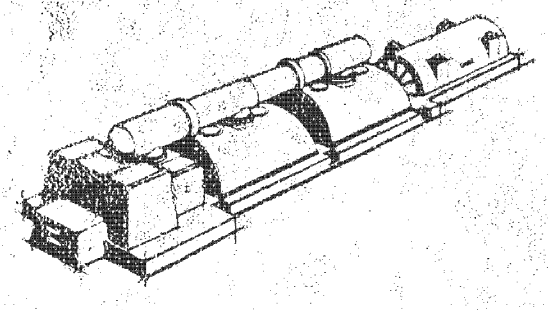

PERFORMANCE TEST REPORT

INTERMOUNTAIN POWER PROJECT

UNIT NO. 1

TURBINE NO. 270T150
820000 KW TC6F-30 3600 RPM
2400 PSIG 1000/1000F

GENERAL ELECTRIC

IP14_007196

INTERMOUNTAIN POWER PROJECT
PERFORMANCE TEST REPORT, UNIT NO. 1

TURBINE NO. 270T150
820000 KW TC6F-30
86 STG 07

IP14_007197

FOR USE OF G-E EMPLOYEES ONLY

GENERAL ELECTRIC

TECHNICAL INFORMATION SERIES

Title Page

BOOK #0956

AUTHOR	SUBJECT	NO. DF86STG07
P.G. Albert	Full Scale ASME Performance Test	DATE 6/23/87
TITLE		G.E. CLASS III
Intermountain Power Project Unit #1, 270T150, 820,000 KW, 2400P/1000F/1000F, 2.3" HgA		GOVT. CLASS None
REPRODUCIBLE COPY FILED AT Technical Report Library Building 273, Room 315, Schenectady, NY		NO. PAGES 17

SUMMARY

This report presents the results obtained from a full scale ASME performance test conducted on the IPP unit #1. The results show that:

- The turbine test heat rate at the guarantee load of 820,000 KW, rated conditions of 2400 psig/1000F/1000F, 1.66/2.24/2.99" Hg, and the contract cycle conditions is 7755.4 BTU/KW-HR, which is 0.8% better than guarantee. This excellent performance is consistent over the load range.

- The maximum contract cycle generator output corrected to rated condition is 878,606 KW, which exceeds the valves wide open output by 3.2%.

- The maximum test throttle flow at rated throttle steam conditions is 6,301,995 lb./hr., which is greater than the valves wide open throttle flow by 2.9%.

KEY WORDS

ASME test, full scale test, performance test, efficiency, Intermountain Power Project, IPP #1

INFORMATION PREPARED FOR Steam Turbine-Generator Engrg. & Mfg. Operations

TESTS MADE BY Intermountain Power Project and General Electric Company

AUTHOR P.G. Albert Paul G. Albert 6/23/87

COMPONENT Performance Engineering

APPROVED John A. Booth, Manager - Performance Engineering John A. Booth

AUTHORIZATION, CLASS AND DISTRIBUTION APPROVED John A. Booth, Manager, Performance Engineering

SIGNATURE, SPONSORING MANAGER

IP14_007198

G-1013-8 (7-70)
PHOTO OFFSET-TDS

GENERAL ELECTRIC COMPANY

TECHNICAL INFORMATION SERIES

NO. DF86STG07

GENERAL ELECTRIC COMPANY
TECHNICAL INFORMATION SERIES
CONTENT PAGES

Contents of Report

No. of Pages Text -
No. of Tables -
No. of Figures -

DISTRIBUTION

L.	Riano/IPP (10)	36-4 FLW
A.	Morson/R.S. Couchman	273-248/273-240
A.	Mahn	Fitchburg
S.L.	Griller/E. Parga	2-1FLW
F.M.	Gates	273-400
K.E.	Robbins/J.H. Moore	285-120/206
P.	Schofield/F.G. Baily/R. Bjorge	285-120/208
M.J.	Boss	285-120
	Technical Report Library (2)	273-315
	Title Page (15)	273-301

Property of General Electric Company
Maintain one-inch side margins.

IP14_007199

TABLE OF CONTENTS

	Page No.
DISTRIBUTION	i
CONTENTS	ii
INDEX OF FIGURES	iii
I. INTRODUCTION	1
II. INSTRUMENTATION	1
III. CALCULATIONS	7
IV. RESULTS	11
1. HP Turbine Efficiency	11
2. IP Turbine Efficiency	12
3. Reheat Turbine Efficiency	12
4. Output and Heat Rate	13
5. Stage Flow Functions	16
6. Packing Flows	17
V. CONCLUSION	18
FIGURES	
APPENDICES	
A. Computer Output for Test Cycle Heat Balances for Test Points	
B. Correction Curves	
C. Correction Factors for Heat Rate and Load	
D. Enthalpy Drop Efficiency	

Property of General Electric Company
Maintain one-inch side margins.

IP14_007200

INDEX OF FIGURES

Figure No.	Nomenclature
1A	Cross-Section of HP Turbine
1B	Cross-Section of IP Turbine
1C	Cross-Section of LP Turbine
2	Instrumentation Diagram
3	Nozzle Calibration
4	Steam Seal Diagram
5	Summary of Test Conditions
6	Posting diagram for TP-4
7	Generator Losses
8	Test Cycle Heat Balance Diagram for TP-4
8A	Exhaust Loss Curve
9A	Contract Cycle Heat Balance Diagram for TP-3
9B	Contract Cycle Heat Balance Diagram for TP-4
9C	Contract Cycle Heat Balance Diagram for TP-5
9D	Contract Cycle Heat Balance Diagram for TP-6
9E	Contract Cycle Heat Balance Diagram for TP-7
9F	Contract Cycle Heat Balance Diagram for TP-8
10	HP η Plotted Versus TFR
11	HP η Plotted Versus $P1^{st}/PT$
12	IP η Plotted Versus Hot Reheat Pressure
13	Reheat Turbine η (UEEP)
14	Reheat Turbine η (ELEP)
15	Test Heat Rate
16	Contract Cycle Heat Rate
17A	Guarantee Heat Balance
17B	Valves Wide Open Heat Balance
17C	Valves Wide Open (Over Pressure) Heat Balance
17D	615 MW Heat Balance
17E	410 MW Heat Balance
17F	205 MW Heat Balance
18	1st Stage Pressure Versus Throttle Flow
19	Flow Function for 1st Stage
20	Flow Function for 4th Stage
21	Flow Function for Hot Reheat
22	Flow Function for Reheat Bowl
23	Flow Function for 11th Stage
24	Flow Function for LP Bowl

Property of General Electric Company
Maintain one-inch side margins.

IP14_007201

INDEX OF FIGURES

Figure No.	Nomenclature
25	Flow Function for 15th Stage
26	Flow Function for 16th Stage
27	Flow Function for 18th Stage
28	Flow Function for 19th Stage
29	No. 1 Packing HPLO
30	No. 2 Packing HPLO
31	No. 1 Packing LPLO
32	No. 2 Packing LPLO
33	No. 3 Packing LPLO
34	No. 4 Packing LPLO
35	Valve Stem Leakoff

Property of General Electric Company
Maintain one-inch side margins.

IP14_007202

I. INTRODUCTION

A full-scale ASME performance test was run on the IPP #1 unit to determine the overall performance of the turbine relative to its guarantee. The tests were conducted through the cooperative efforts of General Electric Company and Intermountain Power Project.

The turbine-generator unit was initially synchronized in February 1986, Enthalpy drop efficiency tests were run on the high pressure (HP) and intermediate pressure (IP) turbines after startup to establish the efficiency levels for these components. The establishment of the startup performance level as soon as possible after initial synchronization is a necessary prerequisite to the running of an ASME full-scale acceptance test. This step provides the basis for identifying the presence of performance deviations which may occur in the time period before a full-scale test can be run.

In June of 1986, the full-scale ASME performance test was conducted. The initial two test points were performed for the primary purpose of instrument checkout, data taker training, isolation verification, and determining the efficiency of the HP and IP turbine sections. This data showed the HP turbine efficiency to having deteriorated 1% since startup and the IP turbine efficiency to have deteriorated 0.5%. Despite this deterioration, the performance test was conducted as originally planned. A series of six full-scale ASME test points were then conducted from June 22 through June 28, 1986. This report presents the results of the full-scale performance test as well as the startup enthalpy drop test.

II. INSTRUMENTATION

The instrumentation and measurements required for a full-scale test are described in detail in PTC-6 1976. A brief summary of the application of PTC-6 to the IPP #1 unit follows:

A. Description of Unit

The turbine is a tandem compound 3600 RPM design with a single flow HP turbine, a double flow IP turbine, and a six flow low pressure turbine with 30" last stage buckets. It is a single reheat design with rated steam conditions of 2400 psig/1000F/1000F and a nameplate rating of 820,000 KW at 1.66/2.24/2.99" HgA exhaust pressure. A cross-section of the HP turbine is given in Figure 1A, the IP turbine is shown in Figure 1B, and one of the three low pressure sections is shown in Figure 1C.

A schematic of the turbine and feedwater cycle is given in Figure 2. The locations and types of measurements which were made are identified on this figure.

B. Pressures, Temperatures, Flows

Most of the instrumentation for the test was provided by the General Electric Company. Temperatures were measured using calibrated chromel constantan thermocouples with continuous leads from the hot junction to an electronic (real ice) ice bath. Per PTC-6 recommendations, temperatures which have the most influence on the test results were measured at two different points, close together, and the mean of the readings was considered to be the temperature of the fluid.

Transducers were used for measuring the various pressures as well as the differential pressures across numerous flow elements. Many pressures were multiplexed to one transducer through the use of scanivalves. This justified the use of expensive, ultra high accuracy Ruska quartz bourdon tube transducers. Rosemount and Gemac transducers were used to measure differential pressures on secondary flow elements and Heise

IP14_007204

pressure transducers were used for some static pressure measurements. Prior to the start of the test, an in-place calibration of transducers was performed.

The condensate flow to the deaerator was measured using an ASME primary-flow section which had a throat tap nozzle with a Beta ratio of 0.423 and a throat diameter of 9.842". Calibration of this flow section was completed by Alden Reseach Laboratory (ARL Report No. 112-84/C354) and the results are shown in Figure 3. This flow section, which is the property of IPP, was inspected just prior to the test and found to be undamaged but have a thin oxide-like deposit. This deposit was removed from the nozzle using acetone as a solvent and scrubbing with a clean cloth. The differential pressure across the nozzle was measured on both sets of taps with Ruska DDR transducers. The temperature-controlled quartz bourdon tube transducers have an accuracy of 0.02% of reading plus 0.02% of full scale.

A calibrated flow section having a throat tap nozzle with a Beta ratio of 0.45 was used to measure the extraction steam flow to each of the two boiler feed pump turbines. The main steam attemperation spray flow was measured with a station pipe tap nozzle which was inspected prior to the test using the inspection port. A station orifice was used to measure the combustion gas reheat return to the deaerator. The feedpump injection flows were measured with six station orifices, one for each of the two main boiler feedpumps, one for the startup boiler feedpump, and one for each of the three booster boiler feedpumps. The feedpump seal return flows were measured with two calibrated turbine-meter flow sections which were provided by GE. Numerous flows in the steam seal system (see Figure 4) were measured with station orifices and forward-reverse tubes. No reheat steam attemperation spray flow or air preheat flow was used during the test.

-1013-8 (7-70)
OTO OFFSET-TDS

C. Electrical Measurement

The generator electric load measurements were obtained using the following apparatus:

Electrical Apparatus Used	Serial No.	Phase
Current Transformers (customer's property)		
Potential Transformers (GE property)	G425553	A
Type: JVS-150	G414871	B
Rating: 13800/120, 3000 VA, 60 Hz	K135196	C
Instruments (GE property)	30809740	A
Precision Watthour Meters	30809742	B
Type: IBL-10 (modified)	30809743	C
Rating: 2.5 Amp, 120 Volt, 60 Hz		

The precision watthour meters and the associated readout equipment were used to determine generator output of each of the three phases. These instruments were supplied by the General Electric Company along with a test cabinet for making all necessary electrical connections. The measuring setup was located in the control room.

The precision watthour meters were calibrated in Schenectady at the standards laboratory of Upstate New York Instrumentation Services, General Electric Company. During the calibration and the test, these meters operated in a temperature-controlled cabinet.

The potential transformers were calibrated at the General Electric Somersworth, New Hampshire plant. These calibrations provided the phase angle correction factors and the ratio correction factors for the potential transformers. The secondary burden consisted solely of our instruments. All transformers were grounded at their secondaries. During the testing, steam conditions and throttle flow were held as steady as possible to maintain steady generator load.

Property of General Electric Company
Maintain one-inch side margins.

IP14_007206

During each test, revolutions of the IBL-10 watthour meters were counted by electronic counters. The digital readout of these counters and the timer was photographed or recorded at precise 15-minute intervals. Phase voltages and currents were recorded by the data acquisition system. These values were used to determine the average armature current of each phase, average line-to-line voltage, and the power factor of the unit during each test. The value of generator hydrogen pressure was recorded during each test using the station instrumentation.

D. Data Acquisition

During the ASME performance test, a Hewlett-Packard 1000 data acquisition system was used for collection and reduction of the test data. The computer has a 0.5 megabyte core memory with a 64 megabyte disc and is housed in a mobile trailer. For convenience, the mobile trailer was located on the turbine deck for the duration of the test.

Use of this system eliminated the need for about 20 data takers, thereby reducing the testing cost for the customer. In addition, the rate of recording data was increased and thus reducing data scatter uncertainty. Using both pressure multiplexing and computer input multiplexing, the scan time was about 3.4 minutes. The more important variables such as primary flow were read more frequently (once every 42 seconds).

During a test point, the system allowed complete visibility of the data as it was logged and stored on magnetic tape. Upon completion of a test point, a hard copy of the raw data was printed, along with corresponding scan times and averaged values converted to engineering units. The system could also be used to perform heat balance calculation for determining detailed turbine performance results as well as information on the performance of other components of the cycle.

E. Cycle Isolation

For all test points, a number of valves were closed to prevent unaccounted for flows from entering or leaving the test cycle or bypassing any cycle component. Many lines were isolated by closing two isolation valves and opening a drain between the valves to verify no leakage. For steam line drains to the condenser, the drain line temperature near the condenser was checked to verify that the single isolation valve was not leaking. During the initial tests, some drain valves were found to be leaking, but these isolation problems were corrected by closing additional drain line valves.

The No. 1 low pressure heater continuous vents could not be completely isolated so on heaters 1B and 1C, the valves were opened three turns, and on heater 1A the valve was left wide open to prevent the heater from becoming air bound during a test. These heater vent leakage flows were estimated to be insignificant to overall performance and no correction was made in the heat balance calculations for this performance loss.

A number of flows were found to be leaking from the test cycle. Many valves identified to be leaking, such as boiler drains, were repaired during an outage prior to test point 3. Some valves, such as feedwater relief valves, could not be repaired nor could the leakage flow be measured. For test points 7 and 8, the leakage flow from the demineralizer was significant and was measured by timing how long it took to fill a known volume of the sump. This measured leakage was then accounted for in the heat balance calculation.

'G-1013-B (7-70)
PHOTO OFFSET-TDS

III. CALCULATIONS

Eight test points were run during the period June 9 through June 28, 1986 which covered three valve best point operating conditions: second, third, fourth, or VWO condition. Test points 1 and 2 may be considered as preliminary tests whose main objective was to provide a check on cycle isolation and instrumentation. Several isolation deficiencies and instrumentation problems were discovered and corrected. Test points 3, 4, 6, 7, and 8 were run with the cycle in the design mode of operation. Test point 5 was run with the total flow from the heater #2 drain going to the condenser. A summary of test conditions for these test points is given in Figure 5.

During test point 6, one electronic thermocouple reference junction malfunctioned because of a high ambient temperature. This caused the main steam, cold reheat, hot reheat, and heater No. 2 drain temperatures to read high. By comparing the enthalpy of the steam at the cold reheat and the extraction to heater No. 7 during test point 6 and previous test points, we determined the malfunction to have caused a 3.8^{o}F error. This was reviewed with IPP and Black and Veatch, and we agreed to correct the affected temperature data from test point 6 by 3.8^{o}F.

The test data which was recorded and stored on a magnetic tape during each test point was printed, along with averaged values converted to engineering units and corrected for water legs, barometric pressure, and instrumentation calibration. The data was then posted on a copy of the instrument diagram (Figure 2) and reviewed for errors, inconsistencies, completeness, etc. An example of a completed posting diagram developed for test point 4 is shown in Figure 6.

The electrical load was calculated from the data obtained from the measurements described in Section II-C by the formula:

Property of General Electric Company
Maintain one-inch side margins.

IP14_007209

Load = Rev. x 60 min./test time (min.) x K x WHMCF x CTRCF x PTRCF x CTMR x PTMR

where:

K	=	Watthour Meter Constant
WHMCF	=	Watthour Meter Correction Factor
CTRCF	=	Current Transformer Ratio Correction Factor
PTRCF	=	Potential Transformer Ratio Correction Factor
CTMR	=	Current Transformer Marked Ratio
PTMR	=	Potential Transformer Marked Ratio

These calculations are done for each phase and the sum of them is the total generator load. Generator data for the average armature current of the phases, the average line-to-line voltage, and the hydrogen pressure are listed in Table 1. The test generator load and power factor (PF) are listed in Table II. Comparisons were made between the electrical measurements made by General Electric and the readings obtained from the station computer. These results, given in Table III, show computer point TGBPKO to read about 0.2% more MW output than the test electrical load equipment and computer point COAXIO to read about 0.5% less MW output. The generator losses are shown in Figure 7.

Table I

Generator Data

Test No.	Avg. Armature Current of 3 Phases	Avg. Line-to-Line Voltage	H_2 Pressure psig
3	19919	25845	61
4	18277	25760	61
5	14105	25674	59
6	19312	25913	61
7	17820	26208	65
8	13766	26100	61

Property of General Electric Company
Maintain one-inch side margins.

IP14_007210

Table II

Generator Load

Test No.	Date	Time	KW	PF
3	6/22/86	20:15 to 22:15	871725	0.978
4	6/24/86	12:15 to 14:15	791473	0.971
5	6/25/86	22:15 to 00:15	596565	0.953
6	6/27/86	23:00 to 00:30	860177	0.992
7	6/28/86	11:15 to 13:45	778625	0.963
8	6/28/86	17:00 to 19:00	590648	0.952

Table III

Test No.	GE Measured (MW)	Station Computer (MW) TGBPKO	% Diff.	Station Computer (MW) COAXIO	% Diff.
3	871.73	873.37	0.19	867.33	-0.5
4	791.47	793.18	0.22	787.51	-0.5
5	596.57	597.69	0.19	593.97	-0.44
6	860.18	861.75	0.18	856.09	-0.48
7	788.63	780.24	0.21	774.96	-0.47
8	590.65	591.78	0.19	588.11	-0.43

The performance of the test cycle was calculated by supplying the measurements identified on the posting diagram for each test point to a computerized heat balance model of the turbine cycle. A sample calculation can be found in the ASME PTC-6 Appendix A to Test Code for Steam Turbines. All calculations have been performed using ASME steam properties. The computer output for the test cycle calculations is contained in Appendix A. The output for each test point contains detailed turbine performance results as well as information on the heaters, pumps, and other components of the cycle. The information contained in Appendix A for test point 4 is summarized on the test cycle heat balance diagram of Figure 8.

TG-1013-8 (7-70)
HOTO OFFSET-TOS

The expansion line end point (ELEP) was calculated by subtracting the appropriate exhaust loss obtained from the curve given in Figure 8A from the measured used energy end point (UEEP). It is noted that the exhaust loss curve shown in Figure 8A is based on data obtained from numerous tests which were conducted on similar turbines with 30" last stage buckets and also from data obtained on laboratory models.

With the test performance characteristics of the turbine established, the contract cycle analysis was then conducted. The contract cycle analysis provides the final results which are used to compare the test performance with the guarantee performance of the turbine. Contract cycle analysis restores the performance of all the cycle components <u>except</u> the turbine to their respective design values while maintaining the test performance characteristics of the turbine. The test characteristics for the turbine and the steam conditions taken from test cycle are:

1. High pressure turbine efficiency
2. Reheat turbine efficiency
3. Packing flows and rotor cooling steam flow
4. Stage flow functions
5. Hot extractions*
6. Throttle flow
7. Throttle pressure
8. Throttle temperature
9. Reheat temperature
10. Exhaust pressure

---

* Hot extractions refer to the difference between the test extraction enthalpy and the corresponding stage test expansion line enthalpy.

Property of General Electric Company
Maintain one-inch side margins.

IP14_007212

The exhaust loss given by Figure 8A was used in the contract cycle analysis calculations to relate the UEEP and ELEP enthalpies. A method of performing contract cycle calculations is shown in the ASME PTC-6 Appendix A to Test Code for Steam Turbines.

Contract cycle calculations were performed on six test points which covered the three valve best point operating conditions: second, third, fourth, or VWO conditions. The flows, pressures, enthalpies, output, and heat rate obtained in the contract cycle analysis are shown on the heat balance diagrams of Figures 9A-9F for test points 3, 4, 5, 6, 7, and 8, respectively. The correction of output and heat rate to design steam conditions is discussed in Section IV-4.

IV. RESULTS

A summary of pertinent results from both the test cycle and the contract cycle analysis follows:

1. HP Turbine Efficiency

The efficiency of the HP turbine was measured* during each test point. The results are plotted on Figure 10 as a function of throttle flow ratio (TFR) which is the ratio of the throttle flow to the valves wide open (VWO) throttle flow. The efficiencies and the TFR have been corrected to rated throttle conditions of 2400 psig/1000F. The efficiencies obtained from the design heat balances are included. For the VWO points (test points 3 and 6), the test efficiency is 1.9% better than the design VWO heat balance. This is worth an estimated 0.3% in turbine heat rate.

---

* Appendix D describes the measurement and calculation of HP and IP efficiency.

The efficiency of the HP turbine deteriorated since the initial performance was established at startup. This is shown in Figure 11, which includes the results of the data taken during the enthalpy drop tests and the full-scale tests. The efficiency established at startup was 1.0% better than the full-scale test. This loss of HP efficiency is worth about 0.2% in turbine heat rate.

2. IP Turbine Efficiency

The efficiency of the IP turbine was also measured during each test point. This efficiency is defined from ahead of the combined reheat valves to the LP bowl. The results obtained during the full-scale test are plotted in Figure 12, along with those previously obtained from the enthalpy drop test. The IP turbine efficiency showed about 0.5% deterioration from what was established at startup.

3. Reheat Turbine Efficiency

The reheat turbine efficiency reflects the combined performance of the IP and low pressure sections. It is measured from the initial conditions defined by the pressure just ahead of the Combined Intercept Valves (CIV's) and bowl enthalpy to the endpoint conditions defined at the exit of the low pressure turbine. Unlike the HP and IP efficiencies discussed above, reheat efficiency can only be determined by performing a full-scale test since a heat balance around the entire turbine is required to determine the used energy endpoint (UEEP) at the low pressure turbine exhaust. Hence, no data for the reheat efficiency was available from the previous enthalpy drop tests which were run prior to the full-scale test.

The results of the reheat turbine UEEP efficiency are presented in Figure 13. These results have been corrected to 1000F reheat

temperature. The level of efficiency indicated by the test curve is 0.5% better than the design curve.

Results for the reheat turbine efficiency based on the expansion line endpoint (ELEP) are shown in Figure 14. The difference between the test level of performance and design level of performance is about the same as indicated by the results in Figure 13.

4. Output and Heat Rate

A. Test Cycle

The test value of the major variables which affect turbine and cycle performance are shown in Appendix C along with the test cycle results for output and heat rate. This data has been used in conjunction with the correction curves for throttle pressures, throttle temperature, reheat temperature and exhaust pressure which are given in Appendix B, to obtain values for the test output and heat rate corresponding to the rated conditions of 2400 psig, 1000/1000F, 1.66/2.24/2.99 HgA, 0.9 power factor, and an H_2 pressure of 63 psig. The final values for test output and heat rate at rated conditions have been plotted in the form of test heat rate versus test load in Figure 15. The design curve shown is based on the design heat balances which include 1% cycle makeup and a heat rate definition with heat input by the condensate pump and for 0.1% boiler blowdown flow.

B. Contract Cycle

As noted earlier in Section III, the results of the contract cycle analysis provide the test turbine performance with all other

components in the cycle performing at their respective design performance levels. The contract cycle analysis provides the results for turbine output and heat rate which are used to compare the test performance with guarantee. Table IV contains a summary of the contract cycle results for output and heat rate. Both have been corrected to rated conditions using the same correction factors listed in Appendix C. The corrected data is plotted in Figure 16 which also contains the design heat rate curve.

The contract cycle test heat rate was compared to the guarantee value using the method outlined in the turbine-generator contract. First, the equation for the straight line between the design heat balance heat rates at the third valve point and valves wide open was determined. Second, the difference between the heat rate at 820,000 KW from the straight line equation and the specified contract 820,000 KW guaranteed heat rate was calculated to be 6.9 BTU/KW-HR. Third, the test heat rate at 820,000 KW was calculated from a straight line equation between the test heat rates at the third valve point and the valves wide open. The resultant corrected test heat rate at 820,000 KW was then determined by subtracting the 6.9 BTU/KW-HR obtained in step 2 from the straight line interpolation of the test heat rate obtained in step 3. This corrected test heat rate is 7755.4 BTU/KWHR and the guarantee value is 7816 BTU/KW-HR (see the guarantee heat balance 481HB111 shown in Figure 17A). The test value is better than guarantee by 60.6 BTU/KW-HR or 0.8%. The test heat rate is considerably better than the design level over the entire tested load range. This difference is primarily attributed to the better stage performance of all turbine sections relative to design.

Using the startup levels of HP and IP efficiency, the corrected contract cycle heat rates would have been 1.0% better than guarantee.

The VWO test output of 878606 KW (average of test points 3 and 6) exceeds the guarantee value of 820,000 KW by 7.1% and design VWO value by 3.2%. The measured VWO throttle flow corrected to 2400 psig/1000F is 6,301,995 LB/HR (average of test points 3 and 6) which exceeds the design VWO throttle flow of 6,122,730 LB/HR by 2.9%.

Table IV

Summary - Contract Cycle Analysis

Generator Output

Test Point	Contract Cycle* Output	Contract Cycle Output** Corrected to Rated Conditions
3	859479 KW	879596 KW
4	780572 KW	799321 KW
5	589420 KW	601640 KW
6	843533 KW	877615 KW
7	768034 KW	795704 KW
8	580851 KW	602113 KW

Heat Rate

Test Point	Contract Cycle* Heat Rate	Contract Cycle Heat Rate** Corrected to Rated Conditions
3	7936.9	7733.8
4	7948.7	7762.3
5	8056.2	7922.7
6	7962.9	7739.1
7	7997.0	7782.0
8	8086.9	7912.8

* Calculated for the test conditions of throttle pressure and temperature, reheat temperature, and exhaust pressure. The power factor and hydrogen pressure were 0.90 and 63 psig, respectively. Makeup of 1.0%.

** The corrections used for throttle pressure, throttle temperature, reheat temperature, and exhaust pressure are listed in Appendix C.

5. Stage Flow Functions

The flow function for a stage is defined by the relationship:

$$\text{Stage Flow Function} = Q / (A \sqrt{P / v})$$

where:

Q = flow to the following stage

A = stage nozzle area

P = stage shell pressure

v = specific volume at the stage shell pressure and temperature

The flow function should have a constant value which is usually independent of load. Plots of this function will reflect any errors that may exist in the measurement of flow, pressure, or temperature

at a specified point in the cycle. Its consistency is a measure of the precision of the test.

Plots of the flow functions calculated for those locations in the turbine where pressures and temperatures were measured (see Figure 2) are given in Figures 19-28. Generally, the values from each test point line up very well for each respective location demonstrating good consistency and, therefore, good precision.

The flow functions obtained for the positions in the HP turbine (Figures 19 and 20) exhibit a positive slope with flow to the following stage (i.e., load). This relationship is common to other large single-flow fossil, high pressure turbines. The remaining plots contain the results for locations in the IP and LP turbines. The first stage pressure has been plotted versus throttle flow in Figure 18.

6. Packing Flows

The turbine shaft packing flows were measured (see Figure 2) during the ASME performance test. The more significant flows are plotted in Figures 29-35. The HP turbine high pressure packing flows are plotted versus throttle flow in Figures 29 and 30 while the low pressure packing leakoff flows are shown in Figures 31 and 32. The IP turbine shaft packing flow to the steam seal header are shown in Figures 33 and 34. The measured flows from the first valve stem leakoff are plotted in Figure 35.

The packing flow constants determined from these test results have been used in the contract cycle calculation. However, packing flows have only a small effect on heat rate.

V. CONCLUSION

The IPP #1 turbine-generator unit is 60.6 BTU/KW-HR or 0.8% better than guarantee at the guarantee output of 820,000 KW. The performance level of the unit is considerably better than design over the entire load range. The maximum contract cycle KW output at rated conditions is 876,606 KW. This exceeds the design VWO value of 851,733 KW by 3.2%. The maximum test throttle flow at rated steam conditions is 6,301,995 lb/hr, which is greater than the valves wide open (VWO) throttle flow of 6,122,730 lb/hr by 2.9%. The HP turbine section efficiency is 1.9% better than design at VWO, while at startup, it was 2.9% better than design. The reheat turbine efficiency, which reflects the combined performance of the IP and low pressure turbine sections, is on the average 0.5% better than design when corrected to rated reheat temperature.

pm/#6730/18

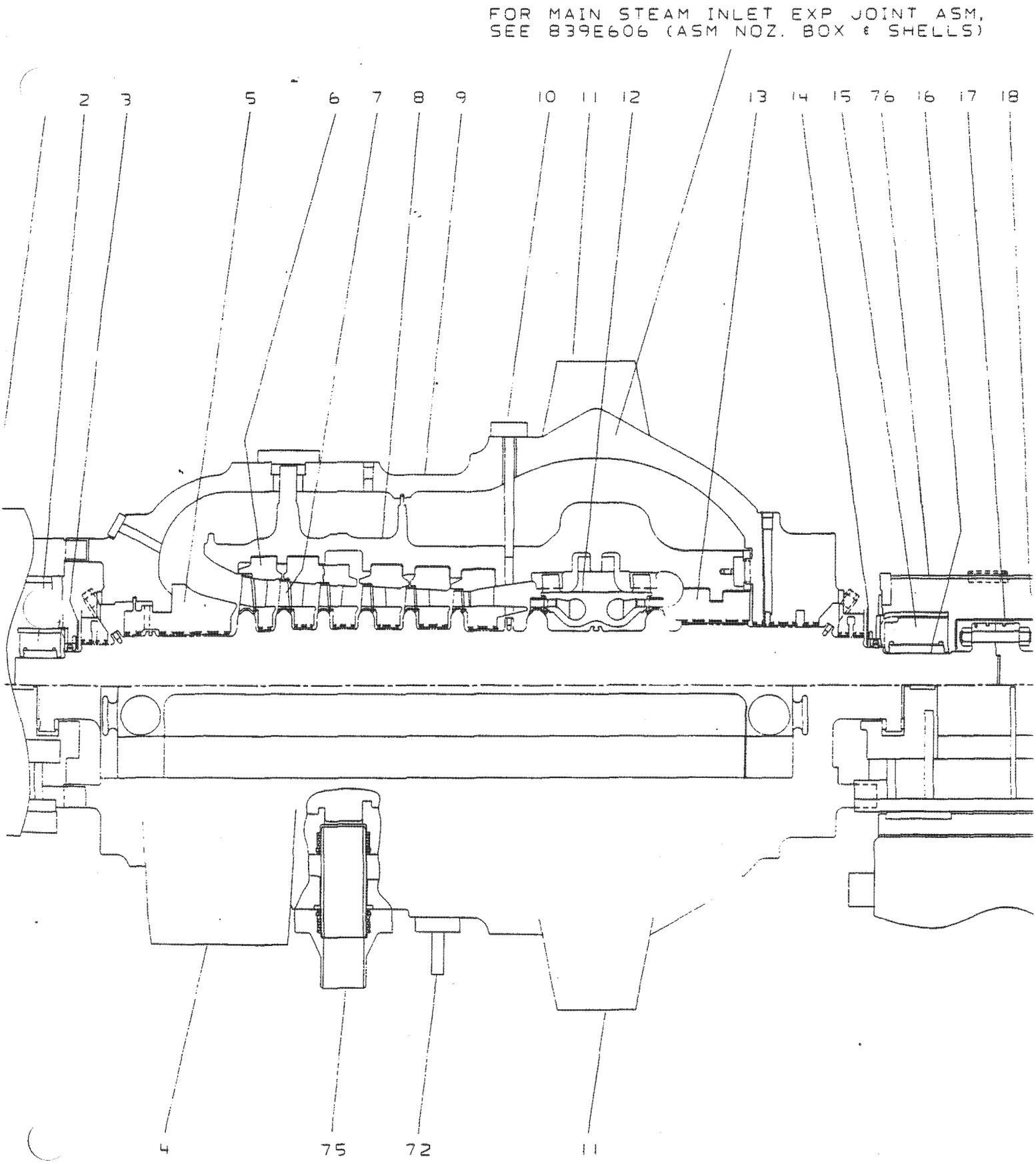

INTERMOUNTAIN POWER PROJECT
UNIT #1
HIGH PRESSURE SECTION

FIG. 1A

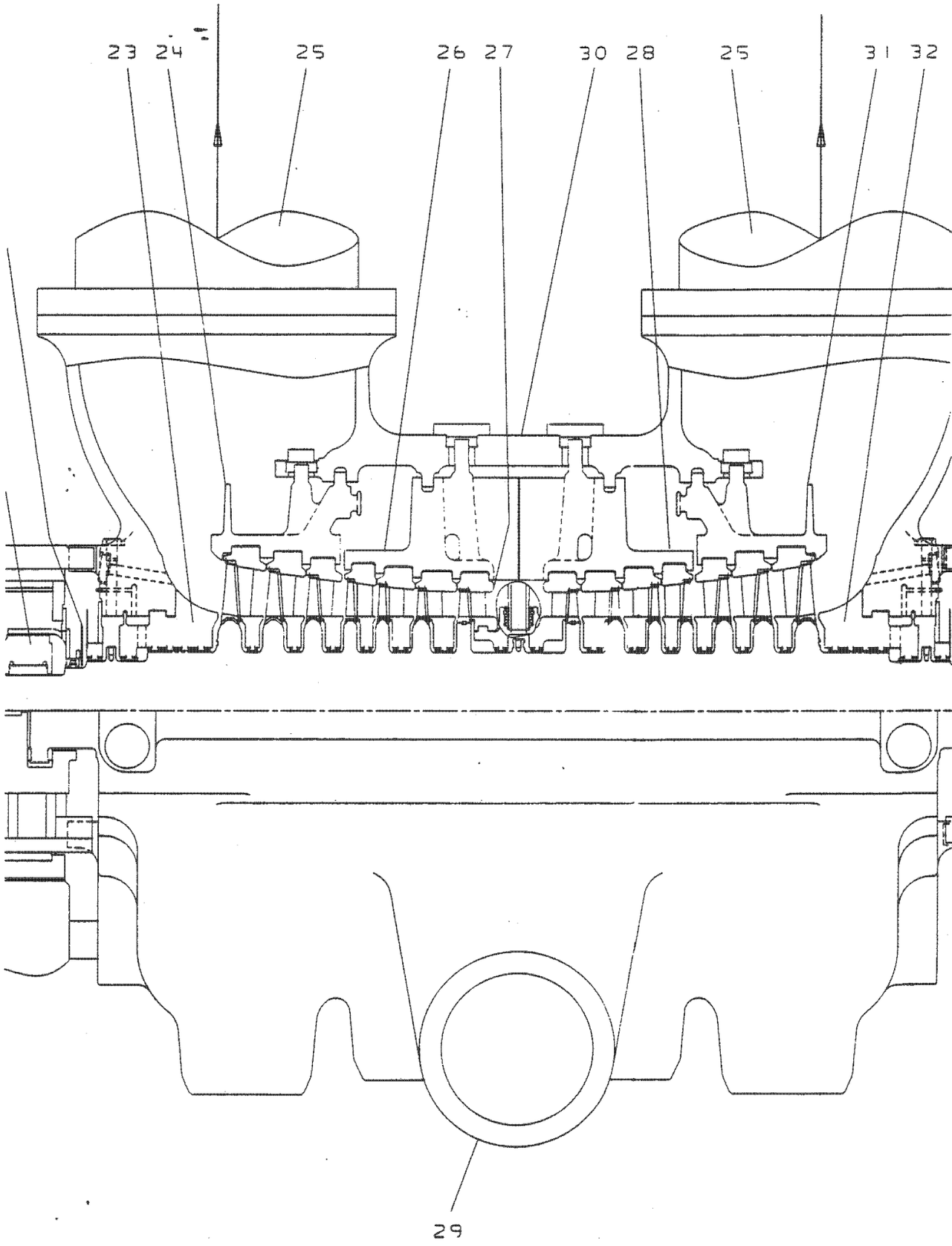

INTERMOUNTAIN POWER PROJECT
UNIT #1
INTERMEDIATE PRESSURE SECTION

FIG. 1B

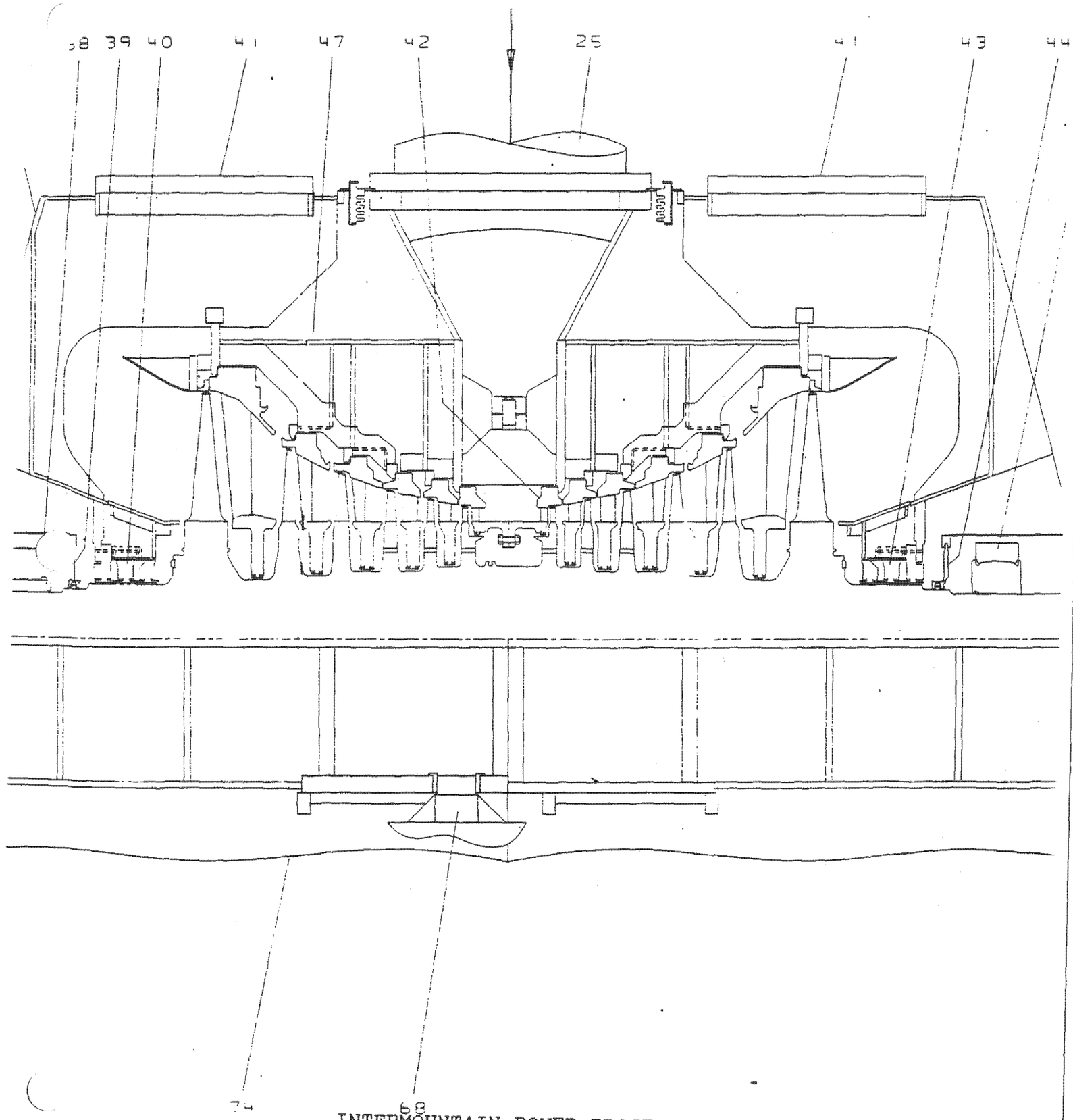

INTERMOUNTAIN POWER PROJECT
UNIT #1
LOW PRESSURE SECTION
HOOD "A" DUPLICATE OF "B" AND "C"

FIG. 1C

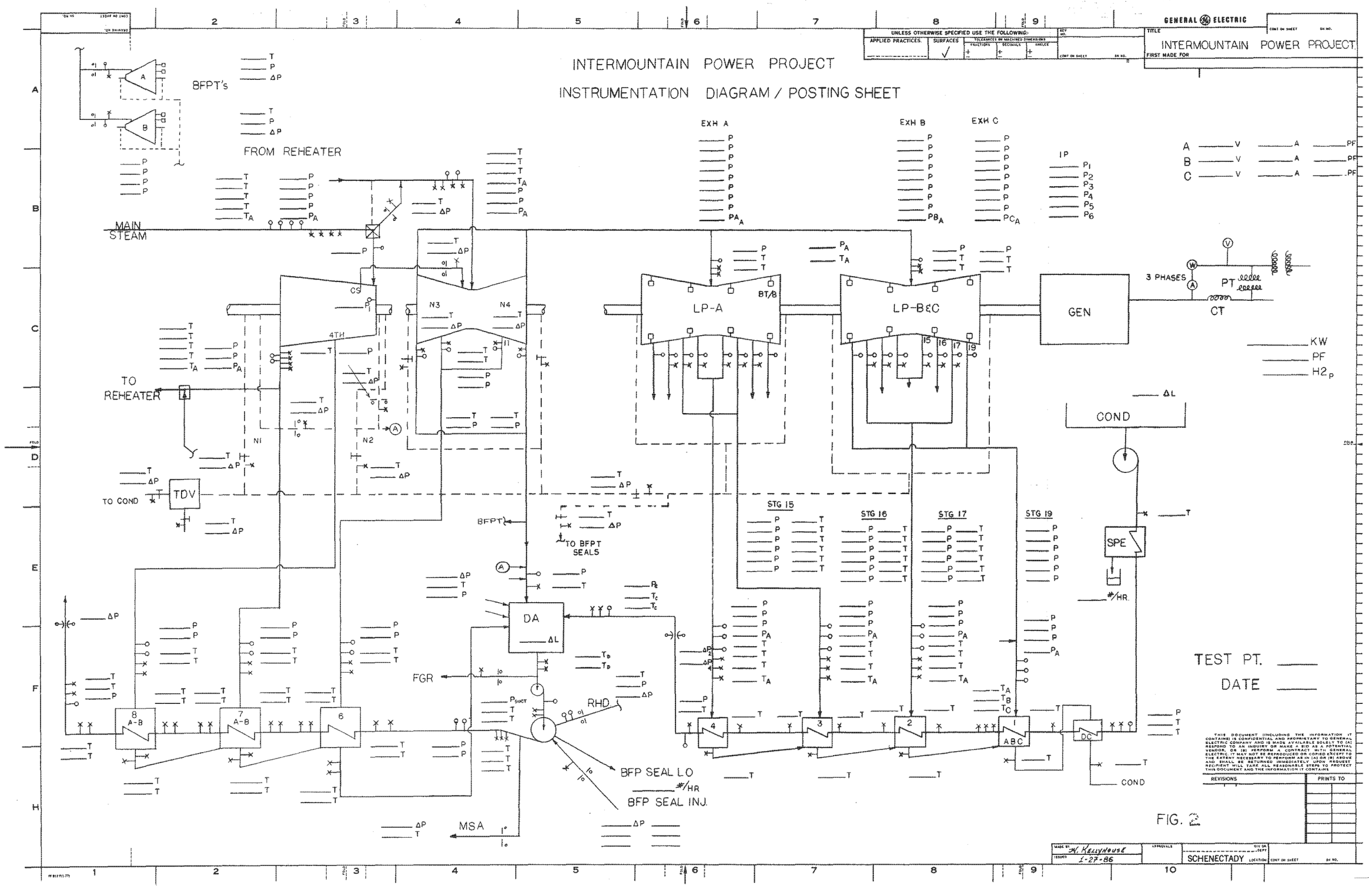
INTERMOUNTAIN POWER PROJECT
INSTRUMENTATION DIAGRAM / POSTING SHEET
GENERAL ELECTRIC
TITLE
INTERMOUNTAIN POWER PROJECT
FIRST MADE FOR
UNLESS OTHERWISE SPECIFIED USE THE FOLLOWING:
APPLIED PRACTICES.
SURFACES
TOLERANCES ON MACHINED DIMENSIONS
FRACTIONS
DECIMALS
ANGLES
BFPT's
FROM REHEATER
MAIN STEAM
TO REHEATER
TO COND
TDV
CS
4TH
N1
N2
N3
N4
BFPT
TO BFPT SEALS
DA
ΔL
FGR
RHD
BFP SEAL LO
#/HR
BFP SEAL INJ.
MSA
EXH A
EXH B
EXH C
IP
LP-A
LP-B&C
BT/B
GEN
3 PHASES
PT
CT
KW
PF
H2p
COND
SPE
#/HR.
STG 15
STG 16
STG 17
STG 19
TEST PT.
DATE
FIG. 2
SCHENECTADY
H. KELLYHOUSE
1-27-86

IP14_007224

INTERMOUNTAIN POWER CO.

IPP No. 1

Condensate Flow Nozzle Calibration

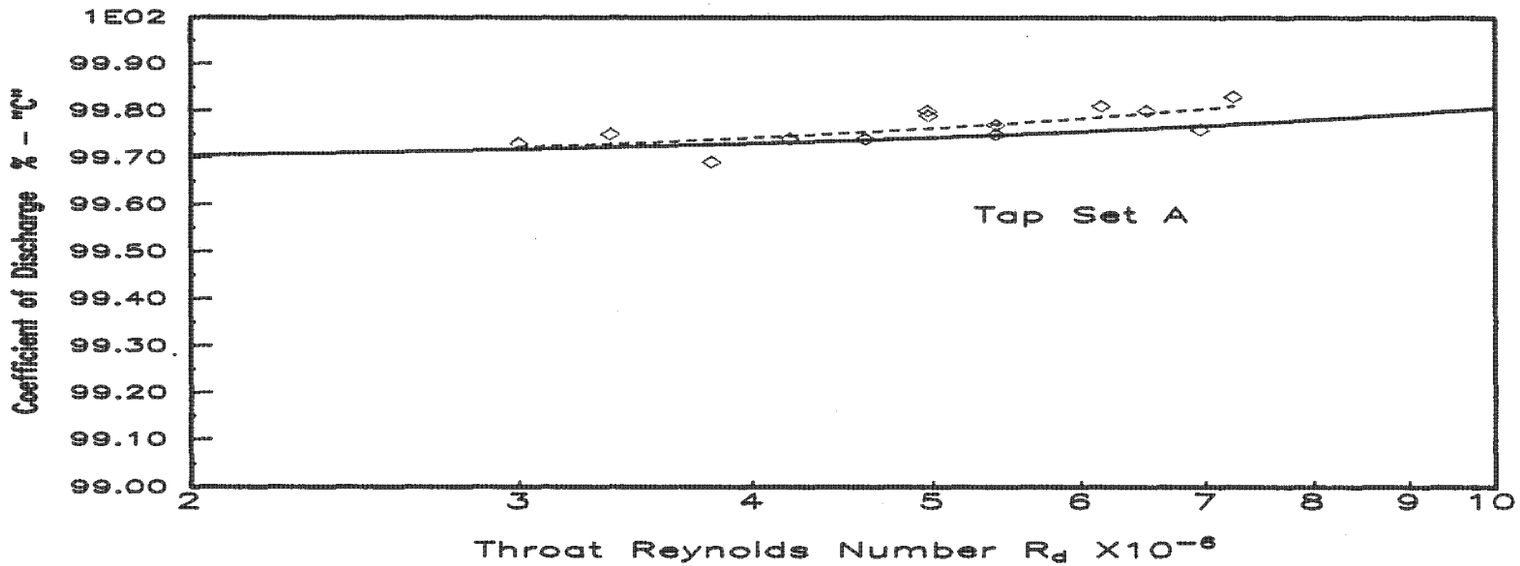

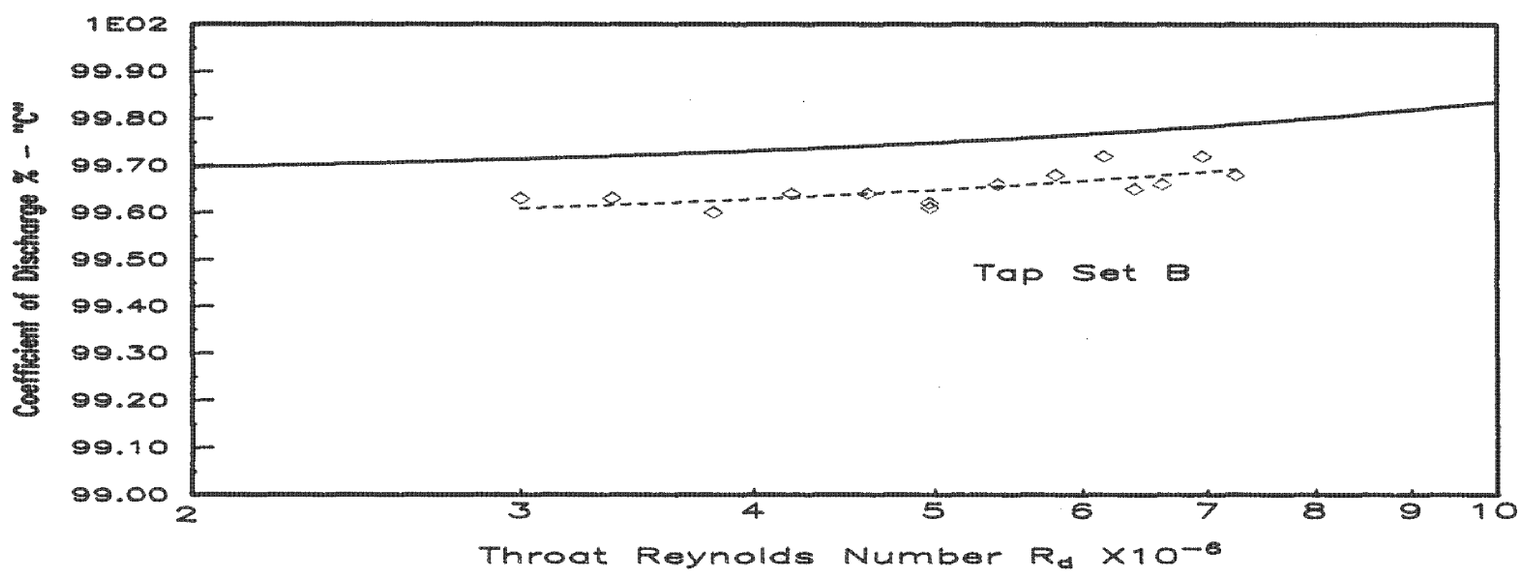

Figure 3

IP14_007225

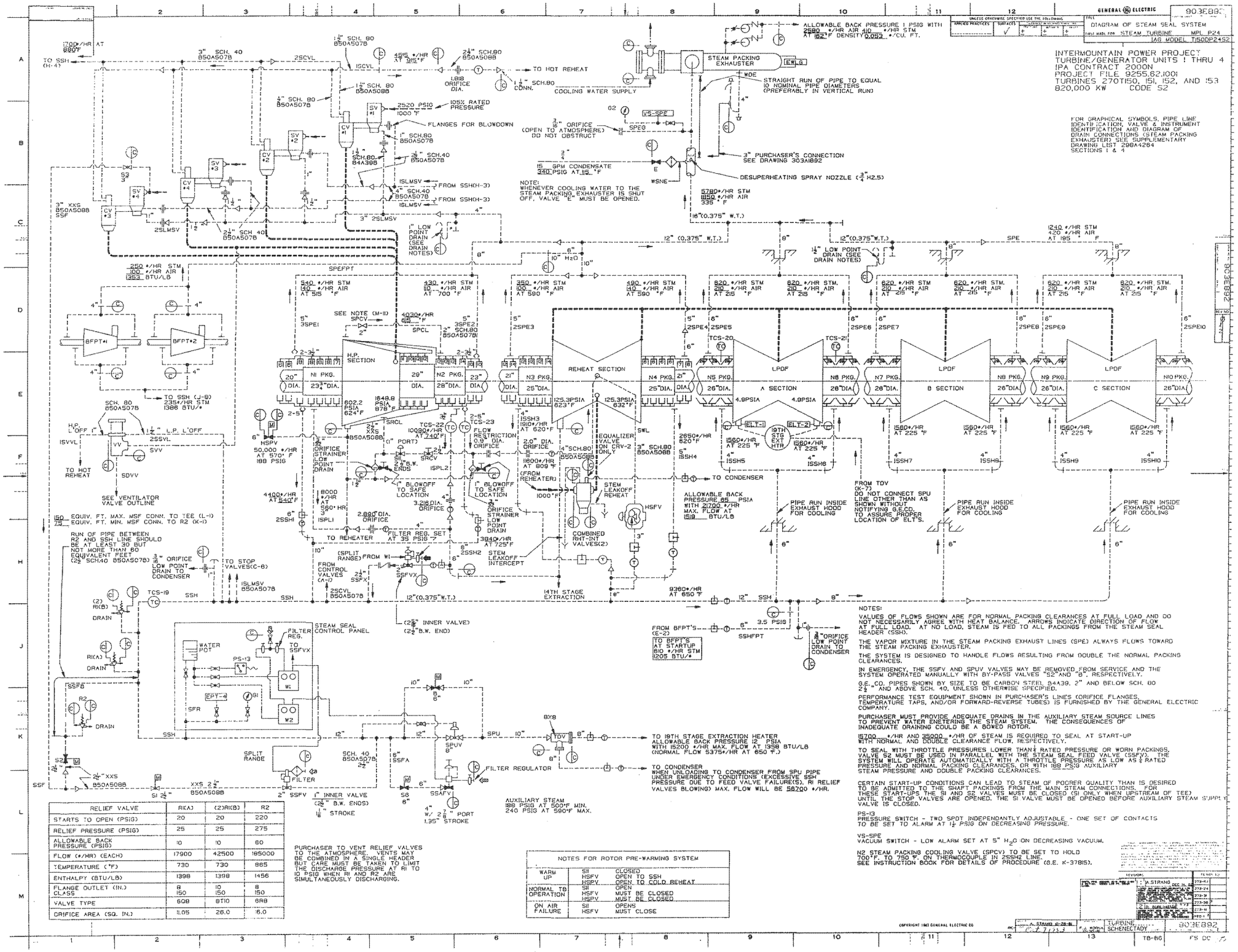

RELIEF VALVE	RI(A)	(2)RI(B)	R2
STARTS TO OPEN (PSIG)	20	20	220
RELIEF PRESSURE (PSIG)	25	25	275
ALLOWABLE BACK PRESSURE (PSIG)	10	10	80
FLOW (#/HR) (EACH)	17900	42500	185000
TEMPERATURE (°F)	730	730	865
ENTHALPY (BTU/LB)	1398	1398	1456
FLANGE OUTLET (IN.) CLASS	8 150	10 150	8 150
VALVE TYPE	6D8	8T10	6R8
ORIFICE AREA (SQ. IN.)	11.05	26.0	6.0

PURCHASER TO VENT RELIEF VALVES TO THE ATMOSPHERE. VENTS MAY BE COMBINED IN A SINGLE HEADER BUT CARE MUST BE TAKEN TO LIMIT THE DISCHARGE PRESSURE AT RI TO 10 PSIG WHEN RI AND R2 ARE SIMULTANEOUSLY DISCHARGING.

NOTES FOR ROTOR PRE-WARMING SYSTEM		
WARM UP	SII	CLOSED
	HSFV	OPEN TO SSH
	HSPV	OPEN TO COLD REHEAT
NORMAL TB OPERATION	SII	OPEN
	HSFV	MUST BE CLOSED
	HSPV	MUST BE CLOSED
ON AIR FAILURE	SII	OPENS
	HSFV	MUST CLOSE

NOTES:

VALUES OF FLOWS SHOWN ARE FOR NORMAL PACKING CLEARANCES AT FULL LOAD AND DO NOT NECESSARILY AGREE WITH HEAT BALANCE. ARROWS INDICATE DIRECTION OF FLOW AT FULL LOAD. AT NO LOAD, STEAM IS FED TO ALL PACKINGS FROM THE STEAM SEAL HEADER (SSH).

THE VAPOR MIXTURE IN THE STEAM PACKING EXHAUST LINES (SPE) ALWAYS FLOWS TOWARD THE STEAM PACKING EXHAUSTER.

THE SYSTEM IS DESIGNED TO HANDLE FLOWS RESULTING FROM DOUBLE THE NORMAL PACKING CLEARANCES.

IN EMERGENCY, THE SSFV AND SPUV VALVES MAY BE REMOVED FROM SERVICE AND THE SYSTEM OPERATED MANUALLY WITH BY-PASS VALVES "S2" AND "B", RESPECTIVELY.

G.E. CO. PIPES SHOWN BY SIZE TO BE CARBON STEEL SA-A53B, 2" AND BELOW SCH. 80 2½" AND ABOVE SCH. 40, UNLESS OTHERWISE SPECIFIED.

PERFORMANCE TEST EQUIPMENT SHOWN IN PURCHASER'S LINES (ORIFICE FLANGES, TEMPERATURE TAPS, AND/OR FORWARD-REVERSE TUBES) IS FURNISHED BY THE GENERAL ELECTRIC COMPANY.

PURCHASER MUST PROVIDE ADEQUATE DRAINS IN THE AUXILIARY STEAM SOURCE LINES TO PREVENT WATER ENETERING THE STEAM SYSTEM. THE CONSEQUENCES OF INADEQUATE DRAINING COULD BE A BOWED ROTOR.

15700 #/HR AND 35000 #/HR OF STEAM IS REQUIRED TO SEAL AT START-UP WITH NORMAL AND DOUBLE CLEARANCE FLOW, RESPECTIVELY.

TO SEAL WITH THROTTLE PRESSURES LOWER THAN ½ RATED PRESSURE OR WORN PACKINGS, VALVE S2 MUST BE USED IN PARALLEL WITH THE STEAM SEAL FEED VALVE (SSFV). THE SYSTEM WILL OPERATE AUTOMATICALLY WITH A THROTTLE PRESSURE AS LOW AS ¼ RATED PRESSURE AND NORMAL PACKING CLEARANCES, OR WITH 198 PSIG AUXILIARY STEAM PRESSURE AND DOUBLE PACKING CLEARANCES.

CERTAIN START-UP CONDITIONS CAN LEAD TO STEAM OF POORER QUALITY THAN IS DESIRED TO BE ADMITTED TO THE SHAFT PACKINGS FROM THE MAIN STEAM CONNECTIONS. FOR THESE START-UPS THE SI AND S2 VALVES MUST BE CLOSED (SI ONLY WHEN UPSTREAM OF TEE) UNTIL THE STOP VALVES ARE OPENED. THE SI VALVE MUST BE OPENED BEFORE AUXILIARY STEAM SUPPLY VALVE IS CLOSED.

PS-13
PRESSURE SWITCH - TWO SPDT INDEPENDANTLY ADJUSTABLE - ONE SET OF CONTACTS TO BE SET TO ALARM AT 1½ PSIG ON DECREASING PRESSURE.

VS-SPE
VACUUM SWITCH - LOW ALARM SET AT 5" H_2O ON DECREASING VACUUM.

N2 STEAM PACKING COOLING VALVE (SPCV) TO BE SET TO HOLD 700°F. TO 750°F. ON THERMOCOUPLE IN 2SSH2 LINE.
SEE INSTRUCTION BOOK FOR DETAILS OF PROCEDURE (G.E. K-37815).

FIG. 4

IP14_007226

SUMMARY OF TEST CONDITIONS

TEST PT.	3	4	5	6	7	8
VALVE PT.	VWO	3 VP	2 VP	VWO	3 VP	2 VP
LOAD (MW)	871.73	791.47	596.57	860.18	778.63	590.65
THROTTLE FLOW (LB/HR)	6322406	5640429	4076417	6231618	5547789	4056460
THROTTLE PRESS. (PSIA)	2421.4	2412.9	2401.5	2377.7	2388.7	2394
THROTTLE TEMP. (F)	1003.3	996.0	1000.8	990.6	998.9	1005.2
FIRST STAGE PRESS.	1968.0	1737.9	1240.9	1933.2	1711.7	1240.1
HOT REHEAT PRESS.	538.1	483.0	358.4	533.2	475.4	357
HOT REHEAT TEMP.	1000.5	995.9	1002.1	999.4	1002.0	981.6
COLD REHEAT PRESS.	583.5	524.0	389.0	578.5	515.8	387.6
COLD REHEAT TEMP.	627.7	603.9	565.9	619.9	605.1	568.7
LP BOWL PRESS.	121.5	109.9	81.8	121.0	108.4	81.5
CROSSOVER TEMP.	617.1	615.8	622.9	617.8	621.5	608.2
LP EXH. PRESS. ("HG)	3.87	3.45	2.83	3.79	3.60	2.88
FINAL FW TEMP.	556.0	543.5	510.4	554.9	542.1	510.5

FIG. 5

IP14_007227

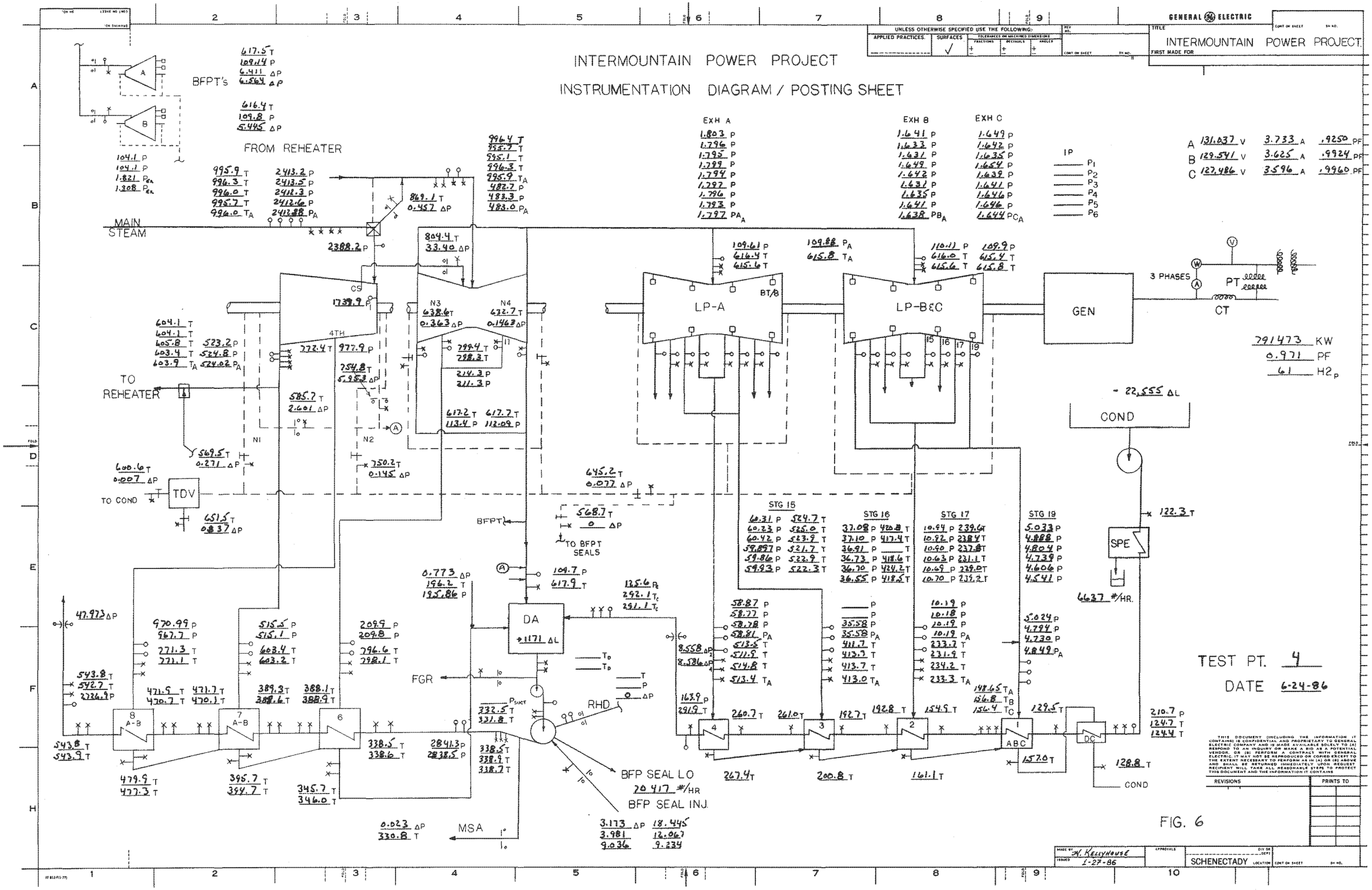
INTERMOUNTAIN POWER PROJECT
INSTRUMENTATION DIAGRAM / POSTING SHEET
GENERAL ELECTRIC
INTERMOUNTAIN POWER PROJECT
BFPT's
617.5 T
109.14 P
6.411 ΔP
6.564 ΔP
616.4 T
109.8 P
5.445 ΔP
FROM REHEATER
MAIN STEAM
2388.2 P
TO REHEATER
TO COND
TDV
TO BFPT SEALS
BFPT
DA
FGR
RHD
MSA
BFP SEAL LO
20 417 #/HR
BFP SEAL INJ.
LP-A
LP-B&C
GEN
PT
CT
3 PHASES
COND
SPE
6637 #/HR.
EXH A
EXH B
EXH C
IP
A 131.037 V 3.733 A .9250 PF
B 129.541 V 3.625 A .9924 PF
C 127.486 V 3.596 A .9960 PF
791473 KW
0.971 PF
61 H2p
- 22,555 ΔL
STG 15
STG 16
STG 17
STG 19
TEST PT. 4
DATE 6-24-86
FIG. 6
H. KELLYHOUSE
1-27-86
SCHENECTADY

IP14_007228

INTERMOUNTAIN POWER CO.

IPP No. 1

Generator Losses

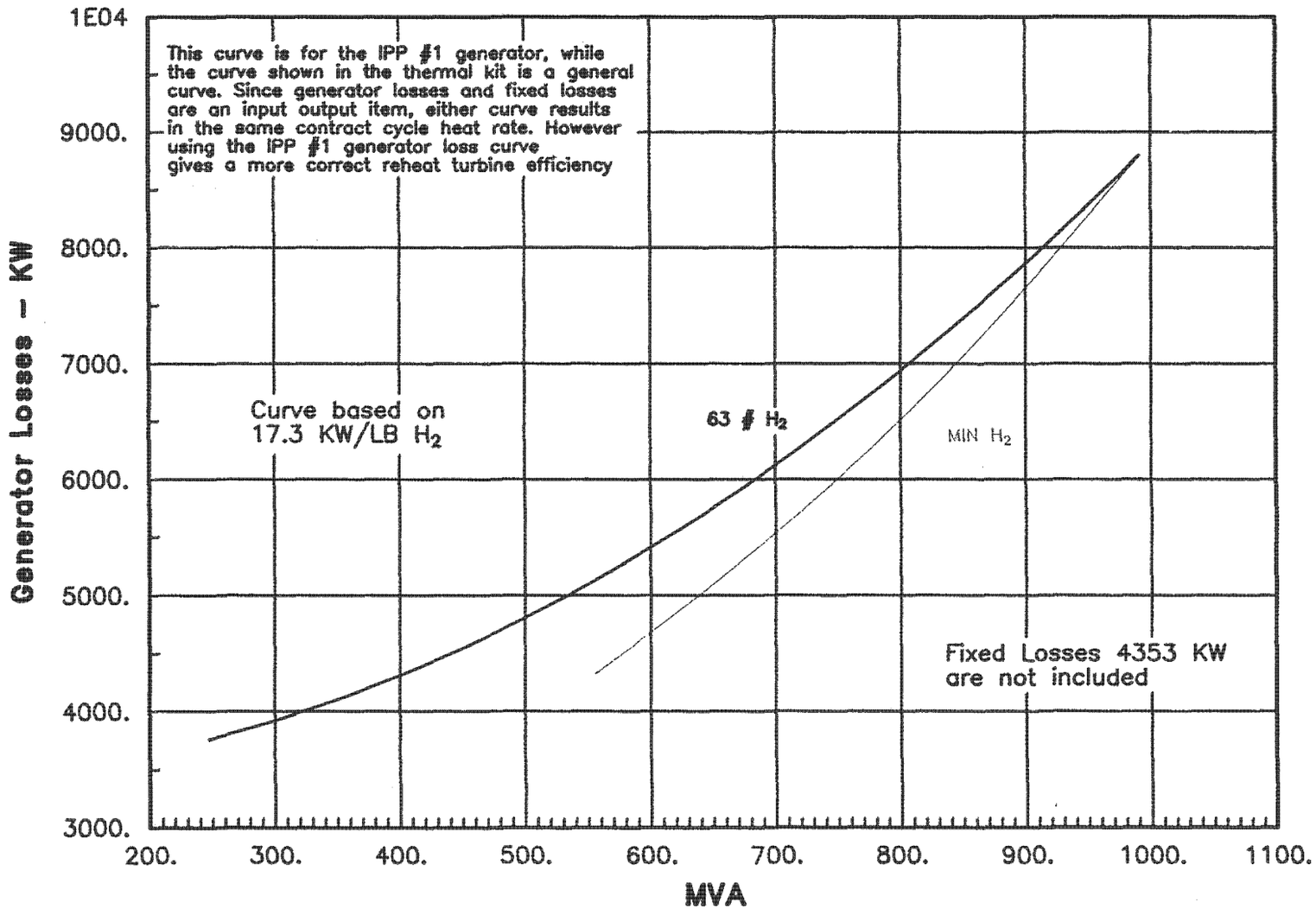

Figure 7

IP14_007229

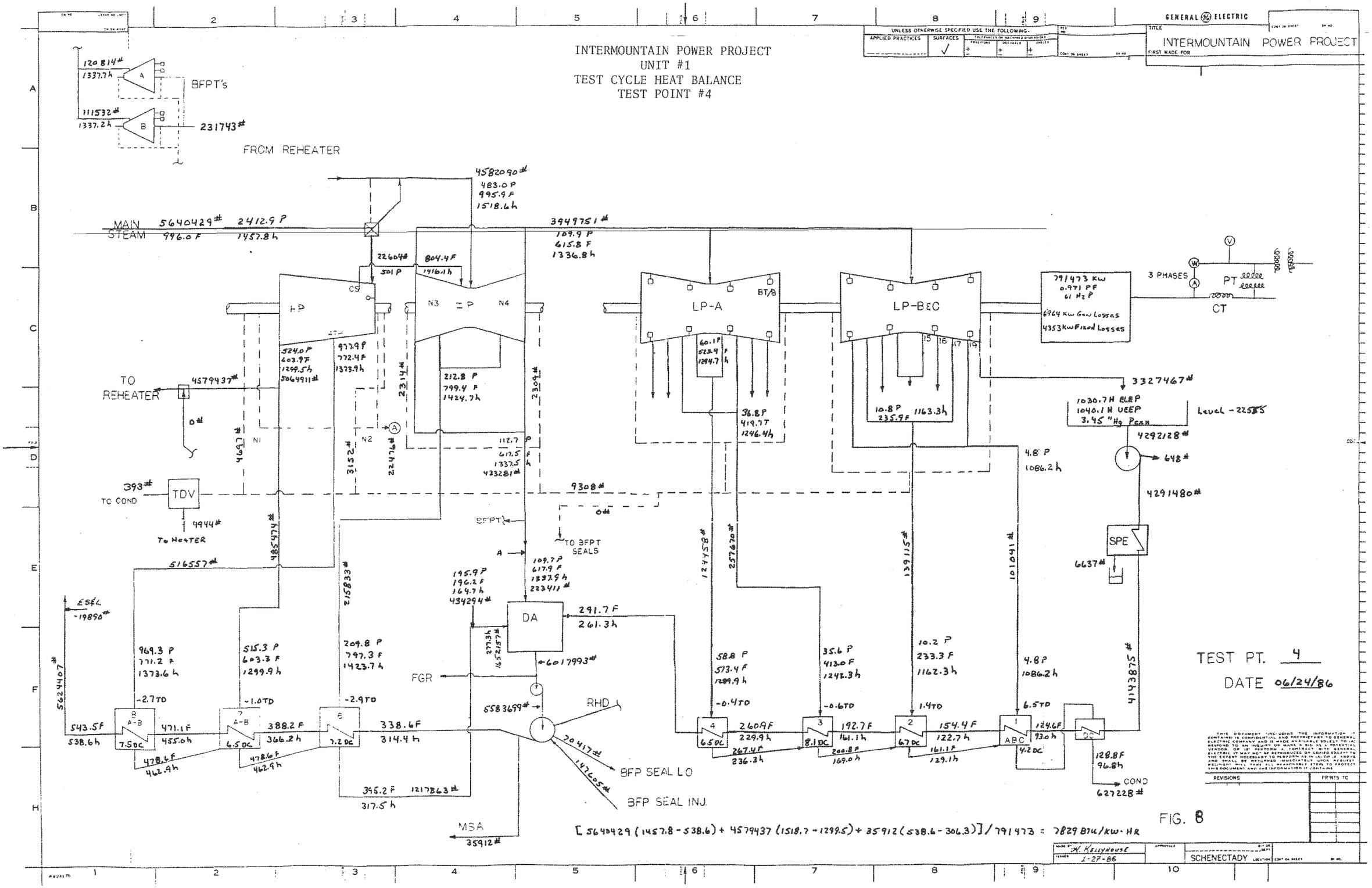
INTERMOUNTAIN POWER PROJECT
UNIT #1
TEST CYCLE HEAT BALANCE
TEST POINT #4
GENERAL ELECTRIC
INTERMOUNTAIN POWER PROJECT
BFPT's
120814#
1337.7h
111532#
1337.2h
231743#
FROM REHEATER
MAIN STEAM
5640429#
2412.9 P
996.0 F
1457.8 h
4582090#
483.0 P
995.9 F
1518.6 h
3949751#
109.9 P
615.8 F
1336.8 h
HP
IP
LP-A
LP-B&C
BT/8
791473 KW
0.971 PF
61 Hz P
6964 KW Gen Losses
4353 KW Fixed Losses
3 PHASES
PT
CT
TO REHEATER
4579437#
TO COND
TDV
To Heater
TO BFPT SEALS
BFPT
DA
FGR
RHD
BFP SEAL LO
BFP SEAL INJ.
MSA
35912#
ESFL
-19890#
SPE
6637#
3327467#
1030.7 H ELEP
1040.1 H UEEP
3.45 "Hg Pcan
Level -225
4292128#
648#
4291480#
4143875#
COND
627228#
TEST PT. 4
DATE 06/24/86
[5640429 (1457.8 - 538.6) + 4579437 (1518.7 - 1299.5) + 35912 (538.6 - 306.3)] / 791473 = 7829 BTU/KW·HR
FIG. 8
H. Kellyhouse
1-27-86
SCHENECTADY

IP14_007230

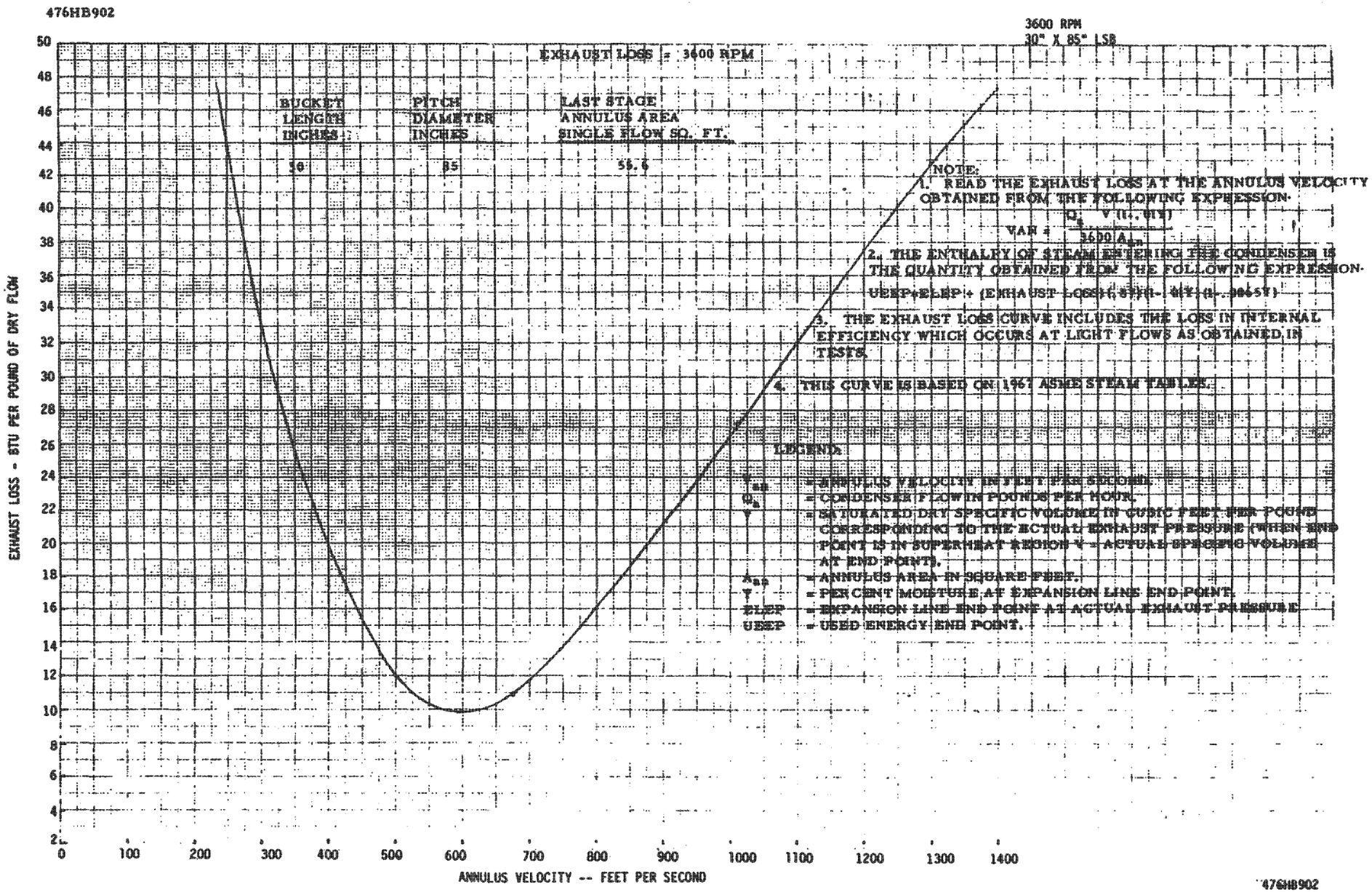

Figure 8A

IP14_007231

FIG. 9A

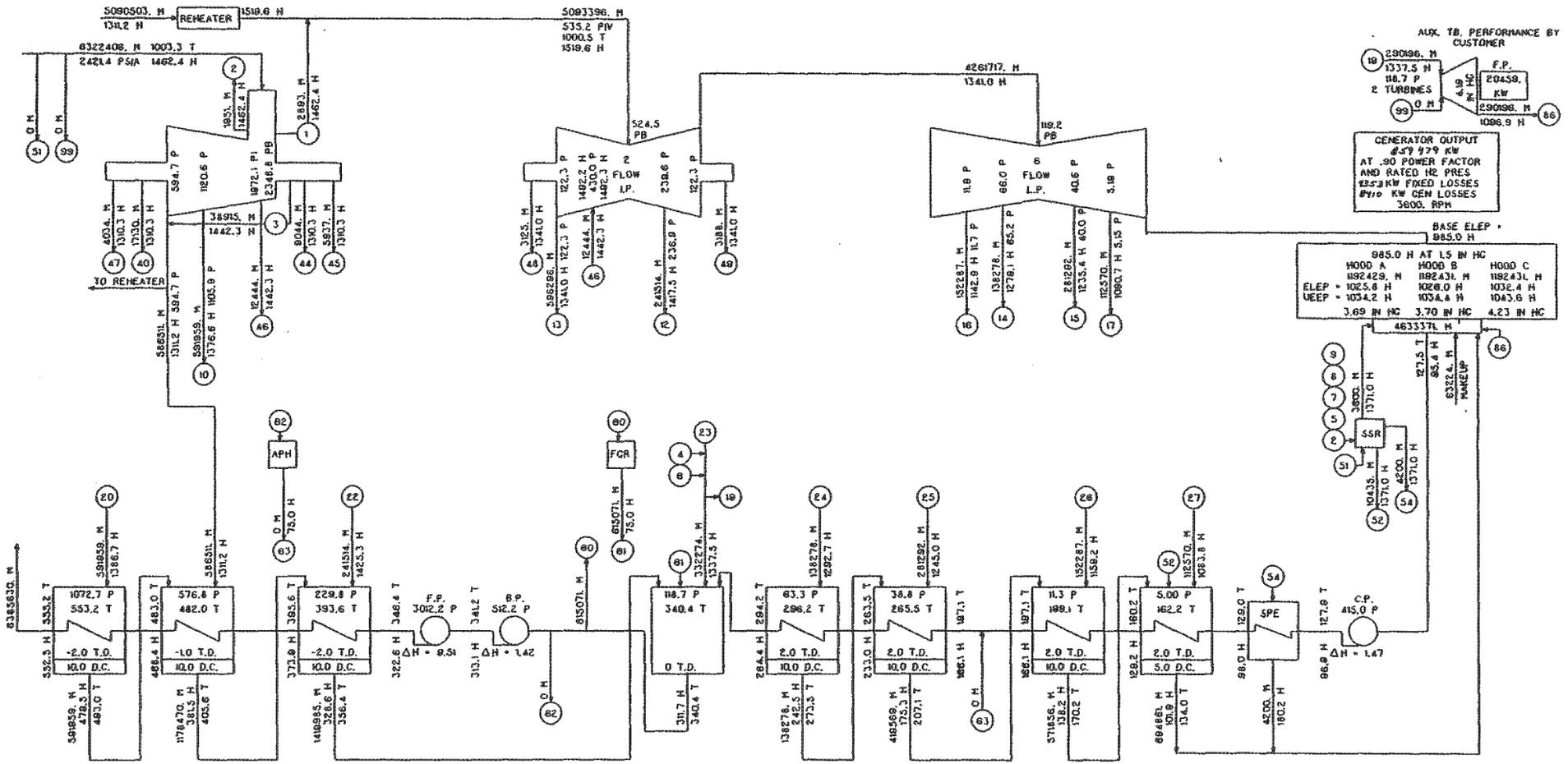

$$\text{HEAT RATE} = \frac{6322406(1462.4-552.5)+5090503(1519.6-1311.2)+463337(1.48)+6322.4(1720.5-552.5)}{859479} = 7937 \text{ BTU/KW-HR}$$

LEGEND - CALCULATIONS BASED ON 1967 ASME STEAM TABLES
M - FLOW-LB/HR
P - PRESSURE-PSIA
H - ENTHALPY-BTU/LB
T - TEMPERATURE-F DEGREES

KW / / IN HG ABS.
CONTRACT CYCLE HEAT BALANCE TEST NO.3
TC6F 30.0 IN. LSB 3600 RPM
2400.0 PSIA 1000. / 1000. T
GEN- 991000. KVA .90 PF LIQ

8446T 1 0 1

IP14_007232

FIG. 9B

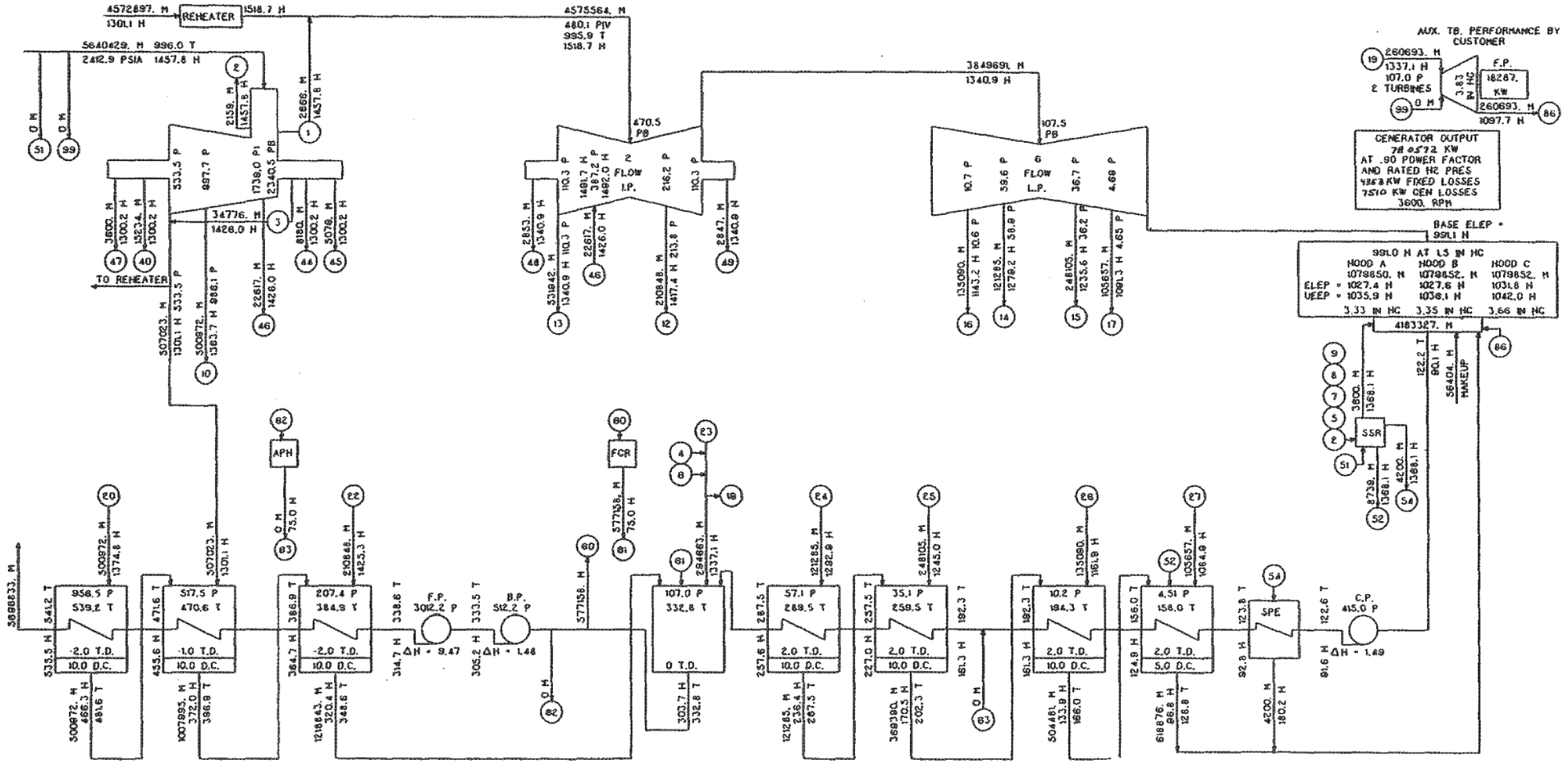

HEAT RATE = $\frac{5640429(1457.8-535.5)+4572897(1518.7-1301.1)+4183327(1.49)+5640.4(720.5-535.5)}{786572}$ = 7949 BTU/KW-HR

LEGEND - CALCULATIONS BASED ON 1967 ASME STEAM TABLES
M - FLOW-LB/HR
P - PRESSURE-PSIA
H - ENTHALPY-BTU/LB
T - TEMPERATURE-F DEGREES

8474T 1 0 1

KW / / IN HG ABS.
CONTRACT CYCLE HEAT BALANCE TEST NO.4
TC8F 30.0 IN. LSB 3600 RPM
2400.0 PSIA 1000. / 1000. T
GEN- 991000. KVA .90 PF LIQ

L.P.S.C. ENGINEERING LIBRARY

IP14_007233

FIG. 9C

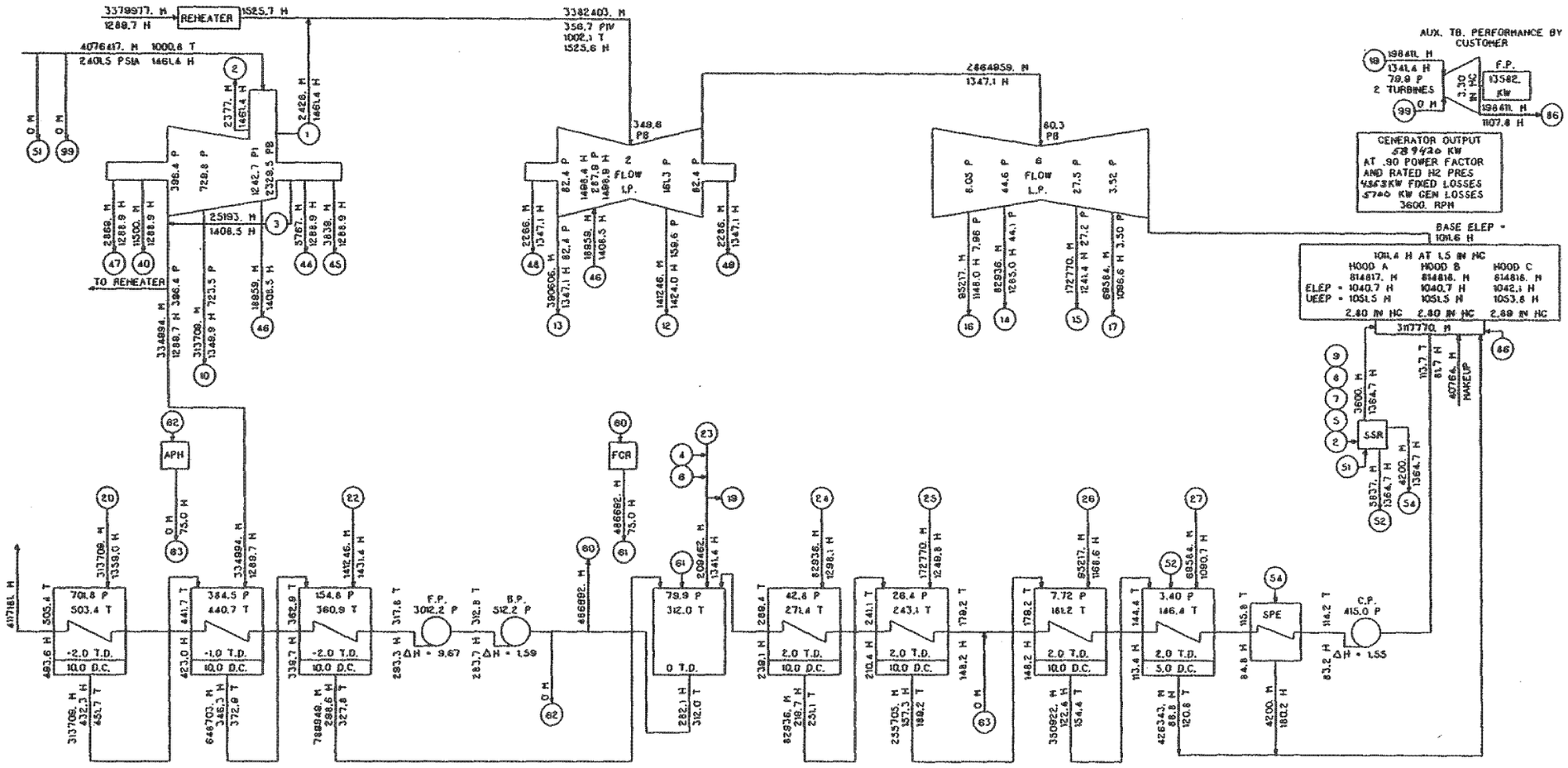

HEAT RATE = $\frac{4076417(1461.4-493.6)+3379977(1525.7-1289.7)+3117770(1.63)+4076.4(720.5-493.6)}{589420}$ = 8056 BTU/KW-HR

LEGEND - CALCULATIONS BASED ON 1967 ASME STEAM TABLES
M - FLOW-LB/HR
P - PRESSURE-PSIA
H - ENTHALPY-BTU/LB
T - TEMPERATURE-F DEGREES

64777 1 0 1

KW / / IN HC ABS.
CONTRACT CYCLE HEAT BALANCE TEST NO.5
TC6F 30.0 IN. LSB 3600 RPM
2400.0 PSIA 1000. / 1000. T
GEN- 991000. KVA .90 PF LIQ

GENERAL ELECTRIC COMPANY. SCHENECTADY N.Y.

IP14_007234

FIG. 90

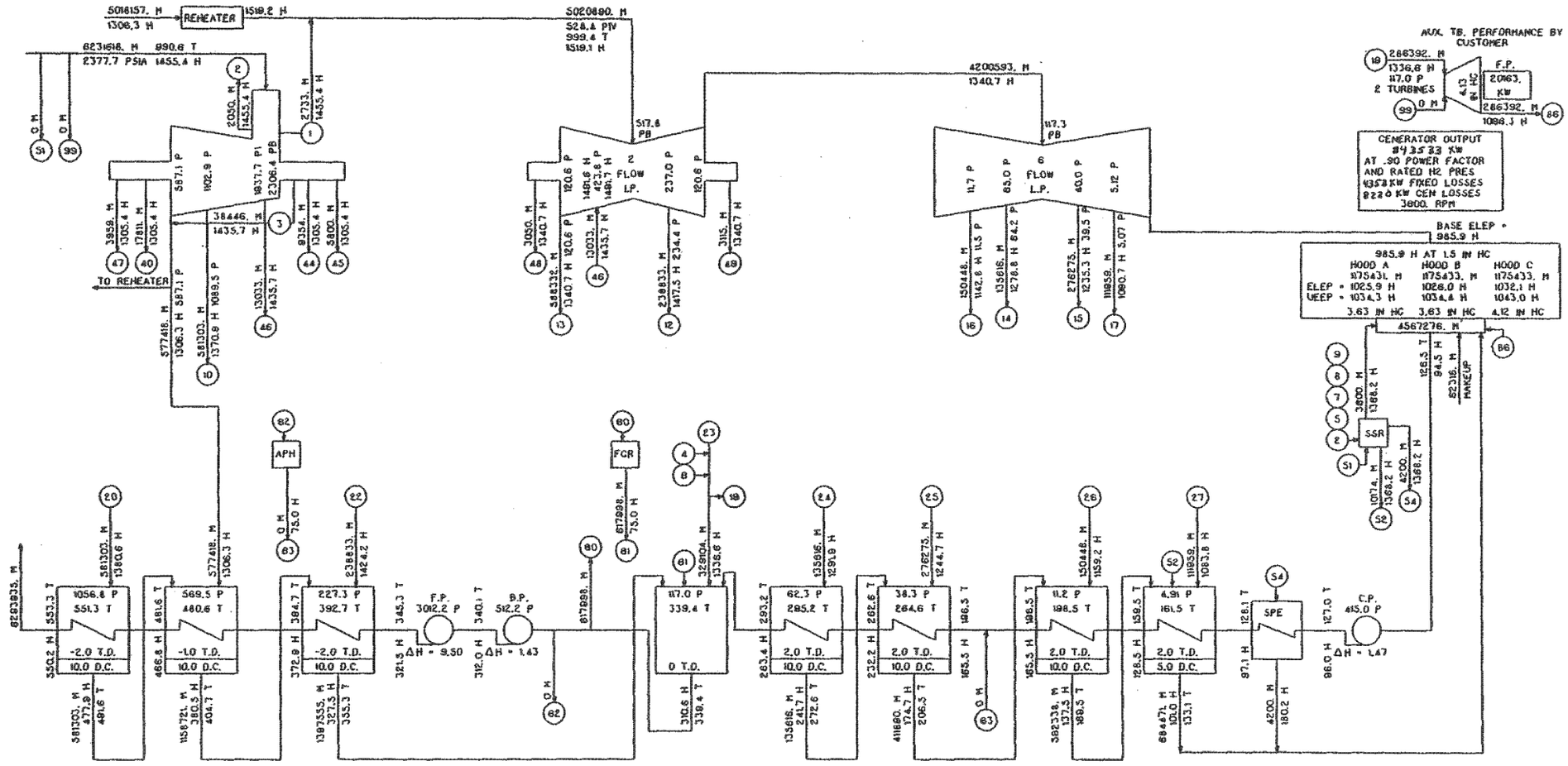

$$\text{HEAT RATE} = \frac{6231618(1455.4-550.2)+5018157(1519.2-1306.3)+4567276(1.48)+6231.6(726.5-550.5)}{843533} = 7963 \text{ BTU/KW-HR}$$

LEGEND - CALCULATIONS BASED ON 1967 ASME STEAM TABLES
H - FLOW-LB/HR
P - PRESSURE-PSIA
H - ENTHALPY-BTU/LB
T - TEMPERATURE-F DEGREES

KW / / IN HG ABS.
CONTRACT CYCLE HEAT BALANCE TEST NO.6
TC6F 30.0 IN. LSB 3600 RPM
2400.0 PSIA 1000. / 1000. T
GEN- 991000. KVA .90 PF LIQ

4479T 1 0 1

GENERAL ELECTRIC COMPANY SCHENECTADY N.Y.

IP14_007235

FIG. 9E

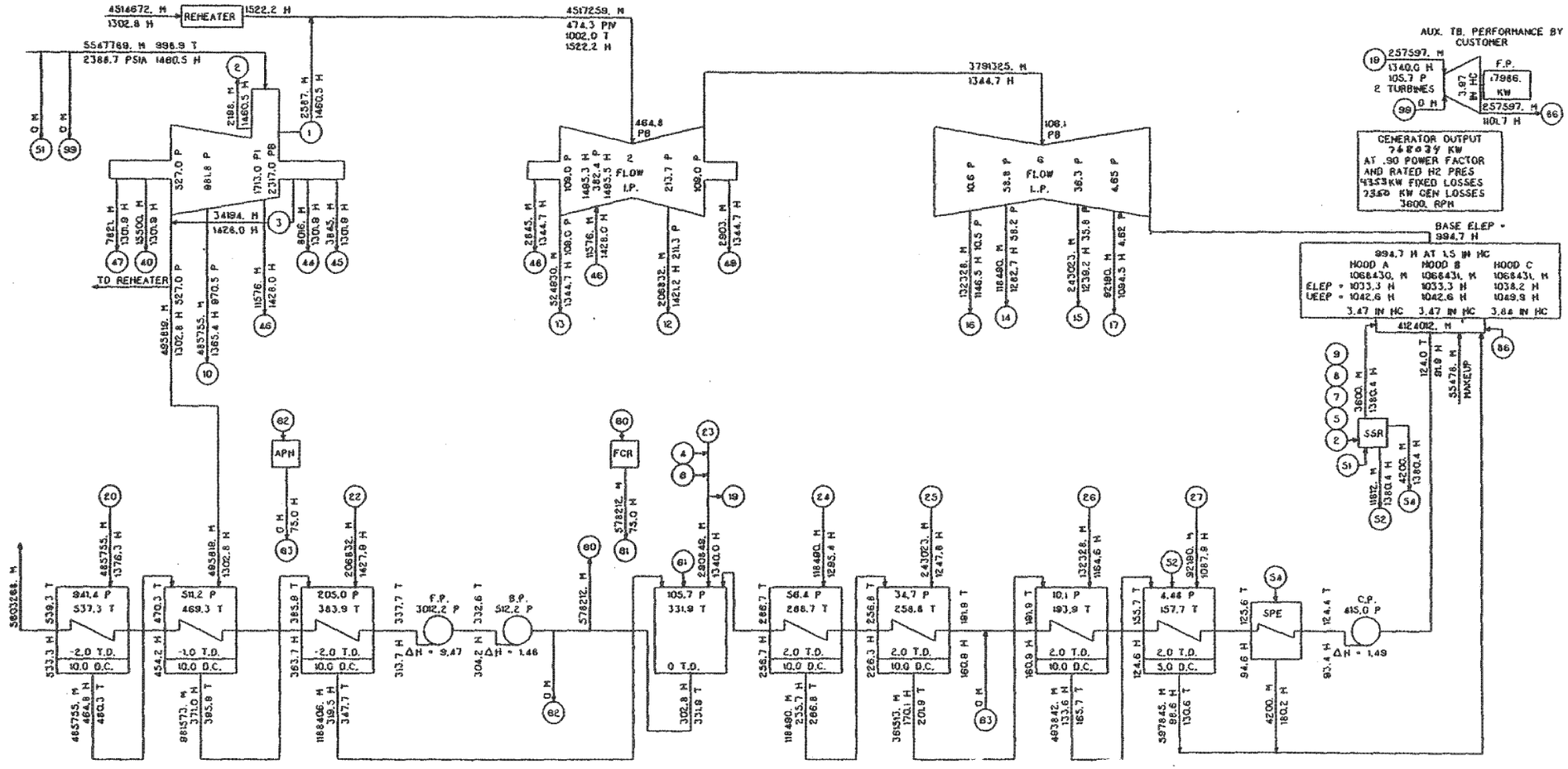

HEAT RATE = $\frac{5547789(1460.5-533.3)+4514672(1522.2-1302.8)+4124012(1.49)+5547.8(720.5-533.3)}{768034}$ = 7997 BTU/KW-HR

LEGEND - CALCULATIONS BASED ON 1967 ASME STEAM TABLES
H - FLOW-LB/HR
P - PRESSURE-PSIA
H - ENTHALPY-BTU/LB
T - TEMPERATURE-F DEGREES

KW / / IN HG ABS.
CONTRACT CYCLE HEAT BALANCE TEST NO.7
TC6F 30.0 IN. LSB 3600 RPM
2400.0 PSIA 1000. / 1000. T
GEN- 991000. KVA .90 PF LIQ

GENERAL ELECTRIC COMPANY, SCHENECTADY N.Y.

FIG. 9E

IP14_007236

FIG. 9F

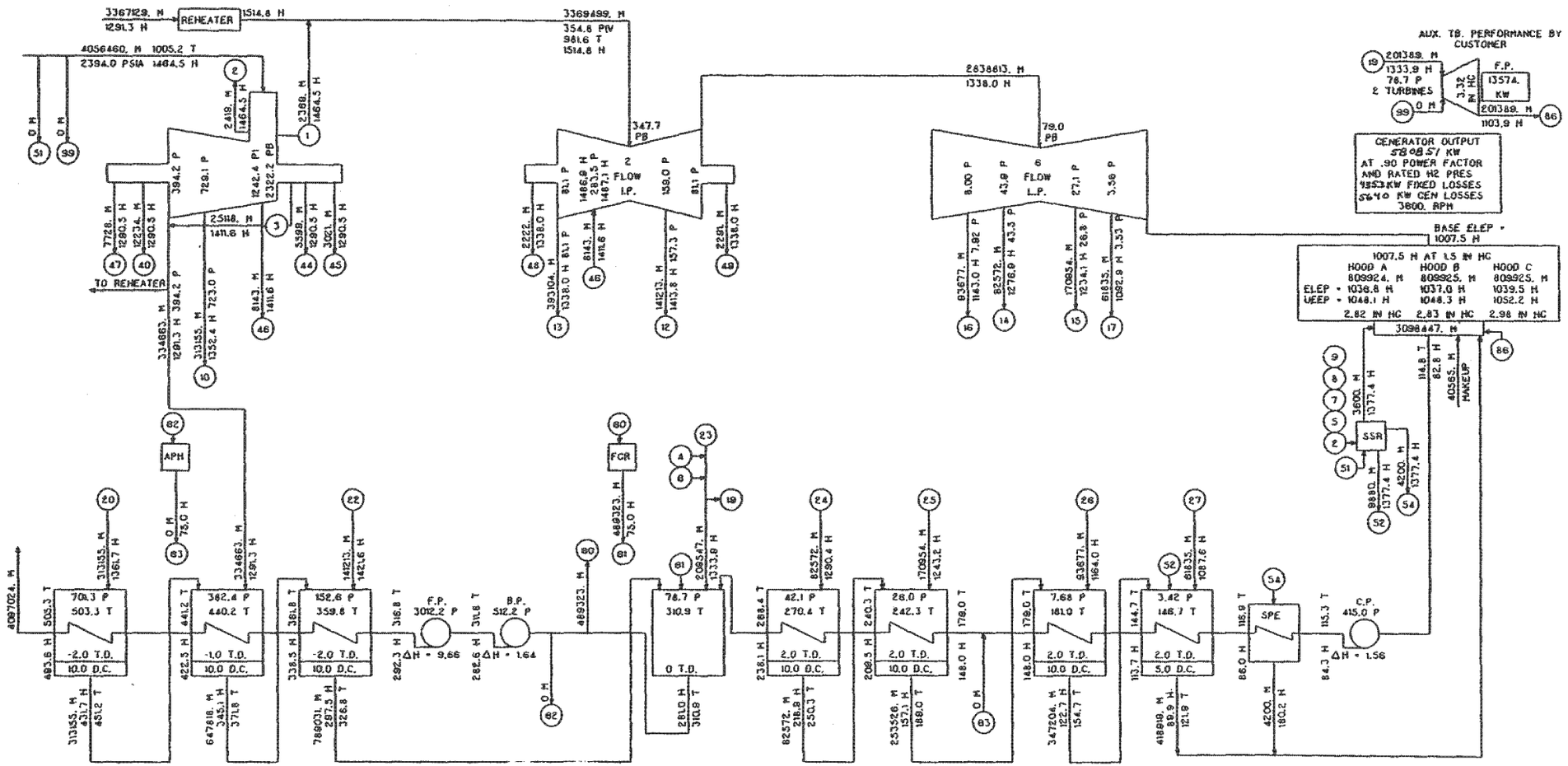

HEAT RATE = $\frac{4056460(1464.5-493.6)+3367129(1514.8-1291.3)+3098447(1.63)+4056.5(720.5-493.6)}{586651}$ = 8087 BTU/KW-HR

LEGEND - CALCULATIONS BASED ON 1967 ASME STEAM TABLES
H - FLOW-LB/HR
P - PRESSURE-PSIA
H - ENTHALPY-BTU/LB
T - TEMPERATURE-F DEGREES

KW / / IN HG ABS.
CONTRACT CYCLE HEAT BALANCE TEST NO.6
TC6F 30.0 IN. LSB 3600 RPM
2400.0 PSIA 1000. / 1000. T
CEN- 991000. KVA .90 PF LIO

8462T 1 0 1

GENERAL ELECTRIC COMPANY. SCHENECTADY N.Y.

IP14_007237

INTERMOUNTAIN POWER CO.

Unit No. 1 T 150

High Pressure Section Efficiency

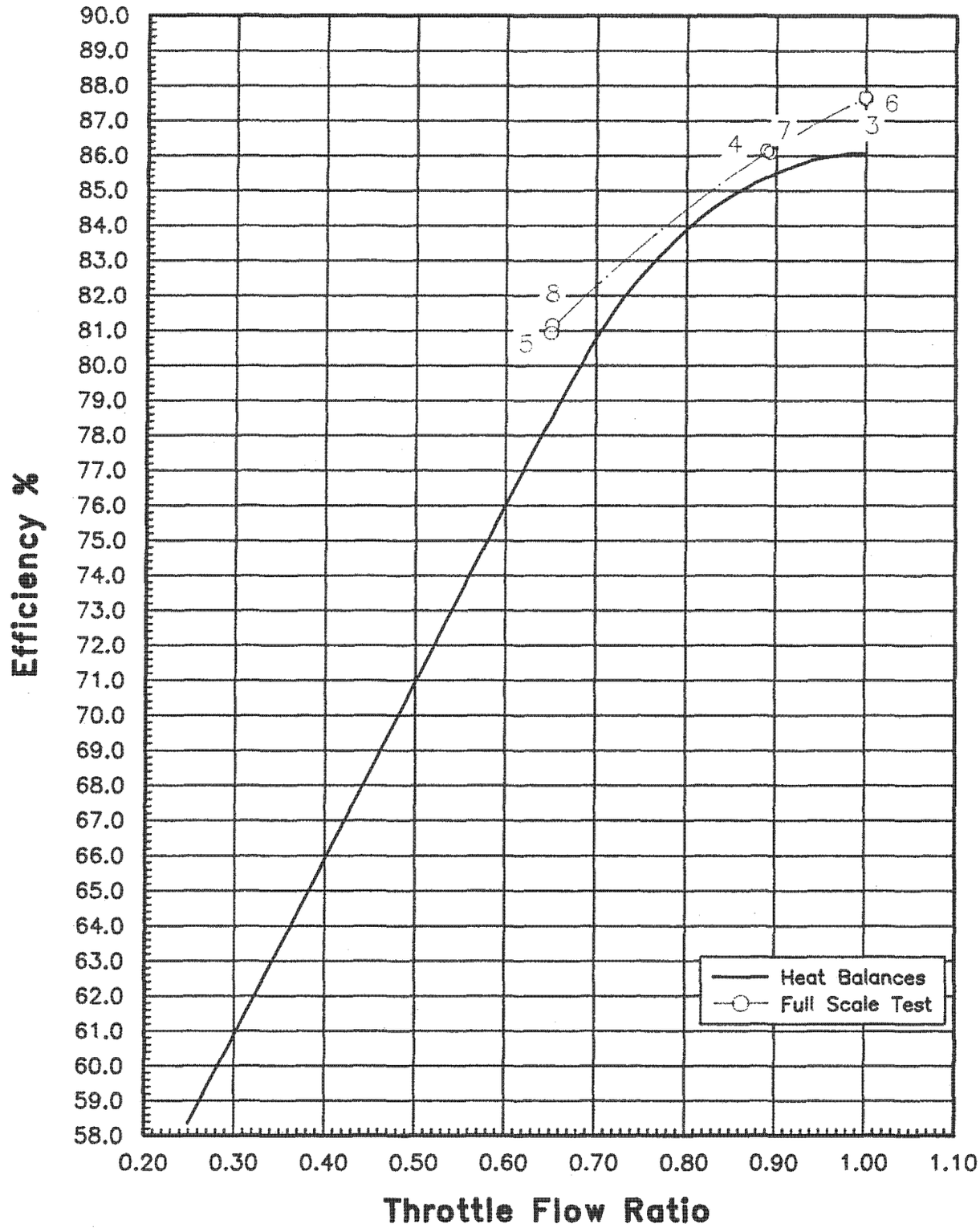

Figure 10

INTERMOUNTAIN POWER CO.

Unit No. 1 T 150

High Pressure Section Efficiency

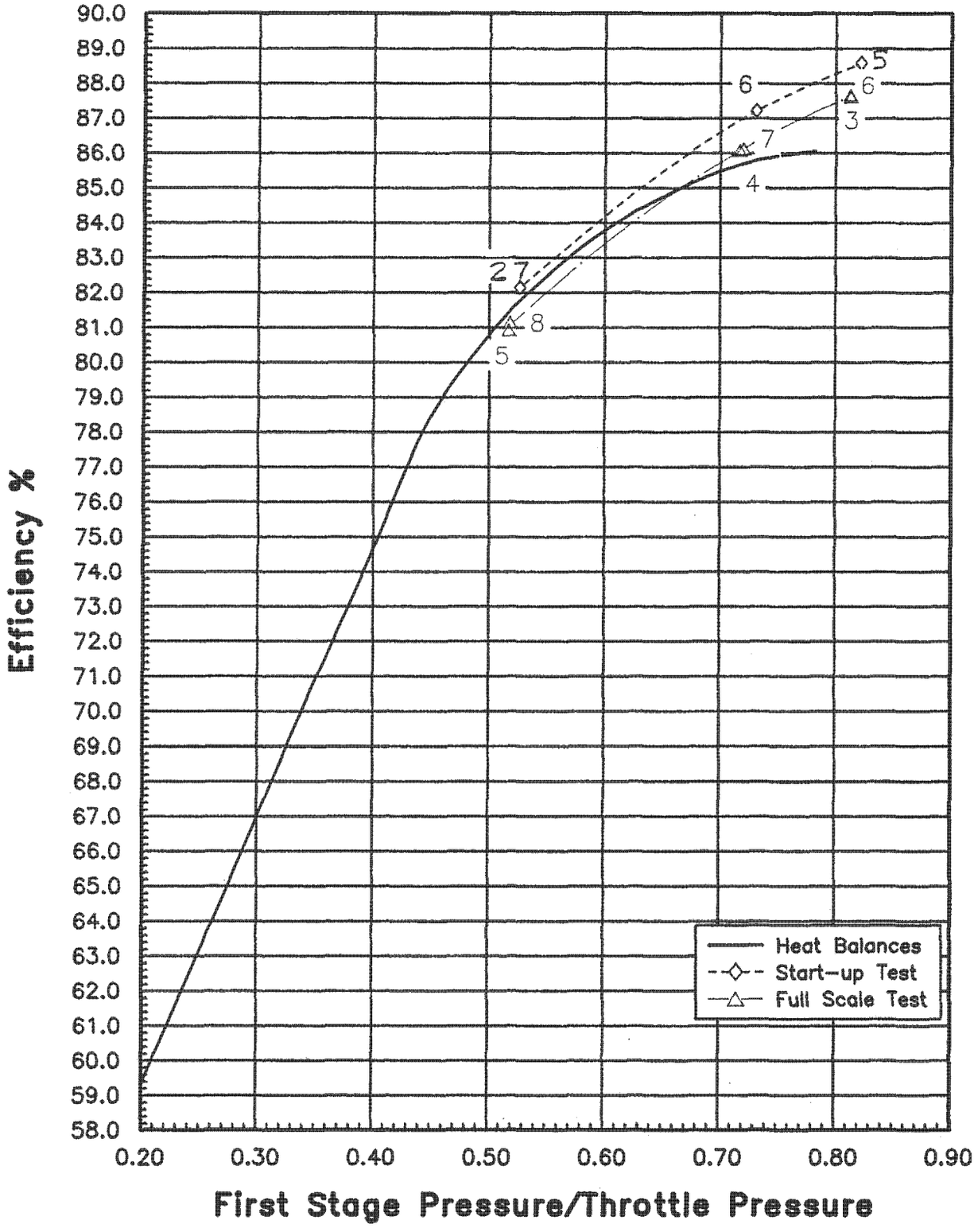

Figure 11

INTERMOUNTAIN POWER CO

Unit No. 1 T 150

Intermediate Pressure Section Efficiency

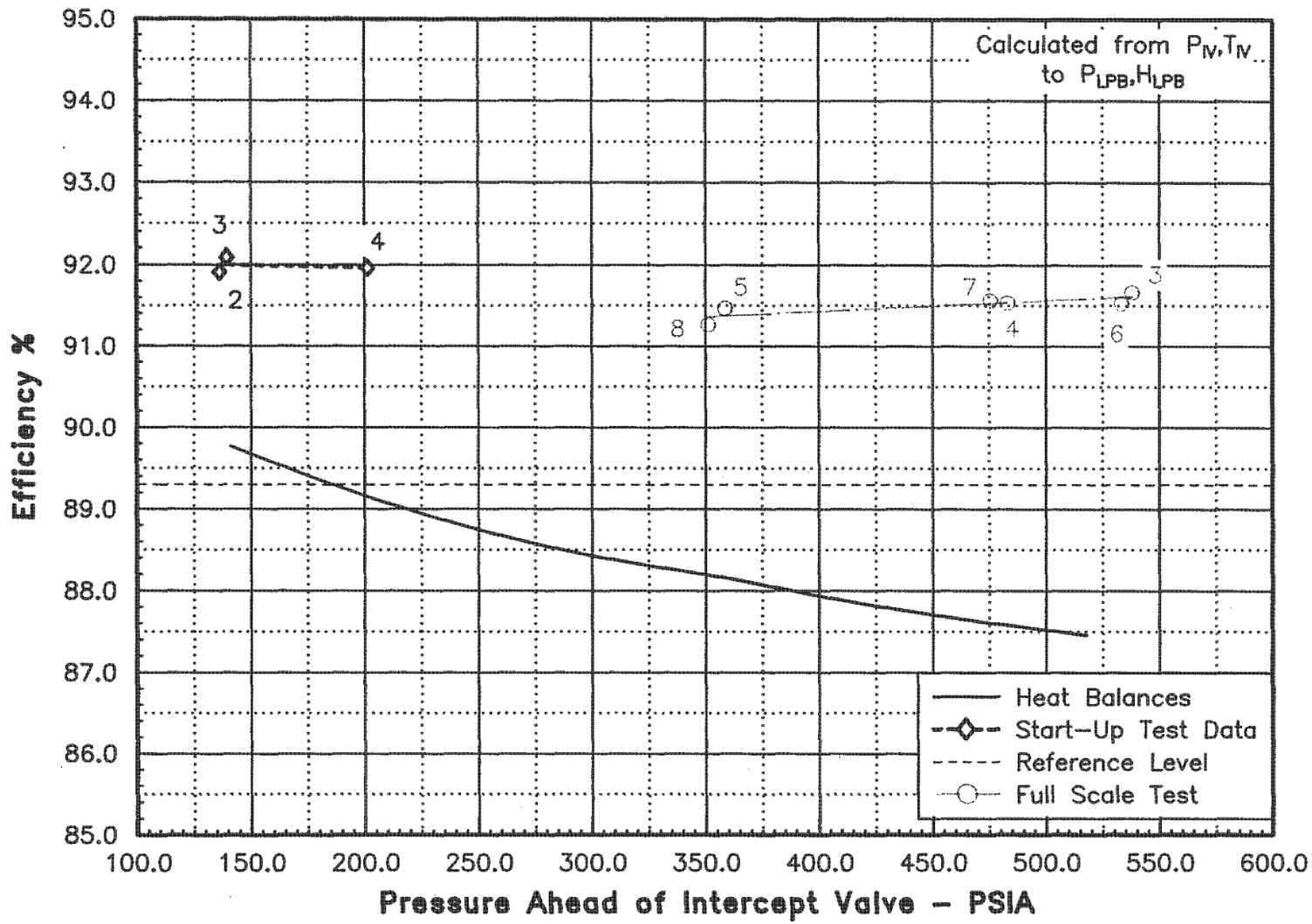

Figure 12

IP14_007240

INTERMOUNTAIN POWER CO.

IPP No. 1

Reheat Steam Path Efficiency to UEEP

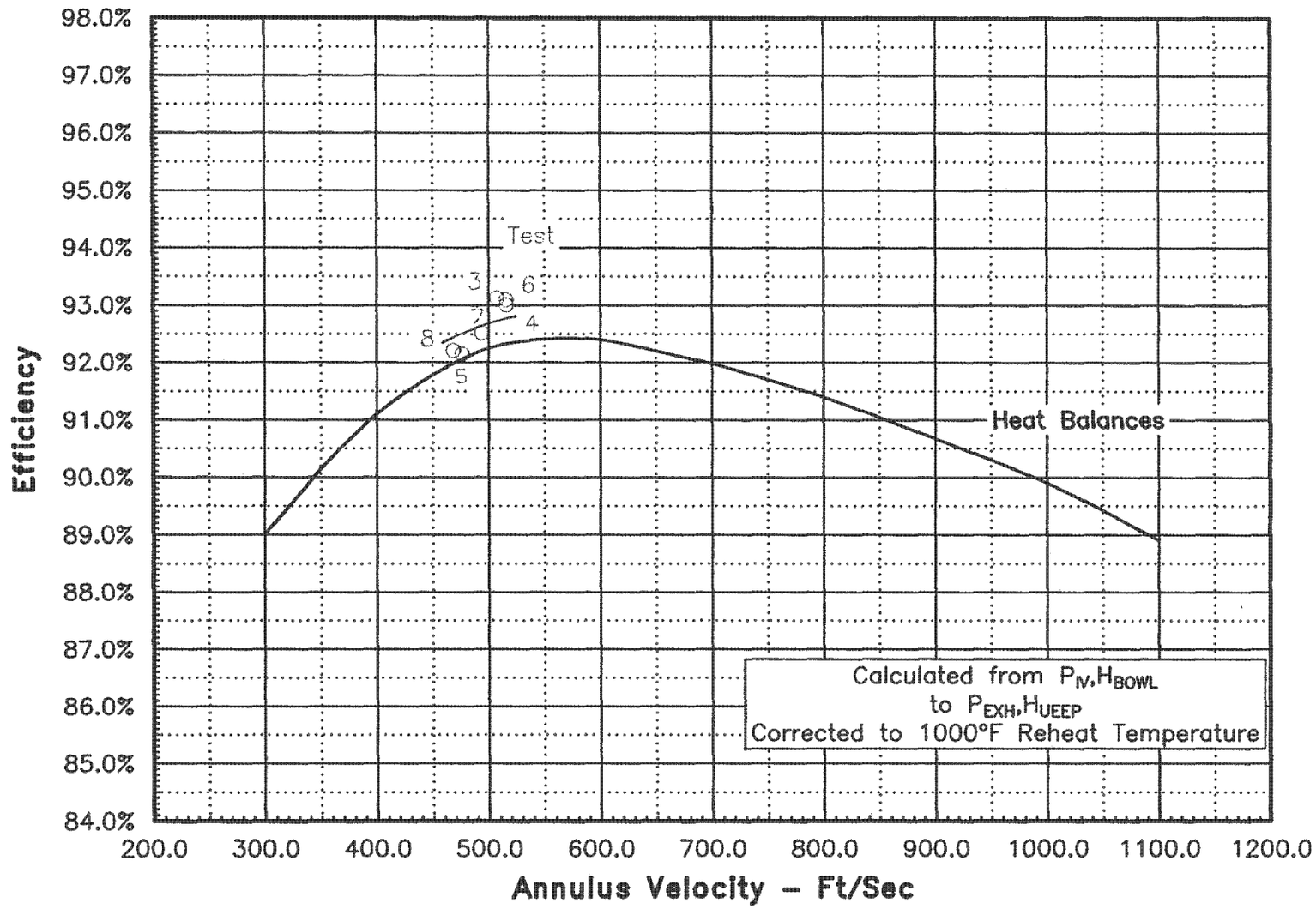

Figure 13

BOOK # 0956

IP14_007241

INTERMOUNTAIN POWER CO.

IPP No. 1

Reheat Steam Path Efficiency to ELEP

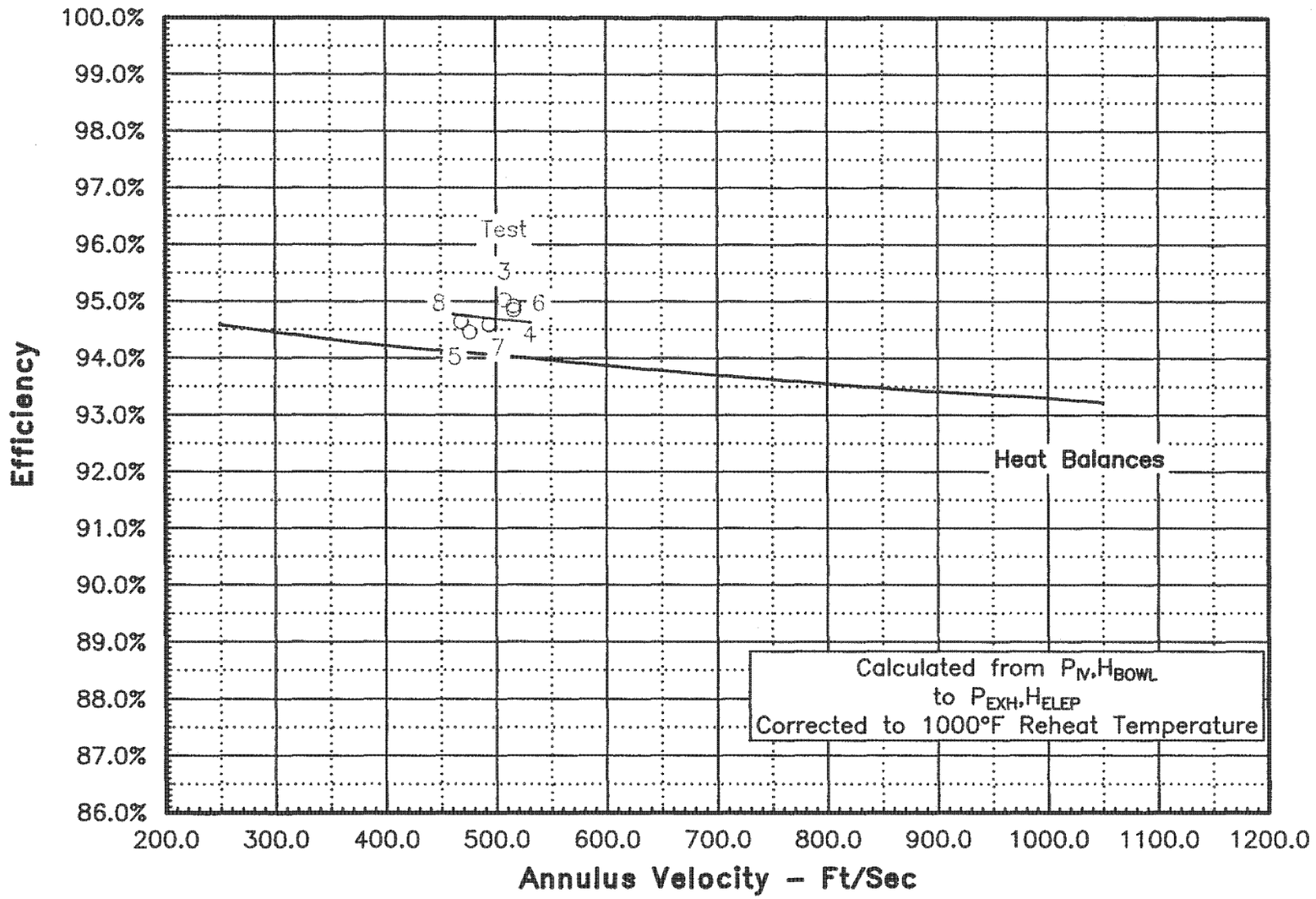

Figure 14

IP14_007242

INTERMOUNTAIN POWER CO.

IPP No. 1

Test Heat Rate

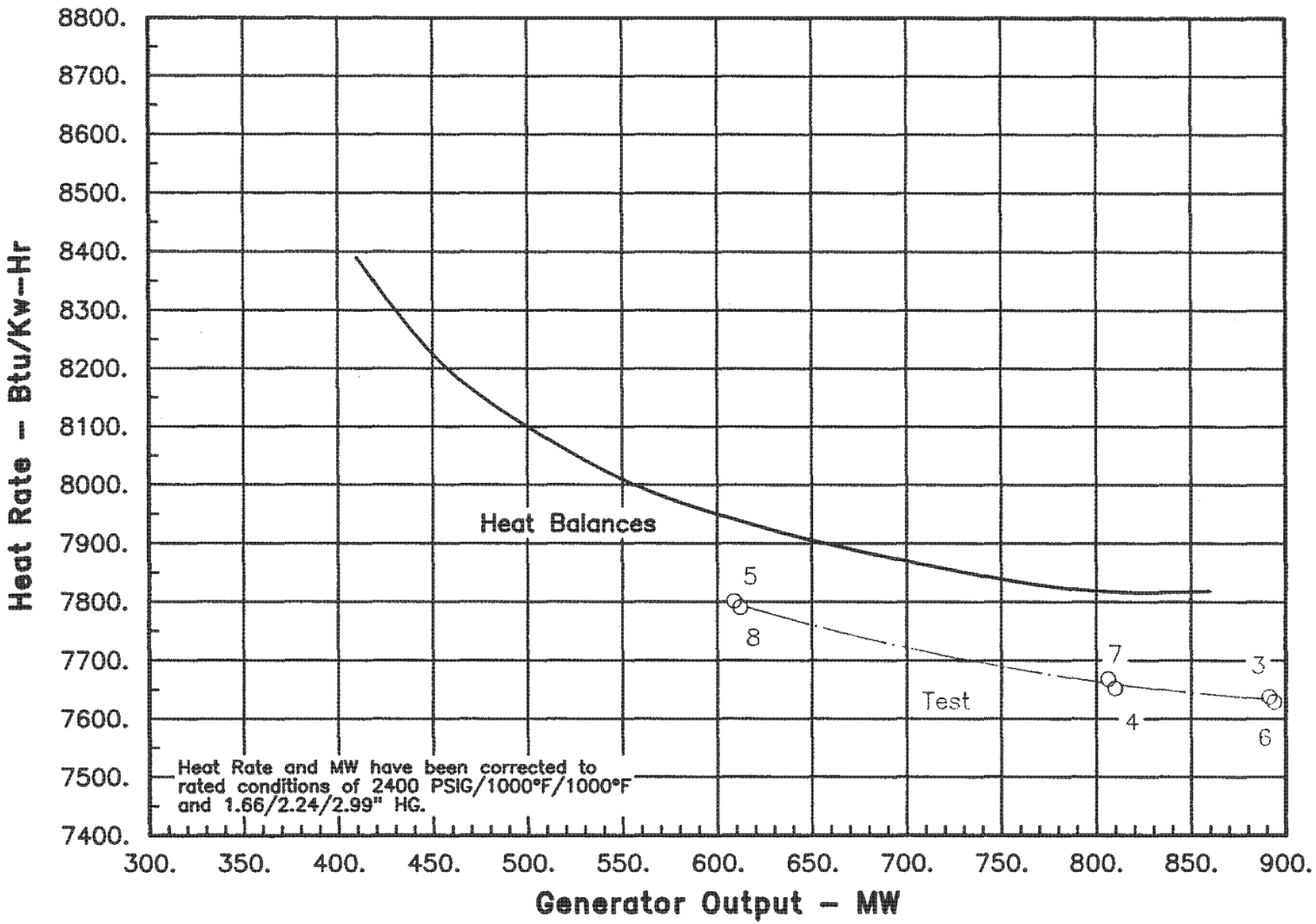

Figure 15

IP14_007243

INTERMOUNTAIN POWER CO.

IPP No. 1

Contract Cycle Heat Rate

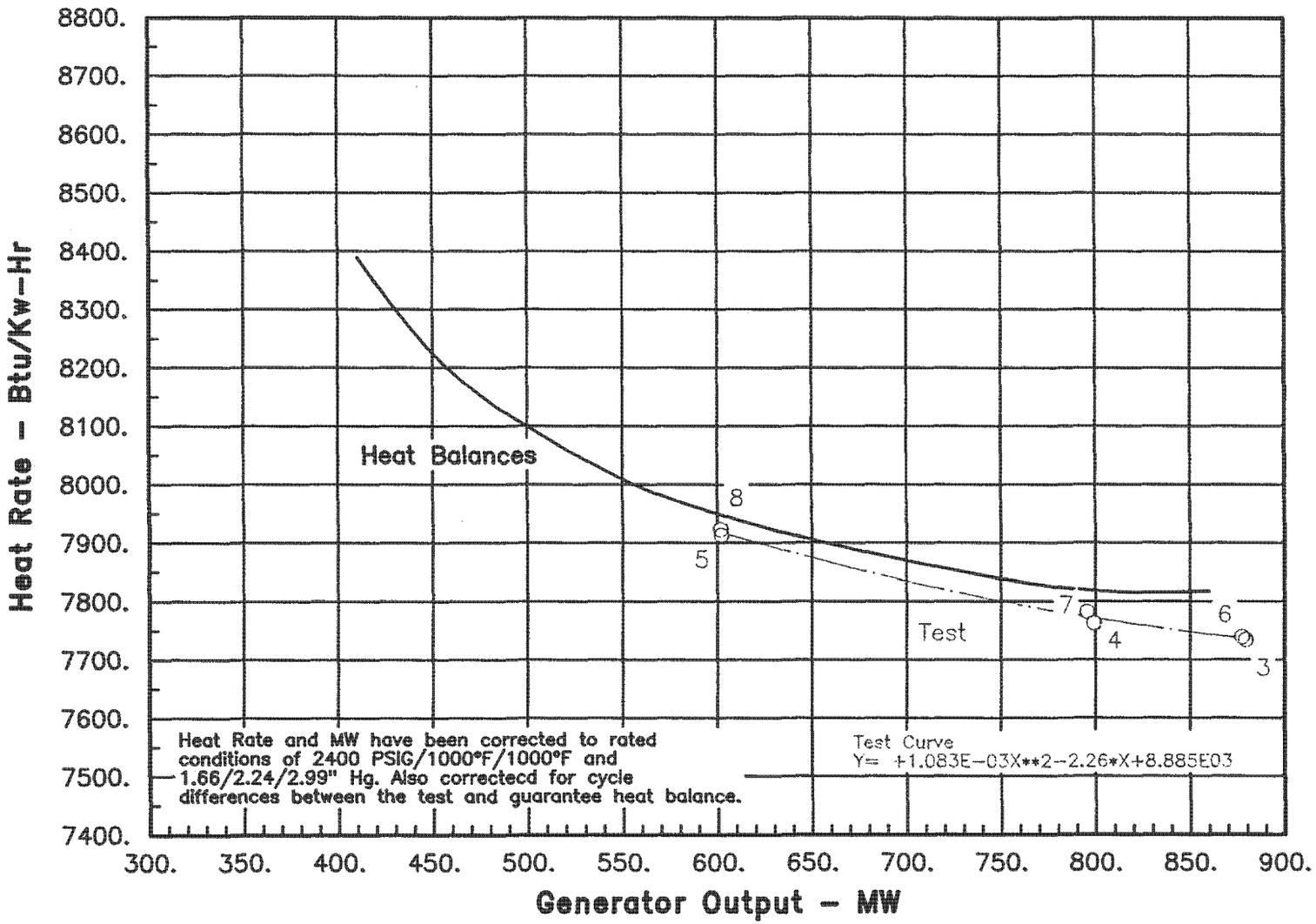

Figure 16

IP14_007244

481 HB 111

EXTRACTION ARRANGEMENT IS SCHEMATIC ONLY

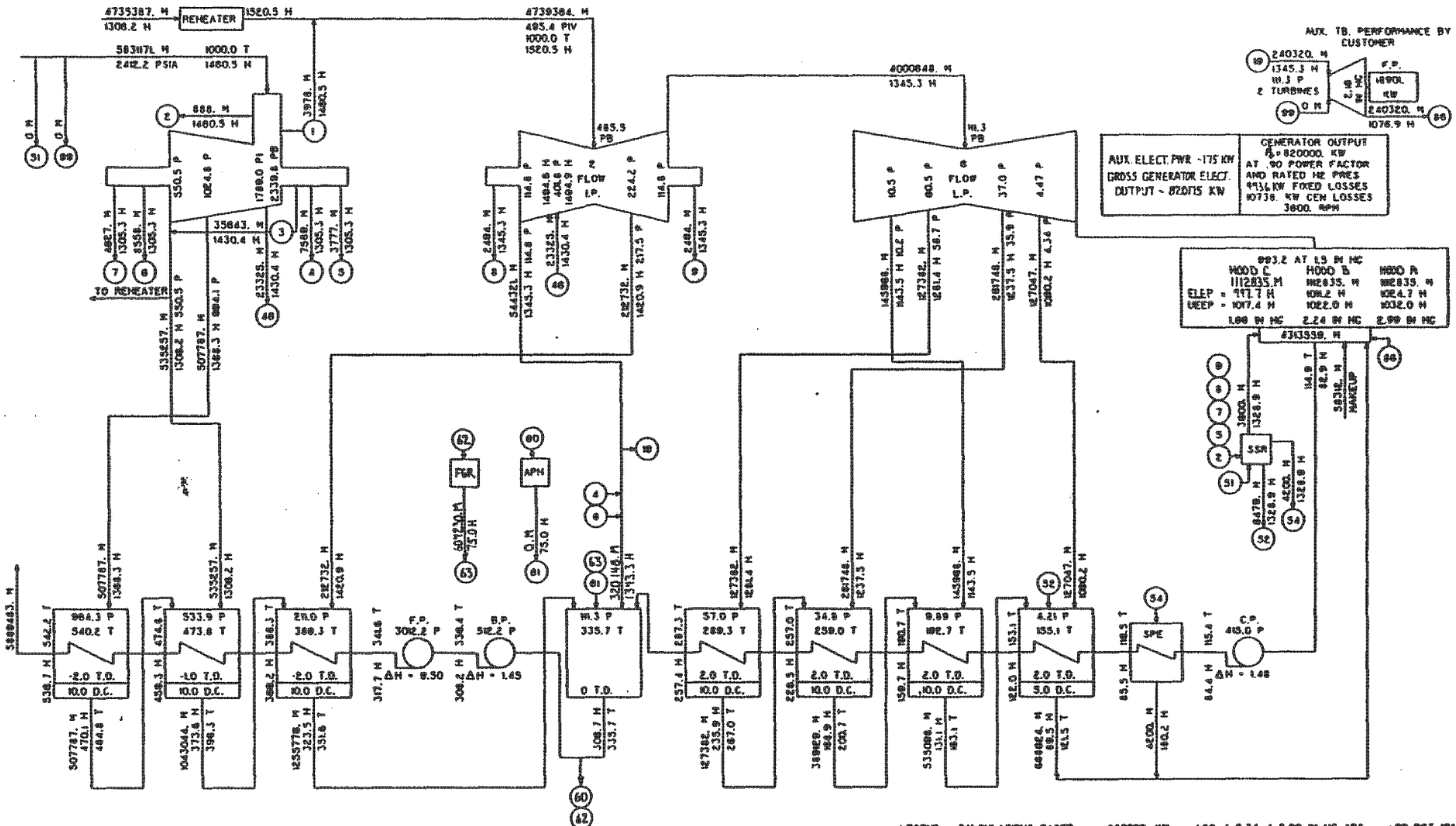

CUSTOMER DEFINED VALVE BEST POINT NET HEAT RATE = $\frac{5831171.M(1460.5H-536.7H)+4735387.M(1520.5H-1306.2H)+4313559.M(1.48H)+5831.M(720.5H-536.7H)}{820000\ KW}$ = 7816 $\frac{Btu}{Kw\text{-}Hr}$

LEGEND - CALCULATIONS BASED ON 1967 ASME STEAM TABLES
M - FLOW-LB/HR
P - PRESSURE-PSIA
H - ENTHALPY-BTU/LB
T - TEMPERATURE-F DEGREES

820000 KW 1.66 / 2.24 / 2.99 IN HG ABS. 1.00 PCT MU
TCGF 30.0 IN. LSB 3600 RPM
2400 PSIG 1000. / 1000. T
GEN- 991000. KVA .90 PF LIQ

KW Koran

03IGT 1 D80291 9523 0 5
481 HB 111 8-24-81

GENERAL ELECTRIC COMPANY, SCHENECTADY N.Y.

Fig. 17A

IP14_007245

NB 145

EXTRACTION ARRANGEMENT IS SCHEMATIC ONLY

CALCULATED DATA - NOT GUARANTEED

RATING FLOW IS 583171. M AT INLET STEAM CONDITIONS OF 2412.2 PSIA AND 1000.0 T
TO ASSURE THAT THE TURBINE WILL PASS THIS FLOW, CONSIDERING VARIATIONS IN FLOW COEFFICIENTS
FROM EXPECTED VALUES, SHOP TOLERANCES ON DRAWING AREAS, ETC. WHICH MAY AFFECT THE FLOW, THE
TURBINE IS BEING DESIGNED FOR A DESIGN FLOW (RATING FLOW PLUS 5.0 PERCENT) OF 6122730. M

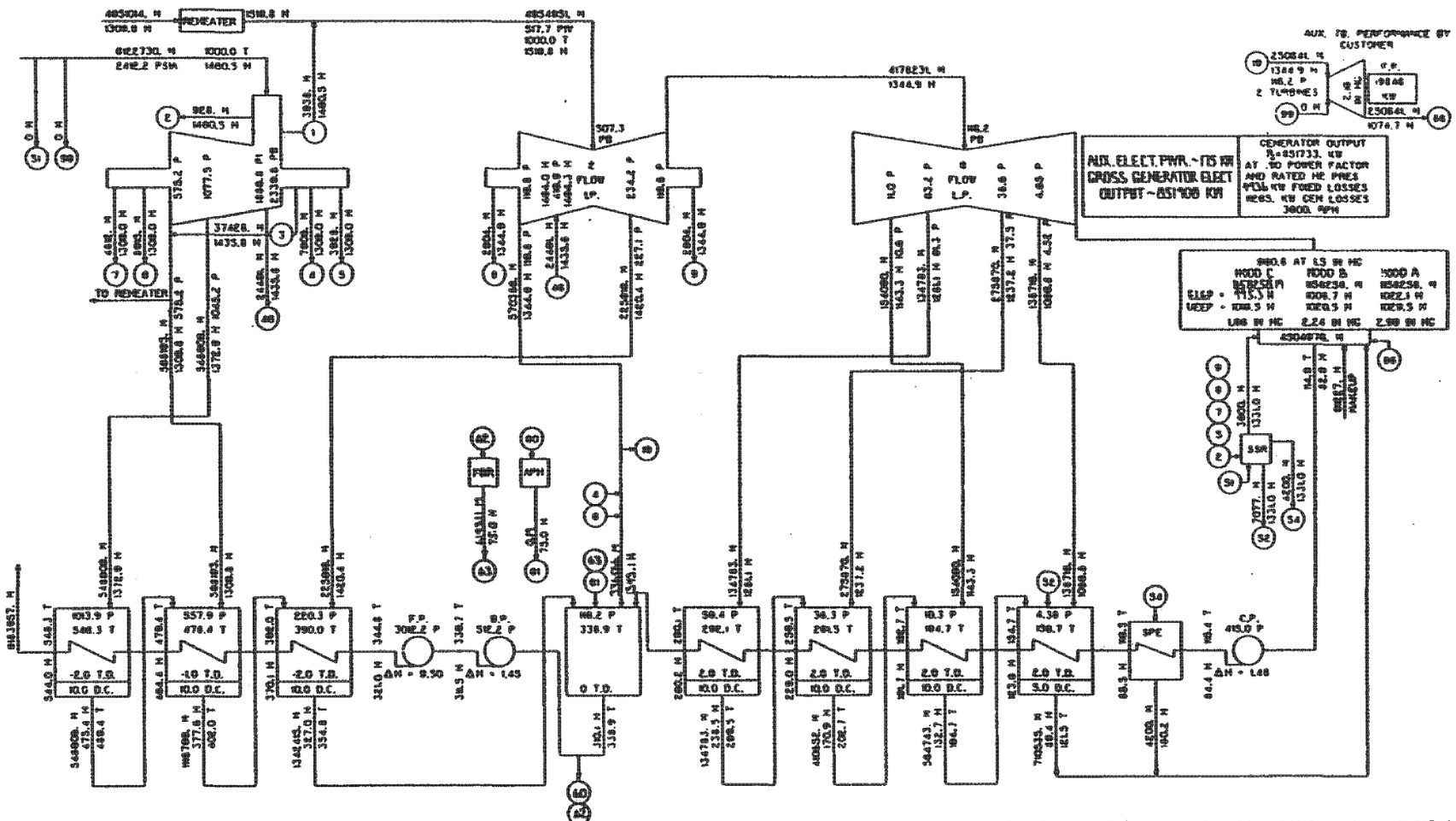

CUSTOMER DEFINED VALVE BEST POINT NET HEAT RATE = $\frac{6122730.M(1460.5H-544.0H)+4951014.M(1519.8H-1309.8H)+4504976.M(1.48H)+6123.M(720.5H-544.0H)}{851733\ KW}$ = 7818 $\frac{BTU}{KW/HR}$

LEGEND - CALCULATIONS BASED ON 1967 ASME STEAM TABLES
M - FLOW-LB/HR
P - PRESSURE-PSIA
H - ENTHALPY-BTU/LB
T - TEMPERATURE-F DEGREES

820000. KW 1.64 / 2.24 / 2.99 IN HG ABS. 1.00 PCT HU
TCBF 30.0 IN LSB 3600 RPM
2400 PSIG 1000 / 1000 T
GEN- 991000. KVA 90 PF LID

KW Koran

534AT 1 DB0291 0 G 6
481 NB 145 7-17-81

GENERAL ELECTRIC COMPANY, SCHENECTADY N.Y.

Fig. 17B

IP14_007246

481 HB 112

EXTRACTION ARRANGEMENT IS SCHEMATIC ONLY

CALCULATED DATA - NOT GUARANTEED

RATING FLOW IS 583171. M AT INLET STEAM CONDITIONS OF 2412.2 PSIA AND 1000.0 T
TO ASSURE THAT THE TURBINE WILL PASS THIS FLOW, CONSIDERING VARIATIONS IN FLOW COEFFICIENTS FROM EXPECTED VALUES, SHOP TOLERANCES ON DRAWING AREAS, ETC. WHICH MAY AFFECT THE FLOW, THE TURBINE IS BEING DESIGNED FOR A DESIGN FLOW (RATING FLOW PLUS 5.0 PERCENT) OF 612273.0. M
THE EQUIVALENT DESIGN FLOW AT 2532.2 PSIA AND 1000.0 T IS 6449000. M .

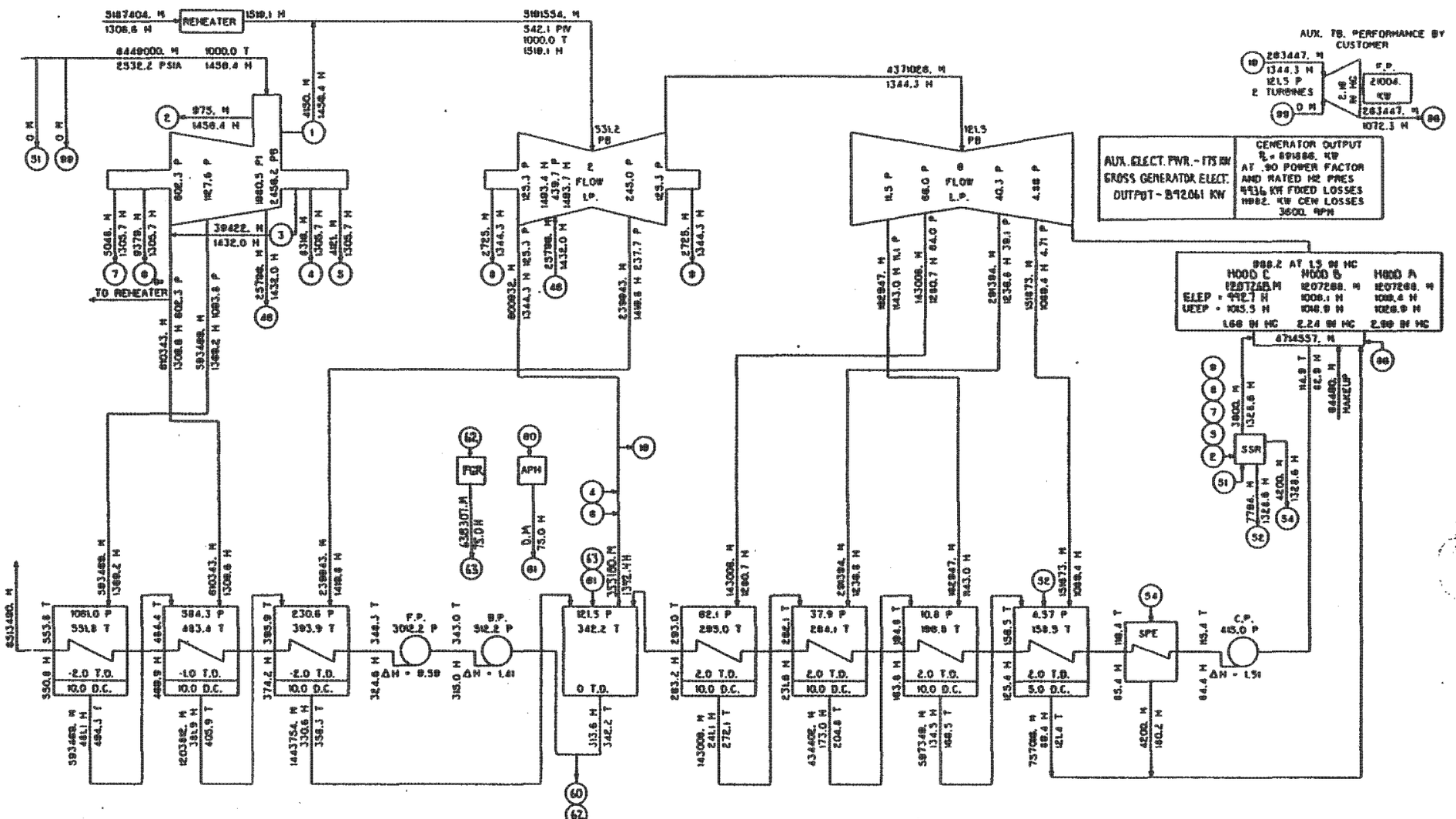

CUSTOMER DEFINED VALVE BEST POINT NET HEAT RATE = $\frac{6449000.M(1456.4H-550.8H)+5187404.M(1519.1H-1306.6H)+4714557.M(1.51H)+6449.M(720.5H-550.8H)}{891886\ KW}$ = 7793 $\frac{Btu}{Kw\text{-}Hr}$

LEGEND CALCULATIONS BASED ON 1967 ASME STEAM TABLES
M - FLOW-LB/HR
P - PRESSURE-PSIA
H - ENTHALPY-BTU/LB
T - TEMPERATURE-F DEGREES

820000. KW 1.68 / 2.24 / 2.98 IN HG ABS. 1.00 PCT MU
TC6F 30.0 IN. LSB 3600 RPM
2480 PSIG 1000. / 1000. T
GEN- 991000. KVA .90 PF LIQ

Fig. 17C

GENERAL ELECTRIC COMPANY. SCHENECTADY N.Y.

031GT 1 DB0291 0 0 12
481 HB 112

8-24-81

IP14_007247

481 HB 146

EXTRACTION ARRANGEMENT IS SCHEMATIC ONLY

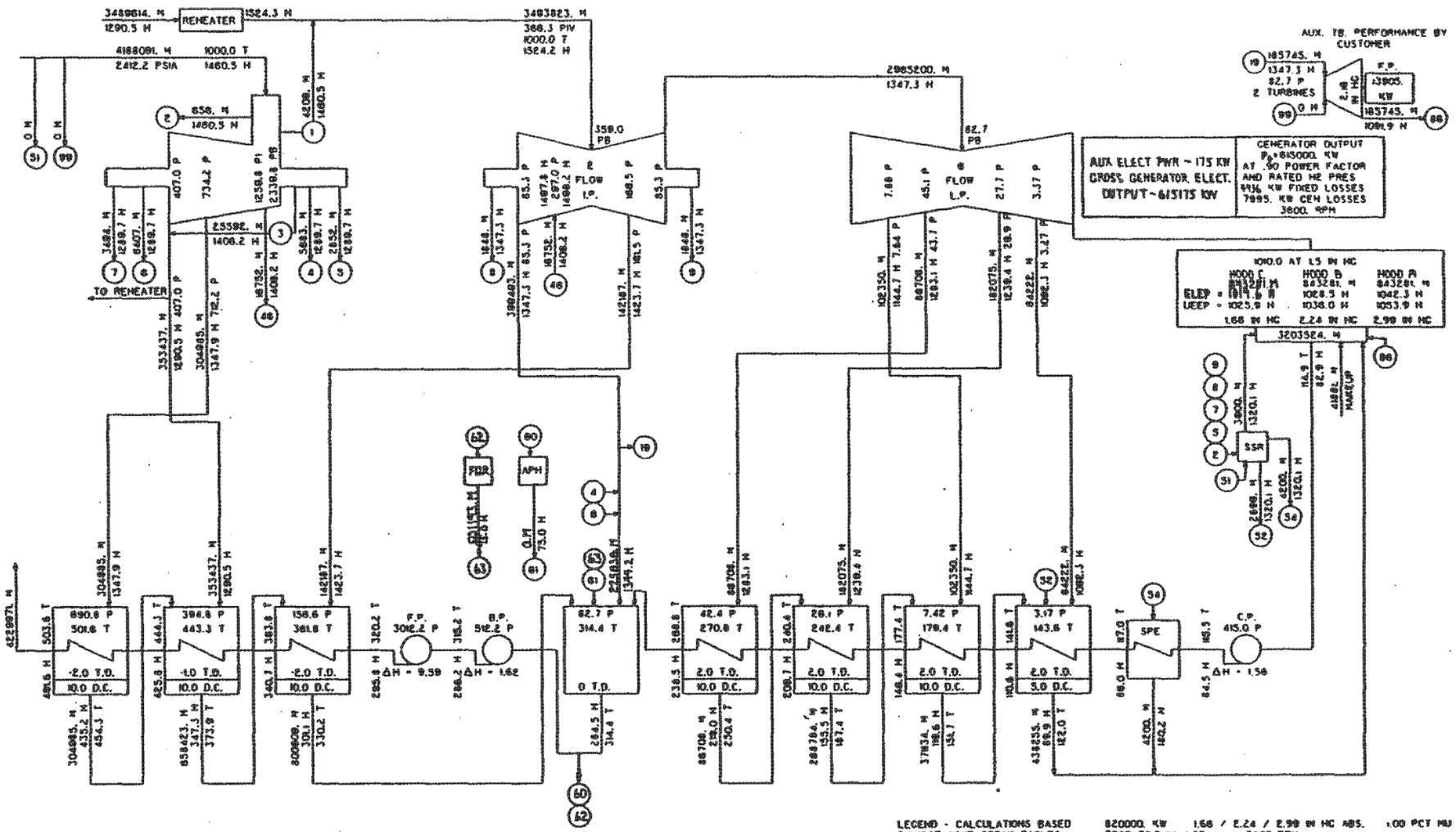

CUSTOMER DEFINED VALVE BEST POINT NET HEAT RATE = $\frac{4188091.M(1460.5H-491.6H)+3489614.M(1524.3H-1290.5H)+3203524.M(1.56H)+4188.M(720.5H-491.6H)}{615000\ KW} = 7934\ \frac{BTU}{KW/HR}$

LEGEND - CALCULATIONS BASED ON 1967 ASME STEAM TABLES
M - FLOW-LB/HR
P - PRESSURE-PSIA
H - ENTHALPY-BTU/LB
T - TEMPERATURE-F DEGREES

820000. KW 1.66 / 2.24 / 2.99 IN HG ABS. 1.00 PCT MU
TC6F 30.0 IN. LSB 3600 RPM
2400 PSIG 1000. / 1000. F
CEN- 994000. KVA .90 PF LIQ

534AT 1 DB0291 6840 0 13
481 HB 146 7-17-81

GENERAL ELECTRIC COMPANY, SCHENECTADY N.Y.

Fig. 17D

IP14_007248

EXTRACTION ARRANGEMENT IS SCHEMATIC ONLY

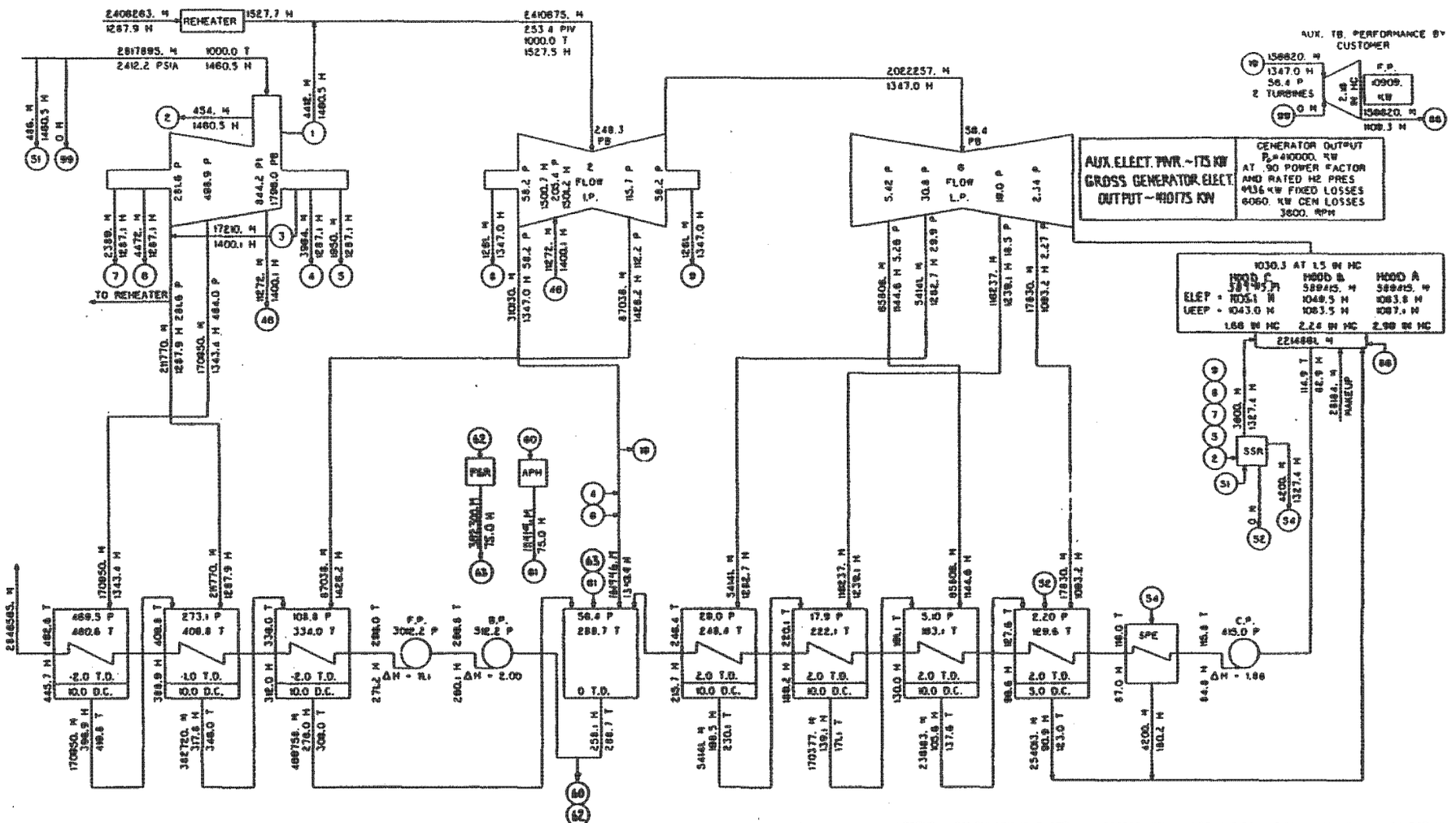

CUSTOMER DEFINED VALVE BEST POINT NET HEAT RATE = $\frac{2817895.M(1460.5H-445.7H)+2406263.M(1527.7H-1287.9H)+2214861.M(1.88H)+2818.M(720.5H-445.7H)}{410000\ KW}$ = 8394 $\frac{BTU}{KW/HR}$

LEGEND - CALCULATIONS BASED ON 1967 ASME STEAM TABLES
M - FLOW-LB/HR
P - PRESSURE-PSIA
H - ENTHALPY-BTU/LB
T - TEMPERATURE-F DEGREES

820000. KW 1.68 / 2.24 / 2.99 IN HG ABS. 100 PCT MU
TC6F 30.0 IN. LSB 3600 RPM
2400 PSIG 1000. / 1000. T
GEN- 999000. KVA .90 PF LIQ

Kline Koeam

534AT 1 080E3M 4802 0 M
481 HB 147 7-17-81

GENERAL ELECTRIC COMPANY, SCHENECTADY N.Y.

Fig. 17E

IP14_007249

481 HB 148

EXTRACTION ARRANGEMENT IS SCHEMATIC ONLY

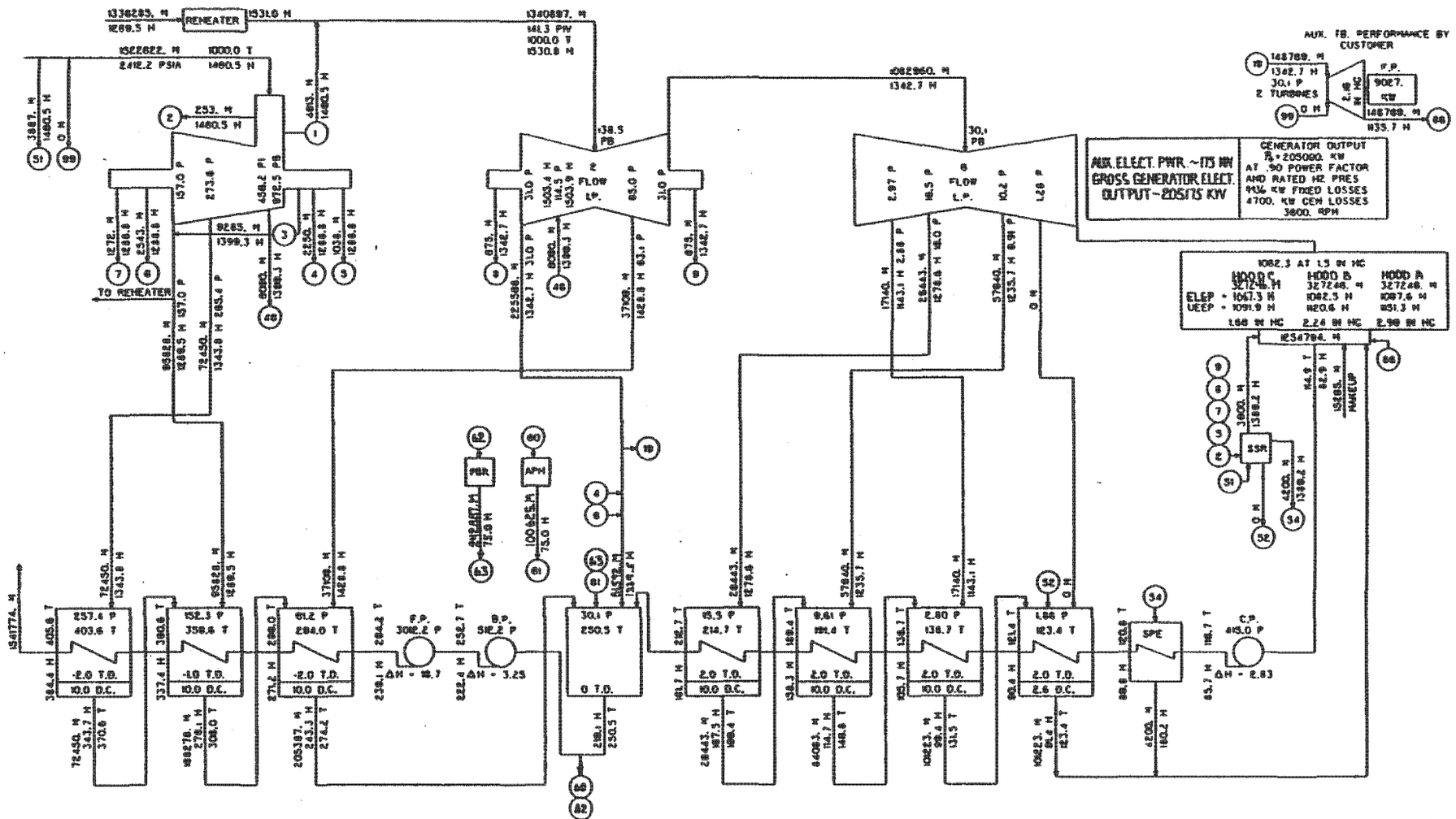

CUSTOMER DEFINED VALVE BEST POINT NET HEAT RATE = $\frac{1522622.M(1460.5H-384.4H)+1336285.M(1531.0H-1289.5H)+1254794.M(2.83H)+1523.M(720.5H-384.4H)}{205000\ KW}$ = 9587 $\frac{BTU}{KW/HR}$

LEGEND - CALCULATIONS BASED ON 1987 ASME STEAM TABLES
M - FLOW-LB/HR
P - PRESSURE-PSIA
H - ENTHALPY-BTU/LB
T - TEMPERATURE-F DEGREES

820000. KW 1.68 / 2.24 / 2.98 IN HG ABS. 1.00 PCT MU
TC6F 30.0 IN. LSB 3600 RPM
2400 PSIG 1000. / 1000. T
GEN- 991000. KVA 90 PF LIQ

KW KORA

534AT 1 080281 2486 0 15
481 HB 148 7-17-81

GENERAL ELECTRIC COMPANY. SCHENECTADY N.Y.

Fig. 17F

IP14_007250

INTERMOUNTAIN POWER CO.

IPP No. 1

1st Stage Pressure

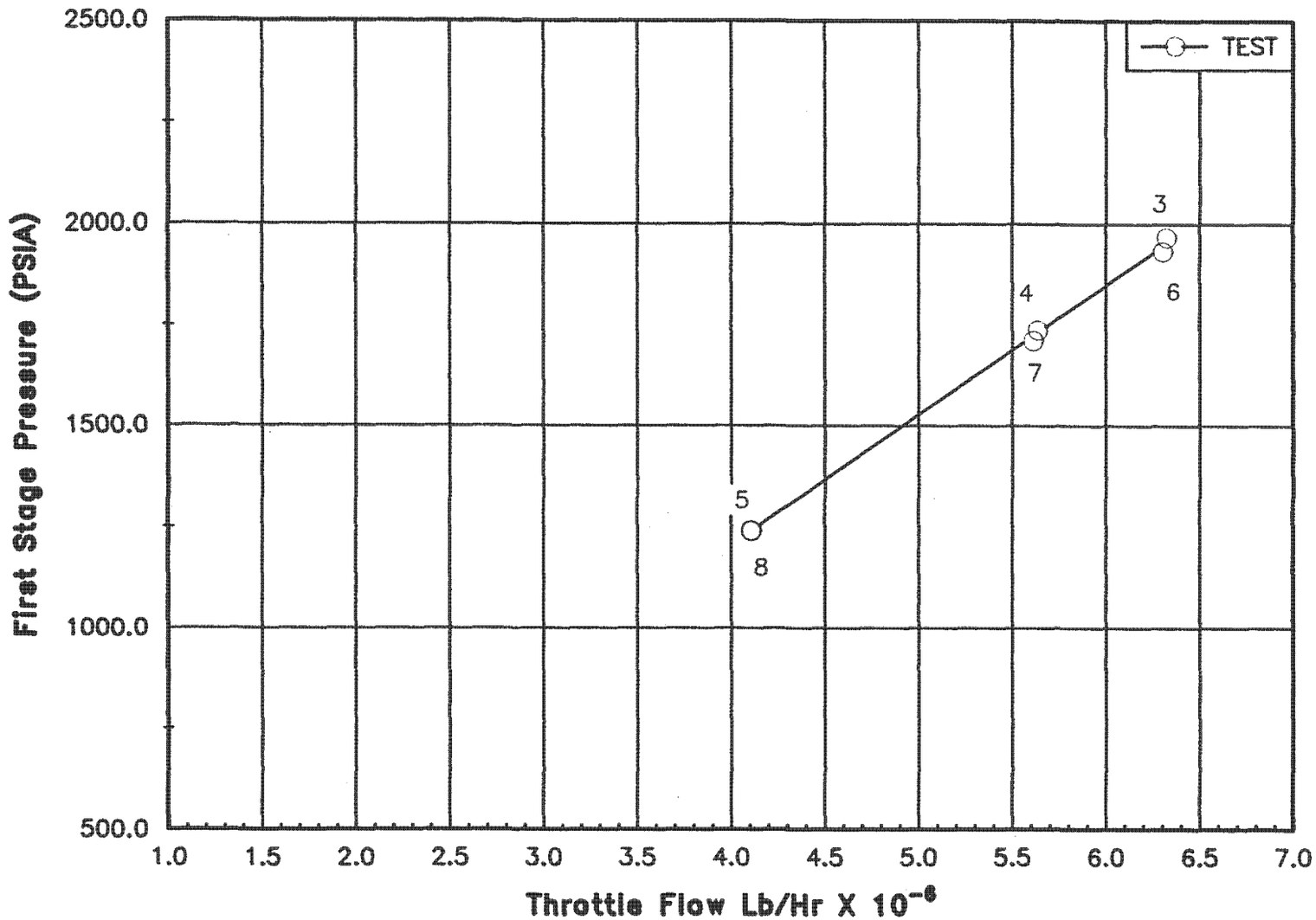

Figure 18

IP14_007251

INTERMOUNTAIN POWER CO.

IPP No. 1

First Stage Flow Function

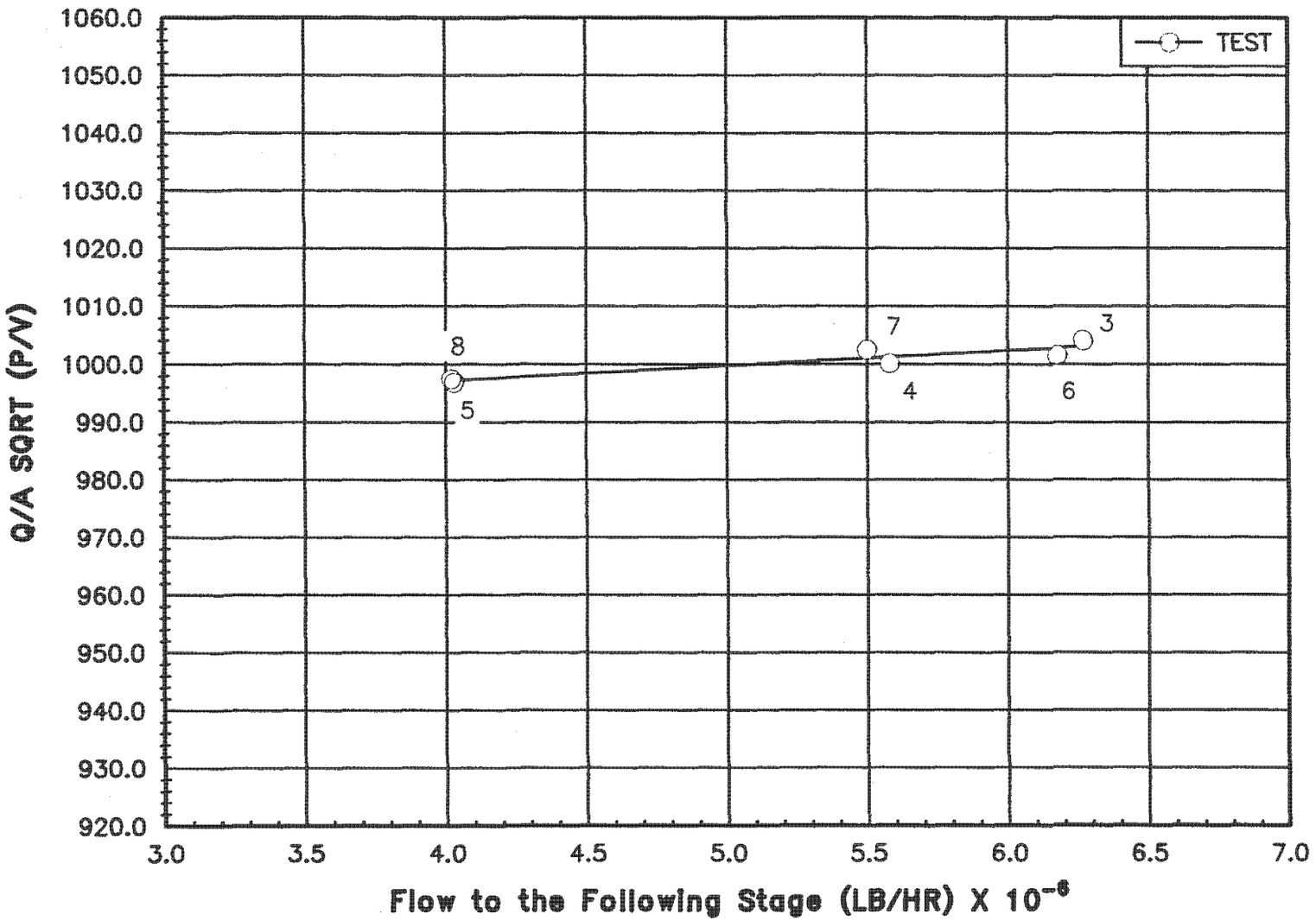

Figure 19

IP14_007252

INTERMOUNTAIN POWER CO.

IPP No. 1

4th Stage Flow Function

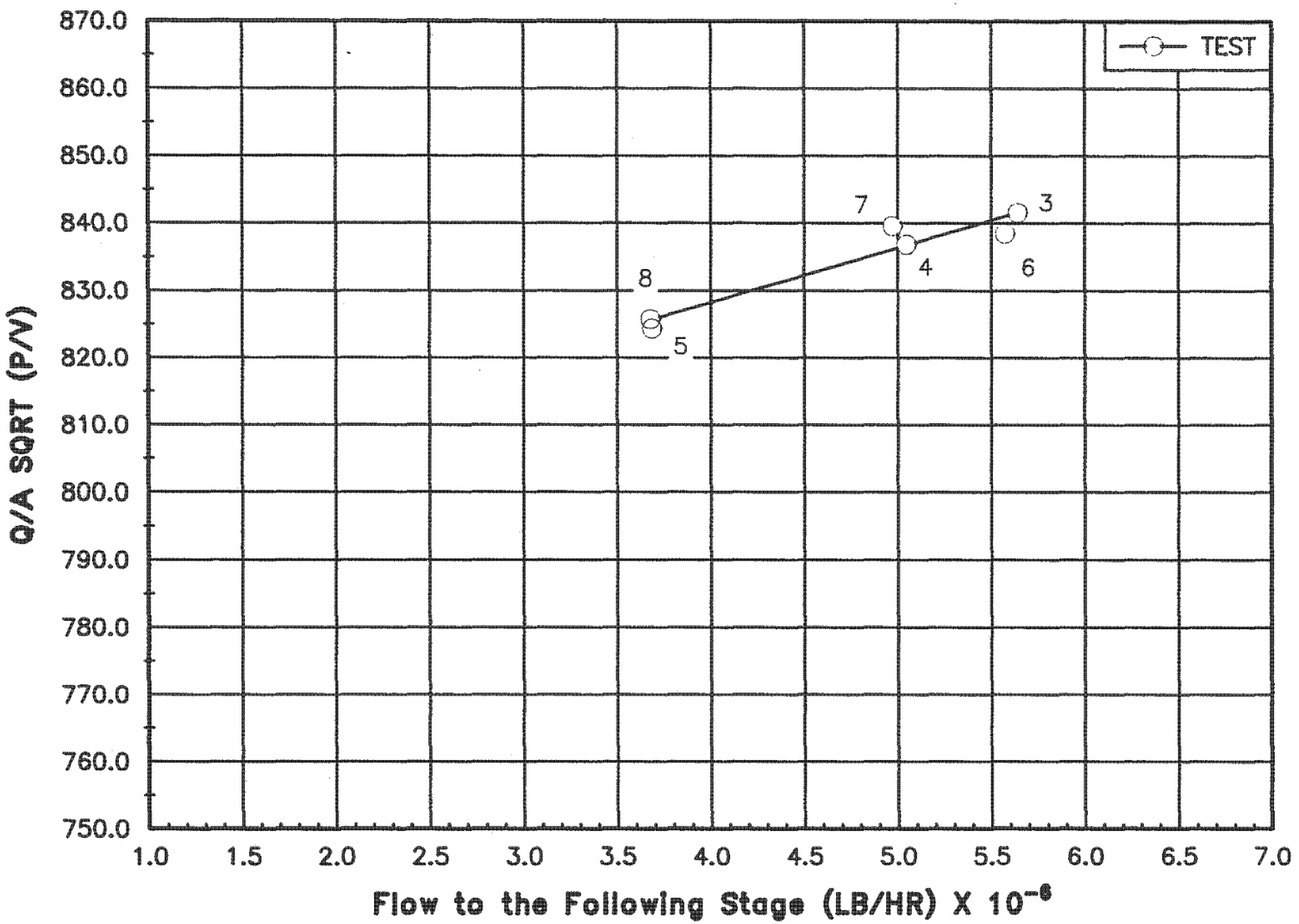

Figure 20

IP14_007253

INTERMOUNTAIN POWER CO.

IPP No. 1

Hot Reheat Flow Function

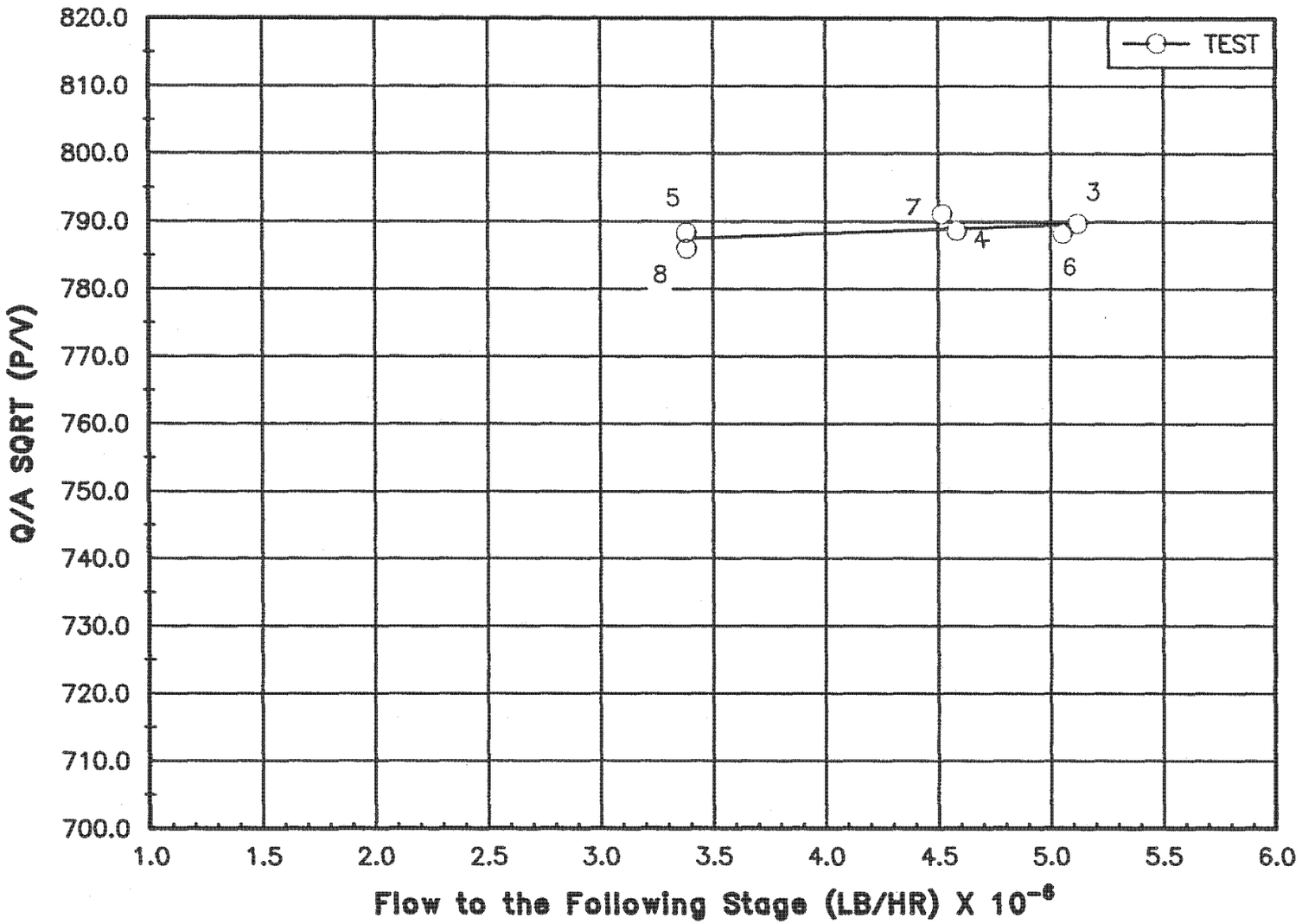

Figure 21

IP14_007254

INTERMOUNTAIN POWER CO.

IPP No. 1

Reheat Bowl Flow Function

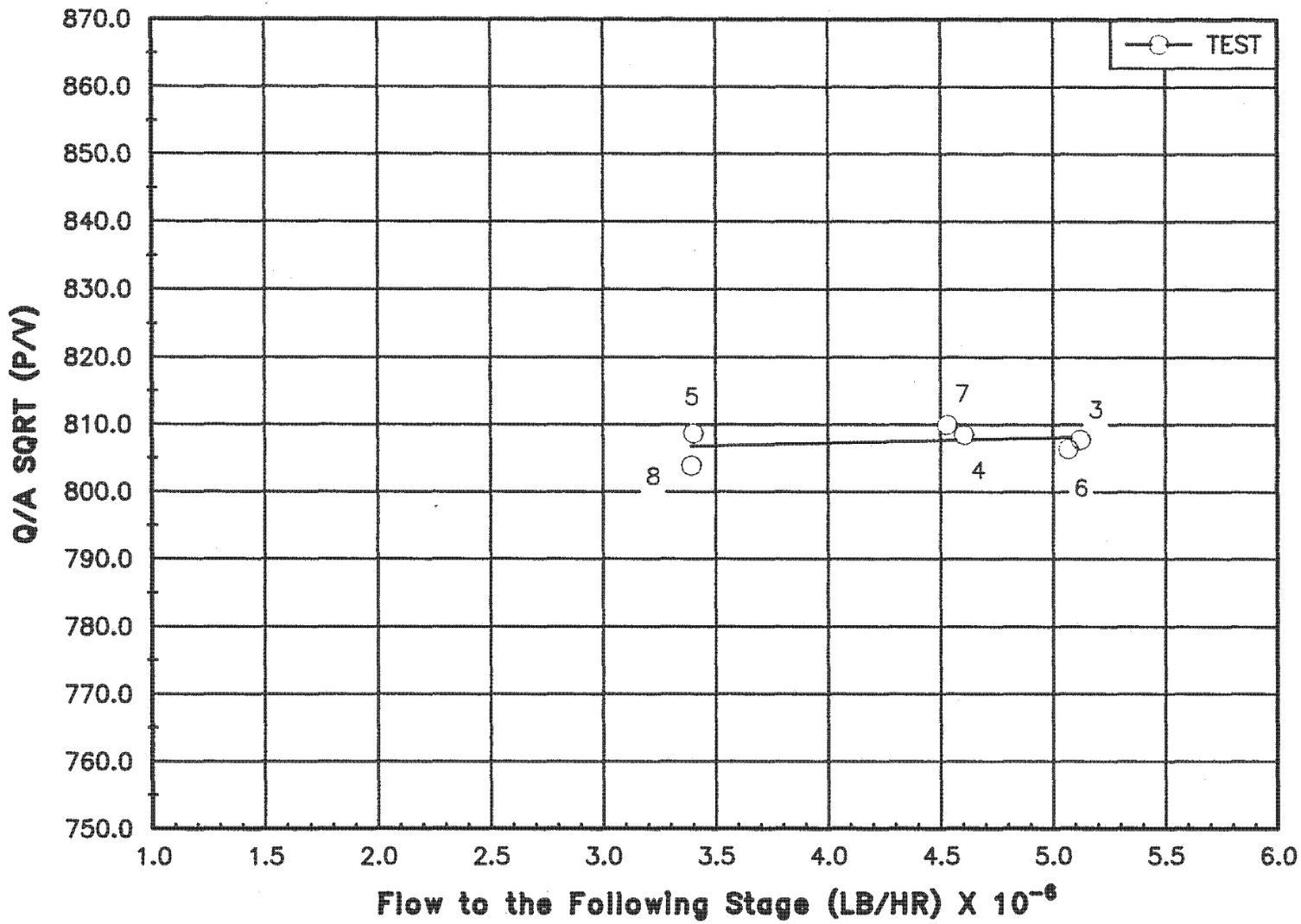

Figure 22

IP14_007255

INTERMOUNTAIN POWER CO.

IPP No. 1

11th Stage Flow Function

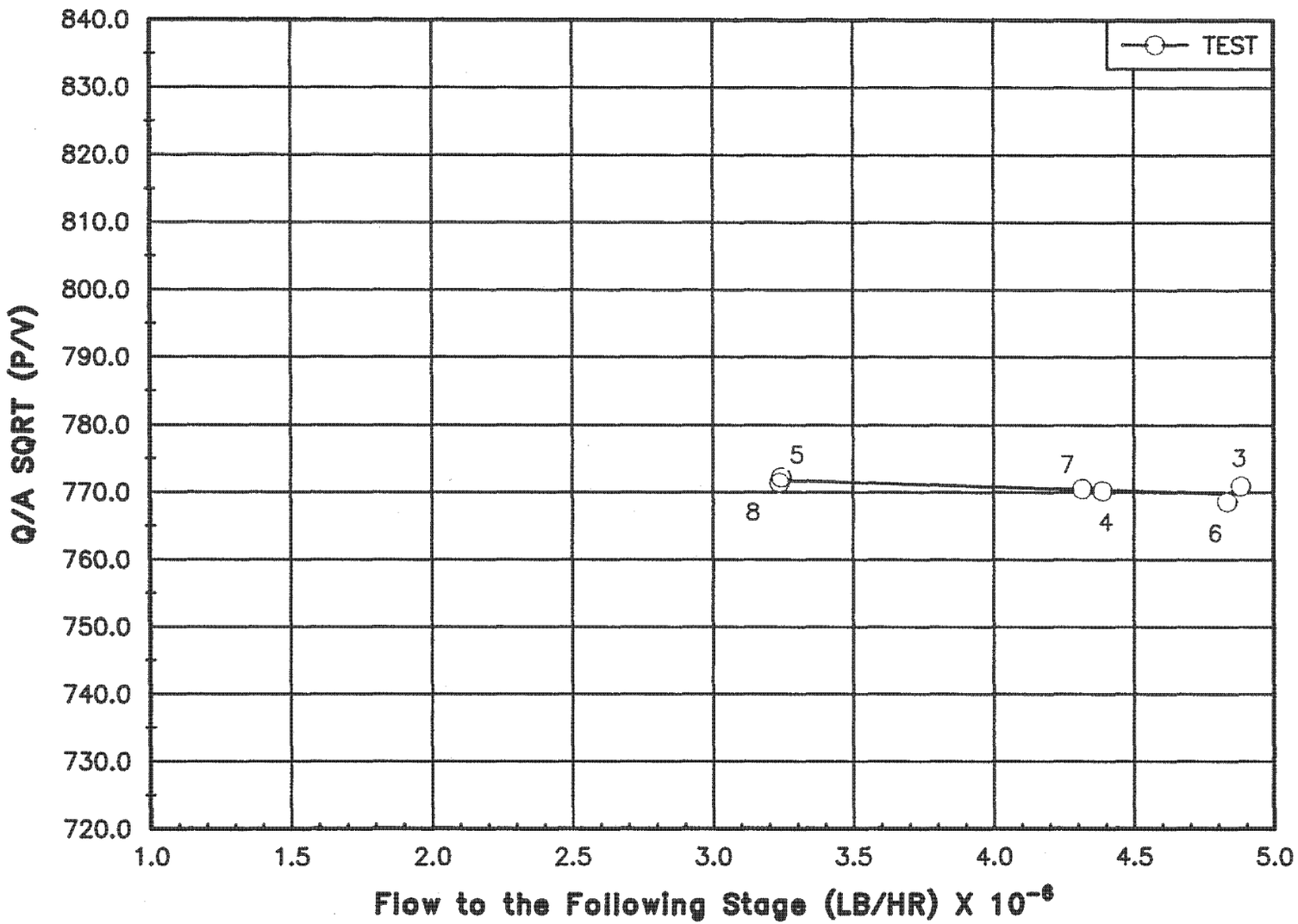

Figure 23

IP14_007256

INTERMOUNTAIN POWER CO.

IPP No. 1

Low Press. Bowl Flow Function

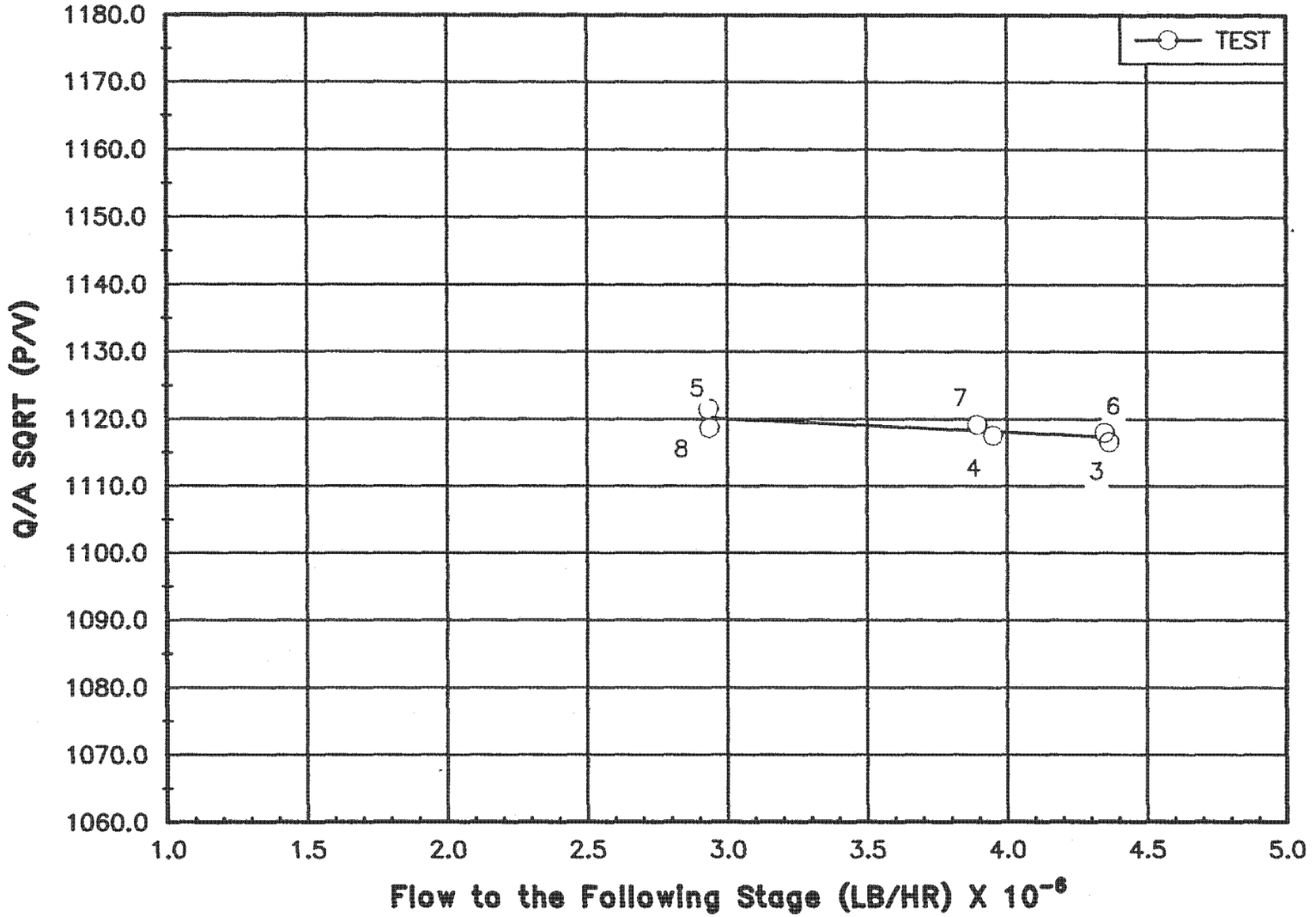

Figure 24

IP14_007257

INTERMOUNTAIN POWER CO.

IPP No. 1

15th Stage Flow Function

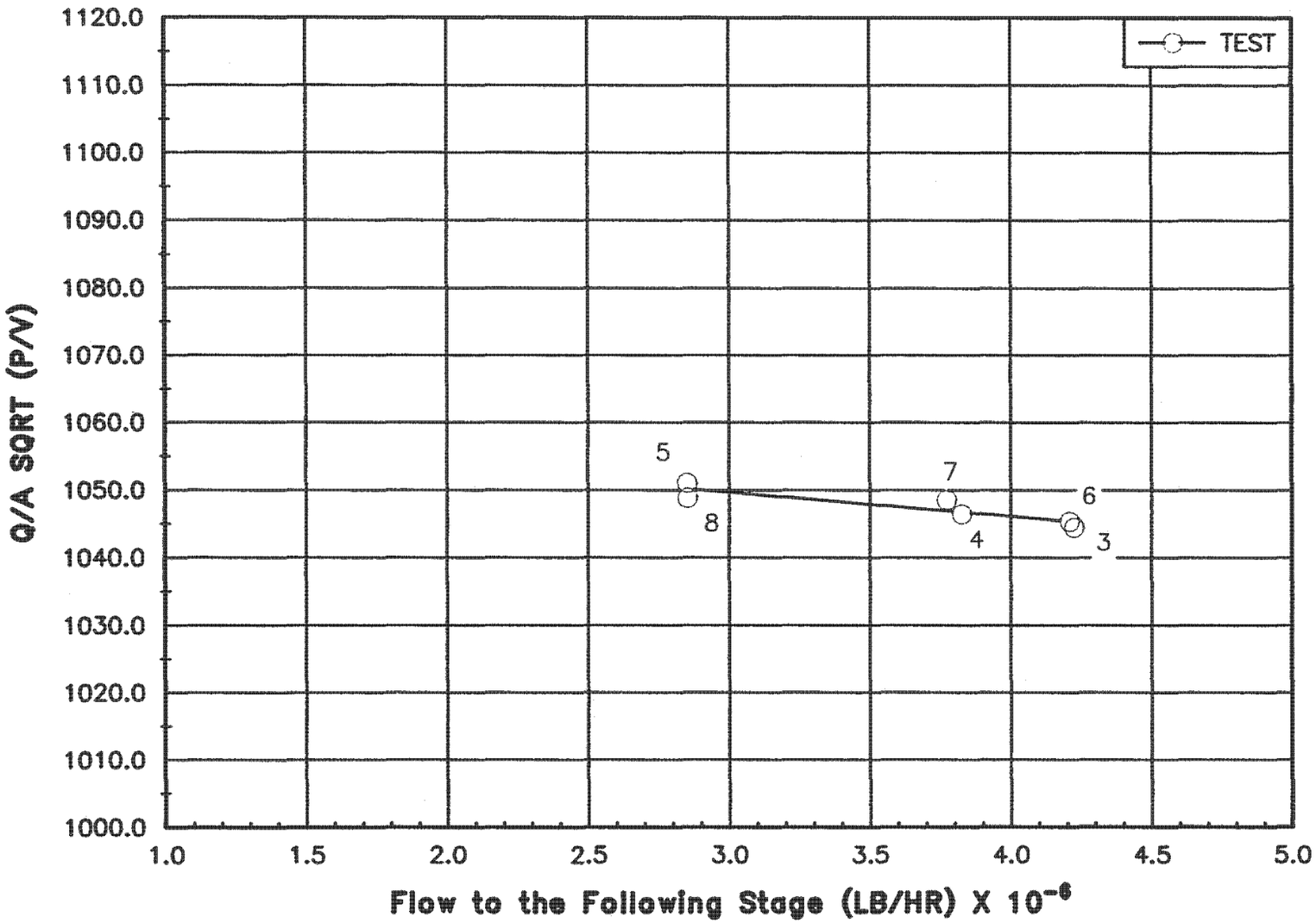

Figure 25

IP14_007258

INTERMOUNTAIN POWER CO.

IPP No. 1

16th Stage Flow Function

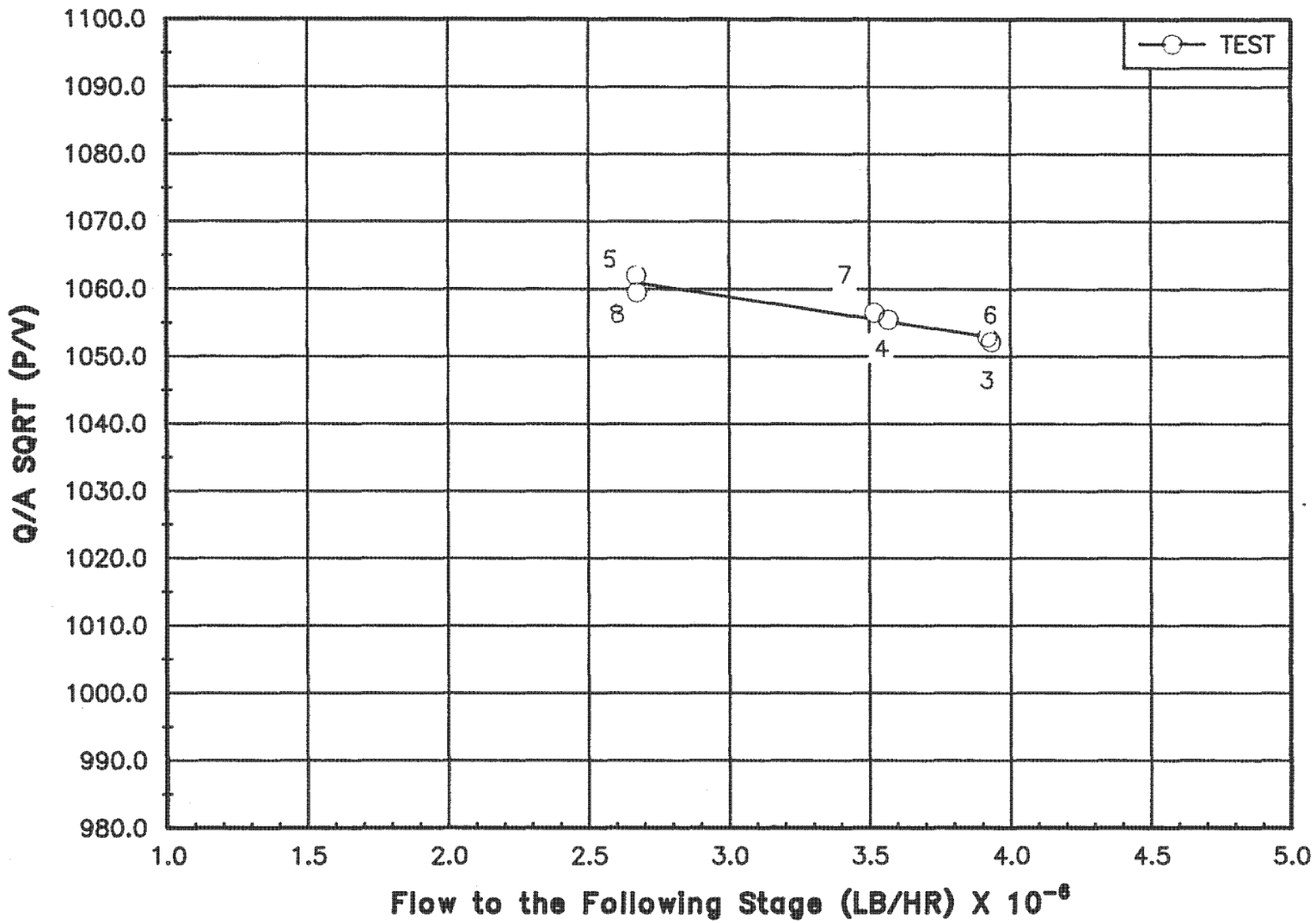

Figure 26

IP14_007259

INTERMOUNTAIN POWER CO.

IPP No. 1

18th Stage Flow Function

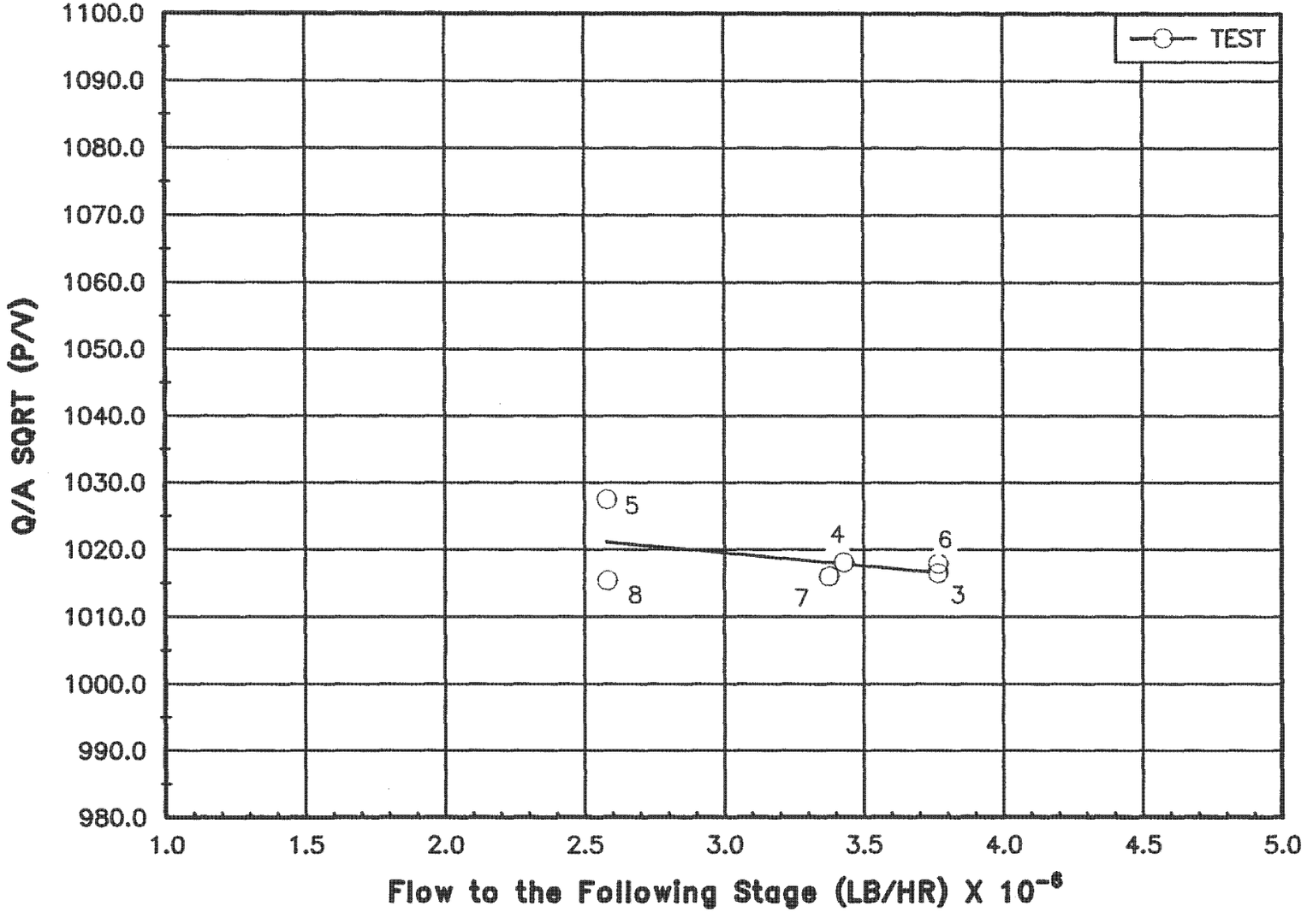

Figure 27

IP14_007260

INTERMOUNTAIN POWER CO.

IPP No. 1

19th Stage Flow Function

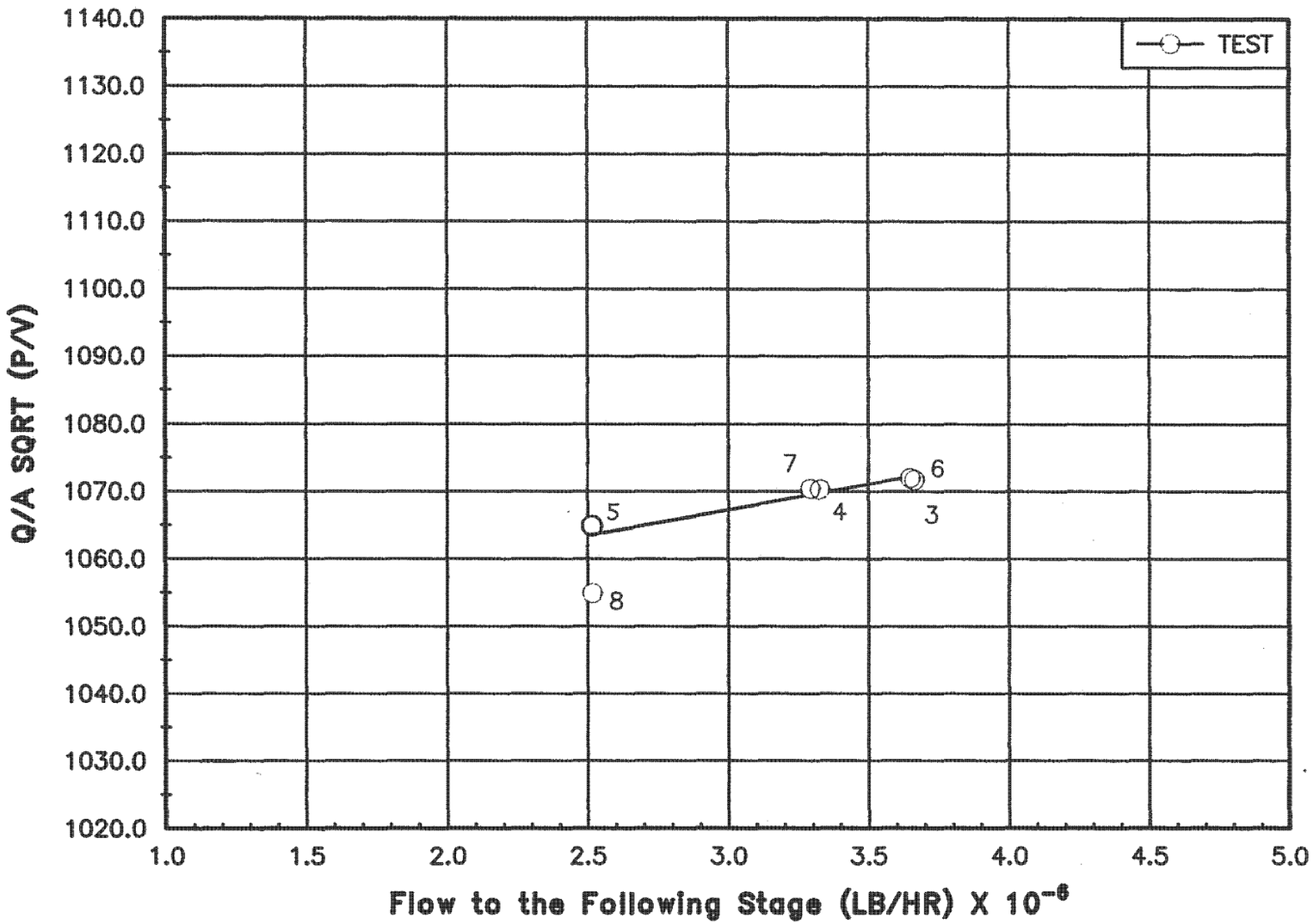

Figure 28

IP14_007261

INTERMOUNTAIN POWER CO.

IPP No. 1

No. 1 Packing HPLO

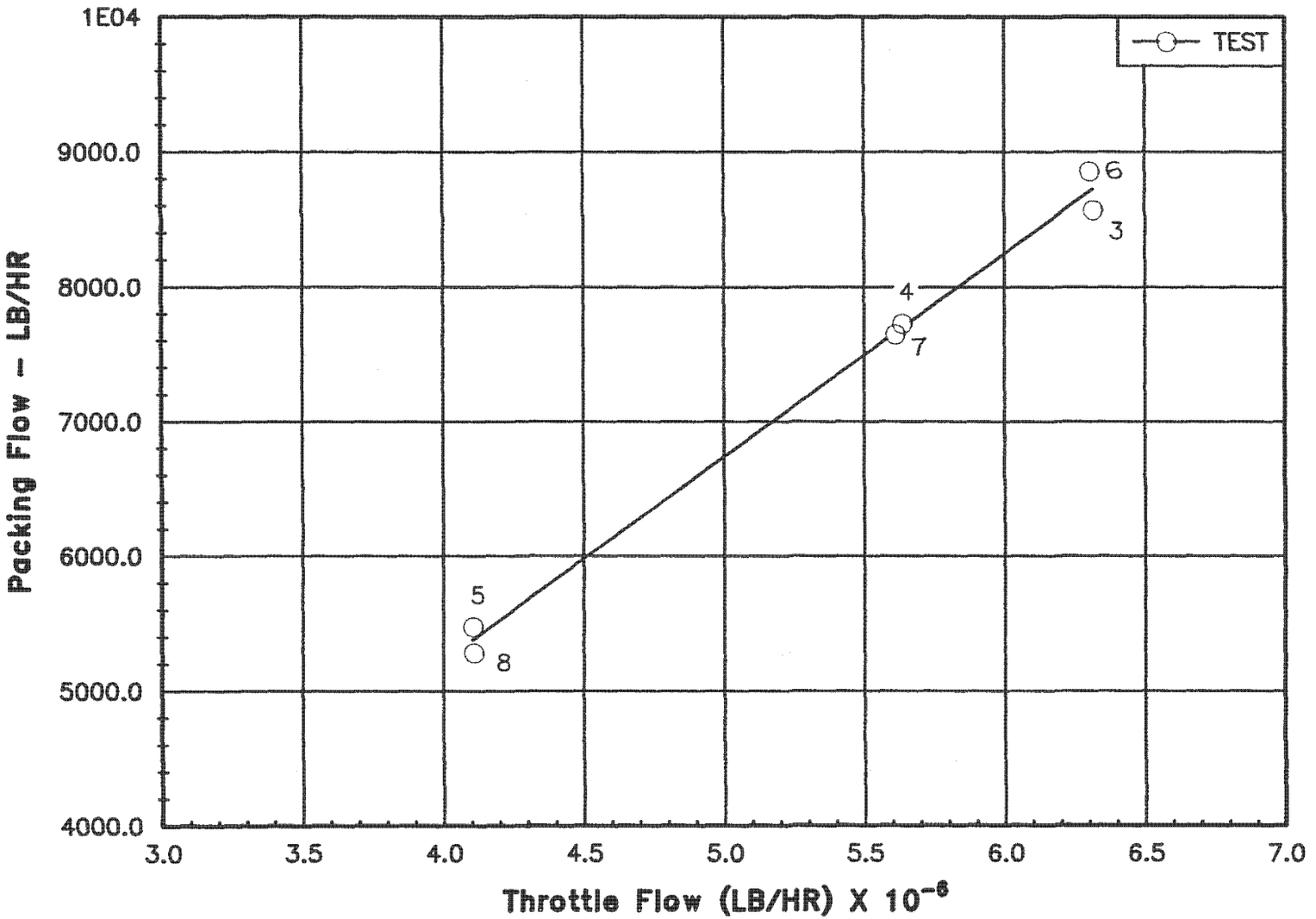

Figure 29

IP14_007262

INTERMOUNTAIN POWER CO.

IPP No. 1

No. 2 Packing HPLO

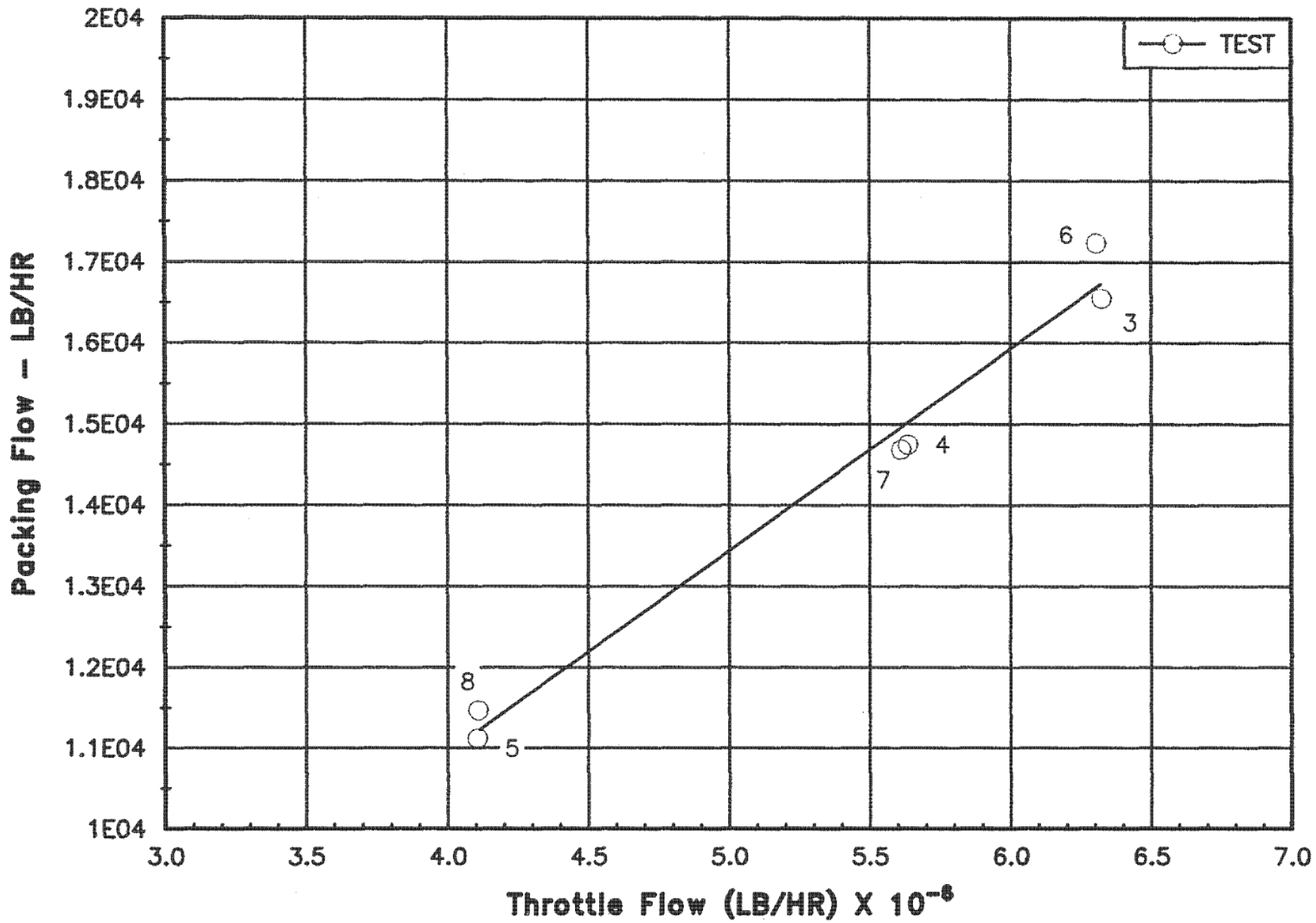

Figure 30

IP14_007263

INTERMOUNTAIN POWER CO.

IPP No. 1

No. 1 Packing LPLO

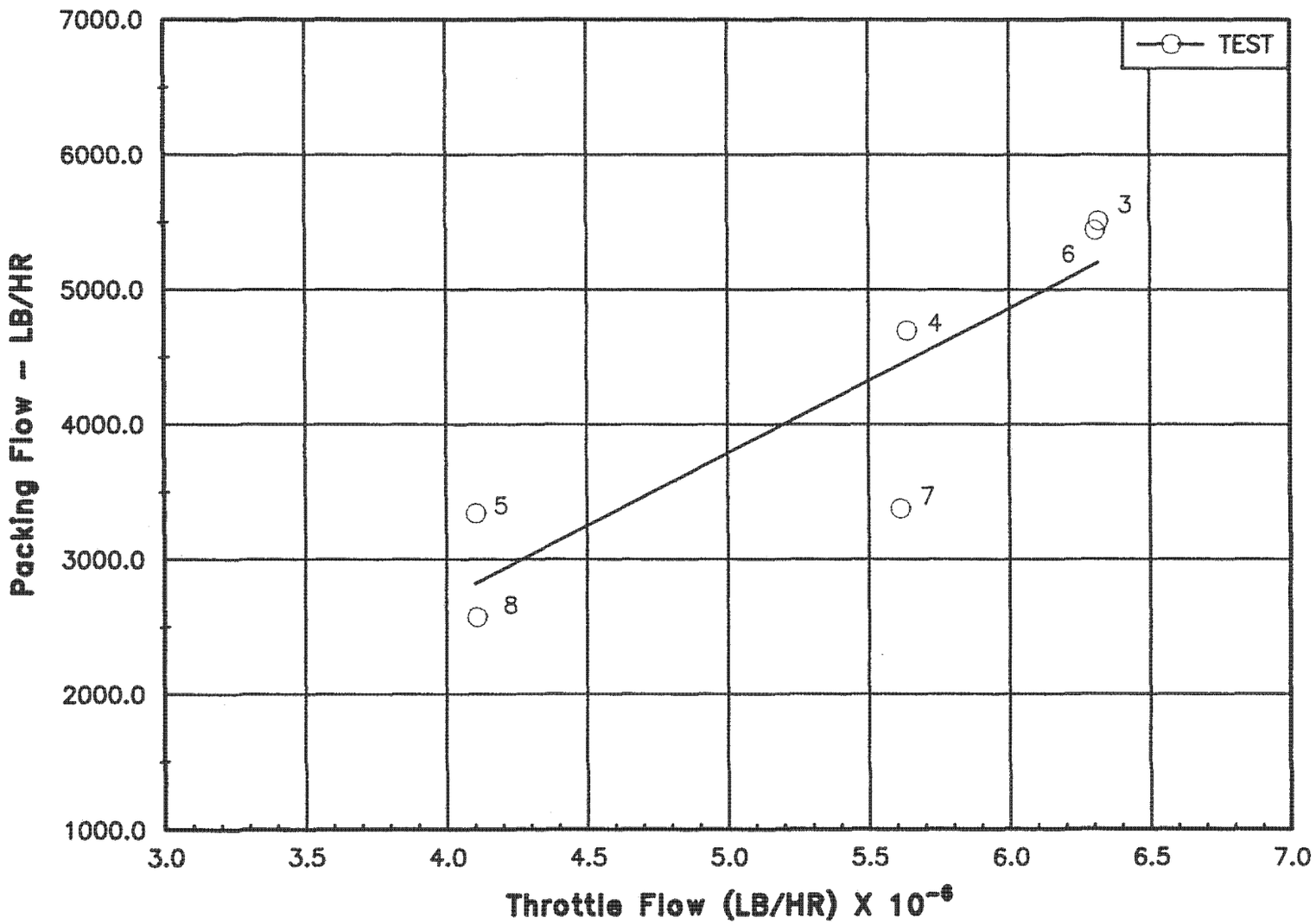

Figure 31

IP14_007264

INTERMOUNTAIN POWER CO.

IPP No. 1

No. 2 Packing LPLO

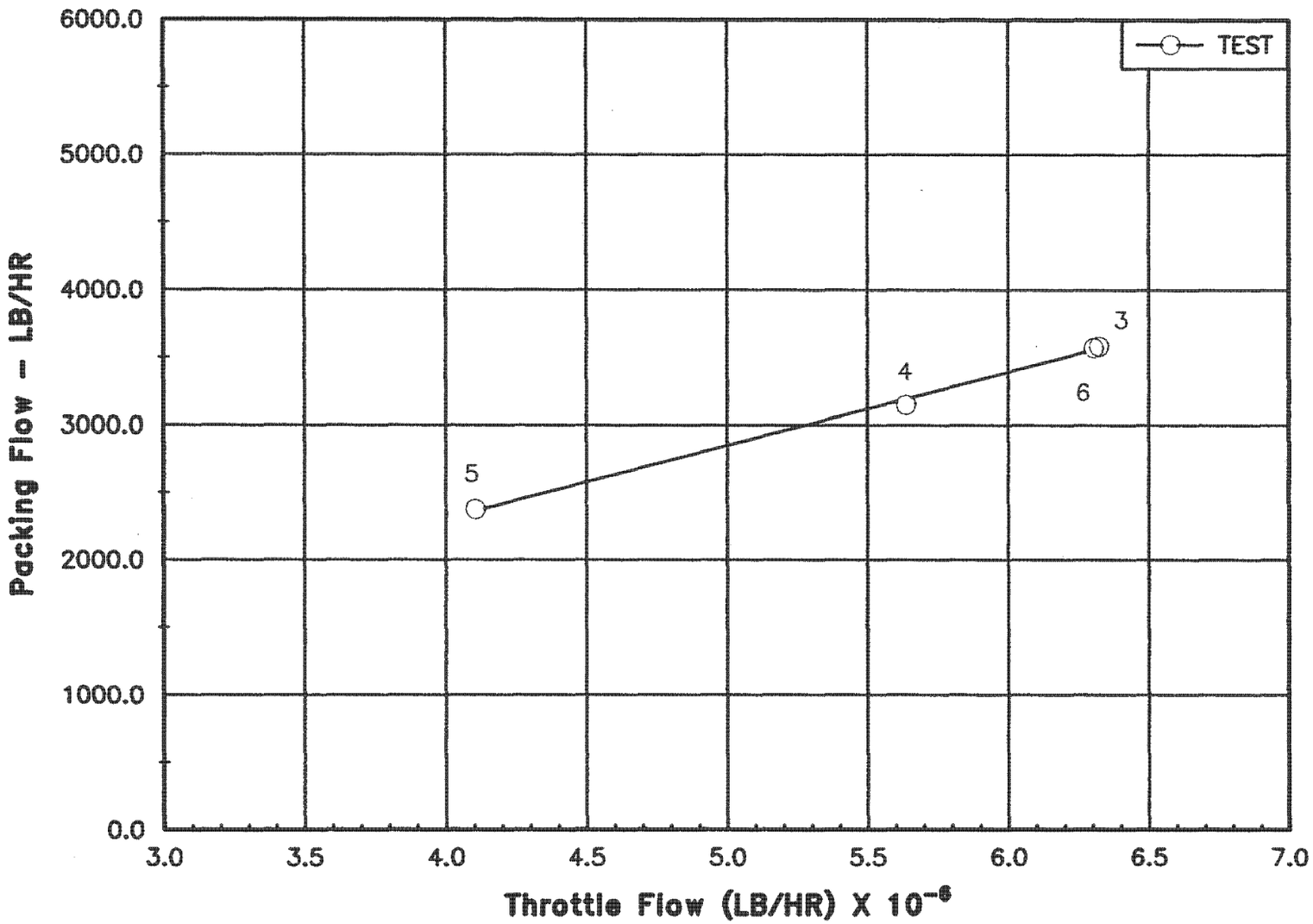

Figure 32

IP14_007265

INTERMOUNTAIN POWER CO.

IPP No. 1

No. 3 Packing LPLO

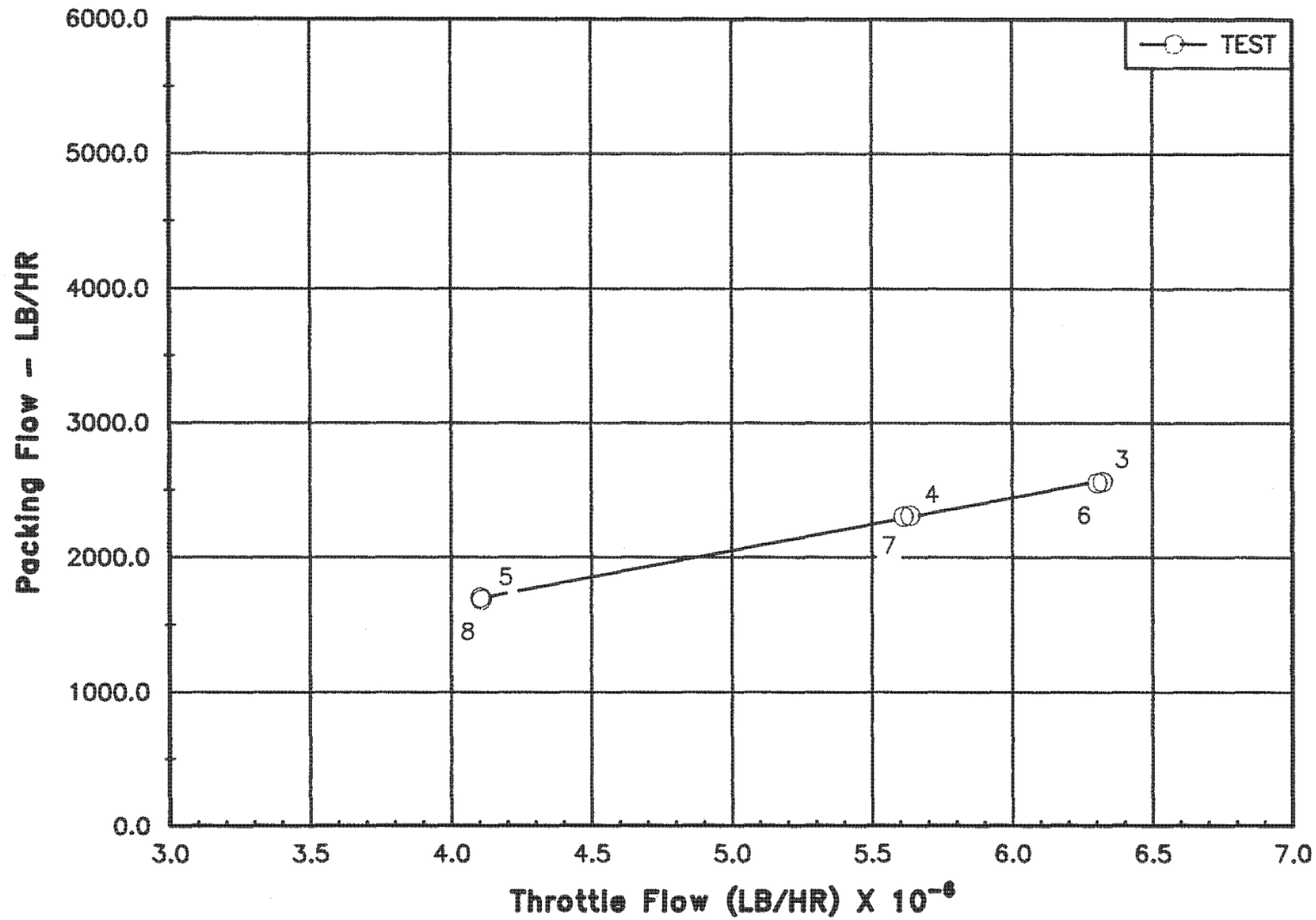

Figure 33

BOOK # 0956

IP14_007266

INTERMOUNTAIN POWER CO.

IPP No. 1

No. 4 Packing LPLO

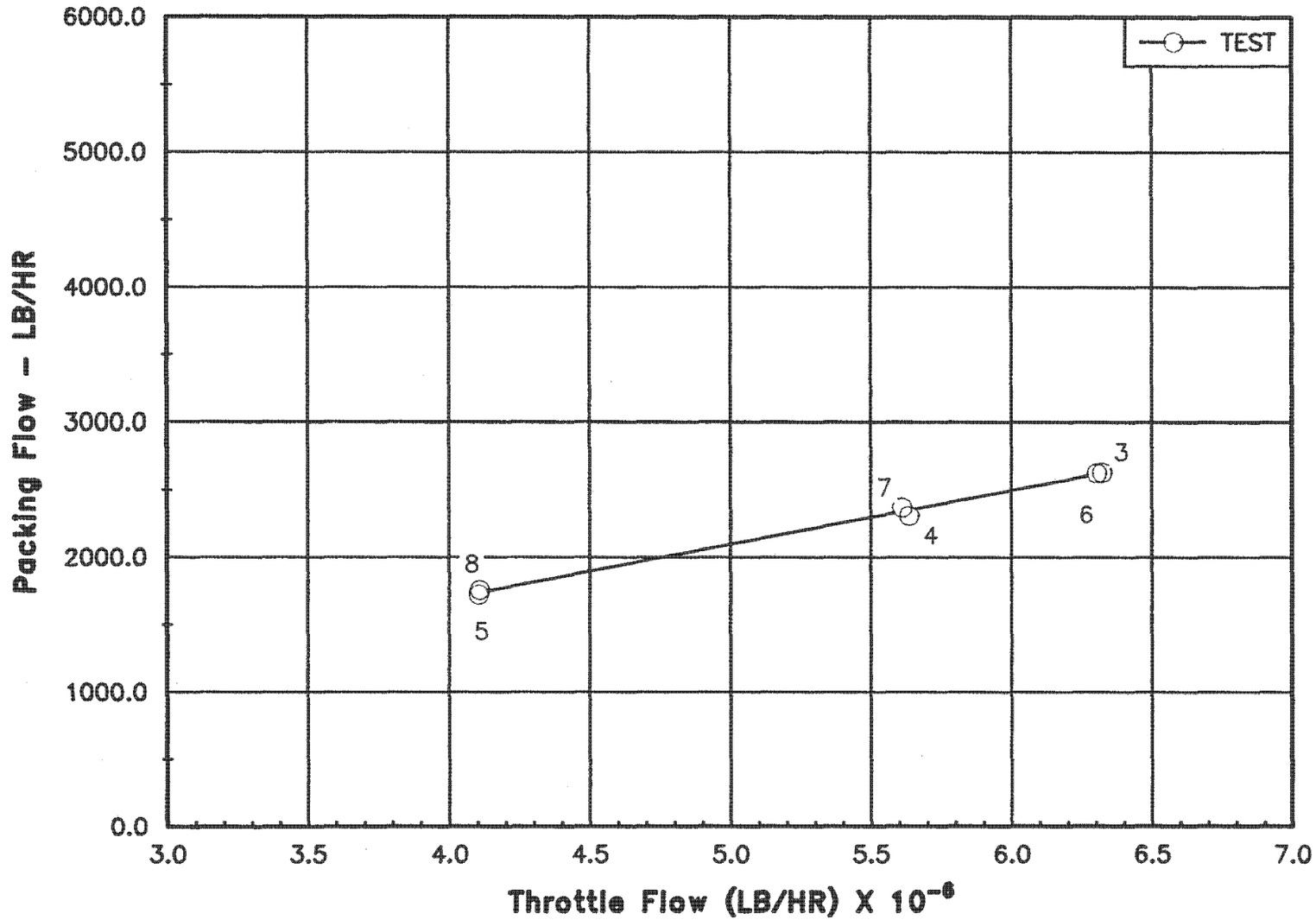

Figure 34

IP14_007267

INTERMOUNTAIN POWER CO.

IPP No. 1

Valve Stem Leakoff

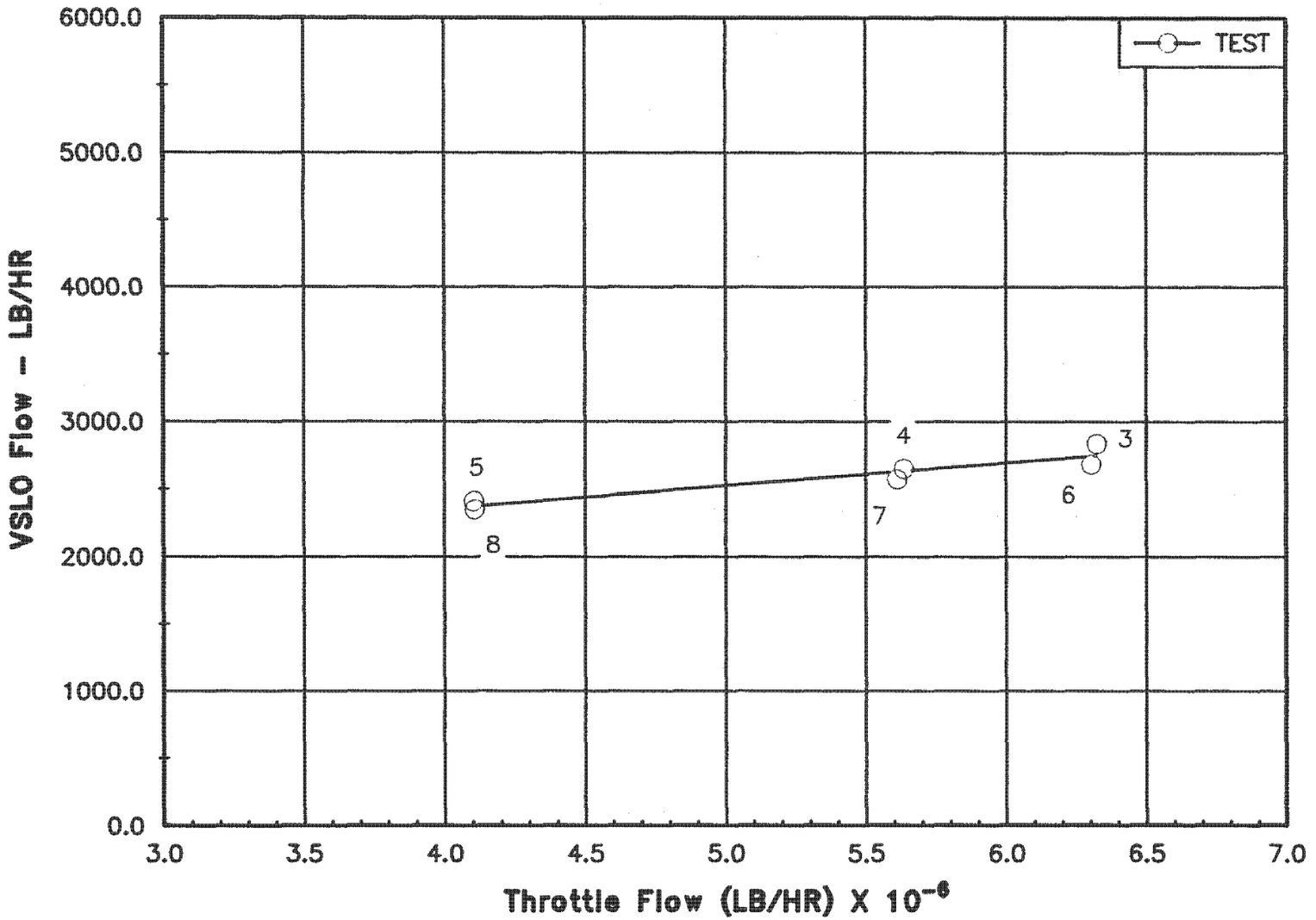

Figure 35

IP14_007268

APPENDIX A

Computer Output for Test Cycle Heat Balances for Test Points 3 - 8

Output Sheets

These output sheets should be used in conjunction with the trunkline diagram shown in Figure A1.

The following is a list of the nomenclature used in these output sheets:

FW	Feedwater
Inj	Injection
Ret	Return
MU	Makeup
LO	Leakoff
Shell	Conditions in turbine
Exh	Exhaust
AE	Available energy
ELEP	Expansion line end point
UEEP	Used energy end point
V_{AN}	Annulus velocity
TL	Trunkline
P	Pressure - psia
T	Temperature - degrees F
H	Enthalpy, BTU/LB
Q	Flow, lb./hr.
SV	Specific volume - ft^3/lb
SSR	Steam seal regulator

Pages 1 and 2 of the output sheets for each test point contain general information on turbine and cycle performance, such as heat rate, throttle flow, section efficiencies, and stage flow function. On page 1 under label "rated conditions", the load and heat rate have been corrected to rated power factor and rated H_2 pressure, and the throttle flow has been corrected to 2400 psig/1000F.

Pages 3-6 include designated component information. The column (TL) to the left of each sheet is a trunkline number used to easily identify points in the cycle. These TL numbers correspond to the number on sheet A1.

Pages 7 and 8 are a tabulation of all information stored in all trunklines. Although much of the same information is already included on pages 3-6, it is reprinted in TL form because not all TL numbers are printed on pages 3-6 and it is easier under some circumstances to look up information on the TL printout.

The column headings for the TL sheets are from left to right (TL) trunkline number, (P) pressure-psia, (T) temperature - ^{o}F, (H) enthalty - Btu/lb., (Q) flow lb./hr., (SV) specific volume-ft^3/lb. in most cases, (SP) an additional fluid property needed in the calculation such as enthalpy, (PV)-(P)/(SV) in most cases but not all; and (TR) transient storage for information needed in the calculation. This last storage area will also contain (Q)/A (P)/(SV)

The page numbering system is as follows:

A0 3-1

where A is for appendix A and 3-1 identifies the test point as 3 and the page number as 1.

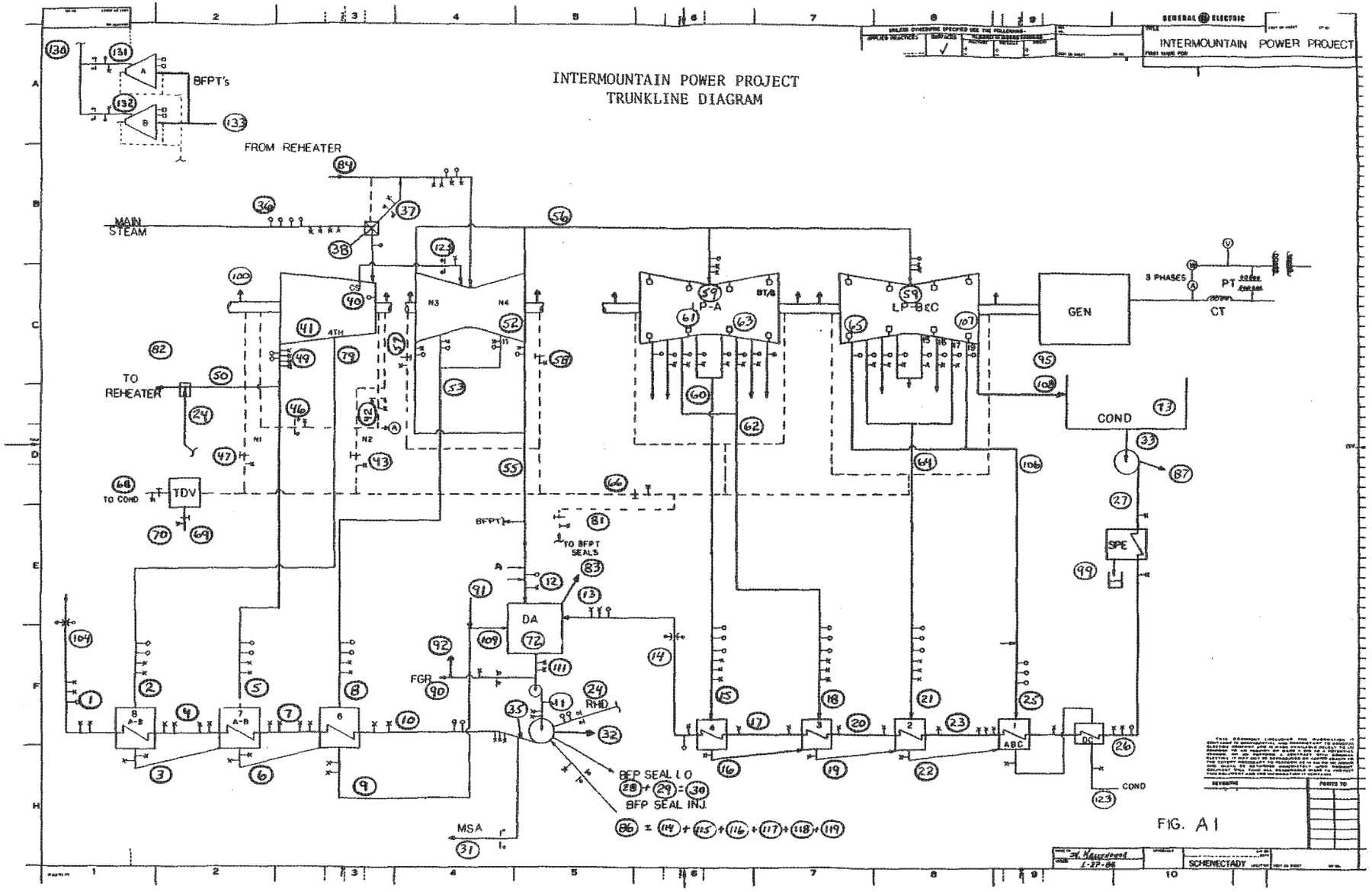

FIG. A1

IP14_007271

TEST CYCLE HEAT BALANCE

VALVE POINT VWO 06/22/86 TEST POINT 03
INTERMOUNTAIN PWR PROJECT UNIT #1
820000. KW TC6F-30 IN LSB TURBINE NO 270T150
2400. PSIG 1000./ 1000. F 2.300 IN HG ABS

CALCULATED USING ASME STEAM TABLES

COMBINED TURBINE-CYCLE PERFORMANCE

	TEST CONDITIONS	*RATED CONDITIONS
TOTAL LOAD	871725.	870878.
HEAT RATE	7829.9	7837.5
THROTTLE FLOW	6322406.	6307919.

TURBINE THERMAL PERFORMANCE

	HIGH PRESS TB		REHEAT TB		
			IP TB		LP TB
	THROTTLE	COLD RHT	INLET	EXH	EXH
PRESS	2421.40	583.45	538.06	121.54	3.874
TEMP	1003.30	627.70	1000.09	617.10	124.24
ENTH	1462.37	1309.48	1519.25	1336.71	1026.84
ENTR	1.5333		1.7285	1.7442	
EFF	87.616		91.658		95.038

ABSCISSA PHPX/PT=0.2410 P1STSTG/PT=0.8127 VAN= 507.4

THRU FLOW PERFORMANCE OF CONDENSING SECTION SHAFT NO 1

	TOTAL TB ENERGY BALANCE		LP TB ENERGY BALANCE	
	RHT TB	LP TB	RHT TB	LP TB
AE	518.12	326.43		
H ELEP	1026.84		1026.84	
H UEEP	1036.66		1036.66	
EFF ELEP	95.04	94.93	95.04	94.93
EFF UEEP	93.14	91.92	93.14	91.92
VAN	507.44		507.44	

* LOAD AND HEAT RATE AT RATED POWER FACTOR AND H2 PRESS. FLOW AT RATED THROTTLE PRESS. OF 2412.2 PSIA AND TEMP. OF 1000 F.

IP14_007272

T G L PERFORMANCE OF CONDENSING SECTION SHAFT NO 1

	TOTAL TB ENERGY BALANCE		LP TB ENERGY BALANCE	
	RHT TB	LP TB	RHT TB	LP TB
H ELEP	1030.03		1030.03	
H UEEP	1039.82		1039.82	
EFF ELEP	94.42	93.95	94.42	93.95
EFF UEEP	92.53	90.95	92.53	90.95
VAN	509.18		509.18	

STAGE FLOW FUNCTION

STG NO	SHELL PRESS	ONE VEL HD	PCT DELTA P	FLANGE PRESS	NOZ AREA	Q/AP H FLG	QFS	Q/AP H SHL
1	1967.96	0.	0.	0.	86.6	0.	6266234.	1004.1
4	1111.92	4.578	1.30	1097.50	157.4	847.1	5640058.	841.6
RH 1	538.06	0.	0.	0.	350.2	0.	5109396.	789.8
8	527.30	0.	0.	0.	350.2	0.	5121811.	807.8
11	239.25	0.853	1.14	236.52	711.2	783.3	4880585.	770.9
15	121.54	0.	0.	0.	807.6	0.	4365819.	1116.6
15	67.19	0.287	1.24	66.36	1414.8	1074.9	4224181.	1044.5
16	41.20	0.198	1.40	40.62	2021.4	1081.2	3930847.	1052.2
18	12.09	0.075	1.79	11.87	6018.0	1053.5	3765887.	1016.5
19	5.30	0.014	0.76	5.26	12096.0	1075.8	3663735.	1071.7

I.P.S.C. ENGINEERING
LIBRARY

IP14_007273

TL	PRESS	TEMP	ENTH	FLOW		

F E E D W A T E R C Y C L E

					HEATER	8
4 FW IN	2792.00	481.40	466.49	6299616.9	CLOSED	
2 EXTR	1090.77	800.40	1385.43	605416.7	TD =	-0.8
3 DRAIN	1090.77	490.60	476.75	605416.7	DC =	9.2
					HEATER	7
7 FW IN	2792.00	396.90	374.93	6299616.9	CLOSED	
5 EXTR	573.48	626.70	1309.64	557710.9	TD =	-0.0
6 DRAIN	573.48	404.40	380.21	1163127.6	DC =	7.5
3 ENTRY	1090.77	490.60	476.75	605416.7		
					HEATER	6
10 FW IN	2929.60	347.04	323.18	6299616.9	CLOSED	
8 EXTR	233.43	799.80	1424.00	241225.3	TD =	-1.9
9 DRAIN	233.43	355.20	327.37	1404352.9	DC =	8.2
6 ENTRY	573.48	404.40	380.21	1163127.6		
					PUMP	
11 FW IN	0.	0.	0.	6260159.6		
86 SEAL INJ	0.	0.	0.	145165.7		
30 SEAL RET	0.	0.	0.	70562.0		
32 LEAKAGE	0.	0.	0.	0.		
24 EXTR	1500.00	200.00	171.47	0.		
35 FW OUT	2929.60	347.04	323.18	6334763.3		
					HEATER	5
13 FW IN	137.70	297.90	267.69	4605624.0	OPEN	
12 EXTR	121.25	619.90	1338.14	250585.7	STO =	90.0
111 DRAIN	121.25	342.10	313.46	6811741.3	SC =	-0.1
109 ENTRY	0.	0.	290.16	1955934.6		
					HEATER	4
17 FW IN	177.10	266.40	235.55	4605624.4	CLOSED	
15 EXTR	64.83	513.50	1289.38	141637.6	TD =	-0.1
16 DRAIN	64.83	273.10	242.16	141637.6	DC =	6.7
					HEATER	3
20 FW IN	177.10	196.90	165.35	4605624.4	CLOSED	
18 EXTR	39.27	412.80	1242.75	293333.8	TD =	-0.3
19 DRAIN	39.27	205.40	173.58	434971.4	DC =	8.5
16 ENTRY	64.83	273.10	242.16	141637.6		
					HEATER	2
23 FW IN	177.10	156.10	124.47	4605624.4	CLOSED	
21 EXTR	11.17	230.50	1160.61	164960.0	TD =	1.6
22 DRAIN	11.17	163.20	131.18	599931.4	DC =	7.1
19 ENTRY	39.27	205.40	173.58	434971.4		

IP14_007274

TL		PRESS	TEMP	ENTH	FLOW	
						STM SEAL REG
88	FLOW TO	0.	0.	0.	6953.7	CALCULATED
70	TDV	6.13	599.20	1335.42	3477.7	TO HEATER
68	TDV	6.63	682.00	1375.43	3476.0	TO CONDENSER
	NOT CODED FOR MU		MEAS TOTAL FLOW =		0.	

						HEATER	1
26	FW IN	227.30	129.40	97.92	4605624.4	CLOSED	
25	EXTR	5.32	0.	1084.65	102152.3	TD =	8.8
123	DRAIN	5.32	133.90	101.86	705561.4	DC =	4.5
22	ENTRY	11.17	163.20	131.18	599931.4		
70	ENTRY	6.13	599.20	1335.42	3477.7		

						PUMP
33	FW IN	0.	0.	0.	4750790.1	
87	LEAKAGE	0.	0.	0.	0.	
27	FW OUT	0.	0.	0.	4750790.1	

						FW TO BOILER
1	FW IN	2792.00	556.03	553.82	6299616.9	S+L = -12357.

T U R B I N E E X P A N S I O N

						MAIN STEAM LINE
71	EXIT	0.	0.	1462.37	0.	
36	THROTTLE	2421.40	1003.30	1462.37	6322406.3	
						VALVE STEM LKG
						SQRT P/V = 87.085
37	LO NO 1	538.26	879.80	1454.30	2838.0	C = 55.610
						SQRT P/V = 19.393
38	LO NO 2	0.	0.	0.	2004.8	C = 103.374
						EXP TO STG 1
40	SHELL	1967.96	944.73	1439.76	6266234.0	
112	EXTR	0.	0.	1439.76	51329.4	

IP14_007275

TL	PRESS	TEMP	ENTH	FLOW	
				PACKING NO	2
				SQRT P/V	=.115E 19
42 LO NO 1	127.55	780.70	1418.86	16553.9	C = 0.000
				SQRT P/V	= 4.717
43 LO NO 2	17.96	774.40	1420.31	3583.6	C = 891.471
				SQRT P/V	= 0.663
100 LO NO 3	0.	0.	0.	621.8	C = 1759.359
				EXP TO STG	4
41 SHELL	1111.92	0.	1385.90	5640058.0	
79 EXTR	1097.50	801.70	1385.90	605416.7	
				PACKING NO	1
				SQRT P/V	= 23.996
46 LO NO 1	126.25	605.60	1330.71	8569.8	C = 612.765
				SQRT P/V	= 5.059
47 LO NO 2	18.20	587.80	1329.13	5512.3	C = 1212.450
				SQRT P/V	= 0.730
100 LO NO 3	0.	0.	0.	621.8	C = 1759.359
				EXPAND TO EXHAUST	
49 EXH	583.45	627.70	1309.48	5664268.9	
80 EXTR	583.45	627.70	1309.48	557710.9	
50 TO RHT	583.45	627.70	1309.48	5106558.0	
				REHEATER	1
BEFORE LO	0.08	0.	1519.51	0.	
37 ENTRY					
84 AFTER LO	538.06	1000.50	1519.47	5109396.0	PCTDP = 7.780
				EXPAND TO BOWL	
51 ENTRY	527.30	999.50	1519.25	5121810.6	
125 ENTRY	537.73	828.60	1426.87	12414.6	
				EXP TO STG	11
52 SHELL	239.25	0.	1411.63	4880585.4	
53 EXTR	236.52	801.90	1424.95	241225.3	

IP14_007276

TL	PRESS	TEMP	ENTH	FLOW
				PACKING NO 3
				SQRT P/V = 4.842
57 LO NO 1	18.08	637.00	1352.93	2566.7 C = 1330.139
				SQRT P/V = 0.708
58 LO NO 2	18.00	631.10	1350.07	2629.5 C = 5468.188
				SQRT P/V = 0.707
100 LO NO 3	0.	0.	0.	621.8 C = 1759.359
				SQRT P/V = 0.
100 LO NO 4	0.	0.	0.	621.8 C = 1759.359
				EXPAND TO EXHAUST
56 EXH	121.54	617.10	1336.71	4365818.7
55 EXTR	124.78	618.94	1337.43	508326.7
				EXPAND TO BOWL
59 ENTRY	121.54	617.10	1336.71	4365818.7
				EXP TO STG 15
61 SHELL	67.19	0.	1273.22	4224181.1
60 EXTR	66.36	523.70	1294.27	141637.6
				EXP TO STG 16
63 SHELL	41.20	0.	1229.07	3930847.3
62 EXTR	40.62	420.00	1246.08	293333.8
				EXP TO STG 18
65 SHELL	12.09	0.	1137.03	3765887.3
64 EXTR	11.87	230.40	1160.33	164960.0
				EXP TO STG 19
107 SHELL	5.30	0.	1084.86	3663735.0
106 EXTR	5.26	0.	1084.65	102152.3
				CONDENSER
				SHAFT 1
108 TB EXH	1.90	124.24	1036.6632	3663735.0 LEVL =-12760.0
76 ENTRY	0.	0.	0.	1074295.5
122 DRAIN	0.	0.	0.	4750790.4
				GENERATOR 1
				SHAFT 1

MEASURED LOAD = 871725.0 PF = 0.978 H2 = 61.00
SHAFT 1 KW = 883767.7 FL =4353.0 GL = 7689.7

IP14_007277

TEST CYCLE HEAT BALANCE

P E R F O R M A N C E

TRUNKLINE OUTPUT

TL	P	T	H	Q	SV	SP	PV	TR
1	2792.0	556.0	553.8	6299617.	0.0213	0.	0.	-12357.0
2	1090.8	800.4	1385.4	605417.	0.6249	555.232	-0.798	245.2
3	1090.8	490.6	476.7	605417.	0.0201	0.	9.200	0.
4	2792.0	481.4	466.5	6299617.	0.	0.	0.	0.
5	573.5	626.7	1309.6	557711.	1.0314	481.366	-0.034	145.3
6	573.5	404.4	380.2	1163128.	0.0187	0.	7.500	0.
7	2792.0	396.9	374.9	6299617.	0.	0.	0.	0.
8	233.4	799.8	1424.0	241225.	3.1536	394.979	-1.921	404.8
9	233.4	355.2	327.4	1404353.	0.0180	0.	8.160	0.
10	2929.6	347.0	323.2	6299617.	0.0177	0.	0.	0.
11	0.	0.	0.	6260160.	0.	0.	0.	0.
12	121.3	619.9	1338.1	250586.	5.2121	342.045	90.000	277.9
13	137.7	297.9	267.7	4605624.	0.0174	0.	0.	0.
14	177.1	297.9	267.8	4605624.	0.0174	1.014	0.	177.1
15	64.8	513.5	1289.4	141638.	8.8196	297.805	-0.095	215.7
16	64.8	273.1	242.2	141638.	0.0172	0.	6.700	0.
17	177.1	266.4	235.6	4605624.	0.	0.	0.	0.
18	39.3	412.8	1242.7	293334.	13.0633	266.144	-0.256	146.7
19	39.3	205.4	173.6	434971.	0.0167	0.	8.500	0.
20	177.1	196.9	165.3	4605624.	0.	0.	0.	0.
21	11.2	230.5	1160.6	164960.	36.4277	198.482	1.582	32.0
22	11.2	163.2	131.2	599931.	0.0164	0.	7.100	0.
23	177.1	156.1	124.5	4605624.	0.	0.	0.	0.
24	1500.0	200.0	171.5	0.	0.0166	0.	0.	0.
25	5.3	0.	1084.7	102152.	0.	164.887	8.787	-164.9
26	227.3	129.4	97.9	4605624.	0.0162	0.	0.	0.
27	0.	0.	0.	4750790.	0.	0.	0.	0.
28	0.	0.	0.	19292.	0.	0.	0.	0.
29	0.	0.	0.	51270.	0.	0.	0.	0.
30	0.	0.	0.	70562.	0.	0.	0.	0.
31	2929.6	328.7	304.3	35146.	0.0175	1.001	0.	2929.6
33	0.	0.	0.	4750790.	0.	0.	0.	0.
34	0.	0.	0.	-12357.	0.	0.	0.	0.
35	2929.6	347.0	323.2	6334763.	0.0177	0.	0.	0.
36	2421.4	1003.3	1462.4	6322406.	0.31930	.133E 37	87.085	0.
37	538.3	879.8	1454.3	2838.	1.4311	0.780	19.393	55.6
38	0.	0.	0.	2005.	0.	0.	0.	103.4
39	2421.4	0.	1462.4	6317563.	0.3193	0.	87.085	0.
40	1968.0	944.7	1439.8	6266234.	0.3789	147.083	72.064	0.
41	1111.9	0.	1385.9	5640058.	0.6134	557.936	42.575	841.6
42	127.5	780.7	1418.9	16554.	5.7313	0.779	4.717	0.0
43	18.0	774.4	1420.3	3584.	40.8713	0.	0.663	891.5
45	0.	0.	0.	38915.	0.	0.	0.	0.
46	126.2	605.6	1330.7	8570.	4.9322	0.703	5.059	612.8
47	18.2	587.8	1329.1	5512.	34.1811	0.	0.730	1212.5
48	0.	0.	0.	5678973.	0.	0.	0.	0.
49	583.4	627.7	1309.5	5664269.	1.0133	483.204	23.996	0.
50	583.4	627.7	1309.5	5106558.	0.	0.	0.	0.
51	527.3	999.5	1519.2	5121811.	1.6091	0.	18.106	0.

IP14_007278

TL	P	T	H	Q	SV	SP	PV	TR
52	239.3	0.	1411.6	4880585.	3.0191	397.503	8.902	770.9
53	236.5	801.9	1425.0	241225.	3.1171	396.120	8.711	0.
54	121.5	617.1	1336.7	4874145.	5.1850	0.	4.842	0.
55	124.8	618.9	1337.4	508327.	5.0572	344.213	0.	0.
56	121.5	617.1	1336.7	4365819.	5.1850	342.225	0.	0.
57	18.1	637.0	1352.9	2567.	36.0408	0.	0.708	1330.1
58	18.0	631.1	1350.1	2630.	36.0149	0.	0.707	5468.2
59	121.5	617.1	1336.7	4365819.	5.1851	0.	4.842	0.
60	66.4	523.7	1294.3	141638.	8.7089	299.353	2.760	0.
61	67.2	0.	1273.2	4224181.	8.2235	300.313	2.858	1044.5
62	40.6	420.0	1246.1	293334.	12.7345	268.180	1.786	0.
63	41.2	0.	1229.1	3930847.	12.0606	269.183	1.848	1052.2
64	11.9	230.4	1160.3	164960.	34.2513	201.422	0.589	0.
65	12.1	0.	1137.0	3765887.	31.8910	202.546	0.616	1016.5
66	17.5	651.8	1360.1	9343.	37.7405	0.	0.	0.
67	125.0	347.5	1193.0	0.	3.6046	0.	0.	0.
68	6.6	682.0	1375.4	3476.	102.5425	0.	0.	0.
69	6.1	599.2	1335.4	8262.	102.7657	0.	0.	0.
70	6.1	599.2	1335.4	3478.	102.7657	0.	0.	0.
71	0.	0.	1462.4	0.	0.	0.	0.	0.
72	0.	0.	0.	90.	0.	0.	0.	0.
73	0.	0.	0.	-12760.	0.	0.	0.	0.
75	0.	0.	0.	5612.	0.	0.	0.	0.
76	0.	0.	0.	1074295.	0.	0.	0.	0.
79	1097.5	801.7	1385.9	605417.	0.6216	555.994	42.020	0.
80	583.4	627.7	1309.5	557711.	0.	0.	0.	0.
81	17.4	484.6	1279.8	0.	32.1353	0.	0.	0.
82	0.	0.	0.	5106558.	0.	0.	0.	0.
83	121.3	342.0	1190.6	313.	0.	0.	0.	0.
84	538.1	1000.5	1519.5	5109396.	1.5768	7.780	18.473	789.8
86	0.	0.	0.	145166.	0.	0.	0.	0.
88	0.	0.	0.	6954.	0.	0.	0.	0.
90	125.0	342.1	313.5	0.	0.0179	0.	0.	0.
91	207.3	226.7	195.4	551582.	0.0168	0.647	0.	207.3
95	1.9	124.2	1026.8	3663735.	166.3386	1036.663	3.874	507.4
99	0.	0.	0.	6841.	0.	0.	0.	0.
100	0.	0.	0.	622.	0.	0.	0.	1759.4
104	2792.0	556.0	553.8	6383857.	0.0213	1.026	0.	2792.0
106	5.3	0.	1084.7	102152.	66.8259	164.371	0.281	0.
107	5.3	0.	1084.9	3663735.	66.3370	0.	0.283	1071.7
108	1.9	124.2	1036.7	3663735.	182.0962	1036.663	3.874	-12760.0
109	0.	0.	290.2	1955935.	0.	0.	0.	0.
111	121.3	342.1	313.5	6811741.	3.6914	0.	-0.055	0.
112	0.	0.	1439.8	51329.	0.	0.	0.	0.
113	0.	0.	0.	6245475.	0.	0.	0.115E 19	0.
114	227.3	129.4	97.9	14792.	0.0162	0.624	0.	227.3
115	227.3	129.4	97.9	17249.	0.0162	0.623	0.	227.3
116	227.3	129.4	97.9	26213.	0.0162	0.623	0.	227.3
117	227.3	129.4	97.9	35052.	0.0162	0.660	0.	227.3
118	227.3	129.4	97.9	28279.	0.0162	0.660	0.	227.3
119	227.3	129.4	97.9	23581.	0.0162	0.660	0.	227.3
120	0.	0.	0.	4843.	0.	0.	0.	0.
122	0.	0.	0.	4750790.	0.	0.	0.	0.
123	5.3	133.9	101.9	705561.	0.0163	0.	4.500	0.
125	537.7	828.6	1426.9	12415.	1.3704	0.628	0.	531.2
130	0.	0.	0.	282865.	0.	0.	0.	0.
131	120.4	619.6	1338.0	149608.	5.2484	1.018	0.	120.4
132	121.0	618.4	1337.4	133256.	5.2153	1.020	0.	121.0
133	0.	0.	0.	282243.	0.	0.	0.	0.

IP14_007279

TEST CYCLE HEAT BALANCE

VALVE POINT 3RD VL	06/24/86	TEST POINT 04
INTERMOUNTAIN PWR PROJECT		UNIT #1
820000. KW	TC6F-30 IN LSB	TURBINE NO 270T150
2400. PSIG	1000./ 1000. F	2.300 IN HG ABS

CALCULATED USING ASME STEAM TABLES

COMBINED TURBINE-CYCLE PERFORMANCE

	TEST CONDITIONS	*RATED CONDITIONS
TOTAL LOAD	791473.	790839.
HEAT RATE	7828.9	7835.2
THROTTLE FLOW	5640429.	5626526.

TURBINE THERMAL PERFORMANCE

	HIGH PRESS TB		REHEAT TB		
			IP TB		LP TB
	THROTTLE	COLD RHT	INLET	EXH	EXH
PRESS	2412.88	524.02	482.98	109.88	3.447
TEMP	996.00	603.90	994.96	615.80	120.01
ENTH	1457.78	1299.51	1518.11	1336.82	1027.66
ENTR	1.5305		1.7393	1.7552	
EFF	86.076		91.527		94.808

ABSCISSA PHPX/PT=0.2172 P1STSTG/PT=0.7203 VAN= 515.9

THRU FLOW PERFORMANCE OF CONDENSING SECTION SHAFT NO 1

	TOTAL TB ENERGY BALANCE		LP TB ENERGY BALANCE	
	RHT TB	LP TB	RHT TB	LP TB
AE	517.31	326.82		
H ELEP	1027.66		1027.66	
H UEEP	1037.17		1037.17	
EFF ELEP	94.81	94.59	94.81	94.59
EFF UEEP	92.97	91.68	92.97	91.68
VAN	515.91		515.91	

* LOAD AND HEAT RATE AT RATED POWER FACTOR AND H2 PRESS. FLOW AT RATED THROTTLE PRESS. OF 2412.2 PSIA AND TEMP. OF 1000 F.

IP14_007280

T G L PERFORMANCE OF CONDENSING SECTION SHAFT NO 1

	TOTAL TB ENERGY BALANCE		LP TB ENERGY BALANCE	
	RHT TB	LP TB	RHT TB	LP TB
H ELEP	1030.66		1030.66	
H UEEP	1040.14		1040.14	
EFF ELEP	94.23	93.68	94.23	93.68
EFF UEEP	92.39	90.77	92.39	90.77
VAN	517.56		517.56	

STAGE FLOW FUNCTION

STG NO	SHELL PRESS	ONE VEL HD	PCT DELTA P	FLANGE PRESS	NOZ AREA	Q/AP H FLG	QFS	Q/AP H SHL
1	1737.90	0.	0.	0.	86.6	0.	5578223.	1000.2
4	989.44	3.663	1.17	977.90	157.4	841.8	5043163.	836.9
RH 1	482.98	0.	0.	0.	350.2	0.	4582090.	788.7
8	473.32	0.	0.	0.	350.2	0.	4604694.	808.5
11	215.25	0.759	1.13	212.82	711.2	782.8	4388861.	770.7
15	109.88	0.	0.	0.	807.6	0.	3949751.	1117.6
15	60.82	0.245	1.17	60.11	1414.8	1075.5	3825293.	1046.5
16	37.34	0.169	1.31	36.85	2021.4	1082.6	3567623.	1055.5
18	10.97	0.059	1.56	10.80	6018.0	1060.2	3428508.	1018.1
19	4.81	0.015	0.91	4.77	12096.0	1075.2	3327467.	1070.3

IP14_007281

TL		PRESS	TEMP	ENTH	FLOW		

F E E D W A T E R C Y C L E

						HEATER	8
4	FW IN	2726.90	471.10	454.98	5624407.3	CLOSED	
2	EXTR	969.34	771.20	1373.62	516556.6	TD =	-2.7
3	DRAIN	969.34	478.60	462.88	516556.6	DC =	7.5
						HEATER	7
7	FW IN	2726.90	388.72	366.23	5624407.3	CLOSED	
5	EXTR	515.32	603.30	1299.87	485473.9	TD =	-1.0
6	DRAIN	515.32	395.20	370.24	1002030.5	DC =	6.5
3	ENTRY	969.34	478.60	462.88	516556.6		
						HEATER	6
10	FW IN	2839.90	338.64	314.38	5624407.3	CLOSED	
8	EXTR	209.82	797.33	1423.72	215832.5	TD =	-2.9
9	DRAIN	209.82	345.83	317.50	1217863.0	DC =	7.2
6	ENTRY	515.32	395.20	370.24	1002030.5		
						PUMP	
11	FW IN	0.	0.	0.	5583699.1		
86	SEAL INJ	0.	0.	0.	147604.7		
30	SEAL RET	0.	0.	0.	70417.0		
32	LEAKAGE	0.	0.	0.	568.0		
24	EXTR	1500.00	330.00	303.18	0.		
35	FW OUT	2839.90	338.64	314.38	5660318.8		
						HEATER	5
13	FW IN	125.60	291.71	261.31	4143874.5	OPEN	
12	EXTR	109.70	617.90	1337.88	223410.6	STO =	1171.0
111	DRAIN	109.70	334.60	305.61	6017993.1	SC =	-0.0
109	ENTRY	0.	0.	277.34	1652157.1		
						HEATER	4
17	FW IN	163.90	260.90	229.93	4143875.3	CLOSED	
15	EXTR	58.81	513.40	1289.87	124457.8	TD =	-0.5
16	DRAIN	58.81	267.40	236.33	124457.8	DC =	6.5
						HEATER	3
20	FW IN	163.90	192.70	161.10	4143875.3	CLOSED	
18	EXTR	35.58	413.00	1243.34	257669.8	TD =	-0.6
19	DRAIN	35.58	200.80	168.95	382127.6	DC =	8.1
16	ENTRY	58.81	267.40	236.33	124457.8		
						HEATER	2
23	FW IN	163.90	154.40	122.74	4143875.3	CLOSED	
21	EXTR	10.19	233.30	1162.26	139115.0	TD =	1.4
22	DRAIN	10.19	161.10	129.07	521242.7	DC =	6.7
19	ENTRY	35.58	200.80	168.95	382127.6		

IP14_007282

TL		PRESS	TEMP	ENTH	FLOW	
						STM SEAL REG
88	FLOW TO	0.	0.	0.	5336.8	CALCULATED
70	TDV	5.79	651.50	1360.67	4944.3	TO HEATER
68	TDV	1.66	600.60	1336.38	392.5	TO CONDENSER
	NOT CODED FOR MU		MEAS TOTAL FLOW =		0.	
						HEATER 1
26	FW IN	210.70	124.55	93.04	4143875.3	CLOSED
25	EXTR	4.85	0.	1086.23	101041.0	TD = 6.5
123	DRAIN	4.85	128.80	96.76	627228.0	DC = 4.2
22	ENTRY	10.19	161.10	129.07	521242.7	
70	ENTRY	5.79	651.50	1360.67	4944.3	
						PUMP
33	FW IN	0.	0.	0.	4292128.0	
87	LEAKAGE	0.	0.	0.	648.0	
27	FW OUT	0.	0.	0.	4291480.0	
						FW TO BOILER
1	FW IN	2726.90	543.54	538.62	5624407.3	S+L = -19890.

T U R B I N E E X P A N S I O N

						MAIN STEAM LINE
71	EXIT	0.	0.	1457.78	0.	
36	THROTTLE	2412.88	996.00	1457.78	5640428.8	
						VALVE STEM LKG
						SQRT P/V = 87.100
37	LO NO 1	483.17	869.10	1450.59	2652.6	C = 55.405
						SQRT P/V = 17.455
38	LO NO 2	0.	0.	0.	2173.1	C = 124.499
						EXP TO STG 1
40	SHELL	1737.90	908.64	1425.22	5578223.3	
112	EXTR	0.	0.	1425.22	57379.7	

IP14_007283

TL	PRESS	TEMP	ENTH	FLOW	
					PACKING NO 2
					SQRT P/V =.115E 19
42 LO NO 1	115.12	754.80	1406.33	14747.9	C = 0.000
					SQRT P/V = 4.302
43 LO NO 2	17.66	750.20	1408.35	3152.2	C = 872.882
					SQRT P/V = 0.658
100 LO NO 3	0.	0.	0.	603.3	C = 1739.807
					EXP TO STG 4
41 SHELL	989.44	0.	1373.90	5043163.3	
79 EXTR	977.90	772.40	1373.90	516556.6	
					PACKING NO 1
					SQRT P/V = 21.769
46 LO NO 1	114.04	585.70	1321.52	7728.1	C = 598.457
					SQRT P/V = 4.612
47 LO NO 2	17.82	569.50	1320.35	4696.7	C = 1149.200
					SQRT P/V = 0.721
100 LO NO 3	0.	0.	0.	603.3	C = 1739.807
					EXPAND TO EXHAUST
49 EXH	524.02	603.90	1299.51	5064911.1	
80 EXTR	524.02	603.90	1299.51	485473.9	
50 TO RHT	524.02	603.90	1299.51	4579437.2	
					REHEATER 1
BEFORE LO	0.08	0.	1518.65	0.	
37 ENTRY					
84 AFTER LO	482.98	995.90	1518.62	4582089.8	PCTDP = 7.832
					EXPAND TO BOWL
51 ENTRY	473.32	994.43	1518.11	4604693.7	
125 ENTRY	500.96	804.40	1416.05	22603.8	
					EXP TO STG 11
52 SHELL	215.25	0.	1411.50	4388861.2	
53 EXTR	212.82	799.40	1424.66	215832.5	

IP14_007284

TL	PRESS	TEMP	ENTH	FLOW	
					PACKING NO 3
					SQRT P/V = 4.376
57 LO NO 1	17.76	638.60	1353.72	2314.0	C = 1332.157
					SQRT P/V = 0.695
58 LO NO 2	17.67	632.70	1350.86	2309.0	C = 5057.178
					SQRT P/V = 0.694
100 LO NO 3	0.	0.	0.	603.3	C = 1739.807
					SQRT P/V = 0.
100 LO NO 4	0.	0.	0.	603.3	C = 1739.807
					EXPAND TO EXHAUST
56 EXH	109.88	615.80	1336.82	3949751.0	
55 EXTR	112.74	617.50	1337.48	433280.6	
					EXPAND TO BOWL
59 ENTRY	109.88	615.80	1336.82	3949751.0	
					EXP TO STG 15
61 SHELL	60.82	0.	1274.27	3825293.2	
60 EXTR	60.11	523.40	1294.66	124457.8	
					EXP TO STG 16
63 SHELL	37.34	0.	1230.29	3567623.3	
62 EXTR	36.85	419.70	1246.43	257669.8	
					EXP TO STG 18
65 SHELL	10.97	0.	1138.42	3428508.3	
64 EXTR	10.80	235.90	1163.29	139115.0	
					EXP TO STG 19
107 SHELL	4.81	0.	1086.54	3327467.3	
106 EXTR	4.77	0.	1086.23	101041.0	
					CONDENSER
					SHAFT 1
108 TB EXH	1.69	120.01	1037.1686	3327467.3	LEVL =-22555.0
76 ENTRY	0.	0.	0.	942105.6	
122 DRAIN	0.	0.	0.	4292127.9	
					GENERATOR 1
					SHAFT 1

MEASURED LOAD = 791473.0 PF = 0.971 H2 = 61.00
SHAFT 1 KW = 802789.9 FL =4353.0 GL = 6963.9

IP14_007285

TEST CYCLE HEAT BALANCE

P E R F O R M A N C E

TRUNKLINE OUTPUT

TL	P	T	H	Q	SV	SP	PV	TR
1	2726.9	543.5	538.6	5624407.	0.0210	0.	0.	-19890.0
2	969.3	771.2	1373.6	516557.	0.6888	540.816	-2.724	230.4
3	969.3	478.6	462.9	516557.	0.0199	0.	7.500	0.
4	2726.9	471.1	455.0	5624407.	0.	0.	0.	0.
5	515.3	603.3	1299.9	485474.	1.1255	470.130	-0.970	133.2
6	515.3	395.2	370.2	1002030.	0.0185	0.	6.480	0.
7	2726.9	388.7	366.2	5624407.	0.	0.	0.	0.
8	209.8	797.3	1423.7	215833.	3.5079	385.842	-2.878	411.5
9	209.8	345.8	317.5	1217863.	0.0179	0.	7.190	0.
10	2839.9	338.6	314.4	5624407.	0.0176	0.	0.	0.
11	0.	0.	0.	5583699.	0.	0.	0.	0.
12	109.7	617.9	1337.9	223411.	5.7593	334.585	1171.000	283.3
13	125.6	291.7	261.3	4143874.	0.0174	0.	0.	0.
14	163.9	291.9	261.6	4143875.	0.0174	1.014	0.	163.9
15	58.8	513.4	1289.9	124458.	9.7341	291.405	-0.495	222.0
16	58.8	267.4	236.3	124458.	0.0172	0.	6.500	0.
17	163.9	260.9	229.9	4143875.	0.	0.	0.	0.
18	35.6	413.0	1243.3	257670.	14.4407	260.255	-0.645	152.7
19	35.6	200.8	168.9	382128.	0.0166	0.	8.100	0.
20	163.9	192.7	161.1	4143875.	0.	0.	0.	0.
21	10.2	233.3	1162.3	139115.	40.1343	194.100	1.400	39.2
22	10.2	161.1	129.1	521243.	0.0164	0.	6.700	0.
23	163.9	154.4	122.7	4143875.	0.	0.	0.	0.
24	1500.0	330.0	303.2	0.	0.0176	0.	0.	0.
25	4.8	0.	1086.2	101041.	0.	160.943	6.543	-160.9
26	210.7	124.6	93.0	4143875.	0.0162	0.	0.	0.
27	0.	0.	0.	4291480.	0.	0.	0.	0.
28	0.	0.	0.	19857.	0.	0.	0.	0.
29	0.	0.	0.	50560.	0.	0.	0.	0.
30	0.	0.	0.	70417.	0.	0.	0.	0.
31	2840.0	330.8	306.3	35912.	0.0175	1.001	0.	2840.0
32	0.	0.	0.	568.	0.	0.	0.	0.
33	0.	0.	0.	4292128.	0.	0.	0.	0.
34	0.	0.	0.	-19890.	0.	0.	0.	0.
35	2839.9	338.6	314.4	5660319.	0.0176	0.	0.	0.
36	2412.9	996.0	1457.8	5640429.	0.31810.133E 37		87.100	0.
37	483.2	869.1	1450.6	2653.	1.5859	0.780	17.455	55.4
38	0.	0.	0.	2173.	0.	0.	0.	124.5
39	2412.9	0.	1457.8	5635603.	0.3181	0.	87.100	0.
40	1737.9	908.6	1425.2	5578223.	0.4190	141.950	64.400	0.
41	989.4	0.	1373.9	5043163.	0.6750	543.766	38.285	836.9
42	115.1	754.8	1406.3	14748.	6.2190	0.779	4.302	0.0
43	17.7	750.2	1408.3	3152.	40.7423	0.	0.658	872.9
45	0.	0.	0.	34776.	0.	0.	0.	0.
46	114.0	585.7	1321.5	7728.	5.3614	0.703	4.612	598.5
47	17.8	569.5	1320.3	4697.	34.2993	0.	0.721	1149.2
48	0.	0.	0.	5077939.	0.	0.	0.	0.
49	524.0	603.9	1299.5	5064911.	1.1057	471.871	21.769	0.
50	524.0	603.9	1299.5	4579437.	0.	0.	0.	0.
51	473.3	994.4	1518.1	4604694.	1.7910	0.	16.262	0.

IP14_007286

TL	P	T	H	Q	SV	SP	PV	TR
52	215.2	0.	1411.5	4388861.	3.3572	388.397	8.007	770.7
53	212.8	799.4	1424.7	215833.	3.4637	387.046	7.839	0.
54	109.9	615.8	1336.8	4383032.	5.7378	0.	4.376	0.
55	112.7	617.5	1337.5	433281.	5.5993	336.607	0.	0.
56	109.9	615.8	1336.8	3949751.	5.7378	334.706	0.	0.
57	17.8	638.6	1353.7	2314.	36.7498	0.	0.695	1332.2
58	17.7	632.7	1350.9	2309.	36.7373	0.	0.694	5057.2
59	109.9	615.8	1336.8	3949751.	5.7378	0.	4.376	0.
60	60.1	523.4	1294.7	124458.	9.6236	292.831	2.499	0.
61	60.8	0.	1274.3	3825293.	9.1112	293.772	2.584	1046.5
62	36.8	419.7	1246.4	257670.	14.0495	262.334	1.620	0.
63	37.3	0.	1230.3	3567623.	13.3540	263.370	1.672	1055.5
64	10.8	235.9	1163.3	139115.	37.9947	196.869	0.533	0.
65	11.0	0.	1138.4	3428508.	35.0346	197.988	0.560	1018.1
66	17.3	645.2	1357.0	9308.	38.0240	0.	0.	0.
67	125.0	335.9	307.0	0.	0.0178	0.	0.	0.
68	1.7	600.6	1336.4	393.	380.3737	0.	0.	0.
69	5.8	651.5	1360.7	7832.	114.2336	0.	0.	0.
70	5.8	651.5	1360.7	4944.	114.2336	0.	0.	0.
71	0.	0.	1457.8	0.	0.	0.	0.	0.
72	0.	0.	0.	1171.	0.	0.	0.	0.
73	0.	0.	0.	-22555.	0.	0.	0.	0.
75	0.	0.	0.	5688.	0.	0.	0.	0.
76	0.	0.	0.	942106.	0.	0.	0.	0.
79	977.9	772.4	1373.9	516557.	0.6831	541.876	37.836	0.
80	524.0	603.9	1299.5	485474.	0.	0.	0.	0.
81	17.2	568.7	1320.0	0.	35.4701	0.	0.	0.
82	0.	0.	0.	4579437.	0.	0.	0.	0.
83	109.7	334.6	1188.8	278.	0.	0.	0.	0.
84	483.0	995.9	1518.6	4582090.	1.7551	7.832	16.589	788.7
86	0.	0.	0.	147605.	0.	0.	0.	0.
87	0.	0.	0.	648.	0.	0.	0.	0.
88	0.	0.	0.	5337.	0.	0.	0.	0.
90	115.0	334.6	305.6	0.	0.0178	0.	0.	0.
91	195.9	196.2	164.7	434294.	0.0166	0.647	0.	195.9
95	1.7	120.0	1027.7	3327467.	186.2036	1037.169	3.447	515.9
99	0.	0.	0.	6637.	0.	0.	0.	0.
100	0.	0.	0.	603.	0.	0.	0.	1739.8
104	2726.9	543.5	538.6	5693728.	0.0210	1.026	0.	2726.9
106	4.8	0.	1086.2	101041.	73.4860	160.244	0.255	0.
107	4.8	0.	1086.5	3327467.	72.8493	0.	0.257	1070.3
108	1.7	120.0	1037.2	3327467.	203.2305	1037.169	3.447	-22555.0
109	0.	0.	277.3	1652157.	0.	0.	0.	0.
111	109.7	334.6	305.6	6017993.	4.0590	0.	-0.015	0.
112	0.	0.	1425.2	57380.	0.	0.	0.	0.
113	0.	0.	0.	5559720.	0.	0.	0.115E 19	0.
114	210.7	124.6	93.0	14957.	0.0162	0.624	0.	210.7
115	210.7	124.6	93.0	16753.	0.0162	0.624	0.	210.7
116	210.7	124.6	93.0	25235.	0.0162	0.623	0.	210.7
117	210.7	124.6	93.0	36025.	0.0162	0.660	0.	210.7
118	210.7	124.6	93.0	29141.	0.0162	0.660	0.	210.7
119	210.7	124.6	93.0	25494.	0.0162	0.660	0.	210.7
120	0.	0.	0.	4826.	0.	0.	0.	0.
122	0.	0.	0.	4292128.	0.	0.	0.	0.
123	4.8	128.8	96.8	627228.	0.0162	0.	4.250	0.
125	501.0	804.4	1416.1	22604.	1.4452	0.628	0.	477.3
130	0.	0.	0.	232346.	0.	0.	0.	0.
131	109.1	617.5	1337.7	120814.	5.7871	1.018	0.	109.1
132	109.1	616.4	1337.2	111532.	5.7840	1.019	0.	109.1
133	0.	0.	0.	231743.	0.	0.	0.	0.

IP14_007287

TEST CYCLE HEAT BALANCE

VALVE POINT 2ND VL — 06/25/86 — TEST POINT 05
INTERMOUNTAIN PWR PROJECT — UNIT #1
820000. KW — TC6F-30 IN LSB — TURBINE NO 270T150
2400. PSIG — 1000./ 1000. F — 2.300 IN HG ABS

CALCULATED USING ASME STEAM TABLES

COMBINED TURBINE-CYCLE PERFORMANCE

	TEST CONDITIONS	*RATED CONDITIONS
TOTAL LOAD	596565.	596228.
HEAT RATE	7927.0	7931.5
THROTTLE FLOW	4076417.	4097492.

TURBINE THERMAL PERFORMANCE

	HIGH PRESS TB		REHEAT TB		
			IP TB		LP TB
	THROTTLE	COLD RHT	INLET	EXH	EXH
PRESS	2401.53	388.96	358.38	81.78	2.830
TEMP	1000.80	565.90	1000.74	622.90	113.01
ENTH	1461.37	1288.24	1524.86	1342.14	1038.97
ENTR	1.5335		1.7762	1.7922	
EFF	80.933		91.460		94.532

ABSCISSA PHPX/PT=0.1620 P1STSTG/PT=0.5167 VAN= 473.8

THRU FLOW PERFORMANCE OF CONDENSING SECTION SHAFT NO 1

	TOTAL TB ENERGY BALANCE		LP TB ENERGY BALANCE	
	RHT TB	LP TB	RHT TB	LP TB
AE	514.00	322.11		
H ELEP	1038.97		1038.97	
H UEEP	1050.99		1050.99	
EFF ELEP	94.53	94.12	94.53	94.12
EFF UEEP	92.19	90.39	92.19	90.39
VAN	473.78		473.78	

* LOAD AND HEAT RATE AT RATED POWER FACTOR AND H2 PRESS. FLOW AT RATED THROTTLE PRESS. OF 2412.2 PSIA AND TEMP. OF 1000 F.

IP14_007288

T G L PERFORMANCE OF CONDENSING SECTION SHAFT NO 1

	TOTAL TB ENERGY BALANCE		LP TB ENERGY BALANCE	
	RHT TB	LP TB	RHT TB	LP TB
H ELEP	1041.53		1041.53	
H UEEP	1053.54		1053.54	
EFF ELEP	94.03	93.33	94.03	93.33
EFF UEEP	91.70	89.60	91.70	89.60
VAN	475.05		475.05	

STAGE FLOW FUNCTION

STG NO	SHELL PRESS	ONE VEL HD	PCT DELTA P	FLANGE PRESS	NOZ AREA	Q/AP H FLG	QFS	Q/AP H SHL
1	1240.92	0.	0.	0.	86.6	0.	4027450.	996.9
4	723.86	1.987	0.86	717.60	157.4	827.9	3683058.	824.4
RH 1	358.38	0.	0.	0.	350.2	0.	3381093.	788.4
8	351.21	0.	0.	0.	350.2	0.	3400065.	808.7
11	159.73	0.540	1.08	158.00	711.2	783.3	3243959.	772.2
15	81.78	0.	0.	0.	807.6	0.	2933610.	1121.5
15	45.44	0.153	0.98	45.00	1414.8	1077.2	2849096.	1051.1
16	28.01	0.109	1.13	27.69	2021.4	1085.7	2670305.	1062.0
18	8.20	0.033	1.18	8.11	6018.0	1076.3	2580749.	1027.5
19	3.62	0.013	1.03	3.59	12096.0	1070.3	2499561.	1064.8

IP14_007289

TL	PRESS	TEMP	ENTH	FLOW		

F E E D W A T E R C Y C L E

					HEATER	8
4 FW IN	2605.80	442.80	423.82	4062471.9	CLOSED	
2 EXTR	712.60	721.10	1357.52	330286.5	TD =	-5.3
3 DRAIN	712.60	447.60	427.70	330286.5	DC =	4.8
					HEATER	7
7 FW IN	2605.80	366.30	342.61	4062471.9	CLOSED	
5 EXTR	383.40	565.30	1288.40	320140.3	TD =	-2.3
6 DRAIN	383.40	370.83	344.09	650426.8	DC =	4.5
3 ENTRY	712.60	447.60	427.70	330286.5		
					HEATER	6
10 FW IN	2673.60	315.60	290.49	4062471.9	CLOSED	
8 EXTR	155.70	802.70	1428.72	156106.6	TD =	-4.9
9 DRAIN	155.70	320.94	291.49	806533.4	DC =	5.3
6 ENTRY	383.40	370.83	344.09	650426.8		
					PUMP	
11 FW IN	0.	0.	0.	4005380.8		
86 SEAL INJ	0.	0.	0.	151016.7		
30 SEAL RET	0.	0.	0.	67461.0		
32 LEAKAGE	0.	0.	0.	416.0		
24 EXTR	1500.00	310.00	282.61	0.		
35 FW OUT	2673.60	315.60	290.49	4088520.5		
					HEATER	5
13 FW IN	96.77	273.95	243.09	3036206.9	OPEN	
12 EXTR	80.96	621.20	1341.35	165243.4	STO =	2395.0
111 DRAIN	80.96	313.30	283.45	4493901.1	SC =	-0.4
109 ENTRY	0.	0.	243.29	1295053.8		
					HEATER	4
17 FW IN	132.25	244.90	213.63	3036207.3	CLOSED	
15 EXTR	44.09	516.40	1292.63	84514.1	TD =	-1.1
16 DRAIN	44.09	250.60	219.23	84514.1	DC =	5.7
					HEATER	3
20 FW IN	132.25	179.20	147.49	3036207.3	CLOSED	
18 EXTR	26.65	417.20	1246.54	178791.5	TD =	-1.3
19 DRAIN	26.65	186.00	154.06	263305.6	DC =	6.8
16 ENTRY	44.09	250.60	219.23	84514.1		
					HEATER	2
23 FW IN	132.25	145.10	113.37	3036207.3	CLOSED	
21 EXTR	7.56	240.10	1166.31	89555.9	TD =	1.1
22 DRAIN	7.56	149.40	117.36	352861.5	DC =	4.3
19 ENTRY	26.65	186.00	154.06	263305.6		

IP14_007290

TL		PRESS	TEMP	ENTH	FLOW	
						STM SEAL REG
88	FLOW TO	0.	0.	0.	2027.6	CALCULATED
70	TDV	4.70	447.30	1263.43	1506.4	TO HEATER
68	TDV	1.70	598.00	1335.13	521.2	TO CONDENSER
	NOT CODED FOR MU		MEAS TOTAL FLOW =		0.	
						HEATER 1
26	FW IN	173.10	117.50	85.91	3036207.3	CLOSED
25	EXTR	3.68	0.	1092.07	81187.6	TD = 4.5
123	DRAIN	3.68	119.10	87.07	82694.0	DC = 1.6
70	ENTRY	4.70	447.30	1263.43	1506.4	
						PUMP
33	FW IN	0.	0.	0.	3187660.0	
87	LEAKAGE	0.	0.	0.	436.0	
27	FW OUT	0.	0.	0.	3187224.0	
						FW TO BOILER
1	FW IN	2605.80	510.35	499.42	4062471.9	S+L = -12103.

T U R B I N E E X P A N S I O N

						MAIN STEAM LINE
71	EXIT	0.	0.	1461.37	0.	
36	THROTTLE	2401.53	1000.80	1461.37	4076417.5	
						VALVE STEM LKG
						SQRT P/V = 86.439
37	LO NO 1	358.59	861.20	1451.06	2413.8	C = 55.566
						SQRT P/V = 12.941
38	LO NO 2	0.	0.	0.	2389.3	C = 184.625
						EXP TO STG 1
40	SHELL	1240.92	846.51	1406.89	4027449.7	
112	EXTR	0.	0.	1406.89	44164.7	
						PACKING NO 2
						SQRT P/V =.115E 19
42	LO NO 1	85.74	722.30	1391.40	11119.6	C = 0.000
						SQRT P/V = 3.245
43	LO NO 2	16.99	712.00	1389.57	2377.2	C = 920.090
						SQRT P/V = 0.644
100	LO NO 3	0.	0.	0.	608.7	C = 1819.980

IP14_007291

TL	PRESS	TEMP	ENTH	FLOW	
					EXP TO STG 4
41 SHELL	723.86	0.	1358.12	3683057.8	
79 EXTR	717.60	722.60	1358.12	330286.5	
					PACKING NO 1
					SQRT P/V = 16.337
46 LO NO 1	84.82	555.20	1308.42	5477.9	C = 577.268
					SQRT P/V = 3.476
47 LO NO 2	17.07	538.00	1305.29	3344.1	C = 1137.126
					SQRT P/V = 0.701
100 LO NO 3	0.	0.	0.	608.7	C = 1819.980
					EXPAND TO EXHAUST
49 EXH	388.96	565.90	1288.24	3698819.5	
80 EXTR	388.96	565.90	1288.24	320140.3	
50 TO RHT	388.96	565.90	1288.24	3378679.3	
					REHEATER 1
BEFORE LO	0.08	0.	1525.64	0.	
37 ENTRY					
84 AFTER LO	358.38	1002.10	1525.59	3381093.0	PCTDP = 7.862
					EXPAND TO BOWL
51 ENTRY	351.21	1000.35	1524.86	3400065.2	
125 ENTRY	376.33	756.70	1396.11	18972.2	
					EXP TO STG 11
52 SHELL	159.73	0.	1418.00	3243958.5	
53 EXTR	158.00	805.60	1430.10	156106.6	
					PACKING NO 3
					SQRT P/V = 3.239
57 LO NO 1	17.05	633.40	1351.24	1703.7	C = 1434.191
					SQRT P/V = 0.669
58 LO NO 2	17.00	627.30	1348.29	1724.4	C = 4397.590
					SQRT P/V = 0.669
100 LO NO 3	0.	0.	0.	608.7	C = 1819.980
					SQRT P/V = 0.
100 LO NO 4	0.	0.	0.	608.7	C = 1819.980

IP14_007292

TL	PRESS	TEMP	ENTH	FLOW	
					EXPAND TO EXHAUST
56 EXH	81.78	622.90	1342.14	2933610.3	
55 EXTR	83.97	623.63	1342.37	305702.8	
					EXPAND TO BOWL
59 ENTRY	81.78	622.90	1342.14	2933610.3	
					EXP TO STG 15
61 SHELL	45.44	0.	1280.76	2849096.2	
60 EXTR	45.00	531.40	1299.85	84514.1	
					EXP TO STG 16
63 SHELL	28.01	0.	1236.69	2670304.7	
62 EXTR	27.69	427.20	1251.21	178791.5	
					EXP TO STG 18
65 SHELL	8.20	0.	1143.66	2580748.8	
64 EXTR	8.11	247.90	1169.78	89555.9	
					EXP TO STG 19
107 SHELL	3.62	0.	1092.72	2499561.2	
106 EXTR	3.59	0.	1092.07	81187.6	
					CONDENSER
					SHAFT 1
108 TB EXH	1.39	113.01	1050.9920	2499561.2	LEVL =-15558.0
76 ENTRY	0.	0.	0.	319679.6	
22 ENTRY	7.56	149.40	117.36	352861.5	
122 DRAIN	0.	0.	0.	3187660.3	
					GENERATOR 1
					SHAFT 1

MEASURED LOAD = 596565.0 PF = 0.953 H2 = 59.00
SHAFT 1 KW = 606344.4 FL =4350.0 GL = 5429.4

IP14_007293

TEST CYCLE HEAT BALANCE

P E R F O R M A N C E

TRUNKLINE OUTPUT

TL	P	T	H	Q	SV	SP	PV	TR
1	2605.8	510.3	499.4	4062472.	0.0202	0.	0.	-12103.0
2	712.6	721.1	1357.5	330287.	0.9117	505.075	-5.275	216.0
3	712.6	447.6	427.7	330287.	0.0193	0.	4.800	0.
4	2605.8	442.8	423.8	4062472.	0.	0.	0.	0.
5	383.4	565.3	1288.4	320140.	1.4792	440.471	-2.329	124.8
6	383.4	370.8	344.1	650427.	0.0182	0.	4.530	0.
7	2605.8	366.3	342.6	4062472.	0.	0.	0.	0.
8	155.7	802.7	1428.7	156107.	4.7697	361.381	-4.919	441.3
9	155.7	320.9	291.5	806533.	0.0177	0.	5.340	0.
10	2673.6	315.6	290.5	4062472.	0.0174	0.	0.	0.
11	0.	0.	0.	4005381.	0.	0.	0.	0.
12	81.0	621.2	1341.4	165243.	7.8618	312.866	2395.000	308.3
13	96.8	274.0	243.1	3036207.	0.0172	0.	0.	0.
14	132.3	274.3	243.5	3036207.	0.0172	1.014	0.	132.3
15	44.1	516.4	1292.6	84514.	13.0667	273.183	-1.117	243.2
16	44.1	250.6	219.2	84514.	0.0170	0.	5.700	0.
17	132.3	244.9	213.6	3036207.	0.	0.	0.	0.
18	26.7	417.2	1246.5	178792.	19.4337	243.631	-1.269	173.6
19	26.7	186.0	154.1	263306.	0.0165	0.	6.800	0.
20	132.3	179.2	147.5	3036207.	0.	0.	0.	0.
21	7.6	240.1	1166.3	89556.	54.7632	180.305	1.105	59.8
22	7.6	149.4	117.4	352861.	0.0163	0.	4.300	0.
23	132.3	145.1	113.4	3036207.	0.	0.	0.	0.
24	1500.0	310.0	282.6	0.	0.0174	0.	0.	0.
25	3.7	0.	1092.1	81188.	0.	149.614	4.514	-149.6
26	173.1	117.5	85.9	3036207.	0.0162	0.	0.	0.
27	0.	0.	0.	3187224.	0.	0.	0.	0.
28	0.	0.	0.	18874.	0.	0.	0.	0.
29	0.	0.	0.	48587.	0.	0.	0.	0.
30	0.	0.	0.	67461.	0.	0.	0.	0.
31	2673.0	309.7	284.5	26049.	0.0174	1.000	0.	2673.0
32	0.	0.	0.	416.	0.	0.	0.	0.
33	0.	0.	0.	3187660.	0.	0.	0.	0.
34	0.	0.	0.	-12103.	0.	0.	0.	0.
35	2673.6	315.6	290.5	4088520.	0.0174	0.	0.	0.
36	2401.5	1000.8	1461.4	4076417.	0.32140	.133E 37	86.439	0.
37	358.6	861.2	1451.1	2414.	2.1411	0.780	12.941	55.6
38	0.	0.	0.	2389.	0.	0.	0.	184.6
39	2401.5	0.	1461.4	4071614.	0.3214	0.	86.439	0.
40	1240.9	846.5	1406.9	4027450.	0.5702	134.023	46.653	0.
41	723.9	0.	1358.1	3683058.	0.8984	507.615	28.385	824.4
42	85.7	722.3	1391.4	11120.	8.1415	0.779	3.245	0.0
43	17.0	712.0	1389.6	2377.	41.0064	0.	0.644	920.1
45	0.	0.	0.	25192.	0.	0.	0.	0.
46	84.8	555.2	1308.4	5478.	7.0196	0.703	3.476	577.3
47	17.1	538.0	1305.3	3344.	34.7023	0.	0.701	1137.1
48	0.	0.	0.	3708250.	0.	0.	0.	0.
49	389.0	565.9	1288.2	3698820.	1.4574	441.868	16.337	0.
50	389.0	565.9	1288.2	3378679.	0.	0.	0.	0.
51	351.2	1000.3	1524.9	3400065.	2.4389	0.	12.006	0.

IP14_007294

TL	P	T	H	Q	SV	SP	PV	TR
52	159.7	0.	1418.0	3243959.	4.5779	363.814	5.907	772.2
53	158.0	805.6	1430.1	156107.	4.7107	362.547	5.791	0.
54	81.8	622.9	1342.1	3239313.	7.7948	0.	3.239	0.
55	84.0	623.6	1342.4	305703.	7.5945	315.405	0.	0.
56	81.8	622.9	1342.1	2933610.	7.7948	313.565	0.	0.
57	17.0	633.4	1351.2	1704.	38.1010	0.	0.669	1434.2
58	17.0	627.3	1348.3	1724.	37.9983	0.	0.669	4397.6
59	81.8	622.9	1342.1	2933610.	7.7948	0.	3.239	0.
60	45.0	531.4	1299.8	84514.	13.0038	274.443	1.860	0.
61	45.4	0.	1280.8	2849096.	12.3807	275.404	1.916	1051.1
62	27.7	427.2	1251.2	178792.	18.9185	245.783	1.210	0.
63	28.0	0.	1236.7	2670305.	18.1020	246.884	1.244	1062.0
64	8.1	247.9	1169.8	89556.	51.6578	183.453	0.396	0.
65	8.2	0.	1143.7	2580749.	47.0873	184.547	0.417	1027.5
66	16.8	620.8	1345.2	9511.	38.3112	0.	0.	0.
67	125.0	314.7	285.0	0.	0.0176	0.	0.	0.
68	1.7	598.0	1335.1	521.	369.8569	0.	0.	0.
69	4.7	447.3	1263.4	7810.	114.7278	0.	0.	0.
70	4.7	447.3	1263.4	1506.	114.7278	0.	0.	0.
71	0.	0.	1461.4	0.	0.	0.	0.	0.
72	0.	0.	0.	2395.	0.	0.	0.	0.
73	0.	0.	0.	-15558.	0.	0.	0.	0.
75	0.	0.	0.	5859.	0.	0.	0.	0.
76	0.	0.	0.	319680.	0.	0.	0.	0.
79	717.6	722.6	1358.1	330287.	0.9063	505.859	28.138	0.
80	389.0	565.9	1288.2	320140.	0.	0.	0.	0.
81	16.7	599.4	1334.8	0.	37.6582	0.	0.	0.
82	0.	0.	0.	3378679.	0.	0.	0.	0.
83	81.0	312.9	1183.3	208.	0.	0.	0.	0.
84	358.4	1002.1	1525.6	3381093.	2.3901	7.862	12.245	788.4
86	0.	0.	0.	151017.	0.	0.	0.	0.
87	0.	0.	0.	436.	0.	0.	0.	0.
88	0.	0.	0.	2028.	0.	0.	0.	0.
90	85.0	313.3	283.5	0.	0.0176	0.	0.	0.
91	167.8	195.3	163.7	488520.	0.0166	0.647	0.	167.8
95	1.4	113.0	1039.0	2499561.	227.6375	1050.992	2.830	473.8
99	0.	0.	0.	6696.	0.	0.	0.	0.
100	0.	0.	0.	609.	0.	0.	0.	1820.0
104	2605.8	510.4	499.5	4112220.	0.0202	1.026	0.	2605.8
106	3.6	0.	1092.1	81188.	97.1227	148.528	0.192	0.
107	3.6	0.	1092.7	2499561.	96.1692	0.	0.194	1064.8
108	1.4	113.0	1051.0	2499561.	244.6636	1050.992	2.830	-15558.0
109	0.	0.	243.3	1295054.	0.	0.	0.	0.
111	81.0	313.3	283.5	4493901.	5.4137	0.	-0.434	0.
112	0.	0.	1406.9	44165.	0.	0.	0.	0.
113	0.	0.	0.	4013344.	0.	0.	0.115E 19	0.
114	173.1	117.5	85.9	14876.	0.0162	0.624	0.	173.1
115	173.1	117.5	85.9	17693.	0.0162	0.624	0.	173.1
116	173.1	117.5	85.9	23988.	0.0162	0.623	0.	173.1
117	173.1	117.5	85.9	37647.	0.0162	0.660	0.	173.1
118	173.1	117.5	85.9	30863.	0.0162	0.660	0.	173.1
119	173.1	117.5	85.9	25949.	0.0162	0.660	0.	173.1
120	0.	0.	0.	4803.	0.	0.	0.	0.
122	0.	0.	0.	3187660.	0.	0.	0.	0.
123	3.7	119.1	87.1	82694.	0.0162	0.	1.600	0.
125	376.3	756.7	1396.1	18972.	1.8617	0.628	0.	354.6
130	0.	0.	0.	157057.	0.	0.	0.	0.
131	81.1	621.3	1341.4	86653.	7.8479	1.017	0.	81.1
132	81.2	619.5	1340.5	70404.	7.8235	1.019	0.	81.2
133	0.	0.	0.	156448.	0.	0.	0.	0.

IP14_007295

TEST CYCLE HEAT BALANCE

VALVE POINT VWO 06/27/86 TEST POINT 06
INTERMOUNTAIN PWR PROJECT UNIT #1
820000. KW TC6F-30 IN LSB TURBINE NO 270T150
2400. PSIG 1000./ 1000. F 2.300 IN HG ABS

CALCULATED USING ASME STEAM TABLES

COMBINED TURBINE-CYCLE PERFORMANCE

	TEST CONDITIONS	*RATED CONDITIONS
TOTAL LOAD	860177.	859231.
HEAT RATE	7840.2	7848.8
THROTTLE FLOW	6231618.	6296075.

TURBINE THERMAL PERFORMANCE

	HIGH PRESS TB		REHEAT TB		
			IP TB		LP TB
	THROTTLE	COLD RHT	INLET	EXH	EXH
PRESS	2377.74	578.54	533.20	121.00	3.793
TEMP	990.62	619.89	998.89	617.77	123.47
ENTH	1455.39	1304.98	1518.74	1337.08	1026.66
ENTR	1.5303		1.7291	1.7450	
EFF	87.670		91.521		94.915

ABSCISSA PHPX/PT=0.2433 P1STSTG/PT=0.8130 VAN= 515.8

THRU FLOW PERFORMANCE OF CONDENSING SECTION SHAFT NO 1

	TOTAL TB ENERGY BALANCE		LP TB ENERGY BALANCE	
	RHT TB	LP TB	RHT TB	LP TB
AE	518.45	327.54		
H ELEP	1026.66		1026.66	
H UEEP	1036.13		1036.13	
EFF ELEP	94.91	94.78	94.91	94.78
EFF UEEP	93.09	91.88	93.09	91.88
VAN	515.78		515.78	

* LOAD AND HEAT RATE AT RATED POWER FACTOR AND H2 PRESS. FLOW AT RATED THROTTLE PRESS. 2412.2 PSIA AND TEMP OF 1000 F.

IP14_007296

T G L PERFORMANCE OF CONDENSING SECTION SHAFT NO 1

	TOTAL TB ENERGY BALANCE		LP TB ENERGY BALANCE	
	RHT TB	LP TB	RHT TB	LP TB
H ELEP	1029.64		1029.64	
H UEEP	1039.09		1039.09	
EFF ELEP	94.34	93.86	94.34	93.86
EFF UEEP	92.52	90.98	92.52	90.98
VAN	517.43		517.43	

STAGE FLOW FUNCTION

STG NO	SHELL PRESS	ONE VEL HD	PCT DELTA P	FLANGE PRESS	NOZ AREA	Q/AP H FLG	QFS	Q/AP H SHL
1	1933.20	0.	0.	0.	86.6	0.	6175350.	1001.6
4	1096.50	4.255	1.22	1083.10	157.4	843.7	5571007.	838.5
RH 1	533.20	0.	0.	0.	350.2	0.	5055275.	788.3
8	522.54	0.	0.	0.	350.2	0.	5068343.	806.4
11	237.68	0.822	1.11	235.05	711.2	780.2	4832187.	768.6
15	121.00	0.	0.	0.	807.6	0.	4350214.	1118.0
15	66.98	0.286	1.24	66.15	1414.8	1074.9	4209266.	1045.4
16	41.11	0.194	1.37	40.55	2021.4	1081.2	3919417.	1052.9
18	12.08	0.063	1.51	11.90	6018.0	1054.3	3767954.	1017.9
19	5.28	0.019	1.03	5.23	12096.0	1077.6	3649982.	1072.0

IP14_007297

TL	PRESS	TEMP	ENTH	FLOW		

F E E D W A T E R C Y C L E

					HEATER	8
4 FW IN	2739.20	481.00	466.02	6098968.0	CLOSED	
2 EXTR	1072.90	790.10	1379.93	582931.7	TD =	-1.7
3 DRAIN	1072.90	489.25	475.18	582931.7	DC =	8.3
					HEATER	7
7 FW IN	2739.20	396.70	374.65	6098968.0	CLOSED	
5 EXTR	568.05	618.66	1305.06	541957.0	TD =	-0.6
6 DRAIN	568.05	403.83	379.59	1124888.7	DC =	7.1
3 ENTRY	1072.90	489.25	475.18	582931.7		
					HEATER	6
10 FW IN	2865.50	346.26	322.27	6098968.0	CLOSED	
8 EXTR	231.42	799.80	1424.08	236156.2	TD =	-2.5
9 DRAIN	231.42	354.00	326.11	1361044.8	DC =	7.7
6 ENTRY	568.05	403.83	379.59	1124888.7		
					PUMP	
11 FW IN	0.	0.	0.	6177375.0		
86 SEAL INJ	0.	0.	0.	148870.4		
30 SEAL RET	0.	0.	0.	71740.0		
32 LEAKAGE	0.	0.	0.	200.0		
24 EXTR	1500.00	342.00	315.60	0.		
35 FW OUT	2865.50	346.26	322.27	6254305.4		
					HEATER	5
13 FW IN	137.40	297.70	267.48	4573041.8	OPEN	
12 EXTR	120.90	621.14	1338.78	244917.4	STO =	1315.0
111 DRAIN	120.90	341.95	313.30	6584692.8	SC =	-0.1
109 ENTRY	0.	0.	289.98	1768362.7		
					HEATER	4
17 FW IN	176.81	266.30	235.45	4573042.1	CLOSED	
15 EXTR	64.67	515.04	1290.15	140947.6	TD =	-0.3
16 DRAIN	64.67	272.90	241.95	140947.6	DC =	6.6
					HEATER	3
20 FW IN	176.81	197.10	165.55	4573042.1	CLOSED	
18 EXTR	39.26	414.53	1243.59	289849.8	TD =	-0.2
19 DRAIN	39.26	205.66	173.84	430797.5	DC =	8.6
16 ENTRY	64.67	272.90	241.95	140947.6		
					HEATER	2
23 FW IN	176.81	159.30	127.67	4573042.1	CLOSED	
21 EXTR	11.21	233.25	1161.90	151462.3	TD =	1.6
22 DRAIN	11.21	165.41	133.39	582259.8	DC =	6.1
19 ENTRY	39.26	205.66	173.84	430797.5		

IP14_007298

TL		PRESS	TEMP	ENTH	FLOW	
						STM SEAL REG
88	FLOW TO	0.	0.	0.	6922.6	CALCULATED
70	TDV	6.73	567.70	1320.28	3619.7	TO HEATER
68	TDV	5.94	673.30	1371.24	3302.9	TO CONDENSER
	NOT CODED FOR MU		MEAS TOTAL FLOW =		0.	
						HEATER 1
26	FW IN	226.60	128.70	97.22	4573042.1	CLOSED
25	EXTR	5.26	0.	1085.61	117972.3	TD = 5.1
123	DRAIN	5.26	133.30	101.26	703851.7	DC = 4.6
22	ENTRY	11.21	165.41	133.39	582259.8	
70	ENTRY	6.73	567.70	1320.28	3619.7	
						PUMP
33	FW IN	0.	0.	0.	4722112.5	
87	LEAKAGE	0.	0.	0.	200.0	
27	FW OUT	0.	0.	0.	4721912.5	
						FW TO BOILER
1	FW IN	2739.20	554.90	552.50	6098968.0	S+L = -22687.

T U R B I N E E X P A N S I O N

						MAIN STEAM LINE
71	EXIT	0.	0.	1455.39	0.	
36	THROTTLE	2377.74	990.62	1455.39	6231618.4	
						VALVE STEM LKG
						SQRT P/V = 85.996
37	LO NO 1	533.38	865.40	1446.71	2683.9	C = 55.299
						SQRT P/V = 19.333
38	LO NO 2	0.	0.	0.	2071.6	C = 107.154
						EXP TO STG 1
40	SHELL	1933.20	932.26	1432.92	6175349.5	
112	EXTR	0.	0.	1432.92	51513.5	

IP14_007299

TL	PRESS	TEMP	ENTH	FLOW	
					PACKING NO 2
					SQRT P/V =.115E 19
42 LO NO 1	127.41	766.10	1411.50	17237.4	C = 0.000
					SQRT P/V = 4.741
43 LO NO 2	17.67	763.00	1414.67	3571.4	C = 880.293
					SQRT P/V = 0.655
100 LO NO 3	0.	0.	0.	602.5	C = 1706.816
					EXP TO STG 4
41 SHELL	1096.50	0.	1380.04	5571006.5	
79 EXTR	1083.10	791.10	1380.04	582931.7	
					PACKING NO 1
					SQRT P/V = 23.906
46 LO NO 1	125.98	594.30	1325.03	8857.9	C = 623.429
					SQRT P/V = 5.078
47 LO NO 2	17.59	578.50	1324.69	5443.3	C = 1190.670
					SQRT P/V = 0.708
100 LO NO 3	0.	0.	0.	602.5	C = 1706.816
					EXPAND TO EXHAUST
49 EXH	578.54	619.89	1304.98	5594548.5	
80 EXTR	578.54	619.89	1304.98	541957.0	
50 TO RHT	578.54	619.89	1304.98	5052591.6	
					REHEATER 1
BEFORE LO	0.08	0.	1519.04	0.	
37 ENTRY					
84 AFTER LO	533.20	999.37	1519.00	5055275.4	PCTDP = 7.837
					EXPAND TO BOWL
51 ENTRY	522.54	998.31	1518.74	5068343.1	
125 ENTRY	533.21	812.10	1418.13	13067.7	
					EXP TO STG 11
52 SHELL	237.68	0.	1411.80	4832187.0	
53 EXTR	235.05	800.80	1424.45	236156.2	

IP14_007300

TL	PRESS	TEMP	ENTH	FLOW
				PACKING NO 3
				SQRT P/V = 4.818
57 LO NO 1	18.00	640.50	1354.63	2556.8 C = 1325.710
				SQRT P/V = 0.704
58 LO NO 2	18.00	634.30	1351.62	2625.8 C = 5441.752
				SQRT P/V = 0.706
100 LO NO 3	0.	0.	0.	602.5 C = 1706.816
				SQRT P/V = 0.
100 LO NO 4	0.	0.	0.	602.5 C = 1706.816
				EXPAND TO EXHAUST
56 EXH	121.00	617.77	1337.08	4350214.1
55 EXTR	124.43	619.80	1337.88	475585.4
				EXPAND TO BOWL
59 ENTRY	121.00	617.77	1337.08	4350214.1
				EXP TO STG 15
61 SHELL	66.98	0.	1273.98	4209266.4
60 EXTR	66.15	524.40	1294.64	140947.6
				EXP TO STG 16
63 SHELL	41.11	0.	1229.93	3919416.6
62 EXTR	40.55	421.70	1246.92	289849.8
				EXP TO STG 18
65 SHELL	12.08	0.	1137.96	3767954.3
64 EXTR	11.90	232.57	1161.35	151462.3
				EXP TO STG 19
107 SHELL	5.28	0.	1085.59	3649982.0
106 EXTR	5.23	0.	1085.61	117972.3
				CONDENSER
				SHAFT 1
108 TB EXH	1.86	123.47	1036.1268	3649982.0 LEVL =-24716.0
76 ENTRY	0.	0.	0.	1047415.0
122 DRAIN	0.	0.	0.	4722112.9
				GENERATOR 1
				SHAFT 1

MEASURED LOAD = 860177.0 PF = 0.992 H2 = 61.00
SHAFT 1 KW = 871978.2 FL =4353.0 GL = 7448.2

IP14_007301

TEST CYCLE HEAT BALANCE

P E R F O R M A N C E

TRUNKLINE OUTPUT

TL	P	T	H	Q	SV	SP	PV	TR
1	2739.2	554.9	552.5	6098968.	0.0213	0.	0.	-22687.0
2	1072.9	790.1	1379.9	582932.	0.6290	553.190	-1.710	236.9
3	1072.9	489.3	475.2	582932.	0.0201	0.	8.250	0.
4	2739.2	481.0	466.0	6098968.	0.	0.	0.	0.
5	568.1	618.7	1305.1	541957.	1.0314	480.355	-0.645	138.3
6	568.1	403.8	379.6	1124889.	0.0187	0.	7.130	0.
7	2739.2	396.7	374.6	6098968.	0.	0.	0.	0.
8	231.4	799.8	1424.1	236156.	3.1815	394.230	-2.470	405.6
9	231.4	354.0	326.1	1361045.	0.0180	0.	7.740	0.
10	2865.5	346.3	322.3	6098968.	0.0177	0.	0.	0.
11	0.	0.	0.	6177375.	0.	0.	0.	0.
12	120.9	621.1	1338.8	244917.	5.2339	341.828	1315.000	279.3
13	137.4	297.7	267.5	4573042.	0.0174	0.	0.	0.
14	176.8	297.9	267.8	4573042.	0.0174	1.014	0.	176.8
15	64.7	515.0	1290.2	140948.	8.8565	297.641	-0.259	217.4
16	64.7	272.9	242.0	140948.	0.0172	0.	6.600	0.
17	176.8	266.3	235.5	4573042.	0.	0.	0.	0.
18	39.3	414.5	1243.6	289850.	13.0951	266.124	-0.176	148.4
19	39.3	205.7	173.8	430797.	0.0167	0.	8.560	0.
20	176.8	197.1	165.5	4573042.	0.	0.	0.	0.
21	11.2	233.3	1161.9	151462.	36.4449	198.658	1.558	34.6
22	11.2	165.4	133.4	582260.	0.0164	0.	6.110	0.
23	176.8	159.3	127.7	4573042.	0.	0.	0.	0.
24	1500.0	342.0	315.6	0.	0.0178	0.	0.	0.
25	5.3	0.	1085.6	117972.	0.	164.395	5.095	-164.4
26	226.6	128.7	97.2	4573042.	0.0162	0.	0.	0.
27	0.	0.	0.	4721913.	0.	0.	0.	0.
28	0.	0.	0.	20122.	0.	0.	0.	0.
29	0.	0.	0.	51618.	0.	0.	0.	0.
30	0.	0.	0.	71740.	0.	0.	0.	0.
31	2865.4	345.3	321.3	155337.	0.0177	1.004	0.	2865.4
32	0.	0.	0.	200.	0.	0.	0.	0.
33	0.	0.	0.	4722113.	0.	0.	0.	0.
34	0.	0.	0.	-22687.	0.	0.	0.	0.
35	2865.5	346.3	322.3	6254305.	0.0177	0.	0.	0.
36	2377.7	990.6	1455.4	6231618.	0.32150	.133E 37	85.996	0.
37	533.4	865.4	1446.7	2684.	1.4270	0.780	19.333	55.3
38	0.	0.	0.	2072.	0.	0.	0.	107.2
39	2377.7	0.	1455.4	6226863.	0.3215	0.	85.996	0.
40	1933.2	932.3	1432.9	6175350.	0.3814	144.454	71.196	0.
41	1096.5	0.	1380.0	5571007.	0.6155	556.295	42.209	838.5
42	127.4	766.1	1411.5	17237.	5.6673	0.779	4.741	0.0
43	17.7	763.0	1414.7	3571.	41.1526	0.	0.655	880.3
45	0.	0.	0.	38446.	0.	0.	0.	0.
46	126.0	594.3	1325.0	8858.	4.8864	0.703	5.078	623.4
47	17.6	578.5	1324.7	5443.	35.0524	0.	0.708	1190.7
48	0.	0.	0.	5609452.	0.	0.	0.	0.
49	578.5	619.9	1305.0	5594549.	1.0123	482.302	23.906	0.
50	578.5	619.9	1305.0	5052592.	0.	0.	0.	0.
51	522.5	998.3	1518.7	5068343.	1.6227	0.	17.948	0.

IP14_007302

TL	P	T	H	Q	SV	SP	PV	TR
52	237.7	0.	1411.8	4832187.	3.0412	396.959	8.840	768.6
53	235.0	800.8	1424.4	236156.	3.1341	395.579	8.660	0.
54	121.0	617.8	1337.1	4825799.	5.2121	0.	4.818	0.
55	124.4	619.8	1337.9	475585.	5.0760	344.000	0.	0.
56	121.0	617.8	1337.1	4350214.	5.2121	341.890	0.	0.
57	18.0	640.5	1354.6	2557.	36.3219	0.	0.704	1325.7
58	18.0	634.3	1351.6	2626.	36.1155	0.	0.706	5441.8
59	121.0	617.8	1337.1	4350214.	5.2121	0.	4.818	0.
60	66.2	524.4	1294.6	140948.	8.7427	299.148	2.751	0.
61	67.0	0.	1274.0	4209266.	8.2707	300.108	2.846	1045.4
62	40.6	421.7	1246.9	289850.	12.7827	268.075	1.781	0.
63	41.1	0.	1229.9	3919417.	12.1229	269.079	1.842	1052.9
64	11.9	232.6	1161.3	151462.	34.2683	201.557	0.589	0.
65	12.1	0.	1138.0	3767954.	31.9424	202.682	0.615	1017.9
66	17.5	650.8	1359.7	9346.	37.7149	0.	0.	0.
67	100.0	339.6	1194.0	0.	4.5161	0.	0.	0.
68	5.9	673.3	1371.2	3303.	113.5754	0.	0.	0.
69	6.7	567.7	1320.3	8789.	90.8161	0.	0.	0.
70	6.7	567.7	1320.3	3620.	90.8161	0.	0.	0.
71	0.	0.	1455.4	0.	0.	0.	0.	0.
72	0.	0.	0.	1315.	0.	0.	0.	0.
73	0.	0.	0.	-24716.	0.	0.	0.	0.
75	0.	0.	0.	5731.	0.	0.	0.	0.
76	0.	0.	0.	1047415.	0.	0.	0.	0.
79	1083.1	791.1	1380.0	582932.	0.6232	554.359	41.690	0.
80	578.5	619.9	1305.0	541957.	0.	0.	0.	0.
81	17.4	449.2	1262.9	0.	30.9668	0.	0.	0.
82	0.	0.	0.	5052592.	0.	0.	0.	0.
83	120.9	341.8	1190.5	314.	0.	0.	0.	0.
84	533.2	999.4	1519.0	5055275.	1.5901	7.837	18.312	788.3
86	0.	0.	0.	148870.	0.	0.	0.	0.
87	0.	0.	0.	200.	0.	0.	0.	0.
88	0.	0.	0.	6923.	0.	0.	0.	0.
90	125.0	342.0	313.3	0.	0.0179	0.	0.	0.
91	207.3	200.7	169.3	407318.	0.0166	0.647	0.	207.3
95	1.9	123.5	1026.7	3649982.	169.7092	1036.127	3.793	515.8
99	0.	0.	0.	6628.	0.	0.	0.	0.
100	0.	0.	0.	602.	0.	0.	0.	1706.8
104	2739.2	554.9	552.5	6113591.	0.0213	1.026	0.	2739.2
106	5.2	0.	1085.6	117972.	67.2973	164.103	0.279	0.
107	5.3	0.	1085.6	3649982.	66.6338	0.	0.281	1072.0
108	1.9	123.5	1036.1	3649982.	185.7496	1036.127	3.793	-24716.0
109	0.	0.	290.0	1768363.	0.	0.	0.	0.
111	120.9	342.0	313.3	6584693.	3.7019	0.	-0.122	0.
112	0.	0.	1432.9	51513.	0.	0.	0.	0.
113	0.	0.	0.	6153938.	0.	0.	0.115E 19	0.
114	226.6	128.7	97.2	15407.	0.0162	0.624	0.	226.6
115	226.6	128.7	97.2	17348.	0.0162	0.623	0.	226.6
116	226.6	128.7	97.2	26500.	0.0162	0.623	0.	226.6
117	226.6	128.7	97.2	35301.	0.0162	0.660	0.	226.6
118	226.6	128.7	97.2	28789.	0.0162	0.660	0.	226.6
119	226.6	128.7	97.2	25526.	0.0162	0.660	0.	226.6
120	0.	0.	0.	4755.	0.	0.	0.	0.
122	0.	0.	0.	4722113.	0.	0.	0.	0.
123	5.3	133.3	101.3	703852.	0.0163	0.	4.600	0.
125	533.2	812.1	1418.1	13068.	1.3620	0.628	0.	526.0
130	0.	0.	0.	256763.	0.	0.	0.	0.
131	120.5	620.8	1338.6	131492.	5.2498	1.018	0.	120.5
132	120.3	619.5	1338.0	125271.	5.2519	1.019	0.	120.3
133	0.	0.	0.	256161.	0.	0.	0.	0.

IP14_007303

TEST CYCLE HEAT BALANCE

VALVE POINT 3RD VL	06/28/86	TEST POINT 07
INTERMOUNTAIN PWR PROJECT		UNIT #1
820000. KW	TC6F-30 IN LSB	TURBINE NO 270T150
2400. PSIG	1000./ 1000. F	2.300 IN HG ABS

CALCULATED USING ASME STEAM TABLES

COMBINED TURBINE-CYCLE PERFORMANCE

	TEST CONDITIONS	*RATED CONDITIONS
TOTAL LOAD	778625.	778136.
HEAT RATE	7874.3	7879.2
THROTTLE FLOW	5547789.	5602677.

TURBINE THERMAL PERFORMANCE

	HIGH PRESS TB		REHEAT TB		
			IP TB		LP TB
	THROTTLE	COLD RHT	INLET	EXH	EXH
PRESS	2388.68	515.83	475.40	108.44	3.596
TEMP	998.87	605.09	1001.45	621.52	121.53
ENTH	1460.52	1300.94	1521.82	1339.77	1033.55
ENTR	1.5334		1.7436	1.7594	
EFF	86.127		91.556		94.599

ABSCISSA PHPX/PT=0.2159 P1STSTG/PT=0.7166 VAN= 493.5

THRU FLOW PERFORMANCE OF CONDENSING SECTION SHAFT NO 1

	TOTAL TB ENERGY BALANCE		LP TB ENERGY BALANCE	
	RHT TB	LP TB	RHT TB	LP TB
AE	516.15	324.93		
H ELEP	1033.55		1033.55	
H UEEP	1044.21		1044.21	
EFF ELEP	94.60	94.24	94.60	94.24
EFF UEEP	92.53	90.96	92.53	90.96
VAN	493.51		493.51	

* LOAD AND HEAT RATE AT RATED POWER FACTOR AND H2 PRESS. FLOW AT RATED THROTTLE PRESS. OF 2412.2 PSIA AND TEMP. OF 1000 F.

IP14_007304

T G L PERFORMANCE OF CONDENSING SECTION SHAFT NO 1

	TOTAL TB ENERGY BALANCE		LP TB ENERGY BALANCE	
	RHT TB	LP TB	RHT TB	LP TB
H ELEP	1036.47		1036.47	
H UEEP	1047.08		1047.08	
EFF ELEP	94.03	93.34	94.03	93.34
EFF UEEP	91.98	90.08	91.98	90.08
VAN	495.04		495.04	

STAGE FLOW FUNCTION

STG NO	SHELL PRESS	ONE VEL HD	PCT DELTA P	FLANGE PRESS	NOZ AREA	Q/AP H FLG	QFS	Q/AP H SHL
1	1711.70	0.	0.	0.	86.6	0.	5497228.	1002.5
4	973.24	3.567	1.15	962.00	157.4	844.5	4969508.	839.6
RH 1	475.40	0.	0.	0.	350.2	0.	4517432.	791.9
8	465.89	0.	0.	0.	350.2	0.	4529022.	810.0
11	212.48	0.744	1.12	210.10	711.2	781.7	4317220.	770.5
15	108.44	0.	0.	0.	807.6	0.	3892270.	1119.2
15	60.08	0.236	1.14	59.39	1414.8	1076.3	3771192.	1048.6
16	36.93	0.167	1.31	36.45	2021.4	1082.8	3517053.	1056.5
18	10.84	0.062	1.66	10.66	6018.0	1061.7	3375766.	1016.0
19	4.77	0.010	0.60	4.74	12096.0	1073.7	3294092.	1070.4

IP14_007305

TL	PRESS	TEMP	ENTH	FLOW		

F E E D W A T E R C Y C L E

					HEATER	8
4 FW IN	2698.60	469.91	453.64	5541241.4	CLOSED	
2 EXTR	953.95	772.00	1374.92	504855.0	TD =	-3.2
3 DRAIN	953.95	477.07	461.12	504855.0	DC =	7.2
					HEATER	7
7 FW IN	2698.60	387.58	364.99	5541241.4	CLOSED	
5 EXTR	507.30	604.41	1301.24	477215.3	TD =	-1.4
6 DRAIN	507.30	394.19	369.14	982070.3	DC =	6.6
3 ENTRY	953.95	477.07	461.12	504855.0		
					HEATER	6
10 FW IN	2808.00	337.42	313.08	5541241.4	CLOSED	
8 EXTR	206.53	801.78	1426.14	211802.0	TD =	-3.1
9 DRAIN	206.53	344.11	315.70	1193872.3	DC =	6.7
6 ENTRY	507.30	394.19	369.14	982070.3		
					PUMP	
11 FW IN	0.	0.	0.	5497204.6		
86 SEAL INJ	0.	0.	0.	152133.3		
30 SEAL RET	0.	0.	0.	72086.0		
32 LEAKAGE	0.	0.	0.	1590.0		
24 EXTR	1500.00	332.00	305.25	0.		
35 FW OUT	2808.00	337.42	313.08	5575661.8		
					HEATER	5
13 FW IN	124.60	290.94	260.52	4077019.0	OPEN	
12 EXTR	108.30	622.51	1340.28	220460.2	STD =	-6127.0
111 DRAIN	108.30	333.91	304.89	5953459.4	SC =	-0.3
109 ENTRY	0.	0.	276.39	1650127.1		
					HEATER	4
17 FW IN	162.50	260.22	229.24	4077019.9	CLOSED	
15 EXTR	58.14	517.15	1291.77	121078.2	TD =	-0.3
16 DRAIN	58.14	267.20	236.13	121078.2	DC =	7.0
					HEATER	3
20 FW IN	162.50	191.67	160.06	4077019.9	CLOSED	
18 EXTR	35.24	416.86	1245.26	254139.3	TD =	-0.5
19 DRAIN	35.24	199.86	168.00	375217.5	DC =	8.2
16 ENTRY	58.14	267.20	236.13	121078.2		
					HEATER	2
23 FW IN	162.50	151.93	120.27	4077019.9	CLOSED	
21 EXTR	10.02	236.05	1163.62	141286.7	TD =	1.6
22 DRAIN	10.02	158.24	126.21	516504.2	DC =	6.3
19 ENTRY	35.24	199.86	168.00	375217.5		

IP14_007306

TL		PRESS	TEMP	ENTH	FLOW	
						STM SEAL REG
88	FLOW TO	0.	0.	0.	7805.0	CALCULATED
70	TDV	5.57	619.40	1345.17	6421.1	TO HEATER
68	TDV	2.97	630.60	1350.73	1383.8	TO CONDENSER
	NOT CODED FOR MU		MEAS TOTAL FLOW =		0.	
						HEATER 1
26	FW IN	208.10	126.42	94.90	4077019.9	CLOSED
25	EXTR	4.80	0.	1089.44	81674.6	TD = 8.6
123	DRAIN	4.80	130.26	98.22	604600.0	DC = 3.8
22	ENTRY	10.02	158.24	126.21	516504.2	
70	ENTRY	5.57	619.40	1345.17	6421.1	
						PUMP
33	FW IN	0.	0.	0.	4239896.2	
87	LEAKAGE	0.	0.	0.	10743.0	
27	FW OUT	0.	0.	0.	4229153.2	
						FW TO BOILER
1	FW IN	2698.60	542.09	536.90	5541241.4	S+L = -27873.

T U R B I N E E X P A N S I O N

						MAIN STEAM LINE
71	EXIT	0.	0.	1460.52	0.	
36	THROTTLE	2388.68	998.87	1460.52	5547788.8	
						VALVE STEM LKG
						SQRT P/V = 86.034
37	LO NO 1	475.58	870.63	1451.69	2574.4	C = 55.529
						SQRT P/V = 17.165
38	LO NO 2	0.	0.	0.	2203.0	C = 128.339
						EXP TO STG 1
40	SHELL	1711.70	909.98	1427.13	5497227.5	
112	EXTR	0.	0.	1427.13	45783.9	

IP14_007307

TL	PRESS	TEMP	ENTH	FLOW	
					PACKING NO 2
					SQRT P/V =.115E 19
42 LO NO 1	113.76	757.98	1407.99	14688.0	C = 0.000
					SQRT P/V = 4.245
43 LO NO 2	17.74	749.20	1407.85	7575.6	C = 1925.945
					SQRT P/V = 0.662
100 LO NO 3	0.	0.	0.	600.9	C = 1732.090
					EXP TO STG 4
41 SHELL	973.24	0.	1375.39	4969507.9	
79 EXTR	962.00	773.47	1375.39	504855.0	
					PACKING NO 1
					SQRT P/V = 21.395
46 LO NO 1	112.65	587.77	1322.66	7648.2	C = 543.536
					SQRT P/V = 4.550
47 LO NO 2	17.62	570.00	1320.60	3379.8	C = 874.799
					SQRT P/V = 0.713
100 LO NO 3	0.	0.	0.	600.9	C = 1732.090
					EXPAND TO EXHAUST
49 EXH	515.83	605.09	1300.94	4992072.6	
80 EXTR	515.83	605.09	1300.94	477215.3	
50 TO RHT	515.83	605.09	1300.94	4514857.4	
					REHEATER 1
BEFORE LO	0.08	0.	1522.14	0.	
37 ENTRY					
84 AFTER LO	475.40	1001.96	1522.10	4517431.8	PCTDP = 7.838
					EXPAND TO BOWL
51 ENTRY	465.89	1000.93	1521.82	4529022.1	
125 ENTRY	475.66	801.63	1414.90	11590.3	
					EXP TO STG 11
52 SHELL	212.48	0.	1415.50	4317220.1	
53 EXTR	210.10	804.20	1427.24	211802.0	

IP14_007308

TL	PRESS	TEMP	ENTH	FLOW	
					PACKING NO 3
					SQRT P/V = 4.306
57 LO NO 1	17.77	639.20	1354.01	2307.6	C = 1365.275
					SQRT P/V = 0.695
58 LO NO 2	17.68	632.80	1350.91	2369.6	C = 5135.994
					SQRT P/V = 0.694
100 LO NO 3	0.	0.	0.	600.9	C = 1732.090
					SQRT P/V = 0.
100 LO NO 4	0.	0.	0.	600.9	C = 1732.090
					EXPAND TO EXHAUST
56 EXH	108.44	621.52	1339.77	3892270.4	
55 EXTR	111.36	622.97	1340.31	419070.6	
					EXPAND TO BOWL
59 ENTRY	108.44	621.52	1339.77	3892270.4	
					EXP TO STG 15
61 SHELL	60.08	0.	1277.95	3771192.3	
60 EXTR	59.39	528.59	1297.27	121078.2	
					EXP TO STG 16
63 SHELL	36.93	0.	1233.84	3517052.9	
62 EXTR	36.45	425.54	1249.32	254139.3	
					EXP TO STG 18
65 SHELL	10.84	0.	1141.36	3375766.2	
64 EXTR	10.66	241.14	1165.82	141286.7	
					EXP TO STG 19
107 SHELL	4.77	0.	1089.71	3294091.6	
106 EXTR	4.74	0.	1089.44	81674.6	
					CONDENSER
					SHAFT 1
108 TB EXH	1.77	121.53	1044.2099	3294091.6	LEVL =-34353.0
76 ENTRY	0.	0.	0.	911451.4	
122 DRAIN	0.	0.	0.	4239896.0	
					GENERATOR 1
					SHAFT 1

MEASURED LOAD = 778625.4 PF = 0.963 H2 = 65.00
SHAFT 1 KW = 789950.8 FL =4353.0 GL = 6972.4

IP14_007309

TEST CYCLE HEAT BALANCE

P E R F O R M A N C E

TRUNKLINE OUTPUT

TL	P	T	H	Q	SV	SP	PV	TR
1	2698.6	542.1	536.9	5541241.	0.0210	0.	0.	-27873.0
2	953.9	772.0	1374.9	504855.	0.7017	538.892	-3.198	233.1
3	953.9	477.1	461.1	504855.	0.0199	0.	7.160	0.
4	2698.6	469.9	453.6	5541241.	0.	0.	0.	0.
5	507.3	604.4	1301.2	477215.	1.1467	468.505	-1.405	135.9
6	507.3	394.2	369.1	982070.	0.0185	0.	6.610	0.
7	2698.6	387.6	365.0	5541241.	0.	0.	0.	0.
8	206.5	801.8	1426.1	211802.	3.5782	384.506	-3.074	417.3
9	206.5	344.1	315.7	1193872.	0.0179	0.	6.690	0.
10	2808.0	337.4	313.1	5541241.	0.0176	0.	0.	0.
11	0.	0.	0.	5497205.	0.	0.	0.	0.
12	108.3	622.5	1340.3	220460.	5.8614	333.639	-6127.000	288.9
13	124.6	290.9	260.5	4077019.	0.0174	0.	0.	0.
14	162.5	290.9	260.6	4077020.	0.0174	1.014	0.	162.5
15	58.1	517.2	1291.8	121078.	9.8875	290.661	-0.279	226.5
16	58.1	267.2	236.1	121078.	0.0171	0.	6.980	0.
17	162.5	260.2	229.2	4077020.	0.	0.	0.	0.
18	35.2	416.9	1245.3	254139.	14.6498	259.687	-0.533	157.2
19	35.2	199.9	168.0	375217.	0.0166	0.	8.190	0.
20	162.5	191.7	160.1	4077020.	0.	0.	0.	0.
21	10.0	236.0	1163.6	141287.	41.0032	193.290	1.620	42.8
22	10.0	158.2	126.2	516504.	0.0164	0.	6.310	0.
23	162.5	151.9	120.3	4077020.	0.	0.	0.	0.
24	1500.0	332.0	305.2	0.	0.0177	0.	0.	0.
25	4.8	0.	1089.4	81675.	0.	160.507	8.577	-160.5
26	208.1	126.4	94.9	4077020.	0.0162	0.	0.	0.
27	0.	0.	0.	4229153.	0.	0.	0.	0.
28	0.	0.	0.	20942.	0.	0.	0.	0.
29	0.	0.	0.	51144.	0.	0.	0.	0.
30	0.	0.	0.	72086.	0.	0.	0.	0.
31	2807.8	318.2	293.4	34420.	0.0174	1.000	0.	2807.8
32	0.	0.	0.	1590.	0.	0.	0.	0.
33	0.	0.	0.	4239896.	0.	0.	0.	0.
34	0.	0.	0.	-27873.	0.	0.	0.	0.
35	2808.0	337.4	313.1	5575662.	0.0176	0.	0.	0.
36	2388.7	998.9	1460.5	5547789.	0.32270.133E 37		86.034	0.
37	475.6	870.6	1451.7	2574.	1.6141	0.780	17.165	55.5
38	0.	0.	0.	2203.	0.	0.	0.	128.3
39	2388.7	0.	1460.5	5543011.	0.3227	0.	86.034	0.
40	1711.7	910.0	1427.1	5497228.	0.4269	142.491	63.321	0.
41	973.2	0.	1375.4	4969508.	0.6883	541.784	37.602	839.6
42	113.8	758.0	1408.0	14688.	6.3114	0.779	4.245	0.0
43	17.7	749.2	1407.8	7576.	40.5245	0.	0.662	1925.9
45	0.	0.	0.	34194.	0.	0.	0.	0.
46	112.6	587.8	1322.7	7648.	5.4402	0.703	4.550	543.5
47	17.6	570.0	1320.6	3380.	34.7069	0.	0.713	874.8
48	0.	0.	0.	5003702.	0.	0.	0.	0.
49	515.8	605.1	1300.9	4992073.	1.1269	470.233	21.395	0.
50	515.8	605.1	1300.9	4514857.	0.	0.	0.	0.
51	465.9	1000.9	1521.8	4529022.	1.8285	0.	15.965	0.

IP14_007310

TL	P	T	H	Q	SV	SP	PV	TR
52	212.5	0.	1415.5	4317220.	3.4228	387.302	7.879	770.5
53	210.1	804.2	1427.2	211802.	3.5235	385.955	7.722	0.
54	108.4	621.5	1339.8	4311341.	5.8480	0.	4.306	0.
55	111.4	623.0	1340.3	419071.	5.7004	335.695	0.	0.
56	108.4	621.5	1339.8	3892270.	5.8480	333.735	0.	0.
57	17.8	639.2	1354.0	2308.	36.7493	0.	0.695	1365.3
58	17.7	632.8	1350.9	2370.	36.7199	0.	0.694	5136.0
59	108.4	621.5	1339.8	3892270.	5.8481	0.	4.306	0.
60	59.4	528.6	1297.3	121078.	9.7956	292.044	2.462	0.
61	60.1	0.	1277.9	3771192.	9.2975	292.984	2.542	1048.6
62	36.4	425.5	1249.3	254139.	14.3045	261.686	1.596	0.
63	36.9	0.	1233.8	3517053.	13.6172	262.725	1.647	1056.5
64	10.7	241.1	1165.8	141287.	38.8164	196.228	0.524	0.
65	10.8	0.	1141.4	3375766.	35.5498	197.345	0.552	1016.0
66	17.3	641.4	1355.1	10031.	37.8482	0.	0.	0.
67	17.3	335.0	1208.7	0.	27.1329	0.	0.	0.
68	3.0	630.6	1350.7	1384.	218.5813	0.	0.	0.
69	5.6	619.4	1345.2	7805.	115.3091	0.	0.	0.
70	5.6	619.4	1345.2	6421.	115.3091	0.	0.	0.
71	0.	0.	1460.5	0.	0.	0.	0.	0.
72	0.	0.	0.	-6127.	0.	0.	0.	0.
73	0.	0.	0.	-34353.	0.	0.	0.	0.
75	0.	0.	0.	5503.	0.	0.	0.	0.
76	0.	0.	0.	911451.	0.	0.	0.	0.
79	962.0	773.5	1375.4	504855.	0.6964	539.901	37.166	0.
80	515.8	605.1	1300.9	477215.	0.	0.	0.	0.
81	17.3	494.8	1284.6	922.	32.8130	0.	0.	0.
82	0.	0.	0.	4514857.	0.	0.	0.	0.
83	108.3	333.6	1188.6	274.	0.	0.	0.	0.
84	475.4	1002.0	1522.1	4517432.	1.7918	7.838	16.289	791.9
86	0.	0.	0.	152133.	0.	0.	0.	0.
87	0.	0.	0.	10743.	0.	0.	0.	0.
88	0.	0.	0.	7805.	0.	0.	0.	0.
90	108.0	333.9	304.9	0.	4.1227	0.	0.	0.
91	194.6	205.0	173.5	456255.	0.0167	0.647	0.	194.6
95	1.8	121.5	1033.6	3294092.	179.9245	1044.210	3.596	493.5
99	0.	0.	0.	6611.	0.	0.	0.	0.
100	0.	0.	0.	601.	0.	0.	0.	1732.1
104	2698.6	542.1	536.9	5562790.	0.0210	1.026	0.	2698.6
106	4.7	0.	1089.4	81675.	74.1338	160.006	0.253	0.
107	4.8	0.	1089.7	3294092.	73.7069	0.	0.254	1070.4
108	1.8	121.5	1044.2	3294092.	195.3018	1044.210	3.596	-34353.0
109	0.	0.	276.4	1650127.	0.	0.	0.	0.
111	108.3	333.9	304.9	5953459.	4.1105	0.	-0.271	0.
112	0.	0.	1427.1	45784.	0.	0.	0.	0.
113	0.	0.	0.	5474363.	0.	0.	0.115E 19	0.
114	208.1	126.4	94.9	15369.	0.0162	0.624	0.	208.1
115	208.1	126.4	94.9	17362.	0.0162	0.623	0.	208.1
116	208.1	126.4	94.9	26481.	0.0162	0.623	0.	208.1
117	208.1	126.4	94.9	36208.	0.0162	0.660	0.	208.1
118	208.1	126.4	94.9	30206.	0.0162	0.660	0.	208.1
119	208.1	126.4	94.9	26507.	0.0162	0.660	0.	208.1
120	0.	0.	0.	4777.	0.	0.	0.	0.
122	0.	0.	0.	4239896.	0.	0.	0.	0.
123	4.8	130.3	98.2	604600.	0.0162	0.	3.840	0.
125	475.7	801.6	1414.9	11590.	1.5195	0.628	0.	469.3
130	0.	0.	0.	220947.	0.	0.	0.	0.
131	108.1	622.6	1340.3	110988.	5.8731	1.018	0.	108.1
132	107.9	621.3	1339.7	109959.	5.8767	1.019	0.	107.9
133	0.	0.	0.	221268.	0.	0.	0.	0.

IP14_007311

TEST CYCLE HEAT BALANCE

VALVE POINT 2ND VL	06/28/86	TEST POINT 08
INTERMOUNTAIN PWR PROJECT		UNIT #1
820000. KW	TC6F-30 IN LSB	TURBINE NO 270T150
2400. PSIG	1000./ 1000. F	2.300 IN HG ABS

CALCULATED USING ASME STEAM TABLES

COMBINED TURBINE-CYCLE PERFORMANCE

	TEST CONDITIONS	*RATED CONDITIONS
TOTAL LOAD	590648.	590355.
HEAT RATE	7956.8	7960.7
THROTTLE FLOW	4056460.	4100704.

TURBINE THERMAL PERFORMANCE

	HIGH PRESS TB		REHEAT TB		
			IP TB		LP TB
	THROTTLE	COLD RHT	INLET	EXH	EXH
PRESS	2394.00	387.60	357.00	81.45	2.877
TEMP	1005.20	568.70	981.30	608.20	113.58
ENTH	1464.54	1290.05	1514.58	1334.88	1035.92
ENTR	1.5359		1.7695	1.7859	
EFF	81.146		91.262		94.484

ABSCISSA PHPX/PT=0.1619 P1STSTG/PT=0.5180 VAN= 468.1

THRU FLOW PERFORMANCE OF CONDENSING SECTION SHAFT NO 1

	TOTAL TB ENERGY BALANCE		LP TB ENERGY BALANCE	
	RHT TB	LP TB	RHT TB	LP TB
AE	506.60	317.52		
H ELEP	1035.92		1035.92	
H UEEP	1048.26		1048.26	
EFF ELEP	94.48	94.16	94.48	94.16
EFF UEEP	92.05	90.27	92.05	90.27
VAN	468.12		468.12	

* LOAD AND HEAT RATE AT RATED POWER FACTOR AND H2 PRESS. FLOW AT RATED THROTTLE PRESS. OF 2412.2 PSIA AND TEMP. OF 1000 F.

IP14_007312

T G L PERFORMANCE OF CONDENSING SECTION SHAFT NO 1

	TOTAL TB ENERGY BALANCE		LP TB ENERGY BALANCE	
	RHT TB	LP TB	RHT TB	LP TB
H ELEP	1038.51		1038.51	
H UEEP	1050.83		1050.83	
EFF ELEP	93.97	93.34	93.97	93.34
EFF UEEP	91.54	89.46	91.54	89.46
VAN	469.39		469.39	

STAGE FLOW FUNCTION

STG NO	SHELL PRESS	ONE VEL HD	PCT DELTA P	FLANGE PRESS	NOZ AREA	Q/AP H FLG	QFS	Q/AP H SHL
1	1240.13	0.	0.	0.	86.6	0.	4018377.	997.5
4	722.95	1.919	0.84	716.90	157.4	829.3	3675193.	825.8
RH 1	357.00	0.	0.	0.	350.2	0.	3383040.	786.0
8	349.86	0.	0.	0.	350.2	0.	3391215.	803.9
11	158.35	0.516	1.04	156.70	711.2	782.7	3238166.	771.4
15	81.45	0.	0.	0.	807.6	0.	2935506.	1118.7
15	45.22	0.153	0.98	44.78	1414.8	1075.3	2850630.	1048.9
16	27.90	0.107	1.11	27.59	2021.4	1083.5	2673238.	1059.5
18	8.25	0.033	1.17	8.16	6018.0	1063.5	2582754.	1015.4
19	3.68	0.008	0.65	3.65	12096.0	1058.3	2516977.	1054.9

IP14_007313

TL	PRESS	TEMP	ENTH	FLOW		

F E E D W A T E R C Y C L E

					HEATER	8
4 FW IN	2591.10	442.20	423.16	3952530.8	CLOSED	
2 EXTR	710.90	725.95	1360.49	323578.8	TD =	-5.7
3 DRAIN	710.90	446.80	426.81	323578.8	DC =	4.6
					HEATER	7
7 FW IN	2591.10	365.50	341.75	3952530.8	CLOSED	
5 EXTR	379.70	568.30	1290.53	311159.7	TD =	-2.7
6 DRAIN	379.70	370.10	343.31	634738.5	DC =	4.6
3 ENTRY	710.90	446.80	426.81	323578.8		
					HEATER	6
10 FW IN	2658.30	314.70	289.54	3952530.8	CLOSED	
8 EXTR	154.46	785.00	1419.77	153049.0	TD =	-4.8
9 DRAIN	154.46	319.97	290.48	787787.5	DC =	5.3
6 ENTRY	379.70	370.10	343.31	634738.5		
					PUMP	
11 FW IN	0.	0.	0.	3992278.2		
86 SEAL INJ	0.	0.	0.	151534.9		
30 SEAL RET	0.	0.	0.	67684.0		
32 LEAKAGE	0.	0.	0.	1590.0		
24 EXTR	1500.00	314.00	286.71	0.		
35 FW OUT	2658.30	314.70	289.54	4074539.0		
					HEATER	5
13 FW IN	96.90	273.55	242.68	3043142.8	OPEN	
12 EXTR	81.11	608.80	1335.20	161560.9	STD =	0.
111 DRAIN	81.11	313.20	283.35	4486807.7	SC =	-0.2
109 ENTRY	0.	0.	247.54	1282317.0		
					HEATER	4
17 FW IN	132.10	244.60	213.33	3043143.0	CLOSED	
15 EXTR	43.84	504.30	1286.77	84875.4	TD =	-1.1
16 DRAIN	43.84	250.60	219.23	84875.4	DC =	6.0
					HEATER	3
20 FW IN	132.10	179.90	148.19	3043143.0	CLOSED	
18 EXTR	26.45	405.80	1241.09	177391.9	TD =	-1.4
19 DRAIN	26.45	186.50	154.56	262267.3	DC =	6.6
16 ENTRY	43.84	250.60	219.23	84875.4		
					HEATER	2
23 FW IN	132.10	145.70	113.96	3043143.0	CLOSED	
21 EXTR	7.71	233.00	1162.94	90484.8	TD =	1.3
22 DRAIN	7.71	150.00	117.96	352752.1	DC =	4.3
19 ENTRY	26.45	186.50	154.56	262267.3		

IP14_007314

TL		PRESS	TEMP	ENTH	FLOW	
						STM SEAL REG
88	FLOW TO	0.	0.	0.	6228.6	CALCULATED
70	TDV	4.54	412.10	1246.97	6080.9	TO HEATER
68	TDV	1.65	602.70	1337.39	147.8	TO CONDENSER
	NOT CODED FOR MU		MEAS TOTAL FLOW =		0.	
						HEATER 1
26	FW IN	172.60	118.30	86.71	3043143.0	CLOSED
25	EXTR	3.72	0.	1089.49	65776.7	TD = 4.3
123	DRAIN	3.72	121.30	89.27	424609.7	DC = 3.0
22	ENTRY	7.71	150.00	117.96	352752.1	
70	ENTRY	4.54	412.10	1246.97	6080.9	
						PUMP
33	FW IN	0.	0.	0.	3205452.9	
87	LEAKAGE	0.	0.	0.	10775.0	
27	FW OUT	0.	0.	0.	3194677.9	
						FW TO BOILER
1	FW IN	2591.10	510.50	499.59	3952530.8	S+L = -18079.

T U R B I N E E X P A N S I O N

						MAIN STEAM LINE
71	EXIT	0.	0.	1464.54	0.	
36	THROTTLE	2394.00	1005.20	1464.54	4056460.0	
						VALVE STEM LKG
						SQRT P/V = 85.948
37	LO NO 1	357.21	869.70	1455.59	2353.7	C = 55.708
						SQRT P/V = 12.846
38	LO NO 2	0.	0.	0.	2434.3	C = 189.505
						EXP TO STG 1
40	SHELL	1240.13	850.68	1409.49	4018377.5	
112	EXTR	0.	0.	1409.49	33294.6	

IP14_007315

TL	PRESS	TEMP	ENTH	FLOW	
					PACKING NO 2
					SQRT P/V =.115E 19
42 LO NO 1	85.54	730.40	1395.45	11469.1	C = 0.000
					SQRT P/V = 3.226
43 LO NO 2	17.14	723.10	1395.02	7528.4	C = 2522.146
					SQRT P/V = 0.646
100 LO NO 3	0.	0.	0.	608.3	C = 1807.590
					EXP TO STG 4
41 SHELL	722.95	0.	1360.89	3675192.9	
79 EXTR	716.90	727.20	1360.89	323578.8	
					PACKING NO 1
					SQRT P/V = 16.248
46 LO NO 1	84.43	561.50	1311.58	5283.7	C = 521.068
					SQRT P/V = 3.449
47 LO NO 2	17.07	545.70	1308.98	2574.1	C = 922.791
					SQRT P/V = 0.699
100 LO NO 3	0.	0.	0.	608.3	C = 1807.590
					EXPAND TO EXHAUST
49 EXH	387.60	568.70	1290.05	3691845.6	
80 EXTR	387.60	568.70	1290.05	311159.7	
50 TO RHT	387.60	568.70	1290.05	3380685.9	
					REHEATER 1
BEFORE LO	0.08	0.	1514.76	0.	
37 ENTRY					
84 AFTER LO	357.00	981.57	1514.72	3383039.6	PCTDP = 7.895
					EXPAND TO BOWL
51 ENTRY	349.86	980.90	1514.58	3391215.4	
125 ENTRY	357.47	869.70	1455.74	8175.8	
					EXP TO STG 11
52 SHELL	158.35	0.	1408.67	3238166.4	
53 EXTR	156.70	787.70	1421.04	153049.0	

IP14_007316

TL	PRESS	TEMP	ENTH	FLOW	
					PACKING NO 3
					SQRT P/V = 3.249
57 LO NO 1	17.15	630.30	1349.73	1685.8	C = 1434.267
					SQRT P/V = 0.674
58 LO NO 2	17.08	624.00	1346.69	1757.6	C = 4413.819
					SQRT P/V = 0.673
100 LO NO 3	0.	0.	0.	608.3	C = 1807.590
					SQRT P/V = 0.
100 LO NO 4	0.	0.	0.	608.3	C = 1807.590
					EXPAND TO EXHAUST
56 EXH	81.45	608.20	1334.88	2935505.7	
55 EXTR	83.63	609.60	1335.43	298000.7	
					EXPAND TO BOWL
59 ENTRY	81.45	608.20	1334.88	2935505.7	
					EXP TO STG 15
61 SHELL	45.22	0.	1273.90	2850630.3	
60 EXTR	44.78	517.60	1293.15	84875.4	
					EXP TO STG 16
63 SHELL	27.90	0.	1230.59	2673238.4	
62 EXTR	27.59	415.40	1245.55	177391.9	
					EXP TO STG 18
65 SHELL	8.25	0.	1139.64	2582753.6	
64 EXTR	8.16	239.50	1165.84	90484.8	
					EXP TO STG 19
107 SHELL	3.68	0.	1089.45	2516976.9	
106 EXTR	3.65	0.	1089.49	65776.7	
					CONDENSER
					SHAFT 1
108 TB EXH	1.41	113.58	1048.2551	2516976.9	LEVL =-30657.0
76 ENTRY	0.	0.	0.	657819.4	
122 DRAIN	0.	0.	0.	3205453.3	
					GENERATOR 1
					SHAFT 1

MEASURED LOAD = 590648.0 PF = 0.952 H2 = 61.00
SHAFT 1 KW = 600427.0 FL =4353.0 GL = 5426.0

IP14_007317

TEST CYCLE HEAT BALANCE

P E R F O R M A N C E

TRUNKLINE OUTPUT

TL	P	T	H	Q	SV	SP	PV	TR
1	2591.1	510.5	499.6	3952531.	0.0203	0.	0.	-18079.0
2	710.9	725.9	1360.5	323579.	0.9191	504.808	-5.692	221.1
3	710.9	446.8	426.8	323579.	0.0193	0.	4.600	0.
4	2591.1	442.2	423.2	3952531.	0.	0.	0.	0.
5	379.7	568.3	1290.5	311160.	1.5006	439.532	-2.668	128.8
6	379.7	370.1	343.3	634739.	0.0182	0.	4.600	0.
7	2591.1	365.5	341.8	3952531.	0.	0.	0.	0.
8	154.5	785.0	1419.8	153049.	4.7378	360.747	-4.753	424.3
9	154.5	320.0	290.5	787787.	0.0177	0.	5.270	0.
10	2658.3	314.7	289.5	3952531.	0.0174	0.	0.	0.
11	0.	0.	0.	3992278.	0.	0.	0.	0.
12	81.1	608.8	1335.2	161561.	7.7531	312.994	0.	295.8
13	96.9	273.5	242.7	3043143.	0.0172	0.	0.	0.
14	132.1	273.9	243.1	3043143.	0.0172	1.014	0.	132.1
15	43.8	504.3	1286.8	84875.	12.9730	272.834	-1.066	231.5
16	43.8	250.6	219.2	84875.	0.0170	0.	6.000	0.
17	132.1	244.6	213.3	3043143.	0.	0.	0.	0.
18	26.5	405.8	1241.1	177392.	19.3180	243.209	-1.391	162.6
19	26.5	186.5	154.6	262267.	0.0165	0.	6.600	0.
20	132.1	179.9	148.2	3043143.	0.	0.	0.	0.
21	7.7	233.0	1162.9	90485.	53.1078	181.211	1.311	51.8
22	7.7	150.0	118.0	352752.	0.0163	0.	4.300	0.
23	132.1	145.7	114.0	3043143.	0.	0.	0.	0.
24	1500.0	314.0	286.7	0.	0.0175	0.	0.	0.
25	3.7	0.	1089.5	65777.	0.	150.017	4.317	-150.0
26	172.6	118.3	86.7	3043143.	0.0162	0.	0.	0.
27	0.	0.	0.	3194678.	0.	0.	0.	0.
28	0.	0.	0.	18238.	0.	0.	0.	0.
29	0.	0.	0.	49446.	0.	0.	0.	0.
30	0.	0.	0.	67684.	0.	0.	0.	0.
31	2658.0	314.1	288.9	122008.	0.0174	1.003	0.	2658.0
32	0.	0.	0.	1590.	0.	0.	0.	0.
33	0.	0.	0.	3205453.	0.	0.	0.	0.
34	0.	0.	0.	-18079.	0.	0.	0.	0.
35	2658.3	314.7	289.5	4074539.	0.0174	0.	0.	0.
36	2394.0	1005.2	1464.5	4056460.	0.3241	0.133E 37	85.948	0.
37	357.2	869.7	1455.6	2354.	2.1648	0.780	12.846	55.7
38	0.	0.	0.	2434.	0.	0.	0.	189.5
39	2394.0	0.	1464.5	4051672.	0.3241	0.	85.948	0.
40	1240.1	850.7	1409.5	4018377.	0.5731	134.925	46.516	0.
41	722.9	0.	1360.9	3675193.	0.9043	507.505	28.274	825.8
42	85.5	730.4	1395.5	11469.	8.2187	0.779	3.226	0.0
43	17.1	723.1	1395.0	7528.	41.0344	0.	0.646	2522.1
45	0.	0.	0.	25119.	0.	0.	0.	0.
46	84.4	561.5	1311.6	5284.	7.0990	0.703	3.449	521.1
47	17.1	545.7	1309.0	2574.	34.9734	0.	0.699	922.8
48	0.	0.	0.	3700312.	0.	0.	0.	0.
49	387.6	568.7	1290.0	3691846.	1.4683	441.528	16.248	0.
50	387.6	568.7	1290.0	3380686.	0.	0.	0.	0.
51	349.9	980.9	1514.6	3391215.	2.4118	0.	12.045	0.

IP14_007318

TL	P	T	H	Q	SV	SP	PV	TR
52	158.4	0.	1408.7	3238166.	4.5453	363.154	5.902	771.4
53	156.7	787.7	1421.0	153049.	4.6799	361.890	5.787	0.
54	81.4	608.2	1334.9	3233506.	7.7158	0.	3.249	0.
55	83.6	609.6	1335.4	298001.	7.5225	315.122	0.	0.
56	81.4	608.2	1334.9	2935506.	7.7158	313.285	0.	0.
57	17.2	630.3	1349.7	1686.	37.7700	0.	0.674	1434.3
58	17.1	624.0	1346.7	1758.	37.7040	0.	0.673	4413.8
59	81.4	608.2	1334.9	2935506.	7.7158	0.	3.249	0.
60	44.8	517.6	1293.2	84875.	12.8799	274.140	1.865	0.
61	45.2	0.	1273.9	2850630.	12.2557	275.103	1.921	1048.9
62	27.6	415.4	1245.6	177392.	18.7259	245.579	1.214	0.
63	27.9	0.	1230.6	2673238.	17.9069	246.680	1.248	1059.5
64	8.2	239.5	1165.8	90485.	50.6908	183.750	0.401	0.
65	8.3	0.	1139.6	2582754.	46.2064	184.845	0.423	1015.4
66	16.9	626.0	1347.7	9752.	38.2456	0.	0.	0.
67	17.0	314.4	1199.0	0.	26.8717	0.	0.	0.
68	1.7	602.7	1337.4	148.	383.4382	0.	0.	0.
69	4.5	412.1	1247.0	7842.	114.2146	0.	0.	0.
70	4.5	412.1	1247.0	6081.	114.2146	0.	0.	0.
71	0.	0.	1464.5	0.	0.	0.	0.	0.
73	0.	0.	0.	-30657.	0.	0.	0.	0.
75	0.	0.	0.	5326.	0.	0.	0.	0.
76	0.	0.	0.	657819.	0.	0.	0.	0.
79	716.9	727.2	1360.9	323579.	0.9120	505.749	28.037	0.
80	387.6	568.7	1290.0	311160.	0.	0.	0.	0.
81	16.8	592.0	1331.2	776.	37.1032	0.	0.	0.
82	0.	0.	0.	3380686.	0.	0.	0.	0.
83	81.1	313.0	1183.3	213.	0.	0.	0.	0.
84	357.0	981.6	1514.7	3383040.	2.3635	7.895	12.290	786.0
86	0.	0.	0.	151535.	0.	0.	0.	0.
87	0.	0.	0.	10775.	0.	0.	0.	0.
88	0.	0.	0.	6229.	0.	0.	0.	0.
90	167.1	313.2	283.5	0.	0.0176	0.	0.	0.
91	167.1	210.6	179.1	494530.	0.0167	0.647	0.	167.1
95	1.4	113.6	1035.9	2516977.	223.3604	1048.255	2.877	468.1
99	0.	0.	0.	6692.	0.	0.	0.	0.
100	0.	0.	0.	608.	0.	0.	0.	1807.6
104	2591.0	510.5	499.7	3959321.	0.0203	1.026	0.	2591.0
106	3.7	0.	1089.5	65777.	95.1168	149.295	0.196	0.
107	3.7	0.	1089.5	2516977.	94.5255	0.	0.197	1054.9
108	1.4	113.6	1048.3	2516977.	240.9005	1048.255	2.877	-30657.0
109	0.	0.	247.5	1282317.	0.	0.	0.	0.
111	81.1	313.2	283.4	4486808.	5.4023	0.	-0.206	0.
112	0.	0.	1409.5	33295.	0.	0.	0.	0.
113	0.	0.	0.	3998772.	0.	0.	0.115E 19	0.
114	172.6	118.3	86.7	15023.	0.0162	0.624	0.	172.6
115	172.6	118.3	86.7	17216.	0.0162	0.624	0.	172.6
116	172.6	118.3	86.7	24215.	0.0162	0.623	0.	172.6
117	172.6	118.3	86.7	37280.	0.0162	0.660	0.	172.6
118	172.6	118.3	86.7	31377.	0.0162	0.660	0.	172.6
119	172.6	118.3	86.7	26424.	0.0162	0.660	0.	172.6
120	0.	0.	0.	4788.	0.	0.	0.	0.
122	0.	0.	0.	3205453.	0.	0.	0.	0.
123	3.7	121.3	89.3	424610.	0.0162	0.	3.000	0.
125	357.5	869.7	1455.7	8176.	2.1637	0.628	0.	353.0
130	0.	0.	0.	153193.	0.	0.	0.	0.
131	81.1	608.8	1335.2	76546.	7.7589	1.017	0.	81.1
132	81.0	607.5	1334.5	76647.	7.7516	1.019	0.	81.0
133	0.	0.	0.	153360.	0.	0.	0.	0.

APPENDIX B

Correction Curves

Dwg. No.	Nomenclature	Page
GEZ 3614	Throttle Pressure Correction	B1
GEZ 3615	Throttle Temperature Correction	B2
GEZ 3617	Reheat Temperature Correction	B3
481 HP 475	Exhaust Pressure Correction	B4

Property of General Electric Company
Maintain one-inch side margins.

IP14_007320

INITIAL PRESSURE CORRECTION FACTORS

FOR SINGLE REHEAT UNITS

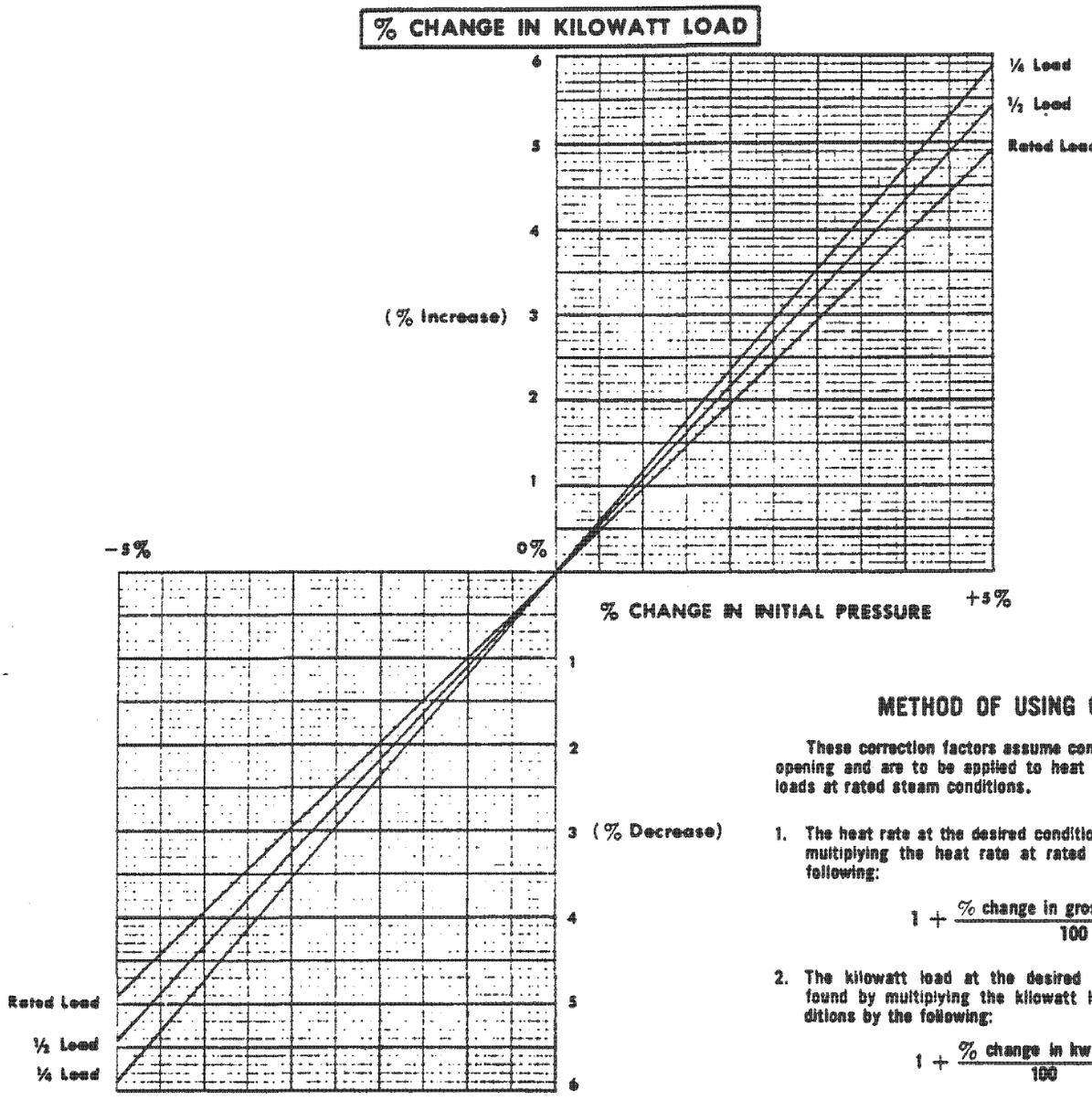

METHOD OF USING CURVES

These correction factors assume constant control valve opening and are to be applied to heat rates and kilowatt loads at rated steam conditions.

1. The heat rate at the desired condition can be found by multiplying the heat rate at rated conditions by the following:

$$1 + \frac{\%\ \text{change in gross heat rate}}{100}$$

2. The kilowatt load at the desired conditions can be found by multiplying the kilowatt load at rated conditions by the following:

$$1 + \frac{\%\ \text{change in kw load}}{100}$$

3. These correction factors are not guaranteed.

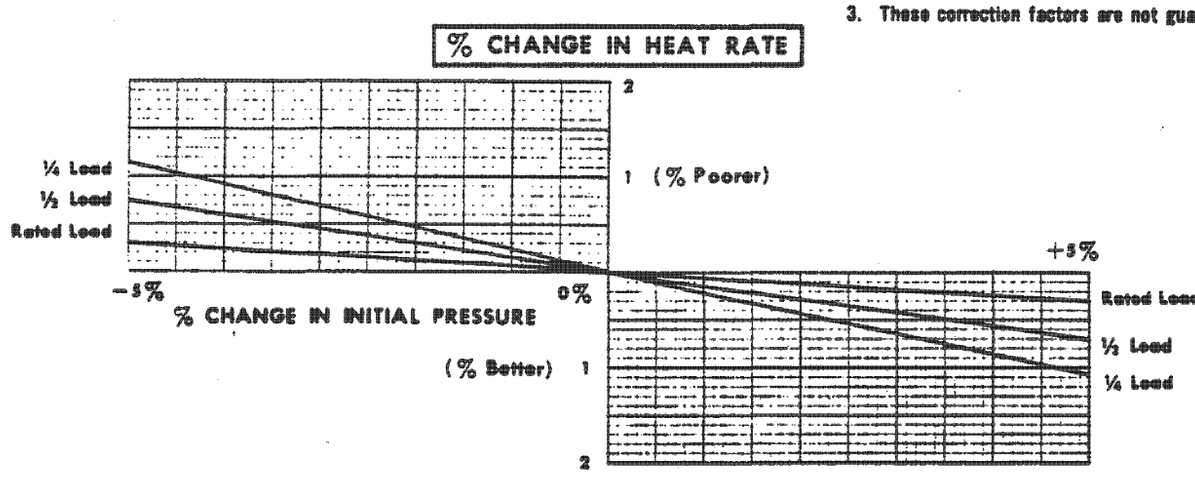

INITIAL TEMPERATURE CORRECTION FACTORS

FOR SINGLE REHEAT – SUBCRITICAL PRESSURE UNITS

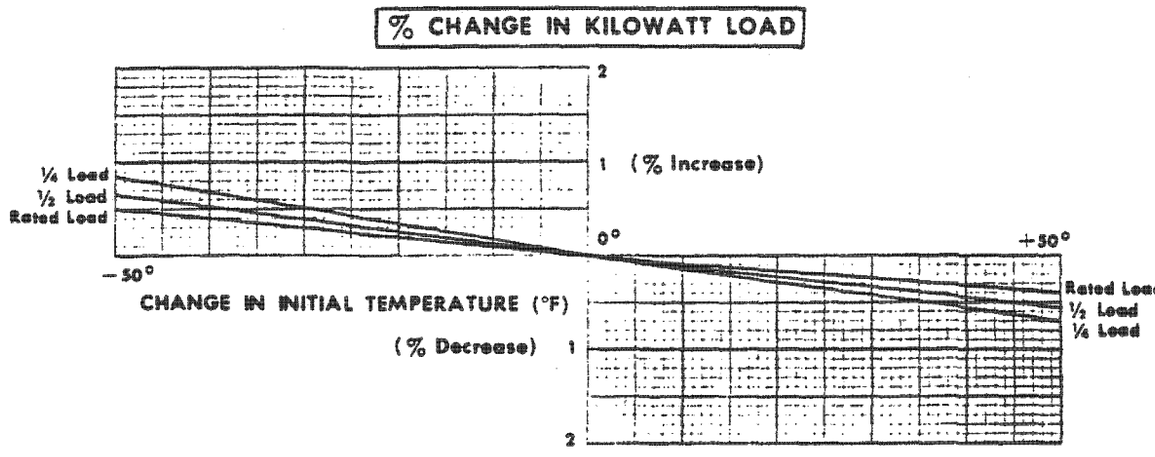

METHOD OF USING CURVES

These correction factors assume constant control valve opening and are to be applied to heat rates and kilowatt loads at rated steam conditions.

1. The heat rate at the desired condition can be found by multiplying the heat rate at rated conditions by the following:

$$1 + \frac{\%\ \text{change in gross heat rate}}{100}$$

2. The kilowatt load at the desired conditions can be found by multiplying the kilowatt load at rated conditions by the following:

$$1 + \frac{\%\ \text{change in kw load}}{100}$$

3. These correction factors are not guaranteed.

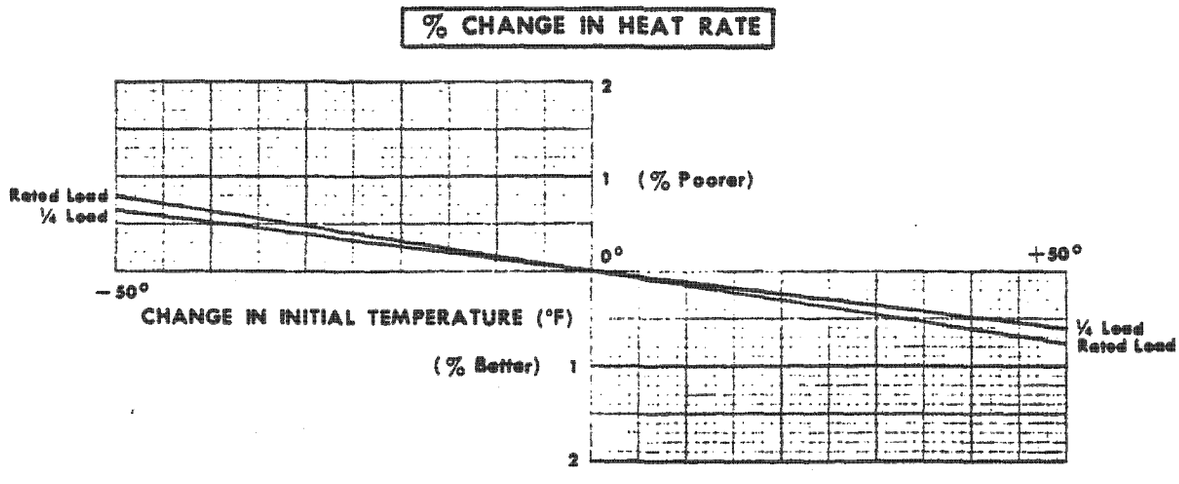

REHEAT TEMPERATURE CORRECTION FACTORS
FOR SINGLE REHEAT UNITS

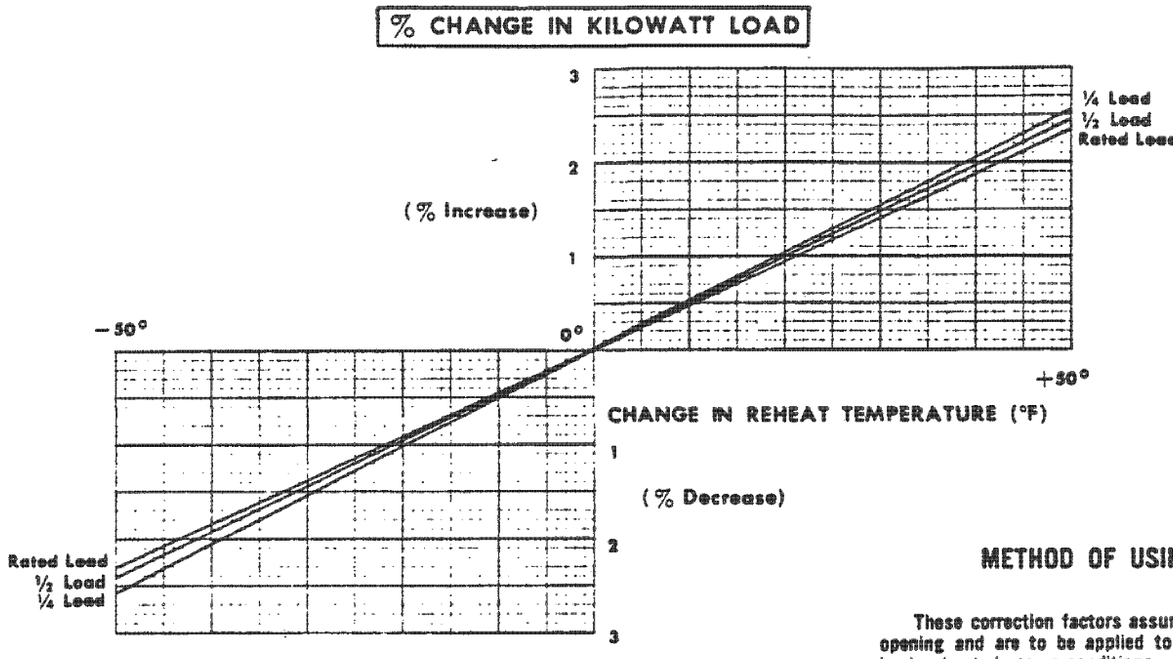

METHOD OF USING CURVES

These correction factors assume constant control valve opening and are to be applied to heat rates and kilowatt loads at rated steam conditions.

1. The heat rate at the desired condition can be found by multiplying the heat rate at rated conditions by the following:

$$1 + \frac{\%\ \text{change in gross heat rate}}{100}$$

2. The kilowatt load at the desired conditions can be found by multiplying the kilowatt load at rated conditions by the following:

$$1 + \frac{\%\ \text{change in kw load}}{100}$$

3. These correction factors are not guaranteed.

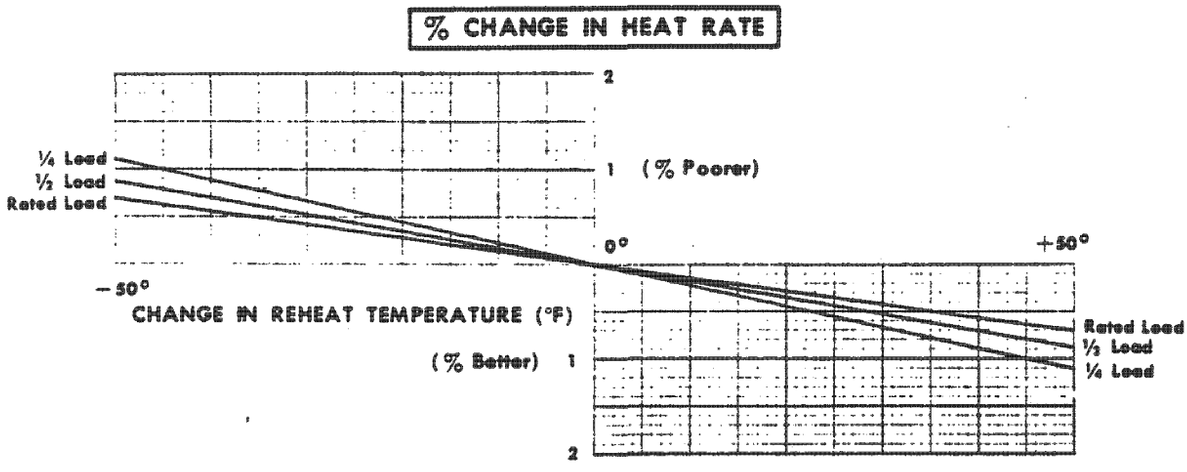

GEZ-3617
8–74 (2000)

GENERAL ELECTRIC

IP14_007323

EXHAUST PRESSURE CORRECTION FACTORS

820000 KW AT 1.66/ 2.24/ 2.99 IN HG ABS 1.00 PCT MU
TC6F-30.0 IN LSB 3600 RPM
2400 PSIA 1000/1000 T

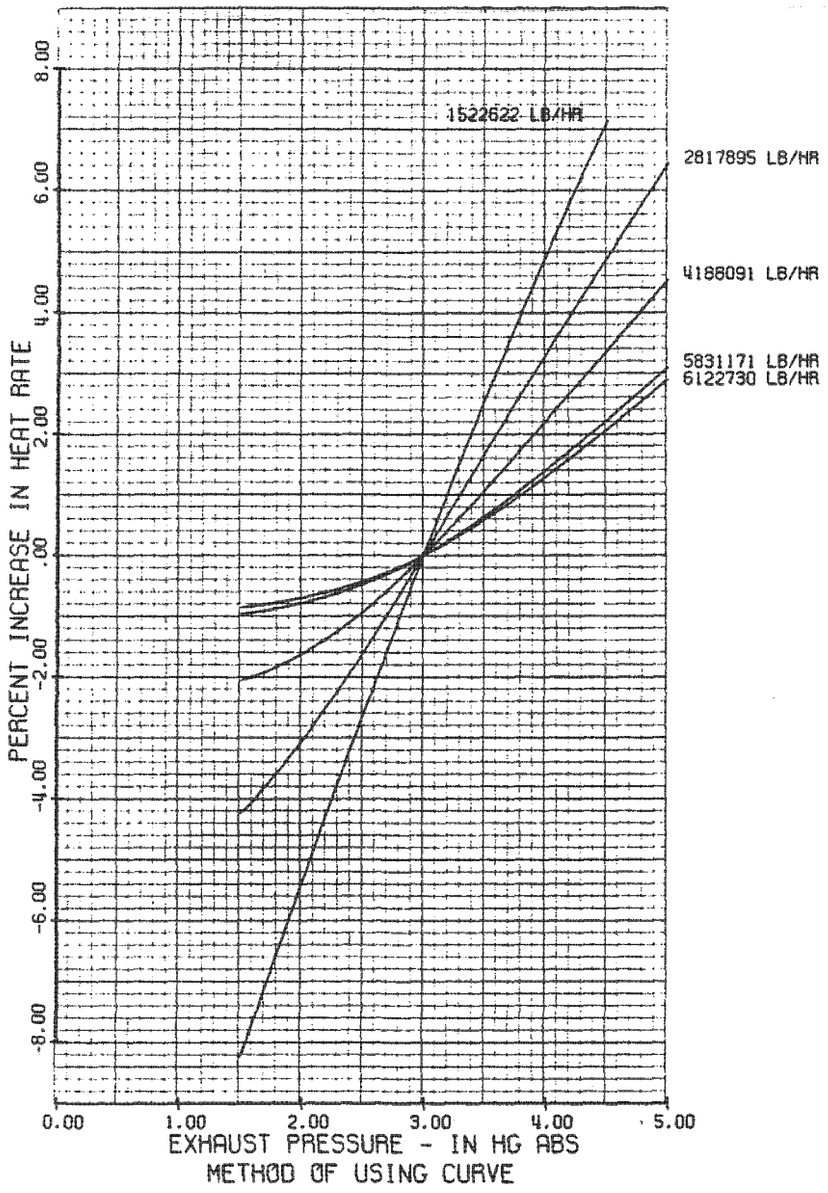

METHOD OF USING CURVE

VALUES NEAR CURVES ARE FLOWS AT 2400 PSIA 1000 T
THESE CORRECTION FACTORS ASSUME CONSTANT CONTROL VALVE OPENING
APPLY CORRECTIONS TO HEAT RATE AND KW LOADS
AT 2.99/ 2.24/ 1.66 IN HG ABS AND 0.0 PCT MU.

THE PERCENT CHANGE IN KW LOAD FOR VARIOUS EXHAUST PRESSURES IS EQUAL TO
(MINUS PCT INCREASE IN HEAT RATE)100/(100 + PCT INCREASE IN HEAT RATE)

THESE CORRECTION FACTORS ARE NOT GUARANTEED

PRESSURES ALONG ABSCISSA ARE PRESSURES IN HOOD c

PRESSURE(IN HG ABS) FOR	HOOD C	HOOD B	HOOD A
	1.50	1.09	.78
	2.00	1.47	1.07
	2.50	1.85	1.36
	3.00	2.24	1.66
	3.50	2.63	1.96
	4.00	3.03	2.27
	4.50	3.42	2.58
	5.00	3.82	2.89

GENERAL ELECTRIC COMPANY. SCHENECTADY. NEW YORK 12/04/81

481 HB 475

IP14_007324

APPENDIX C

Correction To Heat Rate and Load

Test Heat Rate and Load Corrected to Rated Conditions C2

Contract Cycle Heat Rate and Load Corrected to Rated Conditions C3

Notes:

Page C2 shows the measured values of heat rate and load corrected for group 2 corrections. These corrections include power factor, H_2 pressure, throttle pressure, throttle temperature, reheat temperature and exhaust pressure. No correction for off-design cycle conditions are included in the corrected test heat rate and load.

Page C3 shows the contract cycle heat rates and loads which represent the measured heat rate corrected to the specified cycle on the guarantee heat balance (i.e., group 1 corrections). The corrected contract cycle heat rates and loads have also been corrected for group 2 corrections and these are the final values of heat rate and load to compare to the guarantee values.

Property of General Electric Company
Maintain one-inch side margins.

IP14_007325

INTERMOUNTAIN POWER PROJECT
UNIT #1, 270T150

T E S T H E A T R A T E A N D L O A D

TEST POINT	3	4	5	6	7	8
SUMMARY OF TEST CONDITIONS:						
MEAS'D LOAD	871725	791473	596565	860177	778625	590648
THROTTLE FLOW	6322406	5640429	4076417	6231618	5547789	4056460
THROTTLE PRESS.	2421.4	2412.9	2401.5	2377.7	2388.7	2394.0
THROTTLE TEMP.	1003.3	996.0	1000.8	990.6	998.9	1005.2
HOT REHEAT TEMP.	1000.5	995.9	1002.1	999.4	1002.0	981.6
EXHAUST PRESS.	3.87	3.45	2.83	3.79	3.60	2.88
POWER FACTOR	0.98	0.97	0.95	0.99	0.96	0.95
H2 PRESSURE	61	61	59	61	65	61
TEST HEAT RATE	7837.5	7835.2	7931.5	7848.8	7879.2	7960.7
TEST LOAD	870878	790839	596228	859231	778136	590355
HEAT RATE CORRECTIONS (dividing factors):						
PT	0.99980	1.00000	1.00050	1.00090	1.00080	1.00090
TT	0.99950	1.00060	0.99990	1.00150	1.00020	0.99930
THRH	0.99990	1.00060	0.99960	1.00010	0.99970	1.00310
PEXH	1.02709	1.02279	1.01685	1.02635	1.02690	1.01865
COMBINED CORR	1.02627	1.02402	1.01685	1.02892	1.02762	1.02201
LOAD CORRECTIONS (dividing factors):						
PT	1.00370	1.00030	0.99530	0.98590	0.99020	0.99200
TT	0.99970	1.00040	0.99990	1.00090	1.00010	0.99950
THRH	1.00020	0.99810	1.00100	0.99970	1.00090	0.99110
PEXH	0.97362	0.97772	0.98343	0.97433	0.97380	0.98169
COMBINED CORR	0.97713	0.97654	0.97969	0.96116	0.96523	0.96469
CORR TEST HEAT RATE	7636.9	7651.4	7800.1	7628.2	7667.4	7789.2
CORR TEST LOAD	891262	809835	608590	893948	806170	611965

IP14_007326

INTERMOUNTAIN POWER PROJECT
UNIT #1, 270T150

C O N T R A C T C Y C L E H E A T R A T E A N D L O A D

TEST POINT	3	4	5	6	7	8
SUMMARY OF TEST CONDITIONS:						
MEAS'D LOAD	871725	791473	596565	860177	778625	590648
THROTTLE FLOW	6322406	5640429	4076417	6231618	5547789	4056460
THROTTLE PRESS.	2421.4	2412.9	2401.5	2377.7	2388.7	2394.0
THROTTLE TEMP.	1003.3	996.0	1000.8	990.6	998.9	1005.2
HOT REHEAT TEMP.	1000.5	995.9	1002.1	999.4	1002.0	981.6
EXHAUST PRESS.	3.87	3.45	2.83	3.79	3.60	2.88
POWER FACTOR	0.98	0.97	0.95	0.99	0.96	0.95
H2 PRESSURE	61	61	59	61	65	61
CONTRACT CYCLE						
HEAT RATE	7936.9	7948.7	8056.2	7962.9	7997.0	8086.9
LOAD	859479	780572	589420	843533	768034	580851
HEAT RATE CORRECTIONS (dividing factors):						
PT	0.99980	1.00000	1.00050	1.00090	1.00080	1.00090
TT	0.99950	1.00060	0.99990	1.00150	1.00020	0.99930
THRH	0.99990	1.00060	0.99960	1.00010	0.99970	1.00310
PEXH	1.02709	1.02279	1.01685	1.02635	1.02690	1.01865
COMBINED CORR	1.02627	1.02402	1.01685	1.02892	1.02762	1.02201
LOAD CORRECTIONS (dividing factors):						
PT	1.00370	1.00030	0.99530	0.98590	0.99020	0.99200
TT	0.99970	1.00040	0.99990	1.00090	1.00010	0.99950
THRH	1.00020	0.99810	1.00100	0.99970	1.00090	0.99110
PEXH	0.97362	0.97772	0.98343	0.97433	0.97380	0.98169
COMBINED CORR	0.97713	0.97654	0.97969	0.96116	0.96523	0.96469
CORR TEST HEAT RATE	7733.7	7762.3	7922.7	7739.1	7782.1	7912.7
CORR TEST LOAD	879596	799321	601641	877616	795704	602113

IP14_007327

APPENDIX D

Enthalpy Drop Efficiency

	Page No.
Summary of Data and Results of the IPP #1 Startup Enthalpy Drop Test	D1
Correction Curves for HP Efficiency	D2
General Description of Enthalpy Drop Efficiency Test	D3

IP14_007328

INTERMOUNTAIN POWER PROJECT, UNIT #1, T150

TEST PT #	1	2	3	4	5	6	7
DATE	3/1	3/3	3/3	3/5	3/6	3/7	3/7
VALVE PT	THR	2nd	THR	THR	VWO	3rd	2nd
THROTTLE P	1214.55	915.82	1489.36	1279.09	1083.58	1077.24	1439.36
THROTTLE T	928.63	936.97	930.49	934.71	989.60	995.48	989.65
CRH P	130.03	149.34	152.79	220.23	278.65	248.93	243.52
CRH T	530.71	534.19	501.85	539.11	642.90	629.76	577.85
VC P	1208.90	905.26	1488.80	1265.64	1072.89	1077.26	1065.74
1st STG P	378.03	482.96	486.44	716.28	890.76	787.01	759.38
P1/PT	.312	.526	.326	.560	.822	.731	.527
P1/PT COR	.297	.500	.310	.532	.782	.695	.501
η	65.75	82.53	68.97	81.76	88.24	86.83	81.55
TEMP COR*	-.469	-.695	-.479	-.534	-.092	-.039	-.084
PRES COR*	-.16	-.11	-.24	-.21	-.18	-.18	-.26
HTR COR	+2.1	+.4	+.4	0	+.6	+.6	+.8
η_{HP} COR	67.22	82.13	68.77	OFF VP NA	88.58	87.21	82.0
HRH P	119.77	136.71	139.65	201.60	256.36	228.97	224.02
HRH T	928.27	828.87	828.90	871.95	981.60	991.60	973.75
LPB P	31.40	31.70	32.72	47.33	61.02	54.15	52.60
LPB T	598.78	491.89	493.26	527.17	617.67	624.53	608.77
η_{IP}	91.3	91.91	92.09	91.96	91.58	91.57	91.62
HTRS OUT SERVICE	6,7,8	8B	8B		8A,7A,6A	8A,7A,6A	8A,7A,6A
MW	175	200	205	304	400	360	364
BAR PRESS	12.49	12.63	12.63	12.67	12.49	12.49	12.49

* See page D2 for the correction curve. Note that the factors given by the curve are in percent and the values shown in the table are in percentage points.

IP14_007329

HIGH PRESSURE TURBINE EFFICIENCY CORRECTIONS TO RATED CONDITIONS

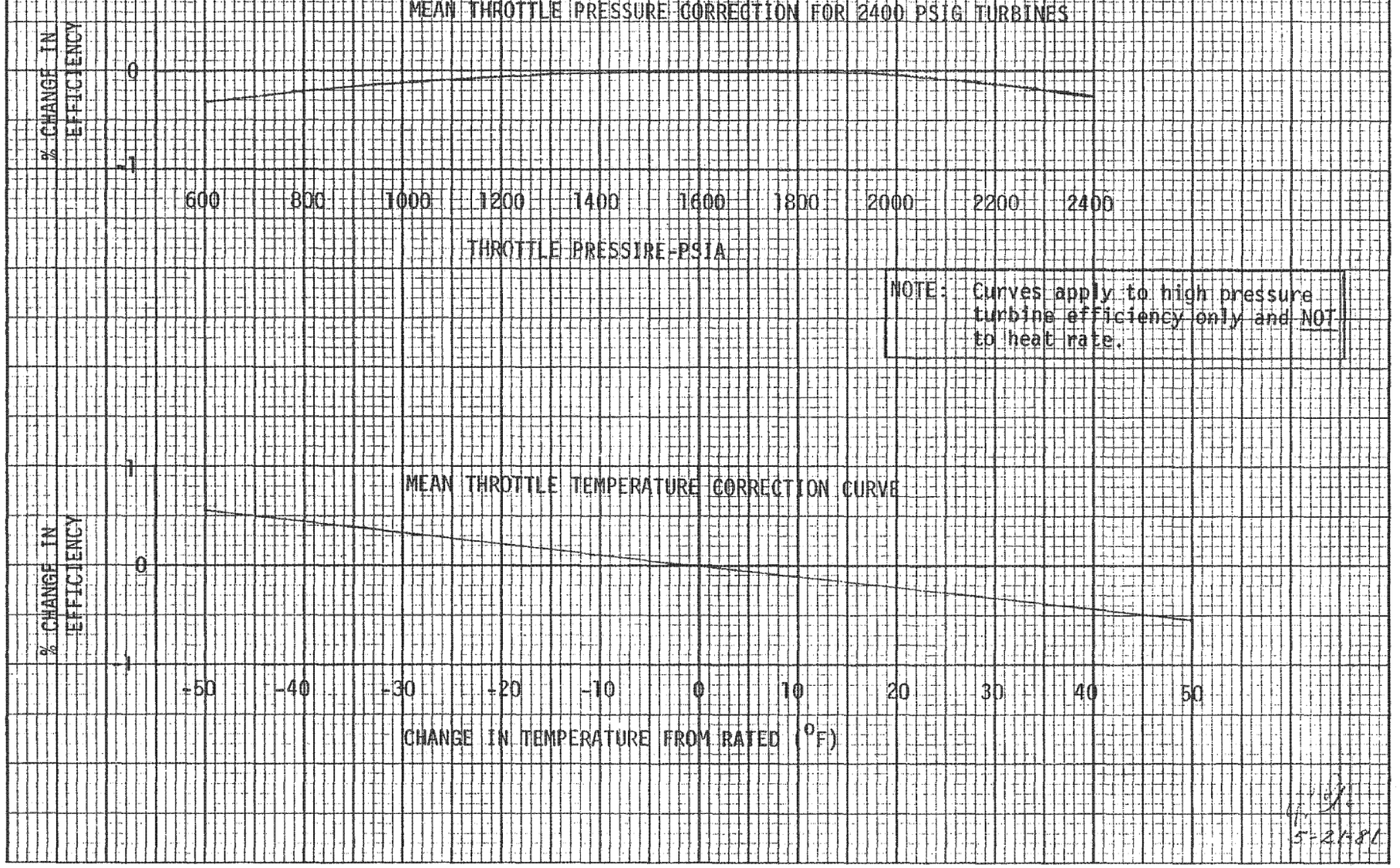

D2

5-24-81

IP14_007330

ENTHALPY DROP EFFICIENCY TEST

A turbine section efficiency can be measured if superheated steam conditions exist at both the inlet and exhaust of the section and the steam is thoroughly mixed so that the average temperature can be measured. The efficiency is defined as the energy used divided by the isentropic energy that is available. See Figure 1.

It is customary practice to measure the efficiencies of the high pressure turbine and intermediate pressure turbine of fossil fired reheat turbines with this method.

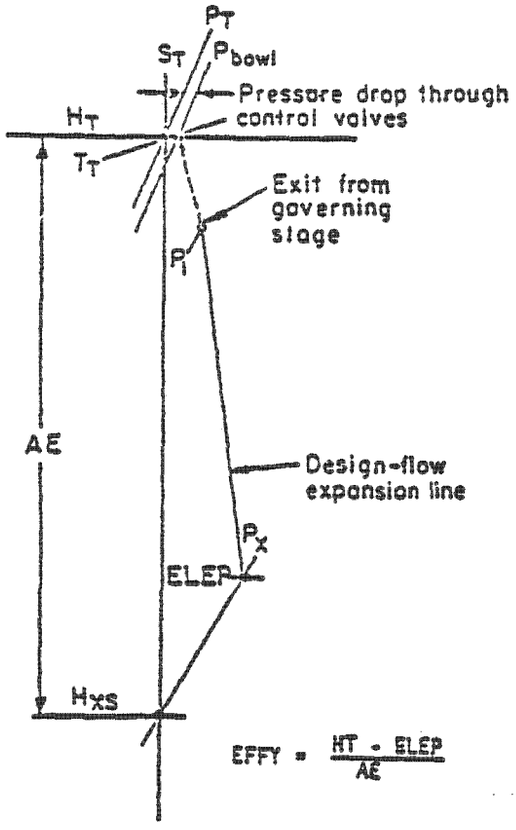

Fig. 1-a. *Construction of expansion lines for non-condensing turbines with governing stage* (HP TB)

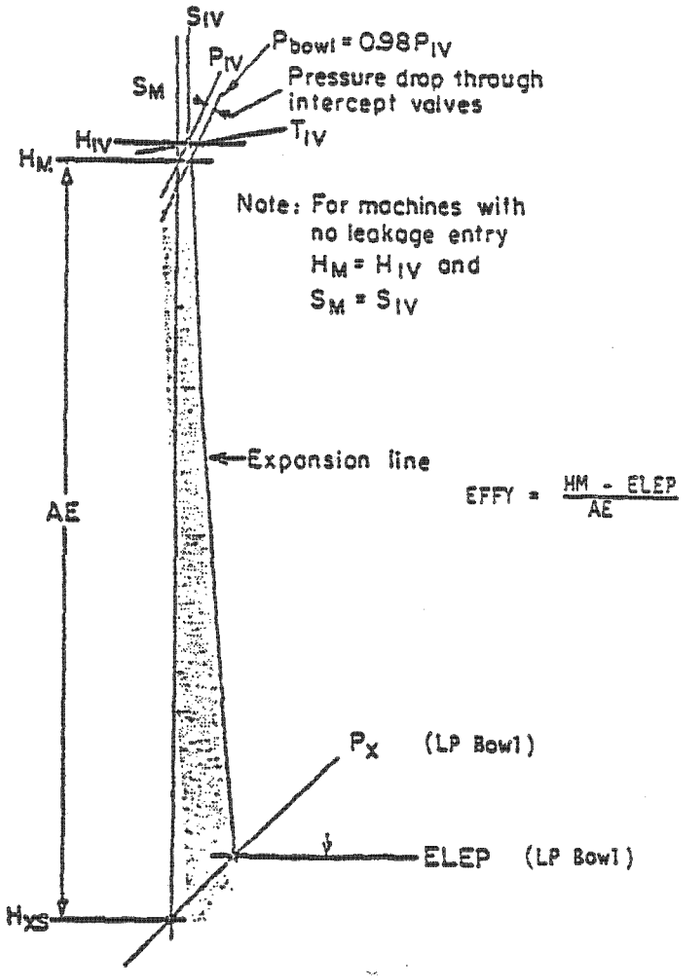

Fig. 1-b. *Construction of expansion lines for* IP turbines

IP14_007331

To obtain an acceptable degree of accuracy and precision, the tests must be run by holding steam temperatures, pressures, and flows constant. Fluctuations of steam pressure should not exceed one percent of absolute pressure; temperature fluctuations should not exceed 5 F. Steam flows and load can be held constant by proper operation of the control mechanism. Care must be taken to insure that the turbine is up to operating temperature. After attaining steady conditions for at least half an hour, a test of one-hour duration with temperatures and pressures read at five-minute intervals should give satisfactory results.

The probable error of these section efficiencies is about 0.25 percent. This accuracy is based upon the ability to measure pressure within 0.1 percent at the throttle and reheat points, and 0.1 psi at the intermediate-pressure-section exhaust, and temperatures within 1/2 F. This probable error has been verified by comparing measured flow with calculated flow using enthalpy-drop efficiencies on the high-pressure section of cross-compound units.

Pressures above 35 psia should be measured with piston-type, dead-weight gages using calibrated weights.+ For a lower pressure a transducer may be used.

The design of a pressure tap should conform with the ASME Power Test Codes. Taps should be in a straight run of pipe, or at least not in or immediately adjacent to, a sharp turn, and should consist of a flush hole in the pipe wall. Care should be taken to remove any burrs.

The pressure connections should be located ahead of the turbine emergency stop valve, ahead of the intercept valve, in a cold reheat pipe near the high-pressure-section exhaust connection, and in the low-pressure-section bowl. If the intercept valve is directly connected to a reheat stop valve, then the pressure connection should be immediately ahead of the reheat stop valve. Figure locates these points of pressure measurements.

The pressure connection may be on the top, bottom, or side of a steam pipe provided certain precautions are taken to insure a definite water leg. If the connection is from the top or side of the steam pipe, the pressure-gage piping should be run horizontally and then dropped down. The same rule holds when the pressure gage is to be located above the pressure connection, i.e., there should be a downward loop in the gage line right near the pressure

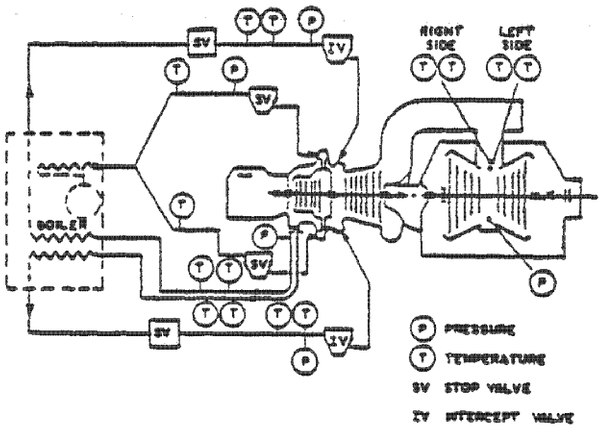

Fig. 2 Schematic arrangement of pressure and temperature instrument locations

connection. Pigtails are acceptable. These arrangements are shown in Fig. 3.

The pressure connection in the low-pressure-section bowl is located in the bottom of the bowl and is a 1/2-inch pipe, plugged at the end, and has several 1/4-inch diameter holes drilled through near the end of the pipe, Fig. 4.

For cross-compound turbines the intermediate-pressure-section exhaust pressure tap should be in the crossover pipe immediately downstream of the exhaust connection.

Temperatures should be measured with precision resistance thermometers or calibrated thermocouples and read on precision bridges and potentiometers.

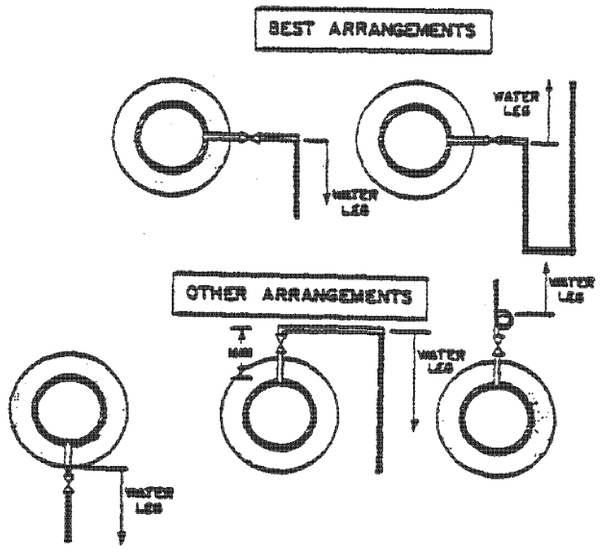

Fig. 3 Pressure-gage connections to steam pipes

+High accuracy transducers may be substituted if calibrated before and after the test.

IP14_007332

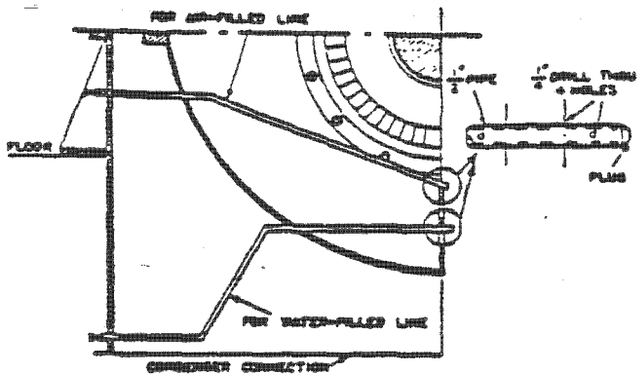

Fig. 4 Section through low-pressure turbine bowl showing pressure tap installation

It is recommended to duplicate temperature instrumentation. This will not only improve the accuracy of the data but will also detect a faulty temperature measurement. Placing the two thermowells in the top of a horizontal pipe so they are at about a 45-degree radial angle on each side of the vertical center line is a good scheme. The object is not to have two thermowells in line, Fig. 5.

When there are two separate steam leads from the boiler to the turbine, duplicate instrumentation in each lead is recommended, Fig. 2.

The length of the thermocouple well from the inner wall of pipe extending into the stream deserves attention in order to eliminate the error due to heat conduction up the thermocouple well wall. At the throttle the immersion should be > 2" and almost all standard installations are satisfactory. At the hot reheat point it is recommended that the immersion should be at least four inches if the outside diameter of the well is not greater than 1 1/2 inches. At the cold reheat point the immersion should be six inches. The location of the thermowells in the cold reheat line should be some distance downstream from the turbine and after at least one elbow to provide the proper mixing. The maximum distance from the turbine should not exceed 50 feet.

The thermocouple wells in the low-pressure-section bowl are made up of four 1/4-inch pipes which are securely fastened in the steam path. These probes should have radiation shields on their ends because the temperatures of all the wall surfaces in the bowl may be somewhat lower than the bowl steam temperature. A typical installation is shown in Fig. 6.

For cross-compound turbines,* two thermocouple wells should be in each crossover pipe located near the downstream end of the pipe. The immersion should be at least six inches if the outside diameter of the well is no greater than 1 1/2 inches.

Sample calculations of high-pressure and intermediate-pressure-section efficiencies are given in Table 1.

TABLE 1
SECTION EFFICIENCIES

High-pressure Section Efficiency

P_1 = 1815 psia P_2 = 430 psia
T_1 = 1000 F T_2 = 638.8 F
H_1 = 1480.3 Btu/lb H_2 = 1326.8 Btu/lb

Entropy = 1.5739 Btu/lb F

Isentropic end point = 1298.4 Btu/lb

$$\text{Efficiency} = \frac{1480.3 - 1326.8}{1480.3 - 1298.4} \times 100 = 84.4 \text{ percent}$$

Intermediate-pressure Section Efficiency

P_1 = 402.0 psia P_2 = 44.0 psia
T_1 = 1000 F T_2 = 470.0 F
H_1 = 1522.4 Btu/lb

H_{mix} Reheat Bowl =

$$\frac{*710{,}290 \times 1522.4 + 21{,}300 \times 1450.8}{731{,}590} = 1520.3 \text{ Btu/lb}$$

* Flows estimated from design heat balances

Entropy P_1 and H_{mix} = 1.7600 Btu/lb F
Isentropic end point = 1244.9 Btu/lb

$$\text{Efficiency} = \frac{1520.3 - 1270.0}{1520.3 - 1244.9} \times 100 = 90.9 \text{ percent}$$

*or for tandem compound units with external pipes. In the near future all GE provisions will be in the crossover pipes.

IP14_007333

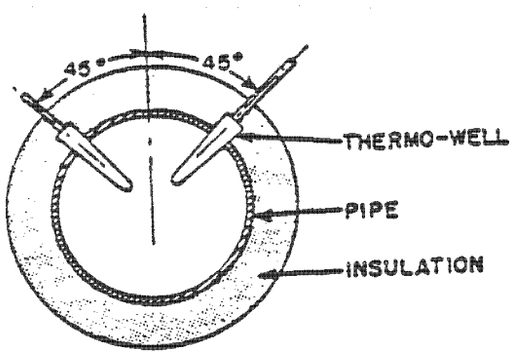

Fig. 5 Typical thermocouple-well arrangement

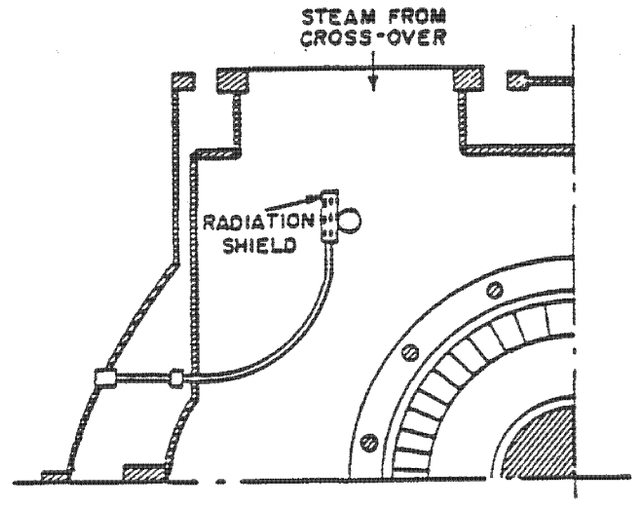

Fig. 6 Section through low-pressure turbine bowl showing thermocouple-well installation

IP14_007334