GE Power Generation

PERFORMANCE TEST REPORT

INTERMOUNTAIN POWER SERVICE
CORPORATION
UNIT # 2

February 8, 1989

P.G. Albert
& W.W. Kellyhouse

PERFORMANCE EVALUATION TEST REPORT

INTERMOUNTAIN POWER SERVICE CORPORATION

IPP UNIT NO. 2

TB NO. 270T151

820,000 kW

FEBRUARY 1989

IP14_002499

INTERMOUNTAIN POWER SERVICE CORPORATION
PERFORMANCE EVALUATION TEST REPORT
UNIT NO. 2

TABLE OF CONTENTS

	PAGE NO.
CONTENTS	i
INDEX OF FIGURES	ii
I. SUMMARY	1
II. INTRODUCTION	2
III. INSTRUMENTATION	2
VI. CALCULATIONS	3
V. RESULTS	3
1. HP Turbine Efficiency	4
2. IP Turbine Efficiency	4
3. Output and Heat Rate	4
4. Feedwater Heaters	5
VI. SUMMARY OF RESULTS	6-7
VII. FIGURES	
VIII. APPENDICES	
Computer Output for Test Cycle Heat Balances for Test Points	
Correction Curves	
Summay of Foxboro Computer Log Performance Test Data	
Thermocouple Location Assignment and Immersion Table	
Thermocouple Calibrations	
Water Legs for GE Instrumentation Points	

IP14_002500

INTERMOUNTAIN POWER SERVICE CORPORATION
PERFORMANCE EVALUATION TEST REPORT
UNIT NO. 2

INDEX OF FIGURES

Figure No.	Nomenclature
1	Posting Diagram Test Point No. 1
2	Posting Diagram Test Point No. 3
3	Posting Diagram Test Point No. 4
4	Posting Diagram Test Point No. 5
5	Summary of Measured Section Efficiencies and GE Measured Data
6	HP Efficiency Plotted Versus P1st/PT
7	IP Efficiency Plotted Versus Hot Reheat Pressure
8A-D	Group 1 & 2 Heat Rate and Load Corrections for Test Points 1,3,4,5
9	Test Cycle Heat Rate
10	Contract Cycle Heat Rate

IP14_002501

II. INTRODUCTION

A performance test was conducted on IPP Unit No. 2 to determine the High Pressure (HP) and Intermediate Pressure (IP) section efficiencies, and the overall performance of the turbine cycle with and without cycle isolation. These tests were run after the outage to establish the base level of performance of the unit. These tests were conducted through the cooperative efforts of the G.E Company and Intermountain Power Service Corporation.

A series of five test points were conducted from February 1 through February 3, 1989. All the test points were conducted with the turbine control valves wide open. During test points 4 and 5, block valves were closed to eliminate identified leakages from entering or leaving the test cycle or bypassing any cycle component.

III. INSTRUMENTATION

The measurements required for the performance test were obtained from both station instrumentation and GE supplied test instrumentation. For the measurement of some critical temperatures, GE provided calibrated chromel constantan thermocouples with continuous leads from the hot junction to an electronic (real ice) ice bath. The test thermocouples were installed to measure the following temperatures:

* Main Steam (Throttle)
* Cold Reheat
* Hot Reheat
* Crossover
* Final Feedwater
* Feedwater From Htr 7
* Feedwater From Htr 6

A copy of the calibration data for each thermocouple is included in Appendix E.

Test transducers were provided by G.E. for measuring various pressures as well as the differential pressure across the final feedwater flow element. The final feedwater differential pressure was measured with a high accuracy Ruska transducer. Twelve turbine exhaust pressures were multiplexed to one Data Metrics transducer through the use of a scanivalve. A high pressure scanivalve and Ruska high accuracy transducers were used for the following pressure measurements.

* Main Steam (Throttle)
* Valve Chest
* First Stage
* 4th Stage
* Cold Reheat
* Hot Reheat
* 10th stage
* Low Pressure Bowl

2. IP Turbine Efficiency

The efficiency of the IP turbine was also measured during each test point. This efficiency is defined from ahead of the combined reheat valves to the LP bowl. The results obtained during this test are also tabulated in Figure 5. These results are plotted in Figure 7, along with those previously obtained from the start-up enthalpy drop test,and the ASME performance test. The IP turbine efficiency is within 0.5% of the ASME test and 0.7% from the startup performance..

3. Output and Heat Rate

A. Test Cycle

The test value of the major variables which affect turbine and cycle performance are shown in Figures 8A through 8D along with test cycle results for output and heat rate. This data has been used in conjunction with Group 1 correction curves for throttle pressures, throttle temperature, reheat temperature, exhaust pressure and reheater pressure drop which are given in Appendix B, to obtain values for the test output and heat rate corresponding to the rated conditions of 2400 psig, 1000 / 1000 F, 1.66 / 2.24 / 2.99 "HgA, 10 % reheater pressure drop, 0.9 power factor, and an H2 pressure of 63 psig.

The values for test output and heat rate at rated conditions have been plotted in the form of test heat rate versus test load in Figure 9. The design curve shown is based on the design heat balances which include 1% cycle makeup and a heat rate definition with heat input by the condensate pump and for 0.1% boiler blowdown down flow.

B. Contract Cycle

As noted earlier, the contract cycle analysis corrects for the differences between the test and specified cycle (Group 1 corrections). The contract cycle analysis provides the results for turbine output and heat rate which are used to compare the test performance with the ASME test results or with the design heat balance.

SUMMARY OF RESULTS

TABLE I

HEAT RATE AND LOAD

TEST POINT	HEAT RATE	PCT CHANGE	LOAD (KW)	PCT CHANGE
DESIGN	7818.0		851733.0	
ASME TEST	7778.7	-0.50%	872780.7	2.47%
1989 TEST				
1	7793.6	0.19%	875250.0	0.28%
3	7805.6	0.35%	877248.0	0.51%
4	7745.4	-0.43%	878147.0	0.61%
5	7792.7	0.18%	879711.0	0.79%

TABLE II

SECTION EFFICIENCIES

TEST POINT	HP TURBINE	PCT CHANGE	IP TURBINE	PCT CHANGE
DESIGN	86.0		89.3	
STARTUP TEST	89.2	3.70%	92.0	3.02%
ASME TEST	88.0	-1.38%	91.7	-0.33%
1989 TEST	87.8	-0.17%	91.3	-0.44%

IP14_002504

SUMMARY OF RESULTS

THROTTLE FLOW

TEST POINT	FLOW LB/HR	PCT CHANGE
DESIGN	6122730	
ASME TEST	6271150	2.4%
1989 TEST		
1	6306864	0.6%
3	6326514	0.9%
4	6280399	0.1%
5	6333988	1.0%

TABLE III

UNACCOUNTED-FOR LEAKAGE LB/HR	PCT
-16188	-0.3%
-12640	-0.2%
-12897	-0.2%
-7107	-0.1%

R015G

IP14_002505

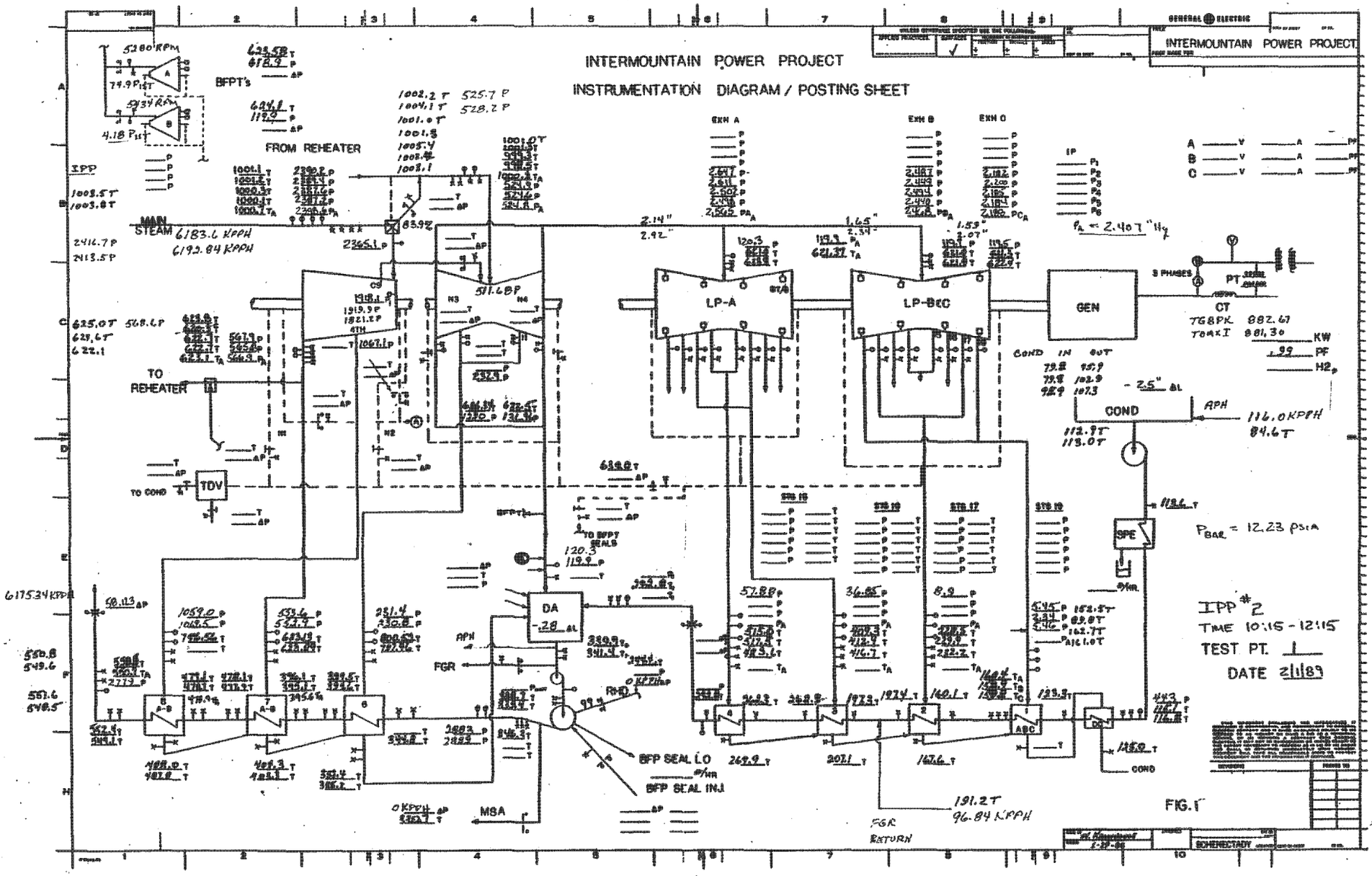
INTERMOUNTAIN POWER PROJECT
INSTRUMENTATION DIAGRAM / POSTING SHEET
GENERAL ELECTRIC
INTERMOUNTAIN POWER PROJECT
BFPT's
FROM REHEATER
MAIN STEAM
TO REHEATER
TDV
TO COND
LP-A
LP-B&C
GEN
COND
SPE
DA
BFP SEAL LO
BFP SEAL INJ
MSA
FGR
FGR RETURN
IPP #2
TIME 10:15 - 12:15
TEST PT. 1
DATE 2/1/89
FIG. 1
SCHENECTADY

IP14_002506

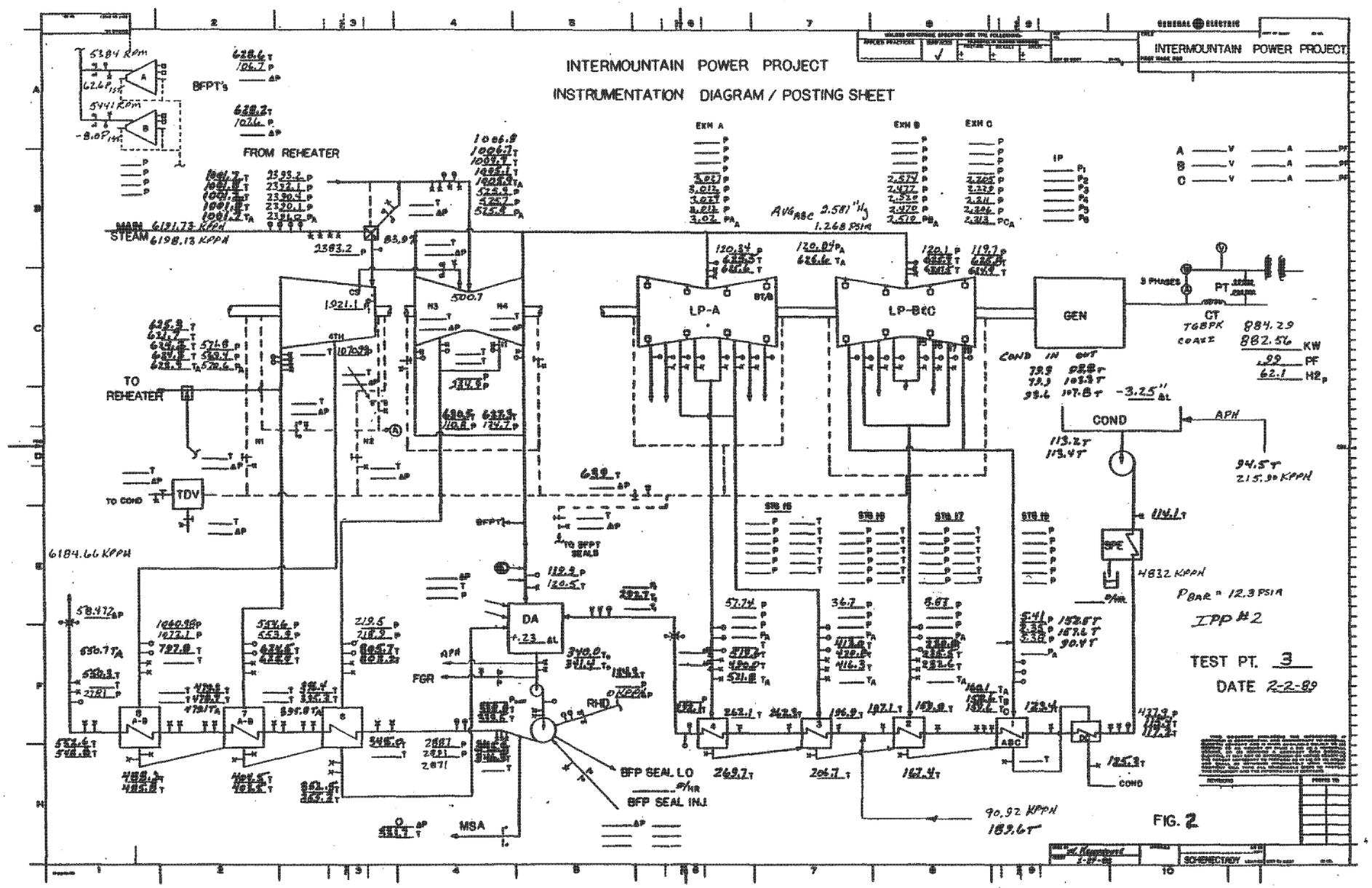
INTERMOUNTAIN POWER PROJECT
INSTRUMENTATION DIAGRAM / POSTING SHEET
GENERAL ELECTRIC
INTERMOUNTAIN POWER PROJECT
BFPT's
FROM REHEATER
MAIN STEAM
TO REHEATER
TDV
TO COND
LP-A
LP-B&C
GEN
COND
APH
DA
FGR
RHD
BFP SEAL LO
BFP SEAL INJ
MSA
SPE
IPP #2
TEST PT. 3
DATE 2-2-89
FIG. 2

IP14_002507

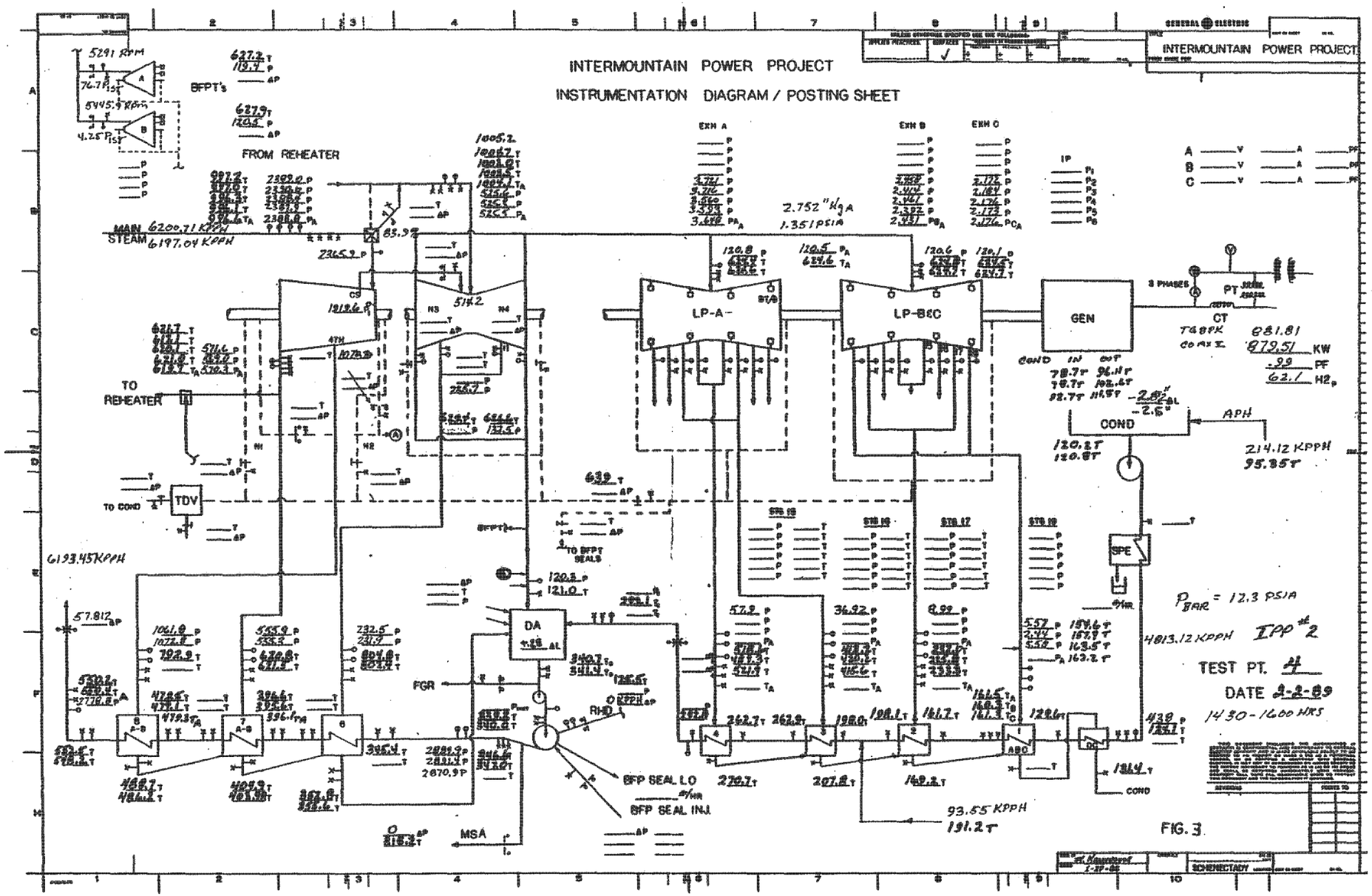
INTERMOUNTAIN POWER PROJECT
INSTRUMENTATION DIAGRAM / POSTING SHEET
INTERMOUNTAIN POWER PROJECT
GENERAL ELECTRIC
BFPT's
FROM REHEATER
MAIN STEAM
6200.71 KPPH
6197.04 KPPH
TO REHEATER
TO COND
TDV
6193.45KPPH
LP-A-
LP-B&C
GEN
COND
APH
214.12 KPPH
95.85T
SPE
DA
FGR
RHD
BFP SEAL LO
BFP SEAL INJ.
MSA
93.55 KPPH
191.2T
4813.12KPPH
IPP #2
TEST PT. 4
DATE 9-2-89
1430-1600 HRS
FIG. 3

IP14_002508

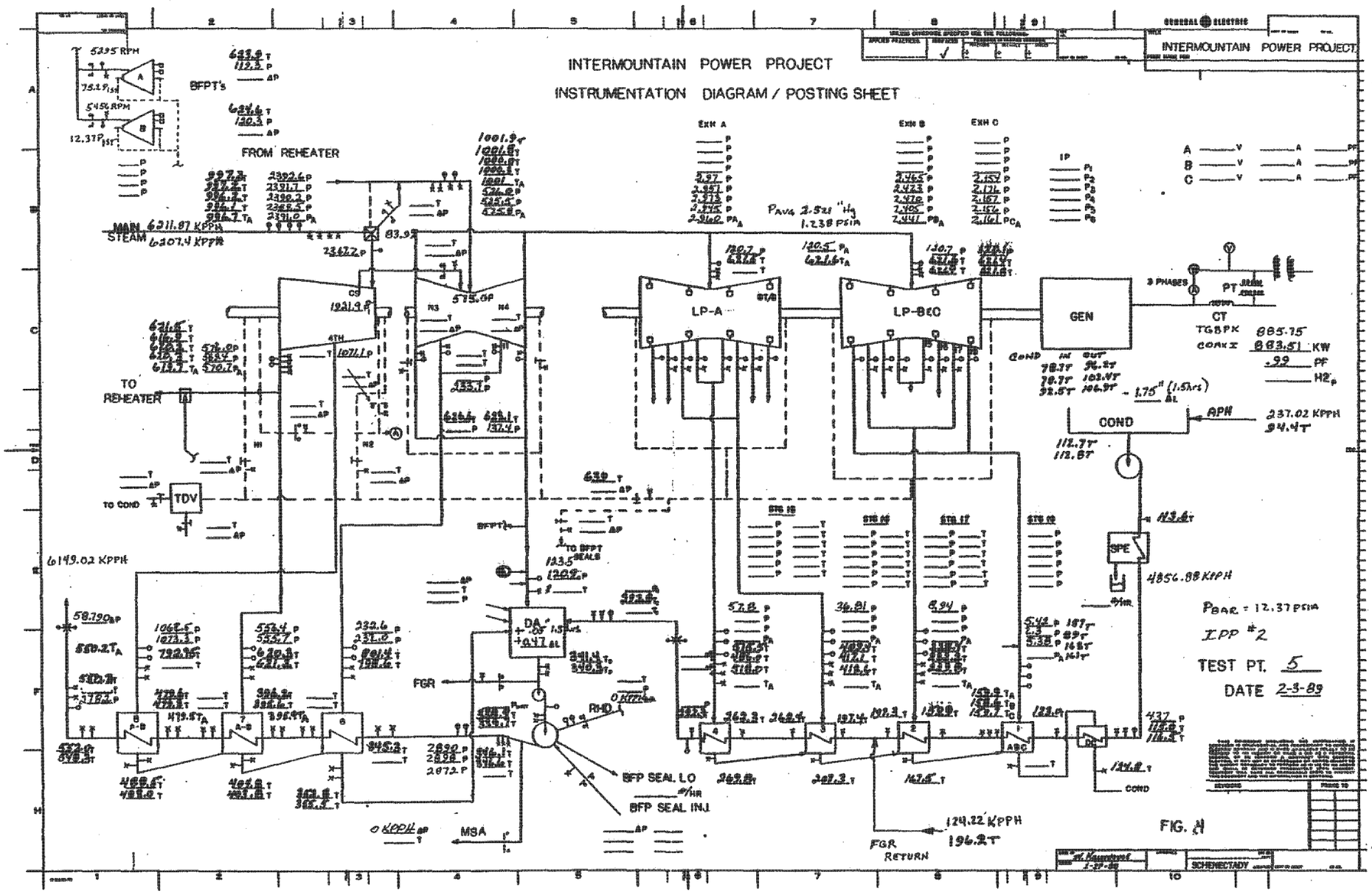
INTERMOUNTAIN POWER PROJECT
INSTRUMENTATION DIAGRAM / POSTING SHEET
INTERMOUNTAIN POWER PROJECT
GENERAL ELECTRIC
BFPT's
FROM REHEATER
MAIN STEAM
TO REHEATER
TO COND
TDV
LP-A
LP-B&C
GEN
COND
SPE
DA
FGR
BFP SEAL LO
BFP SEAL INJ
MSA
FGR RETURN
PBAR = 12.37 PSIA
IPP #2
TEST PT. 5
DATE 2-3-89
SCHENECTADY

FIG. 4

INTERMOUNTAIN POWER SEVICE CORPORATION
IPP NO. 2 PERFORMANCE EVALUATION
SUMMARY OF GE MEASURED TEST DATA

TEST NO.	1	2	3	4	5
THROTTLE (P)	2388.6	2389.1	2391	2388.8	2391
THROTTLE (T)	1000.7	999.1	1001.7	996.6	996.7
VC (P)	2388.59	2364.2	2383.2	2365.9	2367.2
FIRST STG. (P)	1918.1	1918.62	1921	1919.6	1921.9
COLD RHT. (P)	566.9	569.8	570.6	570.3	570.7
COLD RHT. (T)	623.1	621.88	623.9	619.7	619.7
HOT RHT. (P)	524.8	526.83	525.8	525.5	525.8
HOT RHT. (T)	999.66	1008.1	1005.24	1004.1	1001
LP BOWL (P)	119.39	120.66	120.06	120.5	120.5
LP BOWL (T)	621.37	627.88	625.5	624.6	621.6
HP EFFY. %	87.431	87.78	87.852	87.931	87.935
HP EFFY. CORR.	87.437	87.772	87.867	87.901	87.906
P1/PT RATIO	0.8030	0.8031	0.8034	0.8036	0.8038
IP EFFY. %	91.178	91.35	91.215	91.318	91.422
EXHAUST A ("HG)	2.565	3.132	3.02	3.648	2.96
EXHAUST B ("HG)	2.468	2.604	2.51	2.431	2.441
EXHAUST C ("HG)	2.188	2.302	2.213	2.176	2.161
FW OUT H6AB (T)	395.6	-	395.8	396.56	395.9
FW OUT H7AB (T)	478.9	-	479.1	479.28	479.5
FW OUT H8AB (T)	550.7	-	550.7	550.36	550.2
FFW FLOW #/HR.	6238874	-	6261673	6226931	6285898
BAROMETRIC (P)	12.23	12.18	12.3	12.3	12.37

PRESSURES (P) = PSIA
TEMPERATURES (T) = DEG. F

FIG 5

INTERMOUNTAIN POWER CO.

Unit No. 2 T 151

High Pressure Section Efficiency

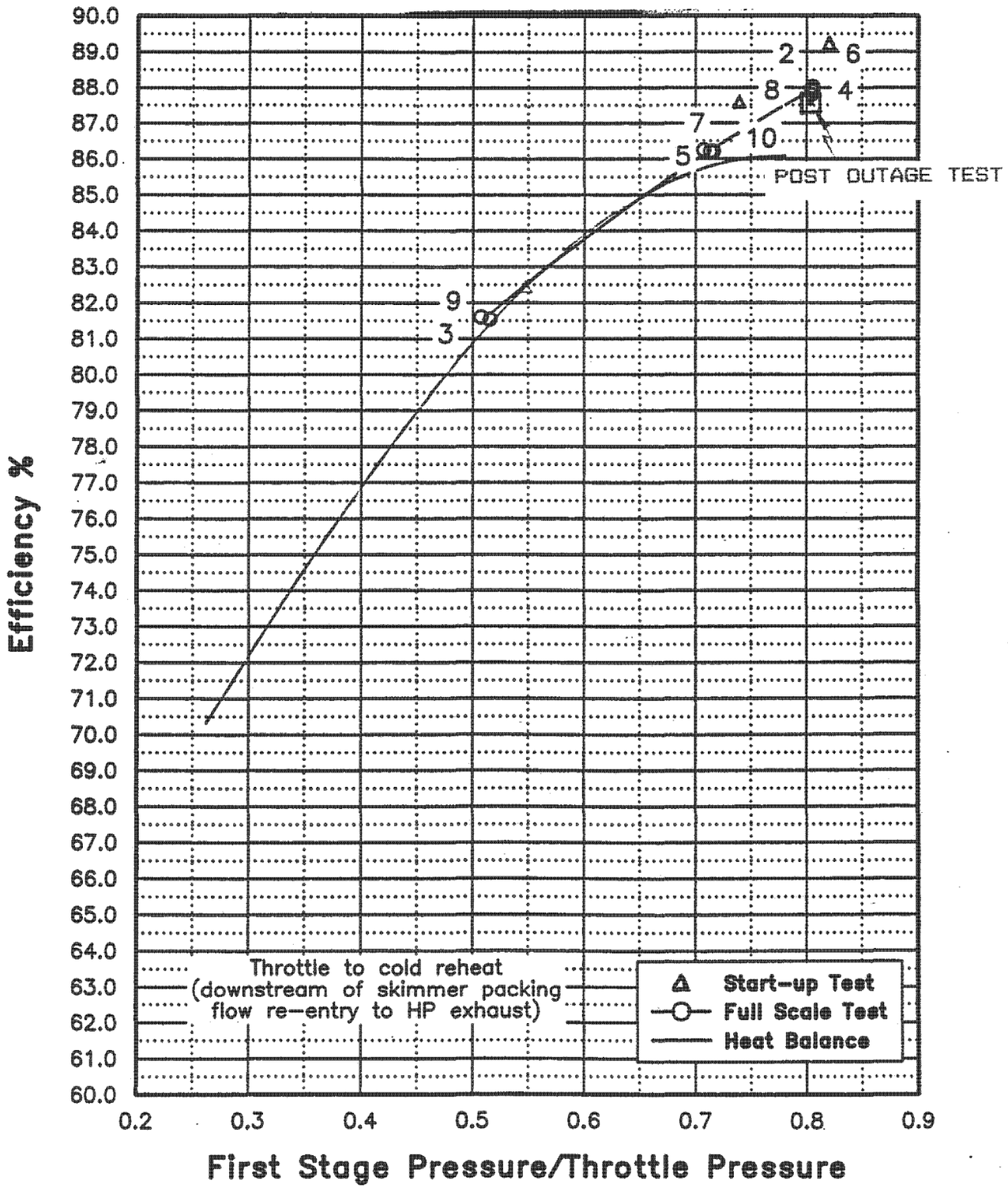

FIG. 6

IP14_002511

INTERMOUNTAIN POWER CO.

Unit No. 2 T 151

Intermediate Pressure Section Efficiency

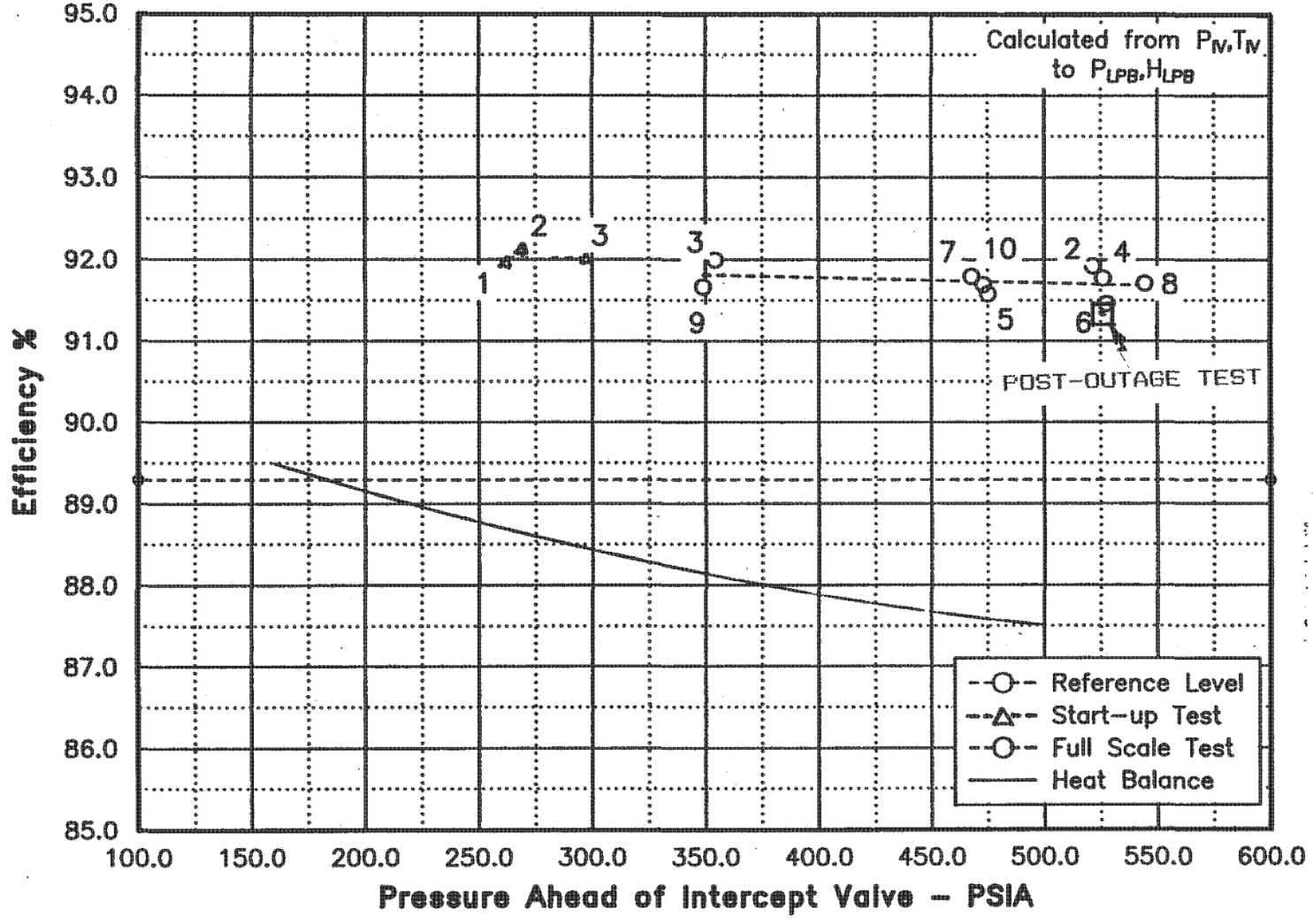

FIG 7

IP14_002512

R015G

IPP UNIT No. 2

CORRECTED HEAT RATE AND LOAD

TEST POINT	1
TEST LOAD	881710.0 kW
TEST HEAT RATE	7687.8 Btu/kW-hr

GROUP 2 CORRECTIONS	DESIGN	TEST	HR CORR	LOAD CORR
THROTTLE PRESS	2412.2	2388.6	1.0006	0.9904
THROTTLE TEMP	1000.0	1000.7	0.9999	0.9999
HOT REHEAT TEMP	1000.0	1000.3	1.0000	1.0001
REHEATER PRESS. DROP	10.0	7.4	0.9974	1.0067
EXHAUST PRESS.	2.3	2.4	1.0014	0.9986
COMBINED CORRECTION			0.9993	0.9956
HEAT RATE WITH GROUP 2 CORRECTIONS			7693.2	
LOAD WITH GROUP 2 CORRECTIONS				885571.2

GROUP 1 CORRECTIONS	DESIGN	TEST	HR CORR	LOAD CORR
TOP HTR TD (F)	-2	1.5	1.0005	1.0036
TOP HTR PRESS DROP (%)	3	0.26	0.9995	0.9965
EXTR TO BFPT (%)	4.09	4.06	0.9997	1.0003
MAIN STM SPRAYS	0	0	1.0000	1.0000
DESIGN APH	2.3	0	0.9877	1.0123
REHEAT SPRAYS	0	0	1.0000	1.0000
FLUE GAS REHEAT	0	96840	1.0011	0.9989
TEST APH	0	116000	1.0015	0.9985
MAKE-UP (%)	1	0	0.9983	1.0018
HR WITH COND PMP PWR AND BLOWDOWN			0.9988	1.0000
COMBINED CORRECTION			0.9871	1.0118
HEAT RATE WITH GROUP 1&2 CORRECTIONS			7793.6	
LOAD WITH GROUP 1&2 CORRECTIONS				875250.4

FIG 8A

IPP UNIT No. 2

CORRECTED HEAT RATE AND LOAD

TEST POINT	3
TEST LOAD	883326.0 kW
TEST HEAT RATE	7723.7 Btu/kW-hr

GROUP 2 CORRECTIONS	DESIGN	TEST	HR CORR	LOAD CORR
THROTTLE PRESS	2412.2	2391.0	1.0006	0.9914
THROTTLE TEMP	1000.0	1001.7	0.9997	0.9999
HOT REHEAT TEMP	1000.0	1005.9	0.9992	1.0028
REHEATER PRESS. DROP	10.0	7.9	0.9979	1.0056
EXHAUST PRESS.	2.3	2.6	1.0039	0.9961
COMBINED CORRECTION			1.0013	0.9957
HEAT RATE WITH GROUP 2 CORRECTIONS			7713.7	
LOAD WITH GROUP 2 CORRECTIONS				887100.9

GROUP 1 CORRECTIONS	DESIGN	TEST	HR CORR	LOAD CORR
TOP HTR TD (F)	-2	1.86	1.0005	1.0039
TOP HTR PRESS DROP (%)	3	0.42	0.9996	0.9967
EXTR TO BFPT (%)	4.09	4.05	0.9995	1.0005
MAIN STM SPRAYS	0	0	1.0000	1.0000
DESIGN APH	2.3	0	0.9877	1.0123
REHEAT SPRAYS	0	0	1.0000	1.0000
FLUE GAS REHEAT	0	90920	1.0010	0.9990
TEST APH	0	215900	1.0028	0.9972
MAKE-UP (%)	1	0	0.9983	1.0018
HR WITH COND PMP PWR AND BLOWDOWN			0.9988	1.0000
COMBINED CORRECTION			0.9882	1.0112
HEAT RATE WITH GROUP 1&2 CORRECTIONS			7805.6	
LOAD WITH GROUP 1&2 CORRECTIONS				877247.6

R015G

FIG 8B

R015G

IPP UNIT No. 2

CORRECTED HEAT RATE AND LOAD

TEST POINT	4
TEST LOAD	880852.0 kW
TEST HEAT RATE	7691.0 Btu/kW-hr

GROUP 2 CORRECTIONS	DESIGN	TEST	HR CORR	LOAD CORR
THROTTLE PRESS	2412.2	2388.8	1.0006	0.9904
THROTTLE TEMP	1000.0	996.6	1.0005	1.0003
HOT REHEAT TEMP	1000.0	1004.1	0.9994	1.0019
REHEATER PRESS. DROP	10.0	7.9	0.9979	1.0056
EXHAUST PRESS.	2.3	2.8	1.0065	0.9935
COMBINED CORRECTION			1.0049	0.9916
HEAT RATE WITH GROUP 2 CORRECTIONS			7653.6	
LOAD WITH GROUP 2 CORRECTIONS				888269.1

GROUP 1 CORRECTIONS	DESIGN	TEST	HR CORR	LOAD CORR
TOP HTR TD (F)	-2	2.24	1.0006	1.0043
TOP HTR PRESS DROP (%)	3	0.27	0.9995	0.9965
EXTR TO BFPT (%)	4.09	4.07	0.9994	1.0006
MAIN STM SPRAYS	0	0	1.0000	1.0000
DESIGN APH	2.3	0	0.9877	1.0123
REHEAT SPRAYS	0	0	1.0000	1.0000
FLUE GAS REHEAT	0	93550	1.0011	0.9989
TEST APH	0	214120	1.0028	0.9972
MAKE-UP (%)	1	0	0.9983	1.0018
HR WITH COND PMP PWR AND BLOWDOWN			0.9988	1.0000
COMBINED CORRECTION			0.9881	1.0115
HEAT RATE WITH GROUP 1&2 CORRECTIONS			7745.4	
LOAD WITH GROUP 1&2 CORRECTIONS				878147.1

R015G

FIG. 8C

R015G

IPP UNIT No. 2

CORRECTED HEAT RATE AND LOAD

TEST POINT	5
TEST LOAD	884783.0 kW
TEST HEAT RATE	7721.4 Btu/kW-hr

GROUP 2 CORRECTIONS	DESIGN	TEST	HR CORR	LOAD CORR
THROTTLE PRESS	2412.2	2391.0	1.0006	0.9914
THROTTLE TEMP	1000.0	996.7	1.0005	1.0003
HOT REHEAT TEMP	1000.0	1001.0	0.9999	1.0005
REHEATER PRESS. DROP	10.0	7.9	0.9979	1.0056
EXHAUST PRESS.	2.3	2.5	1.0031	0.9970
COMBINED CORRECTION			1.0020	0.9948
HEAT RATE WITH GROUP 2 CORRECTIONS			7706.0	
LOAD WITH GROUP 2 CORRECTIONS				889447.0

GROUP 1 CORRECTIONS	DESIGN	TEST	HR CORR	LOAD CORR
TOP HTR TD (F)	-2	2.41	1.0006	1.0045
TOP HTR PRESS DROP (%)	3	0.3	0.9995	0.9966
EXTR TO BFPT (%)	4.09	4.04	0.9995	1.0005
MAIN STM SPRAYS	0	0	1.0000	1.0000
DESIGN APH	2.3	0	0.9877	1.0123
REHEAT SPRAYS	0	0	1.0000	1.0000
FLUE GAS REHEAT	0	124220	1.0014	0.9986
TEST APH	0	237020	1.0031	0.9969
MAKE-UP (%)	1	0	0.9983	1.0018
HR WITH COND PMP PWR AND BLOWDOWN			0.9988	1.0000
COMBINED CORRECTION			0.9889	1.0111
HEAT RATE WITH GROUP 1&2 CORRECTIONS			7792.7	
LOAD WITH GROUP 1&2 CORRECTIONS				879711.1

R015G

FIG 8D

INTERMOUNTAIN POWER CO.

Unit No. 2 T 151

Test Heat Rate

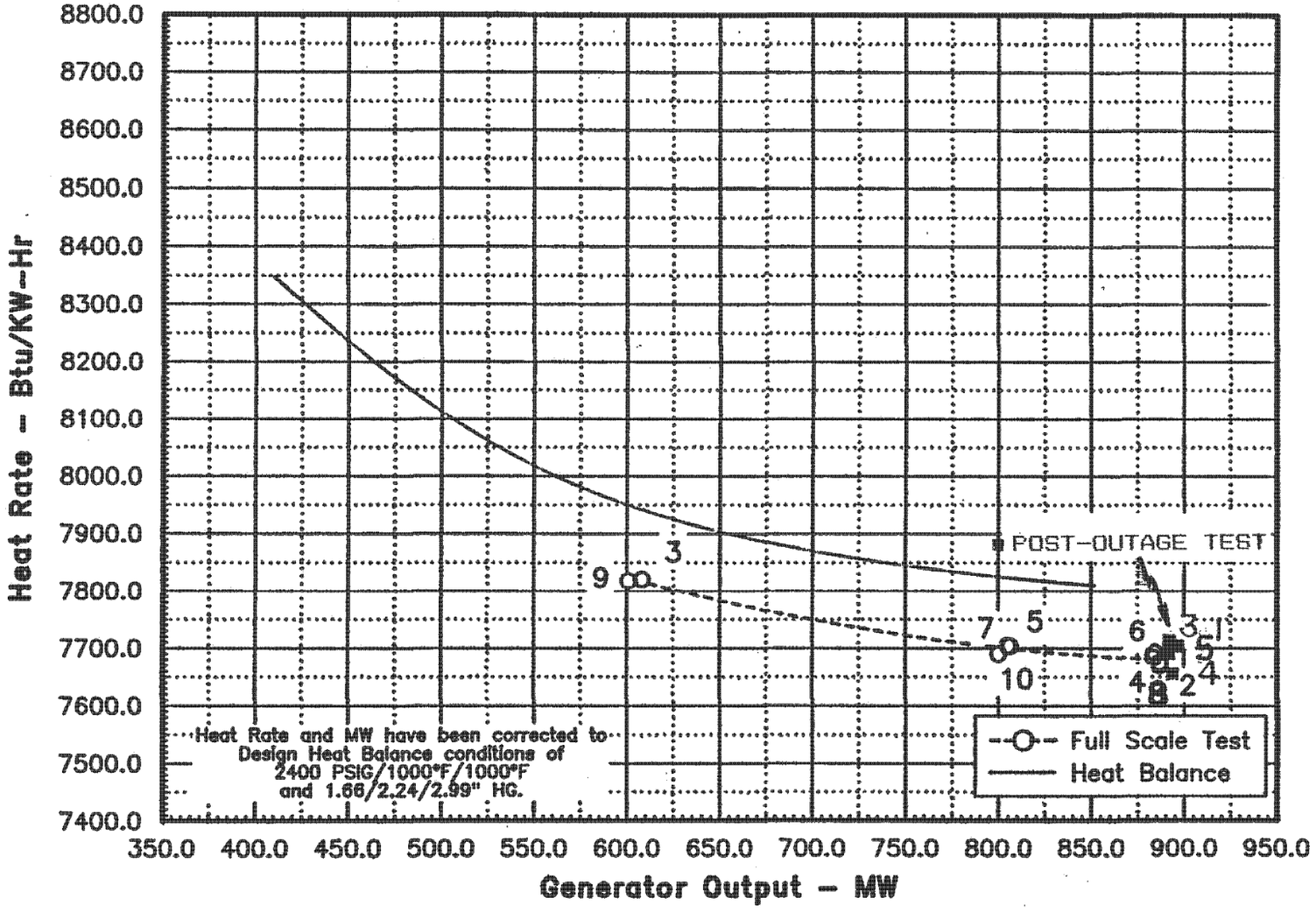

FIG 9

IP14_002517

INTERMOUNTAIN POWER CO.

Unit No. 2 T 151

Contract Cycle Heat Rate

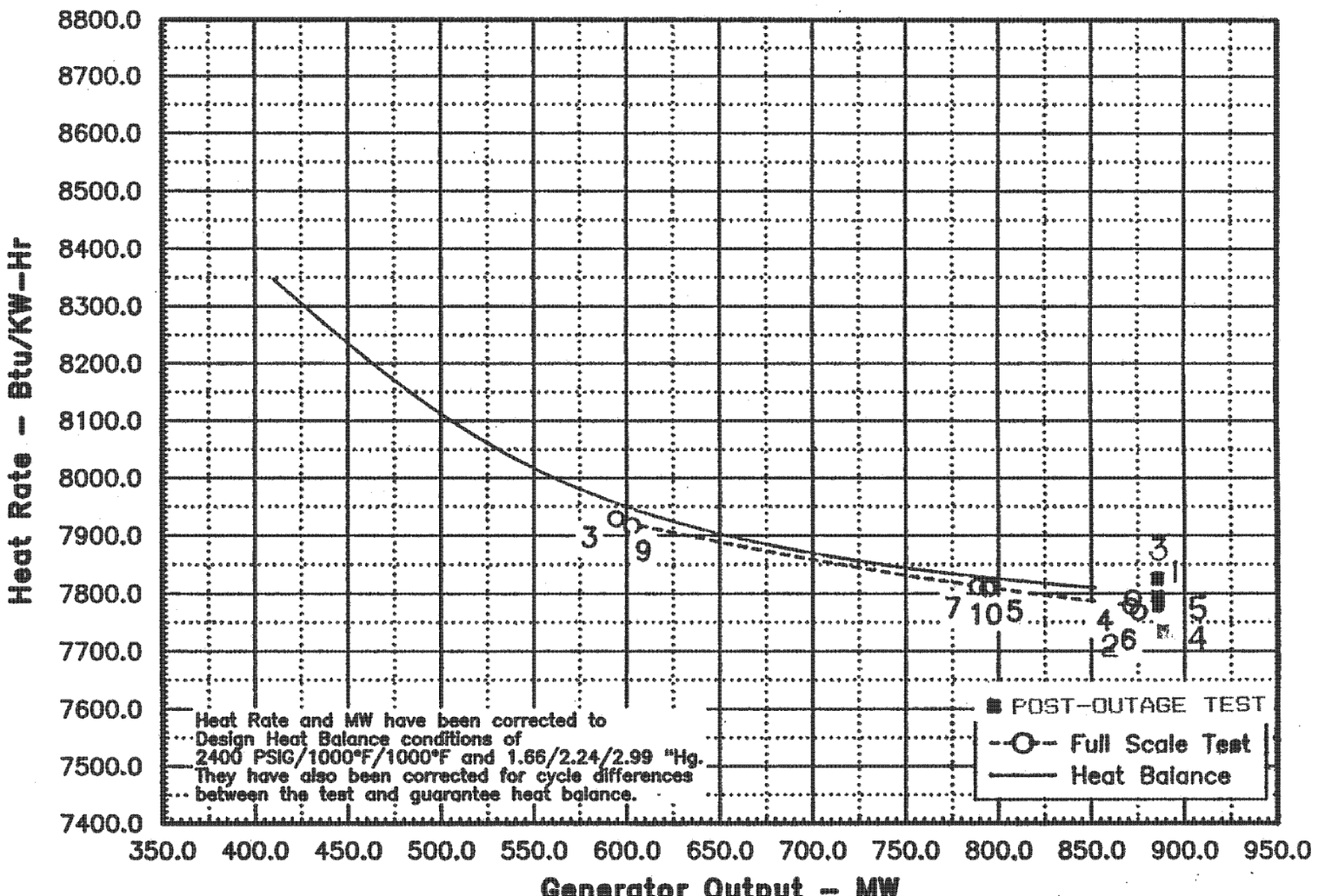

FIG. 10

IP14_002518

INTERMOUNTAIN POWER SERVICE CORPORATION
PERFORMANCE EVALUATION TEST REPORT
UNIT NO. 2

APPENDIX A

Computer Output for Test Cycle Heat Balances for Test Points 1,3,4,5

Output Sheets

These output sheets should be used in conjunction with the trunkline diagram shown in Figure A1.

The following is a list of the nomenclature used in these output sheets:

FW	Feedwater
Inj	Injection
Ret	Return
MU	Makeup
LO	Leakoff
Shell	Conditions in turbine
Exh	Exhaust
AE	Available energy
ELEP	Expansion line end point
UEEP	Used energy end point
V_{AN}	Annulus velocity
TL	Trunkline
P	Pressure - psia
T	Temperature - degrees F
H	Enthalpy, BTU/LB
Q	Flow, lb./hr.
SV	Specific volume - ft^3/lb
SSR	Steam seal regulator

Pages 1 and 2 of the output sheets for each test point contain general information on turbine and cycle performance, such as heat rate, throttle flow, section efficiencies, and stage flow function. On page 1 under label "rated conditions", the load and heat rate have been corrected to rated power factor and rated H_2 pressure, and the throttle flow has been corrected to 2400 psig/1000F.

Pages 3-6 include designated component information. The column (TL) to the left of each sheet is a trunkline number used to easily identify points in the cycle. These TL numbers correspond to the number on sheet A1.

Pages 7 and 8 are a tabulation of all information stored in all trunklines. Although much of the same information is already included on pages 3-6, it is reprinted in TL form because not all TL numbers are printed on pages 3-6 and it is easier under some circumstances to look up information on the TL printout.

The column headings for the TL sheets are from left to right (TL) trunkline number, (P) pressure-psia, (T) temperature - ^{o}F, (H) enthalty - Btu/lb., (Q) flow lb./hr., (SV) specific volume-ft^3/lb. in most cases, (SP) an additional fluid property needed in the calculation such as enthalpy, (PV)-(P)/(SV) in most cases but not all; and (TR) transient storage for information needed in the calculation. This last storage area will also contain $(Q)/A \sqrt{(P)/(SV)}$

The page numbering system is as follows:

A0 3-1

where A is for appendix A and 3-1 identifies the test point as 3 and the page number as 1.

Note:
The load and heat rate on the first page of each test point under the heading "RATED CONDITIONS" is the rated power factor and H2 pressure. The flow under the same heading is the rated throttle pressure and temperature of 2412.2 PSIA/1000 F.

TEST CYCLE HEAT BALANCE

VALVE POINT VWO — 02/1/89 — TEST POINT 01
INTERMOUNTAIN PWR PROJECT — UNIT #2
820000. KW — TC6F-30 IN LSB — TURBINE NO 270T151
2400. PSIG — 1000./ 1000. F — 2.300 IN HG ABS

CALCULATED USING ASME STEAM TABLES

COMBINED TURBINE-CYCLE PERFORMANCE

	TEST CONDITIONS	RATED CONDITIONS
TOTAL LOAD	882670.	881710.
HEAT RATE	7679.4	7687.8
THROTTLE FLOW	6238874.	6306864.

TURBINE THERMAL PERFORMANCE

	HIGH PRESS TB		REHEAT TB		
			IP TB		LP TB
	THROTTLE	COLD RHT	INLET	EXH	EXH
PRESS	2388.60	566.90	524.80	119.90	2.407
TEMP	1000.70	623.10	999.66	621.37	107.40
ENTH	1461.74	1307.93	1519.41	1338.96	1013.30
ENTR	1.5342		1.7313	1.7477	
EFF	87.431		91.168		93.178

ABSCISSA PHPX/PT=0.2373 P1STSTG/PT=0.8030 VAN= 780.3

THRU FLOW PERFORMANCE OF CONDENSING SECTION SHAFT NO 1

	TOTAL TB ENERGY BALANCE		LP TB ENERGY BALANCE	
	RHT TB	LP TB	RHT TB	LP TB
AE	543.16	353.39		
H ELEP	1013.30		1013.30	
H UEEP	1024.63		1024.63	
EFF ELEP	93.18	92.15	93.18	92.15
EFF UEEP	91.09	88.95	91.09	88.95
VAN	780.31		780.31	

A01-1

T G L PERFORMANCE OF CONDENSING SECTION SHAFT NO 1

	TOTAL TB ENERGY BALANCE		LP TB ENERGY BALANCE	
	RHT TB	LP TB	RHT TB	LP TB
H ELEP	1015.55		1015.55	
H UEEP	1026.96		1026.96	
EFF ELEP	92.76	91.52	92.76	91.52
EFF UEEP	90.66	88.29	90.66	88.29
VAN	782.18		782.18	

TL	PRESS	TEMP	ENTH	FLOW

STAGE FLOW FUNCTION

STG NO	SHELL PRESS	ONE VEL HD	PCT DELTA P	FLANGE PRESS	NOZ AREA	Q/AP H FLG	QFS	Q/AP H SHL
1	1918.10	0.	0.	0.	86.6	0.	6178175.	1014.5
4	1080.43	4.232	1.23	1067.10	157.4	862.9	5585192.	857.5
RH 1	524.80	0.	0.	0.	350.2	0.	5068759.	803.5
8	514.30	0.	0.	0.	350.2	0.	5086705.	822.6
11	235.68	0.868	1.18	232.90	711.2	789.2	4845187.	779.9
15	119.90	0.	0.	0.	807.6	0.	4389620.	1140.6
15	59.86	0.330	1.60	58.90	1414.8	1211.1	4246183.	1174.6
16	38.50	0.205	1.55	37.90	2021.4	1161.2	3956754.	1136.7
18	11.86	0.070	1.70	11.66	6018.0	1082.2	3798913.	1047.8
19	5.10	0.045	2.54	4.97	12096.0	1116.7	3621681.	1102.5

A01-2

TL	PRESS	TEMP	ENTH	FLOW		

F E E D W A T E R C Y C L E

					HEATER	8
4 FW IN	2779.00	478.90	463.69	6255062.4	CLOSED	
2 EXTR	1064.30	796.60	1384.39	574092.0	TD =	1.5
3 DRAIN	1064.30	487.90	473.61	574092.0	DC =	9.0
					HEATER	7
7 FW IN	2779.00	395.60	373.54	6255062.4	CLOSED	
5 EXTR	553.30	623.50	1309.26	548423.1	TD =	-1.3
6 DRAIN	553.30	403.80	379.54	1122515.1	DC =	8.2
3 ENTRY	1064.30	487.90	473.61	574092.0		
					HEATER	6
10 FW IN	2886.00	345.50	321.52	6255062.4	CLOSED	
8 EXTR	231.10	799.20	1423.79	241518.1	TD =	-1.5
9 DRAIN	231.10	353.80	325.90	1364033.3	DC =	8.3
6 ENTRY	553.30	403.80	379.54	1122515.1		
					PUMP	
11 FW IN	0.	0.	0.	6213240.4		
86 SEAL INJ	0.	0.	0.	107252.0		
30 SEAL RET	0.	0.	0.	65430.0		
32 LEAKAGE	0.	0.	0.	0.		
24 EXTR	1500.00	244.40	216.01	0.		
35 FW OUT	2886.00	345.50	321.52	6255062.4		
					HEATER	5
13 FW IN	140.00	292.80	262.45	4847023.3	OPEN	
12 EXTR	120.10	624.40	1340.47	215006.9	STO =	-550.0
111 DRAIN	120.10	340.60	311.89	6426080.4	SC =	0.7
9 ENTRY	231.10	353.80	325.90	1364033.3		
					HEATER	4
17 FW IN	140.00	262.30	231.31	4847023.3	CLOSED	
15 EXTR	57.88	516.30	1291.37	143437.5	TD =	-2.4
16 DRAIN	57.88	269.90	238.88	143437.5	DC =	7.6
					HEATER	3
20 FW IN	140.00	197.30	165.66	4847023.3	CLOSED	
18 EXTR	36.85	412.80	1243.07	289429.1	TD =	0.0
19 DRAIN	36.85	207.10	175.28	432866.6	DC =	9.8
16 ENTRY	57.88	269.90	238.88	143437.5		
					HEATER	2
23 FW IN	200.00	159.80	128.23	4750183.3	CLOSED	
21 EXTR	11.05	230.20	1160.51	157840.3	TD =	0.6
22 DRAIN	11.05	167.60	135.58	590706.9	DC =	7.8
19 ENTRY	36.85	207.10	175.28	432866.6		

IP14_002523

TL		PRESS	TEMP	ENTH	FLOW	
						STM SEAL REG
88	FLOW TO	0.	0.	0.	4497.4	CALCULATED
70	TDV	5.03	654.10	1361.97	4497.4	TO HEATER
68	TDV	2.12	480.00	1279.06	0.	TO CONDENSER
	NOT CODED FOR MU		MEAS TOTAL FLOW =		0.	
						HEATER 1
26	FW IN	230.00	116.00	84.56	4750183.3	CLOSED
25	EXTR	4.83	0.	1089.14	177232.9	TD = 1.0
123	DRAIN	4.83	125.00	92.97	772437.2	DC = 9.0
22	ENTRY	11.05	167.60	135.58	590706.9	
70	ENTRY	5.03	654.10	1361.97	4497.4	
						PUMP
33	FW IN	0.	0.	0.	4857435.3	
87	LEAKAGE	0.	0.	0.	0.	
27	FW OUT	0.	0.	0.	4857435.3	
						FW TO BOILER
1	FW IN	2779.00	550.70	547.28	6255062.4	S+L = -16188.

T U R B I N E E X P A N S I O N

						MAIN STEAM LINE
71	EXIT	0.	0.	1461.74	0.	
36	THROTTLE	2388.60	1000.70	1461.74	6238874.4	
						VALVE STEM LKG
						SQRT P/V = 85.947
37	LO NO 1	525.00	890.85	1460.75	2789.3	C = 55.583
						SQRT P/V = 18.819
38	LO NO 2	0.	0.	0.	1987.9	C = 105.634
						EXP TO STG 1
40	SHELL	1918.10	939.46	1438.19	6178175.4	
112	EXTR	0.	0.	1438.19	55921.7	

IP14_002524

TL	PRESS	TEMP	ENTH	FLOW	
					PACKING NO 2
					SQRT P/V =.115E 19
42 LO NO 1	124.85	690.00	1373.25	14004.4	C = 0.000
					SQRT P/V = 4.804
43 LO NO 2	17.08	682.60	1375.18	4281.1	C = 1017.348
					SQRT P/V = 0.655
100 LO NO 3	0.	0.	0.	606.4	C = 1834.023
					EXP TO STG 4
41 SHELL	1080.43	0.	1385.49	5585191.6	
79 EXTR	1067.10	798.60	1385.49	574092.0	
					PACKING NO 1
					SQRT P/V = 23.350
46 LO NO 1	123.45	602.40	1329.21	4713.7	C = 375.779
					SQRT P/V = 4.954
47 LO NO 2	16.96	582.40	1326.61	3454.4	C = 819.637
					SQRT P/V = 0.682
100 LO NO 3	0.	0.	0.	606.4	C = 1834.023
					EXPAND TO EXHAUST
49 EXH	566.90	623.10	1307.93	5614392.4	
80 EXTR	566.90	623.10	1307.93	548423.1	
50 TO RHT	566.90	623.10	1307.93	5065969.3	
					REHEATER 1
BEFORE LO	0.07	0.	1519.79	0.	
37 ENTRY					
84 AFTER LO	524.80	1000.30	1519.75	5068758.6	PCTDP = 7.426
					EXPAND TO BOWL
51 ENTRY	514.30	999.09	1519.41	5086704.9	
125 ENTRY	534.80	818.10	1421.60	17946.4	
					EXP TO STG 11
52 SHELL	235.68	0.	1417.59	4845186.8	
53 EXTR	232.90	800.50	1424.38	241518.1	

A01-5

TL	PRESS	TEMP	ENTH	FLOW	
					PACKING NO 3
					SQRT P/V = 4.766
57 LO NO 1	16.95	635.50	1352.26	1904.7	C = 1095.399
					SQRT P/V = 0.664
58 LO NO 2	16.95	645.70	1357.21	2102.6	C = 4990.290
					SQRT P/V = 0.661
100 LO NO 3	0.	0.	0.	606.4	C = 1834.023
					SQRT P/V = 0.
100 LO NO 4	0.	0.	0.	606.4	C = 1834.023
					EXPAND TO EXHAUST
56 EXH	119.90	621.37	1338.96	4389620.4	
55 EXTR	123.00	624.40	1340.29	450346.2	
					EXPAND TO BOWL
59 ENTRY	119.90	621.37	1338.96	4389620.4	
					EXP TO STG 15
61 SHELL	59.86	0.	1273.22	4246182.9	
60 EXTR	58.90	516.00	1291.14	143437.5	
					EXP TO STG 16
63 SHELL	38.50	0.	1234.33	3956753.8	
62 EXTR	37.90	413.00	1243.03	289429.1	
					EXP TO STG 18
65 SHELL	11.86	0.	1146.45	3798913.4	
64 EXTR	11.66	230.20	1160.30	157840.3	
					EXP TO STG 19
107 SHELL	5.10	0.	1093.65	3621680.6	
106 EXTR	4.97	0.	1089.14	177232.9	
					CONDENSER
					SHAFT 1
108 TB EXH	1.18	107.40	1024.6344	3621680.6	LEVL =-16171.0
76 ENTRY	0.	0.	0.	1219584.3	
122 DRAIN	0.	0.	0.	4857435.9	
					GENERATOR 1
					SHAFT 1

MEASURED LOAD = 882670.0 PF = 0.990 H2 = 62.10
SHAFT 1 KW = 894734.3 FL =4353.0 GL = 7711.3

A01-6

IP14_002526

TEST CYCLE HEAT BALANCE

P E R F O R M A N C E

TRUNKLINE OUTPUT

TL	P	T	H	Q	SV	SP	PV	TR
1	2779.0	550.7	547.3	6255062.	0.0212	0.	0.	-16188.0
2	1064.3	796.6	1384.4	574092.	0.6394	552.198	1.498	244.4
3	1064.3	487.9	473.6	574092.	0.0201	0.	9.000	0.
4	2779.0	478.9	463.7	6255062.	0.	0.	0.	0.
5	553.3	623.5	1309.3	548423.	1.0685	477.571	01.329	145.9
6	553.3	403.8	379.5	1122515.	0.0187	0.	8.200	0.
7	2779.0	395.6	373.5	6255062.	0.	0.	0.	0.
8	231.1	799.2	1423.8	241518.	3.1843	394.110	-1.490	405.1
9	231.1	353.8	325.9	1364033.	0.0180	0.	8.300	0.
10	2886.0	345.5	321.5	6255062.	0.0177	0.	0.	0.
11	0.	0.	0.	6213240.	0.	0.	0.	0.
12	120.1	624.4	1340.5	215007.	5.2863	341.328	-550.000	283.1
13	140.0	292.8	262.5	4847023.	0.0174	0.	0.	0.
15	57.9	516.3	1291.4	143437.	9.9234	290.370	-2.430	225.9
16	57.9	269.9	238.9	143437.	0.0172	0.	7.600	0.
17	140.0	262.3	231.3	4847023.	0.	0.	0.	0.
18	36.8	412.8	1243.1	289429.	13.9337	262.334	0.034	150.5
19	36.8	207.1	175.3	432867.	0.0167	0.	9.800	0.
20	140.0	197.3	165.7	4847023.	0.	0.	0.	0.
21	11.0	230.2	1160.5	157840.	36.8074	197.967	0.567	32.2
22	11.0	167.6	135.6	590707.	0.0164	0.	7.800	0.
23	200.0	159.8	128.2	4750183.	0.	0.	0.	0.
24	1500.0	244.4	216.0	0.	0.0169	0.	0.	0.
25	4.8	0.	1089.1	177233.	0.	160.778	0.978	-160.8
26	230.0	116.0	84.6	4750183.	0.0162	0.	0.	0.
27	0.	0.	0.	4857435.	0.	0.	0.	0.
28	0.	0.	0.	18500.	0.	0.	0.	0.
29	0.	0.	0.	46930.	0.	0.	0.	0.
30	0.	0.	0.	65430.	0.	0.	0.	0.
31	2886.0	330.7	306.3	0.	0.0175	0.	0.	0.
33	0.	0.	0.	4857435.	0.	0.	0.	0.
34	0.	0.	0.	-16188.	0.	0.	0.	0.
35	2886.0	345.5	321.5	6255062.	0.0177	0.	0.	0.
36	2388.6	1000.7	1461.7	6238874.	0.3234	1461.737	85.947	0.
37	525.0	890.9	1460.8	2789.	1.4824	0.780	18.819	55.6
38	0.	0.	0.	1988.	0.	0.	0.	105.6
39	2388.6	0.	1461.7	6234097.	0.3234	0.	85.947	0.
40	1918.1	939.5	1438.2	6178175.	0.3878	147.063	70.325	0.
41	1080.4	0.	1385.5	5585192.	0.6310	554.451	41.379	857.5
42	124.8	690.0	1373.3	14004.	5.4093	0.779	4.804	0.0
43	17.1	682.6	1375.2	4281.	39.7595	0.	0.655	1017.3
45	0.	0.	0.	37975.	0.	0.	0.	0.
46	123.4	602.4	1329.2	4714.	5.0293	0.703	4.954	375.8
47	17.0	582.4	1326.6	3454.	36.5003	0.	0.682	819.6
48	0.	0.	0.	5623167.	0.	0.	0.	0.
49	566.9	623.1	1307.9	5614392.	1.0397	480.140	23.350	0.
50	566.9	623.1	1307.9	5065969.	0.	0.	0.	0.
51	514.3	999.1	1519.4	5086705.	1.6505	0.	17.657	0.
52	235.7	0.	1417.6	4845187.	3.0882	396.159	8.736	779.9

IP14_002527

TL	P	T	H	Q	SV	SP	PV	TR
53	232.9	800.5	1424.4	241518.	3.1628	394.782	8.581	0.
54	119.9	621.4	1339.0	4839967.	5.2795	0.	4.766	0.
55	123.0	624.4	1340.3	450346.	5.1595	343.126	0.	0.
56	119.9	621.4	1339.0	4389620.	5.2795	341.203	0.	0.
57	17.0	635.5	1352.3	1905.	38.4006	0.	0.664	1095.4
58	17.0	645.7	1357.2	2103.	38.7611	0.	0.661	4990.3
59	119.9	621.4	1339.0	4389620.	5.2795	0.	4.766	0.
60	58.9	516.0	1291.1	143437.	9.7463	291.505	2.458	0.
61	59.9	0.	1273.2	4246183.	9.1682	292.443	2.555	1174.6
62	37.9	413.0	1243.0	289429.	13.5461	264.009	1.673	0.
63	38.5	0.	1234.3	3956754.	12.9824	265.037	1.722	1136.7
64	11.7	230.2	1160.3	157840.	34.8616	200.560	0.578	0.
65	11.9	0.	1146.4	3798913.	32.6828	201.683	0.602	1047.8
66	16.6	633.0	1351.1	9233.	39.1454	0.	0.	0.
67	118.3	343.1	1191.9	0.	3.7967	0.	0.	0.
68	2.1	480.0	1279.1	0.	264.2691	0.	0.	0.
69	5.0	654.1	1362.0	1533.	131.7884	0.	0.	0.
70	5.0	654.1	1362.0	4497.	131.7884	0.	0.	0.
71	0.	0.	1461.7	0.	0.	0.	0.	0.
72	0.	0.	0.	-550.	0.	0.	0.	0.
73	0.	0.	0.	-16171.	0.	0.	0.	0.
75	0.	0.	0.	5595.	0.	0.	0.	0.
76	0.	0.	0.	1219584.	0.	0.	0.	0.
79	1067.1	798.6	1385.5	574092.	0.6390	552.522	40.866	0.
80	566.9	623.1	1307.9	548423.	0.	0.	0.	0.
81	16.6	633.0	1351.1	0.	39.1454	0.	0.	0.
82	0.	0.	0.	5065969.	0.	0.	0.	0.
83	120.1	341.3	1190.4	533.	0.	0.	0.	0.
84	524.8	1000.3	1519.8	5068759.	1.6174	7.426	18.013	803.5
86	0.	0.	0.	107252.	0.	0.	0.	0.
88	0.	0.	0.	4497.	0.	0.	0.	0.
90	200.0	197.4	165.9	0.	0.0166	0.	0.	0.
91	200.0	191.2	159.7	96840.	0.0166	0.	0.	0.
92	0.	0.	0.	116000.	0.	0.	0.	0.
95	1.2	107.4	1013.3	3621681.	258.7532	1024.634	2.407	780.3
99	0.	0.	0.	6671.	0.	0.	0.	0.
100	0.	0.	0.	606.	0.	0.	0.	1834.0
104	2779.0	550.7	547.3	6255062.	0.0212	1.028	0.	2779.0
106	5.0	0.	1089.1	177233.	70.8567	161.982	0.265	0.
107	5.1	0.	1093.6	3621681.	69.1375	0.	0.272	1102.5
108	1.2	107.4	1024.6	3621681.	284.9415	1024.634	2.407	-16171.0
111	120.1	340.6	311.9	6426080.	0.0179	0.	0.728	0.
112	0.	0.	1438.2	55922.	0.	0.	0.	0.
113	0.	0.	0.	6159284.	0.	0.	0.115E 19	0.
114	443.0	116.0	85.1	14792.	0.0162	0.624	0.	443.0
115	443.0	116.0	85.1	8898.	0.0162	0.624	0.	443.0
116	443.0	116.0	85.1	28083.	0.0162	0.623	0.	443.0
117	443.0	116.0	85.1	13207.	0.0162	0.660	0.	443.0
118	443.0	116.0	85.1	21400.	0.0162	0.660	0.	443.0
119	443.0	116.0	85.1	20874.	0.0162	0.660	0.	443.0
120	0.	0.	0.	4777.	0.	0.	0.	0.
122	0.	0.	0.	4857436.	0.	0.	0.	0.
123	4.8	125.0	93.0	772437.	0.0162	0.	9.000	0.
125	534.8	818.1	1421.6	17946.	1.3659	0.628	0.	521.0
130	0.	0.	0.	254057.	0.	0.	0.	0.
131	119.3	619.2	1337.9	124258.	5.2952	1.019	0.	119.3
132	119.3	619.1	1337.9	129800.	5.2946	1.019	0.	119.3
133	0.	0.	0.	253451.	0.	0.	0.	0.
135	200.0	197.4	165.9	4750183.	0.0166	0.	0.	0.

TEST CYCLE HEAT BALANCE

VALVE POINT VWO — 02/2/89 — TEST POINT 03
INTERMOUNTAIN PWR PROJECT — UNIT #2
820000. KW — TC6F-30 IN LSB — TURBINE NO 270T151
2400. PSIG — 1000./ 1000. F — 2.300 IN HG ABS

CALCULATED USING ASME STEAM TABLES

COMBINED TURBINE-CYCLE PERFORMANCE

	TEST CONDITIONS	RATED CONDITIONS
TOTAL LOAD	884290.	883326.
HEAT RATE	7715.3	7723.7
THROTTLE FLOW	6261673.	6326514.

TURBINE THERMAL PERFORMANCE

	HIGH PRESS TB		REHEAT TB		
			IP TB		LP TB
	THROTTLE	COLD RHT	INLET	EXH	EXH
PRESS	2391.00	570.60	525.80	120.06	2.581
TEMP	1001.70	623.90	1005.24	625.50	109.80
ENTH	1462.32	1308.13	1522.39	1341.03	1019.63
ENTR	1.5345		1.7331	1.7495	
EFF	87.852		91.215		92.883

ABSCISSA PHPX/PT=0.2386 P1STSTG/PT=0.8035 VAN= 735.0

THRU FLOW PERFORMANCE OF CONDENSING SECTION SHAFT NO 1

	TOTAL TB ENERGY BALANCE		LP TB ENERGY BALANCE	
	RHT TB	LP TB	RHT TB	LP TB
AE	541.29	350.61		
H ELEP	1019.63		1019.63	
H UEEP	1029.58		1029.58	
EFF ELEP	92.88	91.67	92.88	91.67
EFF UEEP	91.05	88.83	91.05	88.83
VAN	734.95		734.95	

A03-1

T G L PERFORMANCE OF CONDENSING SECTION SHAFT NO 1

	TOTAL TB ENERGY BALANCE		LP TB ENERGY BALANCE	
	RHT TB	LP TB	RHT TB	LP TB
H ELEP	1021.51		1021.51	
H UEEP	1031.51		1031.51	
EFF ELEP	92.54	91.13	92.54	91.13
EFF UEEP	90.69	88.28	90.69	88.28
VAN	736.41		736.41	

TL	PRESS	TEMP	ENTH	FLOW

STAGE FLOW FUNCTION

STG NO	SHELL PRESS	ONE VEL HD	PCT DELTA P	FLANGE PRESS	NOZ AREA	Q/AP H FLG	QFS	Q/AP H SHL
1	1921.10	0.	0.	0.	86.6	0.	6200898.	1016.3
4	1084.22	4.196	1.22	1071.00	157.4	864.0	5609495.	858.7
RH 1	525.80	0.	0.	0.	350.2	0.	5090575.	807.1
8	515.28	0.	0.	0.	350.2	0.	5108523.	826.3
11	237.67	0.865	1.16	234.90	711.2	787.7	4866879.	780.0
15	120.06	0.	0.	0.	807.6	0.	4404304.	1145.2
15	59.68	0.339	1.65	58.70	1414.8	1221.9	4259436.	1187.7
16	38.33	0.218	1.65	37.70	2021.4	1171.3	3962702.	1149.6
18	11.87	0.073	1.78	11.66	6018.0	1084.9	3801626.	1053.4
19	5.10	0.046	2.59	4.97	12096.0	1119.5	3622824.	1104.9

A03-2

TL	PRESS	TEMP	ENTH	FLOW		

F E E D W A T E R C Y C L E

					HEATER	8
4 FW IN	2781.00	479.10	463.92	6274312.8	CLOSED	
2 EXTR	1066.54	797.80	1385.02	572394.2	TD =	1.9
3 DRAIN	1066.54	487.00	472.57	572394.2	DC =	7.9
					HEATER	7
7 FW IN	2781.00	395.80	373.75	6274312.8	CLOSED	
5 EXTR	554.30	625.00	1310.10	550941.8	TD =	-1.3
6 DRAIN	554.30	404.00	379.75	1123336.0	DC =	8.2
3 ENTRY	1066.54	487.00	472.57	572394.2		
					HEATER	6
10 FW IN	2883.00	345.70	321.72	6274312.8	CLOSED	
8 EXTR	219.20	804.50	1427.02	241643.5	TD =	-6.2
9 DRAIN	219.20	353.90	325.98	1364979.5	DC =	8.2
6 ENTRY	554.30	404.00	379.75	1123336.0		
					PUMP	
11 FW IN	0.	0.	0.	6234967.1		
86 SEAL INJ	0.	0.	0.	107247.6		
30 SEAL RET	0.	0.	0.	65430.0		
32 LEAKAGE	0.	0.	0.	2472.0		
24 EXTR	1500.00	134.30	106.00	0.		
35 FW OUT	2883.00	345.70	321.72	6274312.8		
					HEATER	5
13 FW IN	140.00	292.40	262.04	4955569.7	OPEN	
12 EXTR	120.20	628.90	1342.73	222072.0	STD =	452.0
111 DRAIN	120.20	340.70	311.99	6541787.1	SC =	0.7
9 ENTRY	219.20	353.90	325.98	1364979.5		
					HEATER	4
17 FW IN	140.00	262.20	231.21	4955569.7	CLOSED	
15 EXTR	57.74	520.70	1293.54	144868.1	TD =	-2.2
16 DRAIN	57.74	269.70	238.68	144868.1	DC =	7.5
					HEATER	3
20 FW IN	140.00	196.90	165.26	4955569.7	CLOSED	
18 EXTR	36.70	416.70	1244.99	296734.2	TD =	-0.1
19 DRAIN	36.70	206.70	174.88	441602.4	DC =	9.8
16 ENTRY	57.74	269.70	238.68	144868.1		
					HEATER	2
23 FW IN	200.00	159.60	128.03	4864649.7	CLOSED	
21 EXTR	11.05	233.00	1161.84	161075.7	TD =	0.9
22 DRAIN	11.05	167.40	135.38	602678.1	DC =	7.8
19 ENTRY	36.70	206.70	174.88	441602.4		

IP14_002531

TL		PRESS	TEMP	ENTH	FLOW	
						STM SEAL REG
88	FLOW TO	0.	0.	0.	4501.6	CALCULATED
70	TDV	5.03	654.10	1361.97	4501.6	TO HEATER
68	TDV	2.12	480.00	1279.06	0.	TO CONDENSER
	NOT CODED FOR MU		MEAS TOTAL FLOW =		0.	
						HEATER 1
26	FW IN	230.00	116.30	84.86	4864649.7	CLOSED
25	EXTR	4.83	0.	1093.88	178802.5	TD = 1.2
123	DRAIN	4.83	125.30	93.27	785982.2	DC = 9.0
22	ENTRY	11.05	167.40	135.38	602678.1	
70	ENTRY	5.03	654.10	1361.97	4501.6	
						PUMP
33	FW IN	0.	0.	0.	4976973.3	
87	LEAKAGE	0.	0.	0.	5076.0	
27	FW OUT	0.	0.	0.	4971897.3	
						FW TO BOILER
1	FW IN	2781.00	550.60	547.16	6274312.8	S+L = -12640.

T U R B I N E E X P A N S I O N

						MAIN STEAM LINE
71	EXIT	0.	0.	1462.32	0.	
36	THROTTLE	2391.00	1001.70	1462.32	6261672.8	
						VALVE STEM LKG
						SQRT P/V = 85.993
37	LO NO 1	526.00	892.77	1461.75	2789.9	C = 55.609
						SQRT P/V = 18.841
38	LO NO 2	0.	0.	0.	1992.1	C = 105.737
						EXP TO STG 1
40	SHELL	1921.10	939.11	1437.85	6200897.8	
112	EXTR	0.	0.	1437.85	55993.0	

A03-4

TL	PRESS	TEMP	ENTH	FLOW	
					PACKING NO 3
					SQRT P/V = 4.762
57 LO NO 1	16.95	635.50	1352.26	1904.7	C = 1096.150
					SQRT P/V = 0.664
58 LO NO 2	16.95	645.70	1357.21	2102.6	C = 4990.290
					SQRT P/V = 0.661
100 LO NO 3	0.	0.	0.	606.4	C = 1834.023
					SQRT P/V = 0.
100 LO NO 4	0.	0.	0.	606.4	C = 1834.023
					EXPAND TO EXHAUST
56 EXH	120.06	625.50	1341.03	4404304.1	
55 EXTR	125.00	628.90	1342.43	457354.8	
					EXPAND TO BOWL
59 ENTRY	120.06	625.50	1341.03	4404304.1	
					EXP TO STG 15
61 SHELL	59.68	0.	1275.97	4259436.0	
60 EXTR	58.70	521.00	1293.61	144868.1	
					EXP TO STG 16
63 SHELL	38.33	0.	1236.91	3962701.8	
62 EXTR	37.70	417.00	1245.00	296734.2	
					EXP TO STG 18
65 SHELL	11.87	0.	1149.15	3801626.1	
64 EXTR	11.66	233.00	1161.63	161075.7	
					EXP TO STG 19
107 SHELL	5.10	0.	1096.38	3622823.6	
106 EXTR	4.97	0.	1093.88	178802.5	
					CONDENSER
					SHAFT 1
108 TB EXH	1.27	109.80	1029.5785	3622823.6	LEVL =-21022.0
76 ENTRY	0.	0.	0.	1333128.5	
122 DRAIN	0.	0.	0.	4976974.1	
					GENERATOR 1
					SHAFT 1

MEASURED LOAD = 884290.0 PF = 0.990 H2 = 62.10
SHAFT 1 KW = 896370.8 FL =4353.0 GL = 7727.8

A03-6

TEST CYCLE HEAT BALANCE

P E R F O R M A N C E

TRUNKLINE OUTPUT

TL	P	T	H	Q	SV	SP	PV	TR
1	2781.0	550.6	547.2	6274313.	0.0212	0.	0.	-12640.0
2	1066.5	797.8	1385.0	572394.	0.6388	552.457	1.857	245.3
3	1066.5	487.0	472.6	572394.	0.0201	0.	7.900	0.
4	2781.0	479.1	463.9	6274313.	0.	0.	0.	0.
5	554.3	625.0	1310.1	550942.	1.0685	477.762	-1.338	147.2
6	554.3	404.0	379.8	1123336.	0.0187	0.	8.200	0.
7	2781.0	395.8	373.8	6274313.	0.	0.	0.	0.
8	219.2	804.5	1427.0	241643.	3.3756	389.564	-6.236	414.9
9	219.2	353.9	326.0	1364980.	0.0180	0.	8.200	0.
10	2883.0	345.7	321.7	6274313.	0.0177	0.	0.	0.
11	0.	0.	0.	6234967.	0.	0.	0.	0.
12	120.2	628.9	1342.7	222072.	5.3051	341.391	452.000	287.5
13	140.0	292.4	262.0	4955570.	0.0174	0.	0.	0.
15	57.7	520.7	1293.5	144868.	9.9947	290.213	-2.187	230.5
16	57.7	269.7	238.7	144868.	0.0172	0.	7.500	0.
17	140.0	262.2	231.2	4955570.	0.	0.	0.	0.
18	36.7	416.7	1245.0	296734.	14.0571	262.091	-0.109	154.6
19	36.7	206.7	174.9	441602.	0.0167	0.	9.800	0.
20	140.0	196.9	165.3	4955570.	0.	0.	0.	0.
21	11.0	233.0	1161.8	161076.	36.9642	197.967	0.867	35.0
22	11.0	167.4	135.4	602678.	0.0164	0.	7.800	0.
23	200.0	159.6	128.0	4864650.	0.	0.	0.	0.
24	1500.0	134.3	106.0	0.	0.0162	0.	0.	0.
25	4.8	0.	1093.9	178802.	0.	160.778	1.178	-160.8
26	230.0	116.3	84.9	4864650.	0.0162	0.	0.	0.
27	0.	0.	0.	4971897.	0.	0.	0.	0.
28	0.	0.	0.	18500.	0.	0.	0.	0.
29	0.	0.	0.	46930.	0.	0.	0.	0.
30	0.	0.	0.	65430.	0.	0.	0.	0.
31	2871.0	331.7	307.3	0.	0.0176	0.	0.	0.
32	0.	0.	0.	2472.	0.	0.	0.	0.
33	0.	0.	0.	4976973.	0.	0.	0.	0.
34	0.	0.	0.	-12640.	0.	0.	0.	0.
35	2883.0	345.7	321.7	6274313.	0.0177	0.	0.	0.
36	2391.0	1001.7	1462.3	6261673.	0.3233	1462.321	85.993	0.
37	526.0	892.8	1461.8	2790.	1.4818	0.780	18.841	55.6
38	0.	0.	0.	1992.	0.	0.	0.	105.7
39	2391.0	0.	1462.3	6256891.	0.3233	0.	85.993	0.
40	1921.1	939.1	1437.9	6200898.	0.3870	146.457	70.455	0.
41	1084.2	0.	1386.0	5609495.	0.6294	554.902	41.504	858.7
42	126.8	690.0	1373.1	14121.	5.3228	0.779	4.882	0.0
43	17.1	682.6	1375.2	4281.	39.7595	0.	0.655	1001.2
45	0.	0.	0.	38046.	0.	0.	0.	0.
46	125.4	602.4	1329.1	4753.	4.9475	0.703	5.035	375.1
47	17.0	582.4	1326.6	3454.	36.5003	0.	0.682	806.4
48	0.	0.	0.	5647541.	0.	0.	0.	0.
49	570.6	623.9	1308.1	5638727.	1.0334	480.831	23.498	0.
50	570.6	623.9	1308.1	5087786.	0.	0.	0.	0.
51	515.3	1004.7	1522.4	5108523.	1.6542	0.	17.654	0.

IP14_002534

TL	P	T	H	Q	SV	SP	PV	TR
52	237.7	0.	1421.6	4866879.	3.0876	396.904	8.774	780.0
53	234.9	805.7	1427.0	241643.	3.1492	395.523	8.637	0.
54	120.1	625.5	1341.0	4861659.	5.2938	0.	4.762	0.
55	125.0	628.9	1342.4	457355.	5.0979	344.346	0.	0.
56	120.1	625.5	1341.0	4404304.	5.2938	341.303	0.	0.
57	17.0	635.5	1352.3	1905.	38.4006	0.	0.664	1096.1
58	17.0	645.7	1357.2	2103.	38.7611	0.	0.661	4990.3
59	120.1	625.5	1341.0	4404304.	5.2938	0.	4.762	0.
60	58.7	521.0	1293.6	144868.	9.8324	291.284	2.443	0.
61	59.7	0.	1276.0	4259436.	9.2882	292.221	2.535	1187.7
62	37.7	417.0	1245.0	296734.	13.6846	263.693	1.660	0.
63	38.3	0.	1236.9	3962702.	13.1814	264.722	1.705	1149.6
64	11.7	233.0	1161.6	161076.	35.0104	200.560	0.577	0.
65	11.9	0.	1149.2	3801626.	33.0121	201.683	0.600	1053.4
66	16.6	633.0	1351.1	9233.	39.1454	0.	0.	0.
67	118.3	343.1	1191.9	0.	3.7967	0.	0.	0.
68	2.1	480.0	1279.1	0.	264.2691	0.	0.	0.
69	5.0	654.1	1362.0	1533.	131.7884	0.	0.	0.
70	5.0	654.1	1362.0	4502.	131.7884	0.	0.	0.
71	0.	0.	1462.3	0.	0.	0.	0.	0.
72	0.	0.	0.	452.	0.	0.	0.	0.
73	0.	0.	0.	-21022.	0.	0.	0.	0.
75	0.	0.	0.	5595.	0.	0.	0.	0.
76	0.	0.	0.	1333128.	0.	0.	0.	0.
79	1071.0	799.8	1386.0	572394.	0.6373	552.971	40.996	0.
80	570.6	623.9	1308.1	550942.	0.	0.	0.	0.
81	16.6	633.0	1351.1	0.	39.1454	0.	0.	0.
82	0.	0.	0.	5087786.	0.	0.	0.	0.
83	120.2	341.4	1190.4	382.	0.	0.	0.	0.
84	525.8	1005.9	1522.8	5090575.	1.6210	7.851	18.010	807.1
86	0.	0.	0.	107248.	0.	0.	0.	0.
87	0.	0.	0.	5076.	0.	0.	0.	0.
88	0.	0.	0.	4502.	0.	0.	0.	0.
90	200.0	197.1	165.6	0.	0.0166	0.	0.	0.
91	200.0	189.6	158.1	90920.	0.0166	0.	0.	0.
92	0.	0.	0.	215900.	0.	0.	0.	0.
95	1.3	109.8	1019.6	3622824.	243.6354	1029.579	2.581	735.0
99	0.	0.	0.	6671.	0.	0.	0.	0.
100	0.	0.	0.	606.	0.	0.	0.	1834.0
104	2781.0	550.6	547.2	6274313.	0.0212	1.028	0.	2781.0
106	5.0	0.	1093.9	178802.	71.2065	161.982	0.264	0.
107	5.1	0.	1096.4	3622824.	69.4409	0.	0.271	1104.9
108	1.3	109.8	1029.6	3622824.	266.8192	1029.579	2.581	-21022.0
111	120.2	340.7	312.0	6541787.	0.0179	0.	0.691	0.
112	0.	0.	1437.9	55993.	0.	0.	0.	0.
113	0.	0.	0.	6181889.	0.	0.	0.115E 19	0.
114	438.0	116.3	85.4	14791.	0.0162	0.624	0.	438.0
115	438.0	116.3	85.4	8897.	0.0162	0.624	0.	438.0
116	438.0	116.3	85.4	28082.	0.0162	0.623	0.	438.0
117	438.0	116.3	85.4	13206.	0.0162	0.660	0.	438.0
118	438.0	116.3	85.4	21399.	0.0162	0.660	0.	438.0
119	438.0	116.3	85.4	20873.	0.0162	0.660	0.	438.0
120	0.	0.	0.	4782.	0.	0.	0.	0.
122	0.	0.	0.	4976974.	0.	0.	0.	0.
123	4.8	125.3	93.3	785982.	0.0162	0.	9.000	0.
125	534.8	818.0	1421.5	17947.	1.3658	0.628	0.	521.0
130	0.	0.	0.	254157.	0.	0.	0.	0.
131	120.0	625.0	1340.8	124308.	5.2939	1.019	0.	120.0
132	120.0	625.0	1340.8	129849.	5.2939	1.019	0.	120.0
133	0.	0.	0.	253550.	0.	0.	0.	0.
135	200.0	197.1	165.6	4864650.	0.0166	0.	0.	0.

IP14_002535

TEST CYCLE HEAT BALANCE

VALVE POINT VWO — 02/2/89 — TEST POINT 04
INTERMOUNTAIN PWR PROJECT — UNIT #2
820000. KW — TC6F-30 IN LSB — TURBINE NO 270T151
2400. PSIG — 1000./ 1000. F — 2.300 IN HG ABS

CALCULATED USING ASME STEAM TABLES

COMBINED TURBINE-CYCLE PERFORMANCE

	TEST CONDITIONS	RATED CONDITIONS
TOTAL LOAD	881810.	880852.
HEAT RATE	7682.6	7691.0
THROTTLE FLOW	6226931.	6280399.

TURBINE THERMAL PERFORMANCE

	HIGH PRESS TB		REHEAT TB		
			IP TB		LP TB
	THROTTLE	COLD RHT	INLET	EXH	EXH
PRESS	2388.80	570.30	525.50	120.50	2.752
TEMP	996.60	619.70	1003.45	624.60	112.03
ENTH	1459.00	1305.53	1521.43	1340.55	1016.87
ENTR	1.5324		1.7325	1.7486	
EFF	87.931		91.318		93.935

ABSCISSA PHPX/PT=0.2387 P1STSTG/PT=0.8036 VAN= 690.9

THRU FLOW PERFORMANCE OF CONDENSING SECTION SHAFT NO 1

	TOTAL TB ENERGY BALANCE		LP TB ENERGY BALANCE	
	RHT TB	LP TB	RHT TB	LP TB
AE	537.14	347.04		
H ELEP	1016.87		1016.87	
H UEEP	1025.55		1025.55	
EFF ELEP	93.93	93.27	93.93	93.27
EFF UEEP	92.32	90.77	92.32	90.77
VAN	690.90		690.90	

IP14_002536

T G L PERFORMANCE OF CONDENSING SECTION SHAFT NO 1

	TOTAL TB ENERGY BALANCE		LP TB ENERGY BALANCE	
	RHT TB	LP TB	RHT TB	LP TB
H ELEP	1018.73		1018.73	
H UEEP	1027.49		1027.49	
EFF ELEP	93.59	92.73	93.59	92.73
EFF UEEP	91.96	90.21	91.96	90.21
VAN	692.27		692.27	

TL	PRESS	TEMP	ENTH	FLOW

STAGE FLOW FUNCTION

STG NO	SHELL PRESS	ONE VEL HD	PCT DELTA P	FLANGE PRESS	NOZ AREA	Q/AP H FLG	QFS	Q/AP H SHL
1	1919.60	0.	0.	0.	86.6	0.	6166084.	1008.5
4	1083.13	4.105	1.19	1070.20	157.4	857.8	5579653.	852.6
RH 1	525.50	0.	0.	0.	350.2	0.	5062662.	802.6
8	514.99	0.	0.	0.	350.2	0.	5080608.	821.7
11	238.39	0.842	1.13	235.70	711.2	780.8	4841687.	773.3
15	120.50	0.	0.	0.	807.6	0.	4380124.	1134.2
15	59.87	0.336	1.63	58.90	1414.8	1211.1	4235723.	1176.8
16	38.61	0.212	1.59	38.00	2021.4	1156.4	3942253.	1135.3
18	11.86	0.068	1.67	11.66	6018.0	1082.0	3786608.	1049.6
19	5.07	0.034	1.94	4.97	12096.0	1125.8	3632389.	1114.8

IP14_002537

TL	PRESS	TEMP	ENTH	FLOW		

F E E D W A T E R C Y C L E

					HEATER	8
4 FW IN	2778.80	479.30	464.14	6239827.8	CLOSED	
2 EXTR	1067.30	792.90	1381.96	567509.3	TD =	2.2
3 DRAIN	1067.30	487.50	473.15	567509.3	DC =	8.2
					HEATER	7
7 FW IN	2778.80	396.10	374.07	6239827.8	CLOSED	
5 EXTR	555.60	621.10	1307.59	549125.5	TD =	-1.3
6 DRAIN	555.60	404.40	380.19	1116634.8	DC =	8.3
3 ENTRY	1067.30	487.50	473.15	567509.3		
					HEATER	6
10 FW IN	2870.90	346.30	322.32	6239827.8	CLOSED	
8 EXTR	232.20	803.60	1426.01	238921.1	TD =	-1.6
9 DRAIN	232.20	354.20	326.32	1355555.9	DC =	7.9
6 ENTRY	555.60	404.40	380.19	1116634.8		
					PUMP	
11 FW IN	0.	0.	0.	6200578.3		
86 SEAL INJ	0.	0.	0.	107151.5		
30 SEAL RET	0.	0.	0.	65430.0		
32 LEAKAGE	0.	0.	0.	2472.0		
24 EXTR	1500.00	125.50	97.26	0.		
35 FW OUT	2870.90	346.30	322.32	6239827.8		
					HEATER	5
13 FW IN	140.00	293.00	262.66	4932985.9	OPEN	
12 EXTR	120.60	624.60	1340.54	220822.4	STD =	734.0
111 DRAIN	120.60	341.10	312.41	6508248.3	SC =	0.5
9 ENTRY	232.20	354.20	326.32	1355555.9		
					HEATER	4
17 FW IN	140.00	262.80	231.82	4932985.9	CLOSED	
15 EXTR	57.90	520.30	1293.33	144400.6	TD =	-2.6
16 DRAIN	57.90	270.70	239.70	144400.6	DC =	7.9
					HEATER	3
20 FW IN	140.00	198.00	166.37	4932985.9	CLOSED	
18 EXTR	36.92	416.30	1244.76	293470.2	TD =	-0.4
19 DRAIN	36.92	207.80	175.99	437870.8	DC =	9.8
16 ENTRY	57.90	270.70	239.70	144400.6		
					HEATER	2
23 FW IN	200.00	161.70	130.13	4839435.9	CLOSED	
21 EXTR	11.05	233.70	1162.17	155644.8	TD =	-0.1
22 DRAIN	11.05	169.20	137.18	593515.6	DC =	7.5
19 ENTRY	36.92	207.80	175.99	437870.8		

IP14_002538

TL		PRESS	TEMP	ENTH	FLOW	
						STM SEAL REG
88	FLOW TO	0.	0.	0.	4491.8	CALCULATED
70	TDV	5.03	654.10	1361.97	4491.8	TO HEATER
68	TDV	2.12	480.00	1279.06	0.	TO CONDENSER
	NOT CODED FOR MU		MEAS TOTAL FLOW =		0.	
						HEATER 1
26	FW IN	230.00	124.10	92.64	4839435.9	CLOSED
25	EXTR	4.83	0.	1093.42	154219.0	TD = -0.9
123	DRAIN	4.83	131.40	99.36	752226.3	DC = 7.3
22	ENTRY	11.05	169.20	137.18	593515.6	
70	ENTRY	5.03	654.10	1361.97	4491.8	
						PUMP
33	FW IN	0.	0.	0.	4951663.4	
87	LEAKAGE	0.	0.	0.	5076.0	
27	FW OUT	0.	0.	0.	4946587.4	
						FW TO BOILER
1	FW IN	2778.80	550.30	546.79	6239827.8	S+L = -12897.

T U R B I N E E X P A N S I O N

						MAIN STEAM LINE
71	EXIT	0.	0.	1459.00	0.	
36	THROTTLE	2388.80	996.60	1459.00	6226930.8	
						VALVE STEM LKG
						SQRT P/V = 86.144
37	LO NO 1	525.70	887.19	1458.75	2795.3	C = 55.461
						SQRT P/V = 18.874
38	LO NO 2	0.	0.	0.	1982.3	C = 105.032
						EXP TO STG 1
40	SHELL	1919.60	933.89	1434.51	6166083.6	
112	EXTR	0.	0.	1434.51	56069.5	

IP14_002539

TL	PRESS	TEMP	ENTH	FLOW	
					PACKING NO 2
					SQRT P/V =.115E 19
42 LO NO 1	125.35	690.00	1373.23	14033.7	C = 0.000
					SQRT P/V = 4.824
43 LO NO 2	17.08	682.60	1375.18	4281.1	C = 1013.261
					SQRT P/V = 0.655
100 LO NO 3	0.	0.	0.	606.4	C = 1834.023
					EXP TO STG 4
41 SHELL	1083.13	0.	1383.05	5579653.1	
79 EXTR	1070.20	794.90	1383.05	567509.3	
					PACKING NO 1
					SQRT P/V = 23.550
46 LO NO 1	123.95	602.40	1329.18	4723.5	C = 373.001
					SQRT P/V = 4.975
47 LO NO 2	16.96	582.40	1326.61	3454.4	C = 816.299
					SQRT P/V = 0.682
100 LO NO 3	0.	0.	0.	606.4	C = 1834.023
					EXPAND TO EXHAUST
49 EXH	570.30	619.70	1305.53	5608992.0	
80 EXTR	570.30	619.70	1305.53	549125.5	
50 TO RHT	570.30	619.70	1305.53	5059866.5	
					REHEATER 1
BEFORE LO	0.08	0.	1521.82	0.	
37 ENTRY					
84 AFTER LO	525.50	1004.10	1521.79	5062661.8	PCTDP = 7.856
					EXPAND TO BOWL
51 ENTRY	514.99	1002.88	1521.43	5080608.1	
125 ENTRY	534.80	818.10	1421.60	17946.4	
					EXP TO STG 11
52 SHELL	238.39	0.	1418.74	4841687.0	
53 EXTR	235.70	804.80	1426.49	238921.1	

A04-5

TL	PRESS	TEMP	ENTH	FLOW	
				PACKING NO	3
				SQRT P/V =	4.782
57 LO NO 1	16.95	635.50	1352.26	1904.7 C =	1091.668
				SQRT P/V =	0.664
58 LO NO 2	16.95	645.70	1357.21	2102.6 C =	4990.290
				SQRT P/V =	0.661
100 LO NO 3	0.	0.	0.	606.4 C =	1834.023
				SQRT P/V =	0.
100 LO NO 4	0.	0.	0.	606.4 C =	1834.023
				EXPAND TO EXHAUST	
56 EXH	120.50	624.67	1340.58	4380123.8	
55 EXTR	123.50	628.00	1342.07	456343.0	
				EXPAND TO BOWL	
59 ENTRY	120.50	624.60	1340.55	4380123.8	
				EXP TO STG	15
61 SHELL	59.87	0.	1271.09	4235723.2	
60 EXTR	58.90	521.00	1293.59	144400.6	
				EXP TO STG	16
63 SHELL	38.61	0.	1232.14	3942253.0	
62 EXTR	38.00	417.00	1244.96	293470.2	
				EXP TO STG	18
65 SHELL	11.86	0.	1143.69	3786608.2	
64 EXTR	11.66	234.00	1162.11	155644.8	
				EXP TO STG	19
107 SHELL	5.07	0.	1090.22	3632389.3	
106 EXTR	4.97	0.	1093.42	154219.0	
				CONDENSER	
				SHAFT	1
108 TB EXH	1.35	112.03	1025.5518	3632389.3 LEVL =-21561.0	
76 ENTRY	0.	0.	0.	1297713.8	
122 DRAIN	0.	0.	0.	4951664.1	
				GENERATOR	1
				SHAFT	1

MEASURED LOAD = 881810.0 PF = 0.990 H2 = 62.10
SHAFT 1 KW = 893865.5 FL =4353.0 GL = 7702.5

A04-6

IP14_002541

TEST CYCLE HEAT BALANCE

P E R F O R M A N C E

TRUNKLINE OUTPUT

TL	P	T	H	Q	SV	SP	PV	TR
1	2778.8	550.3	546.8	6239828.	0.0212	0.	0.	-12897.0
2	1067.3	792.9	1382.0	567509.	0.6347	552.545	2.245	240.4
3	1067.3	487.5	473.1	567509.	0.0201	0.	8.200	0.
4	2778.8	479.3	464.1	6239828.	0.	0.	0.	0.
5	555.6	621.1	1307.6	549126.	1.0603	478.009	-1.291	143.1
6	555.6	404.4	380.2	1116635.	0.0187	0.	8.300	0.
7	2778.8	396.1	374.1	6239828.	0.	0.	0.	0.
8	232.2	803.6	1426.0	238921.	3.1808	394.521	-1.579	409.1
9	232.2	354.2	326.3	1355556.	0.0180	0.	7.900	0.
10	2870.9	346.3	322.3	6239828.	0.0177	0.	0.	0.
11	0.	0.	0.	6200578.	0.	0.	0.	0.
12	120.6	624.6	1340.5	220822.	5.2650	341.641	734.000	283.0
13	140.0	293.0	262.7	4932986.	0.0174	0.	0.	0.
15	57.9	520.3	1293.3	144401.	9.9625	290.393	-2.607	229.9
16	57.9	270.7	239.7	144401.	0.0172	0.	7.900	0.
17	140.0	262.8	231.8	4932986.	0.	0.	0.	0.
18	36.9	416.3	1244.8	293470.	13.9656	262.447	-0.353	153.9
19	36.9	207.8	176.0	437871.	0.0167	0.	9.800	0.
20	140.0	198.0	166.4	4932986.	0.	0.	0.	0.
21	11.0	233.7	1162.2	155645.	37.0033	197.967	-0.133	35.7
22	11.0	169.2	137.2	593516.	0.0164	0.	7.500	0.
23	200.0	161.7	130.1	4839436.	0.	0.	0.	0.
24	1500.0	125.5	97.3	0.	0.0162	0.	0.	0.
25	4.8	0.	1093.4	154219.	0.	160.778	-0.922	-160.8
26	230.0	124.1	92.6	4839436.	0.0162	0.	0.	0.
27	0.	0.	0.	4946587.	0.	0.	0.	0.
28	0.	0.	0.	18500.	0.	0.	0.	0.
29	0.	0.	0.	46930.	0.	0.	0.	0.
30	0.	0.	0.	65430.	0.	0.	0.	0.
31	2871.0	315.2	290.4	0.	0.0174	0.	0.	0.
32	0.	0.	0.	2472.	0.	0.	0.	0.
33	0.	0.	0.	4951663.	0.	0.	0.	0.
34	0.	0.	0.	-12897.	0.	0.	0.	0.
35	2870.9	346.3	322.3	6239828.	0.0177	0.	0.	0.
36	2388.8	996.6	1459.0	6226931.	0.3219	1459.002	86.144	0.
37	525.7	887.2	1458.8	2795.	1.4758	0.780	18.874	55.5
38	0.	0.	0.	1982.	0.	0.	0.	105.0
39	2388.8	0.	1459.0	6222153.	0.3219	0.	86.144	0.
40	1919.6	933.9	1434.5	6166084.	0.3851	145.613	70.598	0.
41	1083.1	0.	1383.0	5579653.	0.6266	554.810	41.576	852.6
42	125.3	690.0	1373.2	14034.	5.3874	0.779	4.824	0.0
43	17.1	682.6	1375.2	4281.	39.7595	0.	0.655	1013.3
45	0.	0.	0.	38123.	0.	0.	0.	0.
46	123.9	602.4	1329.2	4724.	5.0086	0.703	4.975	373.0
47	17.0	582.4	1326.6	3454.	36.5003	0.	0.682	816.3
48	0.	0.	0.	5617776.	0.	0.	0.	0.
49	570.3	619.7	1305.5	5608992.	1.0283	480.775	23.550	0.
50	570.3	619.7	1305.5	5059867.	0.	0.	0.	0.
51	515.0	1002.9	1521.4	5080608.	1.6529	0.	17.655	0.

IP14_002542

TL	P	T	H	Q	SV	SP	PV	TR
52	238.4	0.	1418.7	4841687.	3.0761	397.200	8.803	773.3
53	235.7	804.8	1426.5	238921.	3.1359	395.818	8.670	0.
54	120.5	624.7	1340.6	4836467.	5.2698	0.	4.782	0.
55	123.5	628.0	1342.1	456343.	5.1564	343.433	0.	0.
56	120.5	624.7	1340.6	4380124.	5.2698	341.578	0.	0.
57	17.0	635.5	1352.3	1905.	38.4006	0.	0.664	1091.7
58	17.0	645.7	1357.2	2103.	38.7611	0.	0.661	4990.3
59	120.5	624.6	1340.5	4380124.	5.2695	0.	4.782	0.
60	58.9	521.0	1293.6	144401.	9.7986	291.505	2.452	0.
61	59.9	0.	1271.1	4235723.	9.2506	292.443	2.544	1176.8
62	38.0	417.0	1245.0	293470.	13.5753	264.167	1.673	0.
63	38.6	0.	1232.1	3942253.	13.0860	265.193	1.718	1135.3
64	11.7	234.0	1162.1	155645.	35.0635	200.560	0.577	0.
65	11.9	0.	1143.7	3786608.	32.9939	201.683	0.599	1049.6
66	16.6	633.0	1351.1	9233.	39.1454	0.	0.	0.
67	118.3	343.1	1191.9	0.	3.7967	0.	0.	0.
68	2.1	480.0	1279.1	0.	264.2691	0.	0.	0.
69	5.0	654.1	1362.0	1533.	131.7884	0.	0.	0.
70	5.0	654.1	1362.0	4492.	131.7884	0.	0.	0.
71	0.	0.	1459.0	0.	0.	0.	0.	0.
72	0.	0.	0.	734.	0.	0.	0.	0.
73	0.	0.	0.	-21561.	0.	0.	0.	0.
75	0.	0.	0.	5595.	0.	0.	0.	0.
76	0.	0.	0.	1297714.	0.	0.	0.	0.
79	1070.2	794.9	1383.0	567509.	0.6343	552.879	41.077	0.
80	570.3	619.7	1305.5	549126.	0.	0.	0.	0.
81	16.6	633.0	1351.1	0.	39.1454	0.	0.	0.
82	0.	0.	0.	5059867.	0.	0.	0.	0.
83	120.6	341.6	1190.5	382.	0.	0.	0.	0.
84	525.5	1004.1	1521.8	5062662.	1.6198	7.856	18.012	802.6
86	0.	0.	0.	107152.	0.	0.	0.	0.
87	0.	0.	0.	5076.	0.	0.	0.	0.
88	0.	0.	0.	4492.	0.	0.	0.	0.
90	200.0	198.1	166.6	0.	0.0166	0.	0.	0.
91	200.0	191.2	159.7	93550.	0.0166	0.	0.	0.
92	0.	0.	0.	214120.	0.	0.	0.	0.
95	1.4	112.0	1016.9	3632389.	228.4284	1025.552	2.752	690.9
99	0.	0.	0.	6671.	0.	0.	0.	0.
100	0.	0.	0.	606.	0.	0.	0.	1834.0
104	2778.0	550.3	546.8	6239828.	0.0212	1.028	0.	2778.0
106	5.0	0.	1093.4	154219.	71.1722	161.982	0.264	0.
107	5.1	0.	1090.2	3632389.	69.8514	0.	0.269	1114.8
108	1.4	112.0	1025.6	3632389.	251.1845	1025.552	2.752	-21561.0
111	120.6	341.1	312.4	6508248.	0.0179	0.	0.541	0.
112	0.	0.	1434.5	56070.	0.	0.	0.	0.
113	0.	0.	0.	6147162.	0.	0.	0.115E 19	0.
114	438.0	124.1	93.2	14778.	0.0162	0.624	0.	438.0
115	438.0	124.1	93.2	8889.	0.0162	0.624	0.	438.0
116	438.0	124.1	93.2	28057.	0.0162	0.623	0.	438.0
117	438.0	124.1	93.2	13194.	0.0162	0.660	0.	438.0
118	438.0	124.1	93.2	21379.	0.0162	0.660	0.	438.0
119	438.0	124.1	93.2	20854.	0.0162	0.660	0.	438.0
120	0.	0.	0.	4778.	0.	0.	0.	0.
122	0.	0.	0.	4951664.	0.	0.	0.	0.
123	4.8	131.4	99.4	752226.	0.0163	0.	7.300	0.
125	534.8	818.1	1421.6	17946.	1.3659	0.628	0.	521.0
130	0.	0.	0.	254278.	0.	0.	0.	0.
131	120.0	624.0	1340.3	124367.	5.2887	1.019	0.	120.0
132	120.0	624.0	1340.3	129911.	5.2887	1.019	0.	120.0
133	0.	0.	0.	253671.	0.	0.	0.	0.
135	200.0	198.1	166.6	4839436.	0.0166	0.	0.	0.

TEST CYCLE HEAT BALANCE

VALVE POINT VWO	02/3/89	TEST POINT	05
INTERMOUNTAIN PWR PROJECT		UNIT #2	
820000. KW	TC6F-30 IN LSB	TURBINE NO	270T151
2400. PSIG	1000./ 1000. F	2.300 IN HG ABS	

CALCULATED USING ASME STEAM TABLES

COMBINED TURBINE-CYCLE PERFORMANCE

	TEST CONDITIONS	RATED CONDITIONS
TOTAL LOAD	885750.	884783.
HEAT RATE	7713.0	7721.4
THROTTLE FLOW	6285898.	6333988.

TURBINE THERMAL PERFORMANCE

	HIGH PRESS TB		REHEAT TB		
			IP TB		LP TB
	THROTTLE	COLD RHT	INLET	EXH	EXH
PRESS	2391.00	570.70	525.80	120.50	2.521
TEMP	996.70	619.70	1000.36	621.60	108.99
ENTH	1458.99	1305.50	1519.76	1339.04	1016.92
ENTR	1.5323		1.7313	1.7472	
EFF	87.935		91.422	92.953	

ABSCISSA PHPX/PT=0.2387 P1STSTG/PT=0.8038 VAN= 751.2

THRU FLOW PERFORMANCE OF CONDENSING SECTION SHAFT NO 1

	TOTAL TB ENERGY BALANCE		LP TB ENERGY BALANCE	
	RHT TB	LP TB	RHT TB	LP TB
AE	540.97	351.19		
H ELEP	1016.92		1016.92	
H UEEP	1027.33		1027.33	
EFF ELEP	92.95	91.72	92.95	91.72
EFF UEEP	91.03	88.76	91.03	88.76
VAN	751.23		751.23	

A05-1

T G L PERFORMANCE OF CONDENSING SECTION SHAFT NO 1

	TOTAL TB ENERGY BALANCE		LP TB ENERGY BALANCE	
	RHT TB	LP TB	RHT TB	LP TB
H ELEP	1018.84		1018.84	
H UEEP	1029.31		1029.31	
EFF ELEP	92.60	91.18	92.60	91.18
EFF UEEP	90.66	88.19	90.66	88.19
VAN	752.76		752.76	

TL	PRESS	TEMP	ENTH	FLOW

STAGE FLOW FUNCTION

STG NO	SHELL PRESS	ONE VEL HD	PCT DELTA P	FLANGE PRESS	NOZ AREA	Q/AP H FLG	QFS	Q/AP H SHL
1	1921.90	0.	0.	0.	86.6	0.	6225001.	1017.0
4	1084.05	4.111	1.19	1071.10	157.4	866.0	5637926.	860.8
RH 1	525.80	0.	0.	0.	350.2	0.	5113508.	809.3
8	515.28	0.	0.	0.	350.2	0.	5131454.	828.5
11	236.48	0.869	1.18	233.70	711.2	794.0	4889471.	785.6
15	120.50	0.	0.	0.	807.6	0.	4422661.	1143.5
15	60.01	0.347	1.68	59.00	1414.8	1217.5	4275547.	1184.0
16	38.64	0.220	1.65	38.00	2021.4	1164.5	3976214.	1143.0
18	11.87	0.073	1.79	11.66	6018.0	1087.7	3814647.	1054.7
19	5.11	0.048	2.73	4.97	12096.0	1120.6	3630932.	1105.2

A05-2

TL	PRESS	TEMP	ENTH	FLOW		

F E E D W A T E R C Y C L E

					HEATER	8
4 FW IN	2782.00	479.50	464.36	6293004.9	CLOSED	
2 EXTR	1067.90	799.00	1385.69	568154.3	TD =	2.4
3 DRAIN	1067.90	488.30	474.08	568154.3	DC =	8.8
					HEATER	7
7 FW IN	2782.00	395.90	373.86	6293004.9	CLOSED	
5 EXTR	556.10	620.80	1307.36	556598.0	TD =	-1.4
6 DRAIN	556.10	404.30	380.08	1124752.3	DC =	8.4
3 ENTRY	1067.90	488.30	474.08	568154.3		
					HEATER	6
10 FW IN	2886.00	346.00	322.04	6293004.9	CLOSED	
8 EXTR	232.30	800.00	1424.15	241983.2	TD =	-1.3
9 DRAIN	232.30	354.20	326.32	1366735.5	DC =	8.2
6 ENTRY	556.10	404.30	380.08	1124752.3		
					PUMP	
11 FW IN	0.	0.	0.	6253653.4		
86 SEAL INJ	0.	0.	0.	107253.6		
30 SEAL RET	0.	0.	0.	65430.0		
32 LEAKAGE	0.	0.	0.	2472.0		
24 EXTR	1500.00	125.00	96.76	0.		
35 FW OUT	2886.00	346.00	322.04	6293004.9		
					HEATER	5
13 FW IN	140.00	292.50	262.15	5022544.3	OPEN	
12 EXTR	120.90	624.90	1340.67	226051.6	STO =	131.0
111 DRAIN	120.90	340.90	312.20	6614893.4	SC =	0.9
9 ENTRY	232.30	354.20	326.32	1366735.5		
					HEATER	4
17 FW IN	140.00	262.30	231.31	5022544.3	CLOSED	
15 EXTR	57.80	516.80	1291.63	147113.5	TD =	-2.2
16 DRAIN	57.80	269.80	238.78	147113.5	DC =	7.5
					HEATER	3
20 FW IN	140.00	197.40	165.77	5022544.3	CLOSED	
18 EXTR	36.81	414.90	1244.10	299333.2	TD =	-0.0
19 DRAIN	36.81	207.30	175.48	446446.7	DC =	9.9
16 ENTRY	57.80	269.80	238.78	147113.5		
					HEATER	2
23 FW IN	200.00	159.90	128.33	4898324.3	CLOSED	
21 EXTR	11.05	231.30	1161.03	161567.3	TD =	0.7
22 DRAIN	11.05	167.50	135.48	608014.0	DC =	7.6
19 ENTRY	36.81	207.30	175.48	446446.7		

IP14_002546

TL		PRESS	TEMP	ENTH	FLOW	
						STM SEAL REG
88	FLOW TO	0.	0.	0.	4495.4	CALCULATED
70	TDV	5.03	654.10	1361.97	4495.4	TO HEATER
68	TDV	2.12	480.00	1279.06	0.	TO CONDENSER
	NOT CODED FOR MU		MEAS TOTAL FLOW =		0.	
						HEATER 1
26	FW IN	230.00	115.80	84.36	4898324.3	CLOSED
25	EXTR	4.83	0.	1092.67	183714.8	TD = 0.9
123	DRAIN	4.83	124.80	92.77	796224.2	DC = 9.0
22	ENTRY	11.05	167.50	135.48	608014.0	
70	ENTRY	5.03	654.10	1361.97	4495.4	
						PUMP
33	FW IN	0.	0.	0.	5010653.8	
87	LEAKAGE	0.	0.	0.	5076.0	
27	FW OUT	0.	0.	0.	5005577.8	
						FW TO BOILER
1	FW IN	2782.00	550.20	546.67	6293004.9	S+L = -7107.

T U R B I N E E X P A N S I O N

						MAIN STEAM LINE
71	EXIT	0.	0.	1458.99	0.	
36	THROTTLE	2391.00	996.70	1458.99	6285897.9	
						VALVE STEM LKG
						SQRT P/V = 86.224
37	LO NO 1	526.00	887.21	1458.75	2796.1	C = 55.460
						SQRT P/V = 18.885
38	LO NO 2	0.	0.	0.	1985.9	C = 105.162
						EXP TO STG 1
40	SHELL	1921.90	934.05	1434.52	6225001.1	
112	EXTR	0.	0.	1434.52	56114.9	

IP14_002547

TL	PRESS	TEMP	ENTH	FLOW	
				PACKING NO	2
				SQRT P/V =.115E 19	
42 LO NO 1	125.35	690.00	1373.23	14033.7	C = 0.000
				SQRT P/V = 4.824	
43 LO NO 2	17.08	682.60	1375.18	4281.1	C = 1013.261
				SQRT P/V = 0.655	
100 LO NO 3	0.	0.	0.	606.4	C = 1834.023
				EXP TO STG	4
41 SHELL	1084.05	0.	1383.06	5637925.6	
79 EXTR	1071.10	795.00	1383.06	568154.3	
				PACKING NO	1
				SQRT P/V = 23.568	
46 LO NO 1	123.95	602.40	1329.18	4723.5	C = 372.725
				SQRT P/V = 4.975	
47 LO NO 2	16.96	582.40	1326.61	3454.4	C = 816.299
				SQRT P/V = 0.682	
100 LO NO 3	0.	0.	0.	606.4	C = 1834.023
				EXPAND TO EXHAUST	
49 EXH	570.70	619.70	1305.50	5667309.8	
80 EXTR	570.70	619.70	1305.50	556598.0	
50 TO RHT	570.70	619.70	1305.50	5110711.8	
				REHEATER	1
BEFORE LO	0.08	0.	1520.14	0.	
37 ENTRY					
84 AFTER LO	525.80	1001.00	1520.10	5113507.9	PCTDP = 7.868
				EXPAND TO BOWL	
51 ENTRY	515.28	999.79	1519.76	5131454.3	
125 ENTRY	534.80	818.10	1421.60	17946.4	
				EXP TO STG	11
52 SHELL	236.48	0.	1418.55	4889471.0	
53 EXTR	233.70	801.40	1424.81	241983.2	

IP14_002548

TL	PRESS	TEMP	ENTH	FLOW	
					PACKING NO 3
					SQRT P/V = 4.789
57 LO NO 1	16.95	635.50	1352.26	1904.7	C = 1090.020
					SQRT P/V = 0.664
58 LO NO 2	16.95	645.70	1357.21	2102.6	C = 4990.290
					SQRT P/V = 0.661
100 LO NO 3	0.	0.	0.	606.4	C = 1834.023
					SQRT P/V = 0.
100 LO NO 4	0.	0.	0.	606.4	C = 1834.023
					EXPAND TO EXHAUST
56 EXH	120.50	621.60	1339.04	4422660.9	
55 EXTR	123.50	624.90	1340.51	461590.0	
					EXPAND TO BOWL
59 ENTRY	120.50	621.60	1339.04	4422660.9	
					EXP TO STG 15
61 SHELL	60.01	0.	1274.41	4275547.4	
60 EXTR	59.00	517.00	1291.62	147113.5	
					EXP TO STG 16
63 SHELL	38.64	0.	1235.65	3976214.2	
62 EXTR	38.00	414.90	1243.94	299333.2	
					EXP TO STG 18
65 SHELL	11.87	0.	1147.55	3814646.9	
64 EXTR	11.66	232.00	1161.16	161567.3	
					EXP TO STG 19
107 SHELL	5.11	0.	1094.90	3630932.1	
106 EXTR	4.97	0.	1092.67	183714.8	
					CONDENSER
					SHAFT 1
108 TB EXH	1.24	108.99	1027.3322	3630932.1	LEVL =-15093.0
76 ENTRY	0.	0.	0.	1364629.4	
122 DRAIN	0.	0.	0.	5010654.5	
					GENERATOR 1
					SHAFT 1

MEASURED LOAD = 885750.0 PF = 0.990 H2 = 62.10
SHAFT 1 KW = 897845.7 FL =4353.0 GL = 7742.7

A05-6

IP14_002549

TEST CYCLE HEAT BALANCE

P E R F O R M A N C E

TRUNKLINE OUTPUT

TL	P	T	H	Q	SV	SP	PV	TR
1	2782.0	550.2	546.7	6293005.	0.0212	0.	0.	-7107.0
2	1067.9	799.0	1385.7	568154.	0.6387	552.614	2.414	246.4
3	1067.9	488.3	474.1	568154.	0.0201	0.	8.800	0.
4	2782.0	479.5	464.4	6293005.	0.	0.	0.	0.
5	556.1	620.8	1307.4	556598.	1.0589	478.104	-1.396	142.7
6	556.1	404.3	380.1	1124752.	0.0187	0.	8.400	0.
7	2782.0	395.9	373.9	6293005.	0.	0.	0.	0.
8	232.3	800.0	1424.2	241983.	3.1697	394.558	-1.342	405.4
9	232.3	354.2	326.3	1366736.	0.0180	0.	8.200	0.
10	2886.0	346.0	322.0	6293005.	0.0177	0.	0.	0.
11	0.	0.	0.	6253653.	0.	0.	0.	0.
12	120.9	624.9	1340.7	226052.	5.2533	341.828	131.000	283.1
13	140.0	292.5	262.1	5022544.	0.0174	0.	0.	0.
15	57.8	516.8	1291.6	147114.	9.9426	290.281	-2.219	226.5
16	57.8	269.8	238.8	147114.	0.0172	0.	7.500	0.
17	140.0	262.3	231.3	5022544.	0.	0.	0.	0.
18	36.8	414.9	1244.1	299333.	13.9843	262.269	-0.031	152.6
19	36.8	207.3	175.5	446447.	0.0167	0.	9.900	0.
20	140.0	197.4	165.8	5022544.	0.	0.	0.	0.
21	11.0	231.3	1161.0	161567.	36.8690	197.967	0.667	33.3
22	11.0	167.5	135.5	608014.	0.0164	0.	7.600	0.
23	200.0	159.9	128.3	4898324.	0.	0.	0.	0.
24	1500.0	125.0	96.8	0.	0.0162	0.	0.	0.
25	4.8	0.	1092.7	183715.	0.	160.778	0.878	-160.8
26	230.0	115.8	84.4	4898324.	0.0162	0.	0.	0.
27	0.	0.	0.	5005578.	0.	0.	0.	0.
28	0.	0.	0.	18500.	0.	0.	0.	0.
29	0.	0.	0.	46930.	0.	0.	0.	0.
30	0.	0.	0.	65430.	0.	0.	0.	0.
31	2887.0	315.0	290.3	0.	0.0174	0.	0.	0.
32	0.	0.	0.	2472.	0.	0.	0.	0.
33	0.	0.	0.	5010654.	0.	0.	0.	0.
34	0.	0.	0.	-7107.	0.	0.	0.	0.
35	2886.0	346.0	322.0	6293005.	0.0177	0.	0.	0.
36	2391.0	996.7	1459.0	6285898.	0.3216	1458.994	86.224	0.
37	526.0	887.2	1458.8	2796.	1.4749	0.780	18.885	55.5
38	0.	0.	0.	1986.	0.	0.	0.	105.2
39	2391.0	0.	1459.0	6281116.	0.3216	0.	86.224	0.
40	1921.9	934.0	1434.5	6225001.	0.3847	145.668	70.682	0.
41	1084.0	0.	1383.1	5637926.	0.6261	554.914	41.611	860.8
42	125.3	690.0	1373.2	14034.	5.3874	0.779	4.824	0.0
43	17.1	682.6	1375.2	4281.	39.7595	0.	0.655	1013.3
45	0.	0.	0.	38169.	0.	0.	0.	0.
46	123.9	602.4	1329.2	4724.	5.0086	0.703	4.975	372.7
47	17.0	582.4	1326.6	3454.	36.5003	0.	0.682	816.3
48	0.	0.	0.	5676094.	0.	0.	0.	0.
49	570.7	619.7	1305.5	5667310.	1.0275	480.850	23.568	0.
50	570.7	619.7	1305.5	5110712.	0.	0.	0.	0.
51	515.3	999.8	1519.8	5131454.	1.6481	0.	17.686	0.

IP14_002550

TL	P	T	H	Q	SV	SP	PV	TR
52	236.5	0.	1418.6	4889471.	3.0882	396.458	8.751	785.6
53	233.7	801.4	1424.8	241983.	3.1541	395.079	8.608	0.
54	120.5	621.6	1339.0	4884251.	5.2539	0.	4.789	0.
55	123.5	624.9	1340.5	461590.	5.1407	343.433	0.	0.
56	120.5	621.6	1339.0	4422661.	5.2539	341.578	0.	0.
57	17.0	635.5	1352.3	1905.	38.4006	0.	0.664	1090.0
58	17.0	645.7	1357.2	2103.	38.7611	0.	0.661	4990.3
59	120.5	621.6	1339.0	4422661.	5.2539	0.	4.789	0.
60	59.0	517.0	1291.6	147114.	9.7400	291.615	2.461	0.
61	60.0	0.	1274.4	4275547.	9.2113	292.554	2.552	1184.0
62	38.0	414.9	1243.9	299333.	13.5410	264.167	1.675	0.
63	38.6	0.	1235.6	3976214.	13.0462	265.193	1.721	1143.0
64	11.7	232.0	1161.2	161567.	34.9573	200.560	0.578	0.
65	11.9	0.	1147.6	3814647.	32.8679	201.683	0.601	1054.7
66	16.6	633.0	1351.1	9233.	39.1454	0.	0.	0.
67	118.3	343.1	1191.9	0.	3.7967	0.	0.	0.
68	2.1	480.0	1279.1	0.	264.2691	0.	0.	0.
69	5.0	654.1	1362.0	1533.	131.7884	0.	0.	0.
70	5.0	654.1	1362.0	4495.	131.7884	0.	0.	0.
71	0.	0.	1459.0	0.	0.	0.	0.	0.
72	0.	0.	0.	131.	0.	0.	0.	0.
73	0.	0.	0.	-15093.	0.	0.	0.	0.
75	0.	0.	0.	5595.	0.	0.	0.	0.
76	0.	0.	0.	1364629.	0.	0.	0.	0.
79	1071.1	795.0	1383.1	568154.	0.6337	552.983	41.111	0.
80	570.7	619.7	1305.5	556598.	0.	0.	0.	0.
81	16.6	633.0	1351.1	0.	39.1454	0.	0.	0.
82	0.	0.	0.	5110712.	0.	0.	0.	0.
83	120.9	341.8	1190.5	307.	0.	0.	0.	0.
84	525.8	1001.0	1520.1	5113508.	1.6151	7.868	18.043	809.3
86	0.	0.	0.	107254.	0.	0.	0.	0.
87	0.	0.	0.	5076.	0.	0.	0.	0.
88	0.	0.	0.	4495.	0.	0.	0.	0.
90	200.0	197.3	165.8	0.	0.0166	0.	0.	0.
91	200.0	196.2	164.7	124220.	0.0166	0.	0.	0.
92	0.	0.	0.	237020.	0.	0.	0.	0.
95	1.2	109.0	1016.9	3630932.	248.4754	1027.332	2.521	751.2
99	0.	0.	0.	6671.	0.	0.	0.	0.
100	0.	0.	0.	606.	0.	0.	0.	1834.0
104	2782.0	550.2	546.7	6293005.	0.0212	1.028	0.	2782.0
106	5.0	0.	1092.7	183715.	71.1169	161.982	0.264	0.
107	5.1	0.	1094.9	3630932.	69.2600	0.	0.272	1105.2
108	1.2	109.0	1027.3	3630932.	272.7934	1027.332	2.521	-15093.0
111	120.9	340.9	312.2	6614893.	0.0179	0.	0.928	0.
112	0.	0.	1434.5	56115.	0.	0.	0.	0.
113	0.	0.	0.	6206080.	0.	0.	0.115E 19	0.
114	438.0	115.8	84.9	14792.	0.0162	0.624	0.	438.0
115	438.0	115.8	84.9	8898.	0.0162	0.624	0.	438.0
116	438.0	115.8	84.9	28083.	0.0162	0.623	0.	438.0
117	438.0	115.8	84.9	13207.	0.0162	0.660	0.	438.0
118	438.0	115.8	84.9	21400.	0.0162	0.660	0.	438.0
119	438.0	115.8	84.9	20874.	0.0162	0.660	0.	438.0
120	0.	0.	0.	4782.	0.	0.	0.	0.
122	0.	0.	0.	5010655.	0.	0.	0.	0.
123	4.8	124.8	92.8	796224.	0.0162	0.	9.000	0.
125	534.8	818.1	1421.6	17946.	1.3659	0.628	0.	521.0
130	0.	0.	0.	254296.	0.	0.	0.	0.
131	120.0	624.0	1340.3	124367.	5.2887	1.019	0.	120.0
132	120.0	624.0	1340.3	129928.	5.2887	1.019	0.	120.0
133	0.	0.	0.	253689.	0.	0.	0.	0.
135	200.0	197.3	165.8	4898324.	0.0166	0.	0.	0.

INTERMOUNTAIN POWER SERVICE CORPORATION
PERFORMANCE EVALUATION TEST REPORT
UNIT NO. 2

APPENDIX B

Correction Curves

Dwg. No.	Nomenclature	Page
GEZ 3614	Throttle Pressure Correction	B1
GEZ 3615	Throttle Temperature Correction	B2
GEZ 3617	Reheat Temperature Correction	B3
481 hp 475	Exhaust Pressure Correction	B4
	ALTERNATIVE TEST CORRECTIONS	
*	Final Feedwater Temperature Corrections Top HTR above Reheat Point	B5
*	Final Feedwater Temperature Correction Top HTR at Reheat Point	B6
*	Auxiliary Extraction Correction Extraction After Reheater	B7
*	Auxiliary Extraction from Cold Reheat (Top HTR above Reheat Point)	B8
*	Auxiliary Extraction Correction from Cold Reheat (Top HTR above Reheat Point	B9
*	Main Steam and Reheat Steam Attemperation Correction	B10
*	Condensate Subcooling Correction	B11
*	Condenser Makeup Correction	B12

INITIAL PRESSURE CORRECTION FACTORS

FOR SINGLE REHEAT UNITS

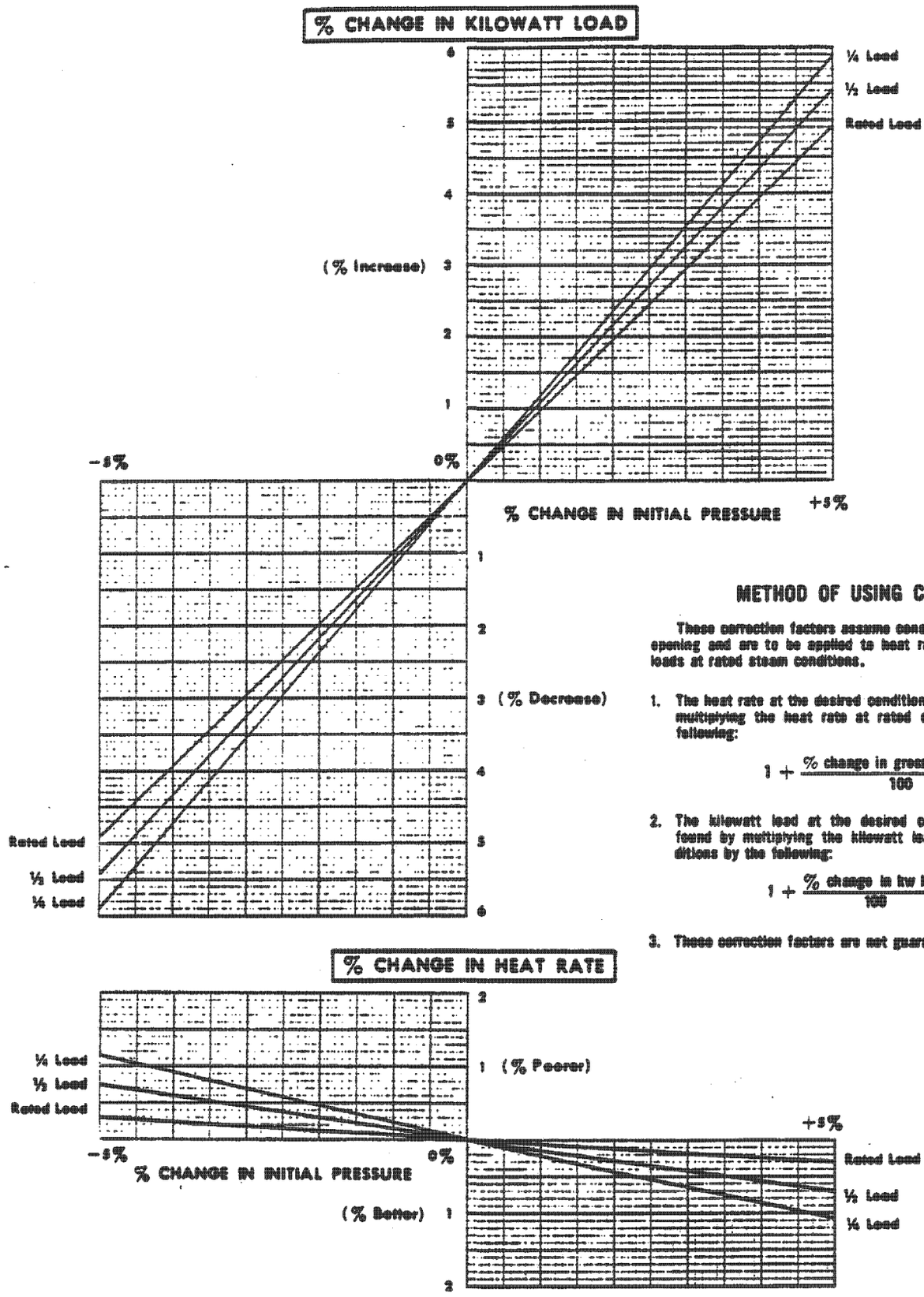

METHOD OF USING CURVES

These correction factors assume constant control valve opening and are to be applied to heat rates and kilowatt loads at rated steam conditions.

1. The heat rate at the desired condition can be found by multiplying the heat rate at rated conditions by the following:

$$1 + \frac{\text{\% change in gross heat rate}}{100}$$

2. The kilowatt load at the desired conditions can be found by multiplying the kilowatt load at rated conditions by the following:

$$1 + \frac{\text{\% change in kw load}}{100}$$

3. These correction factors are not guaranteed.

GEZ-3614

4-81 (2M)

GENERAL ELECTRIC

Fig. B1

IP14_002553

INITIAL TEMPERATURE CORRECTION FACTORS

FOR SINGLE REHEAT – SUBCRITICAL PRESSURE UNITS

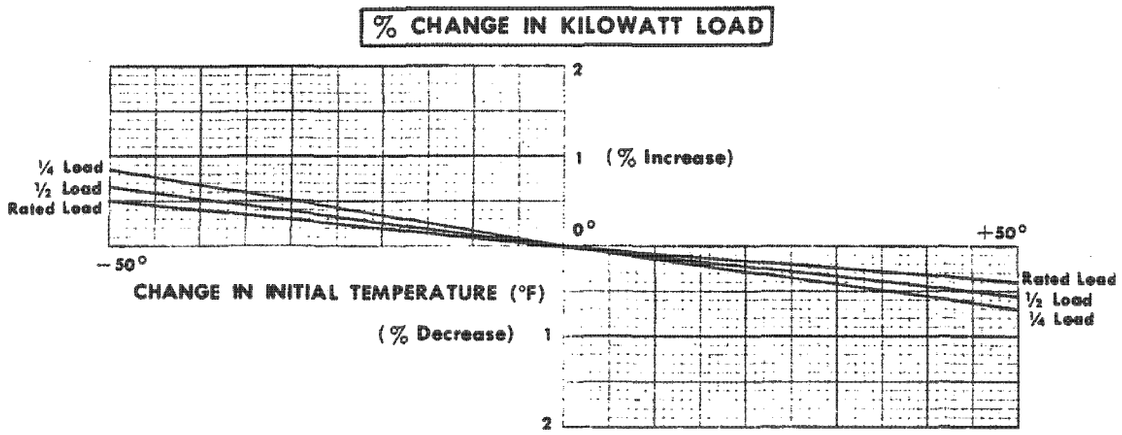

METHOD OF USING CURVES

These correction factors assume constant control valve opening and are to be applied to heat rates and kilowatt loads at rated steam conditions.

1. The heat rate at the desired condition can be found by multiplying the heat rate at rated conditions by the following:

$$1 + \frac{\%\ \text{change in gross heat rate}}{100}$$

2. The kilowatt load at the desired conditions can be found by multiplying the kilowatt load at rated conditions by the following:

$$1 + \frac{\%\ \text{change in kw load}}{100}$$

3. These correction factors are not guaranteed.

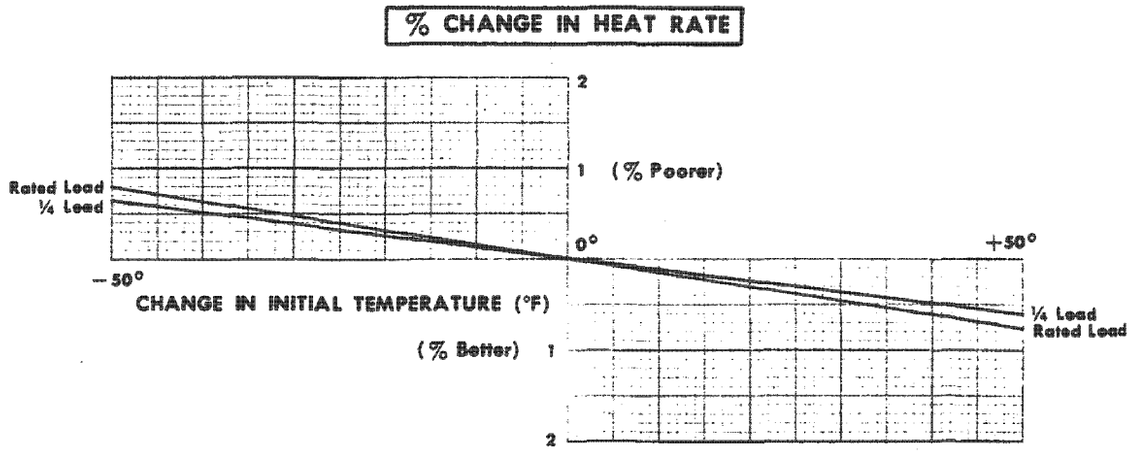

GENERAL ELECTRIC

FIG. B2

IP14_002554

REHEAT TEMPERATURE CORRECTION FACTORS

FOR SINGLE REHEAT UNITS

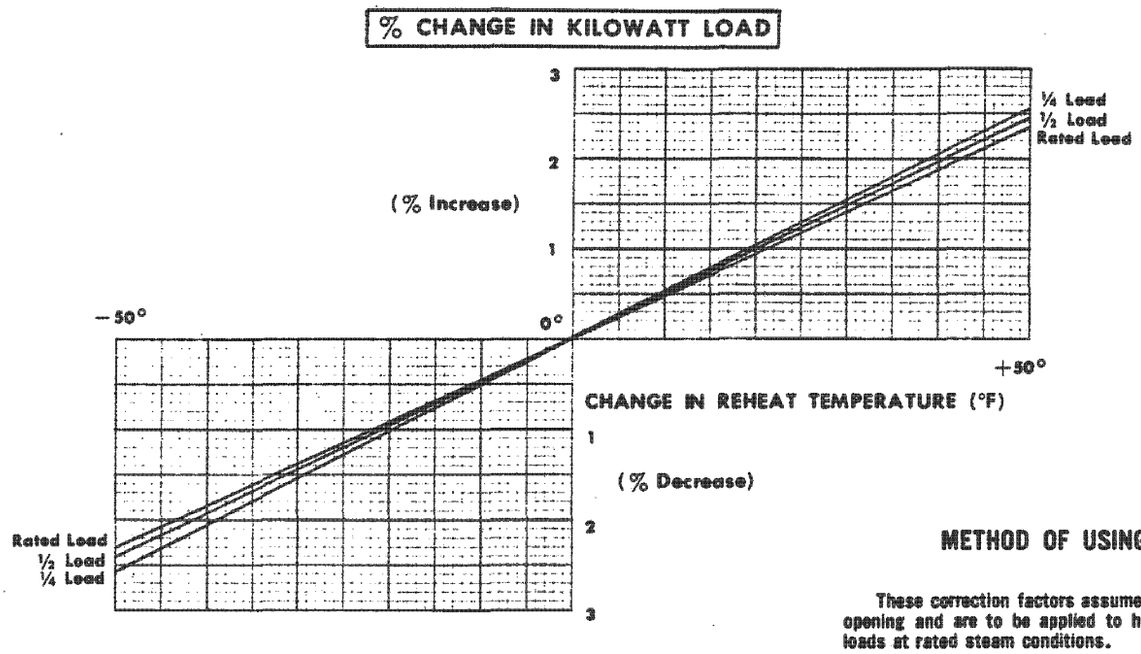

METHOD OF USING CURVES

These correction factors assume constant control valve opening and are to be applied to heat rates and kilowatt loads at rated steam conditions.

1. The heat rate at the desired condition can be found by multiplying the heat rate at rated conditions by the following:

$$1 + \frac{\%\ \text{change in gross heat rate}}{100}$$

2. The kilowatt load at the desired conditions can be found by multiplying the kilowatt load at rated conditions by the following:

$$1 + \frac{\%\ \text{change in kw load}}{100}$$

3. These correction factors are not guaranteed.

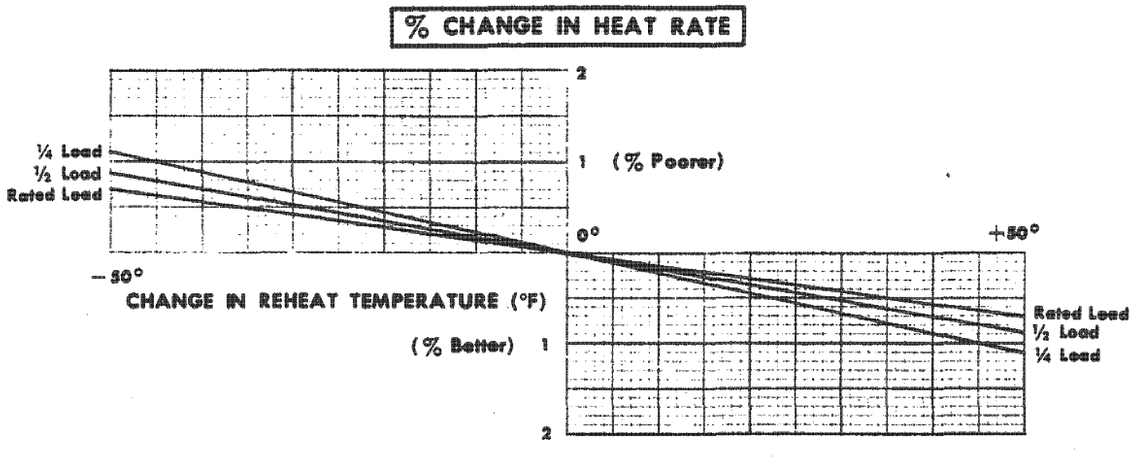

GEZ-3617
2-71 (2M)

GENERAL ELECTRIC

Fig. B3

IP14_002555

EXHAUST PRESSURE CORRECTION FACTORS

820000 KW AT 1.66/ 2.24/ 2.99 IN HG ABS 1.00 PCT MU
TC6F-30.0 IN LSB 3600 RPM
2400 PSIA 1000/1000 T

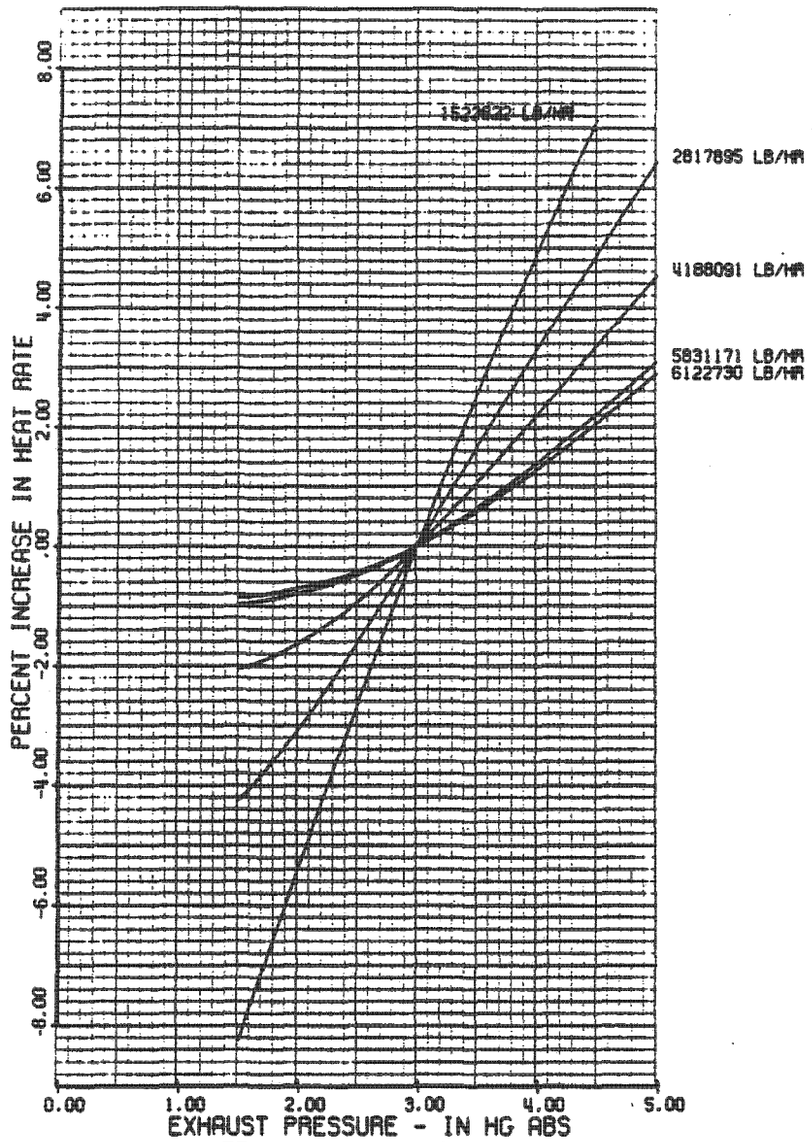

METHOD OF USING CURVE

VALUES NEAR CURVES ARE FLOWS AT 2400 PSIA 1000 T
THESE CORRECTION FACTORS ASSUME CONSTANT CONTROL VALVE OPENING
APPLY CORRECTIONS TO HEAT RATE AND KW LOADS
AT 2.99/ 2.24/ 1.66 IN HG ABS AND 0.0 PCT MU.

THE PERCENT CHANGE IN KW LOAD FOR VARIOUS EXHAUST PRESSURES IS EQUAL TO
(MINUS PCT INCREASE IN HEAT RATE)100/(100 + PCT INCREASE IN HEAT RATE)

THESE CORRECTION FACTORS ARE NOT GUARANTEED

PRESSURES ALONG ABSCISSA ARE PRESSURES IN HOOD C

PRESSURE(IN HG ABS) FOR	HOOD C	HOOD B	HOOD A
	1.50	1.09	.78
	2.00	1.47	1.07
	2.50	1.85	1.36
	3.00	2.24	1.66
	3.50	2.63	1.96
	4.00	3.03	2.27
	4.50	3.42	2.58
	5.00	3.82	2.89

FIG. B4

481 HB 475

GENERAL ELECTRIC COMPANY SCHENECTADY NEW YORK

IP14_002556

GENERAL ELECTRIC COMPAN HENECTADY, N.Y., U.S.A. TROY, OHIO DIVISION
PN-156 (R (E)

Final Feedwater Temperature Correction
Top HTR above Reheat Point

Due to Top Heater Terminal Difference or Extraction Pipe Pressure Drop (Different from Specified Heat Balance) Apply Curves at Constant Control Valve Opening

Refer to B12 for Correction Calculation

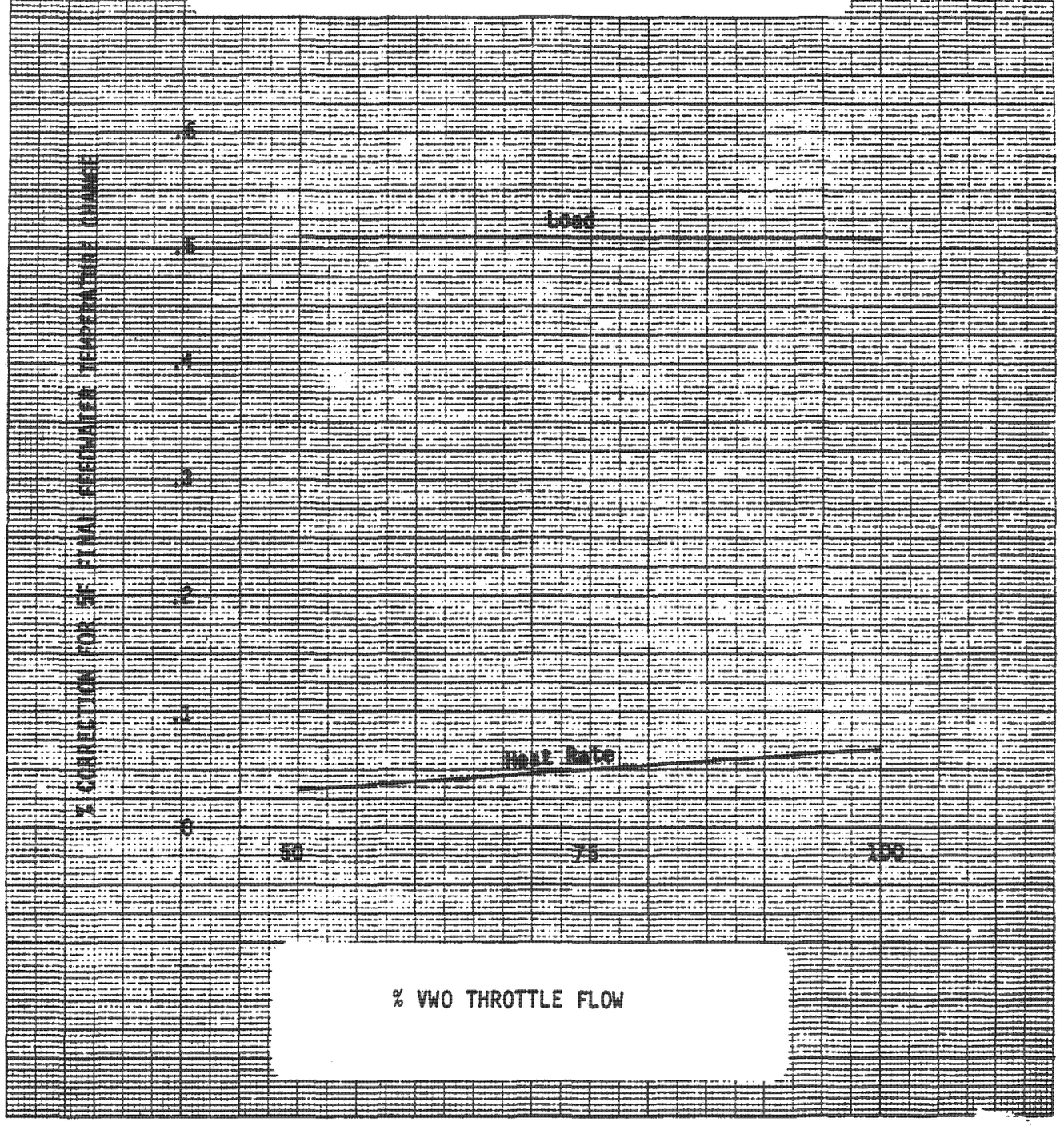

IP14_002557

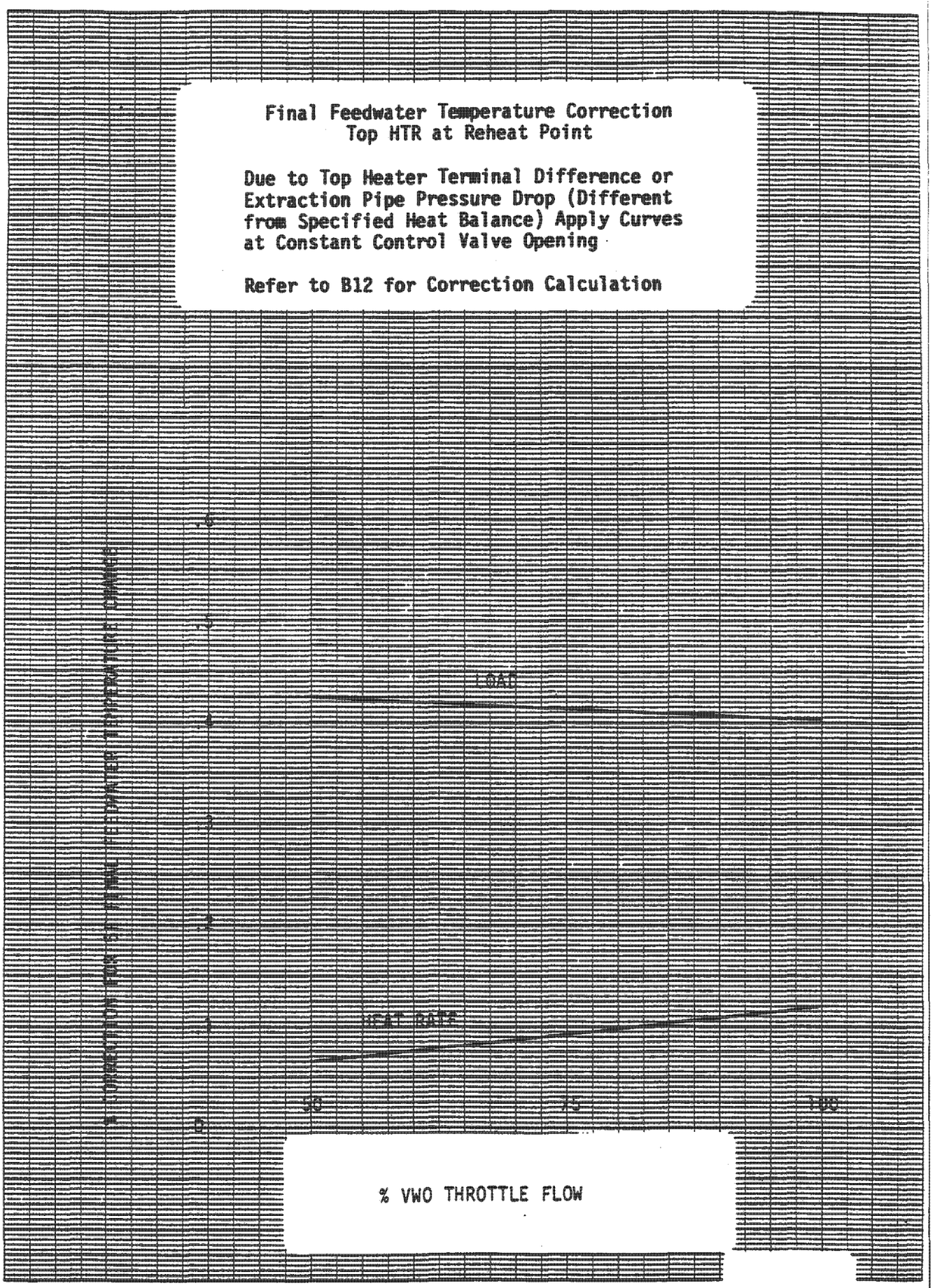

B6

IP14_002558

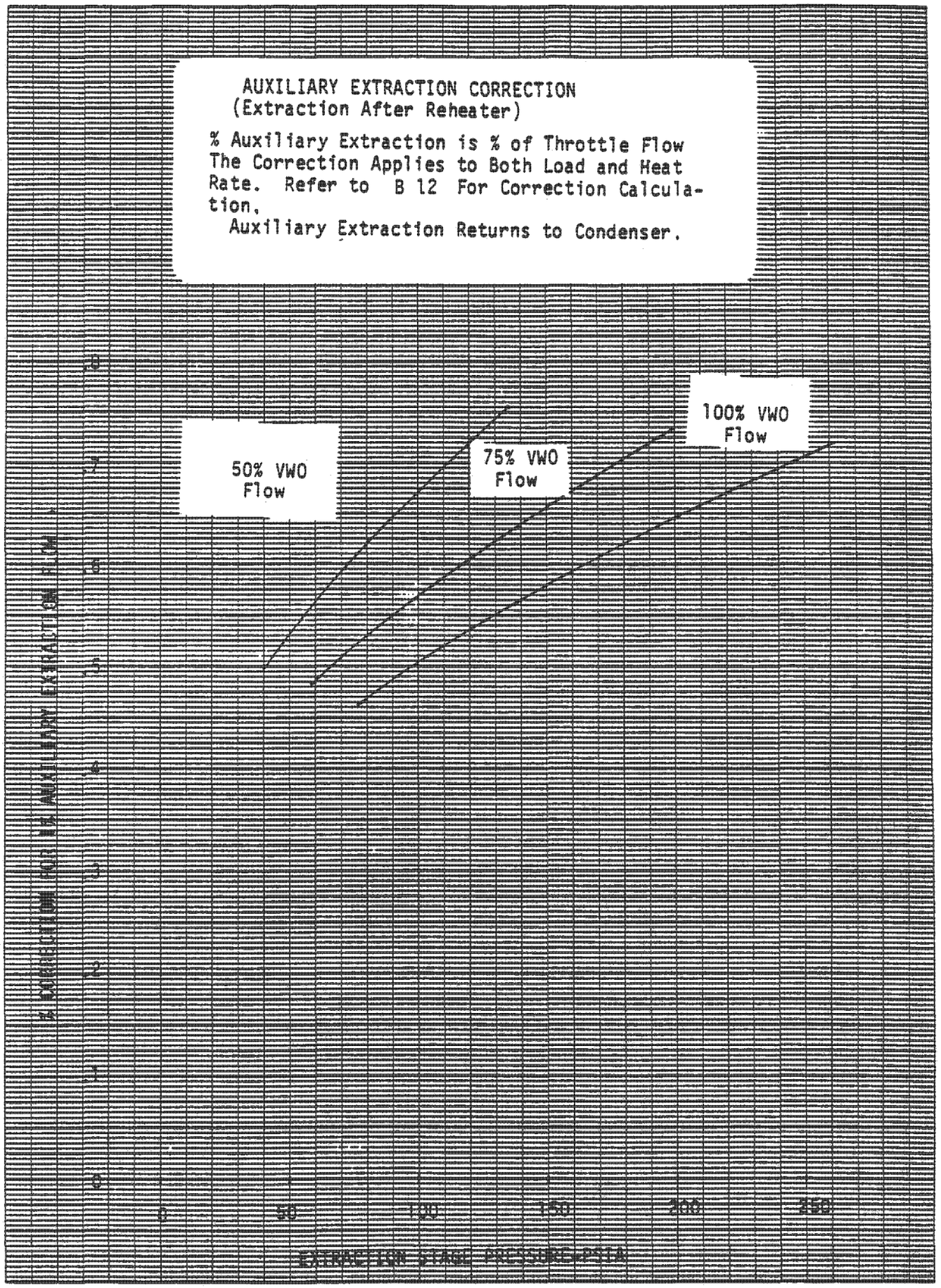

B7

IP14_002559

Correction for Auxiliary Extraction from
Cold Reheat (Top HTR above Reheat Point)

% Auxiliary Extraction is % of Throttle Flow
Refer to B 12 for Correction Calculation
Auxiliary Extraction Returns to Condenser

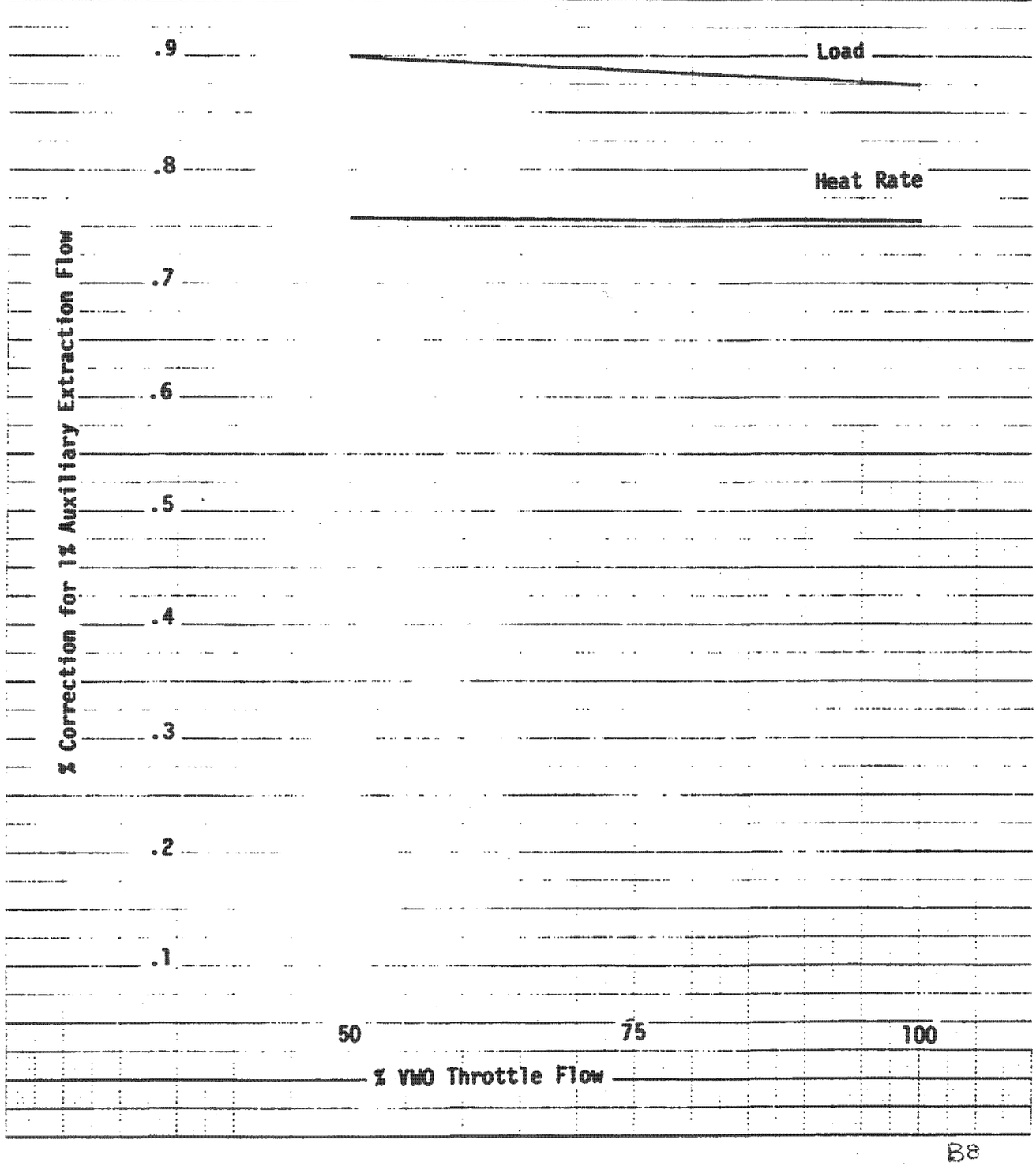

B8

Correction for Auxiliary Extraction from
Cold Reheat (Top HTR at Cold Reheat)

% Auxiliary Extraction is % of Throttle Flow
Refer to B 12 for Correction Calculation
Auxiliary Extraction Returns to Condenser

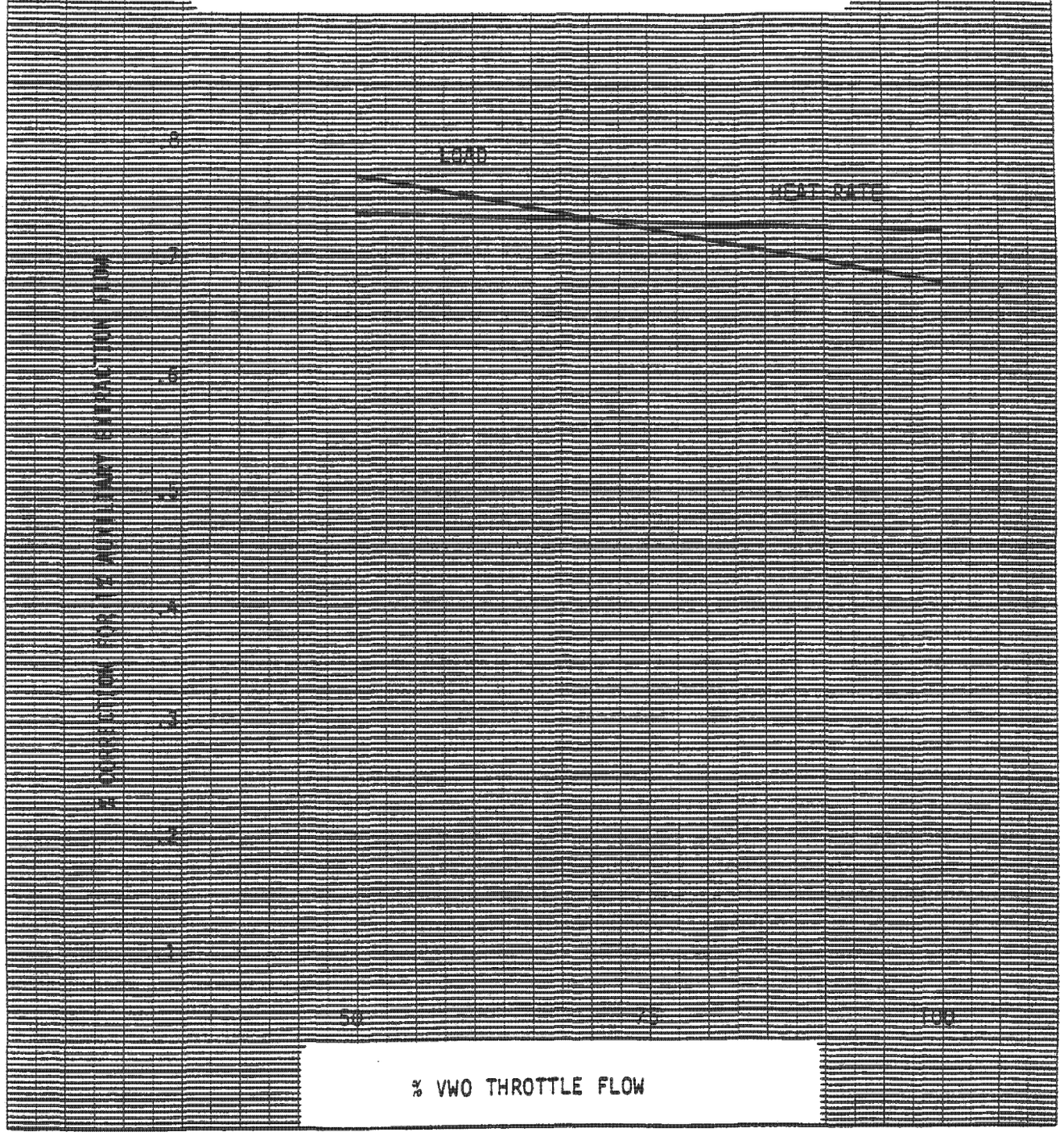

B9

IP14_002561

CORRECTIONS FOR MAIN STEAM AND REHEAT STEAM ATTEMPERATION

% Attemperation is % Of Throttle Flow
Attemperation Supply Is From BFP
Apply Corrections At Constant Main Steam And Reheat Temperatures

Refer to B 13 For Correction Calculation

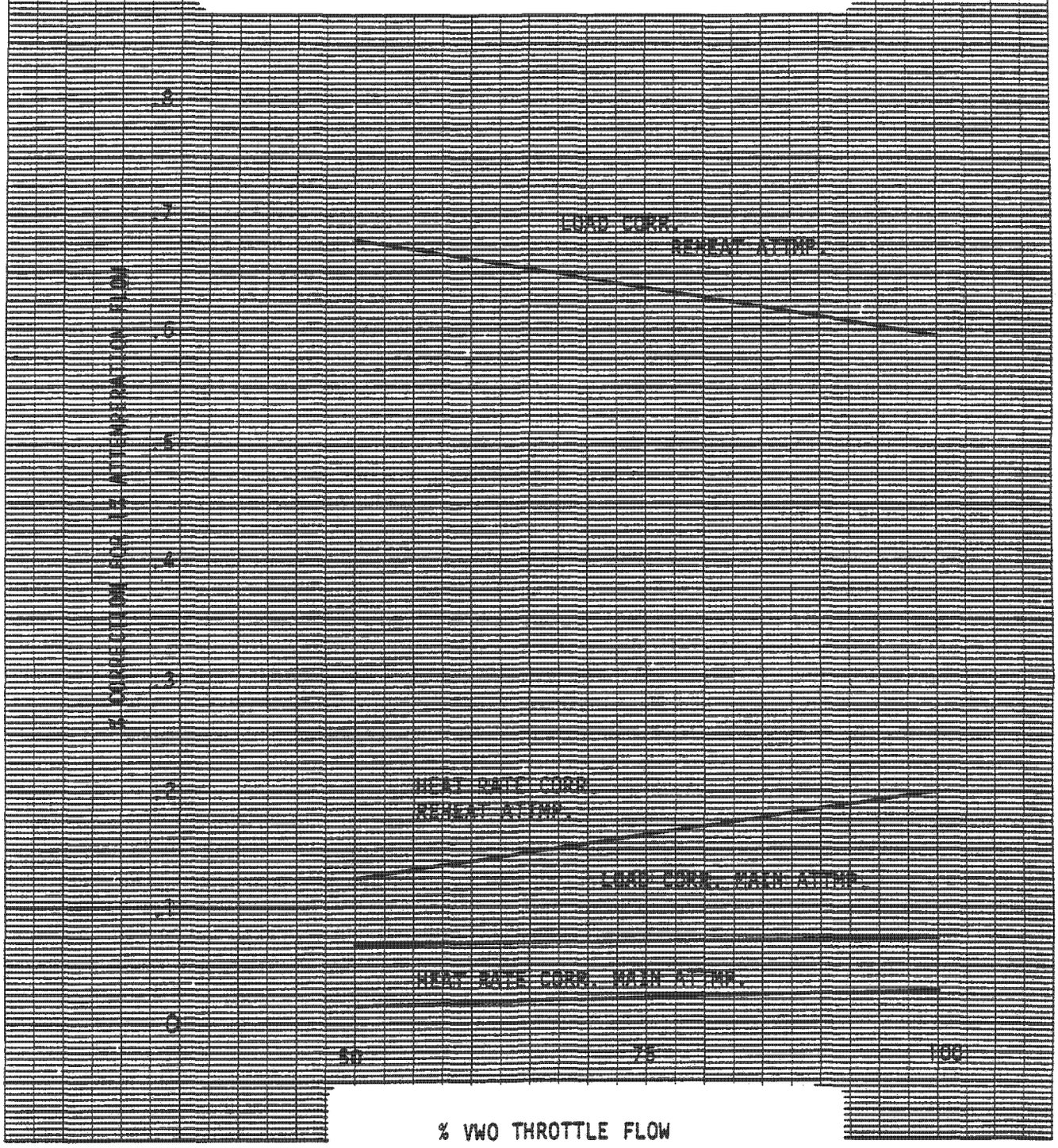

B10

GENERAL ELECTRIC COMPANY, SCHENECTADY, N. Y., U.S.A.
F-N-156 (8-50)

IP14_002562

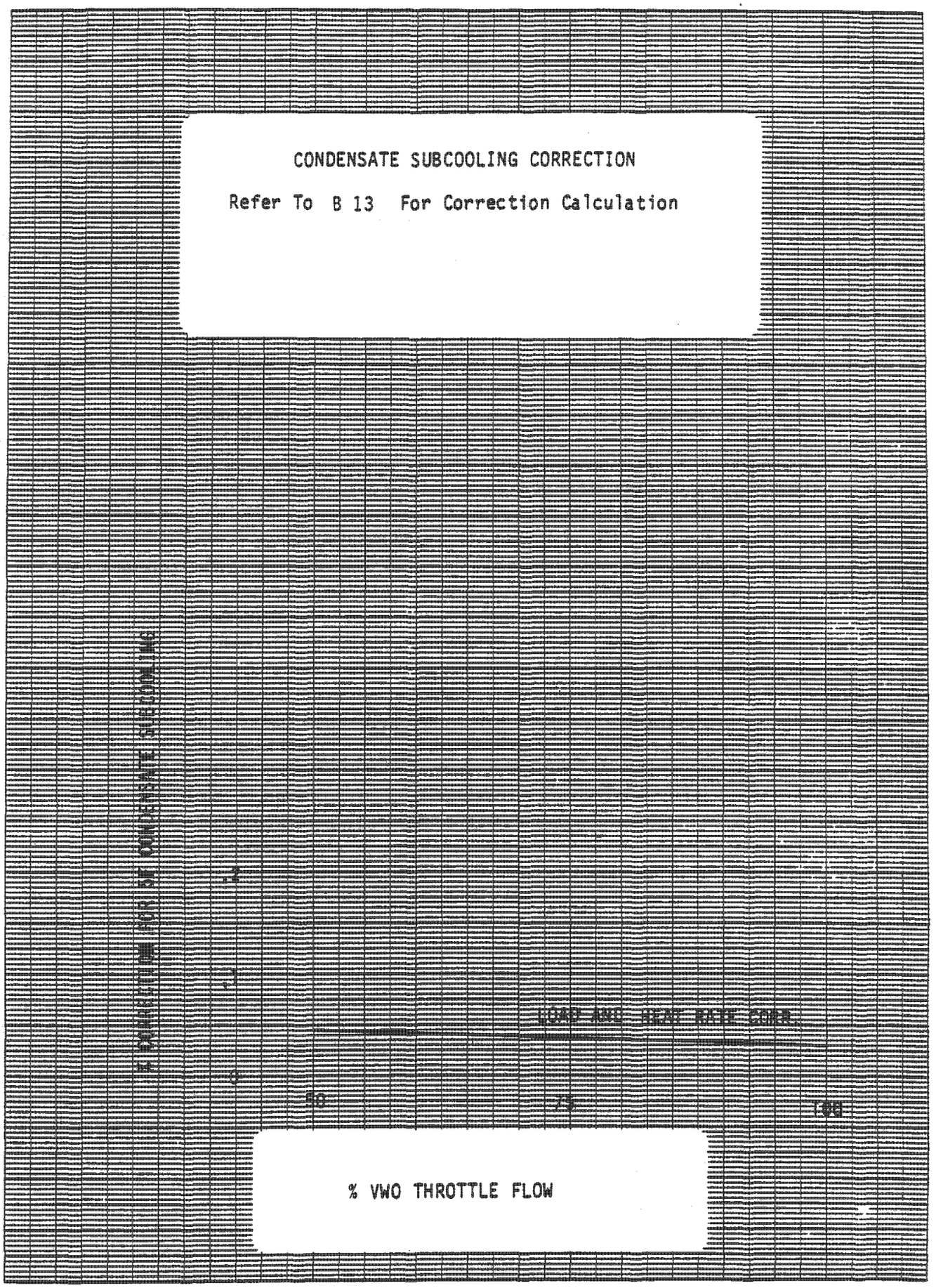

B 11

GENERAL ELECTRIC COMPANY, SCHENECTADY, N. Y., U.S.A.
180x250 1mm Divisions
FN-156 (8-50)

IP14_002563

CONDENSER MAKEUP CORRECTION

% Makeup Is % OF Throttle Flow

Refer To B 13 For Correction Calculation

Leakage IS From Main Part Of Boiler

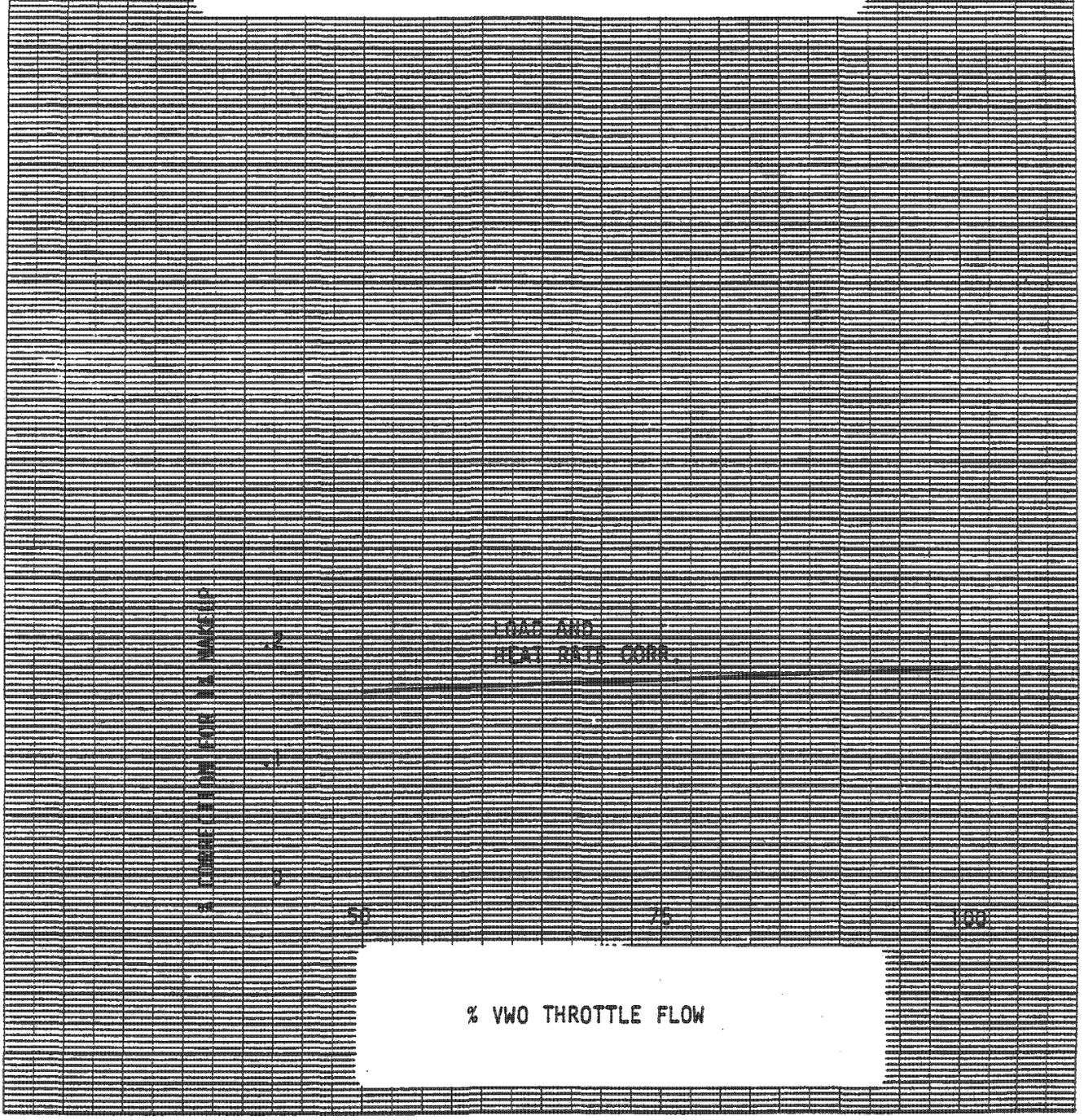

B12

TERMINAL DIFFERENCE CORRECTION - B6

$$\text{Corrected H.R.} = \text{Test H.R.} / \left[1 + \left(\frac{\%\ \text{Corr.}}{100} \times \left(\frac{T.D._{test} - T.D._{design}}{5F}\right)\right)\right]$$

$$\text{Corrected Load} = \text{Test Load} / \left[1 + \left(\frac{\%\ \text{Corr.}}{100} \times \left(\frac{T.D._{test} - T.D._{design}}{5F}\right)\right)\right]$$

PRESSURE DROP CORRECTION - B6

$$\text{Corrected H.R.} = \text{Test H.R.} / \left[1 + \left(\frac{\%\ \text{Corr.}}{100} \times \left(\frac{T_{sat\ @\ (P_{tb\ test} - \Delta P_{design})} - T_{sat\ @\ (P_{tb\ test} - \Delta P_{test})}}{5}\right)\right)\right]$$

$$\text{Corrected Load} = \text{Test Load} / \left[1 + \left(\frac{\%\ \text{Corr.}}{100} \times \left(\frac{T_{sat\ @\ (P_{tb\ test} - \Delta P_{design})} - T_{sat\ @\ (P_{tb\ test} - \Delta P_{test})}}{5}\right)\right)\right]$$

AUXILIARY EXTRACTION CORRECTION - B7 AND B8

$$\text{Corrected H.R.} = \text{Test H.R.} / \left[1 + \left(\frac{\%\ \text{Corr.}}{100} \times \left(\%\ \text{Aux. Extr}_{test} - \%\ \text{Aux. Extr}_{design}\right)\right)\right]$$

$$\text{Corrected Load} = \text{Test Load} / \left[1 - \left(\frac{\%\ \text{Corr.}}{100} \times \left(\%\ \text{Aux. Extr}_{test} - \%\ \text{Aux. Extr}_{design}\right)\right)\right]$$

IP14_002565

ATTEMPERATION CORRECTION - B9

Corrected H.R. = Test H.R/ A
Corrected Load = Test Load/A

$$A = 1 + \left(\frac{\%\ \text{Corr.}}{100} \times \%\ \text{Attemp Flow}\right)$$

CONDENSATE SUBCOOLING CORRECTION - B10

Corrected H.R.=Test H.R/(1+B)
Corrected Load = Test Load/(1-B)

$$B = \left(\frac{\%\ \text{Corr.}}{100} \times \frac{^{o}\text{F Subcooling}}{5^{o}\text{F}}\right)$$

CONDENSER MAKEUP CORRECTION - B11

Corrected H.R. = Test H.R./(1+C)
Corrected Load = Test Load/(1-C)

$$C = \left[\frac{\%\ \text{Corr.}}{100} \times \left(\%\ \text{Makeup}_{test} - \%\ \text{Makeup}_{design}\right)\right]$$

where

T_{sat} = saturation temperature

$P_{tb\ test}$ = extraction pressure at turbine during test

ΔP_{design} = design heat balance pressure drop in extraction pipe

ΔP_{test} = test pressure drop in extraction pipe

IP14_002566

INTERMOUNTAIN POWER SERVICE CORPORATION
PERFORMANCE EVALUATION TEST REPORT
UNIT NO. 2

APPENDIX C

Station Computer Log Summary

Test Point No.	Page
1	C012-5
3	C032-5
4	C042-5
5	C052-5

PERFORMANCE TEST DATA
FOXBORO COMPUTER LOG

Test Point 1 UNIT No. 2
Date FEB. 1, 1989
Start Time 10:15
Barometer 12.23 PSIA

Description	ID #	Group #	Item #	Data Log Value	Units	Final Value	Units
GENERATOR LOAD	TGBPK0022	1	4	882.67	MW	882.67	MW
TURBINE LOAD	TGFTA111	1	6	0.00	MW	0.00	MW
UNIT LOAD	COAXI027A	1	9	881.30	MW	881.30	MW
POWER FACTOR	TGFTG0023	2	1	0.99		0.99	
MAIN STEAM T	SGGTE004	3	11	1003.17	F	1003.17	F
MS TO BFPT T	SGGTE1152	3	12	972.51	F	972.51	F
BFPT 1A MS T	SGGTE0006	4	1	941.20	F	941.20	F
BFPT 1A MS T	SGGTE0007	4	2	883.70	F	883.70	F
MS PRESS	SGGPT0001	4	3	2404.46	PSIG	2416.69	PSIA
THROTTLE PRESS	COAXI012A	4	4	2401.23	PSIG	2413.46	PSIA
THROTTLE T	COAXI015A	4	8	1003.76	F	1003.76	F
MS PRESS	TGFTA1114	4	9	0.00	PSIA	0.00	PSIA
MS TEMP	TGFTA1113	4	10	0.00	F	0.00	F
STEAM FLOW (FW+SSF)	COAXI023A	4	12	6183.60	KPPH	6183.60	KPPH
TURBINE STM FLOW	COAXI024A	5	1	6192.84	KPPH	6192.84	KPPH
CV POSITION	TGFTG0007	5	2	83.90	PCT	83.90	PCT
FIRST STG PRESS	COAXI042A	5	3	1907.70	PSIG	1919.93	PSIA
FIRST STG TB PRESS	TGAPT0057	5	5	1809.00	PSIG	1821.23	PSIA
HTR 8A EXTR T	TEATE0030	5	6	796.56	F	796.56	F
HTR 8A EXTR PRESS	TEAPT0021	5	7	1046.80	PSIG	1059.03	PSIA
HTR 8B EXTR PRESS	TEAPT0022	5	8	1057.28	PSIG	1069.51	PSIA
TB COLD RHT T	SGJTE0024	5	9	625.04	F	625.04	F
TB COLD RHT PRESS	SGJPT0012	5	10	556.38	PSIG	568.61	PSIA
HTR 7A EXTR T	TEATE0028	5	11	623.13	F	623.13	F
HTR 7A EXTR PRESS	TEAPT0019	5	12	541.36	PSIG	553.59	PSIA
HTR 7B EXTR T	TEATE0029	6	1	623.89	F	623.89	F
HTR 7B EXTR PRESS	TEAPT0020	6	2	540.67	PSIG	552.90	PSIA
RHT DSUPHTR INLET T	SGJTE0023	6	3	624.59	F	624.59	F
RHT DSUPHTR INLET T	COAXI106A	6	4	622.14	F	622.14	F
RHT DSUPHTR FLOW	COAXI108A	6	6	0.00	KPPH	0.00	KPPH
HRH N TEMP	SGJTE1155	7	4	1002.40	F	1002.40	F
HRH S TEMP	SGJTE1156	7	5	1004.08	F	1004.08	F
TB N HRH PRESS	SGJPT0006	7	6	513.48	PSIG	525.71	PSIA
TB N HRH TEMP	SGJTE0013	7	7	1002.17	F	1002.17	F
TB RHT INLET TEMP	COAXI104A	7	8	1003.07	F	1003.07	F
TB S HRH PRESS	SGJPT0007	7	9	515.96	PSIG	528.19	PSIA
TB S HRH TEMP	SGJTE0016	7	10	1000.98	F	1000.98	F
TB RHT INLET TEMP	COAXI105A	7	11	1001.34	F	1001.34	F
TB RHT AVG INLET T	COAXI046A	7	12	1005.40	F	1005.40	F

Description	ID #	Group #	Item #	Data Log Value	Units	Final Value	Units
TB RHT TEMP	TGFTA1115	8	1	0.00	F	0.00	F
TB RHT BOWL PRESS	SGJPT0049	8	2	499.45	PSIG	511.68	PSIA
HTR 6A EXTR TEMP	TEAPT0026	8	3	800.52	F	800.52	F
HTR 6A EXTR PRESS	TEAPT0017	8	4	219.15	PSIG	231.38	PSIA
HTR 6B EXTR TEMP	TEAPT0027	8	5	797.96	F	797.96	F
HTR 6B EXTR PRESS	TEAPT0018	8	6	218.59	PSIG	230.82	PSIA
HTR 5 & BFPT EXTR T	TEATE0157	8	7	626.34	F	626.34	F
HTR 5 & BFPT EXTR P	TEAPT0023	8	8	110.75	PSIG	122.98	PSIA
HTR 5 EXTR TEMP	TEATE0025	8	9	622.45	F	622.45	F
HTR 5 EXTR PRESS	TEAPT0016	8	10	124.73	PSIG	136.96	PSIA
BFPT 1A STM TEMP	TEATE0032	8	11	623.58	F	623.58	F
BFPT 1A STM PRESS	TEAPT0014	8	12	106.62	PSIG	118.85	PSIA
BFPT 1B STM TEMP	TEATE0033	9	1	624.05	F	624.05	F
BFPT 1B STM PRESS	TEAPT0015	9	2	107.67	PSIG	119.90	PSIA
BFPT SPEED	FWAKK0013	9	5	0.00	RPM	0.00	RPM
TSI BFPT A SPEED	FWATG0002	9	6	5280.00	RPM	5280.00	RPM
TSI BFPT B SPEED	FWATG0004	9	7	5434.00	RPM	5434.00	RPM
BFPT 1A 1ST STG P	FWAPT0228	9	8	62.71	PSIG	74.94	PSIA
BFPT 1B 1ST STG P	FWAPT0229	9	10	-8.05	PSIG	4.18	PSIA
LP B EXTR TO HTR 4	TTEBTE0164	9	12	515.04	F	515.04	F
LP C EXTR TO HTR 4	TTEBTE0165	10	1	483.63	F	483.63	F
LP A EXTR TO HTR 4	TTEBTE0166	10	2	517.49	F	517.49	F
LP EXTR TO HTR 4 P	TEBPT0055	10	3	45.65	PSIG	57.88	PSIA
LP A EXTR TO HTR 3	TTEBTE0161	10	4	409.25	F	409.25	F
LP C EXTR TO HTR 3	TTEBTE0162	10	5	416.70	F	416.70	F
LP B EXTR TO HTR 3	TTEBTE0163	10	6	412.41	F	412.41	F
LP EXTR TO HTR 3 P	TEBPT0054	10	7	24.62	PSIG	36.85	PSIA
LP A EXTR TO HTR 2	TTEBTE0158	10	8	228.50	F	228.50	F
LP C EXTR TO HTR 2	TTEBTE0159	10	9	232.21	F	232.21	F
LP B EXTR TO HTR 2	TTEBTE0160	10	10	229.94	F	229.94	F
LP EXTR TO HTR 2 P	TEBPT0053	10	11	-3.33	PSIG	8.90	PSIA
LPA EXTR TO HTR 1A	TTEBTE0167	10	12	0.00	F	0.00	F
LPA EXTR TO HTR 1A	TTEBTE0168	11	1	152.49	F	152.49	F
LP HTR 1A PRESS	TEBPT0050	11	2	-6.78	PSIG	5.45	PSIA
STM SEAL HDR T	TGCTE0147	11	4	639.00	F	639.00	F
LPB EXTR TO HTR 1B	TTEBTE0169	11	6	157.68	F	157.68	F
LPB EXTR TO HTR 1B	TTEBTE0170	11	7	89.84	F	89.84	F
LP HTR 1B PRESS	TEBPT0051	11	8	-9.89	PSIG	2.34	PSIA
LPC EXTR TO HTR 1C	TTEBTE0171	11	9	162.70	F	162.70	F
LPC EXTR TO HTR 1C	TTEBTE0172	11	10	161.04	F	161.04	F
LP HTR 1C PRESS	TEBPT0052	11	11	-6.77	PSIG	5.46	PSIA
EXHAUST HOOD A T	TGATE0131	11	12	105.00	F	105.00	F
LP A EXHAUST PRESS	TGAPT0033	12	1	1.05	PSIA	2.14	INHGA
EXHAUST HOOD B T	TGATE0132	12	2	0.00	F	0.00	F
LP B EXHAUST PRESS	TGAPT0034	12	3	0.81	PSIA	1.65	INHGA
EXHAUST HOOD C T	TGATE0133	12	4	98.00	F	98.00	F
LP C EXHAUST PRESS	TGAPT0035	12	5	0.78	PSIA	1.59	INHGA
HP COND 1A EXH PRESS	TGAPT5001	12	8	2.92	INHGA	2.92	INHGA
IP COND 1B EXH PRESS	TGAPT5003	12	10	2.34	INHGA	2.34	INHGA
LP COND 1C EXH PRESS	COAXI110A	12	12	2.07	INHGA	2.07	INHGA

Description	ID #	Group #	Item #	Data Log Value	Units	Final Value	Units
HTR 8A DRAIN TEMP	TEDTE0185	13	1	488.01	F	488.01	F
HTR 8B DRAIN TEMP	TEDTE0186	13	4	487.80	F	487.80	F
HTR 7A DRAIN TEMP	TEDTE0183	13	7	404.33	F	404.33	F
HTR 7B DRAIN TEMP	TEDTE0184	13	10	403.30	F	403.30	F
HTR 6A DRAIN TEMP	TEDTE0181	14	1	352.39	F	352.39	F
HTR 6B DRAIN TEMP	TEDTE0182	14	4	355.21	F	355.21	F
HTR 4 DRAIN TEMP	TEDTE0037	14	7	269.90	F	269.90	F
HTR 3 DRAIN TEMP	TEDTE0036	14	8	207.14	F	207.14	F
HTR 2 DRAIN TEMP	TEDTE0035	14	9	167.64	F	167.64	F
FLASH TK DRAIN TEMP	TEDTE0038	14	10	159.30	F	159.30	F
DR CLR DRAIN TEMP	TEDTE0034	14	11	125.04	F	125.04	F
COND HOTWELL TEMP	HRATE0042	15	3	112.86	F	112.86	F
COND HOTWELL TEMP	HRATE0041	15	4	112.96	F	112.96	F
HOTWELL LEVEL-START	HRALT0001	15	5	40.14	IN		
HOTWELL LEVEL-END	HRALT0001	15	5	37.54	IN	-2.60	D IN
CYCLE MAKEUP FLOW	COAXI113A	15	7	-0.67	KPPH	-0.67	KPPH
COND PMP DISCH P	HRAPT0008	15	8	430.44	PSIG	442.67	PSIA
GLAND COND IN TEMP	HRATE0043	16	3	113.64	F	113.64	F
GLAND COND OUT TEMP	HRATE0044	16	4	115.14	F	115.14	F
CONDENSATE FLOW	COAXI114A	16	8	4707.18	KPPH	4707.18	KPPH
COND TO DR CLR	FWCTE0187	16	9	116.79	F	116.79	F
HTR 1 CONDS IN T	FWCTE0188	16	10	123.26	F	123.26	F
HTR 1A CONDS OUT T	FWCTE0189	16	11	160.35	F	160.35	F
HTR 1B CONDS OUT T	FWCTE0190	16	12	158.88	F	158.88	F
HTR 1C CONDS OUT T	FWCTE0191	17	1	159.82	F	159.82	F
HTR 2 CONDS IN T	FWCTE0192	17	2	160.14	F	160.14	F
HTR 2 CONDS OUT T	FWCTE0193	17	3	197.40	F	197.40	F
HTR 3 CONDS IN T	FWCTE0194	17	4	197.29	F	197.29	F
HTR 3 CONDS OUT T	FWCTE0195	17	5	262.48	F	262.48	F
HTR 4 CONDS IN T	FWCTE0196	17	6	262.26	F	262.26	F
HTR 4 CONDS OUT T	FWCTE0197	17	7	292.28	F	292.28	F
HTR 5 (DA) CONDS IN	FWCTE0198	17	8	292.82	F	292.82	F
HTR 5 (DA) PRESS	FWCPT0056	17	9	107.69	PSIG	119.92	PSIA
DA HTR STOR TK T	FWCTE0199	17	10	339.93	F	339.93	F
DA LEVEL-START	FWCLT0012	17	11	98.53	IN		
DA LEVEL-END	FWCLT0012	17	11	98.25	IN	-0.28	D IN
DA PRESSURE	COAXI111A	18	2	108.26	PSIG	120.49	PSIA
DA OUTLET TEMP	FWATE0045	18	3	341.43	F	341.43	F
APH COIL OUT WTR T	COAXI127A	18	7	84.60	F	84.60	F
APH RETURN FLOW	COAXI115A	18	9	116.00	KPPH	116.00	KPPH
FGR RETURN WTR FLOW	CCDFT0069	18	11	193.78	GPM	96.84	KPPH
FGR RETURN WTR T	CCDTE0905	18	12	191.16	F	191.16	F
BFP 1A SUCTION T	FWATE0046	19	9	338.67	F	338.67	F
BFP 1B SUCTION T	FWATE0047	19	10	339.38	F	339.38	F
STBY BFP SUCTION T	FWATE0048	19	11	338.27	F	338.27	F
RHT DSUPHTR SPRAY T	SGJTE0060	19	12	244.38	F	244.38	F

Description	ID #	Group #	Item #	Data Log Value	Units	Final Value	Units
RHT DSUPHTR SPRAY F	COAXI108A	20	2	0.00	KPPH	0.00	KPPH
BFP 1A DISCH T	FWATE0049	20	3	345.80	F	345.80	F
BFP 1A DISCH PRESS	FWAPT0029	20	4	2870.55	PSIG	2882.78	PSIA
BFP 1B DISCH T	FWATE0050	20	7	346.25	F	346.25	F
BFP 1B DISCH PRESS	FWAPT0030	20	8	2877.10	PSIG	2889.33	PSIA
SUPHTR SPRAY WTR T	COAXI026A	21	4	330.73	F	330.73	F
SUPHTR SPRAY WTR F	COAXI022A	21	5	0.02	KPPH	0.02	KPPH
HP HTR 6 INLET T	FWATE0052	21	6	344.81	F	344.81	F
HP HTR 6 INLET P	FWAPT0250	21	7	2858.10	PSIG	2870.33	PSIA
HP HTR 7A INLET T	FWATE0053	21	10	394.49	F	394.49	F
HP HTR 7B INLET T	FWATE0054	21	11	394.56	F	394.56	F
HP HTR 8A INLET T	FWATE0055	21	12	478.12	F	478.12	F
HP HTR 8B INLET T	FWATE0056	22	1	477.93	F	477.93	F
HP HTR 8A OUTLET T	FWATE0059	22	2	551.58	F	551.58	F
HP HTR 8B OUTLET T	FWATE0154	22	3	548.48	F	548.48	F
ECONOMIZER INLET T	FWATE0990	22	4	550.83	F	550.83	F
ECONOMIZER INLET T	COAXI025A	22	5	549.60	F	549.60	F
ECONOMIZER INLET P	FWAPT0032	22	6	2766.95	PSIG	2779.18	PSIA
FEEDWTR FLOW	COAXI021A	22	8	6175.34	KPPH	6175.34	KPPH
AMBIENT TEMP	INAKK0531	26	1	47.28	F	47.28	F
BAROMETRIC PRESS	INAPT0227	26	2	25.04	INHG	12.30	PSIA
IP COND 1B INLET T	HRCTE0377	42	5	79.04	F	79.04	F
IP COND 1B INLET T	HRCTE0378	42	6	79.10	F	79.10	F
LP COND 1C INLET T	HRCTE0379	42	7	79.37	F	79.37	F
LP COND 1C INLET T	HRCTE0380	42	8	79.20	F	79.20	F
IP COND 1A XOVER T	HRCTE1215	42	10	95.45	F	95.45	F
IP COND 1B XOVER T	HRCTE1216	42	11	96.29	F	96.29	F
IP COND 1B OUTLET T	HRCTE0393	42	12	101.84	F	101.84	F
IP COND 1B OUTLET T	HRCTE0394	43	1	102.47	F	102.47	F
IP COND 1B OUTLET T	HRCTE0395	43	2	102.26	F	102.26	F
IP COND 1B OUTLET T	HRCTE0396	43	3	100.87	F	100.87	F
IP COND 1B OUTLET T	HRCTE0389	43	4	103.23	F	103.23	F
IP COND 1B OUTLET T	HRCTE0390	43	5	104.29	F	104.29	F
IP COND 1B OUTLET T	HRCTE0391	43	6	103.77	F	103.77	F
IP COND 1B OUTLET T	HRCTE0392	43	7	104.48	F	104.48	F
LP-HP COND XOVER T	HRCTE0382	43	8	92.64	F	92.64	F
LP-HP COND XOVER T	HRCTE0384	43	9	92.26	F	92.26	F
LP-HP COND XOVER T	HRCTE0383	43	10	93.39	F	93.39	F
LP-HP COND XOVER T	HRCTE0386	43	11	93.96	F	93.96	F
LP-HP COND XOVER T	HRCTE0388	43	12	94.38	F	94.38	F
LP-HP COND XOVER T	HRCTE0387	44	1	92.13	F	92.13	F
LP-HP COND XOVER T	HRCTE0385	44	2	91.83	F	91.83	F
HP COND OUTLET T	HRCTE0401	44	3	107.55	F	107.55	F
HP COND OUTLET T	HRCTE0402	44	4	107.22	F	107.22	F
HP COND OUTLET T	HRCTE0403	44	5	107.94	F	107.94	F
HP COND OUTLET T	HRCTE0404	44	6	108.48	F	108.48	F

Description	ID #	Group #	Item #	Data Log Value	Units	Final Value	Units
HP COND OUTLET T	HRCTE0399	44	7	107.46	F	107.46	F
HP COND OUTLET T	HRCTE0398	44	8	106.56	F	106.56	F
HP COND OUTLET T	HRCTE0397	44	9	106.28	F	106.28	F
HP COND OUTLET T	HRCTE0400	44	10	106.71	F	106.71	F

AVG COND INLET T	79.18
AVG IP COND 1A XOVER T	95.87
AVG IP COND 1B OUTLET T	102.90
AVG LP-HP COND XOVER T	92.94
AVG HP COND OUTLET T	107.28

R

PERFORMANCE TEST DATA
FOXBORO COMPUTER LOG

Test Point 3 UNIT No. 2
Date FEB. 2, 1989
Start Time 9:30
Barometer 12.3 PSIA

Description	ID #	Group #	Item #	Data Log Value	Units	Final Value	Units
GENERATOR LOAD	TGBPK0022	1	4	884.29	MW	884.29	MW
TURBINE LOAD	TGFTA111	1	6	0.00	MW	0.00	MW
UNIT LOAD	COAXI027A	1	9	882.56	MW	882.56	MW
POWER FACTOR	TGFTG0023	2	1	0.99		0.99	
MAIN STEAM T	SGGTE004	3	11	1004.38	F	1004.38	F
MS TO BFPT T	SGGTE1152	3	12	974.56	F	974.56	F
BFPT 1A MS T	SGGTE0006	4	1	946.24	F	946.24	F
BFPT 1A MS T	SGGTE0007	4	2	891.16	F	891.16	F
MS PRESS	SGGPT0001	4	3	2406.20	PSIG	2418.50	PSIA
THROTTLE PRESS	COAXI012A	4	4	2403.08	PSIG	2415.38	PSIA
THROTTLE T	COAXI015A	4	8	1004.92	F	1004.92	F
MS PRESS	TGFTA1114	4	9	0.00	PSIA	0.00	PSIA
MS TEMP	TGFTA1113	4	10	0.00	F	0.00	F
STEAM FLOW (FW+SSF)	COAXI023A	4	12	6191.73	KPPH	6191.73	KPPH
TURBINE STM FLOW	COAXI024A	5	1	6198.13	KPPH	6198.13	KPPH
CV POSITION	TGFTG0007	5	2	83.90	PCT	83.90	PCT
FIRST STG PRESS	COAXI042A	5	3	1909.41	PSIG	1921.71	PSIA
FIRST STG TB PRESS	TGAPT0057	5	5	1809.00	PSIG	1821.30	PSIA
HTR 8A EXTR T	TEATE0030	5	6	797.77	F	797.77	F
HTR 8A EXTR PRESS	TEAPT0021	5	7	1048.68	PSIG	1060.98	PSIA
HTR 8B EXTR PRESS	TEAPT0022	5	8	1059.81	PSIG	1072.11	PSIA
TB COLD RHT T	SGJTE0024	5	9	626.73	F	626.73	F
TB COLD RHT PRESS	SGJPT0012	5	10	557.32	PSIG	569.62	PSIA
HTR 7A EXTR T	TEATE0028	5	11	624.51	F	624.51	F
HTR 7A EXTR PRESS	TEAPT0019	5	12	542.25	PSIG	554.55	PSIA
HTR 7B EXTR T	TEATE0029	6	1	625.39	F	625.39	F
HTR 7B EXTR PRESS	TEAPT0020	6	2	541.61	PSIG	553.91	PSIA
RHT DSUPHTR INLET T	SGJTE0023	6	3	626.20	F	626.20	F
RHT DSUPHTR INLET T	COAXI106A	6	4	623.54	F	623.54	F
RHT DSUPHTR FLOW	COAXI108A	6	6	0.00	KPPH	0.00	KPPH
HRH N TEMP	SGJTE1155	7	4	1007.76	F	1007.76	F
HRH S TEMP	SGJTE1156	7	5	1009.74	F	1009.74	F
TB N HRH PRESS	SGJPT0006	7	6	514.22	PSIG	526.52	PSIA
TB N HRH TEMP	SGJTE0013	7	7	1007.69	F	1007.69	F
TB RHT INLET TEMP	COAXI104A	7	8	1008.52	F	1008.52	F
TB S HRH PRESS	SGJPT0007	7	9	516.98	PSIG	529.28	PSIA
TB S HRH TEMP	SGJTE0016	7	10	1006.55	F	1006.55	F
TB RHT INLET TEMP	COAXI105A	7	11	1006.63	F	1006.63	F
TB RHT AVG INLET T	COAXI046A	7	12	1010.78	F	1010.78	F

Description	ID #	Group #	Item #	Data Log Value	Units	Final Value	Units
TB RHT TEMP	TGFTA1115	8	1	0.00	F	0.00	F
TB RHT BOWL PRESS	SGJPT0049	8	2	500.74	PSIG	513.04	PSIA
HTR 6A EXTR TEMP	TEAPT0026	8	3	805.66	F	805.66	F
HTR 6A EXTR PRESS	TEAPT0017	8	4	219.47	PSIG	231.77	PSIA
HTR 6B EXTR TEMP	TEAPT0027	8	5	803.24	F	803.24	F
HTR 6B EXTR PRESS	TEAPT0018	8	6	218.91	PSIG	231.21	PSIA
HTR 5 & BFPT EXTR T	TEATE0157	8	7	630.54	F	630.54	F
HTR 5 & BFPT EXTR P	TEAPT0023	8	8	110.77	PSIG	123.07	PSIA
HTR 5 EXTR TEMP	TEATE0025	8	9	627.28	F	627.28	F
HTR 5 EXTR PRESS	TEAPT0016	8	10	124.71	PSIG	137.01	PSIA
BFPT 1A STM TEMP	TEATE0032	8	11	628.16	F	628.16	F
BFPT 1A STM PRESS	TEAPT0014	8	12	106.68	PSIG	118.98	PSIA
BFPT 1B STM TEMP	TEATE0033	9	1	628.57	F	628.57	F
BFPT 1B STM PRESS	TEAPT0015	9	2	107.55	PSIG	119.85	PSIA
BFPT SPEED	FWAKK0013	9	5	0.00	RPM	0.00	RPM
TSI BFPT A SPEED	FWATG0002	9	6	5283.97	RPM	5283.97	RPM
TSI BFPT B SPEED	FWATG0004	9	7	5440.49	RPM	5440.49	RPM
BFPT 1A 1ST STG P	FWAPT0228	9	8	62.57	PSIG	74.87	PSIA
BFPT 1B 1ST STG P	FWAPT0229	9	10	-8.05	PSIG	4.25	PSIA
LP B EXTR TO HTR 4	TTEBTE0164	9	12	519.61	F	519.61	F
LP C EXTR TO HTR 4	TTEBTE0165	10	1	490.04	F	490.04	F
LP A EXTR TO HTR 4	TTEBTE0166	10	2	521.79	F	521.79	F
LP EXTR TO HTR 4 P	TEBPT0055	10	3	45.44	PSIG	57.74	PSIA
LP A EXTR TO HTR 3	TTEBTE0161	10	4	413.06	F	413.06	F
LP C EXTR TO HTR 3	TTEBTE0162	10	5	420.77	F	420.77	F
LP B EXTR TO HTR 3	TTEBTE0163	10	6	416.29	F	416.29	F
LP EXTR TO HTR 3 P	TEBPT0054	10	7	24.43	PSIG	36.73	PSIA
LP A EXTR TO HTR 2	TTEBTE0158	10	8	230.80	F	230.80	F
LP C EXTR TO HTR 2	TTEBTE0159	10	9	235.51	F	235.51	F
LP B EXTR TO HTR 2	TTEBTE0160	10	10	232.57	F	232.57	F
LP EXTR TO HTR 2 P	TEBPT0053	10	11	-3.43	PSIG	8.87	PSIA
LPA EXTR TO HTR 1A	TTEBTE0167	10	12	0.00	F	0.00	F
LPA EXTR TO HTR 1A	TTEBTE0168	11	1	152.53	F	152.53	F
LP HTR 1A PRESS	TEBPT0050	11	2	-6.89	PSIG	5.41	PSIA
STM SEAL HDR T	TGCTE0147	11	4	639.00	F	639.00	F
LPB EXTR TO HTR 1B	TTEBTE0169	11	6	157.62	F	157.62	F
LPB EXTR TO HTR 1B	TTEBTE0170	11	7	90.36	F	90.36	F
LP HTR 1B PRESS	TEBPT0051	11	8	-9.95	PSIG	2.35	PSIA
LPC EXTR TO HTR 1C	TTEBTE0171	11	9	162.55	F	162.55	F
LPC EXTR TO HTR 1C	TTEBTE0172	11	10	160.92	F	160.92	F
LP HTR 1C PRESS	TEBPT0052	11	11	-6.92	PSIG	5.38	PSIA
EXHAUST HOOD A T	TGATE0131	11	12	105.00	F	105.00	F
LP A EXHAUST PRESS	TGAPT0033	12	1	1.05	PSIA	2.14	INHGA
EXHAUST HOOD B T	TGATE0132	12	2	0.00	F	0.00	F
LP B EXHAUST PRESS	TGAPT0034	12	3	0.81	PSIA	1.65	INHGA
EXHAUST HOOD C T	TGATE0133	12	4	98.00	F	98.00	F
LP C EXHAUST PRESS	TGAPT0035	12	5	0.78	PSIA	1.59	INHGA
HP COND 1A EXH PRESS	TGAPT5001	12	8	2.95	INHGA	2.95	INHGA
IP COND 1B EXH PRESS	TGAPT5003	12	10	2.36	INHGA	2.36	INHGA
LP COND 1C EXH PRESS	COAXI110A	12	12	2.10	INHGA	2.10	INHGA

Description	ID #	Group #	Item #	Data Log Value	Units	Final Value	Units
HTR 8A DRAIN TEMP	TEDTE0185	13	1	488.22	F	488.22	F
HTR 8B DRAIN TEMP	TEDTE0186	13	4	485.75	F	485.75	F
HTR 7A DRAIN TEMP	TEDTE0183	13	7	404.52	F	404.52	F
HTR 7B DRAIN TEMP	TEDTE0184	13	10	403.48	F	403.48	F
HTR 6A DRAIN TEMP	TEDTE0181	14	1	352.46	F	352.46	F
HTR 6B DRAIN TEMP	TEDTE0182	14	4	355.27	F	355.27	F
HTR 4 DRAIN TEMP	TEDTE0037	14	7	269.67	F	269.67	F
HTR 3 DRAIN TEMP	TEDTE0036	14	8	206.68	F	206.68	F
HTR 2 DRAIN TEMP	TEDTE0035	14	9	167.44	F	167.44	F
FLASH TK DRAIN TEMP	TEDTE0038	14	10	159.15	F	159.15	F
DR CLR DRAIN TEMP	TEDTE0034	14	11	125.31	F	125.31	F
COND HOTWELL TEMP	HRATE0042	15	3	113.17	F	113.17	F
COND HOTWELL TEMP	HRATE0041	15	4	113.38	F	113.38	F
HOTWELL LEVEL-START	HRALT0001	15	5	39.92	IN		
HOTWELL LEVEL-END	HRALT0001	15	5	36.71	IN	-3.21	D IN
CYCLE MAKEUP FLOW	COAXI113A	15	7	-0.58	KPPH	-0.58	KPPH
COND PMP DISCH P	HRAPT0008	15	8	425.61	PSIG	437.91	PSIA
GLAND COND IN TEMP	HRATE0043	16	3	114.05	F	114.05	F
GLAND COND OUT TEMP	HRATE0044	16	4	115.43	F	115.43	F
CONDENSATE FLOW	COAXI114A	16	8	4832.15	KPPH	4832.15	KPPH
COND TO DR CLR	FWCTE0187	16	9	117.15	F	117.15	F
HTR 1 CONDS IN T	FWCTE0188	16	10	123.42	F	123.42	F
HTR 1A CONDS OUT T	FWCTE0189	16	11	160.05	F	160.05	F
HTR 1B CONDS OUT T	FWCTE0190	16	12	158.57	F	158.57	F
HTR 1C CONDS OUT T	FWCTE0191	17	1	159.59	F	159.59	F
HTR 2 CONDS IN T	FWCTE0192	17	2	159.87	F	159.87	F
HTR 2 CONDS OUT T	FWCTE0193	17	3	197.11	F	197.11	F
HTR 3 CONDS IN T	FWCTE0194	17	4	196.89	F	196.89	F
HTR 3 CONDS OUT T	FWCTE0195	17	5	262.28	F	262.28	F
HTR 4 CONDS IN T	FWCTE0196	17	6	262.10	F	262.10	F
HTR 4 CONDS OUT T	FWCTE0197	17	7	292.12	F	292.12	F
HTR 5 (DA) CONDS IN	FWCTE0198	17	8	292.66	F	292.66	F
HTR 5 (DA) PRESS	FWCPT0056	17	9	107.60	PSIG	119.90	PSIA
DA HTR STOR TK T	FWCTE0199	17	10	340.01	F	340.01	F
DA LEVEL-START	FWCLT0012	17	11	98.72	IN		
DA LEVEL-END	FWCLT0012	17	11	98.95	IN	0.23	D IN
DA PRESSURE	COAXI111A	18	2	108.24	PSIG	120.54	PSIA
DA OUTLET TEMP	FWATE0045	18	3	341.43	F	341.43	F
APH COIL OUT WTR T	COAXI127A	18	7	94.50	F	94.50	F
APH RETURN FLOW	COAXI115A	18	9	215.90	KPPH	215.90	KPPH
FGR RETURN WTR FLOW	CCDFT0069	18	11	181.94	GPM	90.92	KPPH
FGR RETURN WTR T	CCDTE0905	18	12	189.59	F	189.59	F
BFP 1A SUCTION T	FWATE0046	19	9	338.76	F	338.76	F
BFP 1B SUCTION T	FWATE0047	19	10	339.49	F	339.49	F
STBY BFP SUCTION T	FWATE0048	19	11	338.49	F	338.49	F
RHT DSUPHTR SPRAY T	SGJTE0060	19	12	134.31	F	134.31	F

Description	ID #	Group #	Item #	Data Log Value	Units	Final Value	Units
RHT DSUPHTR SPRAY F	COAXI108A	20	2	0.00	KPPH	0.00	KPPH
BFP 1A DISCH T	FWATE0049	20	3	345.91	F	345.91	F
BFP 1A DISCH PRESS	FWAPT0029	20	4	2874.78	PSIG	2887.08	PSIA
BFP 1B DISCH T	FWATE0050	20	7	346.28	F	346.28	F
BFP 1B DISCH PRESS	FWAPT0030	20	8	2878.91	PSIG	2891.21	PSIA
SUPHTR SPRAY WTR T	COAXI026A	21	4	331.70	F	331.70	F
SUPHTR SPRAY WTR F	COAXI022A	21	5	0.01	KPPH	0.01	KPPH
HP HTR 6 INLET T	FWATE0052	21	6	344.96	F	344.96	F
HP HTR 6 INLET P	FWAPT0250	21	7	2859.68	PSIG	2871.98	PSIA
HP HTR 7A INLET T	FWATE0053	21	10	394.68	F	394.68	F
HP HTR 7B INLET T	FWATE0054	21	11	394.82	F	394.82	F
HP HTR 8A INLET T	FWATE0055	21	12	478.37	F	478.37	F
HP HTR 8B INLET T	FWATE0056	22	1	478.11	F	478.11	F
HP HTR 8A OUTLET T	FWATE0059	22	2	551.85	F	551.85	F
HP HTR 8B OUTLET T	FWATE0154	22	3	548.08	F	548.08	F
ECONOMIZER INLET T	FWATE0990	22	4	550.70	F	550.70	F
ECONOMIZER INLET T	COAXI025A	22	5	549.44	F	549.44	F
ECONOMIZER INLET P	FWAPT0032	22	6	2768.86	PSIG	2781.16	PSIA
FEEDWTR FLOW	COAXI021A	22	8	6184.66	KPPH	6184.66	KPPH
AMBIENT TEMP	INAKK0531	26	1	34.22	F	34.22	F
BAROMETRIC PRESS	INAPT0227	26	2	25.14	INHG	12.35	PSIA
IP COND 1B INLET T	HRCTE0377	42	5	79.75	F	79.75	F
IP COND 1B INLET T	HRCTE0378	42	6	79.82	F	79.82	F
LP COND 1C INLET T	HRCTE0379	42	7	80.02	F	80.02	F
LP COND 1C INLET T	HRCTE0380	42	8	79.91	F	79.91	F
IP COND 1A XOVER T	HRCTE1215	42	10	97.18	F	97.18	F
IP COND 1B XOVER T	HRCTE1216	42	11	97.18	F	97.18	F
IP COND 1B OUTLET T	HRCTE0393	42	12	102.15	F	102.15	F
IP COND 1B OUTLET T	HRCTE0394	43	1	102.77	F	102.77	F
IP COND 1B OUTLET T	HRCTE0395	43	2	102.52	F	102.52	F
IP COND 1B OUTLET T	HRCTE0396	43	3	101.47	F	101.47	F
IP COND 1B OUTLET T	HRCTE0389	43	4	103.65	F	103.65	F
IP COND 1B OUTLET T	HRCTE0390	43	5	104.63	F	104.63	F
IP COND 1B OUTLET T	HRCTE0391	43	6	104.19	F	104.19	F
IP COND 1B OUTLET T	HRCTE0392	43	7	104.87	F	104.87	F
LP-HP COND XOVER T	HRCTE0382	43	8	93.37	F	93.37	F
LP-HP COND XOVER T	HRCTE0384	43	9	93.08	F	93.08	F
LP-HP COND XOVER T	HRCTE0383	43	10	94.13	F	94.13	F
LP-HP COND XOVER T	HRCTE0386	43	11	94.46	F	94.46	F
LP-HP COND XOVER T	HRCTE0388	43	12	94.84	F	94.84	F
LP-HP COND XOVER T	HRCTE0387	44	1	92.65	F	92.65	F
LP-HP COND XOVER T	HRCTE0385	44	2	92.31	F	92.31	F
HP COND OUTLET T	HRCTE0401	44	3	107.99	F	107.99	F
HP COND OUTLET T	HRCTE0402	44	4	107.79	F	107.79	F
HP COND OUTLET T	HRCTE0403	44	5	108.53	F	108.53	F
HP COND OUTLET T	HRCTE0404	44	6	109.04	F	109.04	F

Description	ID #	Group #	Item #	Data Log Value	Units	Final Value	Units
HP COND OUTLET T	HRCTE0399	44	7	107.84	F	107.84	F
HP COND OUTLET T	HRCTE0398	44	8	106.98	F	106.98	F
HP COND OUTLET T	HRCTE0397	44	9	106.77	F	106.77	F
HP COND OUTLET T	HRCTE0400	44	10	107.17	F	107.17	F

AVG COND INLET T	98.84
AVG IP COND 1A XOVER T	97.18
AVG IP COND 1B OUTLET T	103.28
AVG LP-HP COND XOVER T	93.55
	107.76

Description	ID #	Group #	Item #	Data Log Value	Units	Final Value	Units
TB RHT TEMP	TGFTA1115	8	1	1002.05	F	1002.05	F
TB RHT BOWL PRESS	SGJPT0049	8	2	574.12	PSIG	586.63	PSIA
HTR 6A EXTR TEMP	TEAPT0026	8	3	803.57	F	803.57	F
HTR 6A EXTR PRESS	TEAPT0017	8	4	219.86	PSIG	232.37	PSIA
HTR 6B EXTR TEMP	TEAPT0027	8	5	803.67	F	803.67	F
HTR 6B EXTR PRESS	TEAPT0018	8	6	220.56	PSIG	233.07	PSIA
HTR 5 & BFPT EXTR T	TEATE0157	8	7	626.61	F	626.61	F
HTR 5 & BFPT EXTR P	TEAPT0023	8	8	122.81	PSIG	135.32	PSIA
HTR 5 EXTR TEMP	TEATE0025	8	9	623.37	F	623.37	F
HTR 5 EXTR PRESS	TEAPT0016	8	10	122.96	PSIG	135.47	PSIA
BFPT 1A STM TEMP	TEATE0032	8	11	625.11	F	625.11	F
BFPT 1A STM PRESS	TEAPT0014	8	12	119.57	PSIG	132.08	PSIA
BFPT 1B STM TEMP	TEATE0033	9	1	624.86	F	624.86	F
BFPT 1B STM PRESS	TEAPT0015	9	2	119.72	PSIG	132.23	PSIA
BFPT SPEED	FWAKK0013	9	5	5240.77	RPM	5240.77	RPM
TSI BFPT A SPEED	FWATG0002	9	6	5358.89	RPM	5358.89	RPM
TSI BFPT B SPEED	FWATG0004	9	7	5237.50	RPM	5237.50	RPM
BFPT 1A 1ST STG P	FWAPT0228	9	8	87.05	PSIG	99.56	PSIA
BFPT 1B 1ST STG P	FWAPT0229	9	10	68.57	PSIG	81.08	PSIA
LP B EXTR TO HTR 4	TTEBTE0164	9	12	512.76	F	512.76	F
LP C EXTR TO HTR 4	TTEBTE0165	10	1	513.02	F	513.02	F
LP A EXTR TO HTR 4	TTEBTE0166	10	2	516.11	F	516.11	F
LP EXTR TO HTR 4 P	TEBPT0055	10	3	47.24	PSIG	59.75	PSIA
LP A EXTR TO HTR 3	TTEBTE0161	10	4	411.07	F	411.07	F
LP C EXTR TO HTR 3	TTEBTE0162	10	5	412.74	F	412.74	F
LP B EXTR TO HTR 3	TTEBTE0163	10	6	412.70	F	412.70	F
LP EXTR TO HTR 3 P	TEBPT0054	10	7	24.64	PSIG	37.15	PSIA
LP A EXTR TO HTR 2	TTEBTE0158	10	8	225.41	F	225.41	F
LP C EXTR TO HTR 2	TTEBTE0159	10	9	225.41	F	225.41	F
LP B EXTR TO HTR 2	TTEBTE0160	10	10	230.46	F	230.46	F
LP EXTR TO HTR 2 P	TEBPT0053	10	11	-1.57	PSIG	10.94	PSIA
LPA EXTR TO HTR 1A	TTEBTE0167	10	12	97.77	F	97.77	F
LPA EXTR TO HTR 1A	TTEBTE0168	11	1	159.21	F	159.21	F
LP HTR 1A PRESS	TEBPT0050	11	2	-7.92	PSIG	4.59	PSIA
STM SEAL HDR T	TGCTE0147	11	4	861.00	F	861.00	F
LPB EXTR TO HTR 1B	TTEBTE0169	11	6	159.54	F	159.54	F
LPB EXTR TO HTR 1B	TTEBTE0170	11	7	158.76	F	158.76	F
LP HTR 1B PRESS	TEBPT0051	11	8	-8.00	PSIG	4.51	PSIA
LPC EXTR TO HTR 1C	TTEBTE0171	11	9	0.00	F	0.00	F
LPC EXTR TO HTR 1C	TTEBTE0172	11	10	0.00	F	0.00	F
LP HTR 1C PRESS	TEBPT0052	11	11	-7.97	PSIG	4.54	PSIA
EXHAUST HOOD A T	TGATE0131	11	12	108.00	F	108.00	F
LP A EXHAUST PRESS	TGAPT0033	12	1	0.94	PSIA	1.91	INHGA
EXHAUST HOOD B T	TGATE0132	12	2	0.00	F	0.00	F
LP B EXHAUST PRESS	TGAPT0034	12	3	1.07	PSIA	2.18	INHGA
EXHAUST HOOD C T	TGATE0133	12	4	98.00	F	98.00	F
LP C EXHAUST PRESS	TGAPT0035	12	5	1.09	PSIA	2.22	INHGA
HP COND 1A EXH PRESS	TGAPT5001	12	8	2.88	INHGA	2.88	INHGA
IP COND 1B EXH PRESS	TGAPT5003	12	10	2.36	INHGA	2.36	INHGA
LP COND 1C EXH PRESS	COAXI110A	12	12	2.12	INHGA	2.12	INHGA

Description	ID #	Group #	Item #	Data Log Value	Units	Final Value	Units
HTR 8A DRAIN TEMP	TEDTE0185	13	1	489.27	F	489.27	F
HTR 8B DRAIN TEMP	TEDTE0186	13	4	487.34	F	487.34	F
HTR 7A DRAIN TEMP	TEDTE0183	13	7	403.22	F	403.22	F
HTR 7B DRAIN TEMP	TEDTE0184	13	10	403.04	F	403.04	F
HTR 6A DRAIN TEMP	TEDTE0181	14	1	351.63	F	351.63	F
HTR 6B DRAIN TEMP	TEDTE0182	14	4	352.44	F	352.44	F
HTR 4 DRAIN TEMP	TEDTE0037	14	7	270.72	F	270.72	F
HTR 3 DRAIN TEMP	TEDTE0036	14	8	205.07	F	205.07	F
HTR 2 DRAIN TEMP	TEDTE0035	14	9	164.47	F	164.47	F
FLASH TK DRAIN TEMP	TEDTE0038	14	10	156.84	F	156.84	F
DR CLR DRAIN TEMP	TEDTE0034	14	11	123.00	F	123.00	F
COND HOTWELL TEMP	HRATE0042	15	3	114.18	F	114.18	F
COND HOTWELL TEMP	HRATE0041	15	4	113.42	F	113.42	F
HOTWELL LEVEL-START	HRALT0001	15	5	37.00	IN		
HOTWELL LEVEL-END	HRALT0001	15	6	34.75	IN	-2.25	D IN
CYCLE MAKEUP FLOW	COAXI113A	15	7	-0.15	KPPH	-0.15	KPPH
COND PMP DISCH P	HRAPT0008	15	8	429.13	PSIG	441.64	PSIA
GLAND COND IN TEMP	HRATE0043	16	3	115.26	F	115.26	F
GLAND COND OUT TEMP	HRATE0044	16	4	115.86	F	115.86	F
CONDENSATE FLOW	COAXI114A	16	8	4866.81	KPPH	4866.81	KPPH
COND TO DR CLR	FWCTE0187	16	9	114.53	F	114.53	F
HTR 1 CONDS IN T	FWCTE0188	16	10	118.85	F	118.85	F
HTR 1A CONDS OUT T	FWCTE0189	16	11	155.19	F	155.19	F
HTR 1B CONDS OUT T	FWCTE0190	16	12	157.41	F	157.41	F
HTR 1C CONDS OUT T	FWCTE0191	17	1	156.67	F	156.67	F
HTR 2 CONDS IN T	FWCTE0192	17	2	157.46	F	157.46	F
HTR 2 CONDS OUT T	FWCTE0193	17	3	195.36	F	195.36	F
HTR 3 CONDS IN T	FWCTE0194	17	4	195.10	F	195.10	F
HTR 3 CONDS OUT T	FWCTE0195	17	5	263.00	F	263.00	F
HTR 4 CONDS IN T	FWCTE0196	17	6	263.10	F	263.10	F
HTR 4 CONDS OUT T	FWCTE0197	17	7	295.02	F	295.02	F
HTR 5 (DA) CONDS IN	FWCTE0198	17	8	295.00	F	295.00	F
HTR 5 (DA) PRESS	FWCPT0056	17	9	106.11	PSIG	118.62	PSIA
DA HTR STOR TK T	FWCTE0199	17	10	340.76	F	340.76	F
DA LEVEL-START	FWCLT0012	17	11	99.42	IN		
DA LEVEL-END	FWCLT0012	17	11	99.42	IN	0.00	D IN
DA PRESSURE	COAXI111A	18	2	107.36	PSIG	119.87	PSIA
DA OUTLET TEMP	FWATE0045	18	3	340.02	F	340.02	F
APH COIL OUT WTR T	COAXI127A	18	7	82.61	F	82.61	F
APH RETURN FLOW	COAXI115A	18	9	257.34	KPPH	257.34	KPPH
FGR RETURN WTR FLOW	CCDFT0069	18	11	121.42	GPM	60.68	KPPH
FGR RETURN WTR T	CCDTE0905	18	12	184.88	F	184.88	F
BFP 1A SUCTION T	FWATE0046	19	9	337.68	F	337.68	F
BFP 1B SUCTION T	FWATE0047	19	10	338.61	F	338.61	F
STBY BFP SUCTION T	FWATE0048	19	11	336.81	F	336.81	F
RHT DSUPHTR SPRAY T	SGJTE0060	19	12	103.84	F	103.84	F

Description	ID #	Group #	Item #	Data Log Value	Units	Final Value	Units
HP COND OUTLET T	HRCTE0399	44	7	107.67	F	107.67	F
HP COND OUTLET T	HRCTE0398	44	8	107.14	F	107.14	F
HP COND OUTLET T	HRCTE0397	44	9	107.01	F	107.01	F
HP COND OUTLET T	HRCTE0400	44	10	107.84	F	107.84	F

AVG COND INLET T	79.42
AVG IP COND 1A XOVER T	96.21
AVG IP COND 1B OUTLET T	103.22
AVG LP-HP COND XOVER T	92.28
AVG HP COND OUTLET T	106.94

R

PERFORMANCE TEST DATA
FOXBORO COMPUTER LOG

Test Point 5 Unit No. 2
Date FEB. 04, 1989
Start Time 9:50:41
Barometer 12.37 PSIA

Description	ID #	Group #	Item #	Data Log Value	Units	Final Value	Units
GENERATOR LOAD	TGBPK0022	1	4	885.75	MW	885.75	MW
TURBINE LOAD	TGFTA111	1	6	0.00	MW	0.00	MW
UNIT LOAD	COAXI027A	1	9	883.51	MW	883.51	MW
POWER FACTOR	TGFTG0023	2	1	0.99		0.99	
MAIN STEAM T	SGGTE004	3	11	999.12	F	999.12	F
MS TO BFPT T	SGGTE1152	3	12	922.42	F	922.42	F
BFPT 1A MS T	SGGTE0006	4	1	864.80	F	864.80	F
BFPT 1A MS T	SGGTE0007	4	2	820.98	F	820.98	F
MS PRESS	SGGPT0001	4	3	2403.73	PSIG	2416.10	PSIA
THROTTLE PRESS	COAXI012A	4	4	2427.39	PSIG	2439.76	PSIA
THROTTLE T	COAXI015A	4	8	999.52	F	999.52	F
MS PRESS	TGFTA1114	4	9	0.00	PSIA	0.00	PSIA
MS TEMP	TGFTA1113	4	10	0.00	F	0.00	F
STEAM FLOW (FW+SSF)	COAXI023A	4	12	6211.87	KPPH	6211.87	KPPH
TURBINE STM FLOW	COAXI024A	5	1	6207.40	KPPH	6207.40	KPPH
CV POSITION	TGFTG0007	5	2	83.90	PCT	83.90	PCT
FIRST STG PRESS	COAXI042A	5	3	1912.18	PSIG	1924.55	PSIA
FIRST STG TB PRESS	TGAPT0057	5	5	1809.00	PSIG	1821.37	PSIA
HTR 6A EXTR T	TEATE0030	5	6	792.95	F	792.95	F
HTR 8A EXTR PRESS	TEAPT0021	5	7	1050.13	PSIG	1062.50	PSIA
HTR 8B EXTR PRESS	TEAPT0022	5	8	1060.96	PSIG	1073.33	PSIA
TB COLD RHT T	SGJTE0024	5	9	622.72	F	622.72	F
TB COLD RHT PRESS	SGJPT0012	5	10	559.00	PSIG	571.37	PSIA
HTR 7A EXTR T	TEATE0028	5	11	620.34	F	620.34	F
HTR 7A EXTR PRESS	TEAPT0019	5	12	543.99	PSIG	556.36	PSIA
HTR 7B EXTR T	TEATE0029	6	1	621.22	F	621.22	F
HTR 7B EXTR PRESS	TEAPT0020	6	2	543.36	PSIG	555.73	PSIA
RHT DSUPHTR INLET T	SGJTE0023	6	3	622.25	F	622.25	F
RHT DSUPHTR INLET T	COAXI106A	6	4	619.49	F	619.49	F
RHT DSUPHTR FLOW	COAXI108A	6	6	0.00	KPPH	0.00	KPPH
HRH N TEMP	SGJTE1155	7	4	1003.08	F	1003.08	F
HRH S TEMP	SGJTE1156	7	5	1004.67	F	1004.67	F
TB N HRH PRESS	SGJPT0006	7	6	516.15	PSIG	528.52	PSIA
TB N HRH TEMP	SGJTE0013	7	7	1003.11	F	1003.11	F
TB RHT INLET TEMP	COAXI104A	7	8	1003.59	F	1003.59	F
TB S HRH PRESS	SGJPT0007	7	9	518.51	PSIG	530.88	PSIA
TB S HRH TEMP	SGJTE0016	7	10	1001.85	F	1001.85	F
TB RHT INLET TEMP	COAXI105A	7	11	1001.79	F	1001.79	F
TB RHT AVG INLET T	COAXI046A	7	12	1005.88	F	1005.88	F

Description	ID #	Group #	Item #	Data Log Value	Units	Final Value	Units
TB RHT TEMP	TGFTA1115	8	1	0.00	F	0.00	F
TB RHT BOWL PRESS	SGJPT0049	8	2	502.61	PSIG	514.98	PSIA
HTR 6A EXTR TEMP	TEAPT0026	8	3	801.35	F	801.35	F
HTR 6A EXTR PRESS	TEAPT0017	8	4	220.18	PSIG	232.55	PSIA
HTR 6B EXTR TEMP	TEAPT0027	8	5	798.62	F	798.62	F
HTR 6B EXTR PRESS	TEAPT0018	8	6	219.62	PSIG	231.99	PSIA
HTR 5 & BFPT EXTR T	TEATE0157	8	7	626.58	F	626.58	F
HTR 5 & BFPT EXTR P	TEAPT0023	8	8	111.12	PSIG	123.49	PSIA
HTR 5 EXTR TEMP	TEATE0025	8	9	623.10	F	623.10	F
HTR 5 EXTR PRESS	TEAPT0016	8	10	124.97	PSIG	137.34	PSIA
BFPT 1A STM TEMP	TEATE0032	8	11	623.90	F	623.90	F
BFPT 1A STM PRESS	TEAPT0014	8	12	106.96	PSIG	119.33	PSIA
BFPT 1B STM TEMP	TEATE0033	9	1	624.62	F	624.62	F
BFPT 1B STM PRESS	TEAPT0015	9	2	107.97	PSIG	120.34	PSIA
BFPT SPEED	FWAKK0013	9	5	0.00	RPM	0.00	RPM
TSI BFPT A SPEED	FWATG0002	9	6	5295.00	RPM	5295.00	RPM
TSI BFPT B SPEED	FWATG0004	9	7	5456.87	RPM	5456.87	RPM
BFPT 1A 1ST STG P	FWAPT0228	9	8	62.84	PSIG	75.21	PSIA
BFPT 1B 1ST STG P	FWAPT0229	9	10	0.00	PSIG	12.37	PSIA
LP B EXTR TO HTR 4	TTEBTE0164	9	12	515.47	F	515.47	F
LP C EXTR TO HTR 4	TTEBTE0165	10	1	486.06	F	486.06	F
LP A EXTR TO HTR 4	TTEBTE0166	10	2	518.00	F	518.00	F
LP EXTR TO HTR 4 P	TEBPT0055	10	3	45.45	PSIG	57.82	PSIA
LP A EXTR TO HTR 3	TTEBTE0161	10	4	409.40	F	409.40	F
LP C EXTR TO HTR 3	TTEBTE0162	10	5	417.14	F	417.14	F
LP B EXTR TO HTR 3	TTEBTE0163	10	6	412.56	F	412.56	F
LP EXTR TO HTR 3 P	TEBPT0054	10	7	24.44	PSIG	36.81	PSIA
LP A EXTR TO HTR 2	TTEBTE0158	10	8	228.44	F	228.44	F
LP C EXTR TO HTR 2	TTEBTE0159	10	9	232.20	F	232.20	F
LP B EXTR TO HTR 2	TTEBTE0160	10	10	229.82	F	229.82	F
LP EXTR TO HTR 2 P	TEBPT0053	10	11	-3.43	PSIG	8.94	PSIA
LPA EXTR TO HTR 1A	TTEBTE0167	10	12	0.00	F	0.00	F
LPA EXTR TO HTR 1A	TTEBTE0168	11	1	152.31	F	152.31	F
LP HTR 1A PRESS	TEBPT0050	11	2	-6.95	PSIG	5.42	PSIA
STM SEAL HDR T	TGCTE0147	11	4	639.00	F	639.00	F
LPB EXTR TO HTR 1B	TTEBTE0169	11	6	157.46	F	157.46	F
LPB EXTR TO HTR 1B	TTEBTE0170	11	7	89.49	F	89.49	F
LP HTR 1B PRESS	TEBPT0051	11	8	-10.07	PSIG	2.30	PSIA
LPC EXTR TO HTR 1C	TTEBTE0171	11	9	162.66	F	162.66	F
LPC EXTR TO HTR 1C	TTEBTE0172	11	10	161.01	F	161.01	F
LP HTR 1C PRESS	TEBPT0052	11	11	-6.99	PSIG	5.38	PSIA
EXHAUST HOOD A T	TGATE0131	11	12	105.00	F	105.00	F
LP A EXHAUST PRESS	TGAPT0033	12	1	1.05	PSIA	2.14	INHGA
EXHAUST HOOD B T	TGATE0132	12	2	0.00	F	0.00	F
LP B EXHAUST PRESS	TGAPT0034	12	3	0.81	PSIA	1.65	INHGA
EXHAUST HOOD C T	TGATE0133	12	4	98.00	F	98.00	F
LP C EXHAUST PRESS	TGAPT0035	12	5	0.78	PSIA	1.59	INHGA
HP COND 1A EXH PRESS	TGAPT5001	12	8	2.88	INHGA	2.88	INHGA
IP COND 1B EXH PRESS	TGAPT5003	12	10	2.29	INHGA	2.29	INHGA
LP COND 1C EXH PRESS	COAXI110A	12	12	2.04	INHGA	2.04	INHGA

Description	ID #	Group #	Item #	Data Log Value	Units	Final Value	Units
HTR 8A DRAIN TEMP	TEDTE0185	13	1	488.47	F	488.47	F
HTR 8B DRAIN TEMP	TEDTE0186	13	4	487.98	F	487.98	F
HTR 7A DRAIN TEMP	TEDTE0183	13	7	404.81	F	404.81	F
HTR 7B DRAIN TEMP	TEDTE0184	13	10	403.84	F	403.84	F
HTR 6A DRAIN TEMP	TEDTE0181	14	1	352.76	F	352.76	F
HTR 6B DRAIN TEMP	TEDTE0182	14	4	355.48	F	355.48	F
HTR 4 DRAIN TEMP	TEDTE0037	14	7	269.81	F	269.81	F
HTR 3 DRAIN TEMP	TEDTE0036	14	8	207.31	F	207.31	F
HTR 2 DRAIN TEMP	TEDTE0035	14	9	167.52	F	167.52	F
FLASH TK DRAIN TEMP	TEDTE0038	14	10	159.20	F	159.20	F
DR CLR DRAIN TEMP	TEDTE0034	14	11	124.83	F	124.83	F
COND HOTWELL TEMP	HRATE0042	15	3	112.69	F	112.69	F
COND HOTWELL TEMP	HRATE0041	15	4	112.76	F	112.76	F
HOTWELL LEVEL-START	HRALT0001	15	5	39.58	IN		
HOTWELL LEVEL-END	HRALT0001	15	6	0.00	IN	-39.58	D IN
CYCLE MAKEUP FLOW	COAXI113A	15	7	-0.62	KPPH	-0.62	KPPH
COND PMP DISCH P	HRAPT0008	15	8	425.04	PSIG	437.41	PSIA
GLAND COND IN TEMP	HRATE0043	16	3	113.64	F	113.64	F
GLAND COND OUT TEMP	HRATE0044	16	4	115.05	F	115.05	F
CONDENSATE FLOW	COAXI114A	16	8	4856.88	KPPH	4856.88	KPPH
COND TO DR CLR	FWCTE0187	16	9	116.52	F	116.52	F
HTR 1 CONDS IN T	FWCTE0188	16	10	123.01	F	123.01	F
HTR 1A CONDS OUT T	FWCTE0189	16	11	159.89	F	159.89	F
HTR 1B CONDS OUT T	FWCTE0190	16	12	158.61	F	158.61	F
HTR 1C CONDS OUT T	FWCTE0191	17	1	159.66	F	159.66	F
HTR 2 CONDS IN T	FWCTE0192	17	2	159.92	F	159.92	F
HTR 2 CONDS OUT T	FWCTE0193	17	3	197.25	F	197.25	F
HTR 3 CONDS IN T	FWCTE0194	17	4	197.40	F	197.40	F
HTR 3 CONDS OUT T	FWCTE0195	17	5	262.43	F	262.43	F
HTR 4 CONDS IN T	FWCTE0196	17	6	262.26	F	262.26	F
HTR 4 CONDS OUT T	FWCTE0197	17	7	292.27	F	292.27	F
HTR 5 (DA) CONDS IN	FWCTE0198	17	8	292.83	F	292.83	F
HTR 5 (DA) PRESS	FWCPT0056	17	9	108.02	PSIG	120.39	PSIA
DA HTR STOR TK T	FWCTE0199	17	10	340.32	F	340.32	F
DA LEVEL-START	FWCLT0012	17	11	98.67	IN		
DA LEVEL-END	FWCLT0012	17	11	99.14	IN	0.47	D IN
DA PRESSURE	COAXI111A	18	2	108.49	PSIG	120.86	PSIA
DA OUTLET TEMP	FWATE0045	18	3	341.43	F	341.43	F
APH COIL OUT WTR T	COAXI127A	18	7	94.38	F	94.38	F
APH RETURN FLOW	COAXI115A	18	9	237.02	KPPH	237.02	KPPH
FGR RETURN WTR FLOW	CCDFT0069	18	11	248.57	GPM	124.22	KPPH
FGR RETURN WTR T	CCDTE0905	18	12	196.18	F	196.18	F
BFP 1A SUCTION T	FWATE0046	19	9	338.90	F	338.90	F
BFP 1B SUCTION T	FWATE0047	19	10	339.71	F	339.71	F
STBY BFP SUCTION T	FWATE0048	19	11	338.69	F	338.69	F
RHT DSUPHTR SPRAY T	SGJTE0060	19	12	241.54	F	241.54	F

Description	ID #	Group #	Item #	Data Log Value	Units	Final Value	Units
RHT DSUPHTR SPRAY F	COAXI108A	20	2	0.00	KPPH	0.00	KPPH
BFP 1A DISCH T	FWATE0049	20	3	346.12	F	346.12	F
BFP 1A DISCH PRESS	FWAPT0029	20	4	2877.50	PSIG	2889.87	PSIA
BFP 1B DISCH T	FWATE0050	20	7	346.55	F	346.55	F
BFP 1B DISCH PRESS	FWAPT0030	20	8	2886.00	PSIG	2898.37	PSIA
SUPHTR SPRAY WTR T	COAXI026A	21	4	328.19	F	328.19	F
SUPHTR SPRAY WTR F	COAXI022A	21	5	0.01	KPPH	0.01	KPPH
HP HTR 6 INLET T	FWATE0052	21	6	345.25	F	345.25	F
HP HTR 6 INLET P	FWAPT0250	21	7	2859.19	PSIG	2871.56	PSIA
HP HTR 7A INLET T	FWATE0053	21	10	394.95	F	394.95	F
HP HTR 7B INLET T	FWATE0054	21	11	395.13	F	395.13	F
HP HTR 8A INLET T	FWATE0055	21	12	478.65	F	478.65	F
HP HTR 8B INLET T	FWATE0056	22	1	478.43	F	478.43	F
HP HTR 8A OUTLET T	FWATE0059	22	2	551.87	F	551.87	F
HP HTR 8B OUTLET T	FWATE0154	22	3	548.88	F	548.88	F
ECONOMIZER INLET T	FWATE0990	22	4	551.09	F	551.09	F
ECONOMIZER INLET T	COAXI025A	22	5	549.79	F	549.79	F
ECONOMIZER INLET P	FWAPT0032	22	6	2769.95	PSIG	2782.32	PSIA
FEEDWTR FLOW	COAXI021A	22	8	6149.02	KPPH	6149.02	KPPH
AMBIENT TEMP	INAKK0531	26	1	29.26	F	29.26	F
BAROMETRIC PRESS	INAPT0227	26	2	25.26	INHG	12.41	PSIA
IP COND 1B INLET T	HRCTE0377	42	5	78.52	F	78.52	F
IP COND 1B INLET T	HRCTE0378	42	6	78.61	F	78.61	F
LP COND 1C INLET T	HRCTE0379	42	7	78.78	F	78.78	F
LP COND 1C INLET T	HRCTE0380	42	8	78.71	F	78.71	F
IP COND 1A XOVER T	HRCTE1215	42	10	96.23	F	96.23	F
IP COND 1B XOVER T	HRCTE1216	42	11	96.16	F	96.16	F
IP COND 1B OUTLET T	HRCTE0393	42	12	101.27	F	101.27	F
IP COND 1B OUTLET T	HRCTE0394	43	1	101.78	F	101.78	F
IP COND 1B OUTLET T	HRCTE0395	43	2	101.58	F	101.58	F
IP COND 1B OUTLET T	HRCTE0396	43	3	100.56	F	100.56	F
IP COND 1B OUTLET T	HRCTE0389	43	4	102.75	F	102.75	F
IP COND 1B OUTLET T	HRCTE0390	43	5	103.77	F	103.77	F
IP COND 1B OUTLET T	HRCTE0391	43	6	103.26	F	103.26	F
IP COND 1B OUTLET T	HRCTE0392	43	7	103.99	F	103.99	F
LP-HP COND XOVER T	HRCTE0382	43	8	92.10	F	92.10	F
LP-HP COND XOVER T	HRCTE0384	43	9	91.85	F	91.85	F
LP-HP COND XOVER T	HRCTE0383	43	10	92.96	F	92.96	F
LP-HP COND XOVER T	HRCTE0386	43	11	93.48	F	93.48	F
LP-HP COND XOVER T	HRCTE0388	43	12	93.80	F	93.80	F
LP-HP COND XOVER T	HRCTE0387	44	1	91.65	F	91.65	F
LP-HP COND XOVER T	HRCTE0385	44	2	91.39	F	91.39	F
HP COND OUTLET T	HRCTE0401	44	3	107.23	F	107.23	F
HP COND OUTLET T	HRCTE0402	44	4	106.89	F	106.89	F
HP COND OUTLET T	HRCTE0403	44	5	107.63	F	107.63	F
HP COND OUTLET T	HRCTE0404	44	6	108.14	F	108.14	F

Description	ID #	Group #	Item #	Data Log Value	Units	Final Value	Units
HP COND OUTLET T	HRCTE0399	44	7	106.93	F	106.93	F
HP COND OUTLET T	HRCTE0398	44	8	106.23	F	106.23	F
HP COND OUTLET T	HRCTE0397	44	9	105.86	F	105.86	F
HP COND OUTLET T	HRCTE0400	44	10	106.34	F	106.34	F

AVG COND INLET T	93.0925
AVG IP COND 1A XOVER T	96.20
AVG IP COND 1B OUTLET T	102.37
AVG LP-HP COND XOVER T	92.46
AVG HP COND OUTLET T	106.91

INTERMOUNTAIN POWER SERVICE CORPORATION
PERFORMANCE EVALUATION TEST REPORT
UNIT NO. 2

APPENDIX E

GE Thermocouple Calibrations

Calibration Sheets E1-16

CUSTOMER: K. MARKS - LST
MANUFACTURER: GE
DESCRIPTION: TURBINE TEST THERMOCOUPLES
MODEL #: TYPE E
SERIAL #: VARIOUS
CUSTOMER I.D. #: NONE
RANGE: 200 TO 1050 DEGREES FAHRENHEIT
CAP #: NONE

JOB #: 66317 - 002

CALIBRATED BY: M. GALARNEAU
DATE: 8/12/86

KAYE REFERENCE JUNCTION SERIAL NO. 2822

THERMOCOUPLE MILLIVOLTS

TEMP F	IMM IN.	1171	1175	1178	1182	1185	1186	1187	1192	[illegible]	1208
200.0	8	5.866	5.872	5.870	5.874	5.867	5.873	5.872	5.874	5.873	5.879
	12	5.868	5.873	5.867	5.873	5.868	5.871	5.873	5.875	5.873	5.876
400.0	8	13.712	13.745	13.734	13.746	13.702	13.731	13.718	13.753	13.738	13.774
	12	13.739	13.736	13.734	13.732	13.735	13.730	13.743	13.737	13.730	13.750
600.0	8	22.242	22.240	22.230	22.253	22.228	22.231	22.252	22.266	22.234	22.298
	12	22.224	22.225	22.221	22.221	22.215	22.216	22.234	22.228	22.217	22.245
800.0	8	31.096	31.065	31.048	31.115	31.070	31.054	31.099	31.105	31.077	31.139
	12	31.050	31.037	31.049	31.054	31.030	31.042	31.060	31.042	31.037	31.074
900.0	8	35.561	35.556	35.491	35.568	35.567	35.545	35.584	35.610	35.517	35.639
	12	35.554	35.521	35.510	35.503	35.525	35.501	35.569	35.525	35.500	35.559
1000.0	8	40.037	40.016	39.973	40.035	40.037	40.016	40.050	40.070	40.003	40.089
	12	40.002	40.019	39.981	39.970	39.980	39.978	40.014	40.027	39.971	40.042
1050.0	8	42.284	42.295	42.252	42.285	42.263	42.258	42.279	42.305	42.246	42.347
	12	42.245	42.242	42.239	42.235	42.218	42.234	42.263	42.239	42.234	42.263

THE STANDARDS USED DURING THIS CALIBRATION ARE:

1 - PLATINUM RESISTANCE THERMOMETER STD - P51261
1 - TEMPERATURE RESISTANCE BRIDGE STD - P40786
1 - KEITHLEY DIGITAL MULTIMETER STD - 0559

THESE COMPANY STANDARDS ARE STANDARDIZED BY REFERENCE TO NATIONAL BUREAU OF STANDARDS CERTIFICATIONS: SIS-R-861-PAGE 1

A-14-D

GENERAL ELECTRIC

APPARATUS SERVICE BUSINESS DIVISION

LOCATION—DATE

Schenectady, NY March 15, 1984

COPIES:

DIAL COMM NUMBER

8*235-7604

SUBJECT

J.T. 82723 Chromel Constantan Thermocouple Calibration

Mrs. Ruth Tyndall
Building 41-Room 310

Reference Junction Kaye Instrument Serial No. 6665.

Temp. °F	Imm. In.	Thermocouple Millivolts 1228	[redacted]	1236	1241	1229	1230	1232	1239
176.5	8	5.00	5.01	5.00	5.00	5.00	5.00	5.00	5.01
	12	5.00	5.01	5.00	5.00	5.00	5.01	5.00	5.00
430.2	8	14.99	15.02	15.01	15.00	15.01	15.01	15.04	14.99
	12	14.99	15.02	14.98	14.99	15.01	14.98	15.02	14.98
662.9	8	24.96	25.01	25.01	25.00	25.01	25.01	25.08	24.95
	12	24.96	25.03	24.99	25.00	25.00	25.01	25.08	24.93
775.7	8	29.95	30.03	30.01	29.98	30.00	30.00	30.07	29.94
	12	29.95	30.03	30.01	29.98	29.99	29.99	30.07	29.93
887.5	8	34.95	35.04	34.99	34.97	34.99	34.99	35.06	34.96
	12	34.93	35.01	35.00	34.98	35.00	35.00	35.07	34.96
998.8	8	39.93	40.01	39.94	39.94	39.95	39.95	40.03	39.92
	12	39.92	40.01	39.99	39.97	39.99	39.99	40.07	39.96
1049.9	8	42.22	42.30	42.23	42.21	42.23	42.23	42.31	42.21
	12	42.21	42.30	42.29	42.26	42.28	42.28	42.36	42.24

The Standards used during this calibration are:

1- Platinum Resistance Thermometer STD-0995
1- Precision Potentiometer STD-0112
1- Mueller Temperature Bridge STD-0459

These Company Standards are standardized by reference to National Bureau of Standards certifications: SIS-R-841 - Page 1.

R.J. Pelletier
Repair and Calibration
UPSTATE NY INSTRUMENTATION SERVICES
Building 28 - Room 512

CUSTOMER: K. MARKS - LST
MANUFACTURER: GE
DESCRIPTION: TURBINE TEST THERMOCOUPLES
MODEL #: TYPE E
SERIAL #: VARIOUS
CUSTOMER I.D. #: NONE
RANGE: 200 TO 1050 DEGREES FAHRENHEIT
CAP #: NONE

JOB #: 66317 - 001

CALIBRATED BY: M. GALARNEAU
DATE: 08/12/86

KAYE REFERENCE JUNCTION SERIAL NO. 2822

THERMOCOUPLE MILLIVOLTS

TEMP F	IMM IN.	1218	1220	1221	1235	1237	[redacted]	[redacted]	1351	1352	1353
200.0	8	5.881	5.875	5.879	5.876	5.878	5.880	5.872	5.873	5.870	5.869
	12	5.880	5.876	5.871	5.874	5.881	5.878	5.870	5.869	5.867	5.868
400.0	8	13.757	13.726	13.778	13.669	13.776	13.758	13.793	13.795	13.786	13.784
	12	13.748	13.740	13.750	13.719	13.755	13.735	13.781	13.771	13.774	13.776
600.0	8	22.272	22.236	22.297	22.143	22.291	22.255	22.327	22.330	22.316	22.313
	12	22.234	22.228	22.225	22.173	22.240	22.222	22.292	22.279	22.285	22.284
800.0	8	31.070	31.093	31.147	30.950	31.125	31.088	31.211	31.219	31.201	31.190
	12	31.047	31.041	31.044	30.981	31.049	31.041	31.155	31.130	31.138	31.140
900.0	8	35.555	35.557	35.638	35.391	35.592	35.582	35.728	35.711	35.690	35.688
	12	35.492	35.546	35.508	35.485	35.524	35.521	35.643	35.619	35.632	35.628
1000.0	8	40.006	40.049	40.130	39.851	40.060	40.025	40.224	40.215	40.217	40.218
	12	39.965	39.990	39.981	39.913	40.017	39.997	40.197	40.111	40.124	40.116
1050.0	8	42.228	42.301	42.358	42.071	42.281	42.263	42.462	42.460	42.460	42.461
	12	42.228	42.230	42.208	42.145	42.235	42.223	42.377	42.358	42.360	42.356

THE STANDARDS USED DURING THIS CALIBRATION ARE:

1 - PLATINUM RESISTANCE THERMOMETER STD - P51261
1 - TEMPERATURE RESISTANCE BRIDGE STD - P40786
1 - KEITHLEY DIGITAL MULTIMETER STD - 0559

THESE COMPANY STANDARDS ARE STANDARDIZED BY REFERENCE TO NATIONAL BUREAU OF STANDARDS CERTIFICATIONS: SIS-R-861-PAGE 1

GENERAL ELECTRIC

INTEGRATED COMMUNICATION SERVICES DEPARTMENT
GENERAL ELECTRIC COMPANY • BLDG. 28, ROOM 500 • SCHENECTADY, NEW YORK 12345 • (518) 385-5108

December 17, 1986
J.T. 66350-001 Chromel Constantan Thermocouple Calibration
General Electric Company
Building 55 - Room 209
Attn: Paul Bahrman
Reference Junction Kaye Instrument Serial No. 6665.

THERMOCOUPLE MILLIVOLTS

TEMP °F	IMM. In.	1030	1133	1188	1137	1241	1251	1143	1136
176.5	8	5.00	5.00	5.00	5.00	5.00	5.01	5.01	5.00
	12	5.00	4.99	5.00	5.00	5.01	5.01	5.01	5.00
430.2	8	15.01	14.99	15.00	14.99	15.00	15.01	15.01	14.99
	12	15.01	14.93	15.01	15.00	15.03	15.02	15.04	15.01
662.9	8	25.03	24.97	25.00	24.96	24.98	24.99	25.00	24.96
	12	25.02	24.84	25.00	24.97	25.02	25.00	25.04	24.96
775.7	8	30.04	29.94	30.03	29.98	29.95	29.98	30.02	29.94
	12	30.04	29.99	30.00	29.93	29.99	29.97	30.02	29.96
887.5	8	35.03	34.94	35.04	34.96	34.94	34.98	35.00	34.95
	12	35.04	39.97 ~~34.97~~	35.00	34.89	34.98	34.95	35.02	34.94
998.8	8	40.06	39.91	40.03	39.93	39.91	39.94	39.97	39.92
	12	40.08	39.97	40.03	39.93	39.98	39.95	40.05	39.95

The Standards used during this calibration are:

1 - Platinum Resistance Thermometer STD - 0576
1 - Mueller Temperature Bridge STD - 0951
1 - Keithley Digital Multimeter STD - 0559

These Company Standards are standardized by reference to National Bureau of Standards certifications: SIS-R-861-Page 18

Robert A. Culver

* typo. should be 34.97 per Bob Culver 1/19/87

Repair and Calibration
UPSTATE NY INSTRUMENTATION SERVICES
Building 28 - Room 512
66350-001-8

GE Computer Service

NE RIVER ROAD, BUILDING 28 - 500 o SCHENECTADY, NEW YORK 12345 o (518) 385-9228

October 27, 1987
J.T. 66614-001 Chromel Constantan Thermocouple Calibration
General Electric Company
Building 55 - Room 212
Attn: Paul Bahrman
Reference Juction Kaye Instrument Serial No. 6665
THERMOCOUPLE MILLIVOLTS

TEMP F	IMM. In.	1330	1280	1163	1225	1204	1272	1262	1180
176.5	8	5.02	5.02	5.00	5.00	5.00	5.02	5.02	5.00
	12	5.00	5.01	5.00	5.00	5.00	5.01	5.01	5.00
430.2	8	15.05	15.04	14.99	14.99	15.00	15.05	15.05	14.98
	12	15.01	15.03	15.00	15.00	15.01	15.04	15.04	14.98
662.9	8	25.18	25.17	25.08	25.06	25.07	25.17	25.17	25.05
	12	25.14	25.15	25.11	25.11	25.12	25.17	25.18	25.08
775.7	8	30.13	30.14	30.00	29.95	29.97	30.10	30.10	29.96
	12	30.09	30.05	29.99	29.99	30.00	30.07	30.08	29.98
687.5	8	35.15	35.15	35.03	34.95	34.98	35.12	35.11	34.96
	12	35.07	35.05	35.01	34.98	35.00	35.08	35.09	34.97
998.8	8	40.18	40.16	40.01	39.93	39.94	40.13	40.12	39.94
	12	40.10	40.06	40.02	39.98	39.99	40.10	40.11	39.98

The Standards used during this calibration are:

1 - Platinum Resistance Thermometer STD - 0499
1 - Keithley Digital Multimeter STD - 0559
1 - Mueller Temperature Bridge STD - 0459

These Company Standards are standardized by reference to National Bureau of Standards certifications: SIS-R-871-Page 39

Robert A. Culver
Robert A. Culver
Quality Assurance
Computer Service
66614-001-39

A GE RCA Enterprise

CUSTOMER:	GE-I&SS	JOB #:	66683-001
CONTACT:	PAUL BAHRMANN	CALIBRATED BY:	P. MORLEY
LOCATION:	BLDG. 55-239	DATE:	7/21/88
MANUFACTURER:	GENERAL ELECTRIC		
DESCRIPTION:	TEST THERMOCOUPLES		
MODEL #:	TYPE E	AMBIENT TEMP:	72 DEG. F
SERIAL #:	SEE BELOW	RELATIVE HUMIDITY:	40 %
CUSTOMER REF #:	95X084002001297X1005		
RANGE:	176.5 TO 998.8 DEGREES FAHRENHEIT		

THERMOCOUPLE MILLIVOLTS

REFERENCED @ 32 F WITH KAYE REFERENCE SYSTEM NO. 6665

TEMP F	IMM IN.	1291	1200	1200	1084	1066	1082	1041	
176.5	8	5.03	5.02	5.02	5.02	5.02	5.02	4.99	
	12	5.02	5.01	5.02	5.02	5.02	5.02	5.00	
430.2	8	15.06	15.05	15.05	15.05	15.04	15.05	15.00	
	12	15.06	15.05	15.05	15.04	15.06	15.06	14.97	
662.9	8	25.11	25.10	25.09	25.09	25.08	25.08	24.99	
	12	25.10	25.09	25.09	25.08	25.08	25.08	24.98	
775.7	8	30.11	30.11	30.10	30.10	30.10	30.10	30.00	
	12	30.12	30.11	30.10	30.10	30.11	30.10	30.00	
887.5	8	35.15	35.14	35.12	35.09	35.09	35.09	35.02	
	12	35.13	35.12	35.12	35.08	35.10	35.08	34.99	
998.8	8	40.15	40.14	40.12	40.08	40.10	40.08	40.04	
	12	40.15	40.14	40.14	40.07	40.10	40.07	40.03	

THE STANDARDS USED DURING THIS CALIBRATION ARE:

1 - PLATINUM RESISTANCE THERMOMETER	STD -	0576
1 - MUELLER TEMPERATURE BRIDGE	STD -	0459
1 - KEITHLEY DIGITAL MULTIMETER	STD -	0559

THESE COMPANY STANDARDS ARE STANDARDIZED BY REFERENCE TO NATIONAL BUREAU OF STANDARDS CERTIFICATIONS: SIS-R-881-PAGE 78

GE Computer Service

ONE RIVER ROAD, BUILDING 28 - 500 o SCHENECTADY, NEW YORK 12345 o (518) 385-9228

NOVEMBER 9, 1987
J.T. 66615-001 Chromel Constantan Thermocouple Calibration
General Electric Company
Building 55 - Room 212
Attn: Paul Bahrman
Reference Juction Kaye Instrument Serial No. 6665
THERMOCOUPLE MILLIVOLTS

TEMP F	IMM. In.	1165	1037	1339	1229	1035	1299	1110	1283
176.5	8	4.99	5.00	5.02	5.00	4.99	5.01	4.99	5.01
	12	4.99	4.99	5.00	5.00	4.99	5.01	4.99	5.01
430.2	8	14.98	15.00	15.07	15.00	14.99	15.08	15.00	15.06
	12	14.99	15.00	15.05	15.02	15.00	15.08	15.01	15.06
662.9	8	24.95	24.99	25.08	24.98	24.97	25.09	24.97	25.07
	12	24.99	25.02	25.06	25.03	25.02	25.11	25.02	25.10
775.7	8	29.93	30.02	30.13	29.96	30.00	30.13	29.97	30.11
	12	29.97	30.01	30.04	30.00	30.00	30.10	30.00	30.11
887.5	8	34.94	35.05	35.16	34.98	35.03	35.16	34.98	35.11
	12	34.96	35.01	35.05	34.99	35.01	35.11	34.99	35.11
998.8	8	39.94	40.05	40.19	39.95	40.04	40.18	39.96	40.12
	12	39.97	40.05	40.04	39.99	40.04	40.13	39.98	40.11

The Standards used during this calibration are:

1 - Platinum Resistance Thermometer STD - 0499
1 - Keithley Digital Multimeter STD - 0559
1 - Mueller Temperature Bridge STD - 0459

These Company Standards are standardized by reference to National Bureau of Standards certifications: SIS-R-871-Page 45

Robert A. Culver
Ouality Assurance
Computer Service
66615-001-45

CUSTOMER:	GE-I&SS	JOB #:	66683-001
CONTACT:	PAUL BAHRMANN	CALIBRATED BY:	P. MORLEY
LOCATION:	BLDG. 55-239	DATE:	7/14/88
MANUFACTURER:	GENERAL ELECTRIC		
DESCRIPTION:	TEST THERMOCOUPLES		
MODEL #:	TYPE E	AMBIENT TEMP:	72 DEG. F
SERIAL #:	SEE BELOW	RELATIVE HUMIDITY:	40 %
CUSTOMER REF #:	95X084002001297X1005		
RANGE:	176.5 TO 998.8 DEGREES FAHRENHEIT		

THERMOCOUPLE MILLIVOLTS

REFERENCED @ 32 F WITH KAYE REFERENCE SYSTEM NO. 6665

TEMP F	IMM IN.	[redacted]	1069	1081	[redacted]	[redacted]	1196	1072	
176.5	8	5.01	5.01	5.01	5.01	5.01	4.99	5.01	
	12	5.00	5.01	5.01	5.00	5.00	4.98	5.01	
430.2	8	15.04	15.06	15.05	15.07	15.07	14.99	15.04	
	12	15.06	15.06	15.04	15.06	15.06	14.99	15.04	
662.9	8	25.03	25.07	25.03	25.09	25.09	24.97	25.03	
	12	25.07	25.08	25.04	25.08	25.10	24.97	25.04	
775.7	8	30.04	30.08	30.04	30.10	30.13	29.97	30.03	
	12	30.08	30.08	30.03	30.10	30.12	29.96	30.05	
887.5	8	35.04	35.05	35.02	35.09	35.13	34.95	35.02	
	12	35.04	35.09	35.03	35.13	35.14	34.97	35.06	
998.8	8	40.02	40.05	40.01	40.11	40.15	39.95	40.01	
	12	40.04	40.08	40.02	40.14	40.16	40.00	40.06	

THE STANDARDS USED DURING THIS CALIBRATION ARE:

1 - PLATINUM RESISTANCE THERMOMETER	STD -	0576
1 - MUELLER TEMPERATURE BRIDGE	STD -	0459
1 - KEITHLEY DIGITAL MULTIMETER	STD -	0559

THESE COMPANY STANDARDS ARE STANDARDIZED BY REFERENCE TO NATIONAL BUREAU OF STANDARDS CERTIFICATIONS: SIS-R-881-PAGE 74

GE Computer Service

ONE RIVER ROAD, BUILDING 28 - 500 o SCHENECTADY, NEW YORK 12345 o (518) 385-9228

July 30, 1987

J.T. 66614-001 Chromel Constantan Thermocouple Calibration
General Electric Company
Building 55 - Room 209
Attn: Paul Bahrman
Reference Juction Kaye Instrument Serial No. 6665

THERMOCOUPLE MILLIVOLTS

TEMP °F	IMM. In.	645	1087	1101	[redacted]	1099	1111	1107	1029
176.5	8	5.02	5.03	5.02	5.03	5.03	5.02	5.01	5.00
	12	5.02	5.02	5.00	5.03	5.01	5.01	5.00	5.00
430.2	8	15.03	15.05	14.99	15.06	15.05	15.01	14.97	14.98
	12	15.02	15.02	14.97	15.04	15.02	15.00	14.97	14.98
662.9	8	25.04	25.10	24.98	25.11	25.08	25.03	24.96	25.00
	12	25.03	25.06	25.00	25.08	25.06	25.03	24.96	24.99
775.7	8	30.06	30.09	29.97	30.15	30.07	30.02	29.95	30.00
	12	30.05	30.07	30.00	30.13	30.10	30.03	29.97	30.01
887.5	8	35.07	35.10	34.96	35.15	35.07	34.99	34.93	35.00
	12	35.07	35.14	35.02	35.15	35.13	34.99	34.99	35.03
998.8	8	40.06	40.12	39.95	40.18	40.10	40.00	39.94	40.02
	12	40.05	40.13	40.01	40.16	40.12	40.03	40.00	40.03

The Standards used during this calibration are:

1 - Platinum Resistance Thermometer STD - 0576
1 - Mueller Temperature Bridge STD - 0959
1 - Keithley Digital Multimeter STD - 0559

These Company Standards are standardized by reference to National Bureau of Standards certifications: SIS-R-871-Page 31

Robert A. Calver

Repair and Calibration
UPSTATE NY INSTRUMENTATION SERVICES
Building 28 - Room 512

66614-001-31

GE Computer Service

ONE RIVER ROAD, BUILDING 28 - 500 o SCHENECTADY, NEW YORK 12345 o (518) 385-9228

NOVEMBER 11, 1987
J.T. 66615-001 Chromel Constantan Thermocouple Calibration
General Electric Company
Building 55 - Room 212
Attn: Paul Bahrman
Reference Juction Kaye Instrument Serial No. 6665
THERMOCOUPLE MILLIVOLTS

TEMP F	IMM. In.	1174	1325	1331	1158	1176	1048	1290	1097
176.5	8	4.99	5.01	5.01	4.98	4.99	4.98	5.01	5.00
	12	4.99	5.00	5.00	4.99	4.98	4.99	5.01	5.01
430.2	8	14.97	15.05	15.06	14.97	14.98	14.97	15.06	15.04
	12	15.00	15.05	15.05	14.99	15.00	14.99	15.07	15.06
662.9	8	24.95	25.08	25.08	24.95	24.97	24.97	25.08	25.04
	12	24.98	25.05	25.05	24.97	24.89	25.00	25.08	25.07
775.7	8	29.92	30.12	30.13	29.95	29.94	29.99	30.11	30.05
	12	29.96	30.07	30.08	29.96	29.92	29.99	30.08	30.06
87.5	8	34.93	35.13	35.15	34.94	34.96	35.01	35.12	35.06
	12	34.98	35.11	35.11	34.98	34.92	35.02	35.11	35.09
998.8	8	39.99	40.16	40.18	39.91	39.93	40.00	40.14	40.04
	12	39.97	40.12	40.12	39.97	39.98	40.03	40.12	40.09

The Standards used during this calibration are:

1 - Platinum Resistance Thermometer STD - 0499
1 - Keithley Digital Multimeter STD - 0559
1 - Mueller Temperature Bridge STD - 0459

These Company Standards are standardized by reference to National Bureau of Standards certifications: SIS-R-871-Page 46

Robert A. Culver
Quality Assurance
Computer Service
66615-001-46

GENERAL ELECTRIC

GE COMPUTER SERVICE

JANUARY 29, 1988
J.T. 66652-59 Chromel Constantan Thermocouple Calibration
General Electric Company
Building 55 - Room 212
Attn: Paul Bahrman
Reference Junction Kaye Instrument Serial No. 6665
THERMOCOUPLE MILLIVOLTS
TYPE E

TEMP F	IMM. IN.	[redacted]	1013	1254	1124	1164	1265	[redacted]	1324
176.5	8	5.01	4.98	5.01	4.99	4.98	5.01	50.1	5.01
	12	5.01	4.99	5.02	5.00	5.00	5.02	5.01	5.01
430.2	8	15.06	14.99	15.06	14.98	14.97	15.07	15.05	15.05
	12	15.07	14.99	15.07	15.02	15.00	15.06	15.05	15.04
662.9	8	25.09	24.99	25.09	24.98	24.95	25.10	25.08	25.08
	12	25.10	25.00	25.09	25.02	24.99	25.07	25.05	25.02
775.7	8	30.11	30.03	30.09	30.02	29.95	30.13	30.09	30.10
	12	30.12	30.00	30.10	30.03	29.98	30.11	30.11	30.10
887.5	8	35.15	35.06	35.13	35.02	34.96	35.16	35.12	35.13
	12	35.13	35.01	35.13	35.02	34.98	35.13	35.12	35.11
998.8	8	40.15	40.06	40.14	40.02	39.93	40.17	40.13	40.12
	12	40.14	40.02	40.15	40.02	39.98	40.15	40.13	40.12

The Standards used during this calibration are:

1 - Platinum Resistance Thermometer STD - 0576
1 - Keithley Digital Multimeter STD - 0559
1 - Mueller Temperature Bridge STD - 0459

These Company Standards are standardized by reference to National Bureau of Standards certifications: SIS-R-881 - Page 59.

Robert A. Culver

Robert A. Culver
Repair and Calibration
GE COMPUTER SERVICE
Bldg. 28 - Room 512

smz

GE Computer Service

NE RIVER ROAD, BUILDING 28 - 500 o SCHENECTADY, NEW YORK 12345 o (518) 385-9228

October 23, 1987
J.T. 66614-001 Chromel Constantan Thermocouple Calibration
General Electric Company
Building 55 - Room 212
Attn: Paul Bahrman
Reference Juction Kaye Instrument Serial No. 6665
THERMOCOUPLE MILLIVOLTS

TEMP F	IMM. In.	1206	1196	1214	12[redacted]	1166	12[redacted]	1179	1093
176.5	8	5.00	4.99	4.99	5.01	5.00	5.02	4.98	5.01
	12	5.00	4.99	5.00	5.02	5.00	5.02	5.00	5.01
430.2	8	14.99	14.98	14.99	15.05	15.00	15.06	14.95	15.04
	12	15.01	14.94	15.00	15.05	15.00	15.05	14.98	15.04
662.9	8	24.98	24.98	24.98	25.08	24.96	25.09	24.93	25.04
	12	25.01	24.87	25.01	25.08	25.00	25.08	24.97	25.06
775.7	8	29.97	29.96	29.96	30.13	29.99	30.14	29.91	30.08
	12	29.98	29.92	29.98	30.07	29.98	30.09	29.95	30.06
887.5	8	34.98	34.96	34.92	35.13	34.94	35.15	34.91	35.06
	12	34.98	34.89	34.94	35.09	34.98	35.11	34.95	35.06
998.8	8	39.98	39.99	39.94	40.15	39.96	40.18	39.90	40.07
	12	40.00	39.89	39.87	40.11	39.99	40.14	39.96	40.07

The Standards used during this calibration are:

1 - Platinum Resistance Thermometer STD - 0499
1 - Keithley Digital Multimeter STD - 0559
1 - Mueller Temperature Bridge STD - 0459

These Company Standards are standardized by reference to National Bureau of Standards certifications: SIS-R-871-Page 38

Robert A. Culver
Robert A. Culver
Quality Assurance
Computer Service
66614-001-38

GE Computer Service

ONE RIVER ROAD, BUILDING 28 - 500 o SCHENECTADY, NEW YORK 12345 o (518) 385-9228

October 30, 1987
J.T. 66615-001 Chromel Constantan Thermocouple Calibration
General Electric Company
Building 55 - Room 212
Attn: Paul Bahrman
Reference Juction Kaye Instrument Serial No. 6665
THERMOCOUPLE MILLIVOLTS

TEMP F	IMM. In.	1055	1195	1203	1228	1116	1288	[redacted]	1296
176.5	8	4.99	4.99	4.99	4.99	4.99	5.01	5.01	5.01
	12	4.98	4.97	4.98	4.98	4.98	5.00	5.00	5.00
430.2	8	14.98	14.98	14.99	14.99	14.97	15.04	15.04	15.05
	12	14.99	14.96	14.96	14.98	14.97	15.04	15.05	15.04
662.9	8	24.97	24.95	24.97	24.97	24.94	25.06	25.06	25.07
	12	25.00	24.94	24.94	24.96	24.95	25.08	25.09	25.07
775.7	8	30.00	29.96	29.95	29.99	29.95	30.11	30.13	30.12
	12	29.99	29.96	29.98	29.94	29.91	30.06	30.09	30.07
87.5	8	35.02	34.98	34.97	34.99	34.96	35.08	35.10	35.13
	12	35.01	34.98	34.98	34.94	34.92	35.09	35.12	35.08
998.8	8	40.04	39.97	39.96	40.01	39.96	40.12	40.14	40.17
	12	40.02	39.98	39.97	39.94	39.90	40.11	40.14	40.12

The Standards used during this calibration are:

1 - Platinum Resistance Thermometer STD - 0499
1 - Keithley Digital Multimeter STD - 0559
1 - Mueller Temperature Bridge STD - 0459

These Company Standards are standardized by reference to National Bureau of Standards certifications: SIS-R-871-Page 41

Robert A. Culver
Robert A. Culver
Quality Assurance
Computer Service
66615-001-41

GENERAL ELECTRIC

INTEGRATED COMMUNICATION SERVICES DEPARTMENT
GENERAL ELECTRIC COMPANY • BLDG. 28, ROOM 500 • SCHENECTADY, NEW YORK 12345 • (518) 385-5108

December 15, 1986
J.T. 66350-001 Chromel Constantan Thermocouple Calibration
General Electric Company
Building 55 - Room 209
Attn: Paul Bahrman
Reference Junction Kaye Instrument Serial No. 6665.

THERMOCOUPLE MILLIVOLTS

TEMP °F	IMM. In.	[redacted]	[redacted]	1311	[redacted]	1289	1314	1312	1252
176.5	8	5.03	5.03	5.03	5.03	5.03	5.03	5.03	5.03
	12	5.03	5.03	5.02	5.03	5.03	5.02	5.02	5.03
430.2	8	15.08	15.08	15.06	15.07	15.08	15.06	15.06	15.07
	12	15.08	15.07	15.02	15.07	15.07	15.02	15.02	15.08
662.9	8	25.13	25.11	25.08	25.10	25.11	25.09	25.08	25.10
	12	25.12	25.11	25.01	25.10	25.11	25.03	25.02	25.12
775.7	8	30.15	30.12	30.10	30.11	30.12	30.10	30.09	30.12
	12	30.12	30.10	30.09	30.09	30.11	30.09	30.08	30.12
887.5	8	35.13	35.10	35.10	35.09	35.12	35.10	35.10	35.13
	12	35.14	35.13	35.11	35.12	35.14	35.13	35.11	35.15
998.8	8	40.15	40.12	40.10	40.11	40.12	40.10	40.09	40.13
	12	40.16	40.16	40.14	40.14	40.17	40.15	40.14	40.19
1049.9	8	42.43	42.43	42.40	42.44	42.44	42.41	42.41	42.45
	12	42.47	42.46	42.43	42.44	42.46	42.44	42.42	42.48

The Standards used during this calibration are:

1 - Platinum Resistance Thermometer	STD - 0576
1 - Mueller Temperature Bridge	STD - 0951
1 - Keithley Digital Multimeter	STD - 0559

These Company Standards are standardized by reference to National Bureau of Standards certifications: SIS-R-861-Page 16

Robert A. Cuhn

Repair and Calibration
UPSTATE NY INSTRUMENTATION SERVICES
Building 28 - Room 512
66350-001-6

GE Computer Service

ONE RIVER ROAD, BUILDING 28 - 500 o SCHENECTADY, NEW YORK 12345 o (518) 385-9228

NOVEMBER 9, 1987
J.T. 66615-001 Chromel Constantan Thermocouple Calibration
General Electric Company
Building 55 - Room 212
Attn: Paul Bahrman
Reference Juction Kaye Instrument Serial No. 6665
THERMOCOUPLE MILLIVOLTS

TEMP F	IMM. In.	1165	1037	1339	1229	1035	[redacted]	1110	1283
176.5	8	4.99	5.00	5.02	5.00	4.99	5.01	4.99	5.01
	12	4.99	4.99	5.00	5.00	4.99	5.01	4.99	5.01
430.2	8	14.98	15.00	15.07	15.00	14.99	15.08	15.00	15.06
	12	14.99	15.00	15.05	15.02	15.00	15.08	15.01	15.06
662.9	8	24.95	24.99	25.08	24.98	24.97	25.09	24.97	25.07
	12	24.99	25.02	25.06	25.03	25.02	25.11	25.02	25.10
775.7	8	29.93	30.02	30.13	29.96	30.00	30.13	29.97	30.11
	12	29.97	30.01	30.04	30.00	30.00	30.10	30.00	30.11
887.5	8	34.94	35.05	35.16	34.98	35.03	35.16	34.98	35.11
	12	34.96	35.01	35.05	34.99	35.01	35.11	34.99	35.11
998.8	8	39.94	40.05	40.19	39.95	40.04	40.18	39.96	40.12
	12	39.97	40.05	40.04	39.99	40.04	40.13	39.98	40.11

The Standards used during this calibration are:

1 - Platinum Resistance Thermometer STD - 0499
1 - Keithley Digital Multimeter STD - 0559
1 - Mueller Temperature Bridge STD - 0459

These Company Standards are standardized by reference to National Bureau of Standards certifications: SIS-R-871-Page 45

Robert A. Culver
Robert A. Culver
Quality Assurance
Computer Service
66615-001-45

GE Computer Service

ONE RIVER ROAD, BUILDING 28 - 500 o SCHENECTADY, NEW YORK 12345 o (518) 385-9228

November 2, 1987
J.T. 66615-001 Chromel Constantan Thermocouple Calibration
General Electric Company
Building 55 - Room 212
Attn: Paul Bahrman
Reference Juction Kaye Instrument Serial No. 6665
THERMOCOUPLE MILLIVOLTS

TEMP F	IMM. In.	1140	1114	1070	1219	1038	[redacted]	1113	1056
176.5	8	5.00	FAILED	5.02	5.00	5.00	5.02	5.00	4.99
	12	4.99	TEST	5.00	4.99	4.99	5.01	4.99	4.99
430.2	8	14.99		15.05	15.00	15.00	15.07	15.01	14.99
	12	14.99		15.02	15.00	14.98	15.05	15.00	14.98
662.9	8	24.96		25.03	24.96	24.95	25.08	24.98	24.97
	12	25.02		25.05	25.03	24.98	25.12	25.04	25.01
775.7	8	29.97		30.00	29.98	29.98	30.15	30.00	30.01
	12	29.98		30.06	30.00	29.97	30.10	30.01	29.99
87.5	8	34.96		35.04	34.98	34.60	34.15	35.01	35.03
	12	34.99		35.06	35.01	34.98	35.12	35.01	35.00
998.8	8	39.95		40.03	39.97	39.94	40.19	39.99	40.02
	12	39.98		40.07	40.00	39.97	40.13	40.00	40.01

The Standards used during this calibration are:

1 - Platinum Resistance Thermometer STD - 0499
1 - Keithley Digital Multimeter STD - 0559
1 - Mueller Temperature Bridge STD - 0459

These Company Standards are standardized by reference to National Bureau of Standards certifications: SIS-R-871-Page 42

Robert A. Culver
Quality Assurance
Computer Service
66615-001-42

INTERMOUNTAIN POWER SERVICE CORPORATION
PERFORMANCE EVALUATION TEST REPORT
UNIT NO. 2

APPENDIX F

Water-Leg Corrections

Measurement	Correction (psia)
Main Steam	- 3.97
Valve Chest	- 2.42
First Stage	- 6.26
Cold Reheat	- 5.34
Hot Reheat	- 6.79
4th Stage	- 1.12
11th Stage	- 4.66