GE Power Generation

PERFORMANCE TEST REPORT

INTERMOUNTAIN POWER SERVICE
CORPORATION
UNIT # 1

February 8, 1989

P.G. Albert
& W.W. Kellyhouse

PERFORMANCE EVALUATION TEST REPORT

INTERMOUNTAIN POWER SERVICE CORPORATION

IPP UNIT NO. 1

TB NO. 270T150

820,000 kW

FEBRUARY 1989

IP14_002375

INTERMOUNTAIN POWER SERVICE CORPORATION
PERFORMANCE EVALUATION TEST REPORT
UNIT NO. 1

TABLE OF CONTENTS

	PAGE NO.
CONTENTS	i
INDEX OF FIGURES	ii
I. SUMMARY	1
II. INTRODUCTION	2
III. INSTRUMENTATION	2
VI. CALCULATIONS	3
V. RESULTS	3
1. HP Turbine Efficiency	4
2. IP Turbine Efficiency	4
3. Output and Heat Rate	4
4. Feedwater Heaters	5
VI. SUMMARY OF RESULTS	6-7
VII. FIGURES	
VIII. APPENDICES	
Computer Output for Test Cycle Heat Balances for Test Points	
Correction Curves	
Summay of Foxboro Computer Log Performance Test Data	
Thermocouple Location Assignment and Immersion Table	
Thermocouple Calibrations	
Water Legs for GE Instrumentation Points	

IP14_002376

INTERMOUNTAIN POWER SERVICE CORPORATION
PERFORMANCE EVALUATION TEST REPORT
UNIT NO. 1

INDEX OF FIGURES

Figure No.	Nomenclature
1	Posting Diagram Test Point No. 1
2	Posting Diagram Test Point No. 2
3	Posting Diagram Test Point No. 3
4	Posting Diagram Test Point No. 4
5	Posting Diagram Test Point No. 5
6	Summary of Measured Section Efficiencies and GE Measured Data
7	HP Efficiency Plotted Versus P1st/PT
8	IP Efficiency Plotted Versus Hot Reheat Pressure
9A-9E	Group 1 & 2 Heat Rate and Load Corrections for Test Points 1-5
10	Test Cycle Heat Rate
11	Contract Cycle Heat Rate

IP14_002377

INTERMOUNTAIN POWER SERVICE CORPORATION
PERFORMANCE EVALUATION TEST REPORT
UNIT NO. 1

I. SUMMARY

This report presents the results obtained from a preoutage test conducted on IPP Unit No. 1. The results show that:

The HP turbine efficiency is down 1.1% from the ASME test level of performance and down about 2.2% from the startup level of performance, but still 0.7% better than the heat balance value.

The IP efficiency is down 0.1 % from the ASME performance test and about 0.6% from the startup performance.

The turbine cycle heat rate is down 1.5% from the ASME performance test and the VWO output is down 2.4%. With the cycle only partially isolated the heat rate is down 1.9% and the output is down 2.6%

The turbine flow capacity as indicated by the measure flow and the turbine pressures is down about 1%. This is apparently due to a flow restriction in the control valves or first stage nozzle box. A 1% flow restriction accounts for about 1% loss in VWO output.

The terminal differences and drain cooling values for all the feedwater heaters are within 3 degrees of the values obtained during the ASME performance test.

IP14_002378

II. INTRODUCTION

A performance test was conducted on IPP Unit No. 1 to determine the High Pressure (HP) and Intermediate Pressure (IP) section efficiencies, and the overall performance of the turbine cycle with and without cycle isolation. These test were run prior to the outage so that losses in performance could be identified and corrected during the outage. These tests were conducted through the cooperative efforts of the G.E Company and Intermountain Power Service Corporation.

A series of five test points were conducted from January 25 through January 27, 1989. All the test points were conducted with the turbine control valves wide open. During test points 3 and 5, block valves were closed to eliminate identified leakages from entering or leaving the test cycle or bypassing any cycle component.

III. INSTRUMENTATION

The measurements required for the performance test were obtained from both station instrumentation and GE supplied test instrumentation. For the measurement of some critical temperatures, GE provided calibrated chromel constantan thermocouples with continuous leads from the hot junction to an electronic (real ice) ice bath. The test thermocouples were installed to measure the following temperatures:

* Main Steam (Throttle)
* Cold Reheat
* Hot Reheat
* Crossover
* Final Feedwater
* Feedwater From Htr 7
* Feedwater From Htr 6

A copy of the calibration data for each thermocouple is included in Appendix E.

Test transducers were provided by G.E. for measuring various pressures as well as the differential pressure across the final feedwater flow element. The final feedwater differential pressure was measured with a high accuracy Ruska transducer. Twelve turbine exhaust pressures were multiplexed to one Data Metrics transducer through the use of a scanivalve. A high pressure scanivalve and Ruska high accuracy transducers were used for the following pressure measurements.

* Main Steam (Throttle)
* Valve Chest
* First Stage
* 4th Stage
* Cold Reheat
* Hot Reheat
* 10th stage
* Low Pressure Bowl

IP14_002379

The remaining measurements were obtained from station instrumentation which was logged by the station computer during each test point.

IV. CALCULATIONS

For each of the five test point, the data obtained from the test instrumentation was averaged converted to engineering units and corrected for water legs, barometric pressure, and instrumentation calibration. The data from the station computer log which was relevant to the turbine cycle was typed into a file and is included in Appendix C. These measured values were then posted on a turbine cycle diagram. Completed posting diagrams for each test point are shown as Figure 1 through 5. For test points 4 and 5 the measurements with test instruments are clearly identified so as to provide the necessary information for an in-place calibration of station instruments at locations where critical performance testing parameters were obtained.

The performance of the test cycle was calculated by supplying the measurement identified on the posting diagram for each test point to a computerized heat balance model of the turbine cycle. For some less critical measurements, not obtained during this test, the values from the ASME performance test were used. For examples, all the steam seal flows are based on the ASME test results. The computer output for the test cycle calculations is contained in Appendix A. The output for each test point contains detailed turbine performance results as well as information on the heaters, and other components of the cycle.

To compare the test heat rate and output to design or the ASME performance test results, correction must be applied for off design operating conditions and cycle conditions. The ASME Alternative test approach was used. That is, these corrections are obtained from correction curves instead of the more complex heat balance method used for the analysis of full scale ASME test results. The correction curves are included in Appendix B of this report.

V. RESULTS

A summary of pertinent results from the test calculation follows:

1. HP Turbine Efficiency

The efficiency of the HP turbine was measured during each test point. The results are tabulated in Figure 6 along with the measured pressures and temperatures. The HP efficiency at valves wide open (VWO) is 86.7%. This efficiency is plotted in Figure 7 along with the startup test, full scale ASME test, and heat balance values. At VWO, the test efficiency is 1.1% poorer than the ASME test value, but still better than the design VWO heat balance. This 1.1% deterioration is worth an estimated 0.2% in turbine heat rate.

IP14_002380

The test value of the major variables which affect the cycle performance are shown in Figures 9A through 9E along with the test cycle results for output and heat rate. This data has been used in with correction curves in Appendix B to obtain the contract cycle results for output and heat rate. The corrected is plotted in Figure 11 which also contains the design heat rate curve and the ASME test results. As summarized in Table I, the the heat rate from the 5 test points ranges from 3.06 % to 1.49 % poorer than the ASME test results and the output is down from the ASME test by 2.8 % to 2.3 %. The large range in results is primarily attributed to cycle isolation. Test point 1 was conducted with the cold reheat supply for auxiliary steam in service. Test points 2 and 4 were conducted with the cold reheat supply out of service, but with all other valves in normal positions. Test points 3 and 5 were conducted with block closed where leakages had been identified.

Test points 3 and 5 heat rate is down 1.55% and the VWO output is down 2.3%. The deterioration in HP and IP efficiency summarized in Table II accounts for 0.25% loss in heat rate and 0.35 % loss in output. The measured VWO flow is down 0.9% from the ASME test results. The turbine pressures also indicate the the flow to be down about 1%. Since all turbine pressures are down by about the from the first stage to the LP bowl, the reduction in flow capacity is due to a restriction in the control valves of first stage (ie nozzle box). The remaining loss in output may be attributed to LP turbine performance, or the performance of other cycle components which were not measured such as BFP or BFPT performance. Some of the apparent loss may be due to a feedwater measurement error which can be caused by a deposit buildup on the feedwater nozzle. A deposit of 10 mils is worth 0.6 % on the calculation of heat rate.

4. Feedwater Heaters

The feedwater terminal differences and drain cooling values list in Appenix A of the heat balance output are all within about 3 degrees of the value measured during the ASME performance test.

IP14_002381

SUMMARY OF RESULTS

HEAT RATE AND LOAD

TABLE I

TEST POINT	HEAT RATE	PCT CHANGE	LOAD (KW)	PCT CHANGE
DESIGN	7818.0		851733.0	
ASME TEST	7736.4	-1.04%	878606.0	3.16%
1989 TEST				
1	7972.8	3.06%	853649.0	-2.84%
2	7884.3	1.91%	855580.0	-2.62%
3	7860.2	1.60%	858523.0	-2.29%
4	7882.1	1.88%	855332.0	-2.65%
5	7852.0	1.49%	856999.0	-2.46%

SECTION EFFICIENCIES

TABLE II

TEST POINT	HP TURBINE	PCT CHANGE	IP TURBINE	PCT CHANGE
DESIGN	86.0		89.3	
STARTUP TEST	88.6	3.00%	92.0	3.02%
ASME TEST	87.6	-1.06%	91.6	-0.45%
1989 TEST	86.7	-1.09%	91.5	-0.13%

IP14_002382

SUMMARY OF RESULTS

THROTTLE FLOW

TEST POINT	FLOW LB/HR	PCT CHANGE
DESIGN	6122730	
ASME TEST	6301995	2.9%
1989 TEST		
1	6298542	-0.1%
2	6245905	-0.9%
3	6251320	-0.8%
4	6250552	-0.8%
5	6237983	-1.0%

TABLE III

UNACCOUNTED-FOR LEAKAGE LB/HR	PCT
-13517	-0.2%
-28049	-0.4%
-9539	-0.2%
-21194	-0.3%
-27662	-0.4%

TURBINE PRESSURES - CORRECTED TO DESIGN STEAM CONDITIONS

TABLE IV

TEST POINT	FIRST STAGE	PCT CHANGE	4TH STAGE	PCT CHANGE
ASME TEST	1960.9		1096.1	
1989 TEST				
1	1931.1	-1.5	1080.5	-1.4
2	1932.2	-1.5	1084.5	-1.1
3	1932.0	-1.5	1084.8	-1.0
4	1932.4	-1.4	1083.3	-1.2
5	1932.8	-1.4	1085.1	-1.0

TEST POINT	HOT REHEAT	PCT CHANGE	10TH STAGE	PCT CHANGE	LP BOWL	PCT CHANGE
ASME TEST	537.8		236.7		121.8	
1989 TEST						
1	513.2	-4.6	224.7	-5.1	116.6	-4.2
2	530.2	-1.4	232.9	-1.6	119.9	-1.5
3	530.9	-1.3	233.7	-1.3	120.4	-1.1
4	529.2	-1.6	231.8	-2.1	119.6	-1.8
5	530.6	-1.3	232.9	-1.6	120.4	-1.1

R015G

IP14_002383

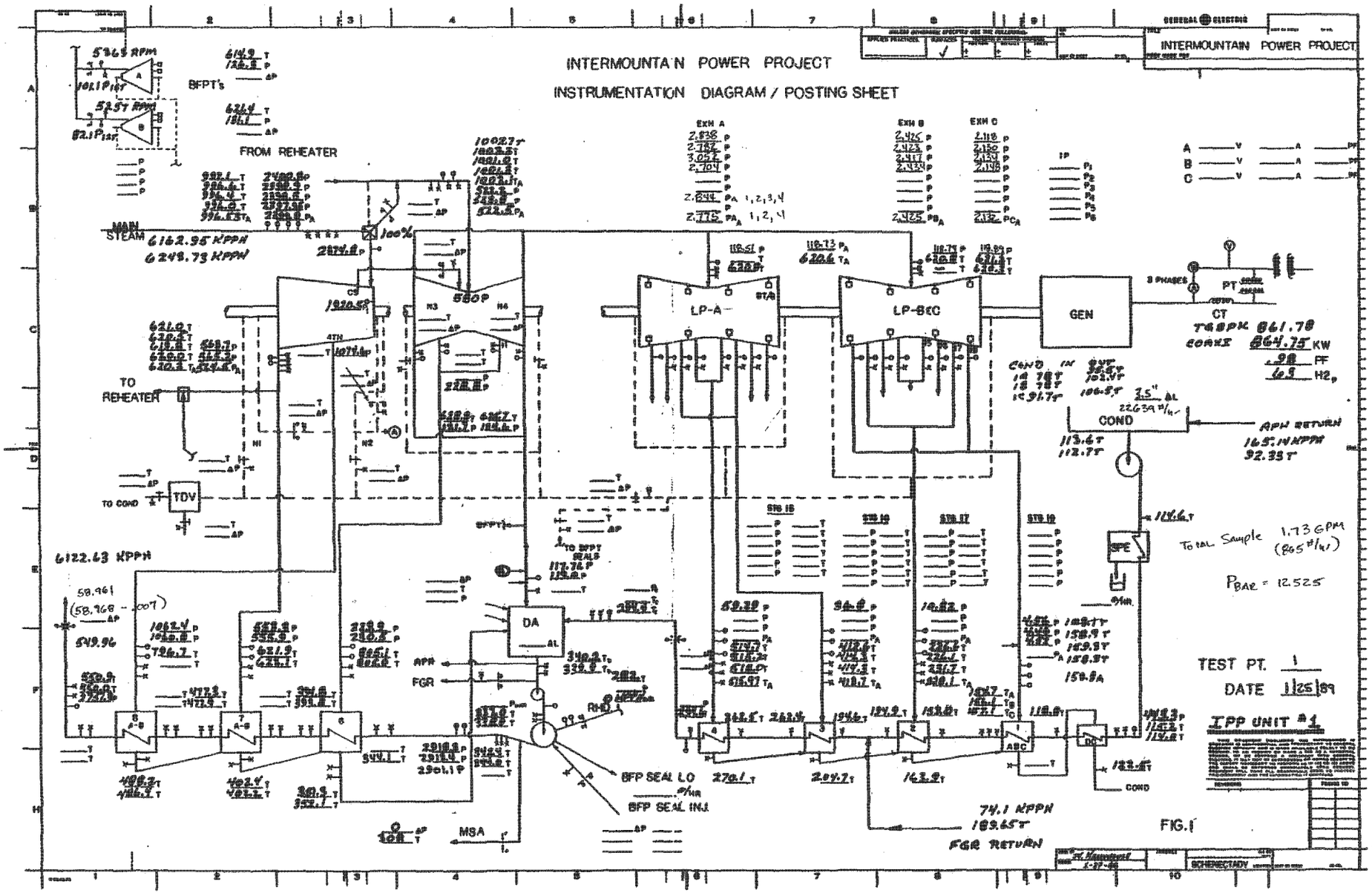
INTERMOUNTAIN POWER PROJECT
INSTRUMENTATION DIAGRAM / POSTING SHEET
INTERMOUNTAIN POWER PROJECT
GENERAL ELECTRIC
BFPT's
FROM REHEATER
MAIN STEAM
6162.95 KPPH
6248.73 KPPH
TO REHEATER
TO COND
TDV
6122.63 KPPH
LP-A
LP-B&C
GEN
CT
COND
APH RETURN
165.14 KPPH
92.33 T
SPE
DA
APH
FGR
RHD
BFP SEAL LO
BFP SEAL INJ
MSA
74.1 KPPH
189.65 T
FGR RETURN
TEST PT. 1
DATE 1/25/89
IPP UNIT #1
FIG. 1
SCHENECTADY

IP14_002384

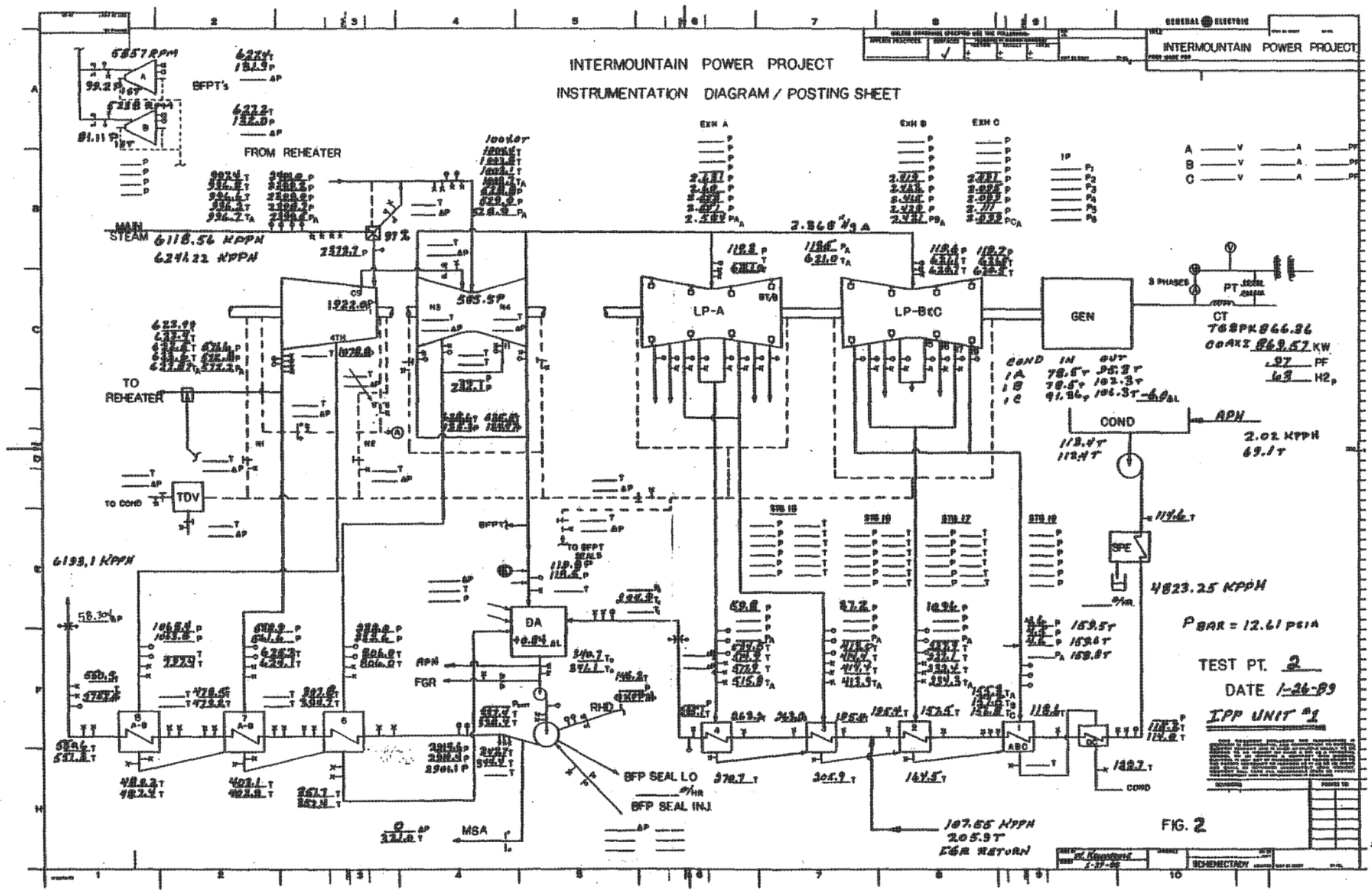
INTERMOUNTAIN POWER PROJECT
INSTRUMENTATION DIAGRAM / POSTING SHEET
GENERAL ELECTRIC
INTERMOUNTAIN POWER PROJECT
BFPT's
FROM REHEATER
MAIN STEAM
6118.56 KPPH
6241.22 KPPH
TO REHEATER
TO COND
TDV
6193.1 KPPH
HP
IP
LP-A
LP-B&C
GEN
3 PHASES
PT
CT
COND
APH
2.02 KPPH
69.1T
SPE
4823.25 KPPH
P BAR = 12.61 PSIA
DA
APH
FGR
RHD
BFP SEAL LO
BFP SEAL INJ
MSA
107.55 KPPH
205.9T
FGR RETURN
TEST PT. 2
DATE 1-26-89
IPP UNIT #1
FIG. 2

IP14_002385

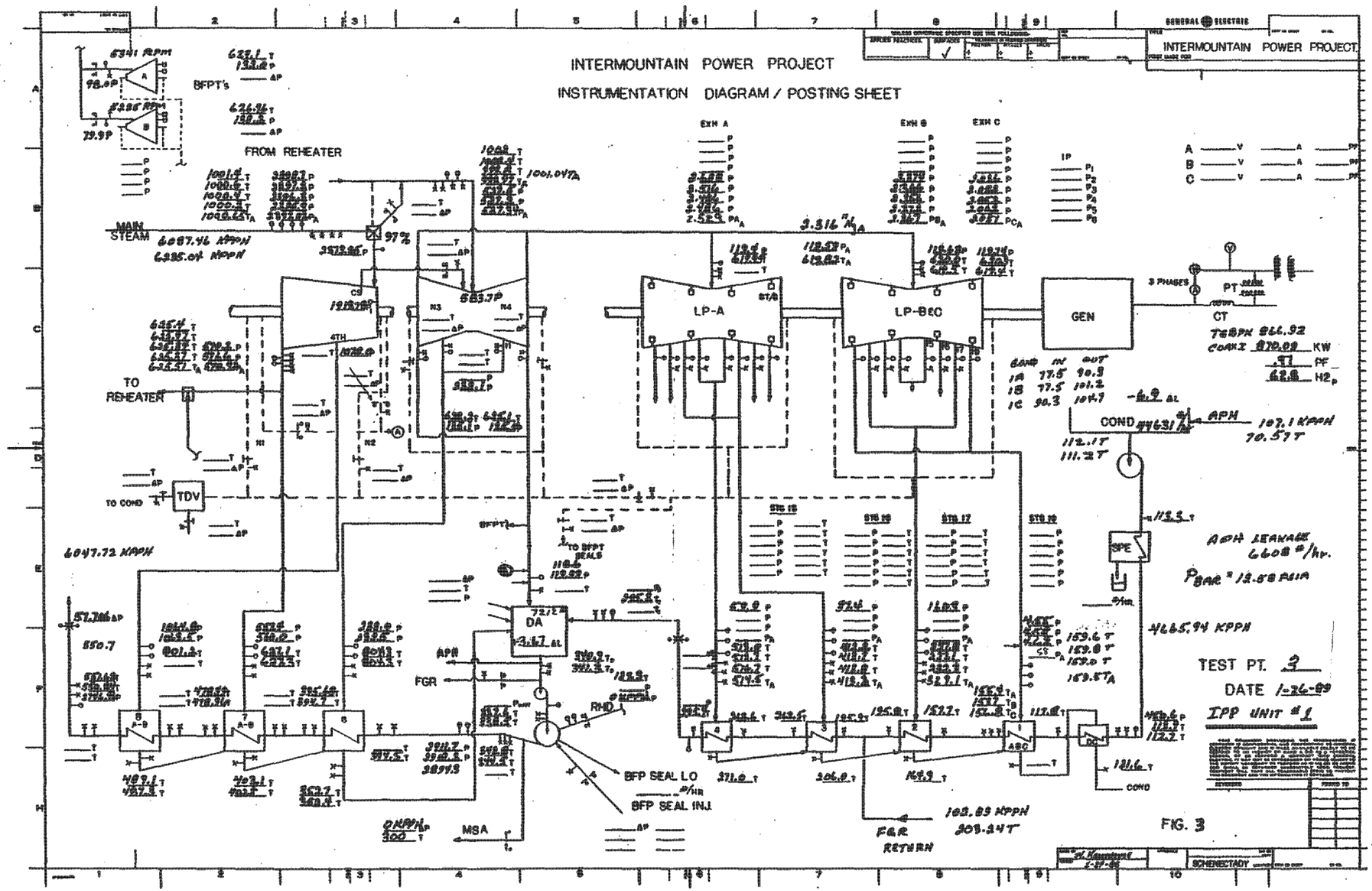
INTERMOUNTAIN POWER PROJECT
INSTRUMENTATION DIAGRAM / POSTING SHEET
GENERAL ELECTRIC
INTERMOUNTAIN POWER PROJECT
BFPT's
FROM REHEATER
MAIN STEAM
TO REHEATER
TO COND
TDV
LP-A
LP-B&C
GEN
3 PHASES
PT
CT
COND
SPE
DA
APH
FGR
RHD
BFP SEAL LO
BFP SEAL INJ.
MSA
FGR RETURN
TO BFPT SEALS
TEST PT. 3
DATE 1-26-89
IPP UNIT #1
SCHENECTADY

FIG. 3

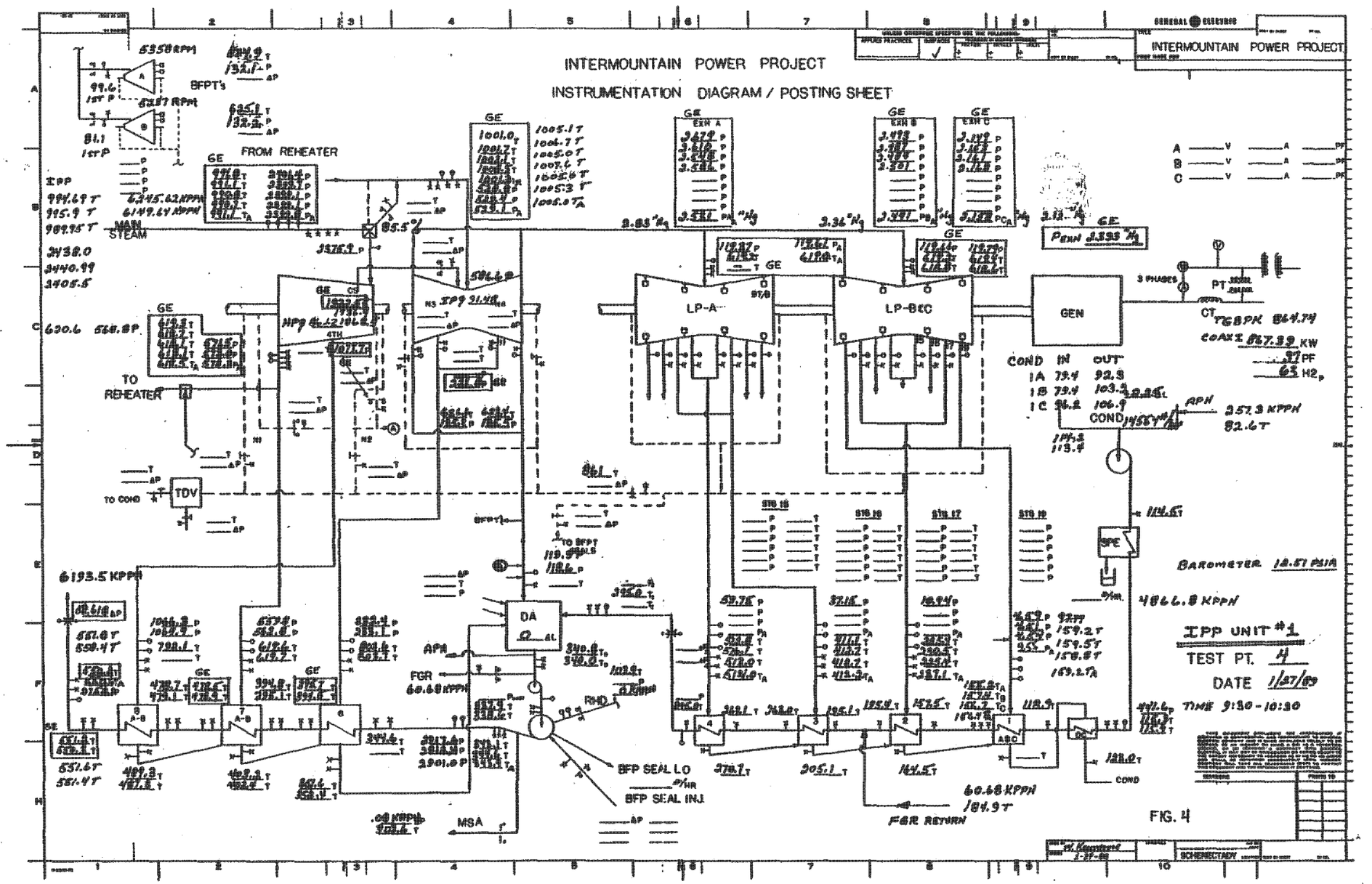
INTERMOUNTAIN POWER PROJECT
INSTRUMENTATION DIAGRAM / POSTING SHEET
INTERMOUNTAIN POWER PROJECT
BFPT's
FROM REHEATER
MAIN STEAM
TO REHEATER
TDV
TO COND
LP-A
LP-B&C
GEN
PT
CT
COND IN OUT
1A 79.4 92.3
1B 79.4 103.2
1C 96.2 106.9
COND
APH
DA
FGR
RHD
BFP SEAL LO
BFP SEAL INJ
MSA
FGR RETURN
BAROMETER 12.51 PSIA
IPP UNIT #1
TEST PT. 4
DATE 1/27/89
TIME 9:50-10:30
FIG. 4

IP14_002387

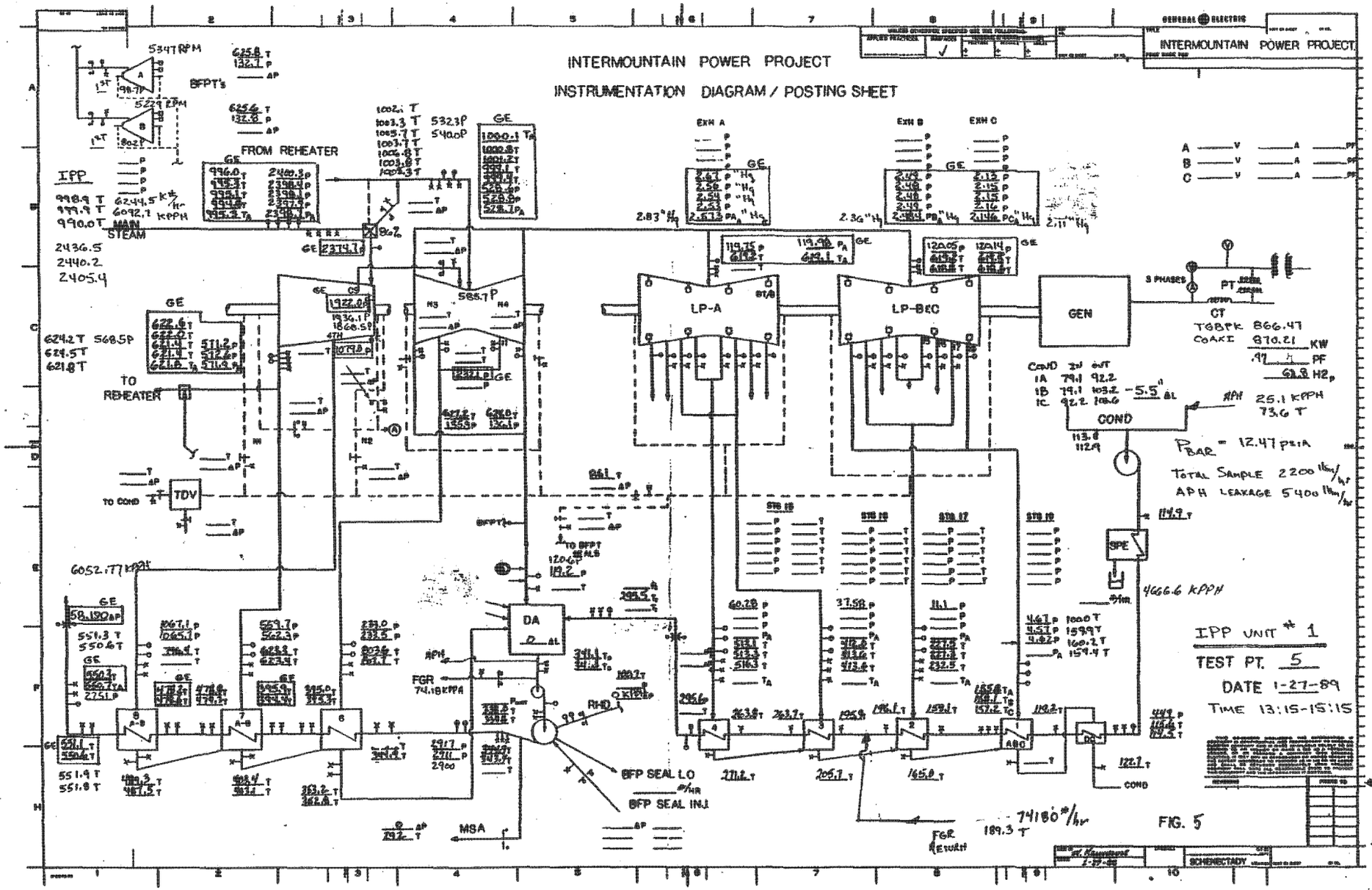
INTERMOUNTAIN POWER PROJECT
INSTRUMENTATION DIAGRAM / POSTING SHEET
GENERAL ELECTRIC
INTERMOUNTAIN POWER PROJECT
BFPT's
FROM REHEATER
IPP
MAIN STEAM
TO REHEATER
TDV
TO COND
LP-A
LP-BEC
GEN
COND
DA
MSA
FGR
BFP SEAL LO
BFP SEAL INJ
SPE
IPP UNIT # 1
TEST PT. 5
DATE 1-27-89
TIME 13:15-15:15
FIG. 5
SCHENECTADY

IP14_002388

R015G

INTERMOUNTAIN POWER SEVICE CORPORATION
IPP NO. 1 PERFORMANCE EVALUATION
SUMMARY OF GE MEASURED TEST DATA

TEST NO.	1	2	3	4	5
THROTTLE (P)	2399	2399.5	2397.02	2399.8	2398.7
THROTTLE (T)	996.53	996.7	1000.65	991.1	995.3
VC (P)	2374.8	2373.7	2373.25	2375.9	2374.7
FIRST STG. (P)	1920.5	1922	1919.78	1922.5	1922.08
COLD RHT. (P)	564.5	572.2	570.92	572.3	571.9
COLD RHT. (T)	620.3	622.9	625.51	618.5	621.8
HOT RHT. (P)	522.5	528.9	527.3	529.1	528.7
HOT RHT. (T)	1002.1	1003.7	1001.04	1001.3	1000.1
LP BOWL (P)	118.73	119.6	119.59	119.61	119.98
LP BOWL (T)	620.6	621	619.82	619.03	619.1
HP EFFY. %	86.53	86.71	86.81	86.62	86.73
HP EFFY. CORR.	86.500	86.681	86.816	86.543	86.689
P1/PT RATIO	0.8005	0.8010	0.8009	0.8011	0.8013
IP EFFY. %	91.51	91.41	91.51	91.48	91.46
EXHAUST A ("HG)	2.775	2.584	2.486	2.531	2.573
EXHAUST B ("HG)	2.425	2.421	2.367	2.491	2.484
EXHAUST C ("HG)	2.132	2.099	2.051	2.158	2.146
FW OUT H6AB (T)	394.3	396.25	395.19	395.1	395.15
FW OUT H7AB (T)	477.6	478.85	478.73	478.7	478.4
FW OUT H8AB (T)	550.3	550.8	551.05	551.57	551.67
FFW FLOW #/HR.	6273662	6222007	6207121	6246463	6216605
BAROMETRIC (P)	12.525	12.61	12.58	12.51	12.47

PRESSURES (P) = PSIA
TEMPERATURES (T) = DEG. F

F166

INTERMOUNTAIN POWER CO.

Unit No. 1 T 150

High Pressure Section Efficiency

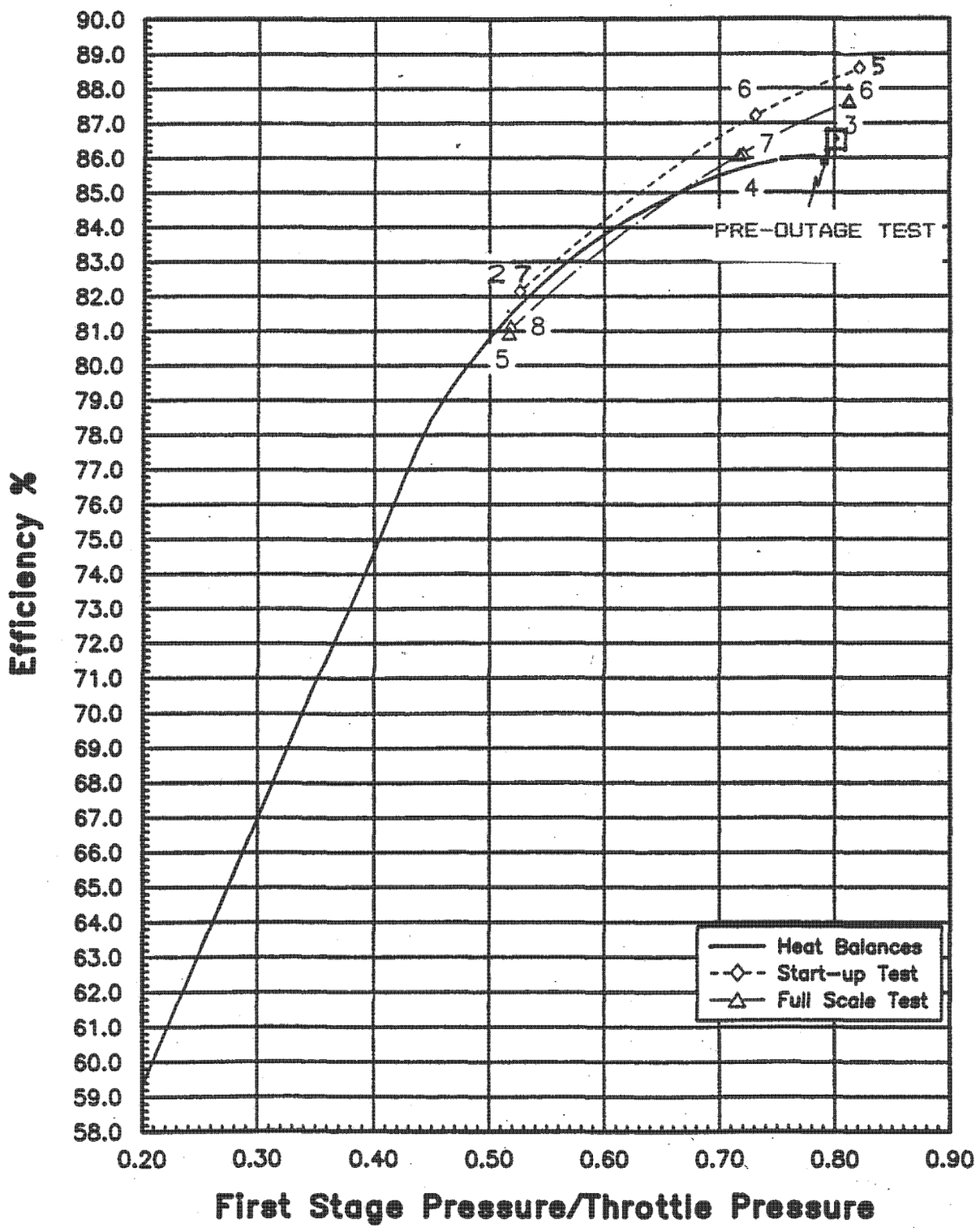

FIG. 7

INTERMOUNTAIN POWER CO

Unit No. 1 T 150

Intermediate Pressure Section Efficiency

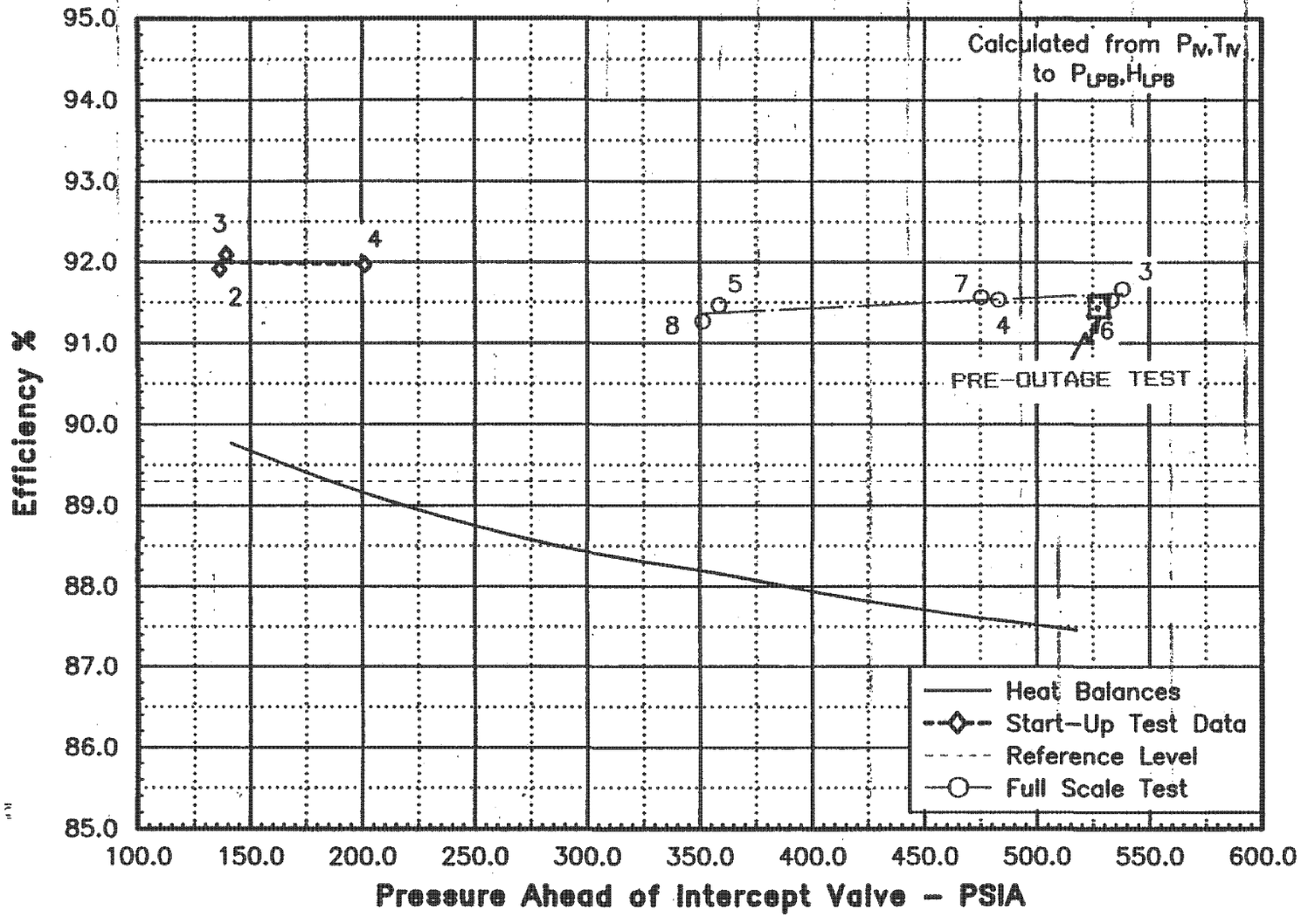

FIG 8

IP14_002391

IPP UNIT No. 1

CORRECTED HEAT RATE AND LOAD

TEST POINT	1
TEST LOAD	863974.0 kW
TEST HEAT RATE	7883.8 Btu/kW-hr

GROUP 2 CORRECTIONS	DESIGN	TEST	HR CORR	LOAD CORR
THROTTLE PRESS	2412.2	2399.0	1.0003	0.9946
THROTTLE TEMP	1000.0	996.5	1.0006	1.0003
HOT REHEAT TEMP	1000.0	1002.1	0.9997	1.0010
REHEATER PRESS. DROP	10.0	7.4	0.9974	1.0067
EXHAUST PRESS.	2.3	2.5	1.0021	0.9979
COMBINED CORRECTION			1.0001	1.0005
HEAT RATE WITH GROUP 2 CORRECTIONS			7883.1	
LOAD WITH GROUP 2 CORRECTIONS				863576.4

GROUP 1 CORRECTIONS	DESIGN	TEST	HR CORR	LOAD CORR
TOP HTR TD (F)	-2	1.59	1.0005	1.0037
TOP HTR PRESS DROP (%)	3	1.21	0.9997	0.9977
EXTR TO BFPT (%)	4.09	4.29	1.0009	0.9991
MAIN STM SPRAYS	0	0	1.0000	1.0000
DESIGN APH	2.3	0	0.9876	1.0124
REHEAT SPRAYS	0	0	1.0000	1.0000
FLUE GAS REHEAT	0	74100	1.0008	0.9992
TEST APH	0	165140	1.0021	0.9978
MAKE-UP (%)	1	0	0.9983	1.0018
HR WITH COND PMP PWR AND BLOWDOWN			0.9988	1.0000
COMBINED CORRECTION			0.9887	1.0116
HEAT RATE WITH GROUP 1&2 CORRECTIONS			7972.8	
LOAD WITH GROUP 1&2 CORRECTIONS				853648.8

FIG 9A

IPP UNIT No. 1

CORRECTED HEAT RATE AND LOAD

TEST POINT	2
TEST LOAD	868834.0 kW
TEST HEAT RATE	7773.6 Btu/kW-hr

GROUP 2 CORRECTIONS	DESIGN	TEST	HR CORR	LOAD CORR
THROTTLE PRESS	2412.2	2399.5	1.0003	0.9948
THROTTLE TEMP	1000.0	996.7	1.0005	1.0003
HOT REHEAT TEMP	1000.0	1003.7	0.9995	1.0017
REHEATER PRESS. DROP	10.0	7.6	0.9976	1.0064
EXHAUST PRESS.	2.3	2.4	1.0008	0.9992
COMBINED CORRECTION			0.9987	1.0024
HEAT RATE WITH GROUP 2 CORRECTIONS			7783.7	
LOAD WITH GROUP 2 CORRECTIONS				866782.3

GROUP 1 CORRECTIONS	DESIGN	TEST	HR CORR	LOAD CORR
TOP HTR TD (F)	-2	1.43	1.0005	1.0035
TOP HTR PRESS DROP (%)	3	1.32	0.9997	0.9978
EXTR TO BFPT (%)	4.09	4.31	1.0011	0.9989
MAIN STM SPRAYS	0	0	1.0000	1.0000
DESIGN APH	2.3	0	0.9876	1.0124
REHEAT SPRAYS	0	0	1.0000	1.0000
FLUE GAS REHEAT	0	107550	1.0012	0.9988
TEST APH	0	2020	1.0000	1.0000
MAKE-UP (%)	1	0	0.9983	1.0018
HR WITH COND PMP PWR AND BLOWDOWN			0.9988	1.0000
COMBINED CORRECTION			0.9872	1.0131
HEAT RATE WITH GROUP 1&2 CORRECTIONS			7884.3	
LOAD WITH GROUP 1&2 CORRECTIONS				855579.8

FIG 9B

IPP UNIT No. 1

CORRECTED HEAT RATE AND LOAD

TEST POINT	3
TEST LOAD	869350.0 kW
TEST HEAT RATE	7746.1 Btu/kW-hr

GROUP 2 CORRECTIONS	DESIGN	TEST	HR CORR	LOAD CORR
THROTTLE PRESS	2412.2	2397.0	1.0004	0.9938
THROTTLE TEMP	1000.0	1000.7	0.9999	0.9999
HOT REHEAT TEMP	1000.0	1001.0	0.9999	1.0005
REHEATER PRESS. DROP	10.0	7.6	0.9976	1.0062
EXHAUST PRESS.	2.3	2.3	1.0002	0.9998
COMBINED CORRECTION			0.9980	1.0002
HEAT RATE WITH GROUP 2 CORRECTIONS			7761.6	
LOAD WITH GROUP 2 CORRECTIONS				869209.7

GROUP 1 CORRECTIONS	DESIGN	TEST	HR CORR	LOAD CORR
TOP HTR TD (F)	-2	1.14	1.0004	1.0032
TOP HTR PRESS DROP (%)	3	1.28	0.9997	0.9978
EXTR TO BFPT (%)	4.09	4.12	1.0001	0.9999
MAIN STM SPRAYS	0	0	1.0000	1.0000
DESIGN APH	2.3	0	0.9876	1.0124
REHEAT SPRAYS	0	0	1.0000	1.0000
FLUE GAS REHEAT	0	102890	1.0012	0.9988
TEST APH	0	107100	1.0014	0.9986
MAKE-UP (%)	1	0	0.9983	1.0018
HR WITH COND PMP PWR AND BLOWDOWN			0.9988	1.0000
COMBINED CORRECTION			0.9875	1.0124
HEAT RATE WITH GROUP 1&2 CORRECTIONS			7860.2	
LOAD WITH GROUP 1&2 CORRECTIONS				858522.7

FIG 9C

IPP UNIT No. 1

CORRECTED HEAT RATE AND LOAD

TEST POINT	4
TEST LOAD	866658.0 kW
TEST HEAT RATE	7795.4 Btu/kW-hr

GROUP 2 CORRECTIONS	DESIGN	TEST	HR CORR	LOAD CORR
THROTTLE PRESS	2412.2	2399.8	1.0003	0.9950
THROTTLE TEMP	1000.0	991.1	1.0014	1.0009
HOT REHEAT TEMP	1000.0	1001.3	0.9998	1.0006
REHEATER PRESS. DROP	10.0	7.6	0.9975	1.0064
EXHAUST PRESS.	2.3	2.4	1.0012	0.9988
COMBINED CORRECTION			1.0002	1.0017
HEAT RATE WITH GROUP 2 CORRECTIONS			7793.9	
LOAD WITH GROUP 2 CORRECTIONS				865215.6

GROUP 1 CORRECTIONS	DESIGN	TEST	HR CORR	LOAD CORR
TOP HTR TD (F)	-2	1.75	1.0005	1.0038
TOP HTR PRESS DROP (%)	3	1.12	0.9997	0.9976
EXTR TO BFPT (%)	4.09	4.09	0.9999	1.0001
MAIN STM SPRAYS	0	0	1.0000	1.0000
DESIGN APH	2.3	0	0.9876	1.0124
REHEAT SPRAYS	0	0	1.0000	1.0000
FLUE GAS REHEAT	0	60680	1.0007	0.9993
TEST APH	0	257300	1.0033	0.9966
MAKE-UP (%)	1	0	0.9983	1.0018
HR WITH COND PMP PWR AND BLOWDOWN			0.9988	1.0000
COMBINED CORRECTION			0.9888	1.0116
HEAT RATE WITH GROUP 1&2 CORRECTIONS			7882.1	
LOAD WITH GROUP 1&2 CORRECTIONS				855332.2

FIG 9D

IPP UNIT No. 1

CORRECTED HEAT RATE AND LOAD

TEST POINT	5
TEST LOAD	869470.0 kW
TEST HEAT RATE	7743.5 Btu/kW-hr

GROUP 2 CORRECTIONS	DESIGN	TEST	HR CORR	LOAD CORR
THROTTLE PRESS	2412.2	2398.7	1.0004	0.9945
THROTTLE TEMP	1000.0	995.3	1.0008	1.0005
HOT REHEAT TEMP	1000.0	1000.1	1.0000	1.0000
REHEATER PRESS. DROP	10.0	7.6	0.9976	1.0064
EXHAUST PRESS.	2.3	2.4	1.0013	0.9987
COMBINED CORRECTION			1.0001	1.0001
HEAT RATE WITH GROUP 2 CORRECTIONS			7742.8	
LOAD WITH GROUP 2 CORRECTIONS				869414.8

GROUP 1 CORRECTIONS	DESIGN	TEST	HR CORR	LOAD CORR
TOP HTR TD (F)	-2	1.74	1.0005	1.0038
TOP HTR PRESS DROP (%)	3	1.17	0.9997	0.9977
EXTR TO BFPT (%)	4.09	4.11	1.0000	1.0000
MAIN STM SPRAYS	0	0	1.0000	1.0000
DESIGN APH	2.3	0	0.9876	1.0124
REHEAT SPRAYS	0	0	1.0000	1.0000
FLUE GAS REHEAT	0	74180	1.0008	0.9992
TEST APH	0	25100	1.0003	0.9997
MAKE-UP (%)	1	0	0.9983	1.0018
HR WITH COND PMP PWR AND BLOWDOWN			0.9988	1.0000
COMBINED CORRECTION			0.9861	1.0145
HEAT RATE WITH GROUP 1&2 CORRECTIONS			7852.0	
LOAD WITH GROUP 1&2 CORRECTIONS				856999.0

FIG 9E

INTERMOUNTAIN POWER CO.

IPP No. 1

Test Heat Rate

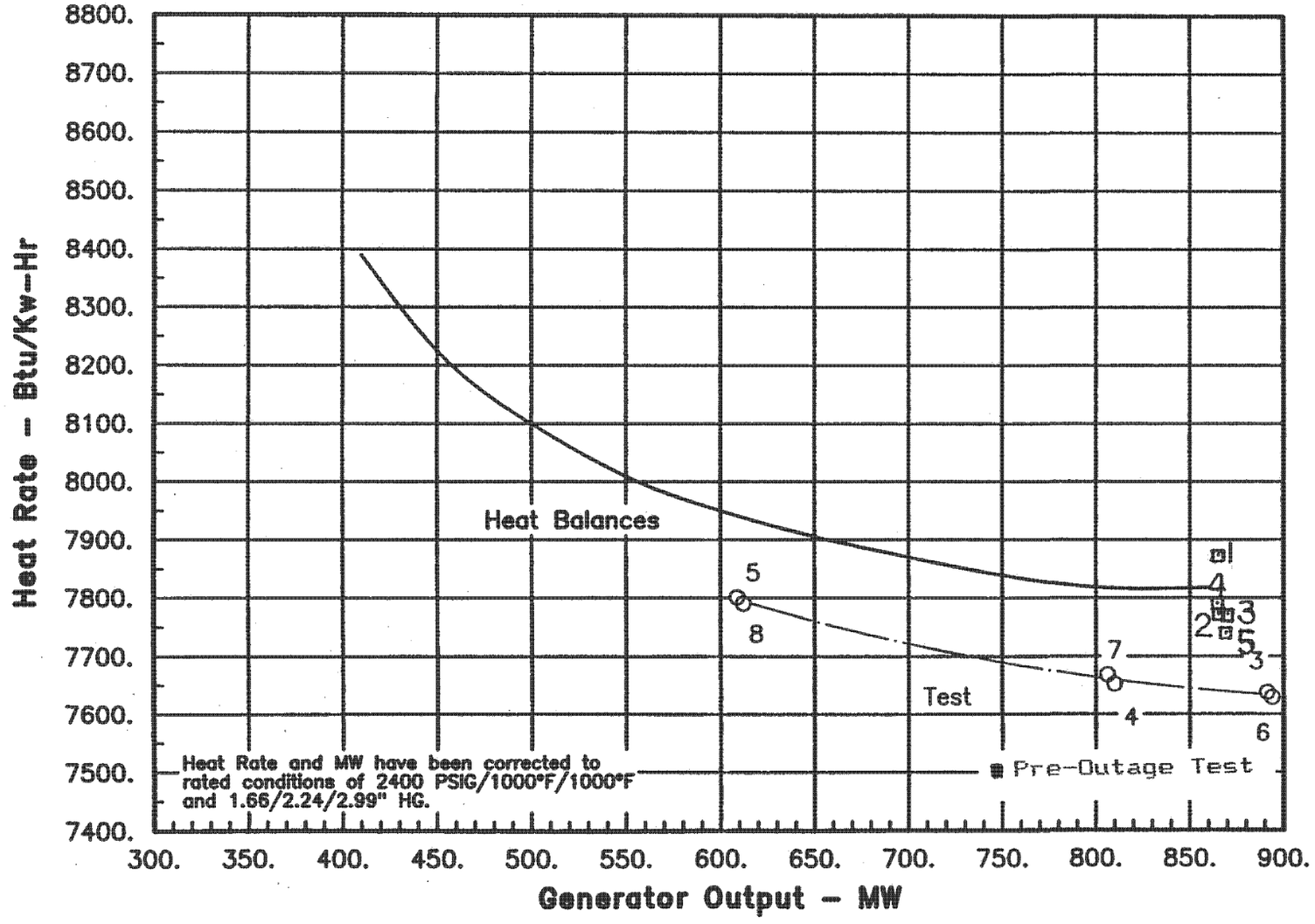

FIG 10

IP14_002397

INTERMOUNTAIN POWER CO.

IPP No. 1

Contract Cycle Heat Rate

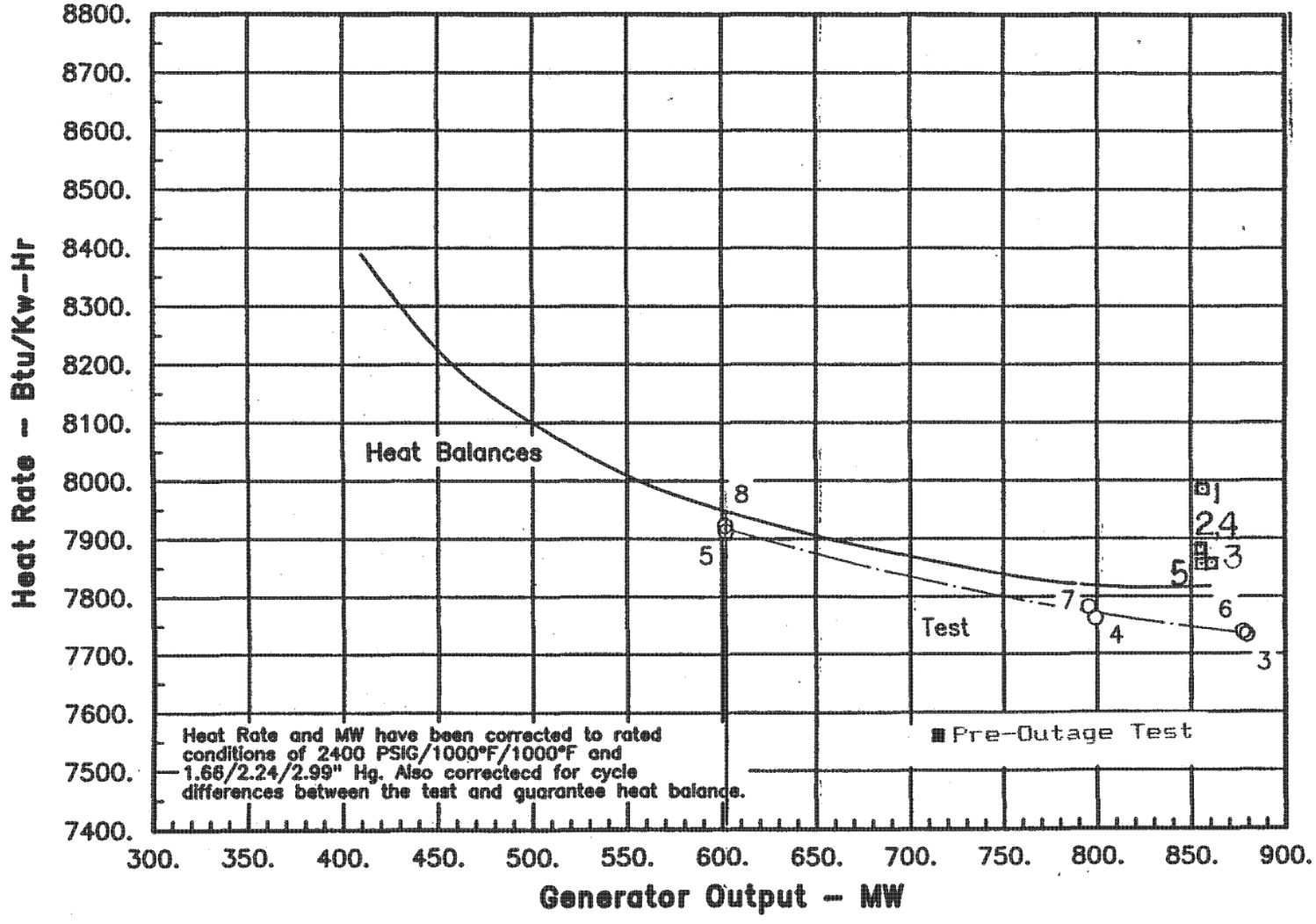

FIG 11

IP14_002398

INTERMOUNTAIN POWER SERVICE CORPORATION
PERFORMANCE EVALUATION TEST REPORT
UNIT NO. 1

APPENDIX A

Computer Output for Test Cycle Heat Balances for Test Points 1 - 5

Output Sheets

These output sheets should be used in conjunction with the trunkline diagram shown in Figure A1.

The following is a list of the nomenclature used in these output sheets:

FW	Feedwater
Inj	Injection
Ret	Return
MU	Makeup
LO	Leakoff
Shell	Conditions in turbine
Exh	Exhaust
AE	Available energy
ELEP	Expansion line end point
UEEP	Used energy end point
V_{AN}	Annulus velocity
TL	Trunkline
P	Pressure - psia
T	Temperature - degrees F
H	Enthalpy, BTU/LB
Q	Flow, lb./hr.
SV	Specific volume - ft^3/lb
SSR	Steam seal regulator

Pages 1 and 2 of the output sheets for each test point contain general information on turbine and cycle performance, such as heat rate, throttle flow, section efficiencies, and stage flow function. On page 1 under label "rated conditions", the load and heat rate have been corrected to rated power factor and rated H_2 pressure, and the throttle flow has been corrected to 2400 psig/1000F.

Pages 3-6 include designated component information. The column (TL) to the left of each sheet is a trunkline number used to easily identify points in the cycle. These TL numbers correspond to the number on sheet A1.

Pages 7 and 8 are a tabulation of all information stored in all trunklines. Although much of the same information is already included on pages 3-6, it is reprinted in TL form because not all TL numbers are printed on pages 3-6 and it is easier under some circumstances to look up information on the TL printout.

The column headings for the TL sheets are from left to right (TL) trunkline number, (P) pressure-psia, (T) temperature - ^{o}F, (H) enthalty - Btu/lb., (Q) flow lb./hr., (SV) specific volume-ft^3/lb. in most cases, (SP) an additional fluid property needed in the calculation such as enthalpy, (PV)-(P)/(SV) in most cases but not all; and (TR) transient storage for information needed in the calculation. This last storage area will also contain $(Q)/A \sqrt{(P)/(SV)}$

The page numbering system is as follows:

A0 3-1

where A is for appendix A and 3-1 identifies the test point as 3 and the page number as 1.

Note:
The load and heat rate on the first page of each test point under the heading "RATED CONDITIONS" is the rated power factor and H2 pressure. The flow under the same heading is the rated throttle pressure and temperature of 2412.2 PSIA/1000 F.

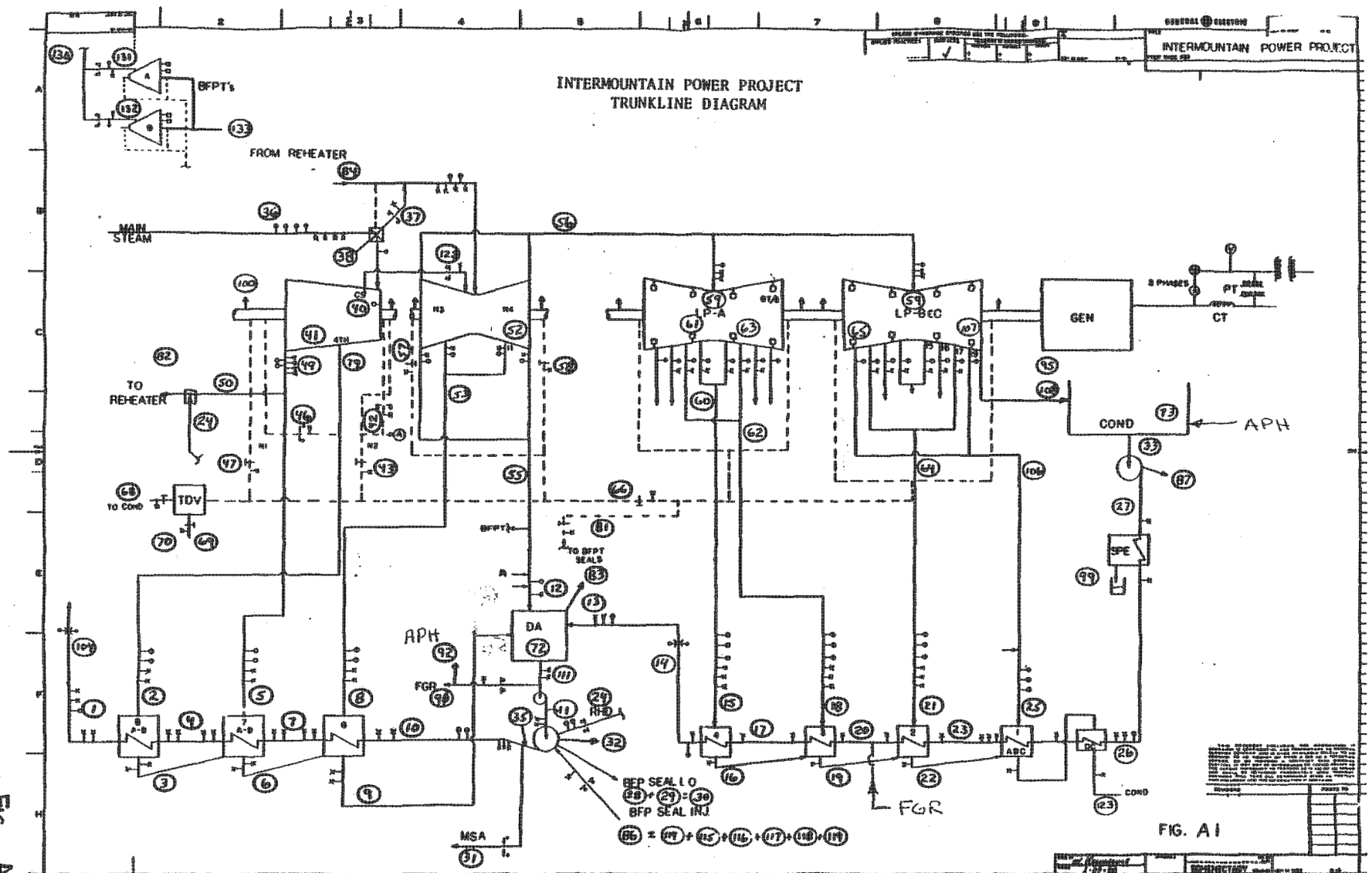

Fig. A1

IP14_002401

TEST CYCLE HEAT BALANCE

VALVE POINT VWO 01/25/89 TEST POINT 01
INTERMOUNTAIN PWR PROJECT UNIT #1
820000. KW TC6F-30 IN LSB TURBINE NO 270T150
2400. PSIG 1000./ 1000. F 2.300 IN HG ABS

CALCULATED USING ASME STEAM TABLES

COMBINED TURBINE-CYCLE PERFORMANCE

	TEST CONDITIONS	RATED CONDITIONS
TOTAL LOAD	864750.	863974.
HEAT RATE	7876.7	7883.8
THROTTLE FLOW	6273622.	6298542.

TURBINE THERMAL PERFORMANCE

	HIGH PRESS TB		REHEAT TB		
			IP TB		LP TB
	THROTTLE	COLD RHT	INLET	EXH	EXH
PRESS	2399.00	564.50	522.50	118.73	2.467
TEMP	996.53	620.30	1001.63	620.60	108.25
ENTH	1458.61	1306.37	1520.54	1338.65	1030.39
ENTR	1.5317		1.7325	1.7485	
EFF	86.536		91.465	90.394	

ABSCISSA PHPX/PT=0.2353 P1STSTG/PT=0.8005 VAN= 775.5

THRU FLOW PERFORMANCE OF CONDENSING SECTION SHAFT NO 1

	TOTAL TB ENERGY BALANCE		LP TB ENERGY BALANCE	
	RHT TB	LP TB	RHT TB	LP TB
AE	542.24	351.29		
H ELEP	1030.39		1030.39	
H UEEP	1041.88		1041.88	
EFF ELEP	90.39	87.75	90.39	87.75
EFF UEEP	88.27	84.48	88.27	84.48
VAN	775.51		775.51	

A01-1

T G L PERFORMANCE OF CONDENSING SECTION SHAFT NO 1

	TOTAL TB ENERGY BALANCE		LP TB ENERGY BALANCE	
	RHT TB	LP TB	RHT TB	LP TB
H ELEP	1033.03		1033.03	
H UEEP	1044.62		1044.62	
EFF ELEP	89.91	87.00	89.91	87.00
EFF UEEP	87.77	83.70	87.77	83.70
VAN	777.66		777.66	

TL	PRESS	TEMP	ENTH	FLOW

STAGE FLOW FUNCTION

STG NO	SHELL PRESS	ONE VEL HD	PCT DELTA P	FLANGE PRESS	NOZ AREA	Q/AP H FLG	QFS	Q/AP H SHL
1	1920.50	0.	0.	0.	86.6	0.	6217776.	1018.5
4	1088.23	4.328	1.25	1074.60	157.4	859.8	5613179.	854.4
RH 1	522.50	0.	0.	0.	350.2	0.	5090906.	811.2
8	512.05	0.	0.	0.	350.2	0.	5103889.	829.7
11	231.62	0.882	1.22	228.80	711.2	807.8	4863100.	795.5
15	118.73	0.	0.	0.	807.6	0.	4405127.	1155.5
15	61.35	0.361	1.71	60.30	1414.8	1187.3	4253611.	1150.6
16	38.46	0.227	1.71	37.80	2021.4	1165.5	3950725.	1135.2
18	12.00	0.070	1.69	11.80	6018.0	1068.1	3791892.	1034.0
19	5.61	0.039	1.99	5.50	12096.0	1016.2	3619438.	1006.1

A01-2

TL		PRESS	TEMP	ENTH	FLOW		

F E E D W A T E R C Y C L E

						HEATER	8
4	FW IN	2751.30	477.60	462.23	6287138.6	CLOSED	
2	EXTR	1061.60	796.70	1384.59	583418.6	TD =	1.6
3	DRAIN	1061.60	487.30	472.92	583418.6	DC =	9.7
						HEATER	7
7	FW IN	2751.30	394.30	372.13	6287138.6	CLOSED	
5	EXTR	554.60	625.00	1310.08	548209.1	TD =	0.2
6	DRAIN	554.60	402.30	377.92	1131627.7	DC =	8.0
3	ENTRY	1061.60	487.30	472.92	583418.6		
						HEATER	6
10	FW IN	2910.90	344.10	320.12	6287138.6	CLOSED	
8	EXTR	230.20	805.10	1426.87	240788.7	TD =	-0.5
9	DRAIN	230.20	351.70	323.69	1372416.4	DC =	7.6
6	ENTRY	554.60	402.30	377.92	1131627.7		
						PUMP	
11	FW IN	0.	0.	0.	6216375.6		
86	SEAL INJ	0.	0.	0.	149111.0		
30	SEAL RET	0.	0.	0.	71740.0		
32	LEAKAGE	0.	0.	0.	6608.0		
24	EXTR	1500.00	100.00	71.94	0.		
35	FW OUT	2910.90	344.10	320.12	6287138.6		
						HEATER	5
13	FW IN	118.40	294.50	264.16	4876123.5	OPEN	
12	EXTR	118.40	627.30	1342.04	207289.7	STO =	0.
111	DRAIN	118.40	340.10	311.36	6455515.6	SC =	0.2
9	ENTRY	230.20	351.70	323.69	1372416.4		
						HEATER	4
17	FW IN	118.40	262.50	231.47	4876123.5	CLOSED	
15	EXTR	59.29	516.00	1291.10	151515.4	TD =	-2.6
16	DRAIN	59.29	270.10	239.09	151515.4	DC =	7.6
						HEATER	3
20	FW IN	118.40	194.60	162.91	4876123.5	CLOSED	
18	EXTR	36.80	413.70	1243.52	302886.0	TD =	-0.2
19	DRAIN	36.80	204.70	172.87	454401.5	DC =	10.1
16	ENTRY	59.29	270.10	239.09	151515.4		
						HEATER	2
23	FW IN	150.00	157.10	125.41	4802123.5	CLOSED	
21	EXTR	10.80	228.10	1159.60	158833.4	TD =	2.0
22	DRAIN	10.80	163.90	131.88	613234.9	DC =	6.8
19	ENTRY	36.80	204.70	172.87	454401.5		

IP14_002404

TL		PRESS	TEMP	ENTH	FLOW	
						STM SEAL REG
88	FLOW TO	0.	0.	0.	6993.1	CALCULATED
70	TDV	6.73	567.70	1320.28	3690.2	TO HEATER
68	TDV	5.94	673.30	1371.24	3302.9	TO CONDENSER
	NOT CODED FOR MU		MEAS TOTAL FLOW =		0.	
						HEATER 1
26	FW IN	226.00	114.60	83.15	4802123.5	CLOSED
25	EXTR	4.51	0.	1094.42	172453.6	TD = 0.8
123	DRAIN	4.51	122.70	90.67	789378.7	DC = 8.1
22	ENTRY	10.80	163.90	131.88	613234.9	
70	ENTRY	6.73	567.70	1320.28	3690.2	
						PUMP
33	FW IN	0.	0.	0.	4953434.5	
87	LEAKAGE	0.	0.	0.	2200.0	
27	FW OUT	0.	0.	0.	4951234.5	
						FW TO BOILER
1	FW IN	2751.30	550.30	546.83	6287138.6	S+L = -13517.

T U R B I N E E X P A N S I O N

						MAIN STEAM LINE
71	EXIT	0.	0.	1458.61	0.	
36	THROTTLE	2399.00	996.53	1458.61	6273621.6	
						VALVE STEM LKG
						SQRT P/V = 86.540
37	LO NO 1	522.68	865.40	1447.11	2655.9	C = 55.443
						SQRT P/V = 18.938
38	LO NO 2	0.	0.	0.	2142.1	C = 113.113
						EXP TO STG 1
40	SHELL	1920.50	937.57	1436.87	6217775.8	
112	EXTR	0.	0.	1436.87	51047.8	

A01-4

TL	PRESS	TEMP	ENTH	FLOW	
					PACKING NO 2
					SQRT P/V =.115E 19
42 LO NO 1	124.18	766.10	1411.64	17004.0	C = 0.000
					SQRT P/V = 4.621
43 LO NO 2	17.67	763.00	1414.67	3571.4	C = 903.321
					SQRT P/V = 0.655
100 LO NO 3	0.	0.	0.	602.5	C = 1706.816
					EXP TO STG 4
41 SHELL	1088.23	0.	1383.94	5613179.4	
79 EXTR	1074.60	796.70	1383.94	583418.6	
					PACKING NO 1
					SQRT P/V = 23.289
46 LO NO 1	122.75	594.30	1325.25	8739.2	C = 634.857
					SQRT P/V = 4.946
47 LO NO 2	17.59	578.50	1324.69	5443.3	C = 1222.320
					SQRT P/V = 0.708
100 LO NO 3	0.	0.	0.	602.5	C = 1706.816
					EXPAND TO EXHAUST
49 EXH	564.50	620.30	1306.37	5636459.6	
80 EXTR	564.50	620.30	1306.37	548209.1	
50 TO RHT	564.50	620.30	1306.37	5088250.4	
					REHEATER 1
BEFORE LO	0.07	0.	1520.83	0.	
37 ENTRY					
84 AFTER LO	522.50	1002.10	1520.79	5090906.3	PCTDP = 7.440
					EXPAND TO BOWL
51 ENTRY	512.05	1001.06	1520.54	5103888.8	
125 ENTRY	528.81	817.00	1420.97	12982.5	
					EXP TO STG 11
52 SHELL	231.62	0.	1423.32	4863100.1	
53 EXTR	228.80	805.00	1426.87	240788.7	

A01-5

TL	PRESS	TEMP	ENTH	FLOW	
				PACKING NO	3
				SQRT P/V =	4.720
57 LO NO 1	18.00	640.50	1354.63	2556.8 C =	1353.173
				SQRT P/V =	0.704
58 LO NO 2	18.00	634.30	1351.62	2625.8 C =	5441.752
				SQRT P/V =	0.706
100 LO NO 3	0.	0.	0.	602.5 C =	1706.816
				SQRT P/V =	0.
100 LO NO 4	0.	0.	0.	602.5 C =	1706.816
				EXPAND TO EXHAUST	
56 EXH	118.73	620.60	1338.65	4405126.6	
55 EXTR	121.20	620.60	1338.49	451586.0	
				EXPAND TO BOWL	
59 ENTRY	118.73	620.60	1338.65	4405126.6	
				EXP TO STG	15
61 SHELL	61.35	0.	1288.36	4253611.1	
60 EXTR	60.30	521.00	1293.47	151515.4	
				EXP TO STG	16
63 SHELL	38.46	0.	1247.85	3950725.1	
62 EXTR	37.80	418.70	1245.82	302886.0	
				EXP TO STG	18
65 SHELL	12.00	0.	1161.19	3791891.7	
64 EXTR	11.80	231.10	1160.68	158833.4	
				EXP TO STG	19
107 SHELL	5.61	0.	1113.97	3619438.1	
106 EXTR	5.50	0.	1094.42	172453.6	
				CONDENSER	
				SHAFT	1
108 TB EXH	1.21	108.25	1041.8811	3619438.1 LEVL =-22639.0	
76 ENTRY	0.	0.	0.	1311358.1	
122 DRAIN	0.	0.	0.	4953435.2	
				GENERATOR	1
				SHAFT	1

MEASURED LOAD = 864750.0 PF = 0.975 H2 = 62.80
SHAFT 1 KW = 876779.5 FL =4353.0 GL = 7676.5

A01-6

IP14_002407

TEST CYCLE HEAT BALANCE

P E R F O R M A N C E

TRUNKLINE OUTPUT

TL	P	T	H	Q	SV	SP	PV	TR
1	2751.3	550.3	546.8	6287139.	0.0212	0.	0.	-13517.0
2	1061.6	796.7	1384.6	583419.	0.6413	551.885	1.585	244.8
3	1061.6	487.3	472.9	583419.	0.0201	0.	9.700	0.
4	2751.3	477.6	462.2	6287139.	0.	0.	0.	0.
5	554.6	625.0	1310.1	548209.	1.0678	477.819	0.219	147.2
6	554.6	402.3	377.9	1131628.	0.0186	0.	8.000	0.
7	2751.3	394.3	372.1	6287139.	0.	0.	0.	0.
8	230.2	805.1	1426.9	240789.	3.2131	393.773	-0.527	411.3
9	230.2	351.7	323.7	1372416.	0.0180	0.	7.600	0.
10	2910.9	344.1	320.1	6287139.	0.0177	0.	0.	0.
11	0.	0.	0.	6216376.	0.	0.	0.	0.
12	118.4	627.3	1342.0	207290.	5.3788	340.259	0.	287.0
13	118.4	294.5	264.2	4876124.	0.0174	0.	0.	0.
15	59.3	516.0	1291.1	151515.	9.6813	291.935	-2.565	224.1
16	59.3	270.1	239.1	151515.	0.0172	0.	7.600	0.
17	118.4	262.5	231.5	4876124.	0.	0.	0.	0.
18	36.8	413.7	1243.5	302886.	13.9680	262.253	-0.247	151.4
19	36.8	204.7	172.9	454401.	0.0167	0.	10.100	0.
20	118.4	194.6	162.9	4876124.	0.	0.	0.	0.
21	10.8	228.1	1159.6	158833.	37.5482	196.869	1.969	31.2
22	10.8	163.9	131.9	613235.	0.0164	0.	6.800	0.
23	150.0	157.1	125.4	4802124.	0.	0.	0.	0.
24	1500.0	100.0	71.9	0.	0.0161	0.	0.	0.
25	4.5	0.	1094.4	172454.	0.	157.911	0.811	-157.9
26	226.0	114.6	83.2	4802124.	0.0162	0.	0.	0.
27	0.	0.	0.	4951235.	0.	0.	0.	0.
28	0.	0.	0.	20122.	0.	0.	0.	0.
29	0.	0.	0.	51618.	0.	0.	0.	0.
30	0.	0.	0.	71740.	0.	0.	0.	0.
31	2910.0	292.0	266.9	0.	0.0172	0.	0.	0.
32	0.	0.	0.	6608.	0.	0.	0.	0.
33	0.	0.	0.	4953435.	0.	0.	0.	0.
34	0.	0.	0.	-13517.	0.	0.	0.	0.
35	2910.9	344.1	320.1	6287139.	0.0177	0.	0.	0.
36	2399.0	996.5	1458.6	6273622.	0.3203	1458.610	86.540	0.
37	522.7	865.4	1447.1	2656.	1.4573	0.780	18.938	55.4
38	0.	0.	0.	2142.	0.	0.	0.	113.1
39	2399.0	0.	1458.6	6268824.	0.3203	0.	86.540	0.
40	1920.5	937.6	1436.9	6217776.	0.3865	147.313	70.491	0.
41	1088.2	0.	1383.9	5613179.	0.6247	555.318	41.739	854.4
42	124.2	766.1	1411.6	17004.	5.8164	0.779	4.621	0.0
43	17.7	763.0	1414.7	3571.	41.1526	0.	0.655	903.3
45	0.	0.	0.	38065.	0.	0.	0.	0.
46	122.8	594.3	1325.3	8739.	5.0176	0.703	4.946	634.9
47	17.6	578.5	1324.7	5443.	35.0524	0.	0.708	1222.3
48	0.	0.	0.	5651245.	0.	0.	0.	0.
49	564.5	620.3	1306.4	5636460.	1.0408	479.690	23.289	0.
50	564.5	620.3	1306.4	5088250.	0.	0.	0.	0.
51	512.1	1001.1	1520.5	5103889.	1.6602	0.	17.565	0.

IP14_002408

TL	P	T	H	Q	SV	SP	PV	TR
52	231.6	0.	1423.3	4863100.	3.1349	394.618	8.596	795.5
53	228.8	805.0	1426.9	240789.	3.2328	393.246	8.413	0.
54	118.7	620.6	1338.7	4856713.	5.3284	0.	4.720	0.
55	121.2	620.6	1338.5	451536.	5.2179	342.014	0.	0.
56	118.7	620.6	1338.7	4405127.	5.3284	340.467	0.	0.
57	18.0	640.5	1354.6	2557.	36.3219	0.	0.704	1353.2
58	18.0	634.3	1351.6	2626.	36.1155	0.	0.706	5441.8
59	118.7	620.6	1338.7	4405127.	5.3284	0.	4.720	0.
60	60.3	521.0	1293.5	151515.	9.5683	293.037	2.510	0.
61	61.3	0.	1288.4	4253611.	8.9857	293.979	2.613	1150.6
62	37.8	418.7	1245.8	302886.	13.6758	263.851	1.663	0.
63	38.5	0.	1247.9	3950725.	12.9749	264.879	1.722	1135.2
64	11.8	231.1	1160.7	158833.	34.4906	201.139	0.585	0.
65	12.0	0.	1161.2	3791892.	32.3234	202.263	0.609	1034.0
66	17.5	650.8	1359.7	9346.	37.7149	0.	0.	0.
67	100.0	339.6	1194.0	0.	4.5161	0.	0.	0.
68	5.9	673.3	1371.2	3303.	113.5754	0.	0.	0.
69	6.7	567.7	1320.3	8789.	90.8161	0.	0.	0.
70	6.7	567.7	1320.3	3690.	90.8161	0.	0.	0.
71	0.	0.	1458.6	0.	0.	0.	0.	0.
73	0.	0.	0.	-22639.	0.	0.	0.	0.
75	0.	0.	0.	5731.	0.	0.	0.	0.
76	0.	0.	0.	1311358.	0.	0.	0.	0.
79	1074.6	796.7	1383.9	583419.	0.6327	553.385	41.213	0.
80	564.5	620.3	1306.4	548209.	0.	0.	0.	0.
81	17.4	449.2	1262.9	0.	30.9668	0.	0.	0.
82	0.	0.	0.	5088250.	0.	0.	0.	0.
83	118.4	340.3	1190.1	314.	0.	0.	0.	0.
84	522.5	1002.1	1520.8	5090906.	1.6269	7.440	17.921	811.2
86	0.	0.	0.	149111.	0.	0.	0.	0.
87	0.	0.	0.	2200.	0.	0.	0.	0.
89	0.	0.	0.	6993.	0.	0.	0.	0.
90	150.0	194.9	163.3	0.	0.0166	0.	0.	0.
91	300.0	189.7	158.4	74000.	0.0166	0.	0.	0.
92	0.	0.	0.	165140.	0.	0.	0.	0.
95	1.2	108.2	1030.4	3619438.	257.3221	1041.881	2.467	775.5
99	0.	0.	0.	6628.	0.	0.	0.	0.
100	0.	0.	0.	602.	0.	0.	0.	1706.8
104	2751.0	550.3	546.8	6287139.	0.0212	1.026	0.	2751.0
106	5.5	0.	1094.4	172454.	64.6687	166.295	0.292	0.
107	5.6	0.	1114.0	3619438.	63.4370	0.	0.297	1006.1
108	1.2	108.2	1041.9	3619438.	278.4117	1041.881	2.467	-22639.0
111	118.4	340.1	311.4	6455516.	0.0179	0.	0.159	0.
112	0.	0.	1436.9	51048.	0.	0.	0.	0.
113	0.	0.	0.	6196598.	0.	0.	0.115E 19	0.
114	226.0	114.6	83.2	15432.	0.0162	0.624	0.	226.0
115	226.0	114.6	83.2	17376.	0.0162	0.624	0.	226.0
116	226.0	114.6	83.2	26542.	0.0162	0.623	0.	226.0
117	226.0	114.6	83.2	35358.	0.0162	0.660	0.	226.0
118	226.0	114.6	83.2	28836.	0.0162	0.660	0.	226.0
119	226.0	114.6	83.2	25568.	0.0162	0.660	0.	226.0
120	0.	0.	0.	4798.	0.	0.	0.	0.
122	0.	0.	0.	4953435.	0.	0.	0.	0.
123	4.5	122.7	90.7	789379.	0.0162	0.	8.100	0.
125	528.8	817.0	1421.0	12983.	1.3800	0.628	0.	521.6
130	0.	0.	0.	270040.	0.	0.	0.	0.
131	132.7	625.8	1340.4	138263.	4.7822	1.018	0.	132.7
132	132.8	625.6	1340.3	131777.	4.7776	1.020	0.	132.8
133	0.	0.	0.	269437.	0.	0.	0.	0.
135	150.0	194.9	163.3	4802124.	0.0166	0.	0.	0.

A01-8

TEST CYCLE HEAT BALANCE

VALVE POINT VWO 01/26/89 TEST POINT 02
INTERMOUNTAIN PWR PROJECT UNIT #1
820000. KW TC6F-30 IN LSB TURBINE NO 270T150
2400. PSIG 1000./ 1000. F 2.300 IN HG ABS

CALCULATED USING ASME STEAM TABLES

COMBINED TURBINE-CYCLE PERFORMANCE

	TEST CONDITIONS	RATED CONDITIONS
TOTAL LOAD	869570.	868834.
HEAT RATE	7767.0	7773.6
THROTTLE FLOW	6222007.	6245905.

TURBINE THERMAL PERFORMANCE

	HIGH PRESS TB		REHEAT TB		
			IP TB		LP TB
	THROTTLE	COLD RHT	INLET	EXH	EXH
PRESS	2399.50	572.20	528.90	119.63	2.368
TEMP	996.70	622.87	1003.62	621.00	106.84
ENTH	1458.71	1307.36	1521.43	1338.80	1017.44
ENTR	1.5317		1.7318	1.7478	
EFF	86.699		91.486	92.348	

ABSCISSA PHPX/PT=0.2385 P1STSTG/PT=0.8010 VAN= 791.7

THRU FLOW PERFORMANCE OF CONDENSING SECTION SHAFT NO 1

	TOTAL TB ENERGY BALANCE		LP TB ENERGY BALANCE	
	RHT TB	LP TB	RHT TB	LP TB
AE	545.76	354.07		
H ELEP	1017.44		1017.44	
H UEEP	1029.25		1029.25	
EFF ELEP	92.35	90.76	92.35	90.76
EFF UEEP	90.18	87.42	90.18	87.42
VAN	791.68		791.68	

A02-1

T G L PERFORMANCE OF CONDENSING SECTION SHAFT NO 1

	TOTAL TB ENERGY BALANCE		LP TB ENERGY BALANCE	
	RHT TB	LP TB	RHT TB	LP TB
H ELEP	1020.28		1020.28	
H UEEP	1032.21		1032.21	
EFF ELEP	91.83	89.96	91.83	89.96
EFF UEEP	89.64	86.59	89.64	86.59
VAN	794.07		794.07	

TL	PRESS	TEMP	ENTH	FLOW

STAGE FLOW FUNCTION

STG NO	SHELL PRESS	ONE VEL HD	PCT DELTA P	FLANGE PRESS	NOZ AREA	Q/AP H FLG	QFS	Q/AP H SHL
1	1922.00	0.	0.	0.	86.6	0.	6176469.	1010.8
4	1092.11	4.226	1.22	1078.80	157.4	855.9	5580473.	850.7
RH 1	528.90	0.	0.	0.	350.2	0.	5064788.	797.6
8	518.32	0.	0.	0.	350.2	0.	5067422.	814.3
11	235.40	0.970	1.32	232.30	711.2	787.3	4813076.	775.3
15	119.63	0.	0.	0.	807.6	0.	4358400.	1134.8
15	61.76	0.331	1.56	60.80	1414.8	1167.0	4212693.	1132.1
16	38.81	0.209	1.57	38.20	2021.4	1145.3	3920243.	1116.8
18	12.14	0.064	1.52	11.96	6018.0	1053.0	3768082.	1016.0
19	5.70	0.035	1.80	5.60	12096.0	994.8	3601494.	985.8

IP14_002411

TL	PRESS	TEMP	ENTH	FLOW		

F E E D W A T E R C Y C L E

					HEATER	8
4 FW IN	2753.00	478.90	463.68	6250055.8	CLOSED	
2 EXTR	1064.60	797.40	1384.87	574760.4	TD =	1.4
3 DRAIN	1064.60	488.30	474.08	574760.4	DC =	9.4
					HEATER	7
7 FW IN	2753.00	396.30	374.24	6250055.8	CLOSED	
5 EXTR	560.30	624.70	1309.44	541647.1	TD =	-0.0
6 DRAIN	560.30	403.00	378.68	1116407.5	DC =	6.7
3 ENTRY	1064.60	488.30	474.08	574760.4		
					HEATER	6
10 FW IN	2908.70	343.60	319.60	6250055.8	CLOSED	
8 EXTR	232.30	806.00	1427.25	254346.5	TD =	-1.7
9 DRAIN	232.30	352.10	324.11	1370754.0	DC =	8.5
6 ENTRY	560.30	403.00	378.68	1116407.5		
					PUMP	
11 FW IN	0.	0.	0.	6179292.8		
86 SEAL INJ	0.	0.	0.	149111.0		
30 SEAL RET	0.	0.	0.	71740.0		
32 LEAKAGE	0.	0.	0.	6608.0		
24 EXTR	1500.00	100.00	71.94	0.		
35 FW OUT	2908.70.	343.60	319.60	6250055.8		
					HEATER	5
13 FW IN	140.00	295.00	264.71	4714868.6	OPEN	
12 EXTR	119.20	627.00	1341.84	205169.2	STD =	1615.0
111 DRAIN	119.20	341.40	312.72	6288862.8	SC =	-0.6
9 ENTRY	232.30	352.10	324.11	1370754.0		
					HEATER	4
17 FW IN	140.00	263.20	232.22	4714868.6	CLOSED	
15 EXTR	59.80	515.80	1290.96	145707.3	TD =	-2.5
16 DRAIN	59.80	270.70	239.70	145707.3	DC =	7.5
					HEATER	3
20 FW IN	140.00	195.50	163.86	4714868.6	CLOSED	
18 EXTR	37.20	413.90	1243.56	292450.5	TD =	-0.3
19 DRAIN	37.20	205.90	174.08	438157.8	DC =	10.4
16 ENTRY	59.80	270.70	239.70	145707.3		
					HEATER	2
23 FW IN	150.00	157.50	125.81	4607318.6	CLOSED	
21 EXTR	10.96	234.30	1162.48	152160.1	TD =	2.2
22 DRAIN	10.96	164.50	132.48	590317.9	DC =	7.0
19 ENTRY	37.20	205.90	174.08	438157.8		

IP14_002412

TL		PRESS	TEMP	ENTH	FLOW	
						STM SEAL REG
88	FLOW TO	0.	0.	0.	6977.3	CALCULATED
70	TDV	6.73	567.70	1320.28	3674.4	TO HEATER
68	TDV	5.94	673.30	1371.24	3302.9	TO CONDENSER
	NOT CODED FOR MU		MEAS TOTAL FLOW =		0.	

					HEATER		1
26	FW IN	226.00	114.60	83.15	4607318.6	CLOSED	
25	EXTR	4.60	0.	1095.08	166588.2	TD =	1.2
123	DRAIN	4.60	122.70	90.67	760580.5	DC =	8.1
22	ENTRY	10.96	164.50	132.48	590317.9		
70	ENTRY	6.73	567.70	1320.28	3674.4		

					PUMP	
33	FW IN	0.	0.	0.	4758629.6	
87	LEAKAGE	0.	0.	0.	2200.0	
27	FW OUT	0.	0.	0.	4756429.6	
					FW TO BOILER	
1	FW IN	2753.00	550.80	547.44	6250055.8	S+L = -28049.

T U R B I N E E X P A N S I O N

					MAIN STEAM LINE		
71	EXIT	0.	0.	1458.71	0.		
36	THROTTLE	2399.50	996.70	1458.71	6222006.8		
					VALVE STEM LKG		
					SQRT P/V =	86.551	
37	LO NO 1	529.08	865.40	1446.87	2672.6	C =	55.447
					SQRT P/V =	19.174	
38	LO NO 2	0.	0.	0.	2126.4	C =	110.897
					EXP TO STG		1
40	SHELL	1922.00	937.22	1436.59	6176469.2		
112	EXTR	0.	0.	1436.59	40738.5		

A02-4

TL	PRESS	TEMP	ENTH	FLOW	
					PACKING NO 2
					SQRT P/V =.115E 19
42 LO NO 1	124.98	766.10	1411.61	17062.1	C = 0.000
					SQRT P/V = 4.650
43 LO NO 2	17.67	763.00	1414.67	3571.4	C = 897.507
					SQRT P/V = 0.655
100 LO NO 3	0.	0.	0.	602.5	C = 1706.816
					EXP TO STG 4
41 SHELL	1092.11	0.	1389.47	5580472.9	
79 EXTR	1078.80	806.00	1389.47	574760.4	
					PACKING NO 1
					SQRT P/V = 23.584
46 LO NO 1	123.55	594.30	1325.20	8768.8	C = 628.175
					SQRT P/V = 4.979
47 LO NO 2	17.59	578.50	1324.69	5443.3	C = 1214.327
					SQRT P/V = 0.708
100 LO NO 3	0.	0.	0.	602.5	C = 1706.816
					EXPAND TO EXHAUST
49 EXH	572.20	622.87	1307.36	5603762.4	
80 EXTR	572.20	622.87	1307.36	541647.1	
50 TO RHT	572.20	622.87	1307.36	5062115.3	
					REHEATER 1
BEFORE LO	0.08	0.	1521.51	0.	
37 ENTRY					
84 AFTER LO	528.90	1003.70	1521.47	5064787.9	PCTDP = 7.567
					EXPAND TO BOWL
51 ENTRY	518.32	1003.05	1521.43	5067422.4	
125 ENTRY	28.81	817.00	1441.36	2634.4	
					EXP TO STG 11
52 SHELL	235.40	0.	1420.21	4813075.9	
53 EXTR	232.30	806.00	1427.25	254346.5	

IP14_002414

TL	PRESS	TEMP	ENTH	FLOW	
				PACKING NO	3
				SQRT P/V =	4.754
57 LO NO 1	18.00	640.50	1354.63	2556.8 C =	1343.509
				SQRT P/V =	0.704
58 LO NO 2	18.00	634.30	1351.62	2625.8 C =	5441.752
				SQRT P/V =	0.706
100 LO NO 3	0.	0.	0.	602.5 C =	1706.816
				SQRT P/V =	0.
100 LO NO 4	0.	0.	0.	602.5 C =	1706.816
				EXPAND TO EXHAUST	
56 EXH	119.60	621.00	1338.80	4358400.3	
55 EXTR	122.00	627.00	1341.66	448288.0	
				EXPAND TO BOWL	
59 ENTRY	119.63	621.00	1338.80	4358400.3	
				EXP TO STG	15
61 SHELL	61.76	0.	1280.33	4212693.0	
60 EXTR	60.80	520.80	1293.33	145707.3	
				EXP TO STG	16
63 SHELL	38.81	0.	1239.40	3920242.5	
62 EXTR	38.20	418.90	1245.86	292450.5	
				EXP TO STG	18
65 SHELL	12.14	0.	1152.41	3768082.4	
64 EXTR	11.96	237.30	1163.58	152160.1	
				EXP TO STG	19
107 SHELL	5.70	0.	1104.92	3601494.3	
106 EXTR	5.60	0.	1095.08	166588.2	
				CONDENSER	
				SHAFT	1
108 TB EXH	1.16	106.84	1029.2519	3601494.3 LEVL	=-38786.0
76 ENTRY	0.	0.	0.	1118350.0	
122 DRAIN	0.	0.	0.	4758630.3	
				GENERATOR	1
				SHAFT	1

MEASURED LOAD = 869570.0 PF = 0.970 H2 = 63.00
SHAFT 1 KW = 881699.2 FL =4353.0 GL = 7776.2

A02-6

IP14_002415

TEST CYCLE HEAT BALANCE

P E R F O R M A N C E

TRUNKLINE OUTPUT

TL	P	T	H	Q	SV	SP	PV	TR
1	2753.0	550.8	547.4	6250056.	0.0212	0.	0.	-28049.0
2	1064.6	797.4	1384.9	574760.	0.6398	552.233	1.433	245.2
3	1064.6	488.3	474.1	574760.	0.0201	0.	9.400	0.
4	2753.0	478.9	463.7	6250056.	0.	0.	0.	0.
5	560.3	624.7	1309.4	541647.	1.0555	478.899	-0.001	145.8
6	560.3	403.0	378.7	1116407.	0.0186	0.	6.700	0.
7	2753.0	396.3	374.2	6250056.	0.	0.	0.	0.
8	232.3	806.0	1427.2	254347.	3.1859	394.558	-1.742	411.4
9	232.3	352.1	324.1	1370754.	0.0180	0.	8.500	0.
10	2908.7	343.6	319.6	6250056.	0.0177	0.	0.	0.
11	0.	0.	0.	6179293.	0.	0.	0.	0.
12	119.2	627.0	1341.8	205169.	5.3405	340.764	1615.000	286.2
13	140.0	295.0	264.7	4714869.	0.0174	0.	0.	0.
15	59.8	515.8	1291.0	145707.	9.5957	292.493	-2.507	223.3
16	59.8	270.7	239.7	145707.	0.0172	0.	7.500	0.
17	140.0	263.2	232.2	4714869.	0.	0.	0.	0.
18	37.2	413.9	1243.6	292450.	13.8193	262.897	-0.303	151.0
19	37.2	205.9	174.1	438158.	0.0167	0.	10.400	0.
20	140.0	195.5	163.9	4714869.	0.	0.	0.	0.
21	11.0	234.3	1162.5	152160.	37.3442	197.574	2.174	36.7
22	11.0	164.5	132.5	590318.	0.0164	0.	7.000	0.
23	150.0	157.5	125.8	4607319.	0.	0.	0.	0.
24	1500.0	100.0	71.9	0.	0.0161	0.	0.	0.
25	4.6	0.	1095.1	166588.	0.	158.734	1.234	-158.7
26	226.0	114.6	83.2	4607319.	0.0162	0.	0.	0.
27	0.	0.	0.	4756430.	0.	0.	0.	0.
28	0.	0.	0.	20122.	0.	0.	0.	0.
29	0.	0.	0.	51618.	0.	0.	0.	0.
30	0.	0.	0.	71740.	0.	0.	0.	0.
31	2910.0	292.0	266.9	0.	0.0172	0.	0.	0.
32	0.	0.	0.	6608.	0.	0.	0.	0.
33	0.	0.	0.	4758630.	0.	0.	0.	0.
34	0.	0.	0.	-28049.	0.	0.	0.	0.
35	2908.7	343.6	319.6	6250056.	0.0177	0.	0.	0.
36	2399.5	996.7	1458.7	6222007.	0.3203	1458.706	86.551	0.
37	529.1	865.4	1446.9	2673.	1.4391	0.780	19.174	55.4
38	0.	0.	0.	2126.	0.	0.	0.	110.9
39	2399.5	0.	1458.7	6217208.	0.3203	0.	86.551	0.
40	1922.0	937.2	1436.6	6176469.	0.3860	145.902	70.563	0.
41	1092.1	0.	1389.5	5580473.	0.6287	555.801	41.677	850.7
42	125.0	766.1	1411.6	17062.	5.7788	0.779	4.650	0.0
43	17.7	763.0	1414.7	3571.	41.1526	0.	0.655	897.5
45	0.	0.	0.	38104.	0.	0.	0.	0.
46	123.6	594.3	1325.2	8769.	4.9844	0.703	4.979	628.2
47	17.6	578.5	1324.7	5443.	35.0524	0.	0.708	1214.3
48	0.	0.	0.	5618577.	0.	0.	0.	0.
49	572.2	622.9	1307.4	5603762.	1.0288	481.129	23.584	0.
50	572.2	622.9	1307.4	5062115.	0.	0.	0.	0.
51	518.3	1003.1	1521.4	5067422.	1.6416	0.	17.770	0.

IP14_002416

TL	P	T	H	Q	SV	SP	PV	TR
52	235.4	0.	1420.2	4813076.	3.0894	395.935	8.729	775.3
53	232.3	806.0	1427.2	254347.	3.1859	394.558	8.539	0.
54	119.6	621.0	1338.8	4806688.	5.2910	0.	4.754	0.
55	122.0	627.0	1341.7	448288.	5.2158	342.510	0.	0.
56	119.6	621.0	1338.8	4358400.	5.2910	341.015	0.	0.
57	18.0	640.5	1354.6	2557.	36.3219	0.	0.704	1343.5
58	18.0	634.3	1351.6	2626.	36.1155	0.	0.706	5441.8
59	119.6	621.0	1338.8	4358400.	5.2897	0.	4.756	0.
60	60.8	520.8	1293.3	145707.	9.4866	293.577	2.532	0.
61	61.8	0.	1280.3	4212693.	8.9285	294.521	2.630	1132.1
62	38.2	418.9	1245.9	292450.	13.5341	264.481	1.680	0.
63	38.8	0.	1239.4	3920243.	12.8688	265.506	1.737	1116.8
64	12.0	237.3	1163.6	152160.	34.3454	201.794	0.590	0.
65	12.1	0.	1152.4	3768082.	31.9757	202.918	0.616	1016.0
66	17.5	650.8	1359.7	9346.	37.7149	0.	0.	0.
67	100.0	339.6	1194.0	0.	4.5161	0.	0.	0.
68	5.9	673.3	1371.2	3303.	113.5754	0.	0.	0.
69	6.7	567.7	1320.3	8789.	90.8161	0.	0.	0.
70	6.7	567.7	1320.3	3674.	90.8161	0.	0.	0.
71	0.	0.	1458.7	0.	0.	0.	0.	0.
72	0.	0.	0.	1615.	0.	0.	0.	0.
73	0.	0.	0.	-38786.	0.	0.	0.	0.
75	0.	0.	0.	5731.	0.	0.	0.	0.
76	0.	0.	0.	1118350.	0.	0.	0.	0.
79	1078.8	806.0	1389.5	574760.	0.6366	553.867	41.167	0.
80	572.2	622.9	1307.4	541647.	0.	0.	0.	0.
81	17.4	449.2	1262.9	0.	30.9668	0.	0.	0.
82	0.	0.	0.	5062115.	0.	0.	0.	0.
83	119.2	340.8	1190.3	314.	0.	0.	0.	0.
84	529.9	1003.7	1521.5	5064788.	1.6086	7.567	18.133	797.6
86	0.	0.	0.	149111.	0.	0.	0.	0.
87	0.	0.	0.	2200.	0.	0.	0.	0.
88	0.	0.	0.	6977.	0.	0.	0.	0.
90	150.0	195.4	163.8	0.	0.0166	0.	0.	0.
91	300.0	205.9	174.7	107550.	0.0167	0.	0.	0.
92	0.	0.	0.	2020.	0.	0.	0.	0.
95	1.2	106.8	1017.4	3601494.	263.9965	1029.252	2.368	791.7
99	0.	0.	0.	6628.	0.	0.	0.	0.
100	0.	0.	0.	602.	0.	0.	0.	1706.8
104	2752.5	550.8	547.4	6250056.	0.0212	1.026	0.	2752.5
106	5.6	0.	1095.1	166588.	63.6081	167.069	0.297	0.
107	5.7	0.	1104.9	3601494.	62.5139	0.	0.302	985.8
108	1.2	106.8	1029.3	3601494.	289.3584	1029.252	2.368	-38786.0
111	119.2	341.4	312.7	6288863.	3.7553	0.	-0.636	0.
112	0.	0.	1436.6	40739.	0.	0.	0.	0.
113	0.	0.	0.	6155233.	0.	0.	0.115E 19	0.
114	226.0	114.6	83.2	15432.	0.0162	0.624	0.	226.0
115	226.0	114.6	83.2	17376.	0.0162	0.624	0.	226.0
116	226.0	114.6	83.2	26542.	0.0162	0.623	0.	226.0
117	226.0	114.6	83.2	35358.	0.0162	0.660	0.	226.0
118	226.0	114.6	83.2	28836.	0.0162	0.660	0.	226.0
119	226.0	114.6	83.2	25568.	0.0162	0.660	0.	226.0
120	0.	0.	0.	4799.	0.	0.	0.	0.
122	0.	0.	0.	4758630.	0.	0.	0.	0.
123	4.6	122.7	90.7	760580.	0.0162	0.	8.100	0.
125	28.8	817.0	1441.4	2634.	26.3508	0.628	0.	21.6
130	0.	0.	0.	268950.	0.	0.	0.	0.
131	131.9	627.4	1341.2	137703.	4.8194	1.018	0.	131.9
132	132.0	627.2	1341.1	131247.	4.8147	1.020	0.	132.0
133	0.	0.	0.	268347.	0.	0.	0.	0.
135	150.0	195.4	163.8	4607319.	0.0166	0.	0.	0.

TEST CYCLE HEAT BALANCE

VALVE POINT VWO 01/26/89 TEST POINT 03
INTERMOUNTAIN PWR PROJECT UNIT #1
820000. KW TC6F-30 IN LSB TURBINE NO 270T150
2400. PSIG 1000./ 1000. F 2.300 IN HG ABS

CALCULATED USING ASME STEAM TABLES

COMBINED TURBINE-CYCLE PERFORMANCE

	TEST CONDITIONS	RATED CONDITIONS
TOTAL LOAD	870090.	869350.
HEAT RATE	7739.5	7746.1
THROTTLE FLOW	6207121.	6251320.

TURBINE THERMAL PERFORMANCE

	HIGH PRESS TB		REHEAT TB		
			IP TB		LP TB
	THROTTLE	COLD RHT	INLET	EXH	EXH
PRESS	2397.00	570.90	527.34	119.59	2.316
TEMP	1000.70	625.50	1000.57	619.82	106.09
ENTH	1461.45	1309.10	1519.82	1338.20	1017.44
ENTR	1.5337		1.7310	1.7473	
EFF	86.826		91.322	92.045	

ABSCISSA PHPX/PT=0.2382 P1STSTG/PT=0.8009 VAN= 809.2

THRU FLOW PERFORMANCE OF CONDENSING SECTION SHAFT NO 1

	TOTAL TB ENERGY BALANCE		LP TB ENERGY BALANCE	
	RHT TB	LP TB	RHT TB	LP TB
AE	545.80	354.98		
H ELEP	1017.44		1017.44	
H UEEP	1029.89		1029.89	
EFF ELEP	92.05	90.36	92.05	90.36
EFF UEEP	89.77	86.85	89.77	86.85
VAN	809.15		809.15	

A03-1

T G L PERFORMANCE OF CONDENSING SECTION SHAFT NO 1

	TOTAL TB ENERGY BALANCE RHT TB	TOTAL TB ENERGY BALANCE LP TB	LP TB ENERGY BALANCE RHT TB	LP TB ENERGY BALANCE LP TB
H ELEP	1019.28		1019.28	
H UEEP	1031.82		1031.82	
EFF ELEP	91.71	89.84	91.71	89.84
EFF UEEP	89.41	86.31	89.41	86.31
VAN	810.73		810.73	

TL	PRESS	TEMP	ENTH	FLOW

STAGE FLOW FUNCTION

STG NO	SHELL PRESS	ONE VEL HD	PCT DELTA P	FLANGE PRESS	NOZ AREA	Q/AP H FLG	QFS	Q/AP H SHL
1	1919.80	0.	0.	0.	86.6	0.	6151360.	1009.8
4	1091.21	4.193	1.21	1078.00	157.4	850.6	5556332.	845.5
RH 1	527.34	0.	0.	0.	350.2	0.	5038259.	795.0
8	516.79	0.	0.	0.	350.2	0.	5051242.	813.2
11	234.90	0.875	1.19	232.10	711.2	787.3	4809529.	777.3
15	119.59	0.	0.	0.	807.6	0.	4385364.	1141.6
15	61.89	0.341	1.60	60.90	1414.8	1170.8	4237295.	1141.3
16	39.03	0.218	1.62	38.40	2021.4	1143.8	3938358.	1121.8
18	12.22	0.067	1.59	12.03	6018.0	1044.3	3781137.	1018.7
19	4.72	0.048	2.98	4.58	12096.0	1200.0	3603374.	1182.1

IP14_002419

TL		PRESS	TEMP	ENTH	FLOW		

F E E D W A T E R C Y C L E

						HEATER	8
4	FW IN	2747.00	478.70	463.45	6216660.4	CLOSED	
2	EXTR	1064.20	801.20	1387.23	573820.6	TD =	1.1
3	DRAIN	1064.20	488.20	473.96	573820.6	DC =	9.5
						HEATER	7
7	FW IN	2747.00	395.20	373.08	6216660.4	CLOSED	
5	EXTR	558.70	627.20	1311.11	543926.7	TD =	-0.1
6	DRAIN	558.70	403.00	378.68	1117747.4	DC =	7.8
3	ENTRY	1064.20	488.20	473.96	573820.6		
						HEATER	6
10	FW IN	2904.40	344.50	320.52	6216660.4	CLOSED	
8	EXTR	232.30	804.30	1426.37	241712.7	TD =	-0.6
9	DRAIN	232.30	352.60	324.64	1359460.0	DC =	8.1
6	ENTRY	558.70	403.00	378.68	1117747.4		
						PUMP	
11	FW IN	0.	0.	0.	6145876.5		
86	SEAL INJ	0.	0.	0.	149131.9		
30	SEAL RET	0.	0.	0.	71740.0		
32	LEAKAGE	0.	0.	0.	6608.0		
24	EXTR	1500.00	100.00	71.94	0.		
35	FW OUT	2904.40	344.50	320.52	6216660.4		
						HEATER	5
13	FW IN	140.00	295.20	264.92	4816682.8	OPEN	
12	EXTR	119.30	625.00	1340.83	187249.7	STO =	7212.0
111	DRAIN	119.30	338.10	309.28	6355866.5	SC =	2.7
9	ENTRY	232.30	352.60	324.64	1359460.0		
						HEATER	4
17	FW IN	140.00	263.60	232.63	4816682.8	CLOSED	
15	EXTR	59.90	514.50	1290.31	148068.6	TD =	-2.6
16	DRAIN	59.90	271.00	240.00	148068.6	DC =	7.4
						HEATER	3
20	FW IN	140.00	195.90	164.26	4816682.8	CLOSED	
18	EXTR	37.40	413.20	1243.19	298937.1	TD =	-0.4
19	DRAIN	37.40	206.00	174.18	447005.8	DC =	10.1
16	ENTRY	59.90	271.00	240.00	148068.6		
						HEATER	2
23	FW IN	150.00	157.70	126.01	4713792.8	CLOSED	
21	EXTR	11.03	229.10	1159.99	157221.0	TD =	2.1
22	DRAIN	11.03	164.90	132.88	604226.8	DC =	7.2
19	ENTRY	37.40	206.00	174.18	447005.8		

IP14_002420

TL		PRESS	TEMP	ENTH	FLOW	
						STM SEAL REG
88	FLOW TO	0.	0.	0.	6976.4	CALCULATED
70	TDV	6.73	567.70	1320.28	3673.5	TO HEATER
68	TDV	5.94	673.30	1371.24	3302.9	TO CONDENSER
	NOT CODED FOR MU		MEAS TOTAL FLOW =		0.	

						HEATER	1
26	FW IN	226.00	113.30	81.86	4713792.8	CLOSED	
25	EXTR	4.58	0.	1087.71	177762.8	TD =	0.9
123	DRAIN	4.58	121.60	89.57	785663.1	DC =	8.3
22	ENTRY	11.03	164.90	132.88	604226.8		
70	ENTRY	6.73	567.70	1320.28	3673.5		

						PUMP
33	FW IN	0.	0.	0.	4865124.6	
87	LEAKAGE	0.	0.	0.	2200.0	
27	FW OUT	0.	0.	0.	4862924.6	

						FW TO BOILER
1	FW IN	2747.00	551.05	547.75	6216660.4	S+L = -9539.

T U R B I N E E X P A N S I O N

						MAIN STEAM LINE
71	EXIT	0.	0.	1461.45	0.	
36	THROTTLE	2397.00	1000.70	1461.45	6207121.4	

						VALVE STEM LKG
					SQRT P/V =	86.269
37	LO NO 1	527.52	865.40	1446.93	2668.6	C = 55.570
					SQRT P/V =	19.117
38	LO NO 2	0.	0.	0.	2125.4	C = 111.183

						EXP TO STG 1
40	SHELL	1919.80	940.72	1438.95	6151359.8	
112	EXTR	0.	0.	1438.95	50967.6	

A03-4

TL	PRESS	TEMP	ENTH	FLOW
				PACKING NO 2
				SQRT P/V =.115E 19
42 LO NO 1	124.58	766.10	1411.63	17033.0 C = 0.000
				SQRT P/V = 4.636
43 LO NO 2	17.67	763.00	1414.67	3571.4 C = 900.405
				SQRT P/V = 0.655
100 LO NO 3	0.	0.	0.	602.5 C = 1706.816
				EXP TO STG 4
41 SHELL	1091.21	0.	1386.55	5556332.3
79 EXTR	1078.00	801.20	1386.55	573820.6
				PACKING NO 1
				SQRT P/V = 23.487
46 LO NO 1	123.15	594.30	1325.23	8754.0 C = 630.137
				SQRT P/V = 4.962
47 LO NO 2	17.59	578.50	1324.69	5443.3 C = 1218.310
				SQRT P/V = 0.708
100 LO NO 3	0.	0.	0.	602.5 C = 1706.816
				EXPAND TO EXHAUST
49 EXH	570.90	625.50	1309.10	5579517.5
80 EXTR	570.90	625.50	1309.10	543926.7
50 TO RHT	570.90	625.50	1309.10	5035590.8
				REHEATER 1
BEFORE LO	0.08	0.	1520.12	0.
37 ENTRY				
84 AFTER LO	527.34	1001.04	1520.08	5038259.3 PCTDP = 7.630
				EXPAND TO BOWL
51 ENTRY	516.79	999.99	1519.82	5051241.8
125 ENTRY	528.81	817.00	1420.97	12982.5
				EXP TO STG 11
52 SHELL	234.90	0.	1419.61	4809529.1
53 EXTR	232.10	804.30	1426.38	241712.7

IP14_002422

TL	PRESS	TEMP	ENTH	FLOW	
					PACKING NO 3
					SQRT P/V = 4.757
57 LO NO 1	18.00	640.50	1354.63	2556.8	C = 1342.840
					SQRT P/V = 0.704
58 LO NO 2	18.00	634.30	1351.62	2625.8	C = 5441.752
					SQRT P/V = 0.706
100 LO NO 3	0.	0.	0.	602.5	C = 1706.816
					SQRT P/V = 0.
100 LO NO 4	0.	0.	0.	602.5	C = 1706.816
					EXPAND TO EXHAUST
36 EXH	119.59	619.82	1338.20	4385363.8	
55 EXTR	121.60	622.00	1339.17	417777.8	
					EXPAND TO BOWL
59 ENTRY	119.59	619.82	1338.20	4385363.8	
					EXP TO STG 15
61 SHELL	61.89	0.	1281.00	4237295.1	
60 EXTR	60.90	519.50	1292.68	148068.6	
					EXP TO STG 16
63 SHELL	39.03	0.	1240.52	3938358.0	
62 EXTR	38.40	418.20	1245.50	298937.1	
					EXP TO STG 18
65 SHELL	12.22	0.	1153.68	3781137.0	
64 EXTR	12.03	230.10	1160.13	157221.0	
					EXP TO STG 19
107 SHELL	4.72	0.	1094.70	3603374.1	
106 EXTR	4.58	0.	1087.71	177762.8	
					CONDENSER
					SHAFT 1
108 TB EXH	1.14	106.09	1029.8875	3603374.1	LEVL =-25873.0
76 ENTRY	0.	0.	0.	1235878.2	
122 DRAIN	0.	0.	0.	4865125.3	
					GENERATOR 1
					SHAFT 1

MEASURED LOAD = 870090.0 PF = 0.970 H2 = 62.80
SHAFT 1 KW = 882221.2 FL =4353.0 GL = 7778.2

A03-6

IP14_002423

TEST CYCLE HEAT BALANCE

P E R F O R M A N C E

TRUNKLINE OUTPUT

TL	P	T	H	Q	SV	SP	PV	TR
1	2747.0	551.1	547.8	6216660.	0.0212	0.	0.	-9539.0
2	1064.2	801.2	1387.2	573821.	0.6428	552.186	1.136	249.0
3	1064.2	488.2	474.0	573821.	0.0201	0.	9.500	0.
4	2747.0	478.7	463.5	6216660.	0.	0.	0.	0.
5	558.7	627.2	1311.1	543927.	1.0622	478.597	-0.103	148.6
6	558.7	403.0	378.7	1117747.	0.0186	0.	7.800	0.
7	2747.0	395.2	373.1	6216660.	0.	0.	0.	0.
8	232.3	804.3	1426.4	241713.	3.1813	394.558	-0.642	409.7
9	232.3	352.6	324.6	1359460.	0.0180	0.	8.100	0.
10	2904.4	344.5	320.5	6216660.	0.0177	0.	0.	0.
11	0.	0.	0.	6145877.	0.	0.	0.	0.
12	119.3	625.0	1340.8	187250.	5.3255	340.827	7212.000	284.2
13	140.0	295.2	264.9	4816683.	0.0174	0.	0.	0.
15	59.9	514.5	1290.3	148069.	9.5660	292.602	-2.598	221.9
16	59.9	271.0	240.0	148069.	0.0172	0.	7.400	0.
17	140.0	263.6	232.6	4816683.	0.	0.	0.	0.
18	37.4	413.2	1243.2	298937.	13.7329	263.216	-0.384	150.0
19	37.4	206.0	174.2	447006.	0.0167	0.	10.100	0.
20	140.0	195.9	164.3	4816683.	0.	0.	0.	0.
21	11.0	229.1	1160.0	157221.	36.8131	197.880	2.080	31.2
22	11.0	164.9	132.9	604227.	0.0164	0.	7.200	0.
23	150.0	157.7	126.0	4713793.	0.	0.	0.	0.
24	1500.0	100.0	71.9	0.	0.0161	0.	0.	0.
25	4.6	0.	1087.7	177763.	0.	158.552	0.852	-158.6
26	226.0	113.3	81.9	4713793.	0.0162	0.	0.	0.
27	0.	0.	0.	4862925.	0.	0.	0.	0.
28	0.	0.	0.	20122.	0.	0.	0.	0.
29	0.	0.	0.	51618.	0.	0.	0.	0.
30	0.	0.	0.	71740.	0.	0.	0.	0.
31	2910.0	292.0	266.9	0.	0.0172	0.	0.	0.
32	0.	0.	0.	6608.	0.	0.	0.	0.
33	0.	0.	0.	4865125.	0.	0.	0.	0.
34	0.	0.	0.	-9539.	0.	0.	0.	0.
35	2904.4	344.5	320.5	6216660.	0.0177	0.	0.	0.
36	2397.0	1000.7	1461.5	6207121.	0.3221	1461.455	86.269	0.
37	527.5	865.4	1446.9	2669.	1.4435	0.780	19.117	55.6
38	0.	0.	0.	2125.	0.	0.	0.	111.2
39	2397.0	0.	1461.5	6202327.	0.3221	0.	86.269	0.
40	1919.8	940.7	1438.9	6151360.	0.3880	146.599	70.343	0.
41	1091.2	0.	1386.6	5556332.	0.6259	555.709	41.753	845.5
42	124.6	766.1	1411.6	17033.	5.7976	0.779	4.636	0.0
43	17.7	763.0	1414.7	3571.	41.1526	0.	0.655	900.4
45	0.	0.	0.	37985.	0.	0.	0.	0.
46	123.2	594.3	1325.2	8754.	5.0009	0.703	4.962	630.1
47	17.6	578.5	1324.7	5443.	35.0524	0.	0.708	1218.3
48	0.	0.	0.	5594317.	0.	0.	0.	0.
49	570.9	625.5	1309.1	5579518.	1.0349	480.887	23.487	0.
50	570.9	625.5	1309.1	5035591.	0.	0.	0.	0.
51	516.8	1000.0	1519.8	5051242.	1.6433	0.	17.737	0.

IP14_002424

TL	P	T	H	Q	SV	SP	PV	TR
52	234.9	0.	1419.6	4809529.	3.1033	395.860	8.700	777.3
53	232.1	804.3	1426.4	241713.	3.1841	394.484	8.538	0.
54	119.6	619.8	1338.2	4803142.	5.2853	0.	4.757	0.
55	121.6	622.0	1339.2	417778.	5.2076	342.262	0.	0.
56	119.6	619.8	1338.2	4385364.	5.2853	341.009	0.	0.
57	18.0	640.5	1354.6	2557.	36.3219	0.	0.704	1342.8
58	18.0	634.3	1351.6	2626.	36.1155	0.	0.706	5441.8
59	119.6	619.8	1338.2	4385364.	5.2853	0.	4.757	0.
60	60.9	519.5	1292.7	148069.	9.4577	293.685	2.538	0.
61	61.9	0.	1281.0	4237295.	8.9870	294.629	2.624	1141.3
62	38.4	418.2	1245.5	298937.	13.4514	264.794	1.690	0.
63	39.0	0.	1240.5	3938358.	12.9384	265.817	1.737	1121.8
64	12.0	230.1	1160.1	157221.	33.7722	202.078	0.597	0.
65	12.2	0.	1153.7	3781137.	32.1321	203.203	0.617	1018.7
66	17.5	650.8	1359.7	9346.	37.7149	0.	0.	0.
67	100.0	339.6	1194.0	0.	4.5161	0.	0.	0.
68	5.9	673.3	1371.2	3303.	113.5754	0.	0.	0.
69	6.7	567.7	1320.3	8789.	90.8161	0.	0.	0.
70	6.7	567.7	1320.3	3673.	90.8161	0.	0.	0.
71	0.	0.	1461.5	0.	0.	0.	0.	0.
72	0.	0.	0.	7212.	0.	0.	0.	0.
73	0.	0.	0.	-25873.	0.	0.	0.	0.
75	0.	0.	0.	5731.	0.	0.	0.	0.
76	0.	0.	0.	1235878.	0.	0.	0.	0.
79	1078.0	801.2	1386.6	573821.	0.6337	553.775	41.245	0.
80	570.9	625.5	1309.1	543927.	0.	0.	0.	0.
81	17.4	449.2	1262.9	0.	30.9668	0.	0.	0.
82	0.	0.	0.	5035591.	0.	0.	0.	0.
83	119.3	340.8	1190.3	314.	0.	0.	0.	0.
84	527.3	1001.0	1520.1	5038259.	1.6103	7.630	18.096	795.0
86	0.	0.	0.	149132.	0.	0.	0.	0.
87	0.	0.	0.	2200.	0.	0.	0.	0.
88	0.	0.	0.	6976.	0.	0.	0.	0.
90	150.0	195.8	164.2	0.	0.0166	0.	0.	0.
91	300.0	203.2	172.0	102890.	0.0166	0.	0.	0.
92	0.	0.	0.	107100.	0.	0.	0.	0.
95	1.1	106.1	1017.4	3603374.	269.6799	1029.887	2.316	809.2
99	0.	0.	0.	6628.	0.	0.	0.	0.
100	0.	0.	0.	602.	0.	0.	0.	1706.8
104	2747.0	551.1	547.8	6216660.	0.0212	1.026	0.	2747.0
106	4.6	0.	1087.7	177763.	76.5016	158.552	0.245	0.
107	4.7	0.	1094.7	3603374.	74.3236	0.	0.252	1182.1
108	1.1	106.1	1029.9	3603374.	295.4725	1029.887	2.316	-25873.0
111	119.3	338.1	309.3	6355867.	0.0179	0.	2.727	0.
112	0.	0.	1438.9	50968.	0.	0.	0.	0.
113	0.	0.	0.	6130153.	0.	0.	0.115E 19	0.
114	226.6	113.3	81.9	15434.	0.0162	0.624	0.	226.6
115	226.6	113.3	81.9	17378.	0.0162	0.624	0.	226.6
116	226.6	113.3	81.9	26546.	0.0162	0.623	0.	226.6
117	226.6	113.3	81.9	35363.	0.0162	0.660	0.	226.6
118	226.6	113.3	81.9	28840.	0.0162	0.660	0.	226.6
119	226.6	113.3	81.9	25571.	0.0162	0.660	0.	226.6
120	0.	0.	0.	4794.	0.	0.	0.	0.
122	0.	0.	0.	4865125.	0.	0.	0.	0.
123	4.6	121.6	89.6	785663.	0.0162	0.	8.300	0.
125	528.8	817.0	1421.0	12983.	1.3800	0.628	0.	521.6
130	0.	0.	0.	256315.	0.	0.	0.	0.
131	120.0	620.0	1338.3	131244.	5.2679	1.018	0.	120.0
132	120.0	620.0	1338.3	125071.	5.2679	1.019	0.	120.0
133	0.	0.	0.	255713.	0.	0.	0.	0.
135	150.0	195.8	164.2	4713793.	0.0166	0.	0.	0.

A03-8

TEST CYCLE HEAT BALANCE

VALVE POINT VWO 01/27/89 TEST POINT 04
INTERMOUNTAIN PWR PROJECT UNIT #1
820000. KW TC6F-30 IN LSB TURBINE NO 270T150
2400. PSIG 1000./ 1000. F 2.300 IN HG ABS

CALCULATED USING ASME STEAM TABLES

COMBINED TURBINE-CYCLE PERFORMANCE

	TEST CONDITIONS	RATED CONDITIONS
TOTAL LOAD	867390.	866658.
HEAT RATE	7795.4	7802.0
THROTTLE FLOW	6246463.	6250552.

TURBINE THERMAL PERFORMANCE

	HIGH PRESS TB		REHEAT TB		
			IP TB		LP TB
	THROTTLE	COLD RHT	INLET	EXH	EXH
PRESS	2399.80	572.30	529.10	119.61	2.393
TEMP	991.10	618.50	1000.82	619.00	107.20
ENTH	1454.95	1304.61	1519.91	1337.79	1020.04
ENTR	1.5291		1.7307	1.7469	
EFF	86.646		91.397		91.841

ABSCISSA PHPX/PT=0.2385 P1STSTG/PT=0.8011 VAN= 784.6

THRU FLOW PERFORMANCE OF CONDENSING SECTION SHAFT NO 1

	TOTAL TB ENERGY BALANCE		LP TB ENERGY BALANCE	
	RHT TB	LP TB	RHT TB	LP TB
AE	544.28	353.01		
H ELEP	1020.04		1020.04	
H UEEP	1031.65		1031.65	
EFF ELEP	91.84	90.01	91.84	90.01
EFF UEEP	89.71	86.72	89.71	86.72
VAN	784.60		784.60	

A04-1

T G L PERFORMANCE OF CONDENSING SECTION SHAFT NO 1

	TOTAL TB ENERGY BALANCE		LP TB ENERGY BALANCE	
	RHT TB	LP TB	RHT TB	LP TB
H ELEP	1022.06		1022.06	
H UEEP	1033.75		1033.75	
EFF ELEP	91.47	89.44	91.47	89.44
EFF UED	89.32	86.13	89.32	86.13
VAN	786.28		786.28	

TL	PRESS	TEMP	ENTH	FLOW

STAGE FLOW FUNCTION

STG NO	SHELL PRESS	ONE VEL HD	PCT DELTA P	FLANGE PRESS	NOZ AREA	Q/AP H FLG	QFS	Q/AP H SHL
1	1922.50	0.	0.	0.	86.6	0.	6190426.	1009.8
4	1090.98	4.217	1.22	1077.70	157.4	851.7	5590869.	846.5
RH 1	529.10	0.	0.	0.	350.2	0.	5064957.	796.6
8	518.52	0.	0.	0.	350.2	0.	5077969.	814.8
11	234.60	0.874	1.19	231.80	711.2	792.6	4836471.	782.3
15	119.61	0.	0.	0.	807.6	0.	4390490.	1142.2
15	61.86	0.365	1.71	60.80	1414.8	1171.8	4237431.	1141.3
16	38.87	0.231	1.72	38.20	2021.4	1146.1	3930214.	1123.1
18	12.15	0.072	1.71	11.94	6018.0	1048.0	3768282.	1020.4
19	4.78	0.045	2.74	4.65	12096.0	1181.6	3595455.	1165.3

A04-2

TL	PRESS	TEMP	ENTH	FLOW		

F E E D W A T E R C Y C L E

					HEATER	8
4 FW IN	2752.00	478.70	463.46	6267656.9	CLOSED	
2 EXTR	1065.60	792.10	1381.55	578349.6	TD =	1.7
3 DRAIN	1065.60	488.30	474.08	578349.6	DC =	9.6
					HEATER	7
7 FW IN	2752.00	395.10	372.98	6267656.9	CLOSED	
5 EXTR	561.30	619.70	1306.26	552011.6	TD =	0.4
6 DRAIN	561.30	403.10	378.79	1130361.2	DC =	8.0
3 ENTRY	1065.60	488.30	474.08	578349.6		
					HEATER	6
10 FW IN	2910.30	344.60	320.64	6267656.9	CLOSED	
8 EXTR	232.80	803.70	1426.04	241497.1	TD =	-0.4
9 DRAIN	232.80	352.00	324.01	1371858.3	DC =	7.4
6 ENTRY	561.30	403.10	378.79	1130361.2		
					PUMP	
11 FW IN	0.	0.	0.	6195701.8		
86 SEAL INJ	0.	0.	0.	149095.1		
30 SEAL RET	0.	0.	0.	71740.0		
32 LEAKAGE	0.	0.	0.	5400.0		
24 EXTR	1500.00	100.00	71.94	0.		
35 FW OUT	2910.30	344.60	320.64	6267656.9		
					HEATER	5
13 FW IN	140.00	295.00	264.71	4933071.4	OPEN	
12 EXTR	119.30	625.00	1340.83	209066.1	STO =	0.
111 DRAIN	119.30	340.40	311.68	6513681.8	SC =	0.4
9 ENTRY	232.80	352.00	324.01	1371858.3		
					HEATER	4
17 FW IN	140.00	263.10	232.12	4933071.4	CLOSED	
15 EXTR	59.75	514.00	1290.08	153058.2	TD =	-2.6
16 DRAIN	59.75	270.70	239.70	153058.2	DC =	7.6
					HEATER	3
20 FW IN	140.00	195.10	163.46	4933071.4	CLOSED	
18 EXTR	37.20	412.20	1242.73	307217.9	TD =	-0.2
19 DRAIN	37.20	205.10	173.27	460276.1	DC =	10.0
16 ENTRY	59.75	270.70	239.70	153058.2		
					HEATER	2
23 FW IN	150.00	157.50	125.81	4872391.4	CLOSED	
21 EXTR	10.90	227.10	1159.09	161931.7	TD =	1.9
22 DRAIN	10.90	164.50	132.48	622207.8	DC =	7.0
19 ENTRY	37.20	205.10	173.27	460276.1		

IP14_002428

TL		PRESS	TEMP	ENTH	FLOW	
						STM SEAL REG
88	FLOW TO	0.	0.	0.	6977.4	CALCULATED
70	TDV	6.73	567.70	1320.28	3674.5	TO HEATER
68	TDV	5.94	673.30	1371.24	3302.9	TO CONDENSER
	NOT CODED FOR MU		MEAS TOTAL FLOW =		0.	

						HEATER	1
26	FW IN	226.00	115.60	84.15	4872391.4	CLOSED	
25	EXTR	4.60	0.	1088.42	172827.1	TD =	1.2
123	DRAIN	4.60	122.70	90.67	798709.4	DC =	7.1
22	ENTRY	10.90	164.50	132.48	622207.8		
70	ENTRY	6.73	567.70	1320.28	3674.5		

						PUMP
33	FW IN	0.	0.	0.	5023686.4	
87	LEAKAGE	0.	0.	0.	2200.0	
27	FW OUT	0.	0.	0.	5021486.4	

						FW TO BOILER
1	FW IN	2752.00	550.60	547.19	6267656.9	S+L = -21194.

T U R B I N E E X P A N S I O N

						MAIN STEAM LINE
71	EXIT	0.	0.	1454.95	0.	
36	THROTTLE	2399.80	991.10	1454.95	6246462.9	

						VALVE STEM LKG
						SQRT P/V = 86.827
37	LO NO 1	529.28	865.40	1446.86	2673.2	C = 55.278
						SQRT P/V = 19.182
38	LO NO 2	0.	0.	0.	2126.4	C = 110.858

						EXP TO STG 1
40	SHELL	1922.50	931.90	1433.10	6190425.7	
112	EXTR	0.	0.	1433.10	51237.6	

A04-4

TL	PRESS	TEMP	ENTH	FLOW	
				PACKING NO	2
				SQRT P/V	=.115E 19
42 LO NO 1	124.58	766.10	1411.63	17033.0	C = 0.000
				SQRT P/V	= 4.636
43 LO NO 2	17.67	763.00	1414.67	3571.4	C = 900.405
				SQRT P/V	= 0.655
100 LO NO 3	0.	0.	0.	602.5	C = 1706.816
				EXP TO STG	4
41 SHELL	1090.98	0.	1380.93	5590869.2	
79 EXTR	1077.70	792.10	1380.93	578349.6	
				PACKING NO	1
				SQRT P/V	= 23.656
46 LO NO 1	123.15	594.30	1325.23	8754.0	C = 625.625
				SQRT P/V	= 4.962
47 LO NO 2	17.59	578.50	1324.69	5443.3	C = 1218.310
				SQRT P/V	= 0.708
100 LO NO 3	0.	0.	0.	602.5	C = 1706.816
				EXPAND TO EXHAUST	
49 EXH	572.30	618.50	1304.61	5614295.8	
80 EXTR	572.30	618.50	1304.61	552011.6	
50 TO RHT	572.30	618.50	1304.61	5062284.3	
				REHEATER	1
BEFORE LO	0.08	0.	1520.21	0.	
37 ENTRY					
84 AFTER LO	529.10	1001.30	1520.17	5064957.4	PCTDP = 7.548
				EXPAND TO BOWL	
51 ENTRY	518.52	1000.24	1519.91	5077968.5	
125 ENTRY	528.81	812.00	1418.26	13011.1	
				EXP TO STG	11
52 SHELL	234.60	0.	1419.58	4836471.4	
53 EXTR	231.80	803.70	1426.08	241497.1	

A04-5

TL	PRESS	TEMP	ENTH	FLOW
				PACKING NO 3
				SQRT P/V = 4.759
57 LO NO 1	18.00	640.50	1354.63	2556.8 C = 1342.070
				SQRT P/V = 0.704
58 LO NO 2	18.00	634.30	1351.62	2625.8 C = 5441.752
				SQRT P/V = 0.706
100 LO NO 3	0.	0.	0.	602.5 C = 1706.816
				SQRT P/V = 0.
100 LO NO 4	0.	0.	0.	602.5 C = 1706.816
				EXPAND TO EXHAUST
56 EXH	119.61	619.00	1337.79	4390489.6
55 EXTR	121.60	622.00	1339.17	439594.3
				EXPAND TO BOWL
59 ENTRY	119.61	619.00	1337.79	4390489.6
				EXP TO STG 15
61 SHELL	61.86	0.	1281.52	4237431.4
60 EXTR	60.80	519.00	1292.44	153058.2
				EXP TO STG 16
63 SHELL	38.87	0.	1240.81	3930213.6
62 EXTR	38.20	417.20	1245.03	307217.9
				EXP TO STG 18
65 SHELL	12.15	0.	1154.00	3768281.8
64 EXTR	11.94	230.10	1160.16	161931.7
				EXP TO STG 19
107 SHELL	4.78	0.	1096.28	3595454.7
106 EXTR	4.65	0.	1088.42	172827.1
				CONDENSER
				SHAFT 1
108 TR EXH	1.18	107.20	1031.6516	3595454.7 LEVL =-29108.0
76 ENTRY	0.	0.	0.	1399124.5
122 DRAIN	0.	0.	0.	5023687.2
				GENERATOR 1
				SHAFT 1

MEASURED LOAD = 867390.0 PF = 0.970 H2 = 63.00
SHAFT 1 KW = 879496.4 FL =4353.0 GL = 7753.4

A04-6

TEST CYCLE HEAT BALANCE

P E R F O R M A N C E

TRUNKLINE OUTPUT

TL	P	T	H	Q	SV	SP	PV	TR
1	2752.0	550.6	547.2	6267657.	0.0212	0.	0.	-21194.0
2	1065.6	792.1	1381.5	578350.	0.6353	552.348	1.748	239.8
3	1065.6	488.3	474.1	578350.	0.0201	0.	9.600	0.
4	2752.0	478.7	463.5	6267657.	0.	0.	0.	0.
5	561.3	619.7	1306.3	552012.	1.0465	479.088	0.388	140.6
6	561.3	403.1	378.8	1130361.	0.0186	0.	8.000	0.
7	2752.0	395.1	373.0	6267657.	0.	0.	0.	0.
8	232.8	803.7	1426.0	241497.	3.1728	394.744	-0.356	409.0
9	232.8	352.0	324.0	1371858.	0.0180	0.	7.400	0.
10	2910.3	344.6	320.6	6267657.	0.0177	0.	0.	0.
11	0.	0.	0.	6195702.	0.	0.	0.	0.
12	119.3	625.0	1340.8	209066.	5.3255	340.827	0.	284.2
13	140.0	295.0	264.7	4933071.	0.0174	0.	0.	0.
15	59.8	514.0	1290.1	153058.	9.5852	292.438	-2.562	221.6
16	59.8	270.7	239.7	153058.	0.0172	0.	7.600	0.
17	140.0	263.1	232.1	4933071.	0.	0.	0.	0.
18	37.2	412.2	1242.7	307218.	13.7910	262.897	-0.203	149.3
19	37.2	205.1	173.3	460276.	0.0167	0.	10.000	0.
20	140.0	195.1	163.5	4933071.	0.	0.	0.	0.
21	10.9	227.1	1159.1	161932.	37.1433	197.311	1.911	29.8
22	10.9	164.5	132.5	622208.	0.0164	0.	7.000	0.
23	150.0	157.5	125.8	4872391.	0.	0.	0.	0.
24	1500.0	100.0	71.9	0.	0.0161	0.	0.	0.
25	4.6	0.	1088.4	172827.	0.	158.734	1.234	-158.7
26	226.0	115.6	84.2	4872391.	0.0162	0.	0.	0.
27	0.	0.	0.	5021486.	0.	0.	0.	0.
28	0.	0.	0.	20122.	0.	0.	0.	0.
29	0.	0.	0.	51618.	0.	0.	0.	0.
30	0.	0.	0.	71740.	0.	0.	0.	0.
31	2910.0	292.0	266.9	0.	0.0172	0.	0.	0.
32	0.	0.	0.	5400.	0.	0.	0.	0.
33	0.	0.	0.	5023686.	0.	0.	0.	0.
34	0.	0.	0.	-21194.	0.	0.	0.	0.
35	2910.3	344.6	320.6	6267657.	0.0177	0.	0.	0.
36	2399.8	991.1	1455.0	6246463.	0.3183	1454.952	86.827	0.
37	529.3	865.4	1446.9	2673.	1.4385	0.780	19.182	55.3
38	0.	0.	0.	2126.	0.	0.	0.	110.9
39	2399.8	0.	1455.0	6241663.	0.3183	0.	86.827	0.
40	1922.5	931.9	1433.1	6190426.	0.3836	145.059	70.790	0.
41	1091.0	0.	1380.9	5590869.	0.6196	555.675	41.961	846.5
42	124.6	766.1	1411.6	17033.	5.7976	0.779	4.636	0.0
43	17.7	763.0	1414.7	3571.	41.1526	0.	0.655	900.4
45	0.	0.	0.	38226.	0.	0.	0.	0.
46	123.2	594.3	1325.2	8754.	5.0009	0.703	4.962	625.6
47	17.6	578.5	1324.7	5443.	35.0524	0.	0.708	1218.3
48	0.	0.	0.	5629096.	0.	0.	0.	0.
49	572.3	618.5	1304.6	5614296.	1.0227	481.147	23.656	0.
50	572.3	618.5	1304.6	5062284.	0.	0.	0.	0.
51	518.5	1000.2	1519.9	5077969.	1.6380	0.	17.795	0.

A04-7

TL	P	T	H	Q	SV	SP	PV	TR
52	234.6	0.	1419.6	4836471.	3.1047	395.748	8.693	782.3
53	231.8	803.7	1426.1	241497.	3.1867	394.372	8.529	0.
54	119.6	619.0	1337.8	4830084.	5.2801	0.	4.759	0.
55	121.6	622.0	1339.2	439594.	5.2076	342.262	0.	0.
56	119.6	619.0	1337.8	4390490.	5.2801	341.021	0.	0.
57	18.0	640.5	1354.6	2557.	36.3219	0.	0.704	1342.1
58	18.0	634.3	1351.6	2626.	36.1155	0.	0.706	5441.8
59	119.6	619.0	1337.8	4390490.	5.2801	0.	4.759	0.
60	60.8	519.0	1292.4	153058.	9.4683	293.577	2.534	0.
61	61.9	0.	1281.5	4237431.	8.9824	294.521	2.624	1141.3
62	38.2	417.2	1245.0	307218.	13.5065	264.481	1.682	0.
63	38.9	0.	1240.8	3930214.	12.9690	265.506	1.731	1123.1
64	11.9	230.1	1160.2	161932.	34.0297	201.712	0.592	0.
65	12.1	0.	1154.0	3768282.	32.2579	202.837	0.614	1020.4
66	17.5	650.8	1359.7	9346.	37.7149	0.	0.	0.
67	100.0	339.6	1194.0	0.	4.5161	0.	0.	0.
68	5.9	673.3	1371.2	3303.	113.5754	0.	0.	0.
69	6.7	567.7	1320.3	8789.	90.8161	0.	0.	0.
70	6.7	567.7	1320.3	3674.	90.8161	0.	0.	0.
71	0.	0.	1455.0	0.	0.	0.	0.	0.
73	0.	0.	0.	-29108.	0.	0.	0.	0.
75	0.	0.	0.	5731.	0.	0.	0.	0.
76	0.	0.	0.	1399124.	0.	0.	0.	0.
79	1077.7	792.1	1380.9	578350.	0.6273	553.741	41.447	0.
80	572.3	618.5	1304.6	552012.	0.	0.	0.	0.
81	17.4	449.2	1262.9	0.	30.9668	0.	0.	0.
82	0.	0.	0.	5062284.	0.	0.	0.	0.
83	119.3	340.8	1190.3	314.	0.	0.	0.	0.
84	529.1	1001.3	1520.2	5064957.	1.6051	7.548	18.156	796.6
86	0.	0.	0.	149095.	0.	0.	0.	0.
87	0.	0.	0.	2200.	0.	0.	0.	0.
88	0.	0.	0.	6977.	0.	0.	0.	0.
90	150.0	195.4	163.8	0.	0.0166	0.	0.	0.
91	300.0	184.9	153.6	60680.	0.0165	0.	0.	0.
92	0.	0.	0.	257300.	0.	0.	0.	0.
95	1.2	107.2	1020.0	3595455.	262.0724	1031.652	2.393	784.6
99	0.	0.	0.	6628.	0.	0.	0.	0.
100	0.	0.	0.	602.	0.	0.	0.	1706.8
104	2752.0	550.6	547.2	6267657.	0.0212	1.026	0.	2752.0
106	4.6	0.	1088.4	172827.	75.4551	159.186	0.248	0.
107	4.8	0.	1096.3	3595455.	73.4778	0.	0.255	1165.3
108	1.2	107.2	1031.7	3595455.	286.5110	1031.652	2.393	-29108.0
111	119.3	340.4	311.7	6513682.	0.0179	0.	0.427	0.
112	0.	0.	1433.1	51238.	0.	0.	0.	0.
113	0.	0.	0.	6169219.	0.	0.	0.115E 19	0.
114	226.6	115.6	84.2	15430.	0.0162	0.624	0.	226.6
115	226.6	115.6	84.2	17374.	0.0162	0.624	0.	226.6
116	226.6	115.6	84.2	26539.	0.0162	0.623	0.	226.6
117	226.6	115.6	84.2	35354.	0.0162	0.660	0.	226.6
118	226.6	115.6	84.2	28833.	0.0162	0.660	0.	226.6
119	226.6	115.6	84.2	25565.	0.0162	0.660	0.	226.6
120	0.	0.	0.	4800.	0.	0.	0.	0.
122	0.	0.	0.	5023687.	0.	0.	0.	0.
123	4.6	122.7	90.7	798709.	0.0162	0.	7.100	0.
125	528.8	812.0	1418.3	13011.	1.3737	0.628	0.	521.6
130	0.	0.	0.	256315.	0.	0.	0.	0.
131	120.0	620.0	1338.3	131244.	5.2679	1.018	0.	120.0
132	120.0	620.0	1338.3	125071.	5.2679	1.019	0.	120.0
133	0.	0.	0.	255713.	0.	0.	0.	0.
135	150.0	195.4	163.8	4872391.	0.0166	0.	0.	0.

A04-

TEST CYCLE HEAT BALANCE

VALVE POINT VWO 01/27/89 TEST POINT 05
INTERMOUNTAIN PWR PROJECT UNIT #1
820000. KW TC6F-30 IN LSB TURBINE NO 270T150
2400. PSIG 1000./ 1000. F 2.300 IN HG ABS

CALCULATED USING ASME STEAM TABLES

COMBINED TURBINE-CYCLE PERFORMANCE

	TEST CONDITIONS	RATED CONDITIONS
TOTAL LOAD	870210.	869470.
HEAT RATE	7736.9	7743.5
THROTTLE FLOW	6216605.	6237983.

TURBINE THERMAL PERFORMANCE

	HIGH PRESS TB		REHEAT TB		
			IP TB		LP TB
	THROTTLE	COLD RHT	INLET	EXH	EXH
PRESS	2398.70	571.90	528.70	119.98	2.401
TEMP	995.30	621.80	999.63	619.10	107.32
ENTH	1457.80	1306.71	1519.28	1337.82	1015.87
ENTR	1.5311		1.7304	1.7466	
EFF	86.665		91.349	92.595	

ABSCISSA PHPX/PT=0.2384 P1STSTG/PT=0.8013 VAN= 782.2

THRU FLOW PERFORMANCE OF CONDENSING SECTION SHAFT NO 1

	TOTAL TB ENERGY BALANCE		LP TB ENERGY BALANCE	
	RHT TB	LP TB	RHT TB	LP TB
AE	543.66	353.03		
H ELEP	1015.87		1015.87	
H UEEP	1027.32		1027.32	
EFF ELEP	92.59	91.20	92.59	91.20
EFF UEEP	90.49	87.95	90.49	87.95
VAN	782.21		782.21	

A05-1

T G L PERFORMANCE OF CONDENSING SECTION SHAFT NO 1

	TOTAL TB ENERGY BALANCE		LP TB ENERGY BALANCE	
	RHT TB	LP TB	RHT TB	LP TB
H ELEP	1018.52		1018.52	
H UEEP	1030.07		1030.07	
EFF ELEP	92.11	90.45	92.11	90.45
EFF UEEP	89.98	87.17	89.98	87.17
VAN	784.41		784.41	

TL	PRESS	TEMP	ENTH	FLOW

STAGE FLOW FUNCTION

STG NO	SHELL PRESS	ONE VEL HD	PCT DELTA P	FLANGE PRESS	NOZ AREA	Q/AP H FLG	QFS	Q/AP H SHL
1	1922.00	0.	0.	0.	86.6	0.	6160696.	1007.5
4	1092.31	4.226	1.22	1079.00	157.4	848.5	5561554.	843.3
RH 1	528.70	0.	0.	0.	350.2	0.	5041873.	793.2
8	518.13	0.	0.	0.	350.2	0.	5054855.	811.4
11	234.54	0.889	1.21	232.10	711.2	787.4	4811219.	775.4
15	119.98	0.	0.	0.	807.6	0.	4374207.	1134.5
15	62.44	0.326	1.51	61.50	1414.8	1159.7	4229060.	1123.8
16	39.10	0.208	1.54	38.50	2021.4	1140.5	3936335.	1112.2
18	12.19	0.065	1.54	12.00	6018.0	1047.4	3782089.	1015.9
19	4.78	0.044	2.64	4.65	12096.0	1184.3	3611927.	1168.5

A05-2

TL	PRESS	TEMP	ENTH	FLOW		

F E E D W A T E R C Y C L E

					HEATER	8
4 FW IN	2751.00	478.40	463.12	6244266.6	CLOSED	
2 EXTR	1066.40	796.40	1384.16	577761.7	TD =	1.7
3 DRAIN	1066.40	488.40	474.19	577761.7	DC =	10.0
					HEATER	7
7 FW IN	2751.00	395.20	373.08	6244266.6	CLOSED	
5 EXTR	561.00	623.40	1308.58	545594.2	TD =	0.6
6 DRAIN	561.00	403.25	378.95	1123355.9	DC =	8.0
3 ENTRY	1066.40	488.40	474.19	577761.7		
					HEATER	6
10 FW IN	2910.00	344.40	320.43	6244266.6	CLOSED	
8 EXTR	233.25	803.70	1426.02	243635.7	TD =	-0.3
9 DRAIN	233.25	353.00	325.06	1366991.6	DC =	8.6
6 ENTRY	561.00	403.25	378.95	1123355.9		
					PUMP	
11 FW IN	0.	0.	0.	6172536.2		
86 SEAL INJ	0.	0.	0.	148870.4		
20 SEAL RET	0.	0.	0.	71740.0		
32 LEAKAGE	0.	0.	0.	5400.0		
24 EXTR	1500.00	100.00	71.94	0.		
35 FW OUT	2910.00	344.40	320.43	6244266.6		
					HEATER	5
13 FW IN	140.00	295.50	265.22	4704780.1	OPEN	
12 EXTR	119.90	622.00	1339.28	200358.5	STD =	0.
111 DRAIN	119.90	341.20	312.52	6271816.2	SC =	0.0
9 ENTRY	233.25	353.00	325.06	1366991.6		
					HEATER	4
17 FW IN	140.00	263.80	232.83	4704780.1	CLOSED	
15 EXTR	60.28	514.20	1290.13	145146.5	TD =	-2.5
16 DRAIN	60.28	271.20	240.21	145146.5	DC =	7.4
					HEATER	3
20 FW IN	140.00	195.90	164.26	4704780.1	CLOSED	
18 EXTR	37.58	413.10	1243.12	292725.6	TD =	-0.3
19 DRAIN	37.58	205.70	173.88	437872.2	DC =	9.8
16 ENTRY	60.28	271.20	240.21	145146.5		
					HEATER	2
23 FW IN	150.00	158.10	126.41	4630600.1	CLOSED	
21 EXTR	11.10	229.10	1159.97	154245.8	TD =	2.1
22 DRAIN	11.10	165.00	132.98	592117.9	DC =	6.9
19 ENTRY	37.58	205.70	173.88	437872.2		

IP14_002436

TL		PRESS	TEMP	ENTH	FLOW	
						STM SEAL REG
88	FLOW TO	0.	0.	0.	6976.2	CALCULATED
70	TDV	6.73	567.70	1320.28	3673.3	TO HEATER
68	TDV	5.94	673.30	1371.24	3302.9	TO CONDENSER
	NOT CODED FOR MU		MEAS TOTAL FLOW =		0.	

					HEATER		1
26	FW IN	226.00	115.00	83.55	4630600.1	CLOSED	
25	EXTR	4.62	0.	1083.11	170161.7	TD =	0.8
123	DRAIN	4.62	122.70	90.67	765952.9	DC =	7.7
22	ENTRY	11.10	165.00	132.98	592117.9		
70	ENTRY	6.73	567.70	1320.28	3673.3		

					PUMP	
33	FW IN	0.	0.	0.	4781670.5	
87	LEAKAGE	0.	0.	0.	2200.0	
27	FW OUT	0.	0.	0.	4779470.5	
					FW TO BOILER	
1	FW IN	2751.00	550.70	547.32	6244266.6	S+L = -27662.

T U R B I N E E X P A N S I O N

					MAIN STEAM LINE	
71	EXIT	0.	0.	1457.80	0.	
36	THROTTLE	2398.70	995.30	1457.80	6216604.6	
					VALVE STEM LKG	
					SQRT P/V =	86.586
37	LO NO 1	528.88	865.40	1446.88	2672.1 C =	55.406
					SQRT P/V =	19.167
38	LO NO 2	0.	0.	0.	2125.3 C =	110.883
					EXP TO STG	1
40	SHELL	1922.00	936.06	1435.83	6160696.3	
112	EXTR	0.	0.	1435.83	51111.0	

A05-4

TL	PRESS	TEMP	ENTH	FLOW	
					PACKING NO 3
					SQRT P/V = 4.774
57 LO NO 1	18.00	640.50	1354.63	2556.8	C = 1337.961
					SQRT P/V = 0.704
58 LO NO 2	18.00	634.30	1351.62	2625.8	C = 5441.752
					SQRT P/V = 0.706
100 LO NO 3	0.	0.	0.	602.5	C = 1706.816
					SQRT P/V = 0.
100 LO NO 4	0.	0.	0.	602.5	C = 1706.816
					EXPAND TO EXHAUST
56 EXH	119.98	619.10	1337.82	4374206.8	
55 EXTR	124.00	622.00	1339.02	430624.9	
					EXPAND TO BOWL
59 ENTRY	119.98	619.10	1337.82	4374206.8	
					EXP TO STG 15
61 SHELL	62.44	0.	1278.83	4229060.2	
60 EXTR	61.50	523.00	1294.35	145146.5	
					EXP TO STG 16
63 SHELL	39.10	0.	1237.58	3936334.6	
62 EXTR	38.50	418.00	1245.38	292725.6	
					EXP TO STG 18
65 SHELL	12.19	0.	1150.40	3782088.8	
64 EXTR	12.00	230.00	1160.09	154245.8	
					EXP TO STG 19
107 SHELL	4.78	0.	1092.18	3611927.1	
106 EXTR	4.65	0.	1083.11	170161.7	
					CONDENSER
					SHAFT 1
108 TB EXH	1.18	107.32	1027.3207	3611927.1	LEVL =-35576.0
76 ENTRY	0.	0.	0.	1134168.0	
122 DRAIN	0.	0.	0.	4781671.1	
					GENERATOR 1
					SHAFT 1

MEASURED LOAD = 870210.0 PF = 0.970 H2 = 62.80
SHAFT 1 KW = 882342.5 FL =4353.0 GL = 7779.5

A05-6

TEST CYCLE HEAT BALANCE

P E R F O R M A N C E

TRUNKLINE OUTPUT

TL	P	T	H	Q	SV	SP	PV	TR
1	2751.0	550.7	547.3	6244267.	0.0212	0.	0.	-27662.0
2	1066.4	796.4	1384.2	577762.	0.6378	552.441	1.741	244.0
3	1066.4	488.4	474.2	577762.	0.0201	0.	10.000	0.
4	2751.0	478.4	463.1	6244267.	0.	0.	0.	0.
5	561.0	623.4	1308.6	545594.	1.0522	479.032	0.632	144.4
6	561.0	403.3	379.0	1123356.	0.0186	0.	8.050	0.
7	2751.0	395.2	373.1	6244267.	0.	0.	0.	0.
8	233.3	803.7	1426.0	243636.	3.1665	394.912	-0.288	408.8
9	233.3	353.0	325.1	1366992.	0.0180	0.	8.600	0.
10	2910.0	344.4	320.4	6244267.	0.0177	0.	0.	0.
11	0.	0.	0.	6172536.	0.	0.	0.	0.
12	119.9	622.0	1339.3	200358.	5.2828	341.203	0.	280.8
13	140.0	295.5	265.2	4704780.	0.0174	0.	0.	0.
15	60.3	514.2	1290.1	145147.	9.5019	293.015	-2.485	221.2
16	60.3	271.2	240.2	145147.	0.0172	0.	7.400	0.
17	140.0	263.3	232.8	4704780.	0.	0.	0.	0.
18	37.6	413.1	1243.1	292726.	13.6646	263.503	-0.297	149.6
19	37.6	205.7	173.9	437872.	0.0167	0.	9.800	0.
20	140.0	195.9	164.3	4704780.	0.	0.	0.	0.
21	11.1	229.1	1160.0	154246.	36.5785	198.184	2.084	30.9
22	11.1	165.0	133.0	592118.	0.0164	0.	6.900	0.
23	150.0	158.1	126.4	4630600.	0.	0.	0.	0.
24	1500.0	100.0	71.9	0.	0.0161	0.	0.	0.
25	4.6	0.	1083.1	170162.	0.	158.915	0.815	-158.9
26	226.0	115.0	83.6	4630600.	0.0162	0.	0.	0.
27	0.	0.	0.	4779471.	0.	0.	0.	0.
28	0.	0.	0.	20122.	0.	0.	0.	0.
29	0.	0.	0.	51618.	0.	0.	0.	0.
30	0.	0.	0.	71740.	0.	0.	0.	0.
31	2910.0	292.0	266.9	0.	0.0172	0.	0.	0.
32	0.	0.	0.	5400.	0.	0.	0.	0.
33	0.	0.	0.	4781671.	0.	0.	0.	0.
34	0.	0.	0.	-27662.	0.	0.	0.	0.
35	2910.0	344.4	320.4	6244267.	0.0177	0.	0.	0.
36	2398.7	995.3	1457.8	6216605.	0.3200	1457.799	86.586	0.
37	528.9	865.4	1446.9	2672.	1.4396	0.780	19.167	55.4
38	0.	0.	0.	2125.	0.	0.	0.	110.9
39	2398.7	0.	1457.8	6211807.	0.3200	0.	86.586	0.
40	1922.0	936.1	1435.8	6160696.	0.3855	145.772	70.608	0.
41	1092.3	0.	1383.9	5561554.	0.6223	555.824	41.897	843.3
42	127.0	766.1	1411.5	17207.	5.6867	0.779	4.725	0.0
43	17.7	763.0	1414.7	3571.	41.1526	0.	0.655	883.3
45	0.	0.	0.	38128.	0.	0.	0.	0.
46	125.6	594.3	1325.1	8842.	4.9034	0.703	5.060	631.2
47	17.6	578.5	1324.7	5443.	35.0524	0.	0.708	1194.8
48	0.	0.	0.	5599683.	0.	0.	0.	0.
49	571.9	621.8	1306.7	5584795.	1.0279	481.073	23.587	0.
50	571.9	621.8	1306.7	5039200.	0.	0.	0.	0.
51	518.1	999.1	1519.3	5054855.	1.6378	0.	17.790	0.

IP14_002439

INTERMOUNTAIN POWER SERVICE CORPORATION
PERFORMANCE EVALUATION TEST REPORT
UNIT NO. 1

APPENDIX B

Correction Curves

Dwg. No.	Nomenclature	Page
GEZ 3614	Throttle Pressure Correction	B1
GEZ 3615	Throttle Temperature Correction	B2
GEZ 3617	Reheat Temperature Correction	B3
481 hp 475	Exhaust Pressure Correction	B4
	ALTERNATIVE TEST CORRECTIONS	
*	Final Feedwater Temperature Corrections Top HTR above Reheat Point	B5
*	Final Feedwater Temperature Correction Top HTR at Reheat Point	B6
*	Auxiliary Extraction Correction Extraction After Reheater	B7
*	Auxiliary Extraction from Cold Reheat (Top HTR above Reheat Point)	B8
*	Auxiliary Extraction Correction from Cold Reheat (Top HTR above Reheat Point	B9
*	Main Steam and Reheat Steam Attemperation Correction	B10
*	Condensate Subcooling Correction	B11
*	Condenser Makeup Correction	B12

INITIAL PRESSURE CORRECTION FACTORS

FOR SINGLE REHEAT UNITS

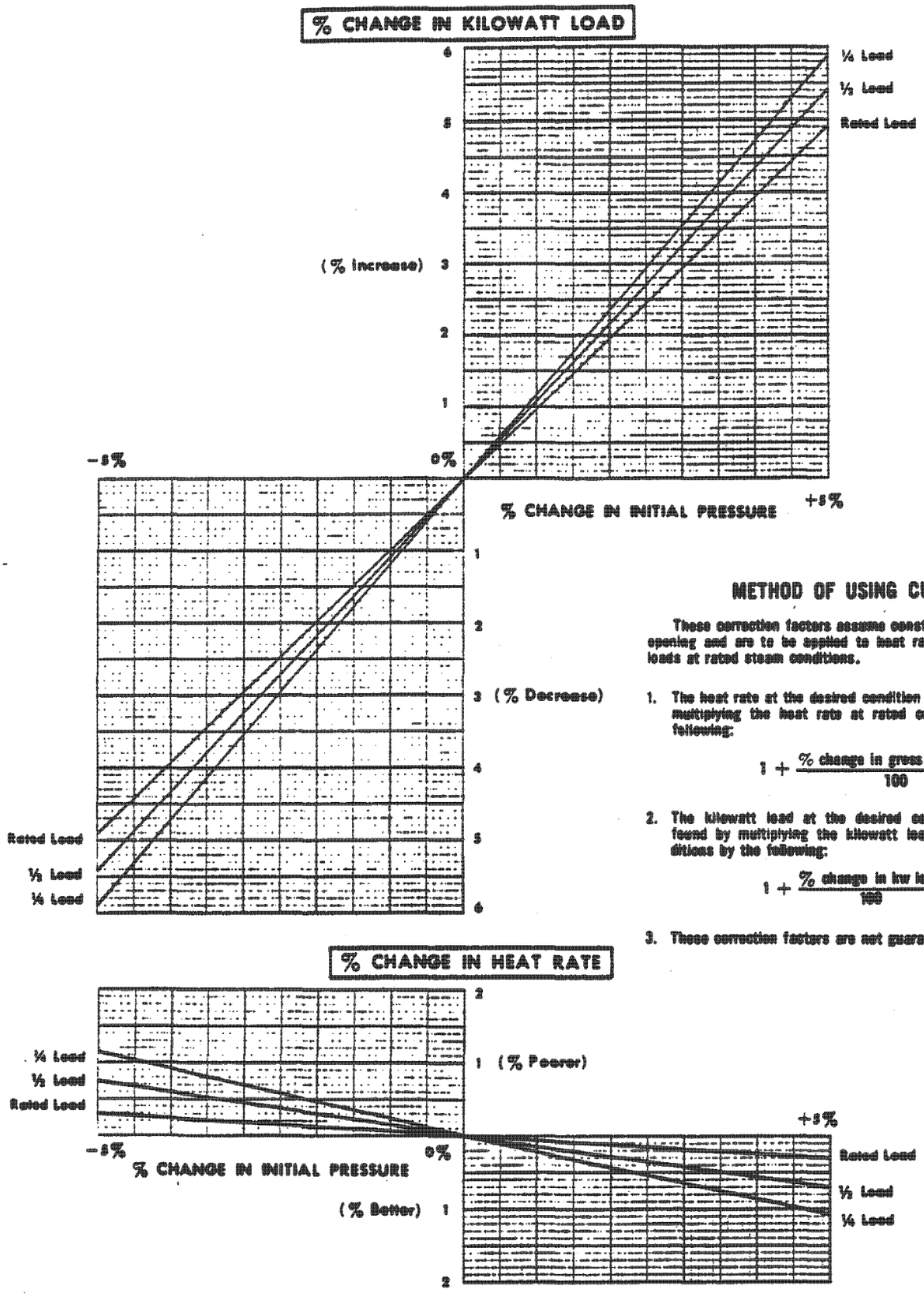

METHOD OF USING CURVES

These correction factors assume constant control valve opening and are to be applied to heat rates and kilowatt loads at rated steam conditions.

1. The heat rate at the desired condition can be found by multiplying the heat rate at rated conditions by the following:

$$1 + \frac{\%\ \text{change in gross heat rate}}{100}$$

2. The kilowatt load at the desired conditions can be found by multiplying the kilowatt load at rated conditions by the following:

$$1 + \frac{\%\ \text{change in kw load}}{100}$$

3. These correction factors are not guaranteed.

GEZ-3614

4-81 (2M)

GENERAL ELECTRIC

Fig. B1

IP14_002441

INITIAL TEMPERATURE CORRECTION FACTORS

FOR SINGLE REHEAT – SUBCRITICAL PRESSURE UNITS

% CHANGE IN KILOWATT LOAD

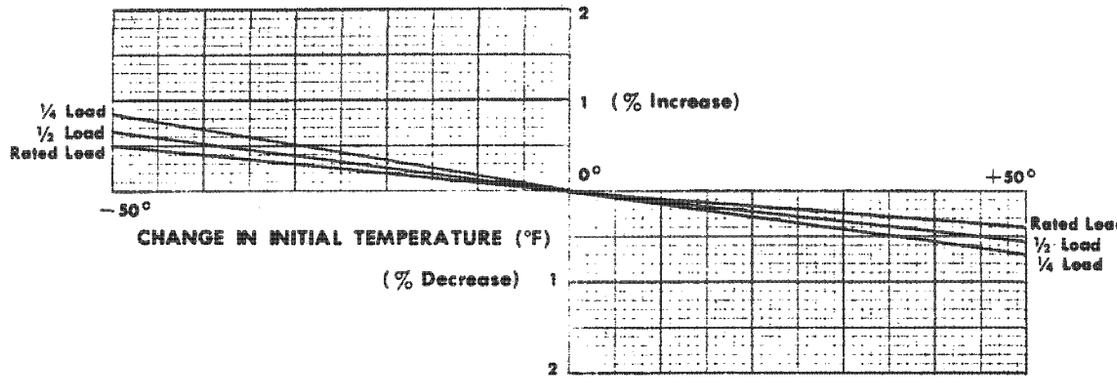

METHOD OF USING CURVES

These correction factors assume constant control valve opening and are to be applied to heat rates and kilowatt loads at rated steam conditions.

1. The heat rate at the desired condition can be found by multiplying the heat rate at rated conditions by the following:

$$1 + \frac{\%\ \text{change in gross heat rate}}{100}$$

2. The kilowatt load at the desired conditions can be found by multiplying the kilowatt load at rated conditions by the following:

$$1 + \frac{\%\ \text{change in kw load}}{100}$$

3. These correction factors are not guaranteed.

% CHANGE IN HEAT RATE

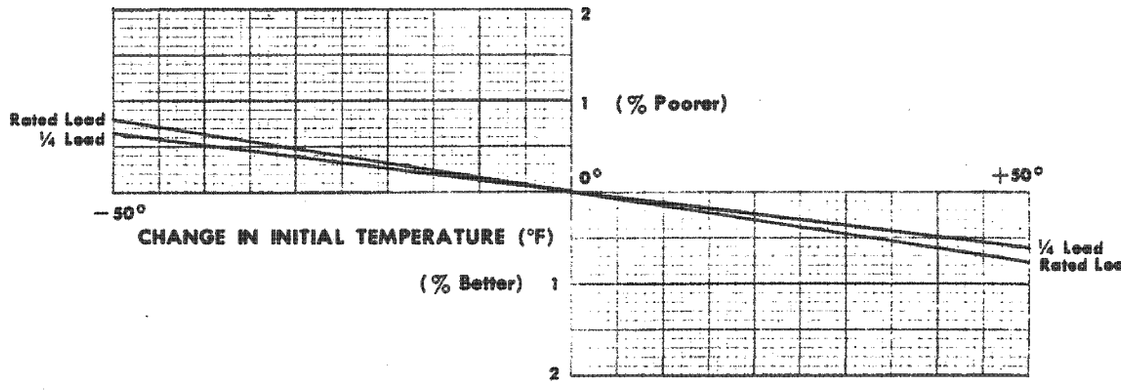

GENERAL ELECTRIC

FIG. B2

IP14_002442

REHEAT TEMPERATURE CORRECTION FACTORS
FOR SINGLE REHEAT UNITS

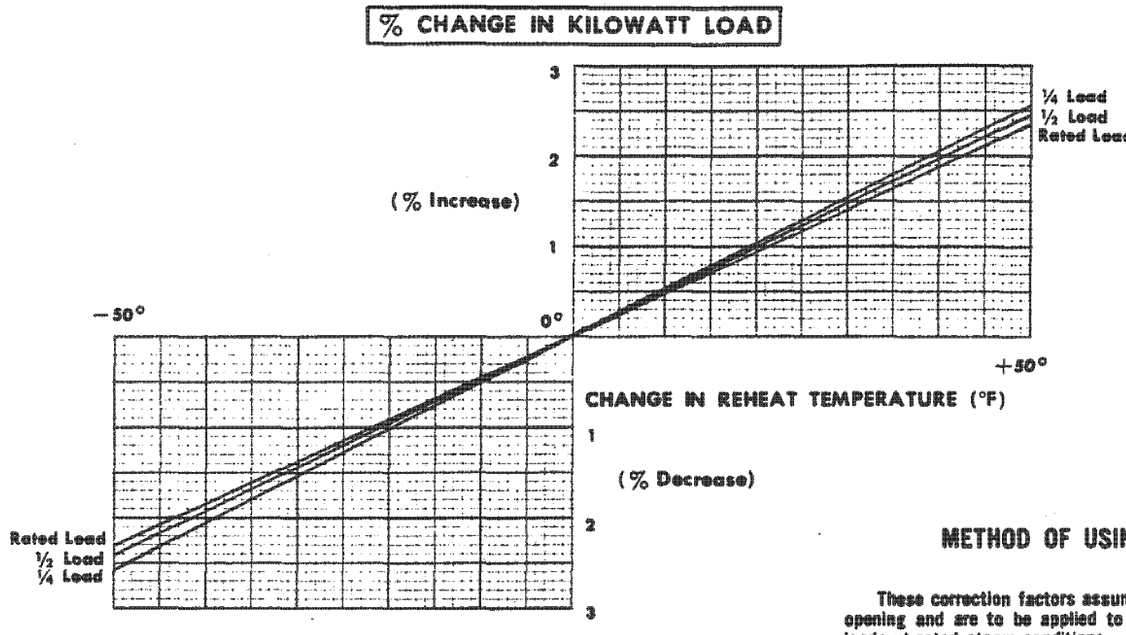

METHOD OF USING CURVES

These correction factors assume constant control valve opening and are to be applied to heat rates and kilowatt loads at rated steam conditions.

1. The heat rate at the desired condition can be found by multiplying the heat rate at rated conditions by the following:

$$1 + \frac{\%\ \text{change in gross heat rate}}{100}$$

2. The kilowatt load at the desired conditions can be found by multiplying the kilowatt load at rated conditions by the following:

$$1 + \frac{\%\ \text{change in kw load}}{100}$$

3. These correction factors are not guaranteed.

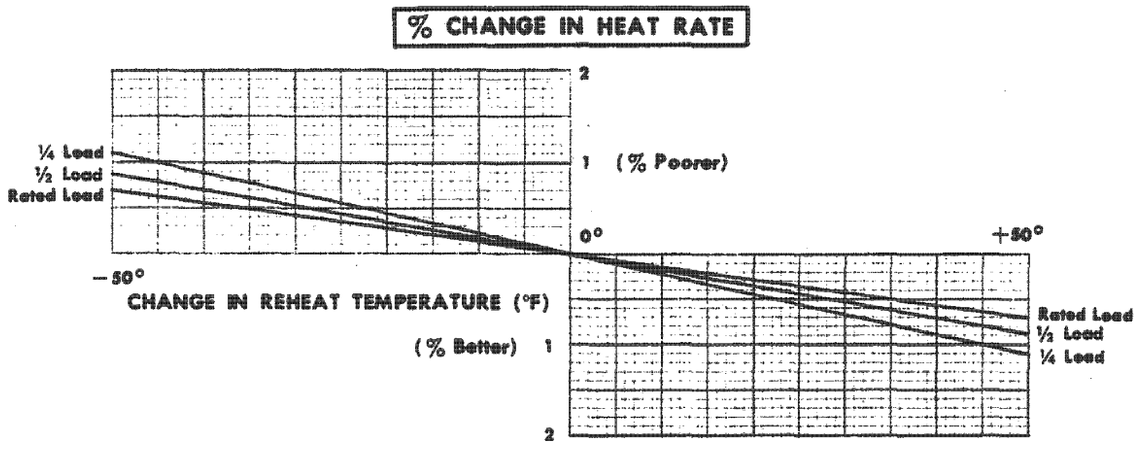

GEZ-3617
2-71 (2M)

GENERAL ELECTRIC

FIG. B3

IP14_002443

EXHAUST PRESSURE CORRECTION FACTORS

820000 KW AT 1.66/ 2.24/ 2.99 IN HG ABS 1.00 PCT MU
TC6F-30.0 IN LSB 3600 RPM
2400 PSIA 1000/1000 T

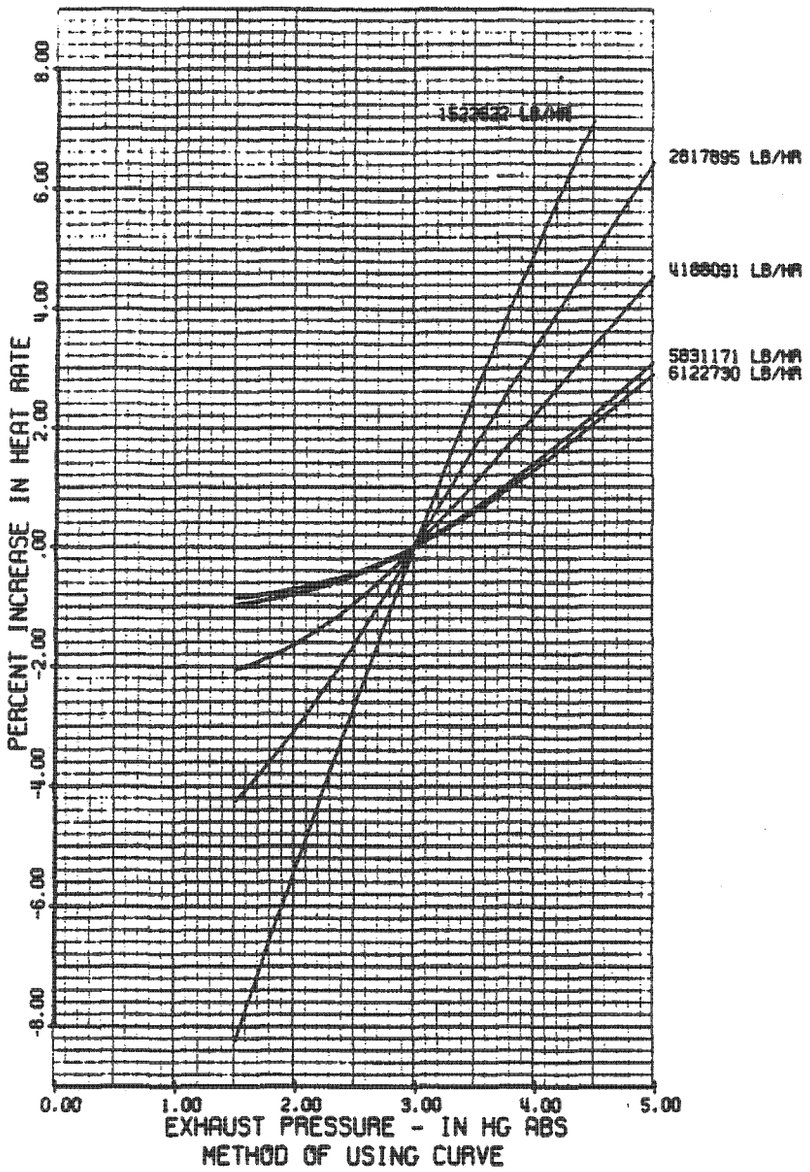

VALUES NEAR CURVES ARE FLOWS AT 2400 PSIA 1000 T
THESE CORRECTION FACTORS ASSUME CONSTANT CONTROL VALVE OPENING
APPLY CORRECTIONS TO HEAT RATE AND KW LOADS
AT 2.99/ 2.24/ 1.66 IN HG ABS AND 0.0 PCT MU.

THE PERCENT CHANGE IN KW LOAD FOR VARIOUS EXHAUST PRESSURES IS EQUAL TO
(MINUS PCT INCREASE IN HEAT RATE)100/(100 + PCT INCREASE IN HEAT RATE)

THESE CORRECTION FACTORS ARE NOT GUARANTEED

PRESSURES ALONG ABSCISSA ARE PRESSURES IN HOOD C

PRESSURE(IN HG ABS) FOR	HOOD C	HOOD B	HOOD A
	1.50	1.09	.78
	2.00	1.47	1.07
	2.50	1.85	1.36
	3.00	2.24	1.66
	3.50	2.63	1.96
	4.00	3.03	2.27
	4.50	3.42	2.58
	5.00	3.82	2.89

Fig. B4

GENERAL ELECTRIC COMPANY SCHENECTADY NEW YORK

IP14_002444

FN-156 (8 (E) GENERAL ELECTRIC COMPAN HENECTADY, N.Y., U.S.A 180x. Imm Divisions

Final Feedwater Temperature Correction
Top HTR above Reheat Point

Due to Top Heater Terminal Difference or Extraction Pipe Pressure Drop (Different from Specified Heat Balance) Apply Curves at Constant Control Valve Opening

Refer to B12 for Correction Calculation

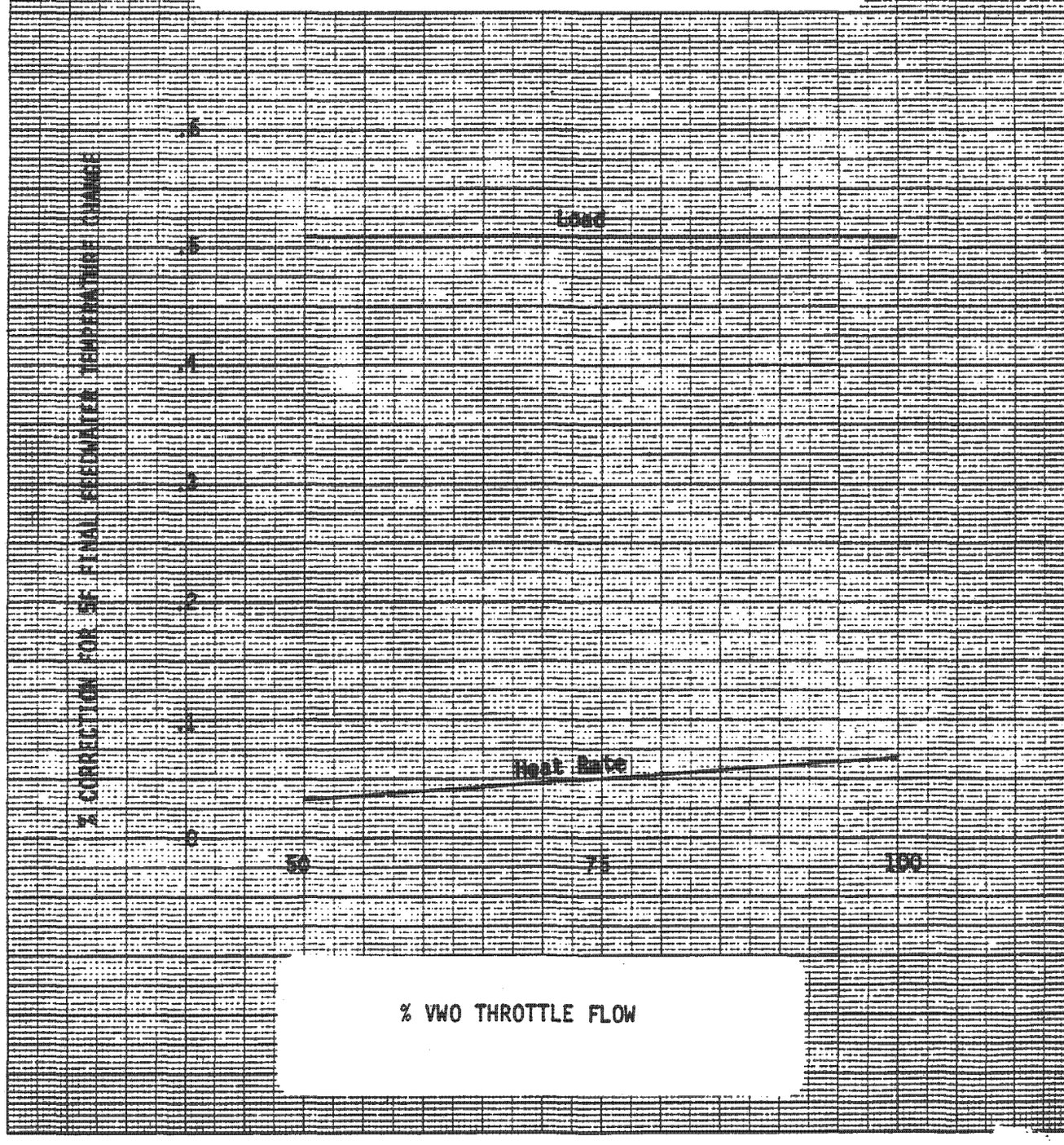

B.5

IP14_002445

Final Feedwater Temperature Correction
Top HTR at Reheat Point

Due to Top Heater Terminal Difference or Extraction Pipe Pressure Drop (Different from Specified Heat Balance) Apply Curves at Constant Control Valve Opening

Refer to B12 for Correction Calculation

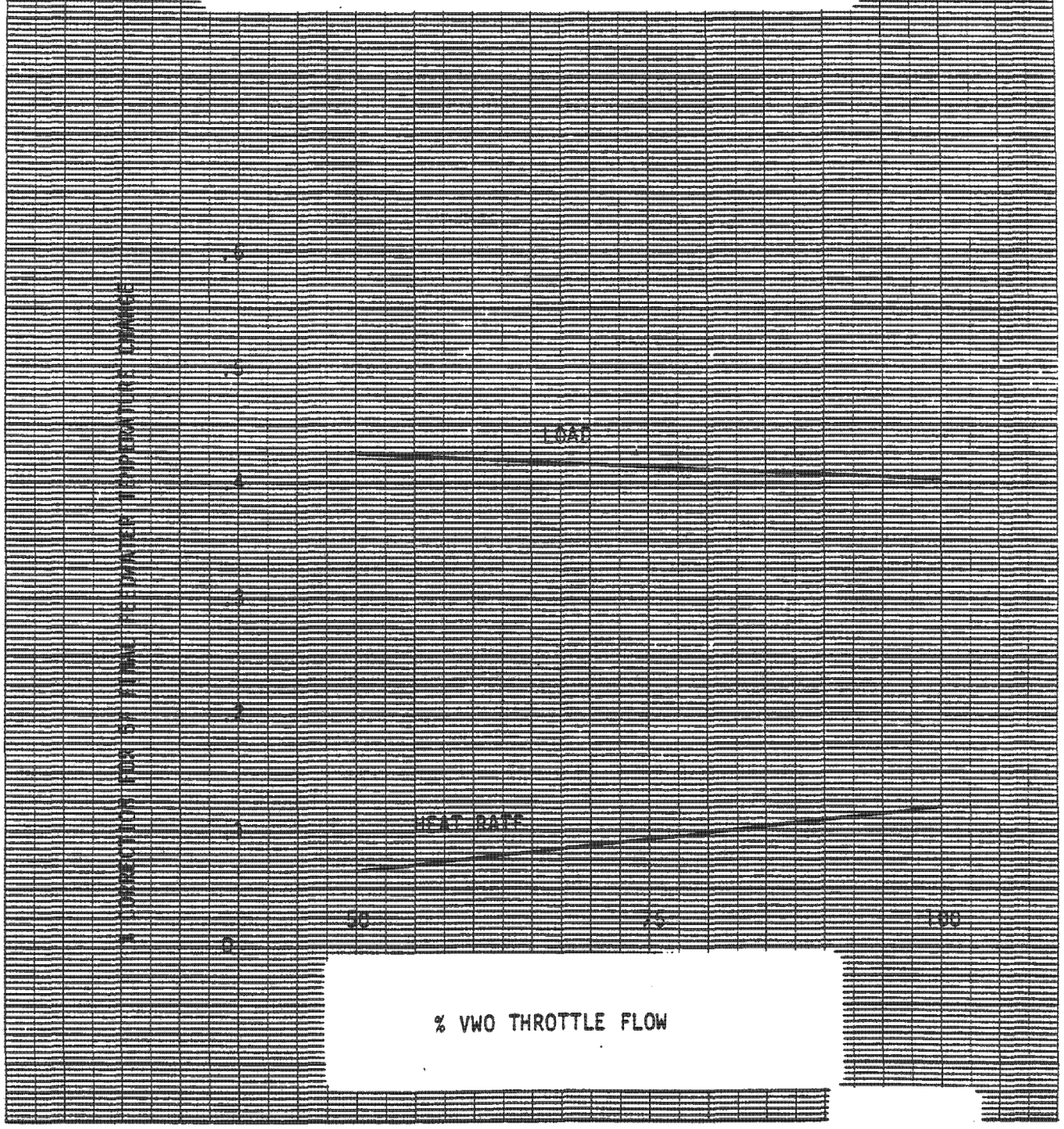

B6

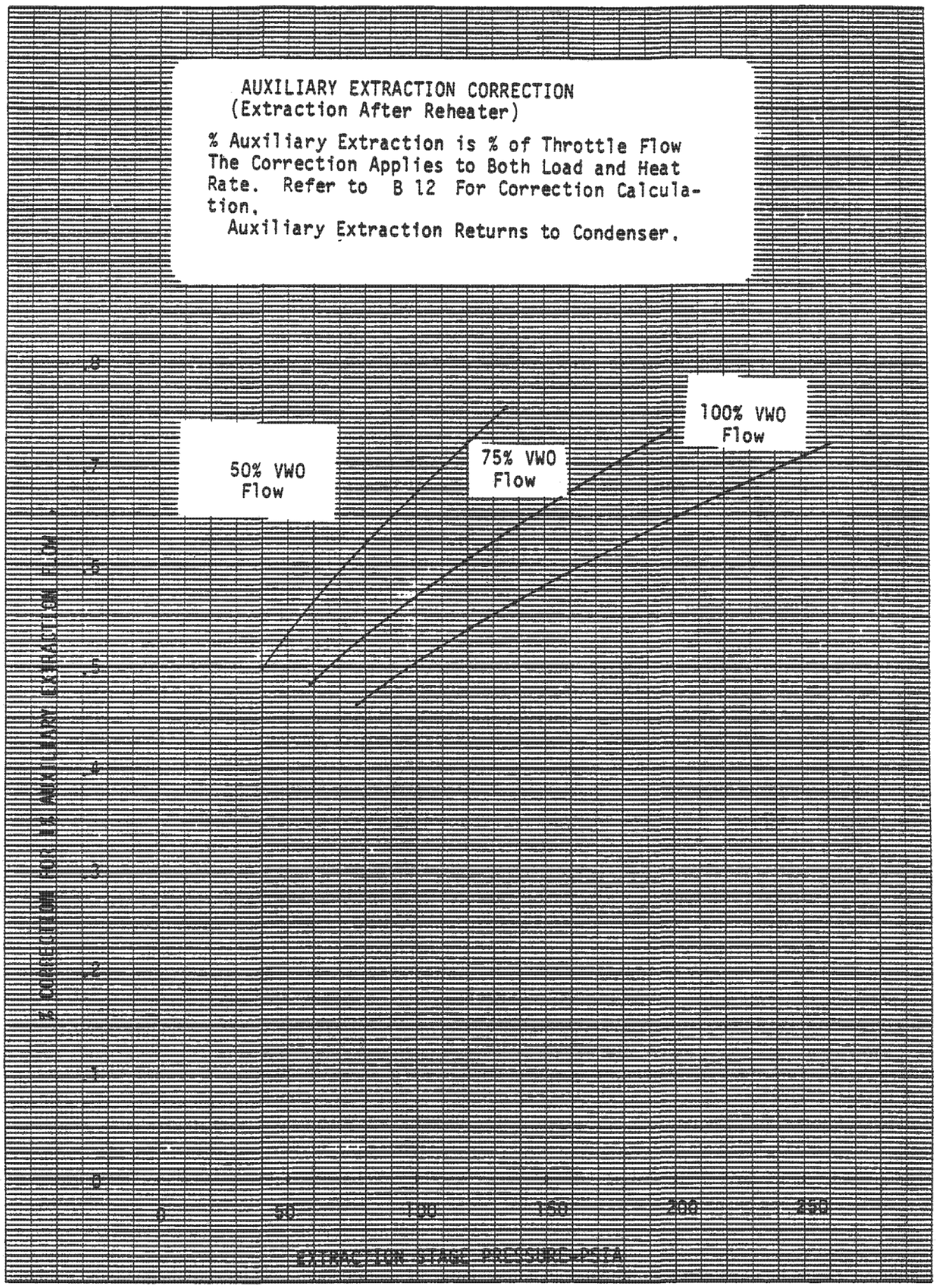
AUXILIARY EXTRACTION CORRECTION
(Extraction After Reheater)
% Auxiliary Extraction is % of Throttle Flow
The Correction Applies to Both Load and Heat Rate. Refer to B 12 For Correction Calculation.
Auxiliary Extraction Returns to Condenser.
50% VWO Flow
75% VWO Flow
100% VWO Flow
% CORRECTION FOR 1% AUXILIARY EXTRACTION FLOW
.8
.7
.6
.5
.4
.3
.2
.1
0
0
50
100
150
200
250
EXTRACTION STAGE PRESSURE-PSIA

IP14_002447

Correction for Auxiliary Extraction from
Cold Reheat (Top HTR above Reheat Point)

% Auxiliary Extraction is % of Throttle Flow
Refer to B 12 for Correction Calculation
Auxiliary Extraction Returns to Condenser

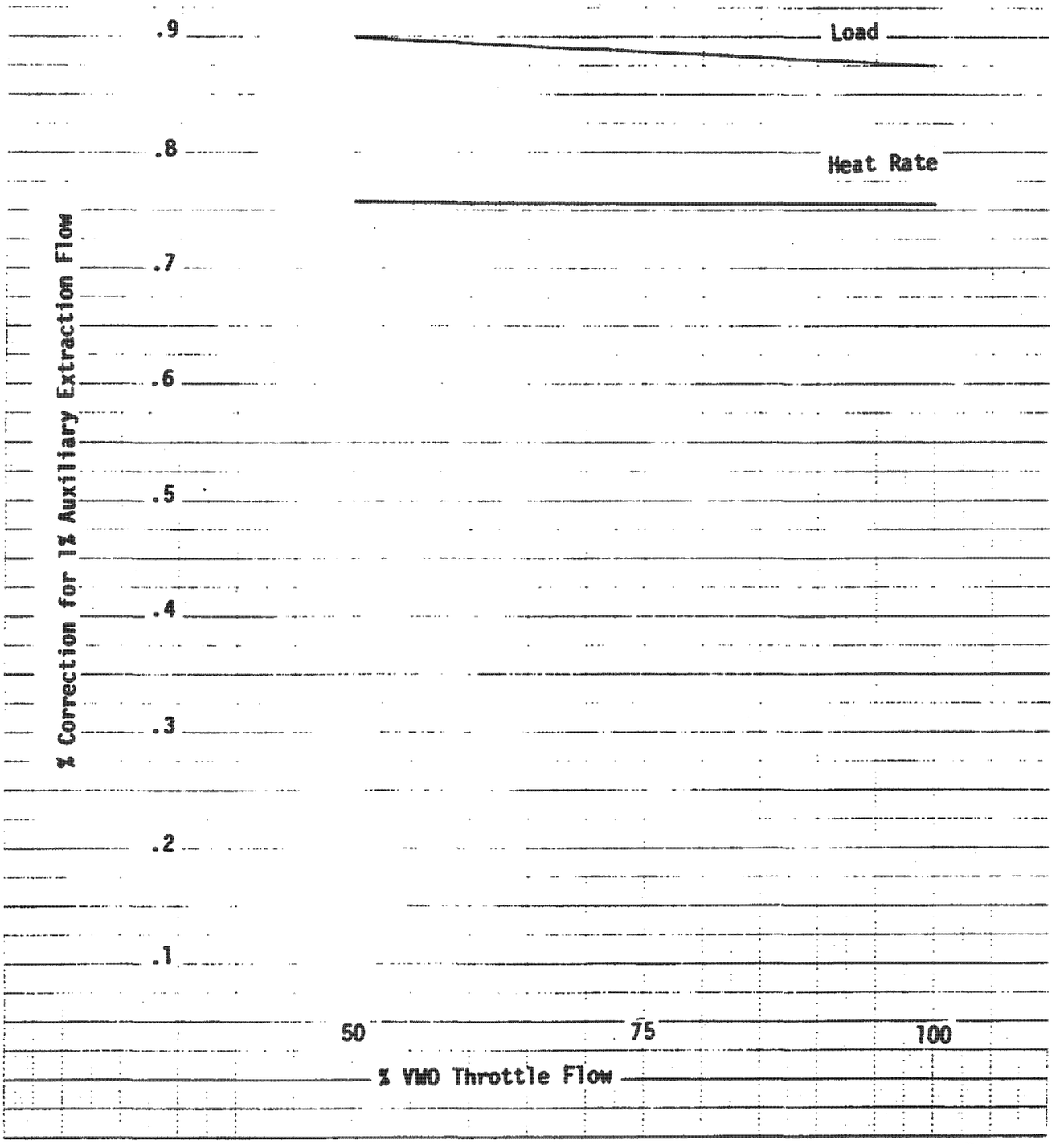

B8

Correction for Auxiliary Extraction from
Cold Reheat (Top HTR at Cold Reheat)

% Auxiliary Extraction is % of Throttle Flow
Refer to B 12 for Correction Calculation
Auxiliary Extraction Returns to Condenser

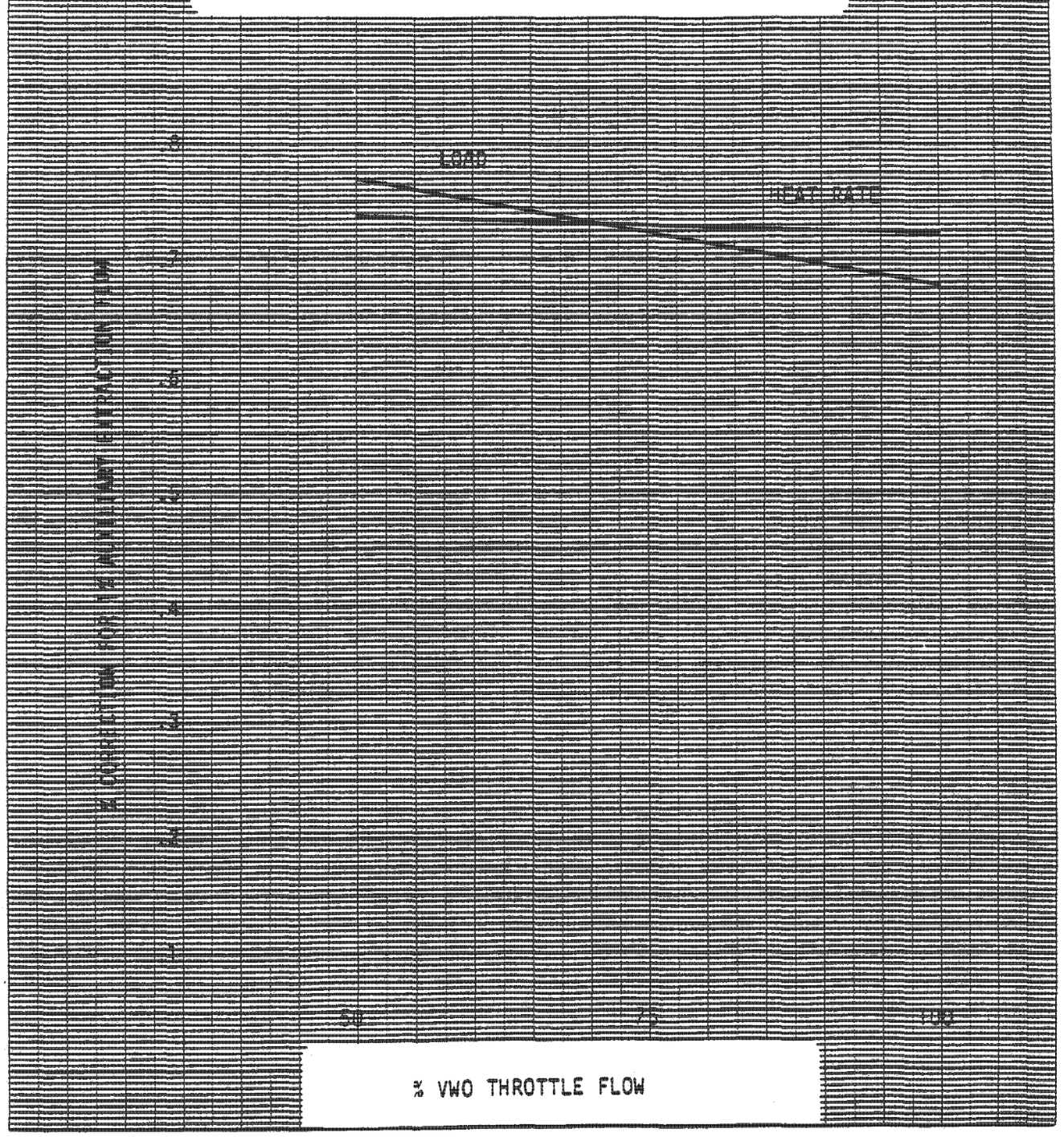

B9

IP14_002449

CORRECTIONS FOR MAIN STEAM AND REHEAT STEAM ATTEMPERATION

% Attemperation is % Of Throttle Flow
Attemperation Supply Is From BFP
Apply Corrections At Constant Main Steam And Reheat Temperatures

Refer to B 13 For Correction Calculation

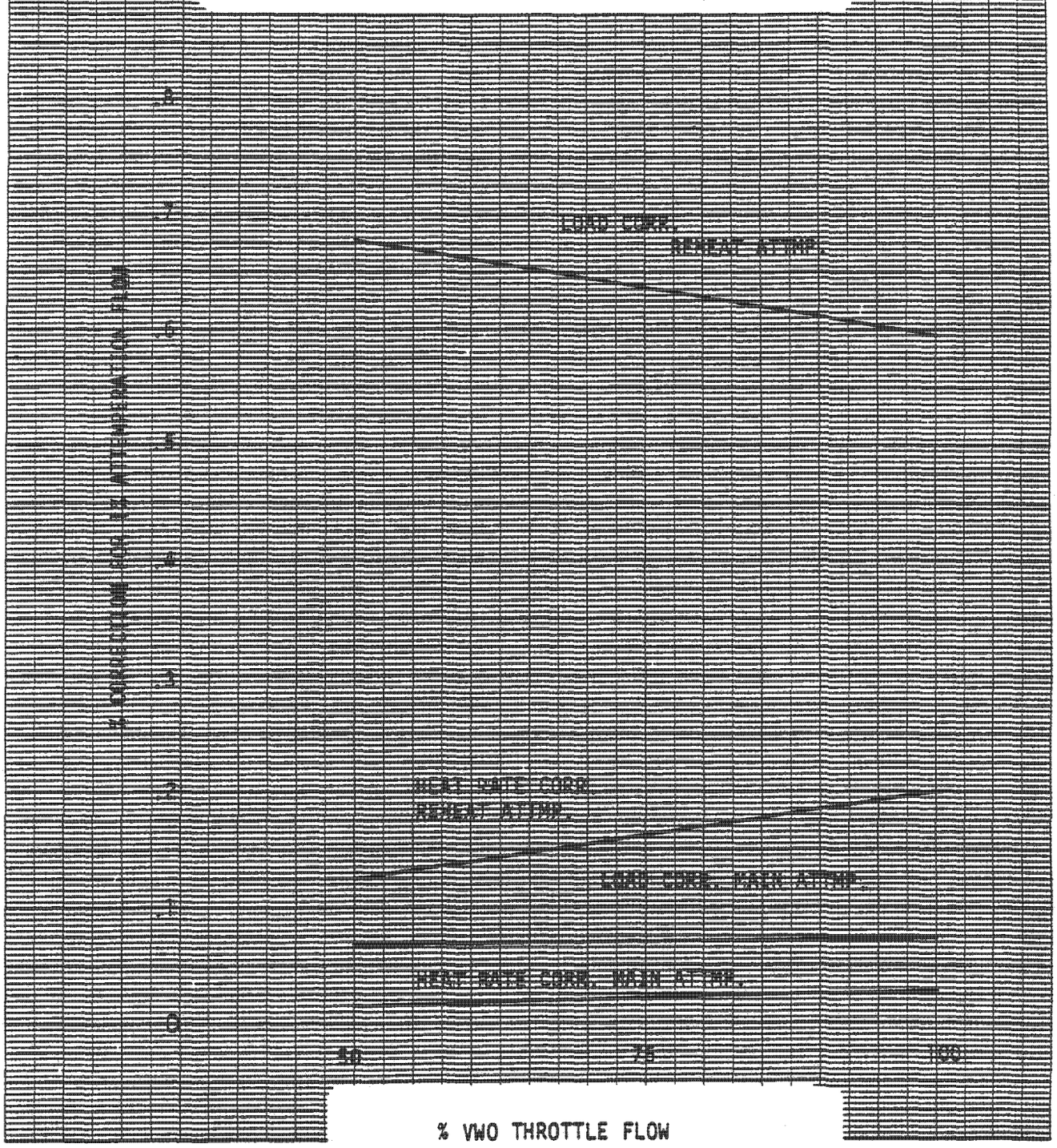

B10

GENERAL ELECTRIC COMPANY, SCHENECTADY, N. Y., U.S.A.
FN-156 (8-50)

CONDENSATE SUBCOOLING CORRECTION

Refer To B 13 For Correction Calculation

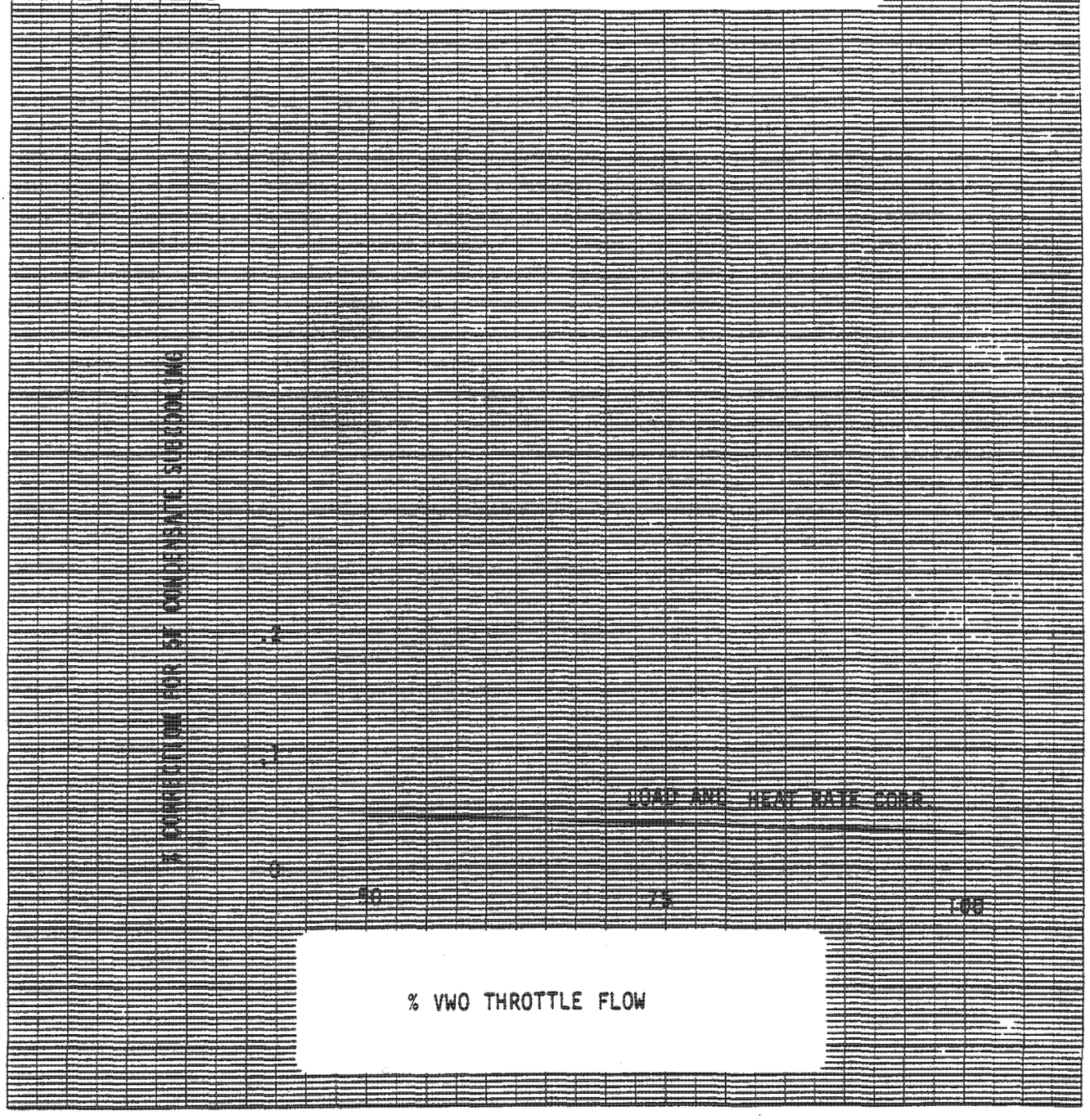

B 11

GENERAL ELECTRIC COMPANY, SCHENECTADY, N. Y., U.S.A.
FN-156 (8-50)

CONDENSER MAKEUP CORRECTION

% Makeup Is % OF Throttle Flow

Refer To B 13 For Correction Calculation

Leakage IS From Main Part Of Boiler

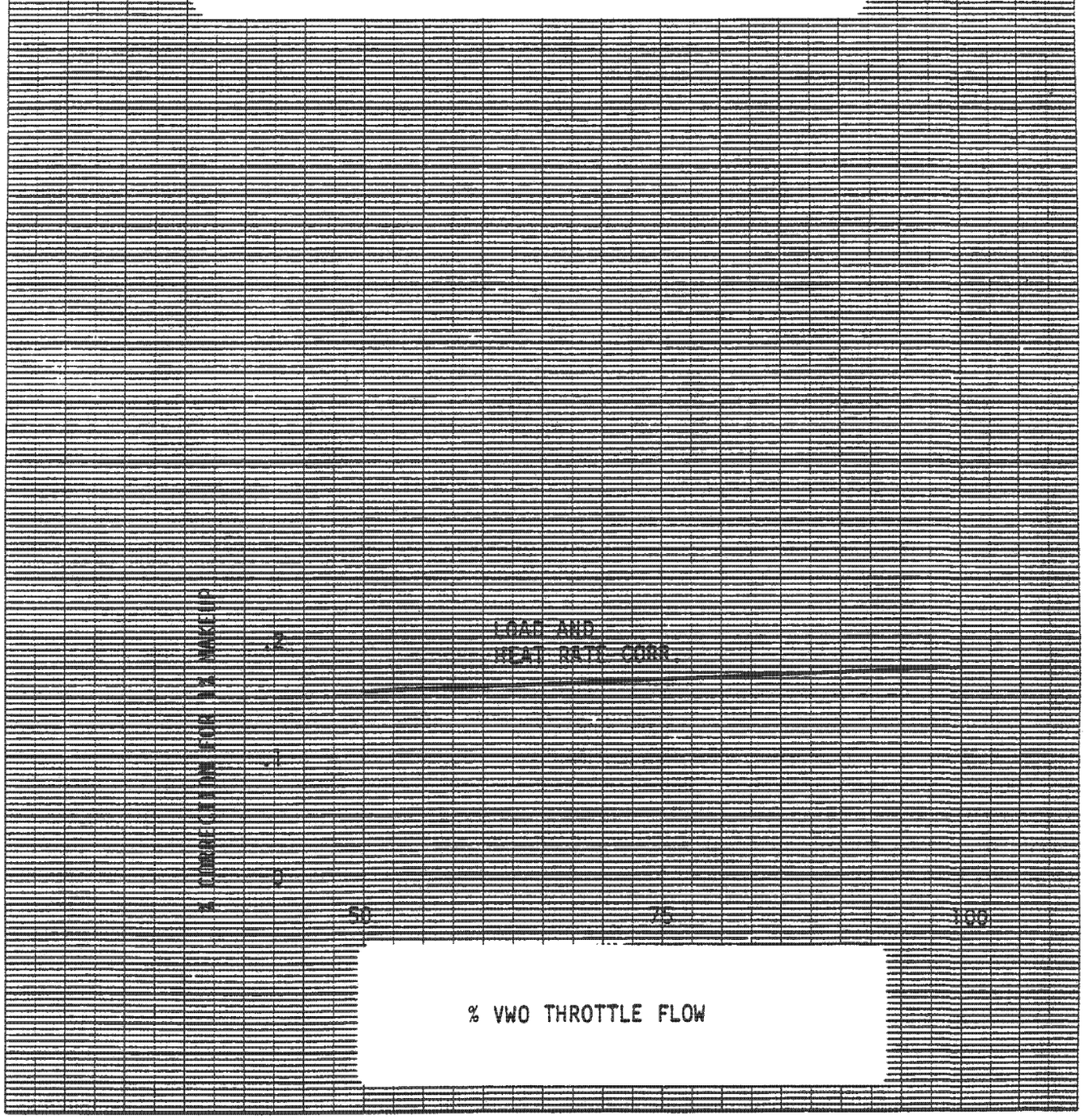

B12

TERMINAL DIFFERENCE CORRECTION - B6

$$\text{Corrected H.R.} = \text{Test H.R.}/\left[1 + \left(\frac{\%\ \text{Corr.}}{100} \times \left(\frac{T.D._{test} - T.D._{design}}{5F}\right)\right)\right]$$

$$\text{Corrected Load} = \text{Test Load}/\left[1 + \left(\frac{\%\ \text{Corr.}}{100} \times \left(\frac{T.D._{test} - T.D._{design}}{5F}\right)\right)\right]$$

PRESSURE DROP CORRECTION - B6

$$\text{Corrected H.R.} = \text{Test H.R.}/\left[1 + \left(\frac{\%\ \text{Corr.}}{100} \times \left(\frac{T_{sat}\ @\ (P_{tb\ test} - \Delta P_{design}) - T_{sat}\ @\ (P_{tb\ test} - \Delta P_{test})}{5}\right)\right)\right]$$

$$\text{Corrected Load} = \text{Test Load}/\left[1 + \left(\frac{\%\ \text{Corr.}}{100} \times \left(\frac{T_{sat}\ @\ (P_{tb\ test} - \Delta P_{design}) - T_{sat}\ @\ (P_{tb\ test} - \Delta P_{test})}{5}\right)\right)\right]$$

AUXILIARY EXTRACTION CORRECTION - B7 AND B8

$$\text{Corrected H.R.} = \text{Test H.R.}/\left[1 + \left(\frac{\%\ \text{Corr.}}{100} \times \left(\%\ \text{Aux. Extr}_{test} - \%\ \text{Aux. Extr}_{design}\right)\right)\right]$$

$$\text{Corrected Load} = \text{Test Load}/\left[1 - \left(\frac{\%\ \text{Corr.}}{100} \times \left(\%\ \text{Aux. Extr}_{test} - \%\ \text{Aux. Extr}_{design}\right)\right)\right]$$

IP14_002453

ATTEMPERATION CORRECTION - B9

Corrected H.R. = Test H.R/ A
Corrected Load = Test Load/A

$$A = 1 + \left(\frac{\%\ \text{Corr.}}{100} \times \%\ \text{Attemp Flow}\right)$$

CONDENSATE SUBCOOLING CORRECTION - B10

Corrected H.R.=Test H.R/(1+B)
Corrected Load = Test Load/(1-B)

$$B = \left(\frac{\%\ \text{Corr.}}{100} \times \frac{^{o}F\ \text{Subcooling}}{5^{o}F}\right)$$

CONDENSER MAKEUP CORRECTION - B11

Corrected H.R. = Test H.R./(1+C)
Corrected Load = Test Load/(1-C)

$$C = \left[\frac{\%\ \text{Corr.}}{100} \times \left(\%\ \text{Makeup}_{test} - \%\ \text{Makeup}_{design}\right)\right]$$

where

T_{sat} = saturation temperature

$P_{tb\ test}$ = extraction pressure at turbine during test

ΔP_{design} = design heat balance pressure drop in extraction pipe

ΔP_{test} = test pressure drop in extraction pipe

IP14_002454

INTERMOUNTAIN POWER SERVICE CORPORATION
PERFORMANCE EVALUATION TEST REPORT
UNIT NO. 1

APPENDIX C

Station Computer Log Summary

Test Point No.	Page
1	C011-5
2	C011-5
3	C031-5
4	C041-5
5	C051-5

[illegible]
[illegible]

Test [illegible] UNIT No. 1
Date [illegible] [illegible] 25, 1989
[illegible] 14:15
[illegible] 12.525 PSIA

Description	ID #	Group #	Item #	Data Log Value	Units	Final Value	Units
[illegible]	[illegible]	1	4	261.[illegible]	MW	861.78	MW
[illegible]	[illegible]	1	6	864.62	MW	834.65	MW
[illegible]	[illegible]	1	9	864.75	MW	864.75	MW
[illegible]	[illegible]	2	1	0.95		0.98	
[illegible]	[illegible]	3	11	1000.14	F	1000.14	F
[illegible]	[illegible]	3	12	954.11	F	954.11	F
[illegible]	[illegible]	4	1	922.26	F	922.26	F
[illegible]	[illegible]	4	2	844.92	F	844.92	F
[illegible]	[illegible]	4	5	2424.86	PSIG	2437.39	PSIA
[illegible]	[illegible]	4	4	2429.14	PSIG	2441.67	PSIA
[illegible]	[illegible]	4	8	1001.20	F	1001.20	F
[illegible]	[illegible]	4	9	2392.97	PSIA	2392.97	PSIA
[illegible]	[illegible]	4	10	989.95	F	989.95	F
[illegible]	[illegible]	4	12	6162.95	KPPH	6162.95	KPPH
[illegible]	[illegible]	5	1	6243.72	KPPH	6243.73	KPPH
[illegible]	[illegible]	5	2	99.75	PCT	99.75	PCT
[illegible]	[illegible]	5	3	1923.34	PSIG	1935.87	PSIA
[illegible]	[illegible]	5	5	1932.20	PSIG	1944.73	PSIA
[illegible]	[illegible]	5	6	796.66	F	796.66	F
[illegible]	[illegible]	5	7	1049.88	PSIG	1062.41	PSIA
[illegible]	[illegible]	5	8	1048.30	PSIG	1060.83	PSIA
[illegible]	[illegible]	5	9	622.77	F	622.77	F
[illegible]	[illegible]	5	10	549.78	PSIG	562.31	PSIA
[illegible]	[illegible]	5	11	621.73	F	621.73	F
[illegible]	[illegible]	5	12	540.75	PSIG	553.32	PSIA
[illegible]	[illegible]	6	1	621.85	F	621.85	F
[illegible]	[illegible]	6	2	543.58	PSIG	555.91	PSIA
[illegible]	[illegible]	6	3	623.11	F	623.11	F
[illegible]	[illegible]	6	4	620.48	F	620.48	F
[illegible]	[illegible]	6	6	0.00	KPPH	0.00	KPPH
[illegible]	[illegible]	7	4	1005.18	F	1005.18	F
[illegible]	[illegible]	7	5	1007.42	F	1007.42	F
[illegible]	[illegible]	7	6	514.58	PSIG	527.06	PSIA
[illegible]	[illegible]	7	7	1005.53	F	1005.53	F
[illegible]	[illegible]	7	8	1009.66	F	1009.66	F
[illegible]	[illegible]	7	9	521.99	PSIG	534.52	PSIA
[illegible]	[illegible]	7	10	1007.02	F	1007.02	F
[illegible]	[illegible]	7	11	1005.49	F	1005.49	F
[illegible]	[illegible]	7	12	1005.49	F	1005.49	F

Description	ID #	Group #	Item #	Data Log Value	Units	Test Value	Units
[illegible]	[illegible]	2	1	1002.05	F	1002.05	F
[illegible] PRESS	[illegible]	2	2	567.44	PSIG	579.97	PSIA
[illegible] TEMP	[illegible]	4	4	505.11	F	505.11	F
[illegible] PRESS	[illegible]	2	4	217.33	PSIG	229.95	PSIA
[illegible] TEMP	[illegible]	2	5	805.04	F	805.04	F
[illegible] PRESS	[illegible]	2	6	217.95	PSIG	230.46	PSIA
[illegible]	[illegible]	2	7	529.81	F	529.81	F
[illegible]	[illegible]	2	8	119.20	PSIG	131.73	PSIA
[illegible]	[illegible]	3	9	525.74	F	525.74	F
[illegible]	[illegible]	8	10	122.02	PSIG	134.55	PSIA
[illegible]	[illegible]	8	11	614.54	F	614.54	F
[illegible]	[illegible]	8	12	113.74	PSIG	126.27	PSIA
[illegible]	[illegible]	9	1	521.35	F	521.35	F
[illegible] PRESS	[illegible]	9	2	118.59	PSIG	131.08	PSIA
[illegible]	[illegible]	9	3	11750.00	FTLB	11750.00	FTLB
[illegible]	[illegible]	9	4	11900.00	HP	11900.00	HP
[illegible]	[illegible]	9	5	5247.26	RPM	5247.26	RPM
[illegible]	[illegible]	9	6	5368.87	RPM	5368.87	RPM
[illegible]	[illegible]	9	7	5256.75	RPM	5256.75	RPM
[illegible]	[illegible]	9	8	88.53	PSIG	101.06	PSIA
[illegible]	[illegible]	9	10	69.39	PSIG	82.12	PSIA
[illegible]	[illegible]	9	12	514.65	F	514.65	F
[illegible]	[illegible]	10	1	515.22	F	515.22	F
[illegible]	[illegible]	10	2	517.98	F	517.98	F
[illegible]	[illegible]	10	3	46.76	PSIG	59.29	PSIA
[illegible]	[illegible]	10	4	412.57	F	412.57	F
[illegible]	[illegible]	10	5	414.25	F	414.25	F
[illegible]	[illegible]	10	6	414.30	F	414.30	F
[illegible]	[illegible]	10	7	24.23	PSIG	36.76	PSIA
[illegible]	[illegible]	10	8	226.62	F	226.62	F
[illegible]	[illegible]	10	9	226.14	F	226.14	F
[illegible]	[illegible]	10	10	231.73	F	231.73	F
[illegible]	[illegible]	10	11	-1.71	PSIG	10.82	PSIA
[illegible]	[illegible]	10	12	103.06	F	103.06	F
[illegible]	[illegible]	11	1	158.87	F	158.87	F
[illegible] PRESS	[illegible]	11	2	-7.97	PSIG	4.56	PSIA
[illegible]	[illegible]	11	4	569.76	F	647.76	F
[illegible]	[illegible]	11	6	159.25	F	159.25	F
[illegible]	[illegible]	11	7	158.33	F	158.33	F
[illegible] PRESS	[illegible]	11	8	-8.07	PSIG	4.46	PSIA
[illegible]	[illegible]	11	9	0.00	F	0.00	F
[illegible]	[illegible]	11	10	0.00	F	0.00	F
[illegible] PRESS	[illegible]	11	11	-8.01	PSIG	4.52	PSIA
[illegible]	[illegible]	11	12	112.52	F	112.52	F
[illegible] PRESS	[illegible]	12	1	1.11	PSIA	2.26	INHGA
[illegible]	[illegible]	12	2	0.00	F	0.00	F
[illegible] PRESS	[illegible]	12	3	1.20	PSIA	2.44	INHGA
[illegible]	[illegible]	12	4	101.20	F	101.20	F
[illegible] PRESS	[illegible]	12	7	1.23	PSIA	2.50	INHGA
HP COND [illegible] EXH PRESS	[illegible]	12	8	2.22	INHGA	2.32	INHGA
LP COND 1C EXH PRESS	[illegible]	12	10	2.29	INHGA	2.29	INHGA
LP COND 1C EXH PRESS	[illegible]	12	12	2.10	INHGA	2.10	INHGA

Description	ID #	Group #	Item #	Data Log Value	Units	Final Value	Units
[illegible]	TEDTE0185	13	1	488.2[illegible]	F	456.2[illegible]	F
[illegible]	TEDTE0186	13	4	486.40	F	486.40	F
[illegible]	TEDTE0193	13	7	402.41	F	402.41	F
[illegible]	TEDTE0194	13	10	402.19	F	402.19	F
[illegible]	TEDTE0[illegible]	14	1	351.33	F	351.33	F
[illegible]	TEDTE0182	14	4	358.06	F	358.06	F
[illegible]	TEDTE0187	14	7	270.37	F	270.37	F
[illegible]	TEDTE0[illegible]	14	8	204.66	F	204.66	F
[illegible]	TEDTE0[illegible]	14	9	163.86	F	163.86	F
[illegible]	TEDTE0188	14	10	156.44	F	156.44	F
[illegible]	TEDTE0[illegible]84	14	11	122.54	F	122.54	F
[illegible]	HDATE0042	15	2	113.57	F	112.57	F
[illegible]	HDATE0041	15	4	112.71	F	112.71	F
[illegible]	HDLT0011	15	5	44.50	IN		
[illegible]	HDLT0031	15	6	40.79	IN	-5.01	D IN
[illegible]	COAXI118A	15	7	-0.09	KPPH	-0.09	KPPH
[illegible]	HDPT0008	15	8	430.75	PSIG	443.28	PSIA
[illegible]	HDATE0043	16	3	114.62	F	114.62	F
[illegible]	HDATE0044	16	4	115.23	F	115.23	F
[illegible]	COAXI114A	16	8	4865.48	KPPH	4865.48	KPPH
[illegible]	FWDTE0187	16	9	114.04	F	114.04	F
[illegible]	FWDTE0188	16	10	118.80	F	118.80	F
[illegible]	FWDTE0189	16	11	154.66	F	154.66	F
[illegible]	FWDTE0190	16	12	157.09	F	157.09	F
[illegible]	FWDTE0191	17	1	156.09	F	156.09	F
[illegible]	FWDTE0192	17	2	157.04	F	157.04	F
[illegible]	FWDTE0193	17	3	194.85	F	194.85	F
[illegible]	FWDTE0194	17	4	194.60	F	194.60	F
[illegible]	FWDTE0195	17	5	262.40	F	262.40	F
[illegible]	FWDTE0196	17	6	262.51	F	262.51	F
[illegible]	FWDTE0197	17	7	294.57	F	294.57	F
[illegible]	FWDTE0198	17	8	294.37	F	294.37	F
[illegible]	FWDPT0056	17	9	105.23	PSIG	117.76	PSIA
[illegible]	FWDTE0199	17	10	340.20	F	340.20	F
[illegible]	FWDLT0012	17	11	99.33	IN		
[illegible]	FWDLT0012	17	11	99.33	IN	0.00	D IN
[illegible]	COAXI111A	18	2	106.49	PSIG	119.02	PSIA
[illegible]	FWATE0045	18	3	339.86	F	339.86	F
[illegible]	COAXI127A	18	7	92.33	F	92.33	F
[illegible]	COAXI115A	18	9	165.14	KPPH	165.14	KPPH
[illegible]	CCDPT0069	18	11	148.27	GPM	74.10	KPPH
[illegible]	CCDTE0905	18	12	189.65	F	189.65	F
[illegible]	FWATE0046	19	9	337.01	F	337.01	F
[illegible]	FWATE0047	19	10	337.96	F	337.96	F
[illegible]	FWATE0049	19	11	336.30	F	336.30	F
[illegible]	SSATE0060	19	12	282.00	F	282.00	F

[illegible]	[illegible] #	Group #	Item #	Data Log Value	Units	Fine Value	Units
[illegible]	[illegible]	20	2	0.00	KPPH	0.00	KPPH
[illegible]	FWATE0049	20	3	342.37	F	342.37	F
[illegible]	FWAPT0029	20	4	2905.75	PSIG	2918.28	PSIA
[illegible]	FWATE0050	20	7	344.05	F	344.05	F
[illegible]	FWAPT0030	20	8	2900.85	PSIG	2913.38	PSIA
[illegible]	[illegible]	21	4	308.15	F	308.15	F
[illegible]	[illegible]	21	5	0.08	KPPH	0.08	KPPH
[illegible]	FWATE0052	21	6	344.05	F	344.05	F
[illegible]	FWAPT0252	21	7	2898.55	PSIG	2901.08	PSIA
[illegible]	FWATE0053	21	10	393.90	F	393.90	F
[illegible]	FWATE0054	21	11	394.26	F	394.26	F
[illegible]	FWATE0055	21	12	477.49	F	477.49	F
[illegible]	FWATE0056	22	1	477.92	F	477.92	F
[illegible]	FWATE0059	22	2	551.26	F	551.26	F
[illegible]	FWATE0154	22	3	551.13	F	551.13	F
[illegible]	FWATE0290	22	4	550.72	F	550.72	F
[illegible]	CGAXI025A	22	5	550.06	F	550.06	F
[illegible]	FWAPT0032	22	6	2738.75	PSIG	2751.28	PSIA
[illegible]	CGAXI021A	22	8	6122.63	KPPH	6122.63	KPPH
[illegible]	INAFR0531	26	1	24.10	F	24.10	F
[illegible]	INAFT0227	26	2	25.57	INHG	12.56	PSIA
[illegible]	HRCTE0377	42	5	78.61	F	78.61	F
[illegible]	HRCTE0378	42	6	78.61	F	78.61	F
[illegible]	HRCTE0379	42	7	78.85	F	78.85	F
[illegible]	HRCTE0380	42	8	78.91	F	78.91	F
[illegible]	HRCTE1215	42	10	95.16	F	95.16	F
[illegible]	HRCTE1216	42	11	95.84	F	95.84	F
[illegible]	HRCTE0392	42	12	102.51	F	102.51	F
[illegible]	HRCTE0394	43	1	102.86	F	102.86	F
[illegible]	HRCTE0395	43	2	102.54	F	102.54	F
[illegible]	HRCTE0396	43	3	101.71	F	101.71	F
[illegible]	HRCTE0389	43	4	101.51	F	101.51	F
[illegible]	HRCTE0390	43	5	102.40	F	102.40	F
[illegible]	HRCTE0391	43	6	101.97	F	101.97	F
[illegible]	HRCTE0392	43	7	103.30	F	103.30	F
[illegible]	HRCTE0382	43	8	91.61	F	91.61	F
[illegible]	HRCTE0384	43	9	92.19	F	92.19	F
[illegible]	HRCTE0383	43	10	91.93	F	91.93	F
[illegible]	HRCTE0386	43	11	90.33	F	90.33	F
[illegible]	HRCTE0388	43	12	91.23	F	91.23	F
[illegible]	HRCTE0387	44	1	92.34	F	92.34	F
[illegible]	HRCTE0385	44	2	92.51	F	92.51	F
[illegible]	HRCTE0401	44	3	105.65	F	105.65	F
[illegible]	HRCTE0402	44	4	105.61	F	105.61	F
[illegible]	HRCTE0403	44	5	106.28	F	106.28	F
[illegible]	HRCTE0404	44	6	106.82	F	106.82	F

Description	ID #	Group #	Item #	Data Log Value	Units	Panel Value	Units
[illegible]	[illegible]	44	7	107.81	F	107.8[illegible]	F
[illegible]	[illegible]	44	6	106.64	F	106.64	F
[illegible]	[illegible]	44	[illegible]	106.54	F	106.54	F
[illegible]	[illegible]	44	10	107.47	F	107.47	F

[illegible]	78.75
[illegible]	95.50
[illegible]	108.35
[illegible]	91.73
[illegible]	106.54

[illegible] DATA
[illegible] LOG

[illegible] 2 Unit NO. 1
[illegible] JAN. 26, 1989
[illegible] 9:30:30
[illegible] 12.61 PSIA

Description	ID #	Group #	Item #	Data Log Value	Units	Final Value	Units
[illegible]	TGCPV0022	1	4	866.36	MW	866.36	MW
[illegible]	TGFTA111	1	6	834.62	MW	834.62	MW
[illegible]	COAXI027A	1	5	869.57	MW	869.57	MW
[illegible]	TGFTG0023	2	1	0.97		0.97	
[illegible]	SGGTE004	3	11	1000.37	F	1000.37	F
[illegible]	SGGTE1152	3	12	953.43	F	953.43	F
[illegible]	SGGTE0006	4	1	927.13	F	927.13	F
[illegible]	SGGTE0007	4	2	854.69	F	854.69	F
[illegible]	SGGPT0001	4	3	2423.85	PSIG	2436.46	PSIA
[illegible]	COAXI012A	4	4	2427.39	PSIG	2440.00	PSIA
[illegible]	COAXI015A	4	8	1001.59	F	1001.59	F
[illegible]	TGFTA1114	4	9	2392.97	PSIA	2392.97	PSIA
[illegible]	TGFTA1113	4	10	989.95	F	989.95	F
[illegible]	COAXI023A	4	12	6118.56	KPPH	6118.56	KPPH
[illegible]	COAXI024A	5	1	6241.22	KPPH	6241.22	KPPH
[illegible]	TGFTG0007	5	2	97.10	PCT	97.10	PCT
[illegible]	COAXI042A	5	3	1922.52	PSIG	1935.13	PSIA
[illegible]	TGAPT0057	5	5	1932.64	PSIG	1945.25	PSIA
[illegible]	TEATE0030	5	6	797.39	F	797.39	F
[illegible]	TEAPT0021	5	7	1052.82	PSIG	1065.43	PSIA
[illegible]	TEAPT0022	5	8	1051.21	PSIG	1063.82	PSIA
[illegible]	SGJTE0024	5	9	625.29	F	625.29	F
[illegible]	SGJPT0012	5	10	555.08	PSIG	567.69	PSIA
[illegible]	TEATE0028	5	11	624.09	F	624.09	F
[illegible]	TEAPT0019	5	12	546.32	PSIG	558.93	PSIA
[illegible]	TEATE0029	6	1	624.31	F	624.31	F
[illegible]	TEAPT0020	6	2	548.97	PSIG	561.58	PSIA
[illegible] INLET T	SGJTE0023	6	3	625.40	F	625.40	F
[illegible] INLET T	COAXI106A	6	4	622.94	F	622.94	F
[illegible]	COAXI108A	6	6	0.00	KPPH	0.00	KPPH
[illegible]	SGJTE1155	7	4	1006.81	F	1006.81	F
[illegible]	SGJTE1156	7	5	1008.70	F	1008.70	F
[illegible]	SGJPT0006	7	6	519.35	PSIG	531.96	PSIA
[illegible]	SGJTE0013	7	7	1007.08	F	1007.08	F
[illegible] INLET TEMP	COAXI104A	7	8	1010.01	F	1010.01	F
[illegible]	SGJPT0007	7	9	526.53	PSIG	539.14	PSIA
[illegible]	SGJTE0016	7	10	1008.31	F	1008.31	F
[illegible] INLET TEMP	COAXI105A	7	11	1007.40	F	1007.40	F
[illegible] INLET T	COAXI046A	7	12	1007.10	F	1007.10	F

IP14_002461

Description	ID #	Group #	Item #	Data Log Value	Units	Final Value	Units
TB [illegible] TEMP	TSFTA1115	8	1	1002.05	F	1002.05	F
TB [illegible] BOIL PRESS	SBJPT0049	8	2	572.92	PSIG	585.54	PSIA
HTR 1A EXTR TEMP	TEAPT0026	8	3	806.02	F	806.02	F
HTR 6A EXTR PRESS	TEAPT0017	8	4	219.37	PSIG	231.98	PSIA
HTR 6B EXTR TEMP	TEAPT0027	8	5	805.95	F	805.95	F
HTR 6B EXTR PRESS	TEAPT0018	8	6	220.02	PSIG	232.63	PSIA
HTR 5 A EXTR T	TEATE0157	8	7	623.61	F	623.61	F
HTR 5 A EXTR P	TEAPT0023	8	8	122.36	PSIG	134.97	PSIA
HTR 5 EXTR TEMP	TEATE0025	8	9	625.54	F	625.54	F
HTR 5 EXTR PRESS	TEAPT0016	8	10	122.71	PSIG	135.32	PSIA
HTR 1B STM TEMP	TEATE0032	8	11	627.36	F	627.36	F
HTR 1B STM PRESS	TEAPT0014	8	12	119.25	PSIG	131.86	PSIA
[illegible] TEMP	TEATE0033	9	1	6247.23	F	6247.23	F
[illegible] PRESS	TEAPT0015	9	2	119.34	PSIG	131.95	PSIA
[illegible]	FWAPM0013	9	3	5230.24	RPM	5230.24	RPM
[illegible] SPEED	FWATS0002	9	4	5357.00	RPM	5357.00	RPM
[illegible] SPEED	FWATS0004	9	7	5238.00	RPM	5238.00	RPM
[illegible] P	FWAPT0228	9	9	86.63	PSIG	99.24	PSIA
[illegible] P	FWAPT0229	9	10	68.50	PSIG	81.11	PSIA
[illegible] HTR 4	TTEBTE0164	9	12	514.48	F	514.48	F
LP A EXTR TO HTR 4	TTEBTE0165	10	1	514.85	F	514.85	F
LP A EXTR TO HTR 4	TTEBTE0166	10	2	517.88	F	517.88	F
LP EXTR TO HTR 4 P	TEBPT0055	10	3	47.16	PSIG	59.77	PSIA
LP A EXTR TO HTR 3	TTEBTE0161	10	4	412.95	F	412.95	F
LP C EXTR TO HTR 3	TTEBTE0162	10	5	414.42	F	414.42	F
LP B EXTR TO HTR 3	TTEBTE0163	10	6	414.44	F	414.44	F
LP EXTR TO HTR 3 P	TEBPT0054	10	7	24.60	PSIG	37.21	PSIA
LP A EXTR TO HTR 2	TTEBTE0158	10	8	227.42	F	227.42	F
LP B EXTR TO HTR 2	TTEBTE0159	10	9	227.10	F	227.10	F
LP C EXTR TO HTR 2	TTEBTE0160	10	10	232.42	F	232.42	F
LP EXTR TO HTR 2 P	TEBPT0053	10	11	-1.65	PSIG	10.96	PSIA
LPA EXTR TO HTR 1A	TTEBTE0167	10	12	99.30	F	99.30	F
LPA EXTR TO HTR 1A	TTEBTE0168	11	1	159.45	F	159.45	F
LP HTR 1A PRESS	TEBPT0050	11	2	-8.01	PSIG	4.60	PSIA
SIM SEAL HDR T	TGCTE0147	11	4	872.28	F	872.28	F
LPB EXTR TO HTR 1B	TTEBTE0169	11	6	159.62	F	159.62	F
LPB EXTR TO HTR 1B	TTEBTE0170	11	7	158.83	F	158.83	F
LP HTR 1B PRESS	TEBPT0051	11	8	-8.11	PSIG	4.50	PSIA
LPC EXTR TO HTR 1C	TTEBTE0171	11	9	0.00	F	0.00	F
LPC EXTR TO HTR 1C	TTEBTE0172	11	10	0.00	F	0.00	F
LP HTR 1C PRESS	TEBPT0052	11	11	-8.04	PSIG	4.57	PSIA
EXHAUST HOOD A T	TGATE0131	11	12	111.92	F	111.92	F
LP A EXHAUST PRESS	TGAPT0033	12	1	1.08	PSIA	2.20	INHGA
EXHAUST HOOD B T	TGATE0132	12	2	0.00	F	0.00	F
LP B EXHAUST PRESS	TGAPT0034	12	3	1.19	PSIA	2.42	INHGA
EXHAUST HOOD C T	TGATE0133	12	4	100.40	F	100.40	F
LP C EXHAUST PRESS	TGAPT0035	12	5	1.19	PSIA	2.42	INHGA
HP COND 1A EXH PRESS	TGAPT5001	12	8	2.80	INHGA	2.80	INHGA
IP COND 1B EXH PRESS	TGAPT5003	12	10	2.28	INHGA	2.28	INHGA
LP COND 1C EXH PRESS	CDAXI110A	12	12	2.06	INHGA	2.06	INHGA

Description	ID #	Group #	Item #	Data Log Value	Units	Final Value	Units
HP COND OUTLET T	HPCTE0398	44	8	106.33	F	106.33	F
HP COND OUTLET T	HPCTE0397	44	9	106.20	F	106.20	F
HP COND OUTLET T	HPCTE0400	44	10	107.10	F	107.10	F
AVG COND INLET T				78.52			
AVG IP COND 1A XOVER T				95.27			
AVG IP COND 1B OUTLET T				102.34			
AVG IP-HP COND XOVER T				91.36			
AVG HP COND OUTLET T				106.27			

Description	ID #	Group #	Item #	Data Log Value	Units	Final Value	Units
[illegible]	[illegible]	8	3	1002.05	F	1002.05	F
[illegible]	[illegible]	8	5	571.15	DEG	583.75	DEG
[illegible]	[illegible]	8	6	804.31	F	[illegible]	F
HPT [illegible] PRESS	TEAPT0017	8	8	519.44	PSIG	232.02	PSIA
[illegible]	TEATE0027	8	9	804.31	F	804.31	F
HPT [illegible] PRESS	TEAPT0018	8	6	219.38	PSIG	232.46	PSIA
[illegible] PREP [illegible] T	TEATE0157	8	7	628.21	F	620.61	F
[illegible]	TEAPT0023	8	8	122.50	PSIG	135.08	PSIA
[illegible]	TEATE0025	8	9	625.07	F	605.07	F
[illegible] PRESS	TEAPT0016	8	10	122.92	PSIG	135.51	PSIA
[illegible]	TEATE0032	8	11	627.09	F	627.09	F
[illegible] PRESS	TEAPT0014	8	12	119.44	PSIG	132.02	PSIA
[illegible]	TEATE0035	9	1	625.74	F	606.56	F
[illegible] PRESS	TFAPT0017	9	2	119.20	PSIG	132.12	PSIA
[illegible]	FWAPT0013	9	5	5220.00	RPM	5220.00	RPM
[illegible]	FWATE0002	9	6	5341.80	RPM	5341.80	RPM
[illegible]	FWATE0004	9	7	5225.26	RPM	5225.26	RPM
[illegible]	FWAPT0228	9	8	83.45	PSIG	93.02	PSIA
[illegible]	FWAPT0229	9	10	67.53	PSIG	75.91	PSIA
[illegible]	TTEBTE0164	9	12	313.04	F	313.04	F
LP [illegible] HTR 4	TTEBTE0165	10	1	513.65	F	513.65	F
LP [illegible] HTR 4	TTEBTE0166	10	2	516.65	F	516.65	F
LP [illegible] HTR 4 P	TEBPT0055	10	3	47.35	PSIG	59.92	PSIA
LP [illegible] TO HTR 3	TTEBTE0161	10	4	412.23	F	412.23	F
LP [illegible] TO HTR 3	TTEBTE0162	10	5	413.68	F	413.68	F
LP [illegible] TO HTR 3	TTEBTE0163	10	6	413.76	F	413.76	F
LP [illegible] TO HTR 3 P	TEBPT0054	10	7	24.80	PSIG	37.38	PSIA
LP [illegible] TO HTR 2	TTEBTE0158	10	8	227.76	F	227.76	F
LP [illegible] TO HTR 2	TTEBTE0159	10	9	227.06	F	227.06	F
LP [illegible] TO HTR 2	TTEBTE0160	10	10	232.27	F	232.27	F
LP [illegible] TO HTR 2 P	TEBPT0053	10	11	-1.55	PSIG	11.03	PSIA
LPA [illegible] TO HTR 1A	TTEBTE0167	10	12	101.78	F	101.78	F
LPA [illegible] TO HTR 1A	TTEBTE0168	11	1	159.62	F	159.62	F
LP HTR 1A PRESS	TEBPT0050	11	2	-7.96	PSIG	4.62	PSIA
S/M SEAL HDR T	TGCTE0147	11	4	872.00	F	872.00	F
LPB [illegible] TO HTR 1B	TTEBTE0169	11	6	159.81	F	159.81	F
LPB [illegible] TO HTR 1B	TTEBTE0170	11	7	159.00	F	159.00	F
LP HTR 1B PRESS	TEBPT0051	11	8	-8.03	PSIG	4.55	PSIA
LPC [illegible] TO HTR 1C	TTEBTE0171	11	9	0.00	F	0.00	F
LPC [illegible] TO HTR 1C	TTEBTE0172	11	10	0.00	F	0.00	F
LP HTR 1C PRESS	TEBPT0052	11	11	-8.00	PSIG	4.58	PSIA
EXHAUST HOOD A T	TGATE0131	11	12	112.00	F	112.00	F
LP A EXHAUST PRESS	TGAPT0033	12	1	1.07	PSIA	2.19	INHGA
EXHAUST HOOD B T	TGATE0132	12	2	0.00	F	0.00	F
LP B EXHAUST PRESS	TGAPT0034	12	3	1.18	PSIA	2.40	INHGA
EXHAUST HOOD C T	TGATE0133	12	4	100.00	F	100.00	F
LP C EXHAUST PRESS	TGAPT0035	12	5	1.18	PSIA	2.40	INHGA
HP COND 1A EXH PRESS	TGAPT5001	12	8	2.68	INHGA	2.68	INHGA
IP COND 1B EXH PRESS	TGAPT5003	12	10	2.23	INHGA	2.23	INHGA
LP COND 1C EXH PRESS	COMX1104	12	12	2.01	INHGA	2.01	INHGA

Description	ID #	Group #	Item #	Data Log Value	Units	Final Value	Units
HTR 3A DRAIN TEMP	TEDTE0185	13	1	489.09	F	489.09	F
HTR 3B DRAIN TEMP	TEDTE0186	13	4	487.30	F	487.30	F
HTR 3A DRAIN TEMP	TEDTE0183	13	7	403.07	F	403.07	F
HTR 3B DRAIN TEMP	TEDTE0184	13	10	402.84	F	402.84	F
HTR 4A DRAIN TEMP	TEDTE0181	14	1	352.65	F	352.65	F
HTR 4B DRAIN TEMP	TEDTE0182	14	4	352.44	F	352.44	F
HTR 4 DRAIN TEMP	TEDTE0037	14	7	271.04	F	271.04	F
HTR 5 DRAIN TEMP	TEDTE0036	14	8	206.01	F	206.01	F
HTR 5 DRAIN TEMP	TEDTE0035	14	9	164.69	F	164.69	F
[illegible] DRAIN TEMP	TEDTE0038	14	10	157.00	F	157.00	F
[illegible] DRAIN TEMP	TEDTE0034	14	11	121.55	F	121.55	F
[illegible] TEMP	HRATE0042	15	3	112.10	F	112.10	F
[illegible] TEMP	HRATE0041	15	4	111.21	F	111.21	F
[illegible] LEVEL-START	HRALT0001	15	5	37.58	IN		
[illegible] LEVEL-END	HRALT0001	15	5	30.68	IN	-6.90	D IN
[illegible] FLOW	COAXI113A	15	7	-0.11	KPPH	-0.11	KPPH
[illegible]	HRAPT0008	15	8	438.04	PSIG	450.62	PSIA
GLAND COND IN TEMP	HRATE0043	16	3	113.26	F	113.26	F
GLAND COND OUT TEMP	HRATE0044	16	4	113.91	F	113.91	F
CONDENSATE FLOW	COAXI114A	16	8	4665.94	KPPH	4665.94	KPPH
COND TO DR CLR	FWCTE0187	16	9	112.67	F	112.67	F
HTR 1 CONDS IN T	FWCTE0188	16	10	117.75	F	117.75	F
HTR 1A CONDS OUT T	FWCTE0189	16	11	155.36	F	155.36	F
HTR 1B CONDS OUT T	FWCTE0190	16	12	157.70	F	157.70	F
HTR 1C CONDS OUT T	FWCTE0191	17	1	156.76	F	156.76	F
HTR 2 CONDS IN T	FWCTE0192	17	2	157.67	F	157.67	F
HTR 2 CONDS OUT T	FWCTE0193	17	3	195.81	F	195.81	F
HTR 3 CONDS IN T	FWCTE0194	17	4	195.87	F	195.87	F
HTR 3 CONDS OUT T	FWCTE0195	17	5	263.52	F	263.52	F
HTR 4 CONDS IN T	FWCTE0196	17	6	263.60	F	263.60	F
HTR 4 CONDS OUT T	FWCTE0197	17	7	295.42	F	295.42	F
HTR 5 (DA) CONDS IN	FWCTE0198	17	8	295.21	F	295.21	F
HTR 5 (DA) PRESS	FWCPT0056	17	9	106.00	PSIG	118.58	PSIA
DA HTR STOR TK T	FWCTE0199	17	10	340.87	F	340.87	F
DA LEVEL-START	FWCLT0012	17	11	98.56	IN		
DA LEVEL-END	FWCLT0012	17	11	102.23	IN	3.67	D IN
DA PRESSURE	COAXI111A	18	2	107.41	PSIG	119.99	PSIA
DA OUTLET TEMP	FWATE0045	18	3	341.27	F	341.27	F
APH COIL OUT WTR T	COAXI127A	18	7	70.47	F	70.47	F
APH RETURN FLOW	COAXI115A	18	9	107.06	KPPH	107.06	KPPH
FGR RETURN WTR FLOW	CCDFT0069	18	11	205.89	GPM	102.89	KPPH
FGR RETURN WTR T	CCDTE0905	18	12	203.24	F	203.24	F
BFP 1A SUCTION T	FWATE0046	19	9	337.57	F	337.57	F
BFP 1B SUCTION T	FWATE0047	19	10	338.46	F	338.46	F
STBY BFP SUCTION T	FWATE0048	19	11	336.68	F	336.68	F
RHT DSUPHTR SPRAY T	SGJTE0060	19	12	129.33	F	129.33	F

Description	ID #	Group #	Item #	Data Log Value	Units	Final Value	Units
RH [illegible] HTR SPRAY F	CD4XI108A	20	2	0.00	KPPH	0.00	KPPH
BFP [illegible] DISCH T	FWATE0049	20	3	342.84	F	342.84	F
BFP [illegible] DISCH PRESS	FWAPT0029	20	4	2899.11	PSIG	2911.69	PSIA
BFP [illegible] DISCH T	FWATE0050	20	7	344.53	F	344.53	F
BFP [illegible] DISCH PRESS	FWAPT0030	20	8	2894.64	PSIG	2907.22	PSIA
SUPHTR SPRAY HTR F	CDAX1026A	21	4	300.04	F	300.04	F
SUPHTR SPRAY WTR F	CDAX1022A	21	5	0.08	KPPH	0.08	KPPH
HP [illegible] INLET T	FWATE0052	21	6	344.48	F	344.48	F
HP [illegible] INLET P	FWAPT0256	21	7	2881.71	PSIG	2894.29	PSIA
HP [illegible] INLET T	FWATE0053	21	10	394.68	F	394.68	F
HP [illegible] INLET T	FWATE0054	21	11	394.96	F	394.96	F
HP [illegible] INLET T	FWATE0055	21	12	478.52	F	478.52	F
HP [illegible] INLET T	FWATE0056	22	1	479.03	F	479.03	F
HP [illegible] OUTLET T	FWATE0059	22	2	551.84	F	551.84	F
HP [illegible] OUTLET T	FWATE0154	22	3	551.78	F	551.78	F
[illegible] INLET T	FWATE0990	22	4	551.35	F	551.35	F
[illegible] INLET T	CD4X1025A	22	5	550.69	F	550.69	F
[illegible] INLET P	FWAPT0032	22	6	2734.38	PSIG	2746.96	PSIA
[illegible] FLOW	CDAX1021A	22	8	6047.72	KPPH	6047.72	KPPH
AMBIENT TEMP	INAKK0531	26	1	18.73	F	18.73	F
BAROMETRIC PRESS	INAPT0227	26	2	25.69	INHG	12.62	PSIA
LP COND 1B INLET T	HRCTE0377	42	5	77.33	F	77.33	F
LP COND 1A INLET T	HRCTE0378	42	6	77.36	F	77.36	F
LP COND 1C INLET T	HRCTE0379	42	7	77.63	F	77.63	F
LP COND 1C INLET T	HRCTE0380	42	8	77.61	F	77.61	F
LP COND 1A XOVER T	HRCTE1215	42	10	93.69	F	93.89	F
LP COND 1B XOVER T	HRCTE1216	42	11	94.69	F	94.69	F
LP COND 1B OUTLET T	HRCTE0393	42	12	101.34	F	101.34	F
LP COND 1B OUTLET T	HRCTE0394	43	1	101.74	F	101.74	F
LP COND 1A OUTLET T	HRCTE0395	43	2	101.38	F	101.38	F
LP COND 1B OUTLET T	HRCTE0396	43	3	100.49	F	100.49	F
LP COND 1B OUTLET T	HRCTE0389	43	4	100.47	F	100.47	F
LP COND 1A OUTLET T	HRCTE0390	43	5	101.26	F	101.26	F
LP COND 1C OUTLET T	HRCTE0391	43	6	100.94	F	100.94	F
LP COND 1B OUTLET T	HRCTE0392	43	7	102.28	F	102.28	F
LP-HP COND XOVER T	HRCTE0382	43	8	90.27	F	90.27	F
LP-HP COND XOVER T	HRCTE0384	43	9	90.83	F	90.83	F
LP-HP COND XOVER T	HRCTE0383	43	10	90.57	F	90.57	F
LP-HP COND XOVER T	HRCTE0386	43	11	88.78	F	88.78	F
LP-HP COND XOVER T	HRCTE0388	43	12	89.74	F	89.74	F
LP-HP COND XOVER T	HRCTE0387	44	1	90.84	F	90.84	F
LP-HP COND XOVER T	HRCTE0385	44	2	90.99	F	90.99	F
HP COND OUTLET T	HRCTE0401	44	3	103.74	F	103.74	F
HP COND OUTLET T	HRCTE0402	44	4	103.76	F	103.76	F
HP COND OUTLET T	HRCTE0403	44	5	104.56	F	104.56	F
HP COND OUTLET T	HRCTE0404	44	6	104.90	F	104.90	F

Description	ID #	Group #	Item #	Data Log Value	Units	Final Value	Units
HP COND OUTLET T	HRCTE0399	44	7	105.43	F	105.43	F
HP COND OUTLET T	HRCTE0398	44	8	104.82	F	104.82	F
HP COND OUTLET T	HRCTE0397	44	9	104.74	F	104.74	F
HP COND OUTLET T	HRCTE0400	44	10	105.64	F	105.64	F

AVG COND INLET T	77.48
AVG HP COND 1A MOVER T	94.29
AVG HP COND 1A OUTLET T	101.24
AVG [illegible] COND MOVER T	90.29
AVG HP COND OUTLET T	104.70

PERFORMANCE TEST DATA
POXBORO COMPUTER LOG

Test Point 4 Unit No. 1
Date JAN. 27, 1989
Start Time 9:30 9:30
Barometer 12.51 PSIA

Description	ID #	Group #	Item #	Data Log Value	Units	Final Value	Units
GENERATOR LOAD	TGBPK0022	1	4	864.74	MW	864.74	MW
TURBINE LOAD	TGFTA111	1	6	0.00	MW	0.00	MW
UNIT LOAD	COAXI027A	1	9	867.39	MW	867.39	MW
POWER FACTOR	TGFTG0023	2	1	0.99		0.99	
[illegible]	SGGTE004	3	11	994.69	F	994.69	F
[illegible]	SGGTE1152	3	12	948.91	F	948.91	F
[illegible]	SGGTE0006	4	1	924.44	F	924.44	F
[illegible]	SGGTE0007	4	2	852.31	F	852.31	F
MS PRESS	SGGPT0001	4	3	2425.53	PSIG	2438.04	PSIA
[illegible]	COAXI012A	4	4	2428.48	PSIG	2440.99	PSIA
[illegible]	COAXI015A	4	8	995.90	F	995.90	F
MS PRESS	TGFTA1114	4	9	2392.97	PSIA	2392.97	PSIA
MS TEMP	TGFTA1113	4	10	989.95	F	989.95	F
STEAM FLOW (FW+SSF)	COAXI023A	4	12	6149.64	KPPH	6149.64	KPPH
TURBINE STM FLOW	COAXI024A	5	1	6245.62	KPPH	6245.62	KPPH
[illegible]	TGFTG0007	5	2	85.50	PCT	85.50	PCT
FIRST STM PRESS	COAXI042A	5	3	1923.93	PSIG	1936.44	PSIA
FIRST STM TB PRESS	TGAPT0057	5	5	1856.00	PSIG	1868.51	PSIA
HTR 8A EXTR T	TEATE0030	5	6	792.06	F	792.06	F
HTR 8A EXTR PRESS	TEAPT0021	5	7	1053.75	PSIG	1066.26	PSIA
HTR 8B EXTR PRESS	TEAPT0022	5	8	1052.43	PSIG	1064.94	PSIA
TB COLD RHT T	SGJTE0024	5	9	620.62	F	620.62	F
TB COLD RHT PRESS	SGJPT0012	5	10	556.25	PSIG	568.76	PSIA
HTR 7A EXTR T	TEATE0028	5	11	619.62	F	619.62	F
HTR 7A EXTR PRESS	TEAPT0019	5	12	547.26	PSIG	559.77	PSIA
HTR 7B EXTR T	TEATE0029	6	1	619.69	F	619.69	F
HTR 7B EXTR PRESS	TEAPT0020	6	2	550.24	PSIG	562.75	PSIA
RHT DSUPHTR INLET T	SGJTE0023	6	3	620.81	F	620.81	F
RHT DSUPHTR INLET T	COAXI106A	6	4	618.62	F	618.62	F
RHT DSUPHTR FLOW	COAXI108A	6	6	0.00	KPPH	0.00	KPPH
HRH N TEMP	SGJTE1155	7	4	1005.07	F	1005.07	F
HRH S TEMP	SGJTE1156	7	5	1006.66	F	1006.66	F
TB N HRH PRESS	SGJPT0006	7	6	519.87	PSIG	532.38	PSIA
TB N HRH TEMP	SGJTE0013	7	7	1005.01	F	1005.01	F
TB RHT INLET TEMP	COAXI104A	7	8	1007.63	F	1007.63	F
TB S HRH PRESS	SGJPT0007	7	9	527.48	PSIG	539.99	PSIA
TB S HRH TEMP	SGJTE0016	7	10	1005.01	F	1005.01	F
TB RHT INLET TEMP	COAXI105A	7	11	1005.25	F	1005.25	F
TB RHT AVG INLET T	COAXI046A	7	12	1005.00	F	1005.00	F

IP14_002468

Description	ID #	Group #	Item #	Data Log Value	Units	Final Value	Units
[illegible]	[illegible]	8	1	1002.05	F	1002.05	F
[illegible]	[illegible]	8	2	574.12	PSIG	584.69	PSIA
[illegible]	[illegible]	8	3	803.57	F	803.57	F
[illegible]	[illegible]	8	4	217.86	PSIG	232.37	PSIA
[illegible]	[illegible]	8	5	803.67	F	803.67	F
[illegible]	[illegible]	8	6	220.56	PSIG	235.07	PSIA
[illegible]	[illegible]	8	7	626.61	F	626.61	F
[illegible]	[illegible]	8	8	122.61	PSIG	137.30	PSIA
[illegible]	[illegible]	8	9	623.27	F	623.27	F
[illegible]	[illegible]	8	10	120.95	PSIG	135.47	PSIA
[illegible]	[illegible]	8	11	625.11	F	625.11	F
[illegible]	[illegible]	8	12	119.57	PSIG	137.08	PSIA
[illegible]	[illegible]	9	1	624.91	F	624.86	F
[illegible]	[illegible]	9	2	119.78	PSIG	135.23	PSIA
[illegible]	[illegible]	9	3	5240.77	RPM	5260.77	RPM
[illegible]	[illegible]	9	4	5658.89	RPM	5658.89	RPM
[illegible]	[illegible]	9	5	5197.50	RPM	5197.50	RPM
[illegible]	[illegible]	9	6	87.05	PSIG	99.56	PSIA
[illegible]	[illegible]	9	7	83.57	PSIG	96.06	PSIA
[illegible]	[illegible]	9	12	512.76	F	512.76	F
[illegible]	[illegible]	10	1	513.08	F	513.08	F
[illegible]	[illegible]	10	2	516.11	F	516.11	F
[illegible]	[illegible]	10	3	47.24	PSIG	59.75	PSIA
[illegible]	[illegible]	10	4	411.07	F	411.07	F
[illegible]	[illegible]	10	5	412.74	F	412.74	F
[illegible]	[illegible]	10	6	412.70	F	412.70	F
[illegible]	[illegible]	10	7	24.64	PSIG	37.15	PSIA
[illegible]	[illegible]	10	8	225.41	F	225.41	F
[illegible]	[illegible]	10	9	225.41	F	225.41	F
[illegible]	[illegible]	10	10	230.46	F	230.46	F
[illegible]	[illegible]	10	11	-1.57	PSIG	10.94	PSIA
[illegible]	[illegible]	10	12	97.77	F	97.77	F
[illegible]	[illegible]	11	1	159.21	F	159.21	F
[illegible]	[illegible]	11	2	-7.92	PSIG	4.69	PSIA
[illegible]	[illegible]	11	4	861.00	F	861.00	F
[illegible]	[illegible]	11	6	159.54	F	159.54	F
[illegible]	[illegible]	11	7	158.76	F	158.76	F
[illegible]	[illegible]	11	8	-8.00	PSIG	4.51	PSIA
[illegible]	[illegible]	11	9	0.00	F	0.00	F
[illegible]	[illegible]	11	10	0.00	F	0.00	F
[illegible]	[illegible]	11	11	-7.97	PSIG	4.54	PSIA
[illegible]	[illegible]	11	12	106.00	F	108.00	F
[illegible]	[illegible]	12	1	0.94	PSIA	1.91	INHGA
[illegible]	[illegible]	12	2	0.00	F	0.00	F
[illegible]	[illegible]	12	3	1.07	PSIA	2.18	INHGA
[illegible]	[illegible]	12	4	98.00	F	98.00	F
[illegible]	[illegible]	12	5	1.09	PSIA	2.22	INHGA
[illegible]	[illegible]	12	9	2.82	INHGA	2.68	INHGA
[illegible]	[illegible]	12	10	2.36	INHGA	2.36	INHGA
[illegible]	[illegible]	12	12	2.12	INHGA	2.12	INHGA

Description	ID #	Group #	Item #	Data Loc Value	Units	Final Value	Units
[illegible] TEMP	TEDTE0165	13	1	409.27	F	409.27	F
[illegible] TEMP	TEDTE0166	13	4	487.34	F	487.34	F
[illegible] TEMP	TEDTE0123	13	7	402.22	F	402.22	F
[illegible]	TEDTE0154	13	10	402.04	F	402.04	F
[illegible] TEMP	TEDTE0181	14	1	351.62	F	351.62	F
[illegible] TEMP	TEDTE0182	14	4	352.44	F	352.44	F
[illegible]	TEDTE0097	14	7	270.72	F	270.72	F
[illegible]	TEDTE0036	14	8	205.07	F	205.07	F
[illegible]	TEDTE0032	14	9	164.47	F	164.47	F
[illegible]	TEDTE0028	14	10	156.84	F	156.84	F
[illegible]	TEDTE0081	14	11	128.00	F	128.00	F
[illegible]	HRATE0043	15	3	114.18	F	114.18	F
[illegible] TEMP	HRATE0041	15	4	113.42	F	113.42	F
[illegible]	HDALT0001	15	5	37.00	IN		
[illegible]	HDAPT0001	15	6	34.75	IN	-2.25	D IN
[illegible]	COAXI1134	15	7	-0.15	KPPH	-0.15	KPPH
[illegible]	HRAPT0008	15	8	429.13	PSIG	441.64	PSIA
[illegible] TEMP	HRATE0043	16	3	115.26	F	115.26	F
[illegible] TEMP	HRATE0044	16	4	115.86	F	115.86	F
[illegible]	COAXI114A	16	8	4966.81	KPPH	4966.81	KPPH
[illegible]	FWCTE0187	16	9	114.53	F	114.53	F
[illegible]	FWCTE0188	16	10	118.85	F	118.85	F
[illegible]	FWCTE0189	16	11	155.19	F	155.19	F
[illegible]	FWCTE0190	16	12	157.41	F	157.41	F
[illegible]	FWCTE0191	17	1	156.67	F	156.67	F
[illegible]	FWCTE0192	17	2	157.46	F	157.46	F
[illegible]	FWCTE0193	17	3	195.36	F	195.36	F
[illegible]	FWCTE0194	17	4	195.10	F	195.10	F
[illegible]	FWCTE0195	17	5	263.00	F	263.00	F
[illegible]	FWCTE0196	17	6	263.10	F	263.10	F
[illegible]	FWCTE0197	17	7	295.02	F	295.02	F
[illegible]	FWCTE0198	17	8	295.00	F	295.00	F
[illegible]	FWCPT0076	17	9	106.11	PSIG	118.62	PSIA
[illegible]	FWCTE0199	17	10	340.76	F	340.76	F
[illegible]	FWCLT0012	17	11	99.42	IN		
[illegible]	FWCLT0012	17	11	99.42	IN	0.00	D IN
[illegible]	COAXI111A	18	2	107.36	PSIG	119.87	PSIA
[illegible] TEMP	FWATE0045	18	3	340.02	F	340.02	F
[illegible]	COAXI127A	18	7	82.61	F	82.61	F
[illegible]	COAXI115A	18	9	257.34	KPPH	257.34	KPPH
[illegible]	COOFT0069	18	11	121.42	GPM	10.68	KPPH
[illegible]	COOTF0905	18	12	184.08	F	184.88	F
[illegible]	FWATE0046	19	9	337.68	F	337.68	F
[illegible]	FWATE0047	19	10	338.61	F	338.61	F
[illegible]	FWATE0048	19	11	336.31	F	336.31	F
[illegible]	SOLTE0060	19	12	103.84	F	103.84	F

Description	ID #	Group #	Item #	Data Log Value	Units	Final Value	Units
[illegible]	CCAXI109A	20	2	0.00	KPPH	0.00	KPPH
[illegible]	FWATE0042	20	3	343.05	F	343.05	F
[illegible]	FWAPT0029	20	4	2905.10	PSIG	2917.67	PSIA
[illegible]	FWATE0050	20	5	344.57	F	344.57	F
[illegible]	FWAPT0030	20	6	2899.96	PSIG	2912.41	PSIA
[illegible]	CCAXI106A	21	4	307.60	F	307.60	F
[illegible]	CCAXI023A	21	5	0.08	KPPH	0.08	KPPH
[illegible]	FWATE0058	21	6	344.57	F	344.57	F
[illegible]	FWAPT0060	21	7	2888.51	PSIG	2901.02	PSIA
[illegible]	FWATE0059	21	10	394.75	F	394.75	F
[illegible]	FWATE0064	21	11	395.14	F	395.14	F
[illegible]	FWATE0055	21	12	478.65	F	478.65	F
[illegible]	FWATE0061	22	1	479.10	F	479.10	F
[illegible]	FWATE0069	22	2	551.64	F	551.64	F
[illegible]	FWATE0154	22	3	551.40	F	551.40	F
[illegible]	FWATE0993	22	4	551.04	F	551.04	F
[illegible]	CCAXI025A	22	5	550.42	F	550.42	F
[illegible]	FWAPT0132	22	6	2739.71	PSIG	2752.22	PSIA
[illegible]	CCAXI021A	22	8	6193.45	KPPH	6193.45	KPPH
[illegible]	IMAXK0531	26	1	6.95	F	6.95	F
[illegible]	IMAPT0287	26	2	25.53	INHG	12.54	PSIA
[illegible]	HRCTE0377	42	5	79.24	F	79.24	F
[illegible]	HRCTE0378	42	6	79.36	F	79.36	F
[illegible]	HRCTE0379	42	7	79.52	F	79.52	F
[illegible]	HRCTE0380	42	8	79.54	F	79.54	F
[illegible]	HRCTE1215	42	10	95.79	F	95.79	F
[illegible]	HRCTE1216	42	11	96.63	F	96.63	F
[illegible]	HRCTE0393	42	12	103.46	F	103.46	F
[illegible]	HRCTE0394	43	1	103.76	F	103.76	F
[illegible]	HRCTE0395	43	2	103.36	F	103.36	F
[illegible]	HRCTE0396	43	3	102.59	F	102.59	F
[illegible]	HRCTE0389	43	4	102.42	F	102.42	F
[illegible]	HRCTE0390	43	5	103.22	F	103.22	F
[illegible]	HRCTE0391	43	6	102.82	F	102.82	F
[illegible]	HRCTE0392	43	7	104.13	F	104.13	F
[illegible]	HRCTE0382	43	8	92.19	F	92.19	F
[illegible]	HRCTE0384	43	9	92.76	F	92.76	F
[illegible]	HRCTE0383	43	10	92.48	F	92.48	F
[illegible]	HRCTE0386	43	11	90.91	F	90.91	F
[illegible]	HRCTE0388	43	12	91.74	F	91.74	F
[illegible]	HRCTE0387	44	1	92.82	F	92.82	F
[illegible]	HRCTE0385	44	2	93.09	F	93.09	F
HP COND OUTLET T	HRCTE0401	44	3	106.31	F	106.31	F
HP COND OUTLET T	HRCTE0402	44	4	106.26	F	106.26	F
HP COND OUTLET T	HRCTE0403	44	5	106.99	F	106.99	F
HP COND OUTLET T	HRCTE0404	44	6	106.31	F	106.31	F

Description	ID #	Group #	Error #	Data Log Value	Units	First Value	Units
[illegible]	[illegible]	44	7	107.67	F	107.67	F
[illegible]	[illegible]	44	8	107.14	F	107.14	F
[illegible]	[illegible]	44	9	107.01	F	107.01	F
[illegible]	[illegible]	44	10	107.84	F	107.84	F

[illegible]	79.49
[illegible]	96.81
[illegible]	103.22
[illegible]	52.96
[illegible]	105.94

PERFORMANCE TEST DATA
FOXBORO COMPUTER LOG

Test Point 5 Unit No. 1
Date JAN 27, 1989
Start Time 13:15
Barometer 12.47 PSIA

Description	ID #	Group #	Item #	Data Log Value	Units	Final Value	Units
GENERATOR LOAD	TGBPK0022	1	4	866.47	MW	866.47	MW
TURBINE LOAD	TGFTA111	1	6	834.62	MW	834.62	MW
UNIT LOAD	COAXI027A	1	9	870.21	MW	870.21	MW
POWER FACTOR	TMFTG0023	2	1	0.99		0.99	
MAIN STEAM T	SGGTE004	3	11	998.91	F	998.91	F
MS 01 BRKT T	SGGTE1152	3	12	956.01	F	956.01	F
BRKT 1A MS T	SGGTE0006	4	1	928.96	F	928.96	F
BRKT 1A MS T	SGGTE0007	4	2	852.68	F	852.68	F
MS PRESS	SGGPT0001	4	3	2424.00	PSIG	2436.47	PSIA
THROTTLE PRESS	COAXI012A	4	4	2427.73	PSIG	2440.20	PSIA
THROTTLE T	COAXI015A	4	8	999.93	F	999.93	F
MS PRESS	TGFTA1114	4	9	2392.97	PSIA	2392.97	PSIA
MS TEMP	TGFTA1113	4	10	989.95	F	989.95	F
STEAM FLOW (FW+SSF)	COAXI023A	4	12	6092.73	KPPH	6092.73	KPPH
TURBINE STM FLOW	COAXI024A	5	1	6244.49	KPPH	6244.49	KPPH
CV POSITION	TGFTG0007	5	2	85.50	PCT	85.50	PCT
FIRST STG PRESS	COAXI042A	5	3	1923.62	PSIG	1936.09	PSIA
FIRST STG TB PRESS	TGAPT0057	5	5	1856.00	PSIG	1868.47	PSIA
HTR 8A EXTR T	TEATE0030	5	6	796.35	F	796.35	F
HTR 8A EXTR PRESS	TEAPT0021	5	7	1054.61	PSIG	1067.08	PSIA
HTR 8B EXTR PRESS	TEAPT0022	5	8	1053.26	PSIG	1065.73	PSIA
TB COLD RHT T	SGJTE0024	5	9	624.17	F	624.17	F
TB COLD RHT PRESS	SGJPT0012	5	10	556.00	PSIG	568.47	PSIA
HTR 7A EXTR T	TEATE0028	5	11	623.28	F	623.28	F
HTR 7A EXTR PRESS	TEAPT0019	5	12	547.26	PSIG	559.73	PSIA
HTR 7B EXTR T	TEATE0029	6	1	623.41	F	623.41	F
HTR 7A EXTR PRESS	TEAPT0020	6	2	549.79	PSIG	562.26	PSIA
RHT DSUPHTR INLET T	SGJTE0023	6	3	624.54	F	624.54	F
RHT DSUPHTR INLET T	COAXI106A	6	4	621.83	F	621.83	F
RHT DSUPHTR FLOW	COAXI108A	6	6	0.00	KPPH	0.00	KPPH
HRH N TEMP	SGJTE1155	7	4	1003.30	F	1003.30	F
HRH S TEMP	SGJTE1156	7	5	1005.65	F	1005.65	F
TB N HRH PRESS	SGJPT0006	7	6	519.86	PSIG	532.33	PSIA
TB N HRH TEMP	SGJTE0013	7	7	1003.73	F	1003.73	F
TB RHT INLET TEMP	COAXI104A	7	8	1006.82	F	1006.82	F
TB S HRH PRESS	SGJPT0007	7	9	527.48	PSIG	539.95	PSIA
TB S HRH TEMP	SGJTE0016	7	10	1005.33	F	1005.33	F
TB RHT INLET TEMP	COAXI105A	7	11	1003.81	F	1003.81	F
TB RHT AVG INLET T	COAXI046A	7	12	1003.88	F	1003.88	F

Description	ID #	Group #	Item #	Data Loc Value	Units	Final Value	Units
[illegible]	T8FTA1115	9	1	1002.05	F	1002.05	F
[illegible]	8BJPT0049	9	2	573.26	PSIG	586.72	PSIA
[illegible]	TF4PT0026	8	3	803.57	F	803.57	F
[illegible]	TE4PT0017	8	[illegible]	220.54	PSIG	233.01	PSIA
[illegible]	TEAPT0027	8	5	803.67	F	803.67	F
[illegible]	TEAPT0015	8	6	220.99	PSIG	233.46	PSIA
[illegible]	TFATE0157	8	7	627.23	F	627.23	F
[illegible]	TE4PT0023	8	8	123.42	PSIG	125.09	PSIA
[illegible]	TEATE0029	8	9	623.96	F	623.96	F
[illegible]	TFAPT0010	8	10	123.62	PSIG	136.09	PSIA
[illegible]	TGATE0032	8	11	625.77	F	625.77	F
[illegible]	TEAPT0014	8	12	120.21	PSIG	132.68	PSIA
[illegible]	TEATE0031	9	1	625.64	F	625.64	F
[illegible]	TE4PT0015	9	2	120.24	PSIG	132.81	PSIA
[illegible]	TWANK0013	9	5	5222.47	RPM	5222.47	RPM
[illegible]	TWATG0002	9	6	5347.25	RPM	5347.25	RPM
[illegible]	TWATG0004	9	7	5229.12	RPM	5229.12	RPM
[illegible]	TWAPT0238	9	8	86.18	PSIG	98.65	PSIA
[illegible]	TWAPT0225	9	10	67.76	PSIG	80.23	PSIA
[illegible]	TTEBTE0164	9	12	513.09	F	513.09	F
[illegible]	TTEBTE0165	10	1	513.27	F	513.27	F
[illegible]	TTEBTE0166	10	2	516.33	F	516.33	F
[illegible]	TEBPT0055	10	3	47.81	PSIG	60.23	PSIA
[illegible]	TTEBTE0161	10	4	412.03	F	412.03	F
[illegible]	TTEBTE0162	10	5	413.61	F	413.61	F
[illegible]	TTEBTE0163	10	6	413.64	F	413.64	F
[illegible]	TEBPT0054	10	7	25.11	PSIG	37.53	PSIA
[illegible]	TTEBTE0158	10	8	227.46	F	227.46	F
[illegible]	TTEBTE0159	10	9	227.34	F	227.34	F
[illegible]	TTEBTE0160	10	10	232.45	F	232.45	F
[illegible]	TEBPT0053	10	11	-1.37	PSIG	11.10	PSIA
[illegible]	TTEBTE0167	10	12	100.04	F	100.04	F
[illegible]	TTEBTE0168	11	1	159.97	F	159.97	F
[illegible]	TEBPT0050	11	2	-7.80	PSIG	4.67	PSIA
[illegible]	TGCTE0147	11	4	861.00	F	861.00	F
[illegible]	TTEBTE0169	11	6	160.17	F	160.17	F
[illegible]	TTEBTE0170	11	7	159.43	F	159.43	F
[illegible]	TEBPT0051	11	8	-7.90	PSIG	4.57	PSIA
[illegible]	TTEBTE0171	11	9	0.00	F	0.00	F
[illegible]	TTEBTE0172	11	10	0.00	F	0.00	F
[illegible]	TEBPT0052	11	11	-7.85	PSIG	4.62	PSIA
EXHAUST HOOD A T	TGATE0131	11	12	108.00	F	108.00	F
LP A EXHAUST PRESS	TGAPT0033	12	1	0.94	PSIA	1.91	INHGA
EXHAUST HOOD B T	TGATE0132	12	2	0.00	F	0.00	F
LP B EXHAUST PRESS	TGAPT0034	12	3	1.07	PSIA	2.19	INHGA
EXHAUST HOOD C T	TGATE0133	12	4	98.00	F	98.00	F
LP C EXHAUST PRESS	TGAPT0035	12	5	1.09	PSIA	2.22	INHGA
HP COND 1A EXH PRESS	TGAPT5001	12	8	2.83	INHGA	2.83	INHGA
HP COND 1B EXH PRESS	TGAPT5003	12	10	2.36	INHGA	2.36	INHGA
LP COND 1C EXH PRESS	30AXI110A	12	12	2.11	INHGA	2.11	INHGA

Description	ID #	Group #	Item #	Data Log Value	Units	Final Value	Units
HTR 5A DRAIN TEMP	TEDTE0185	13	1	489.26	F	489.26	F
HTR 5B DRAIN TEMP	TEDTE0186	13	4	487.48	F	487.48	F
HTR 5A DRAIN TEMP	TEDTE0183	13	7	403.43	F	403.43	F
HTR 5B DRAIN TEMP	TEDTE0184	13	10	403.14	F	403.14	F
HTR 6A DRAIN TEMP	TEDTE0181	14	1	353.15	F	353.15	F
HTR 6B DRAIN TEMP	TEDTE0182	14	4	352.75	F	352.75	F
HTR 7 DRAIN TEMP	TEDTE0037	14	7	271.18	F	271.18	F
HTR 8 DRAIN TEMP	TEDTE0036	14	8	205.66	F	205.61	F
HTR 9 DRAIN TEMP	TEDTE0035	14	9	164.97	F	164.97	F
[illegible] IN DRAIN TEMP	TEDTE0038	14	10	157.43	F	157.43	F
[illegible] DRAIN TEMP	TEDTE0034	14	11	122.72	F	122.72	F
[illegible] TEMP	HRATE0042	15	3	113.76	F	113.76	F
[illegible] TEMP	HRATE0041	15	4	112.90	F	112.90	F
[illegible] LEVEL-START	HRALT0001	15	5	37.79	IN		
[illegible] LEVEL-END	HRALT0001	15	6	32.75	IN	-5.04	D IN
[illegible] FLOW	COAXI113A	15	7	-0.15	KPPH	-0.15	KPPH
COND PUMP DISCH P	HRAPT0008	15	8	436.45	PSIG	448.92	PSIA
SLAND COND IN TEMP	HRATE0043	16	3	114.85	F	114.85	F
SLAND COND OUT TEMP	HRATE0044	16	4	115.58	F	115.58	F
CONDENSATE FLOW	COAXI114A	16	8	4666.62	KPPH	4666.62	KPPH
COND 10 DP CLR	FWCTE0187	16	9	114.45	F	114.45	F
HTR 1 CONDS IN T	FWCTE0188	16	10	119.17	F	119.17	F
HTR 1A CONDS OUT T	FWCTE0189	16	11	155.84	F	155.84	F
HTR 1B CONDS OUT T	FWCTE0190	16	12	158.05	F	158.05	F
HTR 1C CONDS OUT T	FWCTE0191	17	1	157.19	F	157.19	F
HTR 2 CONDS IN T	FWCTE0192	17	2	158.08	F	158.08	F
HTR 2 CONDS OUT T	FWCTE0193	17	3	196.10	F	196.10	F
HTR 3 CONDS IN T	FWCTE0194	17	4	195.92	F	195.92	F
HTR 3 CONDS OUT T	FWCTE0195	17	5	263.65	F	263.65	F
HTR 4 CONDS IN T	FWCTE0196	17	6	263.80	F	263.80	F
HTR 4 CONDS OUT T	FWCTE0197	17	7	295.64	F	295.64	F
HTR 5 (DA) CONDS IN	FWCTE0198	17	8	295.50	F	295.50	F
HTR 5 (DA) PRESS	FWCPT0056	17	9	106.70	PSIG	119.17	PSIA
DA HTR STOR TK T	FWCTE0199	17	10	341.13	F	341.13	F
DA LEVEL START	FWCLT0012	17	11	99.37	IN		
DA LEVEL-END	FWCLT0012	17	11	99.37	IN	0.00	D IN
DA PRESSURE	COAXI111A	18	2	108.10	PSIG	120.57	PSIA
DA OUTLET TEMP	FWATE0045	18	3	341.27	F	341.27	F
APH COIL OUT WTR T	COAXI127A	18	7	73.57	F	73.57	F
APH RETURN FLOW	COAXI115A	18	9	25.10	KPPH	25.10	KPPH
FSR RETURN WTR FLOW	CCDFT0069	18	11	148.43	GPM	74.18	KPPH
FSR RETURN WTR T	CCDTE0905	18	12	189.34	F	189.34	F
BFP 1A SUCTION T	FWATE0046	19	9	338.02	F	338.02	F
BFP 1B SUCTION T	FWATE0047	19	10	338.81	F	338.81	F
STBY BFP SUCTION T	FWATE0048	19	11	337.14	F	337.14	F
RWT DSUPHTR SPRAY T	SGJTE0060	19	12	100.67	F	100.67	F

Description	ID #	Group #	Item #	Data Log Value	Units	Final Value	Units
RHT DESUPHTR SPRAY F	COAXI108A	20	2	0.00	KPPH	0.00	KPPH
BFP 1A DISCH T	FWATE0049	20	3	343.39	F	343.39	F
BFP 1A DISCH PRESS	FWAPT0029	20	4	2904.35	PSIG	2916.32	PSIA
BFP 1B DISCH T	FWATE0050	20	7	344.93	F	344.93	F
BFP 1B DISCH PRESS	FWAPT0030	20	8	2898.60	PSIG	2911.07	PSIA
SUPHTR SPRAY WTR F	COAXI026A	21	4	292.06	F	292.06	F
SUPHTR SPRAY WTR F	COAXI022A	21	5	0.08	KPPH	0.08	KPPH
HP HTR A INLET T	FWATE0052	21	6	344.89	F	344.89	F
HP HTR A INLET P	FWAPT0250	21	7	2887.50	PSIG	2899.97	PSIA
HP HTR 1A INLET T	FWATE0053	21	10	395.02	F	395.02	F
HP HTR 2A INLET T	FWATE0054	21	11	395.34	F	395.34	F
HP HTR 3A INLET T	FWATE0055	21	12	478.79	F	478.79	F
HP HTR 3B INLET T	FWATE0056	22	1	479.30	F	479.30	F
HP HTR 3B OUTLET T	FWATE0059	22	2	551.90	F	551.90	F
HP HTR 3A OUTLET T	FWATE0154	22	3	551.78	F	551.78	F
ECONOMIZER INLET T	FWATE0990	22	4	551.34	F	551.34	F
ECONOMIZER INLET T	COAXI025A	22	5	550.64	F	550.64	F
ECONOMIZER INLET P	FWAPT0032	22	6	2738.40	PSIG	2750.87	PSIA
MEZANIN FLOW	COAXI021A	22	8	6052.77	KPPH	6052.77	KPPH
AMBIENT TEMP	INAKK0531	26	1	21.77	F	21.77	F
BAROMETRIC PRESS	INAPT0287	26	2	25.45	INHG	12.50	PSIA
LP COND 1D INLET T	HRCTE0377	42	5	78.96	F	78.96	F
LP COND 1B INLET T	HRCTE0378	42	6	78.99	F	78.99	F
LP COND 1C INLET T	HRCTE0379	42	7	79.22	F	79.22	F
LP COND 1L INLET T	HRCTE0380	42	8	79.20	F	79.20	F
LP COND 1A XOVER T	HRCTE1215	42	10	95.59	F	95.59	F
LP COND 1H XOVER T	HRCTE1216	42	11	96.31	F	96.31	F
LP COND 1D OUTLET T	HRCTE0393	42	12	103.51	F	103.51	F
LP COND 1B OUTLET T	HRCTE0394	43	1	103.78	F	103.78	F
LP COND 1A OUTLET T	HRCTE0395	43	2	103.38	F	103.38	F
LP COND 1H OUTLET T	HRCTE0396	43	3	102.58	F	102.58	F
LP COND 1G OUTLET T	HRCTE0389	43	4	102.37	F	102.37	F
LP COND 1F OUTLET T	HRCTE0390	43	5	103.09	F	103.09	F
LP COND 1E OUTLET T	HRCTE0391	43	6	102.75	F	102.75	F
LP COND 1E OUTLET T	HRCTE0392	43	7	104.05	F	104.05	F
LP-HP COND XOVER T	HRCTE0382	43	8	91.92	F	91.92	F
LP-HP COND XOVER T	HRCTE0384	43	9	92.48	F	92.48	F
LP-HP COND XOVER T	HRCTE0383	43	10	92.23	F	92.23	F
LP-HP COND XOVER T	HRCTE0386	43	11	90.84	F	90.84	F
LP-HP COND XOVER T	HRCTE0388	43	12	91.68	F	91.68	F
LP-HP COND XOVER T	HRCTE0387	44	1	92.83	F	92.83	F
LP-HP COND XOVER T	HRCTE0385	44	2	93.12	F	93.12	F
HP COND OUTLET T	HRCTE0401	44	3	105.84	F	105.84	F
HP COND OUTLET T	HRCTE0402	44	4	105.86	F	105.86	F
HP COND OUTLET T	HRCTE0403	44	5	106.56	F	106.56	F
HP COND OUTLET T	HRCTE0404	44	6	106.83	F	106.83	F

Description	ID #	Group #	Item #	Data Log Value	Units	Final Value	Units
HP COND OUTLET T	HRCTE0399	44	7	107.23	F	107.26	F
HP COND OUTLET T	HRCTE0398	44	8	106.68	F	106.68	F
HP COND OUTLET T	HRCTE0397	44	9	106.64	F	106.64	F
HP COND OUTLET T	HRCTE0400	44	10	107.45	F	107.45	F

[illegible] COND INLET T	79.09
[illegible] COND 1B POWER T	95.95
[illegible] COND 1B OUTLET T	103.19
[illegible] COND POWER T	92.16
[illegible] COND OUTLET T	106.64

INTERMOUNTAIN POWER SERVICE CORPORATION
PERFORMANCE EVALUATION TEST REPORT
UNIT NO. 1

APPENDIX D

Thermocouple Assignment Locations

R0158

INTERMOUNTAIN POWER SERVICE CORPORATION
PERFORMANCE EVALUATION TEST REPORT
UNIT NO. 1

THERMOCOUPLE LOCATION AND IMMERSION TABLE

STATION # 1 UNIT # 1

POS. #	TC #	IMMERSION (IN.)	LOCATION
1	1194	9	MS (A)
2	1251	10	MS (B)
3	1282	9	MS (C)
4	1350	9	MS (D)
5	1283	11	CRH (N)
6	1329	12	CRH (S)
7	1291	10	CRH (C)
8	1300	10	CRH (C)
9	1298	12	HRH (S)
10	1297	10	HRH (S)
11	1286	11	HRH (N)
12	1290	11	HRH (N)
13	1293	10	LPB (A)
14	1333	10	LPB (A)
15	1296	10	LPB (B)
16	1285	10	LPB (B)
17	1284	10	LPB (C)
18	1294	10	LPB (C)

STATION # 1

POS. #	TC #	IMMERSION (IN.)	LOCATION
1	1301	8	FW OUT HTR. 6A
2	1287	8	FW OUT HTR. 6B
3	1289	9	FW OUT HTR. 7A
4	1295	9	FW OUT HTR. 7B
5	1292	10	FW OUT HTR. 8A
6	1299	10	FW OUT HTR. 8B
7	1238	10	FW TO ECON.

INTERMOUNTAIN POWER SERVICE CORPORATION
PERFORMANCE EVALUATION TEST REPORT
UNIT NO. 1

APPENDIX E

GE Thermocouple Calibrations

Calibration Sheets E1-16

CUSTOMER: K. MARKS - LST
MANUFACTURER: GE
DESCRIPTION: TURBINE TEST THERMOCOUPLES
MODEL #: TYPE E
SERIAL #: VARIOUS
CUSTOMER I.D. #: NONE
RANGE: 200 TO 1050 DEGREES FAHRENHEIT
CAP #: NONE

JOB #: 66317 - 002
CALIBRATED BY: M. GALARNEAU
DATE: 8/12/86

KAYE REFERENCE JUNCTION SERIAL NO. 2822

THERMOCOUPLE MILLIVOLTS

TEMP F	IMM IN.	1171	1175	1178	1182	1185	1186	1187	1192	[redacted]	1208
200.0	8	5.866	5.872	5.870	5.874	5.867	5.873	5.872	5.874	5.873	5.879
	12	5.868	5.873	5.867	5.873	5.868	5.871	5.873	5.875	5.873	5.876
400.0	8	13.712	13.745	13.734	13.746	13.702	13.731	13.718	13.753	13.738	13.774
	12	13.739	13.736	13.734	13.732	13.735	13.730	13.743	13.737	13.730	13.750
600.0	8	22.242	22.240	22.230	22.253	22.228	22.231	22.252	22.266	22.234	22.298
	12	22.224	22.225	22.221	22.221	22.215	22.216	22.234	22.228	22.217	22.245
800.0	8	31.096	31.065	31.048	31.115	31.070	31.054	31.099	31.105	31.077	31.139
	12	31.050	31.037	31.049	31.054	31.030	31.042	31.060	31.042	31.037	31.074
900.0	8	35.561	35.556	35.491	35.568	35.567	35.545	35.584	35.610	35.517	35.639
	12	35.554	35.521	35.510	35.503	35.525	35.501	35.569	35.525	35.500	35.559
1000.0	8	40.037	40.016	39.973	40.035	40.037	40.016	40.050	40.070	40.003	40.089
	12	40.002	40.019	39.981	39.970	39.980	39.978	40.014	40.027	39.971	40.042
1050.0	8	42.284	42.295	42.252	42.285	42.263	42.258	42.279	42.305	42.246	42.347
	12	42.245	42.242	42.239	42.235	42.218	42.234	42.263	42.239	42.234	42.263

THE STANDARDS USED DURING THIS CALIBRATION ARE:

1 - PLATINUM RESISTANCE THERMOMETER STD - P51261
1 - TEMPERATURE RESISTANCE BRIDGE STD - P40786
1 - KEITHLEY DIGITAL MULTIMETER STD - 0559

THESE COMPANY STANDARDS ARE STANDARDIZED BY REFERENCE TO NATIONAL BUREAU OF STANDARDS CERTIFICATIONS: SIS-R-861-PAGE 1

A-14-D

GENERAL ELECTRIC

APPARATUS SERVICE BUSINESS DIVISION

LOCATION—DATE

Schenectady, NY March 15, 1984

COPIES:

DIAL COMM NUMBER

8*235-7604

SUBJECT

J.T. 82723 Chromel Constantan Thermocouple Calibration

Mrs. Ruth Tyndall
Building 41-Room 310

Reference Junction Kaye Instrument Serial No. 6665.

Temp. °F	Imm. In.	Thermocouple Millivolts 1228	[redacted]	1236	1241	1229	1230	1232	1239
176.5	8	5.00	5.01	5.00	5.00	5.00	5.00	5.00	5.01
	12	5.00	5.01	5.00	5.00	5.00	5.01	5.00	5.00
430.2	8	14.99	15.02	15.01	15.00	15.01	15.01	15.04	14.99
	12	14.99	15.02	14.98	14.99	15.01	14.98	15.02	14.98
662.9	8	24.96	25.01	25.01	25.00	25.01	25.01	25.08	24.95
	12	24.96	25.03	24.99	25.00	25.00	25.01	25.08	24.93
775.7	8	29.95	30.03	30.01	29.98	30.00	30.00	30.07	29.94
	12	29.95	30.03	30.01	29.98	29.99	29.99	30.07	29.93
887.5	8	34.95	35.04	34.99	34.97	34.99	34.99	35.06	34.96
	12	34.93	35.01	35.00	34.98	35.00	35.00	35.07	34.96
998.8	8	39.93	40.01	39.94	39.94	39.95	39.95	40.03	39.92
	12	39.92	40.01	39.99	39.97	39.99	39.99	40.07	39.96
1049.9	8	42.22	42.30	42.23	42.21	42.23	42.23	42.31	42.21
	12	42.21	42.30	42.29	42.26	42.28	42.28	42.36	42.24

The Standards used during this calibration are:

1- Platinum Resistance Thermometer STD-0995
1- Precision Potentiometer STD-0112
1- Mueller Temperature Bridge STD-0459

These Company Standards are standardized by reference to National Bureau of Standards certifications: SIS-R-841 - Page 1.

R.J. Pelletier
Repair and Calibration
UPSTATE NY INSTRUMENTATION SERVICES
Building 28 - Room 512

IP14_002482

CUSTOMER: K. MARKS - LST
MANUFACTURER: GE
DESCRIPTION: TURBINE TEST THERMOCOUPLES
MODEL #: TYPE E
SERIAL #: VARIOUS
CUSTOMER I.D. #: NONE
RANGE: 200 TO 1050 DEGREES FAHRENHEIT
CAP #: NONE

JOB #: 66317 - 001

CALIBRATED BY: M. GALARNEAU
DATE: 08/12/86

KAYE REFERENCE JUNCTION SERIAL NO. 2822

THERMOCOUPLE MILLIVOLTS

TEMP F	IMM IN.	1218	1220	1221	1235	1237	[redacted]	[redacted]	1351	1352	1353
200.0	8	5.881	5.875	5.879	5.876	5.878	5.880	5.872	5.873	5.870	5.869
	12	5.880	5.876	5.871	5.874	5.881	5.878	5.870	5.869	5.867	5.868
400.0	8	13.757	13.726	13.778	13.669	13.776	13.758	13.793	13.795	13.786	13.784
	12	13.748	13.740	13.750	13.719	13.755	13.735	13.781	13.771	13.774	13.776
600.0	8	22.272	22.236	22.297	22.143	22.291	22.255	22.327	22.330	22.316	22.313
	12	22.234	22.228	22.225	22.173	22.240	22.222	22.292	22.279	22.285	22.284
800.0	8	31.070	31.093	31.147	30.950	31.125	31.088	31.211	31.219	31.201	31.190
	12	31.047	31.041	31.044	30.981	31.049	31.041	31.155	31.130	31.138	31.140
900.0	8	35.555	35.557	35.638	35.391	35.592	35.582	35.728	35.711	35.690	35.688
	12	35.492	35.546	35.508	35.485	35.524	35.521	35.643	35.619	35.632	35.628
1000.0	8	40.006	40.049	40.130	39.851	40.060	40.025	40.224	40.215	40.217	40.218
	12	39.965	39.990	39.981	39.913	40.017	39.997	40.197	40.111	40.124	40.116
1050.0	8	42.228	42.301	42.358	42.071	42.281	42.263	42.462	42.460	42.460	42.461
	12	42.228	42.230	42.208	42.145	42.235	42.223	42.377	42.358	42.360	42.356

THE STANDARDS USED DURING THIS CALIBRATION ARE:

1 - PLATINUM RESISTANCE THERMOMETER STD - P51261
1 - TEMPERATURE RESISTANCE BRIDGE STD - P40786
1 - KEITHLEY DIGITAL MULTIMETER STD - 0559

THESE COMPANY STANDARDS ARE STANDARDIZED BY REFERENCE TO NATIONAL BUREAU OF STANDARDS CERTIFICATIONS: SIS-R-861-PAGE 1

GENERAL ELECTRIC

INTEGRATED COMMUNICATION SERVICES DEPARTMENT
GENERAL ELECTRIC COMPANY • BLDG. 28, ROOM 500 • SCHENECTADY, NEW YORK 12345 • (518) 385-5108

December 17, 1986
J.T. 66350-001 Chromel Constantan Thermocouple Calibration
General Electric Company
Building 55 - Room 209
Attn: Paul Bahrman
Reference Junction Kaye Instrument Serial No. 6665.

THERMOCOUPLE MILLIVOLTS

TEMP °F	IMM. In.	1030	1133	1188	1137	1241	[redacted]	1143	1136
176.5	8	5.00	5.00	5.00	5.00	5.00	5.01	5.01	5.00
	12	5.00	4.99	5.00	5.00	5.01	5.01	5.01	5.00
430.2	8	15.01	14.99	15.00	14.99	15.00	15.01	15.01	14.99
	12	15.01	14.93	15.01	15.00	15.03	15.02	15.04	15.01
662.9	8	25.03	24.97	25.00	24.96	24.98	24.99	25.00	24.96
	12	25.02	24.84	25.00	24.97	25.02	25.00	25.04	24.96
775.7	8	30.04	29.94	30.03	29.98	29.95	29.98	30.02	29.94
	12	30.04	29.99	30.00	29.93	29.99	29.97	30.02	29.96
887.5	8	35.03	34.94	35.04	34.96	34.94	34.98	35.00	34.95
	12	35.04	39.97 * ~~34.97~~	35.00	34.89	34.98	34.95	35.02	34.94
998.8	8	40.06	39.91	40.03	39.93	39.91	39.94	39.97	39.92
	12	40.08	39.97	40.03	39.93	39.98	39.95	40.05	39.95

The Standards used during this calibration are:

1 - Platinum Resistance Thermometer STD - 0576
1 - Mueller Temperature Bridge STD - 0951
1 - Keithley Digital Multimeter STD - 0559

These Company Standards are standardized by reference to National Bureau of Standards certifications: SIS-R-861-Page 18

Robert C. Culver

* Typo. should be 34.97 per Bob Culver 1/19/87

Repair and Calibration
UPSTATE NY INSTRUMENTATION SERVICES
Building 28 - Room 512
66350-001-8

GE Computer Service

NE RIVER ROAD, BUILDING 28 - 500.o SCHENECTADY, NEW YORK 12345 o (518) 385-9228

October 27, 1987
J.T. 66614-001 Chromel Constantan Thermocouple Calibration
General Electric Company
Building 55 - Room 212
Attn: Paul Bahrman
Reference Juction Kaye Instrument Serial No. 6665
THERMOCOUPLE MILLIVOLTS

TEMP F	IMM. In.	1330	[redacted]	1163	1225	1204	1272	1262	1180
176.5	8	5.02	5.02	5.00	5.00	5.00	5.02	5.02	5.00
	12	5.00	5.01	5.00	5.00	5.00	5.01	5.01	5.00
430.2	8	15.05	15.04	14.99	14.99	15.00	15.05	15.05	14.98
	12	15.01	15.03	15.00	15.00	15.01	15.04	15.04	14.98
662.9	8	25.18	25.17	25.08	25.06	25.07	25.17	25.17	25.05
	12	25.14	25.15	25.11	25.11	25.12	25.17	25.18	25.08
775.7	8	30.13	30.14	30.00	29.95	29.97	30.10	30.10	29.96
	12	30.09	30.05	29.99	29.99	30.00	30.07	30.08	29.98
887.5	8	35.15	35.15	35.03	34.95	34.98	35.12	35.11	34.96
	12	35.07	35.05	35.01	34.98	35.00	35.08	35.09	34.97
998.8	8	40.18	40.16	40.01	39.93	39.94	40.13	40.12	39.94
	12	40.10	40.06	40.02	39.98	39.99	40.10	40.11	39.98

The Standards used during this calibration are:

1 - Platinum Resistance Thermometer STD - 0499
1 - Keithley Digital Multimeter STD - 0559
1 - Mueller Temperature Bridge STD - 0459

These Company Standards are standardized by reference to National Bureau of Standards certifications: SIS-R-871-Page 39

Robert A. Culver
Robert A. Culver
Quality Assurance
Computer Service
66614-001-39

IP14_002485

CUSTOMER:	GE-I&SS	JOB #:	66683-001
CONTACT:	PAUL BAHRMANN	CALIBRATED BY:	P. MORLEY
LOCATION:	BLDG. 55-239	DATE:	7/21/88
MANUFACTURER:	GENERAL ELECTRIC		
DESCRIPTION:	TEST THERMOCOUPLES		
MODEL #:	TYPE E	AMBIENT TEMP:	72 DEG. F
SERIAL #:	SEE BELOW	RELATIVE HUMIDITY:	40 %
CUSTOMER REF #:	95X084002001297X1005		
RANGE:	176.5 TO 998.8 DEGREES FAHRENHEIT		

THERMOCOUPLE MILLIVOLTS

REFERENCED @ 32 F WITH KAYE REFERENCE SYSTEM NO. 6665

TEMP F	IMM IN.	[redacted]	[redacted]	[redacted]	1084	1066	1082	1041
176.5	8	5.03	5.02	5.02	5.02	5.02	5.02	4.99
	12	5.02	5.01	5.02	5.02	5.02	5.02	5.00
430.2	8	15.06	15.05	15.05	15.05	15.04	15.05	15.00
	12	15.06	15.05	15.05	15.04	15.06	15.06	14.97
662.9	8	25.11	25.10	25.09	25.09	25.08	25.08	24.99
	12	25.10	25.09	25.09	25.08	25.08	25.08	24.98
775.7	8	30.11	30.11	30.10	30.10	30.10	30.10	30.00
	12	30.12	30.11	30.10	30.10	30.11	30.10	30.00
887.5	8	35.15	35.14	35.12	35.09	35.09	35.09	35.02
	12	35.13	35.12	35.12	35.08	35.10	35.08	34.99
998.8	8	40.15	40.14	40.12	40.08	40.10	40.08	40.04
	12	40.15	40.14	40.14	40.07	40.10	40.07	40.03

THE STANDARDS USED DURING THIS CALIBRATION ARE:

1 - PLATINUM RESISTANCE THERMOMETER	STD -	0576
1 - MUELLER TEMPERATURE BRIDGE	STD -	0459
1 - KEITHLEY DIGITAL MULTIMETER	STD -	0559

THESE COMPANY STANDARDS ARE STANDARDIZED BY REFERENCE TO NATIONAL BUREAU OF STANDARDS CERTIFICATIONS: SIS-R-881-PAGE 78

GE Computer Service

ONE RIVER ROAD, BUILDING 28 - 500 o SCHENECTADY, NEW YORK 12345 o (518) 385-9228

NOVEMBER 9, 1987
J.T. 66615-001 Chromel Constantan Thermocouple Calibration
General Electric Company
Building 55 - Room 212
Attn: Paul Bahrman
Reference Juction Kaye Instrument Serial No. 6665
THERMOCOUPLE MILLIVOLTS

TEMP F	IMM. In.	1165	1037	1339	1229	1035	1299	1110	[redacted]
176.5	8	4.99	5.00	5.02	5.00	4.99	5.01	4.99	5.01
	12	4.99	4.99	5.00	5.00	4.99	5.01	4.99	5.01
430.2	8	14.98	15.00	15.07	15.00	14.99	15.08	15.00	15.06
	12	14.99	15.00	15.05	15.02	15.00	15.08	15.01	15.06
662.9	8	24.95	24.99	25.08	24.98	24.97	25.09	24.97	25.07
	12	24.99	25.02	25.06	25.03	25.02	25.11	25.02	25.10
775.7	8	29.93	30.02	30.13	29.96	30.00	30.13	29.97	30.11
	12	29.97	30.01	30.04	30.00	30.00	30.10	30.00	30.11
887.5	8	34.94	35.05	35.16	34.98	35.03	35.16	34.98	35.11
	12	34.96	35.01	35.05	34.99	35.01	35.11	34.99	35.11
998.8	8	39.94	40.05	40.19	39.95	40.04	40.18	39.96	40.12
	12	39.97	40.05	40.04	39.99	40.04	40.13	39.98	40.11

The Standards used during this calibration are:

1 - Platinum Resistance Thermometer STD - 0499
1 - Keithley Digital Multimeter STD - 0559
1 - Mueller Temperature Bridge STD - 0459

These Company Standards are standardized by reference to National Bureau of Standards certifications: SIS-R-871-Page 45

Robert A. Culver
Ouality Assurance
Computer Service
66615-001-45

CUSTOMER:	GE-I&SS	JOB #:	66683-001
CONTACT:	PAUL BAHRMANN	CALIBRATED BY:	P. MORLEY
LOCATION:	BLDG. 55-239	DATE:	7/14/88
MANUFACTURER:	GENERAL ELECTRIC		
DESCRIPTION:	TEST THERMOCOUPLES		
MODEL #:	TYPE E	AMBIENT TEMP:	72 DEG. F
SERIAL #:	SEE BELOW	RELATIVE HUMIDITY:	40 %
CUSTOMER REF #:	95X084002001297X1005		
RANGE:	176.5 TO 998.8 DEGREES FAHRENHEIT		

THERMOCOUPLE MILLIVOLTS

REFERENCED @ 32 F WITH KAYE REFERENCE SYSTEM NO. 6665

TEMP F	IMM IN.	[redacted]	1069	1081	[redacted]	[redacted]	1196	1072	
176.5	8	5.01	5.01	5.01	5.01	5.01	4.99	5.01	
	12	5.00	5.01	5.01	5.00	5.00	4.98	5.01	
430.2	8	15.04	15.06	15.05	15.07	15.07	14.99	15.04	
	12	15.06	15.06	15.04	15.06	15.06	14.99	15.04	
662.9	8	25.03	25.07	25.03	25.09	25.09	24.97	25.03	
	12	25.07	25.08	25.04	25.08	25.10	24.97	25.04	
775.7	8	30.04	30.08	30.04	30.10	30.13	29.97	30.03	
	12	30.08	30.08	30.03	30.10	30.12	29.96	30.05	
887.5	8	35.04	35.05	35.02	35.09	35.13	34.95	35.02	
	12	35.04	35.09	35.03	35.13	35.14	34.97	35.06	
998.8	8	40.02	40.05	40.01	40.11	40.15	39.95	40.01	
	12	40.04	40.08	40.02	40.14	40.16	40.00	40.06	

THE STANDARDS USED DURING THIS CALIBRATION ARE:

1 - PLATINUM RESISTANCE THERMOMETER	STD -	0576
1 - MUELLER TEMPERATURE BRIDGE	STD -	0459
1 - KEITHLEY DIGITAL MULTIMETER	STD -	0559

THESE COMPANY STANDARDS ARE STANDARDIZED BY REFERENCE TO NATIONAL BUREAU OF STANDARDS CERTIFICATIONS: SIS-R-881-PAGE 74

GE Computer Service

ONE RIVER ROAD, BUILDING 28 - 500 o SCHENECTADY, NEW YORK 12345 o (518) 385-9228

July 30, 1987

J.T. 66614-001 Chromel Constantan Thermocouple Calibration
General Electric Company
Building 55 - Room 209
Attn: Paul Bahrman
Reference Juction Kaye Instrument Serial No. 6665

THERMOCOUPLE MILLIVOLTS

TEMP °F	IMM. In.	645	1087	1101	[redacted]	1099	1111	1107	1029
176.5	8	5.02	5.03	5.02	5.03	5.03	5.02	5.01	5.00
	12	5.02	5.02	5.00	5.03	5.01	5.01	5.00	5.00
430.2	8	15.03	15.05	14.99	15.06	15.05	15.01	14.97	14.98
	12	15.02	15.02	14.97	15.04	15.02	15.00	14.97	14.98
662.9	8	25.04	25.10	24.98	25.11	25.08	25.03	24.96	25.00
	12	25.03	25.06	25.00	25.08	25.06	25.03	24.96	24.99
775.7	8	30.06	30.09	29.97	30.15	30.07	30.02	29.95	30.00
	12	30.05	30.07	30.00	30.13	30.10	30.03	29.97	30.01
887.5	8	35.07	35.10	34.96	35.15	35.07	34.99	34.93	35.00
	12	35.07	35.14	35.02	35.15	35.13	34.99	34.99	35.03
998.8	8	40.06	40.12	39.95	40.18	40.10	40.00	39.94	40.02
	12	40.05	40.13	40.01	40.16	40.12	40.03	40.00	40.03

The Standards used during this calibration are:

1 - Platinum Resistance Thermometer STD - 0576
1 - Mueller Temperature Bridge STD - 0959
1 - Keithley Digital Multimeter STD - 0559

These Company Standards are standardized by reference to National Bureau of Standards certifications: SIS-R-871-Page 31

Robert A. Colver.

Repair and Calibration
UPSTATE NY INSTRUMENTATION SERVICES
Building 28 - Room 512

66614-001-31

GE Computer Service

ONE RIVER ROAD, BUILDING 28 - 500 o SCHENECTADY, NEW YORK 12345 o (518) 385-9228

NOVEMBER 11, 1987
J.T. 66615-001 Chromel Constantan Thermocouple Calibration
General Electric Company
Building 55 - Room 212
Attn: Paul Bahrman
Reference Juction Kaye Instrument Serial No. 6665
THERMOCOUPLE MILLIVOLTS

TEMP F	IMM. In.	1174	1325	1331	1158	1176	1048	[redacted]	1097
176.5	8	4.99	5.01	5.01	4.98	4.99	4.98	5.01	5.00
	12	4.99	5.00	5.00	4.99	4.98	4.99	5.01	5.01
430.2	8	14.97	15.05	15.06	14.97	14.98	14.97	15.06	15.04
	12	15.00	15.05	15.05	14.99	15.00	14.99	15.07	15.06
662.9	8	24.95	25.08	25.08	24.95	24.97	24.97	25.08	25.04
	12	24.98	25.05	25.05	24.97	24.89	25.00	25.08	25.07
775.7	8	29.92	30.12	30.13	29.95	29.94	29.99	30.11	30.05
	12	29.96	30.07	30.08	29.96	29.92	29.99	30.08	30.06
87.5	8	34.93	35.13	35.15	34.94	34.96	35.01	35.12	35.06
	12	34.98	35.11	35.11	34.98	34.92	35.02	35.11	35.09
998.8	8	39.99	40.16	40.18	39.91	39.93	40.00	40.14	40.04
	12	39.97	40.12	40.12	39.97	39.98	40.03	40.12	40.09

The Standards used during this calibration are:

1 - Platinum Resistance Thermometer STD - 0499
1 - Keithley Digital Multimeter STD - 0559
1 - Mueller Temperature Bridge STD - 0459

These Company Standards are standardized by reference to National Bureau of Standards certifications: SIS-R-871-Page 46

Robert A. Culver
Quality Assurance
Computer Service
66615-001-46

GENERAL ELECTRIC

GE COMPUTER SERVICE

JANUARY 29, 1988
J.T. 66652-59 Chromel Constantan Thermocouple Calibration
General Electric Company
Building 55 - Room 212
Attn: Paul Bahrman
Reference Junction Kaye Instrument Serial No. 6665
THERMOCOUPLE MILLIVOLTS
TYPE E

TEMP F	IMM. IN.	[redacted]	1013	1254	1124	1164	1265	[redacted]	1324
176.5	8	5.01	4.98	5.01	4.99	4.98	5.01	50.1	5.01
	12	5.01	4.99	5.02	5.00	5.00	5.02	5.01	5.01
430.2	8	15.06	14.99	15.06	14.98	14.97	15.07	15.05	15.05
	12	15.07	14.99	15.07	15.02	15.00	15.06	15.05	15.04
662.9	8	25.09	24.99	25.09	24.98	24.95	25.10	25.08	25.08
	12	25.10	25.00	25.09	25.02	24.99	25.07	25.05	25.02
775.7	8	30.11	30.03	30.09	30.02	29.95	30.13	30.09	30.10
	12	30.12	30.00	30.10	30.03	29.98	30.11	30.11	30.10
887.5	8	35.15	35.06	35.13	35.02	34.96	35.16	35.12	35.13
	12	35.13	35.01	35.13	35.02	34.98	35.13	35.12	35.11
998.8	8	40.15	40.06	40.14	40.02	39.93	40.17	40.13	40.12
	12	40.14	40.02	40.15	40.02	39.98	40.15	40.13	40.12

The Standards used during this calibration are:

1 - Platinum Resistance Thermometer STD - 0576
1 - Keithley Digital Multimeter STD - 0559
1 - Mueller Temperature Bridge STD - 0459

These Company Standards are standardized by reference to National Bureau of Standards certifications: SIS-R-881 - Page 59.

Robert A. Culver

Robert A. Culver
Repair and Calibration
GE COMPUTER SERVICE
Bldg. 28 - Room 512

smz

GE Computer Service

NE RIVER ROAD, BUILDING 28 - 500 o SCHENECTADY, NEW YORK 12345 o (518) 385-9228

October 23, 1987
J.T. 66614-001 Chromel Constantan Thermocouple Calibration
General Electric Company
Building 55 - Room 212
Attn: Paul Bahrman
Reference Juction Kaye Instrument Serial No. 6665
THERMOCOUPLE MILLIVOLTS

TEMP F	IMM. In.	1206	1196	1214	[redacted]	1166	[redacted]	1179	1093
176.5	8	5.00	4.99	4.99	5.01	5.00	5.02	4.98	5.01
	12	5.00	4.99	5.00	5.02	5.00	5.02	5.00	5.01
430.2	8	14.99	14.98	14.99	15.05	15.00	15.06	14.95	15.04
	12	15.01	14.94	15.00	15.05	15.00	15.05	14.98	15.04
662.9	8	24.98	24.98	24.98	25.08	24.96	25.09	24.93	25.04
	12	25.01	24.87	25.01	25.08	25.00	25.08	24.97	25.06
775.7	8	29.97	29.96	29.96	30.13	29.99	30.14	29.91	30.08
	12	29.98	29.92	29.98	30.07	29.98	30.09	29.95	30.06
887.5	8	34.98	34.96	34.92	35.13	34.94	35.15	34.91	35.06
	12	34.98	34.89	34.94	35.09	34.98	35.11	34.95	35.06
998.8	8	39.98	39.99	39.94	40.15	39.96	40.18	39.90	40.07
	12	40.00	39.89	39.87	40.11	39.99	40.14	39.96	40.07

The Standards used during this calibration are:

1 - Platinum Resistance Thermometer STD - 0499
1 - Keithley Digital Multimeter STD - 0559
1 - Mueller Temperature Bridge STD - 0459

These Company Standards are standardized by reference to National Bureau of Standards certifications: SIS-R-871-Page 38

Robert A. Culver
Robert A. Culver
Quality Assurance
Computer Service
66614-001-38

GE Computer Service

ONE RIVER ROAD, BUILDING 28 - 500 o SCHENECTADY, NEW YORK 12345 o (518) 385-9228

October 30, 1987
J.T. 66615-001 Chromel Constantan Thermocouple Calibration
General Electric Company
Building 55 - Room 212
Attn: Paul Bahrman
Reference Juction Kaye Instrument Serial No. 6665
THERMOCOUPLE MILLIVOLTS

TEMP F	IMM. In.	1055	1195	1203	1228	1116	1288	[redacted]	[redacted]
176.5	8	4.99	4.99	4.99	4.99	4.99	5.01	5.01	5.01
	12	4.98	4.97	4.98	4.98	4.98	5.00	5.00	5.00
430.2	8	14.98	14.98	14.99	14.99	14.97	15.04	15.04	15.05
	12	14.99	14.96	14.96	14.98	14.97	15.04	15.05	15.04
662.9	8	24.97	24.95	24.97	24.97	24.94	25.06	25.06	25.07
	12	25.00	24.94	24.94	24.96	24.95	25.08	25.09	25.07
775.7	8	30.00	29.96	29.95	29.99	29.95	30.11	30.13	30.12
	12	29.99	29.96	29.98	29.94	29.91	30.06	30.09	30.07
87.5	8	35.02	34.98	34.97	34.99	34.96	35.08	35.10	35.13
	12	35.01	34.98	34.98	34.94	34.92	35.09	35.12	35.08
998.8	8	40.04	39.97	39.96	40.01	39.96	40.12	40.14	40.17
	12	40.02	39.98	39.97	39.94	39.90	40.11	40.14	40.12

The Standards used during this calibration are:

1 - Platinum Resistance Thermometer STD - 0499
1 - Keithley Digital Multimeter STD - 0559
1 - Mueller Temperature Bridge STD - 0459

These Company Standards are standardized by reference to National Bureau of Standards certifications: SIS-R-871-Page 41

Robert A. Culver
Robert A. Culver
Quality Assurance
Computer Service
66615-001-41

GENERAL ELECTRIC

INTEGRATED COMMUNICATION SERVICES DEPARTMENT
GENERAL ELECTRIC COMPANY • BLDG. 28, ROOM 500 • SCHENECTADY, NEW YORK 12345 • (518) 385-5108

December 15, 1986
J.T. 66350-001 Chromel Constantan Thermocouple Calibration
General Electric Company
Building 55 - Room 209
Attn: Paul Bahrman
Reference Junction Kaye Instrument Serial No. 6665.

THERMOCOUPLE MILLIVOLTS

TEMP °F	IMM. In.	[redacted]	[redacted]	1311	[redacted]	1289	1314	1312	1252
176.5	8	5.03	5.03	5.03	5.03	5.03	5.03	5.03	5.03
	12	5.03	5.03	5.02	5.03	5.03	5.02	5.02	5.03
430.2	8	15.08	15.08	15.06	15.07	15.08	15.06	15.06	15.07
	12	15.08	15.07	15.02	15.07	15.07	15.02	15.02	15.08
662.9	8	25.13	25.11	25.08	25.10	25.11	25.09	25.08	25.10
	12	25.12	25.11	25.01	25.10	25.11	25.03	25.02	25.12
775.7	8	30.15	30.12	30.10	30.11	30.12	30.10	30.09	30.12
	12	30.12	30.10	30.09	30.09	30.11	30.09	30.08	30.12
887.5	8	35.13	35.10	35.10	35.09	35.12	35.10	35.10	35.13
	12	35.14	35.13	35.11	35.12	35.14	35.13	35.11	35.15
998.8	8	40.15	40.12	40.10	40.11	40.12	40.10	40.09	40.13
	12	40.16	40.16	40.14	40.14	40.17	40.15	40.14	40.19
1049.9	8	42.43	42.43	42.40	42.44	42.44	42.41	42.41	42.45
	12	42.47	42.46	42.43	42.44	42.46	42.44	42.42	42.48

The Standards used during this calibration are:

1 - Platinum Resistance Thermometer STD - 0576
1 - Mueller Temperature Bridge STD - 0951
1 - Keithley Digital Multimeter STD - 0559

These Company Standards are standardized by reference to National Bureau of Standards certifications: SIS-R-861-Page 16

Repair and Calibration
UPSTATE NY INSTRUMENTATION SERVICES
Building 28 - Room 512
66350-001-6

GE Computer Service

ONE RIVER ROAD, BUILDING 28 - 500 o SCHENECTADY, NEW YORK 12345 o (518) 385-9228

NOVEMBER 9, 1987
J.T. 66615-001 Chromel Constantan Thermocouple Calibration
General Electric Company
Building 55 - Room 212
Attn: Paul Bahrman
Reference Juction Kaye Instrument Serial No. 6665
THERMOCOUPLE MILLIVOLTS

TEMP F	IMM. In.	1165	1037	1339	1229	1035	[redacted]	1110	1283
176.5	8	4.99	5.00	5.02	5.00	4.99	5.01	4.99	5.01
	12	4.99	4.99	5.00	5.00	4.99	5.01	4.99	5.01
430.2	8	14.98	15.00	15.07	15.00	14.99	15.08	15.00	15.06
	12	14.99	15.00	15.05	15.02	15.00	15.08	15.01	15.06
662.9	8	24.95	24.99	25.08	24.98	24.97	25.09	24.97	25.07
	12	24.99	25.02	25.06	25.03	25.02	25.11	25.02	25.10
775.7	8	29.93	30.02	30.13	29.96	30.00	30.13	29.97	30.11
	12	29.97	30.01	30.04	30.00	30.00	30.10	30.00	30.11
887.5	8	34.94	35.05	35.16	34.98	35.03	35.16	34.98	35.11
	12	34.96	35.01	35.05	34.99	35.01	35.11	34.99	35.11
998.8	8	39.94	40.05	40.19	39.95	40.04	40.18	39.96	40.12
	12	39.97	40.05	40.04	39.99	40.04	40.13	39.98	40.11

The Standards used during this calibration are:

1 - Platinum Resistance Thermometer STD - 0499
1 - Keithley Digital Multimeter STD - 0559
1 - Mueller Temperature Bridge STD - 0459

These Company Standards are standardized by reference to National Bureau of Standards certifications: SIS-R-871-Page 45

Robert A. Culver
Ouality Assurance
Computer Service
66615-001-45

GE Computer Service

ONE RIVER ROAD, BUILDING 28 - 500 o SCHENECTADY, NEW YORK 12345 o (518) 385-9228

November 2, 1987
J.T. 66615-001 Chromel Constantan Thermocouple Calibration
General Electric Company
Building 55 - Room 212
Attn: Paul Bahrman
Reference Juction Kaye Instrument Serial No. 6665
THERMOCOUPLE MILLIVOLTS

TEMP F	IMM. In.	1140	1114	1070	1219	1038	[redacted]	1113	1056
176.5	8	5.00	FAILED	5.02	5.00	5.00	5.02	5.00	4.99
	12	4.99	TEST	5.00	4.99	4.99	5.01	4.99	4.99
430.2	8	14.99		15.05	15.00	15.00	15.07	15.01	14.99
	12	14.99		15.02	15.00	14.98	15.05	15.00	14.98
662.9	8	24.96		25.03	24.96	24.95	25.08	24.98	24.97
	12	25.02		25.05	25.03	24.98	25.12	25.04	25.01
775.7	8	29.97		30.00	29.98	29.98	30.15	30.00	30.01
	12	29.98		30.06	30.00	29.97	30.10	30.01	29.99
87.5	8	34.96		35.04	34.98	34.60	34.15	35.01	35.03
	12	34.99		35.06	35.01	34.98	35.12	35.01	35.00
998.8	8	39.95		40.03	39.97	39.94	40.19	39.99	40.02
	12	39.98		40.07	40.00	39.97	40.13	40.00	40.01

The Standards used during this calibration are:

1 - Platinum Resistance Thermometer STD - 0499
1 - Keithley Digital Multimeter STD - 0559
1 - Mueller Temperature Bridge STD - 0459

These Company Standards are standardized by reference to National Bureau of Standards certifications: SIS-R-871-Page 42

Robert A. Culver
Robert A. Culver
Quality Assurance
Computer Service
66615-001-42

INTERMOUNTAIN POWER SERVICE CORPORATION
PERFORMANCE EVALUATION TEST REPORT
UNIT NO. 1

APPENDIX F

Water-Leg Corrections

Measurement	Correction (psia)
Main Steam	- 3.97
Valve Chest	- 2.42
First Stage	- 6.26
Cold Reheat	- 5.34
Hot Reheat	- 6.79
9th Stage	- 1.12
11th Stage	- 4.66