→ TEST #4

PRETEST MEETING Thur 6/25

QUESTION: When to cut crew loose
After all calcs made?
Or at end of day

Target Test Start @ 10:00

CE-APH Based on Straight-line averages
→ PAH Gas Inlet * problem still

SAH ok
PAH High Side on air in-leakage
50% worse than previous day

Changing out all chemicals on Orsats

Bill Arron to get copies made up
Raw Data

Arron: scope for tomorrow
Boiler TESTING if not makeup test

IP14_001409

6/24

Air Inlet PAH 85°

SAH 105°

seem to be reversed

BTU data - checkout

CALCULATION SHEET

For Intermountain Power Project for B&W — Sheet ___ Of ___

Summary of Air Preheater Acceptance Test Data — Contract No. ___

Reference Drawing ___

Straight Line Averages (No gas weighting)

		6-23-87	6-24-87
Econ Outlet			
CO_2	East	15.80	15.76
	C East	15.74	15.13
	C West	14.90	15.04
	West	14.58	15.40
O_2	East	3.14	3.33
	C East	3.11	3.88
	C West	3.93	4.01
	West	4.59	3.83
Baghouse In			
CO_2	East	14.25	14.06
	Center	14.74	14.72
	West	13.38	14.14
O_2	East	4.76	4.98
	Center	4.30	4.32
	West	6.03	4.82
PAH In			
CO_2	East	15.32	15.69
	West	14.64	15.93
O_2	East	3.55	3.26
	West	4.23	3.03
PAH Out			
CO_2	East	12.42	12.48
	West	12.07	11.32
O_2	East	6.43	6.92
	West	7.17	8.35

THE AIR PREHEATER COMPANY, INC.

Made By ___

Checked By ___ Date ___

REV. ___ SHEET NO. ___

Form # 173 6/69

IP14_001411

CALCULATION SHEET

For Intermountain Power Project leakage rates for measured test data

Sheet ____ Of ____

Contract No. ____

Reference Drawing ____

	6-23-87	6-24-87
Econ Out CO_2	15.26	15.33
O_2	3.69	3.76
Baghouse In CO_2	14.12	14.31
O_2	5.43	4.71
Total Lkg CO_2 (%)	7.27	6.42
O_2	7.55	5.25
PAH Lkg		
East CO_2	21.01	23.15
O_2	17.79	23.39
West CO_2	19.16	36.65
O_2	19.13	37.85

THE AIR PREHEATER COMPANY, INC.

Made By ____

Checked By ____ Date ____

REV. ____

SHEET NO. ____

Form # 173 6/69

IP14_001412

CALCULATION SHEET

For Intermountain Power Project for BtW — Sheet ___ Of ___

Summary of Air Preheater Acceptance Test Data — Contract No. ___

Reference Drawing ___

		6-23-87	6-24-87
Econ Outlet			
CO_2	East	15.80	15.76
	C East	15.74	15.13
	C West	14.90	15.04
	West	14.58	15.40
O_2	East	3.14	3.33
	C East	3.11	3.88
	C West	3.93	4.01
	West	4.59	3.83
Baghouse In			
CO_2	East	14.25	14.06
	Center	14.74	14.72
	West	13.38	14.14
O_2	East	4.76	4.98
	Center	4.30	4.32
	West	6.03	4.82
PAH In			
CO_2	East	15.32	15.69
	West	14.64	15.93
O_2	East	3.55	3.26
	West	4.23	3.03
PAH Out			
CO_2	East	12.42	12.48
	West	12.07	11.32
O_2	East	6.43	6.92
	West	7.17	8.35

THE AIR PREHEATER COMPANY, INC.

Made By ___

Checked By ___ Date ___

REV. ___ SHEET NO. ___

Form # 173 6/69

IP14_001413

CALCULATION SHEET

For Intermountain Power Project Leakage rates for measured test data

Sheet ____ Of ____

Contract No. ____

Reference Drawing ____

	6-23-87	6-24-87
Econ Out CO_2	15.26	15.33
O_2	3.69	3.76
Baghouse In CO_2	14.12	14.31
O_2	5.03	4.71
Total Lkg CO_2 (%)	7.27	6.42
O_2	7.55	5.25
PAH Lkg		
East CO_2	21.01	23.15
O_2	17.79	23.39
West CO_2	19.16	36.65
O_2	19.13	37.85

THE AIR PREHEATER COMPANY, INC.

Made By ____

Checked By ____ Date ____

REV. ____

SHEET NO. ____

Form # 173 6/69

IP14_001414

CALCULATION SHEET

For Intermountain Power Project for B&W — Sheet ____ Of ____

Summary of Air Preheater Acceptance Test Data — Contract No. ____ Reference Drawing ____

		6-23-87	6-24-87
Econ Outlet			
CO_2	East	15.80	15.76
	C East	15.74	15.13
	C West	14.90	15.04
	West	14.58	15.40
O_2	East	3.14	3.33
	C East	3.11	3.88
	C West	3.93	4.01
	West	4.59	3.83
Baghouse In			
CO_2	East	14.25	14.06
	Center	14.74	14.72
	West	13.38	14.14
O_2	East	4.76	4.98
	Center	4.30	4.32
	West	6.03	4.82
PAH In			
CO_2	East	15.32	15.69
	West	14.64	15.93
O_2	East	3.55	3.26
	West	4.23	3.03
PAH Out			
CO_2	East	12.42	12.48
	West	12.07	11.32
O_2	East	6.43	6.92
	West	7.17	8.35

THE AIR PREHEATER COMPANY, INC.

Made By ____

Checked By ____ Date ____

REV. ____ SHEET NO. ____

Form # 173 6/69

IP14_001415

CALCULATION SHEET

For Intermountain Power Project leakage rates for measured test data

Sheet ____ Of ____

Contract No. ____

Reference Drawing ____

	6-23-87	6-24-87
Econ Out CO_2	15.26	15.33
O_2	3.69	3.76
Baghouse In CO_2	14.12	14.31
O_2	5.03	4.71
Total Lkg CO_2 (%)	7.27	6.42
O_2	7.55	5.25
PAH Lkg		
East CO_2	21.01	23.15
O_2	17.79	23.39
West CO_2	19.16	36.65
O_2	19.13	37.85

THE AIR PREHEATER COMPANY, INC.

Made By ____

Checked By ____ Date ____

REV. ____

SHEET NO. ____

Form # 173 6/69

IP14_001416

~~Estimation~~
Straight-line averages by CE

BTW: #'s by 8:00-9:00
by 12:00

Hold people over? for Friday RAH test

Up to BTW to demostrate repeatability of calculations between tests

Johnes M. - your call!
His estimation

confident #'s are good, + don't have to repeat test cut loose
otherwise, hold them over
who pays?

I can't say
I have yet to see any raw data from yesterday

Demobilize?

Meeting to Discuss
Chuck Finnegan meeting 6/25 Thur
14:00 w John M, Aaron

- Hold people over → Everybody number crunching
call me morning

To: OPERATIONS
From: AARON NISSEN
Date: 6/25 Thur

Unit #1-Boiler/RAH TESTING for FRIDAY 6/26

At this point, it is still uncertain as to whether we will be RAH Perf Testing (Retesting) or Boiler Perf testing. Copies of what we intend on doing for both are enclosed.

Retest on RAH will not be known until all numbers are calculated & compared. I should know by the beginning of the shift which we'll be doing and will contact you then.

Thank you for your cooperation.

Sincerely
Aaron Nissen

IP14_001418

UNIT #1

RAH PERF TESTING

6/25 Thur
Nissen

RETEST (from Tuesday 6/23)
2nd good test day
(New Operations Crew #3 Brian Gusser 110)

TEST #4

TEST START/FINISH:
10:00 - 15:30 5½ hrs

SAH Air Out team - last out

PA Duct Pressure:
PROBLEMS:
PA Duct Press - lowering too low @29-30"
running out of PA flow; no PA
damping for controllability
causing sluggish fuel response, fuel swings
throttle press swings, MW swings,
small total air flow swings

Future tests will have to be 31-32"

PA Fans - high speed?

IP14_001419

PA Fans - low speed 2A/2B
FD Fans - low speed 1A/1B
RAH - SAH Air Leakage Control System
manual search cycle
@ 9:30

SB: 2K-Seq 1 / 3K-Seq 1 / Finish 6:48
4AH-Seq Finish 5:20

SAH 1B gas inlet SGB-CDR-56/131 63% open
to balance outlet temps (w/I 5F°)

BD isolated

Aux Steam balanced Unit #1 setpoint higher than #2

PulvIF - O/S WB @ 75%
Burner Front Temps (center slightly high)

Main Stm Sprays - in auto to control
main stm temps.

Bias Dampers - manual set + left

TEST CONDITIONS:

@1405

Load	839 TAC 845 Mkgross
Throttle	2411
Chest	2378
1st	1989
RH	565
Aux	42.0
Mstm	1000
Sprays sec	55
HRH	999/999
Sprays	0
BP	1.56/1.62/1.55
Drum	0/-1/2/+8 1/2
O_2 E	2.2/2.2
PA	30.0
Bias	RH 50/PSH 95
Total Air	77 1/2
~~[illegible]~~	
~~[illegible]~~ Disch	3.6"

PROBLEMS:

Fuel Swings - upset from 10:15 - 11:00
Raised PA Duct Press
Dropped Load (5MW setpoint)
to get out of swing

PA Duct press - reset 0.8" higher than before (beginning of test)

PA Duct press - setpoint ~~30.5"~~ → 30.0
(yesterday 29.9-30.0)

PA Air Flow - position feedback

1D 80%	1E 82%
1H 87%	1A 82%
1C 78%	1F 91%
1G 90%	1B 88%

Test Start ~10:00

6/25 Thur

Brian Gusser Crew 3

Scott Robinson

BOILER CONDITIONS REQUESTED:

Sootblowing: IR's- stay off water walls (unless absolutely required)
2K's- blow all prior to 5:00 am each day
3K's- blow all prior to 7:00 am each day
4K's- blow all prior to 8:00 am each day
-Begin complete sootblowing sequence (excluding water-walls) at approximately 3:00 am each morning

Bottom Ash: Have bottom ash pulled prior to 8:00 am each day
Econ Ash Hopper BA-7 - close
1030 Baghouse Fly Ash: Have first and second row hoppers pulled prior to 10:00 am each morning
Isolate hoppers: Baghouse Hoppers 1A1 / 1B10 / 1C9

Blowdown: Isolate prior to the test (9:00 am)

Auxiliary Steam: Isolate Unit #1 prior to the test

Pulverizers: 7 mills in service (would prefer to have first or second row mill out of service
1F o/s

Load: 850 MW gross

Throttle pressure: ~~2400~~ ~2430 psig

Feedwater Flow: ~6100 kpph

Main Steam Temp: 1005 F
Main Steam Sprays: as required (less than 150 kpph)

Reheat Temp: 1005 F
Reheat Sprays: ~~0 kpph~~ as required (set to 0 at start)

Excess O2: ~~2.0~~ 2.5 Ave % (Note: B&W will have their economizer test grid setup with monitoring capabilities available in the control room as reference to establish design gas flow)

Primary Air Duct Pressure: ~~37.0~~ 30.0 "wc (may require to place in manual)
(Highest Pulv PA Flow 95%)

Secondary Air Duct Pressure: auto (should be okay)

PAH Gas Inlet Control Dampers: may have to make minor adjustments to damper position to match gas outlet temps (PAH & SAH) based upon B&W's test grid

SAH 1D - Gas Inlet Damper 1SGA-CDR-56/131 68%

Bias Dampers - set + place in manual (to hold thru test)

If temps come up during test, OK to place sprays in manual to control (need to straight line spray flow)

IP14_001423

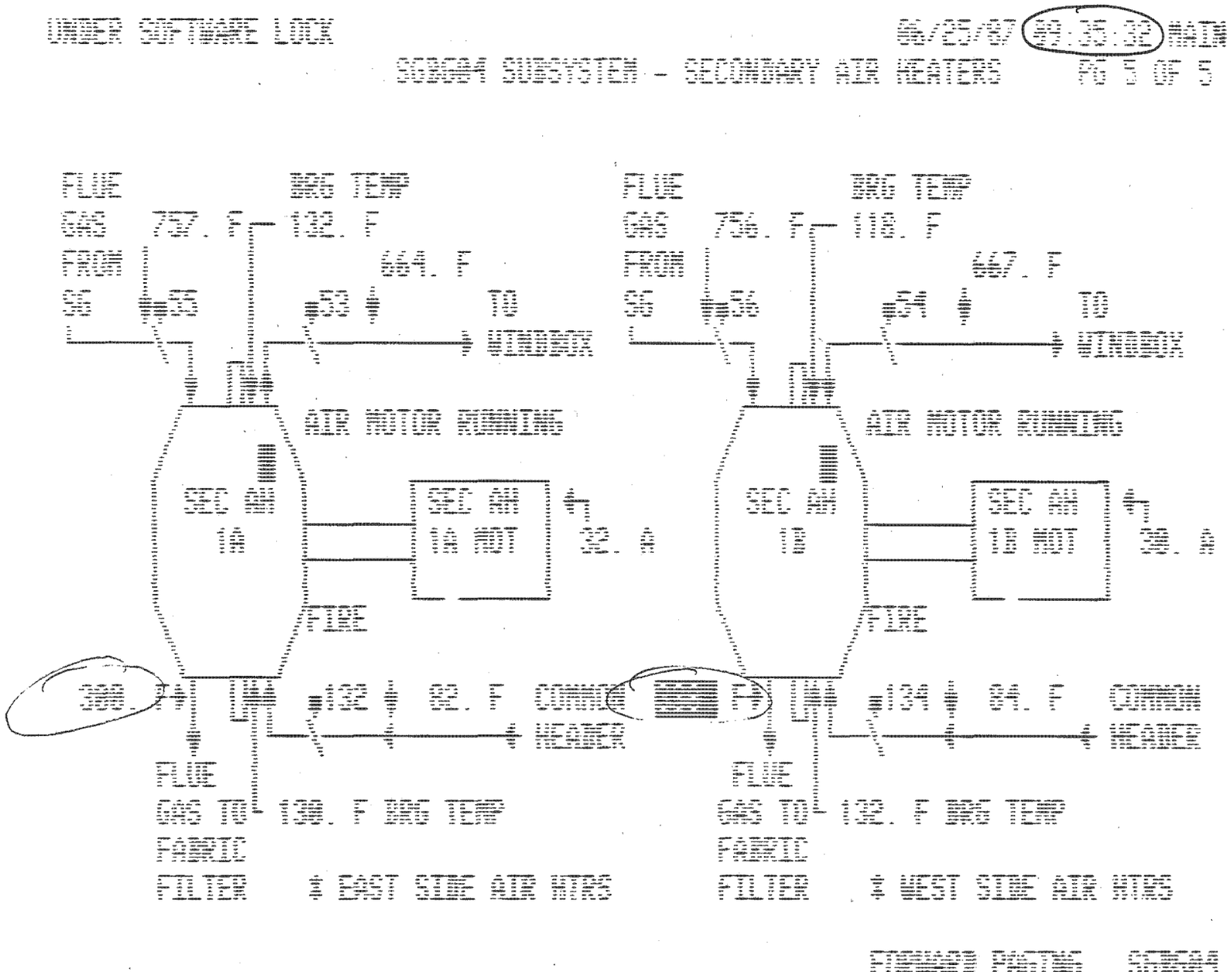

gas temp dw 387°
prior to gas damper biasing

IP14_001424

BLR AUX TEST-3 06/25/87 10:30:12

TOTAL OIL	TOT COAL	COAL TEST	GROSS MW
00231967.	00262585.	00262570.	00178000.
GAL.	TONS	TONS	MWH
TOTAL IGNTR OIL	TOTAL COAL	TOTAL COAL TEST	UNIT1 GROSS MW

1A1 AUX P	1A2 AUX P	1B1 AUX P	1B2 AUX P
00005530.	00006630.	00005661.	00007653.
MWH	MWH	MWH	MWH
1A1 AUX POWER	1A2 AUX POWER	1B1 AUX POWER	1B2 AUX POWER

L/L SCN L/L < > L/L L/L GTD

IP14_001425

BLR AUX TEST-3 06/25/87 11:00:42

TOTAL OIL	TOT COAL	COAL USED	GROSS MW
00231967.	00262753.	00262738.	00178430.
GAL.	TONS	TONS	MWH
TOTAL IGNTR OIL	TOTAL COAL	TOTAL COAL TEST	UNIT1 GROSS MW
UB1 AUX B	UB2 AUX B	UB1 AUX B	UB2 AUX B
00005534.	00006635.	00005667.	00007661.
MWH	MWH	MWH	MWH
1A1 AUX POWER	1A2 AUX POWER	1B1 AUX POWER	1B2 AUX POWER

L/L SCN L/L < > L/L L/L GTD

IP14_001426

BLR AUX TEST-3 06/25/87 11:30:13

TOTAL OIL	TOT COAL	COAL TEST	GROSS MW
00231967.	00262915.	00262899.	00178844.
GAL.	TONS	TONS	MWH
TOTAL IGNTR OIL	TOTAL COAL	TOTAL COAL TEST	UNIT1 GROSS MW

1A1 AUX P	1A2 AUX P	1B1 AUX P	1B2 AUX P
00005538.	00006641.	00005671.	00007667.
MWH	MWH	MWH	MWH
1A1 AUX POWER	1A2 AUX POWER	1B1 AUX POWER	1B2 AUX POWER

L/L SCN L/L < > L/L L/L GTD

IP14_001427

BLR AUX TEST-3 06/25/87 12:00:38

TOTAL OIL	TOT COAL	COAL TEST	GROSS MW
00231987.	00263881	00263865.	00179278.
GAL.	TONS	TONS	MWH
TOTAL IGNTR OIL	TOTAL COAL	TOTAL COAL TEST	UNIT1 GROSS MW
1A1 AUX POWER	1A2 AUX POWER	1B1 AUX POWER	1B2 AUX POWER
00005543.	00006646.	00005675.	00007673.
MWH	MWH	MWH	MWH
1A1 AUX POWER	1A2 AUX POWER	1B1 AUX POWER	1B2 AUX POWER

L/L SCN L/L < > L/L L/L GTD

IP14_001428

BLR AUX TEST-3 06/25/87 12:30:22

TOTAL OIL	TOT COAL	COAL TEST	GROSS MW
00231967.	00263243.	00263227.	00179686.
GAL.	TONS	TONS	MWH
TOTAL IGNTR OIL	TOTAL COAL	TOTAL COAL TEST	UNIT1 GROSS MW
1A1 AUX P	1A2 AUX P	1B1 AUX P	1B2 AUX P
00005547.	00006652.	00005679.	00007679.
MWH	MWH	MWH	MWH
1A1 AUX POWER	1A2 AUX POWER	1B1 AUX POWER	1B2 AUX POWER

L/L SCN L/L < > L/L L/L GTD

IP14_001429

BLR AUX TEST-3 06/25/87 13:00:04

TOTAL OIL	TOT COAL	COAL TEST	GROSS MW
00231967.	00263495.	00263390.	00180104.
GAL.	TONS	TONS	MWH
TOTAL IGNTR OIL	TOTAL COAL	TOTAL COAL TEST	UNIT1 GROSS MW

1A1 AUX P	1A2 AUX P	1B1 AUX P	1B2 AUX P
00005551.	00006657.	00005685.	00007685.
MWH	MWH	MWH	MWH
1A1 AUX POWER	1A2 AUX POWER	1B1 AUX POWER	1B2 AUX POWER

L/L SCN L/L < > L/L L/L GTD

IP14_001430

BLR AUX TEST-3 06/25/87 13:36:44

TOTAL OIL	TOT COAL	COAL TEST	GROSS MW
00231967.	00263606.	00263590.	00190616.
GAL.	TONS	TONS	MWH
TOTAL IGNTR OIL	TOTAL COAL	TOTAL COAL TEST	UNIT1 GROSS MW

1A1 AUX P	1A2 AUX P	1B1 AUX P	1B2 AUX P
00005557.	00006664.	00005689.	00007693.
MWH	MWH	MWH	MWH
1A1 AUX POWER	1A2 AUX POWER	1B1 AUX POWER	1B2 AUX POWER

L/L SCN L/L < > L/L L/L GTD

IP14_001431

BLR AUX TEST-3 06/25/87 14:00:42

TOTAL OIL	TOT COAL	COAL TEST	GROSS MW
00231967.	00263737.	00263722.	00180952.
GAL.	TONS	TONS	MWH
TOTAL IGNTR OIL	TOTAL COAL	TOTAL COAL TEST	UNIT1 GROSS MW

1A1 AUX POWER	1A2 AUX POWER	1B1 AUX POWER	1B2 AUX POWER
00005560.	00006669.	00005693.	00007699.
MWH	MWH	MWH	MWH

L/L SCN L/L < > L/L L/L GTD

BLR AUX TEST-3 06/25/87 14:30:39

TOTAL OIL	PRI COAL	COAL TEST	GROSS MW
00231967.	00263901.	00263885.	00181372.
GAL.	TONS	TONS	MWH
TOTAL IGNTR OIL	TOTAL COAL	TOTAL COAL TEST	UNIT1 GROSS MW

1A1 AUX B	1A2 AUX B	1B1 AUX B	1B2 AUX B
00005565.	00006674.	00005699.	00007705.
MWH	MWH	MWH	MWH
1A1 AUX POWER	1A2 AUX POWER	1B1 AUX POWER	1B2 AUX POWER

L/L SCN L/L < > L/L L/L GTD

IP14_001433

BLR AUX TEST-3 06/25/87 15:00:05

TOTAL OIL	TOT COAL	COAL TEST	GROSS MW
00231967.	00264062.	00264046.	00181784.
GAL.	TONS	TONS	MWH
TOTAL IGNTR OIL	TOTAL COAL	TOTAL COAL TEST	UNIT1 GROSS MW

1A1 AUX P	1A2 AUX P	1B1 AUX P	1B2 AUX P
00005570.	00006680.	00005703.	00007711.
MWH	MWH	MWH	MWH
1A1 AUX POWER	1A2 AUX POWER	1B1 AUX POWER	1B2 AUX POWER

L/L SCN L/L < > L/L L/L GTD

IP14_001434

BLR AUX TEST-3 06/25/87 15:32:03

TOTAL OIL	TOT COAL	COAL TEST	GROSS MW
00231967.	00264237.	00264222.	00182232.
GAL.	TONS	TONS	MWH
TOTAL IGNTR OIL	TOTAL COAL	TOTAL COAL TEST	UNIT1 GROSS MW

1A1 AUX P	1A2 AUX P	1B1 AUX P	1B2 AUX P
00005575.	00006686.	00005797.	00007717.
MWH	MWH	MWH	MWH
1A1 AUX POWER	1A2 AUX POWER	1B1 AUX POWER	1B2 AUX POWER

L/L SCN L/L < > L/L L/L GTD

IP14_001435

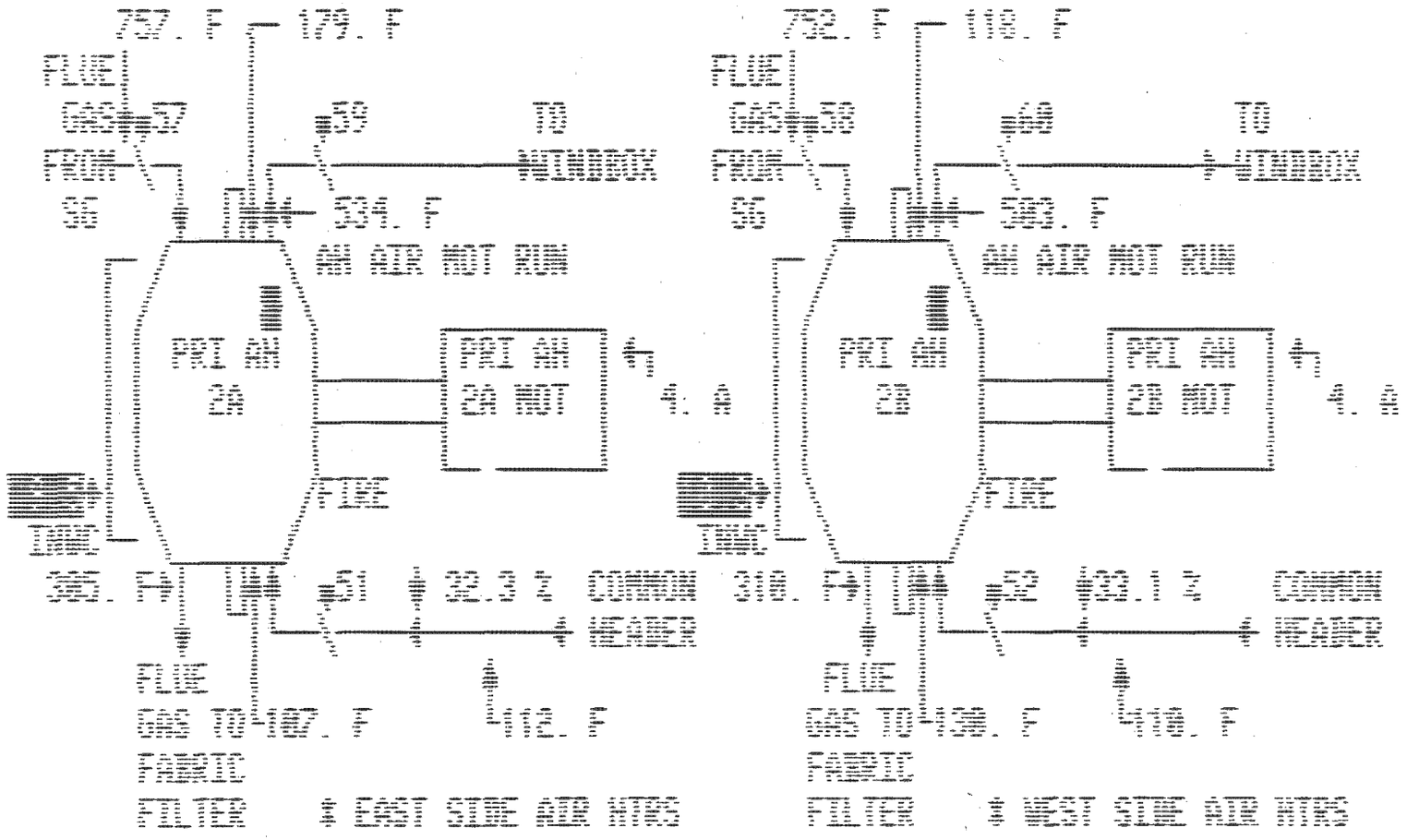

FORWARD PAGING SGBG06

IP14_001436

UNDER SOFTWARE LOCK 06/25/87 12:12:26 MAIN

SGBG07 SUBSYSTEM - EAST SIDE AIR HEATERS

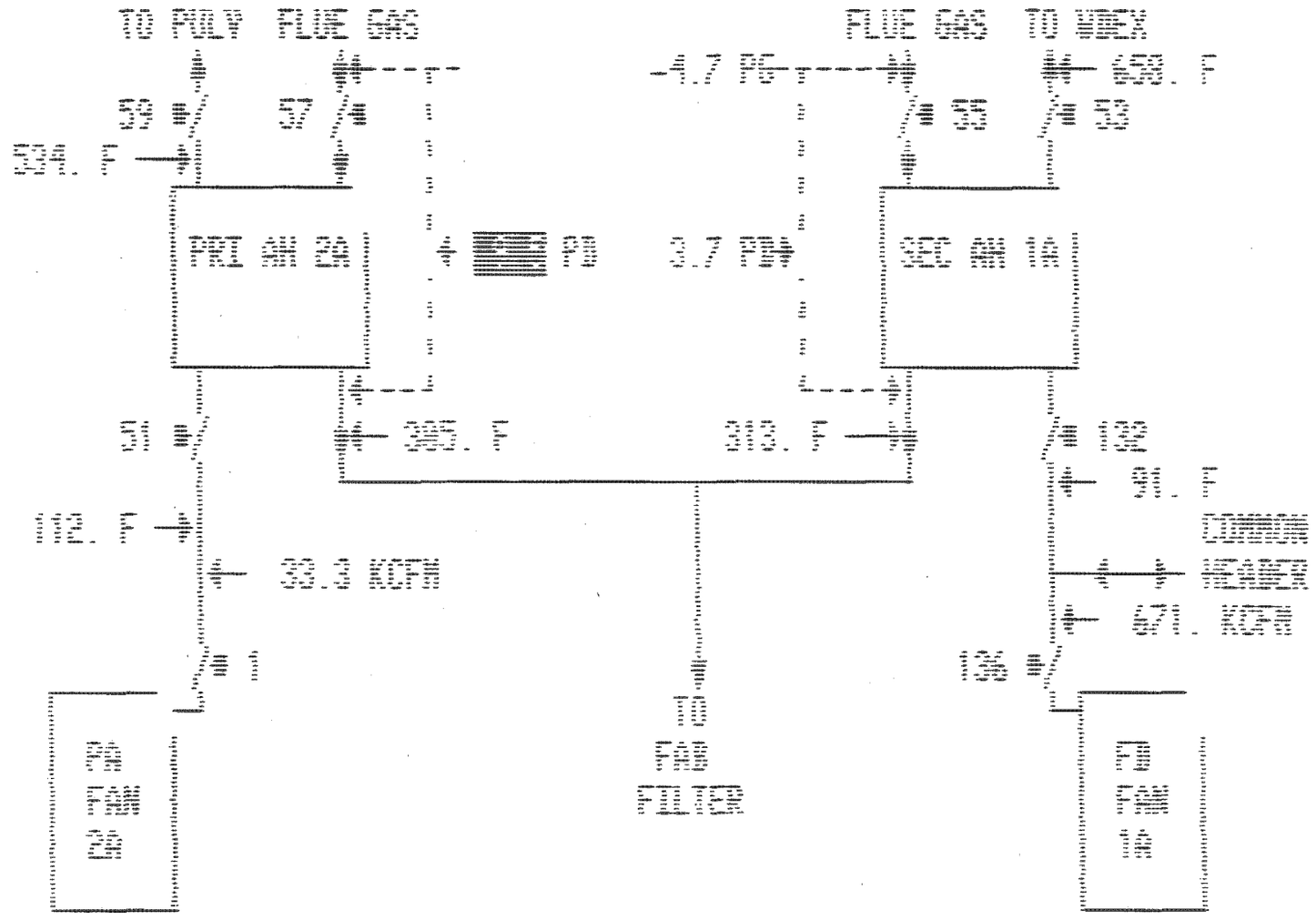

FORWARD PAGING SGBG07

IP14_001437

UNDER SOFTWARE LOCK 06/25/87 12:12:08 MAIN

SGBG08 SUBSYSTEM - WEST SIDE AIR HEATERS

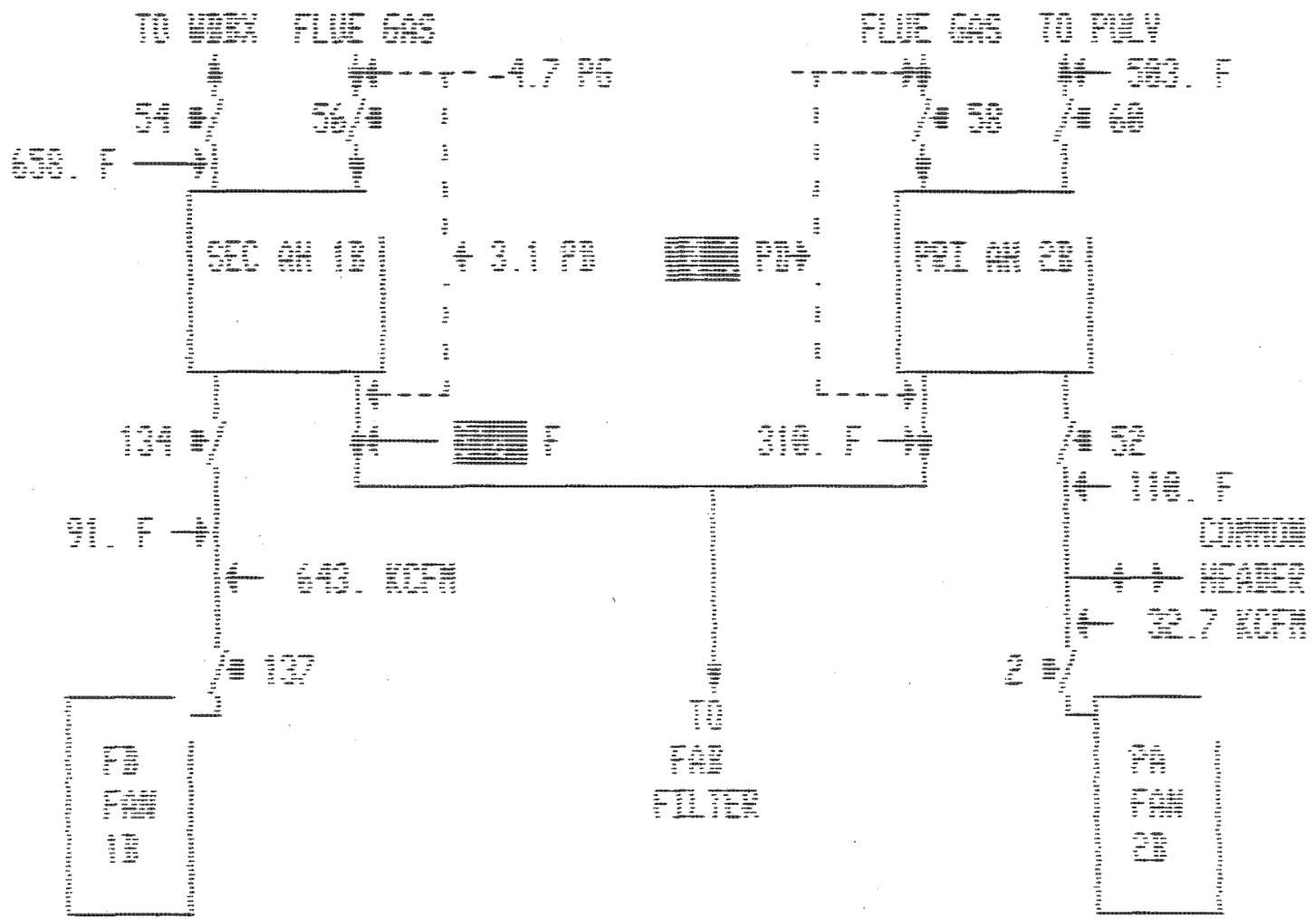

FORWARD PAGING SGBG08

IP14_001438

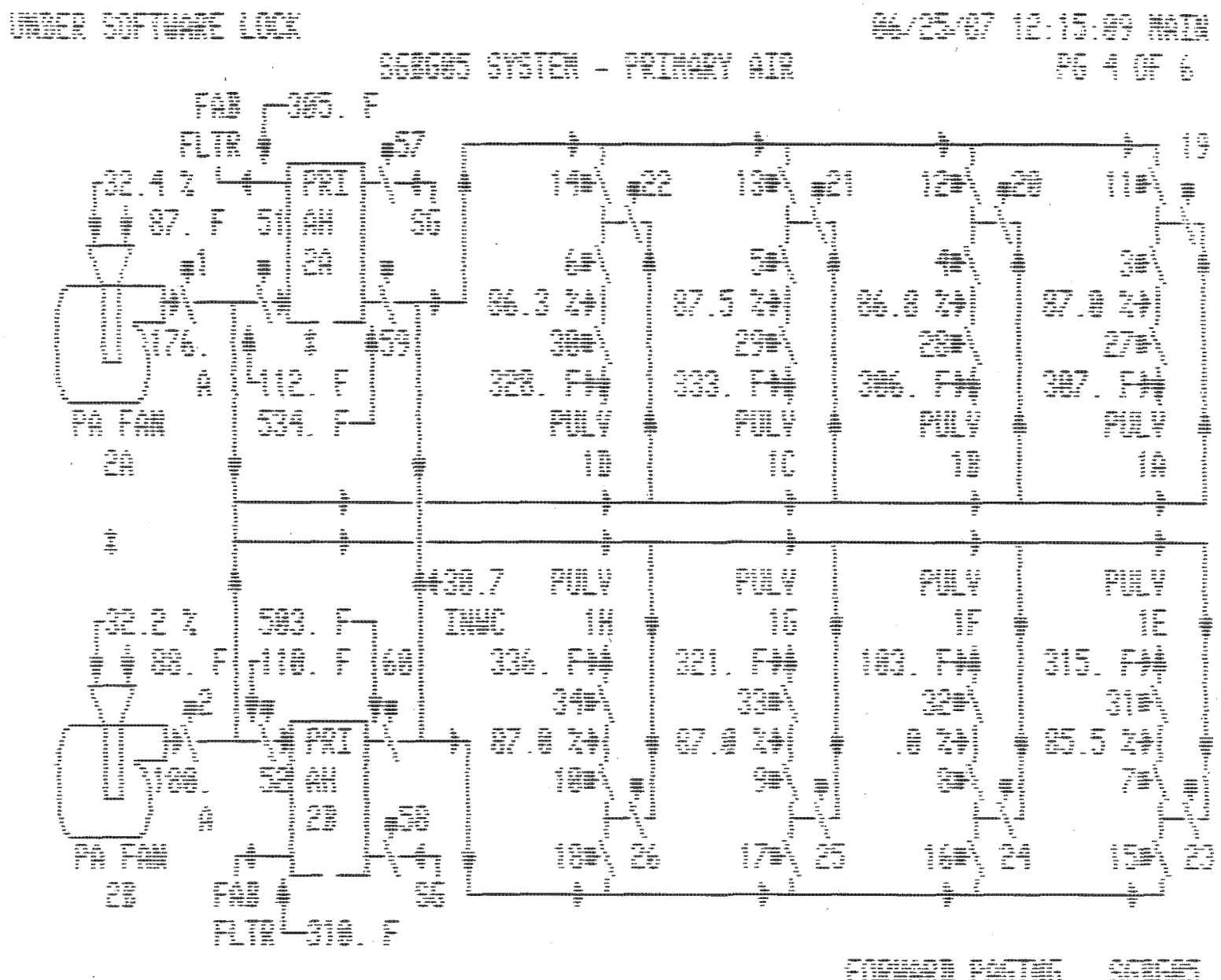
UNDER SOFTWARE LOCK
06/25/87 12:15:09 MAIN
SGBG05 SYSTEM - PRIMARY AIR
PG 4 OF 6
FAB
FLTR
305. F
32.4 %
87. F
PRI
AH
2A
176.
A
112. F
534. F
PA FAN
2A
86.3 %
328. F
PULV
1B
87.5 %
333. F
PULV
1C
86.8 %
306. F
PULV
1D
87.0 %
307. F
PULV
1A
30.7
INWC
PULV
1H
336. F
87.0 %
PULV
1G
321. F
87.0 %
PULV
1F
103. F
.0 %
PULV
1E
315. F
85.5 %
32.2 %
80. F
503. F
110. F
100.
A
PRI
AH
2B
PA FAN
2B
FAB
FLTR
310. F
SG
FORWARD PAGING SGBG05

IP14_001439

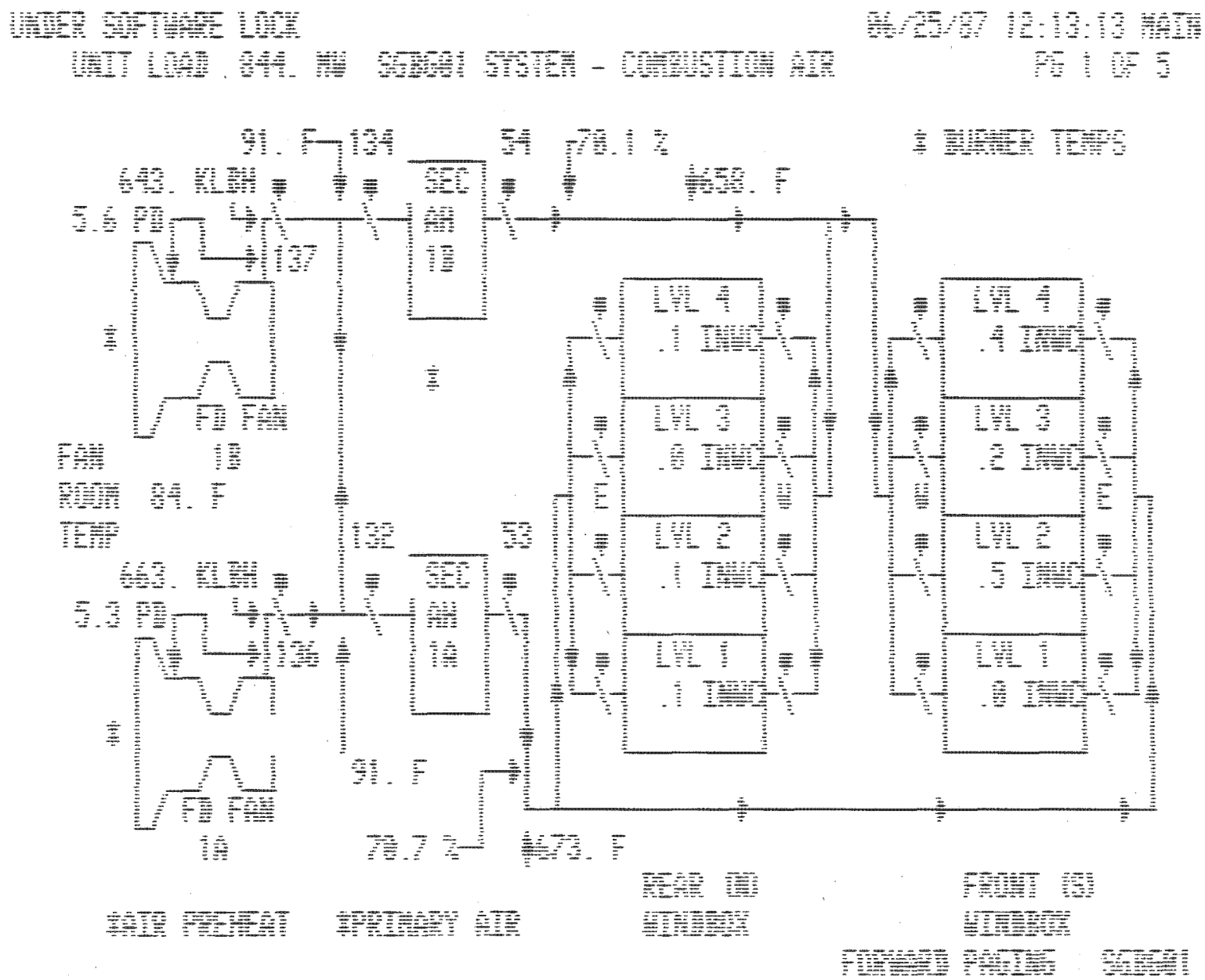
UNDER SOFTWARE LOCK
UNIT LOAD 844. MW SGBG01 SYSTEM - COMBUSTION AIR
06/25/87 12:13:13 MAIN
PG 1 OF 5
$ BURNER TEMPS
91. F
134
54
70.1 %
643. KLBH
5.6 PD
137
SEC AH 1B
$658. F
LVL 4 .1 INWC
LVL 3 .0 INWC
LVL 2 .1 INWC
LVL 1 .1 INWC
LVL 4 .4 INWC
LVL 3 .2 INWC
LVL 2 .5 INWC
LVL 1 .0 INWC
FD FAN 1B
FAN ROOM TEMP 84. F
132
53
663. KLBH
5.3 PD
136
SEC AH 1A
91. F
70.7 %
$673. F
FD FAN 1A
REAR (N) WINDBOX
FRONT (S) WINDBOX
$AIR PREHEAT
$PRIMARY AIR
FORWARD PAGING SGBG01

IP14_001440

UNDER SOFTWARE LOCK

06/25/87 12:17:55 MAIN

SGAG03 SUBSYSTEM- FURNACE

PG 2 OF 3

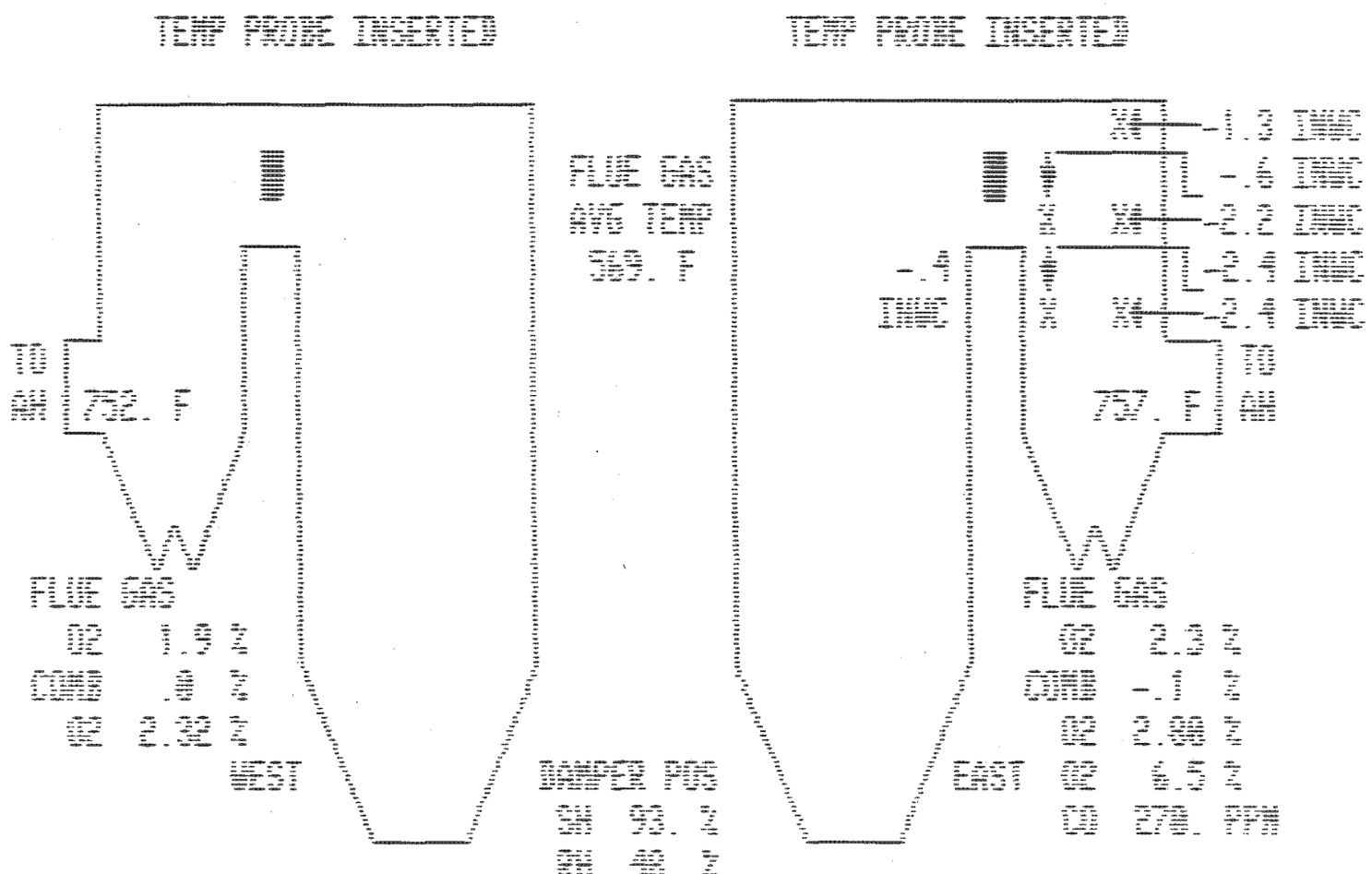

FORWARD PAGING SGAG03

IP14_001441

UNDER SOFTWARE LOCK 06/25/87 12:15:37 MAIN

SGBG09 SUBSYSTEM -PRIMARY AIR FANS

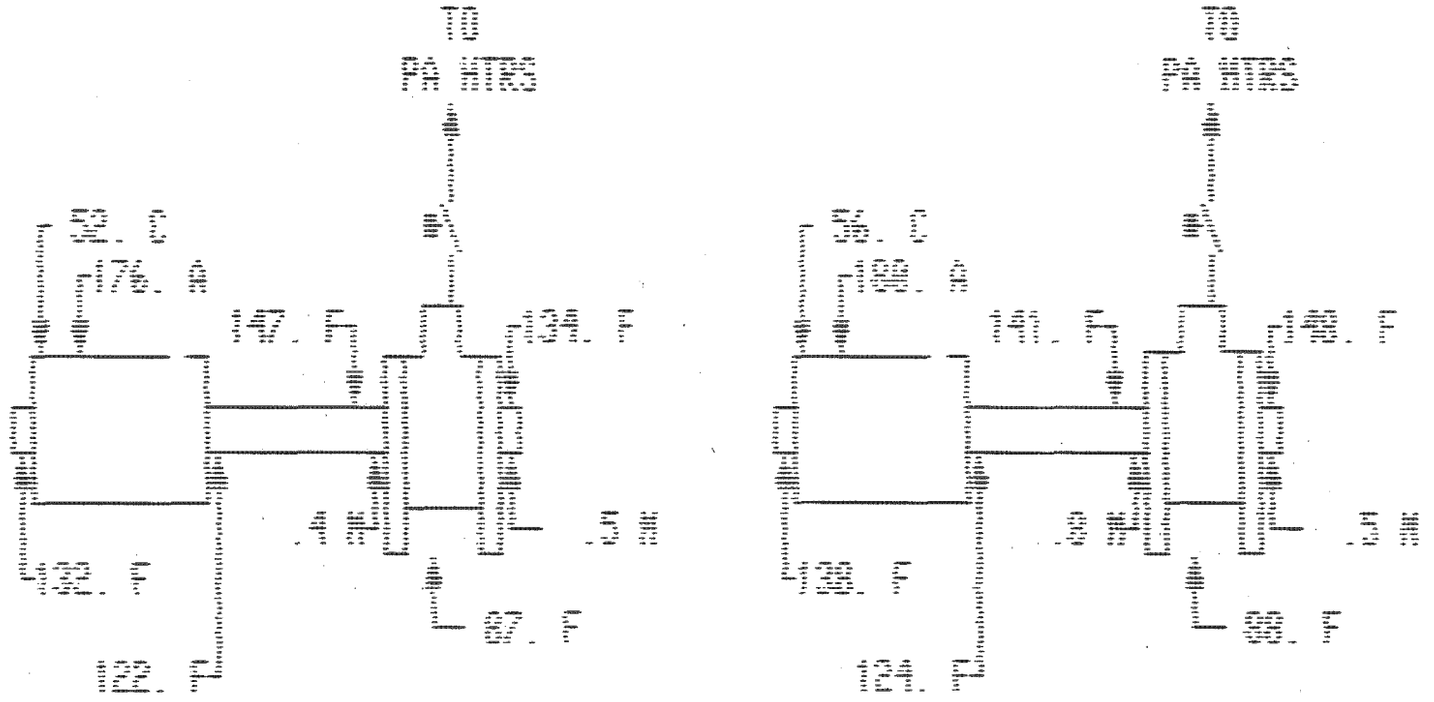

PA FAN 2A PA FAN 2B

FORWARD PAGING SGBG09

IP14_001442

UNDER SOFTWARE LOCK 06/25/87 12:13:55 MAIN

SGB602 SUBSYSTEM - FORCED DRAFT FAN 1A PG 2 OF 5

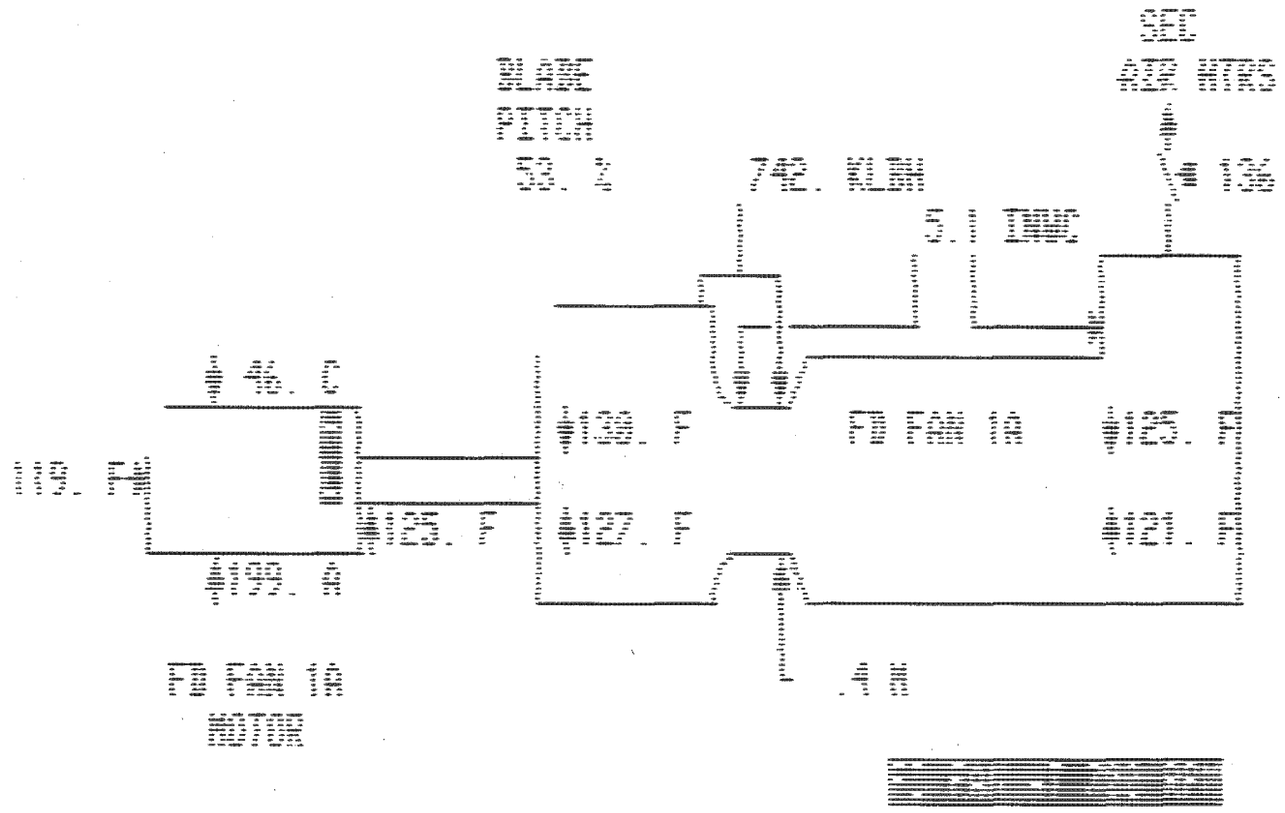

BACKWARD PAGING SGB602

IP14_001443

UNDER SOFTWARE LOCK 06/25/87 12:13:32 MAIN

SGB603 SUBSYSTEM - FORCED DRAFT FAN 1B PG 3 OF 5

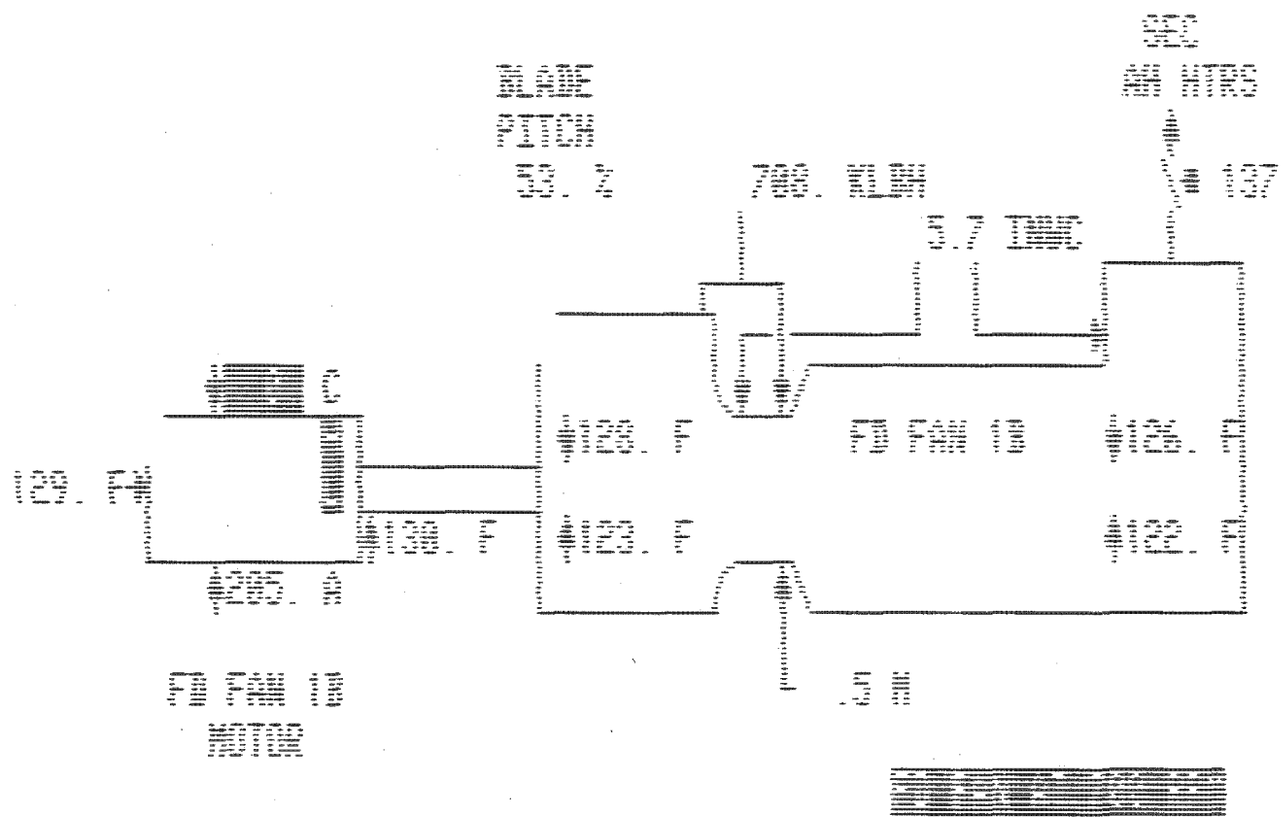

FORWARD PAGING SGB603

IP14_001444

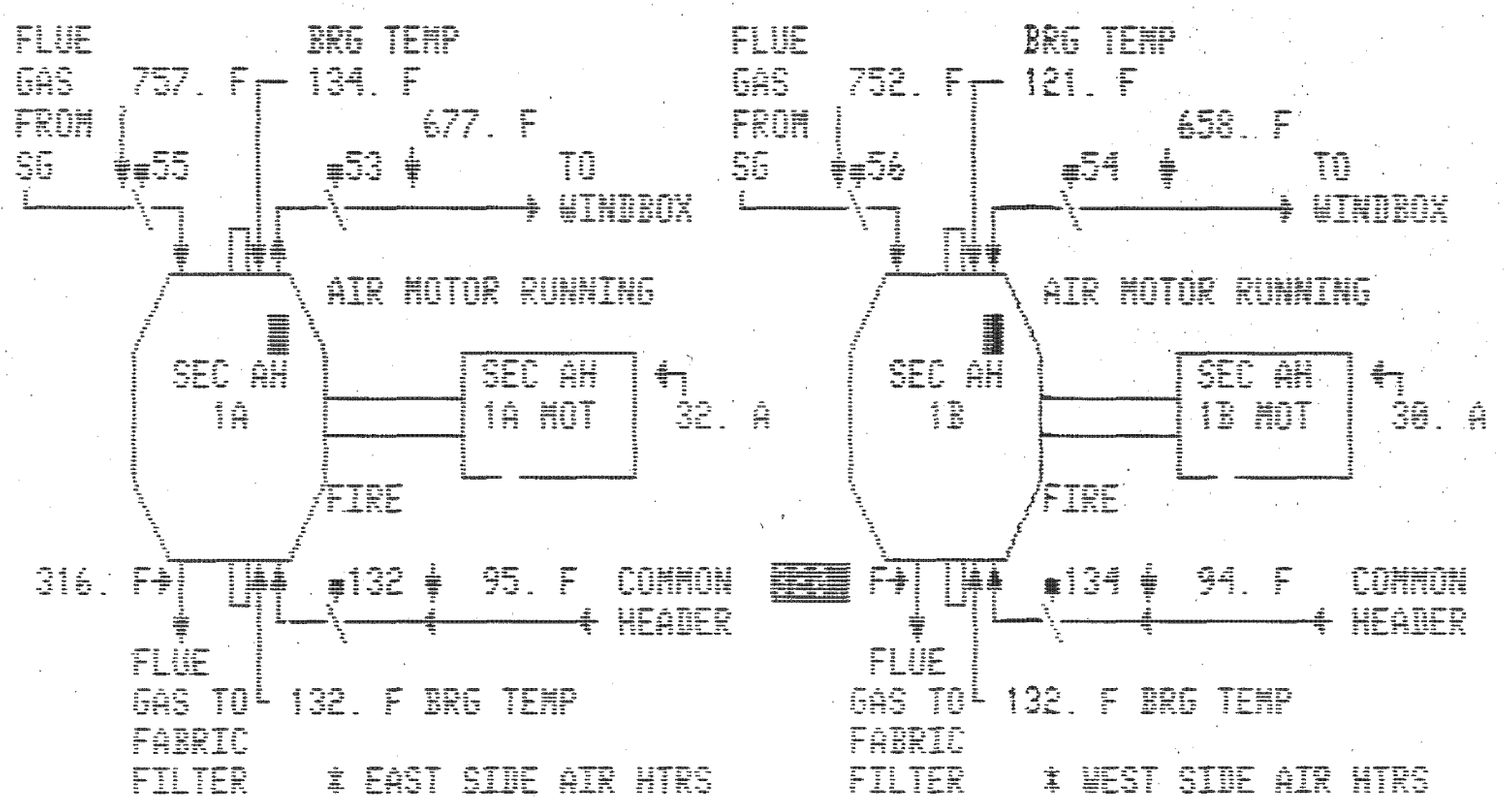

FORWARD PAGING SGBG04

IP14_001445

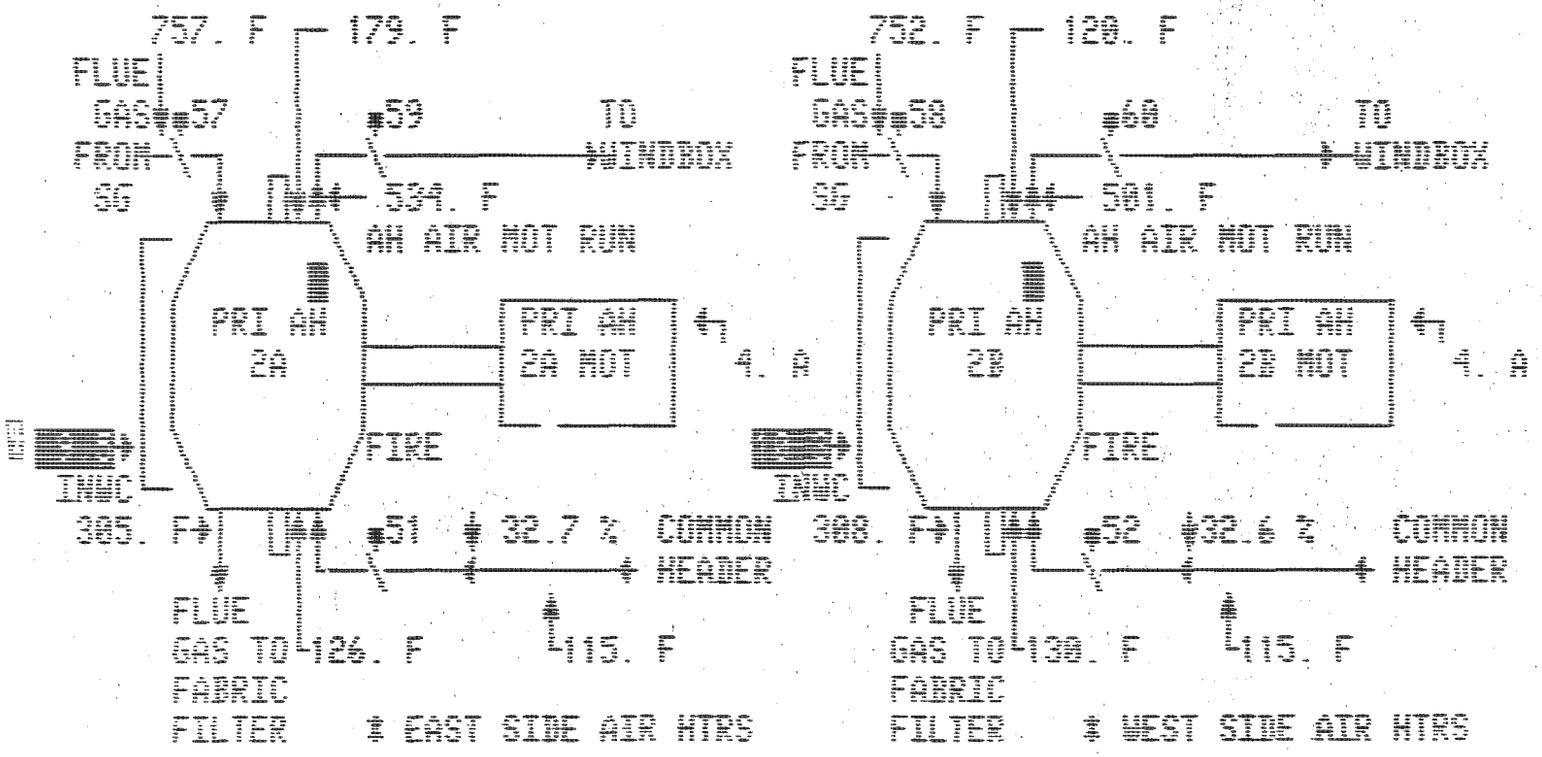

FORWARD PAGING SGB606

IP14_001446

06/25/07 14:53:22 MAIN

SGBG07 SUBSYSTEM - EAST SIDE AIR HEATERS

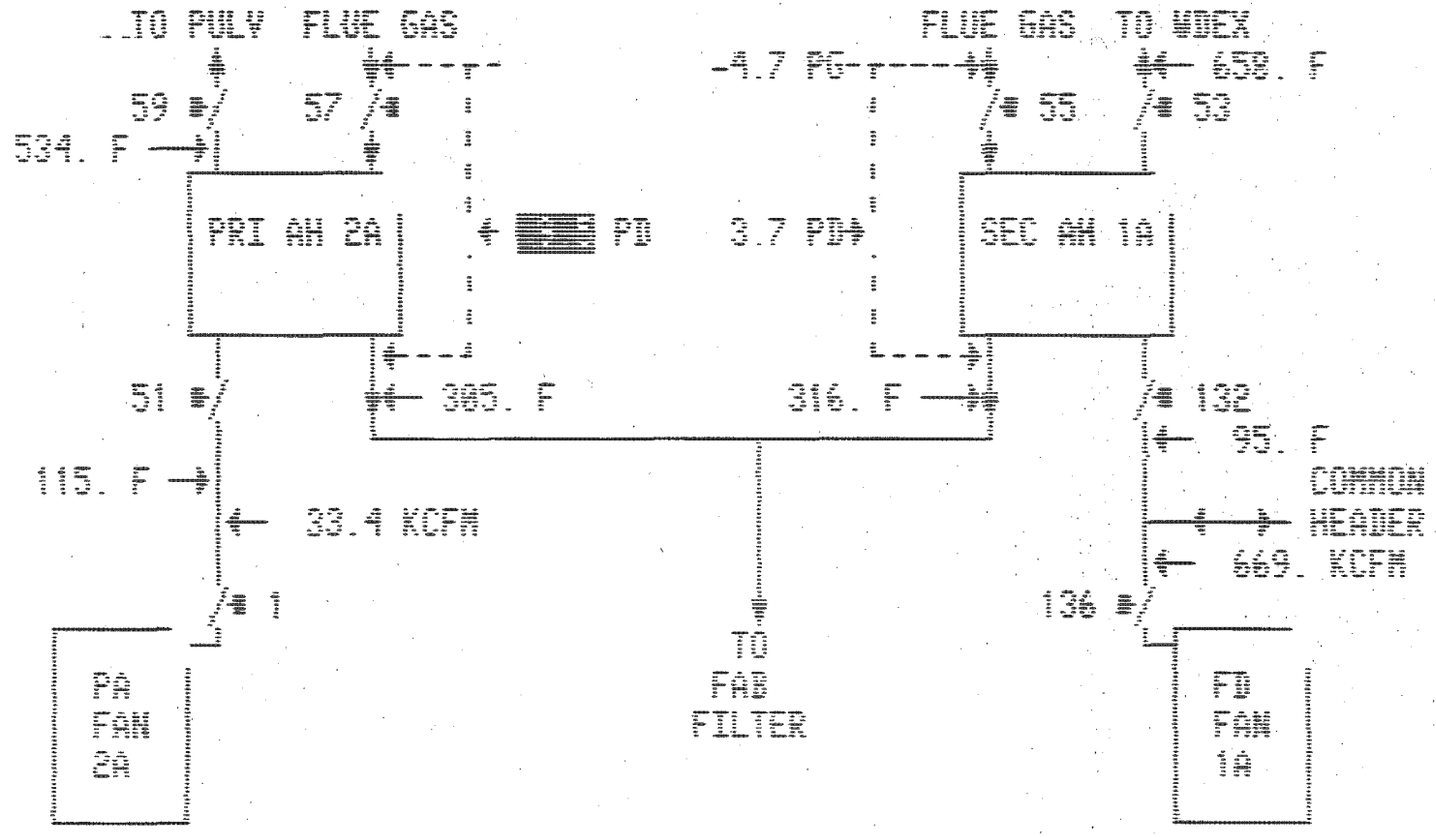

FORWARD PAGING SGBG07

06/25/87 14:53:39 MAIN

SGBG08 SUBSYSTEM - WEST SIDE AIR HEATERS

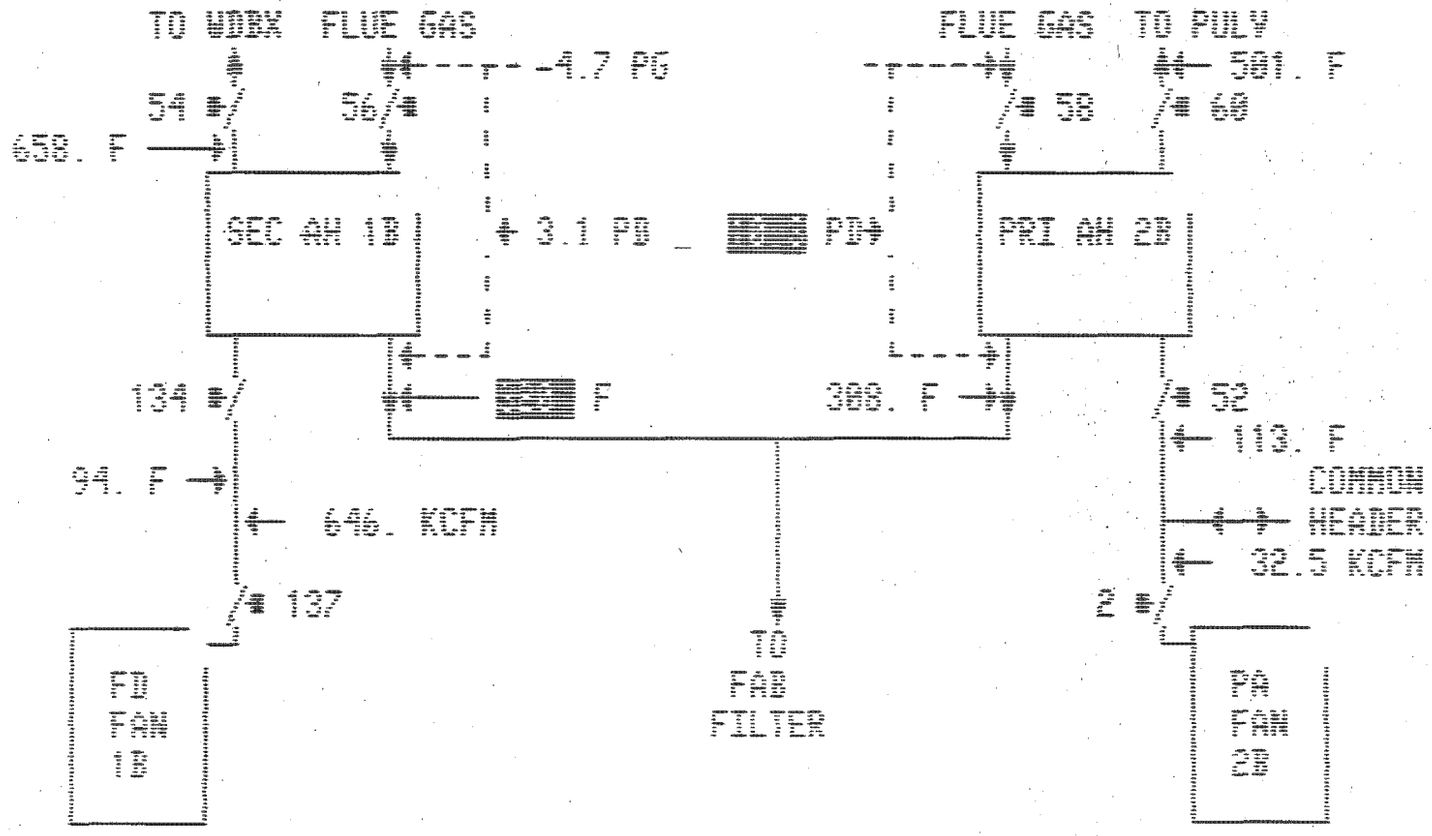

FORWARD PAGING SGBG08

IP14_001448

06/25/87 14:54:54 MAIN

SGBG85 SYSTEM - PRIMARY AIR

PG 4 OF 6

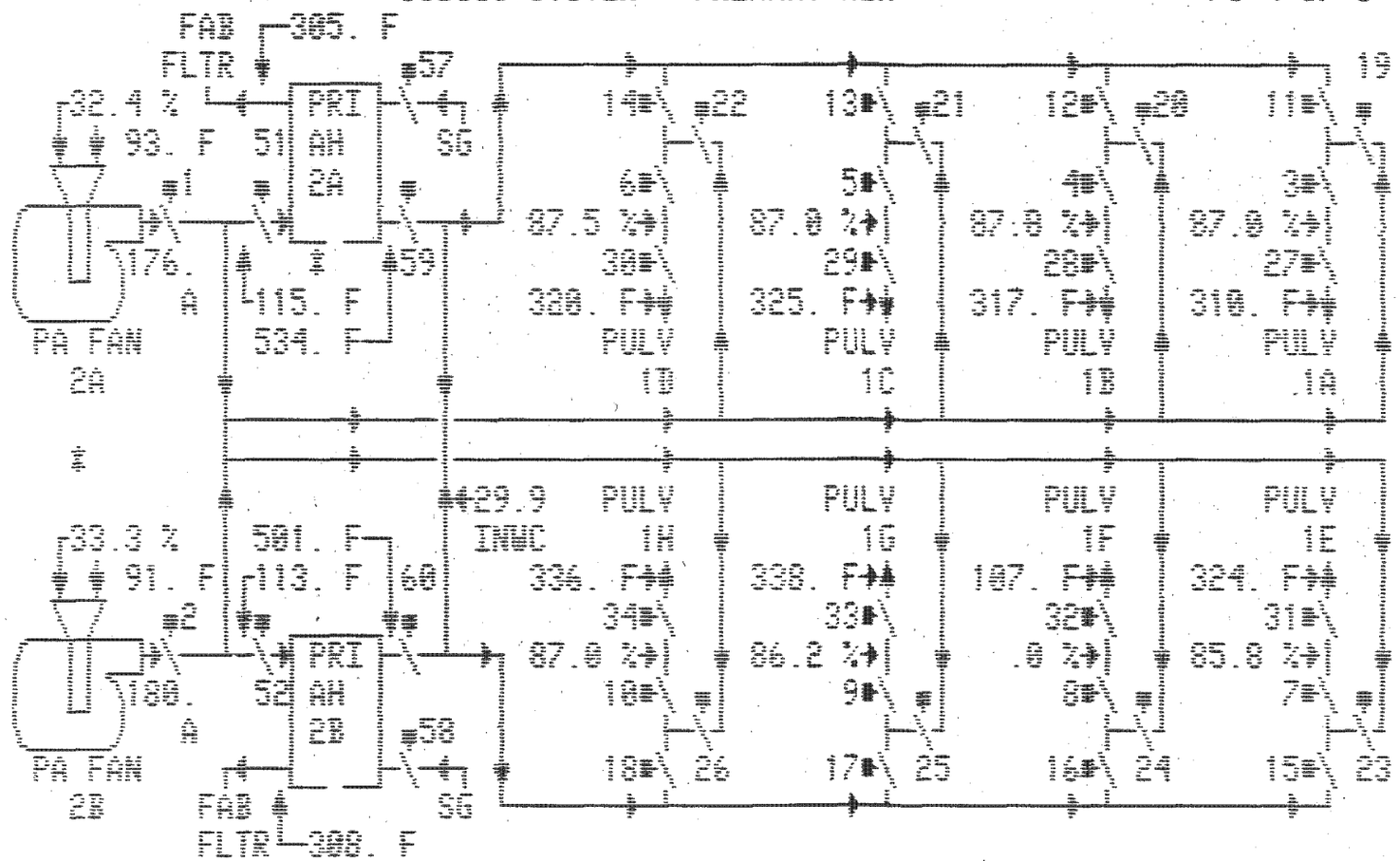

IP14_001449

UNDER SOFTWARE LOCK 06/25/87 14:52:44 MAIN
UNIT LOAD 843. MW SGBG01 SYSTEM - COMBUSTION AIR PG 1 OF 5

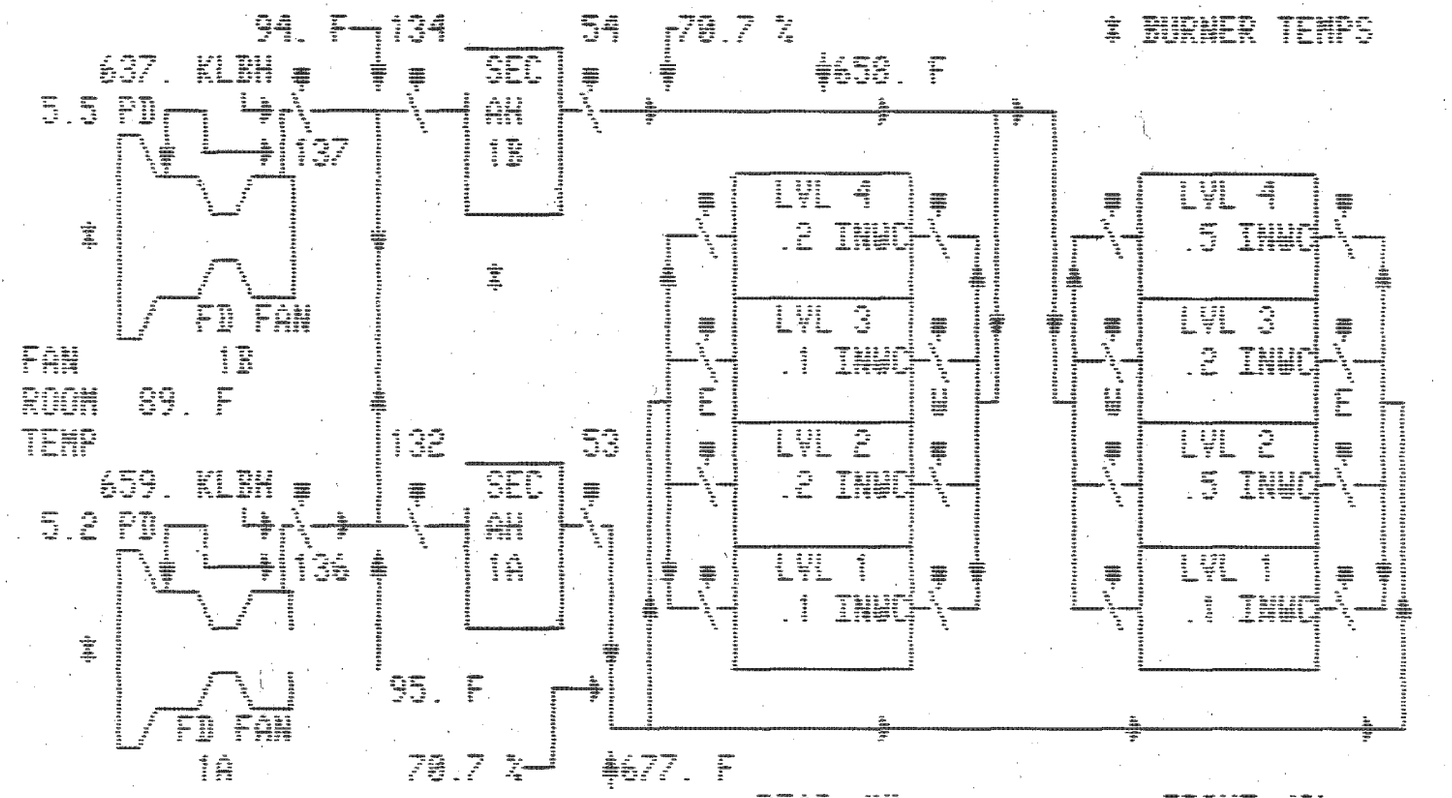

IP14_001450

06/25/87 14:54:38 MAIN

SGBG09 SUBSYSTEM -PRIMARY AIR FANS

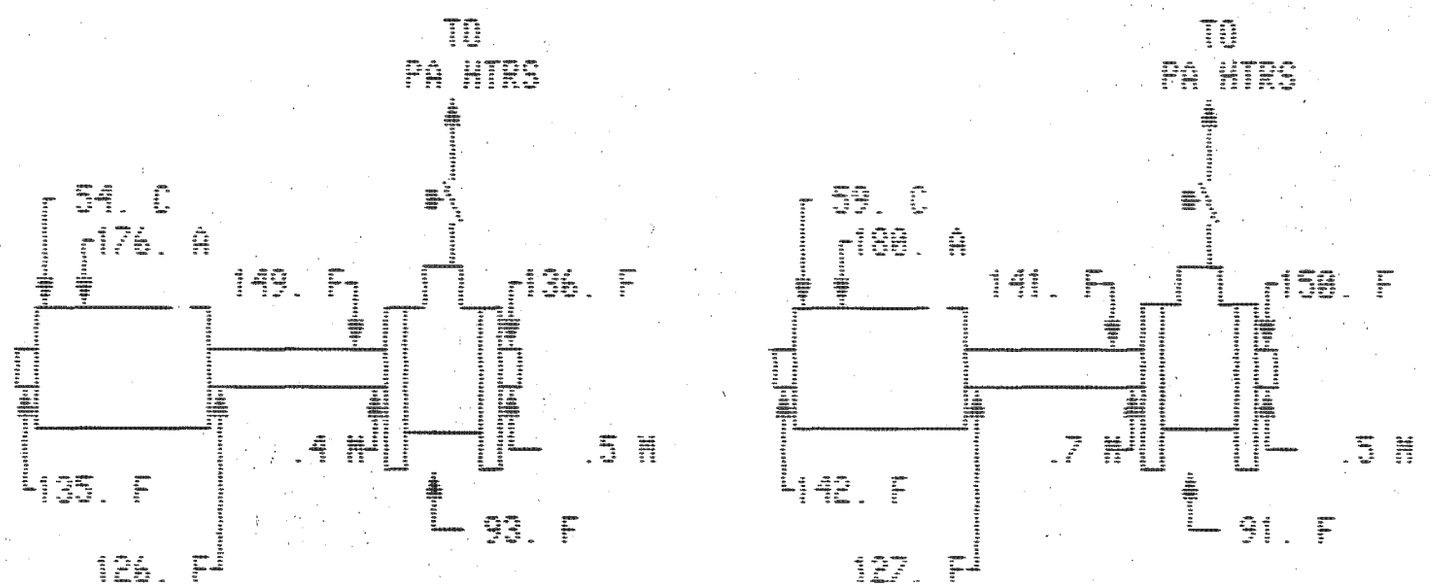

FORWARD PAGING SGBG09

IP14_001451

UNDER SOFTWARE LOCK

06/25/87 14:51:10 MAIN

SGAG03 SUBSYSTEM- FURNACE

PG 2 OF 3

TEMP PROBE INSERTED

TEMP PROBE INSERTED

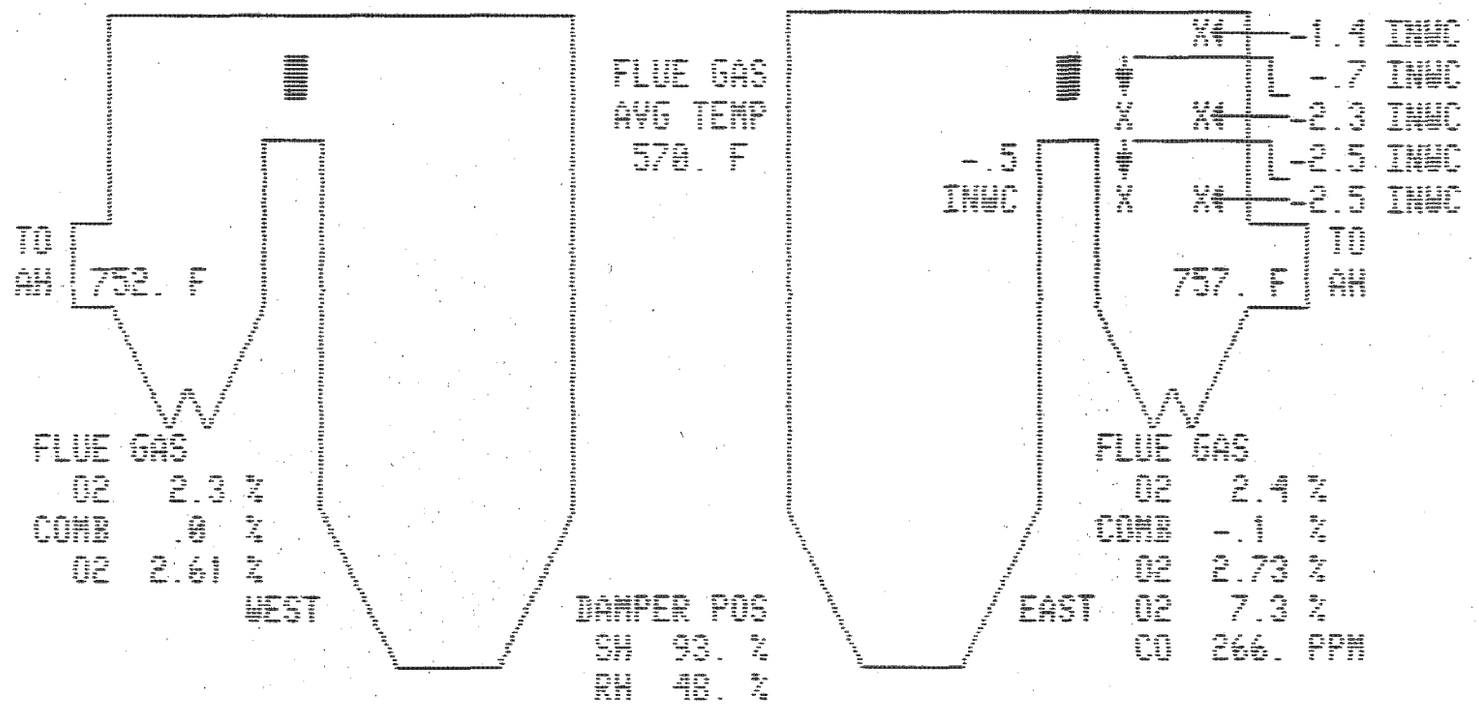

FORWARD PAGING SGAG03

IP14_001452

UNDER SOFTWARE LOCK 06/25/87 14:56:41 MAIN

MEASUREMENT DISPLAY

BOILER PERFORMANCE DATA - TABLE 1

BLOCK	VALUE		DESCRIPTION	STATUS	ALARM
COAXI027A	845.	MW	UNIT LOAD		
COAXI024A	6211.	KPPH	TURBINE STEAM FLOW		
FWAFT0025	6214.	KPPH	BOILER FEEDWATER F		
SGATE0863	726.	DEGF	FIRST STG SUPHTR E ATTEMP INL T		
SGATE0864	720.	DEGF	FIRST STG SUPHTR W ATTEMP INL T		
SGGTE0002	1002.	DEGF	SEC SUPHTR OUTLET STEAM T		
SGGPT0001	2423.	PSIG	MAIN STEAM LINE PR		
SGAFT0070	-1.	KPPH	FIRST STAGE SUPHTR E ATTEMP F		
SGAFT0072	18.	KPPH	SEC STAGE SUPHTR E ATTEMP F		
SGATE0991	337.	DEGF	SUPHTR ATTEMP SPRAY WTR SPLY T		
SGAFT0071	-.5	KPPH	FIRST STAGE SUPHTR W ATTEMP F		
SGAFT0073	15.	KPPH	SEC STAGE SUPHTR W ATTEMP F		
SGATE0991	337.	DEGF	SUPHTR ATTEMP SPRAY WTR SPLY T		
SGJTE0022	622.	DEGF	SG E COLD REHEAT INLET T		
SGJTE0019	624.	DEGF	SG W COLD REHEAT INLET T		
SGJPT0011	544.	PSIG	SG E COLD REHEAT INLET PR		
SGJTE0011	999.	DEGF	SG N HOT REHEAT OUTLET T		
SGJPT0006	514.	PSIG	TURBINE N HOT REHEAT INLET PR		
SGJFT0020	2.7	KPPH	REHEAT DESUPERHEATER SPRAY F		
SGJTE0060	159.	DEGF	REHEAT DESUPERHEATER SPRAY T		

FORWARD PAGING BW1

IP14_001453

UNDER SOFTWARE LOCK 06/25/87 14:57:18 MAIN

MEASUREMENT DISPLAY

BOILER PERFORMANCE DATA - TABLE 2

BLOCK	VALUE		DESCRIPTION	STATUS	ALARM
SGAPT0174	.6	INWC	BNR LVL 2 S WINDBOX PR		
SGAPT0176	.6	INWC	BNR LVL 4 S WINDBOX PR		
SGAPT0179	.2	INWC	BNR LVL 3 N WINDBOX PR		
SGAPT0177	.2	INWC	BNR LVL 1 N WINDBOX PR		
SGAPT0173	.2	INWC	BNR LVL 1 S WINDBOX PR		
SGAPT0175	.4	INWC	BNR LVL 3 S WINDBOX PR		
SGAPT0180	.3	INWC	BNR LVL 4 N WINDBOX PR		
SGAPT0178	.3	INWC	BNR LVL 2 N WINDBOX PR		
COAKS0087A	49.1	PCT	SECONDARY AIR DAMPER POS 1A		
COAKS0083A	48.8	PCT	SECONDARY AIR DAMPER POS 1B		
COAKS0085A	49.4	PCT	SECONDARY AIR DAMPER POS 1C		
COAKS0089A	49.4	PCT	SECONDARY AIR DAMPER POS 1D		
COAKS0010A	49.6	PCT	SECONDARY AIR DAMPER POS 1E		
COAKS0086A	56.8	PCT	SECONDARY AIR DAMPER POS 1F		
COAKS0084A	49.1	PCT	SECONDARY AIR DAMPER POS 1G		
COAKS0088A	49.7	PCT	SECONDARY AIR DAMPER POS 1H		
SGAPT0171	-.5	INWC	SG EAST FLUE GAS PR		

FORWARD PAGING BW2

UNDER SOFTWARE LOCK 06/25/87 14:57:33 MAIN

MEASUREMENT DISPLAY

BOILER PERFORMANCE DATA - TABLE 3

BLOCK	VALUE		DESCRIPTION	STATUS	ALARM
COAXI081A	335.0	TPH	TOTAL FUEL FLOW		
COAXI082A	46.5	TPH	PULV 1A COAL FLOW		
COAXI083A	46.5	TPH	PULV 1B COAL FLOW		
COAXI084A	46.8	TPH	PULV 1C COAL FLOW		
COAXI085A	47.7	TPH	PULV 1D COAL FLOW		
COAXI086A	46.8	TPH	PULV 1E COAL FLOW		
COAXI087A	.2	TPH	PULV 1F COAL FLOW		
COAXI088A	46.8	TPH	PULV 1G COAL FLOW		
COAXI089A	47.3	TPH	PULV 1H COAL FLOW		
COAXI080A	2.2	PCT	WEST FLUE GAS O2		
COAXI079A	2.0	PCT	EAST FLUE GAS O2		
SGATE0707	757.	DEGF	ECON EAST OUTLET FLUE GAS T		
SGATE0710	752.	DEGF	ECON WEST OUTLET FLUE GAS T		
SGBTE0927	316.	DEGF	SEC AH 1A GAS OUT T		
SGBTE0929	[illegible]	DEGF	SEC AH 1B GAS OUT T		HI-WRN
SGBTE0913	305.	DEGF	PRI AH 2A GAS OUT T		
SGBTE0916	308.	DEGF	PRI AH 2B GAS OUT T		
COAXI072A	29.8	INWC	PA DUCT PRESS		
COAXI084A	-13.5	INWC	ID FANS SUCT PRESS		
SGAPT0165	-2.6	INWC	SG ECON OUTLET FLUE GAS PR		

FORWARD PAGING BW3

IP14_001455

UNDER SOFTWARE LOCK 06/25/87 14:58:37 MAIN

MEASUREMENT DISPLAY

ROUND SHEET 06 - FUEL 2

BLOCK	VALUE		DESCRIPTION	STATUS	ALARM
COAXI0007A	.1	TPH	PULV 1F COAL FLOW		
SGAPT0155	.0	INWC	PULV 1F PA D/P		
SGAKK0006	0.	AMPS	PULV 1F MOTOR AMPS		
SGATE0660	185.	DEGF	PULV 1F COAL AIR OUTLET T		
COAXI0008A	45.4	TPH	PULV 1G COAL FLOW		
SGAPT0156	13.9	INWC	PULV 1G PA D/P		
SGAKK0007	57.	AMPS	PULV 1G MOTOR AMPS		
SGATE0661	148.	DEGF	PULV 1G COAL AIR OUTLET T		
COAXI0009A	45.6	TPH	PULV 1H COAL FLOW		
SGAPT0157	12.9	INWC	PULV 1H PA D/P		
SGAKK0008	61.	AMPS	PULV 1H MOTOR AMPS		
SGATE0662	158.	DEGF	PULV 1H COAL AIR OUTLET T		
SGBKK0001	32.	AMPS	SEC AH 1A MOTOR AMPS		
SGBTE0927	316.	DEGF	SEC AH 1A GAS OUT T		
SGBTE0929	[illegible]	DEGF	SEC AH 1B GAS OUT T		HI-WRN
SGBTE0919	677.	DEGF	SEC AH 1A AIR OUT T		
SGBTE0920	658.	DEGF	SEC AH 1B AIR OUT T		
SGBKV0008	15729.	DEGF	COLD END AVG TEMP OF SAH 1A		
SGBKV0009	16732.	DEGF	COLD END AVG TEMP OF SAH 1B		

FORWARD PAGING RS06

UNDER SOFTWARE LOCK 06/25/87 14:59:01 MAIN

MEASUREMENT DISPLAY

ROUND SHEET 87 - PRIMARY AIR

BLOCK	VALUE	DESCRIPTION	STATUS	ALARM
CDAXI001A	338.4 TPH	TOTAL FUEL FLOW		
SGBKK0007	176. AMPS	PA FAN 2A MOTOR AMPS		
SGBKK0008	180. AMPS	PA FAN 2B MOTOR AMPS		
CDAXI074A	32.9 PCT	PA FAN FLOW 2A		
CDAXI075A	32.6 PCT	PA FAN FLOW 2B		
CDAXI072A	29.9 INWC	PA DUCT PRESS		
SGBKK0003	4. AMPS	PRI AH 2A MOTOR AMPS		
SGBKK0004	4. AMPS	PRI AH 2B MOTOR AMPS		
SGBTE0913	305. DEGF	PRI AH 2A GAS OUT T		
SGBTE0916	308. DEGF	PRI AH 2B GAS OUT T		
SGBTE0917	534. DEGF	PRI AH 2A AIR OUT T		
SGBTE0918	501. DEGF	PRI AH 2B AIR OUT T		
SGBKV0006	289. DEGF	COLD END AVG TEMP OF PAH 2A		
SGBKV0007	210. DEGF	COLD END AVG TEMP OF PAH 2B		

FORWARD PAGING RS87

IP14_001457

UNDER SOFTWARE LOCK 06/25/07 15:00:06 MAIN

MEASUREMENT DISPLAY

ROUND SHEET 08 - SECONDARY AIR

BLOCK	VALUE		DESCRIPTION	STATUS	ALARM
SGBKK0005	199.	AMPS	FD FAN 1A MOTOR AMPS		
SGBKK0006	205.	AMPS	FD FAN 1B MOTOR AMPS		
COAXI153A	54.	PCT	FD FAN 1A BLADE PITCH		
COAXI154A	54.	PCT	FD FAN 1B BLADE PITCH		
SGBKV0111	5.	INWC	FD FAN 1A CORR ACTUAL HEAD		
SGBKV0112	5.	INWC	FD FAN 1B CORR ACTUAL HEAD		
COAXI077A	70.4	PCT	SEC AIR FLOW 1B		
SGBPT0216	3.8	INWC	SEC AH 1A DIFF PRESS		
SGBPT0217	3.3	INWC	SEC AH 1B DIFF PRESS		
SGBPT0214	[illegible]	INWC	PRI AH 2A DIFF PRESS	BYPASS	OV-RNG
SGBPT0215	[illegible]	INWC	PRI AH 2B DIFF PRESS	BYPASS	OV-RNG

FORWARD PAGING RS08

IP14_001458

UNDER SOFTWARE LOCK 06/25/87 15:01:02 MAIN

MEASUREMENT DISPLAY

AIR DAMPER POSITIONS

BLOCK	VALUE	DESCRIPTION	STATUS	ALARM
COAKS007A	39.0 PCT	SECONDARY AIR DAMPER POS 1A		
COAKS003A	38.8 PCT	SECONDARY AIR DAMPER POS 1B		
COAKS005A	39.3 PCT	SECONDARY AIR DAMPER POS 1C		
COAKS009A	39.2 PCT	SECONDARY AIR DAMPER POS 1D		
COAKS010A	39.3 PCT	SECONDARY AIR DAMPER POS 1E		
COAKS006A	56.9 PCT	SECONDARY AIR DAMPER POS 1F		
COAKS004A	39.0 PCT	SECONDARY AIR DAMPER POS 1G		
COAKS008A	39.4 PCT	SECONDARY AIR DAMPER POS 1H		
COAKS021A	76.9 PCT	PRIMARY AIR DAMPER POS 1A		
COAKS022A	77.5 PCT	PRIMARY AIR DAMPER POS 1B		
COAKS023A	68.1 PCT	PRIMARY AIR DAMPER POS 1C		
COAKS024A	63.3 PCT	PRIMARY AIR DAMPER POS 1D		
COAKS025A	46.4 PCT	PRIMARY AIR DAMPER POS 1E		
COAKS026A	.0 PCT	PRIMARY AIR DAMPER POS 1F		
COAKS027A	84.0 PCT	PRIMARY AIR DAMPER POS 1G		
COAKS028A	75.3 PCT	PRIMARY AIR DAMPER POS 1H		

FORWARD PAGING DAMPER

IP14_001459

Unit #1

name: G. Christensen

Air Heater Test Data Sheet

DATA ITEM						
Test No.						
Date 6/25/87						
Psychrometric Data	Time	Wet Bulb	Dry Bulb			
	1015	53	79			
	1045	54	81			
	1115	55	82			
	1135	55	82			
	1215	55	84			
	1245	57	87			
	1315	57	88			
	1355	55	85			
	1442	57	89			
Coal Samples	Time	Pulv				
	1000	E				
	1100	G				
	1200	H				
	1305	D				
	1310	C				
	1410	B				
	1500	A				
Fly Ash Samples	Time	Hopper				
	1320	1A1&2				
	1317	1B10				
	1315	1B9				
Economizer Ash Sample	Time	Hopper				
	1508	BV7				
Bottom Ash Sample	Time	Hopper				
	1437	ALL				

IP14_001460

UNDER SOFTWARE LOCK 06/25/87 12:15:56 MATA

MEASUREMENT DISPLAY

WEATHER DATA

BLOCK	VALUE	DESCRIPTION	STATUS	ALARM
IMAXV0001	12.53 PSIA	ATMOSPHERIC PRESSURE		
IMAPT0027	25.52 IN HG	BAROMETRIC PRESSURE		
IMAXX0531	96. DEG	AMBIENT TEMPERATURE		
SSBTE1168	84. DEG	FAN ROOM OUTSIDE AMBIENT TEMP		
IMAXX0530	-25. PCT	RELATIVE HUMIDITY		
IMAXX0529	.01 IN	PRECIPITATION		
IMAXX0532	2. MPH	WIND SPEED		
IMAXX0533	313. DEG	WIND DIRECTION		

FORWARD PATHS VTAR

IP14_001461

UNDER SOFTWARE LOCK 06/25/87 14:50:15 BACKUP

MEASUREMENT DISPLAY

WEATHER DATA

BLOCK	VALUE		DESCRIPTION	STATUS	ALARM
INAKV0001	12.53	PSIA	ATMOSPHERIC PRESSURE		
INAPT0227	25.52	IN HG	BAROMETRIC PRESSURE		
INAKK0531	91.	DEGF	AMBIENT TEMPERATURE		
SGDTE1168	88.	DEGF	FAN ROOM OUTSIDE AMBIENT TEMP		
INAKK0530	-25.	PCT	RELATIVE HUMIDITY		
INAKK0529	.01	IN	PRECIPITATION		
INAKK0532	11.	MPH	WIND SPEED		
INAKK0533	302.	DEG	WIND DIRECTION		

FORWARD PAGING WTHR

IP14_001462

Ultimate Analysis

LAB NO: 3537
IDENTIFICATION: feeder sample, Unit 1, air heater test
DATE SAMPLED: 6-25-87

	As Received	Dry Basis
% Total Moisture	7.39	xxxx
* % Carbon	67.27	72.64
* % Hydrogen	5.44	5.87
* % Nitrogen	1.08	1.17
% Ash	7.67	8.28
% Sulfur	0.52	0.56
% Oxygen (by diff)	10.63	11.48

* Reported by Wyoming Analytical Labs, Inc
Laramie, Wyoming

Note: (As received basis)

Hydrogen and oxygen do not include H and Ox in sample moisture

INTERMOUNTAIN POWER SERVICE CORPORATION

AS FIRED COAL SAMPLER

DATE: 6-29-87

LAB NO: 3537

IDENTIFICATION: feeder sample, unit 1 air heater test

DATE SAMPLED: 6-25-87

TIME COLLECTED: see comments

SHORT PROXIMATE ANALYSIS

	AS RECEIVED	DRY BASIS
% TOTAL MOISTURE	7.39	XXXX
% ASH	7.67	8.28
% SULFUR	0.52	0.56
BTU/LB	12080	13044

MOISTURE ASH FREE BTU 14222

% RESIDUAL MOISTURE = 2.68

ANALYST: RLH

% air dry Loss = 4.84

COMMENTS: feeder 1E, 1000 hrs feeder 1C, 1310 hrs
1G, 1100 hrs 1B, 1410 hrs
1H, 1200 hrs 1A, 1445 hrs
1D, 1300 hrs

cc: [redacted]
AARON NISSEN
[redacted]

PERFORMANCE TEST RESULTS
AIR HEATER TEST

DATE: JUNE 25, 1987

IDENTIFICATION	TIME	% DRY CARBON
FLY ASH, 1B9	1315 HRS.	0.38
1B10	1317 HRS.	
1A1	1320 HRS.	
ECONOMIZER ASH	1500 HRS.	0.77
BOTTOM ASH	1437 HRS.	0.64

PERFORMANCE TEST RESULTS
AIR HEATER TEST

DATE: JUNE 26, 1987

IDENTIFICATION	TIME	% DRY CARBON
FLY ASH, 1A2	1330 HRS.	0.64
1B10	1335 HRS.	
1C9	1340 HRS.	
ECONOMIZER ASH, BV7	1445 HRS.	0.35
BOTTOM ASH, 1A	1426 HRS.	1.24

RD 26

START TIME 1000
END TIME 1435

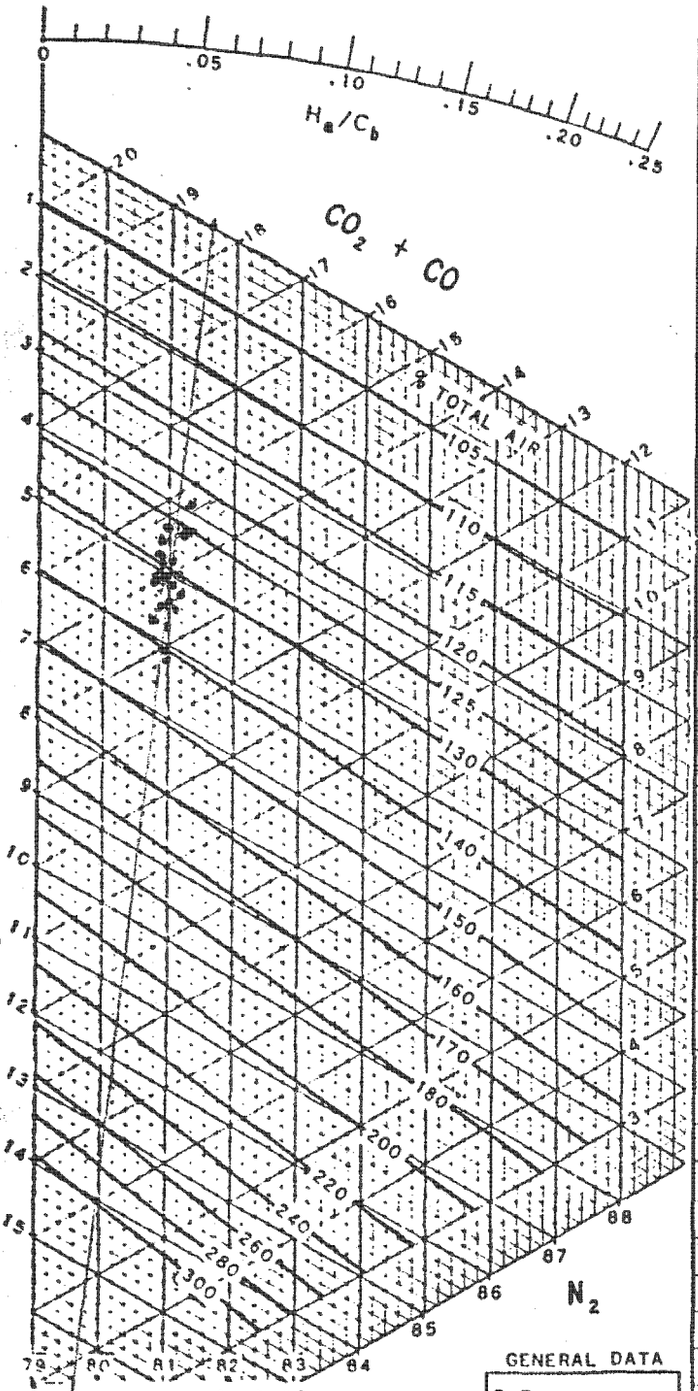

Enhanced Loss $S = \left(1 - \frac{H_a/C}{H_a/C_b}\right) C \times 14500$ Btu/lb.

Where

$\frac{H_a}{C_b}$ is from gas analysis

$\frac{H_a}{C}$ Btu/lb. is from coal analysis

Note: For complete uniform combustion, all points should lie along straight line drawn through pivot point

GENERAL DATA

S.F.	
A.F.	

FUEL ANALYSIS

H	
O	
C	
BTU/LB	
H_a/C	

TIME	LOCATION	CO_2	$+O_2$	+CO	O_2	CO	% UNBURNED	BY
1002	WA 7	12.9	19.0	—	6.1	—	—	FB
1005	WA 6	12.8	19.0	—	6.2	—	—	FB
1008	WA 5	13.0	19.1	—	6.1	—	—	FB
1011	WA 4	13.6	19.0	—	5.4	—	—	FB
1014	WA 3	13.6	19.1	—	5.5	—	—	FB
1017	WA 2	13.9	18.8	—	4.9	—	—	FB
1020	WA 1	13.8	19.1	—	5.3	—	—	FB
1034	WB 7	13.5	19.0	—	5.5	—	—	TF
1038	WB 6	13.4	19.2	—	5.8	—	—	TF
1041	WB 5	13.2	19.0	—	5.8	—	—	TF
1044	WB 4	13.5	18.9	—	5.4	—	—	TF
1047	WB 3	13.8	19.0	—	5.2	—	—	TF
1050	WB 2	14.1	18.9	—	4.8	—	—	TF
1055	WB 1	14.5	19.1	—	4.6	—	—	TF
1110	WC 7	14.2	19.1	—	4.9	—	—	FB
1114	WC 6	13.6	19.0	—	5.4	—	—	FB
1117	WC 5	13.2	19.0	—	5.8	—	—	FB
1119	WC 4	13.6	18.9	—	5.3	—	—	FB
1123	WC 3	13.9	19.2	—	5.3	—	—	FB
1126	WC 2	14.2	19.0	—	4.8	—	—	FB
1128	WC 1	14.7	19.0	—	4.3	—	—	FB
1144	WD 7	14.4	18.8	—	4.4	—	—	TF
1147	WD 6	14.0	19.1	—	5.1	—	—	TF
1150	WD 5	13.5	19.1	—	5.6	—	—	TF
1153	WD 4	14.0	19.2	—	5.2	—	—	TF
1155	WD 3	13.5	18.9	—	5.4	—	—	TF
1158	WD 2	14.3	19.1	—	4.8	—	—	TF
1201	WD 1	14.4	18.8	—	4.4	—	—	TF
	~~WE 7~~	1206	Charged Chemicals					
1222	WE 7	14.6	19.0	—	4.4	—	—	TF
1231	WE 6	13.8	19.1	—	5.3	—	—	TF
1233	WE 5	14.3	19.4	—	5.1	—	Repeated	
1239	WE 4 5	13.2	19.0	—	5.8	—	—	TF
1245	WE 3 4	14.0	19.0	—	5.0	—	—	TF
1249	WE 2 3	14.2	19.2	—	5.0	—	—	TF
1253	WE 1 2	14.2	19.0	—	4.8	—	—	TF
1259	WE 1	14.7	19.1	—	4.4			TF

SUBJECT: Baghouse inlet WEST 6/25/87 Probe E44 Page 1 of 2	FILE NO.	THE BABCOCK & WILCOX CO. RESEARCH LABORATORY ALLIANCE, OHIO
	BY	
	DATE	
	REV.	DRAWING NO.

IP14_001466

START TIME 1000
END TIME 1435

RD 26

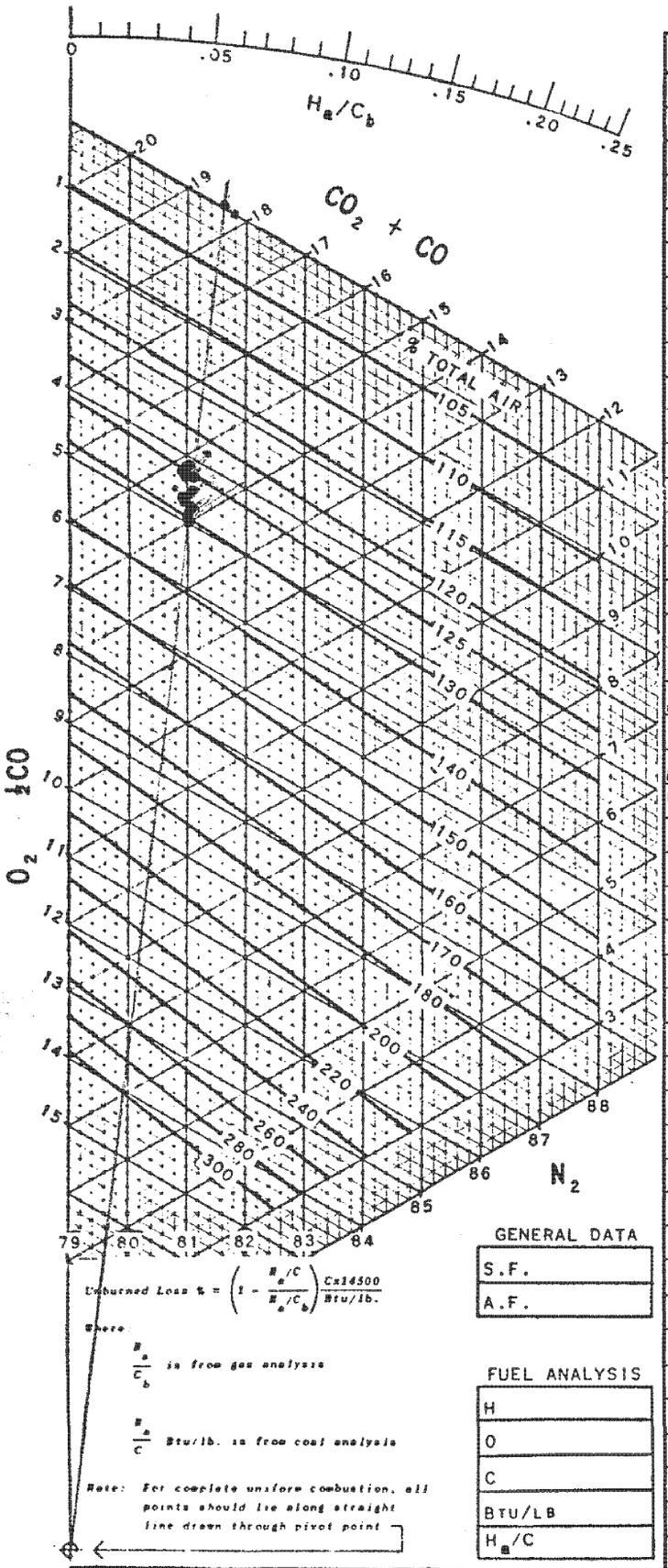

$$\text{Unburned Loss \%} = \left(1 - \frac{H_a/C}{H_a/C_b}\right) \frac{C \times 14500}{\text{Btu/lb.}}$$

Where

$\frac{H_a}{C_b}$ is from gas analysis

$\frac{H_a}{C}$ Btu/lb. is from coal analysis

Note: For complete uniform combustion, all points should lie along straight line drawn through pivot point

GENERAL DATA
S.F.
A.F.

FUEL ANALYSIS
H
O
C
BTU/LB
H_a/C

TIME	LOCATION	CO_2	$+O_2$	+CO	O_2	CO	% UN-BURNED	BY
1304	WF 7	14.4	19.0	—	4.6	—	—	FB
1307	WF 6	14.6	19.1	—	4.5	—	—	FB
1310	WF 5	14.1	18.9	—	4.8	—	—	FB
1313	WF 4	14.1	18.9	—	4.8	—	—	FB
1315	WF 3	14.7	19.0	—	4.3	—	—	FB
1318	WF 2	14.4	19.1	—	4.7	—	—	FB
1321	WF 1	14.8	19.0	—	4.0	—	—	FB
1335	WG 7	14.2	19.0	—	4.8	—	—	TF
1338	WG 6	14.6	19.0	—	4.4	—	—	TF
1341	WG 5	14.0	19.0	—	5.0	—	—	TF
1344	WG 4	14.2	19.0	—	4.8	—	—	TF
1347	WG 3	14.8	19.0	—	4.2	—	—	TF
1350	WG 2	14.7	19.0	—	4.3	—	—	TF
1353	WG 1	14.8	19.1	—	4.3	—	—	TF
1408	WH 7	14.8	19.0	—	4.2	—	—	TF
1412	WH 6	14.7	18.8	—	4.1	—	—	TF
1416	WH 5	14.6	19.2	—	4.6	—	—	TF
1419	WH 4	14.7	19.0	—	4.3	—	—	TF
1424	WH 3	14.4	19.0	—	4.6	—	—	TF
1427	WH 2	14.5	19.0	—	4.5	—	—	FB
1434	WH 1	14.3	18.9	—	4.6	—	—	FB

SUBJECT	FILE NO.	THE BABCOCK & WILCOX CO. RESEARCH LABORATORY ALLIANCE, OHIO
Baghouse inlet WEST Probe E44 6/25/87 Page 2 of 2	BY	
	DATE	
	REV.	DRAWING NO.

IP14_001467

START TIME 1000
END TIME 1435

Babcock & Wilcox
GENERAL CALCULATIONS

T P	POINT	STATIC IN.	TEMP.	ΔP IN.	ANGLE (DEGREE)	DATA BY	LOCATION (REMARKS)
WA	7	-8.3	288	0.512	0	GAC	
WA	6	-8.2	289	0.566	0	GAC	
WA	5	-8.3	293	0.573	0	GAC	
WA	4	-8.3	291	0.075	0	GAC	
WA	3	-8.3	301	0.046	0	GAC	
WA	2	-8.3	300	0.280	0	GAC	
WA	1	-8.3	301	0.996	0	GAC	
WB	7	-8.4	291	0.3070	0	GAC	
WB	6	-8.5	312	0.1000	0	GAC	
WB	5	-8.3	312	0.1750	0	FB	
WB	4	-8.4	306	0.0170	0	FB	
B	3	-8.3	266	0.095	-4	FB	
WB	2	-8.3	299	0.356	-4	FB	
WB	1	-8.3	298	1.113	0	FB	
WC	7	-8.6	301	0.234	0	GAC	TC readings
WC	6	-8.5	301	0.229	0	GAC	suspicious
WC	5	-8.4	301	0.322	0	GAC	"
WC	4	-8.3	301	0.209	+4	GAC	"
WC	3	-8.3	301	0.759	0	GAC	"
WC	2	-8.3	301	1.333	0	GAC	"
WC	1	-8.3	301	1.775	0	GAC	"

Baghouse inlet WEST Probe EHK
6/25/84

START TIME 1000
END TIME 1435

Babcock & Wilcox
GENERAL CALCULATIONS

T O	POINT	STATIC IN.	TEMP.	ΔP IN.	ANGLE (DEGREE)	DATA BY	LOCATION (REMARKS)
WD	7	-8.3	301	0.366	0	GAC	TC suspicious
WD	6	-8.2	301	0.280	+4	GAC	
WD	5	-8.3	325	0.249	0	GAC	TC okay now
WD	4	-8.3	321	0.253	+2	GAC	
WD	3	-8.2	311	0.209	+2	GAC	
WD	2	-8.1	303	0.263	0	GAC	
WD	1	-8.1	299	0.329	+2	GAC	
WE	7	-8.2	287	0.483	0	GAC	
WE	6	-8.3	287	0.310	0	FB	
WE	5	-8.3	326	0.324	0	FB	
WE	4	-8.3	340	0.317	0	FB	
E	3	-8.3	321	0.419	0	FB	
WE	2	-8.2	–	0.419	+4	FB	
WE	1	-8.3	–	0.395	0	FB	
WF	7	-8.3	292	0.332	0	FB	
WF	6	-8.5	305	0.190	0	GAC	
WF	5	-8.4	309	0.305	0	GAC	
WF	4	-8.3	302	0.400	8	GAC	
WF	3	-8.3	301	0.312	+5	GAC	
WF	2	-8.3	299	0.253	+4	GAC	
WF	1	-8.1	301	0.200	+10	TJF	

Baghouse inlet WEST E44 PROBE
6/25/87 Page 2 of 3

IP14_001469

START TIME 1000
END TIME 1435

Babcock & Wilcox
GENERAL CALCULATIONS

T O	POINT	STATIC IN.	TEMP.	ΔP IN.	ANGLE (DEGREE)	DATA BY	LOCATION (REMARKS)
W G	7	-8.3	293	0.183	+5	GAC	PROBE E-44
WG	6	-8.8	295	0.068	+30	GAC	
WG	5	-8.7	295	0.053	+5	GAC	
WG	4	-8.5	298	0.073	+10	GAC	
WG	3	-8.7	301	0.012	+20	GAC	
WG	2	-8.6	301	0.021	+5	GAC	
WG	1	-8.5	301	0.136	+10	GAC	
WH	7	-8.5	315	0.581	+5	FB	
WH	6	-8.7	299	0.153	+5	GAC	
WH	5	-8.5	298	0.012	+5	GAC	
WH	4	-8.5	299	0.619	+2	FB	
WH	3	-8.6	299	0.056	0	FB	
WH	2	-8.5	303	0.549	0	GAC	
WH	1	-8.1	303	0.488	+2	GAC	

Baghouse inlet WEST E 44
6/25/87 page 3 of 3

RD 26

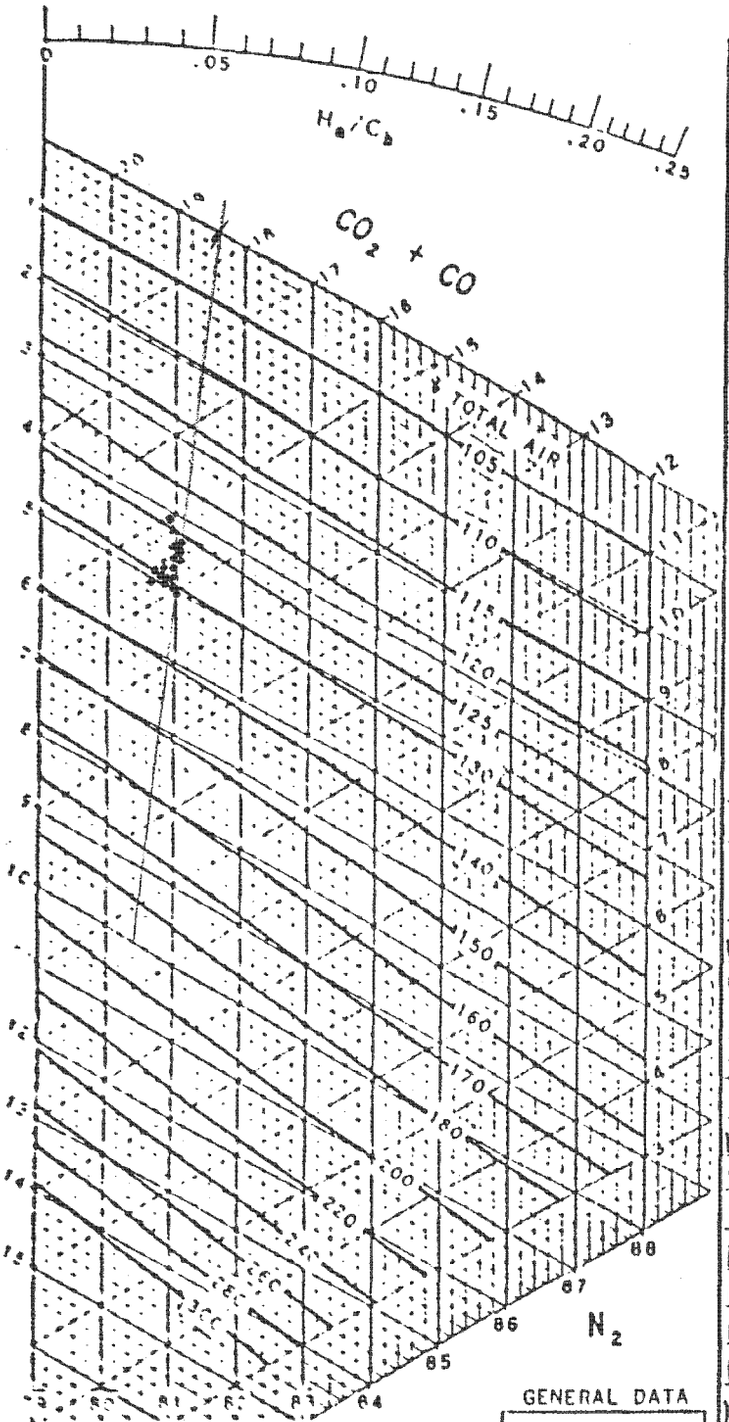

TIME	LOCATION	CO_2	$+ O_2$	$+ CO$	O_2	CO		BY
✓	✓	✓	✓		✓			✓
10:01	CA-7	14.4	18.9		4.5			BC
10:05	CA-6	14.1	19.1		5.0			BC
~~10:08~~	~~CA-5~~	~~14.7~~	~~19.4~~		~~4.7~~	Repeated		BC
10:18	CA-5	14.4	19.3		4.9			BC
~~10:11~~	~~CA-4~~	~~14.4~~	~~19.5~~		~~5.1~~	Repeated		BC
10:21	CA-4	14.4	19.3		4.9			BC
10:24	CA-3	14.3	19.4		5.1			BC
10:27	CA-2	14.3	19.3		5.0			BC
10:31	CA-1	14.5	19.3		4.8			
10:35	CB-7	14.4	18.8		4.4			BC
10:38	CB-6	14.3	19.2		4.9			BC
10:41	CB-5	14.4	19.0		4.6			BC
10:45	CB-4	14.6	19.0		4.4			BC
10:48	CB-3	14.0	19.0		5.0			BC
10:52	CB-2	14.6	18.9		4.3			BC
10:56	CB-1	14.3	19.1		4.8			BC
11:10	CC-7	14.5	18.9		4.4			BC
11:13	CC-6	14.2	18.9		4.7			BC
11:18	CC-5	14.3	19.0		4.7			BC
11:22	CC-4	14.4	18.7		4.3			BC
11:25	CC-3	14.4	19.1		4.7			BC
11:29	CC-2	14.5	19.0		4.5			BC
11:32	CC-1	14.6	19.0		4.4			BC
11:43	CD-7	14.8	19.0		4.2			FB
~~11:46~~	~~CD-6~~	~~14.5~~	~~19.2~~		~~4.7~~	Repeated		FB
11:52	CD-6	14.8	19.3		4.5			FB
11:49	CD-5	14.4	19.0		4.6			FB
~~11:55~~	~~CD-4~~	~~14.8~~	~~19.3~~		~~4.5~~	Repeated		FB
12:00	CD-4	14.4	19.0		4.6			FB
~~11:58~~	~~CD-3~~	~~14.9~~	~~19.6~~		~~4.7~~	Repeated		FB
~~12:04~~	~~CD-3~~	~~15.0~~	~~19.4~~		~~4.4~~	Repeated		FB
12:06	CD-3	14.6	19.3		4.7			FB
~~12:10~~	~~CD-2~~	~~15.1~~	~~19.4~~		~~4.3~~	Repeated		FB
12:12	CD-1	14.9	19.1		4.2			FB
12:16	CD-2	15.1	19.2		4.1			FB
	~~CD-1~~							

GENERAL DATA

S.F.	
A.F.	

FUEL ANALYSIS

H	
O	
C	
BTU/LB	
H_a/C	

SUBJECT Intermountain Power Co.
Airheater Test - Baghouse Inlet
Center Flue
Sheet 1 of 2

FILE NO.
BY
DATE 6/25/87
REV.

THE BABCOCK & WILCOX CO.
RESEARCH LABORATORY
ALLIANCE, OHIO

DRAWING NO.

START 1000 END 1455

IP14_001471

RD 26

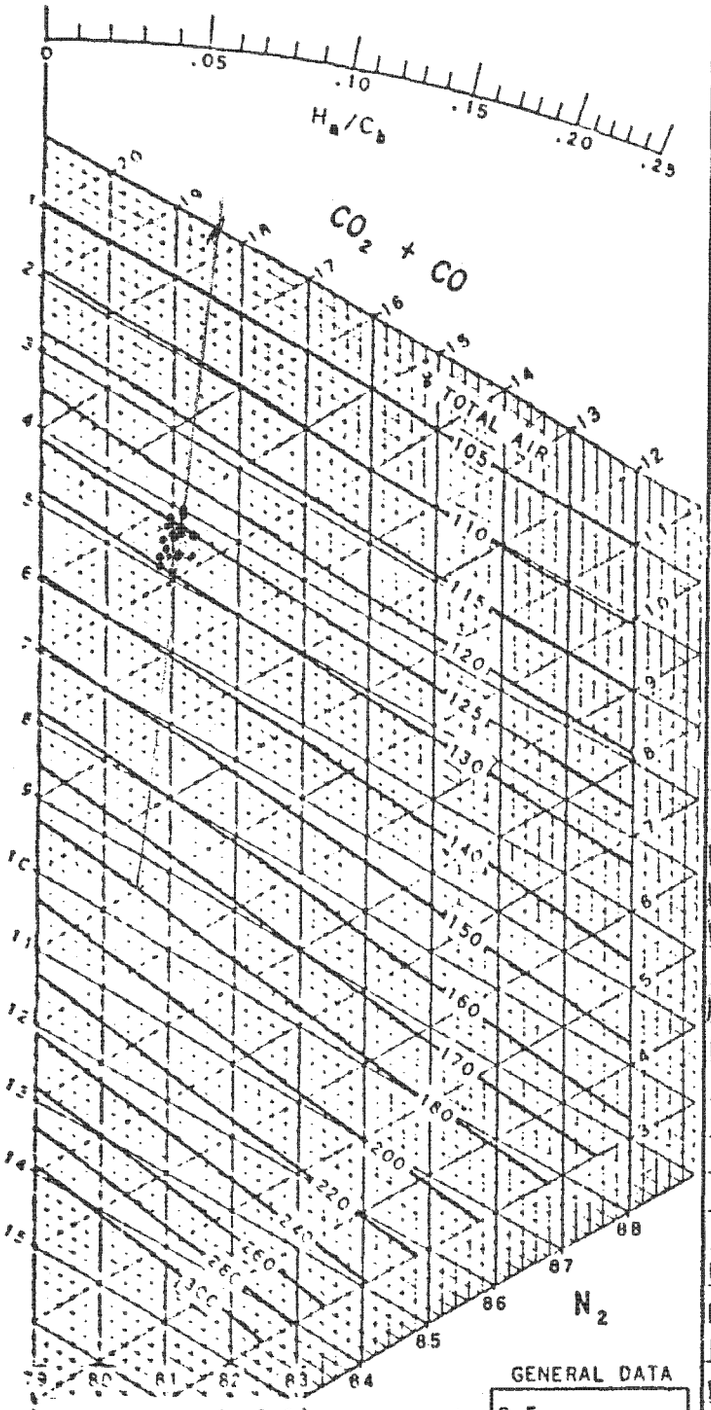

TIME	LOCATION	CO_2	$+O_2$	+CO	O_2	CO		BY
✓	✓	✓	✓ 12:20		ORSAT	CHEMICALS		CHANGE
12:25	CE-7	14.8	19.0		4.2			BC
12:28	CE-6	14.2	18.8		4.6			BC
12:31	CE-5	14.1	18.9		4.8			BC
12:39	CE-4	14.0	19.1		5.1			BC
12:42	CE-3	14.1	18.6		4.5			BC
12:45	CE-2	14.7	18.8		4.1			BC
12:49	CE-1	14.6	18.8		4.2			BC
13:04	CF-7	14.7	19.1		4.4			BC
13:07	CF-6	14.6	18.9		4.3			BC
13:10	CF-5	14.4	19.1		4.7			BC
13:14	CF-4	14.5	19.0		4.5			BC
13:18	CF-3	14.4	19.2		4.8			BC
13:22	CF-2	14.6	18.9		4.3			BC
13:26	CF-1	14.4	19.0		4.6			BC
13:35	CG-7	14.7	19.3		4.6			FB
13:38	CG-6	14.9	19.2		4.3			FB
~~13:40~~	~~CG-5~~	~~14.7~~	~~19.4~~		~~4.7~~	Repeated		FB
13:47	CG-5	14.7	18.8		4.1			FB
~~13:44~~	~~CG-4~~	~~15.4~~	~~18.8~~		~~3.4~~	Repeated		FB
13:51	CG-4	14.7	18.9		4.2			FB
13:54	CG-3	14.4	19.0		4.6			FB
13:57	CG-2	14.6	19.0		4.4			FB
14:00	CG-1	14.6	18.8		4.2			FB
14:10	CH-7	14.3	18.9		4.6			BC
14:12	CH-6	14.4	18.6		4.2			BC
14:14	CH-5	14.6	19.0		4.4			BC
14:18	CH-4	14.5	18.8		4.3			BC
14:22	CH-3	14.5	18.8		4.3			BC
~~14:25~~	~~CH-2~~	~~14.1~~	/		/	Repeated		BC
14:40	CH-2	14.8	18.8		4.0			BC
14:44	CH-1	14.3	19.2		4.9			BC
thru	↓							
1454								

GENERAL DATA

S.F.	
A.F.	

FUEL ANALYSIS

H	
O	
C	
BTU/LB	
H_a/C	

SUBJECT Intermountain Power Co.
Airheater Test - Baghouse Inlet
Center Flue
Sheet 2 of 2

FILE NO.
BY
DATE 6/25/87
REV.

THE BABCOCK & WILCOX CO.
RESEARCH LABORATORY
ALLIANCE, OHIO

DRAWING NO.

START 1000 END 1455

IP14_001472

Babcock & Wilcox
GENERAL CALCULATIONS

T O	POINT	STATIC IN.	TEMP.	ΔP IN.	ANGLE (DEGREE)	DATA BY	LOCATION (REMARKS)
CA	7	-8.0	322	0.371	5	HCJ	
CA	6	-8.0	322	0.065	15	HCJ	
CA	5	-8.2	323	0.036	10	HCJ	
CA	4	-8.1	324	0.532	10	HCJ	
CA	3	-8.1	324	0.009	5	HCJ	
CA	2	-8.3	323	0.029	20	HCJ	
CA	1	-8.4	320	0.449	15	HCJ	
CB	7	-8.3	320	0.136	5	HCJ	
CB	6	-8.4	325	0.288	0	HCJ	
CB	5	-8.2	325	0.317	5	HCJ	
CB	4	-8.2	326	0.256	5	HCJ	
CB	3	-8.3	322	0.251	10	HCJ	
CB	2	-8.4	321	0.092	10	HCJ	
CB	1	-8.3	318	0.041	5	HCJ	
CC	7	-8.3	327	0.283	10	HCJ	
CC	6	-8.4	326	0.324	5	HCJ	
CC	5	-8.3	326	0.363	5	HCJ	
CC	4	-8.3	327	0.285	0	HCJ	
CC	3	-8.3	328	0.227	10	HCJ	
CC	2	-8.3	319	0.222	5	HCJ	
CC	1	-8.2	321	0.129	5	HCJ	

Intermountain Power Co.
Airheater Test - Baghouse Inlet - Center Flue
Probe #: E-42
Start Time: 10:00 End Time: 1455

Sheet 1 of 3

6/25/87

Babcock & Wilcox
GENERAL CALCULATIONS

T O	POINT	STATIC IN.	TEMP.	ΔP IN.	ANGLE (DEGREE)	DATA BY	LOCATION (REMARKS)
CD	7	-8.2	333	0.407	0	HCJ	
CD	6	-8.2	332	0.463	10	HCJ	
CD	5	-8.1	337	0.424	10	HCJ	
CD	4	-8.2	335	0.441	0	HCJ	
CD	3	-8.3	339	0.522	10	HCJ	
CD	2	-8.1	345	0.507	10	HCJ	
CD	1	-8.2	341	0.327	10	HCJ	
							CHANGED ORSAT CHEMICALS
CE	7	-8.2	343	0.446	0	HCJ	
CE	6	-8.1	340	0.485	10	HCJ	
CE	5	-8.0	335	0.463	10	HCJ	
CE	4	-8.2	345	0.507	10	HCJ	
CE	3	-8.1	353	0.576	10	HCJ	
CE	2	-8.2	353	0.549	5	HCJ	
CE	1	-8.2	353	0.224	5	HCJ	
CF	7	-8.2	348	0.317	15	HCJ	
CF	6	-8.1	351	0.415	10	HCJ	
CF	5	-8.2	354	0.532	10	HCJ	
CF	4	-8.2	355	0.595	10	HCJ	
CF	3	-8.0	355	0.603	10	HCJ	
CF	2	-8.0	351	0.422	10	HCJ	
CF	1	-8.0	348	0.092	15	HCJ	

Intermountain Power Co. sheet 2 of 3
Airheater Test - Baghouse Inlet - Center Flue
Probe #: E-42
Start Time: 10:00 End Time: 1455

6/25/87

IP14_001474

Babcock & Wilcox

GENERAL CALCULATIONS

T.	POINT	STATIC IN.	TEMP.	ΔP IN.	ANGLE (DEGREE)	DATA BY	LOCATION (REMARKS)
CG	7	-8.3	350	0.151	5	HCJ	
CG	6	-8.4	352	0.334	0	HCJ	
CG	5	-8.3	352	0.463	10	HCJ	
CG	4	-8.3	355	0.102	5	HCJ	
CG	3	-8.4	352	0.058	10	HCJ	
CG	2	-8.4	348	0.019	10	HCJ	
CG	1	-8.4	347	0.004	5	HCJ	
CH	7	-8.1	345	0.224	5	HCJ	
CH	6	-8.3	349	0.004	25	HCJ	
CH	5	-8.4	349	0.002	10	HCJ	
CH	4	-8.2	352	0.366	15	HCJ	
CH	3	-8.4	349	0.083	20	HCJ	
CH	2	-8.4	346	0.083	15	HCJ	
CH	1	-8.1	346	0.561	20	HCJ	

Intermountain Power Co. Sheet 3 of 3

Airheater Test - Baghouse Inlet - Center Flue

Probe #: E-42

Start Time: 10:00 End Time: 1455

6/25/87

RD 26

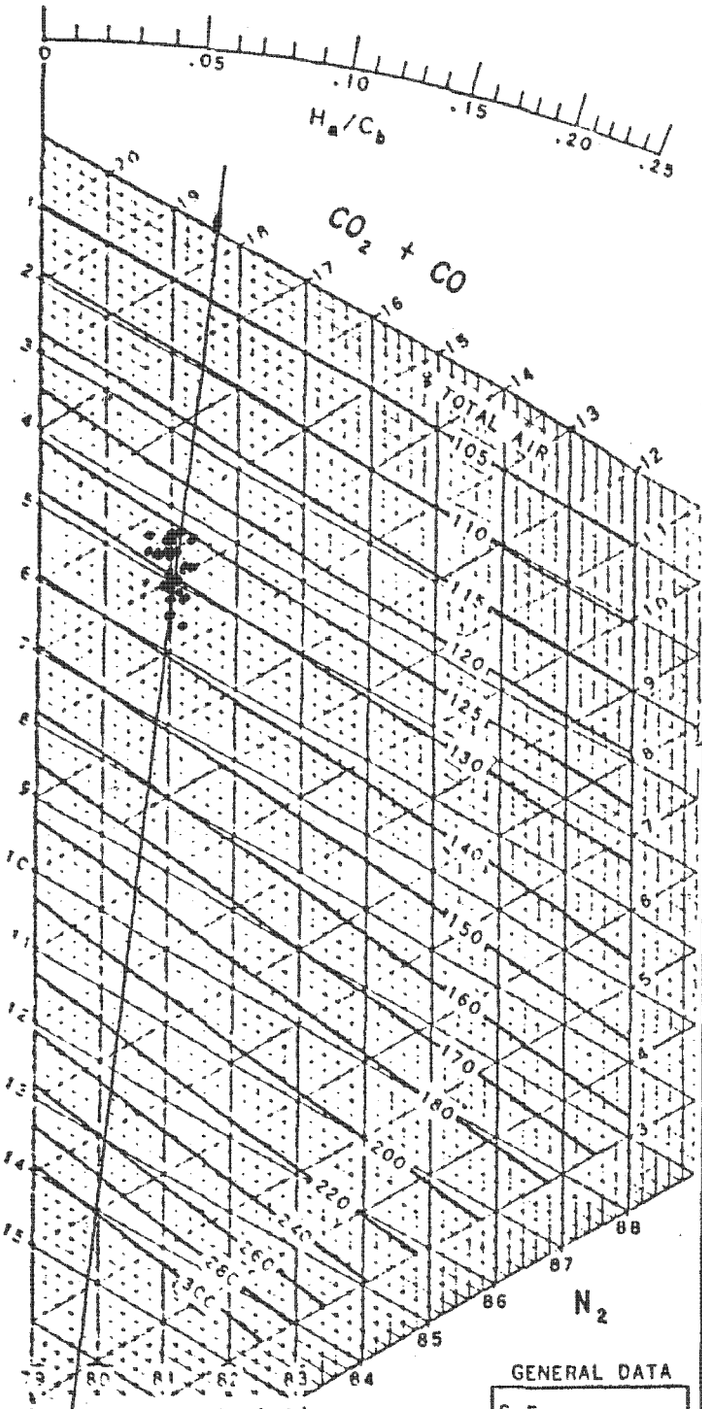

TIME	LOCATION	CO_2	$+ O_2$	+ CO	O_2	CO		BY*
1000	EA 7	14.5	19.0		4.5			JR
1006	EA 6	14.6	19.2		4.6			JR
1010	EA 5	14.5	18.2		4.7			JR
1013	EA 4	14.3	19.0		4.7			JR
1017	EA 3	14.6	19.3		4.7			JR
1020	EA 2	14.6	19.0		4.4			JR
1025	EA 1	14.5	19.3		4.8			JR
~~1035~~	~~EB 7~~	~~14.5~~	~~19.3~~		~~REPEAT~~			~~JR~~
1035	EB 7	13.9	18.0		5.1			JR
1040	EB 6	14.0	19.1		5.1			JR
1044	EB 5	13.8	18.9		5.1			JR
1050	EB 4	14.6	19.1		4.5			JR
1056	EB 3	14.0	18.9		4.9			JR
1100	EB 2	14.6	18.9		4.3			JR
1103	EB 1	13.2	18.8		5.6			JR
~~1111~~	~~EC 7~~	~~13.6~~	~~18.4~~		~~4.8~~	~~REPEAT PROBE BLOCKED~~		~~JR~~
1126	EC 7	13.4	18.9		5.5			JR
1129	EC 6	14.0	18.9		4.9			JR
1132	EC 5	14.0	19.1		5.1			JR
1134	EC 4	13.7	19.0		5.3			JR
1138	EC 3	13.7	18.9		5.2			JR
1141	EC 2	14.1	18.8		4.7			JR
1144	EC 1	14.6	19.1		4.5			JR
1148	ED 7	14.4	18.8		4.4			JR
1151	ED 6	14.4	19.0		4.6			JR
1154	ED 5	14.0	18.9		4.9			JR
1157	ED 4	14.0	18.7		4.7			JR
1201	ED 3	14.1	19.0		4.9			JR
1204	ED 2	14.6	19.4		4.8			JR
1208	ED 1	14.4	19.1		4.7			JR
		CHANGED		ORSAT		CHEMICALS		
		*	JR - JOHN ROSS					

GENERAL DATA

S.F.	
A.F.	

FUEL ANALYSIS

H	
O	
C	
BTU/LB	
H_a/C	

Uncorrected Loss % = $\left(1 - \frac{H_a}{C_b}\frac{C}{H}\right)$ Factor Btu lb.

Where

$\frac{H_a}{C_b}$ is from gas analysis

$\frac{H}{C}$ Btu lb is from coal analysis

Note: For complete uniform combustion, all points should lie along straight line drawn through pivot point

SUBJECT: BAGHOUSE GAS INLET - EAST	FILE NO.	THE BABCOCK & WILCOX CO. RESEARCH LABORATORY ALLIANCE, OHIO
	BY	
	DATE 6/25/87	
PROBE # E-45	REV.	DRAWING NO. PAGE 1 OF 5

START TIME 1000

FINISH TIME 1100

IP14_001476

RD 26

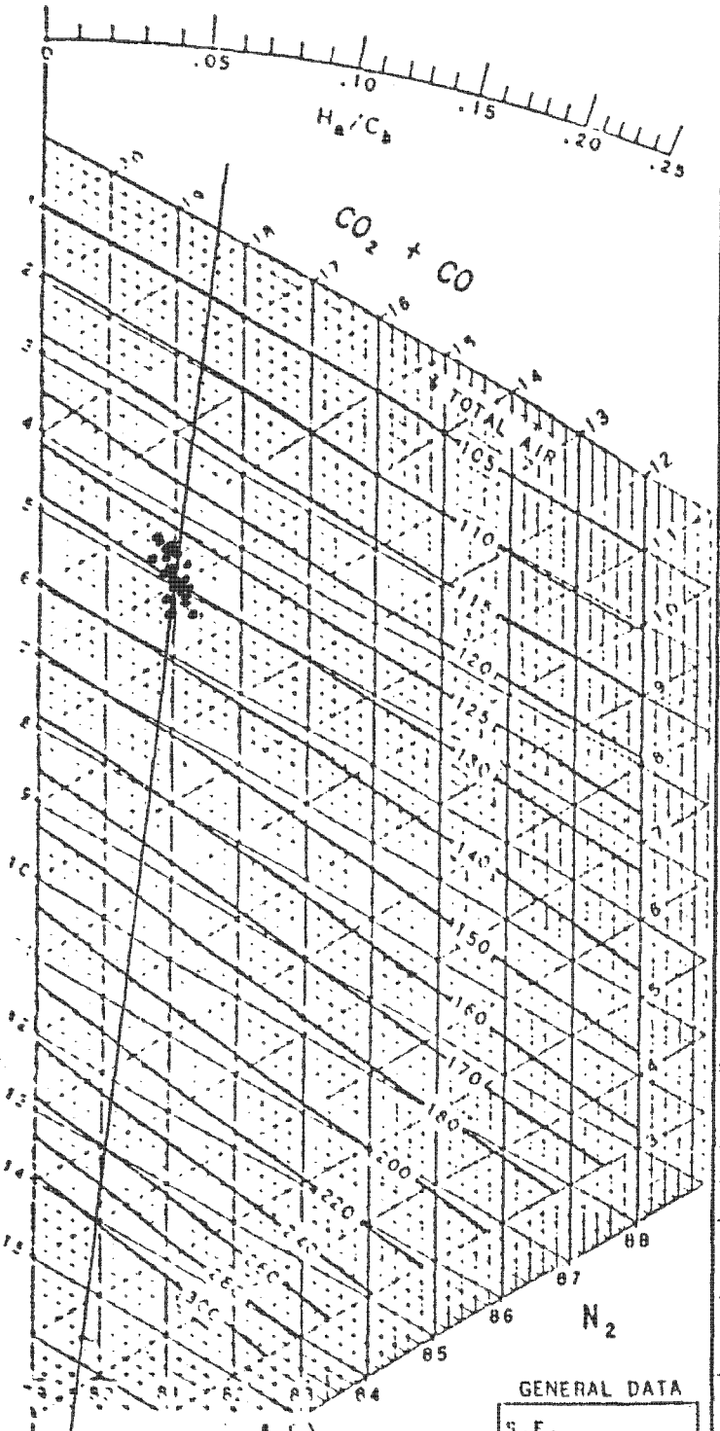

TIME	LOCATION	CO_2	$+ O_2$	$+ CO$	O_2	CO	[illegible]	BY*
1225	EE 7	14.6	19.4		4.8			JR
1230	EE 6	14.0	18.9		4.9			JR
1234	EE 5	14.6	19.2		4.6			JR
1237	EE 4	13.9	18.8		4.9			JR
1240	EE 3	14.2	19.0		4.8			JR
1243	EE 2	14.2	18.8		4.6			JR
1248	EE 1	14.5	18.9		4.4			JR
1300	EF 7	14.6	19.2		4.6			JR
1306	EF 6	14.3	19.1		4.8			JR
1310	EF 5	14.2	19.1		4.9			JR
1314	EF 4	14.2	18.9		4.7			JR
1322	EF 3	14.1	19.0		4.9			JR
1327	EF 2	14.7	19.3		4.6			JR
1332	EF 1	14.4	18.9		4.5			JR
1340	EG 7	13.9	18.9		5.0			JR
1345	EG 6	13.9	19.1		5.2			JR
1349	EG 5	14.0	19.0		5.0			JR
1354	EG 4	13.7	18.9		5.2			JR
1359	EG 3	14.0	18.8		4.8			JR
1403	EG 2	14.2	18.9		4.7			JR
1406	EG 1	14.6	19.2		4.6			JR
1410	EH 7	13.8	18.9		5.1			JR
1416	EH 6	14.0	18.9		4.9			JR
1423	EH 5	13.4	18.6		5.2			JR
1427	EH 4	14.8	19.3		4.5			JR
1430	EH 3	13.6	19.0		5.4			JR
1435	EH 2	14.6	19.1		4.5			JR
1440	EH 1	14.6	19.1		4.5			JR

* JOHN ROSS - JR

GENERAL DATA

S.F.

A.F.

FUEL ANALYSIS

H

O

C

BTU/LB

H_a/C

SUBJECT

BAGHOUSE GAS INLET - EAST

PROBE # E-45

FILE NO.

BY

DATE 6/25/87

REV.

THE BABCOCK & WILCOX CO.
RESEARCH LABORATORY
ALLIANCE, OHIO

DRAWING NO. PAGE 2 OF 5

START TIME 1000

FINISH TIME [illegible]

IP14_001477

Babcock & Wilcox
GENERAL CALCULATIONS

TAP	POINT	STATIC IN.	TEMP.	ΔP IN.	ANGLE (DEGREE)	DATA BY *	LOCATION (REMARKS)
EA	7	-8.0	306	0.81	25	KR DC	1000
EA	6	-8.1	307	0.50	18	KR DC	1006
EA	5	-8.1	308	0.34	30	KR DC	1010
EA	4	-8.2	307	0.86	22	KR DC	1013
EA	3	-8.2	311	0.24	22	KR DC	1017
EA	2	-8.2	314	0.72	25	KR DC	1020
EA	1	-8.1	317	0.60	18	KR DC	1025
EB	7	-8.2	305	0.51	25	KR DC	1035
EB	6	-8.2	307	0.34	30	KR DC	1040
EB	5	-8.2	313	0.31	20	KR DC	1044
EB	4	-8.2	310	0.19	20	KR DC	1050
EB	3	-8.2	319	0.49	0	KR DC	1056
EB	2	-8.2	318	0.23	0	KR DC	1100
EB	1	-8.2	319	0.31	20	KR DC	1103
EC	7	-8.3	319	0.60	0	KR DC	1111 ORSAT HOLE
EC	6	-8.4	327	0.50	0	KR DC	1129 PLUGGED - HAD TO PULL + BLOW OUT
EC	5	-8.4	330	0.55	0	KR _	1132
EC	4	-8.4	327	0.62	10	KR _	1134
EC	3	-8.3	330	0.39	20	KR _	1138
EC	2	-8.4	326	0.39	0	KR _	1141
EC	1	-8.3	326	0.50	0	KR _	1144

* KR - KEVIN KEDINGER
DC DENNY

BAGHOUSE GAS INLET - EAST
PROBE # E-45

VPAS # 100-3
MINCMCTE # 4160044

6/25/87

START TIME 1000 FINISH 1144C

Babcock & Wilcox

GENERAL CALCULATIONS

TAP	POINT	STATIC IN.	TEMP.	ΔP IN.	ANGLE (DEGREE)	DATA BY *	LOCATION (REMARKS)
ED	7	-8.4	313	0.64	10	KR	1148
ED	6	-8.4	348	0.55	25	KR	1151
ED	5	-8.3	351	0.50	25	KR	1154
ED	4	-8.2	333	0.54	10	KR	1157
ED	3	-8.3	324	0.60	20	KR	1201
ED	2	-8.4	319	0.63	20	KR	1204
ED	1	-8.3	320	0.76	20	KR	1208
							CHANGED ORSAT CHEMICALS
EE	7	-8.2	320	0.62	10	KR	1225
EE	6	-8.3	347	0.55	5	KR	1230
EE	5	-8.3	344	0.56	10	KR	1234
EE	4	-8.3	344	0.58	20	KR	1237
EE	3	-8.4	344	0.58	15	KR	1240
EE	2	-8.3	344	0.56	10	KR	1243
EE	1	-8.2	344	0.51	0	KR	1248
EF	7	-8.2	324	0.53	0	KR	1300
EF	6	-8.2	341	0.22	10	KR	1306
EF	5	-8.2	346	0.47	5	KR	1310 BLEW OUT VELOCITY PRESSURE LINE
EF	4	-8.2	325	0.42	0	KR	1314
EF	3	-8.2	295	0.54	10	KR	1322
EF	2	-8.2	304	0.46	10	KR	1327
EF	1	-8.2	324	0.51	0	KR	1332
					* KR	KEVIN KEDINGER	

BAGHOUSE GAS INLET - EAST

PROBE # E-45

VPAS # 100-3
MINIMICE # 41600441

6/25/87

IP14_001479

Babcock & Wilcox
GENERAL CALCULATIONS

TAP	POINT	STATIC IN.	TEMP.	ΔP IN.	ANGLE (DEGREE)	DATA BY *	LOCATION (REMARKS)
EG	7	-8.2	324	0.50	5	KR	1340
EG	6	-8.2	343	0.42	5	KR	1345
EG	5	-8.2	316	0.44	0	KR	1349 REPEATED ORSAT POINT
EG	4	-8.2	294	0.84	10	KR	1354
EG	3	-8.3	292	0.46	10	KR	1359 BLEW OUT VELOCITY PRESS LINE
EG	2	-8.3	305	0.42	5	KR	1403
EG	1	-8.2	324	0.52	10	KR	1406
EH	7	-8.4	317	0.64	15	KR	1410
EH	6	-8.2	334	0.01	45	KR	1416
EH	5	-8.4	329	0.62	0	KR	1423
EH	4	-8.5	319	0.67	20	KR	1427
EH	3	-8.4	316	0.70	10	KR	1430
EH	2	-8.3	323	0.62	15	KR	1435
EH	1	-8.3	325	0.61	0	KR	1440

* KR KEVIN KEDINGER

BAGHOUSE GAS INLET - EAST.
PROBE # E-45

VPHS # 100-3
MINIMITE 4160014

6/25/87

START 1000 FINISH 1445 PAGE 5 OF 5

IP14_001480

RD 26

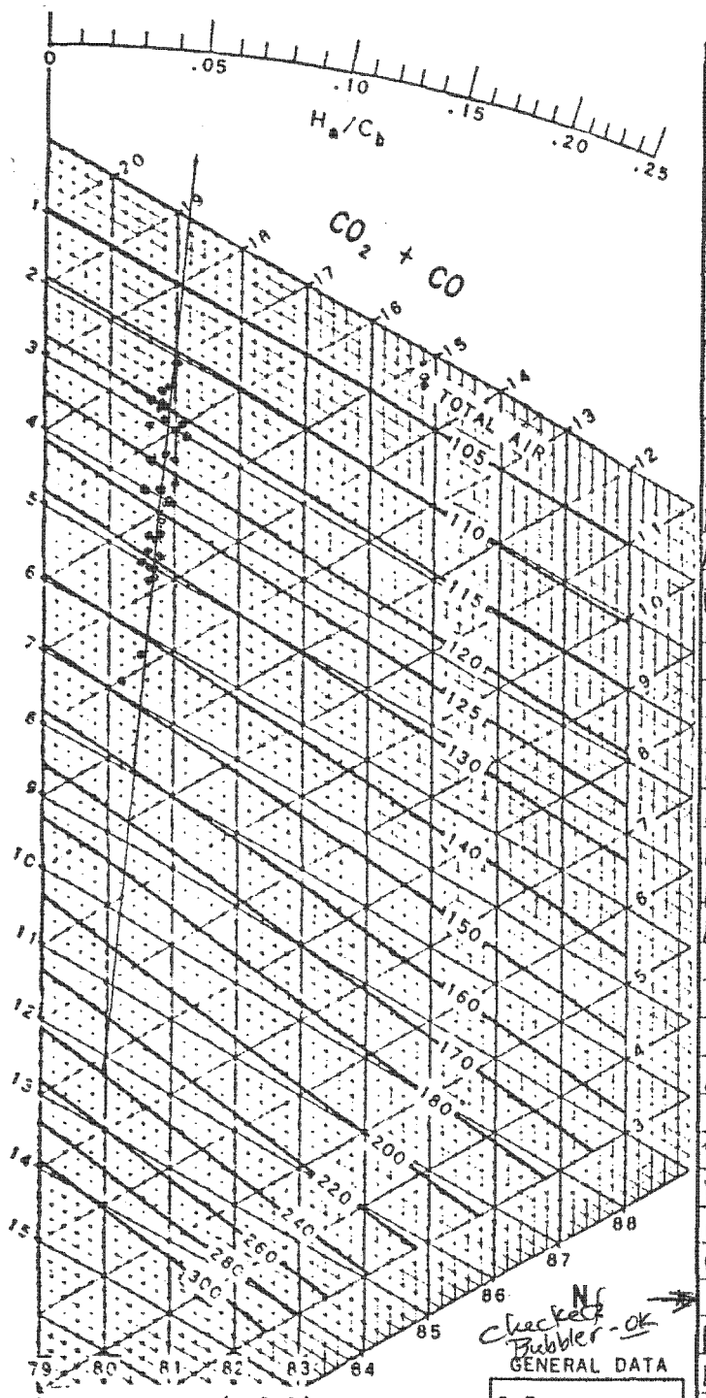

Checked Bubbler - OK

Embarrassed Loss $B = \left(1 - \frac{H_a C}{H_a C_b}\right) \frac{C \times 14500}{Btu/lb.}$

Where

$\frac{H_a}{C_b}$ is from gas analysis

$\frac{H_a}{C}$ Btu/lb. is from coal analysis

Note For complete uniform combustion, all points should lie along straight line drawn through pivot point

GENERAL DATA

S.F.
A.F.

FUEL ANALYSIS

H
O
C
BTU/LB
H_a/C

TIME	LOCATION	CO_2	$+O_2$	+CO	O_2	CO	% UNBURNED	BY
10:00	WA7	15.3	19.2	—	3.9	—	—	DRM
10:06	WA6	15.3	19.2	—	3.9	—	—	DRM
10:12	WA5	15.1	19.1	—	4.0	—	—	DRM
10:18	WA4	15.3	19.0	—	3.7	—	—	DRM
10:24	WA3	14.3	19.3	—	5.0	—	—	DRM
10:28	WA2	14.6	19.4	—	4.8	—	—	DRM
10:35	WA1	14.5	19.5	—	5.0	—	—	DRM
10:42	WB7	15.8	19.2	—	3.4	—	—	DRM
10:49	WB6	15.6	19.0	—	3.4	—	—	DRM
10:53	WB5	16.2	19.2	—	3.0	—	—	DRM
10:57	WB4	15.8	19.2	—	3.4	—	—	DRM
11:01	WB3	15.7	19.1	—	3.4	—	—	DRM
11:05	WB2	14.2	19.4	—	5.2	—	—	DRM
11:09	WB1	13.2	19.5	—	6.3	—	—	DRM
11:24	WC7	16.0	18.9	—	2.9	—	—	DRM
11:29	WC6	16.6	19.4	—	2.8	—	—	DRM
11:33	WC5	16.4	19.2	—	2.8	—	—	DRM
11:37	WC4	16.4	19.2	—	2.8	—	—	DRM
11:41	WC3	14.7	19.3	—	4.6	—	—	DRM
11:45	WC2	14.9	19.2	—	4.3	—	—	DRM
11:49	WC1	13.0	19.8	—	6.8	—	—	DRM
12:08	WD7	16.3	19.4	—	3.1	—	—	DRM
12:16	WD6	16.9	19.0	—	2.1	—	—	DRM
12:20	WD5	16.3	19.2	—	2.9	—	—	DRM
12:24	WD4	16.6	19.1	—	2.5	—	—	DRM
12:28	WD3	14.2	19.3	—	5.1	—	—	DRM
12:32	WD2	14.8	19.4	—	4.6	—	—	DRM
12:36	WD1	14.4	19.2	—	4.8	—	—	DRM
12:48	WE7	15.8	18.8	—	3.0	—	—	DRM
12:52	WE6	15.8	19.4	—	3.6	—	—	DRM
12:56	WE5	16.4	19.2	—	2.8	—	—	DRM
1:00	WE4	16.6	19.2	—	2.6	—	—	DRM
1:04	WE3	14.4	19.4	—	5.0	—	—	DRM
1:08	WE2	14.7	19.2	—	4.5	—	—	DRM
1:03	WE1	15.4	19.4	—	4.0	—	—	DRM

Continued on next page

SUBJECT Economizer Outlet, West End
Probe # E43 Page 1 of 2
Start Time: 10:00
Finish Time: 2:38

FILE NO.
BY DRMiers
DATE 6/25/87
REV.

THE BABCOCK & WILCOX CO.
RESEARCH LABORATORY
ALLIANCE, OHIO

DRAWING NO.

IP14_001481

RD 26

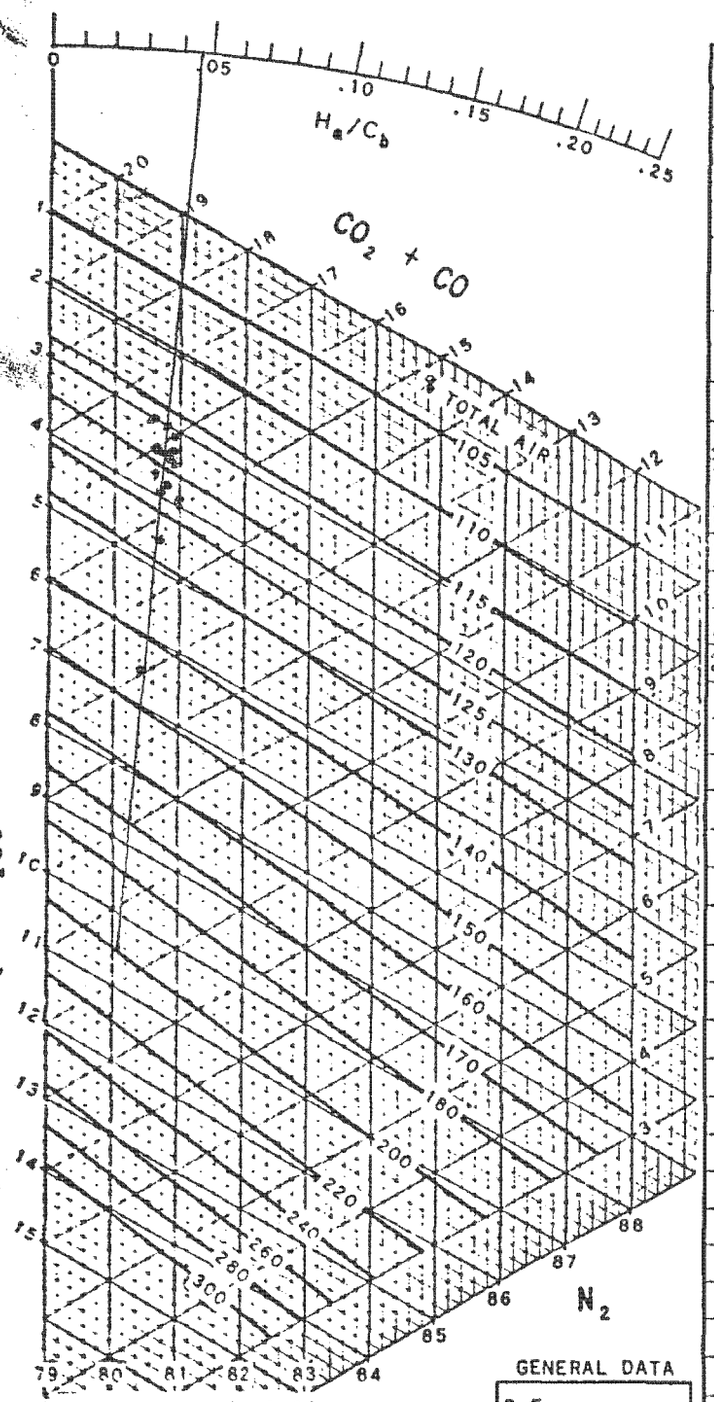

TIME	LOCATION	CO_2	$+O_2$	+CO	O_2	CO	% UNBURNED	BY
1:30	WF7	15.8	19.1	—	3.3	—	—	DRM
1:34	WF6	15.7	19.4	—	3.7	—	—	DRM
1:38	WF5	16.4	19.4	—	3.0	—	—	DRM
1:42	WF4	15.9	19.3	—	3.4	—	—	DRM
1:46	WF3	16.0	19.1	—	3.1	—	—	DRM
1:50	WF2	15.6	19.1	—	3.5	—	—	DRM
1:54	WF1	16.2	19.2	—	3.0	—	—	DRM
2:12	WG7	15.1	19.0	—	3.9	—	—	DRM
2:16	WG6	15.4	19.3	—	3.9	—	—	DRM
2:20	WG5	15.8	19.2	—	3.4	—	—	DRM
2:24	WG4	15.4	19.2	—	3.8	—	—	DRM
2:28	WG3	16.0	19.4	—	3.4	—	—	DRM
2:32	WG2	14.7	19.3	—	4.6	—	—	DRM
2:36	WG1	13.1	19.6	—	6.5	—	—	DRM

Unburned Loss % = $\left(1 - \frac{H_a \cdot C}{H_a \cdot C_b}\right) \frac{C \times 14500}{\text{Btu/lb.}}$

Where

$\frac{H_a}{C_b}$ is from gas analysis

$\frac{H_a}{C}$ Btu lb is from coal analysis

Note: For complete uniform combustion, all points should lie along straight line drawn through pivot point

GENERAL DATA

S.F.
A.F.

FUEL ANALYSIS

H
O
C
BTU/LB
H_a/C

SUBJECT Economizer Outlet West End	FILE NO.	THE BABCOCK & WILCOX CO. RESEARCH LABORATORY ALLIANCE, OHIO
Probe #E43 Page 2 of 2	BY DRMiers	
Start Time 10:00	DATE 6/25/87	
Finish Time 2:38	REV.	DRAWING NO.

IP14_001482

PG-1979-1

Babcock & Wilcox
GENERAL CALCULATIONS Probe #E43

AP	POINT	STATIC IN.	TEMP.	ΔP IN.	ANGLE (DEGREE)	DATA BY	LOCATION (REMARKS)
WA	7	-3.4	739.0	0.245	-30	PLK	1000
WA	6	-3.3	730.2	0.315	-20	PLK	1005
WA	5	-3.2	726.0	0.346	-35	PLK	1011
WA	4	-3.3	728.8	0.333	-35	PLK	1017
WA	3	-3.4	739.4	0.040	0	PLK	1022
WA	2	-3.5	743.6	0.039	-5	PLK	1028
WA	1	-3.6	731.0	0.039	0	PLK	1033
WB	7	-3.4	736.2	0.266	-25	EDD	1042
WB	6	-3.6	735.8	0.324	-20	EDD	1048
WB	5	-3.3	735.4	0.329	-25	EDD	1052
WB	4	-3.5	741.6	0.227	-25	EDD	1058
WB	3	-3.4	745.6	0.041	-10	PLK	1104
WB	2	-3.5	745.6	0.041	+5	PLK	1109
WB	1	-3.3	712.2	0.041	0	PLK	1114
WC	7	-3.3	743.4	0.312	-10	PLK	1124
WC	6	-3.2	745.0	0.275	-20	PLK	1129
WC	5	-3.3	749.6	0.258	-25	PLK	1134
WC	4	-3.3	744.6	0.342	-35	PLK	1139
WC	3	-3.4	758.2	0.295	-20	PLK	1144
WC	2	-3.4	751.2	0.060	-10	PLK	1159
WC	1	-3.3	722.4	0.041	0	PLK	1203
WD	7	-3.2	743.2	0.346	0	PLK	1207
WD	6	-3.3	739.0	0.273	-20	PLK	1213

CUSTOMER: Intermountain Power
FILE NO:
SUBJECT: Air Heater Performance Test
PREPARED BY: DCS/DRM/PLK
DATE: 6-25-87

R. 1 of 2

IP14_001483

PG-1979-1

Babcock & Wilcox
GENERAL CALCULATIONS

Probe # E 43

AP	POINT	STATIC IN.	TEMP.	ΔP IN.	ANGLE (DEGREE)	DATA BY	LOCATION (REMARKS)
WD	5	-3.3	738.8	0.288	-40	PLK	[redacted] 1219
WD	4	-3.2	750.8	0.308	-30	PLK	1224
WD	3	-3.3	759.4	0.383	-20	PLK	1229
WD	[redacted]2	-3.3	757.0	0.092	-25	PLK	1233
WD	1	-3.4	743.2	0.051	0	PLK	1239
WE	7	-3.2	741.4	0.312	-5	PLK	1248
WE	6	-3.1	740.6	0.258	-20	PLK	1253
WE	5	-3.1	737.2	0.240	-25	PLK	1258
WE	4	-3.1	746.4	0.366	-15	PLK	1304
WE	3	-3.3	758.2	0.398	-10	PLK	1309
WE	2	-3.5	757.0	0.082	-10	PLK	1315
WE	1	-3.3	756.0	0.053	-5	PLK	1321
WF	7	-3.4	741.6	0.126	0	PLK	1330
WF	6	-3.3	746.6	0.201	-30	PLK	1335
WF	5	-3.3	740.8	0.258	-20	PLK	1340
WF	4	-3.5	746.8	0.358	-10	PLK	1345
WF	3	-3.4	758.2	0.385	0	PLK	1350
WF	2	-3.5	756.2	0.180	0	PLK	1355
WF	1	-3.6	749.0	0.051	-5	PLK	[redacted] 1402
WG	7	-3.4	756.8	0.151	-30	PLK	1413
WG	6	-3.3	757.6	0.278	-20	PLK	1418
WG	5	-3.5	753.0	0.273	-5	PLK	1423
WG	4	-3.4	750.4	0.344	-5	PLK	1428

CUSTOMER: Intermountain Power

FILE NO:

SUBJECT: Air Heater Performance Test

PREPARED BY: DRM/DCS/PLK

DATE: 6-25-87

PG-1979 1

Babcock & Wilcox
GENERAL CALCULATIONS

Probe # E43

TAP	POINT	STATIC IN.	TEMP.	ΔP IN.	ANGLE (DEGREE)	DATA BY	LOCATION (REMARKS)
WG	3	-3.5	758.8	0.493	-15	PLK	1431
WG	2	-3.4	758.4	0.105	0	PLK	1435
WG	1	-3.4	706.8	0.051	+5	PLK	1442

CUSTOMER: Intermountain Power

FILE NO:

SUBJECT: Air Heater Performance Test

PREPARED BY: DCS/DRM/PLK

DATE: 6-25-87

Pg 3 of 3

IP14_001485

RD 26

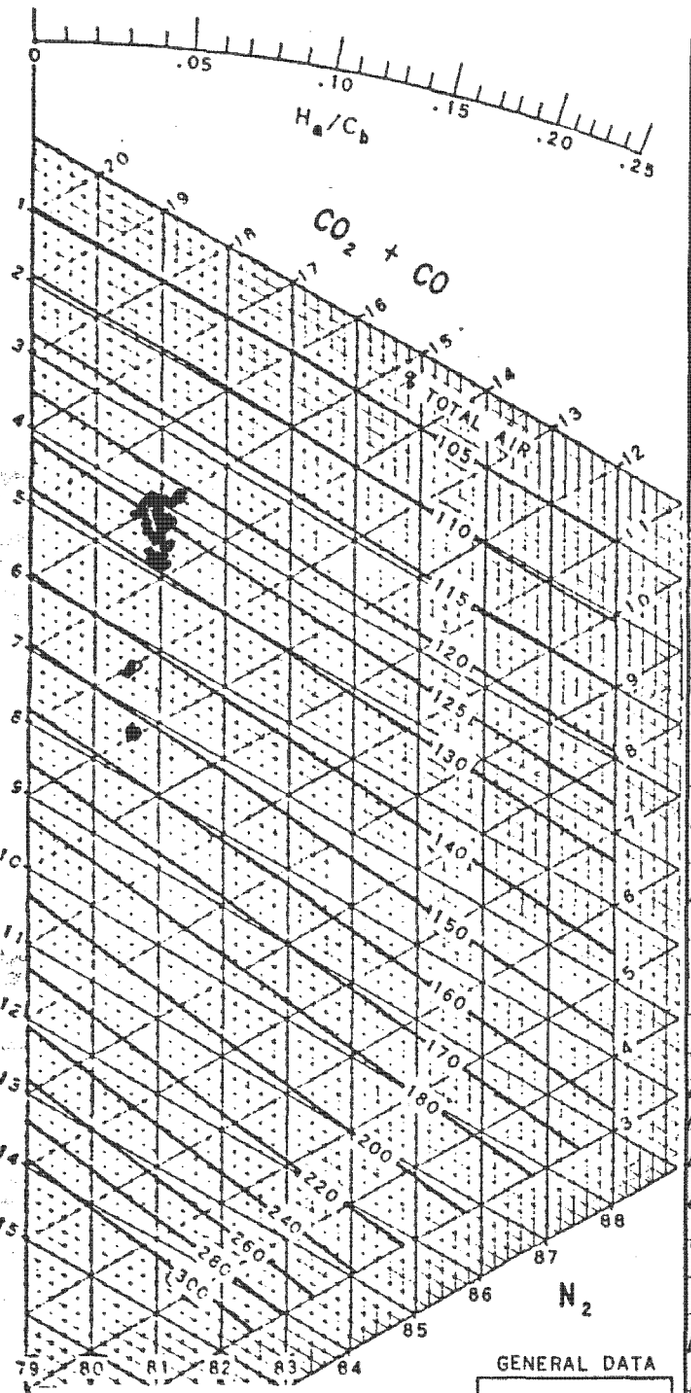

TIME	LOCATION	CO_2	$+O_2$	$+CO$	O_2	CO	% UNBURNED	BY
1000	WN7	14.8	19.0	—	4.2	—	—	MS
1005	WN6	15.2	19.4	—	4.2	—	—	MS
1010	WN5	14.9	19.2	—	4.3	—	—	MS
1015	WN4	14.2	19.2	—	5.0	—	—	MS
1020	WN3	14.5	19.2	—	4.7	—	—	MS
1025	WN2	14.7	19.2	—	4.5	—	—	MS
1031	WN1	14.4	19.2	—	4.8	—	—	MS
—	—	—	—	—	—	—	—	—
1042	WM7	14.9	18.8	—	3.9	—	—	MS
1046	WM6	14.7	19.2	—	4.5	—	—	MS
1051	WM5	14.7	19.1	—	4.4	—	—	MS
1057	WM4	14.4	19.0	—	4.6	—	—	MS
1102	WM3	14.7	19.2	—	4.5	—	—	MS
1107	WM2	14.5	19.3	—	4.8	—	—	MS
1114	WM1	14.2	19.0	—	4.8	—	—	MS
—	—	—	—	—	—	—	—	—
1124	WL7	14.5	19.0	—	4.5	—	—	MS
1130	WL6	14.6	19.2	—	4.6	—	—	MS
1134	WL5	14.7	19.2	—	4.5	—	—	MS
1138	WL4	14.3	19.2	—	4.9	—	—	MS
1142	WL3	15.2	19.2	—	4.0	—	—	MS
1146	WL2	14.7	19.2	—	4.5	—	—	MS
1150	WL1	12.2	19.5	—	7.3	—	—	MS
—	—	—	—	—	—	—	—	—
1207	WK7	15.1	19.4	—	4.3	—	—	MS
1217	WK6	14.8	19.2	—	4.4	—	—	MS
1220	WK5	14.8	19.2	—	4.4	—	—	MS
1224	WK4	15.2	19.3	—	4.1	—	—	MS
1228	WK3	15.0	19.0	—	4.0	—	—	ED
1233	WK2	15.3	19.2	—	3.9	—	—	ED
1237	WK1	13.0	19.5	—	6.5	—	—	ED
—	—	—	—	—	—	—	—	—
1248	WJ7	14.9	18.6	—	3.7	—	—	MS
1252	WJ6	15.1	19.2	—	4.1	—	—	MS
1256	WJ5	15.0	19.2	—	4.2	—	—	MS
1300	WJ4	14.9	19.0	—	4.1	—	—	MS
1304	WJ3	14.8	19.0	—	4.2	—	—	MS
1309	WJ2	15.2	18.8	—	3.6	—	—	MS
1315	WJ1	12.1	19.4	—	7.3	—	—	MS

Unburned Loss % = $\left(1 - \frac{H_a/C}{H_a/C_b}\right) \frac{C \times 14500}{Btu/lb.}$

Where

$\frac{H_a}{C_b}$ is from gas analysis

$\frac{H_a}{C}$ Btu/lb is from coal analysis

Note: For complete uniform combustion, all points should lie along straight line drawn through pivot point

GENERAL DATA

S.F.
A.F.

FUEL ANALYSIS

H
O
C
BTU/LB
H_a/C

SUBJECT ECON WEST 1 of 2
PROBE E6
6/25/87

FILE NO.
BY
DATE
REV.

THE BABCOCK & WILCOX CO.
RESEARCH LABORATORY
ALLIANCE, OHIO

DRAWING NO.

IP14_001486

RD 26

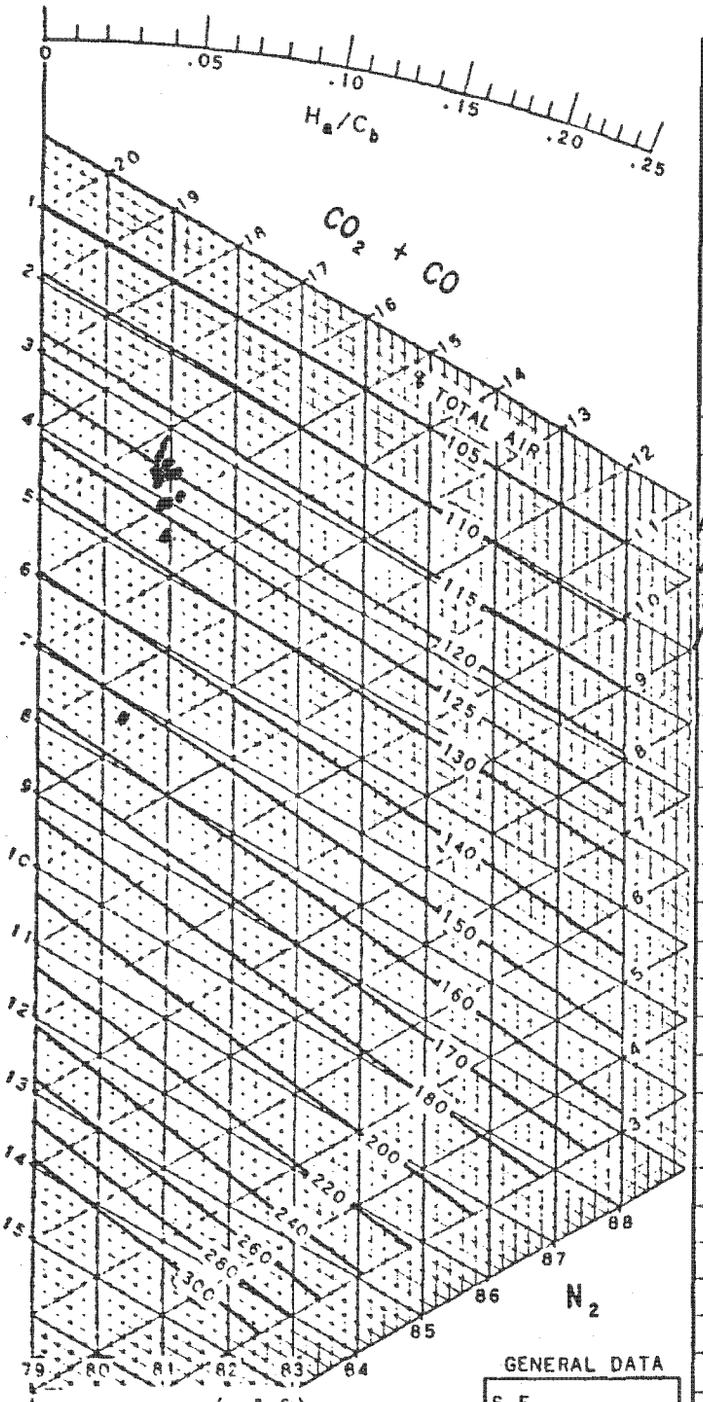

TIME	LOCATION	CO_2	$+O_2$	+CO	O_2	CO	% UNBURNED	BY
1330	WI 7	15.0	18.8	—	3.8	—	—	MS
1334	WI 6	15.1	19.2	—	4.1	—	—	MS
1343	WI 5	15.7	19.2	—	3.5	—	—	MS
1347	WI 4	15.8	19.2	—	3.4	—	—	MS
1351	WI 3	15.2	19.0	—	3.8	—	—	MS
1355	WI 2	14.4	18.7	—	4.3	—	—	MS
1400	WI 1	12.4	19.7	—	7.3	—	—	MS
—	—	—	—	—	—	—	—	—
1412	WH 7	14.8	18.6	—	3.8	—	—	MS
1416	WH 6	15.7	19.4	—	3.7	—	—	MS
1420	WH 5	15.8	19.2	—	3.4	—	—	MS
1424	WH 4	15.3	19.1	—	3.8	—	—	MS
1429	WH 3	15.4	18.8	—	3.4	—	—	MS
1434	WH 2	14.6	19.0	—	4.4	—	—	MS
1438	WH 1	11.0	19.9	—	8.9	—	—	MS

Unburned Loss % = $\left(1 - \frac{H_a/C}{H_a/C_b}\right) \frac{C \times 14500}{\text{Btu/lb.}}$

Where

$\frac{H_a}{C_b}$ is from gas analysis

$\frac{H_a}{C}$ Btu lb is from coal analysis

Note For complete uniform combustion, all points should lie along straight line drawn through pivot point

GENERAL DATA

S.F.
A.F.

FUEL ANALYSIS

H
O
C
BTU/LB
H_a/C

SUBJECT FLOW WEST 2 of 2
PROBE E6
6/25/87

FILE NO.
BY
DATE
REV.

THE BABCOCK & WILCOX CO.
RESEARCH LABORATORY
ALLIANCE, OHIO

DRAWING NO.

IP14_001487

Babcock & Wilcox
GENERAL CALCULATIONS

AI	POINT	STATIC IN.	TEMP.	ΔP IN.	ANGLE (DEGREE)	DATA BY	LOCATION (REMARKS)
WN	7	-2.70	751.8	.278	-20	RSH	
WN	6	-2.70	747.8	.419	-40	RSH	
WN	5	-2.75	758.3	.422	-50	RSH	
WN	4	-2.55	762.8	.163	-10	RSH	
WN	3	-2.65	756.6	.739	-15	RSH	
WN	2	-2.70	766.6	1.001	-10	RSH	
WN	1	-2.60	655.8	NO ZERO	-20	RSH	WILL NOT ZERO
—	—	—	—	—	—	—	
WM	7	-2.80	752.8	.266	-10	RSH	
WM	6	-2.90	689.2	.371	-35	RSH	
WM	5	-2.85	754.2	.444	-50	RSH	
WM	4	-2.75	758.0	.510	-45	RSH	
WM	3	-2.80	751.2	.600	-35	RSH	
WM	2	-2.70	760.2	NO ZERO	-20	RSH	WILL NOT ZERO
WM	1	-2.50	754.6	NO ZERO	0	RSH	WILL NOT ZERO
—	—	—	—	—	—	—	
WL	7	-2.70	749.4	.373	-20	RSH	
WL	6	-2.70	751.8	.376	-30	RSH	
WL	5	-2.75	751.6	.405	-50	RSH	
WL	4	-2.70	752.2	.419	-50	RSH	
WL	3	-2.80	749.2	.522	-45	RSH	
WL	2	-2.60	751.0	NO ZERO	-20	RSH	WILL NOT ZERO
WL	1	-2.45	730.4	NO ZERO	0	RSH	WILL NOT ZERO

ECON. WEST
PROBE E6
6/25/87

Babcock & Wilcox
GENERAL CALCULATIONS

TAP	POINT	STATIC IN.	TEMP.	ΔP IN.	ANGLE (DEGREE)	DATA BY	LOCATION (REMARKS)
WK	7	-2.65	755.8	.290	-30	RSH	
WK	6	-2.60	756.0	.312	-35	RSH	
WK	5	-2.55	753.6	.163	-20	RSH	
WK	4	-2.80	755.8	.429	-35	RSH	
WK	3	-2.70	757.8	.495	-25	RSH	
WK	2	-2.55	760.6	NO ZERO	0	RSH	WILL NOT ZERO
WK	1	-2.45	726.4	NO ZERO	0	RSH	WILL NOT ZERO
—	—	—	—	—	—	—	
WJ	7	-2.50	761.2	.280	-20	RSH	
WJ	6	-2.65	758.8	.356	-30	RSH	
WJ	5	-2.60	761.6	.383	-35	RSH	
WJ	4	-2.75	755.2	.439	-25	RSH	
WJ	3	-2.65	768.0	.510	-30	RSH	
WJ	2	-2.55	760.0	NO ZERO	0	RSH	WILL NOT ZERO
WJ	1	-2.35	750.6	NO ZERO	0	RSH	WILL NOT ZERO
—	—	—	—	—	—	—	
WI	7	-2.70	764.2	.324	-20	RSH	
WI	6	-2.80	764.2	.258	-5	RSH	
WI	5	-2.75	761.6	.346	-20	RSH	
WI	4	-2.80	764.6	.429	-30	RSH	
WI	3	-2.75	765.2	.539	-25	RSH	
WI	2	-2.60	763.6	NO ZERO	-20	RSH	WILL NOT ZERO
WI	1	-2.55	690.6	NO ZERO	-20	RSH	WILL NOT ZERO

ECON WEST
PROBE #6
6/25/87

PG-1979 1

Babcock & Wilcox
GENERAL CALCULATIONS

AP	POINT	STATIC IN.	TEMP.	ΔP IN.	ANGLE (DEGREE)	DATA BY	LOCATION (REMARKS)
WH	7	-2.65	761.8	.014	-15	RSH	
WH	6	-2.95	762.8	.317	-10	RSH	
WH	5	-2.80	756.8	.383	-15	RSH	
WH	4	-2.85	752.4	.451	-30	RSH	
WH	3	-2.85	771.0	.600	-40	RSH	
WH	2	-2.50	758.2	NO ZERO	20	RSH	WILL NOT ZERO
WH	1	-2.55	685.4	NO ZERO	20	RSH	WILL NOT ZERO

STATION: ECON WEST 6/25/87

FILE NO: 3 of 3

SUBJECT: PROBE E6

PREPARED BY:

DATE:

IP14_001490

6-25-87 Economizer Gas Outlet: (Delta, IPP) Team of JAW RAS VEV 1/2

RD 26

Unit #1 East Flue

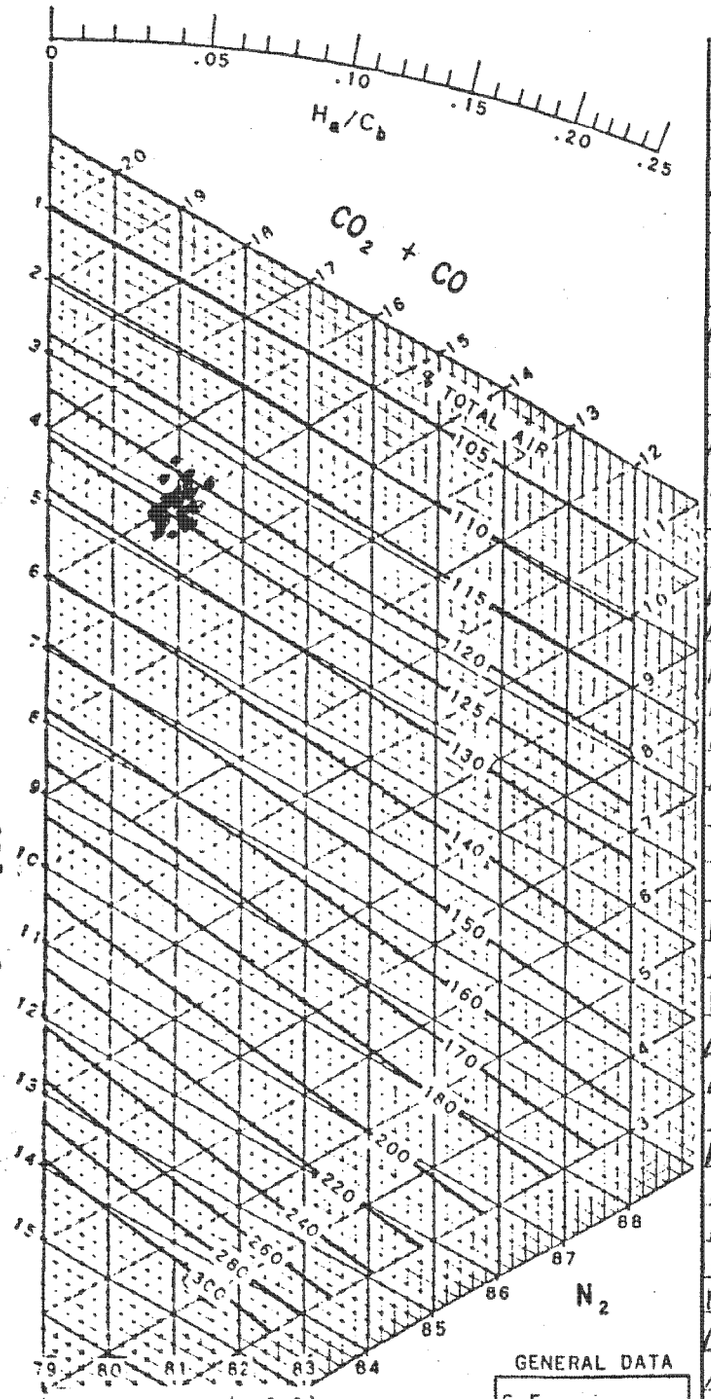

TIME	LOCATION	CO_2	+ O_2	+ CO	O_2	CO	% UNBURNED	BY
10:00	EA 7	14.9	19.0		4.1			RAS
10:05	EA 6	14.8	19.2		4.4			RAS
10:10	EA 5	14.8	19.2		4.4			RAS
	Changed Absorbent							
10:20	EA5	15.0	18.5		3.5			RAS
10:24	EA6	15.0	18.8		3.8			RAS
10:28	EA 7	15.1	19.0		3.9			RAS
10:32	EA4	15.0	19.0		4.0			RAS
10:36	EA3	14.8	18.8		4.0			RAS
10:40	EA2	15.2	19.0		3.8			RAS
10:43	EA1	15.0	19.0		4.0			RAS
10:46	EB7	14.8	19.0		4.2			RAS
10:50	EB6	15.0	19.0		4.0			RAS
10:53	EB5	15.0	19.0		4.0			RAS
10:58	EB4	14.8	18.8		4.0			RAS
11:02	EB3	15.1	18.9		3.8			RAS
11:06	EB2	15.0	19.0		4.0			RAS
11:10	EB 1	14.8	18.9		4.1			RAS
11:25	EC7	14.7	19.0		4.3			RAS
11:29	EC6	15.1	19.3		4.2			RAS
11:34	EC5	15.0	19.1		4.1			RAS
11:40	EC4	15.0	19.0		4.0			RAS
11:44	EC3	15.1	19.1		4.0			RAS
11:49	EC2	15.2	19.2		4.0			RAS
11:54	EC1	14.6	18.8		4.2			RAS
12:07	ED7	15.2	19.2		4.0			RAS
12:13	ED6	15.0	19.3		4.3			RAS
12:18	ED5	14.6	19.0		4.4			RAS
12:26	ED4	15.0	19.3		4.3			RAS
12:30	ED3	14.8	19.3		4.5			RAS
12:34	ED2	15.2	19.2		4.0			RAS
12:38	ED1	15.4	19.3		3.9			RAS
12:49	EE7	14.9	18.9		4.0			RAS
12:54	EE6	14.8	19.2		4.4			RAS
12:58	EE5	15.0	19.2		4.2			RAS
1:04	EE4	15.0	19.3		4.3			RAS
1:08	EE3	15.6	19.2		3.6			RAS
1:13	EE2	15.6	19.2		3.6			RAS
1:17	EE1	15.6	19.2		3.6			RAS

Unburned Loss % = $\left(1 - \frac{H_a/C}{H_a/C_b}\right) \frac{C \times 14500}{Btu \cdot lb.}$

Where

$\frac{H_a}{C_b}$ is from gas analysis

$\frac{H_a}{C}$ Btu/lb. is from coal analysis

Note: For complete uniform combustion, all points should lie along straight line drawn through pivot point

GENERAL DATA

S.F.
A.F.

FUEL ANALYSIS

H
O
C
BTU/LB
H_a/C

SUBJECT Economizer Gas Outlet East Flue Delta, IPP 6-25-87 Unit 1 Team of JAW RAS, VEV page 1 of

FILE NO.

BY JAW

DATE 6-25-87

REV.

THE BABCOCK & WILCOX CO.
RESEARCH LABORATORY
ALLIANCE, OHIO

DRAWING NO.

IP14_001491

6-25-87 Economizer Gas Outlet (Delta IPP) Team of JAW RAS VKU 2/2

RD 26

Unit #1 East Flue

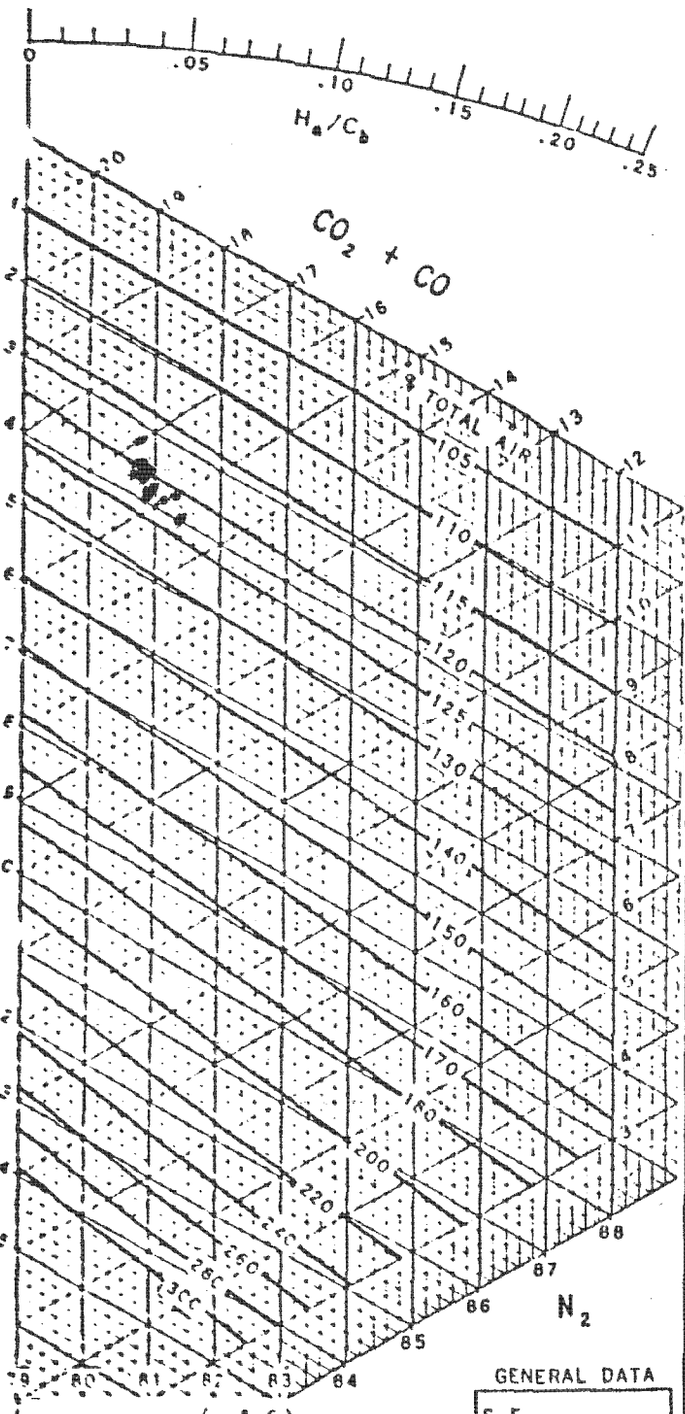

TIME	LOCATION	CO_2	$+ O_2$	$+ CO$	O_2	CO	% UNBURNED	BY
1:30	EF7	14.6	18.6		4.0			RAS
1:36	EF6	15.4	19.2		3.8			RAS
1:42	EF5	15.4	19.3		3.9			RAS
1:46	EF4	15.5	19.3		3.8			RAS
1:50	EF3	15.5	19.3		3.8			RAS
1:54	EF2	15.5	19.1		3.6			RAS
1:58	EF1	15.4	19.2		3.8			RAS
2:13	EG7	15.0	18.9		3.9			RAS
2:17	EG6	15.2	19.1		3.9			RAS
2:21	EG5	15.8	19.4		3.6			RAS
2:25	EG4	15.6	19.2		3.6			RAS
2:30	EG3	16.0	19.2		3.2			RAS
2:34	EG2	15.0	18.8		3.8			RAS
2:38	EG1	15.6	19.2		3.6			RAS

Unburned Loss $Q = \left(1 - \frac{H_a C}{H_a C_b}\right) \frac{C = 14500}{\text{Btu lb.}}$

Where

$\frac{H_a}{C_b}$ is from gas analysis

$\frac{H_a}{C}$ Btu lb is from coal analysis

Note: For complete uniform combustion, all points should lie along straight line drawn through pivot point

GENERAL DATA

S.F.	
A.F.	

FUEL ANALYSIS

H	
O	
C	
BTU/LB	
H_a/C	

SUBJECT Economizer Gas Outlet, East Flue Delta IPP 6-25-87 Unit 1 Team of JAW, RAS, VKU page 2 of 2

FILE NO.

BY JACO

DATE 6-25-87

REV.

THE BABCOCK & WILCOX CO.
RESEARCH LABORATORY
ALLIANCE, OHIO

DRAWING NO.

IP14_001492

PROBE # 28
VPDS3 # 132
MINIMITE # 4160002

Babcock & Wilcox
GENERAL CALCULATIONS

AT	POINT	STATIC IN.	TEMP.	ΔP IN.	ANGLE (DEGREE)	DATA BY	LOCATION (REMARKS)
ED7	7	-2.90	746.0	1.969	0	VKV	12:07
ED6	6	-3.00	741.8	1.381	0	VKV	12:13
ED5	5	-3.00	748.4	0.778	0	VKV	12:18
ED4	4	-3.00	756.2	0.161	0	VKV	12:26
ED3	3	-3.00	748.4	0.395	0	VKV	12:30
ED2	2	-3.00	760.2	0.752	0	VKV	12:34
ED1	1	-3.10	760.2	1.411	0	VKV	12:38
EE7	7	-2.90	769.0	1.777	+1	VKV	12:49
EE6	6	-2.90	761.4	1.616	0	VKV	12:54
EE5	5	-2.90	763.0	1.057	0	VKV	12:58
EE4	4	-2.90	766.6	0.139	0	VKV	1:04
EE3	3	-3.00	761.6	0.207	0	VKV	1:08
EE2	2	-3.00	772.2	0.581	-10	VKV	1:13
EE1	1	-3.00	759.4	1.074	0	VKV	1:17
EF7	7	-3.00	760.2	0.297	+5	VKV	1:30
EF6	6	-3.10	760.6	0.271	0	VKV	1:36
EF5	5	-3.10	766.2	0.100	0	VKV	1:42
EF4	4	-3.10	766.0	0.256	0	VKV	1:46
EF3	3	-3.10	764.0	0.478	0	VKV	1:50
EF2	2	-3.30	763.8	0.625	-10	VKV	1:54
EF1	1	-3.30	756.0	1.211	0	VKV	2:00

EAST ECONOMIZER DUCT FACHITEIMER TRAVERSE
TEAM OF VKV, RAS, JAW
IPP #2 EAST 6/25/87

PROBE #28
VPAS3 #132
MINIMITE # 4160002

Babcock & Wilcox
GENERAL CALCULATIONS

AT	POINT	STATIC IN.	TEMP.	ΔP IN.	ANGLE (DEGREE)	DATA BY	LOCATION (REMARKS)
EA7	7	-3.00	710.2	0.434	+15	VKV	10:00 ORSAT
EA6	6	-2.80	712.2	0.300	+20	VKV	10:05 PROBLEMS
EA5	5	-2.80	722.4	0.180	+15	VKV	10:10
EA5	5	-3.00	731.8	0.095	+15	VKV	10:20
EA6	6	-3.20	731.4	0.227	+15	VKV	10:24
EA7	7	-3.10	730.8	0.311	+15	VKV	10:28
EA4	4	-3.10	734.4	0.390	+30	VKV	10:32
EA3	3	-3.20	737.4	0.075	+20	VKV	10:36
EA2	2	-3.10	738.4	0.680	+20	VKV	10:40
EA1	1	-3.20	746.8	0.940	+25	VKV	10:43
EB7	7	-3.10	735.6	0.788	+5	VKV	10:46
EB6	6	-3.10	734.4	0.615	+20	VKV	10:50
EB5	5	-3.10	736.2	1.255	+20	VKV	10:53
EB4	4	-3.10	737.2	0.940	+20	VKV	10:58
EB3	3	-3.00	739.0	0.229	+15	VKV	~~11:06~~ 11:02
EB2	2	-3.00	743.6	0.329	+15	VKV	~~11:10~~ 11:06
EB1	1	-3.20	750.6	0.742	+30	VKV	~~11:14~~ 11:10
EC7	7	-3.00	731.0	1.352	0	VKV	11:25
EC6	6	-3.00	731.0	0.986	0	VKV	11:29
EC5	5	-3.00	734.2	0.551	+15	VKV	11:34
EC4	4	-2.95	740.6	0.168	+15	VKV	11:40
EC3	3	-3.00	736.6	0.366	0	VKV	11:44
EC2	2	-3.00	746.0	0.919	+10	VKV	11:49
EC1	1	-3.00	736.0	1.281	0	VKV	11:54

EAST ECONOMIZER DUCT FACHHEIMER TRAVERSE
TEAM OF VKV, RAS, JAW
IPP #2 EAST 6/25/87

PROBE #28
VPAS 3 #132
MINIMITE # 4160002

Babcock & Wilcox
GENERAL CALCULATIONS

T P	POINT	STATIC IN.	TEMP.	ΔP IN.	ANGLE (DEGREE)	DATA BY	LOCATION (REMARKS)
EG7	7	-3.0	765.4	0.266	+10	VKV	2:13
EG6	6	-3.0	765.4	0.332	+10	VKV	2:17
EG5	5	-3.1	770.0	0.334	-5	VKV	2:21
EG4	4	-3.1	769.0	0.441	-5	VKV	2:25
EG3	3	-3.1	764.2	0.576	-5	VKV	2:30
EG2	2	-3.1	759.0	0.673	-5	VKV	2:34
EG1	1	-3.1	764.8	1.325	-20	VKV	2:38

ECON. ~~OUT~~ EAST DUCT FACTHEIMER TRAVERSE
~~PROBE 06~~ TEAM OF VKV, RAS, JAW
~~6/25/87~~ IPP #2 EAST 6/25/87

IP14_001495

RD 26

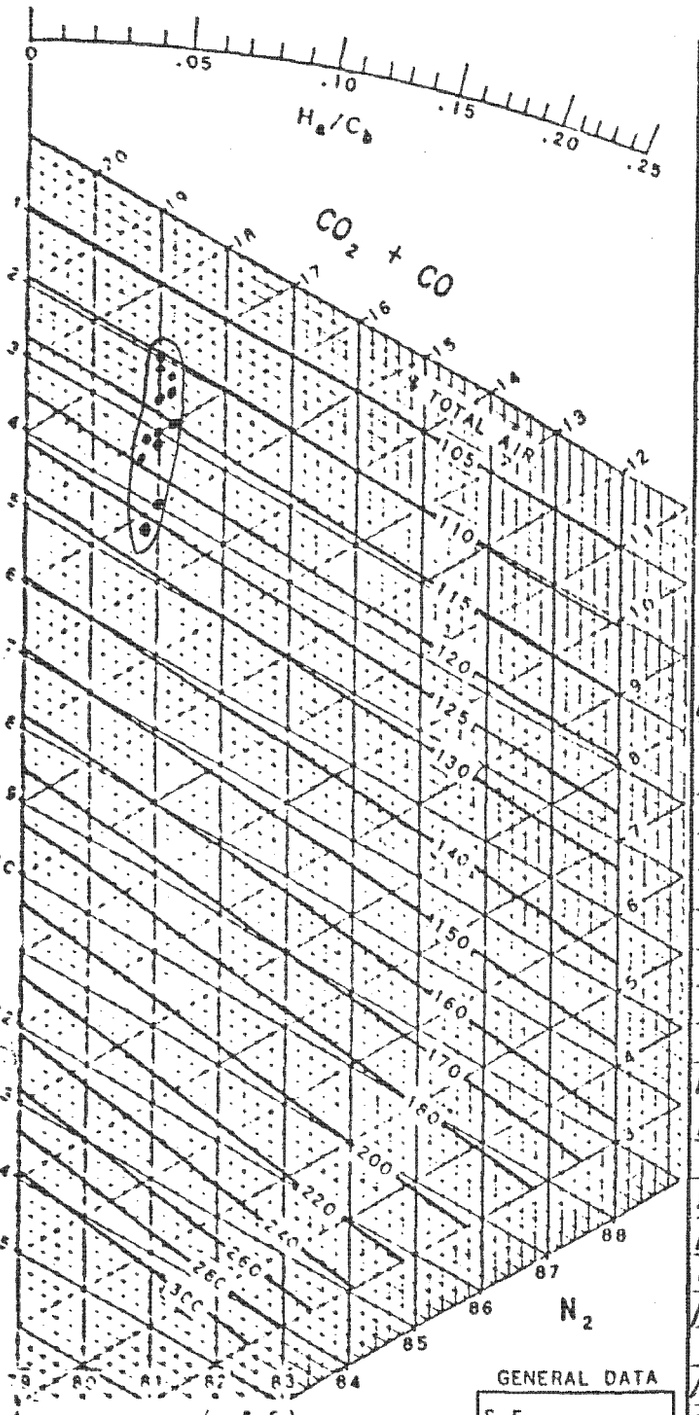

TIME	LOCATION	CO_2	$+O_2$	$+CO$	O_2	CO	% UNFIRED	BY
0923	ORSAT RECHARGED AND LEAK TESTED							
	OK ✓							
0952	EN7	16.0	18.8	—	2.8			BJJ
1000	— BEGIN TEST							
1004	EN7	16.0	18.8		2.8			BJJ
1007	EN6	16.0	19.2		3.2			BJJ
1010	EN5	16.4	19.2		2.8			BJJ
1013	EN4	16.4	18.8		2.4			BJJ
1016	EN3	16.8	19.2		2.4			BJJ
1020	EN2	16.4	19.0		2.6			BJJ
1023	EN1	16.0	19.2		3.2			BJJ
1047	EM7	16.2	19.0		2.8			BJJ
1051	EM6	15.8	19.4		3.6			BJJ
1056	EM5	16.6	20.6	①	4.0			BJJ
1100	EM4	16.6	19.0		3.4			BJJ
1106	EM3	16.4	19.0	②	2.6			BJJ
1113	EM2	16.4	19.0		2.6			BJJ
1116	EM1	15.0	19.0		4.0			BJJ
1103	EM5	16.4	19.0		2.6			BJJ
1100	EM3	16.8	19.0		2.2			BJJ
①	REPEATED DUE TO HIGH $CO_2 + O_2$							
②	REPEATED DUE TO FECHEIMER IN WRONG PLACE							
				O_2				
1128	EL7	15.4	19.0	3.6				BJJ
1131	EL6	16.0	19.2	3.2				BJJ
1134	EL5	15.8	19.0	3.2				BJJ
1137	EL4	16.2	19.0	2.8				BJJ
1141	EL3	16.6	18.8	2.2				BJJ
1144	EL2	16.6	19.0	2.4				BJJ
1147	EL1	14.8	19.2	4.4				BJJ
1213	EK7	16.0	19.0	3.0				BJJ
1217	EK6	15.6	19.0	4.4				BJJ
1220	EK5	16.0	19.2	3.2				BJJ
1225	EK4	16.4	19.0	2.6				BJJ
1228	EK3	17.0	19.0	2.0				BJJ
1233	EK2	15.8	19.0	3.2				BJJ
1237	EK1	16.4	19.0	2.6				BJJ

Unburned Loss $B = \left(1 - \frac{H_a C}{H_a C_b}\right) \frac{C = 14500}{Btu\ lb.}$

Where

$\frac{H_a}{C_b}$ is from gas analysis

$\frac{H_a}{C}$ Btu lb is from coal analysis

Note: For complete uniform combustion, all points should lie along straight line drawn through pivot point

GENERAL DATA

S.F.
A.F.

FUEL ANALYSIS

H
O
C
BTU/LB
H_a/C

SUBJECT DELTA, UTAH AIR HEATER TEST
ECONOMIZER OUTLET

FILE NO.
BY JANHORA
DATE 6-25-87
REV.

THE BABCOCK & WILCOX CO.
RESEARCH LABORATORY
ALLIANCE, OHIO

DRAWING NO.

PAGE 1 OF 2

IP14_001496

RD 26

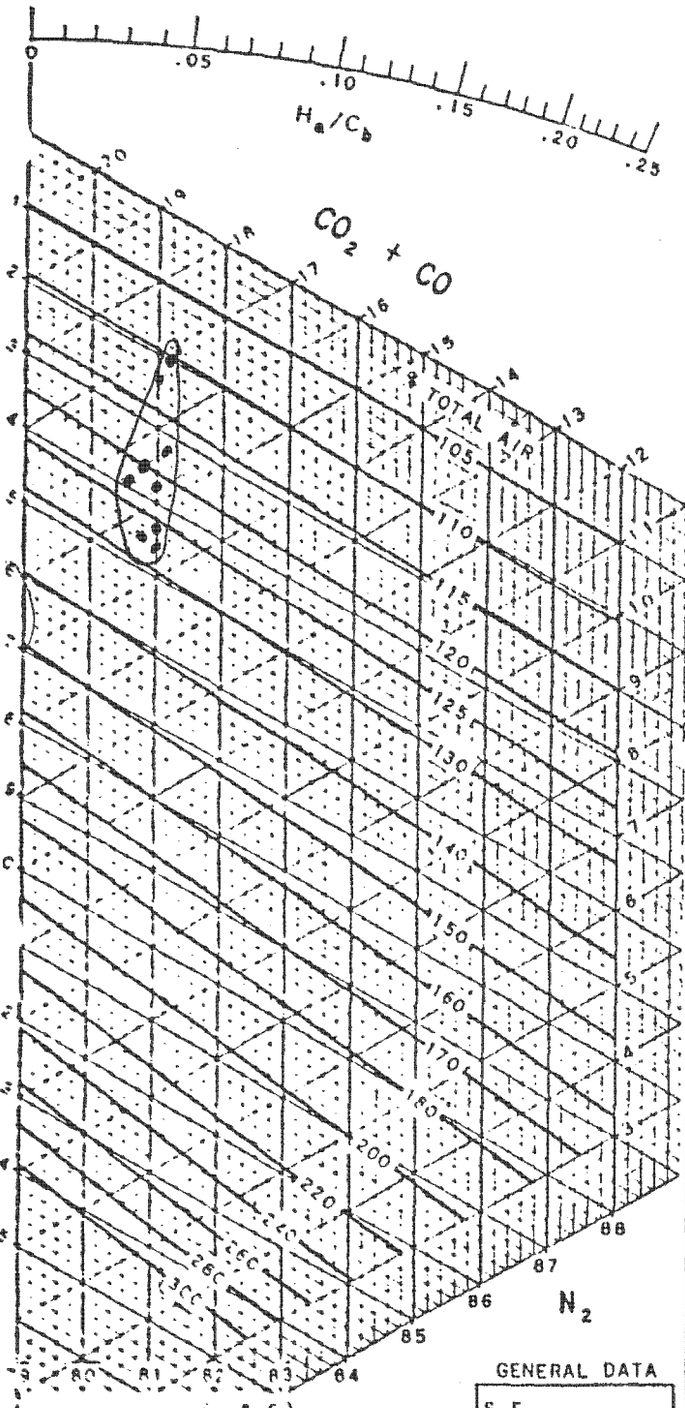

TIME	LOCATION	CO_2	+ O_2	+ CO	O_2	CO		BY
1254	EJ7	15.2	19.0		3.8			BJJ
1257	EJ6	15.6	19.2		3.6			BJJ
1301	EJ5	15.6	19.4		3.8			BJJ
1305	EJ4	15.6	18.8		3.2			BJJ
1310	EJ3	16.8	18.8		2.0			BJJ
1313	EJ2	16.2	19.0		2.8			BJJ
1318	EJ1	16.6	19.0		2.4			BJJ
1335	EI7	14.6	19.0		4.4			BJJ
1339	EI6	15.2	19.2		4.0			BJJ
1343	EI5	15.6	19.2		3.6			BJJ
1346	EI4	15.6	19.2		3.6			BJJ
1349	EI3	15.6	19.0		3.4			BJJ
1353	EI2	15.4	19.2		3.8			BJJ
1356	EI1	16.0	19.0		3.0			BJJ
1415	EH7	14.4	19.0		4.6			BJJ
1419	EH6	15.4	19.0		3.6			BJJ
1423	EH5	15.8	19.0		3.2			BJJ
1427	EH4	15.8	19.2		3.4			BJJ
1431	EH3	16.4	19.2		2.8			BJJ
1435	EH2	16.0	19.2		3.2			BJJ
1440	EH1	14.6	19.2		4.6			BJJ

Inferred Loss % = $\left(1 - \frac{H_a C}{H_a C_b}\right)$ C=18500 Btu/lb.

Where

$\frac{H_a}{C_b}$ is from gas analysis

$\frac{H_a}{C}$ Btu/lb is from coal analysis

Note: For complete uniform combustion, all points should lie along straight line drawn through pivot point

GENERAL DATA

S.F.
A.F.

FUEL ANALYSIS

H
O
C
BTU/LB
H_a/C

SUBJECT DELTA UTAH AIR HEATER TEST
ECONOMIZER OUTLET

FILE NO.
BY JAMURA
DATE 6-25-87
REV.

THE BABCOCK & WILCOX CO.
RESEARCH LABORATORY
ALLIANCE, OHIO

DRAWING NO.

PAGE 2 OF 2

IP14_001497

Babcock & Wilcox
GENERAL CALCULATIONS

PROBE TIP E8

1/3

TAP	POINT	STATIC IN.	TEMP.	ΔP IN.	ANGLE (DEGREE)	DATA BY	LOCATION (REMARKS)
EN	7	-2.8	748.0	.322	55 E	PC	1001
EN	6	-2.7	741.6	.473	55 E	PC	1005
EN	5	-2.7	735.6	.527	45E	PC	1008
EN	4	-2.6	724.0	.647	55 E	PC	1011
EN	3	-3.0	736.0	.061	30 W	PC	1014 swung around completely
EN	2	-3.1	740.2	.026	0	PC	1017 swung around completely
EN	1	-3.1	702.0	.024	45W	PC	1020
EM	7	-3.3	746.0	.485	0	PC	1043
EM	6	-3.4	747.4	.383	45 W	PC	1047
EM	5	-3.5	751.6	.205	45W	PC	1050
EM	4	-3.4	743.2	.275	45W	PC	1055 swung around completely
EM	5	-3.3	752.6	.349	55W	PC	1101 Retra #5
EM	*3	-3.4	745.4	.346	50W	PC	1104 → off line redo pt #
EM	~~2~~ 3 PC	-3.2	746.8	.778	50W	PC	1107
EM	2	-3.4	744.6	.874	30W	PC	1111 checked lines
EM	1	-3.4	~450	1.372	25W	PC	1114 seemed OK temp. jumping back 'but' temp
EL	7	-3.3	745.8	.217	40W	PC	1125
EL	6	-2.~~8~~7 PC	742.0	.383	30E	PC	1129
EL	5	-2.8	75~~4~~5.8	.502	40E	PC	1132
EL	4	-2.8	755.2	.576	40E	PC	1135
EL	3	-2.7	762.8	.622	60E	PC	1139
EL	2	-3.0	748.4	.009	60W	PC	1142 swung around completely
EL	1	-3.1	~665	.007	60W	PC	1145 swung around completely temp. jumpg from 400 → 670°

IPP

Fechheimer Traverse - Economizer Outlet P. Ch 6/25/87

IP14_001498

Babcock & Wilcox
GENERAL CALCULATIONS

PROBE TIP E8

TAP	POINT	STATIC IN.	TEMP.	ΔP IN.	ANGLE (DEGREE)	DATA BY	LOCATION (REMARKS)
EK	7	-2.8	733.8	.249	40E	PC	1211
EK	6	-2.7	733.4	.368	40E	PC	1214
EK	5	-2.8	747.4	.439	40E	PC	1217
EK	4	-2.5	763.4	.615	40E	PC	1221
EK	3	-2.6	764.4	.712	60E	PC	1225
EK	2	-3.0	755.6	.031	45E	PC	1228 swung completely around
EK	1	-3.0	754.2	.004	60E	PC	1233 swung completely around
EJ	7	-3.0	738.4	.095	40W	PC	1250 swung around completely
EJ	6	-2.9	736.2	.131	55W	PC	1253
EJ	5	-2.7	745.6	.400	60E	PC	1257
EJ	4	-2.6	765.4	.578	60E	PC	1301
EJ	3	-2.6	771.2	.686	60E	PC	1308
EJ	2	-3.2	761.2	.075	60E	PC	1311 swung completely around
EJ	1	-3.0	760.2	.007	70E	PC	1315 swung completely around

IPP

Rechheimer Traverse - Economizer Outlet | P. Chu | 6/25/87

IP14_001499

Babcock & Wilcox
GENERAL CALCULATIONS

PROBE TIP E8

TAP	POINT	STATIC IN.	TEMP.	ΔP IN.	ANGLE (DEGREE)	DATA BY	LOCATION (REMARKS)
EI	7	-2.9	750.8	.153	20E	PC	1335
EI	6	-2.8	752.2	.361	50E	PC	1338
EI	5	-2.9	753.8	.358	60E	PC	1341
EI	4	-2.8	768.4	.490	60E	PC	1343
EI	3	-2.8	764.0 (6 PC)	.683	40E	PC	1346
EI	2	-3.2	763.8	.109	30W	PC	1350 swung completely around
EI	1 (GNE)	-3.3	760.6	.041	0	PC	1353
EJ	7	-3.0	762.4	.236	60E	PC	1415
EJ	6	-2.9	768.2	.459	40E	PC	1418
EJ	5	-2.9	763.0	.429	55E	PC	1421
EJ	4	-2.8	774.0	.493	50E	PC	1424
EJ	3	-2.7	769.2	.698	50E	PC	1428
EJ	2	-3.4	766.6	.068	20E	PC	1431 swung cmpl around
EJ	1	-3.1	744.4	.046	40E	PC	1434

IPP

Fechheimer Traverse - Economizer Outlet P. Chu 10/25/87

IP14_001500

6-25-87

Babcock & Wilcox
GENERAL CALCULATIONS

PROBE E-27
SEC GAS IN
WBS

TAP	POINT	STATIC IN.	TEMP.	ΔP IN.	ANGLE (DEGREE)	DATA BY	LOCATION (REMARKS)
O	1	-3.5	750	.236	13	[illegible]	
	2	-3.6	753	.173	25	[illegible]	
	3	-3.8	752	.168	15	[illegible]	
	4	-3.8	752	.114	0	[illegible]	
	5	-3.7	755	.299	15	[illegible]	
	6	-3.7	751	.170	22	[illegible]	
	7	-3.6	745	.048	0	[illegible]	
A	1	-3.4	746	.236	10	[illegible]	
	2	-3.5	749	.214	15	[illegible]	
	3	-3.6	749	.136	3	[illegible]	
	4	-3.7	749	.133	0	[illegible]	
	5	-3.7	749	.173	10	[illegible]	
	6	-3.7	749	.151	10	[illegible]	
	7	-3.7	744	.043	0	[illegible]	

6-25-87

10:50

Babcock & Wilcox
GENERAL CALCULATIONS

PROBE E-27
SEC GAS IN
WEST

TAP	POINT	STATIC IN.	TEMP.	ΔP IN.	ANGLE (DEGREE)	DATA BY	LOCATION (REMARKS)
E	1	-3.7	750	0.297	10	MPH	
	2	-3.6	752	0.217	5	MPH	
	3	-3.7	752	0.241	5	MPH	
	4	-3.8	752	0.178	5	MPH	
	5	-3.9	752	0.056	5	MPH	
	6	-3.9	748	0.012	0	MPH	
	7	-3.9	743	0.004	0	MPH	
D	1	-3.4	753	0.266	5	MPH	
	2	-3.5	755	0.249	0	MPH	
	3	-3.5	760	0.229	7	MPH	
	4	-3.7	753	0.236	3	MPH	
	5	-3.7	751	0.092	6	MPH	
	6	-3.8	747	0.026	12	MPH	
	7	-3.8	743	0.007	0	MPH	
11:00							
C	1	-3.5	752	.273	10	[illegible]	
	2	-3.5	753	.168	10	[illegible]	
	3	-3.6	753	.217	10	[illegible]	
	4	-3.5	751	.183	5	[illegible]	
	5	-3.6	749	.161	10	[illegible]	
	6	-3.6	747	.053	10	[illegible]	
	7	-3.5	738	.007	0	[illegible]	
						[illegible]	

6-25-87

Babcock & Wilcox
GENERAL CALCULATIONS

PROBE E-27
SEC. GASIN WEST

TAP	POINT	STATIC IN.	TEMP.	ΔP IN.	ANGLE (DEGREE)	DATA BY	LOCATION (REMARKS)
H	1	-3.6	724	.163	0	[illegible]	
	2	-3.6	751	.341	25	[illegible]	
	3	-3.8	750	.224	15	[illegible]	
	4	-3.8	750	.166	5	[illegible]	
	5	-3.8	746	.170	3	[illegible]	
	6	-3.9	743	.029	13	[illegible]	
	7	-3.9	742	.063	50	[illegible]	
G	1	-3.6	749	.241	15	[illegible]	
	2	-3.6	753	.261	10	[illegible]	
	3	-3.6	752	.249	0	[illegible]	
	4	-3.7	752	.222	25	[illegible]	
	5	-3.7	748	.080	22	[illegible]	
	6	-3.9	745	.026	0	[illegible]	
	7	-3.8	738	.009	0	[illegible]	
10:45							
F	1	-3.6	752	0.290	23	MPH	
	2	-3.6	752	0.222	5	MPH	
	3	-3.8	751	0.244	5	MPH	
	4	-3.8	751	0.234	5	MPH	
	5	-3.9	747	0.083	11	MPH	
	6	-3.9	743	0.031	45	MPH	
	7	-3.8	~740	0.004	0	MPH	

6-25-87

Babcock & Wilcox

GENERAL CALCULATIONS

PROBE E-27

SEC. GAS IN WEST

TAP	POINT	STATIC IN.	TEMP.	ΔP IN.	ANGLE (DEGREE)	DATA BY	LOCATION (REMARKS)
K	1	-3.7	751	0.253	20	MPH	
	2	-3.7	747	0.283	15	MPH	
	3	-3.75	747	0.251	4	MPH	
	4	-3.8	746	0.287	9	MPH	
	5	-3.7	744	0.214	17	MPH	
	6	-3.8	742	0.156	25	MPH	
	7	-3.8	735	0.012	0	MPH	
10:30							
J	1	-3.8	752	0.268	10	MPH	
	2	-3.9	752	0.336	17	MPH	
	3	-3.8	747	0.241	10	MPH	
	4	-3.8	748	0.207	10	MPH	
	5	-3.8	747	0.200	20	MPH	
	6	-3.8	744	0.183	30	MPH	
	7	-4.0	740	0.053	40	MPH	
I	1	-3.7	744	.271	0	~~MPH~~	
	2	-3.9	753	.273	12	~~MPH~~	
	3	-3.9	749	.256	10	~~MPH~~	
	4	-3.9	747	.217	0	~~MPH~~	
	5	-3.9	747	.214	20	~~MPH~~	
	6	-3.9	743	.114	28	~~MPH~~	
	7	-3.9	740	.048	0	~~MPH~~	

4 of 5

IP14_001504

E-27

6/25/87 1000

Babcock & Wilcox
GENERAL CALCULATIONS

EAST SEC. GAS ~~inlet~~

12:40 TAP	POINT	STATIC IN.	TEMP.	ΔP IN.	ANGLE (DEGREE)	DATA BY	LOCATION (REMARKS)
N	1	-3.4	747	0.380	2	MPH	
	2	-3.5	747	0.366	0	MPH	
	3	-3.7	746	0.356	15	MPH	
	4	-3.7	746	0.307	17	MPH	
	5	-3.8	746	0.095	17	MPH	
	6	-3.8	727	0.012	0	MPH	
	7	-3.7	719	0.012	0	MPH	
12:50							
M	1	-3.4	744	0.463	5	MPH	
	2	-3.6	748	0.393	7	MPH	
	3	-3.6	747	0.236	15	MPH	
	4	-3.7	747	0.068	20	MPH	
	5	-3.8	746	0.007	0	MPH	
	6	-3.8	741	0.004	0	MPH	
	7	-3.7	726	0.004	0	MPH	
L	1	-3.4	750	0.461	10	MPH	
	2	-3.5	751	0.395	10	MPH	
	3	-3.6	751	0.324	5	MPH	
	4	-3.6	750	0.163	5	MPH	
	5	-3.8	750	0.024	0	MPH	
	6	-3.8	749	0.004	0	MPH	
	7	-3.7	748	0.002	0	MPH	

5 of 6

IP14_001505

E-27

6/25/87 1000

Babcock & Wilcox

GENERAL CALCULATIONS

EAST GAS (SEC) ~~OUTLET~~ inlet

TAP	POINT	STATIC IN.	TEMP.	ΔP IN.	ANGLE (DEGREE)	DATA BY	LOCATION (REMARKS)
B	1	-3.6	741	.349	0	[illegible]	
	2	-3.6	744	.366	17	[illegible]	
	3	-3.7	744	.312	26	[illegible]	
	4	-3.7	739	.351	27	[illegible]	
	5	-3.7	740	.263	25	[illegible]	
	6	-3.7	738	.141	30	[illegible]	
	7	-3.7	738	.024	45	[illegible]	
						[illegible]	
A	1	-3.6	750	0.344	10	[illegible] MPH	
	2	-3.6	750	0.390	15	[illegible] MPH	
	3	-3.8	747	0.376	19	MPH	
	4	-3.8	745	0.327	20	MPH	
	5	-3.8	745	0.156	17	MPH	
	6	-3.8	744	0.073	12	MPH	
	7	-3.8	744	0.017	35	MPH	

E-27
6/25/87 1080

Babcock & Wilcox
GENERAL CALCULATIONS

~~East~~ SEC GAS ~~[illegible]~~ inlet

TAP	POINT	STATIC IN.	TEMP.	ΔP IN.	ANGLE (DEGREE)	DATA BY	LOCATION (REMARKS)
	1	-3.7	755	.370	20	[illegible]	
	2	-3.9	758	.376	25	[illegible]	
	3	-3.7	757	.349	20	[illegible]	
	4	-3.7	755	.278	10	[illegible]	
	5	-3.6	753	.278	0	[illegible]	
	6	-3.7	752	.170	0	[illegible]	
	7	-3.6	750	.048	0	[illegible]	
D	1	-3.7	734	.280	30	[illegible]	
	2	-3.7	745	.285	35	[illegible]	
	3	-3.8	742	.317	33	[illegible]	
	4	-3.8	742	.275	26	[illegible]	
	5	-3.8	738	.290	17	[illegible]	
	6	-3.7	733	.117	20	[illegible]	
	7	-3.8	725	.017	0	[illegible]	
						[illegible]	
C	1	-3.	743	.324	10	[illegible]	
	2	-3.7	746	.329	25	[illegible]	
	3	-3.8	745	.317	30	[illegible]	
	4	-3.9	746	.324	30	[illegible]	
	5	-3.6	741	.268	25	[illegible]	
	6	-3.7	737	.239	35	[illegible]	
	7	-3.7	736	.014	45	[illegible]	

E 27
6/25/87 1000

Babcock & Wilcox
GENERAL CALCULATIONS

EAST SEC GAS ~~Out~~ Inlet

TAP	POINT	STATIC IN.	TEMP.	ΔP IN.	ANGLE (DEGREE)	DATA BY	LOCATION (REMARKS)
13:20							
H	1	-3.4	749	0.302	12	MPH	
	2	-3.4	755	0.348	12	MPH	
	3	-3.4	759	0.356	10	MPH	
	4	-3.5	758	0.180	0	MPH	
	5	-3.5	756	0.139	14	MPH	
	6	-3.6	754	0.083	12	MPH	
	7	-3.6	744	0.002	0	MPH	
13:25							
G	1	-3.5	750	0.173	15	MPH	
	2	-3.5	755	0.400	30	MPH	
	3	-3.5	758	0.227	18	MPH	
	4	-3.5	756	0.256	10	MPH	
	5	-3.6	755	0.229	4	MPH	
	6	-3.5	753	0.136	8	MPH	
	7	-3.6	748	0.024	0	MPH	
13:30							
F	1	-3.8	753	0.310	12	MPH	
	2	-3.7	757	0.356	30	MPH	
	3	-3.6	758	0.368	25	MPH	
	4	-3.6	755	0.307	8	MPH	
	5	-3.6	754	0.295	3	MPH	
	6	-3.5	753	0.185	0	MPH	
	7	-3.7	750	0.041	0	MPH	

E 27
6/25/87 1000

Babcock & Wilcox
GENERAL CALCULATIONS

EAST SEC GAS OUT. inlet

TAP	POINT	STATIC IN.	TEMP.	ΔP IN.	ANGLE (DEGREE)	DATA BY	LOCATION (REMARKS)
K	1	-3.6	745	.471	20	[illegible]	
	2	-3.7	750	.473	12	[illegible]	
	3	-3.8	753	.417	5	[illegible]	
	4	-3.6	753	.271	3	[illegible]	
	5	-3.8	753	.036	0	[illegible]	
	6	-3.7	751	.004	0	[illegible]	
	7	-3.6	742	.004	0	[illegible]	
J	1	-3.6	747	.534	20	[illegible]	
	2	-3.8	752	.461	15	[illegible]	
	3	-3.7	755	.427	3	[illegible]	
	4	-3.8	756	.183	7	[illegible]	
	5	-3.8	753	.007	0	[illegible]	
	6	-3.8	751	.004	0	[illegible]	
	7	-3.8	743	.004	0	[illegible]	
I	1	-3.6	748	.478	20	[illegible]	
	2	-3.6	758	.407	7	[illegible]	
	3	-3.7	757	.361	8	[illegible]	
	4	-3.7	754	.188	2	[illegible]	
	5	-3.7	753	.068	10	[illegible]	
	6	-3.6	753	.019	0	[illegible]	
	7	-3.7	750	.002	0	[illegible]	

4 of 5

IP14_001509

6-25-87

Babcock & Wilcox PROBE E-87 SEE - GAS IN WEST

GENERAL CALCULATIONS

TAP	POINT	STATIC IN.	TEMP.	ΔP IN.	ANGLE (DEGREE)	DATA BY	LOCATION (REMARKS)
N	1	-3.3	732	.117	20	[illegible]	POINT 1 NEAR PORT OPENING. POINT 7 AT FAR WALL. POINT 7 READ FIRST
	2	-3.4	738	.136	7	[illegible]	
	3	-3.4	741	.170	5	[illegible]	
	4	-3.3	740	.205	5	[illegible]	
	5	-3.4	740	.214	5	[illegible]	
	6	-3.5	726	.075	0	[illegible]	
	7	-3.5	710	.012	0	[illegible]	
M	1	-3.6	741	.100	5	[illegible]	
	2	-3.6	749	.144	10	[illegible]	
	3	-3.5	750	.200	0	[illegible]	
	4	-3.5	749	.175	5	[illegible]	
	5	-3.4	745	.200	5	[illegible]	
	6	-3.5	741	.073	0	[illegible]	
	7	-3.5	725	.026	0	[illegible]	
L	1	-3.5	749	0.239	15	MPH	
	2	-3.6	749	0.268	16	MPH	
	3	-3.7	747	0.219	5	MPH	
	4	-3.7	746	0.173	10	MPH	
	5	-3.5	745	0.168	18	MPH	
	6	-3.7	743	0.112	12	MPH	
	7	-3.8	740	0.019	0	MPH	

5 of 5

IP14_001510

Babcock & Wilcox FECHEIMER NO. E-4

GENERAL CALCULATIONS

CCW=+ CW=-

TAP	POINT	STATIC IN.	TEMP.	ΔP IN.	ANGLE (DEGREE)	DATA BY	LOCATION (REMARKS)
A	1	1.5	643.6	.561	0	21 J L	1'10" FROM BOTTOM
A	2	1.7	644.4	.161	-10	21 J L	4'10" FROM BOTTOM
A	3	1.7	651.8	.036	-10	21 J L	7'10" FROM BOTTOM
A	4	1.9	666.4	.241	-20	21 J L	10'10" FROM BOTTOM
A	5	2.0	674.0	.292	-15	21 J L	13'10" FROM BOTTOM
A	6	2.4	673.8	.212	0	21 J L	16'10" FROM BOTTOM
A	7	2.3	678.4	.148	-5	21 J L	19'10" FROM BOTTOM
A	8	2.3	~~[illegible]~~ 680.2	.188	-10	21 J L	22'10" FROM BOTTOM
A	9	2.2	693.6	.185	-10	21 J L	25'10" FROM BOTTOM
B	1	2.3	658.0	.219	+10	21 J L	1'10" FROM BOTTOM
B	2	1.7	655.2	.168	-15	21 J L	4'10" FROM BOTTOM
B	3	1.8	659.6	.231	-35	21 J L	7'10" FROM BOTTOM
B	4	1.8	665.0	.246	-25	21 J L	10'10" FROM BOTTOM
B	5	2.0	666.6	.107	-15	21 J L	13'10" FROM BOTTOM
B	6	2.0	669.0	.207	-15	21 J L	16'10" FROM BOTTOM
B	7	2.1	666.2	.202	-20	21 J L	19'10" FROM BOTTOM
B	8	2.1	679.6	.207	-15	21 J L	22'10" FROM BOTTOM
B	9	2.2	678.2	.202	-15	21 J L	25'10" FROM BOTTOM

Secondary Air Heater Outlet

East Side Started - 12:30 P.M.

1 of 5

21 J. Lechnick 6/25/8

IP14_001511

Babcock & Wilcox

GENERAL CALCULATIONS FECHEIMER NO. E-4

CCW=+ CW=−

TAP	POINT	STATIC IN.	TEMP.	ΔP IN.	ANGLE (DEGREE)	DATA BY	LOCATION (REMARKS)
C	1	1.8	628.6	.356	0	21 of 2	1' 10" FROM BOTTOM
C	2	1.6	638.2	.034	+5	21 of 2	4' 10" FROM BOTTOM
C	3	1.5	640.8	.126	−35	21 of 2	7' 10" FROM BOTTOM
C	4	1.8	647.0	.339	−30	21 of 2	10' 10" FROM BOTTOM
C	5	2.0	649.2	.207	−25	21 of 2	13' 10" FROM BOTTOM
C	6	2.0	651.2	.319	−30	21 of 2	16' 10" FROM BOTTOM
C	7	2.2	649.8	.290	−20	21 of 2	19' 10" FROM BOTTOM
C	8	2.3	654.0	.261	−20	21 of 2	22' 10" FROM BOTTOM
C	9	2.3	663.0	.224	−25	21 of 2	25' 10" FROM BOTTOM
D	1	2.0	643.8	.366	0	21 of 2	1' 10" FROM BOTTOM
D	2	1.7	648.6	.039	0	21 of 2	4' 10" FROM BOTTOM
D	3	1.8	661.8	.046	0	21 of 2	7' 10" FROM BOTTOM
D	4	1.8	676.6	.346	−40	21 of 2	10' 10" FROM BOTTOM
D	5	1.6	659.8	.236	−35 ~~+35~~	21 of 2	13' 10" FROM BOTTOM
D	6	2.0	677.0	.295	−30	21 of 2	16' 10" FROM BOTTOM
D	7	2.0	686.4	.376	−20	21 of 2	19' 10" FROM BOTTOM
D	8	2.1	705.2	.395	−15	21 of 2	22' 10" FROM BOTTOM
D	9	2.2	654.4	.175	−20	21 of 2	25' 10" FROM BOTTOM

Secondary Air Heater Outlet

2 of 5

21 Lechnick 6/25/87

IP14_001512

Babcock & Wilcox
GENERAL CALCULATIONS

FECHEIMER NO. E-1

CCW=+ CW=-

TAP	POINT	STATIC IN.	TEMP.	ΔP IN.	ANGLE (DEGREE)	DATA BY	LOCATION (REMARKS)
E	1	1.4	658.0	.034	0	21 JL	1' 10" FROM BOTTOM
E	2	1.6	658.4	.041	0	21 JL	4' 10" FROM BOTTOM
E	3	1.6	647.8	.039	0	21 JL	7' 10" FROM BOTTOM
E	4	1.5	647.2	.126	0	21 JL	10' 10" FROM BOTTOM
E	5	2.0	652.0	.366	-30	21 JL	13' 10" FROM BOTTOM
E	6	1.8	653.4	.459	-30	21 JL	16' 10" FROM BOTTOM
E	7	2.2	647.6	.369	-25	21 JL	19' 10" FROM BOTTOM
E	8	2.3	646.2	.349	-30	21 JL	22' 10" FROM BOTTOM
E	9	2.2	648.0	.415	-30	21 JL	25' 10" FROM BOTTOM
F	1	1.7	668.0	.311	+30	21 JL	1' 10" FROM BOTTOM
F	2	1.5	656.2	.014	0	21 JL	4' 10" FROM BOTTOM
F	3	1.7	650.0	.114	-25	21 JL	7' 10" FROM BOTTOM
F	4	2.0	645.2	.500	-20	21 JL	10' 10" FROM BOTTOM
F	5	2.1	654.0	.263	-20	21 JL	13' 10" FROM BOTTOM
F	6	2.2	647.4	.407	-15	21 JL	16' 10" FROM BOTTOM
F	7	2.3	653.6	.432	-10	21 JL	19' 10" FROM BOTTOM
F	8	2.1	641.2	.153	-20	21 JL	22' 10" FROM BOTTOM
F	9	2.2	653.0	.415	-10	21 JL	25' 10" FROM BOTTOM

Secondary Air Heater Outlet

21 J. Lechnick 6/25/87

Babcock & Wilcox
GENERAL CALCULATIONS

FECHEIMER NO. E-4

CCW=+ CW=-

TAP	POINT	STATIC IN.	TEMP.	ΔP IN.	ANGLE (DEGREE)	DATA BY	LOCATION (REMARKS)
G	1	2.1	643.8	.300	+20	21 L	1'10" FROM BOTTOM
G	2	1.6	658.6	.212	0	21 L	4'10" FROM BOTTOM
G	3	1.7	651.8	.251	-25	21 L	7'10" FROM BOTTOM
G	4	1.9	652.0	.251	-30	21 L	10'10" FROM BOTTOM
G	5	1.7	644.2	.046	-25	21 L	13'10" FROM BOTTOM
G	6	2.0	687.0	.100	-40	21 L	16'10" FROM BOTTOM
G	7	2.0	676.4	.449	-20	21 L	19'10" FROM BOTTOM
G	8	2.0	685.2	.444	-25	21 L	22'10" FROM BOTTOM
G	9	1.7	674.4	.512	-25	21 L	25'10" FROM BOTTOM
H	1	1.7	~~660.2~~ 657.0	.336	+5	21 L	1'10" FROM BOTTOM
H	2	1.8	~~660.4~~ 653.8	.319	0	21 L	4'10" FROM BOTTOM
H	3	1.7	~~665.8~~ 660.4	.434	-20	21 L	7'10" FROM BOTTOM
H	4	1.7	667.2	.454	-25	21 L	10'10" FROM BOTTOM
H	5	1.7	~~666.4~~ 666.4	.112	-30	21 L	13'10" FROM BOTTOM
H	6	1.5	663.8	.029	-35	21 L	16'10" FROM BOTTOM
H	7	1.7	671.4	.075	-35	21 L	19'10" FROM BOTTOM
H	8	1.3	689.8	.061	0	21 L	22'10" FROM BOTTOM
H	9	1.4	668.4	.018	0	21 L	25'10" FROM BOTTOM

Secondary Air Heater Outlet

4 of 5

21 L. Lechnick 6/25/87

IP14_001514

Babcock & Wilcox
GENERAL CALCULATIONS

FECHEIMER NO. E-4

CCW=+ CW=−

TAP	POINT	STATIC IN.	TEMP.	Δp IN.	ANGLE (DEGREE)	DATA BY	LOCATION (REMARKS)
I	1	1.4	640.6	.078	0	21 L	1'10" FROM BOTTOM
I	2	1.5	641.4	.034	−40	21 L	4'10" FROM BOTTOM
I	3	1.7	648.8	.019	0	21 L	7'10" FROM BOTTOM
I	4	1.6	669.4	.024	0	21 L	10'10" FROM BOTTOM
I	5	1.8	679.0	.024	0	21 L	13'10" FROM BOTTOM
I	6	1.8	668.8	.029	0	21 L	16'10" FROM BOTTOM
I	7	1.9	683.4	.083 ~~.834~~	0	21 L	19'10" FROM BOTTOM
I	8	1.7	675.2	.078 ~~.781~~	0	21 L	22'10" FROM BOTTOM
I	9	1.6	698.6	.075 ~~.752~~	0	21 L	25'10" FROM BOTTOM

Secondary Air Heater Outlet — 5 of 5

East Side Completed - 3:35 P.M. 21 L Technick 6/25/87

IP14_001515

Babcock & Wilcox
GENERAL CALCULATIONS

FECHEIMER NO. E-4

CCW=+ CW=—

TAP	POINT	STATIC IN.	TEMP.	ΔP IN.	ANGLE (DEGREE)	DATA BY	LOCATION (REMARKS)
WA	1	1.9	439.8	.126	−10	21/2	1'10" FROM BOTTOM
WA	2	1.5	633.4	.273	+5	21/2	4'10" FROM BOTTOM
WA	3	1.7	632.8	.034	0	21/2	7'10" FROM BOTTOM
WA	4	1.6	629.8	.104	0	21/2	10'6" FROM BOTTOM
WA	5	1.7	627.0	.051	+30	21/2	13'10" FROM BOTTOM
WA	6	1.8	621.0	.026	0	21/2	16'10" FROM BOTTOM
WA	7	1.8	614.6	.026	0	21/2	19'10" FROM BOTTOM
WA	8	1.8	610.2	.026	0	21/2	22'10" FROM BOTTOM
WA	9	1.8	602.4	.026	0	21/2	25'10" FROM BOTTOM
WB	1	1.9	607.2	.039	0	21/2	1'10" FROM BOTTOM
WB	2	1.9	626.0	.207	−20	21/2	4'10" FROM BOTTOM
WB	3	1.7	628.0	.039	0	21/2	7'10" FROM BOTTOM
WB	4	1.7	638.2	.021	+15	21/2	10'10" FROM BOTTOM
WB	5	1.6	639.2	.058	+25	21/2	13'10" FROM BOTTOM
WB	6	1.5	637.6	.146	+45	21/2	16'10" FROM BOTTOM
WB	7	1.6	637.4	.314	+10	21/2	19'10" FROM BOTTOM
WB	8	1.8	639.2	.366	+15	21/2	22'10" FROM BOTTOM
WB	9	1.5	635.2	.085	+35	21/2	25'10" FROM BOTTOM

Secondary Air Heater Outlet
West Side Completed – 11:40 A.M.

1 of 5

21/2 Technicians 6/25/87

IP14_001516

Babcock & Wilcox
GENERAL CALCULATIONS

FECHEIMER NO. E-4

CCW=+ CW=-

TAP	POINT	STATIC IN.	TEMP.	ΔP IN.	ANGLE (DEGREE)	DATA BY	LOCATION (REMARKS)
WC	1	1.7	619.6	.217	-35	21 J L	1'10" FROM BOTTOM
WC	2	1.4	626.4	.026	0	21 J L	4'10" FROM BOTTOM
WC	3	1.5	636.6	.231	+5	21 J L	7'10" FROM BOTTOM
WC	4	1.7	642.4	.593	+25	21 J L	10'10" FROM BOTTOM
WC	5	2.0	644.0	.334	+10	21 J L	13'10" FROM BOTTOM
WC	6	2.2	645.4	.466	+10	21 J L	16'10" FROM BOTTOM
WC	7	2.2	645.8	.502	+10	21 J L	19'10" FROM BOTTOM
WC	8	2.1	646.8	.612	+10	21 J L	22'10" FROM BOTTOM
WC	9	2.1	652.0	0.600	+10	21 J L	25'10" FROM BOTTOM
WD	1	1.7	606.4	.039	-45	21 J L	1'10" FROM BOTTOM
WD	2	1.3	621.2	.024	0	21 J L	4'10" FROM BOTTOM
WD	3	1.8	623.6	.251	+5	21 J L	7'10" FROM BOTTOM
WD	4	1.9	633.4	.432	+15	21 J L	10'10" FROM BOTTOM
WD	5	2.3	639.0	.366	+10	21 J L	13'10" FROM BOTTOM
WD	6	2.4	642.4	.376	+5	21 J L	16'10" FROM BOTTOM
WD	7	2.5	643.2	.344	+5	21 J L	19'10" FROM BOTTOM
WD	8	2.7	648.4	.407	+10	21 J L	22'10" FROM BOTTOM
WD	9	2.2	648.6	.488	+15	21 J L	25'10" FROM BOTTOM

Secondary Air Heater Outlet

2 of 5

21 J. Zechnick 6/25/8

IP14_001517

Babcock & Wilcox
GENERAL CALCULATIONS

FECHEIMER NO. E-4

CCW=T CW=-

TAP	POINT	STATIC IN.	TEMP.	ΔP IN.	ANGLE (DEGREE)	DATA BY	LOCATION (REMARKS)
WE	1	1.4	616.0	.024	0	21 J L	1' 10" FROM BOTTOM
WE	2	1.5	628.2	.019	0	21 J L	4' 10" FROM BOTTOM
WE	3	1.9	639.2	.141	+30	21 J L	7' 10" FROM BOTTOM
WE	4	1.9	646.4	.463	+25	21 J L	10' 10" FROM BOTTOM
WE	5	2.2	663.6	.397	+15	21 J L	13' 10" FROM BOTTOM
WE	6	2.0	669.6	.437	+20	21 J L	16' 10" FROM BOTTOM
WE	7	1.9	673.6	.505	+5	21 J L	19' 10" FROM BOTTOM
WE	8	1.7	683.4	.056	-45	21 J L	22' 10" FROM BOTTOM
WE	9	1.7	688.4	.021	-25	21 J L	25' 10" FROM BOTTOM
WF	1	1.8	593.6	.444	-20	21 J L	1' 10" FROM BOTTOM
WF	2	1.8	620.8	.019	-5	21 J L	4' 10" FROM BOTTOM
WF	3	1.7	626.6	.095	+15	21 J L	7' 10" FROM BOTTOM
WF	4	2.0	635.4	.358	+10	21 J L	10' 10" FROM BOTTOM
WF	5	2.0	641.6	.305	+5	21 J L	13' 10" FROM BOTTOM
WF	6	2.2	652.6	.356	+10	21 J L	16' 10" FROM BOTTOM
WF	7	2.2	656.0	.366	0	21 J L	19' 10" FROM BOTTOM
WF	8	2.3	659.2	.329	0	21 J L	22' 10" FROM BOTTOM
WF	9	2.3	664.4	.327	0	21 J L	25' 10" FROM BOTTOM

Secondary Air Heater Outlet

3 of 5

21 J. Lechnick 6/25/87

IP14_001518

Babcock & Wilcox FECHEIMER NO. E-4

GENERAL CALCULATIONS

CCW=+ CW=-

TAP	POINT	STATIC IN.	TEMP.	ΔP IN.	ANGLE (DEGREE)	DATA BY	LOCATION (REMARKS)
WG	1	1.8	614.0	.388	-15	21 of 2	1' 10" FROM BOTTOM
WG	2	1.7	621.6	.107	-5	21 of 2	4' 10" FROM BOTTOM
WG	3	1.8	627.2	.185	+10	21 of 2	7' 10" FROM BOTTOM
WG	4	2.2	632.2	.275	+10	21 of 2	10' 10" FROM BOTTOM
WG	5	2.4	637.2	.200	0	21 of 2	13' 10" FROM BOTTOM
WG	6	2.3	641.6	.263	+5	21 of 2	16' 10" FROM BOTTOM
WG	7	2.2	644.2	.292	+10	21 of 2	19' 10" FROM BOTTOM
WG	8	2.6	649.4	.288	+5	21 of 2	22' 10" FROM BOTTOM
WG	9	2.5	652.6	.253	+5	21 of 2	25' 10" FROM BOTTOM
WH	1	2.4	616.8	.319	0	21 of 2	1' 10" FROM BOTTOM
WH	2	2.3	626.6	.183	0	21 of 2	4' 10" FROM BOTTOM
WH	3	2.5	630.0	.180	0	21 of 2	7' 10" FROM BOTTOM
WH	4	2.3	633.0	.212	0	21 of 2	10' 10" FROM BOTTOM
WH	5	2.5	635.8	.190	-5	21 of 2	13' 10" FROM BOTTOM
WH	6	2.7	640.0	.239	0	21 of 2	16' 10" FROM BOTTOM
WH	7	2.5	642.4	.212	0	21 of 2	19' 10" FROM BOTTOM
WH	8	2.7	645.2	.224	0	21 of 2	22' 10" FROM BOTTOM
WH	9	2.5	647.8 ~~606.0~~	.224	0	21 of 2	25' 10" FROM BOTTOM

Secondary Air Heater Outlet

4 of 5

D. J. Lechnick 6/25/82

IP14_001519

Babcock & Wilcox
GENERAL CALCULATIONS

FECHEIMER NO. E-1

CCW=+ CW=-

TAP	POINT	STATIC IN.	TEMP.	ΔP IN.	ANGLE (DEGREE)	DATA BY	LOCATION (REMARKS)
WI	1	2.2	629.0	.275	-10	21 fZ	1'10" FROM BOTTOM
WI	2	2.0	632.2	.180	-10	21 fZ	4'10" FROM BOTTOM
WI	3	2.1	635.2	.219	0	21 fZ	7'10" FROM BOTTOM
WI	4	1.9	638.2	.107	0	21 fZ	10'10" FROM BOTTOM
WI	5	1.9	641.4	.014	0	21 fZ	13'10" FROM BOTTOM
WI	6	2.5	657.0	.197	0	21 fZ	16'10" FROM BOTTOM
WI	7	2.3	663.8	.207	0	21 fZ	19'10" FROM BOTTOM
WI	8	2.3	673.6	.192	0	21 fZ	22'10" FROM BOTTOM
WI	9	2.6	686.0	.180	0	21 fZ	25'10" FROM BOTTOM

Secondary Air Heater Outlet
Test Started - 10:00 A.M.

5 of 5

21 fZechnick 6/25/87

IP14_001520

RD 26

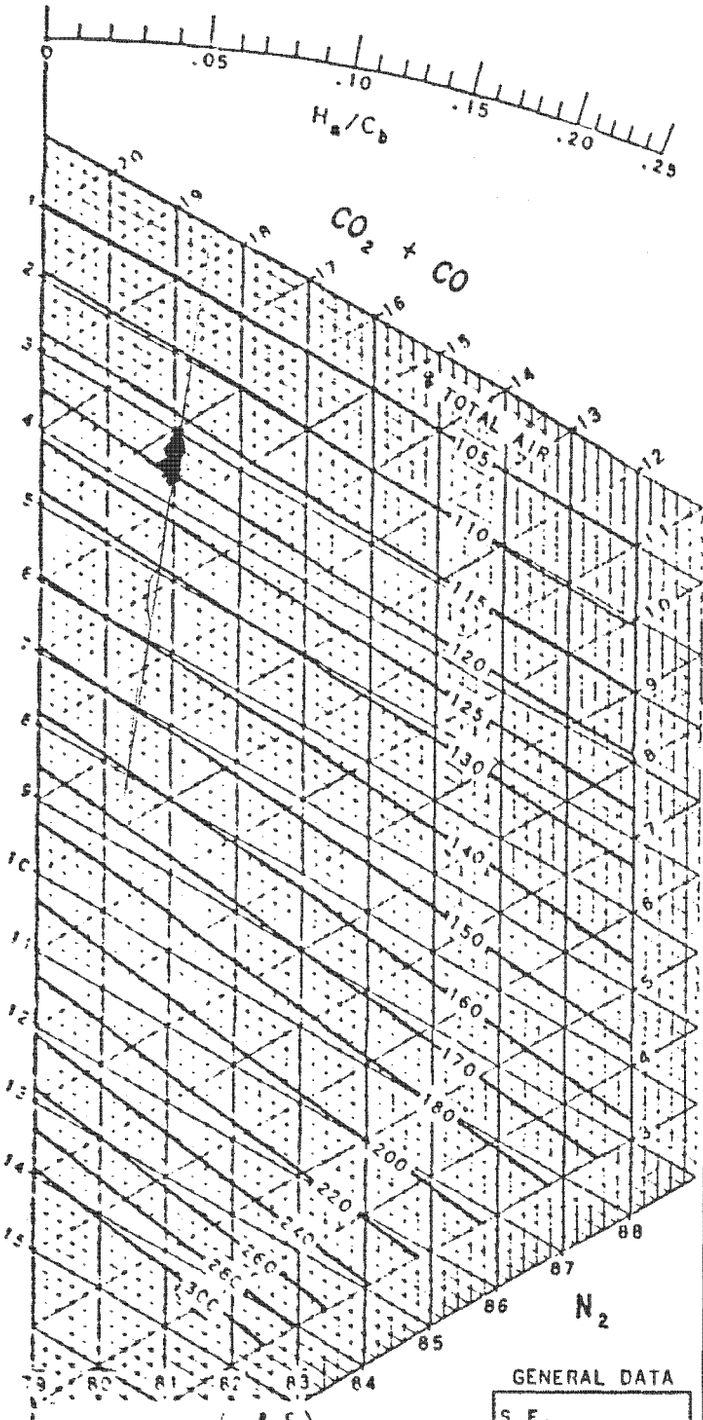

TIME	LOCATION	CO_2	$+O_2$	$+CO$	O_2	CO		BY
1009	WEST A-1	15.6	19.1		3.5			MJH
1013	WEST A-2	15.6	19.0		3.4			MJH
1016	WEST A-3	15.5	19.0		3.5			MJH
1021	WEST B-1	15.4	19.0		3.6			MJH
1025	WEST B-2	15.6	19.0		3.4			MJH
1029	WEST B-3	15.6	19.0		3.4			MJH
1035	WEST C-1	15.5	18.9		3.4			MJH
1040	WEST C-2	15.4	19.0		3.6			MJH
1043	WEST C-3	15.7	18.9		3.2			MJH
1047	WEST D-1	15.4	19.0		3.6			MJH
1051	WEST D-2	15.8	19.1		3.3			MJH
1054	WEST D-3	15.7	19.0		3.3			MJH
1101	WEST E-1	15.6	18.9		3.3			MJH
1107	WEST E-2	15.4	19.0		3.6			MJH
1110	WEST E-3	15.8	19.0		3.2			MJH
1114	WEST F-1	15.5	19.0		3.5			MJH
1117	WEST F-2	15.6	19.0		3.4			MJH
1120	WEST F-3	15.9	18.9		3.0			MJH

$$\text{Inherent Excess Air} = \left(1 - \frac{H_a C}{H_b C_a}\right) \frac{C_{a\,8400}}{\text{Btu lb.}}$$

Where

$\frac{H_a}{C_a}$ is from gas analysis

$\frac{H_b}{C_b}$ Btu lb is from coal analysis

Note: For complete uniform combustion, all points should lie along straight line drawn through given point

GENERAL DATA

S.F.
A.F.

FUEL ANALYSIS

H
O
C
BTU/LB
H_a/C

SUBJECT: WEST Primary AH GAS INLET

FILE NO.

BY GPB/MJH/DAL

DATE 6-25-87

REV.

THE BABCOCK & WILCOX CO.
RESEARCH LABORATORY
ALLIANCE, OHIO

DRAWING NO.

IP14_001521

Babcock & Wilcox
GENERAL CALCULATIONS

START TIME 1007
FINISH TIME 1120

TAC AF	POINT	STATIC IN.	TEMP.	ΔP IN.	ANGLE (DEGREE)	DATA BY	LOCATION (REMARKS)
WEST A	1	-4.0	733	.075	14	GPB/DJL	WEST PRIMARY AH GAS INLET
WEST A	2	-4.0	731	.083	5	GPB/DJL	" " " " "
WEST A	3	-4.0	728	.090	9	GPB/DJL	" " " " "
WEST B	1	-4.0	735	.068	30	GPB/DJL	WEST PRIMARY AH GAS INLET
WEST B	2	-4.0	733	.092	19	GPB/DJL	" " " " "
WEST B	3	-4.0	730	.109	10	GPB/DJL	" " " " "
WEST C	1	-4.0	731	.068	20	GPB/DJL	WEST PRIMARY AH GAS INLET
WEST C	2	-4.0	731	.104	5	GPB/DJL	" " " " "
WEST C	3	-4.0	730	.100	12	GPB/DJL	" " " " "
WEST D	1	-4.0	731	.102	10	GPB/DJL	WEST PRIMARY AH GAS INLET
WEST D	2	-4.0	733	.061	15	GPB/DJL	" " " " "
WEST D	3	-4.0	731	.097	10	GPB/DJL	" " " " "
WEST E	1	-4.0	730	.004	0	GPB/DJL	WEST PRIMARY AH GAS INLET
WEST E	2	-4.0	731	.007	0	GPB/DJL	" " " " "
WEST E	3	-4.0	730	.004	0	GPB/DJL	" " " " "
WEST F	1	-4.0	731	.002	0	GPB/DJL	WEST PRIMARY AH GAS INLET
WEST F	2	-4.0	732	.004	0	GPB/DJL	" " " " "
WEST F	3	-4.0	728	.002	0	GPB/DJL	" " " " "

PRIMARY A.H WEST GAS INLET

FECHEIMER E-11
GPB/MJH/DJL 6-25-87

IP14_001522

RD 26

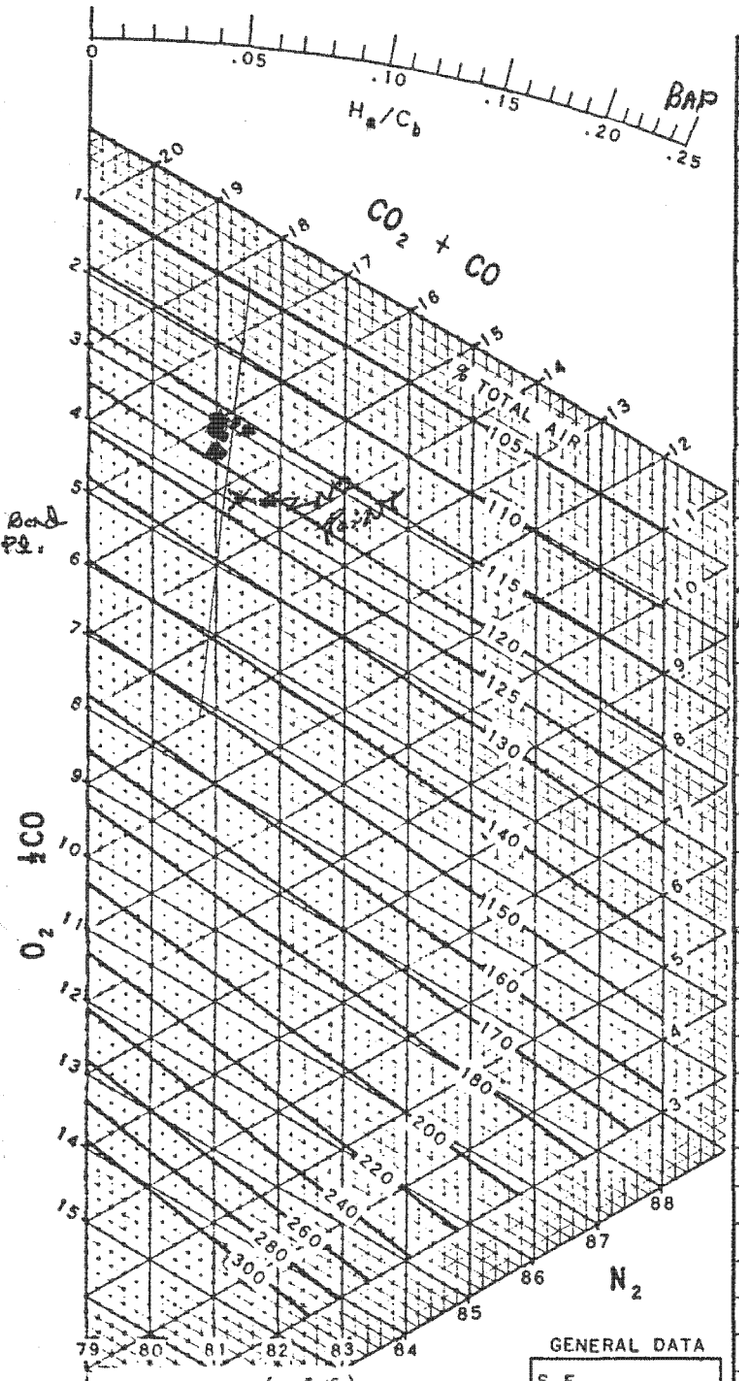

Unburned Loss % = $\left(1 - \frac{H_a/C}{H_a/C_b}\right) \frac{C \times 14500}{\text{Btu/lb.}}$

Where

$\frac{H_a}{C_b}$ is from gas analysis

$\frac{H_a}{C}$ Btu/lb. is from coal analysis

Note: For complete uniform combustion, all points should lie along straight line drawn through pivot point

GENERAL DATA
S.F.
A.F.

FUEL ANALYSIS
H
O
C
BTU/LB
H_a/C

TIME	LOCATION	CO_2	$+O_2$	+CO	O_2	CO	% UNBURNED	BY
1343	EAST F-1	14.7	18.6		3.9			MJH B.
1350	EAST F-2	15.7	18.9		3.2			MJH
1410	EAST F-3	15.6	18.7		2.9			MJH
1415	EAST F-1	15.6	18.7		2.9			MJH
1420	EAST E-1	15.8	18.9		2.9			MJH
1430	EAST E-2	15.6	19.0		3.4			MJH
1433	EAST E-3	16.1	19.1		3.0			MJH
1440	EAST D-1	15.6	19.0		3.4			MJH
1445	EAST D-2	15.5	18.9		3.4			MJH
1450	EAST D-3	15.9	18.9		3.0			MJH
1454	EAST C-1	15.6	19.0		3.4			MJH
1457	EAST C-2	15.9	19.0		3.1			MJH
1500	EAST C-3	15.9	19.1		3.2			MJH
1509	EAST B-1	15.9	19.0		3.1			MJH
1512	EAST B-2	16.0	19.0		3.0			MJH
1515	EAST B-3	16.0	19.0		3.0			MJH
1518	EAST A-1	15.8	19.0		3.2			MJH
1521	EAST A-2	15.8	19.0		3.2			MJH
1524	EAST A-3	15.9	19.0		3.1			MJH

SUBJECT EAST PRIMARY AH GAS INLET

FILE NO.

BY MJH/GPB/DJL

DATE 6-25-87

REV.

THE BABCOCK & WILCOX CO.
RESEARCH LABORATORY
ALLIANCE, OHIO

DRAWING NO.

IP14_001523

PS 1979 1

Babcock & Wilcox
GENERAL CALCULATIONS

START TIME 1335
FINISH TIME 1525

T.P	POINT	STATIC IN.	TEMP.	ΔP IN.	ANGLE (DEGREE)	DATA BY	LOCATION (REMARKS)
EAST F	1	-4.0	734	.104	0	GPB/DJL	EAST PRIMARY AH GAS INLET
EAST F	2	-4.0	738	.092	25	GPB/DJL	" " " " "
EAST F	3	-4.0	738	.092	0	GPB/DJL	" " " " "
EAST E	1	-4.0	737	.065	10	GPB/DJL	EAST PRIMARY AH GAS INLET
EAST E	2	-4.0	737	.100	30	GPB/DJL	" " " " "
EAST E	3	-4.0	739	.087	0	GPB/DJL	" " " " "
EAST D	1	-4.0	732	.090	0	GPB/DJL	EAST PRIMARY AH GAS INLET
EAST D	2	-4.0	741	.117	20	GPB/DJL	" " " " "
EAST D	3	-4.0	739	.109	5	GPB/DJL	" " " " "
EAST C	1	-4.0	736	.109	5	GPB/DJL	EAST PRIMARY AH GAS INLET
EAST C	2	-4.0	740	.056	0	GPB/DJL	" " " " "
EAST C	3	-4.0	737	.018	0	GPB/DJL	" " " " "
EAST B	1	-4.0	734	.012	0	GPB/DJL	EAST PRIMARY AH GAS IN
EAST B	2	-4.0	740	.007	0	GPB/DJL	" " " " "
EAST B	3	-4.0	738	.056	0	GPB/DJL	" " " " "
EAST A	1	-4.0	735	.004	0	GPB/DJL	EAST PRIMARY AH GAS INLET
EAST A	2	-4.0	739	.004	0	GPB/DJL	" " " " "
EAST A	3	-4.0	735	.026	0	GPB/DJL	" " " " "

EAST PRIMARY AH GAS INLET

FECHEIMER E-11

PREPARED BY: GPB/MJH/DJL

DATE: 6-25-87

IP14_001524

WEST PRIMARY A.H. Gas OUT

RD 26

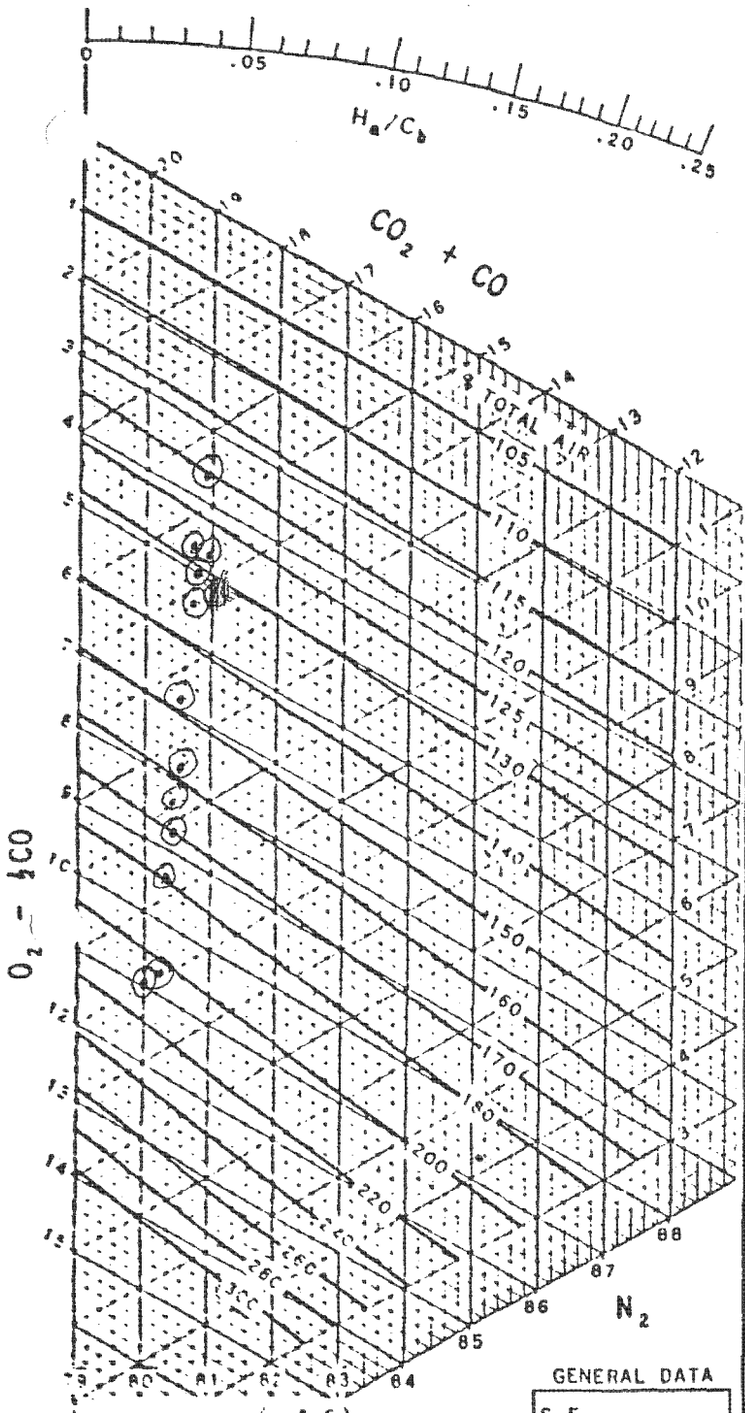

Probe E1

TIME	LOCATION	CO_2	+ O_2	+ CO	O_2	CO	% [illegible]	BY
	WPGO							
1003	A4	10.2	19.7	—	9.5	—	—	CRV
1010	A3	13.7	19.2	—	5.5	—	—	CRV
1017	A2	14.4	19.1	—	4.7	—	—	CRV
1023	A1	10.8	19.6	—	8.8	—	—	CRV
1030	B4	9.0	19.7	—	10.7	—	—	CRV
1037	B3	14.2	19.2	—	5.0	—	—	CRV
1044	B2	15.4	19.0	—	3.6	—	—	CRV
1050	B1	11.7	19.5	—	7.8	—	—	CRV
1057	C4	9.0	20.0	—	11.0	—	—	CRV
1104	C3	12.6	19.4	—	6.8	—	—	CRV
1111	C2	14.5	19.2	—	4.7	—	—	CRV
1118	C1	11.2	19.6	—	8.4	—	—	CRV

Combined loss % = $\left(1 - \frac{H_a C}{H_a C_b}\right) \frac{CV \times 14300}{Btu/lb.}$

Where

$\frac{H_a}{C_b}$ is from gas analysis

$\frac{H_a}{C}$ Btu/lb is from coal analysis

Note: For complete uniform combustion, all points should lie along straight line drawn through pivot point

GENERAL DATA

S.F.
A.F.

FUEL ANALYSIS

H
O
C
BTU/LB
H_a/C

SUBJECT	FILE NO.	THE BABCOCK & WILCOX CO. RESEARCH LABORATORY ALLIANCE, OHIO
WEST PRIMARY A.H. GAS OUT	BY CLIFF VOTAW	
	DATE 6/25/87	
(Position 1 at Top)	REV.	DRAWING NO.

IP14_001525

Babcock & Wilcox

25 JUNE 87 GENERAL CALCULATIONS PROBE # E1

TAP	POINT	STATIC IN.	TEMP.	ΔP IN.	ANGLE (DEGREE)	DATA BY	LOCATION (REMARKS)
A	1	-8.0"	296°F	-0.043"	8°	DEW	WPGO 1023
A	2	-8.0"	306°F	0.143"	4°	DEW	WPGO 1017
A	3	-8.0"	290°F	0.118"	5°	DEW	WPGO 1010
A	4	-8.0"	265°F	0.096"	0°	DEW	WPGO 1003
B	1	-8.0"	299°F	-0.170"	0°	DEW	WPGO 1050
B	2	-8.0"	310°F	0.127"	7°	DEW	WPGO 1044
B	3	-8.0"	290°F	0.113"	4°	DEW	WPGO 1037
B	4	-8.0"	275°F	0.104"	6°	DEW	WPGO 1030
C	1	-8.0"	288°F	-0.178"	10°	DEW	WPGO 1118
C	2	-8.0"	292°F	0.109"	6°	DEW	WPGO 1111
C	3	-8.0"	279°F	0.115"	4°	DEW	WPGO 1104
C	4	-8.0"	271°F	0.116"	0°	DEW	WPGO 1057
			START	TIME	1000		
			END	TIME	1118		

IP14_001526

RD 26

EAST PRIMARY A.H. GAS OUT

Probe E1

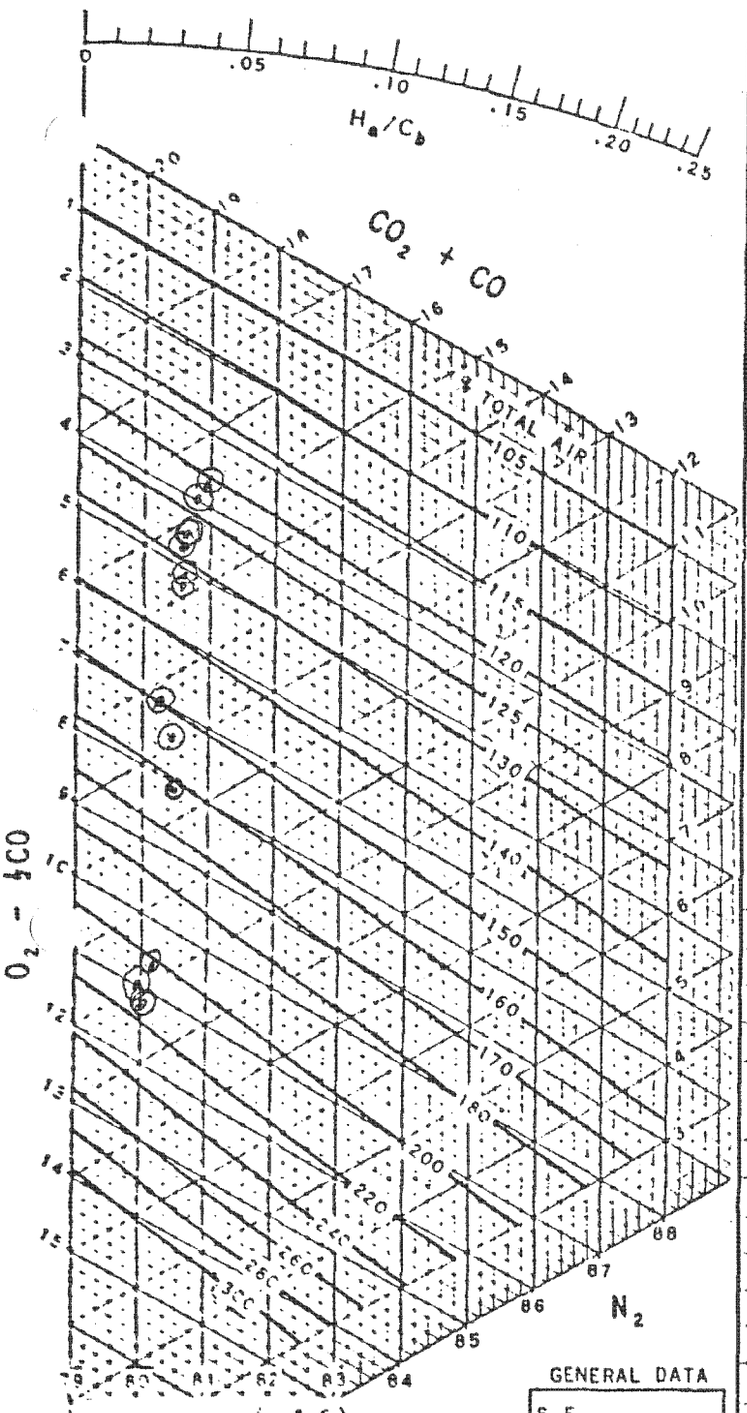

TIME	LOCATION	CO_2	$+O_2$	$+CO$	O_2	CO	% [illegible]	BY
	EPGO							
1335	A4	12.7	19.7	—	7.0	—	—	CRV
1342	A3	14.6	19.3	—	4.7	—	—	CRV
1348	A2	14.8	19.4	—	4.6	—	—	CRV
1355	A1	9.0	20.0	—	11.0	—	—	CRV
1402	B4	12.1	19.5	—	7.4	—	—	CRV
1409	B3	15.2	19.2	—	4.0	—	—	CRV
1415	B2	15.3	19.0	—	3.7	—	—	CRV
1422	B1	8.7	19.9	—	11.2	—	—	CRV
1429	C4	11.4	19.5	—	8.1	—	—	CRV
1436	C3	14.2	19.3	—	5.1	—	—	CRV
1443	C2	14.1	19.4	—	5.3	—	—	CRV
1450	C1	9.2	19.8	—	10.6	—	—	CRV

Combined Loss % = $\left(1 - \frac{H_a C}{H_a C_b}\right) \frac{C \times 14500}{\text{Btu lb.}}$

Where

$\frac{H_a}{C_b}$ is from gas analysis

$\frac{H_a}{C}$ Btu lb is from coal analysis

Note: For complete uniform combustion, all points should lie along straight line drawn through pivot point

GENERAL DATA

S.F.
A.F.

FUEL ANALYSIS

H
O
C
BTU/LB
H_a/C

SUBJECT	FILE NO.	THE BABCOCK & WILCOX CO. RESEARCH LABORATORY ALLIANCE, OHIO
EAST PRIMARY A.H. GAS OUT	BY CLIFF VOTAW	
	DATE 6/25/87	
(POINT 1 AT TOP)	REV.	DRAWING NO.

IP14_001527

Babcock & Wilcox

25 JUNE 87 GENERAL CALCULATIONS PROBE #E1

TAP	POINT	STATIC IN.	TEMP.	ΔP IN.	ANGLE (DEGREE)	DATA BY	LOCATION (REMARKS)
A	1	-8.0"	265°F	-0.148"	8°	DEW	EPGO 1355
A	2	-8.0"	314°F	0.046"	6°	DEW	EPGO 1348
A	3	-8.0"	307°F	0.107"	8°	DEW	EPGO 1342
A	4	-8.0"	293°F	0.104"	4°	DEW	EPGO 1335
B	1	-8.0"	260°F	-0.203	2°	DEW	EPGO 1423
B	2	-8.0"	308°F	0.036"	4°	DEW	EPGO 1416
B	3	-8.0"	308°F	0.114"	6°	DEW	EPGO 1409
B	4	-8.0"	294°F	0.107"	0°	DEW	EPGO 1402
C	1	-8.0"	263°F	-0.083"	6°	DEW	EPGO 1450
C	2	-8.0"	315°F	0.129"	8°	DEW	EPGO 1443
C	3	-8.0"	315°F	0.106"	12°	DEW	EPGO 1436
C	4	-8.0"	297°F	0.114"	4°	DEW	EPGO 1429
			START TIME		1335		
			END TIME		1450		

IP14_001528

Babcock & Wilcox

25 JUNE 87 GENERAL CALCULATIONS PROBE # E1

TAP	POINT	STATIC IN.	TEMP.	ΔP IN.	ANGLE (DEGREE)	DATA BY	LOCATION (REMARKS)
A	1	30"	498°F	0.079"	-5°	DEW	WPAO 1153
A	2	30"	448°F	0.068"	-5°	DEW	WPAO 1152
A	3	30"	416°F	0.048"	-10°	DEW	WPAO 1151
B	1	30"	481°F	0.041"	-5°	DEW	WPAO 1156
B	2	30"	468°F	0.021"	-10°	DEW	WPAO 1155
B	3	30"	459°F	0.065"	0°	DEW	WPAO 1154
C	1	30"	480°F	0.017"	-5°	DEW	WPAO 1200
C	2	30"	468°F	0.067"	-10°	DEW	WPAO 1159
C	3	30"	460°F	0.024"	-10°	DEW	WPAO 1158
D	1	30"	492°F	0.053"	-5°	DEW	WPAO 1205
D	2	30"	489°F	0.041"	-10°	DEW	WPAO 1204
D	3	30"	468°F	0.092"	0°	DEW	WPAO 1203
E	1	30"	496°F	0.024"	-10°	DEW	WPAO 1209
E	2	30"	470°F	0.073"	-10°	DEW	WPAO 1208
E	3	30"	456°F	0.061"	-5°	DEW	WPAO 1207
			START -	1151			
			END -	1209			

IP14_001529

Babcock & Wilcox

25 JUNE 87 GENERAL CALCULATIONS PROBE # E1

TAP	POINT	STATIC IN.	TEMP.	ΔP IN.	ANGLE (DEGREE)	DATA BY	LOCATION (REMARKS)
A	1	30"	486°F	0.036"	-5°	DEW	EPAO 1234
A	2	30"	471°F	0.051"	0°	DEW	EPAO 1233
A	3	30"	440°F	0.058"	-5°	DEW	EPAO 1232
B	1	30"	496°F	0.039"	5°	DEW	EPAO 1238
B	2	30"	488°F	0.063"	5°	DEW	EPAO 1237
B	3	30"	481°F	0.041"	5°	DEW	EPAO 1236
C	1	30"	514°F	0.017"	-10°	DEW	EPAO 1243
C	2	30"	499°F	0.051"	-10°	DEW	EPAO 1242
C	3	30"	482°F	0.007"	-10°	DEW	EPAO 1240
E	1	30"	519°F	0.048"	-5°	DEW	EPAO 1251
E	2	30"	502°F	0.065"	-10°	DEW	EPAO 1250
E	3	30"	478°F	0.048"	-5°	DEW	EPAO 1249
D	1	30"	507°F	0.053"	0°	DEW	EPAO 1247
D	2	30"	497°F	0.065"	-5°	DEW	EPAO 1246
D	3	30"	474°F	0.073"	-5°	DEW	EPAO 1245
		START	1232				
		END	1251				

IP14_001530

Babcock & Wilcox
GENERAL CALCULATIONS

PAGE 1 OF 2

START TIME 1150
FINISH TIME 1225

TAP	POINT	STATIC IN.	TEMP.	ΔP IN.	ANGLE (DEGREE)	DATA BY	LOCATION (REMARKS)
WEST A	1	30.	118	.139	0	GPB/DJL MJH	WEST TEMPERING AIR
WEST A	2	30	118	.043	5	GPB/DJL MJH	" " "
WEST A	3	30	118	.004	10	GPB/DJL/MJH	" " "
WEST A	4	30	118	.002	10	GPB/DJL/MJH	" " "
	1155						
WEST B	1	30	118	.146	0	GPB DJL MJH	WEST TEMPERING AIR
WEST B	2	30	117	.068	20	GPB DJL MJH	" " "
WEST B	3	30	116	.012	10	GPB DJL MJH	" " "
WEST B	4	30	115	.004	0	GPB DJL MJH	" " "
WEST C	1	30	115	.192	0	GPB DJL MJH	WEST TEMPERING AIR
WEST C	2	30	114	.063	20	GPB DJL MJH	" " "
WEST C	3	30	113	.007	30	GPB DJL MJH	" " "
WEST C	4	30	112	.002	0	GPB DJL MJH	" " "
WEST D	1	30	112	.180	5	GPB DJL MJH	WEST TEMPERING AIR
WEST D	2	30	112	.073	15	GPB DJL MJH	" " "
WEST D	3	30	112	.009	20	GPB DJL MJH	" " "
WEST D	4	30	111	.002	0	GPB DJL MJH	" " "
WEST E	1	30	111	.144	5	GPB DJL MJH	WEST TEMPERING AIR
WEST E	2	30	110	.083	10	GPB DJL MJH	" " "
WEST E	3	30	109	.019	10	GPB DJL MJH	" " "
WEST E	4	30	108	.004	15	GPB DJL MJH	" " "

WEST TEMPERING AIR
PAGE 1 OF 2

FECHEMER E-9
GPB/DJL/MJH 6-25-87

IP14_001531

Babcock & Wilcox
GENERAL CALCULATIONS

PAGE 2 OF

TAP	POINT	STATIC IN.	TEMP.	ΔP IN.	ANGLE (DEGREE)	DATA BY	LOCATION (REMARKS)
WEST F	1	30	108	.117	5	GPB DJL MJH	WEST TEMPERING AIR
WEST F	2	30	108	.117	10	GPB DJL MJH	" " "
WEST F	3	30	108	.043	15	GPB DJL MJH	" " "
WEST F	4	30	107	.004	0	GPB DJL MJH	" " "

WEST TEMPERING AIR
PAGE 2 OF 2

FECHEIMER E-9
GPB/DJL/MJH 6-25-87

IP14_001532

PAGE 1 OF 2

Babcock & Wilcox
GENERAL CALCULATIONS

START TIME 1235
FINISH TIME 1305

TAP	POINT	STATIC IN.	TEMP.	ΔP IN.	ANGLE (DEGREE)	DATA BY	LOCATION (REMARKS)
EAST A	1	30	110	.063	10	GPB DJL MJH	EAST TEMPERING AIR
EAST A	2	30	111	.012	0	GPB DJL MJH	" " "
EAST A	3	30	111	.004	0	GPB DJL MJH	" " "
EAST A	4	30	111	.019	0	GPB DJL MJH	" " "
EAST B	1	30	113	.056	10	GPB DJL MJH	EAST TEMPERING AIR
EAST B	2	30	113	.036	20	GPB DJL MJH	" " "
EAST B	3	30	112	.002	0	GPB DJL MJH	" " "
EAST B	4	30	111	.007	0	GPB DJL MJH	" " "
EAST C	1	30	111	.090	5	GPB DJL MJH	EAST TEMPERING AIR
EAST C	2	30	111	.034	15	GPB DJL MJH	" " "
E[illegible]-C	3	30	110	.004	0	GPB DJL MJH	" " "
EAST C	4	30	110	.007	0	GPB DJL MJH	" " "
EAST D	1	30	110	.092	5	GPB DJL MJH	EAST TEMPERING AIR
EAST D	2	30	110	.021	15	GPB DJL MJH	" " "
EAST D	3	30	111	.009	0	GPB DJL MJH	" " "
EAST D	4	30	111	.036	10	GPB DJL MJH	" " "
EAST E	1	30	110	.070	5	GPB DJL MJH	EAST TEMPERING AIR
EAST E	2	30	109	.029	15	GPB DJL MJH	" " "
EAST E	3	30	108	.014	5	GPB DJL MJH	" " "
EAST E	4	30	109	.046	0	GPB DJL MJH	" " "

EAST TEMPERING AIR PAGE 1 OF 2

PECHEIMER E-9
GPB/MJH/DJL 6-25-87

IP14_001533

Babcock & Wilcox
GENERAL CALCULATIONS

PAGE 2 OF 2

TAP	POINT	STATIC IN.	TEMP.	ΔP IN.	ANGLE (DEGREE)	DATA BY	LOCATION (REMARKS)
EAST F	1	30	109	.058	5	GPB DJL MJH	EAST TEMPERING AIR
EAST F	2	30	109	.061	5	GPB. DJL MJH	" " "
EAST F	3	30	109	.029	5	GPB DJL MJH	" " "
EAST F	4	30	109	.026	0	GPB DJL MJH	" " "

EAST TEMPERING AIR PAGE 2 OF 2

FECHEIMER E-9
GPB/MJH/DJL 6-25-87

IP14_001534

ΔPs 6/25/87	10:00	10:30	11:00	11:30	12:00	12:30	1:00	1:30	2:00	2:30	3:00	3:30	4:00	4:30
EPAH AIR IN O GAS OUT ΔP		37.9	39.1	38.2	38.2	38.2	37.9	38.1	38.0	37.5				
EPAH AIR IN STATIC		30.6	32.4	31.3	31.3	31.1	30.8	30.9	30.9	30.7				
ESAH AIR IN TO GAS OUT ΔP		12.0	11.5	11.7	11.5	11.6	11.7	11.6	11.7	11.9				
ESAH AIR IN STATIC		4.1	3.8	4.1	4.1	4.0	4.1	3.9	3.8	4.2				
WPAH AIR IN TO GAS OUT ΔP	~~39.0~~	38.8	40.6	39.3	39.2	38.9	38.8	39.0	38.8	38.8				
WPAH AIR IN STATIC	~~30.4~~	31.4	33.1	32.2	32.0	31.7	31.6	31.5	31.5	31.5				
WSAH AIR INTO GAS OUT ΔP		11.9	11.7	11.9	11.6	11.6	11.9	11.8	11.7	12.0				
WSAH AIR IN STATIC		4.0	3.7	4.1	4.0	4.0	4.3	3.9	3.7	4.1				

AIR HTR INLET TEMP 6/25/87	10:30	~~10:30~~	11:00	11:30	12:00	12:30	1:00	1:30	2:00	2:30	3:00	3:30	4:00	4:30
WSAH 1	103.8		107.4	119.2	110.0	118.4	123.0	118.0	115.2	122.6				
2	104.0		107.4	118.8	111.2	119.0	123.6	118.6	116.4	123.0				
3	104.4		107.6	118.6	110.8	119.0	123.8	118.6	117.0	123.0				
4	104.4		108.0	118.4	112.4	119.2	123.8	118.6	118.4	123.2				
5	103.8		107.6	117.6	112.0	118.6	124.2	118.2	118.4	122.8				
6	103.8		108.0	117.4	112.0	118.6	124.4	118.2	119.2	122.2				
WSAH 1	83.0		87.0	95.6	91.4	97.0	103.0	96.6	98.2	100.8				
2	82.6		87.2	95.4	91.8	98.0	103.4	96.6	98.6	101.0				
3	82.2		86.8	94.2	90.4	96.2	102.0	95.2	98.0	100.6				
4	82.2		87.6	94.2	91.0	97.0	102.2	95.0	98.8	99.6				
5	81.8		87.2	92.8	90.4	95.4	101.0	94.0	97.6	98.2				
6	82.2		88.2	93.6	90.6	95.6	101.0	93.4	98.4	98.6				
7	82.0		88.2	92.4	90.4	94.6	100.4	93.4	97.2	98.0				
8	82.4		88.2	92.4	90.4	94.8	100.2	93.6	97.8	98.2				
EPAH 1	103.0		108.8	111.8	110.0	112.0	115.0	112.8	114.4	113.6				
2	102.0		109.2	111.6	109.2	111.4	114.4	112.8	114.2	112.8				
3	105.0		113.2	115.2	112.6	115.4	118.8	117.2	118.2	117.4				
4	103.6		111.6	113.8	111.6	114.0	116.8	115.4	117.2	116.2				
5	101.2		108.4	110.6	109.0	112.2	114.4	113.4	113.6	113.0				
6	100.4		108.4	110.2	108.6	111.8	114.0	112.8	113.4	113.0				
ESAH 1	78.4		86.4	88.0	87.6	89.6	92.8	91.2	91.6	91.4				
2	77.6		86.0	87.2	86.8	88.8	91.4	91.0	90.6	90.4				
3	77.4		85.4	85.4	85.6	88.8	91.0	89.8	89.8	89.6				
4	76.4		85.2	85.0	85.6	88.2	90.8	89.4	89.6	89.6				
5	76.0		84.2	84.0	84.6	87.8	90.8	89.6	88.4	88.6				
6	76.0		85.4	84.4	85.4	88.2	90.8	90.0	88.8	89.4				
7	76.6		85.4	85.2	86.2	88.4	91.6	90.8	90.0	90.6				
8	76.2		85.0	84.4	85.2	88.0	91.4	90.2	89.8	90.2				

****
****

PRELIMINARY CALCULATIONS !!!!!!!!!
FINAL CALCULATIONS TO BE RUN AFTER
FECHHEIMER PROBES ARE
INDEPENDENTLY CALIBRATED

****
****

DATE = 6-25-1987
LOCATION = ECON EAST
FILE IDENITY = IP6_25EEA
BAROMETRIC PRESSURE = 25.53
PROBE IDENTY = 28
DUCT AREA = 425.0

TAP	POINT	CORR V	%02	% CO2	V LOC/AVG	WTD % O2	WTD %CO2	WTD TEMP
1	1	6001	4.0	15.0	1.16	4.6	17.4	867
1	2	5280	3.8	15.2	1.02	3.9	15.5	755
1	3	1769	4.0	14.8	.34	1.4	5.1	253
1	4	3689	4.0	15.0	.71	2.9	10.7	524
1	5	2040	3.5	15.0	.39	1.4	5.9	289
1	6	3144	3.8	15.0	.61	2.3	9.1	445
1	7	3672	3.9	15.1	.71	2.8	10.7	519

TAP	POINT	CORR V	%02	% CO2	V LOC/AVG	WTD % O2	WTD %CO2	WTD TEMP
2	1	5110	4.1	14.8	.99	4.1	14.6	742
2	2	3797	4.0	15.0	.73	2.9	11.0	546
2	3	3166	3.8	15.1	.61	2.3	9.3	453
2	4	6198	4.0	14.8	1.20	4.8	17.8	884
2	5	7146	4.0	15.0	1.38	5.5	20.7	1018
2	6	5016	4.0	15.0	.97	3.9	14.6	713
2	7	6016	4.2	14.8	1.16	4.9	17.2	857

TAP	POINT	CORR V	%02	% CO2	V LOC/AVG	WTD % O2	WTD %CO2	WTD TEMP
3	1	7685	4.2	14.6	1.49	6.2	21.7	1095
3	2	6442	4.0	15.2	1.25	5.0	19.0	930
3	3	4131	4.0	15.1	.80	3.2	12.1	589
3	4	2717	4.0	15.0	.53	2.1	7.9	389
3	5	4882	4.1	15.0	.94	3.9	14.2	694
3	6	6731	4.2	15.1	1.30	5.5	19.7	952
3	7	7873	4.3	14.7	1.52	6.6	22.4	1114

TAP	POINT	CORR V	%02	% CO2	V LOC/AVG	WTD % O2	WTD %CO2	WTD TEMP
4	1	8136	3.9	15.4	1.57	6.1	24.2	1197
4	2	5959	4.0	15.2	1.15	4.6	17.5	877
4	3	4312	4.5	14.8	.83	3.8	12.4	625
4	4	2772	4.3	15.0	.54	2.3	8.0	406
4	5	6034	4.4	14.6	1.17	5.1	17.1	874
4	6	7990	4.3	15.0	1.55	6.6	23.2	1147
4	7	9537	4.0	15.2	1.85	7.4	28.1	1377

TAP	POINT	CORR V	%02	% CO2	V LOC/AVG	WTD % O2	WTD %CO2	WTD TEMP
5	1	7104	3.6	15.6	1.37	4.9	21.4	1044
5	2	5189	3.6	15.6	1.00	3.6	15.7	775
5	3	3146	3.6	15.6	.61	2.2	9.5	464
5	4	2588	4.3	15.0	.50	2.2	7.5	384
5	5	7062	4.2	15.0	1.37	5.7	20.5	1043
5	6	8709	4.4	14.8	1.69	7.4	24.9	1283
5	7	9156	4.0	14.9	1.77	7.1	26.4	1363

TAP	POINT	CORR V	%02	% CO2	V LOC/AVG	WTD % O2	WTD %CO2	WTD TEMP
6	1	7533	3.8	15.4	1.46	5.5	22.5	1102
6	2	5364	3.6	15.5	1.04	3.7	16.1	793
6	3	4768	3.8	15.5	.92	3.5	14.3	705
6	4	3502	3.8	15.5	.68	2.6	10.5	519
6	5	2197	3.9	15.4	.43	1.7	6.5	326
6	6	3595	3.8	15.4	.70	2.6	10.7	529
6	7	3750	4.0	14.6	.73	2.9	10.6	552

TAP	POINT	CORR V	%02	% CO2	V LOC/AVG	WTD % O2	WTD %CO2	WTD TEMP
7	1	7425	3.6	15.6	1.44	5.2	22.4	1099
7	2	5620	3.8	15.0	1.09	4.1	16.3	825
7	3	5208	3.2	16.0	1.01	3.2	16.1	770
7	4	2598	3.6	15.6	.50	1.8	7.8	387
7	5	3986	3.6	15.8	.77	2.8	12.2	594
7	6	3923	3.9	15.2	.76	3.0	11.5	581
7	7	3516	3.9	15.0	.68	2.7	10.2	521

LOCATION = ECON EAST
FILE IDENITY = IP6_25EEA

AVERAGE VELOCITY = 5167 FPM

AVERAGE (WEIGHTED) % O2 = 4.0
AVERAGE (WEIGHTED) % CO2 = 15.1
AVERAGE (WEIGHTED) TEMPERATURE = 751

AVERAGE (ARITHMATIC) % O2 = 3.9
AVERAGE (ARITHMATIC) % CO2 = 15.1
AVERAGE (ARITHMATIC) TEMPERATURE = 751

AVERAGE STATIC PRESSURE (in. H2O) = -3.1
AVERAGE DENSITY (LBM/FT^3) = .02834

ACFM (ACTUAL FT^3/MIN) = 2195995
LB/HR (WET) = 3733860

****
****

PRELIMINARY CALCULATIONS !!!!!!!!!
FINAL CALCULATIONS TO BE RUN AFTER
FECHHEIMER PROBES ARE
INDEPENDENTLY CALIBRATED

****
****

DATE = 6/25/87
LOCATION = ECON EAST
FILE IDENITY = IP6_25EEH
BAROMETRIC PRESSURE = 25.53
PROBE IDENTY = E8
DUCT AREA = 425.0

TAP	POINT	CORR V	%02	% CO2	V LOC/AVG	WTD % O2	WTD %CO2	WTD TEMP
1	1	1134	4.6	14.6	.45	2.1	6.5	333
1	2	1704	3.2	16.0	.67	2.1	10.7	515
1	3	3700	2.8	16.4	1.46	4.1	23.9	1121
1	4	3123	3.4	15.8	1.23	4.2	19.4	952
1	5	2590	3.2	15.8	1.02	3.3	16.1	778
1	6	3586	3.6	15.4	1.41	5.1	21.8	1085
1	7	1681	4.6	14.4	.66	3.0	9.5	505

TAP	POINT	CORR V	%02	% CO2	V LOC/AVG	WTD % O2	WTD %CO2	WTD TEMP
2	1	1407	3.0	16.0	.55	1.7	8.9	421
2	2	1984	3.8	15.4	.78	3.0	12.0	597
2	3	4361	3.4	15.6	1.72	5.8	26.8	1316
2	4	2417	3.6	15.6	.95	3.4	14.8	731
2	5	2057	3.6	15.6	.81	2.9	12.6	611
2	6	2654	4.0	15.2	1.05	4.2	15.9	786
2	7	2535	4.4	14.6	1.00	4.4	14.6	750

TAP	POINT	CORR V	%02	% CO2	V LOC/AVG	WTD % O2	WTD %CO2	WTD TEMP
3	1	199	2.4	16.6	.08	.2	1.3	60
3	2	950	2.8	16.2	.37	1.0	6.1	285
3	3	2855	2.0	16.8	1.12	2.2	18.9	867
3	4	2619	3.2	15.6	1.03	3.3	16.1	790
3	5	2164	3.8	15.6	.85	3.2	13.3	636
3	6	1422	3.6	15.6	.56	2.0	8.7	412
3	7	1622	3.8	15.2	.64	2.4	9.7	472

TAP	POINT	CORR V	%02	% CO2	V LOC/AVG	WTD % O2	WTD %CO2	WTD TEMP
4	1	220	2.6	16.4	.09	.2	1.4	65
4	2	863	3.2	15.8	.34	1.1	5.4	257
4	3	2899	2.0	17.0	1.14	2.3	19.4	873
4	4	4131	2.6	16.4	1.63	4.2	26.7	1242
4	5	3475	3.2	16.0	1.37	4.4	21.9	1023
4	6	3164	4.4	15.6	1.25	5.5	19.4	914
4	7	2608	3.0	16.0	1.03	3.1	16.4	754

TAP	POINT	CORR V	%02	% CO2	V LOC/AVG	WTD % O2	WTD %CO2	WTD TEMP
5	1	280	4.4	14.8	.11	.5	1.6	73
5	2	328	2.4	16.6	.13	.3	2.1	97
5	3	2711	2.2	16.6	1.07	2.3	17.7	814
5	4	3988	2.8	16.2	1.57	4.4	25.4	1186
5	5	3727	3.2	15.8	1.47	4.7	23.2	1110
5	6	3662	3.2	16.0	1.44	4.6	23.1	1070
5	7	2452	3.6	15.4	.97	3.5	14.9	720

TAP	POINT	CORR V	%02	% CO2	V LOC/AVG	WTD % O2	WTD %CO2	WTD TEMP
6	1	6263	4.0	15.0	2.47	9.9	37.0	1110
6	2	5521	2.6	16.4	2.17	5.7	35.7	1619
6	3	3869	2.2	16.8	1.52	3.4	25.6	1138
6	4	2539	3.4	16.6	1.00	3.4	16.6	743
6	5	2328	2.6	16.4	.92	2.4	15.0	690
6	6	3000	3.6	15.8	1.18	4.3	18.7	883
6	7	4767	2.8	16.0	1.88	5.3	30.0	1401

TAP	POINT	CORR V	%02	% CO2	V LOC/AVG	WTD % O2	WTD %CO2	WTD TEMP
7	1	743	3.2	16.0	.29	.9	4.7	205
7	2	1111	2.6	16.4	.44	1.1	7.2	324
7	3	1467	2.4	16.8	.58	1.4	9.7	425
7	4	3119	2.4	16.4	1.23	2.9	20.1	889
7	5	3491	2.8	16.4	1.38	3.9	22.6	1012
7	6	2692	3.2	16.0	1.06	3.4	17.0	786
7	7	2232	2.8	16.0	.88	2.5	14.1	658

LOCATION = ECON EAST
FILE IDENITY = IP6_25EEH

AVERAGE VELOCITY = 2539 FPM

AVERAGE (WEIGHTED) % O2 = 3.2
AVERAGE (WEIGHTED) % CO2 = 15.9
AVERAGE (WEIGHTED) TEMPERATURE = 737

AVERAGE (ARITHMATIC) % O2 = 3.2
AVERAGE (ARITHMATIC) % CO2 = 15.9
AVERAGE (ARITHMATIC) TEMPERATURE = 743

AVERAGE STATIC PRESSURE (in. H2O) = -3.0
AVERAGE DENSITY (LBM/FT^3) = .02861

ACFM (ACTUAL FT^3/MIN) = 1079110
LB/HR (WET) = 1852367

****
****

PRELIMINARY CALCULATIONS !!!!!!!!!
FINAL CALCULATIONS TO BE RUN AFTER
FECHHEIMER PROBES ARE
INDEPENDENTLY CALIBRATED

****
****

DATE = 6/26/1987
LOCATION = ECON WEST
FILE IDENITY = IP6_25EWH
BAROMETRIC PRESSURE = 25.53
PROBE IDENTY = E6
DUCT AREA = 425.0

TAP	POINT	CORR V	%02	% CO2	V LOC/AVG	WTD % O2	WTD %CO2	WTD TEMP
1	1	0	8.9	11.0	0.00	0.0	0.0	0
1	2	0	4.4	14.6	0.00	0.0	0.0	0
1	3	4100	3.4	15.4	1.53	5.2	23.5	1177
1	4	3992	3.8	15.3	1.49	5.7	22.8	1119
1	5	4112	3.4	15.8	1.53	5.2	24.2	1159
1	6	3828	3.7	15.7	1.43	5.3	22.4	1087
1	7	796	3.8	14.8	.30	1.1	4.4	226

TAP	POINT	CORR V	%02	% CO2	V LOC/AVG	WTD % O2	WTD %CO2	WTD TEMP
2	1	0	7.3	12.4	0.00	0.0	0.0	0
2	2	0	4.3	14.4	0.00	0.0	0.0	0
2	3	4588	3.8	15.2	1.71	6.5	26.0	1308
2	4	3912	3.4	15.8	1.46	5.0	23.0	1114
2	5	3812	3.5	15.7	1.42	5.0	22.3	1081
2	6	3500	4.1	15.1	1.30	5.3	19.7	996
2	7	3696	3.8	15.0	1.38	5.2	20.7	1052

TAP	POINT	CORR V	%02	% CO2	V LOC/AVG	WTD % O2	WTD %CO2	WTD TEMP
3	1	0	7.3	12.1	0.00	0.0	0.0	0
3	2	0	3.6	15.2	0.00	0.0	0.0	0
3	3	4272	4.2	14.8	1.59	6.7	23.5	1222
3	4	4129	4.1	14.9	1.54	6.3	22.9	1162
3	5	3496	4.2	15.0	1.30	5.5	19.5	992
3	6	3560	4.1	15.1	1.33	5.4	20.0	1006
3	7	3434	3.7	14.9	1.28	4.7	19.1	974

TAP	POINT	CORR V	%02	% CO2	V LOC/AVG	WTD % O2	WTD %CO2	WTD TEMP
4	1	0	6.5	13.0	0.00	0.0	0.0	0
4	2	0	3.9	15.3	0.00	0.0	0.0	0
4	3	4386	4.0	15.0	1.63	6.5	24.5	1238
4	4	3689	4.1	15.2	1.37	5.6	20.9	1038
4	5	2617	4.4	14.8	.97	4.3	14.4	734
4	6	3151	4.4	14.8	1.17	5.2	17.4	887
4	7	3212	4.3	15.1	1.20	5.1	18.1	904

TAP	POINT	CORR V	%02	% CO2	V LOC/AVG	WTD % O2	WTD %CO2	WTD TEMP
5	1	0	7.3	12.2	0.00	0.0	0.0	0
5	2	0	4.5	14.7	0.00	0.0	0.0	0
5	3	3500	4.0	15.2	1.30	5.2	19.8	977
5	4	2859	4.9	14.3	1.06	5.2	15.2	801
5	5	2810	4.5	14.7	1.05	4.7	15.4	787
5	6	3649	4.6	14.6	1.36	6.3	19.8	1022
5	7	3941	4.5	14.5	1.47	6.6	21.3	1100

TAP	POINT	CORR V	%02	% CO2	V LOC/AVG	WTD % O2	WTD %CO2	WTD TEMP
6	1	0	4.8	14.2	0.00	0.0	0.0	0
6	2	0	4.8	14.5	0.00	0.0	0.0	0
6	3	4350	4.5	14.7	1.62	7.3	23.8	1217
6	4	3475	4.6	14.4	1.29	6.0	18.6	981
6	5	2944	4.4	14.7	1.10	4.8	16.1	827
6	6	3337	4.5	14.7	1.24	5.6	18.3	857
6	7	3497	3.9	14.9	1.30	5.1	19.4	981

TAP	POINT	CORR V	%02	% CO2	V LOC/AVG	WTD % O2	WTD %CO2	WTD TEMP
7	1	0	4.8	14.4	0.00	0.0	0.0	0
7	2	6780	4.5	14.7	2.53	11.4	37.1	1936
7	3	5699	4.7	14.5	2.12	10.0	30.8	1606
7	4	2755	5.0	14.2	1.03	5.1	14.6	783
7	5	2875	4.3	14.9	1.07	4.6	16.0	812
7	6	3398	4.2	15.2	1.27	5.3	19.2	946
7	7	3409	4.2	14.8	1.27	5.3	18.8	954

LOCATION = ECON WEST
FILE IDENITY = IP6_25EWH

AVERAGE VELOCITY = 2685 FPM

AVERAGE (WEIGHTED) % O2 = 4.1
AVERAGE (WEIGHTED) % CO2 = 15.0
AVERAGE (WEIGHTED) TEMPERATURE = 756

AVERAGE (ARITHMATIC) % O2 = 4.5
AVERAGE (ARITHMATIC) % CO2 = 14.6
AVERAGE (ARITHMATIC) TEMPERATURE = 750

AVERAGE STATIC PRESSURE (in. H2O) = -2.7
AVERAGE DENSITY (LBM/FT^3) = .02837

ACFM (ACTUAL FT^3/MIN) = 1141063
LB/HR (WET) = 1942286

****
****

PRELIMINARY CALCULATIONS !!!!!!!!!
FINAL CALCULATIONS TO BE RUN AFTER
FECHHEIMER PROBES ARE
INDEPENDENTLY CALIBRATED

****
****

DATE = 6/25/1987
LOCATION = ECON WEST A_G
FILE IDENITY = IP6_25EWA
BAROMETRIC PRESSURE = 25.53
PROBE IDENTY = E43
DUCT AREA = 425.0

TAP	POINT	CORR V	%02	% CO2	V LOC/AVG	WTD % O2	WTD %CO2	WTD TEMP
1	1	1357	5.0	14.5	.47	2.4	6.9	346
1	2	1359	4.8	14.6	.47	2.3	6.9	352
1	3	1379	5.0	14.3	.48	2.4	6.9	355
1	4	3219	3.7	15.3	1.12	4.1	17.2	817
1	5	3277	4.0	15.1	1.14	4.6	17.2	829
1	6	3594	3.9	15.3	1.25	4.9	19.2	914
1	7	2936	3.9	15.3	1.02	4.0	15.6	756

TAP	POINT	CORR V	%02	% CO2	V LOC/AVG	WTD % O2	WTD %CO2	WTD TEMP
2	1	1381	6.3	13.2	.48	3.0	6.4	343
2	2	1395	5.2	14.2	.49	2.5	6.9	362
2	3	1377	3.4	15.7	.48	1.6	7.5	358
2	4	2961	3.4	15.8	1.03	3.5	16.3	765
2	5	3547	3.0	16.2	1.24	3.7	20.0	909
2	6	3655	3.4	15.6	1.27	4.3	19.9	937
2	7	3195	3.4	15.8	1.11	3.8	17.6	819

TAP	POINT	CORR V	%02	% CO2	V LOC/AVG	WTD % O2	WTD %CO2	WTD TEMP
3	1	1387	6.8	13.0	.48	3.3	6.3	349
3	2	1669	4.3	14.9	.58	2.5	8.7	437
3	3	3523	4.6	14.7	1.23	5.6	18.0	931
3	4	3280	2.8	16.4	1.14	3.2	18.7	851
3	5	3163	2.8	16.4	1.10	3.1	18.1	826
3	6	3377	2.8	16.6	1.18	3.3	19.5	876
3	7	3768	2.9	16.0	1.31	3.8	21.0	976

TAP	POINT	CORR V	%02	% CO2	V LOC/AVG	WTD % O2	WTD %CO2	WTD TEMP
4	1	1559	4.8	14.4	.54	2.6	7.8	404
4	2	1904	4.6	14.8	.66	3.1	9.8	502
4	3	4013	5.1	14.2	1.40	7.1	19.9	1062
4	4	3300	2.5	16.6	1.15	2.9	19.1	863
4	5	2811	2.9	16.3	.98	2.8	16.0	723
4	6	3356	2.1	16.9	1.17	2.5	19.8	864
4	7	4025	3.1	16.3	1.40	4.3	22.9	1042

TAP	POINT	CORR V	%02	% CO2	V LOC/AVG	WTD % O2	WTD %CO2	WTD TEMP
5	1	1590	4.0	15.4	.55	2.2	8.5	419
5	2	1855	4.5	14.7	.68	3.1	10.0	516
5	3	4284	5.0	14.4	1.49	7.5	21.5	1131
5	4	4001	2.6	16.6	1.39	3.6	23.1	1040
5	5	3035	2.8	16.4	1.06	3.0	17.3	779
5	6	3267	3.6	15.8	1.14	4.1	18.0	843
5	7	3809	3.0	15.8	1.33	4.0	21.0	984

TAP	POINT	CORR V	%02	% CO2	V LOC/AVG	WTD % O2	WTD %CO2	WTD TEMP
6	1	1555	3.0	16.2	.54	1.6	8.8	406
6	2	2930	3.5	15.6	1.02	3.6	15.9	772
6	3	4274	3.1	16.0	1.49	4.6	23.8	1129
6	4	4041	3.4	15.9	1.41	4.8	22.4	1051
6	5	3267	3.0	16.4	1.14	3.4	18.7	843
6	6	2668	3.7	15.7	.93	3.4	14.6	694
6	7	2439	3.3	15.8	.85	2.8	13.4	630

TAP	POINT	CORR V	%02	% CO2	V LOC/AVG	WTD % O2	WTD %CO2	WTD TEMP
7	1	1530	6.5	13.1	.53	3.5	7.0	377
7	2	2246	4.6	14.7	.78	3.6	11.5	593
7	3	4667	3.4	16.0	1.63	5.5	26.0	1234
7	4	4015	3.8	15.4	1.40	5.3	21.5	1050
7	5	3584	3.4	15.8	1.25	4.2	19.7	940
7	6	3418	3.9	15.4	1.19	4.6	18.3	902
7	7	2327	3.9	15.1	.81	3.2	12.2	614

LOCATION = ECON WEST A_6
FILE IDENITY = IP6_25EWA

AVERAGE VELOCITY = 2871 FPM

AVERAGE (WEIGHTED) % O2 = 3.7
AVERAGE (WEIGHTED) % CO2 = 15.6
AVERAGE (WEIGHTED) TEMPERATURE = 745

AVERAGE (ARITHMATIC) % O2 = 3.8
AVERAGE (ARITHMATIC) % CO2 = 15.4
AVERAGE (ARITHMATIC) TEMPERATURE = 744

AVERAGE STATIC PRESSURE (in. H2O) = -3.4
AVERAGE DENSITY (LBM/FT^3) = .02849

ACFM (ACTUAL FT^3/MIN) = 1220096
LB/HR (WET) = 2085905

****
****

PRELIMINARY CALCULATIONS !!!!!!!!!
FINAL CALCULATIONS TO BE RUN AFTER
FECHHEIMER PROBES ARE
INDEPENDENTLY CALIBRATED

****
****

DATE = 6/25/87
LOCATION = EASTPRIGASIN
FILE IDENITY = IP6_25EPGI
BAROMETRIC PRESSURE = 25.52
PROBE IDENTY = E-11
DUCT AREA = 162.0

TAP	POINT	CORR V	%02	% CO2	V LOC/AVG	WTD % O2	WTD %CO2	WTD TEMP
1	1	437	3.2	15.8	.27	.9	4.3	199
1	2	437	3.2	15.8	.27	.9	4.3	201
1	3	1111	3.1	15.9	.69	2.1	11.0	507

TAP	POINT	CORR V	%02	% CO2	V LOC/AVG	WTD % O2	WTD %CO2	WTD TEMP
2	1	755	3.1	15.9	.47	1.5	7.5	344
2	2	579	3.0	16.0	.36	1.1	5.7	266
2	3	1629	3.0	16.0	1.01	3.0	16.2	746

TAP	POINT	CORR V	%02	% CO2	V LOC/AVG	WTD % O2	WTD %CO2	WTD TEMP
3	1	2259	3.4	15.6	1.40	4.8	21.9	1032
3	2	1631	3.1	15.9	1.01	3.1	16.1	749
3	3	1794	3.2	15.9	1.11	3.6	17.7	821

TAP	POINT	CORR V	%02	% CO2	V LOC/AVG	WTD % O2	WTD %CO2	WTD TEMP
4	1	2058	3.4	15.6	1.28	4.3	19.9	935
4	2	2212	3.4	15.5	1.37	4.7	21.3	1018
4	3	2261	3.0	15.9	1.40	4.2	22.3	1037

TAP	POINT	CORR V	%02	% CO2	V LOC/AVG	WTD % O2	WTD %CO2	WTD TEMP
5	1	1728	2.9	15.8	1.07	3.1	16.9	791
5	2	1882	3.4	15.6	1.17	4.0	18.2	861
5	3	2029	3.0	16.1	1.26	3.8	20.3	931

TAP	POINT	CORR V	%02	% CO2	V LOC/AVG	WTD % O2	WTD %CO2	WTD TEMP
6	1	2214	2.9	15.6	1.37	4.0	21.4	1009
6	2	1890	3.2	15.7	1.17	3.8	18.4	866
6	3	2086	2.9	15.6	1.30	3.8	20.2	956

LOCATION = EASTPRIGASIN
FILE IDENITY = IP6_25EPGI

AVERAGE VELOCITY = 1611 FPM

AVERAGE (WEIGHTED) % O2 = 3.1
AVERAGE (WEIGHTED) % CO2 = 15.8
AVERAGE (WEIGHTED) TEMPERATURE = 737

AVERAGE (ARITHMATIC) % O2 = 3.1
AVERAGE (ARITHMATIC) % CO2 = 15.8
AVERAGE (ARITHMATIC) TEMPERATURE = 737

AVERAGE STATIC PRESSURE (in. H2O) = -4.0
AVERAGE DENSITY (LBM/FT^3) = .02860

ACFM (ACTUAL FT^3/MIN) = 260909
LB/HR (WET) = 447645

****
****

PRELIMINARY CALCULATIONS !!!!!!!!!
FINAL CALCULATIONS TO BE RUN AFTER
FECHHEIMER PROBES ARE
INDEPENDENTLY CALIBRATED

****
****

DATE = 6/25/87
LOCATION = WESTPRIGASIN
FILE IDENITY = IP6_25WPGI
BAROMETRIC PRESSURE = 25.52
PROBE IDENTY = E-11
DUCT AREA = 162.0

TAP	POINT	CORR V	%02	% CO2	V LOC/AVG	WTD % O2	WTD %CO2	WTD TEMP
1	1	1825	3.5	15.6	1.26	4.4	19.7	927
1	2	1968	3.4	15.6	1.36	4.6	21.3	997
1	3	2029	3.5	15.5	1.41	4.9	21.8	1024

TAP	POINT	CORR V	%02	% CO2	V LOC/AVG	WTD % O2	WTD %CO2	WTD TEMP
2	1	1553	3.6	15.4	1.08	3.9	16.6	791
2	2	1968	3.4	15.6	1.36	4.6	21.3	1000
2	3	2227	3.4	15.6	1.54	5.2	24.1	1127

TAP	POINT	CORR V	%02	% CO2	V LOC/AVG	WTD % O2	WTD %CO2	WTD TEMP
3	1	1682	3.4	15.5	1.17	4.0	18.1	852
3	2	2202	3.6	15.4	1.53	5.5	23.5	1116
3	3	2119	3.2	15.7	1.47	4.7	23.1	1072

TAP	POINT	CORR V	%02	% CO2	V LOC/AVG	WTD % O2	WTD %CO2	WTD TEMP
4	1	2156	3.6	15.4	1.49	5.4	23.0	1092
4	2	1639	3.3	15.8	1.14	3.7	17.9	832
4	3	2102	3.3	15.7	1.46	4.8	22.9	1065

TAP	POINT	CORR V	%02	% CO2	V LOC/AVG	WTD % O2	WTD %CO2	WTD TEMP
5	1	436	3.3	15.6	.30	1.0	4.7	221
5	2	577	3.6	15.4	.40	1.4	6.2	292
5	3	436	3.2	15.8	.30	1.0	4.8	220

TAP	POINT	CORR V	%02	% CO2	V LOC/AVG	WTD % O2	WTD %CO2	WTD TEMP
6	1	309	3.5	15.5	.21	.7	3.3	156
6	2	436	3.4	15.6	.30	1.0	4.7	221
6	3	308	3.0	15.9	.21	.6	3.4	155

LOCATION = WESTPRIGASIN
FILE IDENITY = IP6_25WPGI

AVERAGE VELOCITY = 1443 FPM

AVERAGE (WEIGHTED) % O2 = 3.4
AVERAGE (WEIGHTED) % CO2 = 15.6
AVERAGE (WEIGHTED) TEMPERATURE = 731

AVERAGE (ARITHMATIC) % O2 = 3.4
AVERAGE (ARITHMATIC) % CO2 = 15.6
AVERAGE (ARITHMATIC) TEMPERATURE = 731

AVERAGE STATIC PRESSURE (in. H2O) = -4.0
AVERAGE DENSITY (LBM/FT^3) = .02873

ACFM (ACTUAL FT^3/MIN) = 233748
LB/HR (WET) = 403000

****
****

PRELIMINARY CALCULATIONS !!!!!!!!!
FINAL CALCULATIONS TO BE RUN AFTER
FECHHEIMER PROBES ARE
INDEPENDENTLY CALIBRATED

****
****

DATE = 6-25-87
LOCATION = SEC GAS IN EAST
FILE IDENITY = IP6_25ESGI
BAROMETRIC PRESSURE = 25.52
PROBE IDENTY = E-27
DUCT AREA = 789.2

TAP	POINT	CORR V	%02	% CO2	V LOC/AVG	WTD % O2	WTD %CO2	WTD TEMP
1	1	3970	3.6	15.5	1.40	5.0	21.7	1048
1	2	4144	3.6	15.5	1.46	5.2	22.6	1094
1	3	3980	3.6	15.5	1.40	5.0	21.7	1046
1	4	3688	3.6	15.5	1.30	4.6	20.1	967
1	5	2600	3.6	15.5	.91	3.2	14.2	681
1	6	1823	3.6	15.5	.64	2.3	9.9	477
1	7	739	3.6	15.5	.26	.9	4.0	193

TAP	POINT	CORR V	%02	% CO2	V LOC/AVG	WTD % O2	WTD %CO2	WTD TEMP
2	1	4050	3.6	15.5	1.43	5.1	22.1	1060
2	2	3966	3.6	15.5	1.40	5.0	21.6	1038
2	3	3444	3.6	15.5	1.21	4.3	18.8	902
2	4	3612	3.6	15.5	1.27	4.5	19.7	939
2	5	3186	3.6	15.5	1.12	4.0	17.4	829
2	6	2232	3.6	15.5	.79	2.8	12.2	580
2	7	755	3.6	15.5	.27	.9	4.1	196

TAP	POINT	CORR V	%02	% CO2	V LOC/AVG	WTD % O2	WTD %CO2	WTD TEMP
3	1	3840	3.6	15.5	1.35	4.8	20.9	1004
3	2	3569	3.6	15.5	1.26	4.5	19.5	937
3	3	3347	3.6	15.5	1.18	4.2	18.3	877
3	4	3385	3.6	15.5	1.19	4.2	18.5	889
3	5	3216	3.6	15.5	1.13	4.0	17.5	839
3	6	2742	3.6	15.5	.96	3.4	15.0	711
3	7	577	3.6	15.5	.20	.7	3.1	149

TAP	POINT	CORR V	%02	% CO2	V LOC/AVG	WTD % O2	WTD %CO2	WTD TEMP
4	1	3132	3.6	15.5	1.10	3.9	17.1	809
4	2	3003	3.6	15.5	1.06	3.8	16.4	787
4	3	3237	3.6	15.5	1.14	4.0	17.7	845
4	4	3233	3.6	15.5	1.14	4.0	17.6	844
4	5	3526	3.6	15.5	1.24	4.4	19.2	915
4	6	2203	3.6	15.5	.78	2.8	12.0	568
4	7	895	3.6	15.5	.31	1.1	4.9	228

TAP	POINT	CORR V	%02	% CO2	V LOC/AVG	WTD % O2	WTD %CO2	WTD TEMP
5	1	4041	3.6	15.5	1.42	5.0	22.0	1073
5	2	3833	3.6	15.5	1.35	4.8	20.9	1022
5	3	3828	3.6	15.5	1.35	4.8	20.9	1019
5	4	3581	3.6	15.5	1.26	4.5	19.5	951
5	5	3632	3.6	15.5	1.28	4.5	19.8	962
5	6	2383	3.6	15.5	.84	3.0	13.0	631
5	7	1516	3.6	15.5	.53	1.9	8.3	400

TAP	POINT	CORR V	%02	% CO2	V LOC/AVG	WTD % O2	WTD %CO2	WTD TEMP
6	1	3751	3.6	15.5	1.32	4.7	20.5	994
6	2	3562	3.6	15.5	1.25	4.4	19.4	949
6	3	3791	3.6	15.5	1.33	4.7	20.7	1011
6	4	3782	3.6	15.5	1.33	4.7	20.6	1005
6	5	3737	3.6	15.5	1.31	4.7	20.4	991
6	6	2969	3.6	15.5	1.04	3.7	16.2	787
6	7	1402	3.6	15.5	.49	1.8	7.6	370

TAP	POINT	CORR V	%02	% CO2	V LOC/AVG	WTD % O2	WTD %CO2	WTD TEMP
7	1	2769	3.6	15.5	.97	3.5	15.1	731
7	2	3770	3.6	15.5	1.33	4.7	20.6	1001
7	3	3130	3.6	15.5	1.10	3.9	17.1	835
7	4	3438	3.6	15.5	1.21	4.3	18.7	914
7	5	3294	3.6	15.5	1.16	4.1	18.0	875
7	6	2522	3.6	15.5	.89	3.2	13.8	668
7	7	1073	3.6	15.5	.38	1.3	5.9	282

TAP	POINT	CORR V	%02	% CO2	V LOC/AVG	WTD % O2	WTD %CO2	WTD TEMP
8	1	3694	3.6	15.5	1.30	4.6	20.1	974
8	2	3973	3.6	15.5	1.40	5.0	21.7	1055
8	3	4053	3.6	15.5	1.43	5.1	22.1	1082
8	4	2934	3.6	15.5	1.03	3.7	16.0	782
8	5	2502	3.6	15.5	.88	3.1	13.6	665
8	6	1951	3.6	15.5	.69	2.4	10.6	517
8	7	311	3.6	15.5	.11	.4	1.7	83

TAP	POINT	CORR V	%02	% CO2	V LOC/AVG	WTD % O2	WTD %CO2	WTD TEMP
9	1	4417	3.6	15.5	1.55	5.5	24.1	1158
9	2	4618	3.6	15.5	1.62	5.8	25.2	1219
9	3	4425	3.6	15.5	1.56	5.5	24.1	1172
9	4	3582	3.6	15.5	1.26	4.5	19.5	949
9	5	1316	3.6	15.5	.46	1.6	7.2	349
9	6	440	3.6	15.5	.15	.5	2.4	116
9	7	438	3.6	15.5	.15	.5	2.4	114

TAP	POINT	CORR V	%02	% CO2	V LOC/AVG	WTD % O2	WTD %CO2	WTD TEMP
10	1	4705	3.6	15.5	1.66	5.9	25.7	1236
10	2	4507	3.6	15.5	1.59	5.6	24.6	1193
10	3	4491	3.6	15.5	1.58	5.6	24.5	1193
10	4	2935	3.6	15.5	1.03	3.7	16.0	781
10	5	582	3.6	15.5	.20	.7	3.2	154
10	6	440	3.6	15.5	.15	.5	2.4	116
10	7	438	3.6	15.5	.15	.5	2.4	115

TAP	POINT	CORR V	%02	% CO2	V LOC/AVG	WTD % O2	WTD %CO2	WTD TEMP
11	1	4432	3.6	15.5	1.56	5.5	24.2	1166
11	2	4364	3.6	15.5	1.54	5.5	23.8	1164
11	3	4102	3.6	15.5	1.44	5.1	22.4	1092
11	4	2992	3.6	15.5	1.05	3.7	16.3	794
11	5	1778	3.6	15.5	.63	2.2	9.7	471
11	6	957	3.6	15.5	.34	1.2	5.2	254
11	7	311	3.6	15.5	.11	.4	1.7	82

TAP	POINT	CORR V	%02	% CO2	V LOC/AVG	WTD % O2	WTD %CO2	WTD TEMP
12	1	2201	3.6	15.5	.77	2.7	12.0	567
12	2	2512	3.6	15.5	.88	3.1	13.7	652
12	3	2820	3.6	15.5	.99	3.5	15.4	735
12	4	3093	3.6	15.5	1.09	3.9	16.9	805
12	5	3160	3.6	15.5	1.11	3.9	17.2	823
12	6	1874	3.6	15.5	.66	2.3	10.2	479
12	7	747	3.6	15.5	.26	.9	4.1	187

TAP	POINT	CORR V	%02	% CO2	V LOC/AVG	WTD % O2	WTD %CO2	WTD TEMP
13	1	2167	3.6	15.5	.76	2.7	11.8	565
13	2	5815	3.6	15.5	2.05	7.3	31.7	1532
13	3	3081	3.6	15.5	1.08	3.8	16.8	813
13	4	2871	3.6	15.5	1.01	3.6	15.7	757
13	5	3062	3.6	15.5	1.08	3.8	16.7	803
13	6	1860	3.6	15.5	.65	2.3	10.1	485
13	7	1105	3.6	15.5	.39	1.4	6.0	282

TAP	POINT	CORR V	%02	% CO2	V LOC/AVG	WTD % O2	WTD %CO2	WTD TEMP
14	1	3249	3.6	15.5	1.14	4.1	17.7	856
14	2	3423	3.6	15.5	1.20	4.3	18.7	902
14	3	3207	3.6	15.5	1.13	4.0	17.5	843
14	4	2819	3.6	15.5	.99	3.5	15.4	740
14	5	2681	3.6	15.5	.94	3.3	14.6	703
14	6	2254	3.6	15.5	.79	2.8	12.3	589
14	7	952	3.6	15.5	.33	1.2	5.2	248

LOCATION = SEC GAS IN EAST
FILE IDENITY = IP6_25ESGI

AVERAGE VELOCITY = 2842 FPM

AVERAGE (WEIGHTED) % O2 = 3.6
AVERAGE (WEIGHTED) % CO2 = 15.5
AVERAGE (WEIGHTED) TEMPERATURE = 748

AVERAGE (ARITHMATIC) % O2 = 3.6
AVERAGE (ARITHMATIC) % CO2 = 15.5
AVERAGE (ARITHMATIC) TEMPERATURE = 747

AVERAGE STATIC PRESSURE (in. H2O) = -3.6
AVERAGE DENSITY (LBM/FT^3) = .02838

ACFM (ACTUAL FT^3/MIN) = 2243097
LB/HR (WET) = 3820105

****
****

PRELIMINARY CALCULATIONS !!!!!!!!!
FINAL CALCULATIONS TO BE RUN AFTER
FECHHEIMER PROBES ARE
INDEPENDENTLY CALIBRATED

****
****

DATE = 6/25/87
LOCATION = WESTSECGASIN
FILE IDENITY = IP6_25WSGI
BAROMETRIC PRESSURE = 25.52
PROBE IDENTY = E-27
DUCT AREA = 789.2

TAP	POINT	CORR V	%02	% CO2	V LOC/AVG	WTD % O2	WTD %CO2	WTD TEMP
1	1	3289	4.2	15.0	1.27	5.3	19.0	947
1	2	3077	4.2	15.0	1.19	4.9	17.8	890
1	3	2541	4.2	15.0	.98	4.1	14.7	735
1	4	2868	4.2	15.0	1.11	4.6	16.6	829
1	5	2824	4.2	15.0	1.09	4.5	16.4	817
1	6	2640	4.2	15.0	1.02	4.2	15.3	763
1	7	1433	4.2	15.0	.55	2.3	8.3	.412

TAP	POINT	CORR V	%02	% CO2	V LOC/AVG	WTD % O2	WTD %CO2	WTD TEMP
2	1	3260	4.2	15.0	1.26	5.2	18.9	944
2	2	2603	4.2	15.0	1.01	4.2	15.1	757
2	3	2734	4.2	15.0	1.06	4.4	15.8	794
2	4	2334	4.2	15.0	.90	3.7	13.5	678
2	5	3643	4.2	15.0	1.41	5.8	21.1	1062
2	6	2638	4.2	15.0	1.02	4.2	15.3	765
2	7	1514	4.2	15.0	.58	2.4	8.8	435

TAP	POINT	CORR V	%02	% CO2	V LOC/AVG	WTD % O2	WTD %CO2	WTD TEMP
3	1	3545	4.2	15.0	1.37	5.7	20.5	1029
3	2	2787	4.2	15.0	1.08	4.5	16.1	810
3	3	3165	4.2	15.0	1.22	5.1	18.3	920
3	4	2939	4.2	15.0	1.13	4.7	17.0	852
3	5	2725	4.2	15.0	1.05	4.4	15.8	788
3	6	1567	4.2	15.0	.61	2.5	9.1	452
3	7	578	4.2	15.0	.22	.9	3.3	165

TAP	POINT	CORR V	%02	% CO2	V LOC/AVG	WTD % O2	WTD %CO2	WTD TEMP
4	1	3541	4.2	15.0	1.37	5.7	20.5	1029
4	2	3443	4.2	15.0	1.33	5.5	19.9	1004
4	3	3285	4.2	15.0	1.27	5.3	19.0	964
4	4	3346	4.2	15.0	1.29	5.4	19.4	973
4	5	2086	4.2	15.0	.81	3.3	12.1	605
4	6	1092	4.2	15.0	.42	1.8	6.3	315
4	7	580	4.2	15.0	.22	.9	3.4	166

TAP	POINT	CORR V	%02	% CO2	V LOC/AVG	WTD % O2	WTD %CO2	WTD TEMP
5	1	3694	4.2	15.0	1.43	5.9	21.4	1070
5	2	3200	4.2	15.0	1.24	5.1	18.5	929
5	3	3372	4.2	15.0	1.30	5.4	19.5	979
5	4	2901	4.2	15.0	1.12	4.6	16.8	843
5	5	1634	4.2	15.0	.63	2.6	9.5	474
5	6	760	4.2	15.0	.29	1.2	4.4	220
5	7	438	4.2	15.0	.17	.7	2.5	126

TAP	POINT	CORR V	%02	% CO2	V LOC/AVG	WTD % O2	WTD %CO2	WTD TEMP
6	1	3414	4.2	15.0	1.32	5.5	19.8	991
6	2	3237	4.2	15.0	1.25	5.2	18.7	940
6	3	3391	4.2	15.0	1.31	5.4	19.6	983
6	4	3322	4.2	15.0	1.28	5.3	19.2	963
6	5	1953	4.2	15.0	.75	3.1	11.3	563
6	6	919	4.2	15.0	.35	1.5	5.3	264
6	7	438	4.2	15.0	.17	.7	2.5	125

TAP	POINT	CORR V	%02	% CO2	V LOC/AVG	WTD % O2	WTD %CO2	WTD TEMP
7	1	3265	4.2	15.0	1.26	5.2	18.9	944
7	2	3468	4.2	15.0	1.34	5.6	20.1	1008
7	3	3439	4.2	15.0	1.33	5.5	19.9	999
7	4	2945	4.2	15.0	1.14	4.7	17.1	855
7	5	1812	4.2	15.0	.70	2.9	10.5	523
7	6	1116	4.2	15.0	.43	1.8	6.5	321
7	7	656	4.2	15.0	.25	1.1	3.8	187

TAP	POINT	CORR V	%02	% CO2	V LOC/AVG	WTD % O2	WTD %CO2	WTD TEMP
8	1	2754	4.2	15.0	1.06	4.4	16.0	770
8	2	3641	4.2	15.0	1.41	5.8	21.1	1056
8	3	3150	4.2	15.0	1.22	5.0	18.2	912
8	4	2800	4.2	15.0	1.08	4.5	16.2	811
8	5	2836	4.2	15.0	1.09	4.5	16.4	817
8	6	1044	4.2	15.0	.40	1.7	6.0	300
8	7	1113	4.2	15.0	.43	1.8	6.4	319

TAP	POINT	CORR V	%02	% CO2	V LOC/AVG	WTD % O2	WTD %CO2	WTD TEMP
9	1	3575	4.2	15.0	1.38	5.7	20.7	1027
9	2	3524	4.2	15.0	1.36	5.6	20.4	1025
9	3	5867	4.2	15.0	2.27	9.4	34.0	1697
9	4	3207	4.2	15.0	1.24	5.1	18.6	925
9	5	2993	4.2	15.0	1.16	4.8	17.3	863
9	6	2054	4.2	15.0	.79	3.3	11.9	589
9	7	1511	4.2	15.0	.58	2.4	8.8	432

TAP	POINT	CORR V	%02	% CO2	V LOC/AVG	WTD % O2	WTD %CO2	WTD TEMP
10	1	3514	4.2	15.0	1.36	5.6	20.4	1020
10	2	3817	4.2	15.0	1.47	6.1	22.1	1108
10	3	3327	4.2	15.0	1.28	5.3	19.3	960
10	4	3086	4.2	15.0	1.19	4.9	17.9	891
10	5	2894	4.2	15.0	1.12	4.6	16.8	835
10	6	2549	4.2	15.0	.98	4.1	14.8	732
10	7	1216	4.2	15.0	.47	1.9	7.0	348

TAP	POINT	CORR V	%02	% CO2	V LOC/AVG	WTD % O2	WTD %CO2	WTD TEMP
11	1	3257	4.2	15.0	1.26	5.2	18.9	944
11	2	3533	4.2	15.0	1.36	5.7	20.5	1019
11	3	3438	4.2	15.0	1.33	5.5	19.9	992
11	4	3237	4.2	15.0	1.25	5.2	18.8	933
11	5	3041	4.2	15.0	1.17	4.9	17.6	874
11	6	2462	4.2	15.0	.95	3.9	14.3	705
11	7	756	4.2	15.0	.29	1.2	4.4	214

TAP	POINT	CORR V	%02	% CO2	V LOC/AVG	WTD % O2	WTD %CO2	WTD TEMP
12	1	4591	4.2	15.0	1.77	7.4	26.6	1330
12	2	4255	4.2	15.0	1.64	6.8	24.6	1234
12	3	3902	4.2	15.0	1.51	6.3	22.6	1132
12	4	2774	4.2	15.0	1.07	4.4	16.1	803
12	5	1074	4.2	15.0	.41	1.7	6.2	311
12	6	439	4.2	15.0	.17	.7	2.5	127
12	7	311	4.2	15.0	.12	.5	1.8	90

TAP	POINT	CORR V	%02	% CO2	V LOC/AVG	WTD % O2	WTD %CO2	WTD TEMP
13	1	4642	4.2	15.0	1.79	7.4	26.9	1334
13	2	4273	4.2	15.0	1.65	6.8	24.7	1234
13	3	3228	4.2	15.0	1.25	5.2	18.7	931
13	4	1693	4.2	15.0	.65	2.7	9.8	488
13	5	580	4.2	15.0	.22	.9	3.4	167
13	6	438	4.2	15.0	.17	.7	2.5	125
13	7	435	4.2	15.0	.17	.7	2.5	122

TAP	POINT	CORR V	%02	% CO2	V LOC/AVG	WTD % O2	WTD %CO2	WTD TEMP
14	1	4228	4.2	15.0	1.63	6.8	24.5	1220
14	2	4153	4.2	15.0	1.60	6.7	24.1	1198
14	3	3957	4.2	15.0	1.53	6.3	22.9	1140
14	4	3640	4.2	15.0	1.41	5.8	21.1	1049
14	5	2034	4.2	15.0	.79	3.3	11.8	586
14	6	753	4.2	15.0	.29	1.2	4.4	211
14	7	751	4.2	15.0	.29	1.2	4.3	208

LOCATION = WESTSECGASIN
FILE IDENITY = IP6_25WSGI

AVERAGE VELOCITY = 2590 FPM

AVERAGE (WEIGHTED) % O2 = 4.2
AVERAGE (WEIGHTED) % CO2 = 15.0
AVERAGE (WEIGHTED) TEMPERATURE = 749

AVERAGE (ARITHMATIC) % O2 = 4.1
AVERAGE (ARITHMATIC) % CO2 = 15.0
AVERAGE (ARITHMATIC) TEMPERATURE = 747

AVERAGE STATIC PRESSURE (in. H2O) = -3.7
AVERAGE DENSITY (LBM/FT^3) = .02835

ACFM (ACTUAL FT^3/MIN) = 2043827
LB/HR (WET) = 3477145

****
****

PRELIMINARY CALCULATIONS !!!!!!!!!
FINAL CALCULATIONS TO BE RUN AFTER
FECHHEIMER PROBES ARE
INDEPENDENTLY CALIBRATED

****
****

DATE = 6/25/87
LOCATION = EASTPRIGASOUT
FILE IDENITY = IP6_25EPGO
BAROMETRIC PRESSURE = 25.52
PROBE IDENTY = E-1
DUCT AREA = 90.1

TAP	POINT	CORR V	%02	% CO2	V LOC/AVG	WTD % O2	WTD %CO2	WTD TEMP
1	1	2048	11.0	9.0	1.17	12.9	10.5	310
1	2	1185	4.6	14.8	.68	3.1	10.0	213
1	3	1785	4.7	14.6	1.02	4.8	14.9	313
1	4	1760	7.0	12.7	1.01	7.0	12.8	295

TAP	POINT	CORR V	%02	% CO2	V LOC/AVG	WTD % O2	WTD %CO2	WTD TEMP
2	1	2409	11.2	8.7	1.38	15.4	12.0	358
2	2	1048	3.7	15.3	.60	2.2	9.2	184
2	3	1850	4.0	15.2	1.06	4.2	16.1	326
2	4	1791	7.4	12.1	1.02	7.6	12.4	301

TAP	POINT	CORR V	%02	% CO2	V LOC/AVG	WTD % O2	WTD %CO2	WTD TEMP
3	1	1542	10.6	9.2	.88	9.3	8.1	232
3	2	1970	5.3	14.1	1.13	6.0	15.9	355
3	3	1765	5.1	14.2	1.01	5.1	14.3	318
3	4	1849	8.1	11.4	1.06	8.6	12.0	314

LOCATION = EASTPRIGASOUT
FILE IDENITY = IP6_25EP60

AVERAGE VELOCITY = 1750 FPM

AVERAGE (WEIGHTED) % O2 = 7.2
AVERAGE (WEIGHTED) % CO2 = 12.3
AVERAGE (WEIGHTED) TEMPERATURE = 293

AVERAGE (ARITHMATIC) % O2 = 6.9
AVERAGE (ARITHMATIC) % CO2 = 12.6
AVERAGE (ARITHMATIC) TEMPERATURE = 295

AVERAGE STATIC PRESSURE (in. H2O) = -8.0
AVERAGE DENSITY (LBM/FT^3) = .04463

ACFM (ACTUAL FT^3/MIN) = 157730
LB/HR (WET) = 422396

****
****

PRELIMINARY CALCULATIONS !!!!!!!!!
FINAL CALCULATIONS TO BE RUN AFTER
FECHHEIMER PROBES ARE
INDEPENDENTLY CALIBRATED

****
****

DATE = 6/25/87
LOCATION = WESTPRIGASOUT
FILE IDENITY = IP6_25WPGO
BAROMETRIC PRESSURE = 25.52
PROBE IDENTY = E-1
DUCT AREA = 90.1

TAP	POINT	CORR V	%02	% CO2	V LOC/AVG	WTD % O2	WTD %CO2	WTD TEMP
1	1	1132	8.8	10.8	.61	5.4	6.6	181
1	2	2075	4.7	14.4	1.12	5.3	16.1	343
1	3	1865	5.5	13.7	1.01	5.5	13.8	292
1	4	1668	9.5	10.2	.90	8.5	9.2	239

TAP	POINT	CORR V	%02	% CO2	V LOC/AVG	WTD % O2	WTD %CO2	WTD TEMP
2	1	2262	7.8	11.7	1.22	9.5	14.3	365
2	2	1951	3.6	15.4	1.05	3.8	16.2	326
2	3	1827	5.0	14.2	.99	4.9	14.0	286
2	4	1739	10.7	9.0	.94	10.0	8.4	258

TAP	POINT	CORR V	%02	% CO2	V LOC/AVG	WTD % O2	WTD %CO2	WTD TEMP
3	1	2263	8.4	11.2	1.22	10.3	13.7	352
3	2	1791	4.7	14.5	.97	4.5	14.0	282
3	3	1832	6.8	12.6	.99	6.7	12.5	276
3	4	1841	11.0	9.0	.99	10.9	8.9	269

LOCATION = WESTPRIGASOUT
FILE IDENITY = IP6_25WP60

AVERAGE VELOCITY = 1854 FPM

AVERAGE (WEIGHTED) % O2 = 7.1
AVERAGE (WEIGHTED) % CO2 = 12.3
AVERAGE (WEIGHTED) TEMPERATURE = 289

AVERAGE (ARITHMATIC) % O2 = 7.2
AVERAGE (ARITHMATIC) % CO2 = 12.2
AVERAGE (ARITHMATIC) TEMPERATURE = 288

AVERAGE STATIC PRESSURE (in. H2O) = -8.0
AVERAGE DENSITY (LBM/FT^3) = .04497

ACFM (ACTUAL FT^3/MIN) = 167077
LB/HR (WET) = 450765

****
****

PRELIMINARY CALCULATIONS !!!!!!!!!
FINAL CALCULATIONS TO BE RUN AFTER
FECHHEIMER PROBES ARE
INDEPENDENTLY CALIBRATED

****
****

DATE = 6-25-87
LOCATION = BAG IN EAST
FILE IDENITY = IP6_25BHE
BAROMETRIC PRESSURE = 25.52
PROBE IDENTY = E-45
DUCT AREA = 346.5

TAP	POINT	CORR V	%02	% CO2	V LOC/AVG	WTD % O2	WTD %CO2	WTD TEMP
1	1	4054	4.8	14.5	1.08	5.2	15.6	341
1	2	4220	4.4	14.6	1.12	4.9	16.4	352
1	3	2501	4.7	14.6	.66	3.1	9.7	207
1	4	4694	4.7	14.3	1.25	5.9	17.8	383
1	5	2770	4.7	14.5	.74	3.5	10.7	227
1	6	3679	4.6	14.6	.98	4.5	14.3	300
1	7	4449	4.5	14.5	1.18	5.3	17.1	362

TAP	POINT	CORR V	%02	% CO2	V LOC/AVG	WTD % O2	WTD %CO2	WTD TEMP
2	1	2897	5.6	13.2	.77	4.3	10.2	246
2	2	2654	4.3	14.6	.71	3.0	10.3	224
2	3	3864	4.9	14.0	1.03	5.0	14.4	327
2	4	2257	4.5	14.6	.60	2.7	8.8	186
2	5	2884	5.1	13.8	.77	3.9	10.6	240
2	6	2770	5.1	14.0	.74	3.8	10.3	226
2	7	3539	5.1	13.9	.94	4.8	13.1	287

TAP	POINT	CORR V	%02	% CO2	V LOC/AVG	WTD % O2	WTD %CO2	WTD TEMP
3	1	3903	4.5	14.6	1.04	4.7	15.1	332
3	2	3468	4.7	14.1	.92	4.3	13.0	300
3	3	3268	5.2	13.7	.87	4.5	11.9	287
3	4	4300	5.3	13.7	1.14	6.1	15.7	374
3	5	4122	5.1	14.0	1.10	5.6	15.3	361
3	6	3925	4.9	14.0	1.04	5.1	14.6	341
3	7	4275	5.5	13.4	1.14	6.2	15.2	362

TAP	POINT	CORR V	%02	% CO2	V LOC/AVG	WTD % O2	WTD %CO2	WTD TEMP
4	1	4514	4.7	14.4	1.20	5.6	17.3	384
4	2	4110	4.8	14.6	1.09	5.2	15.9	348
4	3	4027	4.9	14.1	1.07	5.2	15.1	347
4	4	4030	4.7	14.0	1.07	5.0	15.0	357
4	5	3612	4.9	14.0	.96	4.7	13.4	337
4	6	3778	4.6	14.4	1.00	4.6	14.5	349
4	7	4326	4.4	14.4	1.15	5.1	16.5	360

TAP	POINT	CORR V	%02	% CO2	V LOC/AVG	WTD % O2	WTD %CO2	WTD TEMP
5	1	4004	4.4	14.5	1.06	4.7	15.4	366
5	2	4132	4.6	14.2	1.10	5.0	15.6	378
5	3	4124	4.8	14.2	1.10	5.3	15.6	377
5	4	4013	4.9	13.9	1.07	5.2	14.8	367
5	5	4129	4.6	14.6	1.10	5.0	16.0	377
5	6	4151	4.9	14.0	1.10	5.4	15.4	383
5	7	4275	4.8	14.6	1.14	5.5	16.6	363

TAP	POINT	CORR V	%02	% CO2	V LOC/AVG	WTD % O2	WTD %CO2	WTD TEMP
6	1	3953	4.5	14.4	1.05	4.7	15.1	340
6	2	3648	4.6	14.7	.97	4.5	14.2	295
6	3	3929	4.9	14.1	1.04	5.1	14.7	308
6	4	3594	4.7	14.2	.95	4.5	13.6	310
6	5	3836	4.9	14.2	1.02	5.0	14.5	353
6	6	2596	4.8	14.3	.69	3.3	9.9	235
6	7	4027	4.6	14.6	1.07	4.9	15.6	347

TAP	POINT	CORR V	%02	% CO2	V LOC/AVG	WTD % O2	WTD %CO2	WTD TEMP
7	1	3929	4.6	14.6	1.04	4.8	15.2	338
7	2	3533	4.7	14.2	.94	4.4	13.3	286
7	3	3623	4.8	14.0	.96	4.6	13.5	281
7	4	4888	5.2	13.7	1.30	6.8	17.8	382
7	5	3656	5.0	14.0	.97	4.9	13.6	307
7	6	3623	5.2	13.9	.96	5.0	13.4	330
7	7	3901	5.0	13.9	1.04	5.2	14.4	336

TAP	POINT	CORR V	%02	% CO2	V LOC/AVG	WTD % O2	WTD %CO2	WTD TEMP
8	1	4321	4.5	14.6	1.15	5.2	16.8	373
8	2	4202	4.5	14.6	1.12	5.0	16.3	361
8	3	4534	5.4	13.6	1.20	6.5	16.4	381
8	4	4237	4.5	14.8	1.13	5.1	16.7	359
8	5	4375	5.2	13.4	1.16	6.0	15.6	382
8	6	400	4.9	14.0	.11	.5	1.5	35
8	7	4257	5.1	13.8	1.13	5.8	15.6	358

LOCATION = BAG IN EAST
FILE IDENITY = IP6_25BHE

AVERAGE VELOCITY = 3764 FPM

AVERAGE (WEIGHTED) % O2 = 4.8
AVERAGE (WEIGHTED) % CO2 = 14.2
AVERAGE (WEIGHTED) TEMPERATURE = 322

AVERAGE (ARITHMATIC) % O2 = 4.8
AVERAGE (ARITHMATIC) % CO2 = 14.2
AVERAGE (ARITHMATIC) TEMPERATURE = 322

AVERAGE STATIC PRESSURE (in. H2O) = -8.3
AVERAGE DENSITY (LBM/FT^3) = .04311

ACFM (ACTUAL FT^3/MIN) = 1304214
LB/HR (WET) = 3373667

****
****

PRELIMINARY CALCULATIONS !!!!!!!!!
FINAL CALCULATIONS TO BE RUN AFTER
FECHHEIMER PROBES ARE
INDEPENDENTLY CALIBRATED

****
****

DATE = 6-25-87
LOCATION = BAG IN CENTER
FILE IDENITY = IP6_25BHC
BAROMETRIC PRESSURE = 25.52
PROBE IDENTY = E-42
DUCT AREA = 346.5

TAP	POINT	CORR V	%02	% CO2	V LOC/AVG	WTD % O2	WTD %CO2	WTD TEMP
1	1	3575	4.8	14.5	1.30	6.2	18.8	415
1	2	896	5.0	14.3	.33	1.6	4.6	105
1	3	531	5.1	14.3	.19	1.0	2.8	62
1	4	3974	4.9	14.4	1.44	7.1	20.8	467
1	5	1046	4.9	14.4	.38	1.9	5.5	122
1	6	1374	5.0	14.1	.50	2.5	7.0	161
1	7	3359	4.5	14.4	1.22	5.5	17.5	392

TAP	POINT	CORR V	%02	% CO2	V LOC/AVG	WTD % O2	WTD %CO2	WTD TEMP
2	1	1125	4.8	14.3	.41	2.0	5.8	130
2	2	1664	4.3	14.6	.60	2.6	8.8	194
2	3	2739	5.0	14.0	.99	5.0	13.9	320
2	4	2803	4.4	14.6	1.02	4.5	14.8	331
2	5	3114	4.6	14.4	1.13	5.2	16.3	367
2	6	2982	4.9	14.3	1.08	5.3	15.5	351
2	7	2042	4.4	14.4	.74	3.3	10.7	237

TAP	POINT	CORR V	%02	% CO2	V LOC/AVG	WTD % O2	WTD %CO2	WTD TEMP
3	1	1989	4.4	14.6	.72	3.2	10.5	232
3	2	2600	4.5	14.5	.94	4.2	13.7	301
3	3	2615	4.7	14.4	.95	4.5	13.7	311
3	4	2970	4.3	14.4	1.08	4.6	15.5	352
3	5	3333	4.7	14.3	1.21	5.7	17.3	394
3	6	3152	4.7	14.2	1.14	5.4	16.2	373
3	7	2914	4.4	14.5	1.06	4.7	15.3	346

TAP	POINT	CORR V	%02	% CO2	V LOC/AVG	WTD % O2	WTD %CO2	WTD TEMP
4	1	3157	4.2	14.9	1.14	4.8	17.1	390
4	2	3930	4.1	15.1	1.43	5.8	21.5	492
4	3	3975	4.7	14.6	1.44	6.8	21.1	489
4	4	3705	4.6	14.4	1.34	6.2	19.3	450
4	5	3582	4.6	14.4	1.30	6.0	18.7	438
4	6	3728	4.5	14.8	1.35	6.1	20.0	449
4	7	3554	4.2	14.8	1.29	5.4	19.1	429

TAP	POINT	CORR V	%02	% CO2	V LOC/AVG	WTD % O2	WTD %CO2	WTD TEMP
5	1	2669	4.2	14.6	.97	4.1	14.1	342
5	2	4160	4.1	14.7	1.51	6.2	22.2	533
5	3	4214	4.5	14.1	1.53	6.9	21.5	539
5	4	3936	5.1	14.0	1.43	7.3	20.0	492
5	5	3738	4.8	14.1	1.36	6.5	19.1	454
5	6	3837	4.6	14.2	1.39	6.4	19.8	473
5	7	3743	4.2	14.8	1.36	5.7	20.1	466

TAP	POINT	CORR V	%02	% CO2	V LOC/AVG	WTD % O2	WTD %CO2	WTD TEMP
6	1	1660	4.6	14.4	.60	2.8	8.7	210
6	2	3605	4.3	14.6	1.31	5.6	19.1	459
6	3	4312	4.8	14.4	1.56	7.5	22.5	555
6	4	4285	4.5	14.5	1.55	7.0	22.5	552
6	5	4052	4.7	14.4	1.47	6.9	21.2	520
6	6	3576	4.3	14.6	1.30	5.6	18.9	455
6	7	3063	4.4	14.7	1.11	4.9	16.3	387

TAP	POINT	CORR V	%02	% CO2	V LOC/AVG	WTD % O2	WTD %CO2	WTD TEMP
7	1	360	4.2	14.6	.13	.5	1.9	45
7	2	773	4.4	14.6	.28	1.2	4.1	98
7	3	1350	4.6	14.4	.49	2.3	7.1	172
7	4	1810	4.2	14.7	.66	2.8	9.7	233
7	5	3778	4.1	14.7	1.37	5.6	20.1	482
7	6	3263	4.3	14.9	1.18	5.1	17.6	417
7	7	2191	4.6	14.7	.79	3.7	11.7	278

TAP	POINT	CORR V	%02	% CO2	V LOC/AVG	WTD % O2	WTD %CO2	WTD TEMP
8	1	3949	4.9	14.3	1.43	7.0	20.5	496
8	2	1576	4.0	14.8	.57	2.3	8.5	198
8	3	1536	4.3	14.5	.56	2.4	8.1	194
8	4	3299	4.3	14.5	1.20	5.1	17.3	421
8	5	252	4.4	14.6	.09	.4	1.3	32
8	6	328	4.2	14.4	.12	.5	1.7	41
8	7	2656	4.6	14.3	.96	4.4	13.8	332

LOCATION = BAG IN CENTER
FILE IDENITY = IP6_25BHC

AVERAGE VELOCITY = 2757 FPM

AVERAGE (WEIGHTED) % O2 = 4.5
AVERAGE (WEIGHTED) % CO2 = 14.5
AVERAGE (WEIGHTED) TEMPERATURE = 339

AVERAGE (ARITHMATIC) % O2 = 4.5
AVERAGE (ARITHMATIC) % CO2 = 14.5
AVERAGE (ARITHMATIC) TEMPERATURE = 338

AVERAGE STATIC PRESSURE (in. H2O) = -8.2
AVERAGE DENSITY (LBM/FT^3) = .04229

ACFM (ACTUAL FT^3/MIN) = 955344
LB/HR (WET) = 2424230

****
****

PRELIMINARY CALCULATIONS !!!!!!!!!
FINAL CALCULATIONS TO BE RUN AFTER
FECHHEIMER PROBES ARE
INDEPENDENTLY CALIBRATED

****
****

DATE = [illegible]25-87
LOCATION = BAG INLET WEST
FILE IDENITY = IPG_25BHW
BAROMETRIC PRESSURE = 25.52
PROBE IDENTY = E-44
DUCT AREA = 346.5

TAP	POINT	CORR V	%02	% CO2	V LOC/AVG	WTD % O2	WTD %CO2	WTD TEMP
1	1	5426	5.3	13.8	1.85	9.8	25.5	556
1	2	2893	4.9	13.9	.98	4.8	13.7	295
1	3	1183	5.5	13.6	.40	2.2	5.5	121
1	4	1498	5.4	13.6	.51	2.8	6.9	148
1	5	4108	6.1	13.0	1.40	8.5	18.2	409
1	6	4072	6.2	12.8	1.39	8.6	17.7	400
1	7	3872	6.1	12.9	1.32	8.0	17.0	379

TAP	POINT	CORR V	%02	% CO2	V LOC/AVG	WTD % O2	WTD %CO2	WTD TEMP
2	1	5720	4.6	14.3	1.95	9.0	27.7	580
2	2	3247	4.8	14.1	1.10	5.3	15.6	330
2	3	1651	5.2	13.8	.56	2.9	7.8	149
2	4	724	5.4	13.5	.25	1.3	3.3	75
2	5	2313	5.8	13.2	.79	4.6	10.4	245
2	6	1753	5.8	13.4	.60	3.5	8.0	186
2	7	3011	5.5	13.5	1.02	5.6	13.8	298

TAP	POINT	CORR V	%02	% CO2	V LOC/AVG	WTD % O2	WTD %CO2	WTD TEMP
3	1	7221	4.3	14.7	2.46	10.6	36.1	740
3	2	6267	4.8	14.2	2.13	10.2	30.3	642
3	3	4742	5.3	13.9	1.61	8.6	22.4	486
3	4	2500	5.3	13.6	.85	4.5	11.6	256
3	5	3040	5.8	13.2	1.03	6.0	13.7	311
3	6	2622	5.4	13.6	.89	4.8	12.1	269
3	7	2649	4.9	14.2	.90	4.4	12.8	271

TAP	POINT	CORR V	%02	% CO2	V LOC/AVG	WTD % O2	WTD %CO2	WTD TEMP
4	1	3127	4.4	14.4	1.06	4.7	15.3	318
4	2	2808	4.8	14.3	.96	4.6	13.7	290
4	3	2521	5.4	13.5	.86	4.6	11.6	267
4	4	2788	5.2	14.0	.95	4.9	13.3	304
4	5	2776	5.6	13.5	.94	5.3	12.8	307
4	6	2887	5.1	14.0	.98	5.0	13.8	296
4	7	3304	4.4	14.4	1.12	4.9	16.2	338

TAP	POINT	CORR V	%02	% CO2	V LOC/AVG	WTD % O2	WTD %CO2	WTD TEMP
5	1	3450	4.4	14.7	1.17	5.2	17.3	364
5	2	3545	4.8	14.2	1.21	5.8	17.1	374
5	3	3580	5.0	14.2	1.22	6.1	17.3	391
5	4	3158	5.0	14.0	1.07	5.4	15.0	365
5	5	3166	5.8	13.2	1.08	6.2	14.2	351
5	6	3014	5.1	14.3	1.03	5.2	14.7	294
5	7	3752	4.4	14.6	1.28	5.6	18.6	366

TAP	POINT	CORR V	%02	% CO2	V LOC/AVG	WTD % O2	WTD %CO2	WTD TEMP
6	1	2411	4.2	14.8	.82	3.4	12.1	247
6	2	2741	4.7	14.4	.93	4.4	13.4	279
6	3	3040	4.3	14.7	1.03	4.4	15.2	311
6	4	3456	4.8	14.1	1.18	5.6	16.6	355
6	5	3036	4.8	14.1	1.03	5.0	14.6	319
6	6	2395	4.5	14.6	.81	3.7	11.9	249
6	7	3129	4.6	14.4	1.06	4.9	15.3	311

TAP	POINT	CORR V	%02	% CO2	V LOC/AVG	WTD % O2	WTD %CO2	WTD TEMP
7	1	1993	4.3	14.8	.68	2.9	10.0	204
7	2	798	4.3	14.7	.27	1.2	4.0	82
7	3	570	4.2	14.8	.19	.8	2.9	58
7	4	1462	4.8	14.2	.50	2.4	7.1	148
7	5	1260	5.0	14.0	.43	2.1	6.0	126
7	6	1239	4.4	14.6	.42	1.9	6.2	124
7	7	2323	4.8	14.2	.79	3.8	11.2	232

TAP	POINT	CORR V	%02	% CO2	V LOC/AVG	WTD % O2	WTD %CO2	WTD TEMP
8	1	3811	4.6	14.3	1.30	6.0	18.5	393
8	2	4044	4.5	14.5	1.38	6.2	20.0	417
8	3	1302	4.6	14.4	.44	2.0	6.4	132
8	4	4276	4.3	14.7	1.46	6.3	21.4	435
8	5	603	4.6	14.6	.21	.9	3.0	61
8	6	2135	4.1	14.7	.73	3.0	10.7	217
8	7	4175	4.2	14.8	1.42	6.0	21.0	447

LOCATION = BAG INLET WEST
FILE IDENITY = IP6_25BHW

AVERAGE VELOCITY = 2939 FPM

AVERAGE (WEIGHTED) % O2 = 4.9
AVERAGE (WEIGHTED) % CO2 = 14.1
AVERAGE (WEIGHTED) TEMPERATURE = 302

AVERAGE (ARITHMATIC) % O2 = 4.9
AVERAGE (ARITHMATIC) % CO2 = 14.1
AVERAGE (ARITHMATIC) TEMPERATURE = 302

AVERAGE STATIC PRESSURE (in. H2O) = -8.1
AVERAGE DENSITY (LBM/FT^3) = .04428

ACFM (ACTUAL FT^3/MIN) = 1018385
LB/HR (WET) = 2705684

****
****

PRELIMINARY CALCULATIONS !!!!!!!!!
FINAL CALCULATIONS TO BE RUN AFTER
FECHHEIMER PROBES ARE
INDEPENDENTLY CALIBRATED

****
****

DATE = 6-25-87
LOCATION = SEC AIR OUT EAST
FILE IDENITY = IP6_25ESAO
BAROMETRIC PRESSURE = 25.52
PROBE IDENTY = E-4
DUCT AREA = 601.8

TAP	POINT	CORR V	V LOC/AVG	WTD TEMP
1	1	4944	1.81	1165
1	2	2624	.96	619
1	3	1251	.46	298
1	4	3090	1.13	753
1	5	3507	1.28	865
1	6	3099	1.13	765
1	7	2587	.95	642
1	8	2883	1.06	718
1	9	2876	1.05	730

TAP	POINT	CORR V	V LOC/AVG	WTD TEMP
2	1	3545	1.30	854
2	2	2642	.97	633
2	3	2630	.96	635
2	4	3009	1.10	732
2	5	2124	.78	519
2	6	2950	1.08	722
2	7	2832	1.04	690
2	8	2965	1.09	738
2	9	2927	1.07	726

TAP	POINT	CORR V	V LOC/AVG	WTD TEMP
3	1	3922	1.44	903
3	2	1222	.45	285
3	3	1928	.71	452
3	4	3343	1.22	792
3	5	2743	1.00	652
3	6	3251	1.19	775
3	7	3364	1.23	800
3	8	3199	1.17	766
3	9	2872	1.05	697

TAP	POINT	CORR V V	LOC/AVG	WTD TEMP
4	1	4003	1.47	942
4	2	1320	.48	314
4	3	1441	.53	349
4	4	3028	1.11	750
4	5	2657	.97	642
4	6	3164	1.16	784
4	7	3888	1.42	976
4	8	4130	1.51	1066
4	9	2623	.96	628

TAP	POINT	CORR V V	LOC/AVG	WTD TEMP
5	1	1237	.45	298
5	2	1358	.50	327
5	3	1319	.48	313
5	4	2362	.86	559
5	5	3481	1.27	831
5	6	3895	1.43	931
5	7	3652	1.34	866
5	8	3392	1.24	802
5	9	3855	1.41	914

TAP	POINT	CORR V V	LOC/AVG	WTD TEMP
6	1	3234	1.18	791
6	2	795	.29	191
6	3	2040	.75	485
6	4	4395	1.61	1038
6	5	3210	1.18	769
6	6	4085	1.50	967
6	7	4304	1.58	1030
6	8	2439	.89	572
6	9	4216	1.54	1008

TAP	POINT	CORR V V	LOC/AVG	WTD TEMP
7	1	3411	1.25	804
7	2	3075	1.13	742
7	3	3021	1.11	721
7	4	2887	1.06	689
7	5	1296	.47	305
7	6	1643	.60	413
7	7	4226	1.55	1046
7	8	4070	1.49	1020
7	9	4344	1.59	1072

TAP	POINT	CORR V V	LOC/AVG	WTD TEMP
8	1	3846	1.41	925
8	2	3758	1.38	900
8	3	4124	1.51	996
8	4	4080	1.49	996
8	5	1946	.71	474
8	6	939	.34	228
8	7	1512	.55	371
8	8	1678	.61	424
8	9	905	.33	221

TAP	POINT	CORR V	V LOC/AVG	WTD TEMP
9	1	1856	.68	435
9	2	941	.34	221
9	3	922	.34	219
9	4	1046	.38	256
9	5	1051	.38	261
9	6	1149	.42	281
9	7	1952	.71	488
9	8	1885	.69	466
9	9	1868	.68	478

LOCATION = SEC AIR OUT EAST
FILE IDENITY = IP6_25ESA0

AVERAGE VELOCITY = 2732 FPM

AVERAGE (WEIGHTED) TEMPERATURE = 661
AVERAGE (ARITHMATIC) TEMPERATURE = 661
AVERAGE STATIC PRESSURE (in. H2O) = -1.9
AVERAGE DENSITY (LBM/FT^3) = .03005

ACFM (ACTUAL FT^3/MIN) = 1644094
LB/HR (WET) = 2964712

****
****

PRELIMINARY CALCULATIONS !!!!!!!!!
FINAL CALCULATIONS TO BE RUN AFTER
FECHHEIMER PROBES ARE
INDEPENDENTLY CALIBRATED

****
****

DATE = 6/25/87
LOCATION = WESTSECAIROUT
FILE IDENITY = IP6_25WSAO
BAROMETRIC PRESSURE = 25.52
PROBE IDENTY = E-4
DUCT AREA = 601.8

TAP	POINT	CORR V	V LOC/AVG	WTD TEMP
1	1	2080	.73	323
1	2	3411	1.20	761
1	3	1216	.43	271
1	4	2118	.75	470
1	5	1285	.45	284
1	6	1058	.37	232
1	7	1055	.37	229
1	8	1053	.37	226
1	9	1049	.37	223

TAP	POINT	CORR V	V LOC/AVG	WTD TEMP
2	1	1286	.45	275
2	2	2794	.99	617
2	3	1299	.46	288
2	4	926	.33	208
2	5	1442	.51	325
2	6	1779	.63	400
2	7	3620	1.28	813
2	8	3834	1.35	864
2	9	1573	.55	352

TAP	POINT	CORR V	V LOC/AVG	WTD TEMP
3	1	2487	.88	544
3	2	1061	.37	234
3	3	3146	1.11	707
3	4	4575	1.61	1036
3	5	3743	1.32	850
3	6	4415	1.56	1004
3	7	4583	1.62	1044
3	8	5058	1.78	1154
3	9	5021	1.77	1154

TAP	POINT	CORR V V	LOC/AVG	WTD TEMP
4	1	909	.32	194
4	2	1017	.36	223
4	3	3257	1.15	717
4	4	4150	1.46	926
4	5	3906	1.38	880
4	6	4009	1.41	908
4	7	3837	1.35	870
4	8	4131	1.46	944
4	9	4439	1.57	1016

TAP	POINT	CORR V V	LOC/AVG	WTD TEMP
5	1	1015	.36	220
5	2	908	.32	201
5	3	2141	.76	483
5	4	4054	1.43	923
5	5	4035	1.42	945
5	6	4129	1.46	976
5	7	4711	1.66	1120
5	8	1128	.40	272
5	9	889	.31	216

TAP	POINT	CORR V V	LOC/AVG	WTD TEMP
6	1	4017	1.42	841
6	2	901	.32	197
6	3	1953	.69	432
6	4	3858	1.36	864
6	5	3616	1.28	819
6	6	3878	1.37	893
6	7	3999	1.41	925
6	8	3797	1.34	882
6	9	3794	1.34	888

TAP	POINT	CORR V V	LOC/AVG	WTD TEMP
7	1	3900	1.38	844
7	2	2132	.75	468
7	3	2771	.98	613
7	4	3379	1.19	753
7	5	2936	1.04	660
7	6	3359	1.18	760
7	7	3501	1.23	795
7	8	3523	1.24	806
7	9	3310	1.17	762

TAP	POINT	CORR V V	LOC/AVG	WTD TEMP
8	1	3666	1.29	798
8	2	2797	.99	618
8	3	2777	.98	617
8	4	3017	1.06	673
8	5	2850	1.00	639
8	6	3210	1.13	725
8	7	3029	1.07	686
8	8	3116	1.10	709
8	9	3121	1.10	713

TAP	POINT	CORR V	V LOC/AVG	WTD TEMP
9	1	3375	1.19	748
9	2	2740	.97	611
9	3	3070	1.08	687
9	4	2155	.76	485
9	5	784	.28	177
9	6	2941	1.04	681
9	7	3024	1.07	708
9	8	2925	1.03	694
9	9	2848	1.00	689

LOCATION = WESTSECAIROUT
FILE IDENITY = IP6_25WSA0

AVERAGE VELOCITY = 2836 FPM

AVERAGE (WEIGHTED) TEMPERATURE = 639
AVERAGE (ARITHMATIC) TEMPERATURE = 636
AVERAGE STATIC PRESSURE (in. H2O) = 2.0
AVERAGE DENSITY (LBM/FT^3) = .03118

ACFM (ACTUAL FT^3/MIN) = 1706661
LB/HR (WET) = 3192946

****
****

PRELIMINARY CALCULATIONS !!!!!!!!!
FINAL CALCULATIONS TO BE RUN AFTER
FECHHEIMER PROBES ARE
INDEPENDENTLY CALIBRATED

****
****

DATE = 6/25/87
LOCATION = EASTPRIAIROUT
FILE IDENITY = IP6_25EPA0
BAROMETRIC PRESSURE = 25.52
PROBE IDENTY = E-1
DUCT AREA = 128.7

TAP	POINT	CORR V V	LOC/AVG	WTD TEMP
1	1	1116	.89	434
1	2	1321	1.06	497
1	3	1379	1.10	485

TAP	POINT	CORR V V	LOC/AVG	WTD TEMP
2	1	1167	.93	463
2	2	1475	1.18	576
2	3	1187	.95	457

TAP	POINT	CORR V V	LOC/AVG	WTD TEMP
3	1	770	.62	317
3	2	1320	1.06	527
3	3	487	.39	188

TAP	POINT	CORR V V	LOC/AVG	WTD TEMP
4	1	1310	1.05	544
4	2	1492	1.19	599
4	3	1282	1.02	490

TAP	POINT	CORR V V	LOC/AVG	WTD TEMP
5	1	1372	1.10	556
5	2	1505	1.20	598
5	3	1575	1.26	597

LOCATION = EASTPRIAIROUT
FILE IDENITY = IP6_25EPAO

AVERAGE VELOCITY = 1250 FPM

AVERAGE (WEIGHTED) TEMPERATURE = 488
AVERAGE (ARITHMATIC) TEMPERATURE = 489
AVERAGE STATIC PRESSURE (in. H2O) = 30.0
AVERAGE DENSITY (LBM/FT^3) = .03879

ACFM (ACTUAL FT^3/MIN) = 160994
LB/HR (WET) = 374683

****
****

PRELIMINARY CALCULATIONS !!!!!!!!!
FINAL CALCULATIONS TO BE RUN AFTER
FECHHEIMER PROBES ARE
INDEPENDENTLY CALIBRATED

****
****

DATE = 6/25/87
LOCATION = WESTPRIAIROUT
FILE IDENITY = IP6_25WPAO
BAROMETRIC PRESSURE = 25.52
PROBE IDENTY = E-1
DUCT AREA = 128.7

TAP	POINT	CORR V V	LOC/AVG	WTD TEMP
1	1	1659	1.30	645
1	2	1499	1.17	524
1	3	1224	.96	397

TAP	POINT	CORR V V	LOC/AVG	WTD TEMP
2	1	1187	.93	446
2	2	835	.65	305
2	3	1480	1.16	530

TAP	POINT	CORR V V	LOC/AVG	WTD TEMP
3	1	765	.60	287
3	2	1487	1.16	543
3	3	889	.69	319

TAP	POINT	CORR V V	LOC/AVG	WTD TEMP
4	1	1356	1.06	521
4	2	1178	.92	450
4	3	1768	1.38	646

TAP	POINT	CORR V V	LOC/AVG	WTD TEMP
5	1	906	.71	351
5	2	1554	1.21	570
5	3	1426	1.11	508

LOCATION = WESTPRIAIROUT
FILE IDENITY = IP6_25WPAO

AVERAGE VELOCITY = 1281 FPM

AVERAGE (WEIGHTED) TEMPERATURE = 470
AVERAGE (ARITHMATIC) TEMPERATURE = 470
AVERAGE STATIC PRESSURE (in. H2O) = 30.0
AVERAGE DENSITY (LBM/FT^3) = .03958

ACFM (ACTUAL FT^3/MIN) = 164913
LB/HR (WET) = 391681

****
****

PRELIMINARY CALCULATIONS !!!!!!!!!
FINAL CALCULATIONS TO BE RUN AFTER
FECHHEIMER PROBES ARE
INDEPENDENTLY CALIBRATED

****
****

DATE = 6/25/87
LOCATION = EASTTEMPAIR
FILE IDENITY = IP6_25ETA
BAROMETRIC PRESSURE = 25.52
PROBE IDENTY = E-9
DUCT AREA = 120.0

TAP	POINT	CORR V	V LOC/AVG	WTD TEMP
1	1	1124	1.47	162
1	2	501	.66	73
1	3	290	.38	42
1	4	630	.83	92

TAP	POINT	CORR V	V LOC/AVG	WTD TEMP
2	1	1063	1.39	157
2	2	815	1.07	121
2	3	206	.27	30
2	4	384	.50	56

TAP	POINT	CORR V	V LOC/AVG	WTD TEMP
3	1	1358	1.78	197
3	2	813	1.06	118
3	3	290	.38	42
3	4	383	.50	55

TAP	POINT	CORR V	V LOC/AVG	WTD TEMP
4	1	1371	1.80	198
4	2	639	.84	92
4	3	435	.57	63
4	4	852	1.12	124

TAP	POINT	CORR V	V LOC/AVG	WTD TEMP
5	1	1198	1.57	173
5	2	750	.98	107
5	3	538	.70	76
5	4	976	1.28	139

TAP	POINT	CORR V	V LOC/AVG	WTD TEMP
6	1	1090	1.43	156
6	2	1118	1.46	160
6	3	773	1.01	110
6	4	735	.96	105

LOCATION = EASTTEMPAIR
FILE IDENITY = IP6_25ETA

AVERAGE VELOCITY = 764 FPM

AVERAGE (WEIGHTED) TEMPERATURE = 110
AVERAGE (ARITHMATIC) TEMPERATURE = 110
AVERAGE STATIC PRESSURE (in. H2O) = 30.0
AVERAGE DENSITY (LBM/FT^3) = .06468

ACFM (ACTUAL FT^3/MIN) = 91652
LB/HR (WET) = 355664

****
****

PRELIMINARY CALCULATIONS !!!!!!!!!
FINAL CALCULATIONS TO BE RUN AFTER
FECHHEIMER PROBES ARE
INDEPENDENTLY CALIBRATED

****
****

DATE = 6/25/87
LOCATION = WESTTEMPAIR
FILE IDENITY = IP6_25WTA
BAROMETRIC PRESSURE = 25.52
PROBE IDENTY = E-9
DUCT AREA = 120.0

TAP	POINT	CORR V V	LOC/AVG	WTD TEMP
1	1	1701	1.83	216
1	2	947	1.02	120
1	3	288	.31	37
1	4	204	.22	26

TAP	POINT	CORR V V	LOC/AVG	WTD TEMP
2	1	1743	1.88	222
2	2	1121	1.21	141
2	3	496	.53	62
2	4	291	.31	36

TAP	POINT	CORR V V	LOC/AVG	WTD TEMP
3	1	1990	2.14	247
3	2	1076	1.16	132
3	3	333	.36	41
3	4	206	.22	25

TAP	POINT	CORR V V	LOC/AVG	WTD TEMP
4	1	1915	2.06	231
4	2	1188	1.28	143
4	3	409	.44	49
4	4	205	.22	25

TAP	POINT	CORR V V	LOC/AVG	WTD TEMP
5	1	1713	1.85	205
5	2	1288	1.39	153
5	3	619	.67	73
5	4	280	.30	33

TAP	POINT	CORR V V	LOC/AVG	WTD TEMP
6	1	1542	1.66	179
6	2	1524	1.64	177
6	3	911	.98	106
6	4	289	.31	33

LOCATION = WESTTEMPAIR
FILE IDENITY = IP6_2SWTA

AVERAGE VELOCITY = 928 FPM

AVERAGE (WEIGHTED) TEMPERATURE = 113
AVERAGE (ARITHMATIC) TEMPERATURE = 113
AVERAGE STATIC PRESSURE (in. H2O) = 30.0
AVERAGE DENSITY (LBM/FT^3) = .06440

ACFM (ACTUAL FT^3/MIN) = 111396
LB/HR (WET) = 430412

RB-614 27 Jun 1987 17:07:11

TEST NO.	2A	3A	4A	5A	
TEST SEQ. NO.	1	2	3	4	
DATE	06/23/87	06/24/87	06/25/87	06/26/87	
TIME START	1050	1110	1015	1045	
TIME END	1735	1645	1530	1625	
LOAD MW	857	850	847	853	
FUEL	PC	PC	PC	PC	

2A AVERAGE OF SCANS 1-81
3A AVERAGE OF SCANS 1 - 68
4A AVERAGE OF SCANS 1 - 64
5A AVERAGE OF SCANS 1 - 69

DATA PAGE NO. 2 FLOWS MLB/HR

LOAD MW			857.2	850.1	846.6	853.0	2	1
HP STEAM FLOW			6213.1	6183.8	6140.4	6217.7	2	2
FW FLOW			6155.5	6142.4	6050.3	6159.4	2	3
BLOW DOWN FLOW			0.0	0.0	0.0	0.0	2	4
RH-1 SP FLOW			5.1725	5.6713	3.8197	4.2307	2	5
SH-1 SP FLOW	W		0.0	0.0	0.0	0.0	2	7
SH-1 SP FLOW	E		13.00	13.83	14.23	14.14	2	8
SH-2 SP FLOW	W		16.90	0.00	32.23	11.42	2	9
SH-2 SP FLOW	E		19.24	11.92	32.17	17.87	2	10
TOTAL AIR FLOW			79.71	78.51	78.16	81.18	2	18
TOTAL FUEL FLOW			337.5	333.5	328.4	336.0	2	19
FEGT - PYROSONICS		TG	100.0	100.0	100.0	100.0	2	20

DATA PAGE NO. 3 FLUID TEMPERATURES F - PLANT

SSH OUT T (P)			1004.8	1007.1	1005.0	1005.4	3	1
TURB THROT T (P)			1004.0	1006.4	1004.1	1005.0	3	3
ECON IN T (P)			551.8	551.0	550.9	551.8	3	5
SH-1 SPRAY TEMP			337.5	333.9	337.5	341.1	3	7
LVG 1st STG ATT(P)-W			719.0	717.3	718.1	724.7	3	8
LVG 1st STG ATT(P)-E			725.0	726.0	728.2	729.3	3	9
ENT 1st STG ATT(P)-W			718.9	718.9	719.7	722.2	3	10
ENT 1st STG ATT(P)-E			724.4	724.7	726.2	727.6	3	11
LVG RH-1 T (P)-N			1006.9	1008.3	996.3	997.1	3	12
LVG RH-1 T (P)-S			1009.9	1011.3	1000.5	1001.6	3	13
HRH AT TURB (P)-N			1009.0	1009.4	998.3	999.7	3	14
HRH AT TURB (P)-S			1011.9	1012.4	1001.3	1003.4	3	15
ENT RH-1 T (P)			625.1	617.4	624.2	624.8	3	16
CRH ENT ATT (P)		SGJ024	626.6	627.7	626.1	626.4	3	18

TEST NO.		2A	3A	4A	5A		
TEST SEQ. NO.		1	2	3	4		
DATE		06/23/87	06/24/87	06/25/87	06/26/87		
TIME START		1050	1110	1015	1045		
TIME END		1735	1645	1530	1625		
LOAD MW		857	850	847	853		

DATA PAGE NO. 3 FLUID TEMPERATURES F - PLANT

RH DSUPHTR INL T (P)	COA06A	624.6	625.5	623.5	624.1	3	19
RH-1 SPRAY T (P)		150.3	275.8	164.3	276.2	3	20
LVG 2nd STG AT (P)-W		788.8	792.4	790.2	789.7	3	21
LVG 2nd STG AT (P)-E		779.4	779.4	767.8	777.5	3	22
ENT 2nd STG AT (P)-L		792.6	789.2	796.7	792.6	3	23
ENT 2nd STG AT (P)-R		783.9	779.1	778.0	781.3	3	24
ECON OUT T (P)		573.4	571.8	571.8	572.2	3	27
ECON OUT T (P)		571.1	570.6	574.2	574.2	3	28
SAT CON TUBE(P)		678.4	678.0	678.0	676.7	3	29

DATA PAGE NO. 5 FLUID PRESSURES PSIG

SEC SH OUT PRESS (P)		2439.5	2460.1	2445.8	2460.9	5	2
DRUM PRESS (P)		2667.3	2682.0	2666.8	2686.8	5	3
HRH RH-1 PRESS (P)		523.4	520.9	517.8	522.8	5	4
CRH RH-1 PRESS (P)		556.6	553.9	549.8	555.9	5	5
NO.1 HTR EXT P (P)-A		171.9	270.9	1044.9	1055.7	5	6
NO.1 HTR EXT P (P)-B		1053.0	1045.9	1043.2	1054.1	5	7
NO.2 HTR EXT P (P)-A		546.1	543.1	539.9	545.3	5	8
NO.2 HTR EXT P (P)-B		549.7	546.7	543.2	549.0	5	9
ECON IN PRESS (P)		36.25	36.25	36.25	36.25	5	12
SEC SH IN PRES (P) E		2564.9	2582.1	2568.3	2585.6	5	13
SEC SH IN PRES (P) W		0.0	0.0	0.0	0.0	5	14

DATA PAGE NO. 6 AIR & GAS DATA - PLANT

AMBIENT AIR TEMP		83.19	86.02	87.11	90.44	6	1
AIR ENT SEC AH (P)-A		87.06	90.52	91.94	94.72	6	2
AIR ENT SEC AH (P)-B		86.11	89.87	91.42	93.78	6	3
AIR ENT PRI AH (P)-A		108.2	111.2	112.6	115.1	6	4
AIR ENT PRI AH (P)-B		106.3	109.4	110.6	113.0	6	5
AIR LVG SEC AH (P)-A		655.5	658.9	655.7	659.9	6	6
AIR LVG SEC AH (P)-B		667.4	670.9	672.1	675.1	6	7
AIR LVG PRI AH (P)-A		536.7	537.0	534.0	532.7	6	8
AIR LVG PRI AH (P)-B		499.1	502.1	500.6	498.7	6	9
GAS LVG SEC AH (P)-A		307.0	310.6	312.9	314.9	6	10
GAS LVG SEC AH (P)-B		318.4	323.2	318.7	321.8	6	11
GAS LVG PRI AH (P)-A		307.3	306.0	304.8	306.3	6	12
GAS LVG PRI AH (P)-B		309.6	308.4	307.5	306.9	6	13
GAS LVG ECON (P)-E		750.8	752.7	757.3	761.6	6	14
GAS LVG ECON (P)-W		748.3	748.0	750.3	756.0	6	15
O2 LVG ECON (P)-W		2.5930	2.4666	2.4691	2.8116	6	20
O2 LVG ECON (P)-E		2.7013	2.8213	2.7730	2.7988	6	21
NOX @ STACK (P)		256.3	234.2	238.5	236.1	6	24
O2 @ STACK (P)		256.3	234.2	238.4	236.1	6	25

TEST NO.	2A	3A	4A	5A		
TEST SEQ. NO.	1	2	3	4		
DATE	06/23/87	06/24/87	06/25/87	06/26/87		
TIME START	1050	1110	1015	1045		
TIME END	1735	1645	1530	1625		
LOAD MW	857	850	847	853		

DATA PAGE NO. 6 AIR & GAS DATA - PLANT

BAROMETRIC PRESS (P)		25.45	25.55	25.52	25.49	6 29
DRY BULB TEMP (B)		81.00	83.40	84.10	86.00	7 26
WET BULB TEMP (B)		55.00	56.10	55.30	56.40	7 27
MOIST IN AIR (B)		.0049	.0050	.0044	.0046	7 28
REL HUMIDITY (P)		-25.00	-25.00	-25.00	-25.00	7 30

DATA PAGE NO. 7 AIR & GAS DATA - TEST

AIR ENT SEC AH (B) W	GRID	86.40	83.60	93.80	0.00	7 2
AIR ENT SEC AH (B) E	GRID	87.00	83.70	87.10	0.00	7 3
AIR ENT PRI AH (B) W	GRID	107.8	105.9	115.8	0.0	7 4
AIR ENT PRI AH (B) E	GRID	111.1	109.1	111.9	0.0	7 5
AIR LVG SEC AH (B) W	TRAV	0.0	655.0	636.0	0.0	7 6
AIR LVG SEC AH (B) E	TRAV	0.0	663.0	661.0	0.0	7 7
AIR LVG PRI AH (B) W	TRAV	474.0	452.0	470.0	0.0	7 8
AIR LVG PRI AH (B) E	TRAV	513.0	469.0	489.0	0.0	7 9
GAS LVG PRI AH (B) W	TRAV	287.0	290.0	288.0	0.0	7 12
GAS LVG PRI AH (B) E	TRAV	296.0	307.0	295.0	0.0	7 13
GAS LVG ECON (B) W	GRID	769.1	771.1	768.4	775.8	7 14
GAS LVG ECON (B) E	GRID	771.3	775.0	770.2	775.7	7 15
GAS ENT SEC AH (B) W	TRAV	0.0	747.0	747.0	0.0	7 16
GAS ENT SEC AH (B) E	TRAV	0.0	722.0	747.0	0.0	7 17
GAS ENT PRI AH (B) W	TRAV	734.0	742.0	731.0	0.0	7 18
GAS ENT PRI AH (B) E	TRAV	742.0	740.0	737.0	0.0	7 19
O2 LVG ECON (B) W	TELE	4.3679	3.1774	2.9530	3.5826	7 20
O2 LVG ECON (B) E	TELE	3.1506	3.5595	3.2767	4.2640	7 21

DATA PAGE NO. 8 FW HTR TEMPERATURES F - PLANT

NO.1 HTR EXT T (P)-A		799.5	800.0	798.6	799.5	8 1
NO.1 HTR EXT T (P)-B		799.5	800.2	798.6	799.9	8 2
NO.2 HTR EXT T (P)-A		625.6	627.1	624.8	625.7	8 3
NO.2 HTR EXT T (P)-B		625.9	626.9	625.4	625.2	8 4
NO.1 FW LVG T (P)-A		553.1	552.8	552.8	553.2	8 5
NO.1 FW LVG T (P)-B		553.3	552.2	551.9	553.1	8 6
NO.1 FW ENT T (P)-A		478.2	478.8	478.0	478.3	8 7
NO.1 FW ENT T (P)-B		480.1	480.1	479.6	480.2	8 8
NO.2 FW ENT T (P)-A		395.0	394.5	394.2	394.2	8 11
NO.2 FW ENT T (P)-B		394.5	393.9	394.7	395.0	8 12
NO.1 DRAIN T (P)-A		489.8	488.7	488.4	489.0	8 13
NO.1 DRAIN T (P)-B		488.1	488.1	487.3	487.8	8 14
NO.2 DRAIN T (P)-A		402.0	402.2	402.8	403.1	8 15
NO.2 DRAIN T (P)-B		401.4	402.7	401.0	401.4	8 16
INT SSH MANIF (P)-1		879.7	876.7	870.3	883.4	8 17
INT SSH MANIF (P)-2		907.4	908.9	902.6	915.8	8 18

TEST NO.	2A	3A	4A	5A		
TEST SEQ. NO.	1	2	3	4		
DATE	06/23/87	06/24/87	06/25/87	06/26/87		
TIME START	1050	1110	1015	1045		
TIME END	1735	1645	1530	1625		
LOAD MW	857	850	847	853		

DATA PAGE NO. 8 FW HTR TEMPERATURES F - PLANT

INT SSH MANIF (P)-3	915.8	907.4	907.0	919.3	8	19
INT SSH MANIF (P)-4	954.8	949.5	948.4	962.7	8	20
INT SSH MANIF (P)-5	930.9	923.0	920.3	924.8	8	21
INT SSH MANIF (P)-6	961.5	956.3	950.4	953.5	8	22
INT SSH MANIF (P)-7	924.1	925.7	916.0	920.6	8	23
INT SSH MANIF (P)-8	948.3	952.5	942.7	949.4	8	24
INT SSH MANIF (P)-9	907.9	905.1	899.1	905.2	8	25
INT SSH MANIF (P)-10	948.9	944.7	932.7	935.1	8	26
INT SSH MANIF (P)-11	906.3	905.7	895.6	900.6	8	27
INT SSH MANIF (P)-12	943.8	938.2	925.3	927.6	8	28
INT SSH MANIF (P)-13	904.4	901.3	895.0	901.6	8	29
INT SSH MANIF (P)-14	939.9	935.7	919.2	925.0	8	30
INT SSH MANIF (P)-15	913.3	916.6	915.2	910.2	9	17
INT SSH MANIF (P)-16	951.2	948.3	947.4	939.9	9	18
INT SSH MANIF (P)-17	910.8	920.1	916.7	911.1	9	19
INT SSH MANIF (P)-18	937.1	946.4	944.3	936.5	9	20
INT SSH MANIF (P)-19	919.6	928.7	927.8	919.0	9	21
INT SSH MANIF (P)-20	947.8	958.7	952.7	947.1	9	22
INT SSH MANIF (P)-21	922.1	930.1	928.7	919.4	9	23
INT SSH MANIF (P)-22	952.2	959.3	960.1	950.9	9	24
INT SSH MANIF (P)-23	924.5	933.7	934.4	925.7	9	25
INT SSH MANIF (P)-24	958.3	967.6	968.1	958.8	9	26
INT SSH MANIF (P)-25	923.5	928.0	930.1	925.3	9	27
INT SSH MANIF (P)-26	957.5	963.8	965.0	961.7	9	28
INT SSH MANIF (P)-27	888.3	893.4	889.1	891.8	9	29
INT SSH MANIF (P)-28	911.9	918.1	915.0	916.5	9	30

DATA PAGE NO. 10 PULVERIZER COAL AND PA FLOW

PULV A COAL FLOW	48.31	47.79	46.95	48.17	10	1
PULV B COAL FLOW	48.08	47.56	46.71	47.93	10	2
PULV C COAL FLOW	-.05	47.94	47.09	48.34	10	3
PULV D COAL FLOW	49.32	48.77	47.94	49.19	10	4
PULV E COAL FLOW	48.49	47.97	47.13	48.37	10	5
PULV F COAL FLOW	48.29	.15	.15	.15	10	6
PULV G COAL FLOW	48.68	48.12	47.26	48.49	10	7
PULV H COAL FLOW	48.91	48.39	47.54	48.79	10	8
PULV A PA FLOW	85.24	85.77	87.25	87.92	10	16
PULV B PA FLOW	88.11	87.72	87.25	87.92	10	17
PULV C PA FLOW	3.92	87.67	87.12	87.81	10	18
PULV D PA FLOW	87.30	86.90	86.34	87.23	10	19
PULV E PA FLOW	86.25	85.92	85.46	86.22	10	20
PULV F PA FLOW	87.91	0.00	0.00	0.00	10	21
PULV G PA FLOW	84.03	84.92	86.76	88.40	10	22
PULV H PA FLOW	87.71	87.23	86.85	87.64	10	23

TEST NO.		2A	3A	4A	5A	
TEST SEQ. NO.		1	2	3	4	
DATE		06/23/87	06/24/87	06/25/87	06/26/87	
TIME START		1050	1110	1015	1045	
TIME END		1735	1645	1530	1625	
LOAD MW		857	850	847	853	

DATA PAGE NO. 11 PULVERIZER INLET TEMP AND PA DIFF

PULV A INLET T		326.7	311.2	308.3	319.0	11	1
PULV B INLET T		337.1	320.3	310.0	340.2	11	2
PULV C INLET T		97.2	336.1	329.3	299.4	11	3
PULV D INLET T		347.6	334.3	330.3	339.4	11	4
PULV E INLET T		343.9	333.3	318.8	333.4	11	5
PULV F INLET T		378.3	112.3	103.8	104.9	11	6
PULV G INLET T		365.2	345.4	326.0	337.7	11	7
PULV H INLET T		370.4	342.3	333.7	365.6	11	8
PULV A DIFF P		13.90	13.60	12.46	12.10	11	24
PULV B DIFF P		12.38	12.23	11.67	11.82	11	25
PULV C DIFF P		.04	12.02	11.12	11.84	11	26
PULV D DIFF P		13.29	12.94	12.78	12.61	11	27
PULV E DIFF P		13.20	12.60	12.21	12.52	11	28
PULV F DIFF P		12.13	0.00	0.00	0.00	11	29
PULV G DIFF P		13.86	13.63	13.63	13.60	11	30
PULV H DIFF P		13.35	13.04	12.49	12.47	11	9

DATA PAGE NO. 12 OPERATOR POSITIONS %

RH-1 SP VLV POSIT		0.0	0.0	0.0	0.0	12	1
SH-1 SP VLV POSIT-A		0.0	0.0	0.0	0.0	12	3
SH-1 SP VLV POSIT-B		0.0	0.0	0.0	0.0	12	4
SH-2 SP VLV POSIT-A		0.0	0.0	0.0	0.0	12	5
SH-2 SP VLV POSIT-B		0.0	0.0	0.0	0.0	12	6
RH PASS DMPR POS-A		0.0	0.0	0.0	0.0	12	15
RH PASS DMPR POS-B		0.0	0.0	0.0	0.0	12	16
SH PASS DMPR POS-A		0.0	0.0	0.0	0.0	12	17
SH PASS DMPR POS-B		0.0	0.0	0.0	0.0	12	18

DATA PAGE NO. 13 MISCELLANEOUS GAS DATA - TEST

O2 LVG PRI AH W	TRAV	6.8000	8.3000	7.2000	0.0000	13	5
O2 LVG PRI AH E	TRAV	6.5000	6.5000	6.9000	0.0000	13	6
CO2 LVG PRI AH W	TRAV	12.40	11.40	12.20	0.00	13	7
CO2 LVG PRI AH E	TRAV	12.30	12.80	12.60	0.00	13	8
O2 ENT PRI AH W	TRAV	4.2000	3.0000	3.4000	0.0000	13	13
O2 ENT PRI AH E	TRAV	3.6000	3.2000	3.1000	0.0000	13	14
CO2 ENT PRI AH W	TRAV	14.60	15.90	15.60	0.00	13	15
CO2 ENT PRI AH E	TRAV	15.30	15.80	15.80	0.00	13	16
GAS LVG RH PS (B)SW	GRID	750.7	751.8	742.6	739.7	13	21
GAS LVG RH PS (B)SE	GRID	755.8	753.8	743.7	740.9	13	22
GAS LVG PSH PS (B)NW	GRID	766.7	768.2	769.1	779.4	13	23
GAS LVG PSH PS (B)NE	GRID	767.3	770.5	771.8	779.7	13	24
STACK O2/CO2 (P)		5.1897	5.1991	5.2697	5.5532	13	25
		0.0	0.0	0.0	0.0	13	28

TEST NO.	2A	3A	4A	5A	
TEST SEQ. NO.	1	2	3	4	
DATE	06/23/87	06/24/87	06/25/87	06/26/87	
TIME START	1050	1110	1015	1045	
TIME END	1735	1645	1530	1625	
LOAD MW	857	850	847	853	

DATA PAGE NO. 13 MISCELLANEOUS GAS DATA - TEST

A = RIGHT = EAST	0.0	0.0	0.0	0.0	13 29
GAS LVG ECON T A-G W TRAV	0.0	0.0	0.0	0.0	13 30

DATA PAGE NO. 14 MISCELLANEOUS

GAS LVG ECON T A-G W TRAV	746.0	748.0	744.0	0.0	14 1
GAS LVG ECON T H-N W TRAV	751.0	757.0	750.0	0.0	14 2
GAS LVG ECON T A-G E TRAV	739.0	746.0	751.0	0.0	14 3
GAS LVG ECON T H-N E TRAV	750.0	757.0	743.0	0.0	14 4
O2 LVG ECON A-G W TRAV	4.7000	3.6000	3.8000	0.0000	14 5
O2 LVG ECON H-N W TRAV	3.9000	3.9000	4.5000	0.0000	14 6
O2 LVG ECON A-G E TRAV	3.1000	3.9000	3.9000	0.0000	14 7
O2 LVG ECON H-N E TRAV	4.5000	3.3000	3.2000	0.0000	14 8
CO2 LVG ECON A-G W TRAV	14.60	15.60	15.40	0.00	14 9
CO2 LVG ECON H-N W TRAV	14.90	15.20	14.60	0.00	14 10
CO2 LVG ECON A-G E TRAV	15.80	15.10	15.10	0.00	14 11
CO2 LVG ECON H-N E TRAV	15.50	15.80	15.90	0.00	14 12
GAS ENT BAG HS T W TRAV	295.0	299.0	302.0	0.0	14 13
GAS ENT BAG HS T C TRAV	337.0	337.0	338.0	0.0	14 14
GAS ENT BAG HS T E TRAV	299.0	317.0	322.0	0.0	14 15
O2 ENT BAG HS W TRAV	6.0000	4.9000	4.9000	0.0000	14 16
O2 ENT BAG HS C TRAV	4.2000	4.3000	4.5000	0.0000	14 17
O2 ENT BAG HS E TRAV	4.7000	5.0000	4.8000	0.0000	14 18
CO2 ENT BAG HS W TRAV	13.10	14.10	14.10	0.00	14 19
CO2 ENT BAG HS C TRAV	14.80	14.80	14.50	0.00	14 20
CO2 ENT BAG HS E TRAV	14.30	14.10	14.20	0.00	14 21
TEMP AIR T W TRAV	110.0	110.0	113.0	0.0	14 22
TEMP AIR T E TRAV	109.0	112.0	110.0	0.0	14 23

DATA PAGE NO. 15 MISCELLANEOUS

PRI AH AIR IN P W MANO	0.00	31.10	31.80	0.00	15 1
PRI AH AIR IN P E MANO	0.00	30.40	31.10	0.00	15 2
PRI AH AIR OUT P W TRAV	29.00	29.00	30.00	0.00	15 3
PRI AH AIR OUT P E TRAV	29.00	29.10	30.00	0.00	15 4
PRI AH GAS IN P W TRAV	-3.8000	-4.0000	-4.0000	0.0000	15 5
PRI AH GAS IN P E TRAV	-3.9000	-4.0000	-4.0000	0.0000	15 6
PRI AH GAS OUT P W TRAV	-8.5000	-8.0000	-8.0000	0.0000	15 7
PRI AH GAS OUT P E TRAV	-8.2000	-8.0000	-8.0000	0.0000	15 8
PRI AH AIR-GAS DP W MANO	38.50	38.40	39.20	0.00	15 9
PRI AH AIR-GAS DP E MANO	35.70	37.50	38.10	0.00	15 10
SEC AH AIR IN P W MANO	0.0000	3.9000	4.0000	0.0000	15 11
SEC AH AIR IN P E MANO	0.0000	4.0000	4.0000	0.0000	15 12
SEC AH GAS IN P W TRAV	0.0000	-3.6000	-3.7000	0.0000	15 13
SEC AH GAS IN P E TRAV	0.0000	-3.8000	-3.6000	0.0000	15 14

TEST NO.		2A	3A	4A	5A	
TEST SEQ. NO.		1	2	3	4	
DATE		06/23/87	06/24/87	06/25/87	06/26/87	
TIME START		1050	1110	1015	1045	
TIME END		1735	1645	1530	1625	
LOAD MW		857	850	847	853	

DATA PAGE NO. 15 MISCELLANEOUS

SEC AH AIR-GAS DP	W	MANO	11.90	11.60	11.80	0.00	15 15
SEC AH AIR-GAS DP	E	MANO	11.80	11.40	11.70	0.00	15 16
SEC AH AIR OUT P	W	TRAV	0.0000	2.0000	2.0000	0.0000	15 17
SEC AH AIR OUT P	E	TRAV	0.0000	1.9000	1.9000	0.0000	15 18

DATE = 6-25-87
LOCATION = BAG INLET WEST
FILE IDENITY = IP6_25BHW
BAROMETRIC PRESSURE = 25.52
PROBE IDENTY = E-44
DUCT HEIGHT = 19.3
DUCT WIDTH = 18.0

TAP	POINT	STAT P	TEMP	DELTA P	YAW ANGL	%02	% CO2
1	1	-8.3	301	.996	0	5.3	13.8
1	2	-8.3	300	.280	0	4.9	13.9
1	3	-8.3	301	.046	0	5.5	13.6
1	4	-8.3	291	.075	0	5.4	13.6
1	5	-8.3	293	.573	0	6.1	13.0
1	6	-8.2	289	.566	0	6.2	12.8
1	7	-8.3	288	.512	0	6.1	12.9

TAP	POINT	STAT P	TEMP	DELTA P	YAW ANGL	%02	% CO2
2	1	-8.3	298	1.113	0	4.6	14.3
2	2	-8.3	299	.356	4	4.8	14.1
2	3	-8.3	266	.095	4	5.2	13.8
2	4	-8.4	306	.017	0	5.4	13.5
2	5	-8.3	312	.175	0	5.8	13.2
2	6	-8.5	312	.100	0	5.8	13.4
2	7	-8.4	291	.307	0	5.5	13.5

TAP	POINT	STAT P	TEMP	DELTA P	YAW ANGL	%02	% CO2
3	1	-8.3	301	1.775	0	4.3	14.7
3	2	-8.3	301	1.333	0	4.8	14.2
3	3	-8.3	301	.759	0	5.3	13.9
3	4	-8.3	301	.209	4	5.3	13.6
3	5	6.0	301	.322	0	5.8	13.2
3	6	-8.5	301	.229	0	5.4	13.6
3	7	-8.6	301	.234	0	4.9	14.2

TAP	POINT	STAT P	TEMP	DELTA P	YAW ANGL	%02	% CO2
4	1	-8.1	299	.329	2	4.4	14.4
4	2	-8.1	303	.263	0	4.8	14.3
4	3	-8.2	311	.209	2	5.4	13.5
4	4	-8.3	321	.253	2	5.2	14.0
4	5	-8.3	325	.249	0	5.6	13.5
4	6	-8.2	301	.280	4	5.1	14.0
4	7	-8.3	301	.366	0	4.4	14.4

TAP	POINT	STAT P	TEMP	DELTA P	YAW ANGL	%02	% CO2
5	1	-8.3	310	.395	0	4.4	14.7
5	2	-8.2	310	.419	4	4.8	14.2
5	3	-8.3	321	.419	0	5.0	14.2
5	4	-8.3	340	.317	0	5.0	14.0
5	5	-8.3	326	.324	0	* 5.1	*14.3
5	6	-8.3	287	.310	0	5.3	13.8
5	7	-8.2	287	.483	0	4.4	14.6

TAP	POINT	STAT P	TEMP	DELTA P	YAW ANGL	%02	% CO2
6	1	-8.1	301	.200	10	4.2	14.8
6	2	-8.3	299	.253	4	4.7	14.4
6	3	-8.3	301	.312	5	4.3	14.7
6	4	-8.3	302	.400	0	4.8	14.1
6	5	-8.4	309	.305	0	4.8	14.1
6	6	-8.5	305	.190	0	4.5	14.6
6	7	-8.3	292	.332	0	4.6	14.4

TAP	POINT	STAT P	TEMP	DELTA P	YAW ANGL	%02	% CO2
7	1	-8.5	301	.136	10	4.3	14.8
7	2	-8.6	301	.021	5	4.3	14.7
7	3	-8.7	301	.012	20	4.2	14.8
7	4	-8.5	298	.073	10	4.8	14.2
7	5	-8.7	295	.053	5	5.0	14.0
7	6	-8.8	295	.068	30	4.4	14.6
7	7	-8.3	293	.183	5	4.8	14.2

TAP	POINT	STAT P	TEMP	DELTA P	YAW ANGL	%02	% CO2
8	1	-8.1	303	.488	2	4.6	14.3
8	2	-8.5	303	.549	0	4.5	14.5
8	3	-8.6	299	.056	0	4.6	14.4
8	4	-8.5	299	.619	2	4.3	14.7
8	5	-8.5	298	.012	5	4.6	14.6
8	6	-8.7	299	.153	5	4.1	14.7
8	7	-8.5	315	.581	5	4.2	14.8

* - 02/CO2 DATA WITH ERROR GREATER THAN .35 NOT USED

****
****

PRELIMINARY CALCULATIONS !!!!!!!!!
FINAL CALCULATIONS TO BE RUN AFTER
FECHHEIMER PROBES ARE
INDEPENDENTLY CALIBRATED

****
****

DATE = 6-25-87
LOCATION = BAG INLET WEST
FILE IDENITY = IP6_25BHW
BAROMETRIC PRESSURE = 25.52
PROBE IDENTY = E-44
DUCT AREA = 346.5

TAP	POINT	CORR V	%02	% CO2	V LOC/AVG	WTD % O2	WTD %CO2	WTD TEMP
1	1	5431	5.3	13.8	1.85/1.85	9.8	25.5	556
1	2	2896	4.9	13.9	.99/ .98	4.8	13.7	295
1	3	1184	5.5	13.6	.40/ .40	2.2	5.5	121
1	4	1499	5.4	13.6	.51/ .51	2.8	6.9	148
1	5	4111	6.1	13.0	1.40/1.40	8.5	18.2	410
1	6	4076	6.2	12.8	1.39/1.39	8.6	17.8	400
1	7	3876	6.1	12.9	1.32/1.32	8.0	17.0	379

TAP	POINT	CORR V	%02	% CO2	V LOC/AVG	WTD % O2	WTD %CO2	WTD TEMP
2	1	5725	4.6	14.3	1.95/1.95	9.0	27.8	580
2	2	3250	4.8	14.1	1.11/1.10	5.3	15.6	330
2	3	1652	5.2	13.8	.56/ .56	2.9	7.8	149
2	4	725	5.4	13.5	.25/ .25	1.3	3.3	75
2	5	2315	5.8	13.2	.79/ .79	4.6	10.4	246
2	6	1754	5.8	13.4	.60/ .60	3.5	8.0	186
2	7	3014	5.5	13.5	1.03/1.02	5.6	13.8	298

TAP	POINT	CORR V	%02	% CO2	V LOC/AVG	WTD % O2	WTD %CO2	WTD TEMP
3	1	7228	4.3	14.7	2.46/2.46	10.6	36.2	740
3	2	6273	4.8	14.2	2.14/2.13	10.2	30.3	642
3	3	4746	5.3	13.9	1.62/1.61	8.6	22.5	486
3	4	2502	5.3	13.6	.85/ .85	4.5	11.6	256
3	5	3043	5.8	13.2	1.04/1.03	6.0	13.7	311
3	6	2625	5.4	13.6	.89/ .89	4.8	12.2	269
3	7	2651	4.9	14.2	.90/ .90	4.4	12.8	271

TAP	POINT	CORR V	%02	% CO2	V LOC/AVG	WTD % O2	WTD %CO2	WTD TEMP
4	1	3130	4.4	14.4	1.07/1.06	4.7	15.3	318
4	2	2811	4.8	14.3	.96/ .96	4.6	13.7	290
4	3	2523	5.4	13.5	.86/ .86	4.6	11.6	267
4	4	2790	5.2	14.0	.95/ .95	4.9	13.3	304
4	5	2779	5.6	13.5	.95/ .94	5.3	12.8	307
4	6	2889	5.1	14.0	.98/ .98	5.0	13.8	296
4	7	3307	4.4	14.4	1.13/1.12	5.0	16.2	338

TAP	POINT	CORR V	%02	% CO2	V LOC/AVG	WTD % O2	WTD %CO2	WTD TEMP
5	1	3453	4.4	14.7	1.18/1.17	5.2	17.3	364
5	2	3548	4.8	14.2	1.21/1.21	5.8	17.2	374
5	3	3583	5.0	14.2	1.22/1.22	6.1	17.3	391
5	4	3161	5.0	14.0	1.08/1.07	5.4	15.1	365
5	5	3165	5.1	14.3	1.08/1.08	0.0	0.0	351
5	6	3018	5.3	13.8	1.03/1.03	5.4	14.2	294
5	7	3756	4.4	14.6	1.28/1.28	5.6	18.7	366

TAP	POINT	CORR V	%02	% CO2	V LOC/AVG	WTD % O2	WTD %CO2	WTD TEMP
6	1	2413	4.2	14.8	.82/ .82	3.4	12.2	247
6	2	2744	4.7	14.4	.93/ .93	4.4	13.4	279
6	3	3043	4.3	14.7	1.04/1.03	4.5	15.2	311
6	4	3459	4.8	14.1	1.18/1.18	5.7	16.6	355
6	5	3039	4.8	14.1	1.03/1.03	5.0	14.6	319
6	6	2397	4.5	14.6	.82/ .81	3.7	11.9	249
6	7	3131	4.6	14.4	1.07/1.06	4.9	15.4	311

TAP	POINT	CORR V	%02	% CO2	V LOC/AVG	WTD % O2	WTD %CO2	WTD TEMP
7	1	1994	4.3	14.8	.68/ .68	2.9	10.0	204
7	2	799	4.3	14.7	.27/ .27	1.2	4.0	82
7	3	570	4.2	14.8	.19/ .19	.8	2.9	58
7	4	1463	4.8	14.2	.50/ .50	2.4	7.1	148
7	5	1261	5.0	14.0	.43/ .43	2.1	6.0	126
7	6	1240	4.4	14.6	.42/ .42	1.9	6.2	124
7	7	2325	4.8	14.2	.79/ .79	3.8	11.2	232

TAP	POINT	CORR V	%02	% CO2	V LOC/AVG	WTD % O2	WTD %CO2	WTD TEMP
8	1	3815	4.6	14.3	1.30/1.30	6.0	18.6	393
8	2	4047	4.5	14.5	1.38/1.38	6.2	20.0	417
8	3	1303	4.6	14.4	.44/ .44	2.0	6.4	132
8	4	4280	4.3	14.7	1.46/1.46	6.3	21.4	435
8	5	603	4.6	14.6	.21/ .21	.9	3.0	61
8	6	2137	4.1	14.7	.73/ .73	3.0	10.7	217
8	7	4179	4.2	14.8	1.42/1.42	6.0	21.1	447

LOCATION = BAG INLET WEST
FILE IDENITY = IP6_25BHW

AVERAGE VELOCITY = 2942 FPM

AVERAGE (WEIGHTED) % O2 = 4.92 *
AVERAGE (WEIGHTED) % CO2 = 14.08 *
AVERAGE (WEIGHTED) TEMPERATURE = 302

AVERAGE (ARITHMETIC) % O2 = 4.92 *
AVERAGE (ARITHMETIC) % CO2 = 14.09 *
AVERAGE (ARITHMETIC) TEMPERATURE = 302

AVERAGE STATIC PRESSURE (in. H2O) = -8.1
AVERAGE DENSITY (LBM/FT^3) = .04420

ACFM (ACTUAL FT^3/MIN) = 1019258
LB/HR (WET) = 2703183

* - O2/CO2 DATA WITH ERROR GREATER THAN .35 NOT USED
NO. OF POINTS NOT USED = 1 OUT OF 56

LOCATION = BAG INLET WEST
FILE IDENITY = IP6_25BHW

AVERAGE VELOCITY = 2942 FPM

AVERAGE (WEIGHTED) % O2 = 4.93
AVERAGE (WEIGHTED) % CO2 = 14.09
AVERAGE (WEIGHTED) TEMPERATURE = 302

AVERAGE (ARITHMETIC) % O2 = 4.93
AVERAGE (ARITHMETIC) % CO2 = 14.09
AVERAGE (ARITHMETIC) TEMPERATURE = 302

AVERAGE STATIC PRESSURE (in. H2O) = -8.1
AVERAGE DENSITY (LBM/FT^3) = .04420

ACFM (ACTUAL FT^3/MIN) = 1019258
LB/HR (WET) = 2703183

DATE = 6-25-87
LOCATION = BAG IN CENTER
FILE IDENITY = IP6_25BHC
BAROMETRIC PRESSURE = 25.52
PROBE IDENTY = E-42
DUCT HEIGHT = 19.3
DUCT WIDTH = 18.0

TAP	POINT	STAT P	TEMP	DELTA P	YAW ANGL	%02	% CO2
1	1	-8.4	320	.449	15	4.8	14.5
1	2	-8.3	323	.029	20	5.0	14.3
1	3	-8.1	324	.009	5	5.1	14.3
1	4	-8.1	324	.532	10	4.9	14.4
1	5	-8.2	323	.036	10	4.9	14.4
1	6	-8.0	322	.065	15	5.0	14.1
1	7	-8.0	322	.371	5	4.5	14.4

TAP	POINT	STAT P	TEMP	DELTA P	YAW ANGL	%02	% CO2
2	1	-8.3	318	.041	5	4.8	14.3
2	2	-8.4	321	.092	10	4.3	14.6
2	3	-8.3	322	.251	10	5.0	14.0
2	4	-8.2	326	.256	5	4.4	14.6
2	5	-8.2	325	.317	5	4.6	14.4
2	6	-8.4	325	.288	0	4.9	14.3
2	7	-8.3	320	.136	5	4.4	14.4

TAP	POINT	STAT P	TEMP	DELTA P	YAW ANGL	%02	% CO2
3	1	-8.2	321	.129	5	4.4	14.6
3	2	-8.3	319	.222	5	4.5	14.5
3	3	-8.3	328	.227	10	4.7	14.4
3	4	-8.3	327	.285	0	4.3	14.4
3	5	-8.3	326	.363	5	4.7	14.3
3	6	-8.4	326	.324	5	4.7	14.2
3	7	-8.3	327	.283	10	4.4	14.5

TAP	POINT	STAT P	TEMP	DELTA P	YAW ANGL	%02	% CO2
4	1	-8.2	341	.327	10	4.2	14.9
4	2	-8.1	345	.507	10	4.1	15.1
4	3	-8.3	339	.522	10	4.7	14.6
4	4	-8.2	335	.441	0	4.6	14.4
4	5	-8.1	337	.424	10	4.6	14.4
4	6	-8.2	332	.463	10	4.5	14.8
4	7	-8.2	333	.407	0	4.2	14.8

TAP	POINT	STAT P	TEMP	DELTA P	YAW ANGL	%02	% CO2
5	1	-8.2	353	.224	5	4.2	14.6
5	2	-8.2	353	.549	5	4.1	14.7
5	3	-8.1	353	.576	10	* 4.5	*14.1
5	4	-8.2	345	.507	10	5.1	14.0
5	5	-8.0	335	.463	10	4.8	14.1
5	6	-8.1	340	.485	10	4.6	14.2
5	7	-8.2	343	.446	0	4.2	14.8

TAP	POINT	STAT P	TEMP	DELTA P	YAW ANGL	%02	% CO2
6	1	-8.0	348	.092	15	4.6	14.4
6	2	-8.0	351	.422	10	4.3	14.6
6	3	-8.0	355	.603	10	4.8	14.4
6	4	-8.2	355	.595	10	4.5	14.5
6	5	-8.2	354	.532	10	4.7	14.4
6	6	-8.1	351	.415	10	4.3	14.6
6	7	-8.2	348	.317	15	4.4	14.7

TAP	POINT	STAT P	TEMP	DELTA P	YAW ANGL	%02	% CO2
7	1	-8.4	347	.004	5	4.2	14.6
7	2	-8.4	348	.019	10	4.4	14.6
7	3	-8.4	352	.058	10	4.6	14.4
7	4	-8.3	355	.102	5	4.2	14.7
7	5	-8.3	352	.463	10	4.1	14.7
7	6	-8.4	352	.334	0	4.3	14.9
7	7	-8.3	350	.151	5	4.6	14.7

TAP	POINT	STAT P	TEMP	DELTA P_	YAW ANGL	%02	% CO2
8	1	-8.1	346	.561	20	4.9	14.3
8	2	-8.4	346	.083	15	4.0	14.8
8	3	-8.4	349	.083	20	4.3	14.5
8	4	-8.2	352	.366	15	4.3	14.5
8	5	-8.4	349	.002	10	4.4	14.6
8	6	-8.3	349	.004	25	* 4.2	*14.4
8	7	-8.1	345	.224	5	4.6	14.3

* - O2/CO2 DATA WITH ERROR GREATER THAN .35 NOT USED

****
****

PRELIMINARY CALCULATIONS !!!!!!!!!
FINAL CALCULATIONS TO BE RUN AFTER
FECHHEIMER PROBES ARE
INDEPENDENTLY CALIBRATED

****
****

DATE = 6-25-87
LOCATION = BAG IN CENTER
FILE IDENITY = IP6_25BHC
BAROMETRIC PRESSURE = 25.52
PROBE IDENTY = E-42
DUCT AREA = 346.5

TAP	POINT	CORR V	%02	% CO2	V LOC/AVG	WTD % O2	WTD %CO2	WTD TEMP
1	1	3578	4.8	14.5	1.29/1.30	6.2	18.7	415
1	2	897	5.0	14.3	.32/ .33	1.6	4.6	105
1	3	531	5.1	14.3	.19/ .19	1.0	2.7	62
1	4	3977	4.9	14.4	1.43/1.44	7.0	20.6	467
1	5	1047	4.9	14.4	.38/ .38	1.8	5.4	122
1	6	1376	5.0	14.1	.50/ .50	2.5	7.0	161
1	7	3361	4.5	14.4	1.21/1.22	5.4	17.4	392

TAP	POINT	CORR V	%02	% CO2	V LOC/AVG	WTD % O2	WTD %CO2	WTD TEMP
2	1	1126	4.8	14.3	.41/ .41	1.9	5.8	130
2	2	1665	4.3	14.6	.60/ .60	2.6	8.8	194
2	3	2741	5.0	14.0	.99/ .99	4.9	13.8	320
2	4	2805	4.4	14.6	1.01/1.02	4.4	14.7	331
2	5	3117	4.6	14.4	1.12/1.13	5.2	16.2	367
2	6	2984	4.9	14.3	1.07/1.08	5.3	15.4	351
2	7	2044	4.4	14.4	.74/ .74	3.2	10.6	237

TAP	POINT	CORR V	%02	% CO2	V LOC/AVG	WTD % O2	WTD %CO2	WTD TEMP
3	1	1991	4.4	14.6	.72/ .72	3.2	10.5	232
3	2	2603	4.5	14.5	.94/ .94	4.2	13.6	301
3	3	2617	4.7	14.4	.94/ .95	4.4	13.6	311
3	4	2973	4.3	14.4	1.07/1.08	4.6	15.4	352
3	5	3336	4.7	14.3	1.20/1.21	5.6	17.2	394
3	6	3154	4.7	14.2	1.14/1.14	5.3	16.1	373
3	7	2917	4.4	14.5	1.05/1.06	4.6	15.2	346

TAP	POINT	CORR V	%02	% CO2	V LOC/AVG	WTD % O2	WTD %CO2	WTD TEMP
4	1	3159	4.2	14.9	1.14/1.14	4.8	16.9	390
4	2	3934	4.1	15.1	1.42/1.43	5.8	21.4	492
4	3	3979	4.7	14.6	1.43/1.44	6.7	20.9	489
4	4	3708	4.6	14.4	1.33/1.34	6.1	19.2	450
4	5	3585	4.6	14.4	1.29/1.30	5.9	18.6	438
4	6	3731	4.5	14.8	1.34/1.35	6.0	19.9	449
4	7	3557	4.2	14.8	1.28/1.29	5.4	19.0	429

TAP	POINT	CORR V	%02	% CO2	V LOC/AVG	WTD % O2	WTD %CO2	WTD TEMP
5	1	2672	4.2	14.6	.96/ .97	4.0	14.0	342
5	2	4163	4.1	14.7	1.50/1.51	6.1	22.0	533
5	3	4217	4.5	14.1	1.52/1.53	0.0	0.0	539
5	4	3939	5.1	14.0	1.42/1.43	7.2	19.9	492
5	5	3741	4.8	14.1	1.35/1.36	6.5	19.0	454
5	6	3840	4.6	14.2	1.38/1.39	6.4	19.6	473
5	7	3746	4.2	14.8	1.35/1.36	5.7	20.0	466

TAP	POINT	CORR V	%02	% CO2	V LOC/AVG	WTD % O2	WTD %CO2	WTD TEMP
6	1	1661	4.6	14.4	.60/ .60	2.8	8.6	210
6	2	3608	4.3	14.6	1.30/1.31	5.6	19.0	459
6	3	4316	4.8	14.4	1.55/1.56	7.5	22.4	555
6	4	4289	4.5	14.5	1.54/1.55	6.9	22.4	552
6	5	4055	4.7	14.4	1.46/1.47	6.9	21.0	520
6	6	3579	4.3	14.6	1.29/1.30	5.5	18.8	455
6	7	3066	4.4	14.7	1.10/1.11	4.9	16.2	387

TAP	POINT	CORR V	%02	% CO2	V LOC/AVG	WTD % O2	WTD %CO2	WTD TEMP
7	1	360	4.2	14.6	.13/ .13	.5	1.9	45
7	2	774	4.4	14.6	.28/ .28	1.2	4.1	98
7	3	1352	4.6	14.4	.49/ .49	2.2	7.0	172
7	4	1812	4.2	14.7	.65/ .66	2.7	9.6	233
7	5	3781	4.1	14.7	1.36/1.37	5.6	20.0	482
7	6	3266	4.3	14.9	1.18/1.18	5.1	17.5	417
7	7	2193	4.6	14.7	.79/ .79	3.6	11.6	278

TAP	POINT	CORR V	%02	% CO2	V LOC/AVG	WTD % O2	WTD %CO2	WTD TEMP
8	1	3952	4.9	14.3	1.42/1.43	7.0	20.3	496
8	2	1577	4.0	14.8	.57/ .57	2.3	8.4	198
8	3	1538	4.3	14.5	.55/ .56	2.4	8.0	194
8	4	3302	4.3	14.5	1.19/1.20	5.1	17.2	421
8	5	252	4.4	14.6	.09/ .09	.4	1.3	32
8	6	328	4.2	14.4	.12/ .12	0.0	0.0	42
8	7	2659	4.6	14.3	.96/ .96	4.4	13.7	332

LOCATION = BAG IN CENTER
FILE IDENITY = IP6_25BHC

AVERAGE VELOCITY = 2759 FPM

AVERAGE (WEIGHTED) % O2 = 4.53 *
AVERAGE (WEIGHTED) % CO2 = 14.50 *
AVERAGE (WEIGHTED) TEMPERATURE = 339

AVERAGE (ARITHMETIC) % O2 = 4.53 *
AVERAGE (ARITHMETIC) % CO2 = 14.49 *
AVERAGE (ARITHMETIC) TEMPERATURE = 338

AVERAGE STATIC PRESSURE (in. H2O) = -8.2
AVERAGE DENSITY (LBM/FT^3) = .04222

ACFM (ACTUAL FT^3/MIN) = 956166
LB/HR (WET) = 2422003

* - O2/CO2 DATA WITH ERROR GREATER THAN .35 NOT USED
NO. OF POINTS NOT USED = 2 OUT OF 56

LOCATION = BAG IN CENTER
FILE IDENITY = IP6_25BHC

AVERAGE VELOCITY = 2759 FPM

AVERAGE (WEIGHTED) % O2 = 4.52
AVERAGE (WEIGHTED) % CO2 = 14.49
AVERAGE (WEIGHTED) TEMPERATURE = 339

AVERAGE (ARITHMETIC) % O2 = 4.52
AVERAGE (ARITHMETIC) % CO2 = 14.48
AVERAGE (ARITHMETIC) TEMPERATURE = 338

AVERAGE STATIC PRESSURE (in. H2O) = -8.2
AVERAGE DENSITY (LBM/FT^3) = .04222

ACFM (ACTUAL FT^3/MIN) = 956166
LB/HR (WET) = 2422003

CENTER BAG HOUSE INLET DATA FOR LEFT AND RIGHT SIDES
FILE IDENTITY = IP6_Z5BHC

	AVG FLOW	L/R	1183.0	1239.0
	AVG TEMP	L/R	326.82	349.14
WT'D	AVG TEMP	L/R	328.29	349.26
	AVG O2	L/R	4.61	4.44
WT'D	AVG O2	L/R	4.57	4.48
	AVG CO2	L/R	14.46	14.52
WT'D	AVG CO2	L/R	14.49	14.50

DATE = 6-25-87
LOCATION = BAG IN EAST
FILE IDENITY = IP6_25BHE
BAROMETRIC PRESSURE = 25.52
PROBE IDENTY = E-45
DUCT HEIGHT = 19.3
DUCT WIDTH = 18.0

TAP	POINT	STAT P	TEMP	DELTA P	YAW ANGL	%02	% CO2
1	1	-8.1	317	.600	18	4.8	14.5
1	2	-8.2	314	.720	25	4.4	14.6
1	3	-8.2	311	.240	22	4.7	14.6
1	4	-8.2	307	.860	22	4.7	14.3
1	5	-8.1	308	.340	30	4.7	14.5
1	6	-8.1	307	.500	18	4.6	14.6
1	7	-8.0	306	.810	25	4.5	14.5

TAP	POINT	STAT P	TEMP	DELTA P	YAW ANGL	%02	% CO2
2	1	-8.2	319	.310	20	5.6	13.2
2	2	-8.2	318	.230	0	4.3	14.6
2	3	-8.2	319	.490	0	4.9	14.0
2	4	-8.2	310	.190	20	4.5	14.6
2	5	-8.2	313	.310	20	5.1	13.8
2	6	-8.2	307	.340	30	5.1	14.0
2	7	-8.2	305	.510	25	5.1	13.9

TAP	POINT	STAT P	TEMP	DELTA P	YAW ANGL	%02	% CO2
3	1	-8.3	320	.500	0	4.5	14.6
3	2	-8.4	326	.390	0	4.7	14.1
3	3	-8.3	330	.390	20	5.2	13.7
3	4	-8.4	327	.620	10	5.3	13.7
3	5	-8.4	330	.550	0	5.1	14.0
3	6	-8.4	327	.500	0	4.9	14.0
3	7	-8.3	319	.600	0	5.5	13.4

TAP	POINT	STAT P	TEMP	DELTA P	YAW ANGL	%02	% CO2
4	1	-8.3	320	.760	20	4.7	14.4
4	2	-8.4	319	.630	20	* 4.8	*14.6
4	3	-8.3	324	.600	20	4.9	14.1
4	4	-8.2	333	.540	10	4.7	14.0
4	5	-8.3	351	.500	25	4.9	14.0
4	6	-8.4	348	.550	25	4.6	14.4
4	7	-8.4	313	.640	10	4.4	14.4

TAP	POINT	STAT P	TEMP	DELTA P	YAW ANGL	%02	% CO2
5	1	-8.2	344	.510	0	4.4	14.5
5	2	-8.3	344	.560	10	4.6	14.2
5	3	-8.4	344	.580	15	4.8	14.2
5	4	-8.3	344	.580	20	4.9	13.9
5	5	-8.3	344	.560	10	4.6	14.6
5	6	-8.3	347	.550	5	4.9	14.0
5	7	-8.2	320	.620	10	* 4.8	*14.6

TAP	POINT	STAT P	TEMP	DELTA P	YAW ANGL	%02	% CO2
6	1	-8.2	324	.510	0	4.5	14.4
6	2	-8.2	304	.460	10	4.6	14.7
6	3	-8.2	295	.540	10	4.9	14.1
6	4	-8.2	325	.420	0	4.7	14.2
6	5	-8.2	346	.470	5	4.9	14.2
6	6	-8.2	341	.220	10	4.8	14.3
6	7	-8.2	324	.530	0	4.6	14.6

TAP	POINT	STAT P	TEMP	DELTA P	YAW ANGL	%02	% CO2
7	1	-8.2	324	.520	10	4.6	14.6
7	2	-8.3	305	.420	5	4.7	14.2
7	3	-8.3	292	.460	10	4.8	14.0
7	4	-8.2	294	.840	10	5.2	13.7
7	5	-8.2	316	.440	0	5.0	14.0
7	6	-8.2	343	.420	5	5.2	13.9
7	7	-8.2	324	.500	5	5.0	13.9

TAP	POINT	STAT P	TEMP	DELTA P	YAW ANGL	%02	% CO2
8	1	-8.3	325	.610	0	4.5	14.6
8	2	-8.3	323	.620	15	4.5	14.6
8	3	-8.4	316	.700	10	5.4	13.6
8	4	-8.5	319	.670	20	4.5	14.8
8	5	-8.4	329	.620	0	* 5.2	*13.4
8	6	-8.2	334	.010	45	4.9	14.0
8	7	-8.4	317	.640	15	5.1	13.8

* - O2/CO2 DATA WITH ERROR GREATER THAN .35 NOT USED

****
****

PRELIMINARY CALCULATIONS !!!!!!!!!
FINAL CALCULATIONS TO BE RUN AFTER
FECHHEIMER PROBES ARE
INDEPENDENTLY CALIBRATED

****
****

DATE = 6-25-87
LOCATION = BAG IN EAST
FILE IDENITY = IP6_25BHE
BAROMETRIC PRESSURE = 25.52
PROBE IDENTY = E-45
DUCT AREA = 346.5

TAP	POINT	CORR V	%02	% CO2	V LOC/AVG	WTD % O2	WTD %CO2	WTD TEMP
1	1	4057	4.8	14.5	1.08/1.08	5.2	15.7	341
1	2	4224	4.4	14.6	1.13/1.12	5.0	16.5	352
1	3	2503	4.7	14.6	.67/ .66	3.1	9.8	207
1	4	4698	4.7	14.3	1.26/1.25	5.9	18.0	383
1	5	2773	4.7	14.5	.74/ .74	3.5	10.8	227
1	6	3682	4.6	14.6	.98/ .98	4.5	14.4	300
1	7	4453	4.5	14.5	1.19/1.18	5.4	17.3	362

TAP	POINT	CORR V	%02	% CO2	V LOC/AVG	WTD % O2	WTD %CO2	WTD TEMP
2	1	2900	5.6	13.2	.78/ .77	4.3	10.2	246
2	2	2656	4.3	14.6	.71/ .71	3.1	10.4	224
2	3	3868	4.9	14.0	1.03/1.03	5.1	14.5	327
2	4	2259	4.5	14.6	.60/ .60	2.7	8.8	186
2	5	2887	5.1	13.8	.77/ .77	3.9	10.7	240
2	6	2773	5.1	14.0	.74/ .74	3.8	10.4	226
2	7	3542	5.1	13.9	.95/ .94	4.8	13.2	287

TAP	POINT	CORR V	%02	% CO2	V LOC/AVG	WTD % O2	WTD %CO2	WTD TEMP
3	1	3907	4.5	14.6	1.04/1.04	4.7	15.3	332
3	2	3471	4.7	14.1	.93/ .92	4.4	13.1	300
3	3	3271	5.2	13.7	.87/ .87	4.5	12.0	287
3	4	4304	5.3	13.7	1.15/1.14	6.1	15.8	374
3	5	4125	5.1	14.0	1.10/1.10	5.6	15.4	361
3	6	3928	4.9	14.0	1.05/1.04	5.1	14.7	341
3	7	4279	5.5	13.4	1.14/1.14	6.3	15.3	362

TAP	POINT	CORR V	%02	% CO2	V LOC/AVG	WTD % O2	WTD %CO2	WTD TEMP
4	1	4518	4.7	14.4	1.21/1.20	5.7	17.4	384
4	2	4113	4.8	14.6	1.10/1.09	0.0	0.0	348
4	3	4031	4.9	14.1	1.08/1.07	5.3	15.2	347
4	4	4034	4.7	14.0	1.08/1.07	5.1	15.1	357
4	5	3615	4.9	14.0	.97/ .96	4.7	13.5	337
4	6	3781	4.6	14.4	1.01/1.00	4.7	14.6	349
4	7	4330	4.4	14.4	1.16/1.15	5.1	16.7	360

TAP	POINT	CORR V	%02	% CO2	V LOC/AVG	WTD % O2	WTD %CO2	WTD TEMP
5	1	4007	4.4	14.5	1.07/1.06	4.7	15.5	366
5	2	4136	4.6	14.2	1.11/1.10	5.1	15.7	378
5	3	4128	4.8	14.2	1.10/1.10	5.3	15.7	377
5	4	4017	4.9	13.9	1.07/1.07	5.3	14.9	367
5	5	4133	4.6	14.6	1.11/1.10	5.1	16.1	377
5	6	4155	4.9	14.0	1.11/1.10	5.4	15.6	383
5	7	4278	4.8	14.6	1.14/1.14	0.0	0.0	363

TAP	POINT	CORR V	%02	% CO2	V LOC/AVG	WTD % O2	WTD %CO2	WTD TEMP
6	1	3956	4.5	14.4	1.06/1.05	4.8	15.2	340
6	2	3651	4.6	14.7	.98/ .97	4.5	14.4	295
6	3	3932	4.9	14.1	1.05/1.04	5.2	14.8	308
6	4	3597	4.7	14.2	.96/ .95	4.5	13.7	310
6	5	3840	4.9	14.2	1.03/1.02	5.0	14.6	353
6	6	2598	4.8	14.3	.69/ .69	3.3	9.9	235
6	7	4031	4.6	14.6	1.08/1.07	5.0	15.7	347

TAP	POINT	CORR V	%02	% CO2	V LOC/AVG	WTD % O2	WTD %CO2	WTD TEMP
7	1	3932	4.6	14.6	1.05/1.04	4.8	15.4	338
7	2	3536	4.7	14.2	.95/ .94	4.4	13.4	286
7	3	3626	4.8	14.0	.97/ .96	4.7	13.6	281
7	4	4893	5.2	13.7	1.31/1.30	6.8	17.9	382
7	5	3659	5.0	14.0	.98/ .97	4.9	13.7	307
7	6	3626	5.2	13.9	.97/ .96	5.0	13.5	330
7	7	3905	5.0	13.9	1.04/1.04	5.2	14.5	336

TAP	POINT	CORR V	%02	% CO2	V LOC/AVG	WTD % O2	WTD %CO2	WTD TEMP
8	1	4325	4.5	14.6	1.16/1.15	5.2	16.9	373
8	2	4206	4.5	14.6	1.12/1.12	5.1	16.4	361
8	3	4538	5.4	13.6	1.21/1.20	6.6	16.5	381
8	4	4241	4.5	14.8	1.13/1.13	5.1	16.8	359
8	5	4379	5.2	13.4	1.17/1.16	0.0	0.0	382
8	6	400	4.9	14.0	.11/ .11	.5	1.5	36
8	7	4260	5.1	13.8	1.14/1.13	5.8	15.7	358

LOCATION = BAG IN EAST
FILE IDENITY = IP6_25BHE

AVERAGE VELOCITY = 3767 FPM

AVERAGE (WEIGHTED) % O2 = 4.81 *
AVERAGE (WEIGHTED) % CO2 = 14.19 *
AVERAGE (WEIGHTED) TEMPERATURE = 322

AVERAGE (ARITHMETIC) % O2 = 4.81 *
AVERAGE (ARITHMETIC) % CO2 = 14.19 *
AVERAGE (ARITHMETIC) TEMPERATURE = 322

AVERAGE STATIC PRESSURE (in. H2O) = -8.3
AVERAGE DENSITY (LBM/FT^3) = .04304

ACFM (ACTUAL FT^3/MIN) = 1305344
LB/HR (WET) = 3370536

* - O2/CO2 DATA WITH ERROR GREATER THAN .35 NOT USED
NO. OF POINTS NOT USED = 3 OUT OF 56

LOCATION = BAG IN EAST
FILE IDENITY = IP6_25BHE

AVERAGE VELOCITY = 3767 FPM

AVERAGE (WEIGHTED) % O2 = 4.82
AVERAGE (WEIGHTED) % CO2 = 14.19
AVERAGE (WEIGHTED) TEMPERATURE = 322

AVERAGE (ARITHMETIC) % O2 = 4.82
AVERAGE (ARITHMETIC) % CO2 = 14.19
AVERAGE (ARITHMETIC) TEMPERATURE = 322

AVERAGE STATIC PRESSURE (in. H2O) = -8.3
AVERAGE DENSITY (LBM/FT^3) = .04304

ACFM (ACTUAL FT^3/MIN) = 1305344
LB/HR (WET) = 3370536

DATE = 6/25/87
LOCATION = WESTPRIGASIN
FILE IDENITY = IP6_25WPGI
BAROMETRIC PRESSURE = 25.52
PROBE IDENTY = E-11
DUCT HEIGHT = 9.0
DUCT WIDTH = 18.0

TAP	POINT	STAT P	TEMP	DELTA P	YAW ANGL	%02	% CO2
1	1	-4.0	733	.075	14	3.5	15.6
1	2	-4.0	731	.083	5	3.4	15.6
1	3	-4.0	728	.090	9	3.5	15.5

TAP	POINT	STAT P	TEMP	DELTA P	YAW ANGL	%02	% CO2
2	1	-4.0	735	.068	30	3.6	15.4
2	2	-4.0	733	.092	19	3.4	15.6
2	3	-4.0	730	.109	10	3.4	15.6

TAP	POINT	STAT P	TEMP	DELTA P	YAW ANGL	%02	% CO2
3	1	-4.0	731	.068	20	3.4	15.5
3	2	-4.0	731	.104	5	3.6	15.4
3	3	-4.0	730	.100	12	3.2	15.7

TAP	POINT	STAT P	TEMP	DELTA P	YAW ANGL	%02	% CO2
4	1	-4.0	731	.102	10	3.6	15.4
4	2	-4.0	733	.061	15	3.3	15.8
4	3	-4.0	731	.097	10	3.3	15.7

TAP	POINT	STAT P	TEMP	DELTA P	YAW ANGL	%02	% CO2
5	1	-4.0	730	.004	0	3.3	15.6
5	2	-4.0	731	.007	0	3.6	15.4
5	3	-4.0	730	.004	0	3.2	15.8

TAP	POINT	STAT P	TEMP	DELTA P	YAW ANGL	%02	% CO2
6	1	-4.0	731	.002	0	3.5	15.5
6	2	-4.0	732	.004	0	3.4	15.6
6	3	-4.0	728	.002	0	3.0	15.9

* - O2/CO2 DATA WITH ERROR GREATER THAN .35 NOT USED

****
****

PRELIMINARY CALCULATIONS !!!!!!!!!
FINAL CALCULATIONS TO BE RUN AFTER
FECHHEIMER PROBES ARE
INDEPENDENTLY CALIBRATED

****
****

DATE - 6/25/87
LOCATION - WESTPRIGASIN
FILE IDENITY - IP6_25WPGI
BAROMETRIC PRESSURE - 25.52
PROBE IDENTY - E-11
DUCT AREA - 162.0

TAP	POINT	CORR V	%02	% CO2	V LOC/AVG	WTD % O2	WTD %CO2	WTD TEMP
1	1	1826	3.5	15.6	1.26	4.4	19.7	927
1	2	1970	3.4	15.6	1.36	4.6	21.3	997
1	3	2031	3.5	15.5	1.41	4.9	21.8	1024

TAP	POINT	CORR V	%02	% CO2	V LOC/AVG	WTD % O2	WTD %CO2	WTD TEMP
2	1	1554	3.6	15.4	1.08	3.9	16.6	791
2	2	1970	3.4	15.6	1.36	4.6	21.3	1000
2	3	2229	3.4	15.6	1.54	5.2	24.1	1127

TAP	POINT	CORR V	%02	% CO2	V LOC/AVG	WTD % O2	WTD %CO2	WTD TEMP
3	1	1683	3.4	15.5	1.17	4.0	18.1	852
3	2	2204	3.6	15.4	1.53	5.5	23.5	1116
3	3	2121	3.2	15.7	1.47	4.7	23.1	1072

TAP	POINT	CORR V	%02	% CO2	V LOC/AVG	WTD % O2	WTD %CO2	WTD TEMP
4	1	2158	3.6	15.4	1.49	5.4	23.0	1092
4	2	1640	3.3	15.8	1.14	3.7	17.9	832
4	3	2104	3.3	15.7	1.46	4.8	22.9	1065

TAP	POINT	CORR V	%02	% CO2	V LOC/AVG	WTD % O2	WTD %CO2	WTD TEMP
5	1	436	3.3	15.6	.30	1.0	4.7	221
5	2	577	3.6	15.4	.40	1.4	6.2	292
5	3	436	3.2	15.8	.30	1.0	4.8	220

TAP	POINT	CORR V	%O2	% CO2	V LOC/AVG	WTD % O2	WTD %CO2	WTD TEMP
6	1	309	3.5	15.5	.21	.7	3.3	156
6	2	437	3.4	15.6	.30	1.0	4.7	221
6	3	308	3.0	15.9	.21	.6	3.4	155

LOCATION = WESTPRIGASIN
FILE IDENITY = IP6_25WPGI

AVERAGE VELOCITY = 1444 FPM

AVERAGE (WEIGHTED) % O2 = 3.43 *
AVERAGE (WEIGHTED) % CO2 = 15.57 *
AVERAGE (WEIGHTED) TEMPERATURE = 731

AVERAGE (ARITHMETIC) % O2 = 3.40 *
AVERAGE (ARITHMETIC) % CO2 = 15.59 *
AVERAGE (ARITHMETIC) TEMPERATURE = 731

AVERAGE STATIC PRESSURE (in. H20) = -4.0
AVERAGE DENSITY (LBM/FT^3) = .02869

ACFM (ACTUAL FT^3/MIN) = 233947
LB/HR (WET) = 402648

* - O2/CO2 DATA WITH ERROR GREATER THAN .35 NOT USED
NO. OF POINTS NOT USED = 0 OUT OF 18

DATE = 6/25/87
LOCATION = WESTPRIGASOUT
FILE IDENITY = IP6_25WPGO
BAROMETRIC PRESSURE = 25.52
PROBE IDENTY = E-1
DUCT HEIGHT = 10.5
DUCT WIDTH = 8.6

TAP	POINT	STAT P	TEMP	DELTA P	YAW ANGL	%02	% CO2
1	1	-8.0	296	.043	8	8.8	10.8
1	2	-8.0	306	.143	4	4.7	14.4
1	3	-8.0	290	.118	5	5.5	13.7
1	4	-8.0	266	.096	0	9.5	10.2

TAP	POINT	STAT P	TEMP	DELTA P	YAW ANGL	%02	% CO2
2	1	-8.0	299	.170	0	7.8	11.7
2	2	-8.0	310	.127	7	3.6	15.4
2	3	-8.0	290	.113	4	5.0	14.2
2	4	-8.0	275	.104	6	10.7	9.0

TAP	POINT	STAT P	TEMP	DELTA P	YAW ANGL	%02	% CO2
3	1	-8.0	288	.178	10	8.4	11.2
3	2	-8.0	292	.109	6	4.7	14.5
3	3	-8.0	279	.115	4	6.8	12.6
3	4	-8.0	271	.116	0	11.0	9.0

* - O2/CO2 DATA WITH ERROR GREATER THAN .35 NOT USED

****
****

PRELIMINARY CALCULATIONS !!!!!!!!!
FINAL CALCULATIONS TO BE RUN AFTER
FECHHEIMER PROBES ARE
INDEPENDENTLY CALIBRATED

****
****

DATE = 6/25/87
LOCATION = WESTPRIGASOUT
FILE IDENITY = IP6_25WPGO
BAROMETRIC PRESSURE = 25.52
PROBE IDENTY = E-1
DUCT AREA = 90.1

TAP	POINT	CORR V	%02	% CO2	V LOC/AVG	WTD % O2	WTD %CO2	WTD TEMP
1	1	1133	8.8	10.8	.61	5.4	6.6	181
1	2	2077	4.7	14.4	1.12	5.3	16.1	343
1	3	1867	5.5	13.7	1.01	5.5	13.8	292
1	4	1670	9.5	10.2	.90	8.5	9.2	239

TAP	POINT	CORR V	%02	% CO2	V LOC/AVG	WTD % O2	WTD %CO2	WTD TEMP
2	1	2264	7.8	11.7	1.22	9.5	14.3	365
2	2	1952	3.6	15.4	1.05	3.8	16.2	326
2	3	1829	5.0	14.2	.99	4.9	14.0	286
2	4	1741	10.7	9.0	.94	10.0	8.4	258

TAP	POINT	CORR V	%02	% CO2	V LOC/AVG	WTD % O2	WTD %CO2	WTD TEMP
3	1	2265	8.4	11.2	1.22	10.3	13.7	352
3	2	1793	4.7	14.5	.97	4.5	14.0	282
3	3	1834	6.8	12.6	.99	6.7	12.5	276
3	4	1843	11.0	9.0	.99	10.9	8.9	269

LOCATION = WESTPRIGASOUT
FILE IDENITY = IP6_25WPGO

AVERAGE VELOCITY = 1856 FPM

AVERAGE (WEIGHTED) % O2 = 7.12 *
AVERAGE (WEIGHTED) % CO2 = 12.31 *
AVERAGE (WEIGHTED) TEMPERATURE = 289

AVERAGE (ARITHMETIC) % O2 = 7.21 *
AVERAGE (ARITHMETIC) % CO2 = 12.23 *
AVERAGE (ARITHMETIC) TEMPERATURE = 288

AVERAGE STATIC PRESSURE (in. H2O) = -8.0
AVERAGE DENSITY (LBM/FT^3) = .04488

ACFM (ACTUAL FT^3/MIN) = 167229
LB/HR (WET) = 450323

* - O2/CO2 DATA WITH ERROR GREATER THAN .35 NOT USED
NO. OF POINTS NOT USED = 0 OUT OF 12

DATE = 6/25/87
LOCATION = EASTPRIGASIN
FILE IDENITY = IP6_25EPGI
BAROMETRIC PRESSURE = 25.52
PROBE IDENTY = E-11
DUCT HEIGHT = 9.0
DUCT WIDTH = 18.0

TAP	POINT	STAT P	TEMP	DELTA P	YAW ANGL	%02	% CO2
1	1	-4.0	735	.004	0	3.2	15.8
1	2	-4.0	739	.004	0	3.2	15.8
1	3	-4.0	735	.026	0	3.1	15.9

TAP	POINT	STAT P	TEMP	DELTA P	YAW ANGL	%02	% CO2
2	1	-4.0	734	.012	0	3.1	15.9
2	2	-4.0	740	.007	0	3.0	16.0
2	3	-4.0	738	.056	0	3.0	16.0

TAP	POINT	STAT P	TEMP	DELTA P	YAW ANGL	%02	% CO2
3	1	-4.0	736	.109	5	3.4	15.6
3	2	-4.0	740	.056	0	3.1	15.9
3	3	-4.0	737	.068	0	3.2	15.9

TAP	POINT	STAT P	TEMP	DELTA P	YAW ANGL	%02	% CO2
4	1	-4.0	732	.090	0	3.4	15.6
4	2	-4.0	741	.117	20	3.4	15.5
4	3	-4.0	739	.109	5	3.0	15.9

TAP	POINT	STAT P	TEMP	DELTA P	YAW ANGL	%02	% CO2
5	1	-4.0	737	.065	10	2.9	15.8
5	2	-4.0	737	.100	30	3.4	15.6
5	3	-4.0	739	.087	0	3.0	16.1

TAP	POINT	STAT P	TEMP	DELTA P	YAW ANGL	%02	% CO2
6	1	-4.0	734	.104	0	3.1	15.6
6	2	-4.0	738	.092	25	3.2	15.7
6	3	-4.0	738	.092	0	3.1	15.6

* - O2/CO2 DATA WITH ERROR GREATER THAN .35 NOT USED

****
****

PRELIMINARY CALCULATIONS !!!!!!!!!
FINAL CALCULATIONS TO BE RUN AFTER
FECHHEIMER PROBES ARE
INDEPENDENTLY CALIBRATED

****
****

DATE = 6/25/87
LOCATION = EASTPRIGASIN
FILE IDENITY = IP6_25EPGI
BAROMETRIC PRESSURE = 25.52
PROBE IDENTY = E-11
DUCT AREA = 162.0

TAP	POINT	CORR V	%O2	% CO2	V LOC/AVG	WTD % O2	WTD %CO2	WTD TEMP
1	1	437	3.2	15.8	.27	.9	4.3	199
1	2	438	3.2	15.8	.27	.9	4.3	201
1	3	1112	3.1	15.9	.69	2.1	11.0	507

TAP	POINT	CORR V	%O2	% CO2	V LOC/AVG	WTD % O2	WTD %CO2	WTD TEMP
2	1	756	3.1	15.9	.47	1.5	7.5	344
2	2	579	3.0	16.0	.36	1.1	5.7	266
2	3	1630	3.0	16.0	1.01	3.0	16.2	746

TAP	POINT	CORR V	%O2	% CO2	V LOC/AVG	WTD % O2	WTD %CO2	WTD TEMP
3	1	2261	3.4	15.6	1.40	4.8	21.9	1032
3	2	1632	3.1	15.9	1.01	3.1	16.1	749
3	3	1795	3.2	15.9	1.11	3.6	17.7	821

TAP	POINT	CORR V	%O2	% CO2	V LOC/AVG	WTD % O2	WTD %CO2	WTD TEMP
4	1	2060	3.4	15.6	1.28	4.3	19.9	935
4	2	2214	3.4	15.5	1.37	4.7	21.3	1018
4	3	2263	3.0	15.9	1.40	4.2	22.3	1037

TAP	POINT	CORR V	%O2	% CO2	V LOC/AVG	WTD % O2	WTD %CO2	WTD TEMP
5	1	1729	2.9	15.8	1.07	3.1	16.9	791
5	2	1884	3.4	15.6	1.17	4.0	18.2	861
5	3	2030	3.0	16.1	1.26	3.8	20.3	931

TAP	POINT	CORR V	%O2	% CO2	V LOC/AVG	WTD % O2	WTD %CO2	WTD TEMP
6	1	2215	3.1	15.6	1.37	4.3	21.4	1009
6	2	1892	3.2	15.7	1.17	3.8	18.4	866
6	3	2088	3.1	15.6	1.30	4.0	20.2	956

LOCATION = EASTPRIGASIN
FILE IDENITY = IP6_25EPGI

AVERAGE VELOCITY = 1612 FPM

AVERAGE (WEIGHTED) % O2 = 3.17 *
AVERAGE (WEIGHTED) % CO2 = 15.76 *
AVERAGE (WEIGHTED) TEMPERATURE = 737

AVERAGE (ARITHMETIC) % O2 = 3.16 *
AVERAGE (ARITHMETIC) % CO2 = 15.79 *
AVERAGE (ARITHMETIC) TEMPERATURE = 737

AVERAGE STATIC PRESSURE (in. H2O) = -4.0
AVERAGE DENSITY (LBM/FT^3) = .02855

ACFM (ACTUAL FT^3/MIN) = 261125
LB/HR (WET) = 447262

* - O2/CO2 DATA WITH ERROR GREATER THAN .35 NOT USED
NO. OF POINTS NOT USED = 0 OUT OF 18

DATE = 6/25/87
LOCATION = EASTPRIGASOUT
FILE IDENITY = IP6_25EPGO
BAROMETRIC PRESSURE = 25.52
PROBE IDENTY = E-1
DUCT HEIGHT = 10.5
DUCT WIDTH = 8.6

TAP	POINT	STAT P	TEMP	DELTA P	YAW ANGL	%O2	% CO2
1	1	-8.0	265	.148	8	11.0	9.0
1	2	-8.0	314	.046	6	4.6	14.8
1	3	-8.0	307	.107	8	4.7	14.6
1	4	-8.0	293	.104	4	7.0	12.7

TAP	POINT	STAT P	TEMP	DELTA P	YAW ANGL	%O2	% CO2
2	1	-8.0	260	.203	2	11.2	8.7
2	2	-8.0	308	.036	4	3.7	15.3
2	3	-8.0	308	.114	6	4.0	15.2
2	4	-8.0	294	.107	0	7.4	12.1

TAP	POINT	STAT P	TEMP	DELTA P	YAW ANGL	%O2	% CO2
3	1	-8.0	263	.083	6	10.6	9.2
3	2	-8.0	315	.129	8	5.3	14.1
3	3	-8.0	315	.106	12	5.1	14.2
3	4	-8.0	297	.114	4	8.1	11.4

* - O2/CO2 DATA WITH ERROR GREATER THAN .35 NOT USED

****
****

PRELIMINARY CALCULATIONS !!!!!!!!!
FINAL CALCULATIONS TO BE RUN AFTER
FECHHEIMER PROBES ARE
INDEPENDENTLY CALIBRATED

****
****

DATE = 6/25/87
LOCATION = EASTPRIGASOUT
FILE IDENITY = IP6_25EPGO
BAROMETRIC PRESSURE = 25.52
PROBE IDENTY = E-1
DUCT AREA = 90.1

TAP	POINT	CORR V	%O2	% CO2	V LOC/AVG	WTD % O2	WTD %CO2	WTD TEMP
1	1	2050	11.0	9.0	1.17	12.9	10.5	310
1	2	1186	4.6	14.8	.68	3.1	10.0	213
1	3	1787	4.7	14.6	1.02	4.8	14.9	313
1	4	1761	7.0	12.7	1.01	7.0	12.8	295

TAP	POINT	CORR V	%O2	% CO2	V LOC/AVG	WTD % O2	WTD %CO2	WTD TEMP
2	1	2412	11.2	8.7	1.38	15.4	12.0	358
2	2	1049	3.7	15.3	.60	2.2	9.2	184
2	3	1852	4.0	15.2	1.06	4.2	16.1	326
2	4	1793	7.4	12.1	1.02	7.6	12.4	301

TAP	POINT	CORR V	%O2	% CO2	V LOC/AVG	WTD % O2	WTD %CO2	WTD TEMP
3	1	1543	10.6	9.2	.88	9.3	8.1	232
3	2	1972	5.3	14.1	1.13	6.0	15.9	355
3	3	1767	5.1	14.2	1.01	5.1	14.3	318
3	4	1851	8.1	11.4	1.06	8.6	12.0	314

LOCATION = EASTPRIGASOUT
FILE IDENITY = IP6_25EPGO

AVERAGE VELOCITY = 1752 FPM

AVERAGE (WEIGHTED) % O2 = 7.19 *
AVERAGE (WEIGHTED) % CO2 = 12.34 *
AVERAGE (WEIGHTED) TEMPERATURE = 293

AVERAGE (ARITHMETIC) % O2 = 6.89 *
AVERAGE (ARITHMETIC) % CO2 = 12.61 *
AVERAGE (ARITHMETIC) TEMPERATURE = 295

AVERAGE STATIC PRESSURE (in. H2O) = -8.0
AVERAGE DENSITY (LBM/FT^3) = .04455

ACFM (ACTUAL FT^3/MIN) = 157873
LB/HR (WET) = 421989

* - O2/CO2 DATA WITH ERROR GREATER THAN .35 NOT USED
NO. OF POINTS NOT USED = 0 OUT OF 12

DATE = 6/25/1987
LOCATION = ECON WEST A_G
FILE IDENITY = IP6_25EWA
BAROMETRIC PRESSURE = 25.53
PROBE IDENTY = E43
DUCT HEIGHT = 21.2
DUCT WIDTH = 20.0

TAP	POINT	STAT P	TEMP	DELTA P	YAW ANGL	%02	% CO2
1	1	-3.6	731	.039	0	5.0	14.5
1	2	-3.5	744	.039	-5	4.8	14.6
1	3	-3.4	739	.040	0	5.0	14.3
1	4	-3.3	729	.333	35	3.7	15.3
1	5	-3.2	726	.346	35	4.0	15.1
1	6	-3.3	730	.315	20	3.9	15.3
1	7	-3.4	739	.245	30	3.9	15.3

TAP	POINT	STAT P	TEMP	DELTA P	YAW ANGL	%02	% CO2
2	1	-3.3	712	.041	0	6.3	13.2
2	2	-3.5	746	.041	5	5.2	14.2
2	3	-3.4	746	.041	10	3.4	15.7
2	4	-3.5	742	.227	25	3.4	15.8
2	5	-3.3	735	.329	25	3.0	16.2
2	6	-3.6	736	.324	20	3.4	15.6
2	7	-3.4	736	.266	25	3.4	15.8

TAP	POINT	STAT P	TEMP	DELTA P	YAW ANGL	%02	% CO2
3	1	-3.3	722	.041	0	6.8	13.0
3	2	-3.4	751	.060	10	4.3	14.9
3	3	-3.4	758	.295	20	4.6	14.7
3	4	-3.3	745	.342	35	2.8	16.4
3	5	-3.3	750	.258	25	2.8	16.4
3	6	-3.2	745	.275	20	2.8	16.6
3	7	-3.3	743	.312	10	2.9	16.0

TAP	POINT	STAT P	TEMP	DELTA P	YAW ANGL	%02	% CO2
4	1	-3.4	743	.051	0	4.8	14.4
4	2	-3.3	757	.092	25	4.6	14.8
4	3	-3.3	759	.383	20	5.1	14.2
4	4	-3.2	751	.308	30	2.5	16.6
4	5	-3.3	739	.288	40	2.9	16.3
4	6	-3.3	739	.273	20	2.1	16.9
4	7	-3.2	743	.346	0	3.1	16.3

TAP	POINT	STAT P	TEMP	DELTA P	YAW ANGL	%02	% CO2
5	1	-3.3	756	.053	5	4.0	15.4
5	2	-3.5	757	.082	10	4.5	14.7
5	3	-3.3	758	.398	10	5.0	14.4
5	4	-3.1	746	.366	15	2.6	16.6
5	5	-3.1	737	.240	25	2.8	16.4
5	6	-3.1	741	.258	20	3.6	15.8
5	7	-3.2	741	.312	5	* 3.0	*15.8

TAP	POINT	STAT P	TEMP	DELTA P	YAW ANGL	%02	% CO2
6	1	-3.6	749	.051	5	3.0	16.2
6	2	-3.5	756	.180	0	3.5	15.6
6	3	-3.4	758	.385	0	3.1	16.0
6	4	-3.5	747	.358	10	3.4	15.9
6	5	-3.3	741	.258	20	3.0	16.4
6	6	-3.3	747	.201	30	3.7	15.7
6	7	-3.4	742	.126	0	3.3	15.8

TAP	POINT	STAT P	TEMP	DELTA P	YAW ANGL	%02	% CO2
7	1	-3.4	707	.051	5	6.5	13.1
7	2	-3.4	758	.105	0	4.6	14.7
7	3	-3.5	759	.493	15	3.4	16.0
7	4	-3.4	750	.344	5	3.8	15.4
7	5	-3.5	753	.273	5	3.4	15.8
7	6	-3.3	758	.278	20	3.9	15.4
7	7	-3.4	757	.151	30	3.9	15.1

* - O2/CO2 DATA WITH ERROR GREATER THAN .35 NOT USED

****
****

PRELIMINARY CALCULATIONS !!!!!!!!!
FINAL CALCULATIONS TO BE RUN AFTER
FECHHEIMER PROBES ARE
INDEPENDENTLY CALIBRATED

****
****

DATE = 6/25/1987
LOCATION = ECON WEST A_G
FILE IDENITY = IP6_25EWA
BAROMETRIC PRESSURE = 25.53
PROBE IDENTY = E43
DUCT AREA = 425.0

TAP	POINT	CORR V	%O2	% CO2	V LOC/AVG	WTD % O2	WTD %CO2	WTD TEMP
1	1	1358	5.0	14.5	.48/ .47	2.4	6.9	346
1	2	1360	4.8	14.6	.48/ .47	2.3	7.0	352
1	3	1380	5.0	14.3	.48/ .48	2.4	6.9	355
1	4	3222	3.7	15.3	1.13/1.12	4.2	17.3	817
1	5	3280	4.0	15.1	1.15/1.14	4.6	17.4	829
1	6	3597	3.9	15.3	1.26/1.25	4.9	19.3	914
1	7	2939	3.9	15.3	1.03/1.02	4.0	15.8	756

TAP	POINT	CORR V	%O2	% CO2	V LOC/AVG	WTD % O2	WTD %CO2	WTD TEMP
2	1	1382	6.3	13.2	.48/ .48	3.1	6.4	343
2	2	1396	5.2	14.2	.49/ .49	2.5	6.9	362
2	3	1378	3.4	15.7	.48/ .48	1.6	7.6	358
2	4	2963	3.4	15.8	1.04/1.03	3.5	16.4	765
2	5	3550	3.0	16.2	1.24/1.24	3.7	20.2	909
2	6	3658	3.4	15.6	1.28/1.27	4.4	20.0	937
2	7	3198	3.4	15.8	1.12/1.11	3.8	17.7	819

TAP	POINT	CORR V	%O2	% CO2	V LOC/AVG	WTD % O2	WTD %CO2	WTD TEMP
3	1	1388	6.8	13.0	.49/ .48	3.3	6.3	349
3	2	1671	4.3	14.9	.59/ .58	2.5	8.7	437
3	3	3526	4.6	14.7	1.24/1.23	5.7	18.2	931
3	4	3283	2.8	16.4	1.15/1.14	3.2	18.9	851
3	5	3165	2.8	16.4	1.11/1.10	3.1	18.2	826
3	6	3379	2.8	16.6	1.18/1.18	3.3	19.7	876
3	7	3772	2.9	16.0	1.32/1.31	3.8	21.1	976

TAP	POINT	CORR V	%02	% CO2	V LOC/AVG	WTD % O2	WTD %CO2	WTD TEMP
4	1	1560	4.8	14.4	.55/ .54	2.6	7.9	404
4	2	1906	4.6	14.8	.67/ .66	3.1	9.9	502
4	3	4017	5.1	14.2	1.41/1.40	7.2	20.0	1062
4	4	3303	2.5	16.6	1.16/1.15	2.9	19.2	863
4	5	2813	2.9	16.3	.99/ .98	2.9	16.1	723
4	6	3359	2.1	16.9	1.18/1.17	2.5	19.9	864
4	7	4028	3.1	16.3	1.41/1.40	4.4	23.0	1042

TAP	POINT	CORR V	%02	% CO2	V LOC/AVG	WTD % O2	WTD %CO2	WTD TEMP
5	1	1591	4.0	15.4	.56/ .55	2.2	8.6	419
5	2	1957	4.5	14.7	.69/ .68	3.1	10.1	516
5	3	4287	5.0	14.4	1.50/1.49	7.5	21.6	1131
5	4	4005	2.6	16.6	1.40/1.39	3.6	23.3	1040
5	5	3037	2.8	16.4	1.06/1.06	3.0	17.5	779
5	6	3270	3.6	15.8	1.15/1.14	4.1	18.1	843
5	7	3812	3.0	15.8	1.34/1.33	0.0	0.0	984

TAP	POINT	CORR V	%02	% CO2	V LOC/AVG	WTD % O2	WTD %CO2	WTD TEMP
6	1	1556	3.0	16.2	.55/ .54	1.6	8.8	406
6	2	2933	3.5	15.6	1.03/1.02	3.6	16.0	772
6	3	4277	3.1	16.0	1.50/1.49	4.6	24.0	1129
6	4	4044	3.4	15.9	1.42/1.41	4.8	22.5	1051
6	5	3269	3.0	16.4	1.15/1.14	3.4	18.8	843
6	6	2671	3.7	15.7	.94/ .93	3.5	14.7	694
6	7	2441	3.3	15.8	.86/ .85	2.8	13.5	630

TAP	POINT	CORR V	%02	% CO2	V LOC/AVG	WTD % O2	WTD %CO2	WTD TEMP
7	1	1532	6.5	13.1	.54/ .53	3.5	7.0	377
7	2	2248	4.6	14.7	.79/ .78	3.6	11.6	593
7	3	4671	3.4	16.0	1.64/1.63	5.6	26.2	1234
7	4	4019	3.8	15.4	1.41/1.40	5.4	21.7	1050
7	5	3587	3.4	15.8	1.26/1.25	4.3	19.9	940
7	6	3420	3.9	15.4	1.20/1.19	4.7	18.5	902
7	7	2329	3.9	15.1	.82/ .81	3.2	12.3	614

LOCATION = ECON WEST A_G
FILE IDENITY = IP6_25EWA

AVERAGE VELOCITY = 2873 FPM

AVERAGE (WEIGHTED) % O2 = 3.67 *
AVERAGE (WEIGHTED) % CO2 = 15.57 *
AVERAGE (WEIGHTED) TEMPERATURE = 745

AVERAGE (ARITHMETIC) % O2 = 3.86 *
AVERAGE (ARITHMETIC) % CO2 = 15.39 *
AVERAGE (ARITHMETIC) TEMPERATURE = 744

AVERAGE STATIC PRESSURE (in. H2O) = -3.4
AVERAGE DENSITY (LBM/FT^3) = .02844

ACFM (ACTUAL FT^3/MIN) = 1221122
LB/HR (WET) = 2084065

* - O2/CO2 DATA WITH ERROR GREATER THAN .35 NOT USED
NO. OF POINTS NOT USED = 1 OUT OF 49

LOCATION = ECON WEST A_G
FILE IDENITY = IP6_25EWA

AVERAGE VELOCITY = 2873 FPM

AVERAGE (WEIGHTED) % O2 = 3.65
AVERAGE (WEIGHTED) % CO2 = 15.57
AVERAGE (WEIGHTED) TEMPERATURE = 745

AVERAGE (ARITHMETIC) % O2 = 3.85
AVERAGE (ARITHMETIC) % CO2 = 15.40
AVERAGE (ARITHMETIC) TEMPERATURE = 744

AVERAGE STATIC PRESSURE (in. H2O) = -3.4
AVERAGE DENSITY (LBM/FT^3) = .02844

ACFM (ACTUAL FT^3/MIN) = 1221122
LB/HR (WET) = 2084065

DATE = 6/26/1987
LOCATION = ECON WEST
FILE IDENITY = IP6_25EWH
BAROMETRIC PRESSURE = 25.53
PROBE IDENTY = E6
DUCT HEIGHT = 21.2
DUCT WIDTH = 20.0

TAP	POINT	STAT P	TEMP	DELTA P	YAW ANGL	%02	% CO2
1	1	-2.6	685	0.000	20	8.9	11.0
1	2	-2.5	758	0.000	20	4.4	14.6
1	3	-2.9	771	.600	40	3.4	15.4
1	4	-2.9	752	.451	30	3.8	15.3
1	5	-2.8	757	.383	15	3.4	15.8
1	6	-3.0	763	.317	10	3.7	15.7
1	7	-2.7	762	.014	15	* 3.8	*14.8

TAP	POINT	STAT P	TEMP	DELTA P	YAW ANGL	%02	% CO2
2	1	-2.6	691	0.000	20	7.3	12.4
2	2	-2.6	764	0.000	20	* 4.3	*14.4
2	3	-2.8	765	.539	25	3.8	15.2
2	4	-2.8	765	.429	30	3.4	15.8
2	5	-2.8	762	.346	20	3.5	15.7
2	6	-2.8	764	.258	5	4.1	15.1
2	7	-2.7	764	.324	20	3.8	15.0

TAP	POINT	STAT P	TEMP	DELTA P	YAW ANGL	%02	% CO2
3	1	-2.4	751	0.000	0	7.3	12.1
3	2	-2.6	760	0.000	0	3.6	15.2
3	3	-2.7	768	.510	30	4.2	14.8
3	4	-2.8	755	.439	25	4.1	14.9
3	5	-2.6	762	.383	35	4.2	15.0
3	6	-2.7	759	.356	30	4.1	15.1
3	7	-2.5	761	.280	20	* 3.7	*14.9

TAP	POINT	STAT P	TEMP	DELTA P	YAW ANGL	%02	% CO2
4	1	-2.5	726	0.000	0	6.5	13.0
4	2	-2.6	761	0.000	0	3.9	15.3
4	3	-2.7	758	.495	25	4.0	15.0
4	4	-2.8	756	.429	35	4.1	15.2
4	5	-2.6	754	.163	20	4.4	14.8
4	6	-2.6	756	.312	35	4.4	14.8
4	7	-2.7	756	.290	30	4.3	15.1

TAP	POINT	STAT P	TEMP	DELTA P	YAW ANGL	%02	% CO2
5	1	-2.5	730	0.000	0	7.3	12.2
5	2	-2.6	751	0.000	20	4.5	14.7
5	3	-2.8	749	.522	45	4.0	15.2
5	4	-2.7	752	.419	50	4.9	14.3
5	5	-2.8	752	.405	50	4.5	14.7
5	6	-2.7	752	.376	30	4.6	14.6
5	7	-2.7	749	.373	20	4.5	14.5

TAP	POINT	STAT P	TEMP	DELTA P	YAW ANGL	%02	% CO2
6	1	-2.5	755	0.000	0	4.8	14.2
6	2	-2.7	760	0.000	20	4.8	14.5
6	3	-2.8	751	.600	35	4.5	14.7
6	4	-2.8	758	.510	45	4.6	14.4
6	5	-2.9	754	.444	50	4.4	14.7
6	6	-2.9	689	.371	35	4.5	14.7
6	7	-2.8	753	.266	10	3.9	14.9

TAP	POINT	STAT P	TEMP	DELTA P	YAW ANGL	%02	% CO2
7	1	-2.6	656	0.000	20	4.8	14.4
7	2	-2.7	767	1.001	10	4.5	14.7
7	3	-2.7	757	.739	15	4.7	14.5
7	4	-2.6	763	.163	10	5.0	14.2
7	5	-2.8	758	.422	50	4.3	14.9
7	6	-2.7	748	.419	40	4.2	15.2
7	7	-2.7	752	.278	20	4.2	14.8

* - O2/CO2 DATA WITH ERROR GREATER THAN .35 NOT USED

****
****

PRELIMINARY CALCULATIONS !!!!!!!!!
FINAL CALCULATIONS TO BE RUN AFTER
FECHHEIMER PROBES ARE
INDEPENDENTLY CALIBRATED

****
****

DATE - 6/26/1987
LOCATION - ECON WEST
FILE IDENITY - IP6_25EWH
BAROMETRIC PRESSURE - 25.53
PROBE IDENTY - E6
DUCT AREA - 425.0

TAP	POINT	CORR V	%02	% CO2	V LOC/AVG	WTD % O2	WTD %CO2	WTD TEMP
1	1	0	8.9	11.0	0.00/0.00	0.0	0.0	0
1	2	0	4.4	14.6	0.00/0.00	0.0	0.0	0
1	3	4103	3.4	15.4	1.48/1.53	5.0	22.8	1177
1	4	3996	3.8	15.3	1.44/1.49	5.5	22.1	1119
1	5	4115	3.4	15.8	1.49/1.53	5.1	23.5	1159
1	6	3831	3.7	15.7	1.38/1.43	5.1	21.7	1087
1	7	797	3.8	14.8	.29/ .30	0.0	0.0	226

TAP	POINT	CORR V	%02	% CO2	V LOC/AVG	WTD % O2	WTD %CO2	WTD TEMP
2	1	0	7.3	12.4	0.00/0.00	0.0	0.0	0
2	2	0	4.3	14.4	0.00/0.00	0.0	0.0	0
2	3	4592	3.8	15.2	1.66/1.71	6.3	25.2	1308
2	4	3916	3.4	15.8	1.41/1.46	4.8	22.3	1114
2	5	3815	3.5	15.7	1.38/1.42	4.8	21.6	1081
2	6	3503	4.1	15.1	1.26/1.30	5.2	19.1	996
2	7	3700	3.8	15.0	1.34/1.38	5.1	20.0	1052

TAP	POINT	CORR V	%02	% CO2	V LOC/AVG	WTD % O2	WTD %CO2	WTD TEMP
3	1	0	7.3	12.1	0.00/0.00	0.0	0.0	0
3	2	0	3.6	15.2	0.00/0.00	0.0	0.0	0
3	3	4276	4.2	14.8	1.54/1.59	6.5	22.8	1222
3	4	4133	4.1	14.9	1.49/1.54	6.1	22.2	1162
3	5	3499	4.2	15.0	1.26/1.30	5.3	18.9	992
3	6	3563	4.1	15.1	1.29/1.33	5.3	19.4	1006
3	7	3437	3.7	14.9	1.24/1.28	0.0	0.0	974

TAP	POINT	CORR V	%02	% CO2	V LOC/AVG	WTD % O2	WTD %CO2	WTD TEMP
4	1	0	6.5	13.0	0.00/0.00	0.0	0.0	0
4	2	0	3.9	15.3	0.00/0.00	0.0	0.0	0
4	3	4390	4.0	15.0	1.58/1.63	6.3	23.8	1238
4	4	3692	4.1	15.2	1.33/1.37	5.5	20.3	1038
4	5	2619	4.4	14.8	.95/ .97	4.2	14.0	734
4	6	3154	4.4	14.8	1.14/1.17	5.0	16.8	887
4	7	3214	4.3	15.1	1.16/1.20	5.0	17.5	904

TAP	POINT	CORR V	%02	% CO2	V LOC/AVG	WTD % O2	WTD %CO2	WTD TEMP
5	1	0	7.3	12.2	0.00/0.00	0.0	0.0	0
5	2	0	4.5	14.7	0.00/0.00	0.0	0.0	0
5	3	3503	4.0	15.2	1.26/1.30	5.1	19.2	977
5	4	2861	4.9	14.3	1.03/1.06	5.1	14.8	801
5	5	2812	4.5	14.7	1.02/1.05	4.6	14.9	787
5	6	3652	4.6	14.6	1.32/1.36	6.1	19.2	1022
5	7	3944	4.5	14.5	1.42/1.47	6.4	20.6	1100

TAP	POINT	CORR V	%02	% CO2	V LOC/AVG	WTD % O2	WTD %CO2	WTD TEMP
6	1	0	4.8	14.2	0.00/0.00	0.0	0.0	0
6	2	0	4.8	14.5	0.00/0.00	0.0	0.0	0
6	3	4353	4.5	14.7	1.57/1.62	7.1	23.1	1217
6	4	3478	4.6	14.4	1.26/1.29	5.8	18.1	981
6	5	2947	4.4	14.7	1.06/1.10	4.7	15.6	827
6	6	3340	4.5	14.7	1.21/1.24	5.4	17.7	857
6	7	3500	3.9	14.9	1.26/1.30	4.9	18.8	981

TAP	POINT	CORR V	%02	% CO2	V LOC/AVG	WTD % O2	WTD %CO2	WTD TEMP
7	1	0	4.8	14.4	0.00/0.00	0.0	0.0	0
7	2	6786	4.5	14.7	2.45/2.53	11.0	36.0	1936
7	3	5704	4.7	14.5	2.06/2.12	9.7	29.9	1606
7	4	2757	5.0	14.2	1.00/1.03	5.0	14.1	783
7	5	2877	4.3	14.9	1.04/1.07	4.5	15.5	812
7	6	3400	4.2	15.2	1.23/1.27	5.2	18.7	946
7	7	3412	4.2	14.8	1.23/1.27	5.2	18.2	955

LOCATION = ECON WEST
FILE IDENITY = IP6_25EWH

AVERAGE VELOCITY = 2687 FPM

AVERAGE (WEIGHTED) % O2 = 4.16 *
AVERAGE (WEIGHTED) % CO2 = 14.97 *
AVERAGE (WEIGHTED) TEMPERATURE = 756

AVERAGE (ARITHMETIC) % O2 = 4.57 *
AVERAGE (ARITHMETIC) % CO2 = 14.62 *
AVERAGE (ARITHMETIC) TEMPERATURE = 750

AVERAGE STATIC PRESSURE (in. H2O) = -2.7
AVERAGE DENSITY (LBM/FT^3) = .02832

ACFM (ACTUAL FT^3/MIN) = 1142039
LB/HR (WET) = 1940515

* - O2/CO2 DATA WITH ERROR GREATER THAN .35 NOT USED
NO. OF POINTS NOT USED = 3 OUT OF 49

LOCATION = ECON WEST
FILE IDENITY = IP6_25EWH

AVERAGE VELOCITY = 2687 FPM

AVERAGE (WEIGHTED) % O2 = 4.15
AVERAGE (WEIGHTED) % CO2 = 14.97
AVERAGE (WEIGHTED) TEMPERATURE = 756

AVERAGE (ARITHMETIC) % O2 = 4.53
AVERAGE (ARITHMETIC) % CO2 = 14.62
AVERAGE (ARITHMETIC) TEMPERATURE = 750

AVERAGE STATIC PRESSURE (in. H2O) = -2.7
AVERAGE DENSITY (LBM/FT^3) = .02832

ACFM (ACTUAL FT^3/MIN) = 1142039
LB/HR (WET) = 1940515

DATE = 6-25-1987
LOCATION = ECON EAST
FILE IDENITY = IP6_25EEA
BAROMETRIC PRESSURE = 25.53
PROBE IDENTY = 28
DUCT HEIGHT = 21.2
DUCT WIDTH = 20.0

TAP	POINT	STAT P	TEMP	DELTA P	YAW ANGL	%02	% CO2
1	1	-3.2	747	.940	25	4.0	15.0
1	2	-3.1	738	.680	20	3.8	15.2
1	3	-3.2	737	.075	20	4.0	14.8
1	4	-3.1	734	.390	30	4.0	15.0
1	5	-3.0	732	.095	15	* 3.5	*15.0
1	6	-3.2	731	.227	15	3.8	15.0
1	7	-3.1	731	.311	15	3.9	15.1

TAP	POINT	STAT P	TEMP	DELTA P	YAW ANGL	%02	% CO2
2	1	-3.2	751	.742	30	4.1	14.8
2	2	-3.0	744	.329	15	4.0	15.0
2	3	-3.0	739	.229	15	3.8	15.1
2	4	-3.1	737	.940	20	4.0	14.8
2	5	-3.1	736	1.255	20	4.0	15.0
2	6	-3.1	734	.615	20	4.0	15.0
2	7	-3.1	736	.788	5	4.2	14.8

TAP	POINT	STAT P	TEMP	DELTA P	YAW ANGL	%02	% CO2
3	1	-3.1	736	1.281	0	4.2	14.6
3	2	-3.0	746	.919	10	4.0	15.2
3	3	-3.0	737	.366	0	4.0	15.1
3	4	-3.0	741	.168	15	4.0	15.0
3	5	-3.0	734	.551	15	4.1	15.0
3	6	-3.0	731	.986	0	4.2	15.1
3	7	-3.0	731	1.352	0	4.3	14.7

TAP	POINT	STAT P	TEMP	DELTA P	YAW ANGL	%02	% CO2
4	1	-3.1	760	1.411	0	3.9	15.4
4	2	-3.0	760	.752	0	4.0	15.2
4	3	-3.0	748	.395	0	4.5	14.8
4	4	-3.0	756	.161	0	4.3	15.0
4	5	-3.0	748	.778	0	4.4	14.6
4	6	-3.0	742	1.381	0	4.3	15.0
4	7	-2.9	746	1.969	0	4.0	15.2

TAP	POINT	STAT P	TEMP	DELTA P	YAW ANGL	%02	% CO2
5	1	-3.0	759	1.074	0	3.6	15.6
5	2	-3.0	772	.581	10	3.6	15.6
5	3	-3.0	762	.207	0	3.6	15.6
5	4	-2.9	767	.139	0	4.3	15.0
5	5	-2.9	763	1.057	0	4.2	15.0
5	6	-2.9	761	1.616	0	4.4	14.8
5	7	-2.9	769	1.777	1	4.0	14.9

TAP	POINT	STAT P	TEMP	DELTA P	YAW ANGL	%02	% CO2
6	1	-3.3	756	1.211	0	3.8	15.4
6	2	-3.3	764	.625	10	3.6	15.5
6	3	-3.1	764	.478	0	3.8	15.5
6	4	-3.1	766	.256	0	3.8	15.5
6	5	-3.1	766	.100	0	3.9	15.4
6	6	-3.1	761	.271	0	3.8	15.4
6	7	-3.0	760	.297	5	* 4.0	*14.6

TAP	POINT	STAT P	TEMP	DELTA P	YAW ANGL	%02	% CO2
7	1	-3.1	765	1.325	20	3.6	15.6
7	2	-3.1	759	.673	5	3.8	15.0
7	3	-3.1	764	.576	5	3.2	16.0
7	4	-3.1	769	.141	5	3.6	15.6
7	5	-3.1	770	.334	5	* 3.6	*15.8
7	6	-3.0	765	.332	10	3.9	15.2
7	7	-3.0	765	.266	10	3.9	15.0

* - O2/CO2 DATA WITH ERROR GREATER THAN .35 NOT USED

****
****

PRELIMINARY CALCULATIONS !!!!!!!!!
FINAL CALCULATIONS TO BE RUN AFTER
FECHHEIMER PROBES ARE
INDEPENDENTLY CALIBRATED

****
****

DATE = 6-25-1987
LOCATION = ECON EAST
FILE IDENITY = IP6_25EEA
BAROMETRIC PRESSURE = 25.53
PROBE IDENTY = 28
DUCT AREA = 425.0

TAP	POINT	CORR V	%02	% CO2	V LOC/AVG	WTD % O2	WTD %CO2	WTD TEMP
1	1	6006	4.0	15.0	1.14/1.16	4.6	17.1	867
1	2	5285	3.8	15.2	1.00/1.02	3.8	15.2	755
1	3	1771	4.0	14.8	.34/ .34	1.3	5.0	253
1	4	3693	4.0	15.0	.70/ .71	2.8	10.5	524
1	5	2042	3.5	15.0	.39/ .39	0.0	0.0	289
1	6	3146	3.8	15.0	.60/ .61	2.3	9.0	445
1	7	3676	3.9	15.1	.70/ .71	2.7	10.5	519

TAP	POINT	CORR V	%02	% CO2	V LOC/AVG	WTD % O2	WTD %CO2	WTD TEMP
2	1	5115	4.1	14.8	.97/ .99	4.0	14.4	742
2	2	3800	4.0	15.0	.72/ .73	2.9	10.8	546
2	3	3169	3.8	15.1	.60/ .61	2.3	9.1	453
2	4	6203	4.0	14.8	1.18/1.20	4.7	17.4	884
2	5	7152	4.0	15.0	1.36/1.38	5.4	20.4	1018
2	6	5021	4.0	15.0	.95/ .97	3.8	14.3	713
2	7	6022	4.2	14.8	1.14/1.16	4.8	16.9	857

TAP	POINT	CORR V	%02	% CO2	V LOC/AVG	WTD % O2	WTD %CO2	WTD TEMP
3	1	7692	4.2	14.6	1.46/1.49	6.1	21.3	1095
3	2	6448	4.0	15.2	1.22/1.25	4.9	18.6	930
3	3	4134	4.0	15.1	.78/ .80	3.1	11.9	589
3	4	2719	4.0	15.0	.52/ .53	2.1	7.7	389
3	5	4886	4.1	15.0	.93/ .94	3.8	13.9	694
3	6	6736	4.2	15.1	1.28/1.30	5.4	19.3	952
3	7	7880	4.3	14.7	1.50/1.52	6.4	22.0	1114

TAP	POINT	CORR V	%02	% CO2	V LOC/AVG	WTD % O2	WTD %CO2	WTD TEMP
4	1	8143	3.9	15.4	1.55/1.57	6.0	23.8	1197
4	2	5964	4.0	15.2	1.13/1.15	4.5	17.2	877
4	3	4316	4.5	14.8	.82/ .83	3.7	12.1	625
4	4	2774	4.3	15.0	.53/ .54	2.3	7.9	406
4	5	6040	4.4	14.6	1.15/1.17	5.0	16.7	874
4	6	7996	4.3	15.0	1.52/1.55	6.5	22.8	1147
4	7	9546	4.0	15.2	1.81/1.85	7.2	27.5	1377

TAP	POINT	CORR V	%02	% CO2	V LOC/AVG	WTD % O2	WTD %CO2	WTD TEMP
5	1	7110	3.6	15.6	1.35/1.37	4.9	21.1	1044
5	2	5193	3.6	15.6	.99/1.00	3.5	15.4	775
5	3	3148	3.6	15.6	.60/ .61	2.2	9.3	464
5	4	2590	4.3	15.0	.49/ .50	2.1	7.4	384
5	5	7068	4.2	15.0	1.34/1.37	5.6	20.1	1043
5	6	8716	4.4	14.8	1.65/1.69	7.3	24.5	1283
5	7	9164	4.0	14.9	1.74/1.77	7.0	25.9	1363

TAP	POINT	CORR V	%02	% CO2	V LOC/AVG	WTD % O2	WTD %CO2	WTD TEMP
6	1	7539	3.8	15.4	1.43/1.46	5.4	22.0	1102
6	2	5369	3.6	15.5	1.02/1.04	3.7	15.8	793
6	3	4772	3.8	15.5	.91/ .92	3.4	14.0	705
6	4	3505	3.8	15.5	.67/ .68	2.5	10.3	519
6	5	2199	3.9	15.4	.42/ .43	1.6	6.4	326
6	6	3598	3.8	15.4	.68/ .70	2.6	10.5	529
6	7	3754	4.0	14.6	.71/ .73	0.0	0.0	552

TAP	POINT	CORR V	%02	% CO2	V LOC/AVG	WTD % O2	WTD %CO2	WTD TEMP
7	1	7431	3.6	15.6	1.41/1.44	5.1	22.0	1099
7	2	5624	3.8	15.0	1.07/1.09	4.1	16.0	825
7	3	5212	3.2	16.0	.99/1.01	3.2	15.8	770
7	4	2600	3.6	15.6	.49/ .50	1.8	7.7	387
7	5	3989	3.6	15.8	.76/ .77	2.7	12.0	594
7	6	3927	3.9	15.2	.75/ .76	2.9	11.3	581
7	7	3519	3.9	15.0	.67/ .68	2.6	10.0	521

LOCATION = ECON EAST
FILE IDENITY = IP6_25EEA

AVERAGE VELOCITY = 5171 FPM

AVERAGE (WEIGHTED) % O2 = 3.97 *
AVERAGE (WEIGHTED) % CO2 = 15.13 *
AVERAGE (WEIGHTED) TEMPERATURE = 751

AVERAGE (ARITHMETIC) % O2 = 3.95 *
AVERAGE (ARITHMETIC) % CO2 = 15.15 *
AVERAGE (ARITHMETIC) TEMPERATURE = 751

AVERAGE STATIC PRESSURE (in. H2O) = -3.1
AVERAGE DENSITY (LBM/FT^3) = .02829

ACFM (ACTUAL FT^3/MIN) = 2197863
LB/HR (WET) = 3730533

* - O2/CO2 DATA WITH ERROR GREATER THAN .35 NOT USED
NO. OF POINTS NOT USED = 2 OUT OF 49

LOCATION = ECON EAST
FILE IDENITY = IP6_25EEA

AVERAGE VELOCITY = 5171 FPM

AVERAGE (WEIGHTED) % O2 = 3.97
AVERAGE (WEIGHTED) % CO2 = 15.12
AVERAGE (WEIGHTED) TEMPERATURE = 751

AVERAGE (ARITHMETIC) % O2 = 3.94
AVERAGE (ARITHMETIC) % CO2 = 15.13
AVERAGE (ARITHMETIC) TEMPERATURE = 751

AVERAGE STATIC PRESSURE (in. H2O) = -3.1
AVERAGE DENSITY (LBM/FT^3) = .02829

ACFM (ACTUAL FT^3/MIN) = 2197863
LB/HR (WET) = 3730533

DATE = 6/25/87
LOCATION = ECON EAST
FILE IDENITY = IP6_25EEH
BAROMETRIC PRESSURE = 25.53
PROBE IDENTY = E8
DUCT HEIGHT = 21.2
DUCT WIDTH = 20.0

TAP	POINT	STAT P	TEMP	DELTA P	YAW ANGL	%02	% CO2
1	1	-3.1	744	.046	40	4.6	14.6
1	2	-3.4	767	.068	20	3.2	16.0
1	3	-2.7	769	.698	50	2.8	16.4
1	4	-2.8	774	.493	50	3.4	15.8
1	5	-2.9	763	.429	55	3.2	15.8
1	6	-2.9	768	.459	40	3.6	15.4
1	7	-3.0	762	.236	60	4.6	14.4

TAP	POINT	STAT P	TEMP	DELTA P	YAW ANGL	%02	% CO2
2	1	-3.3	761	.041	0	3.0	16.0
2	2	-3.2	764	.109	30	3.8	15.4
2	3	-2.8	766	.683	40	3.4	15.6
2	4	-2.8	768	.490	60	3.6	15.6
2	5	-2.9	754	.358	60	3.6	15.6
2	6	-2.8	752	.361	50	4.0	15.2
2	7	-2.9	751	.153	20	4.4	14.6

TAP	POINT	STAT P	TEMP	DELTA P	YAW ANGL	%02	% CO2
3	1	-3.0	760	.007	70	2.4	16.6
3	2	-3.2	761	.075	60	2.8	16.2
3	3	-2.6	771	.686	60	2.0	16.8
3	4	-2.6	765	.578	60	3.2	15.6
3	5	-2.7	746	.400	60	3.8	15.6
3	6	-2.9	736	.131	55	3.6	15.6
3	7	-3.0	738	.095	40	3.8	15.2

TAP	POINT	STAT P	TEMP	DELTA P	YAW ANGL	%02	% CO2
4	1	-3.0	754	.004	60	2.6	16.4
4	2	-3.0	756	.031	45	3.2	15.8
4	3	-2.6	764	.712	60	2.0	17.0
4	4	-2.5	763	.615	40	2.6	16.4
4	5	-2.8	747	.439	40	3.2	16.0
4	6	-2.7	733	.368	40	3.4	15.6
4	7	-2.8	734	.249	40	3.0	16.0

TAP	POINT	STAT P	TEMP	DELTA P	YAW ANGL	%02	% CO2
5	1	-3.1	665	.007	60	4.4	14.8
5	2	-3.0	748	.009	60	2.4	16.6
5	3	-2.7	763	.622	60	2.2	16.6
5	4	-2.8	755	.576	40	2.8	16.2
5	5	-2.8	756	.502	40	3.2	15.8
5	6	-2.7	742	.383	30	3.2	16.0
5	7	-3.3	746	.217	40	3.6	15.4

TAP	POINT	STAT P	TEMP	DELTA P	YAW ANGL	%02	% CO2
6	1	-3.4	450	1.372	25	4.0	15.0
6	2	-3.4	745	.874	30	2.6	16.4
6	3	-3.2	747	.778	50	2.2	16.8
6	4	-3.4	743	.275	45	2.4	16.6
6	5	-3.3	753	.349	55	2.6	16.4
6	6	-3.4	747	.383	45	3.6	15.8
6	7	-3.3	746	.485	0	2.8	16.0

TAP	POINT	STAT P	TEMP	DELTA P	YAW ANGL	%02	% CO2
7	1	-3.1	702	.024	45	3.2	16.0
7	2	-3.1	740	.026	0	2.6	16.4
7	3	-3.0	736	.061	30	2.4	16.8
7	4	-2.6	724	.647	55	2.4	16.4
7	5	-2.7	736	.527	45	2.8	16.4
7	6	-2.7	742	.473	55	3.2	16.0
7	7	-2.8	748	.322	55	2.8	16.0

* - O2/CO2 DATA WITH ERROR GREATER THAN .35 NOT USED

****
****

PRELIMINARY CALCULATIONS !!!!!!!!!
FINAL CALCULATIONS TO BE RUN AFTER
FECHHEIMER PROBES ARE
INDEPENDENTLY CALIBRATED

****
****

DATE = 6/25/87
LOCATION = ECON EAST
FILE IDENITY = IP6_25EEH
BAROMETRIC PRESSURE = 25.53
PROBE IDENTY = E8
DUCT AREA = 425.0

TAP	POINT	CORR V	%O2	% CO2	V LOC/AVG	WTD % O2	WTD %CO2	WTD TEMP
1	1	1135	4.6	14.6	.45	2.1	6.5	333
1	2	1706	3.2	16.0	.67	2.1	10.7	515
1	3	3703	2.8	16.4	1.46	4.1	23.9	1121
1	4	3126	3.4	15.8	1.23	4.2	19.4	952
1	5	2592	3.2	15.8	1.02	3.3	16.1	778
1	6	3589	3.6	15.4	1.41	5.1	21.8	1085
1	7	1683	4.6	14.4	.66	3.0	9.5	505

TAP	POINT	CORR V	%O2	% CO2	V LOC/AVG	WTD % O2	WTD %CO2	WTD TEMP
2	1	1408	3.0	16.0	.55	1.7	8.9	421
2	2	1986	3.8	15.4	.78	3.0	12.0	597
2	3	4364	3.4	15.6	1.72	5.8	26.8	1316
2	4	2419	3.6	15.6	.95	3.4	14.8	731
2	5	2058	3.6	15.6	.81	2.9	12.6	611
2	6	2656	4.0	15.2	1.05	4.2	15.9	786
2	7	2537	4.4	14.6	1.00	4.4	14.6	750

TAP	POINT	CORR V	%O2	% CO2	V LOC/AVG	WTD % O2	WTD %CO2	WTD TEMP
3	1	199	2.4	16.6	.08	.2	1.3	60
3	2	950	2.8	16.2	.37	1.0	6.1	285
3	3	2857	2.0	16.8	1.12	2.2	18.9	867
3	4	2622	3.2	15.6	1.03	3.3	16.1	790
3	5	2166	3.8	15.6	.85	3.2	13.3	636
3	6	1423	3.6	15.6	.56	2.0	8.7	412
3	7	1623	3.8	15.2	.64	2.4	9.7	472

TAP	POINT	CORR V	%02	% CO2	V LOC/AVG	WTD % O2	WTD %CO2	WTD TEMP
4	1	220	2.6	16.4	.09	.2	1.4	65
4	2	864	3.2	15.8	.34	1.1	5.4	257
4	3	2901	2.0	17.0	1.14	2.3	19.4	873
4	4	4134	2.6	16.4	1.63	4.2	26.7	1242
4	5	3477	3.2	16.0	1.37	4.4	21.9	1023
4	6	3169	3.4	15.6	1.25	4.2	19.5	914
4	7	2611	3.0	16.0	1.03	3.1	16.4	754

TAP	POINT	CORR V	%02	% CO2	V LOC/AVG	WTD % O2	WTD %CO2	WTD TEMP
5	1	280	4.4	14.8	.11	.5	1.6	73
5	2	329	2.4	16.6	.13	.3	2.1	97
5	3	2713	2.2	16.6	1.07	2.3	17.7	814
5	4	3991	2.8	16.2	1.57	4.4	25.4	1186
5	5	3731	3.2	15.8	1.47	4.7	23.2	1110
5	6	3665	3.2	16.0	1.44	4.6	23.1	1070
5	7	2454	3.6	15.4	.97	3.5	14.9	720

TAP	POINT	CORR V	%02	% CO2	V LOC/AVG	WTD % O2	WTD %CO2	WTD TEMP
6	1	6268	4.0	15.0	2.47	9.9	37.0	1110
6	2	5525	2.6	16.4	2.17	5.7	35.7	1619
6	3	3872	2.2	16.8	1.52	3.4	25.6	1138
6	4	2542	2.4	16.6	1.00	2.4	16.6	744
6	5	2330	2.6	16.4	.92	2.4	15.0	690
6	6	3003	3.6	15.8	1.18	4.3	18.7	883
6	7	4771	2.8	16.0	1.88	5.3	30.0	1400

TAP	POINT	CORR V	%02	% CO2	V LOC/AVG	WTD % O2	WTD %CO2	WTD TEMP
7	1	743	3.2	16.0	.29	.9	4.7	205
7	2	1112	2.6	16.4	.44	1.1	7.2	324
7	3	1468	2.4	16.8	.58	1.4	9.7	425
7	4	3122	2.4	16.4	1.23	2.9	20.1	889
7	5	3494	2.8	16.4	1.38	3.9	22.6	1011
7	6	2695	3.2	16.0	1.06	3.4	17.0	786
7	7	2234	2.8	16.0	.88	2.5	14.1	658

LOCATION = ECON EAST
FILE IDENITY = IP6_25EEH

AVERAGE VELOCITY = 2541 FPM

AVERAGE (WEIGHTED) % O2 = 3.12 *
AVERAGE (WEIGHTED) % CO2 = 15.93 *
AVERAGE (WEIGHTED) TEMPERATURE = 737

AVERAGE (ARITHMETIC) % O2 = 3.15 *
AVERAGE (ARITHMETIC) % CO2 = 15.91 *
AVERAGE (ARITHMETIC) TEMPERATURE = 743

AVERAGE STATIC PRESSURE (in. H2O) = -3.0
AVERAGE DENSITY (LBM/FT^3) = .02856

ACFM (ACTUAL FT^3/MIN) = 1080036
LB/HR (WET) = 1850710

* - O2/CO2 DATA WITH ERROR GREATER THAN .35 NOT USED
NO. OF POINTS NOT USED = 0 OUT OF 49

LOCATION = ECON EAST
FILE IDENITY = IP6_25EEH

AVERAGE VELOCITY = 2541 FPM

AVERAGE (WEIGHTED) % O2 = 3.12
AVERAGE (WEIGHTED) % CO2 = 15.93
AVERAGE (WEIGHTED) TEMPERATURE = 737

AVERAGE (ARITHMETIC) % O2 = 3.15
AVERAGE (ARITHMETIC) % CO2 = 15.91
AVERAGE (ARITHMETIC) TEMPERATURE = 743

AVERAGE STATIC PRESSURE (in. H2O) = -3.0
AVERAGE DENSITY (LBM/FT^3) = .02856

ACFM (ACTUAL FT^3/MIN) = 1080036
LB/HR (WET) = 1850710

DATE = 6/25/87
LOCATION = WESTSECGASIN
FILE IDENITY = IP6_25WSGI
BAROMETRIC PRESSURE = 25.52
PROBE IDENTY = E-27
DUCT HEIGHT = 19.7
DUCT WIDTH = 40.0

TAP	POINT	STAT P	TEMP	DELTA P	YAW ANGL	%02	% CO2
1	1	-3.4	746	.236	10	4.2	15.0
1	2	-3.5	749	.214	15	4.2	15.0
1	3	-3.6	749	.136	3	4.2	15.0
1	4	-3.7	749	.173	0	4.2	15.0
1	5	-3.7	749	.173	10	4.2	15.0
1	6	-3.7	749	.151	10	4.2	15.0
1	7	-3.7	744	.043	0	4.2	15.0

TAP	POINT	STAT P	TEMP	DELTA P	YAW ANGL	%02	% CO2
2	1	-3.5	750	.236	13	4.2	15.0
2	2	-3.6	753	.173	25	4.2	15.0
2	3	-3.8	752	.168	15	4.2	15.0
2	4	-3.8	752	.114	0	4.2	15.0
2	5	-3.7	755	.299	15	4.2	15.0
2	6	-3.7	751	.170	22	4.2	15.0
2	7	-3.6	745	.048	0	4.2	15.0

TAP	POINT	STAT P	TEMP	DELTA P	YAW ANGL	%02	% CO2
3	1	-3.5	752	.273	10	4.2	15.0
3	2	-3.5	753	.168	10	4.2	15.0
3	3	-3.6	753	.217	10	4.2	15.0
3	4	-3.5	751	.183	5	4.2	15.0
3	5	-3.6	749	.161	10	4.2	15.0
3	6	-3.6	747	.053	10	4.2	15.0
3	7	-3.5	738	.007	0	4.2	15.0

TAP	POINT	STAT P	TEMP	DELTA P	YAW ANGL	%02	% CO2
4	1	-3.4	753	.266	5	4.2	15.0
4	2	-3.5	755	.249	0	4.2	15.0
4	3	-3.5	760	.229	7	4.2	15.0
4	4	-3.7	753	.236	3	4.2	15.0
4	5	-3.7	751	.092	6	4.2	15.0
4	6	-3.8	747	.026	12	4.2	15.0
4	7	-3.8	743	.007	0	4.2	15.0

TAP	POINT	STAT P	TEMP	DELTA P	YAW ANGL	%02	% CO2
5	1	-3.7	750	.297	10	4.2	15.0
5	2	-3.6	752	.217	5	4.2	15.0
5	3	-3.7	752	.241	5	4.2	15.0
5	4	-3.8	752	.178	5	4.2	15.0
5	5	-3.9	752	.056	5	4.2	15.0
5	6	-3.9	748	.012	0	4.2	15.0
5	7	-3.9	743	.004	0	4.2	15.0

TAP	POINT	STAT P	TEMP	DELTA P	YAW ANGL	%02	% CO2
6	1	-3.6	752	.290	23	4.2	15.0
6	2	-3.6	752	.222	5	4.2	15.0
6	3	-3.8	751	.244	5	4.2	15.0
6	4	-3.8	751	.234	5	4.2	15.0
6	5	-3.9	747	.083	11	4.2	15.0
6	6	-3.9	743	.031	41	4.2	15.0
6	7	-3.8	740	.004	0	4.2	15.0

TAP	POINT	STAT P	TEMP	DELTA P	YAW ANGL	%02	% CO2
7	1	-3.6	749	.241	15	4.2	15.0
7	2	-3.6	753	.261	10	4.2	15.0
7	3	-3.6	752	.249	0	4.2	15.0
7	4	-3.7	752	.222	25	4.2	15.0
7	5	-3.7	748	.080	22	4.2	15.0
7	6	-3.9	745	.026	0	4.2	15.0
7	7	-3.8	738	.009	0	4.2	15.0

TAP	POINT	STAT P	TEMP	DELTA P	YAW ANGL	%02	% CO2
8	1	-3.6	724	.163	0	4.2	15.0
8	2	-3.6	751	.341	25	4.2	15.0
8	3	-3.8	750	.224	15	4.2	15.0
8	4	-3.8	750	.166	5	4.2	15.0
8	5	-3.8	746	.170	3	4.2	15.0
8	6	-3.9	743	.024	13	4.2	15.0
8	7	-3.9	742	.063	50	4.2	15.0

TAP	POINT	STAT P	TEMP	DELTA P	YAW ANGL	%02	% CO2
9	1	-3.7	744	.271	0	4.2	15.0
9	2	-3.9	753	.273	12	4.2	15.0
9	3	-3.9	749	.756	10	4.2	15.0
9	4	-3.9	747	.217	0	4.2	15.0
9	5	-3.9	747	.214	20	4.2	15.0
9	6	-3.9	743	.114	28	4.2	15.0
9	7	-3.9	740	.048	0	4.2	15.0

TAP	POINT	STAT P	TEMP	DELTA P	YAW ANGL	%02	% CO2
10	1	-3.8	752	.268	10	4.2	15.0
10	2	-3.9	752	.336	17	4.2	15.0
10	3	-3.8	747	.241	10	4.2	15.0
10	4	-3.8	748	.207	10	4.2	15.0
10	5	-3.8	747	.200	20	4.2	15.0
10	6	-3.8	744	.183	30	4.2	15.0
10	7	-4.0	740	.053	40	4.2	15.0

TAP	POINT	STAT P	TEMP	DELTA P	YAW ANGL	%02	% CO2
11	1	-3.7	751	.253	20	4.2	15.0
11	2	-3.7	747	.283	15	4.2	15.0
11	3	-3.7	747	.251	4	4.2	15.0
11	4	-3.8	746	.227	9	4.2	15.0
11	5	-3.7	744	.214	17	4.2	15.0
11	6	-3.8	742	.156	25	4.2	15.0
11	7	-3.8	735	.012	0	4.2	15.0

TAP	POINT	STAT P	TEMP	DELTA P	YAW ANGL	%02	% CO2
12	1	-3.4	750	.461	10	4.2	15.0
12	2	-3.5	751	.395	10	4.2	15.0
12	3	-3.6	751	.324	5	4.2	15.0
12	4	-3.6	750	.163	5	4.2	15.0
12	5	-3.8	750	.024	0	4.2	15.0
12	6	-3.8	749	.004	0	4.2	15.0
12	7	-3.7	748	.002	0	4.2	15.0

TAP	POINT	STAT P	TEMP	DELTA P	YAW ANGL	%02	% CO2
13	1	-3.4	744	.463	5	4.2	15.0
13	2	-3.6	748	.393	7	4.2	15.0
13	3	-3.6	747	.236	15	4.2	15.0
13	4	-3.7	747	.068	20	4.2	15.0
13	5	-3.8	746	.007	0	4.2	15.0
13	6	-3.8	741	.004	0	4.2	15.0
13	7	-3.7	726	.004	0	4.2	15.0

TAP	POINT	STAT P	TEMP	DELTA P	YAW ANGL	%02	% CO2
14	1	-3.4	747	.380	2	4.2	15.0
14	2	-3.5	747	.366	0	4.2	15.0
14	3	-3.7	746	.356	15	4.2	15.0
14	4	-3.7	746	.307	17	4.2	15.0
14	5	-3.8	746	.095	17	4.2	15.0
14	6	-3.8	727	.012	0	4.2	15.0
14	7	-3.7	719	.012	0	4.2	15.0

****
****

PRELIMINARY CALCULATIONS !!!!!!!!!
FINAL CALCULATIONS TO BE RUN AFTER
FECHHEIMER PROBES ARE
INDEPENDENTLY CALIBRATED

****
****

DATE = 6/25/87
LOCATION = WESTSECGASIN
FILE IDENITY = IP6_25WSGI
BAROMETRIC PRESSURE = 25.52
PROBE IDENTY = E-27
DUCT AREA = 789.2

TAP	POINT	CORR V	%02	% CO2	V LOC/AVG	WTD % O2	WTD %CO2	WTD TEMP
1	1	3292	4.2	15.0	1.27	5.3	19.0	947
1	2	3080	4.2	15.0	1.19	4.9	17.8	890
1	3	2543	4.2	15.0	.98	4.1	14.7	735
1	4	2870	4.2	15.0	1.11	4.6	16.6	829
1	5	2826	4.2	15.0	1.09	4.5	16.4	817
1	6	2642	4.2	15.0	1.02	4.2	15.3	763
1	7	1434	4.2	15.0	.55	2.3	8.3	412

TAP	POINT	CORR V	%02	% CO2	V LOC/AVG	WTD % O2	WTD %CO2	WTD TEMP
2	1	3263	4.2	15.0	1.26	5.2	18.9	944
2	2	2605	4.2	15.0	1.01	4.2	15.1	757
2	3	2736	4.2	15.0	1.06	4.4	15.8	794
2	4	2336	4.2	15.0	.90	3.7	13.5	678
2	5	3646	4.2	15.0	1.41	5.8	21.1	1062
2	6	2640	4.2	15.0	1.02	4.2	15.3	765
2	7	1515	4.2	15.0	.58	2.4	8.8	435

TAP	POINT	CORR V	%02	% CO2	V LOC/AVG	WTD % O2	WTD %CO2	WTD TEMP
3	1	3548	4.2	15.0	1.37	5.7	20.5	1029
3	2	2789	4.2	15.0	1.08	4.5	16.1	810
3	3	3168	4.2	15.0	1.22	5.1	18.3	920
3	4	2942	4.2	15.0	1.13	4.7	17.0	852
3	5	2727	4.2	15.0	1.05	4.4	15.8	788
3	6	1569	4.2	15.0	.61	2.5	9.1	452
3	7	579	4.2	15.0	.22	.9	3.3	165

TAP	POINT	CORR V	%02	% CO2	V LOC/AVG	WTD % O2	WTD %CO2	WTD TEMP
4	1	3544	4.2	15.0	1.37	5.7	20.5	1029
4	2	3446	4.2	15.0	1.33	5.5	19.9	1004
4	3	3288	4.2	15.0	1.27	5.3	19.0	964
4	4	3349	4.2	15.0	1.29	5.4	19.4	973
4	5	2088	4.2	15.0	.81	3.3	12.1	605
4	6	1093	4.2	15.0	.42	1.8	6.3	315
4	7	580	4.2	15.0	.22	.9	3.4	166

TAP	POINT	CORR V	%02	% CO2	V LOC/AVG	WTD % O2	WTD %CO2	WTD TEMP
5	1	3697	4.2	15.0	1.43	5.9	21.4	1070
5	2	3203	4.2	15.0	1.24	5.1	18.5	929
5	3	3374	4.2	15.0	1.30	5.4	19.5	979
5	4	2904	4.2	15.0	1.12	4.6	16.8	843
5	5	1635	4.2	15.0	.63	2.6	9.5	474
5	6	761	4.2	15.0	.29	1.2	4.4	220
5	7	439	4.2	15.0	.17	.7	2.5	126

TAP	POINT	CORR V	%02	% CO2	V LOC/AVG	WTD % O2	WTD %CO2	WTD TEMP
6	1	3417	4.2	15.0	1.32	5.5	19.8	991
6	2	3239	4.2	15.0	1.25	5.2	18.7	940
6	3	3394	4.2	15.0	1.31	5.4	19.6	983
6	4	3325	4.2	15.0	1.28	5.3	19.2	963
6	5	1955	4.2	15.0	.75	3.1	11.3	563
6	6	919	4.2	15.0	.35	1.5	5.3	264
6	7	438	4.2	15.0	.17	.7	2.5	125

TAP	POINT	CORR V	%02	% CO2	V LOC/AVG	WTD % O2	WTD %CO2	WTD TEMP
7	1	3267	4.2	15.0	1.26	5.2	18.9	944
7	2	3471	4.2	15.0	1.34	5.6	20.1	1008
7	3	3442	4.2	15.0	1.33	5.5	19.9	999
7	4	2947	4.2	15.0	1.14	4.7	17.1	855
7	5	1813	4.2	15.0	.70	2.9	10.5	523
7	6	1117	4.2	15.0	.43	1.8	6.5	321
7	7	656	4.2	15.0	.25	1.1	3.8	187

TAP	POINT	CORR V	%02	% CO2	V LOC/AVG	WTD % O2	WTD %CO2	WTD TEMP
8	1	2757	4.2	15.0	1.06	4.4	16.0	770
8	2	3644	4.2	15.0	1.41	5.8	21.1	1056
8	3	3153	4.2	15.0	1.22	5.0	18.2	912
8	4	2803	4.2	15.0	1.08	4.5	16.2	811
8	5	2838	4.2	15.0	1.09	4.5	16.4	817
8	6	1045	4.2	15.0	.40	1.7	6.0	300
8	7	1114	4.2	15.0	.43	1.8	6.4	319

TAP	POINT	CORR V	%02	% CO2	V LOC/AVG	WTD % O2	WTD %CO2	WTD TEMP
9	1	3578	4.2	15.0	1.38	5.7	20.7	1027
9	2	3527	4.2	15.0	1.36	5.6	20.4	1025
9	3	5872	4.2	15.0	2.27	9.4	34.0	1697
9	4	3210	4.2	15.0	1.24	5.1	18.6	925
9	5	2995	4.2	15.0	1.16	4.8	17.3	863
9	6	2056	4.2	15.0	.79	3.3	11.9	589
9	7	1512	4.2	15.0	.58	2.4	8.8	432

TAP	POINT	CORR V	%02	% CO2	V LOC/AVG	WTD % O2	WTD %CO2	WTD TEMP
10	1	3517	4.2	15.0	1.36	5.6	20.4	1020
10	2	3821	4.2	15.0	1.47	6.1	22.1	1108
10	3	3329	4.2	15.0	1.28	5.3	19.3	960
10	4	3089	4.2	15.0	1.19	4.9	17.9	891
10	5	2896	4.2	15.0	1.12	4.6	16.8	835
10	6	2551	4.2	15.0	.98	4.1	14.8	732
10	7	1217	4.2	15.0	.47	1.9	7.0	348

TAP	POINT	CORR V	%02	% CO2	V LOC/AVG	WTD % O2	WTD %CO2	WTD TEMP
11	1	3259	4.2	15.0	1.26	5.2	18.9	944
11	2	3536	4.2	15.0	1.36	5.7	20.5	1019
11	3	3441	4.2	15.0	1.33	5.5	19.9	992
11	4	3240	4.2	15.0	1.25	5.2	18.8	933
11	5	3044	4.2	15.0	1.17	4.9	17.6	874
11	6	2464	4.2	15.0	.95	3.9	14.3	705
11	7	756	4.2	15.0	.29	1.2	4.4	214

TAP	POINT	CORR V	%02	% CO2	V LOC/AVG	WTD % O2	WTD %CO2	WTD TEMP
12	1	4595	4.2	15.0	1.77	7.4	26.6	1330
12	2	4259	4.2	15.0	1.64	6.8	24.6	1234
12	3	3906	4.2	15.0	1.51	6.3	22.6	1132
12	4	2777	4.2	15.0	1.07	4.4	16.1	803
12	5	1075	4.2	15.0	.41	1.7	6.2	311
12	6	440	4.2	15.0	.17	.7	2.5	127
12	7	311	4.2	15.0	.12	.5	1.8	90

TAP	POINT	CORR V	%02	% CO2	V LOC/AVG	WTD % O2	WTD %CO2	WTD TEMP
13	1	4646	4.2	15.0	1.79	7.4	26.9	1334
13	2	4276	4.2	15.0	1.65	6.8	24.7	1234
13	3	3231	4.2	15.0	1.25	5.2	18.7	931
13	4	1695	4.2	15.0	.65	2.7	9.8	488
13	5	581	4.2	15.0	.22	.9	3.4	167
13	6	438	4.2	15.0	.17	.7	2.5	125
13	7	436	4.2	15.0	.17	.7	2.5	122

TAP	POINT	CORR V	%O2	% CO2	V LOC/AVG	WTD % O2	WTD %CO2	WTD TEMP
14	1	4232	4.2	15.0	1.63	6.8	24.5	1220
14	2	4157	4.2	15.0	1.60	6.7	24.1	1198
14	3	3960	4.2	15.0	1.53	6.3	22.9	1140
14	4	3643	4.2	15.0	1.41	5.8	21.1	1049
14	5	2036	4.2	15.0	.79	3.3	11.8	586
14	6	754	4.2	15.0	.29	1.2	4.4	211
14	7	751	4.2	15.0	.29	1.2	4.3	208

LOCATION = WESTSECGASIN
FILE IDENITY = IP6_25WSGI

AVERAGE VELOCITY = 2592 FPM

AVERAGE (WEIGHTED) % O2 = 4.15
AVERAGE (WEIGHTED) % CO2 = 15.00
AVERAGE (WEIGHTED) TEMPERATURE = 749

AVERAGE (ARITHMETIC) % O2 = 4.15
AVERAGE (ARITHMETIC) % CO2 = 15.00
AVERAGE (ARITHMETIC) TEMPERATURE = 747

AVERAGE STATIC PRESSURE (in. H2O) = -3.7
AVERAGE DENSITY (LBM/FT^3) = .02831

ACFM (ACTUAL FT^3/MIN) = 2045580
LB/HR (WET) = 3474047

DATE = 6-25-87
LOCATION = SEC GAS IN EAST
FILE IDENITY = IP6_25ESGI
BAROMETRIC PRESSURE = 25.52
PROBE IDENTY = E-27
DUCT HEIGHT = 19.7
DUCT WIDTH = 40.0

TAP	POINT	STAT P	TEMP	DELTA P	YAW ANGL	%02	% CO2
1	1	-3.6	750	.344	10	3.6	15.5
1	2	-3.6	750	.390	15	3.6	15.5
1	3	-3.8	747	.376	19	3.6	15.5
1	4	-3.8	745	.327	20	3.6	15.5
1	5	-3.8	745	.156	17	3.6	15.5
1	6	-3.8	744	.073	12	3.6	15.5
1	7	-3.8	744	.017	35	3.6	15.5

TAP	POINT	STAT P	TEMP	DELTA P	YAW ANGL	%02	% CO2
2	1	-3.6	744	.349	0	3.6	15.5
2	2	-3.6	744	.366	17	3.6	15.5
2	3	-3.7	744	.312	26	3.6	15.5
2	4	-3.7	739	.351	27	3.6	15.5
2	5	-3.7	740	.263	25	3.6	15.5
2	6	-3.7	738	.141	30	3.6	15.5
2	7	-3.7	738	.024	45	3.6	15.5

TAP	POINT	STAT P	TEMP	DELTA P	YAW ANGL	%02	% CO2
3	1	-3.0	743	.324	10	3.6	15.5
3	2	-3.7	746	.329	25	3.6	15.5
3	3	-3.8	745	.317	30	3.6	15.5
3	4	-3.9	746	.324	30	3.6	15.5
3	5	-3.6	741	.268	25	3.6	15.5
3	6	-3.7	737	.239	35	3.6	15.5
3	7	-3.7	736	.014	45	3.6	15.5

TAP	POINT	STAT P	TEMP	DELTA P	YAW ANGL	%02	% CO2
4	1	-3.7	734	.280	30	3.6	15.5
4	2	-3.7	745	.285	35	3.6	15.5
4	3	-3.8	742	.317	33	3.6	15.5
4	4	-3.8	742	.275	26	3.6	15.5
4	5	-3.8	738	.290	17	3.6	15.5
4	6	-3.7	733	.117	20	3.6	15.5
4	7	-3.8	725	.017	0	3.6	15.5

TAP	POINT	STAT P	TEMP	DELTA P	YAW ANGL	%02	% CO2
5	1	-3.7	755	.390	20	3.6	15.5
5	2	-3.9	758	.376	25	3.6	15.5
5	3	-3.7	757	.349	20	3.6	15.5
5	4	-3.7	755	.278	10	3.6	15.5
5	5	-3.6	753	.278	0	3.6	15.5
5	6	-3.7	752	.119	0	3.6	15.5
5	7	-3.6	750	.048	0	3.6	15.5

TAP	POINT	STAT P	TEMP	DELTA P	YAW ANGL	%02	% CO2
6	1	-3.8	753	.310	12	3.6	15.5
6	2	-3.7	757	.356	30	3.6	15.5
6	3	-3.6	758	.368	25	3.6	15.5
6	4	-3.6	755	.307	8	3.6	15.5
6	5	-3.6	754	.295	3	3.6	15.5
6	6	-3.8	753	.185	0	3.6	15.5
6	7	-3.7	750	.041	0	3.6	15.5

TAP	POINT	STAT P	TEMP	DELTA P	YAW ANGL	%02	% CO2
7	1	-3.5	750	.173	15	3.6	15.5
7	2	-3.5	755	.400	30	3.6	15.5
7	3	-3.5	758	.227	18	3.6	15.5
7	4	-3.5	756	.256	10	3.6	15.5
7	5	-3.6	755	.229	4	3.6	15.5
7	6	-3.5	753	.136	8	3.6	15.5
7	7	-3.6	748	.024	0	3.6	15.5

TAP	POINT	STAT P	TEMP	DELTA P	YAW ANGL	%02	% CO2
8	1	-3.4	749	.302	12	3.6	15.5
8	2	-3.4	755	.348	12	3.6	15.5
8	3	-3.4	759	.356	10	3.6	15.5
8	4	-3.5	758	.180	0	3.6	15.5
8	5	-3.5	756	.139	14	3.6	15.5
8	6	-3.6	754	.083	12	3.6	15.5
8	7	-3.6	754	.002	0	3.6	15.5

TAP	POINT	STAT P	TEMP	DELTA P	YAW ANGL	%02	% CO2
9	1	-3.6	745	.471	20	3.6	15.5
9	2	-3.7	750	.473	12	3.6	15.5
9	3	-3.8	753	.417	5	3.6	15.5
9	4	-3.6	753	.271	3	3.6	15.5
9	5	-3.8	753	.036	0	3.6	15.5
9	6	-3.7	751	.004	0	3.6	15.5
9	7	-3.6	742	.004	0	3.6	15.5

TAP	POINT	STAT P	TEMP	DELTA P	YAW ANGL	%02	% CO2
10	1	-3.6	747	.534	20	3.6	15.5
10	2	-3.8	752	.461	15	3.6	15.5
10	3	-3.7	755	.427	3	3.6	15.5
10	4	-3.8	756	.183	7	3.6	15.5
10	5	-3.8	753	.007	0	3.6	15.5
10	6	-3.8	751	.004	0	3.6	15.5
10	7	-3.8	743	.004	0	3.6	15.5

TAP	POINT	STAT P	TEMP	DELTA P	YAW ANGL	%02	% CO2
11	1	-3.6	748	.473	20	3.6	15.5
11	2	-3.6	758	.407	7	3.6	15.5
11	3	-3.7	757	.361	8	3.6	15.5
11	4	-3.7	754	.188	2	3.6	15.5
11	5	-3.7	753	.068	10	3.6	15.5
11	6	-3.6	753	.019	0	3.6	15.5
11	7	-3.7	750	.002	0	3.6	15.5

TAP	POINT	STAT P	TEMP	DELTA P	YAW ANGL	%02	% CO2
12	1	-3.3	732	.117	20	3.6	15.5
12	2	-3.4	738	.136	7	3.6	15.5
12	3	-3.4	741	.170	5	3.6	15.5
12	4	-3.3	740	.205	5	3.6	15.5
12	5	-3.4	740	.214	5	3.6	15.5
12	6	-3.5	726	.075	0	3.6	15.5
12	7	-3.5	710	.012	0	3.6	15.5

TAP	POINT	STAT P	TEMP	DELTA P_	YAW ANGL	%02	% CO2
13	1	-3.6	741	.100	5	3.6	15.5
13	2	-3.6	749	.744	10	3.6	15.5
13	3	-3.5	750	.200	0	3.6	15.5
13	4	-3.5	749	.175	5	3.6	15.5
13	5	-3.4	745	.200	5	3.6	15.5
13	6	-3.5	741	.073	0	3.6	15.5
13	7	-3.5	725	.026	0	3.6	15.5

TAP	POINT	STAT P	TEMP	DELTA P	YAW ANGL	%02	% CO2
14	1	-3.5	749	.239	15	3.6	15.5
14	2	-3.6	749	.268	16	3.6	15.5
14	3	-3.7	747	.219	5	3.6	15.5
14	4	-3.7	746	.173	10	3.6	15.5
14	5	-3.5	745	.168	18	3.6	15.5
14	6	-3.7	743	.112	12	3.6	15.5
14	7	-3.8	740	.019	0	3.6	15.5

****
****

PRELIMINARY CALCULATIONS !!!!!!!!!
FINAL CALCULATIONS TO BE RUN AFTER
FECHHEIMER PROBES ARE
INDEPENDENTLY CALIBRATED

****
****

DATE - 6-25-87
LOCATION - SEC GAS IN EAST
FILE IDENITY - IP6_25ESGI
BAROMETRIC PRESSURE - 25.52
PROBE IDENTY - E-27
DUCT AREA - 789.2

TAP	POINT	CORR V	%02	% CO2	V LOC/AVG	WTD % O2	WTD %CO2	WTD TEMP
1	1	3974	3.6	15.5	1.40	5.0	21.7	1048
1	2	4148	3.6	15.5	1.46	5.2	22.6	1094
1	3	3983	3.6	15.5	1.40	5.0	21.7	1046
1	4	3691	3.6	15.5	1.30	4.6	20.1	967
1	5	2602	3.6	15.5	.91	3.2	14.2	682
1	6	1824	3.6	15.5	.64	2.3	9.9	477
1	7	740	3.6	15.5	.26	.9	4.0	193

TAP	POINT	CORR V	%02	% CO2	V LOC/AVG	WTD % O2	WTD %CO2	WTD TEMP
2	1	4054	3.6	15.5	1.43	5.1	22.1	1060
2	2	3969	3.6	15.5	1.40	5.0	21.6	1038
2	3	3447	3.6	15.5	1.21	4.3	18.8	902
2	4	3615	3.6	15.5	1.27	4.5	19.7	939
2	5	3188	3.6	15.5	1.12	4.0	17.4	829
2	6	2234	3.6	15.5	.79	2.8	12.2	580
2	7	756	3.6	15.5	.27	.9	4.1	196

TAP	POINT	CORR V	%02	% CO2	V LOC/AVG	WTD % O2	WTD %CO2	WTD TEMP
3	1	3843	3.6	15.5	1.35	4.8	20.9	1004
3	2	3572	3.6	15.5	1.26	4.5	19.5	937
3	3	3350	3.6	15.5	1.18	4.2	18.3	877
3	4	3388	3.6	15.5	1.19	4.2	18.5	889
3	5	3219	3.6	15.5	1.13	4.0	17.5	839
3	6	2745	3.6	15.5	.96	3.4	15.0	711
3	7	578	3.6	15.5	.20	.7	3.1	149

TAP	POINT	CORR V	%02	% CO2	V LOC/AVG	WTD % O2	WTD %CO2	WTD TEMP
4	1	3135	3.6	15.5	1.10	3.9	17.1	809
4	2	3005	3.6	15.5	1.06	3.8	16.4	787
4	3	3240	3.6	15.5	1.14	4.0	17.7	845
4	4	3236	3.6	15.5	1.14	4.0	17.6	844
4	5	3529	3.6	15.5	1.24	4.4	19.2	915
4	6	2205	3.6	15.5	.78	2.8	12.0	568
4	7	896	3.6	15.5	.31	1.1	4.9	228

TAP	POINT	CORR V	%02	% CO2	V LOC/AVG	WTD % O2	WTD %CO2	WTD TEMP
5	1	4044	3.6	15.5	1.42	5.0	22.0	1073
5	2	3836	3.6	15.5	1.35	4.8	20.9	1022
5	3	3831	3.6	15.5	1.35	4.8	20.9	1019
5	4	3584	3.6	15.5	1.26	4.5	19.5	951
5	5	3635	3.6	15.5	1.28	4.5	19.8	962
5	6	2386	3.6	15.5	.84	3.0	13.0	631
5	7	1517	3.6	15.5	.53	1.9	8.3	400

TAP	POINT	CORR V	%02	% CO2	V LOC/AVG	WTD % O2	WTD %CO2	WTD TEMP
6	1	3754	3.6	15.5	1.32	4.7	20.5	994
6	2	3565	3.6	15.5	1.25	4.4	19.4	949
6	3	3794	3.6	15.5	1.33	4.7	20.7	1011
6	4	3785	3.6	15.5	1.33	4.7	20.6	1005
6	5	3740	3.6	15.5	1.31	4.7	20.4	991
6	6	2971	3.6	15.5	1.04	3.7	16.2	787
6	7	1403	3.6	15.5	.49	1.8	7.6	370

TAP	POINT	CORR V	%02	% CO2	V LOC/AVG	WTD % O2	WTD %CO2	WTD TEMP
7	1	2771	3.6	15.5	.97	3.5	15.1	731
7	2	3773	3.6	15.5	1.33	4.7	20.6	1001
7	3	3133	3.6	15.5	1.10	3.9	17.1	835
7	4	3441	3.6	15.5	1.21	4.3	18.7	914
7	5	3297	3.6	15.5	1.16	4.1	18.0	875
7	6	2525	3.6	15.5	.89	3.2	13.8	668
7	7	1074	3.6	15.5	.38	1.3	5.9	282

TAP	POINT	CORR V	%02	% CO2	V LOC/AVG	WTD % O2	WTD %CO2	WTD TEMP
8	1	3698	3.6	15.5	1.30	4.6	20.1	974
8	2	3977	3.6	15.5	1.40	5.0	21.7	1055
8	3	4056	3.6	15.5	1.43	5.1	22.1	1082
8	4	2936	3.6	15.5	1.03	3.7	16.0	782
8	5	2504	3.6	15.5	.88	3.1	13.6	665
8	6	1952	3.6	15.5	.69	2.4	10.6	517
8	7	312	3.6	15.5	.11	.4	1.7	83

TAP	POINT	CORR V	%02	% CO2	V LOC/AVG	WTD % O2	WTD %CO2	WTD TEMP
9	1	4421	3.6	15.5	1.55	5.5	24.1	1158
9	2	4622	3.6	15.5	1.62	5.8	25.2	1219
9	3	4429	3.6	15.5	1.56	5.5	24.1	1172
9	4	3585	3.6	15.5	1.26	4.5	19.5	949
9	5	1317	3.6	15.5	.46	1.6	7.2	349
9	6	440	3.6	15.5	.15	.5	2.4	116
9	7	438	3.6	15.5	.15	.5	2.4	114

TAP	POINT	CORR V	%02	% CO2	V LOC/AVG	WTD % O2	WTD %CO2	WTD TEMP
10	1	4709	3.6	15.5	1.66	5.9	25.7	1236
10	2	4511	3.6	15.5	1.59	5.6	24.6	1193
10	3	4495	3.6	15.5	1.58	5.6	24.5	1193
10	4	2937	3.6	15.5	1.03	3.7	16.0	781
10	5	582	3.6	15.5	.20	.7	3.2	154
10	6	440	3.6	15.5	.15	.5	2.4	116
10	7	439	3.6	15.5	.15	.5	2.4	115

TAP	POINT	CORR V	%02	% CO2	V LOC/AVG	WTD % O2	WTD %CO2	WTD TEMP
11	1	4436	3.6	15.5	1.56	5.5	24.2	1166
11	2	4368	3.6	15.5	1.54	5.5	23.8	1164
11	3	4105	3.6	15.5	1.44	5.1	22.4	1092
11	4	2994	3.6	15.5	1.05	3.7	16.3	794
11	5	1780	3.6	15.5	.63	2.2	9.7	471
11	6	958	3.6	15.5	.34	1.2	5.2	254
11	7	311	3.6	15.5	.11	.4	1.7	82

TAP	POINT	CORR V	%02	% CO2	V LOC/AVG	WTD % O2	WTD %CO2	WTD TEMP
12	1	2203	3.6	15.5	.77	2.7	12.0	567
12	2	2514	3.6	15.5	.88	3.1	13.7	652
12	3	2822	3.6	15.5	.99	3.5	15.4	735
12	4	3095	3.6	15.5	1.09	3.9	16.9	805
12	5	3162	3.6	15.5	1.11	3.9	17.2	823
12	6	1875	3.6	15.5	.66	2.3	10.2	479
12	7	748	3.6	15.5	.26	.9	4.1	187

TAP	POINT	CORR V	%02	% CO2	V LOC/AVG	WTD % O2	WTD %CO2	WTD TEMP
13	1	2169	3.6	15.5	.76	2.7	11.8	565
13	2	5820	3.6	15.5	2.05	7.3	31.7	1532
13	3	3083	3.6	15.5	1.08	3.8	16.8	813
13	4	2873	3.6	15.5	1.01	3.6	15.7	757
13	5	3065	3.6	15.5	1.08	3.8	16.7	803
13	6	1862	3.6	15.5	.65	2.3	10.1	485
13	7	1106	3.6	15.5	.39	1.4	6.0	282

TAP	POINT	CORR V	%O2	% CO2	V LOC/AVG	WTD % O2	WTD %CO2	WTD TEMP
14	1	3252	3.6	15.5	1.14	4.1	17.7	856
14	2	3426	3.6	15.5	1.20	4.3	18.7	902
14	3	3210	3.6	15.5	1.13	4.0	17.5	843
14	4	2822	3.6	15.5	.99	3.5	15.4	740
14	5	2684	3.6	15.5	.94	3.3	14.6	703
14	6	2256	3.6	15.5	.79	2.8	12.3	589
14	7	953	3.6	15.5	.33	1.2	5.2	248

LOCATION = SEC GAS IN EAST
FILE IDENITY = IP6_25ESGI

AVERAGE VELOCITY = 2845 FPM

AVERAGE (WEIGHTED) % O2 = 3.55
AVERAGE (WEIGHTED) % CO2 = 15.50
AVERAGE (WEIGHTED) TEMPERATURE = 748

AVERAGE (ARITHMETIC) % O2 = 3.55
AVERAGE (ARITHMETIC) % CO2 = 15.50
AVERAGE (ARITHMETIC) TEMPERATURE = 747

AVERAGE STATIC PRESSURE (in. H2O) = -3.6
AVERAGE DENSITY (LBM/FT^3) = .02834

ACFM (ACTUAL FT^3/MIN) = 2244995
LB/HR (WET) = 3816746

DATE = 6/25/87
LOCATION = WESTPRIAIROUT
FILE IDENITY = IP6_25WPAO
BAROMETRIC PRESSURE = 25.52
PROBE IDENTY = E-1
DUCT HEIGHT = 8.6
DUCT WIDTH = 15.0

TAP	POINT	STAT P	TEMP	DELTA P	YAW ANGL
1	1	30.0	498	.079	5
1	2	30.0	448	.068	5
1	3	30.0	416	.048	10

TAP	POINT	STAT P	TEMP	DELTA P	YAW ANGL
2	1	30.0	481	.041	5
2	2	30.0	468	.021	10
2	3	30.0	459	.065	0

TAP	POINT	STAT P	TEMP	DELTA P	YAW ANGL
3	1	30.0	480	.017	5
3	2	30.0	468	.067	10
3	3	30.0	460	.024	10

TAP	POINT	STAT P	TEMP	DELTA P	YAW ANGL
4	1	30.0	492	.053	5
4	2	30.0	489	.041	10
4	3	30.0	468	.092	0

TAP	POINT	STAT P	TEMP	DELTA P	YAW ANGL
5	1	30.0	496	.024	10
5	2	30.0	470	.073	10
5	3	30.0	456	.061	5

****
****

PRELIMINARY CALCULATIONS !!!!!!!!!
FINAL CALCULATIONS TO BE RUN AFTER
FECHHEIMER PROBES ARE
INDEPENDENTLY CALIBRATED

****
****

DATE = 6/25/87
LOCATION = WESTPRIAIROUT
FILE IDENITY = IP6_25WPAO
BAROMETRIC PRESSURE = 25.52
PROBE IDENTY = E-1
DUCT AREA = 128.7

TAP	POINT	CORR V V	LOC/AVG	WTD TEMP
1	1	1659	1.30	645
1	2	1499	1.17	524
1	3	1224	.96	397

TAP	POINT	CORR V V	LOC/AVG	WTD TEMP
2	1	1187	.93	446
2	2	835	.65	305
2	3	1480	1.16	530

TAP	POINT	CORR V V	LOC/AVG	WTD TEMP
3	1	765	.60	287
3	2	1487	1.16	543
3	3	889	.69	319

TAP	POINT	CORR V V	LOC/AVG	WTD TEMP
4	1	1356	1.06	521
4	2	1178	.92	450
4	3	1768	1.38	646

TAP	POINT	CORR V V	LOC/AVG	WTD TEMP
5	1	906	.71	351
5	2	1554	1.21	570
5	3	1426	1.11	508

LOCATION = WESTPRIAIROUT
FILE IDENITY = IP6_25WPAO

AVERAGE VELOCITY = 1281 FPM

AVERAGE (WEIGHTED) TEMPERATURE = 470

AVERAGE (ARITHMETIC) TEMPERATURE = 470

AVERAGE STATIC PRESSURE (in. H2O) = 30.0
AVERAGE DENSITY (LBM/FT^3) = .03958

ACFM (ACTUAL FT^3/MIN) = 164913
LB/HR (WET) = 391681

****
****

PRELIMINARY CALCULATIONS !!!!!!!!!
FINAL CALCULATIONS TO BE RUN AFTER
FECHHEIMER PROBES ARE
INDEPENDENTLY CALIBRATED

****
****

DATE = 6/25/87
LOCATION = EASTPRIAIROUT
FILE IDENITY = IP6_25EPAO
BAROMETRIC PRESSURE = 25.52
PROBE IDENTY = E-1
DUCT AREA = 128.7

TAP	POINT	CORR V V	LOC/AVG	WTD TEMP
1	1	1116	.89	434
1	2	1321	1.06	497
1	3	1379	1.10	485

TAP	POINT	CORR V V	LOC/AVG	WTD TEMP
2	1	1167	.93	463
2	2	1475	1.18	576
2	3	1187	.95	457

TAP	POINT	CORR V V	LOC/AVG	WTD TEMP
3	1	770	.62	317
3	2	1320	1.06	527
3	3	487	.39	188

TAP	POINT	CORR V V	LOC/AVG	WTD TEMP
4	1	1310	1.05	544
4	2	1492	1.19	599
4	3	1282	1.02	490

TAP	POINT	CORR V V	LOC/AVG	WTD TEMP
5	1	1372	1.10	556
5	2	1505	1.20	598
5	3	1575	1.26	597

DATE = 6/25/87
LOCATION = EASTPRIAIROUT
FILE IDENITY = IP6_25EPAO
BAROMETRIC PRESSURE = 25.52
PROBE IDENTY = E-1
DUCT HEIGHT = 8.6
DUCT WIDTH = 15.0

TAP	POINT	STAT P	TEMP	DELTA P	YAW ANGL
1	1	30.0	486	.036	5
1	2	30.0	471	.051	0
1	3	30.0	440	.058	5

TAP	POINT	STAT P	TEMP	DELTA P	YAW ANGL
2	1	30.0	496	.039	5
2	2	30.0	488	.063	5
2	3	30.0	481	.041	5

TAP	POINT	STAT P	TEMP	DELTA P	YAW ANGL
3	1	30.0	514	.017	10
3	2	30.0	499	.051	10
3	3	30.0	482	.007	10

TAP	POINT	STAT P	TEMP	DELTA P	YAW ANGL
4	1	30.0	519	.048	5
4	2	30.0	502	.065	10
4	3	30.0	478	.048	5

TAP	POINT	STAT P	TEMP	DELTA P	YAW ANGL
5	1	30.0	507	.053	0
5	2	30.0	497	.065	5
5	3	30.0	474	.073	5

DATE = 6/25/87
LOCATION = WESTTEMPAIR
FILE IDENITY = IP6_25WTA
BAROMETRIC PRESSURE = 25.52
PROBE IDENTY = E-9
DUCT HEIGHT = 10.0
DUCT WIDTH = 12.0

TAP	POINT	STAT P	TEMP	DELTA P	YAW ANGL
1	1	30.0	118	.139	0
1	2	30.0	118	.043	5
1	3	30.0	118	.004	10
1	4	30.0	118	.002	10

TAP	POINT	STAT P	TEMP	DELTA P	YAW ANGL
2	1	30.0	118	.146	0
2	2	30.0	117	.068	20
2	3	30.0	116	.012	10
2	4	30.0	115	.004	0

TAP	POINT	STAT P	TEMP	DELTA P	YAW ANGL
3	1	30.0	115	.192	0
3	2	30.0	114	.063	20
3	3	30.0	113	.007	30
3	4	30.0	112	.002	0

TAP	POINT	STAT P	TEMP	DELTA P	YAW ANGL
4	1	30.0	112	.180	5
4	2	30.0	112	.073	15
4	3	30.0	112	.009	20
4	4	30.0	111	.002	0

TAP	POINT	STAT P	TEMP	DELTA P	YAW ANGL
5	1	30.0	111	.144	5
5	2	30.0	110	.083	10
5	3	30.0	109	.019	10
5	4	30.0	108	.004	15

TAP	POINT	STAT P	TEMP	DELTA P	YAW ANGL
6	1	30.0	108	.117	5
6	2	30.0	108	.117	10
6	3	30.0	108	.043	15
6	4	30.0	107	.004	0

LOCATION = EASTPRIAIROUT
FILE IDENITY = IP6_25EPAO

AVERAGE VELOCITY = 1250 FPM

AVERAGE (WEIGHTED) TEMPERATURE = 488

AVERAGE (ARITHMETIC) TEMPERATURE = 489

AVERAGE STATIC PRESSURE (in. H2O) = 30.0
AVERAGE DENSITY (LBM/FT^3) = .03879

ACFM (ACTUAL FT^3/MIN) = 160994
LB/HR (WET) = 374683

****
****

PRELIMINARY CALCULATIONS !!!!!!!!!
FINAL CALCULATIONS TO BE RUN AFTER
FECHHEIMER PROBES ARE
INDEPENDENTLY CALIBRATED

****
****

DATE - 6/25/87
LOCATION - WESTTEMPAIR
FILE IDENITY - IP6_25WTA
BAROMETRIC PRESSURE - 25.52
PROBE IDENTY - E-9
DUCT AREA - 120.0

TAP	POINT	CORR V V	LOC/AVG	WTD TEMP
1	1	1703	1.83	216
1	2	949	1.02	120
1	3	288	.31	37
1	4	204	.22	26

TAP	POINT	CORR V V	LOC/AVG	WTD TEMP
2	1	1745	1.88	222
2	2	1122	1.21	141
2	3	497	.53	62
2	4	292	.31	36

TAP	POINT	CORR V V	LOC/AVG	WTD TEMP
3	1	1993	2.14	247
3	2	1078	1.16	132
3	3	333	.36	41
3	4	206	.22	25

TAP	POINT	CORR V V	LOC/AVG	WTD TEMP
4	1	1918	2.06	231
4	2	1189	1.28	143
4	3	409	.44	49
4	4	206	.22	25

LOCATION = WESTTEMPAIR
FILE IDENITY = IP6_25WTA

AVERAGE VELOCITY = 929 FPM

AVERAGE (WEIGHTED) TEMPERATURE = 113

AVERAGE (ARITHMETIC) TEMPERATURE = 113

AVERAGE STATIC PRESSURE (in. H2O) = 30.0
AVERAGE DENSITY (LBM/FT^3) = .06423

ACFM (ACTUAL FT^3/MIN) = 111538
LB/HR (WET) = 429858

TAP	POINT	CORR V V	LOC/AVG	WTD TEMP
5	1	1716	1.85	205
5	2	1290	1.39	153
5	3	620	.67	73
5	4	280	.30	33

TAP	POINT	CORR V V	LOC/AVG	WTD TEMP
6	1	1544	1.66	179
6	2	1526	1.64	177
6	3	912	.98	106
6	4	290	.31	33

****
****

PRELIMINARY CALCULATIONS !!!!!!!!!
FINAL CALCULATIONS TO BE RUN AFTER
FECHHEIMER PROBES ARE
INDEPENDENTLY CALIBRATED

****
****

DATE = 6/25/87
LOCATION = EASTTEMPAIR
FILE IDENITY = IP6_25ETA
BAROMETRIC PRESSURE = 25.52
PROBE IDENTY = E-9
DUCT AREA = 120.0

TAP	POINT	CORR V V	LOC/AVG	WTD TEMP
1	1	1125	1.47	162
1	2	502	.66	73
1	3	291	.38	42
1	4	631	.83	92

TAP	POINT	CORR V V	LOC/AVG	WTD TEMP
2	1	1064	1.39	157
2	2	816	1.07	121
2	3	206	.27	30
2	4	384	.50	56

TAP	POINT	CORR V V	LOC/AVG	WTD TEMP
3	1	1359	1.78	197
3	2	814	1.06	118
3	3	290	.38	42
3	4	384	.50	55

TAP	POINT	CORR V V	LOC/AVG	WTD TEMP
4	1	1373	1.80	198
4	2	640	.84	92
4	3	435	.57	63
4	4	853	1.12	124

DATE = 6/25/87
LOCATION = EASTTEMPAIR
FILE IDENITY = IP6_25ETA
BAROMETRIC PRESSURE = 25.52
PROBE IDENTY = E-9
DUCT HEIGHT = 10.0
DUCT WIDTH = 12.0

TAP	POINT	STAT P	TEMP	DELTA P	YAW ANGL
1	1	30.0	110	.063	10
1	2	30.0	111	.012	0
1	3	30.0	111	.004	0
1	4	30.0	111	.019	0

TAP	POINT	STAT P	TEMP	DELTA P	YAW ANGL
2	1	30.0	113	.056	10
2	2	30.0	113	.036	20
2	3	30.0	112	.002	0
2	4	30.0	111	.007	0

TAP	POINT	STAT P	TEMP	DELTA P	YAW ANGL
3	1	30.0	111	.090	5
3	2	30.0	111	.034	15
3	3	30.0	110	.004	0
3	4	30.0	110	.007	0

TAP	POINT	STAT P	TEMP	DELTA P	YAW ANGL
4	1	30.0	110	.092	5
4	2	30.0	110	.021	15
4	3	30.0	111	.009	0
4	4	30.0	111	.036	10

TAP	POINT	STAT P	TEMP	DELTA P	YAW ANGL
5	1	30.0	110	.070	5
5	2	30.0	109	.029	15
5	3	30.0	108	.014	5
5	4	30.0	109	.046	0

TAP	POINT	STAT P	TEMP	DELTA P	YAW ANGL
6	1	30.0	109	.058	5
6	2	30.0	109	.061	5
6	3	30.0	109	.029	5
6	4	30.0	109	.026	0

TAP	POINT	CORR V V	LOC/AVG	WTD TEMP
5	1	1199	1.57	173
5	2	751	.98	107
5	3	539	.70	76
5	4	977	1.28	139

TAP	POINT	CORR V V	LOC/AVG	WTD TEMP
6	1	1092	1.43	156
6	2	1119	1.46	160
6	3	774	1.01	110
6	4	736	.96	105

LOCATION = EASTTEMPAIR
FILE IDENITY = IP6_25ETA

AVERAGE VELOCITY = 765 FPM

AVERAGE (WEIGHTED) TEMPERATURE = 110

AVERAGE (ARITHMETIC) TEMPERATURE = 110

AVERAGE STATIC PRESSURE (in. H2O) = 30.0
AVERAGE DENSITY (LBM/FT^3) = .06451

ACFM (ACTUAL FT^3/MIN) = 91769
LB/HR (WET) = 355206

LOCATION = SEC AIR OUT EAST
FILE IDENITY = IP6_25ESAO

AVERAGE VELOCITY = 2732 FPM

AVERAGE (WEIGHTED) TEMPERATURE = 661

AVERAGE (ARITHMETIC) TEMPERATURE = 661

AVERAGE STATIC PRESSURE (in. H2O) = -1.9
AVERAGE DENSITY (LBM/FT^3) = .03005

ACFM (ACTUAL FT^3/MIN) = 1644094
LB/HR (WET) = 2964712

TAP	POINT	STAT P	TEMP	DELTA P	YAW ANGL
4	1	1.7	606	.039	45
4	2	1.3	621	.024	0
4	3	1.8	624	.251	5
4	4	1.9	633	.432	15
4	5	2.3	639	.366	10
4	6	2.4	642	.376	5
4	7	2.5	643	.344	5
4	8	2.7	648	.407	10
4	9	2.2	649	.488	15

TAP	POINT	STAT P	TEMP	DELTA P	YAW ANGL
5	1	1.4	616	.024	0
5	2	1.5	628	.019	0
5	3	1.9	639	.141	30
5	4	1.9	646	.463	25
5	5	2.2	664	.397	15
5	6	2.0	670	.437	20
5	7	1.9	674	.505	5
5	8	1.7	683	.056	45
5	9	1.7	688	.021	25

TAP	POINT	STAT P	TEMP	DELTA P	YAW ANGL
6	1	1.8	594	.444	20
6	2	1.8	621	.019	5
6	3	1.7	627	.095	15
6	4	2.0	635	.358	10
6	5	2.0	642	.305	5
6	6	2.2	653	.356	10
6	7	2.0	656	.366	0
6	8	2.3	659	.329	0
6	9	2.3	664	.327	0

TAP	POINT	STAT P	TEMP	DELTA P	YAW ANGL
7	1	1.8	614	.388	15
7	2	1.7	622	.107	5
7	3	1.8	627	.185	10
7	4	2.2	632	.275	10
7	5	2.4	637	.200	0
7	6	2.3	642	.263	5
7	7	2.2	644	.292	10
7	8	2.6	649	.288	5
7	9	2.5	653	.253	5

TAP	POINT	STAT P	TEMP	DELTA P	YAW ANGL
8	1	2.4	617	.319	0
8	2	2.3	627	.183	0
8	3	2.5	630	.180	0
8	4	2.3	633	.212	0
8	5	2.5	636	.190	5
8	6	2.7	640	.239	0
8	7	2.5	642	.212	0
8	8	2.7	645	.224	0
8	9	2.5	648	.224	0

TAP	POINT	STAT P	TEMP	DELTA P	YAW ANGL
9	1	2.2	629	.275	10
9	2	2.0	632	.180	10
9	3	2.1	635	.219	0
9	4	1.9	638	.107	0
9	5	1.9	641	.014	0
9	6	2.5	657	.197	0
9	7	2.3	664	.207	0
9	8	2.3	673	.192	0
9	9	2.6	686	.180	0

****
****

PRELIMINARY CALCULATIONS !!!!!!!!!
FINAL CALCULATIONS TO BE RUN AFTER
FECHHEIMER PROBES ARE
INDEPENDENTLY CALIBRATED

****
****

DATE = 6/25/87
LOCATION = WESTSECAIROUT
FILE IDENITY = IP6_25WSAO
BAROMETRIC PRESSURE = 25.52
PROBE IDENTY = E-4
DUCT AREA = 601.8

TAP	POINT	CORR V V	LOC/AVG	WTD TEMP
1	1	2083	.73	323
1	2	3415	1.20	761
1	3	1218	.43	271
1	4	2121	.75	470
1	5	1287	.45	284
1	6	1059	.37	232
1	7	1056	.37	229
1	8	1054	.37	226
1	9	1050	.37	223

TAP	POINT	CORR V V	LOC/AVG	WTD TEMP
2	1	1288	.45	275
2	2	2798	.99	617
2	3	1301	.46	288
2	4	927	.33	208
2	5	1444	.51	325
2	6	1781	.63	400
2	7	3625	1.28	813
2	8	3838	1.35	864
2	9	1575	.55	352

TAP	POINT	CORR V V	LOC/AVG	WTD TEMP
3	1	2490	.88	544
3	2	1062	.37	234
3	3	3150	1.11	707
3	4	4581	1.61	1036
3	5	3748	1.32	850
3	6	4421	1.56	1004
3	7	4589	1.62	1044
3	8	5065	1.78	1154
3	9	5027	1.77	1154

TAP	POINT	CORR V V	LOC/AVG	WTD TEMP
4	1	910	.32	194
4	2	1019	.36	223
4	3	3261	1.15	717
4	4	4155	1.46	926
4	5	3911	1.38	880
4	6	4014	1.41	908
4	7	3842	1.35	870
4	8	4137	1.46	944
4	9	4444	1.57	1016

TAP	POINT	CORR V V	LOC/AVG	WTD TEMP
5	1	1016	.36	220
5	2	909	.32	201
5	3	2144	.76	483
5	4	4059	1.43	923
5	5	4040	1.42	945
5	6	4134	1.46	976
5	7	4717	1.66	1120
5	8	1129	.40	272
5	9	890	.31	216

TAP	POINT	CORR V V	LOC/AVG	WTD TEMP
6	1	4022	1.42	841
6	2	903	.32	197
6	3	1955	.69	432
6	4	3863	1.36	864
6	5	3621	1.28	819
6	6	3883	1.37	893
6	7	4004	1.41	925
6	8	3802	1.34	882
6	9	3799	1.34	888

TAP	POINT	CORR V V	LOC/AVG	WTD TEMP
7	1	3905	1.38	844
7	2	2134	.75	468
7	3	2775	.98	613
7	4	3384	1.19	753
7	5	2940	1.04	660
7	6	3363	1.18	760
7	7	3505	1.23	795
7	8	3528	1.24	806
7	9	3315	1.17	762

TAP	POINT	CORR V V	LOC/AVG	WTD TEMP
8	1	3671	1.29	798
8	2	2800	.99	618
8	3	2781	.98	617
8	4	3021	1.06	673
8	5	2853	1.00	639
8	6	3215	1.13	725
8	7	3033	1.07	686
8	8	3120	1.10	709
8	9	3125	1.10	713

TAP	POINT	CORR V V	LOC/AVG	WTD TEMP
9	1	3379	1.19	748
9	2	2743	.97	611
9	3	3074	1.08	687
9	4	2158	.76	485
9	5	785	.28	177
9	6	2944	1.04	681
9	7	3028	1.07	708
9	8	2929	1.03	694
9	9	2852	1.00	689

LOCATION = WESTSECAIROUT
FILE IDENITY = IP6_25WSAO

AVERAGE VELOCITY = 2839 FPM

AVERAGE (WEIGHTED) TEMPERATURE = 639

AVERAGE (ARITHMETIC) TEMPERATURE = 636

AVERAGE STATIC PRESSURE (in. H2O) = 2.0
AVERAGE DENSITY (LBM/FT^3) = .03110

ACFM (ACTUAL FT^3/MIN) = 1708841
LB/HR (WET) = 3188853

DATE = 6-25-87
LOCATION = SEC AIR OUT EAST
FILE IDENITY = IP6_25ESAO
BAROMETRIC PRESSURE = 25.52
PROBE IDENTY = E-4
DUCT HEIGHT = 27.7
DUCT WIDTH = 21.7

TAP	POINT	STAT P	TEMP	DELTA P	YAW ANGL
1	1	-1.5	644	.561	0
1	2	-1.7	644	.161	10
1	3	-1.7	652	.036	10
1	4	-1.9	666	.241	20
1	5	-2.0	674	.292	15
1	6	-2.4	674	.212	0
1	7	-2.3	678	.148	5
1	8	-2.3	680	.188	10
1	9	-2.2	693	.185	10

TAP	POINT	STAT P	TEMP	DELTA P	YAW ANGL
2	1	-2.3	658	.291	10
2	2	-1.7	655	.168	15
2	3	-1.8	660	.231	35
2	4	-1.8	665	.246	25
2	5	-2.0	667	.107	15
2	6	-2.0	669	.207	15
2	7	-2.1	666	.202	20
2	8	-2.1	680	.207	15
2	9	-2.2	678	.202	15

TAP	POINT	STAT P	TEMP	DELTA P	YAW ANGL
3	1	-1.8	629	.356	0
3	2	-1.6	638	.034	5
3	3	-1.5	640	.126	35
3	4	-1.8	647	.339	30
3	5	-2.0	649	.207	25
3	6	-2.0	651	.319	30
3	7	-2.2	650	.290	20
3	8	-2.3	654	.261	20
3	9	-2.3	663	.224	25

TAP	POINT	STAT P	TEMP	DELTA P	YAW ANGL
4	1	-2.0	643	.366	0
4	2	-1.7	649	.039	0
4	3	-1.8	662	.046	0
4	4	-1.8	677	.346	40
4	5	-1.6	660	.236	35
4	6	-2.0	677	.295	30
4	7	-2.0	686	.376	20
4	8	-2.1	705	.395	15
4	9	-2.2	654	.175	20

TAP	POINT	STAT P	TEMP	DELTA P	YAW ANGL
5	1	-1.4	658	.034	0
5	2	-1.6	658	.041	0
5	3	-1.6	648	.039	0
5	4	-1.5	647	.126	0
5	5	-2.0	652	.366	30
5	6	-1.8	653	.459	30
5	7	-2.2	648	.369	25
5	8	-2.3	646	.349	30
5	9	-2.2	648	.451	30

TAP	POINT	STAT P	TEMP	DELTA P	YAW ANGL
6	1	-1.7	668	.311	30
6	2	-1.5	656	.014	0
6	3	-1.7	650	.114	25
6	4	-2.0	645	.500	20
6	5	-2.1	654	.263	20
6	6	-2.2	647	.407	15
6	7	-2.3	654	.432	10
6	8	-2.1	641	.153	20
6	9	-2.2	653	.415	10

TAP	POINT	STAT P	TEMP	DELTA P	YAW ANGL
7	1	-2.1	644	.300	20
7	2	-1.6	659	.212	0
7	3	-1.7	652	.251	25
7	4	-1.9	652	.251	30
7	5	-1.7	644	.046	25
7	6	-2.0	687	.100	40
7	7	-2.0	676	.449	20
7	8	-2.0	685	.444	25
7	9	-1.7	674	.512	25

TAP	POINT	STAT P	TEMP	DELTA P	YAW ANGL
8	1	-1.7	657	.336	5
8	2	-1.8	654	.319	0
8	3	-1.7	660	.434	20
8	4	-1.7	667	.454	25
8	5	-1.7	666	.112	30
8	6	-1.5	664	.029	35
8	7	-1.7	671	.075	35
8	8	-1.3	690	.061	0
8	9	-1.4	668	.018	0

TAP	POINT	STAT P	TEMP	DELTA P	YAW ANGL
9	1	-1.4	641	.078	0
9	2	-1.5	641	.034	40
9	3	-1.7	649	.019	0
9	4	-1.6	669	.024	0
9	5	-1.8	679	.024	0
9	6	-1.8	669	.029	0
9	7	-1.9	683	.083	0
9	8	-1.7	675	.078	0
9	9	-1.6	699	.075	0

****
****

PRELIMINARY CALCULATIONS !!!!!!!!!
FINAL CALCULATIONS TO BE RUN AFTER
FECHHEIMER PROBES ARE
INDEPENDENTLY CALIBRATED

****
****

DATE - 6-25-87
LOCATION - SEC AIR OUT EAST
FILE IDENITY - IP6_25ESAO
BAROMETRIC PRESSURE - 25.52
PROBE IDENTY - E-4
DUCT AREA - 601.8

TAP	POINT	CORR V V	LOC/AVG	WTD TEMP
1	1	4944	1.81	1165
1	2	2624	.96	619
1	3	1251	.46	298
1	4	3090	1.13	753
1	5	3507	1.28	865
1	6	3099	1.13	765
1	7	2587	.95	642
1	8	2883	1.06	718
1	9	2876	1.05	730

TAP	POINT	CORR V V	LOC/AVG	WTD TEMP
2	1	3545	1.30	854
2	2	2642	.97	633
2	3	2630	.96	635
2	4	3009	1.10	732
2	5	2124	.78	519
2	6	2950	1.08	722
2	7	2832	1.04	690
2	8	2965	1.09	738
2	9	2927	1.07	726

TAP	POINT	CORR V V	LOC/AVG	WTD TEMP
3	1	3922	1.44	903
3	2	1222	.45	285
3	3	1928	.71	452
3	4	3343	1.22	792
3	5	2743	1.00	652
3	6	3251	1.19	775
3	7	3364	1.23	800
3	8	3199	1.17	766
3	9	2872	1.05	697

TAP	POINT	CORR V V	LOC/AVG	WTD TEMP
4	1	4003	1.47	942
4	2	1320	.48	314
4	3	1441	.53	349
4	4	3028	1.11	750
4	5	2657	.97	642
4	6	3164	1.16	784
4	7	3888	1.42	976
4	8	4130	1.51	1066
4	9	2623	.96	628

TAP	POINT	CORR V V	LOC/AVG	WTD TEMP
5	1	1237	.45	298
5	2	1358	.50	327
5	3	1319	.48	313
5	4	2362	.86	559
5	5	3481	1.27	831
5	6	3895	1.43	931
5	7	3652	1.34	866
5	8	3392	1.24	802
5	9	3855	1.41	914

TAP	POINT	CORR V V	LOC/AVG	WTD TEMP
6	1	3234	1.18	791
6	2	795	.29	191
6	3	2040	.75	485
6	4	4395	1.61	1038
6	5	3210	1.18	769
6	6	4085	1.50	967
6	7	4304	1.58	1030
6	8	2439	.89	572
6	9	4216	1.54	1008

TAP	POINT	CORR V V	LOC/AVG	WTD TEMP
7	1	3411	1.25	804
7	2	3075	1.13	742
7	3	3021	1.11	721
7	4	2887	1.06	689
7	5	1296	.47	305
7	6	1643	.60	413
7	7	4226	1.55	1046
7	8	4070	1.49	1020
7	9	4344	1.59	1072

TAP	POINT	CORR V V	LOC/AVG	WTD TEMP
8	1	3846	1.41	925
8	2	3758	1.38	900
8	3	4124	1.51	996
8	4	4080	1.49	996
8	5	1946	.71	474
8	6	939	.34	228
8	7	1512	.55	371
8	8	1678	.61	424
8	9	905	.33	221

TAP	POINT	CORR V V	LOC/AVG	WTD TEMP
9	1	1856	.68	435
9	2	941	.34	221
9	3	922	.34	219
9	4	1046	.38	256
9	5	1051	.38	261
9	6	1149	.42	281
9	7	1952	.71	488
9	8	1885	.69	466
9	9	1868	.68	478

DATE = 6/25/87
LOCATION = WESTSECAIROUT
FILE IDENITY = IP6_25WSAO
BAROMETRIC PRESSURE = 25.52
PROBE IDENTY = E-4
DUCT HEIGHT = 27.7
DUCT WIDTH = 21.7

TAP	POINT	STAT P	TEMP	DELTA P	YAW ANGL
1	1	1.9	440	.126	10
1	2	1.5	633	.273	5
1	3	1.7	633	.034	0
1	4	1.6	630	.104	0
1	5	1.7	627	.051	30
1	6	1.8	621	.026	0
1	7	1.8	615	.026	0
1	8	1.8	610	.026	0
1	9	1.8	602	.026	0

TAP	POINT	STAT P	TEMP	DELTA P	YAW ANGL
2	1	1.9	607	.039	0
2	2	1.9	626	.207	20
2	3	1.7	628	.039	0
2	4	1.7	638	.021	15
2	5	1.6	639	.058	25
2	6	1.5	638	.146	45
2	7	1.6	637	.314	10
2	8	1.8	639	.366	15
2	9	1.5	635	.085	35

TAP	POINT	STAT P	TEMP	DELTA P	YAW ANGL
3	1	1.7	620	.217	35
3	2	1.4	626	.026	0
3	3	1.5	637	.231	5
3	4	1.7	642	.593	25
3	5	2.0	644	.334	10
3	6	2.2	645	.466	10
3	7	2.2	646	.502	10
3	8	2.1	647	.612	10
3	9	2.1	652	.600	10

INTERMOUNTAIN POWER PROJECT
UNIT NO. 1 - RB-614

AIR HEATER/EFFICIENCY TEST - JUNE 1987

OVERVIEW

Boiler performance tests were conducted on Unit No. 1 from June 22 through June 27, 1987. The purpose of the tests was to was to determine boiler efficiency, air heater leakage and air heater performance. The test method was specified by Air Preheater Co. and consisted of point by point traverses for velocity, temperature, and orsat (where applicable) at the economizer gas outlet, bag house inlet, primary and secondary air heater gas inlets and air outlets, primary air heater gas outlet, and tempering air. Denver Service was contracted by IPP to conduct the tests. The tests were witnessed by Air Preheater Co.

On Saturday, June 27, performance tests were conducted on the Boiler to obtain quality data with an upper mill out of service. Data was collected with balanced firing, normal high cooling air to the idle burner compartment, pulverizers biased up with normal cooling air and pulverizers biased up with reduced cooling air.

The test results are summarized on Table I. The conclusions are:

1. The average efficiency the 6/25 and 6/26 tests was 88.61 % when corrected to contract conditions versus the guarantee value of 88.57 %.

2. The average total air heater leakage for the 6/24, 6/25 and 6/26 tests was 461 Klb/hr versus a guarantee of 477 Klb/hr.

3. The calculated gas temperature leaving the secondary air heaters was 6 to 7 F more than expected for the test conditions which is within APCO's guarantee margin when considering test uncertainty.

4. The gas temperature leaving the primary air heaters was on the order of 65 F more than expected for the test conditions. This translates to approximately 6 to 7 F on final end temperature since only 10 % of the gas weight passes through the primary air heaters.

5. The composite gas temperature leaving the air heaters (excluding leakage) when corrected to contract conditions is 20 F higher than expected. Two thirds of this is due to poorer than expected air heater performance and one third due to higher than expected economizer gas outlet temperature. The addition of economizer sootblowers is expected to reduce economizer gas outlet temperature to expected.

6. Steam Temperature - With the upper rear wall burners out of service, pulverizers biased toward the upper burners and reduced cooling air to the idle compartment, superheat and reheat temperatures were 1008 and 1013 respectively with 22 % excess air. Steam temperature would be expected to be within guarantee with 17 % excess air (contract).

IP14_001699

INTERMOUNTAIN POWER PROJECT
Boiler
AIR HEATER/EFFICIENCY TEST SUMMARY

	EXPECTED	6/24/87	6/25/87	6/26/87	AVE
BOILER EFFICIENCY, %					
TEST	---	---	88.53	88.51	88.52
CORRECTED	* 88.57	---	88.60	88.62	88.61
AH LEAKAGE, KLB/HR					
TOTAL	477	446	430	508	461
PRIMARY	* 163	216	176	120	171
SECONDARY (BY DIFFERENCE)	* 314	230	254	388	291
AIR TEMP ENT AIR HEATERS, F					
PRIMARY TEST	---	---	114	114	---
PRIMARY CORRECTED	77	---	77	77	77
SECONDARY TEST	---	---	90	91	---
SECONDARY CORRECTED	64	---	64	64	64
GAS TEMP LVG AH'S (EXCL LKG), F					
EXPECTED (TEST CONDITIONS)	---	---	321	318	320
TEST	---	---	333	331	332
CORRECTED	295	---	315	314	315
GAS TEMP LVG PRI AH (EXCL LKG), F					
EXPECTED (TEST CONDITIONS)	---	---	264	269	267
TEST	---	---	334	330	332
CORRECTED	313	---	310	306	308
GAS TEMP LVG SEC AH (EXCL LKG), F					
EXPECTED (TEST CONDITIONS)	---	---	326	324	325
TEST	---	---	332	331	332
CORRECTED	292	---	316	314	315

* Guaranteed

Calculations based on O2 and measured primary air flow from plant computer.

Boiler

TEMPERATURES, F	SH	RH
BALANCED FIRING - NORM COOLING	968	965
BIAS UP - NORM COOLING	986	977
BIAS UP - MIN COOLING	1008	1013

TABLE I

IP14_001700

INSTRUMENTATION AND TEST PROCEDURE

The test procedure used was essentially in accordance with Air Preheater Co's requirements for an acceptance. The only exception was that the conditions at the secondary air heater gas outlets could not be measured directly. For air and gas side measurements, APCO requires a point by point traverse (with the exception of the air heater air inlets where a thermocouple grid was installed). The number of points per flue or duct was determined by dividing the flue or duct into equal areas not to exceed 3 ft. by 3 ft. A table showing the test locations, measurements required at each location and the number of points per location is contained in Appendix C. A sketch showing the physical dimensions of each location is also included. One complete traverse constituted one test. The economizer gas outlet, bag house inlet (air heater gas outlets), secondary air heater gas in and air out were coordinated such that the start and stop times coincided. Since these locations had the most points, they governed the length of a test. The primary air heaters were measured individually during the test period. The gas inlet and gas outlet of each primary air heater were traversed simultaneously and the primary air outlet and tempering air were traversed either immediately before or after the gas side traverses.

Water manometers were installed at the air heater air inlets and gas outlets to measure static pressure and air to gas pressure differential.

Coal and ash samples were obtained by IPP personnel. The ash and fuel analysis results are contained in Appendix I. IPP personnel also obtained local barometric pressure and wet and dry bulb temperatures to calculate moisture in air.

The remaining data necessary to determine output and efficiency were obtained from the plant computer. Data was obtained at five (5) minute intervals and later downloaded to an HP-9816 computer for averaging and reporting.

DATA REDUCTION AND CALCULATION METHODOLOGY

Static pressure and velocity head was measured at each traverse point with a Fechheimer probe and B&W's Velocity Pressure Averaging System (VPAS). Velocities were calculated for each point in accordance with PTC-11 Fans. Flue gas density was calculated in accordance with PTC-4.1 Steam Generators. All temperatures and O_2/CO_2 readings were weight averaged based on velocity as well as arithmetically averaged. A linear regression analysis was used to determine the combustion line (with respect to the flue gas volumetric combustion chart) for each orsat station. The combustion line relationship was then used to eliminate obviously bad orsat points; points with a CO_2 deviation greater than 0.35 from expected for the measured O_2. The point by point data listing, calculated velocity and weight average calculations are contained in appendices D, E and F. The orsat points that were eliminated are indicated as well as the weighted and arithmetic averages for each test station.

IP14_001701

A comparison of the arithmetic versus weighted average is summarized in Appendix K. It will be observed that there is virtually no difference between the weighted average results and the arithmetic average results. Thus, for future testing, B&W recommends that multi-point grids and the composite sampling method be employed. This has the benefit of reducing uncertainty by virtue of more samples.

For the test, there were eleven orsat stations. All orsat results were to the left of the flue gas combustion line. Refer to Appendix J for a tabulation of the combustion line results (maximum CO_2 at zero O_2) for each test station for each of the test days. It will be observed that the results for each test station are very consistent between the test days. The average combustion line based on the orsat results was 18.6 % CO_2 +/- 0.25 % at 0 % O_2. This order of variation is typically as good as one can achieve with an orsat. For the final fuel analysis, the expected CO_2 at zero O_2 is 18.3 %. If the O_2/CO_2 data is not on the combustion line, the CO_2 method (PTC 4.1 paragraphs 9.1 and 9.2) for calculating excess air and air and gas weights can be erroneous, especially when comparing differentials as when calculating air heater leakage. For this reason, B&W has more confidence in the calculations based on O_2 than CO_2, however, both are reported for comparison.

Unit efficiency was calculated in accordance with ASME PTC 4.1 Heat Loss Method, Abbreviated Efficiency Form. The key measurement points for determining efficiency by the heat loss method are average air temperature entering the unit and average gas temperature and excess air leaving the unit. The average air inlet temperature is a weighted average of the air temperature entering the primary and secondary air heaters. The alternate methods for determining the primary/secondary air flow split are described below. The average gas temperature/excess air leaving the air heaters (unit) is a composite sample of the gas entering the bag house which is a mix of the gas leaving the primary and secondary air heaters. This is the most accurate measurement location for determining unit efficiency. Flue gas sampling at the economizer gas outlet in conjunction with the bag house inlet enables calculation of total air heater leakage with a high confidence level.

Problems were encountered with measuring the air temperature at the air heater air inlets on 6/24. For purposes of evaluating air heater leakage, the difference between the plant and test averages on 6/25 and 6/26 was used to adjust the plant air heater air inlet temperature in order to calculate efficiency and gas flow. These results were not used for evaluation of unit efficiency and/or air heater performance, however, any error in the efficiency calculation has negligible impact on calculated air heater leakage mass flows.

In order to evaluate individual air heater performance and leakage, it is desirable to measure the conditions at the gas and air inlets and outlets of each air heater. On this unit, it was not possible to measure the secondary air heater gas outlet temperature and flue gas analysis directly due to the flue arrangement. Therefore, it was necessary to calculate the secondary air heater gas outlet conditions based on the primary air heater gas outlet and bag house gas inlet conditions. The following describes this calculation as well as the alternate methods used to determine air and gas mass flow splits.

IP14_001702

Total gas mass flow leaving the economizer and air heaters (entering the bag house) was calculated stoichiometrically based on the gas analysis data and fuel input. Fuel input was calculated from measured unit output and efficiency determined as described above.

Gas mass flow splits - B&W preferred method - Based on measured primary air flow to the pulverizers, mill inlet temperature, hot and cold primary air temperature; calculate air flow through the primary air heater by heat balance. Calculate the gas flow through the primary air heater by heat balance from the primary air heater gas side data and heat added to the primary air as measured and calculated above. It is noted that the pulverizers and primary air flow pressure transducers had been recently calibrated. The plant indication of percent primary air flow was converted to primary element pressure differential based on the latest calibration data. Primary air flow to each pulverizer was then calculated from this pressure differential, mill inlet temperature, and calibration ('K') factors for each mill. The gas mass flow entering the secondary air heaters is the difference between total gas mass flow leaving the economizer and the gas mass flow entering the primary air heaters.

Gas mass flow splits - APCO method - The measured gas flows entering the primary and secondary air heaters are adjusted proportionally by the ratio of calculated gas mass flow leaving the economizer divided by the sum of the measured gas mass flows entering the air heaters. These calculations are contained in Appendix H. It will be observed that the gas flow correction factors are reasonable.

Secondary air heater gas outlet conditions - Total leakage between the economizer gas outlet and bag house gas inlet (composite leaving all air heaters) was calculated as described above. The primary air heater leakage was calculated from the primary air heater gas inlet and outlet orsat data and gas mass flow entering as determined by either of the methods above. The secondary air heater leakage is the difference between the total air heater leakage and primary air heater leakage. Knowing the secodary air heater leakage, gas temperature leaving the primary air heater, average gas temperature leaving all the air heaters and gas mass flows, it is possible to calculate the average gas temperature leaving the secondary air heaters. A detailed description of this calculation procedure and calculations are contained in Appendix H.

For air heater evaluation and efficiency calculations using measured gas flows, the air flow through the air heaters was determined by heat balance. For efficiency calculated by the B&W method for calculating gas flow splits, the total air flow was calculated stoichiometrically assuming 2 % setting infiltration. Secondary air flow is the difference between total air flow and the measured air flow entering the pulverizers. The primary/secondary air flow split is required to determine the average entering air temperature for the efficiency calculations, and is not critical.

IP14_001703

TEST RESULTS

For the final analysis of the results, B&W considers the following methods for reducing the data and calculating the results to be the most accurate:

1. O2 method for calculating excess air and efficiency.

2. Utilizing the primary air flow measured by the plant instrumentation for calculating air/gas flow splits.

In this section, the results of the different calculation methods are presented and discussed. For simplicity of presentation in the tables and discussion, the following nomenclature is used:

1. O2 - O2 method for calculating excess air.

2. CO2 - CO2 method for calculating excess air.

3. MPAF - Calculated air/gas flow splits based on primary air flow to the pulverizers measured by the plant control system. In the text, this is referred to as the 'heat balance method'.

4. TRAV - Calculated air/gas flow splits based on the point by point velocity measurements. In the text, 'measured air/gas flow' refers to directly measured or calculated flows based upon the traverse data.

A summary of the air and gas flow results are shown in Table II. The calculations are contained in Appendix _H. Items of note are:

1. The measured primary air heater gas flow is higher than the gas flow calculated by heat balance. Since the primary air heater gas flow is only about 10 % of the total gas weight, this has no significant impact on the calculations except primary air heater versus secondary air heater leakage. The differences in secondary air heater gas flow follow the primary air heater gas flow, but the percent error is significantly less by virtue of the higher gas flow for the same error.

2. For the 6/25 and 6/26 tests, there is resonable agreement between the calculation methods for air flow to the pulverizers and secondary air heaters. The plant instrumentation is repeatable and thus more believable. Differences would have a slight impact on the weighted average entering air temperature and thus efficiency.

IP14_001704

	6/24/87 AVE		6/25/87 AVE		6/26/87 AVE	
	WEST	EAST	WEST	EAST	WEST	EAST
PRI AH GAS FLOW, KLB/HR						
MPAF / O2	372		349		360	
MPAF / CO2	370		348		362	
TRAV / O2	406	529	373	413	394	418
TRAV / CO2	394	514	363	402	384	407
PRI AH AIR FLOW, KLB/HR						
TO MILLS, TOTAL						
MPAF	1441		1451		1455	
TRAV / O2	1848		1471		1624	
TRAV / CO2	1766		1421		1563	
THRU AH, AVE PER HTR						
MPAF	453		411		443	
TRAV / O2	569		456	471	501	498
TRAV / CO2	555		445	462	486	484
PULV TEMP AIR, TOTAL						
MPAF	536		629		569	
TRAV / O2	711		544		625	
TRAV / CO2	656		514		594	
SEC AH GAS FLOW, KLB/HR						
MPAF / O2	6824		6827		7056	
MPAF / CO2	6610		6634		6846	
TRAV / O2	6633		6739		6963	
TRAV / CO2	6442		6564		6778	
SEC AH AIR FLOW, KLB/HR						
MPAF / O2	5425		5380		5623	
MPAF / CO2	5168		5148		5380	
TRAV / O2	5018		5359		5454	
TRAV / CO2	4842		5178		5272	

TABLE II
AIR & GAS FLOW CALCULATION SUMMARY

TCH-082787

A summary of the air heater leakage results is shown in Table III. The calculations are contained in Appendix H.

1. The composite air heater leakage was very repeatable for all three tests. The maximum deviation from the average is 10 % (0.6 % of total gas weight).

2. The leakage using the CO_2 method is higher than that calculated using the O_2 method, approximately 1.0 % of total gas weight. Due to the average O_2/CO_2 relationship being above the combustion line, B&W considers the O_2 method to be more believable.

3. The west primary air heater leakage is out of line (high) on 6/24 versus 6/25 and 6/26. The east primary air heater leakage is out of line (low) on 6/26 versus 6/24 and 6/25. The average air heater leakage column reflects deleting these two points from the average.

4. There is no significant difference in the primary air heater leakage calculated by either the O_2 or CO_2 method.

5. The primary air heater leakage is higher utilizing the measured gas flow data than the heat balance method since the traverse data indicates a higher primary air heater gas flow.

6. Based on the O_2 method and gas flow calculated by heat balance, the primary air heater leakage guarantee of 163 Klb/hr and secondary air heater leakage guarantee of 314 Klb/hr are met.

	6/24/87		6/25/87		6/26/87		AVERAGE *	
AH LEAKAGE, KLB/HR	TRAV	MPAF	TRAV	MPAF	TRAV	MPAF	TRAV	MPAF
COMPOSITE OF ALL AH'S								
O_2	446		430		509		462	
CO_2	518		525		616		553	
WEST PRI AH								
O_2	150	138	90	84	79	72	85	78
CO_2	140	131	86	82	83	78	85	80
EAST PRI AH								
O_2	111	78	109	92	57	49	110	85
CO_2	105	76	100	86	58	51	103	81
AVE PRI AH								
O_2	266	216	199	176	136	121	195	163
CO_2	250	207	186	168	141	129	188	161
AVE SEC AH								
O_2	180	234	231	254	373	388	267	299
CO_2	268	314	339	356	476	487	365	392

* AVERAGE OMITS 6/24 WEST PAH AND 6/26 EAST PAH DATA

TABLE III - AIR HEATER LEAKAGE SUMMARY

IP14_001706

A comparison of the results of the gas temperature entering the bag house (composite leaving the air heaters) is shown on Table IV and discussed below. The results for the individual air heaters is discussed later.

1. The corrected gas temperature entering the bag house (temperature excluding leakage) is 2 F to 3 F higher using the CO_2 method versus the O_2 method. This is due to the higher calculated leakage. The difference translates to 0.07 % in calculated efficiency.

2. Some concern has been expressed about the high gas temperature (including AH leakage) entering the bag house. The design target value was 280 F. The average for the three tests was 319 F. However, the average entering air temperature during the tests was 95 F versus the average design value of 67 F (64 F entering the secondary and 77 F entering the primary air heaters). Correcting the exit gas temperature for entering air temperature yields an average exit gas temperature of 300 F. The air heater exit gas temperature is expected to decrease on the order of 5 F with the addition of economizer sootblowers.

		6/24/87	6/25/87	6/26/87
GAS ENT BAG HOUSE, F				
	(INCL LKG)	318	321	317
O_2 BASIS	(EXCL LKG)	330	333	331
CO_2 BASIS	(EXCL LKG)	332	336	334
AVE AIR IN TEMP		93	95	96
*ENT BAG HOUSE	(INCL LKG)	301	302	298
AVE ECON GAS OUT		752	747	753

* CORRECTED FOR CONTRACT AVERAGE ENTERING AIR TEMP OF 67 F

TABLE IV - GAS TEMPERATURE ENTERING BAG HOUSE SUMMARY

The efficiency results are shown on Table V. Efficiency was first calculated based on the composite gas temperature entering the bag house. These results were used to calculate total gas flow and air heater leakage. The plant measured primary air flow was used for these calculations. From these results, the measured gas flow data entering the air heaters was adjusted to agree with the total leaving the economizer calculated stoichiometrically. Also the gas conditions leaving the secondary air heater were calculated. A summary of the composite efficiency calculations is contained in Appendix H.

Efficiency was then re-calculated based on the separate primary and secondary air heater data and calculated results. These efficiency calculation results were also corrected to contract conditions (identified by CORR). The correction to contract conditions are for entering air temperature, fuel analysis and excess air. A summary of the composite efficiency calculations is contained in Appendix G.

IP14_001707

It will be observed that the test efficiencies are the same for both the composite and individual air heater basis. Other items of note are:

1. The efficiency for the test conditions is higher using the CO2 method than the O2 method because the calculated excess air and thus dry gas weight is lower even though the gas temperature leaving (excluding leakage) is higher.

2. The method for determining gas and air splits has no impact on the calculated or corrected efficiency.

3. The corrected efficiency is 0.06 % to 0.08 % lower using the CO2 method than the O2 method. This is due to the higher calculated exit gas temperature (excluding leakage) using the CO2 method.

	6/24/87		6/25/87		6/26/87	
EXCESS AIR MEAS BASIS	O2	CO2	O2	CO2	O2	CO2
EXCESS AIR LVG ECON, %	21	16	21	17	23	19
EFFICIENCY, %						
COMPOSITE ANALYSIS						
TEST - MPAF	88.40	88.50	88.53	88.61	88.50	88.58
INDIVIDUAL PRI/SEC AH						
TEST - MPAF	---	---	88.53	---	88.51	---
CORR - MPAF	---	---	88.60	---	88.62	---
TEST - TRAV	---	---	88.54	88.62	88.52	88.60
CORR - TRAV	---	---	88.61	88.53	88.63	88.57

TABLE V - EFFICIENCY SUMMARY

Table VI shows actual versus expected exit gas temperature for the air heaters. This table shows the air heater exit gas temperature as measured (including leakage) and corrected for no leakage for both the O2 and CO2 methods for calculating leakage. Also shown is the expected air heater exit gas temperature for the test conditions for both the measured flow (TRAV) and heat balance (MPAF) methods for determining air and gas flows. B&W's first principle air heater model was used to determine expected air heater performance based on the original predicted performance for the air heaters.

1. The secondary air heater exit gas temperature is 2 to 11 F higher than expected depending upon the test and calculation method. This is well within Air Preheater's guarantee considering test uncertainty.

IP14_001708

2. The primary air heater exit gas temperature is 56 to 70 F higher than expected. The performance of the east and west primary air heaters is similar and repeatable for the two tests. The expected exit gas temperature is approximately the same for the alternate calculation methods.

		6/25/87	6/26/87
SEC AH EXIT GAS TEMPERATURE, F			
TST	(INCL LKG)	324	319
TST - O2	(EXCL LKG)	332	331
EXP - O2 - MPAF	(EXCL LKG)	326	324
EXP - O2 - TRAV	(EXCL LKG)	323	329
TST - CO2	(EXCL LKG)	336	335
EXP - CO2 - TRAV	(EXCL LKG)	325	330

		AVE		AVE	
PRI AH EXIT GAS TEMPERATURE, F		WEST	EAST	WEST	EAST
TST	(INCL LKG)	289	293	295	306
TST - O2	(EXCL LKG)	329	339	329	331
EXP - O2 - MPAF	(EXCL LKG)	264		269	
EXP - O2 - TRAV	(EXCL LKG)	264	283	267	272
TST - CO2	(EXCL LKG)	328	336	332	333
EXP - CO2 - TRAV	(EXCL LKG)	262	280	267	273

TABLE VI - ACTUAL VS EXPECTED AH PERFORMANCE

SUMMARY AND CONCLUSIONS

1. The average efficiency corrected to contract conditions was 88.61 % by the O2 method and 88.55 % by the CO2 method. This meets the guarantee of 88.57 %.

2. The total air heater leakage was 462 Klb/hr by the O2 method and 553 Klb/hr by the CO2 method. The guarantee is 477 Klb/hr. The calculated primary air heater leakage varies between 161 and 195 Klb/hr depending upon the calculation method versus a guarantee of 163 Klb/hr. The calculated secondary air heater leakage varies between 267 and 392 Klb/hr depending upon the calculation method versus a guarantee of 314 Klb/hr. Note that the secondary air heater leakage is the difference between the measured total air heater leakage and the measured primary air heater leakage, thus the high secondary air heater leakage corresponds to the low primary air heater leakage and vice versa.

IP14_001709

3. The secondary air heater exit gas temperature (excluding leakage) is 6 to 7 F higher than expected which is within normal design tolerances when considering test uncertainty.

4. The primary air heaters are not performing as well as expected. The exit gas temperature is on the order of 55 to 65 F higher than expected. This conclusion is independent of the test calculation procedure. The primary air heaters only handle approximately 10 % of the gas flow, thus, the impact of primary air heater performance on average exit temperature is on the order of 6 F.

5. The average gas temperature entering the bag house (including air heater leakage) was 319 F with an entering air temperature of 95 F. Correcting for the contract average entering air temperature of 67 F, the gas temperature entering the bag house would be 300 F, or 20 F higher than expected. Two thirds of this is attributed to air heater performance and one third due to higher than expected gas temperature leaving the boiler. The addition of economizer sootblowers is expected to reduce the boiler gas outlet temperature.

6. Excessive cooling air to upper burner compartments was demonstrated to have a significant impact on steam temperature. Steam temperatures can be maintained by minimizing cooling air and bias firing.

7. While the test results utilizing point by point traverses were repeatable, there is concern on the part of B&W about the uncertainty introduced due to variations with time and coordination between test locations. The test results demonstrated that the arithmetic average of the individual traverse points agreed with the weighted average. For future testing, it is recommended that temperature grids and composite flue gas analysis be utilized. This would have the advantage of reducing test uncertainty by virtue of more samples as well as eliminate the uncertainty due to time and coordination between test locations in that all test locations are measured simultaneously.

IP14_001710

RB-614 26 Aug 1987 14:47:35

TEST NO.	2A	3A	4A	5A	
TEST SEQ. NO.	1	2	3	4	
DATE	06/23/87	06/24/87	06/25/87	06/26/87	
TIME START	1050	1110	1015	1045	
TIME END	1735	1645	1530	1625	
LOAD MW	857	850	847	853	
FUEL	PC	PC	PC	PC	

2A AVERAGE OF SCANS 1-81
3A AVERAGE OF SCANS 1 - 68
4A AVERAGE OF SCANS 1 - 64
5A AVERAGE OF SCANS 1 - 69

DATA PAGE NO. 2 FLOWS MLB/HR

LOAD MW		857.2	850.1	846.6	853.0	2	1
HP STEAM FLOW		6213.1	6183.8	6140.4	6217.7	2	2
FW FLOW		6155.5	6142.4	6050.3	6159.4	2	3
BLOW DOWN FLOW		0.0	0.0	0.0	0.0	2	4
RH-1 SP FLOW		5.1725	5.6713	3.8197	4.2307	2	5
SH-1 SP FLOW W		0.0	0.0	0.0	0.0	2	7
SH-1 SP FLOW E		13.00	13.83	14.23	14.14	2	8
SH-2 SP FLOW W		16.90	0.00	32.23	11.42	2	9
SH-2 SP FLOW E		19.24	11.92	32.17	17.87	2	10
TOTAL AIR FLOW		79.71	78.51	78.16	81.18	2	18
TOTAL FUEL FLOW		337.5	333.5	328.4	336.0	2	19
FEGT - PYROSONICS	TG	100.0	100.0	100.0	100.0	2	20

DATA PAGE NO. 3 FLUID TEMPERATURES F - PLANT

SSH OUT T (P)		1004.8	1007.1	1005.0	1005.4	3	1
TURB THROT T (P)		1004.0	1006.4	1004.1	1005.0	3	3
ECON IN T (P)		551.8	551.0	550.9	551.8	3	5
SH-1 SPRAY TEMP		337.5	333.9	337.5	341.1	3	7
LVG 1st STG ATT(P)-W		719.0	717.3	718.1	724.7	3	8
LVG 1st STG ATT(P)-E		725.0	726.0	728.2	729.3	3	9
ENT 1st STG ATT(P)-W		718.9	718.9	719.7	722.2	3	10
ENT 1st STG ATT(P)-E		724.4	724.7	726.2	727.6	3	11
LVG RH-1 T (P)-N		1006.9	1008.3	996.3	997.1	3	12
LVG RH-1 T (P)-S		1009.9	1011.3	1000.5	1001.6	3	13
HRH AT TURB (P)-N		1009.0	1009.4	998.3	999.7	3	14
HRH AT TURB (P)-S		1011.9	1012.4	1001.3	1003.4	3	15
ENT RH-1 T (P)		625.1	617.4	624.2	624.8	3	16
CRH ENT ATT (P)	SGJ024	626.6	627.7	626.1	626.4	3	18

TEST NO.		2A	3A	4A	5A	
TEST SEQ. NO.		1	2	3	4	
DATE		06/23/87	06/24/87	06/25/87	06/26/87	
TIME START		1050	1110	1015	1045	
TIME END		1735	1645	1530	1625	
LOAD MW		857	850	847	853	

DATA PAGE NO. 3 FLUID TEMPERATURES F - PLANT

RH DSUPHTR INL T (P)	COA06A	624.6	625.5	623.5	624.1	3 19
RH-1 SPRAY T (P)		150.3	275.8	164.3	276.2	3 20
LVG 2nd STG AT (P)-W		788.8	792.4	790.2	789.7	3 21
LVG 2nd STG AT (P)-E		779.4	779.4	767.8	777.5	3 22
ENT 2nd STG AT (P)-L		792.6	789.2	796.7	792.6	3 23
ENT 2nd STG AT (P)-R		783.9	779.1	778.0	781.3	3 24
ECON OUT T (P)		573.4	571.8	571.8	572.2	3 27
ECON OUT T (P)		571.1	570.6	574.2	574.2	3 28
SAT CON TUBE(P)		678.4	678.0	678.0	676.7	3 29

DATA PAGE NO. 5 FLUID PRESSURES PSIG

SEC SH OUT PRESS (P)		2439.5	2460.1	2445.8	2460.9	5 2
DRUM PRESS (P)		2667.3	2682.0	2666.8	2686.8	5 3
HRH RH-1 PRESS (P)		523.4	520.9	517.8	522.8	5 4
CRH RH-1 PRESS (P)		556.6	553.9	549.8	555.9	5 5
NO.1 HTR EXT P (P)-A		171.9	270.9	1044.9	1055.7	5 6
NO.1 HTR EXT P (P)-B		1053.0	1045.9	1043.2	1054.1	5 7
NO.2 HTR EXT P (P)-A		546.1	543.1	539.9	545.3	5 8
NO.2 HTR EXT P (P)-B		549.7	546.7	543.2	549.0	5 9
ECON IN PRESS (P)		36.25	36.25	36.25	36.25	5 12
SEC SH IN PRES (P) E		2564.9	2582.1	2568.3	2585.6	5 13
SEC SH IN PRES (P) W		0.0	0.0	0.0	0.0	5 14

DATA PAGE NO. 6 AIR & GAS DATA - PLANT

AMBIENT AIR TEMP		83.19	86.02	87.11	90.44	6 1
AIR ENT SEC AH (P)-A		87.06	90.52	91.94	94.72	6 2
AIR ENT SEC AH (P)-B		86.11	89.87	91.42	93.78	6 3
AIR ENT PRI AH (P)-A		108.2	111.2	112.6	115.1	6 4
AIR ENT PRI AH (P)-B		106.3	109.4	110.6	113.0	6 5
AIR LVG SEC AH (P)-A		655.5	658.9	655.7	659.9	6 6
AIR LVG SEC AH (P)-B		667.4	670.9	672.1	675.1	6 7
AIR LVG PRI AH (P)-A		536.7	537.0	534.0	532.7	6 8
AIR LVG PRI AH (P)-B		499.1	502.1	500.6	498.7	6 9
GAS LVG SEC AH (P)-A		307.0	310.6	312.9	314.9	6 10
GAS LVG SEC AH (P)-B		318.4	323.2	318.7	321.8	6 11
GAS LVG PRI AH (P)-A		307.3	306.0	304.8	306.3	6 12
GAS LVG PRI AH (P)-B		309.6	308.4	307.5	306.9	6 13
GAS LVG ECON (P)-E		750.8	752.7	757.3	761.6	6 14
GAS LVG ECON (P)-W		748.3	748.0	750.3	756.0	6 15
O2 LVG ECON (P)-W		2.5930	2.4666	2.4691	2.8116	6 20
O2 LVG ECON (P)-E		2.7013	2.8213	2.7730	2.7988	6 21
NOX @ STACK (P)		256.3	234.2	238.5	236.1	6 24
O2 @ STACK (P)		256.3	234.2	238.4	236.1	6 25

TEST NO.		2A	3A	4A	5A	
TEST SEQ. NO.		1	2	3	4	
DATE		06/23/87	06/24/87	06/25/87	06/26/87	
TIME START		1050	1110	1015	1045	
TIME END		1735	1645	1530	1625	
LOAD MW		857	850	847	853	

DATA PAGE NO. 6 AIR & GAS DATA - PLANT

BAROMETRIC PRESS (P)		25.45	25.55	25.52	25.49	6 29
DRY BULB TEMP (B)		81.00	83.40	84.10	86.00	7 26
WET BULB TEMP (B)		55.00	56.10	55.30	56.40	7 27
MOIST IN AIR (B)		.0049	.0050	.0044	.0046	7 28
REL HUMIDITY (P)		-25.00	-25.00	-25.00	-25.00	7 30

DATA PAGE NO. 7 AIR & GAS DATA - TEST

AIR ENT SEC AH (B) W	GRID	86.40	83.60	93.80	94.10	7 2
AIR ENT SEC AH (B) E	GRID	87.00	83.70	87.10	87.30	7 3
AIR ENT PRI AH (B) W	GRID	107.8	105.9	115.8	117.4	7 4
AIR ENT PRI AH (B) E	GRID	111.1	109.1	111.9	110.7	7 5
AIR LVG SEC AH (B) W	TRAV	0.0	655.0	636.0	652.0	7 6
AIR LVG SEC AH (B) E	TRAV	0.0	663.0	661.0	658.0	7 7
AIR LVG PRI AH (B) W	TRAV	474.0	452.0	470.0	467.0	7 8
AIR LVG PRI AH (B) E	TRAV	513.0	469.0	489.0	478.0	7 9
GAS LVG PRI AH (B) W	TRAV	287.0	290.0	288.0	295.0	7 12
GAS LVG PRI AH (B) E	TRAV	296.0	307.0	295.0	306.0	7 13
GAS LVG ECON (B) W	GRID	754.0	756.1	753.4	760.8	7 14
GAS LVG ECON (B) E	GRID	756.3	760.0	755.2	760.7	7 15
GAS ENT SEC AH (B) W	TRAV	0.0	747.0	747.0	744.0	7 16
GAS ENT SEC AH (B) E	TRAV	0.0	722.0	747.0	747.0	7 17
GAS ENT PRI AH (B) W	TRAV	734.0	742.0	731.0	742.0	7 18
GAS ENT PRI AH (B) E	TRAV	742.0	740.0	737.0	738.0	7 19
O2 LVG ECON (B) W	TELE	4.3679	3.1774	2.9530	3.5826	7 20
O2 LVG ECON (B) E	TELE	3.1506	3.5595	3.2767	4.2640	7 21

DATA PAGE NO. 8 FW HTR TEMPERATURES F - PLANT

NO.1 HTR EXT T (P)-A		799.5	800.0	798.6	799.5	8 1
NO.1 HTR EXT T (P)-B		799.5	800.2	798.6	799.9	8 2
NO.2 HTR EXT T (P)-A		625.6	627.1	624.8	625.7	8 3
NO.2 HTR EXT T (P)-B		625.9	626.9	625.4	625.2	8 4
NO.1 FW LVG T (P)-A		553.1	552.8	552.8	553.2	8 5
NO.1 FW LVG T (P)-B		553.3	552.2	551.9	553.1	8 6
NO.1 FW ENT T (P)-A		478.2	478.8	478.0	478.3	8 7
NO.1 FW ENT T (P)-B		480.1	480.1	479.6	480.2	8 8
NO.2 FW ENT T (P)-A		395.0	394.5	394.2	394.2	8 11
NO.2 FW ENT T (P)-B		394.5	393.9	394.7	395.0	8 12
NO.1 DRAIN T (P)-A		489.8	488.7	488.4	489.0	8 13
NO.1 DRAIN T (P)-B		488.1	488.1	487.3	487.8	8 14
NO.2 DRAIN T (P)-A		402.0	402.2	402.8	403.1	8 15
NO.2 DRAIN T (P)-B		401.4	402.7	401.0	401.4	8 16
INT SSH MANIF (P)-1		879.7	876.7	870.3	883.4	8 17
INT SSH MANIF (P)-2		907.4	908.9	902.6	915.8	8 18

TEST NO.	2A	3A	4A	5A		
TEST SEQ. NO.	1	2	3	4		
DATE	06/23/87	06/24/87	06/25/87	06/26/87		
TIME START	1050	1110	1015	1045		
TIME END	1735	1645	1530	1625		
LOAD MW	857	850	847	853		

DATA PAGE NO. 8 FW HTR TEMPERATURES F - PLANT

INT SSH MANIF (P)-3	915.8	907.4	907.0	919.3		8 19
INT SSH MANIF (P)-4	954.8	949.5	948.4	962.7		8 20
INT SSH MANIF (P)-5	930.9	923.0	920.3	924.8		8 21
INT SSH MANIF (P)-6	961.5	956.3	950.4	953.5		8 22
INT SSH MANIF (P)-7	924.1	925.7	916.0	920.6		8 23
INT SSH MANIF (P)-8	948.3	952.5	942.7	949.4		8 24
INT SSH MANIF (P)-9	907.9	905.1	899.1	905.2		8 25
INT SSH MANIF (P)-10	948.9	944.7	932.7	935.1		8 26
INT SSH MANIF (P)-11	906.3	905.7	895.6	900.6		8 27
INT SSH MANIF (P)-12	943.8	938.2	925.3	927.6		8 28
INT SSH MANIF (P)-13	904.4	901.3	895.0	901.6		8 29
INT SSH MANIF (P)-14	939.9	935.7	919.2	925.0		8 30
INT SSH MANIF (P)-15	913.3	916.6	915.2	910.2		9 17
INT SSH MANIF (P)-16	951.2	948.3	947.4	939.9		9 18
INT SSH MANIF (P)-17	910.8	920.1	916.7	911.1		9 19
INT SSH MANIF (P)-18	937.1	946.4	944.3	936.5		9 20
INT SSH MANIF (P)-19	919.6	928.7	927.8	919.0		9 21
INT SSH MANIF (P)-20	947.8	958.7	952.7	947.1		9 22
INT SSH MANIF (P)-21	922.1	930.1	928.7	919.4		9 23
INT SSH MANIF (P)-22	952.2	959.3	960.1	950.9		9 24
INT SSH MANIF (P)-23	924.5	933.7	934.4	925.7		9 25
INT SSH MANIF (P)-24	958.3	967.6	968.1	958.8		9 26
INT SSH MANIF (P)-25	923.5	928.0	930.1	925.3		9 27
INT SSH MANIF (P)-26	957.5	963.8	965.0	961.7		9 28
INT SSH MANIF (P)-27	888.3	893.4	889.1	891.8		9 29
INT SSH MANIF (P)-28	911.9	918.1	915.0	916.5		9 30

DATA PAGE NO. 10 PULVERIZER COAL AND PA FLOW

PULV A COAL FLOW	48.31	47.79	46.95	48.17		10 1
PULV B COAL FLOW	48.08	47.56	46.71	47.93		10 2
PULV C COAL FLOW	-.05	47.94	47.09	48.34		10 3
PULV D COAL FLOW	49.32	48.77	47.94	49.19		10 4
PULV E COAL FLOW	48.49	47.97	47.13	48.37		10 5
PULV F COAL FLOW	48.29	.15	.15	.15		10 6
PULV G COAL FLOW	48.68	48.12	47.26	48.49		10 7
PULV H COAL FLOW	48.91	48.39	47.54	48.79		10 8
PULV A PA FLOW	85.24	85.77	87.25	87.92		10 16
PULV B PA FLOW	88.11	87.72	87.25	87.92		10 17
PULV C PA FLOW	3.92	87.67	87.12	87.81		10 18
PULV D PA FLOW	87.30	86.90	86.34	87.23		10 19
PULV E PA FLOW	86.25	85.92	85.46	86.22		10 20
PULV F PA FLOW	87.91	0.00	0.00	0.00		10 21
PULV G PA FLOW	84.03	84.92	86.76	88.40		10 22
PULV H PA FLOW	87.71	87.23	86.85	87.64		10 23

TEST NO.		2A	3A	4A	5A	
TEST SEQ. NO.		1	2	3	4	
DATE		06/23/87	06/24/87	06/25/87	06/26/87	
TIME START		1050	1110	1015	1045	
TIME END		1735	1645	1530	1625	
LOAD MW		857	850	847	853	

DATA PAGE NO. 11 PULVERIZER INLET TEMP AND PA DIFF

PULV A INLET T		326.7	311.2	308.3	319.0	11 1
PULV B INLET T		337.1	320.3	310.0	340.2	11 2
PULV C INLET T		97.2	336.1	329.3	299.4	11 3
PULV D INLET T		347.6	334.3	330.3	339.4	11 4
PULV E INLET T		343.9	333.3	318.8	333.4	11 5
PULV F INLET T		378.3	112.3	103.8	104.9	11 6
PULV G INLET T		365.2	345.4	326.0	337.7	11 7
PULV H INLET T		370.4	342.3	333.7	365.6	11 8
PULV A DIFF P		13.90	13.60	12.46	12.10	11 24
PULV B DIFF P		12.38	12.23	11.67	11.82	11 25
PULV C DIFF P		.04	12.02	11.12	11.84	11 26
PULV D DIFF P		13.29	12.94	12.78	12.61	11 27
PULV E DIFF P		13.20	12.60	12.21	12.52	11 28
PULV F DIFF P		12.13	0.00	0.00	0.00	11 29
PULV G DIFF P		13.86	13.63	13.63	13.60	11 30
PULV H DIFF P		13.35	13.04	12.49	12.47	11 9

DATA PAGE NO. 12 OPERATOR POSITIONS %

RH-1 SP VLV POSIT		0.0	0.0	0.0	0.0	12 1
SH-1 SP VLV POSIT-A		0.0	0.0	0.0	0.0	12 3
SH-1 SP VLV POSIT-B		0.0	0.0	0.0	0.0	12 4
SH-2 SP VLV POSIT-A		0.0	0.0	0.0	0.0	12 5
SH-2 SP VLV POSIT-B		0.0	0.0	0.0	0.0	12 6
RH PASS DMPR POS-A		0.0	0.0	0.0	0.0	12 15
RH PASS DMPR POS-B		0.0	0.0	0.0	0.0	12 16
SH PASS DMPR POS-A		0.0	0.0	0.0	0.0	12 17
SH PASS DMPR POS-B		0.0	0.0	0.0	0.0	12 18

DATA PAGE NO. 13 MISCELLANEOUS GAS DATA - TEST

O2 LVG PRI AH W	TRAV	6.8000	8.2700	7.1200	6.8800	13 5
O2 LVG PRI AH E	TRAV	6.5000	6.5300	7.1900	5.4700	13 6
CO2 LVG PRI AH W	TRAV	12.40	11.40	12.31	12.43	13 7
CO2 LVG PRI AH E	TRAV	12.30	12.83	12.34	13.70	13 8
O2 ENT PRI AH W	TRAV	4.2000	3.0500	3.4300	3.7700	13 13
O2 ENT PRI AH E	TRAV	3.6000	3.1700	3.1700	3.1300	13 14
CO2 ENT PRI AH W	TRAV	14.60	15.92	15.57	15.44	13 15
CO2 ENT PRI AH E	TRAV	15.30	15.77	15.76	15.88	13 16
GAS LVG RH PS (B)SW	GRID	735.7	736.8	727.6	724.7	13 21
GAS LVG RH PS (B)SE	GRID	740.8	738.8	728.7	725.9	13 22
GAS LVG PSH PS (B)NW	GRID	751.7	753.2	754.1	764.4	13 23
GAS LVG PSH PS (B)NE	GRID	752.3	755.5	756.8	764.7	13 24
STACK O2/CO2 (P)		5.1897	5.1991	5.2697	5.5532	13 25
		0.0	0.0	0.0	0.0	13 28

TEST NO.		2A	3A	4A	5A	
TEST SEQ. NO.		1	2	3	4	
DATE		06/23/87	06/24/87	06/25/87	06/26/87	
TIME START		1050	1110	1015	1045	
TIME END		1735	1645	1530	1625	
LOAD MW		857	850	847	853	

DATA PAGE NO. 13 MISCELLANEOUS GAS DATA - TEST

A - RIGHT - EAST		0.0	0.0	0.0	0.0	13 29
GAS LVG ECON T A-G W	TRAV	0.0	0.0	0.0	0.0	13 30

DATA PAGE NO. 14 MISCELLANEOUS

GAS LVG ECON T A-G W	TRAV	746.0	748.0	744.0	753.0	14 1
GAS LVG ECON T H-N W	TRAV	751.0	757.0	750.0	762.0	14 2
GAS LVG ECON T A-G E	TRAV	739.0	746.0	751.0	742.0	14 3
GAS LVG ECON T H-N E	TRAV	750.0	757.0	743.0	754.0	14 4
O2 LVG ECON A-G W	TRAV	4.7000	3.6400	3.6700	3.8700	14 5
O2 LVG ECON H-N W	TRAV	3.9000	3.8900	4.1600	4.5800	14 6
O2 LVG ECON A-G E	TRAV	3.1000	3.8700	3.9700	4.3400	14 7
O2 LVG ECON H-N E	TRAV	4.5000	3.3300	3.1200	3.0400	14 8
CO2 LVG ECON A-G W	TRAV	14.60	15.57	15.57	15.38	14 9
CO2 LVG ECON H-N W	TRAV	14.90	15.16	14.97	14.60	14 10
CO2 LVG ECON A-G E	TRAV	15.80	15.14	15.13	14.81	14 11
CO2 LVG ECON H-N E	TRAV	15.50	15.76	15.93	16.01	14 12
GAS ENT BAG HS T W	TRAV	295.0	299.0	302.0	297.0	14 13
GAS ENT BAG HS T C	TRAV	337.0	337.0	338.0	340.0	14 14
GAS ENT BAG HS T E	TRAV	299.0	317.0	322.0	315.0	14 15
O2 ENT BAG HS W	TRAV	6.0000	4.8700	4.9200	5.4800	14 16
O2 ENT BAG HS C	TRAV	4.2000	4.3600	4.5300	4.9700	14 17
O2 ENT BAG HS E	TRAV	4.7000	4.9900	4.8100	4.8600	14 18
CO2 ENT BAG HS W	TRAV	13.10	14.08	14.08	13.60	14 19
CO2 ENT BAG HS C	TRAV	14.80	14.69	14.50	14.00	14 20
CO2 ENT BAG HS E	TRAV	14.30	14.07	14.19	14.20	14 21
TEMP AIR T W	TRAV	110.0	110.0	113.0	112.0	14 22
TEMP AIR T E	TRAV	109.0	112.0	110.0	120.0	14 23

DATA PAGE NO. 15 MISCELLANEOUS

PRI AH AIR IN P W	MANO	0.00	31.10	31.80	33.70	15 1
PRI AH AIR IN P E	MANO	0.00	30.40	31.10	33.00	15 2
PRI AH AIR OUT P W	TRAV	29.00	29.00	30.00	31.00	15 3
PRI AH AIR OUT P E	TRAV	29.00	29.10	30.00	31.00	15 4
PRI AH GAS IN P W	TRAV	-3.8000	-4.0000	-4.0000	-4.0000	15 5
PRI AH GAS IN P E	TRAV	-3.9000	-4.0000	-4.0000	-4.0000	15 6
PRI AH GAS OUT P W	TRAV	-8.5000	-8.0000	-8.0000	-8.5000	15 7
PRI AH GAS OUT P E	TRAV	-8.2000	-8.0000	-8.0000	-8.5000	15 8
PRI AH AIR-GAS DP W	MANO	38.50	38.40	39.20	41.30	15 9
PRI AH AIR-GAS DP E	MANO	35.70	37.50	38.10	40.50	15 10
SEC AH AIR IN P W	MANO	0.0000	3.9000	4.0000	4.4000	15 11
SEC AH AIR IN P E	MANO	0.0000	4.0000	4.0000	4.4000	15 12
SEC AH GAS IN P W	TRAV	0.0000	-3.6000	-3.7000	-3.8000	15 13
SEC AH GAS IN P E	TRAV	0.0000	-3.8000	-3.6000	-3.9000	15 14

TEST NO.	2A	3A	4A	5A		
TEST SEQ. NO.	1	2	3	4		
DATE	06/23/87	06/24/87	06/25/87	06/26/87		
TIME START	1050	1110	1015	1045		
TIME END	1735	1645	1530	1625		
LOAD MW	857	850	847	853		

DATA PAGE NO. 15 MISCELLANEOUS

SEC AH AIR-GAS DP	W	MANO	11.90	11.60	11.80	12.50	15 15
SEC AH AIR-GAS DP	E	MANO	11.80	11.40	11.70	12.50	15 16
SEC AH AIR OUT P	W	TRAV	0.0000	2.0000	2.0000	2.6000	15 17
SEC AH AIR OUT P	E	TRAV	0.0000	1.9000	1.9000	2.6000	15 18

RB-614 2 Aug 1987 10:53:58

TEST NO 4A DATE 06/25/87 TIME START 1015 TIME END 1530

USING MEASURED HP STEAM FLOW
USING DATA CHOICE 1

DRUM, SAT FLUID	P = 2666.8 PSIG	T = 678.5 F	H = 754.9 BTU/LB
DRUM, SAT VAPOR	P = 2666.8 PSIG	T = 678.5 F	H = 1072.1 BTU/LB
DRUM, BLOWDOWN	P = 2666.8 PSIG	T = 678.5 F	H = 754.9 BTU/LB
SH SPRAY	P = 2816.8 PSIG	T = 337.5 F	H = 313.2 BTU/LB
ENT SEC.	P = 2548.0 PSIG	T = 790.2 F	H = 1289.4 BTU/LB
LVG PRI-2	P = 2548.0 PSIG	T = 796.7 F	H = 1295.9 BTU/LB
ENT PRI-2	P = 2599.2 PSIG	T = 723.2 F	H = 1201.1 BTU/LB
LVG PRI-1	P = 2599.2 PSIG	T = 723.0 F	H = 1200.8 BTU/LB
CORR LVG PRI-1	P = 2599.2 PSIG	T = 723.1 F	H = 1200.9 BTU/LB
CORR ENT PRI-2	P = 2599.2 PSIG	T = 723.1 F	H = 1200.9 BTU/LB
ENT ECON	P = 2716.8 PSIG	T = 550.9 F	H = 547.6 BTU/LB
LVG SEC SH	P = 2445.8 PSIG	T = 1005.0 F	H = 1462.2 BTU/LB
ENT RH-1 ATTEMP	P = 549.8 PSIG	T = 626.1 F	H = 1309.9 BTU/LB
ENT RH-1	P = 549.8 PSIG	T = 624.2 F	H = 1308.8 BTU/LB
LVG RH-1	P = 517.8 PSIG	T = 998.4 F	H = 1518.5 BTU/LB
NO. 1 HTR FW ENT	P = 2716.8 PSIG	T = 478.8 F	H = 463.5 BTU/LB
NO. 1 HTR FW LVG	P = 2716.8 PSIG	T = 552.3 F	H = 549.4 BTU/LB
NO. 1 HTR DRAIN	P = 1043.2 PSIG	T = 487.8 F	H = 473.5 BTU/LB
NO. 1 HTR EXTR	P = 1043.2 PSIG	T = 798.6 F	H = 1385.9 BTU/LB
NO. 2 HTR FW ENT	P = 2716.8 PSIG	T = 394.4 F	H = 372.2 BTU/LB
NO. 2 HTR FW LVG	P = 2716.8 PSIG	T = 478.8 F	H = 463.5 BTU/LB
NO. 2 HTR DRAIN	P = 541.5 PSIG	T = 401.9 F	H = 377.5 BTU/LB
NO. 2 HTR EXTR	P = 541.5 PSIG	T = 625.1 F	H = 1310.0 BTU/LB
RH-1 SPRAY	P = 749.8 PSIG	T = 164.3 F	H = 134.0 BTU/LB

1st STAGE SPRAY	MEASURED	14.2	CALCULATED	0.0	USED C
2nd STAGE SPRAY	MEASURED	64.4	CALCULATED	40.4	USED C
RH-1 SPRAY	MEASURED	0.0	CALCULATED	4.8	USED M

FLOWS MLB/HR

STEAM LVG SEC SH	=	6140.4
STEAM LVG PRI-2 SH	=	6100.1
STEAM LVG PRI-1 SH	=	6100.1
FEEDWATER TO ECON	=	6100.1
BLOWDOWN	=	0.0
SH EXTRACTION	=	0.0
STEAM LVG RH-1	=	4973.1
STEAM ENT RH-1 ATTEMP	=	4973.1
NO. 1 HTR. EXTR. FLOW	=	573.7
NO. 2 HTR. EXTR. FLOW	=	538.2
TURB LKG	=	55.4

HEAT ABSORPTION MKB/HR

BOILER	=	3199.2
BLOWDOWN HEAT	=	0.0
EXTRACTION HEAT	=	0.0
SUPERHEATER	=	2426.1
REHEATER 1	=	1037.2
REHEATER 2	=	0.0
TOTAL OUTPUT	=	6662.5

			CONTRACT SUMMARY SHEET	TEST 4A CORRECTED FOR CONTR. CONDITIONS	TEST 4A WITH TEST CONDITIONS
Fuel			CONTRACT	CONTRACT	TEST
Air Temp Ent AH	PRI/SEC	F	77/ 64	77/ 64	114/ 90
Air Temp Lvg AH	PRI/SEC	F	582/ 647	0/ 0	480/ 648
Air Flow Lvg AH (1)	PRI/SEC	MLB/HR	1335/5184	1451/5094	1451/5380
AH Air By-Pass Flow		MLB/HR	497.8	629.0	629.0
Mill Inlet Temp		F	397.2	0.0	322.3
Ave Air Temp Ent AH		F	66.7	66.9	95.4
Gas Temp Lvg Econ		F	736.0	747.0	747.0
Gas Temp Ent AH	PRI/SEC	F	736/ 736	734/ 747	734/ 747
Gas Temp Lvg AH (Incl Lkg)	PRI/SEC	F	279/ 282	-/ -	291/ 324
Gas Temp Lvg AH (Excl Lkg)	PRI/SEC	F	313/ 292	310/ 316	334/ 332
Gas Flow Ent AH	PRI/SEC	MLB/HR	924/6286	698/6546	698/6827
Ave Gas Temp Lvg AH (Excl Lkg)		F	294.7	315.3	332.6
Excess Air Lvg Econ		%	17.0	17.0	21.0
Excess Air Ent Pri AH		%	---	17.0	18.2
Excess Air Ent Sec AH		%	---	17.0	21.0
Excess Air Lvg Sec AH		%	---	---	25.9
Excess Air Lvg Pri AH		%	---	---	50.4
Excess Air to Burners		%	15.0	15.0	18.9
Sec AH Leakage		MLB/HR	315	---	254
Pri AH Leakage		MLB/HR	169	---	176
Moisture In Air		LB/LB DA	.0067	.0067	.0044
Dry Gas Wt Lvg Econ		LB/LB Fuel	---	10.005	11.471
Dry Air Wt to Burners		LB/LB Fuel	---	9.477	10.918
Wet Gas Wt Lvg Econ		LB/LB Fuel	---	10.561	12.080
Losses		%			
Dry Gas			4.84	5.42	5.41
H2O in Fuel			(2) 5.15	.88	.70
H2 in Fuel			---	4.32	4.62
Moisture in Air			.07	.07	.04
Unburned Combustible			.20	.04	.04
Radiation			.17	.17	.16
Unaccounted			(3) 1.00	.50	.50
Summation of Losses			11.43	11.40	11.47
Efficiency		%	88.57	88.60	88.53
Unit Output		MKB	6691.5	6691.5	6662.5
Fuel Input		MKB	7555.0	7552.5	7525.7
Fuel Rate		MLB/HR	686.2	686.0	623.0

(1) Includes By-Pass Flow (2) Includes H2 in Fuel Loss
(3) Includes Manufacturer's Margin of .5 %

TEST 4A : 06/25/87 : 1015-1530 : 847 MW : O2/PRI-SEC TCH-080487

			CONTRACT SUMMARY SHEET	TEST 4M CORRECTED FOR CONTR. CONDITIONS	TEST 4M WITH TEST CONDITIONS
Fuel			CONTRACT	CONTRACT	TEST
Air Temp Ent AH	PRI/SEC	F	77/ 64	77/ 64	114/ 90
Air Temp Lvg AH	PRI/SEC	F	582/ 647	0/ 0	480/ 648
Air Flow Lvg AH (1)	PRI/SEC	MLB/HR	1335/5184	1471/5073	1471/5360
AH Air By-Pass Flow		MLB/HR	497.8	544.0	544.0
Mill Inlet Temp		F	397.2	0.0	322.3
Ave Air Temp Ent AH		F	66.7	66.9	95.5
Gas Temp Lvg Econ		F	736.0	747.0	747.0
Gas Temp Ent AH	PRI/SEC	F	736/ 736	734/ 747	734/ 747
Gas Temp Lvg AH (Incl Lkg)	PRI/SEC	F	279/ 282	-/ -	291/ 325
Gas Temp Lvg AH (Excl Lkg)	PRI/SEC	F	313/ 292	310/ 316	334/ 332
Gas Flow Ent AH	PRI/SEC	MLB/HR	924/6286	786/6457	786/6739
Ave Gas Temp Lvg AH (Excl Lkg)		F	294.7	315.2	332.6
Excess Air Lvg Econ		%	17.0	17.0	21.0
Excess Air Ent Pri AH		%	---	17.0	18.2
Excess Air Ent Sec AH		%	---	17.0	21.0
Excess Air Lvg Sec AH		%	---	---	25.5
Excess Air Lvg Pri AH		%	---	---	50.4
Excess Air to Burners		%	15.0	15.0	18.9
Sec AH Leakage		MLB/HR	315	---	231
Pri AH Leakage		MLB/HR	169	---	198
Moisture In Air		LB/LB DA	.0067	.0067	.0044
Dry Gas Wt Lvg Econ		LB/LB Fuel	---	10.005	11.471
Dry Air Wt to Burners		LB/LB Fuel	---	9.477	10.918
Wet Gas Wt Lvg Econ		LB/LB Fuel	---	10.561	12.080
Losses		%			
Dry Gas			4.84	5.41	5.40
H2O in Fuel			(2) 5.15	.88	.70
H2 in Fuel			---	4.32	4.62
Moisture in Air			.07	.07	.04
Unburned Combustible			.20	.04	.04
Radiation			.17	.17	.16
Unaccounted			(3) 1.00	.50	.50
Summation of Losses			11.43	11.39	11.46
Efficiency		%	88.57	88.61	88.54
Unit Output		MKB	6691.5	6691.5	6662.5
Fuel Input		MKB	7555.0	7551.6	7524.8
Fuel Rate		MLB/HR	686.2	685.9	622.9

(1) Includes By-Pass Flow (2) Includes H2 in Fuel Loss
(3) Includes Manufacturer's Margin of .5 %

TEST 4M : 06/25/87 : 1015-1530 : 847 MW : O2/PRI-SEC/MEAS FLOW |TCH-080587

			CONTRACT SUMMARY SHEET	TEST 4MC CORRECTED FOR CONTR. CONDITIONS	TEST 4MC WITH TEST CONDITIONS
Fuel			CONTRACT	CONTRACT	TEST
Air Temp Ent AH	PRI/SEC	F	77/ 64	77/ 64	114/ 90
Air Temp Lvg AH	PRI/SEC	F	582/ 647	0/ 0	480/ 648
Air Flow Lvg AH (1)	PRI/SEC	MLB/HR	1335/5184	1421/5129	1421/5177
AH Air By-Pass Flow		MLB/HR	497.8	514.0	514.0
Mill Inlet Temp		F	397.2	0.0	322.3
Ave Air Temp Ent AH		F	66.7	66.8	95.5
Gas Temp Lvg Econ		F	736.0	747.0	747.0
Gas Temp Ent AH	PRI/SEC	F	736/ 736	734/ 747	734/ 747
Gas Temp Lvg AH (Incl Lkg)	PRI/SEC	F	279/ 282	-/ -	291/ 325
Gas Temp Lvg AH (Excl Lkg)	PRI/SEC	F	313/ 292	309/ 319	333/ 336
Gas Flow Ent AH	PRI/SEC	MLB/HR	924/6286	765/6485	765/6563
Ave Gas Temp Lvg AH (Excl Lkg)		F	294.7	318.1	335.5
Excess Air Lvg Econ		%	17.0	17.0	17.1
Excess Air Ent Pri AH		%	---	17.0	15.4
Excess Air Ent Sec AH		%	---	17.0	17.1
Excess Air Lvg Sec AH		%	---	---	24.4
Excess Air Lvg Pri AH		%	---	---	45.8
Excess Air to Burners		%	15.0	15.0	15.0
Sec AH Leakage		MLB/HR	315	---	327
Pri AH Leakage		MLB/HR	169	---	186
Moisture In Air		LB/LB DA	.0067	.0067	.0044
Dry Gas Wt Lvg Econ		LB/LB Fuel	---	10.005	11.167
Dry Air Wt to Burners		LB/LB Fuel	---	9.477	10.556
Wet Gas Wt Lvg Econ		LB/LB Fuel	---	10.561	11.774
Losses		%			
Dry Gas			4.84	5.48	5.32
H2O in Fuel			(2) 5.15	.88	.70
H2 in Fuel			---	4.33	4.62
Moisture in Air			.07	.07	.04
Unburned Combustible			.20	.04	.04
Radiation			.17	.17	.16
Unaccounted			(3) 1.00	.50	.50
Summation of Losses			11.43	11.47	11.38
Efficiency		%	88.57	88.53	88.62
Unit Output		MKB	6691.5	6691.5	6662.5
Fuel Input		MKB	7555.0	7558.5	7518.1
Fuel Rate		MLB/HR	686.2	686.5	622.4

(1) Includes By-Pass Flow (2) Includes H2 in Fuel Loss
(3) Includes Manufacturer's Margin of .5 %

TEST 4MC: 06/25/87 : 1015-1530 : 847 MW :CO2/PRI-SEC/MEAS FLOW |TCH-080587

			CONTRACT SUMMARY SHEET	TEST 4A CORRECTED FOR CONTR. CONDITIONS	TEST 4A WITH TEST CONDITIONS
Fuel			CONTRACT	CONTRACT	TEST
Air Temp Ent AH	PRI/SEC	F	77/ 64	77/ 64	114/ 90
Air Temp Lvg AH	PRI/SEC	F	582/ 647	0/ 0	480/ 648
Air Flow Lvg AH (1)	PRI/SEC	MLB/HR	1335/5184	1451/5092	1451/5380
AH Air By-Pass Flow		MLB/HR	497.8	629.0	629.0
Mill Inlet Temp		F	397.2	0.0	322.3
Ave Air Temp Ent AH		F	66.7	66.9	95.4
Gas Temp Lvg Econ		F	736.0	747.0	747.0
Gas Flow Ent AH		MLB/HR	7210	7243	7525
Ave Gas Temp Lvg AH (Incl Lkg)		F	281.6	---	320.7
Ave Gas Temp Lvg AH (Excl Lkg)		F	294.7	314.6	332.7
Excess Air Lvg Econ		%	17.0	17.0	21.0
Excess Air Lvg AH		%	---	---	28.5
Excess Air to Burners		%	15.0	15.0	18.9
AH Leakage		MLB/HR	484	---	430
Moisture In Air		LB/LB DA	.0067	.0067	.0044
Dry Gas Wt Lvg Econ		LB/LB Fuel	---	10.005	11.471
Dry Air Wt to Burners		LB/LB Fuel	---	9.477	10.918
Wet Gas Wt Lvg Econ		LB/LB Fuel	---	10.561	12.080
Losses		%			
Dry Gas			4.84	5.40	5.41
H2O in Fuel			(2) 5.15	.88	.70
H2 in Fuel			---	4.32	4.62
Moisture in Air			.07	.07	.04
Unburned Combustible			.20	.04	.04
Radiation			.17	.17	.16
Unaccounted			(3) 1.00	.50	.50
Summation of Losses			11.43	11.38	11.47
Efficiency		%	88.57	88.62	88.53
Unit Output		MKB	6691.5	6691.5	6662.5
Fuel Input		MKB	7555.0	7550.8	7525.7
Fuel Rate		MLB/HR	686.2	685.8	623.0

(1) Includes By-Pass Flow (2) Includes H2 in Fuel Loss
(3) Includes Manufacturer's Margin of .5 %

TEST 4A : 06/25/87 : 1015-1530 : 847 MW : COMPOSITE/ O2 TCH-080287

TEST 4A : 06/25/87 : 1015-1530 : 847 MW : COMPOSITE/ O2 TCH-080287

EXCESS AIR = 21.04 O2 % = 3.73 CO % = 0.00 CO2 % = 14.92 SO2 % = .04
DRY AIR = 11.11 MOIS AIR = .048 MOIS ADD = 0.000 H2O FUEL = .560 LB/LB FUEL
DRY GAS = 11.471 WET GAS = 12.080 LB/LB FUEL MOIS GAS, % = 5.04

EXCESS AIR = 28.51 O2 % = 4.75 CO % = 0.00 CO2 % = 14.03 SO2 % = .04
DRY AIR = 11.80 MOIS AIR = .051 MOIS ADD = 0.000 H2O FUEL = .560 LB/LB FUEL
DRY GAS = 12.158 WET GAS = 12.769 LB/LB FUEL MOIS GAS, % = 4.79
Cpa = .242 Cpg = .255 AH LKG, % = 5.71 GAS LVG AH (EXCL LKG) = 332.7

TEST 4A : 06/25/87 : 1015-1530 : 847 MW : USING O2 TCH-080287

EXCESS AIR = 18.16 O2 % = 3.30 CO % = 0.00 CO2 % = 15.29 SO2 % = .04
DRY AIR = 10.85 MOIS AIR = .047 MOIS ADD = 0.000 H2O FUEL = .560 LB/LB FUEL
DRY GAS = 11.206 WET GAS = 11.814 LB/LB FUEL MOIS GAS, % = 5.14

EXCESS AIR = 50.43 O2 % = 7.16 CO % = 0.00 CO2 % = 11.94 SO2 % = .03
DRY AIR = 13.81 MOIS AIR = .060 MOIS ADD = 0.000 H2O FUEL = .560 LB/LB FUEL
DRY GAS = 14.171 WET GAS = 14.792 LB/LB FUEL MOIS GAS, % = 4.19
Cpa = .242 Cpg = .254 AH LKG, % = 25.21 GAS LVG AH (EXCL LKG) = 334.2

TEST 4A : 06/25/87 : 1015-1530 : 847 MW : USING O2 TCH-080287

CALCULATED SECONDARY AH GAS OUTLET CONDITIONS

		LVG ECON	ENT PRI	LVG PRI	ENT SEC	LVG SEC	TOTAL LVG AH'S
O2,	%	3.73*	3.30*	7.16*	3.73*	4.41	4.75*
CO2,	%	14.92	15.29	11.94	14.92	14.32	14.03
EXCESS AIR,	%	21.0	18.2	50.4	21.0	25.9	28.5
H2O IN GAS,	%	5.04	5.14	4.19	5.04	4.86	4.79
T AIR,	F		113.9*	479.5*	90.5*	648.5*	
H AIR,	BTU/LB		8.2		2.5		
T AIR CALC,	F			479.9		652.7	
T GAS,	F	747.0*	734.0*	291.5*	747.0*	324.2	320.7*
H GAS,	BTU/LB			52.4		61.0	60.1
H GASC,	BTU/LB			63.6		63.2	63.2
T GAS (W/O LKG),	F			333.7		332.4	332.6
WT AIR,	KLB/HR			822.1		5380.0	0.0
WT GAS,	KLB/HR	7525.0	698.1	874.1	6826.9	7080.6	7954.7
AH LKG,	KLB/HR			176.0*		253.7	429.7*

* DENOTES MEASURED VALUES.

PRI AH AIR BY-PASS FLOW = 629.0
MOIS IN AIR, LB/LB DA = .0044

TEST 4A : 06/25/87 : 1015-1530 : 847 MW : USING O2 TCH-080387

EXCESS AIR = 19.01 O2 % = 3.43 CO % = 0.00 CO2 % = 15.17 SO2 % = .05
DRY AIR = 11.15 MOIS AIR = .052 MOIS ADD = 0.000 H2O FUEL = .556 LB/LB FUEL
DRY GAS = 11.510 WET GAS = 12.118 LB/LB FUEL MOIS GAS, % = 5.02

EXCESS AIR = 50.05 O2 % = 7.12 CO % = 0.00 CO2 % = 11.97 SO2 % = .04
DRY AIR = 14.06 MOIS AIR = .065 MOIS ADD = 0.000 H2O FUEL = .556 LB/LB FUEL
DRY GAS = 14.419 WET GAS = 15.041 LB/LB FUEL MOIS GAS, % = 4.13
Cpa = .242 Cpg = .254 AH LKG, % = 24.12 GAS LVG AH (EXCL LKG) = 328.9

TEST 4A : 06/25/87 : 1015-1530 : 847 MW : USING O2 TCH-080387

EXCESS AIR = 17.32 O2 % = 3.17 CO % = 0.00 CO2 % = 15.40 SO2 % = .05
DRY AIR = 10.99 MOIS AIR = .051 MOIS ADD = 0.000 H2O FUEL = .556 LB/LB FUEL
DRY GAS = 11.351 WET GAS = 11.958 LB/LB FUEL MOIS GAS, % = 5.08

EXCESS AIR = 50.80 O2 % = 7.19 CO % = 0.00 CO2 % = 11.90 SO2 % = .04
DRY AIR = 14.13 MOIS AIR = .066 MOIS ADD = 0.000 H2O FUEL = .556 LB/LB FUEL
DRY GAS = 14.490 WET GAS = 15.111 LB/LB FUEL MOIS GAS, % = 4.11
Cpa = .242 Cpg = .254 AH LKG, % = 26.37 GAS LVG AH (EXCL LKG) = 338.5

TEST 4A : 06/25/87 : 1015-1530 : 847 MW : USING O2 MEAS WPG TCH-080387

CALCULATED SECONDARY AH GAS OUTLET CONDITIONS

		LVG ECON	ENT PRI	LVG PRI	ENT SEC	LVG SEC	TOTAL LVG AH'S
O2,	%	3.73*	3.30*	7.16*	3.73*	4.36	4.75*
CO2,	%	14.92	15.29	11.94	14.92	14.37	14.03
EXCESS AIR,	%	21.0	18.2	50.4	21.0	25.5	28.5
H2O IN GAS,	%	5.04	5.14	4.19	5.04	4.87	4.79
T AIR,	F		113.9*	479.5*	90.5*	648.5*	
H AIR,	BTU/LB		8.2		2.5		
T AIR CALC,	F			525.1		645.7	
T GAS,	F	747.0*	734.0*	291.5*	747.0*	324.8	320.7*
H GAS,	BTU/LB			52.4		61.1	60.1
H GASC,	BTU/LB			63.6		63.2	63.2
T GAS (W/O LKG),	F			333.7		332.3	332.5
WT AIR,	KLB/HR			822.1		5380.0	0.0
WT GAS,	KLB/HR	7525.0	786.0	984.1	6739.0	6970.5	7954.7
AH LKG,	KLB/HR			198.1*		231.5	429.7*

* DENOTES MEASURED VALUES.

PRI AH AIR BY-PASS FLOW = 629.0
MOIS IN AIR, LB/LB DA = .0044

			CONTRACT SUMMARY SHEET	TEST 4AC CORRECTED FOR CONTR. CONDITIONS	TEST 4AC WITH TEST CONDITIONS
Fuel			CONTRACT	CONTRACT	TEST
Air Temp Ent AH	PRI/SEC	F	77/ 64	77/ 64	114/ 90
Air Temp Lvg AH	PRI/SEC	F	582/ 647	0/ 0	480/ 648
Air Flow Lvg AH (1)	PRI/SEC	MLB/HR	1335/5184	1451/5098	1451/5148
AH Air By-Pass Flow		MLB/HR	497.8	629.0	629.0
Mill Inlet Temp		F	397.2	0.0	322.3
Ave Air Temp Ent AH		F	66.7	66.9	95.6
Gas Temp Lvg Econ		F	736.0	747.0	747.0
Gas Flow Ent AH		MLB/HR	7210	7249	7329
Ave Gas Temp Lvg AH (Incl Lkg)		F	281.6	---	320.7
Ave Gas Temp Lvg AH (Excl Lkg)		F	294.7	317.7	335.8
Excess Air Lvg Econ		%	17.0	17.0	17.1
Excess Air Lvg AH		%	---	---	26.7
Excess Air to Burners		%	15.0	15.0	15.0
AH Leakage		MLB/HR	484	---	525
Moisture In Air		LB/LB DA	.0067	.0067	.0044
Dry Gas Wt Lvg Econ		LB/LB Fuel	---	10.005	11.167
Dry Air Wt to Burners		LB/LB Fuel	---	9.477	10.556
Wet Gas Wt Lvg Econ		LB/LB Fuel	---	10.561	11.774
Losses		%			
Dry Gas			4.84	5.47	5.33
H2O in Fuel			(2) 5.15	.88	.70
H2 in Fuel			---	4.33	4.62
Moisture in Air			.07	.07	.04
Unburned Combustible			.20	.04	.04
Radiation			.17	.17	.16
Unaccounted			(3) 1.00	.50	.50
Summation of Losses			11.43	11.46	11.39
Efficiency		%	88.57	88.54	88.61
Unit Output		MKB	6691.5	6691.5	6662.5
Fuel Input		MKB	7555.0	7557.6	7518.9
Fuel Rate		MLB/HR	686.2	686.4	622.4

(1) Includes By-Pass Flow (2) Includes H2 in Fuel Loss
(3) Includes Manufacturer's Margin of .5 %

TEST 4AC: 06/25/87 : 1015-1530 : 847 MW : COMPOSITE/CO2 TCH-080287

TEST 4AC: 06/25/87 : 1015-1530 : 847 MW : COMPOSITE/CO2 TCH-080287

EXCESS AIR = 0.00 O2 % = 3.73 CO % = 0.00 CO2 % = 15.40 SO2 % = 0.00
DRY AIR = 10.74 MOIS AIR = .047 MOIS ADD = 0.000 H2O FUEL = .560 LB/LB FUEL
DRY GAS = 11.167 WET GAS = 11.774 LB/LB FUEL MOIS GAS, % = 5.15

EXCESS AIR = 0.00 O2 % = 4.75 CO % = 0.00 CO2 % = 14.26 SO2 % = 0.00
DRY AIR = 11.62 MOIS AIR = .051 MOIS ADD = 0.000 H2O FUEL = .560 LB/LB FUEL
DRY GAS = 12.007 WET GAS = 12.618 LB/LB FUEL MOIS GAS, % = 4.84
Cpa = .242 Cpg = .255 AH LKG, % = 7.16 GAS LVG AH (EXCL LKG) = 335.8

TEST 4AC: 06/25/87 : 1015-1530 : 847 MW : COMPOSITE/CO2 TCH-080287

EXCESS AIR = 0.00 O2 % = 3.30 CO % = 0.00 CO2 % = 15.66 SO2 % = 0.00
DRY AIR = 10.58 MOIS AIR = .046 MOIS ADD = 0.000 H2O FUEL = .560 LB/LB FUEL
DRY GAS = 10.988 WET GAS = 11.594 LB/LB FUEL MOIS GAS, % = 5.23

EXCESS AIR = 0.00 O2 % = 7.16 CO % = 0.00 CO2 % = 12.32 SO2 % = 0.00
DRY AIR = 13.36 MOIS AIR = .058 MOIS ADD = 0.000 H2O FUEL = .560 LB/LB FUEL
DRY GAS = 13.792 WET GAS = 14.410 LB/LB FUEL MOIS GAS, % = 4.29
Cpa = .242 Cpg = .254 AH LKG, % = 24.29 GAS LVG AH (EXCL LKG) = 332.6

TEST 4AC: 06/25/87 : 1015-1530 : 847 MW : USING CO2 TCH-080287

CALCULATED SECONDARY AH GAS OUTLET CONDITIONS

		LVG ECON	ENT PRI	LVG PRI	ENT SEC	LVG SEC	TOTAL LVG AH'S
O2,	%	3.73*	3.30*	7.16*	3.73*	4.15	4.75*
CO2,	%	15.40*	15.66*	12.32*	15.40*	14.55	14.26*
EXCESS AIR,	%	17.1	15.4	45.7	17.1	24.0	26.7
H2O IN GAS,	%	5.15	5.23	4.29	5.15	4.91	4.84
T AIR,	F		113.9*	479.5*	90.5*	648.5*	
H AIR,	BTU/LB		8.2		2.5		
T AIR CALC,	F			479.9		657.0	
T GAS,	F	747.0*	734.0*	291.5*	747.0*	324.2	320.7*
H GAS,	BTU/LB			52.5		61.0	60.1
H GASC,	BTU/LB			63.2		64.2	64.1
T GAS (W/O LKG),	F			332.1		336.1	335.7
WT AIR,	KLB/HR			822.1		5148.0	0.0
WT GAS,	KLB/HR	7329.0	694.9	863.7	6634.1	6990.3	7854.0
AH LKG,	KLB/HR			168.8*		356.2	525.0*

* DENOTES MEASURED VALUES.

PRI AH AIR BY-PASS FLOW = 629.0
MOIS IN AIR, LB/LB DA = .0044

TEST 4AC : 06/25/87 : 1015-1530 : 847 MW : USING CO2 TCH-080387

EXCESS AIR = 0.00 O2 % = 3.43 CO % = 0.00 CO2 % = 15.57 SO2 % = 0.00
DRY AIR = 10.64 MOIS AIR = .046 MOIS ADD = 0.000 H2O FUEL = .560 LB/LB FUEL
DRY GAS = 11.051 WET GAS = 11.657 LB/LB FUEL MOIS GAS, % = 5.20

EXCESS AIR = 0.00 O2 % = 7.12 CO % = 0.00 CO2 % = 12.31 SO2 % = 0.00
DRY AIR = 13.38 MOIS AIR = .058 MOIS ADD = 0.000 H2O FUEL = .560 LB/LB FUEL
DRY GAS = 13.807 WET GAS = 14.425 LB/LB FUEL MOIS GAS, % = 4.29
Cpa = .242 Cpg = .254 AH LKG, % = 23.74 GAS LVG AH (EXCL LKG) = 328.2

TEST 4AC : 06/25/87 : 1015-1530 : 847 MW : USING CO2 TCH-080387

EXCESS AIR = 0.00 O2 % = 3.17 CO % = 0.00 CO2 % = 15.76 SO2 % = 0.00
DRY AIR = 10.52 MOIS AIR = .046 MOIS ADD = 0.000 H2O FUEL = .560 LB/LB FUEL
DRY GAS = 10.925 WET GAS = 11.531 LB/LB FUEL MOIS GAS, % = 5.25

EXCESS AIR = 0.00 O2 % = 7.19 CO % = 0.00 CO2 % = 12.34 SO2 % = 0.00
DRY AIR = 13.34 MOIS AIR = .058 MOIS ADD = 0.000 H2O FUEL = .560 LB/LB FUEL
DRY GAS = 13.777 WET GAS = 14.395 LB/LB FUEL MOIS GAS, % = 4.29
Cpa = .242 Cpg = .255 AH LKG, % = 24.84 GAS LVG AH (EXCL LKG) = 335.8

TEST 4AC: 06/25/87 : 1015-1530 : 847 MW : USING CO2 TCH-080387

CALCULATED SECONDARY AH GAS OUTLET CONDITIONS

		LVG ECON	ENT PRI	LVG PRI	ENT SEC	LVG SEC	TOTAL LVG AH'S
O2,	%	3.73*	3.30*	7.16*	3.73*	4.11	4.75*
CO2,	%	15.40*	15.66*	12.32*	15.40*	14.58	14.26*
EXCESS AIR,	%	17.1	15.4	45.7	17.1	23.7	26.7
H2O IN GAS,	%	5.15	5.23	4.29	5.15	4.92	4.84
T AIR,	F		113.9*	479.5*	90.5*	648.5*	
H AIR,	BTU/LB		8.2		2.5		
T AIR CALC,	F			516.1		651.2	
T GAS,	F	747.0*	734.0*	291.5*	747.0*	324.7	320.7*
H GAS,	BTU/LB			52.5		61.1	60.1
H GASC,	BTU/LB			63.2		64.2	64.1
T GAS (W/O LKG),	F			332.1		336.1	335.7
WT AIR,	KLB/HR			822.1		5148.0	0.0
WT GAS,	KLB/HR	7329.0	765.0	950.8	6564.0	6903.2	7854.0
AH LKG,	KLB/HR			185.8*		339.2	525.0*

* DENOTES MEASURED VALUES.

PRI AH AIR BY-PASS FLOW = 629.0

MOIS IN AIR, LB/LB DA = .0044

PG-1980-1

Babcock & Wilcox
GENERAL CALCULATIONS

	WPAH	EPAH	WSAH	ESAH	TOTAL
MEAS GAS ENT	403	447	3474	3817	8141
CORR FACTOR/CALC TOTAL		.9423			7525
ADJUSTED GAS FLOW	373	413	6739		
	786				
O2 ENT	3.43	3.17			
CO2 ENT	15.57	15.76			
O2 LVG	7.12	7.19			
CO2 LVG	12.31	12.34			
% LKG	24.12	26.37			
TAIR ENT	115.8	111.9	93.8	90.5	87.1
T LVG W/LEG	289	293	324.8		
T LVG W/O LKG	328.9	338.5	332.3		
W LKG	90.0 199	108.9	231		430
TAIR LVG	470	488	639	650	661
TGAS ENT	731	737	749	748.5	748
% MOIS	5.05				
HA ENT	8.64	7.69	2.53		
HA LVG	95.07	99.54	140.13		
HG ENT	167.84	169.46	172.58		
HG LVG	62.29	64.73	63.15		
W AIR LVG AH	456 927	471	5359		6831
W AIR BY-PASS					544
BY PULV HT BAL					629
MEAS TEMPER	785-93				692

CUSTOMER: IPP — TEST NO. 4A — FILE NO. RB-614

SUBJECT: CALC AIR/GAS FLOWS using O2 — PREPARED BY: TCH — DATE: 8/3/87

IP14_001734

PG-1980-1

Babcock & Wilcox
GENERAL CALCULATIONS

	WPAH	EPAH	WSAH	ESAH	TOT
MEAS GAS ENT	403	447	3474	3817	8141
CORR FACTOR/CALC TOTAL		.9003			7329
ADJUSTED GAS FLOW	363	402	6564		
	765				
O2 ENT	3.43	3.17			
CO2 ENT	15.57	15.76			
O2 LVG	7.12	7.19			
CO2 LVG	12.31	12.34			
% LKG	23.74	24.84			
TAIR ENT	115.8	111.9	93.8	90.5	87.1
TG LVG W/LKG	289	293	324.7		
TG LVG W/O LKG	328.2	335.8	336.1		
W LKG	86.2	186 99.9			525
TAIR LVG	470	488	639	650	661
TGAS ENT	731	737	749	748.5	748
% MOIS	5.22			5.15	
HA ENT	8.63	7.69	2.53		
HA LVG	95.05	94.52	140.13		
HG ENT	168.08	169.70	172.72		
HG LVG	62.2	64.14	64.18		
W AIR LVG AH	445	907 462	5108		6599
W AIR By-PASS					514
By PASS AT BAL					629

CUSTOMER		FILE NO.
IPP	TEST NO. 4AC	RB-614

SUBJECT	PREPARED BY	DATE
CALC AIR/GAS FLOWS - USING CO2	TCH	8/3/87

IP14_001735

			6/24	6/25	6/26
BH W			18.36	18.41	18.41
BH C			18.53	18.46	18.37
BH E			18.44	18.42	18.48
ECON	W	A-G	18.83	18.85	18.85
"	W	H-N	18.60	18.63	18.66
"	E	A-G	18.57	18.63	18.65
"	E	H-N	18.72	18.72	18.68
WEST	PRI	GAS IN	18.62	18.60	18.80
"	"	" OUT	18.78	18.61	18.44
EAST	PRI	GAS IN	18.57	18.58	18.66
"	"	" OUT	18.61	18.77	18.54
AVE			18.60	18.61	18.59

AVERAGE COL AT Ø 02

LINEAR REGRESSION ANALYSIS RESULTS

TCH

TEST 6/25/87 ARITH AVE / WTD AVE

		T	O2	CO2
BH	L	314.3/313.5	4.79/4.80	14.22/14.21
	R	327.7/326.5	4.72/4.74	14.29/14.27
	AVE	321.0/320.5	4.75/4.77	14.26/14.24
ECON	L	750.5/750.3	3.92/3.91	15.27/15.28
	R	744.0/746.4	3.55/3.69	15.53/15.40
	AVE	746.7/748.0	3.70/3.78	15.42/15.35
PRI GAS IN		734/734.2	3.30/3.29	15.66/15.67
PRI GAS OUT		291.0/290.9	7.16/7.15	12.32/12.32
PRI AIR OUT		479/478.8		
TEMP		111.5/111.6		
SAH AIR OUT		650.0/649.6		

	CASE	TUE 21 6/23/87	WED 22 6/24/87	THUR 23 6/25/87	FRI 24 6/26/87
1	% Ash Coal	6.96	7.28	7.67	7.37
2					
3	% Carbon				
4	Fly Ash	.55	.76	.38	.64
5	Econ Ash	1.28	.46	.77	.35
6	Bottom Ash	.46	.34	.64	1.24
7					
8	[4] x .8	.44	.608	.304	.512
9	[5] x .05	.064	.023	.039	.018
10	[6] x .15	.069	.051	.096	.186
11	Ave % C refuse	.573	.682	.4385	.7155
12					
13	UBC = $\frac{[1] * [11]}{100 - [11]}$, %	.04	.05	.034	.053
14					
15					
16					
17	% C	65.93	66.74	67.27	68.61
18	H2	5.54	5.61	5.44	5.40
19	S	.55	.54	.52	.57
20	O2	12.25	10.96	10.63	9.63
21					
22	HHV	12263	12110	12080	12192
23					
24	Theo Air, LB/10KB	7.325	7.560	7.592	7.675

CALCULATION OF UNBURNED CARBON

TCH
7/24/87

TEST 4A : 06/25/87 : SEC AH / O2 / PLANT PA FLOW TCH-080587

	BASE	NEW		BASE	NEW			
GAS WT ENT =	6286	6827	AIR WT LVG =	5184	5380	MOIST =	6.6	5.0
GAS TEMP ENT =	736	747	GAS TEMP LVG =	292	326	EXCL. LKG		
AH LKG, %		3.72	GAS TEMP LVG =		318	INCL. LKG		
			AVE COLD END =	178	208			
AIR TEMP ENT =	64	90	AIR TEMP LVG =	647	668			

TEST 4M : 06/25/87 : SEC AH / O2 / MEAS AIR-GAS FLOW TCH-080587

	BASE	NEW		BASE	NEW			
GAS WT ENT =	6286	6739	AIR WT LVG =	5184	5360	MOIST =	6.6	5.0
GAS TEMP ENT =	736	747	GAS TEMP LVG =	292	323	EXCL. LKG		
AH LKG, %		3.43	GAS TEMP LVG =		316	INCL. LKG		
			AVE COLD END =	178	207			
AIR TEMP ENT =	64	90	AIR TEMP LVG =	647	666			

TEST 4MC: 06/25/87 : SEC AH / CO2 / MEAS AIR-GAS FLOW TCH-080587

	BASE	NEW		BASE	NEW			
GAS WT ENT =	6286	6563	AIR WT LVG =	5184	5177	MOIST =	6.6	5.2
GAS TEMP ENT =	736	747	GAS TEMP LVG =	292	325	EXCL. LKG		
AH LKG, %		4.98	GAS TEMP LVG =		314	INCL. LKG		
			AVE COLD END =	178	207			
AIR TEMP ENT =	64	90	AIR TEMP LVG =	647	669			

TEST 4M : 06/25/87 : W PRI AH / O2 / MEAS AIR-GAS FLOW TCH-081
887

	BASE	NEW		BASE	NEW	
GAS WT ENT =	924	746	AIR WT LVG =	837	886	MOIST = 6.0 5.0
GAS TEMP ENT =	736	731	GAS TEMP LVG =	313	264	EXCL. LKG
AH LKG, %		24.13	GAS TEMP LVG =		235	INCL. LKG
			AVE COLD END =	195	185	
AIR TEMP ENT =	77	106	AIR TEMP LVG =	582	529	

TEST 4M : 06/25/87 : E PRI AH / O2 / MEAS AIR-GAS FLOW TCH-081
887

	BASE	NEW		BASE	NEW	
GAS WT ENT =	924	826	AIR WT LVG =	837	946	MOIST = 6.0 5.0
GAS TEMP ENT =	736	737	GAS TEMP LVG =	313	283	EXCL. LKG
AH LKG, %		26.39	GAS TEMP LVG =		249	INCL. LKG
			AVE COLD END =	195	198	
AIR TEMP ENT =	77	114	AIR TEMP LVG =	582	541	

TEST 4MC: 06/25/87 : W PRI AH / CO2 / MEAS AIR-GAS FLOW TCH-081
887

	BASE	NEW		BASE	NEW	
GAS WT ENT =	924	726	AIR WT LVG =	837	866	MOIST = 6.0 5.2
GAS TEMP ENT =	736	731	GAS TEMP LVG =	313	262	EXCL. LKG
AH LKG, %		23.69	GAS TEMP LVG =		234	INCL. LKG
			AVE COLD END =	195	184	
AIR TEMP ENT =	77	106	AIR TEMP LVG =	582	529	

TEST 4MC: 06/25/87 : E PRI AH / CO2 / MEAS AIR-GAS FLOW TCH-081
887

	BASE	NEW		BASE	NEW	
GAS WT ENT =	924	804	AIR WT LVG =	837	929	MOIST = 6.0 5.2
GAS TEMP ENT =	736	737	GAS TEMP LVG =	313	280	EXCL. LKG
AH LKG, %		24.88	GAS TEMP LVG =		249	INCL. LKG
			AVE COLD END =	195	197	
AIR TEMP ENT =	77	114	AIR TEMP LVG =	582	540	

ATTACHMENT E

TRAVERSE DATA & CALCULATIONS - TEST 6/25/87

Revised 10/23/87
-calibrated probes

Date. 6/25/87

	W	P	T	O_2	CO_2
West BH In	3,009,591	-8.1	302	4.43	14.09
Center BH In	2,551,595	-6.2	339	4.52	14.49
East BH In	3,546,514	-8.3	322	4.82	14.19
AVE			320	4.77	14.24
Econ W A-G	2,165,032	-3.4	745	3.64	15.58
W H-N	1,981,993	-2.7	756	4.15	14.97
E A-G	3,749,361	-3.1	751	3.97	15.12
E H-N	2,008,052	-3.0	736	3.12	15.93
AVE			748	3.76	15.35
PAH W Gas In	455,890	-4.0	731	3.43	15.57
Gas Out	484,047	-8.0	289	7.12	12.30
Air Out	427,200	30.0	470	—	—
Temp	465,689	30.0	113	—	—
PAH E Gas In	506,318	-4.0	737	3.17	15.76
Gas Out	458,441	-8.0	293	7.19	12.35
Air Out	408,796	30.0	486	—	—
Temp	387,562	30.0	110	—	—
SAH W Air Out	3,572,085	2.0	639	—	—
E Air Out	3,332,665	1.9	661	—	—
W Gas In	3,712,549	-3.7	749	4.15	15.0
E Gas In	4,079,374	-3.6	748	3.55	15.50

Wet Bulb
Dry Bulb
Barometric Press.
Moisture in Air

SEC West 87.1 .52 } 90.6
East 93.8 .48

Air in West 115.8 } 113.8
East 111.9

SUMMARY

REV 10/23/87

IP14_001743

DATE = 6-25-87
LOCATION = BAG INLET WEST
FILE IDENITY = IP6_25BHW
BAROMETRIC PRESSURE = 25.52
PROBE IDENTY = E-44
DUCT HEIGHT = 19.3
DUCT WIDTH = 18.0

TAP	POINT	STAT P	TEMP	DELTA P	YAW ANGL	%02	% CO2
1	1	-8.3	301	.996	0	5.3	13.8
1	2	-8.3	300	.280	0	4.9	13.9
1	3	-8.3	301	.046	0	5.5	13.6
1	4	-8.3	291	.075	0	5.4	13.6
1	5	-8.3	293	.573	0	6.1	13.0
1	6	-8.2	289	.566	0	6.2	12.8
1	7	-8.3	288	.512	0	6.1	12.9

TAP	POINT	STAT P	TEMP	DELTA P	YAW ANGL	%02	% CO2
2	1	-8.3	298	1.113	0	4.6	14.3
2	2	-8.3	299	.356	4	4.8	14.1
2	3	-8.3	266	.095	4	5.2	13.8
2	4	-8.4	306	.017	0	5.4	13.5
2	5	-8.3	312	.175	0	5.8	13.2
2	6	-8.5	312	.100	0	5.8	13.4
2	7	-8.4	291	.307	0	5.5	13.5

TAP	POINT	STAT P	TEMP	DELTA P	YAW ANGL	%02	% CO2
3	1	-8.3	301	1.775	0	4.3	14.7
3	2	-8.3	301	1.333	0	4.8	14.2
3	3	-8.3	301	.759	0	5.3	13.9
3	4	-8.3	301	.209	4	5.3	13.6
3	5	6.0	301	.322	0	5.8	13.2
3	6	-8.5	301	.229	0	5.4	13.6
3	7	-8.6	301	.234	0	4.9	14.2

TAP	POINT	STAT P	TEMP	DELTA P	YAW ANGL	%02	% CO2
4	1	-8.1	299	.329	2	4.4	14.4
4	2	-8.1	303	.263	0	4.8	14.3
4	3	-8.2	311	.209	2	5.4	13.5
4	4	-8.3	321	.253	2	5.2	14.0
4	5	-8.3	325	.249	0	5.6	13.5
4	6	-8.2	301	.280	4	5.1	14.0
4	7	-8.3	301	.366	0	4.4	14.4

TAP	POINT	STAT P	TEMP	DELTA P	YAW ANGL	%02	% CO2
5	1	-8.3	310	.395	0	4.4	14.7
5	2	-8.2	310	.419	4	4.8	14.2
5	3	-8.3	321	.419	0	5.0	14.2
5	4	-8.3	340	.317	0	5.0	14.0
5	5	-8.3	326	.324	0	* 5.1	*14.3
5	6	-8.3	287	.310	0	5.3	13.8
5	7	-8.2	287	.483	0	4.4	14.6

TAP	POINT	STAT P	TEMP	DELTA P	YAW ANGL	%02	% CO2
6	1	-8.1	301	.200	10	4.2	14.8
6	2	-8.3	299	.253	4	4.7	14.4
6	3	-8.3	301	.312	5	4.3	14.7
6	4	-8.3	302	.400	0	4.8	14.1
6	5	-8.4	309	.305	0	4.8	14.1
6	6	-8.5	305	.190	0	4.5	14.6
6	7	-8.3	292	.332	0	4.6	14.4

TAP	POINT	STAT P	TEMP	DELTA P	YAW ANGL	%02	% CO2
7	1	-8.5	301	.136	10	4.3	14.8
7	2	-8.6	301	.021	5	4.3	14.7
7	3	-8.7	301	.012	20	4.2	14.8
7	4	-8.5	298	.073	10	4.8	14.2
7	5	-8.7	295	.053	5	5.0	14.0
7	6	-8.8	295	.068	30	4.4	14.6
7	7	-8.3	293	.183	5	4.8	14.2

TAP	POINT	STAT P	TEMP	DELTA P	YAW ANGL	%02	% CO2
8	1	-8.1	303	.488	2	4.6	14.3
8	2	-8.5	303	.549	0	4.5	14.5
8	3	-8.6	299	.056	0	4.6	14.4
8	4	-8.5	299	.619	2	4.3	14.7
8	5	-8.5	298	.012	5	4.6	14.6
8	6	-8.7	299	.153	5	4.1	14.7
8	7	-8.5	315	.581	5	4.2	14.8

* - O2/CO2 DATA WITH ERROR GREATER THAN .35 NOT USED

DATE = 6-25-87
LOCATION = BAG INLET WEST
FILE IDENITY = IP6_25BHW
BAROMETRIC PRESSURE = 25.52
PROBE IDENTY = E-44
AO = 1.23619E+00
A1 = -8.35970E-06
A2 = 2.84819E-10
A3 = -3.25479E-15
A4 = 7.18749E-21
DUCT AREA = 346.5

TAP	POINT	CORR V	%02	% CO2	V LOC/AVG	WTD % O2	WTD %CO2	WTD TEMP
1	1	6034	5.3	13.8	1.84/1.84	9.8	25.5	555
1	2	3220	4.9	13.9	.98/ .98	4.8	13.7	295
1	3	1340	5.5	13.6	.41/ .41	2.3	5.6	123
1	4	1688	5.4	13.6	.52/ .52	2.8	7.0	150
1	5	4557	6.1	13.0	1.39/1.39	8.5	18.1	408
1	6	4517	6.2	12.8	1.38/1.38	8.6	17.7	399
1	7	4296	6.1	12.9	1.31/1.31	8.0	16.9	378

TAP	POINT	CORR V	%02	% CO2	V LOC/AVG	WTD % O2	WTD %CO2	WTD TEMP
2	1	6370	4.6	14.3	1.95/1.95	9.0	27.8	580
2	2	3608	4.8	14.1	1.10/1.10	5.3	15.6	329
2	3	1854	5.2	13.8	.57/ .57	2.9	7.8	151
2	4	827	5.4	13.5	.25/ .25	1.4	3.4	77
2	5	2586	5.8	13.2	.79/ .79	4.6	10.4	246
2	6	1971	5.8	13.4	.60/ .60	3.5	8.1	188
2	7	3348	5.5	13.5	1.02/1.02	5.6	13.8	298

TAP	POINT	CORR V	%02	% CO2	V LOC/AVG	WTD % O2	WTD %CO2	WTD TEMP
3	1	8099	4.3	14.7	2.48/2.47	10.6	36.4	744
3	2	6995	4.8	14.2	2.14/2.14	10.3	30.4	643
3	3	5264	5.3	13.9	1.61/1.61	8.5	22.4	484
3	4	2789	5.3	13.6	.85/ .85	4.5	11.6	256
3	5	3380	5.8	13.2	1.03/1.03	6.0	13.6	311
3	6	2924	5.4	13.6	.89/ .89	4.8	12.2	269
3	7	2952	4.9	14.2	.90/ .90	4.4	12.8	271

REV 10/20/87

TAP	POINT	CORR V	%02	% CO2	V LOC/AVG	WTD % O2	WTD %CO2	WTD TEMP
4	1	3476	4.4	14.4	1.06/1.06	4.7	15.3	317
4	2	3127	4.8	14.3	.96/ .95	4.6	13.7	289
4	3	2814	5.4	13.5	.86/ .86	4.6	11.6	267
4	4	3107	5.2	14.0	.95/ .95	4.9	13.3	305
4	5	3096	5.6	13.5	.95/ .95	5.3	12.8	307
4	6	3213	5.1	14.0	.98/ .98	5.0	13.8	295
4	7	3670	4.4	14.4	1.12/1.12	4.9	16.2	337

TAP	POINT	CORR V	%02	% CO2	V LOC/AVG	WTD % O2	WTD %CO2	WTD TEMP
5	1	3831	4.4	14.7	1.17/1.17	5.2	17.2	363
5	2	3936	4.8	14.2	1.20/1.20	5.8	17.1	373
5	3	3976	5.0	14.2	1.22/1.21	6.1	17.3	390
5	4	3515	5.0	14.0	1.07/1.07	5.4	15.0	365
5	5	3517	5.1	14.3	1.08/1.07	0.0	0.0	350
5	6	3353	5.3	13.8	1.03/1.02	5.4	14.1	294
5	7	4163	4.4	14.6	1.27/1.27	5.6	18.6	365

TAP	POINT	CORR V	%02	% CO2	V LOC/AVG	WTD % O2	WTD %CO2	WTD TEMP
6	1	2690	4.2	14.8	.82/ .82	3.5	12.2	247
6	2	3053	4.7	14.4	.93/ .93	4.4	13.4	279
6	3	3380	4.3	14.7	1.03/1.03	4.4	15.2	311
6	4	3837	4.8	14.1	1.17/1.17	5.6	16.5	354
6	5	3378	4.8	14.1	1.03/1.03	5.0	14.6	319
6	6	2674	4.5	14.6	.82/ .82	3.7	11.9	249
6	7	3477	4.6	14.4	1.06/1.06	4.9	15.3	310

TAP	POINT	CORR V	%02	% CO2	V LOC/AVG	WTD % O2	WTD %CO2	WTD TEMP
7	1	2232	4.3	14.8	.68/ .68	2.9	10.1	205
7	2	909	4.3	14.7	.28/ .28	1.2	4.1	84
7	3	652	4.2	14.8	.20/ .20	.8	3.0	60
7	4	1648	4.8	14.2	.50/ .50	2.4	7.2	150
7	5	1425	5.0	14.0	.44/ .43	2.2	6.1	128
7	6	1397	4.4	14.6	.43/ .43	1.9	6.2	126
7	7	2594	4.8	14.2	.79/ .79	3.8	11.3	232

TAP	POINT	CORR V	%02	% CO2	V LOC/AVG	WTD % O2	WTD %CO2	WTD TEMP
8	1	4229	4.6	14.3	1.29/1.29	5.9	18.5	391
8	2	4486	4.5	14.5	1.37/1.37	6.2	19.9	415
8	3	1472	4.6	14.4	.45/ .45	2.1	6.5	134
8	4	4744	4.3	14.7	1.45/1.45	6.2	21.3	433
8	5	690	4.6	14.6	.21/ .21	1.0	3.1	63
8	6	2388	4.1	14.7	.73/ .73	3.0	10.7	218
8	7	4632	4.2	14.8	1.42/1.41	5.9	21.0	446

REV 10/20/87

LOCATION = BAG INLET WEST
FILE IDENITY = IP6_25BHW

AVERAGE VELOCITY = 3275 FPM

AVERAGE (WEIGHTED) % O2 = 4.92 *
AVERAGE (WEIGHTED) % CO2 = 14.08 *
AVERAGE (WEIGHTED) TEMPERATURE = 302

AVERAGE (ARITHMETIC) % O2 = 4.92 *
AVERAGE (ARITHMETIC) % CO2 = 14.09 *
AVERAGE (ARITHMETIC) TEMPERATURE = 302

AVERAGE STATIC PRESSURE (in. H2O) = -8.1
AVERAGE DENSITY (LBM/FT^3) = .04420

ACFM (ACTUAL FT^3/MIN) = 1134791
LB/HR (WET) = 3009591

* - O2/CO2 DATA WITH ERROR GREATER THAN .35 NOT USED
NO. OF POINTS NOT USED = 1 OUT OF 56

REV 10/20/87

LOCATION = BAG INLET WEST
FILE IDENITY = IP6_25BHW

AVERAGE VELOCITY = 3275 FPM

AVERAGE (WEIGHTED) % O2 = 4.93
AVERAGE (WEIGHTED) % CO2 = 14.09
AVERAGE (WEIGHTED) TEMPERATURE = 302

AVERAGE (ARITHMETIC) % O2 = 4.93
AVERAGE (ARITHMETIC) % CO2 = 14.09
AVERAGE (ARITHMETIC) TEMPERATURE = 302

AVERAGE STATIC PRESSURE (in. H2O) = -8.1
AVERAGE DENSITY (LBM/FT^3) = .04420

ACFM (ACTUAL FT^3/MIN) = 1134791
LB/HR (WET) = 3009591

REV 10/20/87

DATE = 6-25-87
LOCATION = BAG IN CENTER
FILE IDENITY = IP6_25BHC
BAROMETRIC PRESSURE = 25.52
PROBE IDENTY = E-42
DUCT HEIGHT = 19.3
DUCT WIDTH = 18.0

TAP	POINT	STAT P	TEMP	DELTA P	YAW ANGL	%02	% CO2
1	1	-8.4	320	.449	15	4.8	14.5
1	2	-8.3	323	.029	20	5.0	14.3
1	3	-8.1	324	.009	5	5.1	14.3
1	4	-8.1	324	.532	10	4.9	14.4
1	5	-8.2	323	.036	10	4.9	14.4
1	6	-8.0	322	.065	15	5.0	14.1
1	7	-8.0	322	.371	5	4.5	14.4

TAP	POINT	STAT P	TEMP	DELTA P	YAW ANGL	%02	% CO2
2	1	-8.3	318	.041	5	4.8	14.3
2	2	-8.4	321	.092	10	4.3	14.6
2	3	-8.3	322	.251	10	5.0	14.0
2	4	-8.2	326	.256	5	4.4	14.6
2	5	-8.2	325	.317	5	4.6	14.4
2	6	-8.4	325	.288	0	4.9	14.3
2	7	-8.3	320	.136	5	4.4	14.4

TAP	POINT	STAT P	TEMP	DELTA P	YAW ANGL	%02	% CO2
3	1	-8.2	321	.129	5	4.4	14.6
3	2	-8.3	319	.222	5	4.5	14.5
3	3	-8.3	328	.227	10	4.7	14.4
3	4	-8.3	327	.285	0	4.3	14.4
3	5	-8.3	326	.363	5	4.7	14.3
3	6	-8.4	326	.324	5	4.7	14.2
3	7	-8.3	327	.283	10	4.4	14.5

TAP	POINT	STAT P	TEMP	DELTA P	YAW ANGL	%02	% CO2
4	1	-8.2	341	.327	10	4.2	14.9
4	2	-8.1	345	.507	10	4.1	15.1
4	3	-8.3	339	.522	10	4.7	14.6
4	4	-8.2	335	.441	0	4.6	14.4
4	5	-8.1	337	.424	10	4.6	14.4
4	6	-8.2	332	.463	10	4.5	14.8
4	7	-8.2	333	.407	0	4.2	14.8

TAP	POINT	STAT P	TEMP	DELTA P	YAW ANGL	%02	% CO2
5	1	-8.2	353	.224	5	4.2	14.6
5	2	-8.2	353	.549	5	4.1	14.7
5	3	-8.1	353	.576	10	* 4.5	*14.1
5	4	-8.2	345	.507	10	5.1	14.0
5	5	-8.0	335	.463	10	4.8	14.1
5	6	-8.1	340	.485	10	4.6	14.2
5	7	-8.2	343	.446	0	4.2	14.8

TAP	POINT	STAT P	TEMP	DELTA P	YAW ANGL	%02	% CO2
6	1	-8.0	348	.092	15	4.6	14.4
6	2	-8.0	351	.422	10	4.3	14.6
6	3	-8.0	355	.603	10	4.8	14.4
6	4	-8.2	355	.595	10	4.5	14.5
6	5	-8.2	354	.532	10	4.7	14.4
6	6	-8.1	351	.415	10	4.3	14.6
6	7	-8.2	348	.317	15	4.4	14.7

TAP	POINT	STAT P	TEMP	DELTA P	YAW ANGL	%02	% CO2
7	1	-8.4	347	.004	5	4.2	14.6
7	2	-8.4	348	.019	10	4.4	14.6
7	3	-8.4	352	.058	10	4.6	14.4
7	4	-8.3	355	.102	5	4.2	14.7
7	5	-8.3	352	.463	10	4.1	14.7
7	6	-8.4	352	.334	0	4.3	14.9
7	7	-8.3	350	.151	5	4.6	14.7

TAP	POINT	STAT P	TEMP	DELTA P	YAW ANGL	%02	% CO2
8	1	-8.1	346	.561	20	4.9	14.3
8	2	-8.4	346	.083	15	4.0	14.8
8	3	-8.4	349	.083	20	4.3	14.5
8	4	-8.2	352	.366	15	4.3	14.5
8	5	-8.4	349	.002	10	4.4	14.6
8	6	-8.3	349	.004	25	* 4.2	*14.4
8	7	-8.1	345	.224	5	4.6	14.3

* - O2/CO2 DATA WITH ERROR GREATER THAN .35 NOT USED

DATE = 6-25-87
LOCATION = BAG IN CENTER
FILE IDENITY = IP6_25BHC
BAROMETRIC PRESSURE = 25.52
PROBE IDENTY = E-42
AO = 1.10891E+00
A1 = 1.05741E-06
A2 = -1.55805E-10
A3 = 4.83148E-15
A4 = -4.33794E-20
DUCT AREA = 346.5

TAP	POINT	CORR V	%02	% CO2	V LOC/AVG	WTD % O2	WTD %CO2	WTD TEMP
1	1	3770	4.8	14.5	1.29/1.30	6.2	18.7	415
1	2	941	5.0	14.3	.32/ .32	1.6	4.6	105
1	3	556	5.1	14.3	.19/ .19	1.0	2.7	62
1	4	4189	4.9	14.4	1.43/1.44	7.0	20.6	467
1	5	1099	4.9	14.4	.38/ .38	1.8	5.4	122
1	6	1447	5.0	14.1	.49/ .50	2.5	7.0	160
1	7	3543	4.5	14.4	1.21/1.22	5.4	17.4	392

TAP	POINT	CORR V	%02	% CO2	V LOC/AVG	WTD % O2	WTD %CO2	WTD TEMP
2	1	1183	4.8	14.3	.40/ .41	1.9	5.8	129
2	2	1753	4.3	14.6	.60/ .60	2.6	8.7	194
2	3	2890	5.0	14.0	.99/ .99	4.9	13.8	320
2	4	2957	4.4	14.6	1.01/1.02	4.4	14.8	332
2	5	3285	4.6	14.4	1.12/1.13	5.2	16.2	367
2	6	3146	4.9	14.3	1.08/1.08	5.3	15.4	352
2	7	2153	4.4	14.4	.74/ .74	3.2	10.6	237

TAP	POINT	CORR V	%02	% CO2	V LOC/AVG	WTD % O2	WTD %CO2	WTD TEMP
3	1	2098	4.4	14.6	.72/ .72	3.2	10.5	232
3	2	2744	4.5	14.5	.94/ .94	4.2	13.6	301
3	3	2759	4.7	14.4	.94/ .95	4.4	13.6	311
3	4	3134	4.3	14.4	1.07/1.08	4.6	15.4	353
3	5	3516	4.7	14.3	1.20/1.21	5.6	17.2	394
3	6	3325	4.7	14.2	1.14/1.14	5.3	16.1	373
3	7	3075	4.4	14.5	1.05/1.06	4.6	15.2	346

REV 10/20/87

TAP	POINT	CORR V	%O2	% CO2	V LOC/AVG	WTD % O2	WTD %CO2	WTD TEMP
4	1	3331	4.2	14.9	1.14/1.15	4.8	17.0	391
4	2	4144	4.1	15.1	1.42/1.43	5.8	21.4	492
4	3	4192	4.7	14.6	1.43/1.44	6.7	20.9	489
4	4	3907	4.6	14.4	1.34/1.34	6.1	19.2	450
4	5	3778	4.6	14.4	1.29/1.30	5.9	18.6	438
4	6	3931	4.5	14.8	1.34/1.35	6.0	19.9	449
4	7	3749	4.2	14.8	1.28/1.29	5.4	19.0	429

TAP	POINT	CORR V	%O2	% CO2	V LOC/AVG	WTD % O2	WTD %CO2	WTD TEMP
5	1	2816	4.2	14.6	.96/ .97	4.0	14.1	342
5	2	4386	4.1	14.7	1.50/1.51	6.1	22.0	533
5	3	4442	4.5	14.1	1.52/1.53	0.0	0.0	539
5	4	4150	5.1	14.0	1.42/1.43	7.2	19.9	493
5	5	3942	4.8	14.1	1.35/1.36	6.5	19.0	454
5	6	4046	4.6	14.2	1.38/1.39	6.4	19.6	473
5	7	3948	4.2	14.8	1.35/1.36	5.7	20.0	466

TAP	POINT	CORR V	%O2	% CO2	V LOC/AVG	WTD % O2	WTD %CO2	WTD TEMP
6	1	1749	4.6	14.4	.60/ .60	2.7	8.6	209
6	2	3802	4.3	14.6	1.30/1.31	5.6	19.0	459
6	3	4546	4.8	14.4	1.55/1.56	7.5	22.4	555
6	4	4518	4.5	14.5	1.54/1.55	6.9	22.4	552
6	5	4273	4.7	14.4	1.46/1.47	6.9	21.0	520
6	6	3772	4.3	14.6	1.29/1.30	5.5	18.8	455
6	7	3232	4.4	14.7	1.10/1.11	4.9	16.2	387

TAP	POINT	CORR V	%O2	% CO2	V LOC/AVG	WTD % O2	WTD %CO2	WTD TEMP
7	1	376	4.2	14.6	.13/ .13	.5	1.9	45
7	2	811	4.4	14.6	.28/ .28	1.2	4.0	97
7	3	1421	4.6	14.4	.49/ .49	2.2	7.0	172
7	4	1907	4.2	14.7	.65/ .66	2.7	9.6	233
7	5	3985	4.1	14.7	1.36/1.37	5.6	20.0	482
7	6	3443	4.3	14.9	1.18/1.18	5.1	17.5	417
7	7	2311	4.6	14.7	.79/ .79	3.6	11.6	278

TAP	POINT	CORR V	%O2	% CO2	V LOC/AVG	WTD % O2	WTD %CO2	WTD TEMP
8	1	4163	4.9	14.3	1.42/1.43	7.0	20.3	496
8	2	1660	4.0	14.8	.57/ .57	2.3	8.4	198
8	3	1618	4.3	14.5	.55/ .56	2.4	8.0	194
8	4	3480	4.3	14.5	1.19/1.20	5.1	17.2	421
8	5	263	4.4	14.6	.09/ .09	.4	1.3	32
8	6	343	4.2	14.4	.12/ .12	0.0	0.0	41
8	7	2803	4.6	14.3	.96/ .96	4.4	13.7	333

REV 10/20/87

LOCATION = BAG IN CENTER
FILE IDENITY = IP6_25BHC

AVERAGE VELOCITY = 2907 FPM

AVERAGE (WEIGHTED) % O2 = 4.53 *
AVERAGE (WEIGHTED) % CO2 = 14.50 *
AVERAGE (WEIGHTED) TEMPERATURE = 339

AVERAGE (ARITHMETIC) % O2 = 4.53 *
AVERAGE (ARITHMETIC) % CO2 = 14.49 *
AVERAGE (ARITHMETIC) TEMPERATURE = 338

AVERAGE STATIC PRESSURE (in. H2O) = -8.2
AVERAGE DENSITY (LBM/FT^3) = .04222

ACFM (ACTUAL FT^3/MIN) = 1007327
LB/HR (WET) = 2551595

* - O2/CO2 DATA WITH ERROR GREATER THAN .35 NOT USED
NO. OF POINTS NOT USED = 2 OUT OF 56

REV 10/20/87

LOCATION = BAG IN CENTER
FILE IDENITY = IP6_25BHC

AVERAGE VELOCITY = 2907 FPM

AVERAGE (WEIGHTED) % O2 = 4.52
AVERAGE (WEIGHTED) % CO2 = 14.49
AVERAGE (WEIGHTED) TEMPERATURE = 339

AVERAGE (ARITHMETIC) % O2 = 4.52
AVERAGE (ARITHMETIC) % CO2 = 14.48
AVERAGE (ARITHMETIC) TEMPERATURE = 338

AVERAGE STATIC PRESSURE (in. H2O) = -8.2
AVERAGE DENSITY (LBM/FT^3) = .04222

ACFM (ACTUAL FT^3/MIN) = 1007327
LB/HR (WET) = 2551595

REV 10/20/87

CENTER BAG HOUSE INLET DATA FOR LEFT AND RIGHT SIDES
FILE IDENTITY = IP6_25BHC:

	AVG FLOW	L/R	1246.9	1305.7
	AVG TEMP	L/R	326.82	349.14
WT'D	AVG TEMP	L/R	328.29	349.26
	AVG O2	L/R	4.61	4.44
WT'D	AVG O2	L/R	4.57	4.48
	AVG CO2	L/R	14.46	14.52
WT'D	AVG CO2	L/R	14.49	14.50

DATE = 6-25-87
LOCATION = BAG IN EAST
FILE IDENITY = IP6_25BHE
BAROMETRIC PRESSURE = 25.52
PROBE IDENTY = E-45
DUCT HEIGHT = 19.3
DUCT WIDTH = 18.0

TAP	POINT	STAT P	TEMP	DELTA P	YAW ANGL	%02	% CO2
1	1	-8.1	317	.600	18	4.8	14.5
1	2	-8.2	314	.720	25	4.4	14.6
1	3	-8.2	311	.240	22	4.7	14.6
1	4	-8.2	307	.860	22	4.7	14.3
1	5	-8.1	308	.340	30	4.7	14.5
1	6	-8.1	307	.500	18	4.6	14.6
1	7	-8.0	306	.810	25	4.5	14.5

TAP	POINT	STAT P	TEMP	DELTA P	YAW ANGL	%02	% CO2
2	1	-8.2	319	.310	20	5.6	13.2
2	2	-8.2	318	.230	0	4.3	14.6
2	3	-8.2	319	.490	0	4.9	14.0
2	4	-8.2	310	.190	20	4.5	14.6
2	5	-8.2	313	.310	20	5.1	13.8
2	6	-8.2	307	.340	30	5.1	14.0
2	7	-8.2	305	.510	25	5.1	13.9

TAP	POINT	STAT P	TEMP	DELTA P	YAW ANGL	%02	% CO2
3	1	-8.3	320	.500	0	4.5	14.6
3	2	-8.4	326	.390	0	4.7	14.1
3	3	-8.3	330	.390	20	5.2	13.7
3	4	-8.4	327	.620	10	5.3	13.7
3	5	-8.4	330	.550	0	5.1	14.0
3	6	-8.4	327	.500	0	4.9	14.0
3	7	-8.3	319	.600	0	5.5	13.4

TAP	POINT	STAT P	TEMP	DELTA P	YAW ANGL	%02	% CO2
4	1	-8.3	320	.760	20	4.7	14.4
4	2	-8.4	319	.630	20	* 4.8	*14.6
4	3	-8.3	324	.600	20	4.9	14.1
4	4	-8.2	333	.540	10	4.7	14.0
4	5	-8.3	351	.500	25	4.9	14.0
4	6	-8.4	348	.550	25	4.6	14.4
4	7	-8.4	313	.640	10	4.4	14.4

TAP	POINT	STAT P	TEMP	DELTA P	YAW ANGL	%02	% CO2
5	1	-8.2	344	.510	0	4.4	14.5
5	2	-8.3	344	.560	10	4.6	14.2
5	3	-8.4	344	.580	15	4.8	14.2
5	4	-8.3	344	.580	20	4.9	13.9
5	5	-8.3	344	.560	10	4.6	14.6
5	6	-8.3	347	.550	5	4.9	14.0
5	7	-8.2	320	.620	10	* 4.8	*14.6

TAP	POINT	STAT P	TEMP	DELTA P	YAW ANGL	%02	% CO2
6	1	-8.2	324	.510	0	4.5	14.4
6	2	-8.2	304	.460	10	4.6	14.7
6	3	-8.2	295	.540	10	4.9	14.1
6	4	-8.2	325	.420	0	4.7	14.2
6	5	-8.2	346	.470	5	4.9	14.2
6	6	-8.2	341	.220	10	4.8	14.3
6	7	-8.2	324	.530	0	4.6	14.6

TAP	POINT	STAT P	TEMP	DELTA P	YAW ANGL	%02	% CO2
7	1	-8.2	324	.520	10	4.6	14.6
7	2	-8.3	305	.420	5	4.7	14.2
7	3	-8.3	292	.460	10	4.8	14.0
7	4	-8.2	294	.840	10	5.2	13.7
7	5	-8.2	316	.440	0	5.0	14.0
7	6	-8.2	343	.420	5	5.2	13.9
7	7	-8.2	324	.500	5	5.0	13.9

TAP	POINT	STAT P	TEMP	DELTA P	YAW ANGL	%02	% CO2
8	1	-8.3	325	.610	0	4.5	14.6
8	2	-8.3	323	.620	15	4.5	14.6
8	3	-8.4	316	.700	10	5.4	13.6
8	4	-8.5	319	.670	20	4.5	14.8
8	5	-8.4	329	.620	0	* 5.2	*13.4
8	6	-8.2	334	.010	45	4.9	14.0
8	7	-8.4	317	.640	15	5.1	13.8

* - O2/CO2 DATA WITH ERROR GREATER THAN .35 NOT USED

DATE = 6-25-87
LOCATION = BAG IN EAST
FILE IDENITY = IP6_25BHE
BAROMETRIC PRESSURE = 25.52
PROBE IDENTY = E-45
AO = 9.51682E-01
A1 = 1.99376E-05
A2 = -9.37778E-10
A3 = 1.88580E-14
A4 = -1.36877E-19
DUCT AREA = 346.5

TAP	POINT	CORR V	%O2	% CO2	V LOC/AVG	WTD % O2	WTD %CO2	WTD TEMP
1	1	4287	4.8	14.5	1.09/1.08	5.2	15.8	343
1	2	4472	4.4	14.6	1.14/1.13	5.0	16.6	354
1	3	2591	4.7	14.6	.66/ .65	3.1	9.6	203
1	4	4981	4.7	14.3	1.27/1.26	5.9	18.1	386
1	5	2900	4.7	14.5	.74/ .73	3.5	10.7	225
1	6	3882	4.6	14.6	.99/ .98	4.5	14.4	301
1	7	4719	4.5	14.5	1.20/1.19	5.4	17.4	364

TAP	POINT	CORR V	%O2	% CO2	V LOC/AVG	WTD % O2	WTD %CO2	WTD TEMP
2	1	3019	5.6	13.2	.77/ .76	4.3	10.1	243
2	2	2745	4.3	14.6	.70/ .69	3.0	10.2	220
2	3	4073	4.9	14.0	1.03/1.03	5.1	14.5	328
2	4	2321	4.5	14.6	.59/ .59	2.7	8.6	181
2	5	3009	5.1	13.8	.76/ .76	3.9	10.5	237
2	6	2899	5.1	14.0	.74/ .73	3.8	10.3	224
2	7	3735	5.1	13.9	.95/ .94	4.8	13.2	287

TAP	POINT	CORR V	%O2	% CO2	V LOC/AVG	WTD % O2	WTD %CO2	WTD TEMP
3	1	4116	4.5	14.6	1.05/1.04	4.7	15.3	332
3	2	3636	4.7	14.1	.92/ .92	4.3	13.0	299
3	3	3424	5.2	13.7	.87/ .86	4.5	11.9	285
3	4	4546	5.3	13.7	1.16/1.15	6.1	15.8	375
3	5	4350	5.1	14.0	1.11/1.10	5.6	15.5	362
3	6	4136	4.9	14.0	1.05/1.04	5.1	14.7	341
3	7	4518	5.5	13.4	1.15/1.14	6.3	15.4	363

REV 10/20/87

TAP	POINT	CORR V	%02	% CO2	V LOC/AVG	WTD % O2	WTD %CO2	WTD TEMP
4	1	4784	4.7	14.4	1.22/1.21	5.7	17.5	386
4	2	4348	4.8	14.6	1.10/1.10	0.0	0.0	350
4	3	4257	4.9	14.1	1.08/1.07	5.3	15.2	348
4	4	4251	4.7	14.0	1.08/1.07	5.1	15.1	357
4	5	3800	4.9	14.0	.97/ .96	4.7	13.5	336
4	6	3983	4.6	14.4	1.01/1.00	4.7	14.6	350
4	7	4579	4.4	14.4	1.16/1.15	5.1	16.8	361

TAP	POINT	CORR V	%02	% CO2	V LOC/AVG	WTD % O2	WTD %CO2	WTD TEMP
5	1	4217	4.4	14.5	1.07/1.06	4.7	15.5	366
5	2	4359	4.6	14.2	1.11/1.10	5.1	15.7	378
5	3	4353	4.8	14.2	1.11/1.10	5.3	15.7	378
5	4	4235	4.9	13.9	1.08/1.07	5.3	15.0	367
5	5	4356	4.6	14.6	1.11/1.10	5.1	16.2	378
5	6	4376	4.9	14.0	1.11/1.10	5.4	15.6	383
5	7	4521	4.8	14.6	1.15/1.14	0.0	0.0	365

TAP	POINT	CORR V	%02	% CO2	V LOC/AVG	WTD % O2	WTD %CO2	WTD TEMP
6	1	4169	4.5	14.4	1.06/1.05	4.8	15.3	341
6	2	3845	4.6	14.7	.98/ .97	4.5	14.4	295
6	3	4153	4.9	14.1	1.06/1.05	5.2	14.9	309
6	4	3775	4.7	14.2	.96/ .95	4.5	13.6	309
6	5	4033	4.9	14.2	1.02/1.02	5.0	14.5	352
6	6	2672	4.8	14.3	.68/ .67	3.3	9.7	230
6	7	4250	4.6	14.6	1.08/1.07	5.0	15.8	347

TAP	POINT	CORR V	%02	% CO2	V LOC/AVG	WTD % O2	WTD %CO2	WTD TEMP
7	1	4145	4.6	14.6	1.05/1.05	4.8	15.4	339
7	2	3717	4.7	14.2	.94/ .94	4.4	13.4	286
7	3	3821	4.8	14.0	.97/ .96	4.7	13.6	281
7	4	5187	5.2	13.7	1.32/1.31	6.9	18.1	384
7	5	3846	5.0	14.0	.98/ .97	4.9	13.7	306
7	6	3799	5.2	13.9	.97/ .96	5.0	13.4	329
7	7	4112	5.0	13.9	1.04/1.04	5.2	14.5	336

TAP	POINT	CORR V	%02	% CO2	V LOC/AVG	WTD % O2	WTD %CO2	WTD TEMP
8	1	4569	4.5	14.6	1.16/1.15	5.2	16.9	374
8	2	4445	4.5	14.6	1.13/1.12	5.1	16.5	362
8	3	4802	5.4	13.6	1.22/1.21	6.6	16.6	383
8	4	4486	4.5	14.8	1.14/1.13	5.1	16.9	361
8	5	4624	5.2	13.4	1.17/1.17	0.0	0.0	384
8	6	374	4.9	14.0	.09/ .09	.5	1.3	31
8	7	4504	5.1	13.8	1.14/1.14	5.8	15.8	360

REV 10/20/87

LOCATION = BAG IN EAST
FILE IDENITY = IP6_25BHE

AVERAGE VELOCITY = 3966 FPM

AVERAGE (WEIGHTED) % O2 = 4.81 *
AVERAGE (WEIGHTED) % CO2 = 14.19 *
AVERAGE (WEIGHTED) TEMPERATURE = 322

AVERAGE (ARITHMETIC) % O2 = 4.81 *
AVERAGE (ARITHMETIC) % CO2 = 14.19 *
AVERAGE (ARITHMETIC) TEMPERATURE = 322

AVERAGE STATIC PRESSURE (in. H2O) = -8.3
AVERAGE DENSITY (LBM/FT^3) = .04304

ACFM (ACTUAL FT^3/MIN) = 1374272
LB/HR (WET) = 3548514

* - O2/CO2 DATA WITH ERROR GREATER THAN .35 NOT USED
NO. OF POINTS NOT USED = 3 OUT OF 56

REV 10/20/87

LOCATION = BAG IN EAST
FILE IDENITY = IP6_25BHE

AVERAGE VELOCITY = 3966 FPM

AVERAGE (WEIGHTED) % O2 = 4.82
AVERAGE (WEIGHTED) % CO2 = 14.19
AVERAGE (WEIGHTED) TEMPERATURE = 322

AVERAGE (ARITHMETIC) % O2 = 4.82
AVERAGE (ARITHMETIC) % CO2 = 14.19
AVERAGE (ARITHMETIC) TEMPERATURE = 322

AVERAGE STATIC PRESSURE (in. H2O) = -8.3
AVERAGE DENSITY (LBM/FT^3) = .04304

ACFM (ACTUAL FT^3/MIN) = 1374272
LB/HR (WET) = 3548514

REV 10/20/87

DATE = 6/25/87
LOCATION = WESTPRIGASIN
FILE IDENITY = IP6_25WPGI
BAROMETRIC PRESSURE = 25.52
PROBE IDENTY = E-11
DUCT HEIGHT = 9.0
DUCT WIDTH = 18.0

TAP	POINT	STAT P	TEMP	DELTA P	YAW ANGL	%02	% CO2
1	1	-4.0	733	.075	14	3.5	15.6
1	2	-4.0	731	.083	5	3.4	15.6
1	3	-4.0	728	.090	9	3.5	15.5

TAP	POINT	STAT P	TEMP	DELTA P	YAW ANGL	%02	% CO2
2	1	-4.0	735	.068	30	3.6	15.4
2	2	-4.0	733	.092	19	3.4	15.6
2	3	-4.0	730	.109	10	3.4	15.6

TAP	POINT	STAT P	TEMP	DELTA P	YAW ANGL	%02	% CO2
3	1	-4.0	731	.068	20	3.4	15.5
3	2	-4.0	731	.104	5	3.6	15.4
3	3	-4.0	730	.100	12	3.2	15.7

TAP	POINT	STAT P	TEMP	DELTA P	YAW ANGL	%02	% CO2
4	1	-4.0	731	.102	10	3.6	15.4
4	2	-4.0	733	.061	15	3.3	15.8
4	3	-4.0	731	.097	10	3.3	15.7

TAP	POINT	STAT P	TEMP	DELTA P	YAW ANGL	%02	% CO2
5	1	-4.0	730	.004	0	3.3	15.6
5	2	-4.0	731	.007	0	3.6	15.4
5	3	-4.0	730	.004	0	3.2	15.8

TAP	POINT	STAT P	TEMP	DELTA P	YAW ANGL	%02	% CO2
6	1	-4.0	731	.002	0	3.5	15.5
6	2	-4.0	732	.004	0	3.4	15.6
6	3	-4.0	728	.002	0	3.0	15.9

* - O2/CO2 DATA WITH ERROR GREATER THAN .35 NOT USED

DATE = 6/25/87
LOCATION = WESTPRIGASIN
FILE IDENITY = IP6_25WPGI
BAROMETRIC PRESSURE = 25.52
PROBE IDENTY = E-11
AO = 1.24866E+00
A1 = -1.40421E-05
A2 = 5.84233E-10
A3 = -9.17920E-15
A4 = 4.78536E-20
DUCT AREA = 162.0

TAP	POINT	CORR V	%02	% CO2	V LOC/AVG	WTD % O2	WTD %CO2	WTD TEMP
1	1	2067	3.5	15.6	1.26/1.26	4.4	19.7	927
1	2	2227	3.4	15.6	1.36/1.36	4.6	21.2	995
1	3	2293	3.5	15.5	1.40/1.40	4.9	21.7	1021

TAP	POINT	CORR V	%02	% CO2	V LOC/AVG	WTD % O2	WTD %CO2	WTD TEMP
2	1	1761	3.6	15.4	1.08/1.08	3.9	16.6	792
2	2	2223	3.4	15.6	1.36/1.36	4.6	21.2	997
2	3	2509	3.4	15.6	1.53/1.53	5.2	23.9	1120

TAP	POINT	CORR V	%02	% CO2	V LOC/AVG	WTD % O2	WTD %CO2	WTD TEMP
3	1	1908	3.4	15.5	1.17/1.17	4.0	18.1	853
3	2	2483	3.6	15.4	1.52/1.52	5.5	23.4	1110
3	3	2391	3.2	15.7	1.46/1.46	4.7	23.0	1067

TAP	POINT	CORR V	%02	% CO2	V LOC/AVG	WTD % O2	WTD %CO2	WTD TEMP
4	1	2432	3.6	15.4	1.49/1.49	5.4	22.9	1087
4	2	1861	3.3	15.8	1.14/1.14	3.8	18.0	834
4	3	2373	3.3	15.7	1.45/1.45	4.8	22.8	1061

TAP	POINT	CORR V	%02	% CO2	V LOC/AVG	WTD % O2	WTD %CO2	WTD TEMP
5	1	506	3.3	15.6	.31/ .31	1.0	4.8	226
5	2	668	3.6	15.4	.41/ .41	1.5	6.3	299
5	3	506	3.2	15.8	.31/ .31	1.0	4.9	226

REV 10/20/87

TAP	POINT	CORR V	%O2	% CO2	V LOC/AVG	WTD % O2	WTD %CO2	WTD TEMP
6	1	359	3.5	15.5	.22/ .22	.8	3.4	161
6	2	507	3.4	15.6	.31/ .31	1.1	4.8	227
6	3	359	3.0	15.9	.22/ .22	.7	3.5	160

REV 10/20/87

LOCATION = WESTPRIGASIN
FILE IDENITY = IP6_25WPGI

AVERAGE VELOCITY = 1635 FPM

AVERAGE (WEIGHTED) % O2 = 3.43 *
AVERAGE (WEIGHTED) % CO2 = 15.57 *
AVERAGE (WEIGHTED) TEMPERATURE = 731

AVERAGE (ARITHMETIC) % O2 = 3.40 *
AVERAGE (ARITHMETIC) % CO2 = 15.59 *
AVERAGE (ARITHMETIC) TEMPERATURE = 731

AVERAGE STATIC PRESSURE (in. H2O) = -4.0
AVERAGE DENSITY (LBM/FT^3) = .02869

ACFM (ACTUAL FT^3/MIN) = 264882
LB/HR (WET) = 455890

* - O2/CO2 DATA WITH ERROR GREATER THAN .35 NOT USED
NO. OF POINTS NOT USED = 0 OUT OF 18

REV 10/20/87

LOCATION = WESTPRIGASIN
FILE IDENITY = IP6_25WPGI

AVERAGE VELOCITY = 1635 FPM

AVERAGE (WEIGHTED) % O2 = 3.43
AVERAGE (WEIGHTED) % CO2 = 15.57
AVERAGE (WEIGHTED) TEMPERATURE = 731

AVERAGE (ARITHMETIC) % O2 = 3.40
AVERAGE (ARITHMETIC) % CO2 = 15.59
AVERAGE (ARITHMETIC) TEMPERATURE = 731

AVERAGE STATIC PRESSURE (in. H2O) = -4.0
AVERAGE DENSITY (LBM/FT^3) = .02869

ACFM (ACTUAL FT^3/MIN) = 264882
LB/HR (WET) = 455890

REV 10/20/87

DATE = 6/25/87
LOCATION = WESTPRIGASOUT
FILE IDENITY = IP6_25WPGO
BAROMETRIC PRESSURE = 25.52
PROBE IDENTY = E-1
DUCT HEIGHT = 10.5
DUCT WIDTH = 8.6

TAP	POINT	STAT P	TEMP	DELTA P	YAW ANGL	%02	% CO2
1	1	-8.0	296	.043	8	8.8	10.8
1	2	-8.0	306	.143	4	4.7	14.4
1	3	-8.0	290	.118	5	5.5	13.7
1	4	-8.0	266	.096	0	9.5	10.2

TAP	POINT	STAT P	TEMP	DELTA P	YAW ANGL	%02	% CO2
2	1	-8.0	299	.170	0	7.8	11.7
2	2	-8.0	310	.127	7	3.6	15.4
2	3	-8.0	290	.113	4	5.0	14.2
2	4	-8.0	275	.104	6	10.7	9.0

TAP	POINT	STAT P	TEMP	DELTA P	YAW ANGL	%02	% CO2
3	1	-8.0	288	.178	10	8.4	11.2
3	2	-8.0	292	.109	6	4.7	14.5
3	3	-8.0	279	.115	4	6.8	12.6
3	4	-8.0	271	.116	0	11.0	9.0

* - O2/CO2 DATA WITH ERROR GREATER THAN .35 NOT USED

DATE = 6/25/87
LOCATION = WESTPRIGASOUT
FILE IDENITY = IP6_25WPGO
BAROMETRIC PRESSURE = 25.52
PROBE IDENTY = E-1
AO = 1.17088E+00
A1 = -4.30409E-06
A2 = 1.54069E-10
A3 = -1.65099E-15
A4 = 2.82564E-21
DUCT AREA = 90.1

TAP	POINT	CORR V	%02	% CO2	V LOC/AVG	WTD % O2	WTD %CO2	WTD TEMP
1	1	1234	8.8	10.8	.61/ .61	5.4	6.6	181
1	2	2255	4.7	14.4	1.12/1.12	5.3	16.1	342
1	3	2027	5.5	13.7	1.01/1.01	5.5	13.8	292
1	4	1814	9.5	10.2	.90/ .90	8.6	9.2	240

TAP	POINT	CORR V	%02	% CO2	V LOC/AVG	WTD % O2	WTD %CO2	WTD TEMP
2	1	2456	7.8	11.7	1.22/1.22	9.5	14.3	364
2	2	2119	3.6	15.4	1.05/1.05	3.8	16.2	326
2	3	1986	5.0	14.2	.99/ .99	4.9	14.0	286
2	4	1892	10.7	9.0	.94/ .94	10.0	8.4	258

TAP	POINT	CORR V	%02	% CO2	V LOC/AVG	WTD % O2	WTD %CO2	WTD TEMP
3	1	2457	8.4	11.2	1.22/1.22	10.2	13.7	351
3	2	1947	4.7	14.5	.97/ .97	4.5	14.0	282
3	3	1991	6.8	12.6	.99/ .99	6.7	12.5	276
3	4	2001	11.0	9.0	.99/ .99	10.9	8.9	269

REV 10/20/87

LOCATION = WESTPRIGASOUT
FILE IDENITY = IP6_25WPGO

AVERAGE VELOCITY = 2015 FPM

AVERAGE (WEIGHTED) % O2 = 7.12 *
AVERAGE (WEIGHTED) % CO2 = 12.30 *
AVERAGE (WEIGHTED) TEMPERATURE = 289

AVERAGE (ARITHMETIC) % O2 = 7.21 *
AVERAGE (ARITHMETIC) % CO2 = 12.23 *
AVERAGE (ARITHMETIC) TEMPERATURE = 288

AVERAGE STATIC PRESSURE (in. H2O) = -8.0
AVERAGE DENSITY (LBM/FT^3) = .04488

ACFM (ACTUAL FT^3/MIN) = 181609
LB/HR (WET) = 489047

* - O2/CO2 DATA WITH ERROR GREATER THAN .35 NOT USED
NO. OF POINTS NOT USED = 0 OUT OF 12

REV 10/20/87

LOCATION = WESTPRIGASOUT
FILE IDENITY = IP6_25WPGO

AVERAGE VELOCITY = 2015 FPM

AVERAGE (WEIGHTED) % O2 = 7.12
AVERAGE (WEIGHTED) % CO2 = 12.30
AVERAGE (WEIGHTED) TEMPERATURE = 289

AVERAGE (ARITHMETIC) % O2 = 7.21
AVERAGE (ARITHMETIC) % CO2 = 12.23
AVERAGE (ARITHMETIC) TEMPERATURE = 288

AVERAGE STATIC PRESSURE (in. H2O) = -8.0
AVERAGE DENSITY (LBM/FT^3) = .04488

ACFM (ACTUAL FT^3/MIN) = 181609
LB/HR (WET) = 489047

REV 10/20/87

DATE = 6/25/87
LOCATION = EASTPRIGASIN
FILE IDENITY = IP6_25EPGI
BAROMETRIC PRESSURE = 25.52
PROBE IDENTY = E-11
DUCT HEIGHT = 9.0
DUCT WIDTH = 18.0

TAP	POINT	STAT P	TEMP	DELTA P	YAW ANGL	%02	% CO2
1	1	-4.0	735	.004	0	3.2	15.8
1	2	-4.0	739	.004	0	3.2	15.8
1	3	-4.0	735	.026	0	3.1	15.9

TAP	POINT	STAT P	TEMP	DELTA P	YAW ANGL	%02	% CO2
2	1	-4.0	734	.012	0	3.1	15.9
2	2	-4.0	740	.007	0	3.0	16.0
2	3	-4.0	738	.056	0	3.0	16.0

TAP	POINT	STAT P	TEMP	DELTA P	YAW ANGL	%02	% CO2
3	1	-4.0	736	.109	5	3.4	15.6
3	2	-4.0	740	.056	0	3.1	15.9
3	3	-4.0	737	.068	0	3.2	15.9

TAP	POINT	STAT P	TEMP	DELTA P	YAW ANGL	%02	% CO2
4	1	-4.0	732	.090	0	3.4	15.6
4	2	-4.0	741	.117	20	3.4	15.5
4	3	-4.0	739	.109	5	3.0	15.9

TAP	POINT	STAT P	TEMP	DELTA P	YAW ANGL	%02	% CO2
5	1	-4.0	737	.065	10	2.9	15.8
5	2	-4.0	737	.100	30	3.4	15.6
5	3	-4.0	739	.087	0	3.0	16.1

TAP	POINT	STAT P	TEMP	DELTA P	YAW ANGL	%02	% CO2
6	1	-4.0	734	.104	0	3.1	15.6
6	2	-4.0	738	.092	25	3.2	15.7
6	3	-4.0	738	.092	0	3.1	15.6

* - O2/CO2 DATA WITH ERROR GREATER THAN .35 NOT USED

DATE = 6/25/87
LOCATION = EASTPRIGASIN
FILE IDENITY = IP6_25EPGI
BAROMETRIC PRESSURE = 25.52
PROBE IDENTY = E-11
AO = 1.24866E+00
A1 = -1.40421E-05
A2 = 5.84233E-10
A3 = -9.17920E-15
A4 = 4.78536E-20
DUCT AREA = 162.0

TAP	POINT	CORR V	%02	% CO2	V LOC/AVG	WTD % O2	WTD %CO2	WTD TEMP
1	1	507	3.2	15.8	.28/ .28	.9	4.4	204
1	2	508	3.2	15.8	.28/ .28	.9	4.4	206
1	3	1273	3.1	15.9	.70/ .70	2.2	11.1	513

TAP	POINT	CORR V	%02	% CO2	V LOC/AVG	WTD % O2	WTD %CO2	WTD TEMP
2	1	871	3.1	15.9	.48/ .48	1.5	7.6	351
2	2	670	3.0	16.0	.37/ .37	1.1	5.9	272
2	3	1852	3.0	16.0	1.02/1.02	3.0	16.2	749

TAP	POINT	CORR V	%02	% CO2	V LOC/AVG	WTD % O2	WTD %CO2	WTD TEMP
3	1	2545	3.4	15.6	1.39/1.39	4.7	21.8	1027
3	2	1854	3.1	15.9	1.02/1.02	3.2	16.2	752
3	3	2034	3.2	15.9	1.11/1.11	3.6	17.7	822

TAP	POINT	CORR V	%02	% CO2	V LOC/AVG	WTD % O2	WTD %CO2	WTD TEMP
4	1	2325	3.4	15.6	1.27/1.27	4.3	19.9	933
4	2	2490	3.4	15.5	1.36/1.36	4.6	21.2	1011
4	3	2548	3.0	15.9	1.40/1.40	4.2	22.2	1032

TAP	POINT	CORR V	%02	% CO2	V LOC/AVG	WTD % O2	WTD %CO2	WTD TEMP
5	1	1961	2.9	15.8	1.07/1.07	3.1	17.0	792
5	2	2124	3.4	15.6	1.16/1.16	4.0	18.2	858
5	3	2293	3.0	16.1	1.26/1.26	3.8	20.2	929

REV 10/20/87

TAP	POINT	CORR V	%O2	% CO2	V LOC/AVG	WTD % O2	WTD %CO2	WTD TEMP
6	1	2496	3.1	15.6	1.37/1.37	4.2	21.3	1004
6	2	2135	3.2	15.7	1.17/1.17	3.7	18.4	864
6	3	2357	3.1	15.6	1.29/1.29	4.0	20.1	953

REV 10/20/87

LOCATION = EASTPRIGASIN
FILE IDENITY = IP6_25EPGI

AVERAGE VELOCITY = 1825 FPM

AVERAGE (WEIGHTED) % O2 = 3.17 *
AVERAGE (WEIGHTED) % CO2 = 15.76 *
AVERAGE (WEIGHTED) TEMPERATURE = 737

AVERAGE (ARITHMETIC) % O2 = 3.16 *
AVERAGE (ARITHMETIC) % CO2 = 15.79 *
AVERAGE (ARITHMETIC) TEMPERATURE = 737

AVERAGE STATIC PRESSURE (in. H2O) = -4.0
AVERAGE DENSITY (LBM/FT^3) = .02855

ACFM (ACTUAL FT^3/MIN) = 295604
LB/HR (WET) = 506318

* - O2/CO2 DATA WITH ERROR GREATER THAN .35 NOT USED
NO. OF POINTS NOT USED = 0 OUT OF 18

REV 10/20/87

LOCATION = EASTPRIGASIN
FILE IDENITY = IP6_25EPGI

AVERAGE VELOCITY = 1825 FPM

AVERAGE (WEIGHTED) % O2 = 3.17
AVERAGE (WEIGHTED) % CO2 = 15.76
AVERAGE (WEIGHTED) TEMPERATURE = 737

AVERAGE (ARITHMETIC) % O2 = 3.16
AVERAGE (ARITHMETIC) % CO2 = 15.79
AVERAGE (ARITHMETIC) TEMPERATURE = 737

AVERAGE STATIC PRESSURE (in. H2O) = -4.0
AVERAGE DENSITY (LBM/FT^3) = .02855

ACFM (ACTUAL FT^3/MIN) = 295604
LB/HR (WET) = 506318

REV 10/20/87

DATE = 6/25/87
LOCATION = EASTPRIGASOUT
FILE IDENITY = IP6_25EPGO
BAROMETRIC PRESSURE = 25.52
PROBE IDENTY = E-1
DUCT HEIGHT = 10.5
DUCT WIDTH = 8.6

TAP	POINT	STAT P	TEMP	DELTA P	YAW ANGL	%02	% CO2
1	1	-8.0	265	.148	8	11.0	9.0
1	2	-8.0	314	.046	6	4.6	14.8
1	3	-8.0	307	.107	8	4.7	14.6
1	4	-8.0	293	.104	4	7.0	12.7

TAP	POINT	STAT P	TEMP	DELTA P	YAW ANGL	%02	% CO2
2	1	-8.0	260	.203	2	11.2	8.7
2	2	-8.0	308	.036	4	3.7	15.3
2	3	-8.0	308	.114	6	4.0	15.2
2	4	-8.0	294	.107	0	7.4	12.1

TAP	POINT	STAT P	TEMP	DELTA P	YAW ANGL	%02	% CO2
3	1	-8.0	263	.083	6	10.6	9.2
3	2	-8.0	315	.129	8	5.3	14.1
3	3	-8.0	315	.106	12	5.1	14.2
3	4	-8.0	297	.114	4	8.1	11.4

* - O2/CO2 DATA WITH ERROR GREATER THAN .35 NOT USED

DATE = 6/25/87
LOCATION = EASTPRIGASOUT
FILE IDENITY = IP6_25EPGO
BAROMETRIC PRESSURE = 25.52
PROBE IDENTY = E-1
AO = 1.17088E+00
A1 = -4.30409E-06
A2 = 1.54069E-10
A3 = -1.65099E-15
A4 = 2.82564E-21
DUCT AREA = 90.1

TAP	POINT	CORR V	%02	% CO2	V LOC/AVG	WTD % O2	WTD %CO2	WTD TEMP
1	1	2225	11.0	9.0	1.17/1.17	12.9	10.5	310
1	2	1291	4.6	14.8	.68/ .68	3.1	10.0	213
1	3	1941	4.7	14.6	1.02/1.02	4.8	14.9	313
1	4	1913	7.0	12.7	1.01/1.01	7.0	12.8	295

TAP	POINT	CORR V	%02	% CO2	V LOC/AVG	WTD % O2	WTD %CO2	WTD TEMP
2	1	2616	11.2	8.7	1.37/1.37	15.4	12.0	357
2	2	1143	3.7	15.3	.60/ .60	2.2	9.2	185
2	3	2011	4.0	15.2	1.06/1.06	4.2	16.1	325
2	4	1948	7.4	12.1	1.02/1.02	7.6	12.4	301

TAP	POINT	CORR V	%02	% CO2	V LOC/AVG	WTD % O2	WTD %CO2	WTD TEMP
3	1	1678	10.6	9.2	.88/ .88	9.3	8.1	232
3	2	2141	5.3	14.1	1.12/1.12	6.0	15.9	354
3	3	1919	5.1	14.2	1.01/1.01	5.1	14.3	318
3	4	2011	8.1	11.4	1.06/1.06	8.6	12.0	314

REV 10/20/87

LOCATION = EASTPRIGASOUT
FILE IDENITY = IP6_25EPGO

AVERAGE VELOCITY = 1903 FPM

AVERAGE (WEIGHTED) % O2 = 7.19 *
AVERAGE (WEIGHTED) % CO2 = 12.35 *
AVERAGE (WEIGHTED) TEMPERATURE = 293

AVERAGE (ARITHMETIC) % O2 = 6.89 *
AVERAGE (ARITHMETIC) % CO2 = 12.61 *
AVERAGE (ARITHMETIC) TEMPERATURE = 295

AVERAGE STATIC PRESSURE (in. H2O) = -8.0
AVERAGE DENSITY (LBM/FT^3) = .04455

ACFM (ACTUAL FT^3/MIN) = 171511
LB/HR (WET) = 458441

* - O2/CO2 DATA WITH ERROR GREATER THAN .35 NOT USED
NO. OF POINTS NOT USED = 0 OUT OF 12

REV 10/20/87

LOCATION = EASTPRIGASOUT
FILE IDENITY = IP6_25EPGO

AVERAGE VELOCITY = 1903 FPM

AVERAGE (WEIGHTED) % O2 = 7.19
AVERAGE (WEIGHTED) % CO2 = 12.35
AVERAGE (WEIGHTED) TEMPERATURE = 293

AVERAGE (ARITHMETIC) % O2 = 6.89
AVERAGE (ARITHMETIC) % CO2 = 12.61
AVERAGE (ARITHMETIC) TEMPERATURE = 295

AVERAGE STATIC PRESSURE (in. H2O) = -8.0
AVERAGE DENSITY (LBM/FT^3) = .04455

ACFM (ACTUAL FT^3/MIN) = 171511
LB/HR (WET) = 458441

REV 10/20/87

DATE = 6/25/1987
LOCATION = ECON WEST A_G
FILE IDENITY = IP6_25EWA
BAROMETRIC PRESSURE = 25.53
PROBE IDENTY = E43
DUCT HEIGHT = 21.2
DUCT WIDTH = 20.0

TAP	POINT	STAT P	TEMP	DELTA P	YAW ANGL	%02	% CO2
1	1	-3.6	731	.039	0	5.0	14.5
1	2	-3.5	744	.039	-5	4.8	14.6
1	3	-3.4	739	.040	0	5.0	14.3
1	4	-3.3	729	.333	35	3.7	15.3
1	5	-3.2	726	.346	35	4.0	15.1
1	6	-3.3	730	.315	20	3.9	15.3
1	7	-3.4	739	.245	30	3.9	15.3

TAP	POINT	STAT P	TEMP	DELTA P	YAW ANGL	%02	% CO2
2	1	-3.3	712	.041	0	6.3	13.2
2	2	-3.5	746	.041	5	5.2	14.2
2	3	-3.4	746	.041	10	3.4	15.7
2	4	-3.5	742	.227	25	3.4	15.8
2	5	-3.3	735	.329	25	3.0	16.2
2	6	-3.6	736	.324	20	3.4	15.6
2	7	-3.4	736	.266	25	3.4	15.8

TAP	POINT	STAT P	TEMP	DELTA P	YAW ANGL	%02	% CO2
3	1	-3.3	722	.041	0	6.8	13.0
3	2	-3.4	751	.060	10	4.3	14.9
3	3	-3.4	758	.295	20	4.6	14.7
3	4	-3.3	745	.342	35	2.8	16.4
3	5	-3.3	750	.258	25	2.8	16.4
3	6	-3.2	745	.275	20	2.8	16.6
3	7	-3.3	743	.312	10	2.9	16.0

TAP	POINT	STAT P	TEMP	DELTA P	YAW ANGL	%02	% CO2
4	1	-3.4	743	.051	0	4.8	14.4
4	2	-3.3	757	.092	25	4.6	14.8
4	3	-3.3	759	.383	20	5.1	14.2
4	4	-3.2	751	.308	30	2.5	16.6
4	5	-3.3	739	.288	40	2.9	16.3
4	6	-3.3	739	.273	20	2.1	16.9
4	7	-3.2	743	.346	0	3.1	16.3

TAP	POINT	STAT P	TEMP	DELTA P	YAW ANGL	%O2	% CO2
5	1	-3.3	756	.053	5	4.0	15.4
5	2	-3.5	757	.082	10	4.5	14.7
5	3	-3.3	758	.398	10	5.0	14.4
5	4	-3.1	746	.366	15	2.6	16.6
5	5	-3.1	737	.240	25	2.8	16.4
5	6	-3.1	741	.258	20	3.6	15.8
5	7	-3.2	741	.312	5	* 3.0	*15.8

TAP	POINT	STAT P	TEMP	DELTA P	YAW ANGL	%O2	% CO2
6	1	-3.6	749	.051	5	3.0	16.2
6	2	-3.5	756	.180	0	3.5	15.6
6	3	-3.4	758	.385	0	3.1	16.0
6	4	-3.5	747	.358	10	3.4	15.9
6	5	-3.3	741	.258	20	3.0	16.4
6	6	-3.3	747	.201	30	3.7	15.7
6	7	-3.4	742	.126	0	3.3	15.8

TAP	POINT	STAT P	TEMP	DELTA P	YAW ANGL	%O2	% CO2
7	1	-3.4	707	.051	5	6.5	13.1
7	2	-3.4	758	.105	0	4.6	14.7
7	3	-3.5	759	.493	15	3.4	16.0
7	4	-3.4	750	.344	5	3.8	15.4
7	5	-3.5	753	.273	5	3.4	15.8
7	6	-3.3	758	.278	20	3.9	15.4
7	7	-3.4	757	.151	30	3.9	15.1

* - O2/CO2 DATA WITH ERROR GREATER THAN .35 NOT USED

DATE = 6/25/1987
LOCATION = ECON WEST A_G
FILE IDENITY = IP6_25EWA
BAROMETRIC PRESSURE = 25.53
PROBE IDENTY = E-43
AO = 1.04096E+00
A1 = 1.03261E-05
A2 = -3.72379E-10
A3 = 6.20123E-15
A4 = -3.92264E-20
DUCT AREA = 425.0

TAP	POINT	CORR V	%02	% CO2	V LOC/AVG	WTD % O2	WTD %CO2	WTD TEMP
1	1	1365	5.0	14.5	.46/ .46	2.3	6.7	334
1	2	1366	4.8	14.6	.46/ .46	2.2	6.7	340
1	3	1387	5.0	14.3	.47/ .46	2.3	6.7	344
1	4	3378	3.7	15.3	1.14/1.13	4.2	17.4	825
1	5	3441	4.0	15.1	1.16/1.15	4.6	17.5	837
1	6	3765	3.9	15.3	1.27/1.26	5.0	19.4	921
1	7	3055	3.9	15.3	1.03/1.02	4.0	15.8	756

TAP	POINT	CORR V	%02	% CO2	V LOC/AVG	WTD % O2	WTD %CO2	WTD TEMP
2	1	1390	6.3	13.2	.47/ .47	3.0	6.2	332
2	2	1403	5.2	14.2	.47/ .47	2.5	6.7	350
2	3	1386	3.4	15.7	.47/ .46	1.6	7.3	346
2	4	3076	3.4	15.8	1.04/1.03	3.5	16.4	764
2	5	3721	3.0	16.2	1.26/1.25	3.8	20.3	917
2	6	3831	3.4	15.6	1.29/1.28	4.4	20.2	944
2	7	3333	3.4	15.8	1.12/1.12	3.8	17.8	822

TAP	POINT	CORR V	%02	% CO2	V LOC/AVG	WTD % O2	WTD %CO2	WTD TEMP
3	1	1396	6.8	13.0	.47/ .47	3.2	6.1	338
3	2	1688	4.3	14.9	.57/ .57	2.4	8.5	425
3	3	3678	4.6	14.7	1.24/1.23	5.7	18.2	934
3	4	3443	2.8	16.4	1.16/1.15	3.3	19.1	859
3	5	3296	2.8	16.4	1.11/1.10	3.1	18.2	828
3	6	3525	2.8	16.6	1.19/1.18	3.3	19.7	880
3	7	3946	2.9	16.0	1.33/1.32	3.9	21.3	983

REV 10/20/87

TAP	POINT	CORR V	%02	% CO2	V LOC/AVG	WTD % O2	WTD %CO2	WTD TEMP
4	1	1573	4.8	14.4	.53/ .53	2.5	7.6	392
4	2	1939	4.6	14.8	.65/ .65	3.0	9.7	492
4	3	4215	5.1	14.2	1.42/1.41	7.3	20.2	1072
4	4	3454	2.5	16.6	1.17/1.16	2.9	19.3	869
4	5	2938	2.9	16.3	.99/ .98	2.9	16.2	727
4	6	3505	2.1	16.9	1.18/1.17	2.5	20.0	868
4	7	4225	3.1	16.3	1.43/1.42	4.4	23.2	1052

TAP	POINT	CORR V	%02	% CO2	V LOC/AVG	WTD % O2	WTD %CO2	WTD TEMP
5	1	1605	4.0	15.4	.54/ .54	2.2	8.3	406
5	2	1987	4.5	14.7	.67/ .67	3.0	9.9	504
5	3	4504	5.0	14.4	1.52/1.51	7.6	21.9	1144
5	4	4207	2.6	16.6	1.42/1.41	3.7	23.6	1052
5	5	3158	2.8	16.4	1.07/1.06	3.0	17.5	780
5	6	3405	3.6	15.8	1.15/1.14	4.1	18.1	845
5	7	3989	3.0	15.8	1.35/1.34	0.0	0.0	991

TAP	POINT	CORR V	%02	% CO2	V LOC/AVG	WTD % O2	WTD %CO2	WTD TEMP
6	1	1569	3.0	16.2	.53/ .53	1.6	8.6	394
6	2	3026	3.5	15.6	1.02/1.01	3.6	15.9	767
6	3	4495	3.1	16.0	1.52/1.51	4.7	24.3	1142
6	4	4244	3.4	15.9	1.43/1.42	4.9	22.8	1062
6	5	3405	3.0	16.4	1.15/1.14	3.4	18.8	845
6	6	2763	3.7	15.7	.93/ .93	3.4	14.6	691
6	7	2502	3.3	15.8	.84/ .84	2.8	13.3	622

TAP	POINT	CORR V	%02	% CO2	V LOC/AVG	WTD % O2	WTD %CO2	WTD TEMP
7	1	1545	6.5	13.1	.52/ .52	3.4	6.8	366
7	2	2292	4.6	14.7	.77/ .77	3.6	11.4	582
7	3	4939	3.4	16.0	1.67/1.65	5.7	26.7	1256
7	4	4211	3.8	15.4	1.42/1.41	5.4	21.9	1059
7	5	3737	3.4	15.8	1.26/1.25	4.3	19.9	943
7	6	3564	3.9	15.4	1.20/1.19	4.7	18.5	905
7	7	2394	3.9	15.1	.81/ .80	3.1	12.2	607

REV 10/20/87

LOCATION = ECON WEST A_G
FILE IDENITY = IP6_25EWA

AVERAGE VELOCITY = 2985 FPM

AVERAGE (WEIGHTED) % O2 = 3.66 *
AVERAGE (WEIGHTED) % CO2 = 15.57 *
AVERAGE (WEIGHTED) TEMPERATURE = 745

AVERAGE (ARITHMETIC) % O2 = 3.86 *
AVERAGE (ARITHMETIC) % CO2 = 15.39 *
AVERAGE (ARITHMETIC) TEMPERATURE = 744

AVERAGE STATIC PRESSURE (in. H2O) = -3.4
AVERAGE DENSITY (LBM/FT^3) = .02844

ACFM (ACTUAL FT^3/MIN) = 1268564
LB/HR (WET) = 2165032

* - O2/CO2 DATA WITH ERROR GREATER THAN .35 NOT USED
NO. OF POINTS NOT USED = 1 OUT OF 49

REV 10/20/87

LOCATION = ECON WEST A_G
FILE IDENITY = IP6_25EWA

AVERAGE VELOCITY = 2985 FPM

AVERAGE (WEIGHTED) % O2 = 3.64
AVERAGE (WEIGHTED) % CO2 = 15.58
AVERAGE (WEIGHTED) TEMPERATURE = 745

AVERAGE (ARITHMETIC) % O2 = 3.85
AVERAGE (ARITHMETIC) % CO2 = 15.40
AVERAGE (ARITHMETIC) TEMPERATURE = 744

AVERAGE STATIC PRESSURE (in. H2O) = -3.4
AVERAGE DENSITY (LBM/FT^3) = .02844

ACFM (ACTUAL FT^3/MIN) = 1268564
LB/HR (WET) = 2165032

REV 10/20/87

DATE = 6/26/1987
LOCATION = ECON WEST
FILE IDENITY = IP6_25EWH
BAROMETRIC PRESSURE = 25.53
PROBE IDENTY = E6
DUCT HEIGHT = 21.2
DUCT WIDTH = 20.0

TAP	POINT	STAT P	TEMP	DELTA P	YAW ANGL	%02	% CO2
1	1	-2.6	685	0.000	20	8.9	11.0
1	2	-2.5	758	0.000	20	4.4	14.6
1	3	-2.9	771	.600	40	3.4	15.4
1	4	-2.9	752	.451	30	3.8	15.3
1	5	-2.8	757	.383	15	3.4	15.8
1	6	-3.0	763	.317	10	3.7	15.7
1	7	-2.7	762	.014	15	* 3.8	*14.8

TAP	POINT	STAT P	TEMP	DELTA P	YAW ANGL	%02	% CO2
2	1	-2.6	691	0.000	20	7.3	12.4
2	2	-2.6	764	0.000	20	* 4.3	*14.4
2	3	-2.8	765	.539	25	3.8	15.2
2	4	-2.8	765	.429	30	3.4	15.8
2	5	-2.8	762	.346	20	3.5	15.7
2	6	-2.8	764	.258	5	4.1	15.1
2	7	-2.7	764	.324	20	3.8	15.0

TAP	POINT	STAT P	TEMP	DELTA P	YAW ANGL	%02	% CO2
3	1	-2.4	751	0.000	0	7.3	12.1
3	2	-2.6	760	0.000	0	3.6	15.2
3	3	-2.7	768	.510	30	4.2	14.8
3	4	-2.8	755	.439	25	4.1	14.9
3	5	-2.6	762	.383	35	4.2	15.0
3	6	-2.7	759	.356	30	4.1	15.1
3	7	-2.5	761	.280	20	* 3.7	*14.9

TAP	POINT	STAT P	TEMP	DELTA P	YAW ANGL	%02	% CO2
4	1	-2.5	726	0.000	0	6.5	13.0
4	2	-2.6	761	0.000	0	3.9	15.3
4	3	-2.7	758	.495	25	4.0	15.0
4	4	-2.8	756	.429	35	4.1	15.2
4	5	-2.6	754	.163	20	4.4	14.8
4	6	-2.6	756	.312	35	4.4	14.8
4	7	-2.7	756	.290	30	4.3	15.1

TAP	POINT	STAT P	TEMP	DELTA P	YAW ANGL	%02	% CO2
5	1	-2.5	730	0.000	0	7.3	12.2
5	2	-2.6	751	0.000	20	4.5	14.7
5	3	-2.8	749	.522	45	4.0	15.2
5	4	-2.7	752	.419	50	4.9	14.3
5	5	-2.8	752	.405	50	4.5	14.7
5	6	-2.7	752	.376	30	4.6	14.6
5	7	-2.7	749	.373	20	4.5	14.5

TAP	POINT	STAT P	TEMP	DELTA P	YAW ANGL	%02	% CO2
6	1	-2.5	755	0.000	0	4.8	14.2
6	2	-2.7	760	0.000	20	4.8	14.5
6	3	-2.8	751	.600	35	4.5	14.7
6	4	-2.8	758	.510	45	4.6	14.4
6	5	-2.9	754	.444	50	4.4	14.7
6	6	-2.9	689	.371	35	4.5	14.7
6	7	-2.8	753	.266	10	3.9	14.9

TAP	POINT	STAT P	TEMP	DELTA P	YAW ANGL	%02	% CO2
7	1	-2.6	656	0.000	20	4.8	14.4
7	2	-2.7	767	1.001	10	4.5	14.7
7	3	-2.7	757	.739	15	4.7	14.5
7	4	-2.6	763	.163	10	5.0	14.2
7	5	-2.8	758	.422	50	4.3	14.9
7	6	-2.7	748	.419	40	4.2	15.2
7	7	-2.7	752	.278	20	4.2	14.8

* - O2/CO2 DATA WITH ERROR GREATER THAN .35 NOT USED

DATE = 6/26/1987
LOCATION = ECON WEST
FILE IDENITY = IP6_25EWH
BAROMETRIC PRESSURE = 25.53
PROBE IDENTY = E-6
AO = 1.03371E+00
A1 = 7.08594E-06
A2 = -3.17015E-10
A3 = 6.53622E-15
A4 = -4.99241E-20
DUCT AREA = 425.0

TAP	POINT	CORR V	%O2	% CO2	V LOC/AVG	WTD % O2	WTD %CO2	WTD TEMP
1	1	0	8.9	11.0	0.00/0.00	0.0	0.0	0
1	2	0	4.4	14.6	0.00/0.00	0.0	0.0	0
1	3	4217	3.4	15.4	1.49/1.54	5.1	22.9	1185
1	4	4089	3.8	15.3	1.44/1.49	5.5	22.1	1121
1	5	4200	3.4	15.8	1.48/1.53	5.0	23.4	1158
1	6	3896	3.7	15.7	1.38/1.42	5.1	21.6	1083
1	7	782	3.8	14.8	.28/ .29	0.0	0.0	217

TAP	POINT	CORR V	%O2	% CO2	V LOC/AVG	WTD % O2	WTD %CO2	WTD TEMP
2	1	0	7.3	12.4	0.00/0.00	0.0	0.0	0
2	2	0	4.3	14.4	0.00/0.00	0.0	0.0	0
2	3	4711	3.8	15.2	1.66/1.72	6.3	25.3	1313
2	4	4002	3.4	15.8	1.41/1.46	4.8	22.3	1115
2	5	3886	3.5	15.7	1.37/1.42	4.8	21.6	1078
2	6	3550	4.1	15.1	1.25/1.29	5.1	18.9	988
2	7	3763	3.8	15.0	1.33/1.37	5.1	19.9	1048

TAP	POINT	CORR V	%O2	% CO2	V LOC/AVG	WTD % O2	WTD %CO2	WTD TEMP
3	1	0	7.3	12.1	0.00/0.00	0.0	0.0	0
3	2	0	3.6	15.2	0.00/0.00	0.0	0.0	0
3	3	4381	4.2	14.8	1.55/1.60	6.5	22.9	1226
3	4	4226	4.1	14.9	1.49/1.54	6.1	22.2	1163
3	5	3569	4.2	15.0	1.26/1.30	5.3	18.9	990
3	6	3630	4.1	15.1	1.28/1.32	5.3	19.4	1004
3	7	3488	3.7	14.9	1.23/1.27	0.0	0.0	967

REV 10/20/87

TAP	POINT	CORR V	%02	% CO2	V LOC/AVG	WTD % O2	WTD %CO2	WTD TEMP
4	1	0	6.5	13.0	0.00/0.00	0.0	0.0	0
4	2	0	3.9	15.3	0.00/0.00	0.0	0.0	0
4	3	4498	4.0	15.0	1.59/1.64	6.4	23.8	1242
4	4	3774	4.1	15.2	1.33/1.38	5.5	20.3	1039
4	5	2636	4.4	14.8	.93/ .96	4.1	13.8	724
4	6	3206	4.4	14.8	1.13/1.17	5.0	16.8	883
4	7	3264	4.3	15.1	1.15/1.19	5.0	17.4	899

TAP	POINT	CORR V	%02	% CO2	V LOC/AVG	WTD % O2	WTD %CO2	WTD TEMP
5	1	0	7.3	12.2	0.00/0.00	0.0	0.0	0
5	2	0	4.5	14.7	0.00/0.00	0.0	0.0	0
5	3	3593	4.0	15.2	1.27/1.31	5.1	19.3	981
5	4	2923	4.9	14.3	1.03/1.07	5.1	14.8	801
5	5	2872	4.5	14.7	1.01/1.05	4.6	14.9	786
5	6	3725	4.6	14.6	1.32/1.36	6.1	19.2	1020
5	7	4022	4.5	14.5	1.42/1.47	6.4	20.6	1098

TAP	POINT	CORR V	%02	% CO2	V LOC/AVG	WTD % O2	WTD %CO2	WTD TEMP
6	1	0	4.8	14.2	0.00/0.00	0.0	0.0	0
6	2	0	4.8	14.5	0.00/0.00	0.0	0.0	0
6	3	4475	4.5	14.7	1.58/1.63	7.1	23.2	1225
6	4	3565	4.6	14.4	1.26/1.30	5.8	18.1	985
6	5	3014	4.4	14.7	1.06/1.10	4.7	15.7	828
6	6	3414	4.5	14.7	1.21/1.24	5.4	17.7	857
6	7	3550	3.9	14.9	1.25/1.29	4.9	18.7	974

TAP	POINT	CORR V	%02	% CO2	V LOC/AVG	WTD % O2	WTD %CO2	WTD TEMP
7	1	0	4.8	14.4	0.00/0.00	0.0	0.0	0
7	2	7029	4.5	14.7	2.48/2.56	11.2	36.5	1963
7	3	5882	4.7	14.5	2.08/2.14	9.8	30.1	1622
7	4	2774	5.0	14.2	.98/1.01	4.9	13.9	771
7	5	2940	4.3	14.9	1.04/1.07	4.5	15.5	812
7	6	3475	4.2	15.2	1.23/1.27	5.2	18.7	947
7	7	3463	4.2	14.8	1.22/1.26	5.1	18.1	949

REV 10/20/87

LOCATION = ECON WEST
FILE IDENITY = IP6_25EWH

AVERAGE VELOCITY = 2745 FPM

AVERAGE (WEIGHTED) % O2 = 4.16 *
AVERAGE (WEIGHTED) % CO2 = 14.97 *
AVERAGE (WEIGHTED) TEMPERATURE = 756

AVERAGE (ARITHMETIC) % O2 = 4.57 *
AVERAGE (ARITHMETIC) % CO2 = 14.62 *
AVERAGE (ARITHMETIC) TEMPERATURE = 750

AVERAGE STATIC PRESSURE (in. H2O) = -2.7
AVERAGE DENSITY (LBM/FT^3) = .02832

ACFM (ACTUAL FT^3/MIN) = 1166449
LB/HR (WET) = 1981993

* - O2/CO2 DATA WITH ERROR GREATER THAN .35 NOT USED
NO. OF POINTS NOT USED = 3 OUT OF 49

REV 10/20/87

LOCATION = ECON WEST
FILE IDENITY = IP6_25EWH

AVERAGE VELOCITY = 2745 FPM

AVERAGE (WEIGHTED) % O2 = 4.15
AVERAGE (WEIGHTED) % CO2 = 14.97
AVERAGE (WEIGHTED) TEMPERATURE = 756

AVERAGE (ARITHMETIC) % O2 = 4.53
AVERAGE (ARITHMETIC) % CO2 = 14.62
AVERAGE (ARITHMETIC) TEMPERATURE = 750

AVERAGE STATIC PRESSURE (in. H2O) = -2.7
AVERAGE DENSITY (LBM/FT^3) = .02832

ACFM (ACTUAL FT^3/MIN) = 1166449
LB/HR (WET) = 1981993

REV 10/20/87

DATE = 6-25-1987
LOCATION = ECON EAST
FILE IDENITY = IP6_25EEA
BAROMETRIC PRESSURE = 25.53
PROBE IDENTY = 28
DUCT HEIGHT = 21.2
DUCT WIDTH = 20.0

TAP	POINT	STAT P	TEMP	DELTA P	YAW ANGL	%02	% CO2
1	1	-3.2	747	.940	25	4.0	15.0
1	2	-3.1	738	.680	20	3.8	15.2
1	3	-3.2	737	.075	20	4.0	14.8
1	4	-3.1	734	.390	30	4.0	15.0
1	5	-3.0	732	.095	15	* 3.5	*15.0
1	6	-3.2	731	.227	15	3.8	15.0
1	7	-3.1	731	.311	15	3.9	15.1

TAP	POINT	STAT P	TEMP	DELTA P	YAW ANGL	%02	% CO2
2	1	-3.2	751	.742	30	4.1	14.8
2	2	-3.0	744	.329	15	4.0	15.0
2	3	-3.0	739	.229	15	3.8	15.1
2	4	-3.1	737	.940	20	4.0	14.8
2	5	-3.1	736	1.255	20	4.0	15.0
2	6	-3.1	734	.615	20	4.0	15.0
2	7	-3.1	736	.788	5	4.2	14.8

TAP	POINT	STAT P	TEMP	DELTA P	YAW ANGL	%02	% CO2
3	1	-3.1	736	1.281	0	4.2	14.6
3	2	-3.0	746	.919	10	4.0	15.2
3	3	-3.0	737	.366	0	4.0	15.1
3	4	-3.0	741	.168	15	4.0	15.0
3	5	-3.0	734	.551	15	4.1	15.0
3	6	-3.0	731	.986	0	4.2	15.1
3	7	-3.0	731	1.352	0	4.3	14.7

TAP	POINT	STAT P	TEMP	DELTA P	YAW ANGL	%02	% CO2
4	1	-3.1	760	1.411	0	3.9	15.4
4	2	-3.0	760	.752	0	4.0	15.2
4	3	-3.0	748	.395	0	4.5	14.8
4	4	-3.0	756	.161	0	4.3	15.0
4	5	-3.0	748	.778	0	4.4	14.6
4	6	-3.0	742	1.381	0	4.3	15.0
4	7	-2.9	746	1.969	0	4.0	15.2

TAP	POINT	STAT P	TEMP	DELTA P	YAW ANGL	%02	% CO2
5	1	-3.0	759	1.074	0	3.6	15.6
5	2	-3.0	772	.581	10	3.6	15.6
5	3	-3.0	762	.207	0	3.6	15.6
5	4	-2.9	767	.139	0	4.3	15.0
5	5	-2.9	763	1.057	0	4.2	15.0
5	6	-2.9	761	1.616	0	4.4	14.8
5	7	-2.9	769	1.777	1	4.0	14.9

TAP	POINT	STAT P	TEMP	DELTA P	YAW ANGL	%02	% CO2
6	1	-3.3	756	1.211	0	3.8	15.4
6	2	-3.3	764	.625	10	3.6	15.5
6	3	-3.1	764	.478	0	3.8	15.5
6	4	-3.1	766	.256	0	3.8	15.5
6	5	-3.1	766	.100	0	3.9	15.4
6	6	-3.1	761	.271	0	3.8	15.4
6	7	-3.0	760	.297	5	* 4.0	*14.6

TAP	POINT	STAT P	TEMP	DELTA P	YAW ANGL	%02	% CO2
7	1	-3.1	765	1.325	20	3.6	15.6
7	2	-3.1	759	.673	5	3.8	15.0
7	3	-3.1	764	.576	5	3.2	16.0
7	4	-3.1	769	.141	5	3.6	15.6
7	5	-3.1	770	.334	5	* 3.6	*15.8
7	6	-3.0	765	.332	10	3.9	15.2
7	7	-3.0	765	.266	10	3.9	15.0

* - O2/CO2 DATA WITH ERROR GREATER THAN .35 NOT USED

DATE = 6-25-1987
LOCATION = ECON EAST
FILE IDENITY = IP6_25EEA
BAROMETRIC PRESSURE = 25.53
PROBE IDENTY = E-28
AO = 1.03215E+00
A1 = 2.95347E-06
A2 = -1.05871E-10
A3 = 2.33758E-15
A4 = -2.00933E-20
DUCT AREA = 425.0

TAP	POINT	CORR V	%O2	% CO2	V LOC/AVG	WTD % O2	WTD %CO2	WTD TEMP
1	1	6057	4.0	15.0	1.14/1.17	4.6	17.2	870
1	2	5309	3.8	15.2	1.00/1.02	3.8	15.2	754
1	3	1742	4.0	14.8	.33/ .34	1.3	4.9	247
1	4	3686	4.0	15.0	.70/ .71	2.8	10.4	521
1	5	2012	3.5	15.0	.38/ .39	0.0	0.0	283
1	6	3123	3.8	15.0	.59/ .60	2.2	8.8	439
1	7	3660	3.9	15.1	.69/ .70	2.7	10.4	515

TAP	POINT	CORR V	%O2	% CO2	V LOC/AVG	WTD % O2	WTD %CO2	WTD TEMP
2	1	5142	4.1	14.8	.97/ .99	4.0	14.4	743
2	2	3785	4.0	15.0	.71/ .73	2.9	10.7	542
2	3	3145	3.8	15.1	.59/ .61	2.3	9.0	447
2	4	6257	4.0	14.8	1.18/1.20	4.7	17.5	887
2	5	7241	4.0	15.0	1.37/1.39	5.5	20.5	1026
2	6	5038	4.0	15.0	.95/ .97	3.8	14.3	712
2	7	6061	4.2	14.8	1.14/1.17	4.8	16.9	858

TAP	POINT	CORR V	%O2	% CO2	V LOC/AVG	WTD % O2	WTD %CO2	WTD TEMP
3	1	7789	4.2	14.6	1.47/1.50	6.2	21.5	1103
3	2	6501	4.0	15.2	1.23/1.25	4.9	18.7	933
3	3	4124	4.0	15.1	.78/ .79	3.1	11.8	584
3	4	2691	4.0	15.0	.51/ .52	2.0	7.6	383
3	5	4897	4.1	15.0	.92/ .94	3.8	13.9	692
3	6	6800	4.2	15.1	1.28/1.31	5.4	19.4	956
3	7	7986	4.3	14.7	1.51/1.54	6.5	22.2	1123

REV 10/20/87

TAP	POINT	CORR V	%02	% CO2	V LOC/AVG	WTD % O2	WTD %CO2	WTD TEMP
4	1	8252	3.9	15.4	1.56/1.59	6.1	24.0	1207
4	2	5996	4.0	15.2	1.13/1.15	4.5	17.2	877
4	3	4307	4.5	14.8	.81/ .83	3.7	12.0	620
4	4	2743	4.3	15.0	.52/ .53	2.2	7.8	399
4	5	6075	4.4	14.6	1.15/1.17	5.0	16.7	875
4	6	8104	4.3	15.0	1.53/1.56	6.6	23.0	1157
4	7	9719	4.0	15.2	1.84/1.87	7.3	27.9	1395

TAP	POINT	CORR V	%02	% CO2	V LOC/AVG	WTD % O2	WTD %CO2	WTD TEMP
5	1	7181	3.6	15.6	1.36/1.38	4.9	21.1	1049
5	2	5204	3.6	15.6	.98/1.00	3.5	15.3	773
5	3	3120	3.6	15.6	.59/ .60	2.1	9.2	457
5	4	2557	4.3	15.0	.48/ .49	2.1	7.2	377
5	5	7135	4.2	15.0	1.35/1.37	5.7	20.2	1047
5	6	8847	4.4	14.8	1.67/1.70	7.3	24.7	1296
5	7	9312	4.0	14.9	1.76/1.79	7.0	26.2	1378

TAP	POINT	CORR V	%02	% CO2	V LOC/AVG	WTD % O2	WTD %CO2	WTD TEMP
6	1	7626	3.8	15.4	1.44/1.47	5.5	22.2	1109
6	2	5385	3.6	15.5	1.02/1.04	3.7	15.8	791
6	3	4772	3.8	15.5	.90/ .92	3.4	14.0	701
6	4	3481	3.8	15.5	.66/ .67	2.5	10.2	513
6	5	2166	3.9	15.4	.41/ .42	1.6	6.3	319
6	6	3576	3.8	15.4	.68/ .69	2.6	10.4	523
6	7	3734	4.0	14.6	.70/ .72	0.0	0.0	546

TAP	POINT	CORR V	%02	% CO2	V LOC/AVG	WTD % O2	WTD %CO2	WTD TEMP
7	1	7524	3.6	15.6	1.42/1.45	5.1	22.2	1107
7	2	5647	3.8	15.0	1.07/1.09	4.1	16.0	825
7	3	5224	3.2	16.0	.99/1.01	3.2	15.8	768
7	4	2568	3.6	15.6	.48/ .49	1.7	7.6	380
7	5	3972	3.6	15.8	.75/ .76	2.7	11.9	589
7	6	3910	3.9	15.2	.74/ .75	2.9	11.2	576
7	7	3496	3.9	15.0	.66/ .67	2.6	9.9	515

REV 10/20/87

LOCATION = ECON EAST
FILE IDENITY = IP6_25EEA

AVERAGE VELOCITY = 5198 FPM

AVERAGE (WEIGHTED) % O2 = 3.97 *
AVERAGE (WEIGHTED) % CO2 = 15.13 *
AVERAGE (WEIGHTED) TEMPERATURE = 751

AVERAGE (ARITHMETIC) % O2 = 3.95 *
AVERAGE (ARITHMETIC) % CO2 = 15.15 *
AVERAGE (ARITHMETIC) TEMPERATURE = 751

AVERAGE STATIC PRESSURE (in. H2O) = -3.1
AVERAGE DENSITY (LBM/FT^3) = .02829

ACFM (ACTUAL FT^3/MIN) = 2208956
LB/HR (WET) = 3749361

* - O2/CO2 DATA WITH ERROR GREATER THAN .35 NOT USED
NO. OF POINTS NOT USED = 2 OUT OF 49

REV 10/20/87

LOCATION = ECON EAST
FILE IDENITY = IP6_25EEA

AVERAGE VELOCITY = 5198 FPM

AVERAGE (WEIGHTED) % O2 = 3.97
AVERAGE (WEIGHTED) % CO2 = 15.12
AVERAGE (WEIGHTED) TEMPERATURE = 751

AVERAGE (ARITHMETIC) % O2 = 3.94
AVERAGE (ARITHMETIC) % CO2 = 15.13
AVERAGE (ARITHMETIC) TEMPERATURE = 751

AVERAGE STATIC PRESSURE (in. H2O) = -3.1
AVERAGE DENSITY (LBM/FT^3) = .02829

ACFM (ACTUAL FT^3/MIN) = 2208956
LB/HR (WET) = 3749361

REV 10/20/87

DATE = 6/25/87
LOCATION = ECON EAST
FILE IDENITY = IP6_25EEH
BAROMETRIC PRESSURE = 25.53
PROBE IDENTY = E8
DUCT HEIGHT = 21.2
DUCT WIDTH = 20.0

TAP	POINT	STAT P	TEMP	DELTA P	YAW ANGL	%02	% CO2
1	1	-3.1	744	.046	40	4.6	14.6
1	2	-3.4	767	.068	20	3.2	16.0
1	3	-2.7	769	.698	50	2.8	16.4
1	4	-2.8	774	.493	50	3.4	15.8
1	5	-2.9	763	.429	55	3.2	15.8
1	6	-2.9	768	.459	40	3.6	15.4
1	7	-3.0	762	.236	60	4.6	14.4

TAP	POINT	STAT P	TEMP	DELTA P	YAW ANGL	%02	% CO2
2	1	-3.3	761	.041	0	3.0	16.0
2	2	-3.2	764	.109	30	3.8	15.4
2	3	-2.8	766	.683	40	3.4	15.6
2	4	-2.8	768	.490	60	3.6	15.6
2	5	-2.9	754	.358	60	3.6	15.6
2	6	-2.8	752	.361	50	4.0	15.2
2	7	-2.9	751	.153	20	4.4	14.6

TAP	POINT	STAT P	TEMP	DELTA P	YAW ANGL	%02	% CO2
3	1	-3.0	760	.007	70	2.4	16.6
3	2	-3.2	761	.075	60	2.8	16.2
3	3	-2.6	771	.686	60	2.0	16.8
3	4	-2.6	765	.578	60	3.2	15.6
3	5	-2.7	746	.400	60	3.8	15.6
3	6	-2.9	736	.131	55	3.6	15.6
3	7	-3.0	738	.095	40	3.8	15.2

TAP	POINT	STAT P	TEMP	DELTA P	YAW ANGL	%02	% CO2
4	1	-3.0	754	.004	60	2.6	16.4
4	2	-3.0	756	.031	45	3.2	15.8
4	3	-2.6	764	.712	60	2.0	17.0
4	4	-2.5	763	.615	40	2.6	16.4
4	5	-2.8	747	.439	40	3.2	16.0
4	6	-2.7	733	.368	40	3.4	15.6
4	7	-2.8	734	.249	40	3.0	16.0

TAP	POINT	STAT P	TEMP	DELTA P	YAW ANGL	%02	% CO2
5	1	-3.1	665	.007	60	4.4	14.8
5	2	-3.0	748	.009	60	2.4	16.6
5	3	-2.7	763	.622	60	2.2	16.6
5	4	-2.8	755	.576	40	2.8	16.2
5	5	-2.8	756	.502	40	3.2	15.8
5	6	-2.7	742	.383	30	3.2	16.0
5	7	-3.3	746	.217	40	3.6	15.4

TAP	POINT	STAT P	TEMP	DELTA P	YAW ANGL	%02	% CO2
6	1	-3.4	450	1.372	25	4.0	15.0
6	2	-3.4	745	.874	30	2.6	16.4
6	3	-3.2	747	.778	50	2.2	16.8
6	4	-3.4	743	.275	45	2.4	16.6
6	5	-3.3	753	.349	55	2.6	16.4
6	6	-3.4	747	.383	45	3.6	15.8
6	7	-3.3	746	.485	0	2.8	16.0

TAP	POINT	STAT P	TEMP	DELTA P	YAW ANGL	%02	% CO2
7	1	-3.1	702	.024	45	3.2	16.0
7	2	-3.1	740	.026	0	2.6	16.4
7	3	-3.0	736	.061	30	2.4	16.8
7	4	-2.6	724	.647	55	2.4	16.4
7	5	-2.7	736	.527	45	2.8	16.4
7	6	-2.7	742	.473	55	3.2	16.0
7	7	-2.8	748	.322	55	2.8	16.0

* - O2/CO2 DATA WITH ERROR GREATER THAN .35 NOT USED

DATE = 6/25/87
LOCATION = ECON EAST
FILE IDENITY = IP6_25EEH
BAROMETRIC PRESSURE = 25.53
PROBE IDENTY = E-8
AO = 1.10640E+00
A1 = 4.40463E-06
A2 = -9.96281E-11
A3 = 1.87291E-15
A4 = -1.81710E-20
DUCT AREA = 425.0

TAP	POINT	CORR V	%O2	% CO2	V LOC/AVG	WTD % O2	WTD %CO2	WTD TEMP
1	1	1198	4.6	14.6	.43/ .43	2.0	6.3	323
1	2	1805	3.2	16.0	.65/ .65	2.1	10.5	502
1	3	4048	2.8	16.4	1.47/1.47	4.1	24.1	1129
1	4	3394	3.4	15.8	1.23/1.23	4.2	19.4	953
1	5	2809	3.2	15.8	1.02/1.02	3.3	16.1	777
1	6	3893	3.6	15.4	1.41/1.41	5.1	21.7	1084
1	7	1805	4.6	14.4	.65/ .65	3.0	9.4	499

TAP	POINT	CORR V	%O2	% CO2	V LOC/AVG	WTD % O2	WTD %CO2	WTD TEMP
2	1	1484	3.0	16.0	.54/ .54	1.6	8.6	409
2	2	2111	3.8	15.4	.77/ .77	2.9	11.8	585
2	3	4769	3.4	15.6	1.73/1.73	5.9	27.0	1325
2	4	2626	3.6	15.6	.95/ .95	3.4	14.9	732
2	5	2224	3.6	15.6	.81/ .81	2.9	12.6	608
2	6	2870	4.0	15.2	1.04/1.04	4.2	15.8	783
2	7	2708	4.4	14.6	.98/ .98	4.3	14.3	737

TAP	POINT	CORR V	%O2	% CO2	V LOC/AVG	WTD % O2	WTD %CO2	WTD TEMP
3	1	208	2.4	16.6	.08/ .08	.2	1.3	57
3	2	1007	2.8	16.2	.37/ .37	1.0	5.9	278
3	3	3123	2.0	16.8	1.13/1.13	2.3	19.0	874
3	4	2856	3.2	15.6	1.04/1.04	3.3	16.2	793
3	5	2345	3.8	15.6	.85/ .85	3.2	13.3	634
3	6	1517	3.6	15.6	.55/ .55	2.0	8.6	405
3	7	1724	3.8	15.2	.63/ .63	2.4	9.5	462

REV 10/20/87

TAP	POINT	CORR V	%02	% CO2	V LOC/AVG	WTD % O2	WTD %CO2	WTD TEMP
4	1	229	2.6	16.4	.08/ .08	.2	1.4	63
4	2	909	3.2	15.8	.33/ .33	1.1	5.2	249
4	3	3175	2.0	17.0	1.15/1.15	2.3	19.6	880
4	4	4510	2.6	16.4	1.64/1.64	4.3	26.8	1249
4	5	3772	3.2	16.0	1.37/1.37	4.4	21.9	1022
4	6	3428	3.4	15.6	1.24/1.24	4.2	19.4	912
4	7	2807	3.0	16.0	1.02/1.02	3.1	16.3	747

TAP	POINT	CORR V	%02	% CO2	V LOC/AVG	WTD % O2	WTD %CO2	WTD TEMP
5	1	293	4.4	14.8	.11/ .11	.5	1.6	71
5	2	344	2.4	16.6	.12/ .12	.3	2.1	93
5	3	2961	2.2	16.6	1.07/1.07	2.4	17.8	819
5	4	4350	2.8	16.2	1.58/1.58	4.4	25.6	1191
5	5	4055	3.2	15.8	1.47/1.47	4.7	23.2	1111
5	6	3967	3.2	16.0	1.44/1.44	4.6	23.0	1068
5	7	2632	3.6	15.4	.95/ .95	3.4	14.7	712

TAP	POINT	CORR V	%02	% CO2	V LOC/AVG	WTD % O2	WTD %CO2	WTD TEMP
6	1	7078	4.0	15.0	2.57/2.57	10.3	38.5	1155
6	2	6075	2.6	16.4	2.20/2.20	5.7	36.1	1640
6	3	4248	2.2	16.8	1.54/1.54	3.4	25.9	1150
6	4	2738	2.4	16.6	.99/ .99	2.4	16.5	738
6	5	2518	2.6	16.4	.91/ .91	2.4	15.0	687
6	6	3249	3.6	15.8	1.18/1.18	4.2	18.6	881
6	7	5185	2.8	16.0	1.88/1.88	5.3	30.1	1403

TAP	POINT	CORR V	%02	% CO2	V LOC/AVG	WTD % O2	WTD %CO2	WTD TEMP
7	1	781	3.2	16.0	.28/ .28	.9	4.5	199
7	2	1169	2.6	16.4	.42/ .42	1.1	7.0	314
7	3	1554	2.4	16.8	.56/ .56	1.4	9.5	415
7	4	3415	2.4	16.4	1.24/1.24	3.0	20.3	897
7	5	3805	2.8	16.4	1.38/1.38	3.9	22.6	1015
7	6	2927	3.2	16.0	1.06/1.06	3.4	17.0	787
7	7	2411	2.8	16.0	.87/ .87	2.4	14.0	654

REV 10/20/87

LOCATION = ECON EAST
FILE IDENITY = IP6_25EEH

AVERAGE VELOCITY = 2757 FPM

AVERAGE (WEIGHTED) % O2 = 3.12 *
AVERAGE (WEIGHTED) % CO2 = 15.93 *
AVERAGE (WEIGHTED) TEMPERATURE = 736

AVERAGE (ARITHMETIC) % O2 = 3.15 *
AVERAGE (ARITHMETIC) % CO2 = 15.91 *
AVERAGE (ARITHMETIC) TEMPERATURE = 743

AVERAGE STATIC PRESSURE (in. H2O) = -3.0
AVERAGE DENSITY (LBM/FT^3) = .02856

ACFM (ACTUAL FT^3/MIN) = 1171858
LB/HR (WET) = 2008052

* - O2/CO2 DATA WITH ERROR GREATER THAN .35 NOT USED
NO. OF POINTS NOT USED = 0 OUT OF 49

REV 10/20/87

LOCATION = ECON EAST
FILE IDENITY = IP6_25EEH

AVERAGE VELOCITY = 2757 FPM

AVERAGE (WEIGHTED) % O2 = 3.12
AVERAGE (WEIGHTED) % CO2 = 15.93
AVERAGE (WEIGHTED) TEMPERATURE = 736

AVERAGE (ARITHMETIC) % O2 = 3.15
AVERAGE (ARITHMETIC) % CO2 = 15.91
AVERAGE (ARITHMETIC) TEMPERATURE = 743

AVERAGE STATIC PRESSURE (in. H2O) = -3.0
AVERAGE DENSITY (LBM/FT^3) = .02856

ACFM (ACTUAL FT^3/MIN) = 1171858
LB/HR (WET) = 2008052

REV 10/20/87

DATE = 6/25/87
LOCATION = WESTSECGASIN
FILE IDENITY = IP6_25WSGI
BAROMETRIC PRESSURE = 25.52
PROBE IDENTY = E-27
DUCT HEIGHT = 19.7
DUCT WIDTH = 40.0

TAP	POINT	STAT P	TEMP	DELTA P	YAW ANGL	%02	% CO2
1	1	-3.4	746	.236	10	4.2	15.0
1	2	-3.5	749	.214	15	4.2	15.0
1	3	-3.6	749	.136	3	4.2	15.0
1	4	-3.7	749	.173	0	4.2	15.0
1	5	-3.7	749	.173	10	4.2	15.0
1	6	-3.7	749	.151	10	4.2	15.0
1	7	-3.7	744	.043	0	4.2	15.0

TAP	POINT	STAT P	TEMP	DELTA P	YAW ANGL	%02	% CO2
2	1	-3.5	750	.236	13	4.2	15.0
2	2	-3.6	753	.173	25	4.2	15.0
2	3	-3.8	752	.168	15	4.2	15.0
2	4	-3.8	752	.114	0	4.2	15.0
2	5	-3.7	755	.299	15	4.2	15.0
2	6	-3.7	751	.170	22	4.2	15.0
2	7	-3.6	745	.048	0	4.2	15.0

TAP	POINT	STAT P	TEMP	DELTA P	YAW ANGL	%02	% CO2
3	1	-3.5	752	.273	10	4.2	15.0
3	2	-3.5	753	.168	10	4.2	15.0
3	3	-3.6	753	.217	10	4.2	15.0
3	4	-3.5	751	.183	5	4.2	15.0
3	5	-3.6	749	.161	10	4.2	15.0
3	6	-3.6	747	.053	10	4.2	15.0
3	7	-3.5	738	.007	0	4.2	15.0

TAP	POINT	STAT P	TEMP	DELTA P	YAW ANGL	%02	% CO2
4	1	-3.4	753	.266	5	4.2	15.0
4	2	-3.5	755	.249	0	4.2	15.0
4	3	-3.5	760	.229	7	4.2	15.0
4	4	-3.7	753	.236	3	4.2	15.0
4	5	-3.7	751	.092	6	4.2	15.0
4	6	-3.8	747	.026	12	4.2	15.0
4	7	-3.8	743	.007	0	4.2	15.0

TAP	POINT	STAT P	TEMP	DELTA P	YAW ANGL	%02	% CO2
5	1	-3.7	750	.297	10	4.2	15.0
5	2	-3.6	752	.217	5	4.2	15.0
5	3	-3.7	752	.241	5	4.2	15.0
5	4	-3.8	752	.178	5	4.2	15.0
5	5	-3.9	752	.056	5	4.2	15.0
5	6	-3.9	748	.012	0	4.2	15.0
5	7	-3.9	743	.004	0	4.2	15.0

TAP	POINT	STAT P	TEMP	DELTA P	YAW ANGL	%02	% CO2
6	1	-3.6	752	.290	23	4.2	15.0
6	2	-3.6	752	.222	5	4.2	15.0
6	3	-3.8	751	.244	5	4.2	15.0
6	4	-3.8	751	.234	5	4.2	15.0
6	5	-3.9	747	.083	11	4.2	15.0
6	6	-3.9	743	.031	41	4.2	15.0
6	7	-3.8	740	.004	0	4.2	15.0

TAP	POINT	STAT P	TEMP	DELTA P	YAW ANGL	%02	% CO2
7	1	-3.6	749	.241	15	4.2	15.0
7	2	-3.6	753	.261	10	4.2	15.0
7	3	-3.6	752	.249	0	4.2	15.0
7	4	-3.7	752	.222	25	4.2	15.0
7	5	-3.7	748	.080	22	4.2	15.0
7	6	-3.9	745	.026	0	4.2	15.0
7	7	-3.8	738	.009	0	4.2	15.0

TAP	POINT	STAT P	TEMP	DELTA P	YAW ANGL	%02	% CO2
8	1	-3.6	724	.163	0	4.2	15.0
8	2	-3.6	751	.341	25	4.2	15.0
8	3	-3.8	750	.224	15	4.2	15.0
8	4	-3.8	750	.166	5	4.2	15.0
8	5	-3.8	746	.170	3	4.2	15.0
8	6	-3.9	743	.024	13	4.2	15.0
8	7	-3.9	742	.063	50	4.2	15.0

TAP	POINT	STAT P	TEMP	DELTA P	YAW ANGL	%02	% CO2
9	1	-3.7	744	.271	0	4.2	15.0
9	2	-3.9	753	.273	12	4.2	15.0
9	3	-3.9	749	.756	10	4.2	15.0
9	4	-3.9	747	.217	0	4.2	15.0
9	5	-3.9	747	.214	20	4.2	15.0
9	6	-3.9	743	.114	28	4.2	15.0
9	7	-3.9	740	.048	0	4.2	15.0

TAP	POINT	STAT P	TEMP	DELTA P	YAW ANGL	%02	% CO2
10	1	-3.8	752	.268	10	4.2	15.0
10	2	-3.9	752	.336	17	4.2	15.0
10	3	-3.8	747	.241	10	4.2	15.0
10	4	-3.8	748	.207	10	4.2	15.0
10	5	-3.8	747	.200	20	4.2	15.0
10	6	-3.8	744	.183	30	4.2	15.0
10	7	-4.0	740	.053	40	4.2	15.0

TAP	POINT	STAT P	TEMP	DELTA P	YAW ANGL	%02	% CO2
11	1	-3.7	751	.253	20	4.2	15.0
11	2	-3.7	747	.283	15	4.2	15.0
11	3	-3.7	747	.251	4	4.2	15.0
11	4	-3.8	746	.227	9	4.2	15.0
11	5	-3.7	744	.214	17	4.2	15.0
11	6	-3.8	742	.156	25	4.2	15.0
11	7	-3.8	735	.012	0	4.2	15.0

TAP	POINT	STAT P	TEMP	DELTA P	YAW ANGL	%02	% CO2
12	1	-3.4	750	.461	10	4.2	15.0
12	2	-3.5	751	.395	10	4.2	15.0
12	3	-3.6	751	.324	5	4.2	15.0
12	4	-3.6	750	.163	5	4.2	15.0
12	5	-3.8	750	.024	0	4.2	15.0
12	6	-3.8	749	.004	0	4.2	15.0
12	7	-3.7	748	.002	0	4.2	15.0

TAP	POINT	STAT P	TEMP	DELTA P	YAW ANGL	%02	% CO2
13	1	-3.4	744	.463	5	4.2	15.0
13	2	-3.6	748	.393	7	4.2	15.0
13	3	-3.6	747	.236	15	4.2	15.0
13	4	-3.7	747	.068	20	4.2	15.0
13	5	-3.8	746	.007	0	4.2	15.0
13	6	-3.8	741	.004	0	4.2	15.0
13	7	-3.7	726	.004	0	4.2	15.0

TAP	POINT	STAT P	TEMP	DELTA P	YAW ANGL	%02	% CO2
14	1	-3.4	747	.380	2	4.2	15.0
14	2	-3.5	747	.366	0	4.2	15.0
14	3	-3.7	746	.356	15	4.2	15.0
14	4	-3.7	746	.307	17	4.2	15.0
14	5	-3.8	746	.095	17	4.2	15.0
14	6	-3.8	727	.012	0	4.2	15.0
14	7	-3.7	719	.012	0	4.2	15.0

DATE = 6/25/87
LOCATION = WESTSECGASIN
FILE IDENITY = IP6_25WSGI
BAROMETRIC PRESSURE = 25.52
PROBE IDENTY = E-27
AO = 1.14355E+00
A1 = -3.76441E-06
A2 = 2.34373E-10
A3 = -4.63214E-15
A4 = 3.02600E-20
DUCT AREA = 789.2

TAP	POINT	CORR V	%02	% CO2	V LOC/AVG	WTD % O2	WTD %CO2	WTD TEMP
1	1	3516	4.2	15.0	1.27/1.27	5.3	19.0	947
1	2	3290	4.2	15.0	1.19/1.19	4.9	17.8	890
1	3	2717	4.2	15.0	.98/ .98	4.1	14.7	735
1	4	3066	4.2	15.0	1.11/1.11	4.6	16.6	829
1	5	3019	4.2	15.0	1.09/1.09	4.5	16.4	816
1	6	2822	4.2	15.0	1.02/1.02	4.2	15.3	763
1	7	1533	4.2	15.0	.55/ .55	2.3	8.3	412

TAP	POINT	CORR V	%02	% CO2	V LOC/AVG	WTD % O2	WTD %CO2	WTD TEMP
2	1	3486	4.2	15.0	1.26/1.26	5.2	18.9	944
2	2	2783	4.2	15.0	1.00/1.00	4.2	15.1	757
2	3	2923	4.2	15.0	1.06/1.06	4.4	15.8	793
2	4	2496	4.2	15.0	.90/ .90	3.7	13.5	678
2	5	3896	4.2	15.0	1.41/1.41	5.8	21.1	1062
2	6	2820	4.2	15.0	1.02/1.02	4.2	15.3	765
2	7	1620	4.2	15.0	.58/ .58	2.4	8.8	436

TAP	POINT	CORR V	%02	% CO2	V LOC/AVG	WTD % O2	WTD %CO2	WTD TEMP
3	1	3790	4.2	15.0	1.37/1.37	5.7	20.5	1029
3	2	2980	4.2	15.0	1.08/1.08	4.5	16.1	810
3	3	3384	4.2	15.0	1.22/1.22	5.1	18.3	920
3	4	3142	4.2	15.0	1.13/1.13	4.7	17.0	852
3	5	2913	4.2	15.0	1.05/1.05	4.4	15.8	788
3	6	1677	4.2	15.0	.61/ .61	2.5	9.1	452
3	7	620	4.2	15.0	.22/ .22	.9	3.4	165

REV 10/20/87

TAP	POINT	CORR V	%02	% CO2	V LOC/AVG	WTD % O2	WTD %CO2	WTD TEMP
4	1	3786	4.2	15.0	1.37/1.37	5.7	20.5	1029
4	2	3681	4.2	15.0	1.33/1.33	5.5	19.9	1003
4	3	3513	4.2	15.0	1.27/1.27	5.3	19.0	964
4	4	3578	4.2	15.0	1.29/1.29	5.4	19.4	973
4	5	2231	4.2	15.0	.81/ .81	3.3	12.1	605
4	6	1169	4.2	15.0	.42/ .42	1.8	6.3	315
4	7	621	4.2	15.0	.22/ .22	.9	3.4	167

TAP	POINT	CORR V	%02	% CO2	V LOC/AVG	WTD % O2	WTD %CO2	WTD TEMP
5	1	3950	4.2	15.0	1.43/1.43	5.9	21.4	1070
5	2	3422	4.2	15.0	1.24/1.24	5.1	18.5	929
5	3	3605	4.2	15.0	1.30/1.30	5.4	19.5	979
5	4	3102	4.2	15.0	1.12/1.12	4.6	16.8	842
5	5	1748	4.2	15.0	.63/ .63	2.6	9.5	474
5	6	814	4.2	15.0	.29/ .29	1.2	4.4	220
5	7	470	4.2	15.0	.17/ .17	.7	2.5	126

TAP	POINT	CORR V	%02	% CO2	V LOC/AVG	WTD % O2	WTD %CO2	WTD TEMP
6	1	3651	4.2	15.0	1.32/1.32	5.5	19.8	991
6	2	3461	4.2	15.0	1.25/1.25	5.2	18.7	939
6	3	3626	4.2	15.0	1.31/1.31	5.4	19.6	983
6	4	3552	4.2	15.0	1.28/1.28	5.3	19.2	963
6	5	2089	4.2	15.0	.75/ .75	3.1	11.3	563
6	6	983	4.2	15.0	.35/ .35	1.5	5.3	264
6	7	469	4.2	15.0	.17/ .17	.7	2.5	125

TAP	POINT	CORR V	%02	% CO2	V LOC/AVG	WTD % O2	WTD %CO2	WTD TEMP
7	1	3491	4.2	15.0	1.26/1.26	5.2	18.9	944
7	2	3709	4.2	15.0	1.34/1.34	5.6	20.1	1008
7	3	3677	4.2	15.0	1.33/1.33	5.5	19.9	998
7	4	3149	4.2	15.0	1.14/1.14	4.7	17.1	855
7	5	1938	4.2	15.0	.70/ .70	2.9	10.5	523
7	6	1195	4.2	15.0	.43/ .43	1.8	6.5	321
7	7	703	4.2	15.0	.25/ .25	1.1	3.8	187

TAP	POINT	CORR V	%02	% CO2	V LOC/AVG	WTD % O2	WTD %CO2	WTD TEMP
8	1	2945	4.2	15.0	1.06/1.06	4.4	15.9	770
8	2	3895	4.2	15.0	1.41/1.41	5.8	21.1	1056
8	3	3368	4.2	15.0	1.22/1.22	5.0	18.2	912
8	4	2994	4.2	15.0	1.08/1.08	4.5	16.2	811
8	5	3032	4.2	15.0	1.09/1.09	4.5	16.4	817
8	6	1118	4.2	15.0	.40/ .40	1.7	6.1	300
8	7	1191	4.2	15.0	.43/ .43	1.8	6.4	319

REV 10/20/87

TAP	POINT	CORR V	%02	% CO2	V LOC/AVG	WTD % O2	WTD %CO2	WTD TEMP
9	1	3823	4.2	15.0	1.38/1.38	5.7	20.7	1027
9	2	3768	4.2	15.0	1.36/1.36	5.6	20.4	1024
9	3	6293	4.2	15.0	2.27/2.27	9.4	34.1	1702
9	4	3429	4.2	15.0	1.24/1.24	5.1	18.6	925
9	5	3200	4.2	15.0	1.16/1.16	4.8	17.3	863
9	6	2196	4.2	15.0	.79/ .79	3.3	11.9	589
9	7	1617	4.2	15.0	.58/ .58	2.4	8.8	432

TAP	POINT	CORR V	%02	% CO2	V LOC/AVG	WTD % O2	WTD %CO2	WTD TEMP
10	1	3757	4.2	15.0	1.36/1.36	5.6	20.3	1020
10	2	4083	4.2	15.0	1.47/1.47	6.1	22.1	1109
10	3	3557	4.2	15.0	1.28/1.28	5.3	19.3	959
10	4	3300	4.2	15.0	1.19/1.19	4.9	17.9	891
10	5	3094	4.2	15.0	1.12/1.12	4.6	16.8	834
10	6	2725	4.2	15.0	.98/ .98	4.1	14.8	732
10	7	1301	4.2	15.0	.47/ .47	1.9	7.0	348

TAP	POINT	CORR V	%02	% CO2	V LOC/AVG	WTD % O2	WTD %CO2	WTD TEMP
11	1	3482	4.2	15.0	1.26/1.26	5.2	18.9	944
11	2	3778	4.2	15.0	1.36/1.36	5.7	20.5	1019
11	3	3676	4.2	15.0	1.33/1.33	5.5	19.9	991
11	4	3461	4.2	15.0	1.25/1.25	5.2	18.7	932
11	5	3251	4.2	15.0	1.17/1.17	4.9	17.6	873
11	6	2632	4.2	15.0	.95/ .95	3.9	14.3	705
11	7	810	4.2	15.0	.29/ .29	1.2	4.4	215

TAP	POINT	CORR V	%02	% CO2	V LOC/AVG	WTD % O2	WTD %CO2	WTD TEMP
12	1	4914	4.2	15.0	1.77/1.77	7.4	26.6	1330
12	2	4553	4.2	15.0	1.64/1.64	6.8	24.7	1234
12	3	4174	4.2	15.0	1.51/1.51	6.3	22.6	1132
12	4	2966	4.2	15.0	1.07/1.07	4.4	16.1	803
12	5	1150	4.2	15.0	.42/ .42	1.7	6.2	311
12	6	471	4.2	15.0	.17/ .17	.7	2.6	127
12	7	333	4.2	15.0	.12/ .12	.5	1.8	90

TAP	POINT	CORR V	%02	% CO2	V LOC/AVG	WTD % O2	WTD %CO2	WTD TEMP
13	1	4969	4.2	15.0	1.79/1.79	7.4	26.9	1335
13	2	4572	4.2	15.0	1.65/1.65	6.8	24.8	1235
13	3	3451	4.2	15.0	1.25/1.25	5.2	18.7	931
13	4	1811	4.2	15.0	.65/ .65	2.7	9.8	488
13	5	622	4.2	15.0	.22/ .22	.9	3.4	167
13	6	470	4.2	15.0	.17/ .17	.7	2.5	126
13	7	467	4.2	15.0	.17/ .17	.7	2.5	122

REV 10/20/87

TAP	POINT	CORR V	%O2	% CO2	V LOC/AVG	WTD % O2	WTD %CO2	WTD TEMP
14	1	4524	4.2	15.0	1.63/1.63	6.8	24.5	1220
14	2	4443	4.2	15.0	1.60/1.60	6.7	24.1	1198
14	3	4233	4.2	15.0	1.53/1.53	6.3	22.9	1140
14	4	3893	4.2	15.0	1.41/1.41	5.8	21.1	1048
14	5	2175	4.2	15.0	.79/ .79	3.3	11.8	586
14	6	807	4.2	15.0	.29/ .29	1.2	4.4	212
14	7	804	4.2	15.0	.29/ .29	1.2	4.4	209

REV 10/20/87

LOCATION = WESTSECGASIN
FILE IDENITY = IP6_25WSGI

AVERAGE VELOCITY = 2770 FPM

AVERAGE (WEIGHTED) % O2 = 4.15 *
AVERAGE (WEIGHTED) % CO2 = 15.00 *
AVERAGE (WEIGHTED) TEMPERATURE = 749

AVERAGE (ARITHMETIC) % O2 = 4.15 *
AVERAGE (ARITHMETIC) % CO2 = 15.00 *
AVERAGE (ARITHMETIC) TEMPERATURE = 747

AVERAGE STATIC PRESSURE (in. H2O) = -3.7
AVERAGE DENSITY (LBM/FT^3) = .02831

ACFM (ACTUAL FT^3/MIN) = 2186014
LB/HR (WET) = 3712549

* - O2/CO2 DATA WITH ERROR GREATER THAN .35 NOT USED
NO. OF POINTS NOT USED = 0 OUT OF 98

REV 10/20/87

LOCATION = WESTSECGASIN
FILE IDENITY = IP6_25WSGI

AVERAGE VELOCITY = 2770 FPM

AVERAGE (WEIGHTED) % O2 = 4.15
AVERAGE (WEIGHTED) % CO2 = 15.00
AVERAGE (WEIGHTED) TEMPERATURE = 749

AVERAGE (ARITHMETIC) % O2 = 4.15
AVERAGE (ARITHMETIC) % CO2 = 15.00
AVERAGE (ARITHMETIC) TEMPERATURE = 747

AVERAGE STATIC PRESSURE (in. H2O) = -3.7
AVERAGE DENSITY (LBM/FT^3) = .02831

ACFM (ACTUAL FT^3/MIN) = 2186014
LB/HR (WET) = 3712549

REV 10/20/87

DATE = 6-25-87
LOCATION = SEC GAS IN EAST
FILE IDENITY = IP6_25ESGI
BAROMETRIC PRESSURE = 25.52
PROBE IDENTY = E-27
DUCT HEIGHT = 19.7
DUCT WIDTH = 40.0

TAP	POINT	STAT P	TEMP	DELTA P	YAW ANGL	%02	% CO2
1	1	-3.6	750	.344	10	3.6	15.5
1	2	-3.6	750	.390	15	3.6	15.5
1	3	-3.8	747	.376	19	3.6	15.5
1	4	-3.8	745	.327	20	3.6	15.5
1	5	-3.8	745	.156	17	3.6	15.5
1	6	-3.8	744	.073	12	3.6	15.5
1	7	-3.8	744	.017	35	3.6	15.5

TAP	POINT	STAT P	TEMP	DELTA P	YAW ANGL	%02	% CO2
2	1	-3.6	744	.349	0	3.6	15.5
2	2	-3.6	744	.366	17	3.6	15.5
2	3	-3.7	744	.312	26	3.6	15.5
2	4	-3.7	739	.351	27	3.6	15.5
2	5	-3.7	740	.263	25	3.6	15.5
2	6	-3.7	738	.141	30	3.6	15.5
2	7	-3.7	738	.024	45	3.6	15.5

TAP	POINT	STAT P	TEMP	DELTA P	YAW ANGL	%02	% CO2
3	1	-3.0	743	.324	10	3.6	15.5
3	2	-3.7	746	.329	25	3.6	15.5
3	3	-3.8	745	.317	30	3.6	15.5
3	4	-3.9	746	.324	30	3.6	15.5
3	5	-3.6	741	.268	25	3.6	15.5
3	6	-3.7	737	.239	35	3.6	15.5
3	7	-3.7	736	.014	45	3.6	15.5

TAP	POINT	STAT P	TEMP	DELTA P	YAW ANGL	%02	% CO2
4	1	-3.7	734	.280	30	3.6	15.5
4	2	-3.7	745	.285	35	3.6	15.5
4	3	-3.8	742	.317	33	3.6	15.5
4	4	-3.8	742	.275	26	3.6	15.5
4	5	-3.8	738	.290	17	3.6	15.5
4	6	-3.7	733	.117	20	3.6	15.5
4	7	-3.8	725	.017	0	3.6	15.5

TAP	POINT	STAT P	TEMP	DELTA P	YAW ANGL	%02	% CO2
5	1	-3.7	755	.390	20	3.6	15.5
5	2	-3.9	758	.376	25	3.6	15.5
5	3	-3.7	757	.349	20	3.6	15.5
5	4	-3.7	755	.278	10	3.6	15.5
5	5	-3.6	753	.278	0	3.6	15.5
5	6	-3.7	752	.119	0	3.6	15.5
5	7	-3.6	750	.048	0	3.6	15.5

TAP	POINT	STAT P	TEMP	DELTA P	YAW ANGL	%02	% CO2
6	1	-3.8	753	.310	12	3.6	15.5
6	2	-3.7	757	.356	30	3.6	15.5
6	3	-3.6	758	.368	25	3.6	15.5
6	4	-3.6	755	.307	8	3.6	15.5
6	5	-3.6	754	.295	3	3.6	15.5
6	6	-3.8	753	.185	0	3.6	15.5
6	7	-3.7	750	.041	0	3.6	15.5

TAP	POINT	STAT P	TEMP	DELTA P	YAW ANGL	%02	% CO2
7	1	-3.5	750	.173	15	3.6	15.5
7	2	-3.5	755	.400	30	3.6	15.5
7	3	-3.5	758	.227	18	3.6	15.5
7	4	-3.5	756	.256	10	3.6	15.5
7	5	-3.6	755	.229	4	3.6	15.5
7	6	-3.5	753	.136	8	3.6	15.5
7	7	-3.6	748	.024	0	3.6	15.5

TAP	POINT	STAT P	TEMP	DELTA P	YAW ANGL	%02	% CO2
8	1	-3.4	749	.302	12	3.6	15.5
8	2	-3.4	755	.348	12	3.6	15.5
8	3	-3.4	759	.356	10	3.6	15.5
8	4	-3.5	758	.180	0	3.6	15.5
8	5	-3.5	756	.139	14	3.6	15.5
8	6	-3.6	754	.083	12	3.6	15.5
8	7	-3.6	754	.002	0	3.6	15.5

TAP	POINT	STAT P	TEMP	DELTA P	YAW ANGL	%02	% CO2
9	1	-3.6	745	.471	20	3.6	15.5
9	2	-3.7	750	.473	12	3.6	15.5
9	3	-3.8	753	.417	5	3.6	15.5
9	4	-3.6	753	.271	3	3.6	15.5
9	5	-3.8	753	.036	0	3.6	15.5
9	6	-3.7	751	.004	0	3.6	15.5
9	7	-3.6	742	.004	0	3.6	15.5

TAP	POINT	STAT P	TEMP	DELTA P	YAW ANGL	%02	% CO2
10	1	-3.6	747	.534	20	3.6	15.5
10	2	-3.8	752	.461	15	3.6	15.5
10	3	-3.7	755	.427	3	3.6	15.5
10	4	-3.8	756	.183	7	3.6	15.5
10	5	-3.8	753	.007	0	3.6	15.5
10	6	-3.8	751	.004	0	3.6	15.5
10	7	-3.8	743	.004	0	3.6	15.5

TAP	POINT	STAT P	TEMP	DELTA P	YAW ANGL	%02	% CO2
11	1	-3.6	748	.473	20	3.6	15.5
11	2	-3.6	758	.407	7	3.6	15.5
11	3	-3.7	757	.361	8	3.6	15.5
11	4	-3.7	754	.188	2	3.6	15.5
11	5	-3.7	753	.068	10	3.6	15.5
11	6	-3.6	753	.019	0	3.6	15.5
11	7	-3.7	750	.002	0	3.6	15.5

TAP	POINT	STAT P	TEMP	DELTA P	YAW ANGL	%02	% CO2
12	1	-3.3	732	.117	20	3.6	15.5
12	2	-3.4	738	.136	7	3.6	15.5
12	3	-3.4	741	.170	5	3.6	15.5
12	4	-3.3	740	.205	5	3.6	15.5
12	5	-3.4	740	.214	5	3.6	15.5
12	6	-3.5	726	.075	0	3.6	15.5
12	7	-3.5	710	.012	0	3.6	15.5

TAP	POINT	STAT P	TEMP	DELTA P	YAW ANGL	%02	% CO2
13	1	-3.6	741	.100	5	3.6	15.5
13	2	-3.6	749	.744	10	3.6	15.5
13	3	-3.5	750	.200	0	3.6	15.5
13	4	-3.5	749	.175	5	3.6	15.5
13	5	-3.4	745	.200	5	3.6	15.5
13	6	-3.5	741	.073	0	3.6	15.5
13	7	-3.5	725	.026	0	3.6	15.5

TAP	POINT	STAT P	TEMP	DELTA P	YAW ANGL	%02	% CO2
14	1	-3.5	749	.239	15	3.6	15.5
14	2	-3.6	749	.268	16	3.6	15.5
14	3	-3.7	747	.219	5	3.6	15.5
14	4	-3.7	746	.173	10	3.6	15.5
14	5	-3.5	745	.168	18	3.6	15.5
14	6	-3.7	743	.112	12	3.6	15.5
14	7	-3.8	740	.019	0	3.6	15.5

DATE = 6-25-87
LOCATION = SEC GAS IN EAST
FILE IDENITY = IP6_25ESGI
BAROMETRIC PRESSURE = 25.52
PROBE IDENTY = E-27
AO = 1.14355E+00
A1 = -3.76441E-06
A2 = 2.34373E-10
A3 = -4.63214E-15
A4 = 3.02600E-20
DUCT AREA = 789.2

TAP	POINT	CORR V	%02	% CO2	V LOC/AVG	WTD % O2	WTD %CO2	WTD TEMP
1	1	4247	3.6	15.5	1.40/1.40	5.0	21.7	1048
1	2	4434	3.6	15.5	1.46/1.46	5.2	22.6	1094
1	3	4258	3.6	15.5	1.40/1.40	5.0	21.7	1046
1	4	3945	3.6	15.5	1.30/1.30	4.6	20.1	967
1	5	2780	3.6	15.5	.91/ .91	3.2	14.2	681
1	6	1950	3.6	15.5	.64/ .64	2.3	9.9	477
1	7	792	3.6	15.5	.26/ .26	.9	4.0	194

TAP	POINT	CORR V	%02	% CO2	V LOC/AVG	WTD % O2	WTD %CO2	WTD TEMP
2	1	4333	3.6	15.5	1.43/1.43	5.1	22.1	1060
2	2	4243	3.6	15.5	1.40/1.40	5.0	21.6	1038
2	3	3684	3.6	15.5	1.21/1.21	4.3	18.8	901
2	4	3864	3.6	15.5	1.27/1.27	4.5	19.7	939
2	5	3406	3.6	15.5	1.12/1.12	4.0	17.4	829
2	6	2387	3.6	15.5	.79/ .79	2.8	12.2	579
2	7	809	3.6	15.5	.27/ .27	.9	4.1	196

TAP	POINT	CORR V	%02	% CO2	V LOC/AVG	WTD % O2	WTD %CO2	WTD TEMP
3	1	4107	3.6	15.5	1.35/1.35	4.8	20.9	1004
3	2	3817	3.6	15.5	1.26/1.26	4.5	19.5	937
3	3	3580	3.6	15.5	1.18/1.18	4.2	18.2	877
3	4	3621	3.6	15.5	1.19/1.19	4.2	18.5	888
3	5	3439	3.6	15.5	1.13/1.13	4.0	17.5	838
3	6	2932	3.6	15.5	.96/ .96	3.4	14.9	711
3	7	618	3.6	15.5	.20/ .20	.7	3.2	150

REV 10/20/87

TAP	POINT	CORR V	%02	% CO2	V LOC/AVG	WTD % O2	WTD %CO2	WTD TEMP
4	1	3349	3.6	15.5	1.10/1.10	3.9	17.1	809
4	2	3211	3.6	15.5	1.06/1.06	3.7	16.4	787
4	3	3462	3.6	15.5	1.14/1.14	4.0	17.7	845
4	4	3457	3.6	15.5	1.14/1.14	4.0	17.6	844
4	5	3771	3.6	15.5	1.24/1.24	4.4	19.2	915
4	6	2356	3.6	15.5	.77/ .77	2.8	12.0	568
4	7	958	3.6	15.5	.32/ .32	1.1	4.9	229

TAP	POINT	CORR V	%02	% CO2	V LOC/AVG	WTD % O2	WTD %CO2	WTD TEMP
5	1	4323	3.6	15.5	1.42/1.42	5.0	22.0	1074
5	2	4101	3.6	15.5	1.35/1.35	4.8	20.9	1022
5	3	4094	3.6	15.5	1.35/1.35	4.8	20.9	1019
5	4	3829	3.6	15.5	1.26/1.26	4.5	19.5	951
5	5	3884	3.6	15.5	1.28/1.28	4.5	19.8	962
5	6	2549	3.6	15.5	.84/ .84	3.0	13.0	630
5	7	1622	3.6	15.5	.53/ .53	1.9	8.3	400

TAP	POINT	CORR V	%02	% CO2	V LOC/AVG	WTD % O2	WTD %CO2	WTD TEMP
6	1	4012	3.6	15.5	1.32/1.32	4.7	20.5	994
6	2	3811	3.6	15.5	1.25/1.25	4.4	19.4	949
6	3	4055	3.6	15.5	1.33/1.33	4.7	20.7	1011
6	4	4044	3.6	15.5	1.33/1.33	4.7	20.6	1004
6	5	3997	3.6	15.5	1.31/1.31	4.7	20.4	991
6	6	3174	3.6	15.5	1.04/1.04	3.7	16.2	786
6	7	1500	3.6	15.5	.49/ .49	1.8	7.6	370

TAP	POINT	CORR V	%02	% CO2	V LOC/AVG	WTD % O2	WTD %CO2	WTD TEMP
7	1	2961	3.6	15.5	.97/ .97	3.5	15.1	730
7	2	4034	3.6	15.5	1.33/1.33	4.7	20.6	1002
7	3	3347	3.6	15.5	1.10/1.10	3.9	17.1	834
7	4	3676	3.6	15.5	1.21/1.21	4.3	18.7	914
7	5	3522	3.6	15.5	1.16/1.16	4.1	18.0	875
7	6	2697	3.6	15.5	.89/ .89	3.1	13.7	668
7	7	1149	3.6	15.5	.38/ .38	1.3	5.9	283

TAP	POINT	CORR V	%02	% CO2	V LOC/AVG	WTD % O2	WTD %CO2	WTD TEMP
8	1	3951	3.6	15.5	1.30/1.30	4.6	20.1	973
8	2	4250	3.6	15.5	1.40/1.40	5.0	21.7	1055
8	3	4335	3.6	15.5	1.43/1.43	5.1	22.1	1082
8	4	3136	3.6	15.5	1.03/1.03	3.7	16.0	782
8	5	2675	3.6	15.5	.88/ .88	3.1	13.6	665
8	6	2086	3.6	15.5	.69/ .69	2.4	10.6	517
8	7	334	3.6	15.5	.11/ .11	.4	1.7	83

REV 10/20/87

TAP	POINT	CORR V	%02	% CO2	V LOC/AVG	WTD % O2	WTD %CO2	WTD TEMP
9	1	4729	3.6	15.5	1.56/1.56	5.5	24.1	1159
9	2	4944	3.6	15.5	1.63/1.63	5.8	25.2	1220
9	3	4735	3.6	15.5	1.56/1.56	5.5	24.1	1173
9	4	3830	3.6	15.5	1.26/1.26	4.5	19.5	949
9	5	1408	3.6	15.5	.46/ .46	1.6	7.2	349
9	6	471	3.6	15.5	.16/ .16	.6	2.4	116
9	7	469	3.6	15.5	.15/ .15	.5	2.4	115

TAP	POINT	CORR V	%02	% CO2	V LOC/AVG	WTD % O2	WTD %CO2	WTD TEMP
10	1	5038	3.6	15.5	1.66/1.66	5.9	25.7	1238
10	2	4825	3.6	15.5	1.59/1.59	5.6	24.6	1193
10	3	4806	3.6	15.5	1.58/1.58	5.6	24.5	1194
10	4	3137	3.6	15.5	1.03/1.03	3.7	16.0	780
10	5	624	3.6	15.5	.21/ .21	.7	3.2	154
10	6	471	3.6	15.5	.16/ .16	.6	2.4	116
10	7	470	3.6	15.5	.15/ .15	.5	2.4	115

TAP	POINT	CORR V	%02	% CO2	V LOC/AVG	WTD % O2	WTD %CO2	WTD TEMP
11	1	4745	3.6	15.5	1.56/1.56	5.5	24.2	1167
11	2	4670	3.6	15.5	1.54/1.54	5.5	23.8	1164
11	3	4388	3.6	15.5	1.44/1.44	5.1	22.4	1092
11	4	3198	3.6	15.5	1.05/1.05	3.7	16.3	793
11	5	1902	3.6	15.5	.63/ .63	2.2	9.7	471
11	6	1025	3.6	15.5	.34/ .34	1.2	5.2	254
11	7	333	3.6	15.5	.11/ .11	.4	1.7	82

TAP	POINT	CORR V	%02	% CO2	V LOC/AVG	WTD % O2	WTD %CO2	WTD TEMP
12	1	2353	3.6	15.5	.77/ .77	2.7	12.0	567
12	2	2686	3.6	15.5	.88/ .88	3.1	13.7	652
12	3	3015	3.6	15.5	.99/ .99	3.5	15.4	735
12	4	3307	3.6	15.5	1.09/1.09	3.9	16.9	805
12	5	3378	3.6	15.5	1.11/1.11	3.9	17.2	822
12	6	2004	3.6	15.5	.66/ .66	2.3	10.2	479
12	7	800	3.6	15.5	.26/ .26	.9	4.1	187

TAP	POINT	CORR V	%02	% CO2	V LOC/AVG	WTD % O2	WTD %CO2	WTD TEMP
13	1	2318	3.6	15.5	.76/ .76	2.7	11.8	565
13	2	6237	3.6	15.5	2.05/2.05	7.3	31.8	1537
13	3	3294	3.6	15.5	1.08/1.08	3.8	16.8	812
13	4	3069	3.6	15.5	1.01/1.01	3.6	15.6	756
13	5	3274	3.6	15.5	1.08/1.08	3.8	16.7	802
13	6	1990	3.6	15.5	.65/ .65	2.3	10.1	485
13	7	1184	3.6	15.5	.39/ .39	1.4	6.0	282

REV 10/20/87

TAP	POINT	CORR V	%O2	% CO2	V LOC/AVG	WTD % O2	WTD %CO2	WTD TEMP
14	1	3474	3.6	15.5	1.14/1.14	4.1	17.7	856
14	2	3660	3.6	15.5	1.20/1.20	4.3	18.7	902
14	3	3429	3.6	15.5	1.13/1.13	4.0	17.5	842
14	4	3014	3.6	15.5	.99/ .99	3.5	15.4	740
14	5	2867	3.6	15.5	.94/ .94	3.3	14.6	702
14	6	2410	3.6	15.5	.79/ .79	2.8	12.3	589
14	7	1020	3.6	15.5	.34/ .34	1.2	5.2	248

REV 10/20/87

LOCATION = SEC GAS IN EAST
FILE IDENITY = IP6_25ESGI

AVERAGE VELOCITY = 3040 FPM

AVERAGE (WEIGHTED) % O2 = 3.55 *
AVERAGE (WEIGHTED) % CO2 = 15.50 *
AVERAGE (WEIGHTED) TEMPERATURE = 748

AVERAGE (ARITHMETIC) % O2 = 3.55 *
AVERAGE (ARITHMETIC) % CO2 = 15.50 *
AVERAGE (ARITHMETIC) TEMPERATURE = 747

AVERAGE STATIC PRESSURE (in. H2O) = -3.6
AVERAGE DENSITY (LBM/FT^3) = .02834

ACFM (ACTUAL FT^3/MIN) = 2399472
LB/HR (WET) = 4079374

* - O2/CO2 DATA WITH ERROR GREATER THAN .35 NOT USED
NO. OF POINTS NOT USED = 0 OUT OF 98

REV 10/20/87

LOCATION = SEC GAS IN EAST
FILE IDENITY = IP6_25ESGI

AVERAGE VELOCITY = 3040 FPM

AVERAGE (WEIGHTED) % O2 = 3.55
AVERAGE (WEIGHTED) % CO2 = 15.50
AVERAGE (WEIGHTED) TEMPERATURE = 748

AVERAGE (ARITHMETIC) % O2 = 3.55
AVERAGE (ARITHMETIC) % CO2 = 15.50
AVERAGE (ARITHMETIC) TEMPERATURE = 747

AVERAGE STATIC PRESSURE (in. H2O) = -3.6
AVERAGE DENSITY (LBM/FT^3) = .02834

ACFM (ACTUAL FT^3/MIN) = 2399472
LB/HR (WET) = 4079374

REV 10/20/87

DATE = 6/25/87
LOCATION = WESTPRIAIROUT
FILE IDENITY = IP6_25WPAO
BAROMETRIC PRESSURE = 25.52
PROBE IDENTY = E-1
DUCT HEIGHT = 8.6
DUCT WIDTH = 15.0

TAP	POINT	STAT P	TEMP	DELTA P	YAW ANGL
1	1	30.0	498	.079	5
1	2	30.0	448	.068	5
1	3	30.0	416	.048	10

TAP	POINT	STAT P	TEMP	DELTA P	YAW ANGL
2	1	30.0	481	.041	5
2	2	30.0	468	.021	10
2	3	30.0	459	.065	0

TAP	POINT	STAT P	TEMP	DELTA P	YAW ANGL
3	1	30.0	480	.017	5
3	2	30.0	468	.067	10
3	3	30.0	460	.024	10

TAP	POINT	STAT P	TEMP	DELTA P	YAW ANGL
4	1	30.0	492	.053	5
4	2	30.0	489	.041	10
4	3	30.0	468	.092	0

TAP	POINT	STAT P	TEMP	DELTA P	YAW ANGL
5	1	30.0	496	.024	10
5	2	30.0	470	.073	10
5	3	30.0	456	.061	5

DATE = 6/25/87
LOCATION = WESTPRIAIROUT
FILE IDENITY = IP6_25WPAO
BAROMETRIC PRESSURE = 25.52
PROBE IDENTY = E-1
A0 = 1.17088E+00
A1 = -4.30409E-06
A2 = 1.54069E-10
A3 = -1.65099E-15
A4 = 2.82564E-21
DUCT AREA = 128.7

TAP	POINT	CORR V V	LOC/AVG	WTD TEMP
1	1	1808	1.29/1.29	644
1	2	1633	1.17/1.17	524
1	3	1335	.96/ .96	397

TAP	POINT	CORR V V	LOC/AVG	WTD TEMP
2	1	1296	.93/ .93	446
2	2	913	.65/ .65	306
2	3	1613	1.15/1.15	530

TAP	POINT	CORR V V	LOC/AVG	WTD TEMP
3	1	837	.60/ .60	288
3	2	1621	1.16/1.16	543
3	3	971	.70/ .70	320

TAP	POINT	CORR V V	LOC/AVG	WTD TEMP
4	1	1480	1.06/1.06	521
4	2	1286	.92/ .92	450
4	3	1925	1.38/1.38	645

TAP	POINT	CORR V V	LOC/AVG	WTD TEMP
5	1	990	.71/ .71	352
5	2	1693	1.21/1.21	570
5	3	1555	1.11/1.11	508

REV 10/20/87

LOCATION = WESTPRIAIROUT
FILE IDENITY = IP6_25WPAO

AVERAGE VELOCITY = 1397 FPM

AVERAGE (WEIGHTED) TEMPERATURE = 470

AVERAGE (ARITHMETIC) TEMPERATURE = 470

AVERAGE STATIC PRESSURE (in. H2O) = 30.0
AVERAGE DENSITY (LBM/FT^3) = .03958

ACFM (ACTUAL FT^3/MIN) = 179868
LB/HR (WET) = 427200

REV 10/20/87

DATE = 6/25/87
LOCATION = EASTPRIAIROUT
FILE IDENITY = IP6_25EPAO
BAROMETRIC PRESSURE = 25.52
PROBE IDENTY = E-1
DUCT HEIGHT = 8.6
DUCT WIDTH = 15.0

TAP	POINT	STAT P	TEMP	DELTA P	YAW ANGL
1	1	30.0	486	.036	5
1	2	30.0	471	.051	0
1	3	30.0	440	.058	5

TAP	POINT	STAT P	TEMP	DELTA P	YAW ANGL
2	1	30.0	496	.039	5
2	2	30.0	488	.063	5
2	3	30.0	481	.041	5

TAP	POINT	STAT P	TEMP	DELTA P	YAW ANGL
3	1	30.0	514	.017	10
3	2	30.0	499	.051	10
3	3	30.0	482	.007	10

TAP	POINT	STAT P	TEMP	DELTA P	YAW ANGL
4	1	30.0	519	.048	5
4	2	30.0	502	.065	10
4	3	30.0	478	.048	5

TAP	POINT	STAT P	TEMP	DELTA P	YAW ANGL
5	1	30.0	507	.053	0
5	2	30.0	497	.065	5
5	3	30.0	474	.073	5

DATE = 6/25/87
LOCATION = EASTPRIAIROUT
FILE IDENITY = IP6_25EPAO
BAROMETRIC PRESSURE = 25.52
PROBE IDENTY = E-1
A0 = 1.17088E+00
A1 = -4.30409E-06
A2 = 1.54069E-10
A3 = -1.65099E-15
A4 = 2.82564E-21
DUCT AREA = 128.7

TAP	POINT	CORR V V	LOC/AVG	WTD TEMP
1	1	1218	.89/ .89	434
1	2	1441	1.06/1.06	497
1	3	1503	1.10/1.10	485

TAP	POINT	CORR V V	LOC/AVG	WTD TEMP
2	1	1274	.93/ .93	463
2	2	1608	1.18/1.18	575
2	3	1296	.95/ .95	457

TAP	POINT	CORR V V	LOC/AVG	WTD TEMP
3	1	843	.62/ .62	317
3	2	1441	1.06/1.06	527
3	3	533	.39/ .39	188

TAP	POINT	CORR V V	LOC/AVG	WTD TEMP
4	1	1429	1.05/1.05	544
4	2	1627	1.19/1.19	599
4	3	1398	1.02/1.02	490

TAP	POINT	CORR V V	LOC/AVG	WTD TEMP
5	1	1497	1.10/1.10	556
5	2	1641	1.20/1.20	598
5	3	1716	1.26/1.26	596

REV 10/20/87

LOCATION = EASTPRIAIROUT
FILE IDENITY = IP6_25EPAO

AVERAGE VELOCITY = 1364 FPM

AVERAGE (WEIGHTED) TEMPERATURE = 488

AVERAGE (ARITHMETIC) TEMPERATURE = 489

AVERAGE STATIC PRESSURE (in. H20) = 30.0
AVERAGE DENSITY (LBM/FT^3) = .03879

ACFM (ACTUAL FT^3/MIN) = 175652
LB/HR (WET) = 408796

REV 10/20/87

DATE = 6/25/87
LOCATION = WESTTEMPAIR
FILE IDENITY = IP6_25WTA
BAROMETRIC PRESSURE = 25.52
PROBE IDENTY = E-9
DUCT HEIGHT = 10.0
DUCT WIDTH = 12.0

TAP	POINT	STAT P	TEMP	DELTA P	YAW ANGL
1	1	30.0	118	.139	0
1	2	30.0	118	.043	5
1	3	30.0	118	.004	10
1	4	30.0	118	.002	10

TAP	POINT	STAT P	TEMP	DELTA P	YAW ANGL
2	1	30.0	118	.146	0
2	2	30.0	117	.068	20
2	3	30.0	116	.012	10
2	4	30.0	115	.004	0

TAP	POINT	STAT P	TEMP	DELTA P	YAW ANGL
3	1	30.0	115	.192	0
3	2	30.0	114	.063	20
3	3	30.0	113	.007	30
3	4	30.0	112	.002	0

TAP	POINT	STAT P	TEMP	DELTA P	YAW ANGL
4	1	30.0	112	.180	5
4	2	30.0	112	.073	15
4	3	30.0	112	.009	20
4	4	30.0	111	.002	0

TAP	POINT	STAT P	TEMP	DELTA P	YAW ANGL
5	1	30.0	111	.144	5
5	2	30.0	110	.083	10
5	3	30.0	109	.019	10
5	4	30.0	108	.004	15

TAP	POINT	STAT P	TEMP	DELTA P	YAW ANGL
6	1	30.0	108	.117	5
6	2	30.0	108	.117	10
6	3	30.0	108	.043	15
6	4	30.0	107	.004	0

DATE = 6/25/87
LOCATION = WESTTEMPAIR
FILE IDENITY = IP6_25WTA
BAROMETRIC PRESSURE = 25.52
PROBE IDENTY = E-9
AO = 1.21044E+00
A1 = -1.21369E-05
A2 = 5.52116E-10
A3 = -9.31289E-15
A4 = 5.20267E-20
DUCT AREA = 120.0

TAP	POINT	CORR V V	LOC/AVG	WTD TEMP
1	1	1831	1.82/1.82	215
1	2	1033	1.03/1.03	121
1	3	322	.32/ .32	38
1	4	229	.23/ .23	27

TAP	POINT	CORR V V	LOC/AVG	WTD TEMP
2	1	1875	1.86/1.86	220
2	2	1215	1.21/1.21	141
2	3	549	.55/ .55	63
2	4	326	.32/ .32	37

TAP	POINT	CORR V V	LOC/AVG	WTD TEMP
3	1	2138	2.12/2.12	244
3	2	1168	1.16/1.16	132
3	3	370	.37/ .37	42
3	4	231	.23/ .23	26

TAP	POINT	CORR V V	LOC/AVG	WTD TEMP
4	1	2058	2.04/2.04	229
4	2	1287	1.28/1.28	143
4	3	454	.45/ .45	50
4	4	231	.23/ .23	25

REV 10/20/87

TAP	POINT	CORR V V	LOC/AVG	WTD TEMP
5	1	1844	1.83/1.83	203
5	2	1393	1.38/1.38	152
5	3	682	.68/ .68	74
5	4	313	.31/ .31	34

TAP	POINT	CORR V V	LOC/AVG	WTD TEMP
6	1	1662	1.65/1.65	178
6	2	1643	1.63/1.63	176
6	3	992	.99/ .99	106
6	4	323	.32/ .32	34

REV 10/20/87

LOCATION = WESTTEMPAIR
FILE IDENITY = IP6_25WTA

AVERAGE VELOCITY = 1007 FPM

AVERAGE (WEIGHTED) TEMPERATURE = 113

AVERAGE (ARITHMETIC) TEMPERATURE = 113

AVERAGE STATIC PRESSURE (in. H2O) = 30.0
AVERAGE DENSITY (LBM/FT^3) = .06423

ACFM (ACTUAL FT^3/MIN) = 120835
LB/HR (WET) = 465689

REV 10/20/87

DATE = 6/25/87
LOCATION = EASTTEMPAIR
FILE IDENITY = IP6_25ETA
BAROMETRIC PRESSURE = 25.52
PROBE IDENTY = E-9
DUCT HEIGHT = 10.0
DUCT WIDTH = 12.0

TAP	POINT	STAT P	TEMP	DELTA P	YAW ANGL
1	1	30.0	110	.063	10
1	2	30.0	111	.012	0
1	3	30.0	111	.004	0
1	4	30.0	111	.019	0

TAP	POINT	STAT P	TEMP	DELTA P	YAW ANGL
2	1	30.0	113	.056	10
2	2	30.0	113	.036	20
2	3	30.0	112	.002	0
2	4	30.0	111	.007	0

TAP	POINT	STAT P	TEMP	DELTA P	YAW ANGL
3	1	30.0	111	.090	5
3	2	30.0	111	.034	15
3	3	30.0	110	.004	0
3	4	30.0	110	.007	0

TAP	POINT	STAT P	TEMP	DELTA P	YAW ANGL
4	1	30.0	110	.092	5
4	2	30.0	110	.021	15
4	3	30.0	111	.009	0
4	4	30.0	111	.036	10

TAP	POINT	STAT P	TEMP	DELTA P	YAW ANGL
5	1	30.0	110	.070	5
5	2	30.0	109	.029	15
5	3	30.0	108	.014	5
5	4	30.0	109	.046	0

TAP	POINT	STAT P	TEMP	DELTA P	YAW ANGL
6	1	30.0	109	.058	5
6	2	30.0	109	.061	5
6	3	30.0	109	.029	5
6	4	30.0	109	.026	0

DATE = 6/25/87
LOCATION = EASTTEMPAIR
FILE IDENITY = IP6_25ETA
BAROMETRIC PRESSURE = 25.52
PROBE IDENTY = E-9
AO = 1.21044E+00
A1 = -1.21369E-05
A2 = 5.52116E-10
A3 = -9.31289E-15
A4 = 5.20267E-20
DUCT AREA = 120.0

TAP	POINT	CORR V V	LOC/AVG	WTD TEMP
1	1	1219	1.46/1.46	161
1	2	555	.67/ .67	74
1	3	324	.39/ .39	43
1	4	694	.83/ .83	92

TAP	POINT	CORR V V	LOC/AVG	WTD TEMP
2	1	1155	1.38/1.38	156
2	2	890	1.07/1.07	121
2	3	231	.28/ .28	31
2	4	427	.51/ .51	57

TAP	POINT	CORR V V	LOC/AVG	WTD TEMP
3	1	1467	1.76/1.76	195
3	2	888	1.06/1.06	118
3	3	324	.39/ .39	43
3	4	426	.51/ .51	56

TAP	POINT	CORR V V	LOC/AVG	WTD TEMP
4	1	1481	1.78/1.78	195
4	2	703	.84/ .84	93
4	3	482	.58/ .58	64
4	4	931	1.12/1.12	124

REV 10/20/87

TAP	POINT	CORR V V	LOC/AVG	WTD TEMP
5	1	1298	1.56/1.56	171
5	2	821	.98/ .98	107
5	3	594	.71/ .71	77
5	4	1063	1.27/1.27	139

TAP	POINT	CORR V V	LOC/AVG	WTD TEMP
6	1	1184	1.42/1.42	155
6	2	1213	1.45/1.45	158
6	3	847	1.01/1.01	111
6	4	806	.97/ .97	105

REV 10/20/87

LOCATION = EASTTEMPAIR
FILE IDENITY = IP6_25ETA

AVERAGE VELOCITY = 834 FPM

AVERAGE (WEIGHTED) TEMPERATURE = 110

AVERAGE (ARITHMETIC) TEMPERATURE = 110

AVERAGE STATIC PRESSURE (in. H2O) = 30.0
AVERAGE DENSITY (LBM/FT^3) = .06451

ACFM (ACTUAL FT^3/MIN) = 100129
LB/HR (WET) = 387566

REV 10/20/87

DATE = 6/25/87
LOCATION = WESTSECAIROUT
FILE IDENITY = IP6_25WSAO
BAROMETRIC PRESSURE = 25.52
PROBE IDENTY = E-4
DUCT HEIGHT = 27.7
DUCT WIDTH = 21.7

TAP	POINT	STAT P	TEMP	DELTA P	YAW ANGL
1	1	1.9	440	.126	10
1	2	1.5	633	.273	5
1	3	1.7	633	.034	0
1	4	1.6	630	.104	0
1	5	1.7	627	.051	30
1	6	1.8	621	.026	0
1	7	1.8	615	.026	0
1	8	1.8	610	.026	0
1	9	1.8	602	.026	0

TAP	POINT	STAT P	TEMP	DELTA P	YAW ANGL
2	1	1.9	607	.039	0
2	2	1.9	626	.207	20
2	3	1.7	628	.039	0
2	4	1.7	638	.021	15
2	5	1.6	639	.058	25
2	6	1.5	638	.146	45
2	7	1.6	637	.314	10
2	8	1.8	639	.366	15
2	9	1.5	635	.085	35

TAP	POINT	STAT P	TEMP	DELTA P	YAW ANGL
3	1	1.7	620	.217	35
3	2	1.4	626	.026	0
3	3	1.5	637	.231	5
3	4	1.7	642	.593	25
3	5	2.0	644	.334	10
3	6	2.2	645	.466	10
3	7	2.2	646	.502	10
3	8	2.1	647	.612	10
3	9	2.1	652	.600	10

TAP	POINT	STAT P	TEMP	DELTA P	YAW ANGL
4	1	1.7	606	.039	45
4	2	1.3	621	.024	0
4	3	1.8	624	.251	5
4	4	1.9	633	.432	15
4	5	2.3	639	.366	10
4	6	2.4	642	.376	5
4	7	2.5	643	.344	5
4	8	2.7	648	.407	10
4	9	2.2	649	.488	15

TAP	POINT	STAT P	TEMP	DELTA P	YAW ANGL
5	1	1.4	616	.024	0
5	2	1.5	628	.019	0
5	3	1.9	639	.141	30
5	4	1.9	646	.463	25
5	5	2.2	664	.397	15
5	6	2.0	670	.437	20
5	7	1.9	674	.505	5
5	8	1.7	683	.056	45
5	9	1.7	688	.021	25

TAP	POINT	STAT P	TEMP	DELTA P	YAW ANGL
6	1	1.8	594	.444	20
6	2	1.8	621	.019	5
6	3	1.7	627	.095	15
6	4	2.0	635	.358	10
6	5	2.0	642	.305	5
6	6	2.2	653	.356	10
6	7	2.0	656	.366	0
6	8	2.3	659	.329	0
6	9	2.3	664	.327	0

TAP	POINT	STAT P	TEMP	DELTA P	YAW ANGL
7	1	1.8	614	.388	15
7	2	1.7	622	.107	5
7	3	1.8	627	.185	10
7	4	2.2	632	.275	10
7	5	2.4	637	.200	0
7	6	2.3	642	.263	5
7	7	2.2	644	.292	10
7	8	2.6	649	.288	5
7	9	2.5	653	.253	5

TAP	POINT	STAT P	TEMP	DELTA P	YAW ANGL
8	1	2.4	617	.319	0
8	2	2.3	627	.183	0
8	3	2.5	630	.180	0
8	4	2.3	633	.212	0
8	5	2.5	636	.190	5
8	6	2.7	640	.239	0
8	7	2.5	642	.212	0
8	8	2.7	645	.224	0
8	9	2.5	648	.224	0

TAP	POINT	STAT P	TEMP	DELTA P	YAW ANGL
9	1	2.2	629	.275	10
9	2	2.0	632	.180	10
9	3	2.1	635	.219	0
9	4	1.9	638	.107	0
9	5	1.9	641	.014	0
9	6	2.5	657	.197	0
9	7	2.3	664	.207	0
9	8	2.3	673	.192	0
9	9	2.6	686	.180	0

DATE = 6/25/87
LOCATION = WESTSECAIROUT
FILE IDENITY = IP6_25WSAO
BAROMETRIC PRESSURE = 25.52
PROBE IDENTY = E-4
AO = 1.31748E+00
A1 = -2.48691E-05
A2 = 1.06673E-09
A3 = -1.84181E-14
A4 = 1.11149E-19
DUCT AREA = 601.8

TAP	POINT	CORR V	V LOC/AVG	WTD TEMP
1	1	2348	.74/ .74	325
1	2	3813	1.20/1.20	759
1	3	1436	.45/ .45	286
1	4	2435	.77/ .77	482
1	5	1504	.47/ .47	296
1	6	1255	.39/ .39	245
1	7	1251	.39/ .39	242
1	8	1248	.39/ .39	239
1	9	1243	.39/ .39	235

TAP	POINT	CORR V	V LOC/AVG	WTD TEMP
2	1	1512	.48/ .48	289
2	2	3148	.99/ .99	620
2	3	1529	.48/ .48	302
2	4	1103	.35/ .35	221
2	5	1683	.53/ .53	338
2	6	2027	.64/ .64	407
2	7	4030	1.27/1.27	807
2	8	4248	1.34/1.34	853
2	9	1819	.57/ .57	363

TAP	POINT	CORR V	V LOC/AVG	WTD TEMP
3	1	2797	.88/ .88	545
3	2	1259	.40/ .40	248
3	3	3535	1.11/1.11	708
3	4	4999	1.57/1.57	1009
3	5	4160	1.31/1.31	842
3	6	4859	1.53/1.53	985
3	7	5033	1.58/1.58	1022
3	8	5524	1.74/1.74	1124
3	9	5487	1.73/1.73	1125

REV 10/20/87

TAP	POINT	CORR V V	LOC/AVG	WTD TEMP
4	1	1069	.34/ .34	204
4	2	1208	.38/ .38	236
4	3	3647	1.15/1.15	716
4	4	4573	1.44/1.44	910
4	5	4328	1.36/1.36	869
4	6	4439	1.40/1.40	896
4	7	4261	1.34/1.34	861
4	8	4566	1.44/1.44	930
4	9	4879	1.53/1.53	996

TAP	POINT	CORR V V	LOC/AVG	WTD TEMP
5	1	1205	.38/ .38	233
5	2	1083	.34/ .34	214
5	3	2442	.77/ .77	491
5	4	4462	1.40/1.40	906
5	5	4467	1.40/1.40	933
5	6	4559	1.43/1.43	960
5	7	5182	1.63/1.63	1098
5	8	1320	.42/ .42	283
5	9	1060	.33/ .33	229

TAP	POINT	CORR V V	LOC/AVG	WTD TEMP
6	1	4413	1.39/1.39	824
6	2	1075	.34/ .34	210
6	3	2250	.71/ .71	444
6	4	4276	1.34/1.34	854
6	5	4030	1.27/1.27	813
6	6	4305	1.35/1.35	884
6	7	4436	1.39/1.39	915
6	8	4226	1.33/1.33	876
6	9	4225	1.33/1.33	882

TAP	POINT	CORR V V	LOC/AVG	WTD TEMP
7	1	4307	1.35/1.35	831
7	2	2448	.77/ .77	479
7	3	3133	.99/ .99	618
7	4	3776	1.19/1.19	750
7	5	3314	1.04/1.04	664
7	6	3760	1.18/1.18	759
7	7	3907	1.23/1.23	791
7	8	3935	1.24/1.24	803
7	9	3713	1.17/1.17	762

REV 10/20/87

TAP	POINT	CORR V V	LOC/AVG	WTD TEMP
8	1	4074	1.28/1.28	790
8	2	3163	.99/ .99	624
8	3	3143	.99/ .99	623
8	4	3398	1.07/1.07	676
8	5	3221	1.01/1.01	644
8	6	3604	1.13/1.13	725
8	7	3413	1.07/1.07	689
8	8	3506	1.10/1.10	711
8	9	3513	1.10/1.10	716

TAP	POINT	CORR V V	LOC/AVG	WTD TEMP
9	1	3770	1.19/1.19	745
9	2	3101	.97/ .97	616
9	3	3455	1.09/1.09	690
9	4	2477	.78/ .78	497
9	5	940	.30/ .30	189
9	6	3325	1.05/1.05	687
9	7	3416	1.07/1.07	713
9	8	3313	1.04/1.04	701
9	9	3235	1.02/1.02	698

LOCATION = WESTSECAIROUT
FILE IDENITY = IP6_25WSAO

AVERAGE VELOCITY = 3181 FPM

AVERAGE (WEIGHTED) TEMPERATURE = 639

AVERAGE (ARITHMETIC) TEMPERATURE = 636

AVERAGE STATIC PRESSURE (in. H2O) = 2.0
AVERAGE DENSITY (LBM/FT^3) = .03110

ACFM (ACTUAL FT^3/MIN) = 1914207
LB/HR (WET) = 3572085

REV 10/20/87

DATE = 6-25-87
LOCATION = SEC AIR OUT EAST
FILE IDENITY = IP6_25ESAO
BAROMETRIC PRESSURE = 25.52
PROBE IDENTY = E-4
DUCT HEIGHT = 27.7
DUCT WIDTH = 21.7

TAP	POINT	STAT P	TEMP	DELTA P	YAW ANGL
1	1	-1.5	644	.561	0
1	2	-1.7	644	.161	10
1	3	-1.7	652	.036	10
1	4	-1.9	666	.241	20
1	5	-2.0	674	.292	15
1	6	-2.4	674	.212	0
1	7	-2.3	678	.148	5
1	8	-2.3	680	.188	10
1	9	-2.2	693	.185	10

TAP	POINT	STAT P	TEMP	DELTA P	YAW ANGL
2	1	-2.3	658	.291	10
2	2	-1.7	655	.168	15
2	3	-1.8	660	.231	35
2	4	-1.8	665	.246	25
2	5	-2.0	667	.107	15
2	6	-2.0	669	.207	15
2	7	-2.1	666	.202	20
2	8	-2.1	680	.207	15
2	9	-2.2	678	.202	15

TAP	POINT	STAT P	TEMP	DELTA P	YAW ANGL
3	1	-1.8	629	.356	0
3	2	-1.6	638	.034	5
3	3	-1.5	640	.126	35
3	4	-1.8	647	.339	30
3	5	-2.0	649	.207	25
3	6	-2.0	651	.319	30
3	7	-2.2	650	.290	20
3	8	-2.3	654	.261	20
3	9	-2.3	663	.224	25

TAP	POINT	STAT P	TEMP	DELTA P	YAW ANGL
4	1	-2.0	643	.366	0
4	2	-1.7	649	.039	0
4	3	-1.8	662	.046	0
4	4	-1.8	677	.346	40
4	5	-1.6	660	.236	35
4	6	-2.0	677	.295	30
4	7	-2.0	686	.376	20
4	8	-2.1	705	.395	15
4	9	-2.2	654	.175	20

TAP	POINT	STAT P	TEMP	DELTA P	YAW ANGL
5	1	-1.4	658	.034	0
5	2	-1.6	658	.041	0
5	3	-1.6	648	.039	0
5	4	-1.5	647	.126	0
5	5	-2.0	652	.366	30
5	6	-1.8	653	.459	30
5	7	-2.2	648	.369	25
5	8	-2.3	646	.349	30
5	9	-2.2	648	.451	30

TAP	POINT	STAT P	TEMP	DELTA P	YAW ANGL
6	1	-1.7	668	.311	30
6	2	-1.5	656	.014	0
6	3	-1.7	650	.114	25
6	4	-2.0	645	.500	20
6	5	-2.1	654	.263	20
6	6	-2.2	647	.407	15
6	7	-2.3	654	.432	10
6	8	-2.1	641	.153	20
6	9	-2.2	653	.415	10

TAP	POINT	STAT P	TEMP	DELTA P	YAW ANGL
7	1	-2.1	644	.300	20
7	2	-1.6	659	.212	0
7	3	-1.7	652	.251	25
7	4	-1.9	652	.251	30
7	5	-1.7	644	.046	25
7	6	-2.0	687	.100	40
7	7	-2.0	676	.449	20
7	8	-2.0	685	.444	25
7	9	-1.7	674	.512	25

TAP	POINT	STAT P	TEMP	DELTA P	YAW ANGL
8	1	-1.7	657	.336	5
8	2	-1.8	654	.319	0
8	3	-1.7	660	.434	20
8	4	-1.7	667	.454	25
8	5	-1.7	666	.112	30
8	6	-1.5	664	.029	35
8	7	-1.7	671	.075	35
8	8	-1.3	690	.061	0
8	9	-1.4	668	.018	0

TAP	POINT	STAT P	TEMP	DELTA P	YAW ANGL
9	1	-1.4	641	.078	0
9	2	-1.5	641	.034	40
9	3	-1.7	649	.019	0
9	4	-1.6	669	.024	0
9	5	-1.8	679	.024	0
9	6	-1.8	669	.029	0
9	7	-1.9	683	.083	0
9	8	-1.7	675	.078	0
9	9	-1.6	699	.075	0

DATE = 6-25-87
LOCATION = SEC AIR OUT EAST
FILE IDENITY = IP6_25ESAO
BAROMETRIC PRESSURE = 25.52
PROBE IDENTY = E-4
AO = 1.31748E+00
A1 = -2.48691E-05
A2 = 1.06673E-09
A3 = -1.84181E-14
A4 = 1.11149E-19
DUCT AREA = 601.8

TAP	POINT	CORR V V	LOC/AVG	WTD TEMP
1	1	5406	1.76/1.76	1133
1	2	2979	.97/ .97	625
1	3	1474	.48/ .48	313
1	4	3471	1.13/1.13	753
1	5	3918	1.28/1.28	860
1	6	3497	1.14/1.14	767
1	7	2951	.96/ .96	652
1	8	3265	1.06/1.06	723
1	9	3262	1.06/1.06	736

TAP	POINT	CORR V V	LOC/AVG	WTD TEMP
2	1	3957	1.29/1.29	848
2	2	2998	.98/ .98	639
2	3	2957	.96/ .96	636
2	4	3378	1.10/1.10	731
2	5	2443	.80/ .80	531
2	6	3330	1.08/1.08	725
2	7	3198	1.04/1.04	694
2	8	3349	1.09/1.09	742
2	9	3308	1.08/1.08	730

TAP	POINT	CORR V V	LOC/AVG	WTD TEMP
3	1	4343	1.41/1.41	889
3	2	1441	.47/ .47	299
3	3	2204	.72/ .72	459
3	4	3711	1.21/1.21	782
3	5	3092	1.01/1.01	653
3	6	3617	1.18/1.18	767
3	7	3753	1.22/1.22	794
3	8	3582	1.17/1.17	763
3	9	3233	1.05/1.05	698

REV 10/20/87

TAP	POINT	CORR V V	LOC/AVG	WTD TEMP
4	1	4433	1.44/1.44	928
4	2	1553	.51/ .51	328
4	3	1692	.55/ .55	365
4	4	3366	1.10/1.10	742
4	5	2986	.97/ .97	642
4	6	3535	1.15/1.15	779
4	7	4313	1.40/1.40	963
4	8	4580	1.49/1.49	1052
4	9	2973	.97/ .97	633

TAP	POINT	CORR V V	LOC/AVG	WTD TEMP
5	1	1460	.48/ .48	313
5	2	1598	.52/ .52	342
5	3	1552	.51/ .51	328
5	4	2701	.88/ .88	569
5	5	3857	1.26/1.26	819
5	6	4287	1.40/1.40	911
5	7	4045	1.32/1.32	854
5	8	3763	1.23/1.23	792
5	9	4243	1.38/1.38	895

TAP	POINT	CORR V V	LOC/AVG	WTD TEMP
6	1	3604	1.17/1.17	784
6	2	952	.31/ .31	203
6	3	2340	.76/ .76	495
6	4	4822	1.57/1.57	1013
6	5	3594	1.17/1.17	765
6	6	4510	1.47/1.47	950
6	7	4745	1.55/1.55	1011
6	8	2773	.90/ .90	579
6	9	4654	1.52/1.52	990

TAP	POINT	CORR V V	LOC/AVG	WTD TEMP
7	1	3801	1.24/1.24	797
7	2	3466	1.13/1.13	744
7	3	3386	1.10/1.10	719
7	4	3236	1.05/1.05	687
7	5	1519	.49/ .49	319
7	6	1896	.62/ .62	424
7	7	4660	1.52/1.52	1026
7	8	4492	1.46/1.46	1002
7	9	4771	1.55/1.55	1047

REV 10/20/87

TAP	POINT	CORR V V	LOC/AVG	WTD TEMP
8	1	4273	1.39/1.39	914
8	2	4181	1.36/1.36	891
8	3	4547	1.48/1.48	977
8	4	4495	1.46/1.46	976
8	5	2235	.73/ .73	485
8	6	1112	.36/ .36	240
8	7	1755	.57/ .57	383
8	8	1960	.64/ .64	440
8	9	1081	.35/ .35	235

TAP	POINT	CORR V V	LOC/AVG	WTD TEMP
9	1	2149	.70/ .70	448
9	2	1110	.36/ .36	232
9	3	1100	.36/ .36	232
9	4	1243	.40/ .40	271
9	5	1249	.41/ .41	276
9	6	1361	.44/ .44	297
9	7	2262	.74/ .74	503
9	8	2187	.71/ .71	481
9	9	2172	.71/ .71	494

LOCATION = SEC AIR OUT EAST
FILE IDENITY = IP6_25ESAO

AVERAGE VELOCITY = 3071 FPM

AVERAGE (WEIGHTED) TEMPERATURE = 661

AVERAGE (ARITHMETIC) TEMPERATURE = 661

AVERAGE STATIC PRESSURE (in. H2O) = +1.9
AVERAGE DENSITY (LBM/FT^3) = .03005

ACFM (ACTUAL FT^3/MIN) = 1848143
LB/HR (WET) = 3332665

REV 10/20/87

INTERMOUNTAIN POWER PROJECT
UNIT NO. 1 - RB-614

AIR HEATER/EFFICIENCY TEST - JUNE 1987

OVERVIEW

Boiler performance tests were conducted on Unit No. 1 from June 22 through June 27, 1987. The purpose of the tests was to was to determine boiler efficiency, air heater leakage and air heater performance. The test method was specified by Air Preheater Co. and consisted of point by point traverses for velocity, temperature, and orsat (where applicable) at the economizer gas outlet, bag house inlet, primary and secondary air heater gas inlets and air outlets, primary air heater gas outlet, and tempering air. Denver Service was contracted by IPP to conduct the tests. The tests were witnessed by Air Preheater Co.

On Saturday, June 27, performance tests were conducted to obtain quality data with an upper mill out of service. Data was collected with balanced firing, normal high cooling air to the idle burner compartment, pulverizers biased up with normal cooling air and pulverizers biased up with reduced cooling air.

The test results are summarized on Table I. The conclusions are:

1. The average efficiency the 6/25 and 6/26 tests was 88.61 % when corrected to contract conditions versus the guarantee value of 88.57 %.

2. The average total air heater leakage for the 6/24, 6/25 and 6/26 tests was 461 Klb/hr versus a guarantee of 477 Klb/hr.

3. The calculated gas temperature leaving the secondary air heaters was 6 to 7 F more than expected for the test conditions which is within APCO's guarantee margin when considering test uncertainty.

4. The gas temperature leaving the primary air heaters was on the order of 65 F more than expected for the test conditions. This translates to approximately 6 to 7 F on final end temperature since only 10 % of the gas weight passes through the primary air heaters.

5. The composite gas temperature leaving the air heaters (excluding leakage) when corrected to contract conditions is 20 F higher than expected. Two thirds of this is due to poorer than expected air heater performance and one third due to higher than expected economizer gas outlet temperature. The addition of economizer sootblowers is expected to reduce economizer gas outlet temperature to expected.

6. Steam Temperature - With the upper rear wall burners out of service, pulverizers biased toward the upper burners and reduced cooling air to the idle compartment, superheat and reheat temperatures were 1008 and 1013 respectively with 22 % excess air. Steam temperature would be expected to be within guarantee with 17 % excess air (contract).

IP14_001851

INTERMOUNTAIN POWER PROJECT
AIR HEATER/EFFICIENCY TEST SUMMARY

	EXPECTED	6/24/87	6/25/87	6/26/87	AVE
EFFICIENCY, %					
TEST	---	---	88.53	88.51	88.52
CORRECTED	* 88.57	---	88.60	88.62	88.61
AH LEAKAGE, KLB/HR					
TOTAL	477	446	430	508	461
PRIMARY	* 163	212	176	120	169
SECONDARY (BY DIFFERENCE)	* 314	234	254	388	292
AIR TEMP ENT AIR HEATERS, F					
PRIMARY TEST	---	---	114	114	---
PRIMARY CORRECTED	77	---	77	77	77
SECONDARY TEST	---	---	90	91	---
SECONDARY CORRECTED	64	---	64	64	64
GAS TEMP LVG AH'S (EXCL LKG), F					
EXPECTED (TEST CONDITIONS)	---	---	321	318	320
TEST	---	---	333	331	332
CORRECTED	295	---	315	314	315
GAS TEMP LVG PRI AH (EXCL LKG), F					
EXPECTED (TEST CONDITIONS)	---	---	264	269	267
TEST	---	---	334	330	332
CORRECTED	313	---	310	306	308
GAS TEMP LVG SEC AH (EXCL LKG), F					
EXPECTED (TEST CONDITIONS)	---	---	326	324	325
TEST	---	---	332	331	332
CORRECTED	292	---	316	314	315

* Guaranteed
Calculations based on O2 and measured primary air flow from plant computer.

TEMPERATURES, F	SH	RH
BALANCED FIRING - NORM COOLING	968	965
BIAS UP - NORM COOLING	986	977
BIAS UP - MIN COOLING	1008	1013

TABLE I

IP14_001852

INSTRUMENTATION AND TEST PROCEDURE

The test procedure used was essentially in accordance with Air Preheater Co's requirements for an acceptance. The only exception was that the conditions at the secondary air heater gas outlets could not be measured directly. For air and gas side measurements, APCO requires a point by point traverse (with the exception of the air heater air inlets where a thermocouple grid was installed). The number of points per flue or duct was determined by dividing the flue or duct into equal areas not to exceed 3 ft. by 3 ft. A table showing the test locations, measurements required at each location and the number of points per location is contained in Appendix C. A sketch showing the physical dimensions of each location is also included. One complete traverse constituted one test. The economizer gas outlet, bag house inlet (air heater gas outlets), secondary air heater gas in and air out were coordinated such that the start and stop times coincided. Since these locations had the most points, they governed the length of a test. The primary air heaters were measured individually during the test period. The gas inlet and gas outlet of each primary air heater were traversed simultaneously and the primary air outlet and tempering air were traversed either immediately before or after the gas side traverses.

Water manometers were installed at the air heater air inlets and gas outlets to measure static pressure and air to gas pressure differential.

Coal and ash samples were obtained by IPP personnel. The ash and fuel analysis results are contained in Appendix I. IPP personnel also obtained local barometric pressure and wet and dry bulb temperatures to calculate moisture in air.

The remaining data necessary to determine output and efficiency were obtained from the plant computer. Data was obtained at five (5) minute intervals and later downloaded to an HP-9816 computer for averaging and reporting.

DATA REDUCTION AND CALCULATION METHODOLOGY

Static pressure and velocity head was measured at each traverse point with a Fechheimer probe and B&W's Velocity Pressure Averaging System (VPAS). Velocities were calculated for each point in accordance with PTC-11 Fans. Flue gas density was calculated in accordance with PTC-4.1 Steam Generators. All temperatures and O_2/CO_2 readings were weight averaged based on velocity as well as arithmetically averaged. A linear regression analysis was used to determine the combustion line (with respect to the flue gas volumetric combustion chart) for each orsat station. The combustion line relationship was then used to eliminate obviously bad orsat points; points with a CO_2 deviation greater than 0.35 from expected for the measured O_2. The point by point data listing, calculated velocity and weight average calculations are contained in appendices D, E and F. The orsat points that were eliminated are indicated as well as the weighted and arithmetic averages for each test station.

IP14_001853

A comparison of the arithmetic versus weighted average is summarized in Appendix K. It will be observed that there is virtually no difference between the weighted average results and the arithmetic average results. Thus, for future testing, B&W recommends that multi-point grids and the composite sampling method be employed. This has the benefit of reducing uncertainty by virtue of more samples.

For the test, there were eleven orsat stations. All orsat results were to the left of the flue gas combustion line. Refer to Appendix J for a tabulation of the combustion line results (maximum CO_2 at zero O_2) for each test station for each of the test days. It will be observed that the results for each test station are very consistent between the test days. The average combustion line based on the orsat results was 18.6 % CO_2 +/- 0.25 % at 0 % O_2. This order of variation is typically as good as one can achieve with an orsat. For the final fuel analysis, the expected CO_2 at zero O_2 is 18.3 %. If the O_2/CO_2 data is not on the combustion line, the CO_2 method (PTC 4.1 paragraphs 9.1 and 9.2) for calculating excess air and air and gas weights can be erroneous, especially when comparing differentials as when calculating air heater leakage. For this reason, B&W has more confidence in the calculations based on O_2 than CO_2, however, both are reported for comparison.

Unit efficiency was calculated in accordance with ASME PTC 4.1 Heat Loss Method, Abbreviated Efficiency Form. The key measurement points for determining efficiency by the heat loss method are average air temperature entering the unit and average gas temperature and excess air leaving the unit. The average air inlet temperature is a weighted average of the air temperature entering the primary and secondary air heaters. The alternate methods for determining the primary/secondary air flow split are described below. The average gas temperature/excess air leaving the air heaters (unit) is a composite sample of the gas entering the bag house which is a mix of the gas leaving the primary and secondary air heaters. This is the most accurate measurement location for determining unit efficiency. Flue gas sampling at the economizer gas outlet in conjunction with the bag house inlet enables calculation of total air heater leakage with a high confidence level.

Problems were encountered with measuring the air temperature at the air heater air inlets on 6/24. For purposes of evaluating air heater leakage, the difference between the plant and test averages on 6/25 and 6/26 was used to adjust the plant air heater air inlet temperature in order to calculate efficiency and gas flow. These results were not used for evaluation of unit efficiency and/or air heater performance, however, any error in the efficiency calculation has negligible impact on calculated air heater leakage mass flows.

In order to evaluate individual air heater performance and leakage, it is desirable to measure the conditions at the gas and air inlets and outlets of each air heater. On this unit, it was not possible to measure the secondary air heater gas outlet temperature and flue gas analysis directly due to the flue arrangement. Therefore, it was necessary to calculate the secondary air heater gas outlet conditions based on the primary air heater gas outlet and bag house gas inlet conditions. The following describes this calculation as well as the alternate methods used to determine air and gas mass flow splits.

IP14_001854

Total gas mass flow leaving the economizer and air heaters (entering the bag house) was calculated stoichiometrically based on the gas analysis data and fuel input. Fuel input was calculated from measured unit output and efficiency determined as described above.

Gas mass flow splits - B&W preferred method - Based on measured primary air flow to the pulverizers, mill inlet temperature, hot and cold primary air temperature; calculate air flow through the primary air heater by heat balance. Calculate the gas flow through the primary air heater by heat balance from the primary air heater gas side data and heat added to the primary air as measured and calculated above. It is noted that the pulverizers and primary air flow pressure transducers had been recently calibrated. The plant indication of percent primary air flow was converted to primary element pressure differential based on the latest calibration data. Primary air flow to each pulverizer was then calculated from this pressure differential, mill inlet temperature, and calibration ('K') factors for each mill. The gas mass flow entering the secondary air heaters is the difference between total gas mass flow leaving the economizer and the gas mass flow entering the primary air heaters.

Gas mass flow splits - APCO method - The measured gas flows entering the primary and secondary air heaters are adjusted proportionally by the ratio of calculated gas mass flow leaving the economizer divided by the sum of the measured gas mass flows entering the air heaters. These calculations are contained in Appendix H. It will be observed that the gas flow correction factors are reasonable.

Secondary air heater gas outlet conditions - Total leakage between the economizer gas outlet and bag house gas inlet (composite leaving all air heaters) was calculated as described above. The primary air heater leakage was calculated from the primary air heater gas inlet and outlet orsat data and gas mass flow entering as determined by either of the methods above. The secondary air heater leakage is the difference between the total air heater leakage and primary air heater leakage. Knowing the secodary air heater leakage, gas temperature leaving the primary air heater, average gas temperature leaving all the air heaters and gas mass flows, it is possible to calculate the average gas temperature leaving the secondary air heaters. A detailed description of this calculation procedure and calculations are contained in Appendix H.

For air heater evaluation and efficiency calculations using measured gas flows, the air flow through the air heaters was determined by heat balance. For efficiency calculated by the B&W method for calculating gas flow splits, the total air flow was calculated stoichiometrically assuming 2 % setting infiltration. Secondary air flow is the difference between total air flow and the measured air flow entering the pulverizers. The primary/secondary air flow split is required to determine the average entering air temperature for the efficiency calculations, and is not critical.

IP14_001855

TEST RESULTS

For the final analysis of the results, B&W considers the following methods for reducing the data and calculating the results to be the most accurate:

1. O2 method for calculating excess air and efficiency.

2. Utilizing the primary air flow measured by the plant instrumentation for calculating air/gas flow splits.

In this section, the results of the different calculation methods are presented and discussed. For simplicity of presentation in the tables and discussion, the following nomenclature is used:

1. O2 - O2 method for calculating excess air.

2. CO2 - CO2 method for calculating excess air.

3. MPAF - Calculated air/gas flow splits based on primary air flow to the pulverizers measured by the plant control system. In the text, this is referred to as the 'heat balance method'.

4. TRAV - Calculated air/gas flow splits based on the point by point velocity measurements. In the text, 'measured air/gas flow' refers to directly measured or calculated flows based upon the traverse data.

A summary of the air and gas flow results are shown in Table II. The calculations are contained in Appendix _H. Items of note are:

1. The measured primary air heater gas flow is higher than the gas flow calculated by heat balance. Since the primary air heater gas flow is only about 10 % of the total gas weight, this has no significant impact on the calculations except primary air heater versus secondary air heater leakage. The differences in secondary air heater gas flow follow the primary air heater gas flow, but the percent error is significantly less by virtue of the higher gas flow for the same error.

2. For the 6/25 and 6/26 tests, there is resonable agreement between the calculation methods for air flow to the pulverizers and secondary air heaters. The plant instrumentation is repeatable and thus more believable. Differences would have a slight impact on the weighted average entering air temperature and thus efficiency.

IP14_001856

	6/24/87 AVE		6/25/87 AVE		6/26/87 AVE	
	WEST	EAST	WEST	EAST	WEST	EAST
PRI AH GAS FLOW, KLB/HR						
MPAF / O2	372		349		360	
MPAF / CO2	370		348		362	
TRAV / O2	428	553	393	436	416	440
TRAV / CO2	415	537	383	425	407	430
PRI AH AIR FLOW, KLB/HR						
TO MILLS, TOTAL						
MPAF	1441		1451		1455	
TRAV / O2	1799		1478		1597	
TRAV / CO2	1709		1430		1555	
THRU AH, AVE PER HTR						
MPAF	453		411		443	
TRAV / O2	579	482	499	532	529	
TRAV / CO2	581	471	490	516	513	
PULV TEMP AIR, TOTAL						
MPAF	536		629		569	
TRAV / O2	642		498		536	
TRAV / CO2	547		470		527	
SEC AH GAS FLOW, KLB/HR						
MPAF / O2	6824		6827		7056	
MPAF / CO2	6610		6634		6846	
TRAV / O2	6599		6708		6924	
TRAV / CO2	6413		6541		6747	
SEC AH AIR FLOW, KLB/HR						
MPAF / O2	5425		5380		5623	
MPAF / CO2	5168		5148		5380	
TRAV / O2	5083		5364		5484	
TRAV / CO2	4917		5192		5297	

TABLE II
AIR & GAS FLOW CALCULATION SUMMARY

IP14_001857

A summary of the air heater leakage results is shown in Table III. The calculations are contained in Appendix H.

1. The composite air heater leakage was very repeatable for all three tests. The maximum deviation from the average is 10 % (0.6 % of total gas weight).

2. The total air heater leakage using the CO2 method is higher than that calculated using the O2 method, approximately 1.0 % of total gas weight. Due to the average O2/CO2 relationship being above the combustion line, B&W considers the O2 method to be more believable.

3. The west primary air heater leakage is out of line (high) on 6/24 versus 6/25 and 6/26. The east primary air heater leakage is out of line (low) on 6/26 versus 6/24 and 6/25. The average air heater leakage column reflects deleting these two points from the average.

4. There is no significant difference in the primary air heater leakage calculated by either the O2 or CO2 method.

5. The primary air heater leakage is higher utilizing the measured gas flow data than the heat balance method since the traverse data indicates a higher primary air heater gas flow.

6. Based on the O2 method and gas flow calculated by heat balance, the primary air heater leakage guarantee of 163 Klb/hr and secondary air heater leakage guarantee of 314 Klb/hr are met.

	6/24/87		6/25/87		6/26/87		AVERAGE *	
AH LEAKAGE, KLB/HR	TRAV	MPAF	TRAV	MPAF	TRAV	MPAF	TRAV	MPAF
COMPOSITE OF ALL AH'S								
O2	446		430		509		462	
CO2	518		525		616		553	
WEST PRI AH								
O2	159	138	94	84	84	72	89	78
CO2	147	131	91	82	89	78	90	80
EAST PRI AH								
O2	116	78	115	92	60	49	116	85
CO2	110	76	105	86	61	51	108	81
AVE PRI AH								
O2	272	216	210	176	142	120	205	163
CO2	254	207	197	169	148	129	198	161
AVE SEC AH								
O2	173	234	215	254	356	389	257	299
CO2	263	310	315	356	452	488	355	392

* AVERAGE OMITS 6/24 WEST PAH AND 6/26 EAST PAH DATA

TABLE III - AIR HEATER LEAKAGE SUMMARY

IP14_001858

A comparison of the results of the gas temperature entering the bag house (composite leaving the air heaters) is shown on Table IV and discussed below. The results for the individual air heaters is discussed later.

1. The corrected gas temperature entering the bag house (temperature excluding leakage) is 2 F to 3 F higher using the CO2 method versus the O2 method. This is due to the higher calculated leakage. The difference translates to 0.07 % in calculated efficiency.

2. Some concern has been expressed about the high gas temperature (including AH leakage) entering the bag house. The design target value was 280 F. The average for the three tests was 319 F. However, the average entering air temperature during the tests was 95 F versus the average design value of 67 F (64 F entering the secondary and 77 F entering the primary air heaters). Correcting the exit gas temperature for entering air temperature yields an average exit gas temperature of 300 F. The air heater exit gas temperature is expected to decrease on the order of 5 F with the addition of economizer sootblowers.

		6/24/87	6/25/87	6/26/87
GAS ENT BAG HOUSE, F				
	(INCL LKG)	318	321	317
O2 BASIS	(EXCL LKG)	330	333	331
CO2 BASIS	(EXCL LKG)	332	336	334
AVE AIR IN TEMP		93	95	96
*ENT BAG HOUSE	(INCL LKG)	301	302	298
AVE ECON GAS OUT		752	747	753

* CORRECTED FOR CONTRACT AVERAGE ENTERING AIR TEMP OF 67 F

TABLE IV - GAS TEMPERATURE ENTERING BAG HOUSE SUMMARY

The efficiency results are shown on Table V. Efficiency was first calculated based on the composite gas temperature entering the bag house. These results were used to calculate total gas flow and total air heater leakage. The plant measured primary air flow was used for these calculations. From these results, the measured gas flow data entering the air heaters was adjusted to agree with the total leaving the economizer calculated stoichiometrically. Also the gas conditions leaving the secondary air heater were calculated. A summary of the composite efficiency calculations is contained in Appendix H.

Efficiency was then re-calculated based on the separate primary and secondary air heater data and calculated results. These efficiency calculation results were also corrected to contract conditions (identified by CORR). The correction to contract conditions are for entering air temperature, fuel analysis and excess air. A summary of the composite efficiency calculations is contained in Appendix G.

IP14_001859

It will be observed that the test efficiencies are the same for both the composite and individual air heater basis. Other items of note are:

1. The efficiency for the test conditions is higher using the CO2 method than the O2 method because the calculated excess air and thus dry gas weight is lower even though the gas temperature leaving (excluding leakage) is higher.

2. The method for determining gas and air splits has no impact on the calculated or corrected efficiency.

3. The corrected efficiency is 0.07 % to 0.09 % lower using the CO2 method than the O2 method. This is due to the higher calculated exit gas temperature (excluding leakage) using the CO2 method.

	6/24/87		6/25/87		6/26/87	
EXCESS AIR MEAS BASIS	O2	CO2	O2	CO2	O2	CO2
EXCESS AIR LVG ECON, %	21	16	21	17	23	19
EFFICIENCY, %						
COMPOSITE ANALYSIS						
TEST - MPAF	88.40	88.50	88.53	88.61	88.51	88.59
INDIVIDUAL PRI/SEC AH						
TEST - MPAF	---	---	88.53	---	88.51	---
CORR - MPAF	---	---	88.60	---	88.62	---
TEST - TRAV	---	---	88.56	88.63	88.57	88.63
CORR - TRAV	---	---	88.63	88.56	88.70	88.61

TABLE V - EFFICIENCY SUMMARY

Table VI shows actual versus expected exit gas temperature for the air heaters. This table shows the air heater exit gas temperature as measured (including leakage) and corrected for no leakage for both the O2 and CO2 methods for calculating leakage. Also shown is the expected air heater exit gas temperature for the test conditions for both the measured flow (TRAV) and heat balance (MPAF) methods for determining air and gas flows. B&W's first principle air heater model was used to determine expected air heater performance based on the original predicted performance for the air heaters.

1. The secondary air heater exit gas temperature is 5 to 12 F higher than expected depending upon the test and calculation method. This is well within Air Preheater's guarantee considering test uncertainty.

IP14_001860

2. The primary air heater exit gas temperature is 54 to 70 F higher than expected. The performance of the east and west primary air heaters is similar and repeatable for the two tests. The expected exit gas temperature is approximately the same for the alternate calculation methods.

		6/25/87	6/26/87
SEC AH EXIT GAS TEMPERATURE, F			
TST	(INCL LKG)	324	319
TST - O2	(EXCL LKG)	332	331
EXP - O2 - MPAF	(EXCL LKG)	326	324
EXP - O2 - TRAV	(EXCL LKG)	323	326
TST - CO2	(EXCL LKG)	336	335
EXP - CO2 - TRAV	(EXCL LKG)	324	327

		AVE		AVE	
PRI AH EXIT GAS TEMPERATURE, F		WEST	EAST	WEST	EAST
TST	(INCL LKG)	289	293	295	306
TST - O2	(EXCL LKG)	329	338	329	331
EXP - O2 - MPAF	(EXCL LKG)	264		269	
EXP - O2 - TRAV	(EXCL LKG)	269	285	266	277
TST - CO2	(EXCL LKG)	328	336	332	333
EXP - CO2 - TRAV	(EXCL LKG)	267	282	267	276

TABLE VI - ACTUAL VS EXPECTED AH PERFORMANCE

SUMMARY AND CONCLUSIONS

1. The average efficiency corrected to contract conditions was 88.61 % by the O2 method and 88.59 % by the CO2 method. This meets the guarantee of 88.57 %.

2. The total air heater leakage was 462 Klb/hr by the O2 method and 553 Klb/hr by the CO2 method. The guarantee is 477 Klb/hr. The calculated primary air heater leakage varies between 161 and 205 Klb/hr depending upon the calculation method versus a guarantee of 163 Klb/hr. The calculated secondary air heater leakage varies between 257 and 392 Klb/hr depending upon the calculation method versus a guarantee of 314 Klb/hr. Note that the secondary air heater leakage is the difference between the measured total air heater leakage and the measured primary air heater leakage, thus the high secondary air heater leakage corresponds to the low primary air heater leakage and vice versa.

IP14_001861

3. The secondary air heater exit gas temperature (excluding leakage) is 6 to 7 F higher than expected which is within normal design tolerances when considering test uncertainty.

4. The primary air heaters are not performing as well as expected. The exit gas temperature is on the order of 55 to 65 F higher than expected. This conclusion is independent of the test calculation procedure. The primary air heaters only handle approximately 10 % of the gas flow, thus, the impact of primary air heater performance on average exit temperature is on the order of 6 F.

5. The average gas temperature entering the bag house (including air heater leakage) was 319 F with an entering air temperature of 95 F. Correcting for the contract average entering air temperature of 67 F, the gas temperature entering the bag house would be 300 F, or 20 F higher than expected. Two thirds of this is attributed to air heater performance and one third due to higher than expected gas temperature leaving the boiler. The addition of economizer sootblowers is expected to reduce the boiler gas outlet temperature.

6. Excessive cooling air to upper burner compartments was demonstrated to have a significant impact on steam temperature. Steam temperatures can be maintained by minimizing cooling air and bias firing.

7. While the test results utilizing point by point traverses were repeatable, there is concern on the part of B&W about the uncertainty introduced due to variations with time and coordination between test locations. The test results demonstrated that the arithmetic average of the individual traverse points agreed with the weighted average. For future testing, it is recommended that temperature grids and composite flue gas analysis be utilized. This would have the advantage of reducing test uncertainty by virtue of more samples as well as eliminate the uncertainty due to time and coordination between test locations in that all test locations are measured simultaneously.

IP14_001862

			CONTRACT SUMMARY SHEET	TEST 4A CORRECTED FOR CONTR. CONDITIONS	TEST 4A WITH TEST CONDITIONS
Fuel			CONTRACT	CONTRACT	TEST
Air Temp Ent AH	PRI/SEC	F	77/ 64	77/ 64	114/ 90
Air Temp Lvg AH	PRI/SEC	F	582/ 647	0/ 0	480/ 648
Air Flow Lvg AH (1)	PRI/SEC	MLB/HR	1335/5184	1451/5094	1451/5380
AH Air By-Pass Flow		MLB/HR	497.8	629.0	629.0
Mill Inlet Temp		F	397.2	0.0	322.3
Ave Air Temp Ent AH		F	66.7	66.9	95.4
Gas Temp Lvg Econ		F	736.0	747.0	747.0
Gas Temp Ent AH	PRI/SEC	F	736/ 736	734/ 747	734/ 747
Gas Temp Lvg AH (Incl Lkg)	PRI/SEC	F	279/ 282	-/ -	291/ 324
Gas Temp Lvg AH (Excl Lkg)	PRI/SEC	F	313/ 292	310/ 316	334/ 332
Gas Flow Ent AH	PRI/SEC	MLB/HR	924/6286	698/6546	698/6827
Ave Gas Temp Lvg AH (Excl Lkg)		F	294.7	315.3	332.6
Excess Air Lvg Econ		%	17.0	17.0	21.0
Excess Air Ent Pri AH		%	---	17.0	18.2
Excess Air Ent Sec AH		%	---	17.0	21.0
Excess Air Lvg Sec AH		%	---	---	25.9
Excess Air Lvg Pri AH		%	---	---	50.4
Excess Air to Burners		%	15.0	15.0	18.9
Sec AH Leakage		MLB/HR	315	---	254
Pri AH Leakage		MLB/HR	169	---	176
Moisture In Air		LB/LB DA	.0067	.0067	.0044
Dry Gas Wt Lvg Econ		LB/LB Fuel	---	10.005	11.471
Dry Air Wt to Burners		LB/LB Fuel	---	9.477	10.918
Wet Gas Wt Lvg Econ		LB/LB Fuel	---	10.561	12.080
Losses		%			
Dry Gas			4.84	5.42	5.41
H2O in Fuel			(2) 5.15	.88	.70
H2 in Fuel			---	4.32	4.62
Moisture in Air			.07	.07	.04
Unburned Combustible			.20	.04	.04
Radiation			.17	.17	.16
Unaccounted			(3) 1.00	.50	.50
Summation of Losses			11.43	11.40	11.47
Efficiency		%	88.57	88.60	88.53
Unit Output		MKB	6691.5	6691.5	6662.5
Fuel Input		MKB	7555.0	7552.5	7525.7
Fuel Rate		MLB/HR	686.2	686.0	623.0

(1) Includes By-Pass Flow (2) Includes H2 in Fuel Loss
(3) Includes Manufacturer's Margin of .5 %

TEST 4A : 06/25/87 : 1015-1530 : 847 MW : O2/PRI-SEC TCH-080487

			CONTRACT SUMMARY SHEET	TEST 4MO CORRECTED FOR CONTR. CONDITIONS	TEST 4MO WITH TEST CONDITIONS
Fuel			CONTRACT	CONTRACT	TEST
Air Temp Ent AH	PRI/SEC	F	77/ 64	77/ 64	114/ 91
Air Temp Lvg AH	PRI/SEC	F	582/ 647	0/ 0	479/ 650
Air Flow Lvg AH (1)	PRI/SEC	MLB/HR	1335/5184	1478/5064	1478/5363
AH Air By-Pass Flow		MLB/HR	497.8	498.0	498.0
Mill Inlet Temp		F	397.2	0.0	322.3
Ave Air Temp Ent AH		F	66.7	66.9	95.6
Gas Temp Lvg Econ		F	736.0	748.0	748.0
Gas Temp Ent AH	PRI/SEC	F	736/ 736	734/ 749	734/ 749
Gas Temp Lvg AH (Incl Lkg)	PRI/SEC	F	279/ 282	-/ -	291/ 324
Gas Temp Lvg AH (Excl Lkg)	PRI/SEC	F	313/ 295	310/ 315	334/ 331
Gas Flow Ent AH	PRI/SEC	MLB/HR	924/6286	829/6413	829/6706
Ave Gas Temp Lvg AH (Excl Lkg)		F	294.7	314.1	331.7
Excess Air Lvg Econ		%	17.0	17.0	21.2
Excess Air Ent Pri AH		%	---	17.0	18.1
Excess Air Ent Sec AH		%	---	17.0	21.2
Excess Air Lvg Sec AH		%	---	---	25.5
Excess Air Lvg Pri AH		%	---	---	50.5
Excess Air to Burners		%	15.0	15.0	19.1
Sec AH Leakage		MLB/HR	315	---	215
Pri AH Leakage		MLB/HR	169	---	210
Moisture In Air		LB/LB DA	.0067	.0067	.0044
Dry Gas Wt Lvg Econ		LB/LB Fuel	---	10.005	11.490
Dry Air Wt to Burners		LB/LB Fuel	---	9.477	10.937
Wet Gas Wt Lvg Econ		LB/LB Fuel	---	10.561	12.099
Losses		%			
Dry Gas			4.84	5.39	5.39
H2O in Fuel			(2) 5.15	.88	.70
H2 in Fuel			---	4.32	4.61
Moisture in Air			.07	.07	.04
Unburned Combustible			.20	.04	.04
Radiation			.17	.17	.16
Unaccounted			(3) 1.00	.50	.50
Summation of Losses			11.43	11.37	11.44
Efficiency		%	88.57	88.63	88.56
Unit Output		MKB	6691.5	6691.5	6662.5
Fuel Input		MKB	7555.0	7549.9	7523.1
Fuel Rate		MLB/HR	686.2	685.7	622.8

(1) Includes By-Pass Flow (2) Includes H2 in Fuel Loss
(3) Includes Manufacturer's Margin of .5 %

TEST 4MO: 06/25/87 : 1015-1530 : 847 MW : O2 PRI/SEC JMJr-102181

			CONTRACT SUMMARY SHEET	TEST 4MC CORRECTED FOR CONTR. CONDITIONS	TEST 4MC WITH TEST CONDITIONS
Fuel			CONTRACT	CONTRACT	TEST
Air Temp Ent AH	PRI/SEC	F	77/ 64	77/ 64	114/ 91
Air Temp Lvg AH	PRI/SEC	F	582/ 647	0/ 0	479/ 650
Air Flow Lvg AH (1)	PRI/SEC	MLB/HR	1335/5184	1430/5118	1430/5191
AH Air By-Pass Flow		MLB/HR	497.8	469.7	469.7
Mill Inlet Temp		F	397.2	0.0	322.3
Ave Air Temp Ent AH		F	66.7	66.8	95.6
Gas Temp Lvg Econ		F	736.0	748.0	748.0
Gas Temp Ent AH	PRI/SEC	F	736/ 736	734/ 749	734/ 749
Gas Temp Lvg AH (Incl Lkg)	PRI/SEC	F	279/ 282	-/ -	291/ 324
Gas Temp Lvg AH (Excl Lkg)	PRI/SEC	F	313/ 295	308/ 318	332/ 334
Gas Flow Ent AH	PRI/SEC	MLB/HR	924/6286	808/6439	808/6540
Ave Gas Temp Lvg AH (Excl Lkg)		F	294.7	316.7	334.2
Excess Air Lvg Econ		%	17.0	17.0	17.5
Excess Air Ent Pri AH		%	---	17.0	15.3
Excess Air Ent Sec AH		%	---	17.0	17.5
Excess Air Lvg Sec AH		%	---	---	24.3
Excess Air Lvg Pri AH		%	---	---	45.8
Excess Air to Burners		%	15.0	15.0	15.4
Sec AH Leakage		MLB/HR	315	---	302
Pri AH Leakage		MLB/HR	169	---	197
Moisture In Air		LB/LB DA	.0067	.0067	.0044
Dry Gas Wt Lvg Econ		LB/LB Fuel	---	10.005	11.201
Dry Air Wt to Burners		LB/LB Fuel	---	9.477	10.594
Wet Gas Wt Lvg Econ		LB/LB Fuel	---	10.561	11.808
Losses		%			
Dry Gas			4.84	5.45	5.31
H2O in Fuel			(2) 5.15	.88	.70
H2 in Fuel			---	4.33	4.62
Moisture in Air			.07	.07	.04
Unburned Combustible			.20	.04	.04
Radiation			.17	.17	.16
Unaccounted			(3) 1.00	.50	.50
Summation of Losses			11.43	11.44	11.37
Efficiency		%	88.57	88.56	88.63
Unit Output		MKB	6691.5	6691.5	6662.5
Fuel Input		MKB	7555.0	7555.9	7517.2
Fuel Rate		MLB/HR	686.2	686.3	622.3

(1) Includes By-Pass Flow (2) Includes H2 in Fuel Loss
(3) Includes Manufacturer's Margin of .5 %

TEST 4MC: 06/25/87 : 1015-1530 : 847 MW :CO2 PRI/SEC JMJr-102087

			CONTRACT SUMMARY SHEET	TEST 4A CORRECTED FOR CONTR. CONDITIONS	TEST 4A WITH TEST CONDITIONS
Fuel			CONTRACT	CONTRACT	TEST
Air Temp Ent AH	PRI/SEC	F	77/ 64	77/ 64	114/ 90
Air Temp Lvg AH	PRI/SEC	F	582/ 647	0/ 0	480/ 648
Air Flow Lvg AH (1)	PRI/SEC	MLB/HR	1335/5184	1451/5092	1451/5380
AH Air By-Pass Flow		MLB/HR	497.8	629.0	629.0
Mill Inlet Temp		F	397.2	0.0	322.3
Ave Air Temp Ent AH		F	66.7	66.9	95.4
Gas Temp Lvg Econ		F	736.0	747.0	747.0
Gas Flow Ent AH		MLB/HR	7210	7243	7525
Ave Gas Temp Lvg AH (Incl Lkg)		F	281.6	---	320.7
Ave Gas Temp Lvg AH (Excl Lkg)		F	294.7	314.5	332.7
Excess Air Lvg Econ		%	17.0	17.0	21.0
Excess Air Lvg AH		%	---	---	28.5
Excess Air to Burners		%	15.0	15.0	18.9
AH Leakage		MLB/HR	484	---	430
Moisture In Air		LB/LB DA	.0067	.0067	.0044
Dry Gas Wt Lvg Econ		LB/LB Fuel	---	10.005	11.471
Dry Air Wt to Burners		LB/LB Fuel	---	9.477	10.918
Wet Gas Wt Lvg Econ		LB/LB Fuel	---	10.561	12.080
Losses		%			
Dry Gas			4.84	5.40	5.41
H2O in Fuel			(2) 5.15	.88	.70
H2 in Fuel			---	4.32	4.62
Moisture in Air			.07	.07	.04
Unburned Combustible			.20	.04	.04
Radiation			.17	.17	.16
Unaccounted			(3) 1.00	.50	.50
Summation of Losses			11.43	11.38	11.47
Efficiency		%	88.57	88.62	88.53
Unit Output		MKB	6691.5	6691.5	6662.5
Fuel Input		MKB	7555.0	7550.8	7525.7
Fuel Rate		MLB/HR	686.2	685.8	623.0

(1) Includes By-Pass Flow (2) Includes H2 in Fuel Loss
(3) Includes Manufacturer's Margin of .5 %

TEST 4A : 06/25/87 : 1015-1530 : 847 MW : COMPOSITE/ O2 TCH-102387

TEST 4A : 06/25/87 : 1015-1530 : 847 MW : COMPOSITE/ O2 TCH-102387

EXCESS AIR = 21.04 O2 % = 3.73 CO % = 0.00 CO2 % = 14.92 SO2 % = .04
DRY AIR = 11.11 MOIS AIR = .048 MOIS ADD = 0.000 H2O FUEL = .560 LB/LB FUEL
DRY GAS = 11.471 WET GAS = 12.080 LB/LB FUEL MOIS GAS, % = 5.04

EXCESS AIR = 28.51 O2 % = 4.75 CO % = 0.00 CO2 % = 14.03 SO2 % = .04
DRY AIR = 11.80 MOIS AIR = .051 MOIS ADD = 0.000 H2O FUEL = .560 LB/LB FUEL
DRY GAS = 12.158 WET GAS = 12.769 LB/LB FUEL MOIS GAS, % = 4.79
Cpa = .242 Cpg = .255 AH LKG, % = 5.71 GAS LVG AH (EXCL LKG) = 332.7
AIR TEMP ENT = 99.8 GAS TEMP LVG (INCL LKG) = 320.7

← HO% PRI LEAKAGE

TEST 4A : 06/25/87 : 1015-1530 : 847 MW : USING O2 TCH-080287

CALCULATED SECONDARY AH GAS OUTLET CONDITIONS

		LVG ECON	ENT PRI	LVG PRI	ENT SEC	LVG SEC	TOTAL LVG AH'S
O2,	%	3.73*	3.30*	7.16*	3.73*	4.41	4.75*
CO2,	%	14.92	15.29	11.94	14.92	14.32	14.03
EXCESS AIR,	%	21.0	18.2	50.4	21.0	25.9	28.5
H2O IN GAS,	%	5.04	5.14	4.19	5.04	4.86	4.79
T AIR,	F		113.9*	479.5*	90.5*	648.5*	
H AIR,	BTU/LB		8.2		2.5		
T AIR CALC,	F			479.9		652.7	
T GAS,	F	747.0*	734.0*	291.5*	747.0*	324.2	320.7*
H GAS,	BTU/LB			52.4		61.0	60.1
H GASC,	BTU/LB			63.6		63.2	63.2
T GAS (W/O LKG),	F			333.7		332.4	332.6
WT AIR,	KLB/HR			822.1		5380.0	0.0
WT GAS,	KLB/HR	7525.0	698.1	874.1	6826.9	7080.6	7954.7
AH LKG,	KLB/HR			176.0*		253.7	429.7*

* DENOTES MEASURED VALUES.

PRI AH AIR BY-PASS FLOW = 629.0
MOIS IN AIR, LB/LB DA = .0044

TEST 4A : 06/25/87 : 1015-1530 : 847 MW : USING O2 TCH-080387

EXCESS AIR = 19.01 O2 % = 3.43 CO % = 0.00 CO2 % = 15.17 SO2 % = .05
DRY AIR = 11.15 MOIS AIR = .052 MOIS ADD = 0.000 H2O FUEL = .556 LB/LB FUEL
DRY GAS = 11.510 WET GAS = 12.118 LB/LB FUEL MOIS GAS, % = 5.02

EXCESS AIR = 50.05 O2 % = 7.12 CO % = 0.00 CO2 % = 11.97 SO2 % = .04
DRY AIR = 14.06 MOIS AIR = .065 MOIS ADD = 0.000 H2O FUEL = .556 LB/LB FUEL
DRY GAS = 14.419 WET GAS = 15.041 LB/LB FUEL MOIS GAS, % = 4.13
Cpa = .242 Cpg = .254 AH LKG, % = 24.12 GAS LVG AH (EXCL LKG) = 328.9

TEST 4A : 06/25/87 : 1015-1530 : 847 MW : USING O2 TCH-080387

EXCESS AIR = 17.32 O2 % = 3.17 CO % = 0.00 CO2 % = 15.40 SO2 % = .05
DRY AIR = 10.99 MOIS AIR = .051 MOIS ADD = 0.000 H2O FUEL = .556 LB/LB FUEL
DRY GAS = 11.351 WET GAS = 11.958 LB/LB FUEL MOIS GAS, % = 5.08

EXCESS AIR = 50.80 O2 % = 7.19 CO % = 0.00 CO2 % = 11.90 SO2 % = .04
DRY AIR = 14.13 MOIS AIR = .066 MOIS ADD = 0.000 H2O FUEL = .556 LB/LB FUEL
DRY GAS = 14.490 WET GAS = 15.111 LB/LB FUEL MOIS GAS, % = 4.11
Cpa = .242 Cpg = .254 AH LKG, % = 26.37 GAS LVG AH (EXCL LKG) = 338.5

			CONTRACT SUMMARY SHEET	TEST 4AC CORRECTED FOR CONTR. CONDITIONS	TEST 4AC WITH TEST CONDITIONS
Fuel			CONTRACT	CONTRACT	TEST
Air Temp Ent AH	PRI/SEC	F	77/ 64	77/ 64	114/ 90
Air Temp Lvg AH	PRI/SEC	F	582/ 647	0/ 0	480/ 648
Air Flow Lvg AH (1)	PRI/SEC	MLB/HR	1335/5184	1451/5098	1451/5148
AH Air By-Pass Flow		MLB/HR	497.8	629.0	629.0
Mill Inlet Temp		F	397.2	0.0	322.3
Ave Air Temp Ent AH		F	66.7	66.9	95.6
Gas Temp Lvg Econ		F	736.0	747.0	747.0
Gas Flow Ent AH		MLB/HR	7210	7249	7329
Ave Gas Temp Lvg AH (Incl Lkg)		F	281.6	---	320.7
Ave Gas Temp Lvg AH (Excl Lkg)		F	294.7	317.6	335.7
Excess Air Lvg Econ		%	17.0	17.0	17.1
Excess Air Lvg AH		%	---	---	26.7
Excess Air to Burners		%	15.0	15.0	15.0
AH Leakage		MLB/HR	484	---	525
Moisture In Air		LB/LB DA	.0067	.0067	.0044
Dry Gas Wt Lvg Econ		LB/LB Fuel	---	10.005	11.167
Dry Air Wt to Burners		LB/LB Fuel	---	9.477	10.556
Wet Gas Wt Lvg Econ		LB/LB Fuel	---	10.561	11.774
Losses		%			
Dry Gas			4.84	5.47	5.33
H2O in Fuel			(2) 5.15	.88	.70
H2 in Fuel			---	4.33	4.62
Moisture in Air			.07	.07	.04
Unburned Combustible			.20	.04	.04
Radiation			.17	.17	.16
Unaccounted			(3) 1.00	.50	.50
Summation of Losses			11.43	11.46	11.39
Efficiency		%	88.57	88.54	88.61
Unit Output		MKB	6691.5	6691.5	6662.5
Fuel Input		MKB	7555.0	7557.6	7518.9
Fuel Rate		MLB/HR	686.2	686.4	622.4

(1) Includes By-Pass Flow (2) Includes H2 in Fuel Loss
(3) Includes Manufacturer's Margin of .5 %

TEST 4AC: 06/25/87 : 1015-1530 : 847 MW : COMPOSITE/CO2 TCH-102387

TEST 4AC: 06/25/87 : 1015-1530 : 847 MW : COMPOSITE/CO2 TCH-102387

EXCESS AIR = 0.00 O2 % = 3.73 CO % = 0.00 CO2 % = 15.40 SO2 % = 0.00
DRY AIR = 10.74 MOIS AIR = .047 MOIS ADD = 0.000 H2O FUEL = .560 LB/LB FUEL
DRY GAS = 11.167 WET GAS = 11.774 LB/LB FUEL MOIS GAS, % = 5.15

EXCESS AIR = 0.00 O2 % = 4.75 CO % = 0.00 CO2 % = 14.26 SO2 % = 0.00
DRY AIR = 11.62 MOIS AIR = .051 MOIS ADD = 0.000 H2O FUEL = .560 LB/LB FUEL
DRY GAS = 12.007 WET GAS = 12.618 LB/LB FUEL MOIS GAS, % = 4.84
Cpa = .242 Cpg = .255 AH LKG, % = 7.16 GAS LVG AH (EXCL LKG) = 335.7
AIR TEMP ENT = 99.8 GAS TEMP LVG (INCL LKG) = 320.7

↑ 40% PRJ LKG

TEST 4AC: 06/25/87 : 1015-1530 : 847 MW : USING CO2 TCH-080287

CALCULATED SECONDARY AH GAS OUTLET CONDITIONS

		LVG ECON	ENT PRI	LVG PRI	ENT SEC	LVG SEC	TOTAL LVG AH'S
O2,	%	3.73*	3.30*	7.16*	3.73*	4.15	4.75*
CO2,	%	15.40*	15.66*	12.32*	15.40*	14.55	14.26*
EXCESS AIR,	%	17.1	15.4	45.7	17.1	24.0	26.7
H2O IN GAS,	%	5.15	5.23	4.29	5.15	4.91	4.84
T AIR,	F		113.9*	479.5*	90.5*	648.5*	
H AIR,	BTU/LB		8.2		2.5		
T AIR CALC,	F			479.9		657.0	
T GAS,	F	747.0*	734.0*	291.5*	747.0*	324.2	320.7*
H GAS,	BTU/LB			52.5		61.0	60.1
H GASC,	BTU/LB			63.2		64.2	64.1
T GAS (W/O LKG),	F			332.1		336.1	335.7
WT AIR,	KLB/HR			822.1		5148.0	0.0
WT GAS,	KLB/HR	7329.0	694.9	863.7	6634.1	6990.3	7854.0
AH LKG,	KLB/HR			168.8*		356.2	525.0*

* DENOTES MEASURED VALUES.

PRI AH AIR BY-PASS FLOW = 629.0
MOIS IN AIR, LB/LB DA = .0044

TEST 4AC : 06/25/87 : 1015-1530 : 847 MW : USING CO2 TCH-080387

EXCESS AIR = 0.00 O2 % = 3.43 CO % = 0.00 CO2 % = 15.57 SO2 % = 0.00
DRY AIR = 10.64 MOIS AIR = .046 MOIS ADD = 0.000 H2O FUEL = .560 LB/LB FUEL
DRY GAS = 11.051 WET GAS = 11.657 LB/LB FUEL MOIS GAS, % = 5.20

EXCESS AIR = 0.00 O2 % = 7.12 CO % = 0.00 CO2 % = 12.31 SO2 % = 0.00
DRY AIR = 13.38 MOIS AIR = .058 MOIS ADD = 0.000 H2O FUEL = .560 LB/LB FUEL
DRY GAS = 13.807 WET GAS = 14.425 LB/LB FUEL MOIS GAS, % = 4.29
Cpa = .242 Cpg = .254 AH LKG, % = 23.74 GAS LVG AH (EXCL LKG) = 328.2

TEST 4AC : 06/25/87 : 1015-1530 : 847 MW : USING CO2 TCH-080387

EXCESS AIR = 0.00 O2 % = 3.17 CO % = 0.00 CO2 % = 15.76 SO2 % = 0.00
DRY AIR = 10.52 MOIS AIR = .046 MOIS ADD = 0.000 H2O FUEL = .560 LB/LB FUEL
DRY GAS = 10.925 WET GAS = 11.531 LB/LB FUEL MOIS GAS, % = 5.25

EXCESS AIR = 0.00 O2 % = 7.19 CO % = 0.00 CO2 % = 12.34 SO2 % = 0.00
DRY AIR = 13.34 MOIS AIR = .058 MOIS ADD = 0.000 H2O FUEL = .560 LB/LB FUEL
DRY GAS = 13.777 WET GAS = 14.395 LB/LB FUEL MOIS GAS, % = 4.29
Cpa = .242 Cpg = .255 AH LKG, % = 24.84 GAS LVG AH (EXCL LKG) = 335.8

			CONTRACT SUMMARY SHEET	TEST 4MO CORRECTED FOR CONTR. CONDITIONS	TEST 4MO WITH TEST CONDITIONS
Fuel			CONTRACT	CONTRACT	TEST
Air Temp Ent AH	PRI/SEC	F	77/ 64	77/ 64	114/ 91
Air Temp Lvg AH	PRI/SEC	F	582/ 647	0/ 0	480/ 648
Air Flow Lvg AH (1)	PRI/SEC	MLB/HR	1335/5184	1451/5091	1451/5391
AH Air By-Pass Flow		MLB/HR	497.8	628.9	628.9
Mill Inlet Temp		F	397.2	0.0	322.3
Ave Air Temp Ent AH		F	66.7	66.9	95.5
Gas Temp Lvg Econ		F	736.0	748.0	748.0
Gas Flow Ent AH		MLB/HR	7210	7241	7536
Ave Gas Temp Lvg AH (Incl Lkg)		F	281.6	---	320.0
Ave Gas Temp Lvg AH (Excl Lkg)		F	294.7	313.6	331.8
Excess Air Lvg Econ		%	17.0	17.0	21.2
Excess Air Lvg AH		%	---	---	28.6
Excess Air to Burners		%	15.0	15.0	19.1
AH Leakage		MLB/HR	484	---	425
Moisture In Air		LB/LB DA	.0067	.0067	.0044
Dry Gas Wt Lvg Econ		LB/LB Fuel	---	10.005	11.490
Dry Air Wt to Burners		LB/LB Fuel	---	9.477	10.937
Wet Gas Wt Lvg Econ		LB/LB Fuel	---	10.561	12.099
Losses		%			
Dry Gas			4.84	5.38	5.39
H2O in Fuel			(2) 5.15	.88	.70
H2 in Fuel			---	4.32	4.62
Moisture in Air			.07	.07	.04
Unburned Combustible			.20	.04	.04
Radiation			.17	.17	.16
Unaccounted			(3) 1.00	.50	.50
Summation of Losses			11.43	11.36	11.45
Efficiency		%	88.57	88.64	88.55
Unit Output		MKB	6691.5	6691.5	6662.5
Fuel Input		MKB	7555.0	7549.1	7524.0
Fuel Rate		MLB/HR	686.2	685.7	622.8

(1) Includes By-Pass Flow (2) Includes H2 in Fuel Loss
(3) Includes Manufacturer's Margin of .5 %

TEST 4MO: 06/25/87 : 1015-1530 : 847 MW : COMPOSITE/ O2 MEAS FLOW JMJr-102087

TEST 4MO: 06/25/87 : 1015-1530 : 847 MW : COMPOSITE/ O2 MEAS FLOW JMJr-102087

EXCESS AIR = 21.25 O2 % = 3.76 CO % = 0.00 CO2 % = 14.89 SO2 % = .04
DRY AIR = 11.13 MOIS AIR = .049 MOIS ADD = 0.000 H2O FUEL = .560 LB/LB FUEL
DRY GAS = 11.490 WET GAS = 12.099 LB/LB FUEL MOIS GAS, % = 5.03

EXCESS AIR = 28.64 O2 % = 4.77 CO % = 0.00 CO2 % = 14.01 SO2 % = .04
DRY AIR = 11.81 MOIS AIR = .052 MOIS ADD = 0.000 H2O FUEL = .560 LB/LB FUEL
DRY GAS = 12.170 WET GAS = 12.781 LB/LB FUEL MOIS GAS, % = 4.78
Cpa = .242 Cpg = .254 AH LKG, % = 5.64 GAS LVG AH (EXCL LKG) = 331.8
AIR TEMP ENT = 99.9 GAS TEMP LVG (INCL LKG) = 320.0

PG-1980-1

Babcock & Wilcox
GENERAL CALCULATIONS

	WPAH	EPAH	WSAH	ESAH	TOTAL
MEAS GAS ENT	456	506	3713	4079	8754
CORR FACTOR/CALC TOTAL		Corr Fact - .86			7536
ADJUSTED GAS FLOW	393	436	6708		
		829			
O2 ENT ✓	3.43	3.29 3.17			
CO2 ENT ✓	15.57	15.76			
O2 LVG ✓	7.12	7.16 7.19			
CO2 LVG ✓	12.30	12.34			
% LKG	24.0%	26.3%			
TAIR ENT ✓	115.8	113.8 111.9	93.8	90.6 87.1	
T LVG W/LKG ✓	289	291.1 293	324.3		
T LVG W/O LKG *	328.6	338.2	321.3		
W LKG	94.3	114.7	215		
TAIR LVG ✓	470	479 488	639 649.4	661	
TGAS ENT ✓	731	734 737	749 742.5	748	
% MOIS		5.35			
HA ENT	8.63	7.69	2.56		
HA LVG	95.05	99.5	140.0		
HG ENT	168.3	169.9	173.0		
HG LVG	62.4	64.8	63.1		
W AIR LVG AH	481.6	499	536.4		6842
W AIR By-Pass					497.5
By PULV HT BAL					629

CUSTOMER IPP	TEST NO. 4MO		FILE NO. RB-614
SUBJECT CALC AIR/GAS FLOWS		PREPARED BY JM/TEH	DATE 10/20/87

IP14_001876

TEST 4MO: 06/25/87 : 1015-1530 : 847 MW : O2 MEAS FLOW JMJr-102087

EXCESS AIR = 19.02 O2 % = 3.43 CO % = 0.00 CO2 % = 15.18 SO2 % = .05
DRY AIR = 10.70 MOIS AIR = .047 MOIS ADD = 0.000 H2O FUEL = .572 LB/LB FUEL
DRY GAS = 11.053 WET GAS = 11.673 LB/LB FUEL MOIS GAS, % = 5.31

EXCESS AIR = 50.06 O2 % = 7.12 CO % = 0.00 CO2 % = 11.97 SO2 % = .04
DRY AIR = 13.49 MOIS AIR = .059 MOIS ADD = 0.000 H2O FUEL = .572 LB/LB FUEL
DRY GAS = 13.847 WET GAS = 14.478 LB/LB FUEL MOIS GAS, % = 4.36
Cpa = .242 Cpg = .254 AH LKG, % = 24.04 GAS LVG AH (EXCL LKG) = 328.6
AIR TEMP ENT = 115.8 GAS TEMP LVG (INCL LKG) = 289.0

TEST 4MO: 06/25/87 : 1015-1530 : 847 MW : EAST PRI AH / O2 JMJr-102087

EXCESS AIR = 17.32 O2 % = 3.17 CO % = 0.00 CO2 % = 15.41 SO2 % = .05
DRY AIR = 10.55 MOIS AIR = .046 MOIS ADD = 0.000 H2O FUEL = .572 LB/LB FUEL
DRY GAS = 10.900 WET GAS = 11.519 LB/LB FUEL MOIS GAS, % = 5.37

EXCESS AIR = 50.81 O2 % = 7.19 CO % = 0.00 CO2 % = 11.91 SO2 % = .04
DRY AIR = 13.56 MOIS AIR = .060 MOIS ADD = 0.000 H2O FUEL = .572 LB/LB FUEL
DRY GAS = 13.914 WET GAS = 14.546 LB/LB FUEL MOIS GAS, % = 4.35
Cpa = .242 Cpg = .255 AH LKG, % = 26.28 GAS LVG AH (EXCL LKG) = 338.2
AIR TEMP ENT = 111.9 GAS TEMP LVG (INCL LKG) = 293.0

TEST 4MO : 06/25/87 : 1015-1530 : 847 MW : MEAS FLOW / O2 JMJr-102087

CALCULATED SECONDARY AH GAS OUTLET CONDITIONS

		LVG ECON	ENT PRI	LVG PRI	ENT SEC	LVG SEC	TOTAL LVG AH'S
O2,	%	3.76*	3.29*	7.16*	3.76*	4.35	4.77*
CO2,	%	14.89	15.30	11.93	14.89	14.38	14.01
EXCESS AIR,	%	21.2	18.1	50.5	21.2	25.5	28.6
H2O IN GAS,	%	5.03	5.14	4.19	5.03	4.87	4.78
T AIR,	F		113.8*	479.0*	90.6*	649.6*	
H AIR,	BTU/LB		8.2		2.6		
T AIR CALC,	F			478.5		648.1	
T GAS,	F	748.0*	734.0*	291.1*	748.5*	324.3	320.0*
H GAS,	BTU/LB			52.3		61.0	59.9
H GASC,	BTU/LB			63.5		62.9	63.0
T GAS (W/O LKG),	F			333.4		331.4	331.6
WT AIR,	KLB/HR			980.6		5364.0	0.0
WT GAS,	KLB/HR	7536.0	829.0	1038.9	6707.0	6922.4	7961.2
AH LKG,	KLB/HR			209.9*		215.4	425.2*

* DENOTES MEASURED VALUES.

PRI AH AIR BY-PASS FLOW = 497.5
MOIS IN AIR, LB/LB DA = .0044
WT AIR LVG SEC BY HT BAL = 5349.4

TEST 4MO: 06/25/87 : 1015-1530 : 847 MW : O2 PRI/SEC JMJr-102187

EXCESS AIR = 21.25 O2 % = 3.76 CO % = 0.00 CO2 % = 14.89 SO2 % = .04
DRY AIR = 11.13 MOIS AIR = .049 MOIS ADD = 0.000 H2O FUEL = .560 LB/LB FUEL
DRY GAS = 11.490 WET GAS = 12.099 LB/LB FUEL MOIS GAS, % = 5.03

EXCESS AIR = 25.46 O2 % = 4.35 CO % = 0.00 CO2 % = 14.38 SO2 % = .04
DRY AIR = 11.52 MOIS AIR = .050 MOIS ADD = 0.000 H2O FUEL = .560 LB/LB FUEL
DRY GAS = 11.877 WET GAS = 12.487 LB/LB FUEL MOIS GAS, % = 4.89
Cpa = .242 Cpg = .255 AH LKG, % = 3.21 GAS LVG AH (EXCL LKG) = 331.4
AIR TEMP ENT = 90.6 GAS TEMP LVG (INCL LKG) = 324.3

TEST 4MO: 06/25/87 : 1015-1530 : 847 MW : O2 PRI/SEC JMJr-102187

EXCESS AIR = 18.09 O2 % = 3.29 CO % = 0.00 CO2 % = 15.30 SO2 % = .04
DRY AIR = 10.84 MOIS AIR = .047 MOIS ADD = 0.000 H2O FUEL = .560 LB/LB FUEL
DRY GAS = 11.200 WET GAS = 11.808 LB/LB FUEL MOIS GAS, % = 5.14

EXCESS AIR = 50.48 O2 % = 7.16 CO % = 0.00 CO2 % = 11.93 SO2 % = .03
DRY AIR = 13.82 MOIS AIR = .060 MOIS ADD = 0.000 H2O FUEL = .560 LB/LB FUEL
DRY GAS = 14.176 WET GAS = 14.797 LB/LB FUEL MOIS GAS, % = 4.19
Cpa = .242 Cpg = .254 AH LKG, % = 25.31 GAS LVG AH (EXCL LKG) = 333.9
AIR TEMP ENT = 113.8 GAS TEMP LVG (INCL LKG) = 291.1

			CONTRACT SUMMARY SHEET	TEST 4MC CORRECTED FOR CONTR. CONDITIONS	TEST 4MC WITH TEST CONDITIONS
Fuel			CONTRACT	CONTRACT	TEST
Air Temp Ent AH	PRI/SEC	F	77/ 64	77/ 64	114/ 91
Air Temp Lvg AH	PRI/SEC	F	582/ 647	0/ 0	480/ 648
Air Flow Lvg AH (1)	PRI/SEC	MLB/HR	1335/5184	1451/5095	1451/5171
AH Air By-Pass Flow		MLB/HR	497.8	628.9	628.9
Mill Inlet Temp		F	397.2	0.0	322.3
Ave Air Temp Ent AH		F	66.7	66.9	95.7
Gas Temp Lvg Econ		F	736.0	748.0	748.0
Gas Flow Ent AH		MLB/HR	7210	7246	7349
Ave Gas Temp Lvg AH (Incl Lkg)		F	281.6	---	320.0
Ave Gas Temp Lvg AH (Excl Lkg)		F	294.7	316.3	334.6
Excess Air Lvg Econ		%	17.0	17.0	17.5
Excess Air Lvg AH		%	---	---	26.8
Excess Air to Burners		%	15.0	15.0	15.4
AH Leakage		MLB/HR	484	---	512
Moisture In Air		LB/LB DA	.0067	.0067	.0044
Dry Gas Wt Lvg Econ		LB/LB Fuel	---	10.005	11.201
Dry Air Wt to Burners		LB/LB Fuel	---	9.477	10.594
Wet Gas Wt Lvg Econ		LB/LB Fuel	---	10.561	11.808
Losses		%			
Dry Gas			4.84	5.44	5.32
H2O in Fuel			(2) 5.15	.88	.70
H2 in Fuel			---	4.32	4.62
Moisture in Air			.07	.07	.04
Unburned Combustible			.20	.04	.04
Radiation			.17	.17	.16
Unaccounted			(3) 1.00	.50	.50
Summation of Losses			11.43	11.42	11.38
Efficiency		%	88.57	88.58	88.62
Unit Output		MKB	6691.5	6691.5	6662.5
Fuel Input		MKB	7555.0	7554.2	7518.1
Fuel Rate		MLB/HR	686.2	686.1	622.4

(1) Includes By-Pass Flow (2) Includes H2 in Fuel Loss
(3) Includes Manufacturer's Margin of .5 %

TEST 4MC: 06/25/87 : 1015-1530 : 847 MW : COMPOSITE/CO2 MEAS FLOW JMJr-102087

TEST 4MC: 06/25/87 : 1015-1530 : 847 MW : COMPOSITE/CO2 MEAS FLOW JMJr-102087

EXCESS AIR = 0.00 O2 % = 3.76 CO % = 0.00 CO2 % = 15.35 SO2 % = 0.00
DRY AIR = 10.77 MOIS AIR = .047 MOIS ADD = 0.000 H2O FUEL = .560 LB/LB FUEL
DRY GAS = 11.201 WET GAS = 11.808 LB/LB FUEL MOIS GAS, % = 5.14

EXCESS AIR = 0.00 O2 % = 4.77 CO % = 0.00 CO2 % = 14.24 SO2 % = 0.00
DRY AIR = 11.63 MOIS AIR = .051 MOIS ADD = 0.000 H2O FUEL = .560 LB/LB FUEL
DRY GAS = 12.020 WET GAS = 12.631 LB/LB FUEL MOIS GAS, % = 4.84
Cpa = .242 Cpg = .255 AH LKG, % = 6.97 GAS LVG AH (EXCL LKG) = 334.6
AIR TEMP ENT = 99.9 GAS TEMP LVG (INCL LKG) = 320.0

PG-1980-1

Babcock & Wilcox
GENERAL CALCULATIONS

	WPAH	EPAH	WSAH	ESAH	TOTAL
MEAS GAS ENT	456	506	3713	4079	8754
CORR FACTOR/CALC TOTAL		Corr Fact .840			7349
ADJUSTED GAS FLOW	383	425	6541		
		808			
O2 ENT	3.43 3.29	3.17			
CO2 ENT	15.57 15.47	15.76			
O2 LVG	7.12 7.16	7.19			
CO2 LVG	12.30 12.32	12.34			
% LKG	23.76	24.79			
TAIR ENT	115.8	113.8 111.9	93.8	90.6 87.1	
TG LVG W/LKG	289	291.1 293	324.2		
TG LVG W/O LKG	328.2	335.7	334.8		
W LKG	91.1	105.4	3155		512
TAIR LVG	470	479 488	639 649.6	661	
TGAS ENT	731	734 737	749 748.5	748	
% MOIS	5.43				
HA ENT	8.63	7.69	2.56		
HA LVG	95.0	99.5	140.8		
HG ENT	168.4	170.0	173.1		
HG LVG	62.3	64.2	64.0		
W AIR LVG AH	470.5	489.8		519.2	6622
W AIR By-PASS					469.7
By PHLV HT BAL					629

CUSTOMER IPP	TEST NO. 4MC		FILE NO. RB-614
SUBJECT CALC AIR/GAS FLOWS		PREPARED BY JM/TCH	DATE 10/20/87

IP14_001882

TEST 4MC: 06/25/87 : 1015-1530 : 847 MW : EAST PRI AH /CO2 JMJr-102087

EXCESS AIR = 0.00 O2 % = 3.17 CO % = 0.00 CO2 % = 15.76 SO2 % = 0.00
DRY AIR = 10.31 MOIS AIR = .045 MOIS ADD = 0.000 H2O FUEL = .572 LB/LB FUEL
DRY GAS = 10.709 WET GAS = 11.326 LB/LB FUEL MOIS GAS, % = 5.45

EXCESS AIR = 0.00 O2 % = 7.19 CO % = 0.00 CO2 % = 12.34 SO2 % = 0.00
DRY AIR = 13.07 MOIS AIR = .058 MOIS ADD = 0.000 H2O FUEL = .572 LB/LB FUEL
DRY GAS = 13.504 WET GAS = 14.134 LB/LB FUEL MOIS GAS, % = 4.46
Cpa = .242 Cpg = .255 AH LKG, % = 24.79 GAS LVG AH (EXCL LKG) = 335.7
AIR TEMP ENT = 111.9 GAS TEMP LVG (INCL LKG) = 293.0

TEST 4MC: 06/25/87 : 1015-1530 : 847 MW : WEST PRI AH /CO2 JMJr-102087

EXCESS AIR = 0.00 O2 % = 3.43 CO % = 0.00 CO2 % = 15.57 SO2 % = 0.00
DRY AIR = 10.43 MOIS AIR = .046 MOIS ADD = 0.000 H2O FUEL = .572 LB/LB FUEL
DRY GAS = 10.832 WET GAS = 11.451 LB/LB FUEL MOIS GAS, % = 5.40

EXCESS AIR = 0.00 O2 % = 7.12 CO % = 0.00 CO2 % = 12.30 SO2 % = 0.00
DRY AIR = 13.13 MOIS AIR = .058 MOIS ADD = 0.000 H2O FUEL = .572 LB/LB FUEL
DRY GAS = 13.544 WET GAS = 14.174 LB/LB FUEL MOIS GAS, % = 4.45
Cpa = .242 Cpg = .255 AH LKG, % = 23.78 GAS LVG AH (EXCL LKG) = 328.2
AIR TEMP ENT = 115.8 GAS TEMP LVG (INCL LKG) = 289.0

TEST 4MC : 06/25/87 : 1015-1530 : 847 MW : MEAS FLOW / CO2 JMJr-102087

CALCULATED SECONDARY AH GAS OUTLET CONDITIONS

		LVG ECON	ENT PRI	LVG PRI	ENT SEC	LVG SEC	TOTAL LVG AH'S
O2,	%	3.76*	3.29*	7.16*	3.76*	4.11	4.77*
CO2,	%	15.35*	15.67*	12.32*	15.35*	14.59	14.24*
EXCESS AIR,	%	17.5	15.3	45.8	17.5	23.7	26.8
H2O IN GAS,	%	5.14	5.23	4.29	5.14	4.92	4.84
T AIR,	F		113.8*	479.0*	90.6*	649.6*	
H AIR,	BTU/LB		8.2		2.6		
T AIR CALC,	F			478.5		648.4	
T GAS,	F	748.0*	734.0*	291.1*	748.5*	324.2	320.0*
H GAS,	BTU/LB			52.3		61.0	59.9
H GASC,	BTU/LB			63.1		63.8	63.8
T GAS (W/O LKG),	F			331.8		334.8	334.5
WT AIR,	KLB/HR			960.3		5192.0	0.0
WT GAS,	KLB/HR	7349.0	808.0	1004.9	6541.0	6856.1	7861.0
AH LKG,	KLB/HR			196.9*		315.1	512.0*

* DENOTES MEASURED VALUES.

PRI AH AIR BY-PASS FLOW = 469.7
MOIS IN AIR, LB/LB DA = .0044
WT AIR LVG SEC BY HT BAL = 5180.2

TEST 4MC: 06/25/87 : 1015-1530 : 847 MW :CO2 PRI/SEC JMJr-102087

EXCESS AIR = 0.00 O2 % = 3.76 CO % = 0.00 CO2 % = 15.35 SO2 % = 0.00
DRY AIR = 10.77 MOIS AIR = .047 MOIS ADD = 0.000 H2O FUEL = .560 LB/LB FUEL
DRY GAS = 11.201 WET GAS = 11.808 LB/LB FUEL MOIS GAS, % = 5.14

EXCESS AIR = 0.00 O2 % = 4.11 CO % = 0.00 CO2 % = 14.59 SO2 % = 0.00
DRY AIR = 11.39 MOIS AIR = .050 MOIS ADD = 0.000 H2O FUEL = .560 LB/LB FUEL
DRY GAS = 11.743 WET GAS = 12.353 LB/LB FUEL MOIS GAS, % = 4.94
Cpa = .242 Cpg = .255 AH LKG, % = 4.61 GAS LVG AH (EXCL LKG) = 334.5
AIR TEMP ENT = 90.6 GAS TEMP LVG (INCL LKG) = 324.2

TEST 4MC: 06/25/87 : 1015-1530 : 847 MW :CO2 PRI/SEC JMJr-102087

EXCESS AIR = 0.00 O2 % = 3.29 CO % = 0.00 CO2 % = 15.67 SO2 % = 0.00
DRY AIR = 10.57 MOIS AIR = .046 MOIS ADD = 0.000 H2O FUEL = .560 LB/LB FUEL
DRY GAS = 10.984 WET GAS = 11.590 LB/LB FUEL MOIS GAS, % = 5.23

EXCESS AIR = 0.00 O2 % = 7.16 CO % = 0.00 CO2 % = 12.32 SO2 % = 0.00
DRY AIR = 13.37 MOIS AIR = .058 MOIS ADD = 0.000 H2O FUEL = .560 LB/LB FUEL
DRY GAS = 13.797 WET GAS = 14.415 LB/LB FUEL MOIS GAS, % = 4.29
Cpa = .242 Cpg = .254 AH LKG, % = 24.37 GAS LVG AH (EXCL LKG) = 332.3
AIR TEMP ENT = 113.8 GAS TEMP LVG (INCL LKG) = 291.1

TEST 4A :06/25/87 : SEC AH / O2 / PLANT PA FLOW JMJr 102187

	BASE	NEW		BASE	NEW			
GAS WT ENT =	6286	6827	AIR WT LVG =	5184	5380	MOIST =	6.6	5.0
GAS TEMP ENT =	736	747	GAS TEMP LVG =	292	326	EXCL. LKG		
AH LKG, %		3.72	GAS TEMP LVG =		318	INCL. LKG		
			AVE COLD END =	178	208			
AIR TEMP ENT =	64	90	AIR TEMP LVG =	647	668			

TEST 4MO :06/25/87 : SEC AH / O2 / MEASURED AIR-GAS FLOW JMJr 102187

	BASE	NEW		BASE	NEW			
GAS WT ENT =	6286	6707	AIR WT LVG =	5184	5364	MOIST =	6.6	5.4
GAS TEMP ENT =	736	749	GAS TEMP LVG =	292	323	EXCL. LKG		
AH LKG, %		3.21	GAS TEMP LVG =		316	INCL. LKG		
			AVE COLD END =	178	207			
AIR TEMP ENT =	64	91	AIR TEMP LVG =	647	666			

TEST 4MC :06/25/87 : SEC AH / CO2 / MEASURED AIR-GAS FLOW JMJr 102187

	BASE	NEW		BASE	NEW			
GAS WT ENT =	6286	6541	AIR WT LVG =	5184	5192	MOIST =	6.6	5.4
GAS TEMP ENT =	736	749	GAS TEMP LVG =	292	324	EXCL. LKG		
AH LKG, %		4.68	GAS TEMP LVG =		314	INCL. LKG		
			AVE COLD END =	178	207			
AIR TEMP ENT =	64	91	AIR TEMP LVG =	647	669			

TEST 4MO :06/25/87 : W PRI AH / O2 / MEASURED AIR-GAS FLOW JMJr 102187

	BASE	NEW		BASE	NEW		
GAS WT ENT =	462	393	AIR WT LVG =	418	482	MOIST = 6.0	5.4
GAS TEMP ENT =	736	731	GAS TEMP LVG =	313	269	EXCL. LKG	
AH LKG, %		23.99	GAS TEMP LVG =		240	INCL. LKG	
			AVE COLD END =	195	192		
AIR TEMP ENT =	77	116	AIR TEMP LVG =	582	522		

TEST 4MO :06/25/87 : E PRI AH / O2 / MEASURED AIR-GAS FLOW JMJr 102187

	BASE	NEW		BASE	NEW		
GAS WT ENT =	462	436	AIR WT LVG =	418	499	MOIST = 6.0	5.4
GAS TEMP ENT =	736	737	GAS TEMP LVG =	313	285	EXCL. LKG	
AH LKG, %		26.31	GAS TEMP LVG =		250	INCL. LKG	
			AVE COLD END =	195	198		
AIR TEMP ENT =	77	112	AIR TEMP LVG =	582	538		

TEST 4MC :06/25/87 : W PRI AH / CO2 / MEASURED AIR-GAS FLOW JMJr 102187

	BASE	NEW		BASE	NEW		
GAS WT ENT =	462	383	AIR WT LVG =	418	471	MOIST = 6.0	5.4
GAS TEMP ENT =	736	731	GAS TEMP LVG =	313	267	EXCL. LKG	
AH LKG, %		23.79	GAS TEMP LVG =		239	INCL. LKG	
			AVE COLD END =	195	191		
AIR TEMP ENT =	77	116	AIR TEMP LVG =	582	523		

TEST 4MC :06/25/87 : E PRI AH / CO2 / MEASURED AIR-GAS FLOW JMJr 102187

	BASE	NEW		BASE	NEW		
GAS WT ENT =	462	425	AIR WT LVG =	418	490	MOIST = 6.0	5.4
GAS TEMP ENT =	736	737	GAS TEMP LVG =	313	282	EXCL. LKG	
AH LKG, %		24.80	GAS TEMP LVG =		250	INCL. LKG	
			AVE COLD END =	195	197		
AIR TEMP ENT =	77	112	AIR TEMP LVG =	582	538		

To: OPERATIONS
From: AARON NISSEN
Date: 6/25 Thur

Unit #1 Boiler/RAH TESTING for FRIDAY 6/26

At this point, it is still uncertain as to whether we will be RAH Perf Testing (Retesting) or Boiler Perf testing. Copies of what we intend on doing for both are enclosed.

Retest on RAH will not be known until all numbers are calculated & compared. I should know by the beginning of the shift which well ~~will~~ be doing and will contact you then.

Thank you for your cooperation.

Sincerely
Aaron Nissen

IP14_001888

Test Start ~10:00

~~6/25 Thur~~
For 6/26 Fri

BOILER CONDITIONS REQUESTED: RAH PERF TESTS

Sootblowing: IR's- stay off water walls (unless absolutely required)
2K's- blow all prior to 5:00 am each day
3K's- blow all prior to 7:00 am each day
4K's- blow all prior to 8:00 am each day
-Begin complete sootblowing sequence (excluding water-walls) at approximately 3:00 am each morning

Bottom Ash: Have bottom ash pulled prior to 8:00 am each day

1030 - Econ Ash Hopper BV-7 - close

Baghouse Fly Ash: Have first and second row hoppers pulled prior to 10:00 am each morning

Isolate hoppers: Baghouse Hoppers 1A1 / 1B10 / 1C9

Blowdown: Isolate prior to the test (9:00 am)

Auxiliary Steam: Isolate Unit #1 prior to the test

Pulverizers: 7 mills in service (would prefer to have first or second row mill out of service

Load: 850 MW gross

Throttle pressure: ~~2400~~ ~2430 psig

Feedwater Flow: ~6100 kpph

Main Steam Temp: 1005 F
Main Steam Sprays: as required (less than 150 kpph)

Reheat Temp: 1005 F
Reheat Sprays: ~~0 kpph~~ as required (set to 0 at start)

Excess O2: ~~2.0~~ 2.5 Ave % (Note: B&W will have their economizer test grid setup with monitoring capabilities available in the control room as reference to establish design gas flow)

Primary Air Duct Pressure: ~~37.0~~ 30.0 "wc (may require to place in manual)
(Highest Pulv PA Flow 95%)

Secondary Air Duct Pressure: auto (should be okay)

PAH Gas Inlet Control Dampers: may have to make minor adjustments to damper position to match gas outlet temps (PAH & SAH) based upon B&W's test grid

SAH ID - Gas Inlet Damper ISGA-CDR-56/131 68%

Bias Dampers - set + place in manual (to hold thru test)

If temps come up during test, OK to place sprays in manual to control (need to straight line spray fl...)

IP14_001889

BDS 1698-1

LONGHAND MEMORANDUM

BABCOCK & WILCOX

For FRIDAY 6/26/87 (if not RAH testing)

TO: Aaron Nissen

FROM: Bill Arvan

CUST.: IPSC

FILE NO. OR REF.: RB-614 Performance

SUBJ.: Unit 1 Performance Testing

DATE: 6/24/87

As discussed in the June 11th contract meeting, B+W would like to run additional tests after the airheater performance tests. To accomplish these tests, B+W will need the following operating condition

Sootblowing: Complete 2K, 3K, and 4K sequences by 8:00 AM. Do not blow the IRs.

Blowdown: Isolate prior to test.

Aux Steam: Isolate Unit 1 prior to test

Feedwater Flow: ≈ 6,100,000 lb/hr

Mill Configuration: Top mill out of service

Excess O_2: Set up such that main steam and reheat temperature stay above 950°F; however do not drop below 3% O_2 indication until our economizer grid is functional

Load: 840MWg

B+W's test plan will consist of the following two tests.

Test 1: ~~Bias~~ (Normal) the upper mill to 100%. Bias the two third row mills as high as allowable and yet allow for a safe runback condition. Stabilize and take data for a two hour period.

Test 2: As a continuation of Test 1, bias the cooling air to the out of service mill down until the burner carbon steel temperature approaches 1000°F. Stabilize and take data

Bill Arvan

cc: file
: C. Palmberg
: F. McGinley

IP14_001890

RAH PERF TESTING

6/26/87
Fri Nissen

Post Test Meeting (Thursday's Test)

Retest Fri; ?
- Preliminary Results ?
  Comparability ?

→ Run 3rd good test (1st Wed / 2nd Thur)
@ BKW recommendation

Boiler Test - ~~Sat~~ postponed until

~~Test Start~~ → 10:00

~~Post~~ Schedule Test Review Meeting
7 July 8-9, 1987

#10 6/25 10-1530
16-28

Perf Tests RAM

1) Retest FRIDAY

2) Take 2 closest tests of WTF
or if results beyond
take 3 way average

		6/23 2A	6/24 3A	6/25 4A
AH LEAKAGE				
TOTAL	%	7.2 (5.2)	6.8 (5.9)	6.2 (4.9) (B2)
"	KLB/HR	540 (402)	504 (447)	456 (372)
WEST PRI	%		35.4*	25.0
EAST PRI	%		21.0	22.8
AVE PRI	%		27.8	23.9
" "	KLB/HR		254	166
SEC AH	%		3.9	4.4
" "	KLB/HR		251	290
PRI AIR FLOW (P) BW				
TO MILLS	KLB/HR	1420	1441	1451
By-PASS	"	526	530	629
PRI AIR FLOW (HB) CE method				
TO MILLS	KLB/HR		1831	1461
By-PASS	"		737*	548
BAG HOUSE (INCL LKG) T		310.3	317.7	320.7
BAG HOUSE (EXCL LKG)		325.1	332.3	333.7
AVE AIR INLET T		91.5	88.8	95.5

↑ CE Discredits Air Temps PA/SA flipped

Good Test

- Not Corrected for ΔP air-gas
- All results

6/26

?

		6/23 2A	6/24 3A	6/25 4A
AH LEAKAGE				
TOTAL	%	7.2 (5.2)	6.8 (5.9)	6.2 (4.9)
"	KLB/HR	540 (402)	504 (447)	456 (372)
WEST PRI	%		35.4	25.0
EAST PRI	%		21.0	22.8
AVE PRI	%		27.8	23.9
" "	KLB/HR		254	166
SEC AH	%		3.9	4.4
" "	KLB/HR		251	290
PRI AIR FLOW (R.)				
TO MILLS	KLB/HR	1420	1441	1451
By-PASS	"	526	530	629
PRI AIR FLOW (HB)				
TO MILLS	KLB/HR		1831	1461
By-PASS	"		737	548
BAG HOUSE (INCL LKG)		310.3	317.7	320.7
BAG HOUSE (EXCL LKG)		325.1	332.3	333.7
AVE AIR INLET T		91.5	88.8	95.5

RAH - PERF TESTING

6/26 Fri
Nissen

Unit #1 . Acceptance Testing RAH

Pretest Meeting
→ decided to perform another test
several discrepancies: PAH leakage

fuel swinging
swinging O_2

TEST START: ~~10:00~~
Restart @ 1045 - ~~11:00~~

TEST #5

UNIT OPERATION - very stable
(but running at higher PA Duct Press ~32.5"
(still lower than normal ~36"))
fuel swings but relatively small

SAH Air Out last to finish up

Goyd Lewitt
Bottom Ash

Pulv IF O/S 2nd Row - front
WB Damper 75%

SAH 1B Gas Inlet Dampers ISGA-CDR-56/131
62% open temps 1A 311 1B 318

Bias Dampers manual
RH 50% / PSH 100%

BD - isolated

O_2% station
split E 1.8-2.2 W 2.5-2.9 Dw ~0.6% O_2

SB 4AH Finish @ 6:11

PA Duct Raised up to maintain stable operation
+32.6" 2" higher than previous tests

Pulv: PA Flow

1D	75%	1E	80%
1H	87	1A	80
1C	81	1F	0
1G	85	1B	87%

UNIT PARAMETERS

	@ 1130	@ 13:00	@ 1521
Load gross	848 Tac / 855 Fox	847 / 854	848 / 854
aux	43.8	43.2	42.6
Throttle	2439	2440	2444
Chest	2404	2405	2408
1st	1904	1913	1913
RH	570	571	571
Mstm manual	1005	1007	1006
Spray Sec	has pulled out thru last hour	manual 30	38
RH	1005/1005	1001/1000	1000/999
Spray	0	0	0
Bias RH/PSH	50/100	42/100	40/100
PA Duct	32.6	32.4	~~32~~ 31.8
O_2% E/W	2.0/2.7	2.0/2.7	2.0/2.7
Drum	-1/2/-1/+8	0/0/9	0/-1/2/9 1/2
Total Air	80%	80%	80%
BP	1.64/1.67/1.60		1.66/1.69/1.62

IP14_001897

PA Fans : 2A/2B

CR	2A	163amps	Air Flow PFB	40%
	2B	182amps		43%

FD Fans	1A	210	55
	1B	215	52

Manual Search Cycle activated ~ 9:30 SAH Leakage Control System

Test Start ~10:00

~~6/25 Thru~~
~~For 6/26 Thru~~

BOILER CONDITIONS REQUESTED: RAH PERF TESTS

Sootblowing: IR's- stay off water walls (unless absolutely required)
2K's- blow all prior to 5:00 am each day
3K's- blow all prior to 7:00 am each day
4K's- blow all prior to 8:00 am each day
-Begin complete sootblowing sequence (excluding water-walls) at approximately 3:00 am each morning

1030 -
Bottom Ash: Have bottom ash pulled prior to 8:00 am each day
Econ Ash Hopper BV-7 - close
Baghouse Fly Ash: Have first and second row hoppers pulled prior to 10:00 am each morning
Isolate Hoppers: Baghouse Hoppers 1A1 / 1B10 / 1C9

Blowdown: Isolate prior to the test (9:00 am)

Auxiliary Steam: Isolate Unit #1 prior to the test

Pulverizers: 7 mills in service (would prefer to have first or second row mill out of service

Load: 850 MW gross

Throttle pressure: ~~2400~~ ~2430 psig

Feedwater Flow: ~6100 kpph

Main Steam Temp: 1005 F
Main Steam Sprays: as required (less than 150 kpph)

Reheat Temp: 1005 F
Reheat Sprays: ~~0 kpph~~ as required (set to 0 at start)

Excess O2: ~~2.0~~ 2.5 Ave % (Note: B&W will have their economizer test grid setup with monitoring capabilities available in the control room as reference to establish design gas flow)

Primary Air Duct Pressure: ~~30.0~~ 30.0 ~~37.0~~ "wc (may require to place in manual)
(Highest Pulv PA Flow 95%)

Secondary Air Duct Pressure: auto (should be okay)

~~PAH Gas Inlet Control Dampers~~: may have to make minor adjustments to damper position to match gas outlet temps (PAH & SAH) based upon B&W's test grid

SAH ID - Gas Inlet Damper 1SGA-CDR-36/131 68%

Bias Dampers - set + place in manual (to hold thru test)

If temps come up during test, OK to place sprays in manual to control (need to straight line [illegible])

IP14_001899

Unit #1

name: G. Christensen

Air Heater Test Data Sheet

DATA ITEM						
Test No.						
Date 6/26/87						
Psychrometric Data	Time	Wet Bulb	Dry Bulb			
	1010	55	80			
	1038	55	82			
	1110	56	84			
	1138	57	84			
	1210	57	86			
	1317	57	89			
	1342	56	89			
	1507	57	89			
	1537	58	91			
Coal Samples	Time	Pulv				
	10:00	A				
	1100	B				
	1200	C				
	1300	D				
	1310	H				
	1430	G				
	1530	E				
Fly Ash Samples	Time	Hopper				
	1330	1A1, 1A2				
	1335	1B10				
	1340	1C9				
Economizer Ash Sample	Time	Hopper				
	1445	1B7				
Bottom Ash Sample	Time	Hopper				
	1426	1A				

UNDER SOFTWARE LOCK 06/26/87 12:10:15 MAIN

MEASUREMENT DISPLAY

WEATHER DATA

BLOCK	VALUE	DESCRIPTION	STATUS ALARM
INAKV0001	12.52 PSIA	ATMOSPHERIC PRESSURE	
INAPT0227	25.49 IN HG	BAROMETRIC PRESSURE	
INAKK0531	87. DEGF	AMBIENT TEMPERATURE	
SGBTE1160	85. DEGF	FAN ROOM OUTSIDE AMBIENT TEMP	
INAKK0530	-25. PCT	RELATIVE HUMIDITY	
INAKK0529	.01 IN	PRECIPITATION	
INAKK0532	6. MPH	WIND SPEED	
INAKK0533	245. DEG	WIND DIRECTION	

FORWARD PAGING WTHR

IP14_001902

BLR AUX TEST-3 06/26/87 10:44:23

[redacted]	[redacted]	[redacted]	[redacted]
00241471.	00270241.	00270224.	00197488.
GAL.	TONS	TONS	MWH
TOTAL IGNTR OIL	TOTAL COAL	TOTAL COAL TEST DIS	UNIT1 GROSS MW
[redacted]	[redacted]	[redacted]	[redacted]
00005750.	00006908.	00005881.	00007973.
MWH	MWH	MWH	MWH
1A1 AUX POWER	1A2 AUX POWER	1B1 AUX POWER	1B2 AUX POWER

L/L SCN L/L < > L/L L/L GTD[redacted]

IP14_001903

BLR AUX TEST-3 06/26/87 11:00:44

TOTAL OIL	TOT COAL	COAL TEST	GROSS MW
00241471.	00270333.	00270316.	00197728.
GAL.	TONS	TONS	MWH
TOTAL IGNTR OIL	TOTAL COAL	TOTAL COAL TEST DIS	UNIT1 GROSS MW
1B1 AUX 2	1B2 AUX 2	1B1 AUX 2	1B2 AUX 2
00005752.	00006911.	00005883.	00007977.
MWH	MWH	MWH	MWH
1A1 AUX POWER	1A2 AUX POWER	1B1 AUX POWER	1B2 AUX POWER

L/L SCN L/L < > L/L L/L GTD

IP14_001904

BLR AUX TEST-3 06/26/87 11:36:39

TOTAL OIL	TOT COAL	COAL DIS	GROSS MW
00241471.	00270501.	00270485.	00198142.
GAL.	TONS	TONS	MWH
TOTAL IGNTR OIL	TOTAL COAL	TOTAL COAL TEST DIS	UNIT1 GROSS MW

NO1 AUX 2	NO2 AUX 2	NB1 AUX 2	NB2 AUX 2
00005757.	00006916.	00005889.	00007985.
MWH	MWH	MWH	MWH
1A1 AUX POWER	1A2 AUX POWER	1B1 AUX POWER	1B2 AUX POWER

L/L SCN L/L < > L/L L/L GTD

IP14_001905

BLR AUX TEST-3 06/26/87 12:00:42

00241471.	00270670.	00270653.	00198568.
GAL.	TONS	TONS	MWH
TOTAL IGNTR OIL	TOTAL COAL	TOTAL COAL TEST DIS	UNIT1 GROSS MW
00005762.	00006922.	00005893.	00007991.
MWH	MWH	MWH	MWH
1A1 AUX POWER	1A2 AUX POWER	1B1 AUX POWER	1B2 AUX POWER

L/L SCN L/L < > L/L L/L GTD

IP14_001906

BLR AUX TEST-3 06/26/87 12:31:03

TOTAL OIL	TOT COAL	COAL TEST	GROSS MW
00241471.	00270841.	00270824.	00198996.
GAL.	TONS	TONS	MWH
TOTAL IGNTR OIL	TOTAL COAL	TOTAL COAL TEST DIS	UNIT1 GROSS MW

1A1 AUX P	1A2 AUX P	1B1 AUX P	1B2 AUX P
00005766.	00006928.	00005897.	00007997.
MWH	MWH	MWH	MWH
1A1 AUX POWER	1A2 AUX POWER	1B1 AUX POWER	1B2 AUX POWER

L/L SCN L/L < > L/L L/L GTD

IP14_001907

BLR AUX TEST-3 06/26/87 12:59:59

TOTAL OIL	TOT COAL	COAL TEST	GROSS MW
00241471.	00271003.	00270986.	00199404.
GAL.	TONS	TONS	MWH
TOTAL IGNTR OIL	TOTAL COAL	TOTAL COAL TEST DIS	UNIT1 GROSS MW
1A1 AUX P	1A2 AUX P	1B1 AUX P	1B2 AUX P
00005771.	00006934.	00005901.	00008003.
MWH	MWH	MWH	MWH
1A1 AUX POWER	1A2 AUX POWER	1B1 AUX POWER	1B2 AUX POWER

L/L SCN L/L < > L/L L/L GTD

IP14_001908

BLR AUX TEST-3 06/26/87 13:30:00

TOTAL OIL	TOT COAL	COAL TEST	GROSS MW
00241471.	00271172.	00271156.	00199828.
GAL.	TONS	TONS	MWH
TOTAL IGNTR OIL	TOTAL COAL	TOTAL COAL TEST DIS	UNIT1 GROSS MW
TOT AUX P	TOT AUX P	TOT AUX P	TOT AUX P
00005776.	00006939.	00005907.	00008011.
MWH	MWH	MWH	MWH
1A1 AUX POWER	1A2 AUX POWER	1B1 AUX POWER	1B2 AUX POWER

L/L SCN L/L < > L/L L/L GTD

IP14_001909

BLR AUX TEST-3 06/26/97 13:59:59

TOTAL OIL	TOT COAL	COAL TEST	GROSS MW
00241471.	00271340.	00271323.	00200252.
GAL.	TONS	TONS	MWH
TOTAL ICNTR OIL	TOTAL COAL	TOTAL COAL TEST DIS	UNIT1 GROSS MW

1A1 AUX P	1A2 AUX P	1B1 AUX P	1B2 AUX P
00005780.	00006945.	00005911.	00008017.
MWH	MWH	MWH	MWH
1A1 AUX POWER	1A2 AUX POWER	1B1 AUX POWER	1B2 AUX POWER

L/L SCN L/L < > L/L L/L GTD

IP14_001910

BLR AUX TEST-3 06/26/87 14:30:02

[redacted]	[redacted]	[redacted]	[redacted]
00241471.	00271508.	00271492.	00209676.
GAL.	TONS	TONS	MWH
TOTAL IGNTR OIL	TOTAL COAL	TOTAL COAL TEST DIS	UNIT1 GROSS MW
[redacted]	[redacted]	[redacted]	[redacted]
00005785.	00006951.	00005915.	00008023.
MWH	MWH	MWH	MWH
1A1 AUX POWER	1A2 AUX POWER	1B1 AUX POWER	1B2 AUX POWER

L/L SCN L/L < > L/L L/L STD

CSR IV

15:00:00

BLR AUX TEST-3 06/26/87 ~~14:59~~:00

TOTAL OIL	TOT COAL	COAL TEST	GROSS MW
00241471.	00271676.	00271659.	00201100.
GAL.	TONS	TONS	MWH
TOTAL IGNTR OIL	TOTAL COAL	TOTAL COAL TEST DIS	UNIT1 GROSS MW

1A1 AUX P	1A2 AUX P	1B1 AUX P	1B2 AUX P
00005790.	00006957.	00005919.	00008031.
MWH	MWH	MWH	MWH
1A1 AUX POWER	1A2 AUX POWER	1B1 AUX POWER	1B2 AUX POWER

L/L SCN L/L < > L/L L/L GTD

IP14_001912

BLR AUX TEST-3 06/26/87 15:30:15

TOTAL OIL	TOT COAL	COAL TEST	GROSS MW
00241471.	00271845.	00271828.	00201528.
GAL.	TONS	TONS	MWH
TOTAL IGNTR OIL	TOTAL COAL	TOTAL COAL TEST DIS	UNIT1 GROSS MW
1A1 AUX POWER	1A2 AUX POWER	1B1 AUX POWER	1B2 AUX POWER
00005794.	00006962.	00005923.	00008037.
MWH	MWH	MWH	MWH

L/L SCN L/L < > L/L L/L GTD

BLR AUX TEST-3 06/26/87 15:45:00

TOTAL OIL	TOT COAL	TOTAL COAL	GROSS MW
00241471.	00271927.	00271989.	00201736.
GAL.	TONS	TONS	MWH
TOTAL IGNTR OIL	TOTAL COAL	TOTAL COAL TEST DIS	UNIT1 GROSS MW
TOT AUX P	TOT AUX P	TOT AUX P	TOT AUX P
00005797.	00006965.	00005927.	00008041.
MWH	MWH	MWH	MWH
1A1 AUX POWER	1A2 AUX POWER	1B1 AUX POWER	1B2 AUX POWER

L/L SCN L/L < > L/L L/L GTD

IP14_001914

CSR

16

BLR AUX TEST-3 06/26/87 [redacted]:00:00

TOTAL OIL	TOT COAL	COAL TEST	GROSS GEN
00241471.	00272010.	00271993.	00201946.
GAL.	TONS	TONS	MWH
TOTAL IGNTR OIL	TOTAL COAL	TOTAL COAL TEST DIS	UNIT1 GROSS MW

1A1 AUX B	1A2 AUX B	1B1 AUX B	1B2 AUX B
00005799.	00006968.	00005929.	00008943.
MWH	MWH	MWH	MWH
1A1 AUX POWER	1A2 AUX POWER	1B1 AUX POWER	1B2 AUX POWER

L/L SCN L/L < > L/L L/L GTD[redacted]

IP14_001915

BLR AUX TEST-3 06/26/87 16:15:52

TOTAL OIL	TOT COAL	COAL TEST	GROSS MW
00241471.	00272898.	00272981.	00202170.
GAL.	TONS	TONS	MWH
TOTAL IGNTR OIL	TOTAL COAL	TOTAL COAL TEST DIS-	UNIT1 GROSS MW

1A1 AUX P	1A2 AUX P	1B1 AUX P	1B2 AUX P
00005881.	00006971.	00005931.	00008847.
MWH	MWH	MWH	MWH
1A1 AUX POWER	1A2 AUX POWER	1B1 AUX POWER	1B2 AUX POWER

L/L SCN L/L < > L/L L/L GTO

IP14_001916

BLR AUX. TEST-3 06/26/87 16:56:17

00241471.	00272322.	00272395.	00202742.
GAL.	TONS	TONS	MWH
TOTAL IGNTR OIL	TOTAL COAL	TOTAL COAL TEST DIS	UNIT1 GROSS MW
00005808.	00006979.	00005937.	00008057.
MWH	MWH	MWH	MWH
1A1 AUX POWER	1A2 AUX POWER	1B1 AUX POWER	1B2 AUX POWER

L/L SCN L/L < > L/L L/L GTD

IP14_0019917

UNDER SOFTWARE LOCK 06/26/87 11:47:57 MAIN

SGD604 SUBSYSTEM - SECONDARY AIR HEATERS PG 5 OF 5

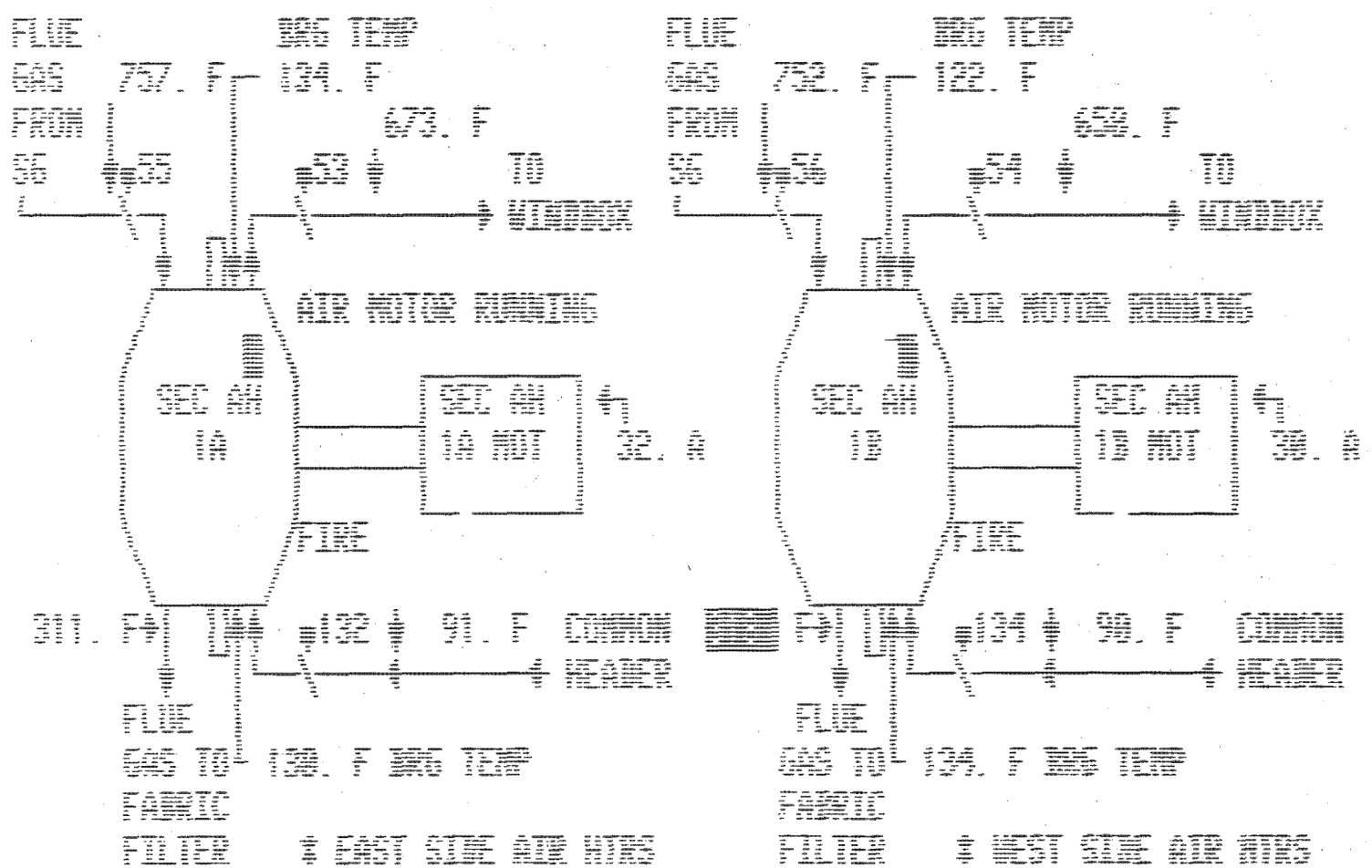

FORWARD PAGING SGD604

IP14_001918

UNDER SOFTWARE LOCK 06/26/87 11:50:23 MAIN
SGD086 SUBSYSTEM - PRIMARY AIR HEATERS PG 6 OF 6

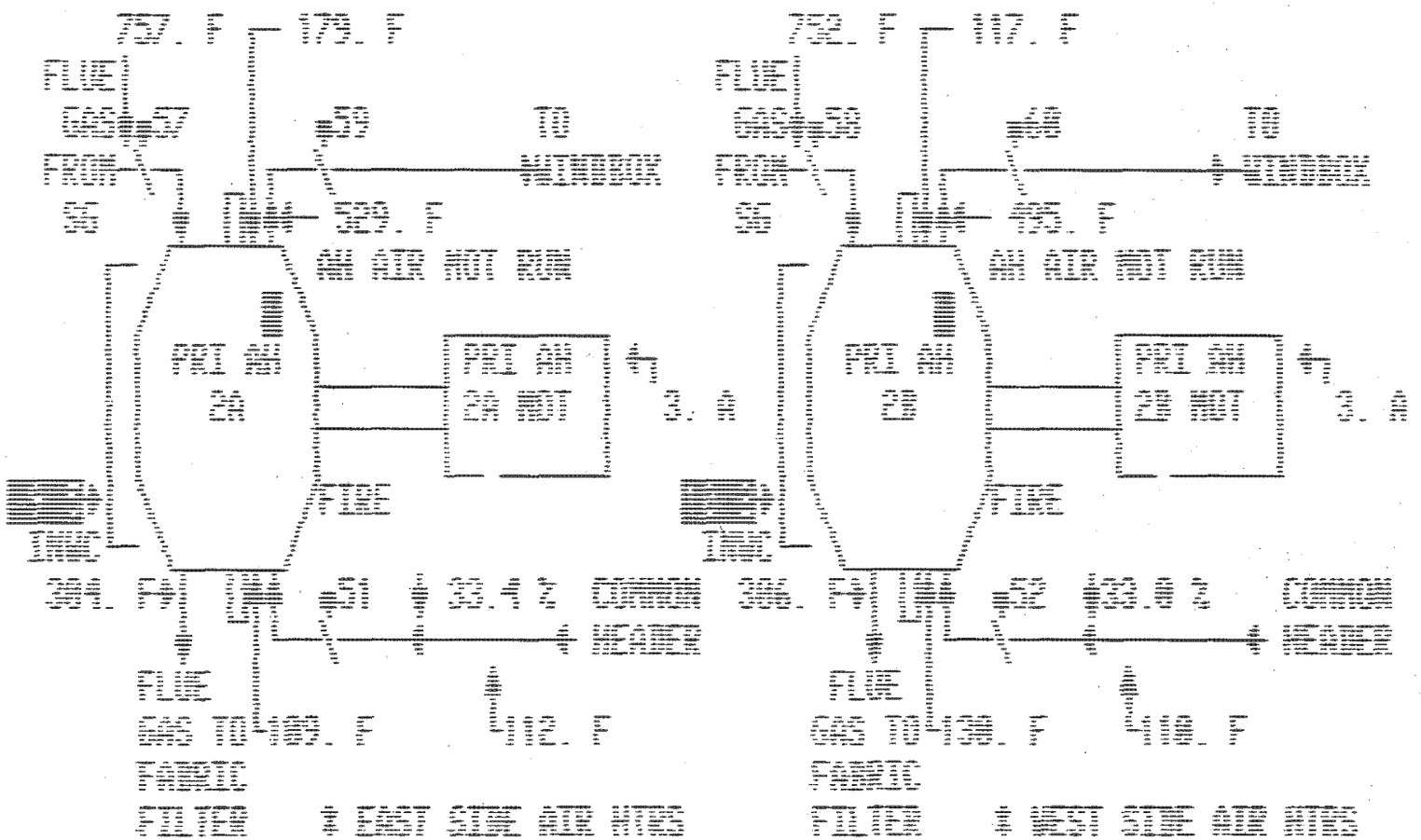

IP14_001919

UNDER SOFTWARE LOCK

06/26/87 11:40:40 MAIN

SGB607 SUBSYSTEM - EAST SIDE AIR HEATERS

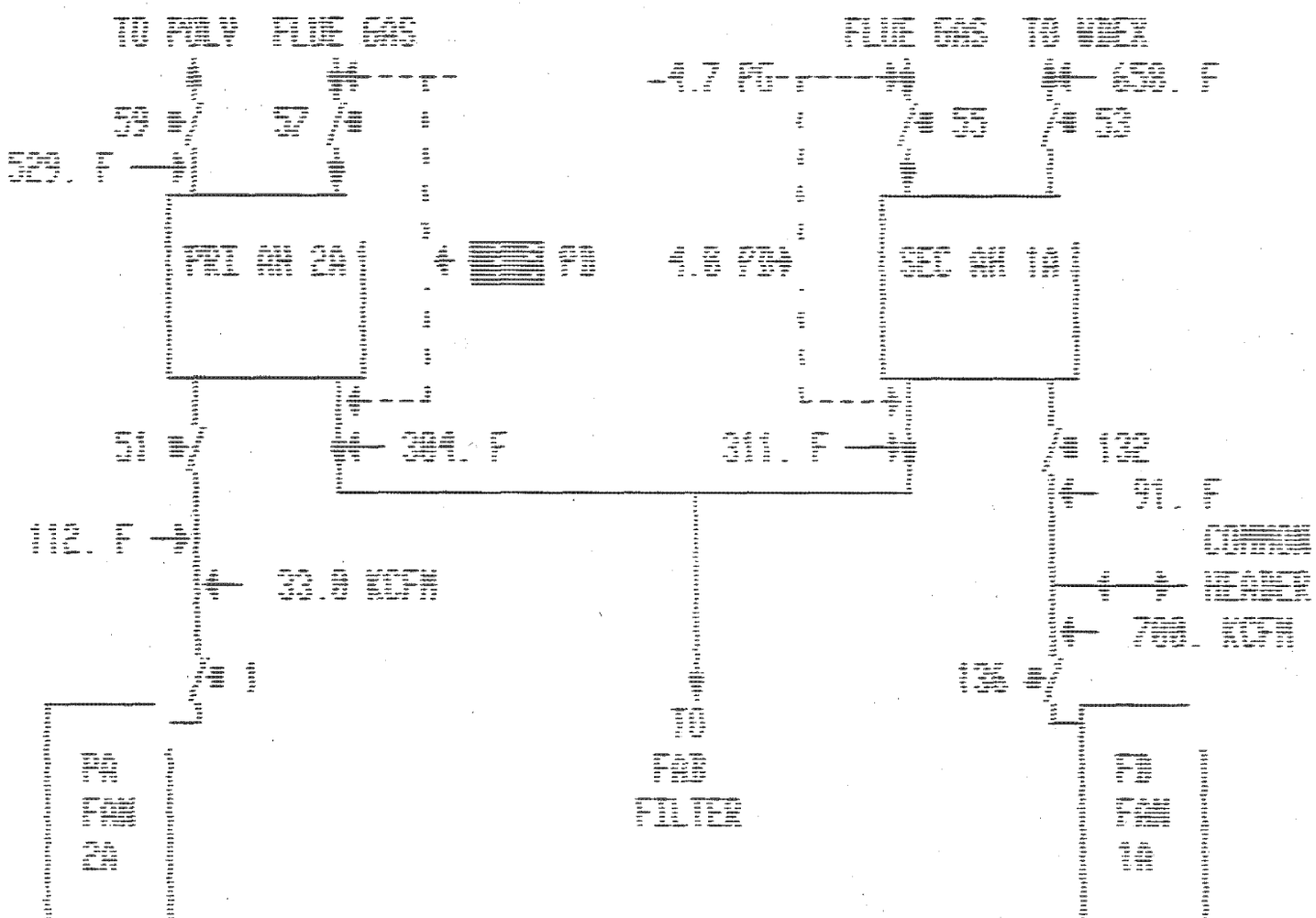

FORWARD PAGING SGB607

IP14_001920

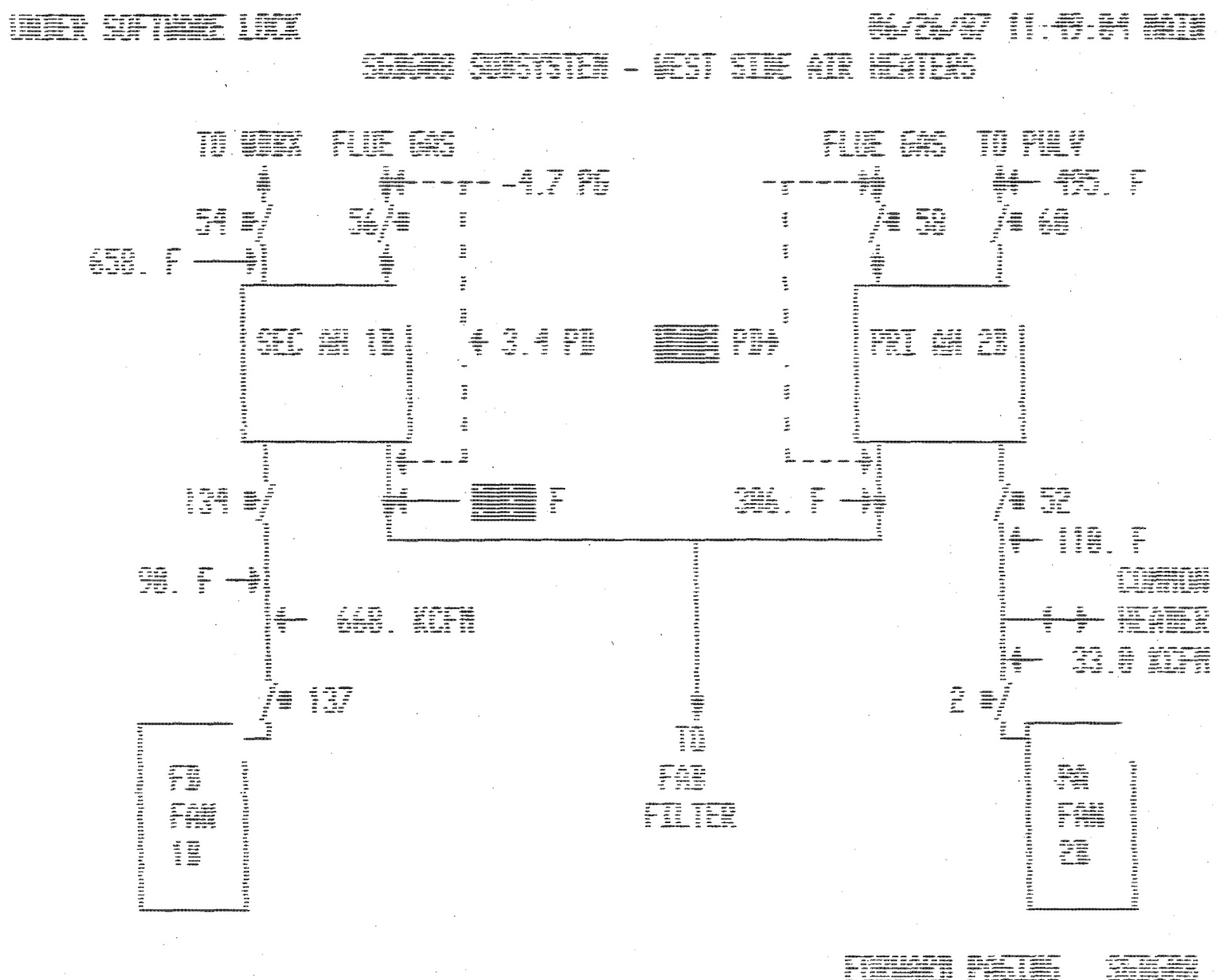
UNDER SOFTWARE LOCK
06/26/87 11:49:04 MAIN
SEGMO SUBSYSTEM - WEST SIDE AIR HEATERS
TO WBBX
FLUE GAS
-4.7 PG
FLUE GAS
TO PULV
495. F
54
56
58
60
650. F
SEC AH 1B
3.4 PB
PB
PRI AH 2B
134
F
386. F
52
118. F
90. F
COMMON
HEADER
668. KCFM
33.0 KCFM
137
2
TO
FAB
FILTER
FB
FAN
1B
PA
FAN
2B
FORWARD PAGING
SEGMO

IP14_001921

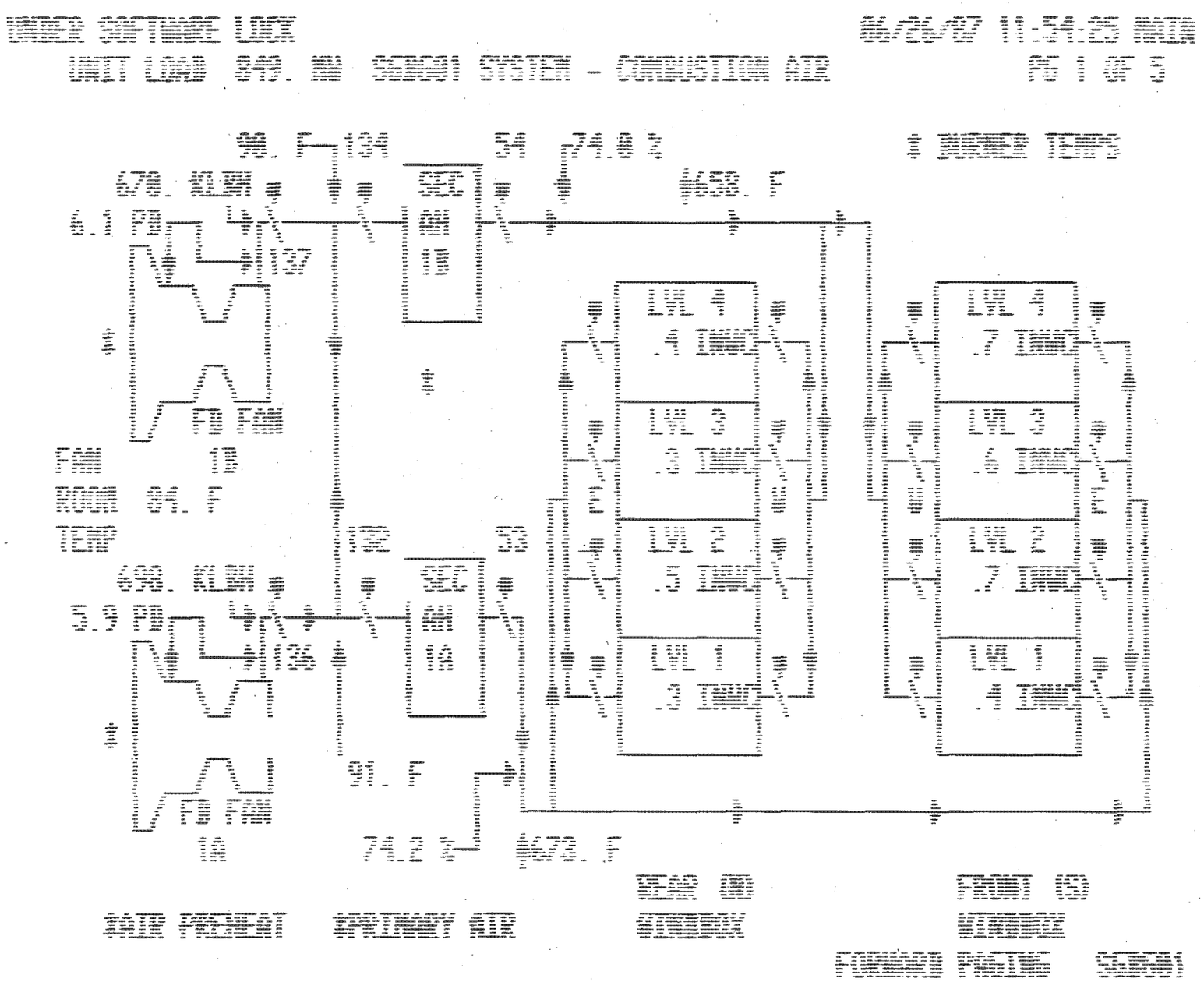
UNDER SOFTWARE LOCK
UNIT LOAD 849. MW SEDG01 SYSTEM - COMBUSTION AIR
06/26/87 11:54:25 MAIN
PG 1 OF 5
90. F
134
54
74.0 %
$ BURNER TEMPS
670. KLBH
6.1 PB
137
SEC
AH
1B
$658. F
FD FAN
1B
FAN
ROOM 84. F
TEMP
LVL 4
.4 INWC
LVL 3
.3 INWC
LVL 2
.5 INWC
LVL 1
.3 INWC
LVL 4
.7 INWC
LVL 3
.6 INWC
LVL 2
.7 INWC
LVL 1
.4 INWC
E
W
132
53
698. KLBH
5.9 PB
136
SEC
AH
1A
91. F
FD FAN
1A
74.2 %
$673. F
REAR (N)
WINDBOX
FRONT (S)
WINDBOX
$AIR PREHEAT
$PRIMARY AIR
FORWARD PAGING SEDG01

IP14_001922

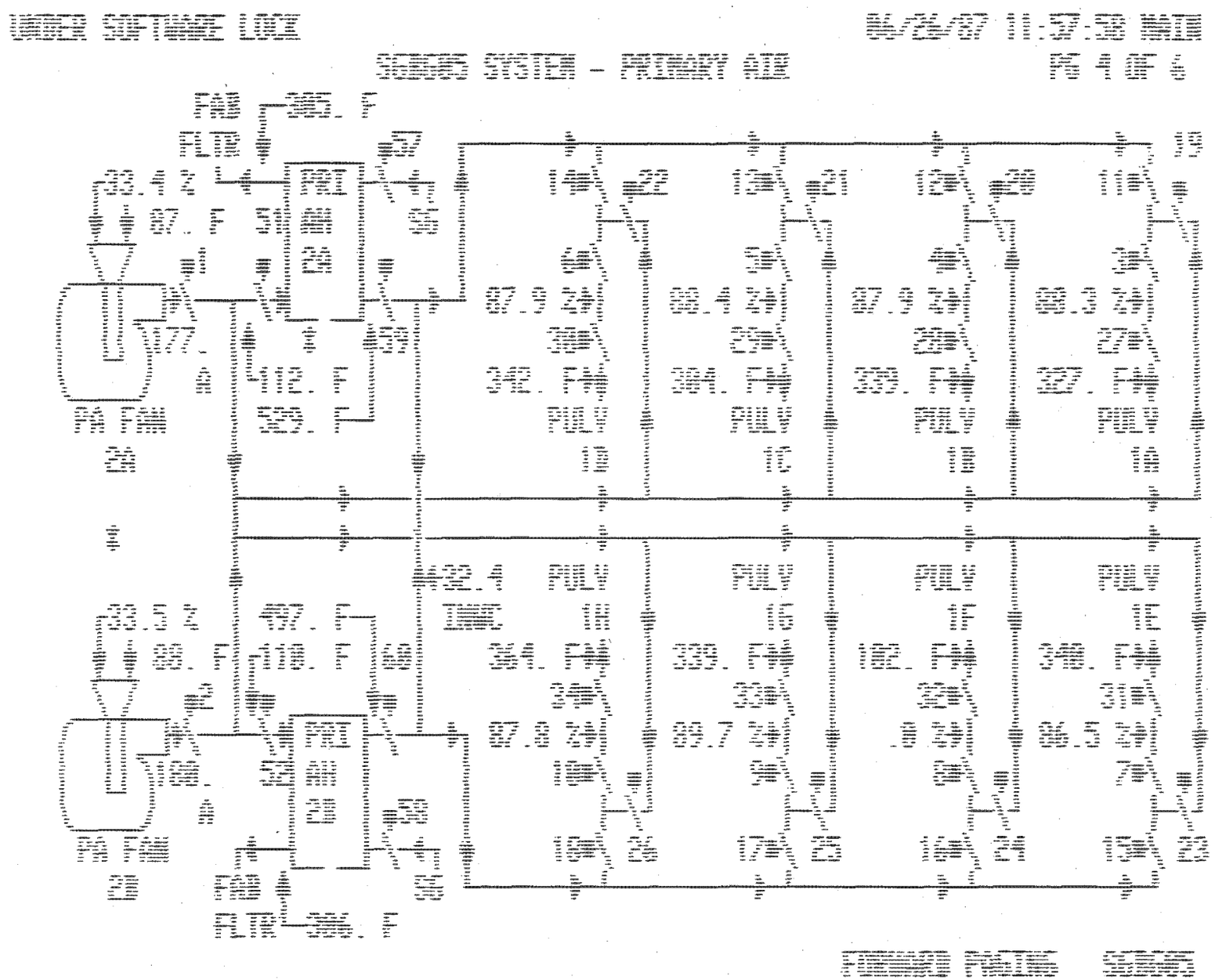
UNDER SOFTWARE LOCK
SGB685 SYSTEM - PRIMARY AIR
PG 4 OF 6
FAB
FLTR
PRI
AH
2A
PA FAN
2A
PULV
1D
1C
1B
1A
PULV
1H
1G
1F
1E
PRI
AH
2B
PA FAN
2B
FAB
FLTR
FORWARD PAGING SGB685

UNDER SOFTWARE LOCK

06/26/87 11:56:36 MAIN

SGB603 SUBSYSTEM - FORCED DRAFT FAN 1B PG 3 OF 5

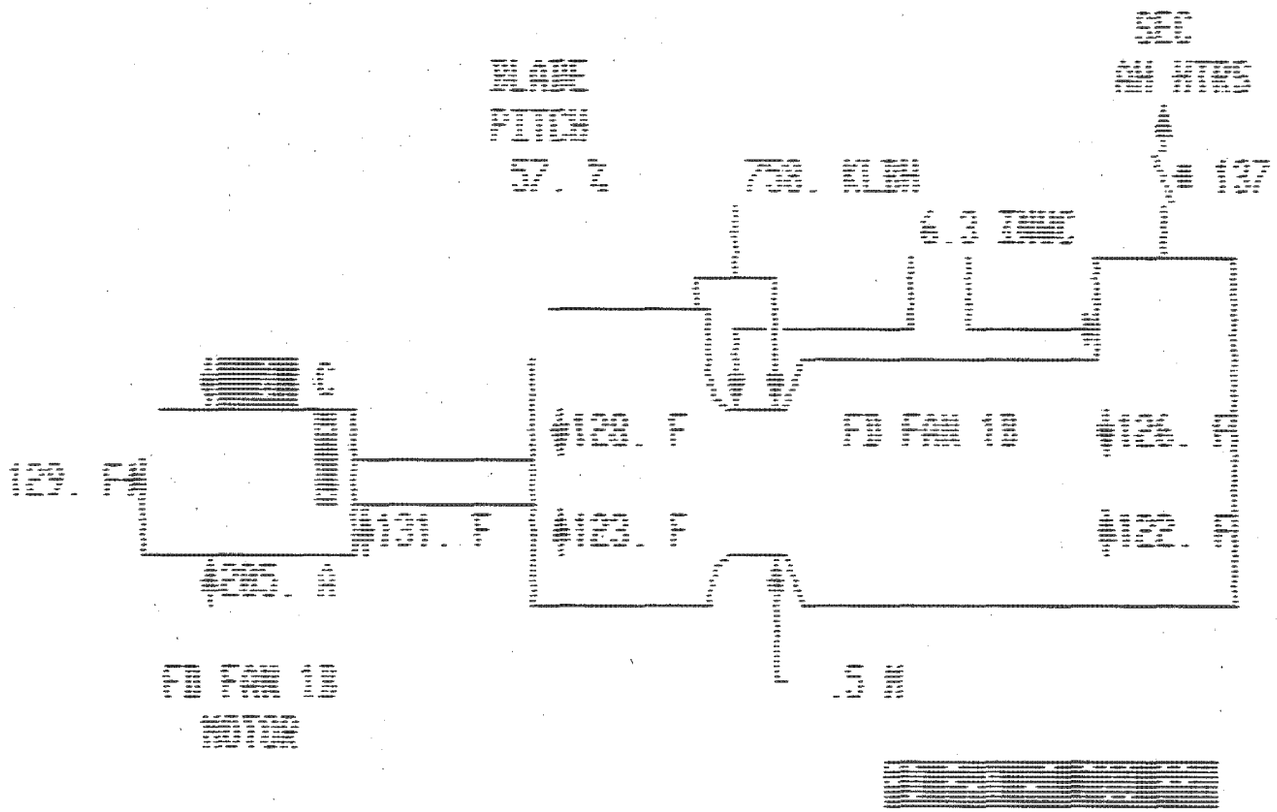

FORWARD PAGING SGB603

IP14_001925

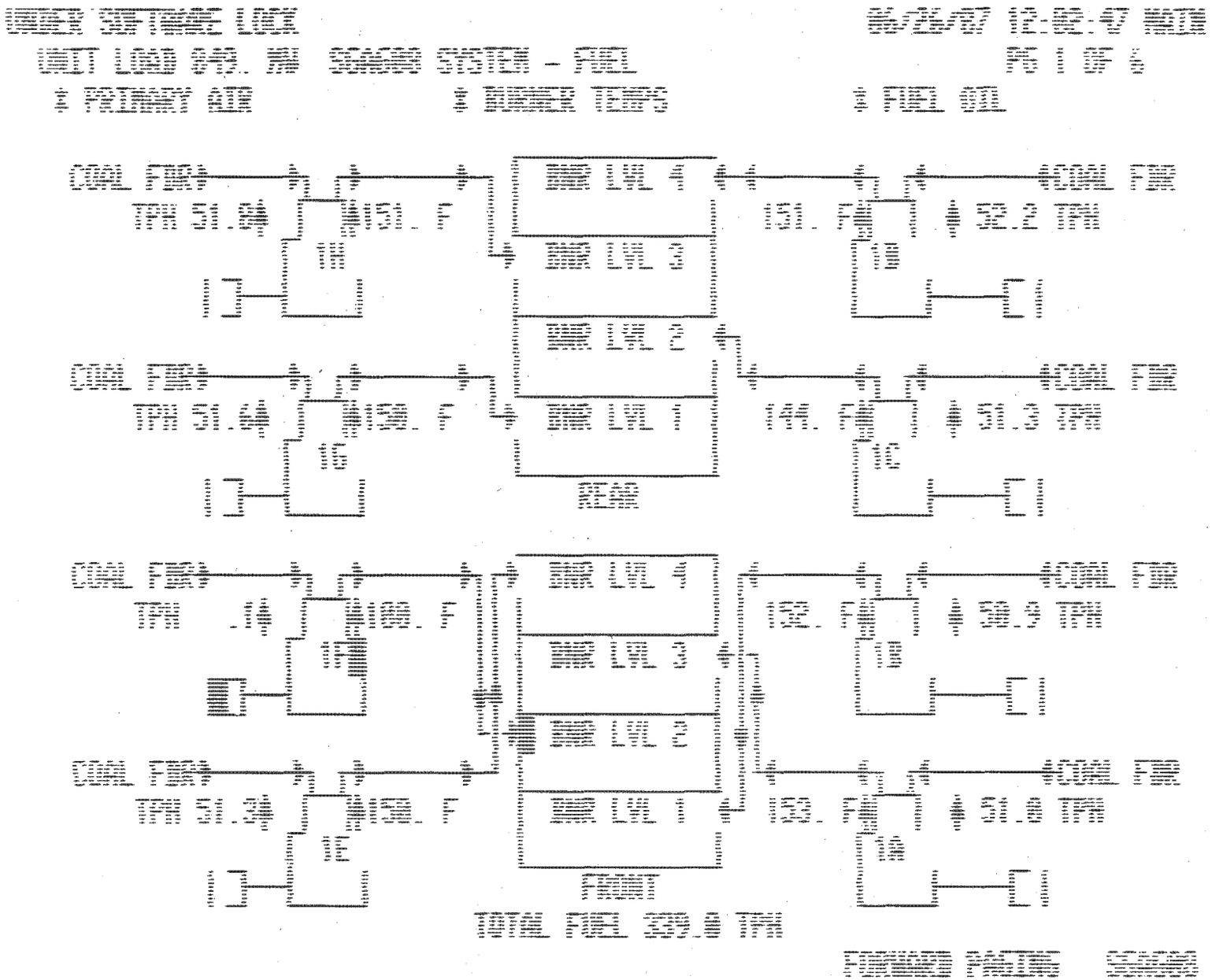
UNDER SOFTWARE LOCK
UNIT LOAD 849. MW SGA680 SYSTEM - FUEL
PG 1 OF 6
* PRIMARY AIR
* BURNER TEMPS
* FUEL OIL
COAL FDR
TPH 51.8
151. F
1H
BNR LVL 4
BNR LVL 3
BNR LVL 2
BNR LVL 1
REAR
151. F
52.2 TPH
1B
COAL FDR
TPH 51.6
150. F
1G
144. F
51.3 TPH
1C
COAL FDR
TPH .1
100. F
1F
BNR LVL 4
BNR LVL 3
BNR LVL 2
BNR LVL 1
FRONT
152. F
50.9 TPH
1B
COAL FDR
TPH 51.3
150. F
1E
153. F
51.8 TPH
1A
TOTAL FUEL 339.0 TPH
FORWARD PAGING SGA680

IP14_001928

UNDER SOFTWARE LOCK 06/26/87 12:03:55 MAIN

MEASUREMENT DISPLAY

AIR DAMPER POSITIONS

BLOCK	VALUE	DESCRIPTION	STATUS	ALARM
COAKS007A	53.2 PCT	SECONDARY AIR DAMPER POS 1A		
COAKS003A	52.9 PCT	SECONDARY AIR DAMPER POS 1B		
COAKS005A	53.5 PCT	SECONDARY AIR DAMPER POS 1C		
COAKS009A	53.4 PCT	SECONDARY AIR DAMPER POS 1D		
COAKS010A	53.7 PCT	SECONDARY AIR DAMPER POS 1E		
COAKS006A	55.9 PCT	SECONDARY AIR DAMPER POS 1F		
COAKS004A	53.2 PCT	SECONDARY AIR DAMPER POS 1G		
COAKS008A	53.8 PCT	SECONDARY AIR DAMPER POS 1H		
COAKS021A	71.6 PCT	PRIMARY AIR DAMPER POS 1A		
COAKS022A	80.4 PCT	PRIMARY AIR DAMPER POS 1B		
COAKS023A	78.3 PCT	PRIMARY AIR DAMPER POS 1C		
COAKS024A	68.7 PCT	PRIMARY AIR DAMPER POS 1D		
COAKS025A	69.0 PCT	PRIMARY AIR DAMPER POS 1E		
COAKS026A	.0 PCT	PRIMARY AIR DAMPER POS 1F		
COAKS027A	78.8 PCT	PRIMARY AIR DAMPER POS 1G		
COAKS028A	75.1 PCT	PRIMARY AIR DAMPER POS 1H		

FORWARD PAGING DAMPER

IP14_001929

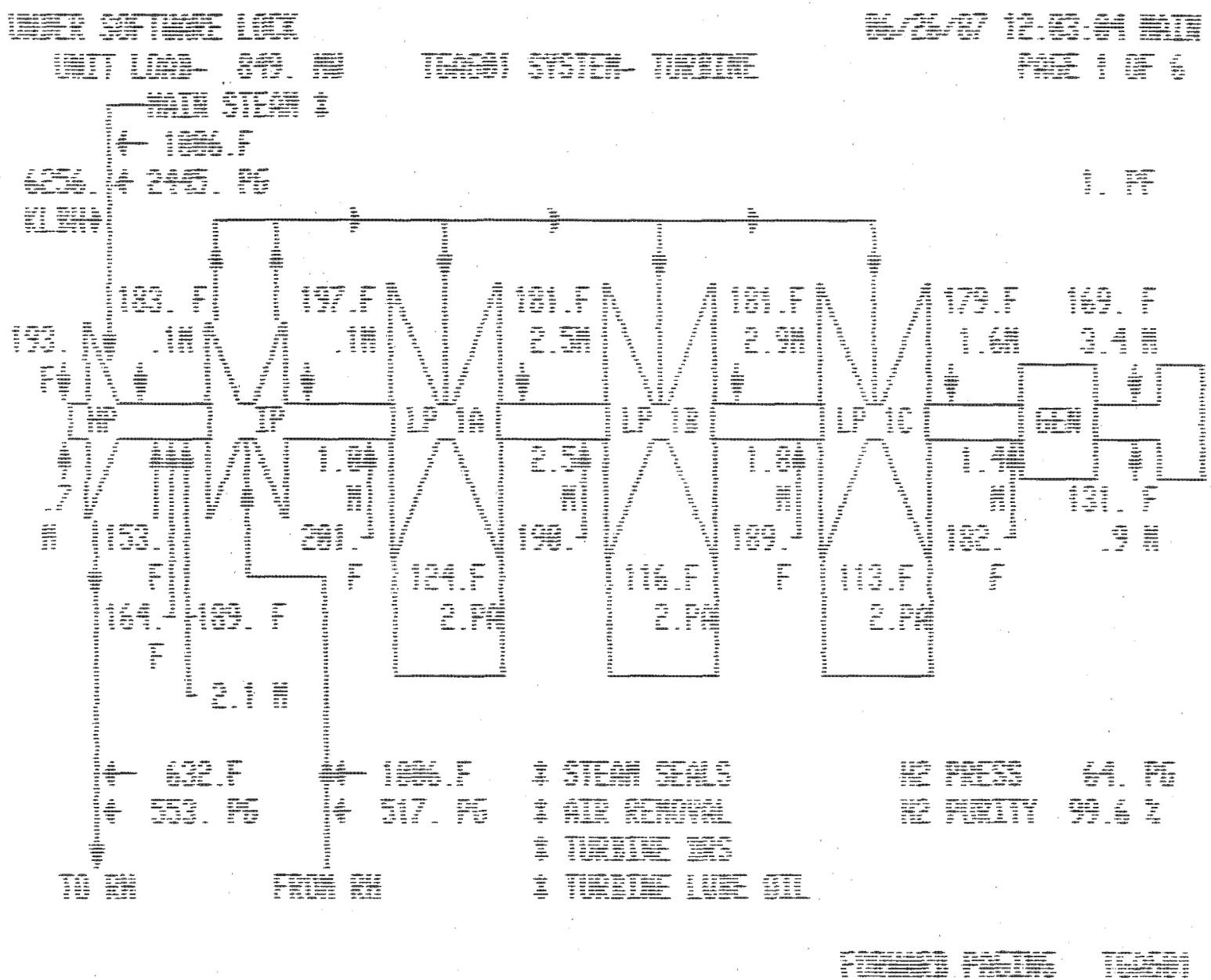
UNDER SOFTWARE LOCK
UNIT LOAD- 849. MW
T6A001 SYSTEM- TURBINE
PAGE 1 OF 6
MAIN STEAM
1086.F
2445. PG
6256.
KLBH
1. PF
183. F
.1M
197.F
.1M
181.F
2.5M
181.F
2.9M
179.F
1.6M
169. F
3.4 M
193.
F
HP
IP
LP 1A
LP 1B
LP 1C
GEN
1.8
M
2.5
M
1.8
M
1.4
M
131. F
.9 M
.7
M
153.
F
201.
F
198.
F
189.
F
182.
F
124.F
2.PA
116.F
2.PA
113.F
2.PA
164.
F
189. F
2.1 M
632.F
553. PG
1086.F
517. PG
STEAM SEALS
AIR REMOVAL
TURBINE DRS
TURBINE LUBE OIL
H2 PRESS 64. PG
H2 PURITY 99.6 %
TO RH
FROM RH
FORWARD PAGING T6A001

IP14_001930

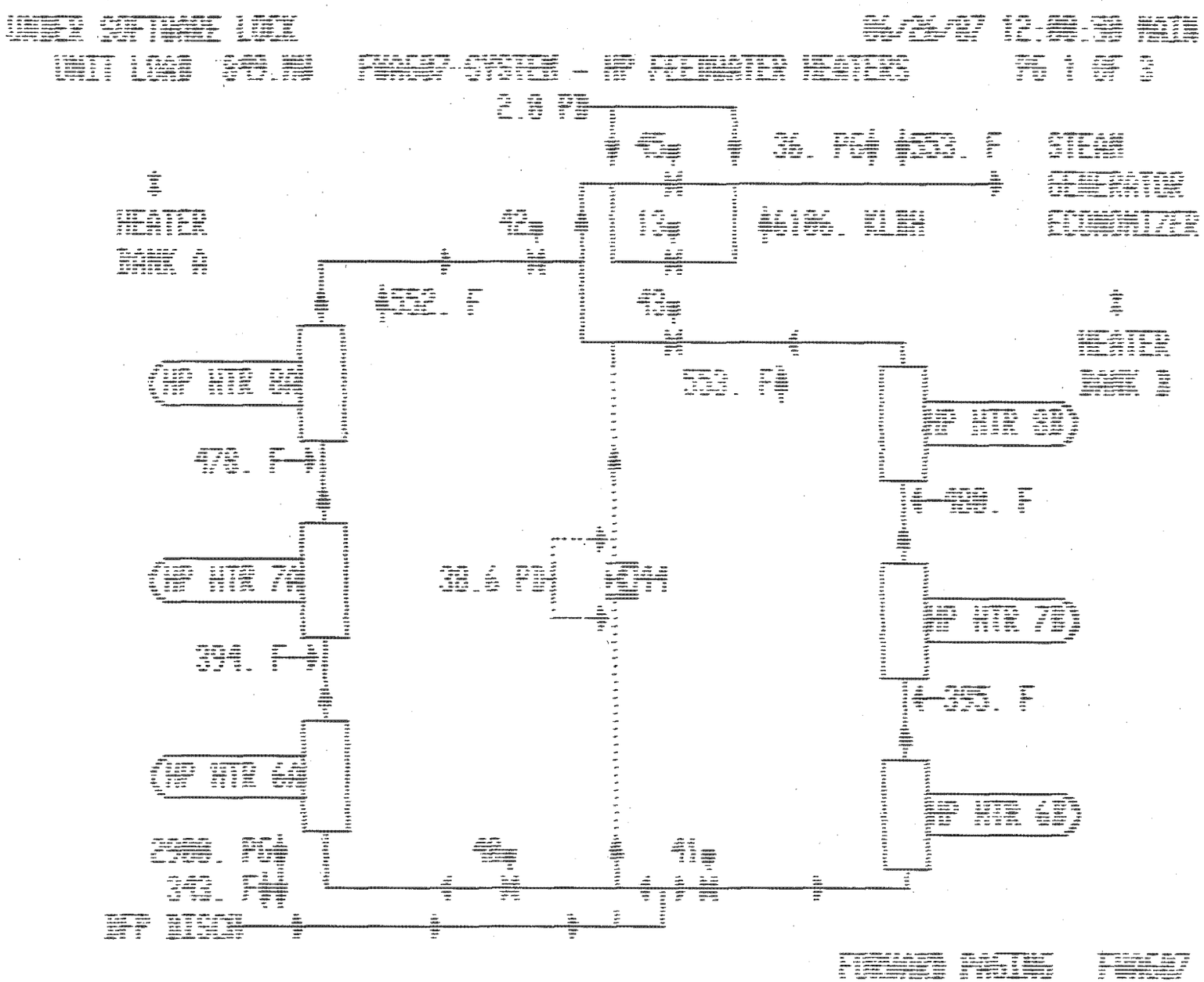
UNDER SOFTWARE LOCK
UNIT LOAD
FWA607-SYSTEM - HP FEEDWATER HEATERS
PG 1 OF 3
2.0 PB
36. PG
553. F
STEAM
GENERATOR
ECONOMIZER
HEATER
BANK A
6186. KLBH
552. F
HEATER
BANK B
553. F
HP HTR 8A
HP HTR 8B
478. F
480. F
HP HTR 7A
HP HTR 7B
38.6 PB
394. F
395. F
HP HTR 6A
HP HTR 6B
2900. PG
343. F
HP DISCH
FORWARD PAGING
FWA607

IP14_001931

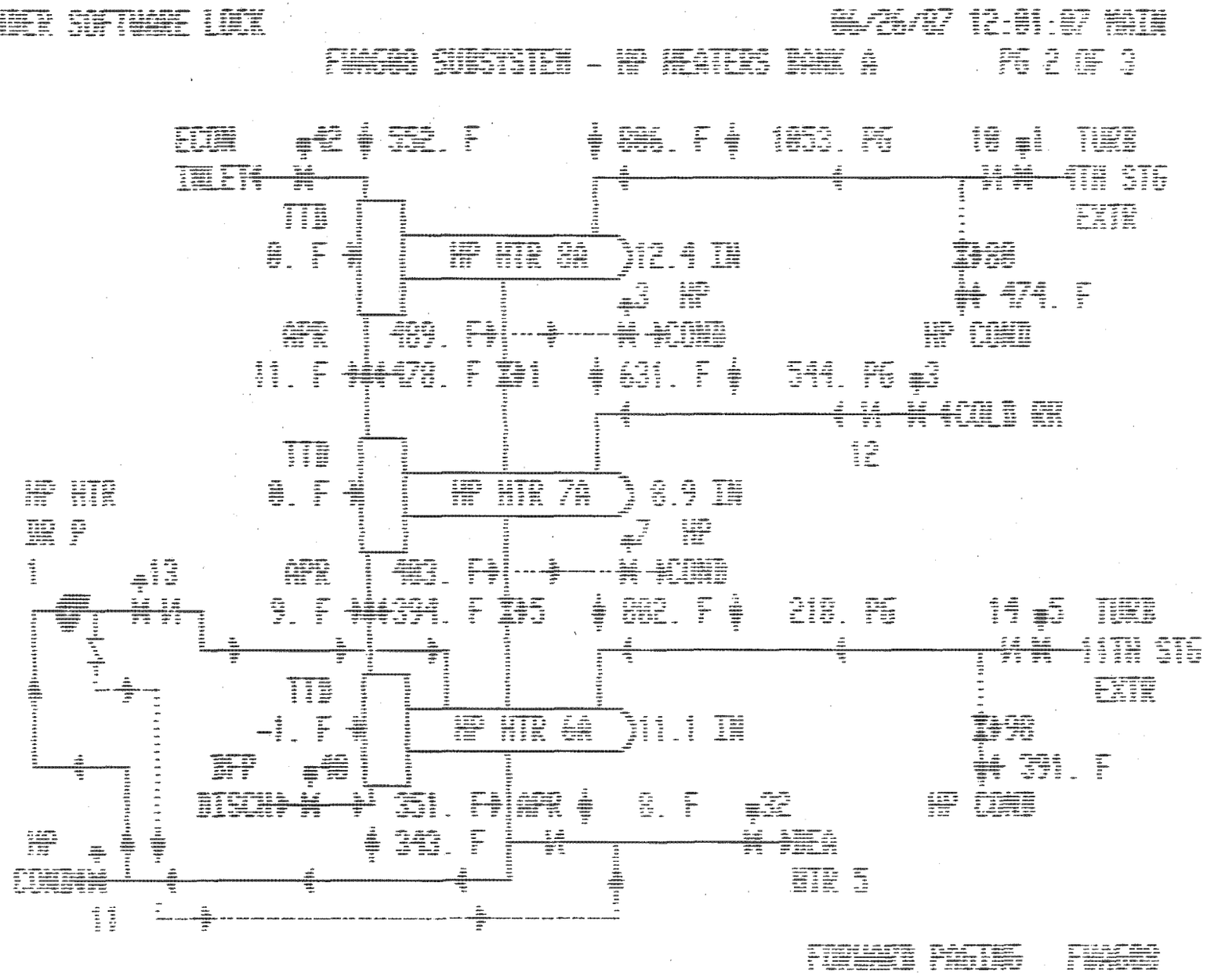

IP14_001932

UNDER SOFTWARE LOCK 06/26/87 12:05:15 MAIN

MEASUREMENT DISPLAY

ROUND SHEET 06 - FUEL 2

BLOCK	VALUE		DESCRIPTION	STATUS	ALARM
COAXI007A	.1	TPH	PULV 1F COAL FLOW		
SGAPT0155	.0	INWC	PULV 1F PA D/P		
SGAKK0006	0.	AMPS	PULV 1F MOTOR AMPS		
SGATE0660	100.	DEGF	PULV 1F COAL AIR OUTLET T		
COAXI008A	48.6	TPH	PULV 1G COAL FLOW		
SGAPT0156	13.8	INWC	PULV 1G PA D/P		
SGAKK0007	56.	AMPS	PULV 1G MOTOR AMPS		
SGATE0661	148.	DEGF	PULV 1G COAL AIR OUTLET T		
COAXI009A	48.9	TPH	PULV 1H COAL FLOW		
SGAPT0157	12.6	INWC	PULV 1H PA D/P		
SGAKK0008	59.	AMPS	PULV 1H MOTOR AMPS		
SGATE0662	151.	DEGF	PULV 1H COAL AIR OUTLET T		
SGBKK0001	32.	AMPS	SEC AH 1A MOTOR AMPS		
SGBTE0927	312.	DEGF	SEC AH 1A GAS OUT T		
SGBTE0929	[illegible]	DEGF	SEC AH 1B GAS OUT T		HI-URN
SGBTE0919	677.	DEGF	SEC AH 1A AIR OUT T		
SGBTE0920	658.	DEGF	SEC AH 1B AIR OUT T		
SGBKV0008	15656.	DEGF	COLD END AVG TEMP OF SAH 1A		
SGBKV0009	16533.	DEGF	COLD END AVG TEMP OF SAH 1B		

FORWARD PAGING R506

IP14_001933

UNDER SOFTWARE LOCK 06/26/87 12:05:47 MAIN

MEASUREMENT DISPLAY

ROUND SHEET 07 - PRIMARY AIR

BLOCK	VALUE	DESCRIPTION	STATUS	ALARM
COAXI001A	341.7 TPH	TOTAL FUEL FLOW		
SGBKK0007	177. AMPS	PA FAN 2A MOTOR AMPS		
SGBKK0008	180. AMPS	PA FAN 2B MOTOR AMPS		
COAXI074A	33.5 PCT	PA FAN FLOW 2A		
COAXI075A	33.5 PCT	PA FAN FLOW 2B		
COAXI072A	32.2 INWC	PA DUCT PRESS		
SGBKK0003	3. AMPS	PRI AH 2A MOTOR AMPS		
SGBKK0004	4. AMPS	PRI AH 2B MOTOR AMPS		
SGBTE0913	305. DEGF	PRI AH 2A GAS OUT T		
SGBTE0916	308. DEGF	PRI AH 2B GAS OUT T		
SGBTE0917	530. DEGF	PRI AH 2A AIR OUT T		
SGBTE0918	497. DEGF	PRI AH 2B AIR OUT T		
SGBKV0006	207. DEGF	COLD END AVG TEMP OF PAH 2A		
SGBKV0007	207. DEGF	COLD END AVG TEMP OF PAH 2B		

FORWARD PAGING RS07

IP14_001934

UNDER SOFTWARE LOCK 06/26/87 12:06:11 MAIN

MEASUREMENT DISPLAY

ROUND SHEET 08 - SECONDARY AIR

BLOCK	VALUE	DESCRIPTION	STATUS	ALARM
SGBKK0005	212. AMPS	FD FAN 1A MOTOR AMPS		
SGBKK0006	205. AMPS	FD FAN 1B MOTOR AMPS		
COAXI153A	56. PCT	FD FAN 1A BLADE PITCH		
COAXI154A	57. PCT	FD FAN 1B BLADE PITCH		
SGBKV0111	6. INWC	FD FAN 1A CORR ACTUAL HEAD		
SGBKV0112	6. INWC	FD FAN 1B CORR ACTUAL HEAD		
COAXI077A	74.1 PCT	SEC AIR FLOW 1B		
SGBPT0216	3.9 INWC	SEC AH 1A DIFF PRESS		
SGBPT0217	3.3 INWC	SEC AH 1B DIFF PRESS		
SGBPT0214	[illegible] INWC	PRI AH 2A DIFF PRESS	BYPASS	OV-RNG
SGBPT0215	[illegible] INWC	PRI AH 2B DIFF PRESS	BYPASS	OV-RNG

FORWARD PAGING RS08

IP14_001935

UNDER SOFTWARE LOCK 06/26/07 12:07:06 MAIN

MEASUREMENT DISPLAY

BOILER PERFORMANCE DATA - TABLE 1

BLOCK	VALUE		DESCRIPTION	STATUS	ALARM
COAXI027A	855.	MW	UNIT LOAD		
COAXI024A	6265.	KPPH	TURBINE STEAM FLOW		
FWAFT0025	6241.	KPPH	BOILER FEEDWATER F		
SGATE0063	729.	DEGF	FIRST STG SUPHTR E ATTEMP INL T		
SGATE0064	722.	DEGF	FIRST STG SUPHTR W ATTEMP INL T		
SGGTE0002	1014.	DEGF	SEC SUPHTR OUTLET STEAM T		
SGGPT0001	2474.	PSIG	MAIN STEAM LINE PR		
SGAFT0070	-1.	KPPH	FIRST STAGE SUPHTR E ATTEMP F		
SGAFT0072	16.	KPPH	SEC STAGE SUPHTR E ATTEMP F		
SGATE0991	341.	DEGF	SUPHTR ATTEMP SPRAY WTR SPLY T		
SGAFT0071	-.4	KPPH	FIRST STAGE SUPHTR W ATTEMP F		
SGAFT0073	12.	KPPH	SEC STAGE SUPHTR W ATTEMP F		
SGATE0991	341.	DEGF	SUPHTR ATTEMP SPRAY WTR SPLY T		
SGJTE0022	630.	DEGF	SG E COLD REHEAT INLET T		
SGJTE0019	631.	DEGF	SG W COLD REHEAT INLET T		
SGJPT0011	549.	PSIG	SG E COLD REHEAT INLET PR		
SGJTE0011	1007.	DEGF	SG N HOT REHEAT OUTLET T		
SGJPT0006	519.	PSIG	TURBINE N HOT REHEAT INLET PR		
SGJFT0020	10.0	KPPH	REHEAT DESUPERHEATER SPRAY F		
SGJTE0060	292.	DEGF	REHEAT DESUPERHEATER SPRAY T		

FORWARD PAGING DN1

IP14_001936

UNDER SOFTWARE LOCK 06/26/87 12:07:49 MAIN

MEASUREMENT DISPLAY

BOILER PERFORMANCE DATA - TABLE 2

BLOCK	VALUE		DESCRIPTION	STATUS	ALARM
SGAPT0174	.9	INWC	BNR LVL 2 S WINDBOX PR		
SGAPT0176	.9	INWC	BNR LVL 4 S WINDBOX PR		
SGAPT0179	.3	INWC	BNR LVL 3 N WINDBOX PR		
SGAPT0177	.5	INWC	BNR LVL 1 N WINDBOX PR		
SGAPT0173	.4	INWC	BNR LVL 1 S WINDBOX PR		
SGAPT0175	.6	INWC	BNR LVL 3 S WINDBOX PR		
SGAPT0180	.5	INWC	BNR LVL 4 N WINDBOX PR		
SGAPT0178	.5	INWC	BNR LVL 2 N WINDBOX PR		
COAKS007A	41.6	PCT	SECONDARY AIR DAMPER POS 1A		
COAKS003A	41.4	PCT	SECONDARY AIR DAMPER POS 1B		
COAKS005A	42.0	PCT	SECONDARY AIR DAMPER POS 1C		
COAKS009A	41.8	PCT	SECONDARY AIR DAMPER POS 1D		
COAKS010A	42.1	PCT	SECONDARY AIR DAMPER POS 1E		
COAKS006A	55.9	PCT	SECONDARY AIR DAMPER POS 1F		
COAKS004A	41.8	PCT	SECONDARY AIR DAMPER POS 1G		
COAKS008A	42.1	PCT	SECONDARY AIR DAMPER POS 1H		
SGAPT0171	-.5	INWC	SG EAST FLUE GAS PR		

FORWARD PAGING DW2

IP14_001937

UNDER SOFTWARE LOCK 06/26/87 12:08:08 MAIN

MEASUREMENT DISPLAY

BOILER PERFORMANCE DATA - TABLE 3

BLOCK	VALUE		DESCRIPTION	STATUS	ALARM
COAXI001A	334.0	TPH	TOTAL FUEL FLOW		
COAXI002A	46.4	TPH	PULV 1A COAL FLOW		
COAXI003A	45.9	TPH	PULV 1B COAL FLOW		
COAXI004A	46.2	TPH	PULV 1C COAL FLOW		
COAXI005A	47.1	TPH	PULV 1D COAL FLOW		
COAXI006A	46.2	TPH	PULV 1E COAL FLOW		
COAXI007A	.2	TPH	PULV 1F COAL FLOW		
COAXI008A	46.5	TPH	PULV 1G COAL FLOW		
COAXI009A	46.8	TPH	PULV 1H COAL FLOW		
COAXI080A	2.9	PCT	WEST FLUE GAS O2		
COAXI079A	2.3	PCT	EAST FLUE GAS O2		
SGATE0707	761.	DEGF	ECON EAST OUTLET FLUE GAS T		
SGATE0710	756.	DEGF	ECON WEST OUTLET FLUE GAS T		
SGBTE0927	314.	DEGF	SEC AH 1A GAS OUT T		
SGBTE0929	[illegible]	DEGF	SEC AH 1B GAS OUT T		HI-WRN
SGBTE0913	307.	DEGF	PRI AH 2A GAS OUT T		
SGBTE0916	308.	DEGF	PRI AH 2B GAS OUT T		
COAXI072A	32.6	INWC	PA DUCT PRESS		
COAXI084A	-14.2	INWC	ID FANS SUCT PRESS		
SGAPT0165	-2.7	INWC	SG ECON OUTLET FLUE GAS PR		

FORWARD PAGING DW3

IP14_001938

UNDER SOFTWARE LOCK 06/26/87 12:08:59 MAIN

MEASUREMENT DISPLAY

UNIT 2 PERFORMANCE LOG

BLOCK	VALUE		DESCRIPTION	STATUS	ALARM
COAXI027A	854.	MW	UNIT LOAD		
APEKV0005	43.2	MW	AUX PWR USED		
COAXI023A	6094.	KPPH	STEAM FLOW (FW + SSF)		
COAXI015A	1012.	DEGF	THROTTLE TEMP		
SGGTE0004	1010.	DEGF	MAIN STEAM LINE T		
COAXI012A	2403.	PSIG	TURBINE THROTTLE PRESS		
SGGPT0001	2474.	PSIG	MAIN STEAM LINE PR		
SGJTE0013	1010.	DEGF	TURBINE N HOT REHEAT INLET T		
SGJTE0016	1012.	DEGF	TURBINE S HOT REHEAT INLET T		
SGJPT0006	519.	PSIG	TURBINE N HOT REHEAT INLET PR		
SGJPT0007	525.	PSIG	TURBINE S HOT REHEAT INLET PR		
COAXI021A	6031.	KPPH	FDW FLOW TO ECONOMIZER		
FWAFT0025	6055.	KPPH	BOILER FEEDWATER F		
COAXI001A	332.3	TPH	TOTAL FUEL FLOW		
COAXI080A	3.1	PCT	WEST FLUE GAS O2		
COAXI079A	2.1	PCT	EAST FLUE GAS O2		
COAXI083A	-.3	INWC	FURNACE PRESS		
SGAPT0171	-.5	INWC	SG EAST FLUE GAS PR		

FORWARD PAGING DESK1

IP14_001939

UNDER SOFTWARE LOCK 06/26/87 12:10:02 MAIN

MEASUREMENT DISPLAY

UNIT 2 PERFORMANCE LOG

BLOCK	VALUE		DESCRIPTION	STATUS	ALARM
HRAPT0112	2.6	INHGA	HP COND 1A SHELL PR		
HRAPT0113	2.5	INHGA	IP COND 1B SHELL PR		
COAXI110A	2.8	INHGA	CONDENSER ABSOLUTE PRESSURE		
SGBTE0927	314.	DEGF	SEC AH 1A GAS OUT T		
SGBTE0929	[illegible]	DEGF	SEC AH 1B GAS OUT T		HI-WRN
SAAKK0007	.372	LB/MB	STACK NOX CONVERTED		
SAAKK0002	415.	PPM	SCRUB INLET SO2		
SAAKK0004	17.7	PPM	STACK SO2		
HRCTE0377	89.	DEGF	IP COND 1B INLET T		
HRCTE0378	90.	DEGF	IP COND 1B INLET T		
HRCTE0379	91.	DEGF	LP COND 1C EAST INLET T		
HRCTE0380	91.	DEGF	LP COND 1C WEST INLET T		
HRCTE0389	114.	DEGF	IP COND 1B OUTLET T WEST		
HRCTE0394	114.	DEGF	IP COND 1B OUTLET T EAST		
HRCTE0397	119.	DEGF	HP COND 1A WEST OUTLET T		
HRCTE0401	118.	DEGF	HP COND 1A EAST OUTLET T		
COAXI070A	81.1	PCT	TOTAL AIR FLOW		

FORWARD PAGING DESK2

IP14_001940

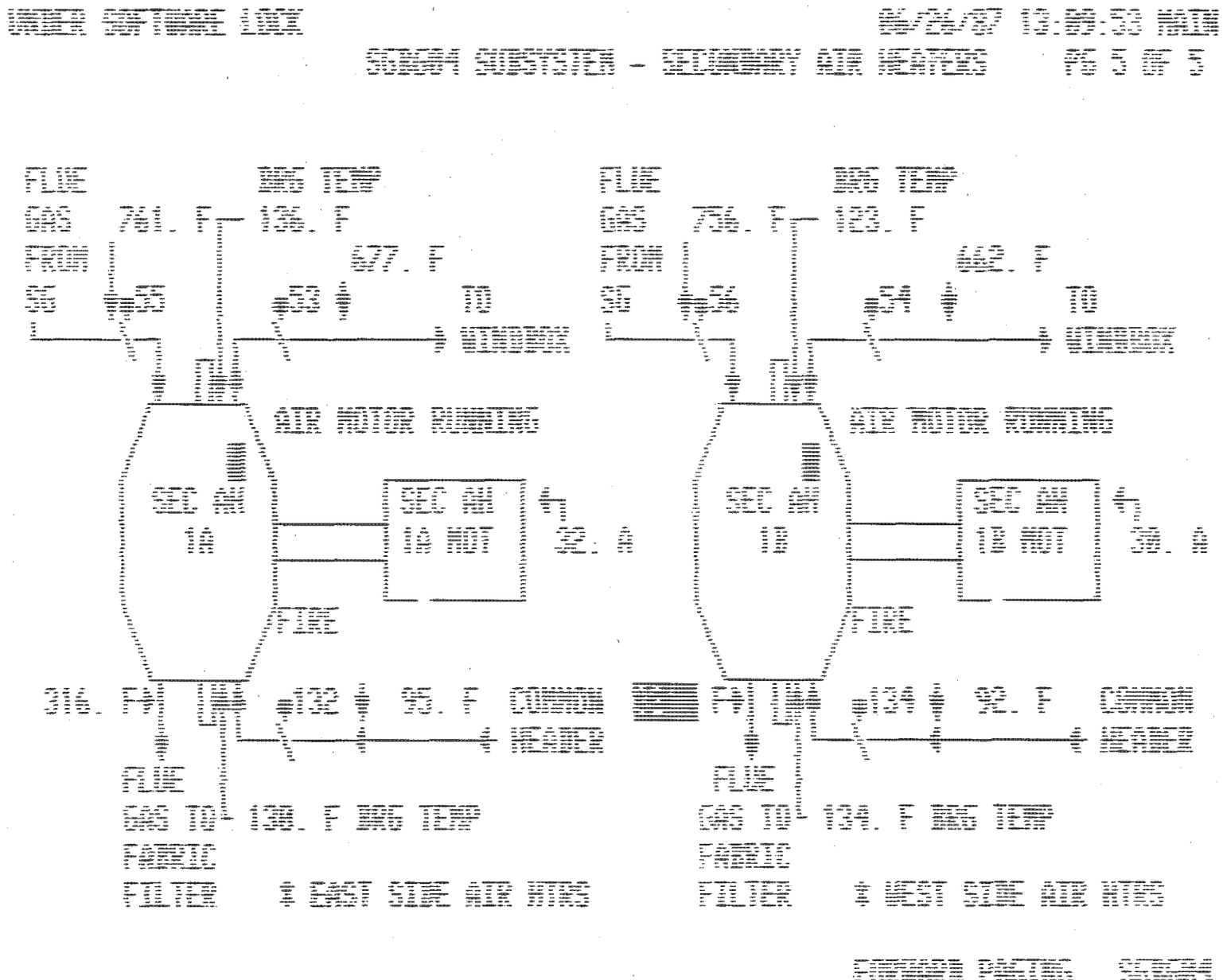
UNDER SOFTWARE LOCK
06/26/87 13:09:53 MAIN
SGB604 SUBSYSTEM - SECONDARY AIR HEATERS
PG 5 OF 5
FLUE GAS FROM SG
761. F
BRG TEMP
136. F
677. F
55
53
TO WINDBOX
AIR MOTOR RUNNING
SEC AH 1A
SEC AH 1A MOT
32. A
FIRE
316. F
132
95. F
COMMON HEADER
FLUE GAS TO FABRIC FILTER
138. F BRG TEMP
* EAST SIDE AIR HTRS
FLUE GAS FROM SG
756. F
BRG TEMP
123. F
662. F
56
54
TO WINDBOX
AIR MOTOR RUNNING
SEC AH 1B
SEC AH 1B MOT
30. A
FIRE
F
134
92. F
COMMON HEADER
FLUE GAS TO FABRIC FILTER
134. F BRG TEMP
* WEST SIDE AIR HTRS
FORWARD PAGING SGB604

IP14_001941

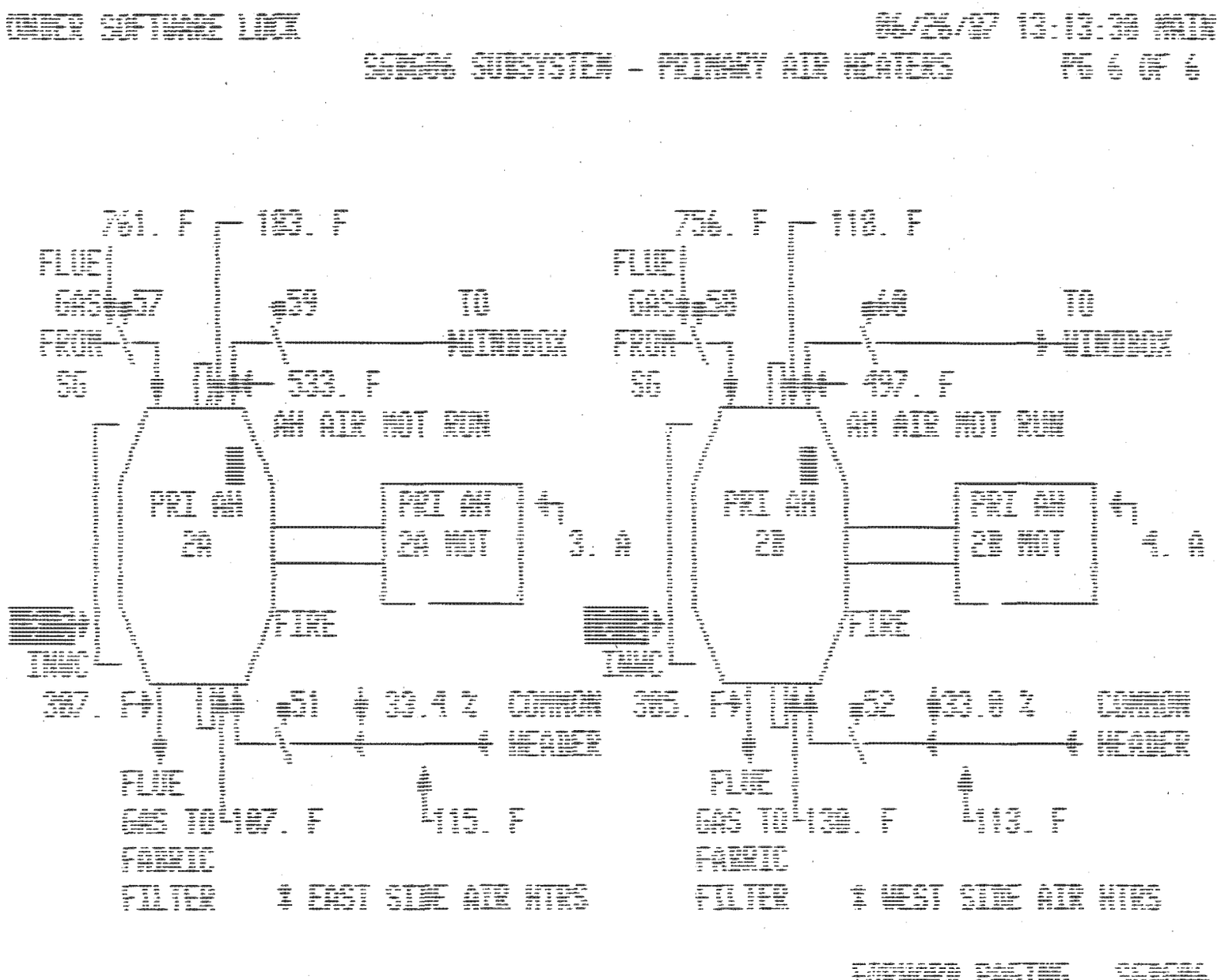

UNDER SOFTWARE LOCK
06/26/07 13:13:30 MAIN
SGB06 SUBSYSTEM - PRIMARY AIR HEATERS
PG 6 OF 6
761. F
183. F
FLUE GAS FROM SG
57
59
TO WINDBOX
533. F
AH AIR MOT RUN
PRI AH 2A
PRI AH 2A MOT
3. A
FIRE
INWC
387. F
51
33.4 %
COMMON HEADER
FLUE GAS TO FABRIC FILTER
107. F
115. F
* EAST SIDE AIR HTRS
756. F
118. F
FLUE GAS FROM SG
58
60
TO WINDBOX
497. F
AH AIR MOT RUN
PRI AH 2B
PRI AH 2B MOT
4. A
FIRE
INWC
385. F
52
33.8 %
COMMON HEADER
FLUE GAS TO FABRIC FILTER
130. F
113. F
* WEST SIDE AIR HTRS
FORWARD PAGING
SGB06

IP14_001942

UNDER SOFTWARE LOCK 06/26/87 13:10:27 MAIN

SGBG87 SUBSYSTEM - EAST SIDE AIR HEATERS

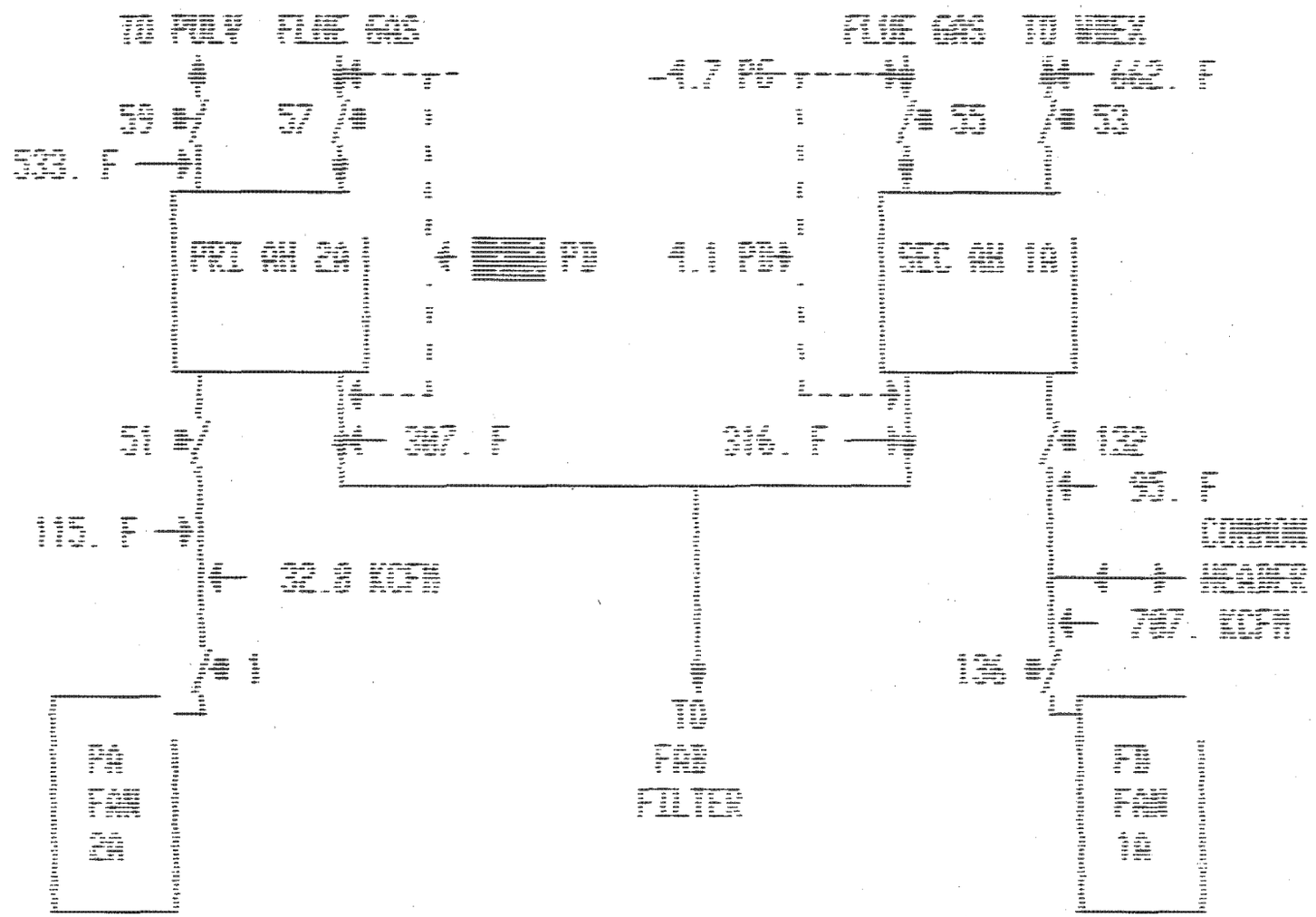

FORWARD PAGING SGBG87

IP14_001943

UNDER SOFTWARE LOCK 06/26/87 13:12:30 MAIN

SGBG08 SUBSYSTEM - WEST SIDE AIR HEATERS

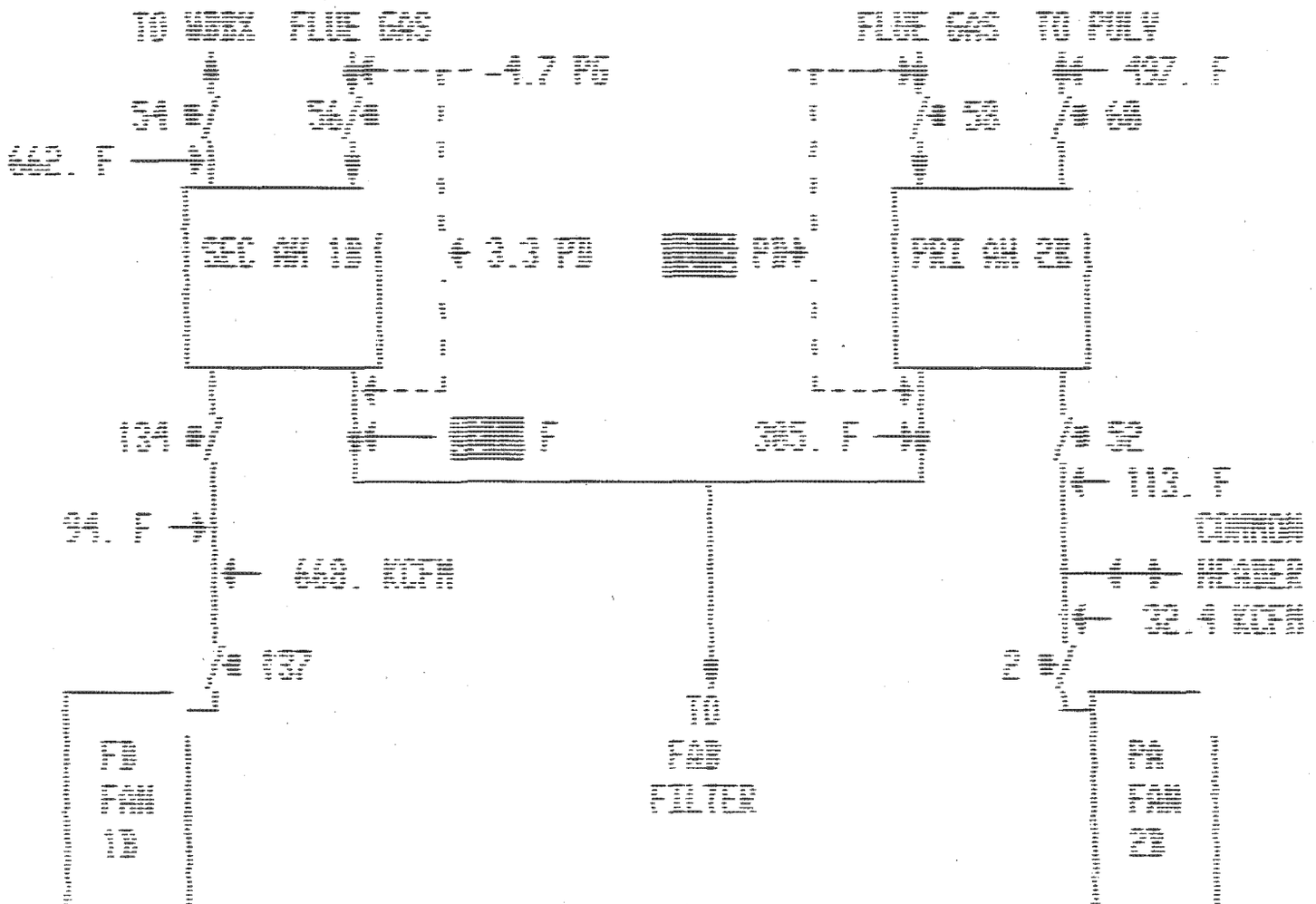

FORWARD PAGING SGBG08

IP14_001944

UNDER SOFTWARE LOCK 06/26/87 13:09:28 MAIN

UNIT LOAD 850. MW SGDG01 SYSTEM - COMBUSTION AIR PG 1 OF 5

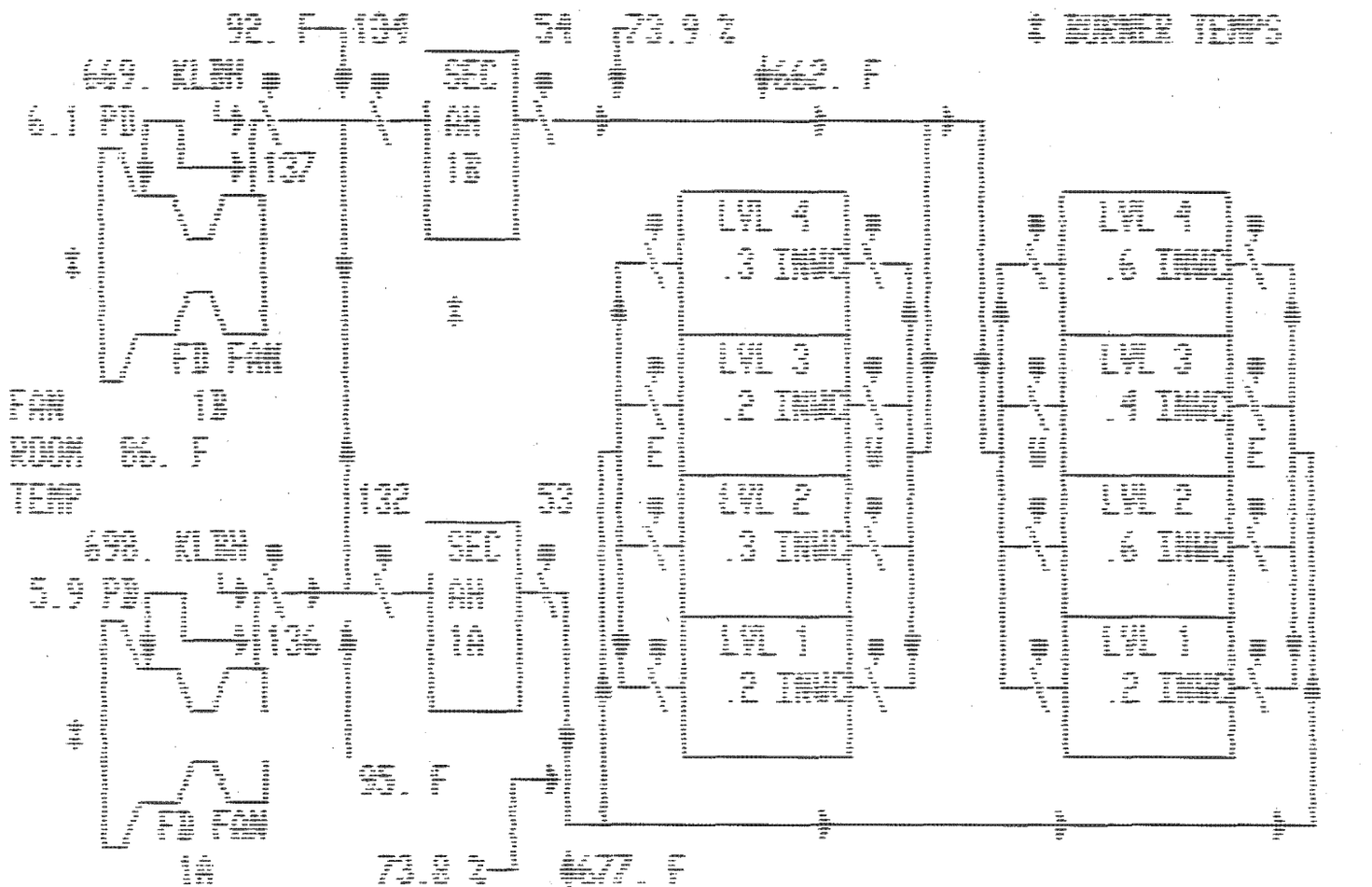

FORWARD PAGING SGDG01

IP14_001945

UNDER SOFTWARE LOCK

06/26/87 13:17:08 MAIN

SGAGB3 SUBSYSTEM- FURNACE

PG 2 OF 3

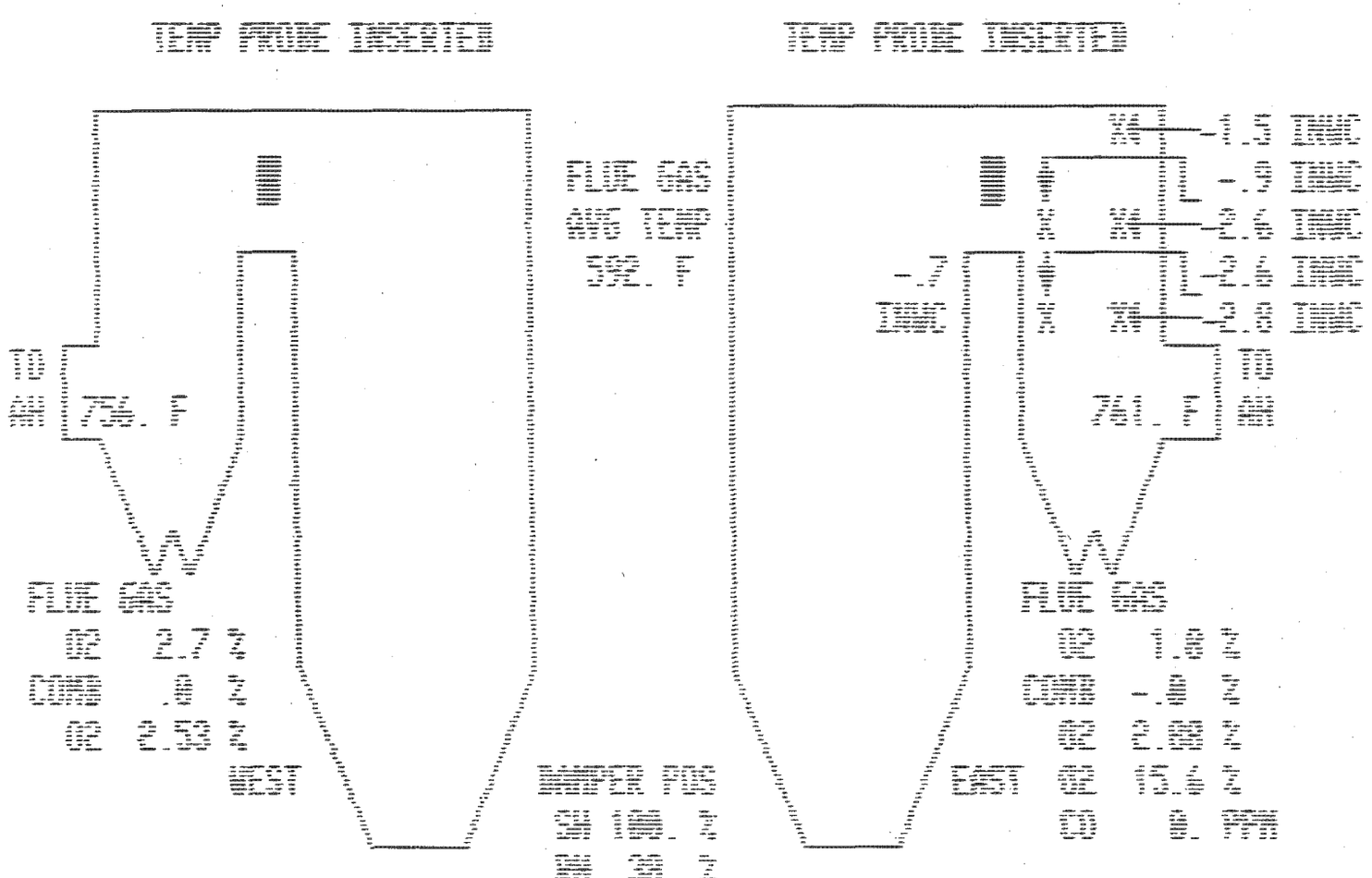

FORWARD PAGING SGAGB3

IP14_001947

Ultimate Analysis

LAB NO: 3541
IDENTIFICATION: feeder sample, Unit 1, air water test
DATE SAMPLED: 6-26-87

	As Received	Dry Basis
% Total Moisture	7.36	xxxx
* % Carbon	68.61	74.06
* % Hydrogen	5.40	5.83
* % Nitrogen	1.06	1.14
% Ash	7.37	7.96
% Sulfur	0.57	0.61
% Oxygen (by diff)	9.63	10.40

* Reported by Wyoming Analytical Labs, Inc
Laramie, Wyoming

Note: (As received basis)

Hydrogen and oxygen do not include H and Ox in sample moisture

IP14_001948

INTERMOUNTAIN POWER SERVICE CORPORATION

AS FIRED COAL SAMPLER

DATE: 6-29-87

LAB NO: 3541

IDENTIFICATION: feeder sample, unit 1
air heater test

DATE SAMPLED: 6-26-87

TIME COLLECTED: see comments

SHORT PROXIMATE ANALYSIS

	AS RECEIVED	DRY BASIS
% TOTAL MOISTURE	7.36	XXXX
% ASH	7.37	7.96
% SULFUR	0.57	0.61
BTU/LB	12192	13161

MOISTURE ASH FREE BTU 14299

% RESIDUAL MOISTURE = 2.49

ANALYST: RLJ % Air Dry Loss = 4.99

COMMENTS: feeder 1A, 1000 hrs
1B, 1100 hrs
1C, 1200 hrs
1D, 1300 hrs
feeder 1H, 1305 hrs
1G, 1430 hrs
1E, 1530 hrs

cc: [redacted]
AARON NISSEN
[redacted]

IP14_001949

PERFORMANCE TEST RESULTS
AIR HEATER TEST

DATE: JUNE 25, 1987

IDENTIFICATION	TIME	% DRY CARBON
FLY ASH, 1B9	1315 HRS.	0.38
1B10	1317 HRS.	
1A1	1320 HRS.	
ECONOMIZER ASH	1500 HRS.	0.77
BOTTOM ASH	1437 HRS.	0.64

PERFORMANCE TEST RESULTS
AIR HEATER TEST

DATE: JUNE 26, 1987

IDENTIFICATION	TIME	% DRY CARBON
FLY ASH, 1A2	1330 HRS.	0.64
1B10	1335 HRS.	
1C9	1340 HRS.	
ECONOMIZER ASH, BV7	1445 HRS.	0.35
BOTTOM ASH, 1A	1426 HRS.	1.24

RD 26

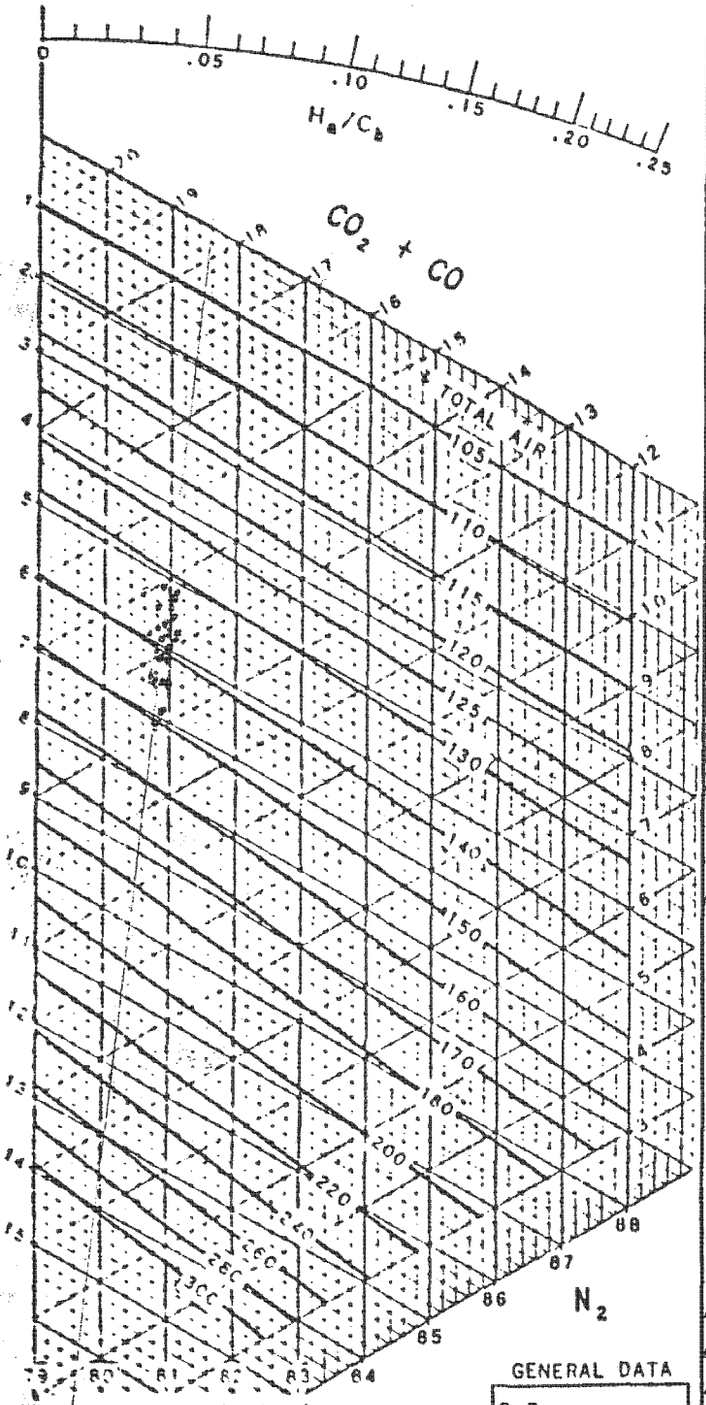

TIME	LOCATION	CO_2	$+O_2$	+CO	O_2	CO		BY
1006	WA7	12.6	19.1	—	6.5	—	—	FB
1011	WA6	12.5	19.0	—	6.5	—	—	FB
1014	WA5	12.2	19.0	—	6.8	—	—	FB
1017	WA4	12.1	19.2	—	7.1	—	—	FB
1022	WA3	13.4	19.1	—	5.7	—	—	FB
1025	WA2	13.7	19.2	—	5.5	—	—	FB
1028	WA1	13.4	18.9	—	5.5	—	—	FB
1034	WB7	13.2	19.0	—	5.8	—	—	TF
1037	WB6	13.4						TF
		Restart						
1045	WA7	12.8	19.3	—	6.5	—	—	TF
1047	WA6	13.1	19.2	—	6.1	—	—	TF
1050	WA5	12.7	19.2	—	6.5	—	—	TF
1053	WA4	13.0	19.1	—	6.1	—	—	TF
1056	WA3	13.1	18.9	—	5.8	—	—	TF
1100	WA2	13.7	18.9	5.2	~~9.2~~	—	—	TF
1103	WA1	13.9	19.2	—	5.3	—	—	TF
1120	WB7	13.4	18.8	—	5.7	—	—	FB
1124	WB6	13.0	19.2	—	6.2	—	—	FB
1125	WB5	12.5	18.9	—	6.4	—	—	FB
1128	WB4	12.9	19.1	—	6.2	—	—	FB
1130	WB3	12.9	19.1	—	6.2	—	—	FB
1132	WB2	13.7	19.1	—	5.4	—	—	FB
1135	WB1	13.7	19.0	—	5.3	—	—	FB
1155	WC7	14.1	19.4	—	5.3	Repeated		TF
1201	WC7	13.4	19.2	—	5.8	—	—	TF
1204	WC6	13.0	19.0	—	6.0	—	—	TF
1207	WC5	13.3	19.0	—	5.7	—	—	TF
1209	WC4	13.4	19.2	—	5.8	—	—	TF
1212	WC3	13.4	19.3	—	5.9	—	—	TF
1215	WC2	14.0	19.2	—	5.2	—	—	TF
1219	WC1	13.8	19.2	—	5.3	—	—	TF
1236	WD7	13.9	19.2	—	5.3	—	—	FB
1238	WD6	13.6	19.0	—	5.4	—	—	FB
1241	WD5	13.4	19.0	—	5.6	—	—	FB
1244	WD4	13.0	19.0	—	6.0	—	—	FB
1248	WD3	13.2	19.0	—	5.8	—	—	FB
1250	WD2	13.7	19.1	—	5.4	—	—	FB

GENERAL DATA

S.F.

A.F.

FUEL ANALYSIS

H

O

C

BTU/LB

H_a/C

SUBJECT BAGHOUSE INLET WEST

START TIME ~~1000~~ 1045 RESTART

STOP TIME

PAGE 1 OF 2

FILE NO.

BY

DATE 6/26/87

REV.

THE BABCOCK & WILCOX CO.
RESEARCH LABORATORY
ALLIANCE, OHIO

DRAWING NO.

C - 4CO

IP14_001951

FD 26

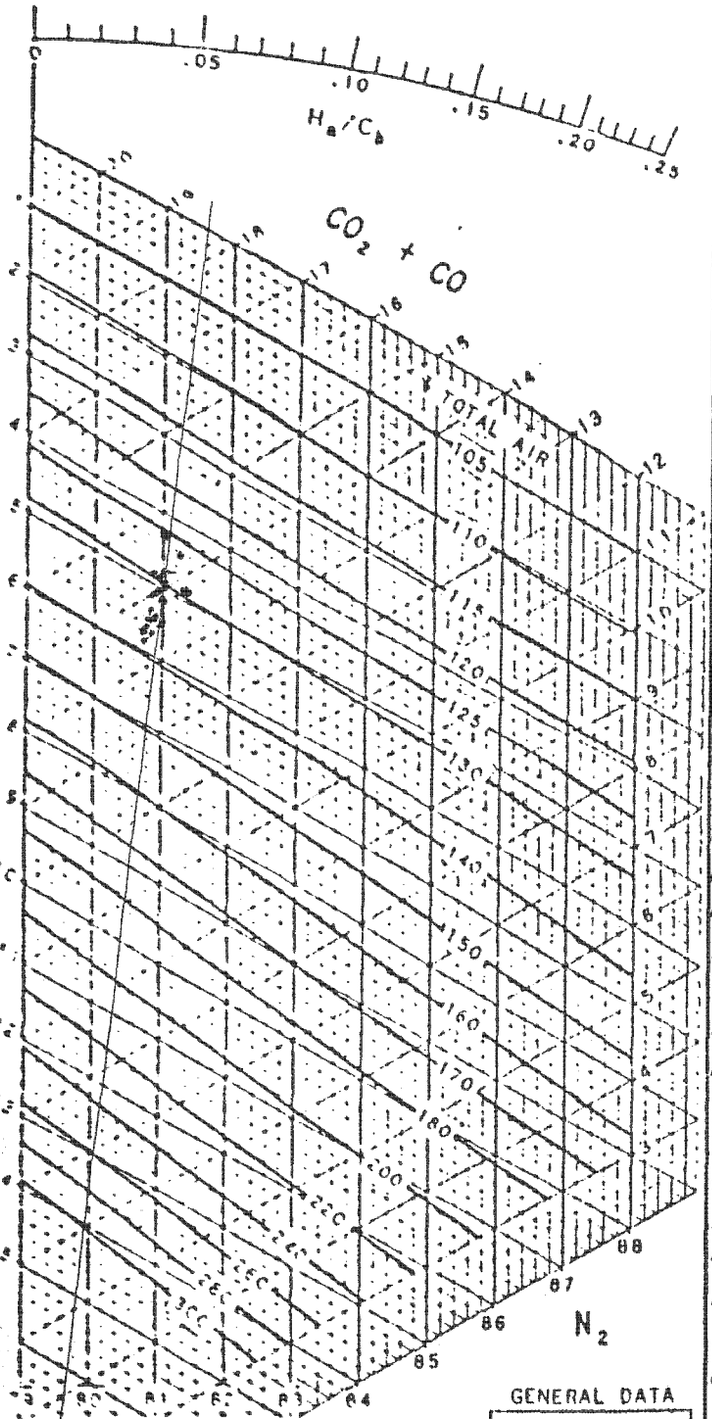

TIME	LOCATION	CO_2	$+O_2$	+CO	O_2	CO		BY
1253	WD1	13.8	19.0	—	5.2	—	—	FB
1305	WE7	14.0	19.1	—	5.1	—	—	TF
1309	WE6	13.5	19.2	—	5.7	—	—	TF
1312	WE5	13.5	19.2	—	5.7	—	—	TF
1316	WE4	13.4	19.2	—	5.8	—	—	TF
1319	WE3	13.6	19.3	—	5.7	—	—	TF
1323	WE2	13.7	19.2	—	5.5	—	—	TF
1326	WE1	14.2	19.0	—	4.8	—	—	TF
1345	WF7	14.0	19.2	—	5.2	—	—	FB
1347	WF6	13.8	19.0	—	5.2	—	—	FB
1349	WF5	13.6	19.0	—	5.4	—	—	FB
1351	WF4	13.5	19.0	—	5.5	—	—	FB
1353	WF3	14.0	19.0	—	5.0	—	—	FB
1356	WF2	13.8	19.0	—	5.2	—	—	FB
1358	WF1	14.1	19.0	—	4.9	—	—	FB
1415	WG7	13.8	19.1	—	5.3	—	—	FB
1420	WG6	14.0	19.2	—	5.2	—	—	TF
1424	WG5	13.8	19.2	—	5.4	—	—	TF
1426	WG4	14.3	19.3	—	5.0	Repeated		TF
1430	WG4	13.9	19.2	—	5.3	—	—	TF
1432	WG3	14.3	19.1	—	4.8	—	—	TF
1435	WG2	14.3	19.2	—	4.9	—	—	TF
1439	WG1	14.3	19.2	—	4.9	—	—	TF
1455	WH7	14.3	18.9	—	4.6	—	—	FB
1459	WH6	14.2	18.9	—	4.7	—	—	FB
1502	WH5	13.7	18.6	—	4.9	—	—	FB
1505	WH4	14.2	19.0	—	4.8	—	—	FB
1507	WH3	14.6	19.0	—	4.4	—	—	FB
1511	WH2	14.0	19.1	—	5.1	—	—	FB
1514	WH[illegible]	14.7	19.0	—	4.3	—	—	FB

GENERAL DATA

S.F.

A.F.

FUEL ANALYSIS

H

O

C

BTU/LB

H_a/C

SUBJECT BAGHOUSE INLET WEST

START 1045

STOP 1520

PAGE 2 OF 2

FILE NO.

BY

DATE 6/26/87

REV.

THE BABCOCK & WILCOX CO.
RESEARCH LABORATORY
ALLIANCE, OHIO

DRAWING NO.

IP14_001952

Babcock & Wilcox
GENERAL CALCULATIONS

IP	POINT	STATIC IN.	TEMP.	ΔP IN.	ANGLE (DEGREE)	DATA BY	LOCATION (REMARKS)
WA	7	-9.6	277	0.666	0	TJF	PROBE E-44
WA	6	-9.3	283	0.576	0	TJF	
WA	5	-9.2	284	0.502	0	TJF	
WA	4	-9.0	288	0.539	0	TJF	
WA	3	-8.9	292	0.505	0	TJF	
WA	2	-9.0	294	0.314	0	TJF	
WA	1	-9.1	295	0.322	0	TJF	
WB	7	-9.0	285	0.300	+6	FB	
WB	6	-9.0	287	0.295	+5	FB	
WB	5					FB	
WB	4					FB	
WB	3					FB	
WB	2					FB	
WB	1					FB	
		Restart					
WA	7	-9.0	284	0.544	+7	FB	
WA	6	-8.9	285	0.493	0	FB	
WA	5	-9.0	286	0.595	0	FB	
WA	4	-8.9	289	0.568	0	FB	
WA	3	-9.1	294	0.507	0	FB	
WA	2	-8.9	296	0.378	+5	FB	
WA	1	-8.8	296	0.302	+5	FB	

BAGHOUSE INLET WEST
START TIME 1000
STOP TIME 1520
PAGE 1 OF 4

6/26/87

IP14_001953

PS 1979 1

Babcock & Wilcox
GENERAL CALCULATIONS

TAP	POINT	STATIC IN.	TEMP.	ΔP IN.	ANGLE (DEGREE)	DATA BY	LOCATION (REMARKS)
WB	7	-9.0	288	0.234	0	TJF	PROBE E-44
WB	6	-9.0	288	0.341	0	TJF	
WB	5	-9.0	288	0.354	0	TJF	
WB	4	-8.9	290	0.051	+5	TJF	
WB	3	-8.9	294	0.158	0	TJF	
WB	2	-8.7	297	0.505	-5	TJF	
WB	1	-8.7	298	0.549	0	TJF	
WC	7	-8.9	294	0.551	-4	FB	
WC	6	-8.7	292	1.013	0	FB	
WC	5	-9.0	292	1.186	+6	FB	
WC	4	-9.2	294	1.196	+7	FB	
WC	3	-9.2	295	0.361	+1	FB	
WC	2	-9.2	299	0.344	0	FB	
WC	1	-8.9	301	0.144	0	FB	
WD	7	-9.2	298	0.427	0	TJF	
WD	6	-9.1	295	0.290	0	TJF	
WD	5	-9.1	302	0.295	+2	TJF	
WD	4	-9.2	296	0.339	0	TJF	
WD	3	-9.3	294	0.302	+2	TJF	
WD	2	-9.1	298	0.156	+2	TJF	
WD	1	-9.0	303	0.871	+5	TJF	

SUBJECT: BAGHOUSE INLET WEST
START TIME 1095
STOP TIME 1520
PAGE 2014

DATE: 6/26/87

PREPARED BY:

DATE:

IP14_001954

Babcock & Wilcox
GENERAL CALCULATIONS

P	POINT	STATIC IN.	TEMP.	ΔP IN.	ANGLE (DEGREE)	DATA BY	LOCATION (REMARKS)
WE	7	-9.1	299	0.522	0	FB	PROBE E-44
WE	6	-9.1	299	0.363	+2	FB	
WE	5	-9.0	292	0.412	+4	FB	
WE	4	-9.0	295	0.390	+6	FB	
WE	3	-9.0	300	0.446	+7	FB	
WE	2	-8.9	304	0.395	+4	FB	
WE	1	-9.0	305	0.425	+4	FB	
WF	7	-9.1	299	0.424	0	TJF	
WF	6	-9.0	296	0.324	0	TJF	
WF	5	-9.1	295	0.456	+2	TJF	
WF	4	-9.0	297	0.449	0	TJF	
F	3	-9.1	299	0.468	+5	TJF	
WF	2	-9.1	303	0.302	+2	TJF	
WF	1	-9.0	305	0.283	+5	TJF	
WG	7	-9.1	299	0.278	+2	TJF	
WG	6	-9.2	300	0.031	-4	FB	
WG	5	-9.4	299	0.104	-6	FB	
WG	4	-9.4	300	0.046	+7	FB	
WG	3	-9.3	305	0.007	-12	FB	
WG	2	-9.1	306	0.053	+5	FB	
WG	1	-9.1	308	0.151	+20	FB	

BAGHOUSE INLET WEST
START 1045
STOP 1520
PAGE 3 OF 4

6/26/87

IP14_001955

Babcock & Wilcox
GENERAL CALCULATIONS

T.P	POINT	STATIC IN.	TEMP.	ΔP IN.	ANGLE (DEGREE)	DATA BY	LOCATION (REMARKS)
WH	7	-8.9	303	0.615	+5	TJF	PROBE E-44
WH	6	-9.1	301	0.131	+10	TJF	
WH	5	-9.1	301	0.107	+10	TJF	
WH	4	-9.0	303	0.761	0	TJF	
WH	3	-9.0	304	0.114	+10	TJF	
WH	2	-9.0	308	0.644	+15	TJF	
WH	1	-8.9	309	0.637	+10	TJF	

BAGHOUSE INLET WEST
START 1045
STOP 1520 PAGE 4 OF 4

6/26/87

IP14_001956

RD 26

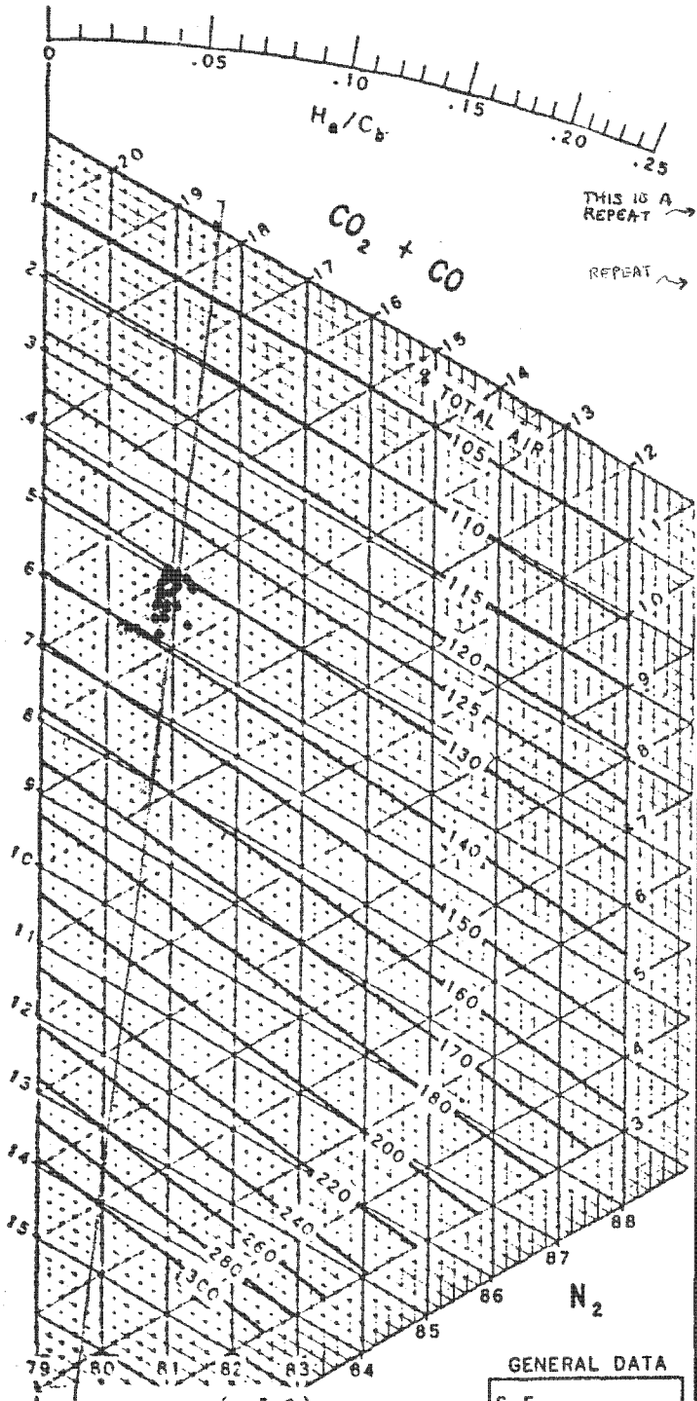

THIS IS A REPEAT

REPEAT

TIME	LOCATION	CO_2	$+O_2$	$+CO$	O_2	CO	% UNBURNED	BY
1001	CA 7	13.3	19.2	—	5.9	—	—	BC
1006	CA 6	13.6	19.6	—	6.0	—	—	BC
1009	CA 5	13.5	19.2	—	5.7	—	—	BC
1012	CA 6	13.7	19.2	—	5.5	—	—	BC
1015	CA 4	13.4	19.5	—	6.1	—	—	BC
1020	CA 4	14.1	19.2	—	5.1	—	—	BC
1017	CA 3	13.9	19.2	—	5.3	—	—	BC
1022	CA 2	13.9	19.2	—	5.3	—	—	BC
1026	CA 1	14.0	19.1	—	5.1	—	—	BC
1035	CB 7	14.0	19.4	—	5.4	—	—	BC
Instructed to re-start at 10:45								
		13.8						
1045	CA 7	~~14.0~~	19.0	—	5.2	—	—	BC
1049	CA 6	14.0	19.0	—	5.0	—	—	BC
1051	CA 5	13.8	19.1	—	5.3	—	—	BC
1054	CA 4	13.5	19.1	—	5.6	—	—	BC
1058	CA 3	13.7	19.2	—	5.5	—	—	BC
1102	CA 2	13.6	19.0	—	5.4	—	—	BC
1106	CA 1	13.8	19.1	—	5.3	—	—	BC
1119	CB 7	14.2	19.4	—	5.2	—	—	BC
1125	CB 7	13.6	19.1	—	5.5	—	—	BC
1122	CB 6	13.9	18.8	—	4.9	—	—	BC
1128	CB 5	13.6	19.0	—	5.4	—	—	BC
1131	CB 4	13.7	19.0	—	5.3	—	—	BC
1134	CB 3	13.8	18.8	—	5.0	—	—	BC
1137	CB 2	14.0	19.2	—	5.2	—	—	BC
1141	CB 1	14.1	19.1	—	5.0	—	—	BC
1155	CC 7	13.9	19.2	—	5.3	—	—	BC
1159	CC 6	13.9	19.2	—	5.3	—	—	BC
1203	CC 5	13.2	18.8	—	5.6	—	—	BC
1206	CC 4	13.7	18.7	—	5.0	—	—	BC
1209	CC 3	13.9	19.2	—	5.3	—	—	BC
1212	CC 2	13.6	19.4	—	5.8	—	—	BC
1217	CC 2	13.9	19.1	—	5.2	—	—	BC
1214	CC 1	14.0	19.0	—	5.0	—	—	BC

Unburned Loss % = $\left(1 - \frac{R_a C}{R_a C_b}\right) \frac{C \times 14300}{Btu/lb.}$

Where

$\frac{R_a}{C_b}$ is from gas analysis

$\frac{R_a}{C}$ Btu/lb. is from coal analysis

Note: For complete uniform combustion, all points should lie along straight line drawn through pivot point

GENERAL DATA

S.F.
A.F.

FUEL ANALYSIS

H
O
C
BTU/LB
H_a/C

SUBJECT Baghouse inlet	FILE NO.	THE BABCOCK & WILCOX CO. RESEARCH LABORATORY ALLIANCE, OHIO
CENTER 6/26/86 START 1045	BY	
Page 1 of 3 STOP 1520	DATE	
	REV.	DRAWING NO.

IP14_001957

RD 26

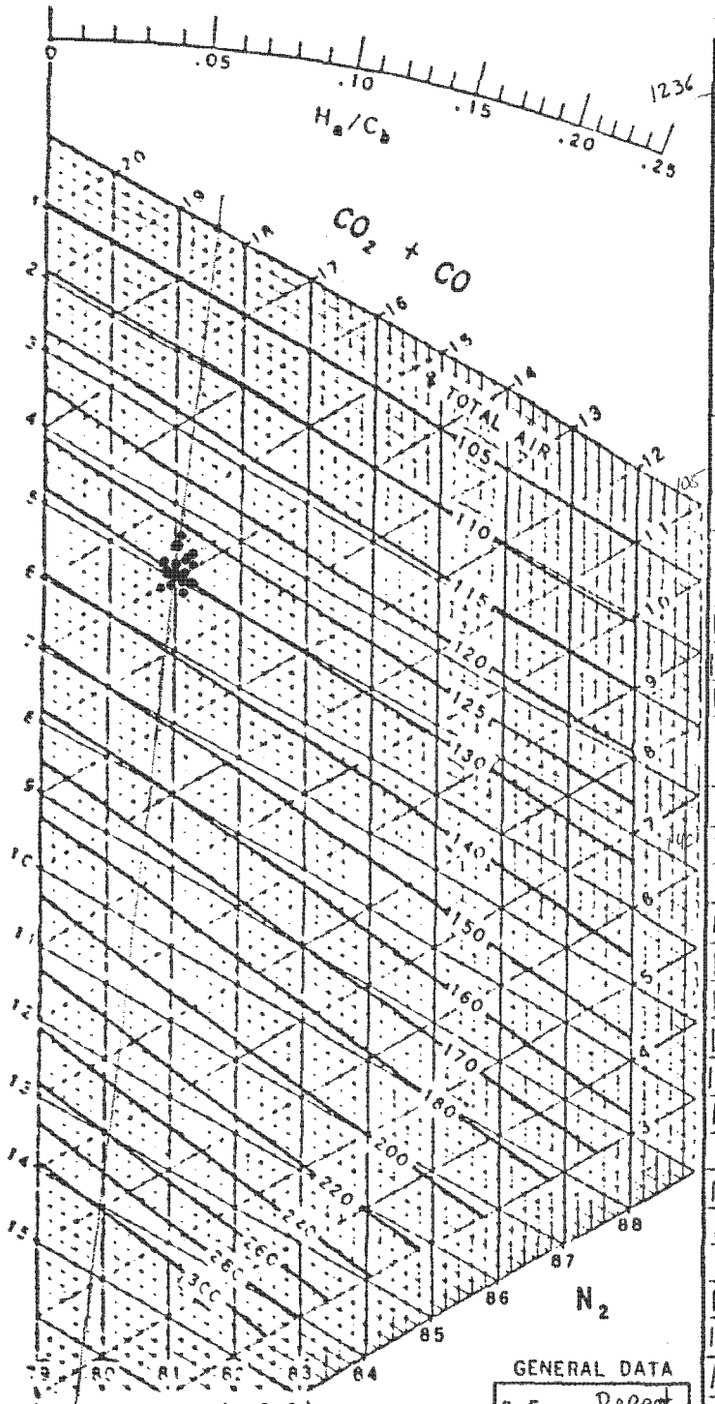

TIME	LOCATION	CO_2	$+O_2$	$+CO$	O_2	CO	% UNBURNED	BY
~~CD~~ 1236	CD 7	14.3	19.4	—	5.1	—	—	BC
1242	CD 7	13.7	18.8	—	5.1	—	—	BC
1240	CD 6	14.4	19.3	—	4.9	—	—	BC
1245	CD 6	13.8	18.7	—	4.9	—	—	BC
1248	CD 5	13.9	19.0	—	5.1	—	—	BC
1251	CD 4	13.9	19.3	—	5.4	—	—	BC
1258	CD 4	14.0	19.2	—	5.2	—	—	BC
1254	CD 3	14.2	19.0	—	4.8	—	—	BC
1300	CD 2	14.0	18.9	—	4.9	—	—	BC
1303	CD 1	14.4	19.0	—	4.6	—	—	BC
1313	CE 7	14.4	18.6	—	4.2	—	—	BC
1317	CE 7	14.2	18.9	—	4.7	—	—	BC
1315	CE 6	13.9	18.9	—	5.0	—	—	BC
1321	CE 5	14.0	19.0	—	5.0	—	—	BC
1324	CE 4	~~13.7~~ 14.8	18.8	—	4.8	—	—	BC
1326	CE 3	13.9	18.7	—	4.8	—	—	BC
1329	CE 2	14.2	18.8	—	4.6	—	—	BC
1332	CE 1	14.0	18.9		4.9			BC
1342	CF 7	14.2	18.8	—	4.6	—	—	BC
1345	CF 6	14.4	19.0	—	4.6	—	—	BC
1348	CF 5	13.9	18.9	—	5.0	—	—	BC
1350	CF 4	14.0	19.0	—	5.0	—	—	BC
1353	CF 3	~~13.3~~ 14.3	19.1	—	4.8	—	—	BC
1356	CF 2	14.4	19.4	—	5.0	—	—	BC
1402	CF 2	14.2	19.0	—	4.8	—	—	
1359	CF 1	14.2	19.0	—	4.8	—	—	BC
1413	CG 7	14.2	19.2	—	5.0	—	—	BC
1417	CG 6	14.4	19.2	—	4.8	—	—	BC
1420	CG 5	14.1	18.8	—	4.7	—	—	BC
1423	CG 4	14.2	19.0	—	4.8	—	—	BC
1426	CG 3	14.3	19.2	—	5.1	—	—	BC
1429	CG 2	14.1	19.1	—	5.0	—	—	BC
1432	CG 3	14.2	19.1	—	4.9	—	—	BC
1436	CG 1	14.2	19.1	—	4.9	—	—	BC
	Continued on page 3							

GENERAL DATA

S.F.	Repeat
A.F.	

FUEL ANALYSIS

H
O
C
BTU/LB
H_a/C

SUBJECT Baghouse inlet CENTER
6/26/87 START 1045
Page 2 of 3 STOP 1520

FILE NO.
BY
DATE
REV.

THE BABCOCK & WILCOX CO.
RESEARCH LABORATORY
ALLIANCE, OHIO

DRAWING NO.

IP14_001958

RD 26

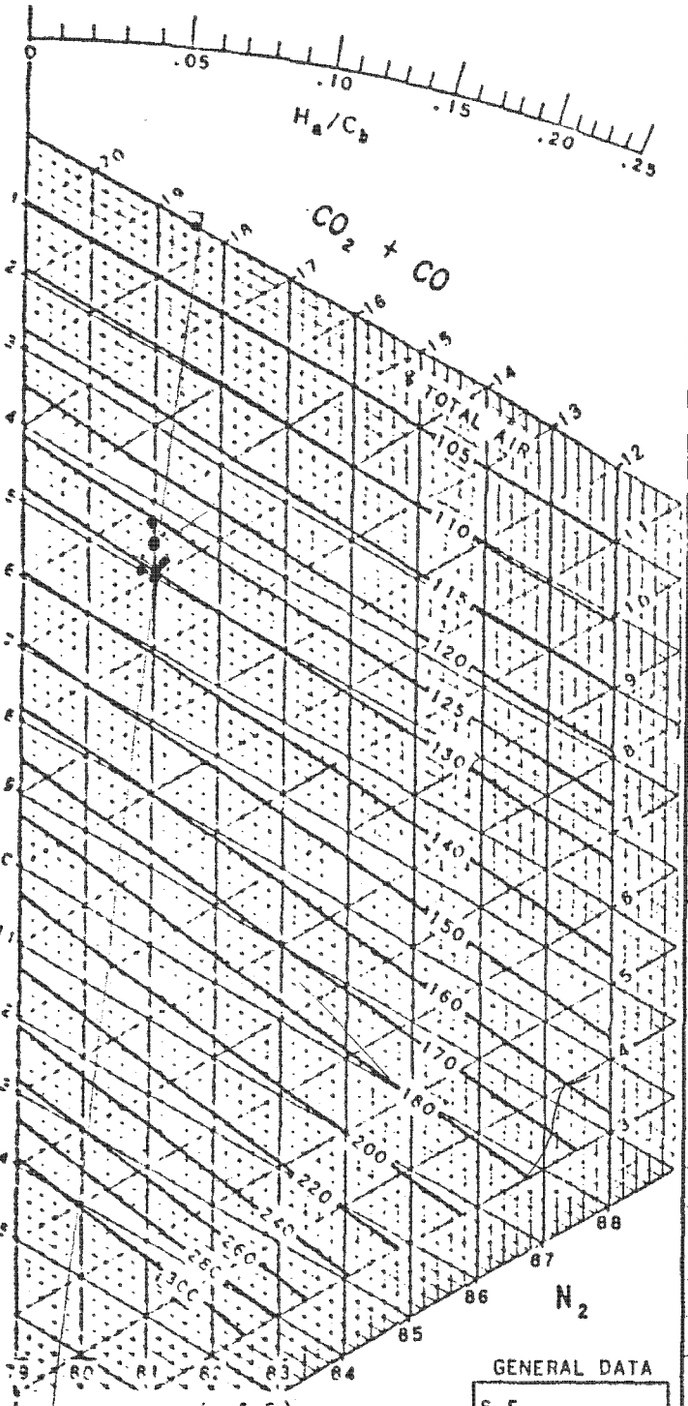

Unburned Loss % = $\left(1 - \frac{H_a C}{H_a C_b}\right) \frac{C \times 14500}{Btu\ lb.}$

Where

$\frac{H_a}{C_b}$ is from gas analysis

$\frac{H_a}{C}$ Btu lb is from coal analysis

Note For complete uniform combustion, all points should fix along straight line drawn through pivot point

GENERAL DATA

S.F.
A.F.

FUEL ANALYSIS

H
O
C
BTU/LB
H_a/C

TIME	LOCATION	CO_2	$+ O_2$	+ CO	O_2	CO	% UNBURNED	BY
1450	CH 7	14.4	19.0	—	4.6	—	—	BC
1453	CH 6	14.1	19.0	—	4.9	—	—	BC
1456	CH 5	14.1	18.8	—	4.7	—	—	BC
1459	CH 4	14.0	19.0	—	5.0	—	—	BC
1502	CH 3	14.5	19.1	—	4.6	—	—	BC
1507	CH 2	14.2	19.2	—	5.0	—	—	BC
1511	CH 1	14.4	19.3	—	4.9	—	—	BC
1513	CH 1	~~14.5~~ 14.6	19.0	—	4.4	—	—	BC

SUBJECT Baghouse inlet CENTER
6/26/87 START 1045
Page 3 of 3 STOP 1500

FILE NO.
BY
DATE
REV.

THE BABCOCK & WILCOX CO.
RESEARCH LABORATORY
ALLIANCE, OHIO

DRAWING NO.

IP14_001959

Babcock & Wilcox
GENERAL CALCULATIONS

TAP	POINT	STATIC IN.	TEMP.	ΔP IN.	ANGLE (DEGREE)	DATA BY	LOCATION (REMARKS)
CA	7	-9.0	302	0.361	0	GAC	PROBE E-42
CA	6	-8.8	311	0.031	-30	GAC	Null point
CA	5	-9.0	315	0.034	-40	GAC	difficult to
CA	4	-9.0	315	0.004	-90	GAC	find and
CA	3	-9.0	315	0.007	-35	GAC	maintain.
CA	2	-8.7	316	0.083	-30	GAC	"
CA	1	-8.7	313	0.366	-25	GAC	"
CB	7	-8.4	315	0.124	+5	GAC	
	Instructed	to re-start		at 1045 hr			
CA	7	-8.3	315	0.314	-20	GAC	
CA	6	-8.5	314	0.100	-25	GAC	
CA	5	-8.5	316	0.031	-10	GAC	
CA	4	-8.5	316	0.485	-5	GAC	
CA	3	-8.6	317	0.007	-15	GAC	
CA	2	-8.6	318	0.065	-25	GAC	
CA	1	-8.5	317	0.441	-20	GAC	
CB	7	-8.7	318	0.129	-10	GAC	
CB	6	-8.4	321	0.305	-5	GAC	
CB	5	-8.4	322	0.376	-10	GAC	
CB	4	-8.2	322	0.197	-5	GAC	
CB	3	-8.4	322	0.209	-10	GAC	
CB	2	-8.4	322	0.104	-5	GAC	
CB	1	-8.4	321	0.046	-5	GAC	

Baghouse inlet CENTER 6/26/87
Page 1 of 3

START 1045
STOP 1520

IP14_001960

Babcock & Wilcox
GENERAL CALCULATIONS

TAP	POINT	STATIC IN.	TEMP.	ΔP IN.	ANGLE (DEGREE)	DATA BY	LOCATION (REMARKS)
CC	7	-8.2	329	0.314	-10	GAC	PROBE E-42
CC	6	-8.2	328	0.297	-10	GAC	
CC	5	-8.4	329	0.388	+5	GAC	
CC	4	-8.6	330	0.319	+10	GAC	
CC	3	-8.4		0.175	+20	GAC	TC NOT WORKING
CC	2	-8.6	324	0.175	+5	GAC	TC CAME BACK
CC	1	-8.6		0.129	0	GAC	TC OUT
CD	7	-8.6	335	0.510	+10	GAC	
CD	6	-8.8	338	0.493	+5	GAC	
CD	5	-8.9	341	0.429	+10	GAC	
CD	4	-8.8	345	0.522	-10	GAC	
CD	3	-8.8	344	0.537	0	GAC	
CD	2	-8.6	342	0.495	0	GAC	
CD	1	-8.6	345	0.297	-10	GAC	
CE	7	-8.7	339	0.502	+10	GAC	
CE	6	-8.7	340	0.546	+10	GAC	
CE	5	-8.5	342	0.554	+10	GAC	
CE	4	-8.4	343	0.559	-5	GAC	
CE	3	-8.7	346	0.632	+10	GAC	
CE	2	-8.5	348	0.542	0	GAC	
CE	1	-8.6	347	0.268	+5	GAC	

Baghouse inlet CENTER 6/26/87
Page 2 of 3

START 1045
STOP 1520

IP14_001961

Babcock & Wilcox
GENERAL CALCULATIONS

TAP	POINT	STATIC IN.	TEMP.	ΔP IN.	ANGLE (DEGREE)	DATA BY	LOCATION (REMARKS)
CF	7	-8.5	350	0.400	+10	GAC	PROBE E-42
CF	6	-8.6	354	0.437	0	GAC	
CF	5	-8.5	355	0.512	+10	GAC	
CF	4	-8.4	355	0.644	+5	GAC	
CF	3	-8.6	354	0.546	0	GAC	
CF	2	-8.5	353	0.434	+10	GAC	
CF	1	-8.4	348	0.090	+5	GAC	
CG	7	-8.5	351	0.534	+5	GAC	
CG	6	-8.7	356	0.356	0	GAC	
CG	5	-8.8	357	0.478	0	GAC	
CG	4	-8.7	355	0.329	-10	GAC	
CG	3	-8.8	354	0.166	+20	GAC	
CG	2	-8.8	351	0.026	+15	GAC	
CG	1	-8.6	350	0.017	0	GAC	
CH	7	-8.5	350	0.122	+10	GAC	
CH	6	-8.7	352	0.007	+20	GAC	
CH	5	-8.6	355	0.024	-10	GAC	
CH	4	-8.6	355	0.195	-10	GAC	
CH	3	-8.5	353	0.065	+20	GAC	
CH	2	-8.5	351	0.031	+20	GAC	
CH	1	-8.2	350	0.649	+10	GAC	

Baghouse inlet CENTER 6/26/87
Page 3 of 3

START 1045
STOP 1520

IP14_001962

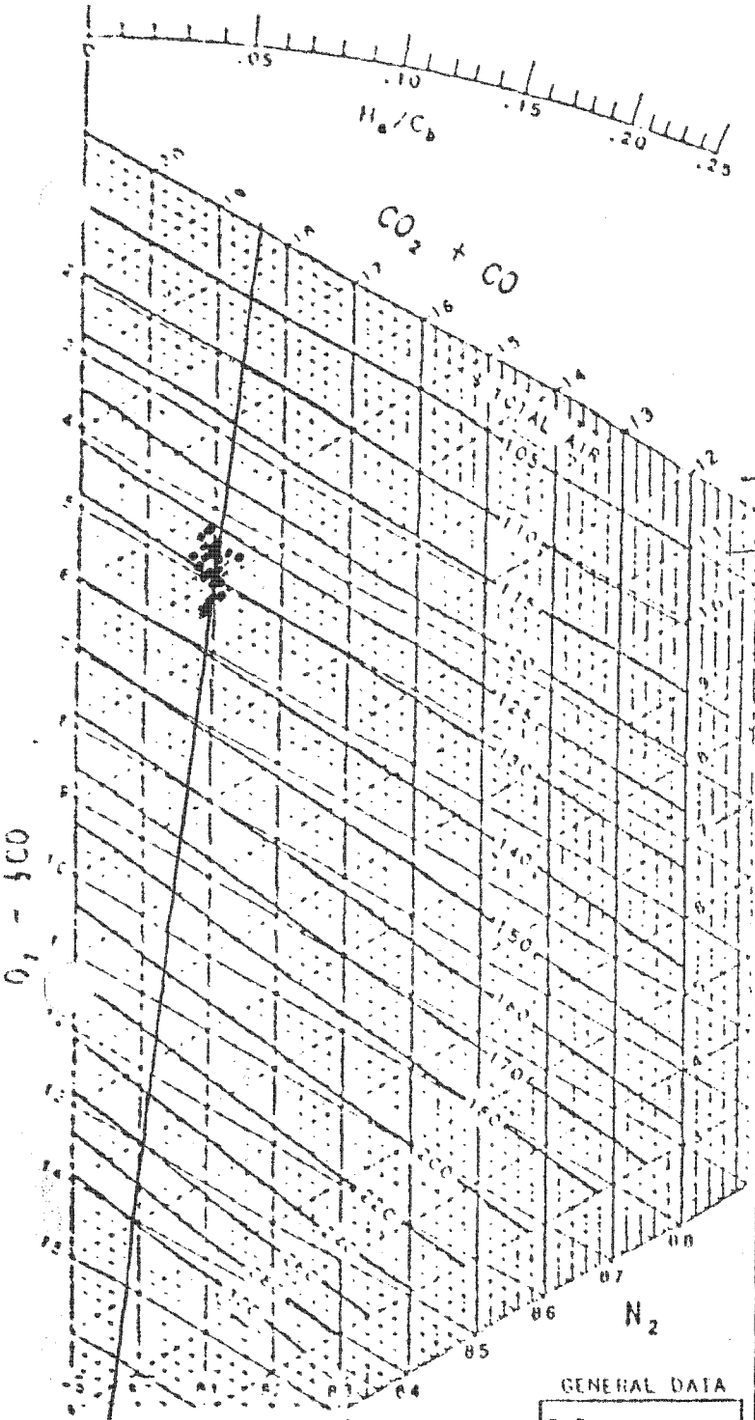

TIME	LOCATION	CO_2	CO_2	CO	O_2	CO	[illegible]	BY*
1004	EA 7	14.0	19.0		5.0			JR
1007	EA 6	14.5	19.3		4.8			JR
1011	EA 5	13.8	19.0		5.2			JR
1015	EA 4	14.1	19.0		4.9			JR
1018	EA 3	14.5	19.0		4.5			JR
1021	EA 2	14.7	19.3		4.6			JR
1025	EA 1	14.8	19.3		4.5			JR
1035	EB 7	14.2	19.1		4.9			JR
1039	EB 6							JR
	RESTART							
1045	EA 7	14.5	19.1		4.6			JR
1049	EA 6	14.6	19.2		4.6			JR
1052	EA 5	14.4	19.2		4.8			JR
1055	EA 4	14.5	19.1		4.6			JR
1059	EA 3	14.4	19.0		4.6			JR
1103	EA 2	14.5	19.2		4.7			JR
1106	EA 1	14.6	19.2		4.6			JR
1120	EB 7	13.7	19.1		5.4			JR
1123	EB 6	14.2	19.0		4.8			JR
1127	EB 5	13.8	19.0		5.2			JR
1130	EB 4	13.8	19.2		5.4			JR
1133	EB 3	14.2	18.6		4.4			JR
1136	EB 2	14.6	19.3		4.7			JR
1140	EB 1	14.8	19.2		4.4			JR
1155	EC 7	14.2	19.0		4.8			JR
1200	EC 6	13.7	19.2		5.5			JR
1203	EC 5	14.0	19.0		5.0			JR
1206	EC 4	14.0	18.9		4.9			JR
1209	EC 3	14.1	19.0		4.9			JR
1212	EC 2	14.2	19.1		4.9			JR
1216	EC 1	14.5	19.2		4.7			JR

* JR JON ROSS

GENERAL DATA

S.F.

A.F.

FUEL ANALYSIS

H

O

C

BTU/LB

H_a/C_b

BAGHOUSE INLET - EAST

PROBE # E-45

TEST START ~~1000~~ 1045 FINISH 1520

FILE NO.

BY

DATE 6/26/07

REV.

THE BABCOCK & WILCOX CO.
RESEARCH LABORATORY
ALLIANCE, OHIO

DRAWING NO. PAGE 1 OF 6

IP14_001963

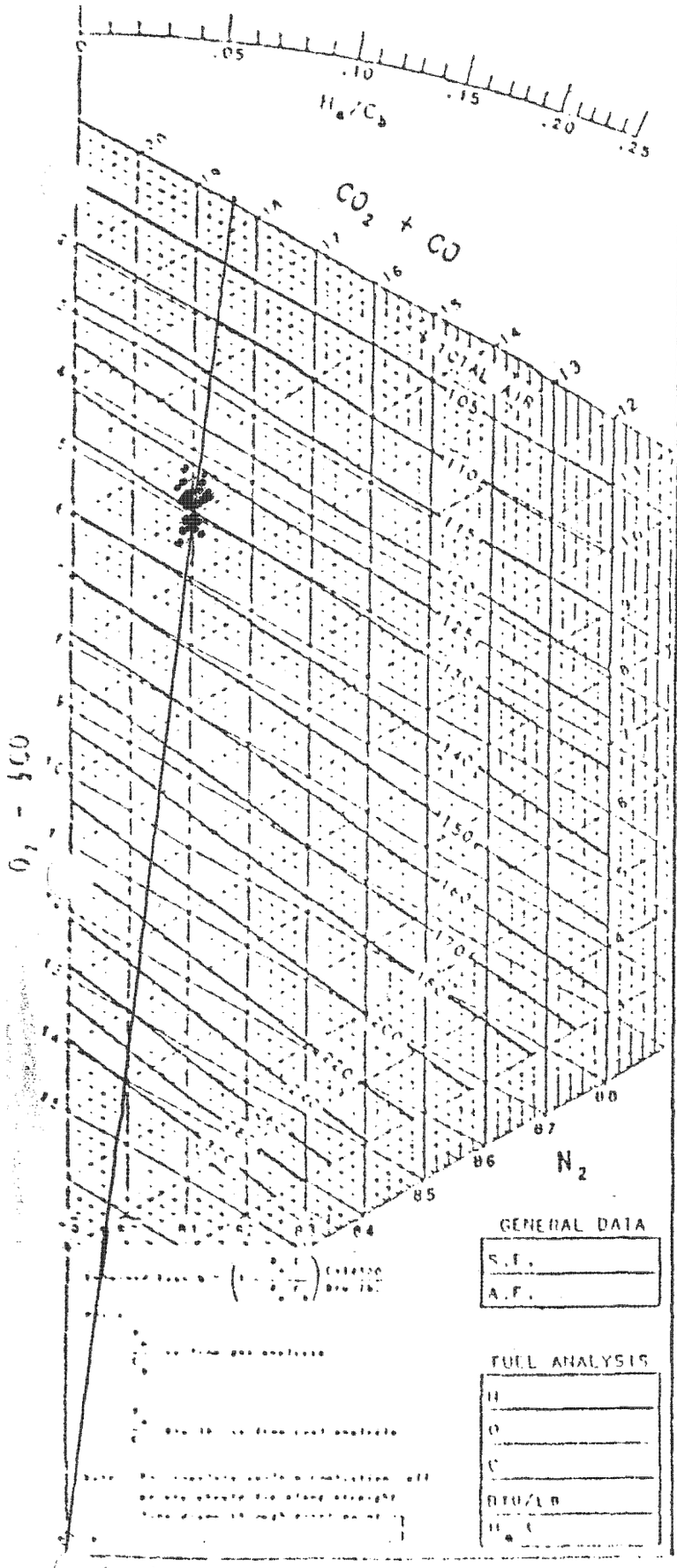

TIME	LOCATION	CO_2	EO_2	ECO	O_2	CO	[illegible]	BY
1230	ED 7	14.5	19.0		4.5			JR
1237	ED 6	13.8	19.0		5.2			JR
1241	ED 5	13.7	18.9		5.2			JR
1244	ED 4	13.8	19.1		5.3			JR
1248	ED 3	14.0	19.0		5.0			JR
1252	ED 2	14.0	19.1		5.1			JR
1256	ED 1	14.6	19.2		4.6			JR
			CHANGED		ORSAT	CHEMICALS		
1308	EE 7	14.4	19.1		4.7			JR
1313	EE 6	14.2	19.0		4.8			JR
1317	EE 5	13.9	19.1		5.2			JR
1324	EE 4	14.2	19.1		4.9			JR
1327	EE 3	14.2	19.0		4.8			JR
1330	EE 2	14.4	19.0		4.6			JR
1335	EE 1	14.3	18.9		4.6			
1344	EF 7	14.2	19.0		4.8			JR
1347	EF 6	14.2	19.0		4.8			JR
1350	EF 5	13.9	19.0		5.1			JR
1353	EF 4	14.3	19.1		4.8			JR
1356	EF 3	14.6	19.3		4.7			JR
1400	EF 2	14.3	19.1		4.8			JR
1403	EF 1	14.2	19.0		4.8			JR
1415	EG 7	14.4	19.1		4.7			JR
1419	EG 6	14.4	19.2		4.8			JR
1422	EG 5	13.8	19.1		5.3			JR
1425	EG 4	13.8	18.9		5.1			JR
1427	EG 3	14.5	19.2		4.7			JR
1430	EG 2	14.8	19.2		4.4			JR
1434	EG 1	14.8	19.2		4.4			JR
1450	EH 7	13.5	19.1		5.6			JR
1458	EH 6	14.2	18.9		4.6			JR
1501	EH 5	13.8	19.0		5.2			JR
1504	EH 4	14.1	18.8		4.7			JR
1507	EH 3	14.2	18.9		4.7			JR
1511	EH 2	14.2	18.9		4.7			JR
1515	EH 1	14.6	19.2		4.6			JR

* JR + JON ROSS

SUBJECT: BAGHOUSE INLET - EAST
PROBE # E-45
TEST START 1045 FINISH 1520

FILE NO.
BY
DATE 6/26/87
REV.

THE BABCOCK & WILCOX CO.
RESEARCH LABORATORY
ALLIANCE, OHIO

DRAWING NO. PAGE 2 OF 6

IP14_001964

Babcock & Wilcox

GENERAL CALCULATIONS

AF	POINT	STATIC IN.	TEMP.	ΔP IN.	ANGLE (DEGREE)	DATA BY *	LOCATION (REMARKS)
EA	7	-9.0	309	0.76	25	KR	1004
EA	6	-9.0	312	0.54	15	KR	1007
EA	5	-9.0	311	0.39	25	KR	1011
EA	4	-8.8	310	0.85	20	KR	1015
EA	3	-9.0	314	0.15	10	KR	1018
EA	2	-9.0	315	0.48	15	KR	1021
EA	1	-9.0	321	0.70	15	KR	1025
EB	7	-8.8	324	0.60	20	KR	1035
EB	6					KR	1039
			RESTART	1045			
E..	7	-8.5	312	0.79	15	KR	1045
EA	6	-8.5	311	0.51	20	KR	1049
EA	5	-8.8	313	0.30	30	KR	1052
EA	4	-8.8	315	0.85	15	KR	1055
EA	3	-8.8	315	0.04	10	KR	1059 BLOW OUT TOTAL PRESS LINE
EA	2	-8.8	320	0.37	25	KR	1103
EA	1	-8.8	323	0.12	90	KR	1106

* KR - KEVIN REDINGER

BAGHOUSE INLET EAST
PROBE # E-45 VPAS #100-3 MINI-MITE #A160062 6/26/87
TEST START 1045 FINISH 1520

PG-1979-1

Babcock & Wilcox
GENERAL CALCULATIONS

AP	POINT	STATIC IN.	TEMP.	ΔP IN.	ANGLE (DEGREE)	DATA BY *	LOCATION (REMARKS)
EB	7	-8.8	314	0.62	20	KR	1120
EB	6	-9.0	323	0.43	25	KR	1123
EB	5	-9.0	305	0.30	15	KR	1127
EB	4	-9.0	300	0.32	20	KR	1130
EB	3	-9.0	303	0.21	5	KR	1133
EB	2	-8.8	314	0.39	5	KR	1136
EB	1	-8.8	322	0.41	35	KR	1140
EC	7	-8.8	315	0.63	15	KR	1155
EC	6	-9.0	309	0.54	15	KR	1200
EC	5	-8.8	308	0.55	10	KR	1203
EC	4	-9.0	308	0.71	0	KR	1206
EC	3	-8.8	308	0.65	10	KR	1209
EC	2	-8.8	308	0.53	20	KR	1212
EC	1	-8.8	321	0.55	20	KR	1216
ED	7	-8.8	328	0.73	5	KR	1230
ED	6	-9.0	310	0.60	15	KR	1237
ED	5	-9.0	281	0.59	25	KR	1241
ED	4	-9.0	268	0.56	25	KR	1244
ED	3	-9.0	263	0.58	25	KR	1248
ED	2	-9.0	273	0.59	10	KR	1252
ED	1	-9.0	305	0.69	30	KR	1256

* KR - KEVIN REDINGER

CUSTOMER: BAGHOUSE INLET - EAST

FILE NO: PAGE 4 OF 6

SUBJECT: PROBE # E-45 TEST START 1045 TEST FINISH 1520

PREPARED BY:

DATE: 6/26/87

VPAS # 100-3

MINI-MITE # 41600[illegible]

IP14_001966

Babcock & Wilcox
GENERAL CALCULATIONS

TP	POINT	STATIC IN.	TEMP.	ΔP IN.	ANGLE (DEGREE)	DATA BY *	LOCATION (REMARKS)
EE	7	-9.2	329	0.60 ~~0.27~~	0	KR	1308
EE	6	-9.0	314	0.52	10	KR	1313
EE	5	-9.0	302	0.50	15	KR	1317
EE	4	-8.8	289	0.52	15	KR	1324
EE	3	-8.8	288	0.52	20	KR	1327
EE	2	-9.0	292	0.52	10	KR	1330
EE	1	-9.0	319	0.52	10	KR	1335 BLOW OUT TOTAL PRESS. LINE
EF	7	-9.0	342	0.50	10	KR	1344
EF	6	-8.8	362	0.40	5	KR	1347
EF	5	-8.8	371	0.41	0	KR	1350
EF	4	-8.8	370	0.43	5	KR	1353
EF	3	-9.0	368	0.45	15	KR	1356
EF	2	-8.8	358	0.40	10	KR	1400
EF	1	-8.5	337	0.40	5	KR	1403
EG	7	-9.0	332	0.18	65	KR	1415
EG	6	-9.0	308	0.55	0	KR	1419
EG	5	-9.0	293	0.52	5	KR	1422
EG	4	-9.0	292	0.42	0	KR	1425
EG	3	-9.0	285	0.54	5	KR	1427
EG	2	-9.0	300	0.52	0	KR	1430
EG	1	-9.0	316	0.54	0	KR	1434

* KR - KEVIN RESINGER

BAGHOUSE INLET EAST
PROBE # E-45
VPAS # 100-3
MINI MITE # 4160062

TEST START 1045
FINISH 1520
6/26/87

IP14_001967

Babcock & Wilcox
GENERAL CALCULATIONS

IP	POINT	STATIC IN.	TEMP.	ΔP IN.	ANGLE (DEGREE)	DATA BY *	LOCATION (REMARKS)
EH	7	-9.0	339	0.66	5	KR	1450
EH	6	-9.0	336	0.64	10	KR	1456
EH	5	-9.0	326	0.69	5	KR	1501
EH	4	-9.0	330	0.70	0	KR	1504
EH	3	-9.2	322	~~0.56~~ 0.67	0	KR	1507 BLEW OUT POTTL PRESS. LINE
EH	2	-9.0	319	0.57	5	KR	1513
EH	1	-9.0	337	0.58	0	KR	1515
			TEST	COMPLETE			

* KR - KEVIN REDINGER

BAGHOUSE INLET - EAST
PROBE # E-45
VPASS # 100-3

START 1045
FINISH 1520

MINI UNITE # 41600 62

6/26/87

PAGE 6 OF 6

IP14_001968

RD 26

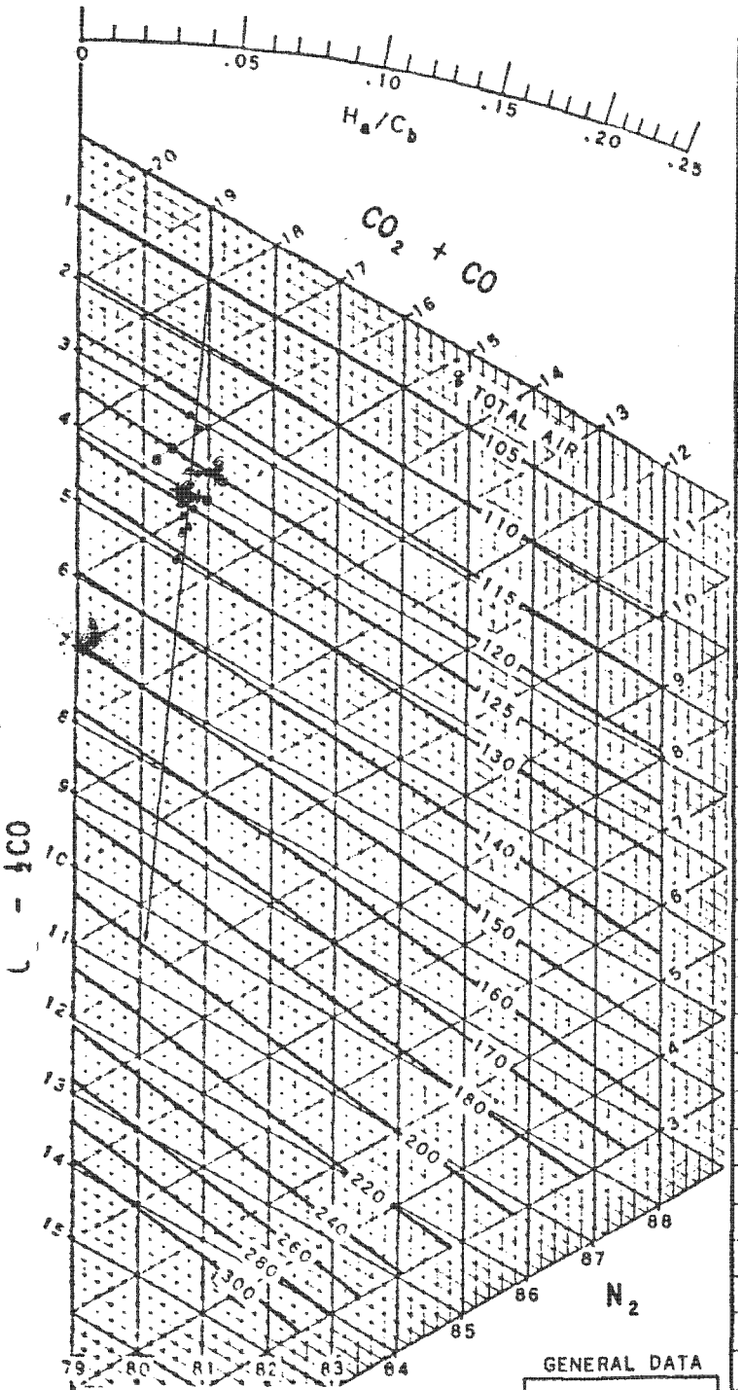

Unburned Loss % = $\left(1 - \frac{H_a C}{H_a C_b}\right) \frac{C \times 14500}{Btu\ lb.}$

Where

$\frac{H_a}{C_b}$ is from gas analysis

$\frac{H_a}{C}$ Btu·lb. is from coal analysis

Note: For complete uniform combustion, all points should lie along straight line drawn through pivot point

GENERAL DATA

S.F.
A.F.

FUEL ANALYSIS

H
O
C
BTU/LB
H_a/C

TIME	LOCATION	CO_2	$+O_2$	$+CO$	O_2	CO	% UNBURNED	BY
10:00	WA7	15.2	19.4	—	4.2	—	—	DRM
10:05	WA6	15.3	19.4	—	4.1	—	—	DRM
10:10	WA5	14.5	19.5	—	5.0	—	—	DRM
10:14	WA4	15.0	19.2	—	4.2	—	—	DRM
10:18	WA3	15.5	19.2	—	3.7	—	—	DRM
10:22	WA2	15.0	19.2	—	4.2	—	—	DRM
10:26	WA1	14.8	19.3	—	4.5	—	—	DRM
~~10:42~~	Unit upset - start over per John Mcholich							
10:45	WA7	15.3	18.9	—	3.6	—	—	DRM
10:49	WA6	15.4	19.5	—	4.1	—	—	DRM
10:54	WA5	15.2	19.2	—	4.0	—	—	DRM
11:01	WA4	15.0	19.4	—	4.4	—	—	DRM
11:05	WA3	15.6	19.3	—	3.7	—	—	DRM
11:09	WA2	14.8	19.4	—	4.6	—	—	DRM
11:13	WA1	15.5	19.2	—	3.7	—	—	DRM
11:27	WB7	15.4	19.0	—	3.6	—	—	DRM
11:31	WB6	16.3	19.3	—	3.0	—	—	DRM
11:36	WB5	15.5	19.2	—	3.7	—	—	DRM
11:41	WB4	15.6	19.4	—	3.8	—	—	DRM
11:45	WB3	15.3	18.3	—	3.0	—	—	DRM
11:51	WB2	16.0	19.8	—	3.8	—	—	DRM
11:56	WB1	12.5	20.0	—	7.5	—	—	DRM
12:12	WC7	15.0	18.7	—	3.7	—	—	DRM
12:20	WC6	15.4	19.5	—	4.1	—	—	DRM
12:24	WC5	16.1	19.2	—	3.1	—	—	DRM
12:28	WC4	15.4	19.3	—	3.9	—	—	DRM
12:31	WC3	15.4	19.4	—	4.0	—	—	DRM
12:35	WC2	15.0	19.0	—	4.0	—	—	DRM
12:38	WC1	14.7	19.6	—	4.9	—	—	DRM
12:51	WD7	15.2	18.8	—	3.6	—	—	DRM
12:55	WD6	15.6	18.9	—	3.3	—	—	DRM
12:59	WD5	15.5	19.0	—	3.5	—	—	DRM
13:06	WD4	15.8	19.4	—	3.6	—	—	DRM
13:10	WD3	15.2	19.4	—	4.2	—	—	DRM
13:13	WD2	15.4	19.0	—	3.6	—	—	DRM
13:16	WD1	15.2	19.3	—	4.1	—	—	DRM

CONTINUED ON NEXT PAGE

SUBJECT Economizer Outlet, West End
Probe #E43 Page 1 of 2
Start Time: 10:00 - restart 10:45
End Time: 15:19

FILE NO.
BY D.R. Meers
DATE 6/26/87
REV.

THE BABCOCK & WILCOX CO.
RESEARCH LABORATORY
ALLIANCE, OHIO

DRAWING NO.

8

IP14_001969

RD 26

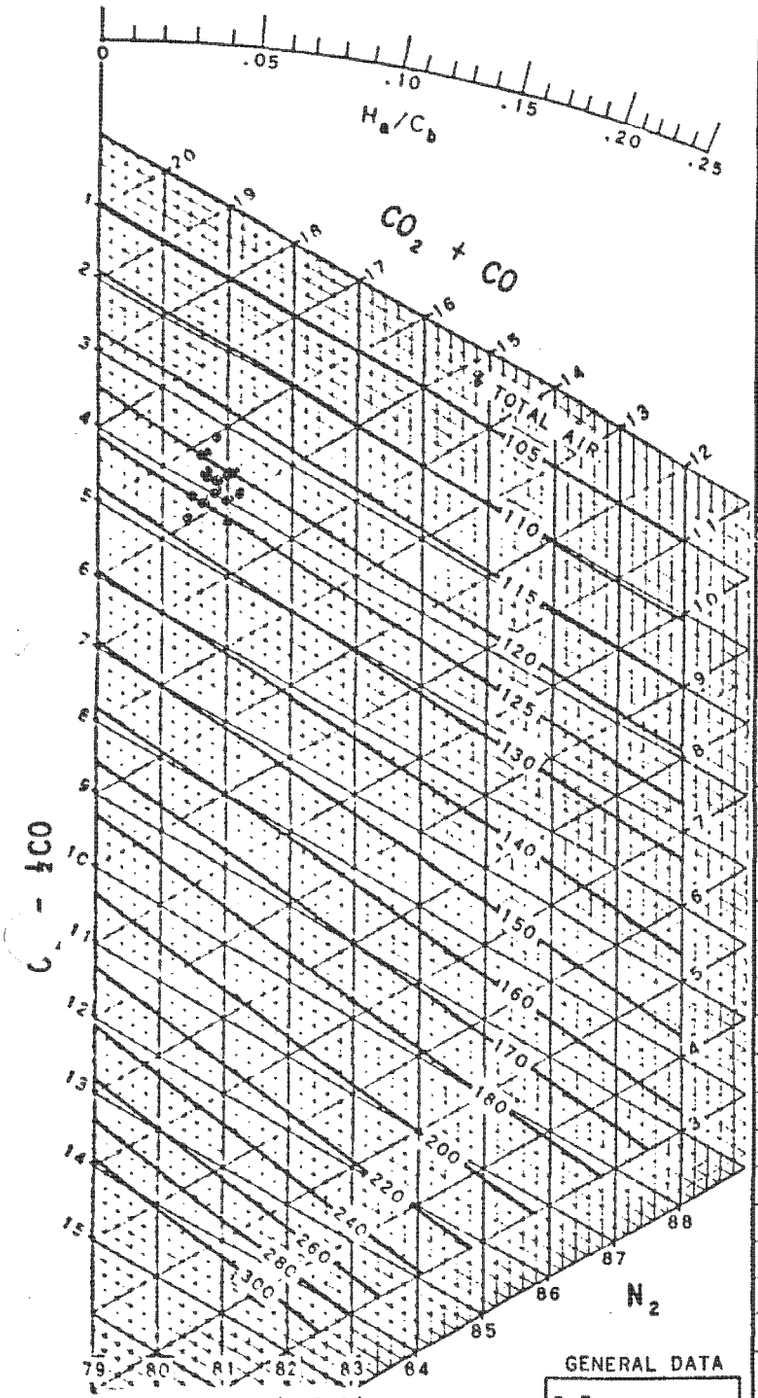

TIME	LOCATION	CO_2	$+O_2$	+CO	O_2	CO	% UNBURNED	BY
13:33	WE7	15.0	18.8	—	3.8	—	—	DRM
13:36	WE6	15.4	18.9	—	3.5	—	—	DRM
13:39	WE5	15.4	19.3	—	3.9	—	—	DRM
13:42	WE4	15.6	19.2	—	3.6	—	—	DRM
13:45	WE3	15.4	19.4	—	4.0	—	—	DRM
13:48	WE2	15.4	19.3	—	3.9	—	—	DRM
13:51	WE1	15.2	19.0	—	3.8	—	—	DRM
14:15	WF7	15.4	19.0	—	3.6	—	—	DRM
14:18	WF6	15.4	19.6	—	4.2	—	—	DRM
14:21	WF5	15.2	19.2	—	4.0	—	—	DRM
14:28	WF4	15.0	19.0	—	4.0	—	—	DRM
14:32	WF3	15.6	19.3	—	3.7	—	—	DRM
14:35	WF2	15.6	19.4	—	3.8	—	—	DRM
14:38	WF1	15.2	19.4	—	4.2	—	—	DRM
14:57	WG7	14.7	19.0	—	4.3	—	—	DRM
15:00	WG6	15.1	19.6	—	4.5	—	—	DRM
15:04	WG5	15.2	19.4	—	4.2	—	—	DRM
15:07	WG4	15.4	19.2	—	3.8	—	—	DRM
15:10	WG3	15.1	19.5	—	4.4	—	—	DRM
15:13	WG2	15.2	19.2	—	4.0	—	—	DRM
15:16	WG1	15.0	19.8	—	4.8	—	—	DRM

Unburned Loss % = $\left(1 - \frac{H_a/C}{H_a/C_b}\right) \frac{C \times 14500}{Btu/lb.}$

Where

$\frac{H_a}{C_b}$ is from gas analysis

$\frac{H_a}{C}$ Btu/lb. is from coal analysis

Note: For complete uniform combustion, all points should lie along straight line drawn through pivot point

GENERAL DATA

S.F.
A.F.

FUEL ANALYSIS

H
O
C
BTU/LB
H_a/C

SUBJECT Economizer Outlet, West End
Probe # E43 Page 2 of 2
Start Time: 10:00 restart 10:45
End Time: 15:19

FILE NO.
BY D. R. Miers
DATE 6/26/87
REV.

THE BABCOCK & WILCOX CO.
RESEARCH LABORATORY
ALLIANCE, OHIO

DRAWING NO.

IP14_001970

Babcock & Wilcox

GENERAL CALCULATIONS

TAP	POINT	STATIC IN.	TEMP.	ΔP IN.	ANGLE (DEGREE)	DATA BY	LOCATION (CLEARANCE)
F	7	-3.5	750.2	.268	0	SAB	1413
WF	6	-3.5	754.8	.244	-35	SAB	1418
WF	5	-3.6	751.6	.209	-10	SAB	1421
WF	4	-3.5	758.8	.372	-5	SAB	1425
WF	3	-3.7	767.0	.200	0	SAB	1430
WF	2	-3.8	766.6	.092	0	SAB	1435
WF	1	-3.8	762.0	.058	-5	SAB	1439
WG	7	-3.6	764.6	.134	-40	SAB	1457
WG	6	-3.7	762.6	.253	-30	SAB	1500
WG	5	-3.5	753.8	.307	-5	SAB	1503
WG	4	-3.5	758.6	.434	-10	SAB	1507
WG	3	-3.5	766.2	.148	-10	SAB	1510
WG	2	-3.5	766.8	.102	-5	SAB	1513
WG	1	-3.6	712.0	.067	0	SAB	1516

Intermountain Power

Air Heater Performance Test

DRM/DCS/PLK SAB 6-26-87

IP14_001971

Babcock & Wilcox

GENERAL CALCULATIONS

Probe #E43

TAP	POINT	STATIC IN.	TEMP.	ΔP IN.	ANGLE (DEGREE)	DATA BY	LOCATION (REMARKS)
WA	7	-3.7	747.4	0.266	-40	PLK	1000
WA	6	-3.7	742.4	0.195	-30	PLK	1005
WA	5	-3.7	733.6	0.124	-35	SAB	1010
WA	4	-3.8	728.2	0.224	-30	SAB	1014
WA	3	-3.7	735.8	0.593	+10	SAB	1018
WA	2	-3.8	742.8	0.043	0	SAB	1023
WA	1	-3.8	728.6	0.039	-5	SAB	1027
WA	7	-3.4	732.0	0.214	-35	SAB	1045
WA	6	-3.5	736.2	0.297	-25	SAB	1050
WA	5	-3.5	732.8	0.366	-35	SAB	1055
WA	4	-3.5	729.4	0.417	-30	SAB	1100
WA	3	-3.7	736.8	0.046	+5	SAB	1105
WA	2	-3.5	743.0	0.046	0	SAB	1111
WA	1	-3.8	733.0	0.046	-5	SAB	1116
WB	7	-3.3	746.6	0.354	-25	SAB	1127
WB	6	-3.3	745.8	0.268	-30	SAB	1132
WB	5	-3.4	746.2	0.114	-30	SAB	1137
WB	4	-3.4	745.2	0.336	-25	SAB	1143
WB	3	-3.5	747.6	0.041	-10	SAB	11:46
WB	2	-3.5	748.6	0.048	+5	SAB	11:50
WB	1	-3.7	688.6	0.051	0	SAB	11:55

UNIT PROBLEM

Intermountain Power

Air Heater Performance Test

DRM/DCS/SAB PLK 6-26-87

IP14_001972

Babcock & Wilcox

GENERAL CALCULATIONS

FAP	POINT	STATIC IN.	TEMP.	ΔP IN.	ANGLE (DEGS)	DATA BY	LOCATION (REMARKS)
WC	7	-3.5	749.4	.344	-10	SAB	1205
WC	6	-3.5	752.6	.214	-20	SAB	1219
WC	5	-3.5	758.4	.322	-30	SAB	1223
WC	4	-3.5	755.8	.422	-25	SAB	1226
WC	3	-3.7	765.8	.292	-15	SAB	1231
WC	2	-3.6	761.0	.053	+5	SAB	1235
WC	1	-3.5	728.0	.046	0	SAB	1239
WD	7	-3.6	749.2	.349	0	SAB	1252
WD	6	-3.6	750.6	.268	-20	SAB	1257
WD	5	-3.5	752.0	.351	-35	SAB	1301
WD	4	-3.6	765.8	.449	-25	SAB	1306
WD	3	-3.7	772.0	.410	-10	SAB	1310
WD	2	-3.8	768.2	.097	0	SAB	1314
WD	1	-3.8	755.2	.056	-5	SAB	1317
WE	7	-3.4	751.2	.422	0	SAB	1233
WE	6	-3.6	752.2	.356	-20	SAB	1236
WE	5	-3.5	749.6	.288	-20	SAB	1239
WE	4	-3.6	763.0	.488	-20	SAB	1242
WE	3	-3.6	771.0	.432	-5	SAB	1245
WE	2	-3.5	768.8	.095	-5	SAB	1249
WE	1	-3.6	745.6	.056	0	SAB	1252

Intermountain Power

Air Heater Performance Test

DRM/DCS/SAB PLK 6-26-87

IP14_001973

Babcock & Wilcox

GENERAL CALCULATIONS

Probe # E6

TAP	POINT	STATIC IN.	TEMP.	Δ P IN.	ANGLE (DEGREE)	DATA BY	LOCATION (REMARKS)
WN	7	-2.9	722.0	0.371 [redacted]	[redacted] -45	PLK	1106
WN	6	-2.7	747.8	0.402	-54	PLK	1110
WN	5	-2.8	755.0	0.417	-56	PLK	1115
WN	4	-2.7	760.4	0.476	-65	PLK	1120
WN	3	-2.8	760.8	0.050	-20	PLK	1125
WN	2	-2.8	767.4	0.673	-60	PLK	1130
WN	1	-3.1	721.6			PLK	1135 (Will not zero)
WM	7	-2.8	752.4	0.183	-35	PLK	1142
WM	6	-2.7	756.0	0.112	-30	PLK	1147
WM	5	-2.7	759.8	0.014	-15	PLK	1152
WM	4	-2.7	764.8	0.024	-25	PLK	1158
WM	3	-2.8	750.8	0.998	-10	PLK	1205
WM	2	-2.8	764.8			PLK	1210 (Will not zer
WM	1	-2.7	763.0			PLK	1216 (Will not zero)
WL	7	-2.9	756.0	0.190	-10	PLK	1222
WL	6	-3.0	761.4	0.416	-45	DLC	1228
WL	5	-3.0	762.6	0.432	-50	DLC	1234
WL	4	-2.9	765.0	0.532	-60	DLC	1240
WL	3	-3.1	762.8	0.590	-40	DLC	1246
WL	2	-3.0	764.6			PLK	1252 (will not zero)
WL	1	-2.8	737.2			PLK	1258 (will not zero)
WK	7	-2.8	765.8	0.286	-40	PLK	1303
WK	6	-2.9	763.0	0.407	-50	PLK	1307

Intermountain Power

Air Heater Performance Test

RB-614

MS/DLC/PLK

6-26-87

D. 1 of 2

IP14_001974

Babcock & Wilcox
GENERAL CALCULATIONS

Probe # E6

TAP	POINT	STATIC IN.	TEMP.	ΔP IN.	ANGLE (DEGREE)	DATA BY	LOCATION (REMARKS)
WK	5	-3.0	767.0	0.417	-40	PLK	1309
WK	4	-2.8	760.2	0.419	-5	PLK	1312
WK	3	-2.9	760.2	0.854	0	PLK	1315
WK	2	-2.9	766.8			PLK	1318 (couldn't zero)
WK	1	-2.8	710.0			PLK	1321 (couldn't zero)
WJ	7	-2.8	767.6	0.034	-10	PLK	1338
WJ	6	-2.9	766.2	0.401	-45	PLK	1343
WJ	5	-2.9	768.2	0.424	-40	PLK	1348
WJ	4	-3.0	766.4	0.422	0	PLK	1352
WJ	3	-2.9	773.2	0.034	0	PLK	1357
WJ	2	-2.7	764.0			PLK	1402 (couldn't zero
WJ	1	-2.7	737.7			PLK	1407 (couldn't zero)
WI	7	-3.0	759.8	0.401	-75	PLK	1416
WI	6	-3.1	762.0	0.351	-50	PLK	1421
WI	5	-3.0	766.2	0.397	-40	PLK	1426
WI	4	-3.1	770.4	0.505	-35	PLK	1431
WI	3	-3.1	772.8	0.576	-45	PLK	1436
WI	2	-2.9	771.4			PLK	1442 (couldn't zero
WI	1	-2.8	675.8			PLK	1447
WH	7	-2.9	763.0	0.124	-35	PLK	1459
WH	6	-3.0	758.2	0.307	-20	PLK	1404
WH	5	-3.0	752.8	0.439	-25	PLK	1409
WH	4	-2.9	768.8	0.241	0	PLK	1414

Intermountain Power

RB-614

Air Heater Performance Test

MS/DLC/PLK 6-26-87

P. 2 of 3

IP14_001975

Babcock & Wilcox

GENERAL CALCULATIONS

Probe # E6

TAP	POINT	STATIC IN.	TEMP.	ΔP IN.	ANGLE (DEGREE)	DATA BY	LOCATION (REMARKS)
WH	3	-3.0	778.4	0.710	0	PLK	1419
WH	2	-2.9	771.4			PLK	1423 (couldn't zero)
WH	1	-2.8	708.8			PLK	1427 (couldn't zero)

Intermountain Power

RB-614

Air Heater Performance Test

MS/DLC/PLK 6-26-87

Pn 2 OF 3

IP14_001976

RD 26

Probe #E6

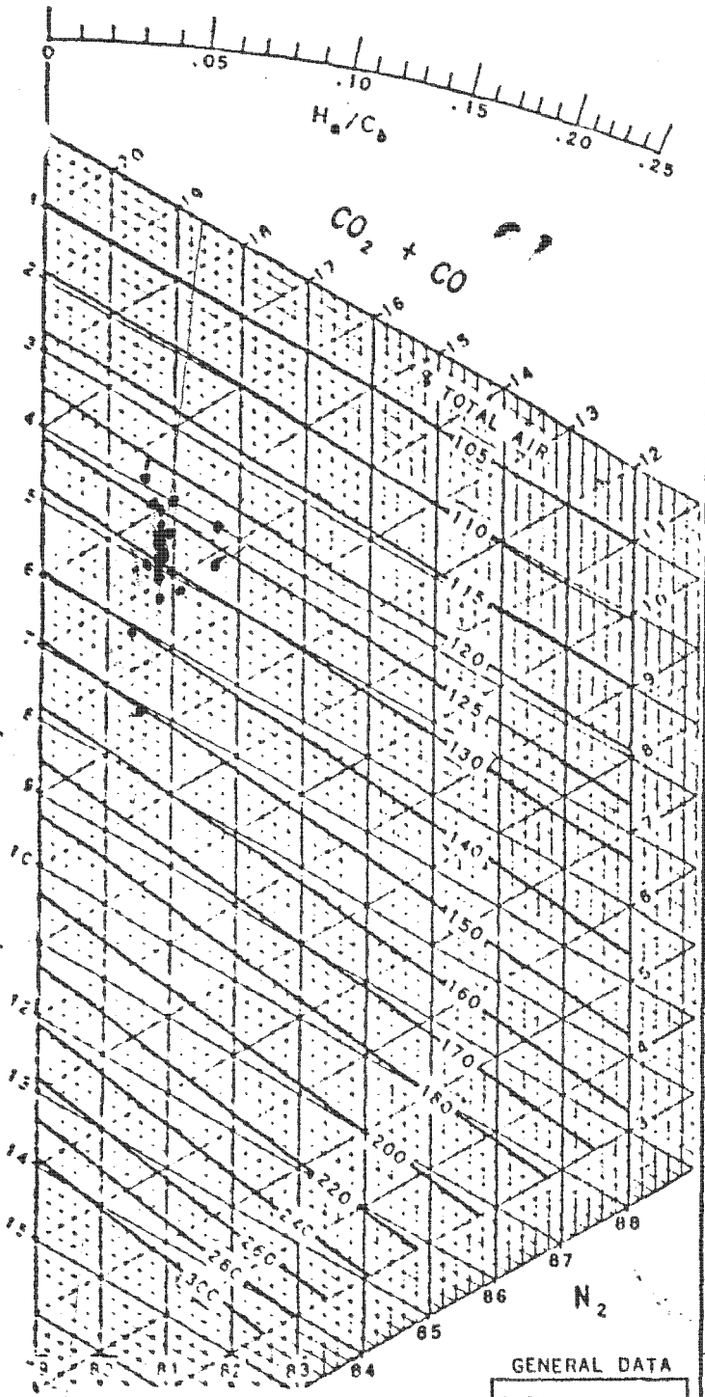

TIME	LOCATION	CO_2	$+O_2$	$+CO$	O_2	CO	% UNIFORMITY	BY
1000	WN-7	14.5	19.2	—	4.7	—		MS
1007	WN-6	14.3	18.3	—	4.0	—		MS
1014	WN-5	14.4	19.2	—	4.8	—		MS
				—		—		
	Restart			—		—		
				—		—		
1105	WN-7	14.4	19.2	—	4.8	—		MS
1110	WN-6	14.4	19.2	—	4.8	—		MS
1115	WN-5	14.4	19.0	—	4.6	—		MS
1120	WN-4	14.2	19.2	—	5.0	—		MS
1125	WN-3	14.1	19.0	—	4.9	—		MS
1130	WN-2	14.1	19.2	—	5.1	—		MS
1135	WN-1	13.7	18.8	—	5.1	—		MS
1142	WM-7	14.8	19.2	—	4.4	—		MS
1147	WM-6	14.3	19.2	—	4.9	—		MS
1152	WM-5	14.2	19.2	—	5.0	—		MS
1158	WM-4	14.0	19.2	—	5.2	—		MS
1205	WM-3	14.0	19.2	—	5.2	—		MS
1210	WM-2	14.0	19.2	—	5.2	—		MS
1216	WM-1	14.0	19.2	—	5.2	—		MS
1222	WL-7	14.4	19.0	—	4.6	—		ED
1228	WL-6	14.6	19.0	—	4.4	—		ED
1234	WL-5	14.5	19.1	—	4.6	—		ED
1240	WL-4	14.0	19.2	—	5.2	—		ED
1246	WL-3	14.4	19.2	—	4.8	—		ED
1252	WL-2	13.8	19.0	—	5.2	—		MS
1300	WL-1	13.5	19.6	—	6.1	—		MS
1304	WK-7	14.8	19.2	—	4.4	—		MS
1307	WK-6	14.5	19.2	—	4.7	—		MS
1309	WK-5	14.4	19.4	—	5.0	—		MS
1312	WK-4	14.6	19.3	—	4.7	—		MS
1316	WK-3	14.8	19.2	—	4.4	—		MS
1319	WK-2	14.4	19.3	—	4.9	—		MS
1322	WK-1	12.4	19.5	—	7.1	—		MS
1338	WJ-7	15.1	19.3	—	4.2	—		MS
1343	WJ-6	15.5	19.4	—	3.9	—		MS
1348	WJ-5	14.8	19.2	—	4.4	—		MS
1353	WJ-4	14.7	19.2	—	4.5	—		MS
1358	WJ-3	14.2	19.4	—	5.2	—		MS
1402	WJ-2	14.8	19.2	—	4.4	—		MS

Enhanced Loss $Q = \left(1 - \frac{H_a C}{H_a C_b}\right) \frac{C \times 14500}{\text{Btu lb.}}$

Where

$\frac{H_a}{C_b}$ is from gas analysis

$\frac{H_a}{C}$ Btu lb is from coal analysis

Note: For complete uniform combustion, all points should lie along straight line drawn through pivot point

GENERAL DATA

S.F.
A.F.

FUEL ANALYSIS

H
O
C
BTU/LB
H_a/C

SUBJECT

Intermountain Power
Air Heater Performance Test

FILE NO. RB-614
BY PLK
DATE 6-26-87
REV.

THE BABCOCK & WILCOX CO.
RESEARCH LABORATORY
ALLIANCE, OHIO

DRAWING NO.

IP14_001977

RD 26

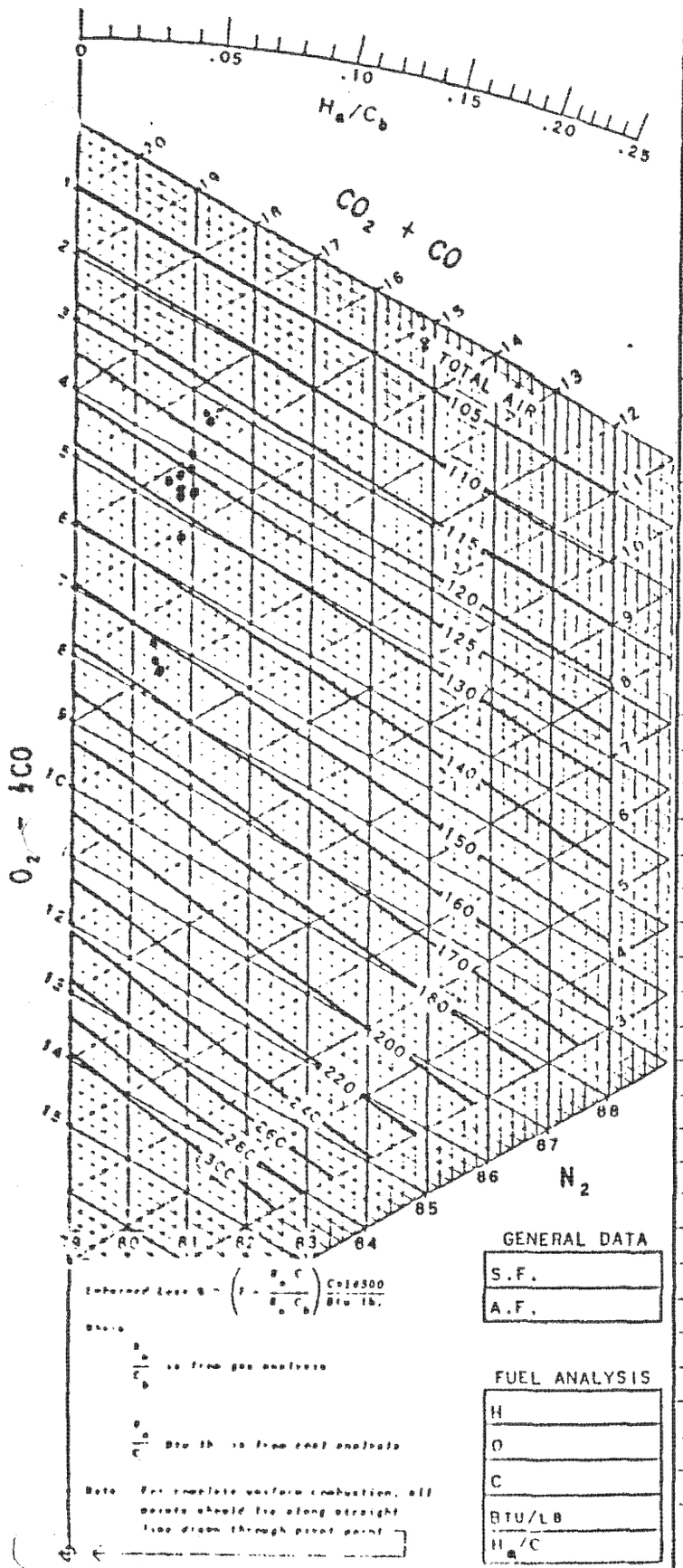

Probe #E6

TIME	LOCATION	CO_2	$+O_2$	$+CO$	O_2	CO		BY
1407	W5-1	12.2	19.6	—	7.4	—		MS
				—		—		
1416	W1-7	13.9	19.1	—	5.2	—		MS
1421	W1-6	14.8	19.2	—	4.4	—		MS
1426	W1-5	14.8	19.0	—	4.2	—		MS
1431	W1-4	15.0	19.0	—	4.0	—		MS
1436	W1-3	14.5	19.2	—	4.7	—		MS
1436	W1-2	14.8	19.2	—	4.4	—		MS
1441	W1-1	12.5	19.6	—	7.1	—		MS
1459	WH-7	14.8	19.0	—	4.2	—		MS
1404	WH-6	14.8	19.2	—	4.4	—		MS
1409	WH-5	15.4	19.0	—	3.6	—		MS
1414	WH-4	15.2	19.2	—	4.0	—		MS
1419	WH-3	14.5	19.2	—	4.7	—		MS
1423	WH-2	14.4	19.0	—	4.6	—		MS
1427	WH-1	12.0	19.4	—	7.4	—		MS

GENERAL DATA

S.F.
A.F.

FUEL ANALYSIS

H
O
C
BTU/LB
H_a/C

SUBJECT: Intermountain Power Air Heater Performance Test

FILE NO. AB-614
BY PLK
DATE 6-26-87
REV.

THE BABCOCK & WILCOX CO.
RESEARCH LABORATORY
ALLIANCE, OHIO

DRAWING NO.

Pg 2 of 2

IP14_001978

PROBE # 28
VPASS NO: 1B
MINIMITE # 4160108

Babcock & Wilcox
GENERAL CALCULATIONS

TAP	POINT	STATIC IN.	TEMP.	ΔP IN.	ANGLE (DEGREE)	DATA BY	LOCATION (REMARKS)
EA7	7	-3.30	715.2	0.209	+10	VKV	10:04
EA6	6	-3.20	708.4	0.249	0	VKV	10:20
EA5	5	-3.10	711.4	0.368	+5	VKV	10:26
EA4	4	-3.20	729.2	0.385	+10	VKV	10:31
EA3	3	-3.50	739.8	0.131	+10	VKV	10:35
			UNIT	UPSET	TEST	REREADED	
EA7	7	-3.20	717.6	0.588	+10	VKV	10:45
EA6	6	-3.10	724.0	0.334	+20	VKV	10:50
EA5	5	-3.20	736.0	0.400	+30	VKV	10:58
EA4	4	-3.20	743.2	0.349	+25	VKV	11:02
EA3	3	-3.10	744.2	0.300	+20	VKV	11:06
EA2	2	-3.30	743.0	0.380	+20	VKV	11:14
EA1	1	-3.20	753.3	0.874	+30	VKV	11:20
EB7	7	-3.00	733.8	1.816	+70	VKV	11:28
EB6	6	-2.90	732.6	1.269	+30	VKV	11:32
EB5	5	-2.90	734.2	0.539	+25	VKV	11:37
EB4	4	-3.00	741.8	0.202	+35	VKV	11:42
EB3	3	-3.00	739.0	0.200	+15	VKV	11:47
EB2	2	-3.10	743.8	0.454	+25	VKV	11:50
EB1	1	-3.10	748.4	0.737	+30	VKV	11:54
EC7	7	-3.30	736.6	0.229	-5	VKV	12:20
EC6	6	-3.50	738.0	0.314	-5	VKV	12:24
EC5	5	-3.20	743.2	0.104	+15	VKV	12:28
EC4	4	-3.20	752.8	0.317	+15	VKV	12:32

ECONOMIZER OUTLET (EAST) DELTA PP UNIT #1
TEAM OF JAW, PAS, VKV
FRI: 6/26/87

IP14_001979

PROBE # 28
V-BOS 3 NO: 118
MINIMITE #4160108

Babcock & Wilcox
GENERAL CALCULATIONS

TAP	POINT	STATIC IN.	TEMP.	ΔP IN.	ANGLE (DEGREE)	DATA BY	LOCATION (REMARKS)
EC3	3	-3.30	749.0	0.461	+10	VKV	12:36
EC2	2	-3.60	759.8	0.734	+10	VKV	12:40
EC1	1	-3.40	750.6	0.810	+5	VKV	12:45
ED7	7	-3.2	754.6	0.344	+5	VKV	12:52
ED6	6	-3.4	752.4	0.307	+5	VKV	12:58
ED5	5	-3.3	756.0	0.109	+10	VKV	1:04
ED4	4	-3.2	763.8	0.136	+5	VKV	1:08
ED3	3	-3.4	762.8	0.385	0	VKV	1:13
ED2	2	-3.3	770.6	0.664	0	VKV	1:16
ED1	1	-3.5	756.0	1.269	0	VKV	1:20
EE7	7	-3.2	751.2	.341	-5	JAW	1:34
EE6	6	-3.1	766.2	0.253	0	VKV	1:39
EE5	5	-3.1	772.2	0.144	+5	VKV	1:43
EE4	4	-3.2	776.4	0.129	+5	VKV	1:46
EE3	3	-3.2	770.6	0.617	0	VKV	1:50
EE2	2	-3.2	778.2	0.827	0	VKV	1:54
EE1	1	-3.1	778.4	0.986	0	VKV	1:58
EF7	7	-3.2	778.4	.317	0	JAW	2:05
EF6	6	-3.3	777.2	0.339	0	VKV	2:21
EF5	5	-3.2	782.0	0.380	0	VKV	2:25
EF4	4	-3.3	785.2	0.314	0	VKV	2:28
EF3	3	-3.5	787.0	0.202	0	VKV	2:36
EF2	2	-3.6	778.6	0.839	0	VKV	2:41
EF1	1	-3.5	716.2	1.079	0	VKV	

ECONOMIZER OUTLET (EAST) DELTA IPP UNIT #1
TEAM OF JAW, RAS, VKV
FRI: 6/26/87

IP14_001980

PROBE # 28
VPAS 3 NO: 108
MINIMITE # 4/6 0108

Babcock & Wilcox
GENERAL CALCULATIONS

TAP	POINT	STATIC IN.	TEMP.	ΔP IN.	ANGLE (DEGREE)	DATA BY	LOCATION (REMARKS)
EG7	7	-3.3	780.8	0.290	+10	VKV	2:56
EG6	6	-3.4	756.0	0.362	+10	VKV	3:00
EG5	5	-3.3	784.2	0.185	-5	VKV	3:04
EG4	4	-3.3	777.4	0.174	-5	VKV	3:08
EG3	3	-3.4	779.6	0.151	-5	VKV	3:11
EG2	2	-3.4	772.0	0.314	-5	VKV	3:13
EG1	1	-3.4	777.4	0.985	-5	VKV	3:16

ECONOMIZER OUTLET (EAST) DELTA PP UNIT #1
TEAM OF JAW, RAS, VKV
FRI: 6/26/87

IP14_001981

6-26-87
RD 26

Economizer Gas Outlet = Delta, IPP, Unit 1 East Flue
Team of RAS, VKV, JAW

1/2

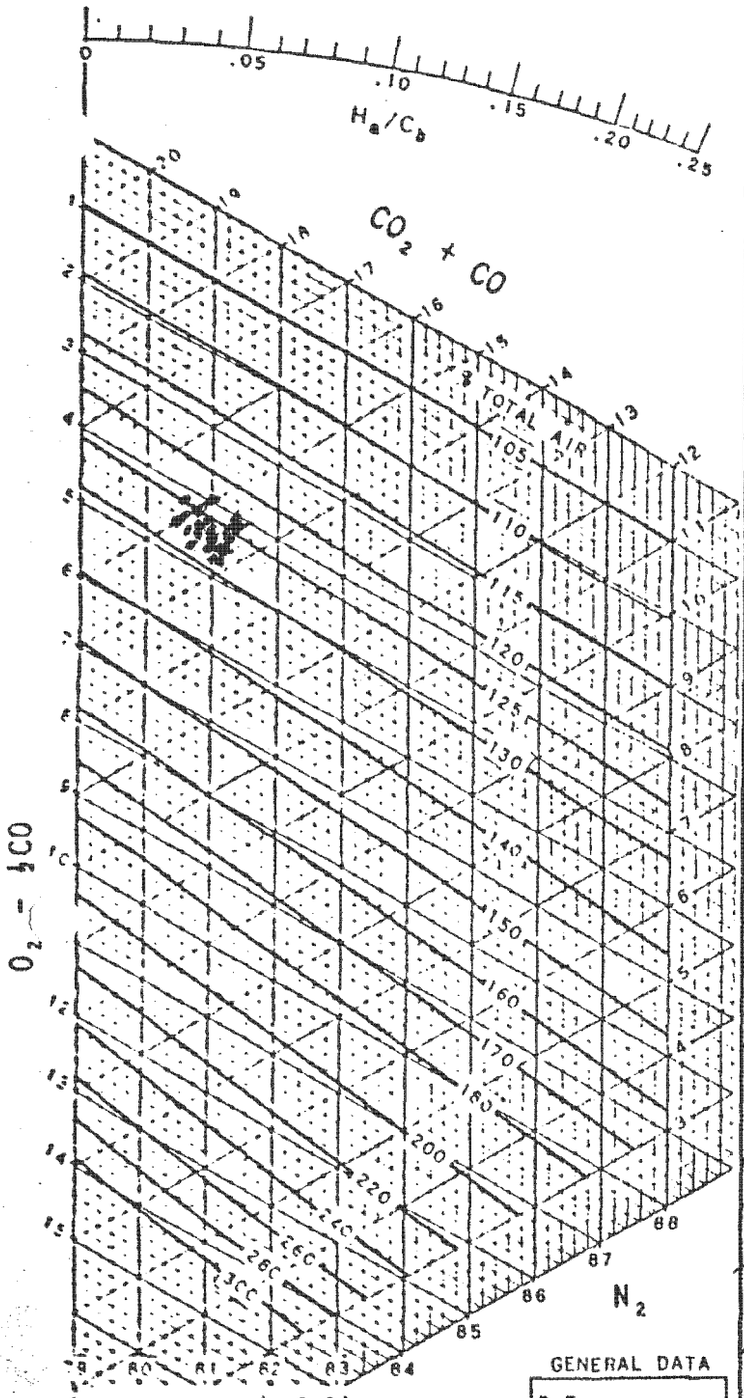

TIME	LOCATION	CO_2	$+ O_2$	$+ CO$	O_2	CO	% [illegible]	BY
10:04	EA 7	14.8	19.0	-	4.2	-		RAS
10:20	EA 6	14.6	19.0	-	4.4	-		RAS
10:26	EA 5	14.6	19.0	-	4.4	-		RAS
10:31	EA 4	14.6	19.2	-	4.6	-		RAS
10:35	EA 3	14.2	19.2	-	5.0	-		RAS
	unit		upset			-		
10:45	EA 7	14.4	18.8	-	4.4	-		RAS
10:50	EA 6	14.6	19.2	-	4.6	-		RAS
10:58	EA 5	14.7	19.2	-	4.5	-		
11:02	EA 4	14.2	19.0	-	4.8	-		RAS
11:06	EA 3	14.5	19.0	-	4.5	-		RAS
11:14	EA 2	14.4	19.0	-	4.6	-		VKV
11:20	EA 1	14.3	19.0	-	4.7	-		RAS
11:28	EB 7	14.2	18.9	-	4.7	-		RAS
11:32	EB 6	14.8	19.3	-	4.5	-		RAS
11:37	EB 5	14.6	19.0	-	4.4	-		RAS
11:42	EB 4	14.2	19.0	-	4.8	-		RAS
11:47	EB 3	15.0	19.0	-	4.0	-		RAS
11:50	EB 2	14.5	19.2	-	4.7	-		RAS
11:54	EB 1	14.5	19.2	-	4.7	-		RAS
12:20	EC 7	14.3	18.7	-	4.4	-		RAS
12:24	EC 6	15.2	19.4	-	4.2	-		RAS
12:28	EC 5	15.0	19.3	-	4.3	-		RAS
12:32	EC 4	14.6	18.7	-	4.1	-		RAS
12:36	EC 3	14.7	19.0	-	4.3			RAS
12:40	EC 2	14.2	19.0	-	4.8	-		RAS
12:45	EC 1	14.2	18.8	-	4.6	-		RAS
12:52	ED 7	14.5	18.8	-	4.1	-		RAS
12:58	ED 6	14.5	19.0	-	4.5	-		RAS
1:04	ED 5	14.6	19.2	-	4.6	-		RAS
1:08	ED 4	15.0	19.3	-	4.3	-		RAS
1:13	ED 3	14.9	19.3	-	4.4	-		RAS
1:16	ED 2	14.9	19.3	-	4.4	-		RAS
1:20	ED 1	14.2	19.2	-	5.0	-		RAS
1:34	EE 7	14.2	18.9	-	4.7	-		RAS
1:39	EE 6	15.0	19.2	-	4.2	-		RAS
1:43	EE 5	15.0	19.2	-	4.2	-		RAS
1:46	EE 4	15.0	19.2	-	4.2	-		RAS
1:50	EE 3	15.2	19.4	-	4.2	-		RAS
1:54	EE 2	15.0	19.4	-	4.4	-		RAS

Laboratory Loss % = $\left(1 - \frac{H_a C}{H_a C_b}\right) \frac{C \times 14500}{\text{Btu lb.}}$

Where

$\frac{H_a}{C_b}$ is from gas analysis

$\frac{H_a}{C}$ Btu lb is from coal analysis

Note: For complete uniform combustion, all points should fix along straight line drawn through pivot point

GENERAL DATA

S.F.	
A.F.	

FUEL ANALYSIS

H	
O	
C	
BTU/LB	
H_a/C	

SUBJECT Economizer Gas Outlet
Delta, IPP, Unit 1, East Flue
Team of RAS, VKV, JAW

FILE NO.
BY JAW
DATE 6-26-87
REV.

THE BABCOCK & WILCOX CO.
RESEARCH LABORATORY
ALLIANCE, OHIO

DRAWING NO.

IP14_001982

6-26-87

RD 26

Economizer Gas Outlet: Delta, IPP Unit 1 East Flue 2/2

Team of RAS, VKU, JAW

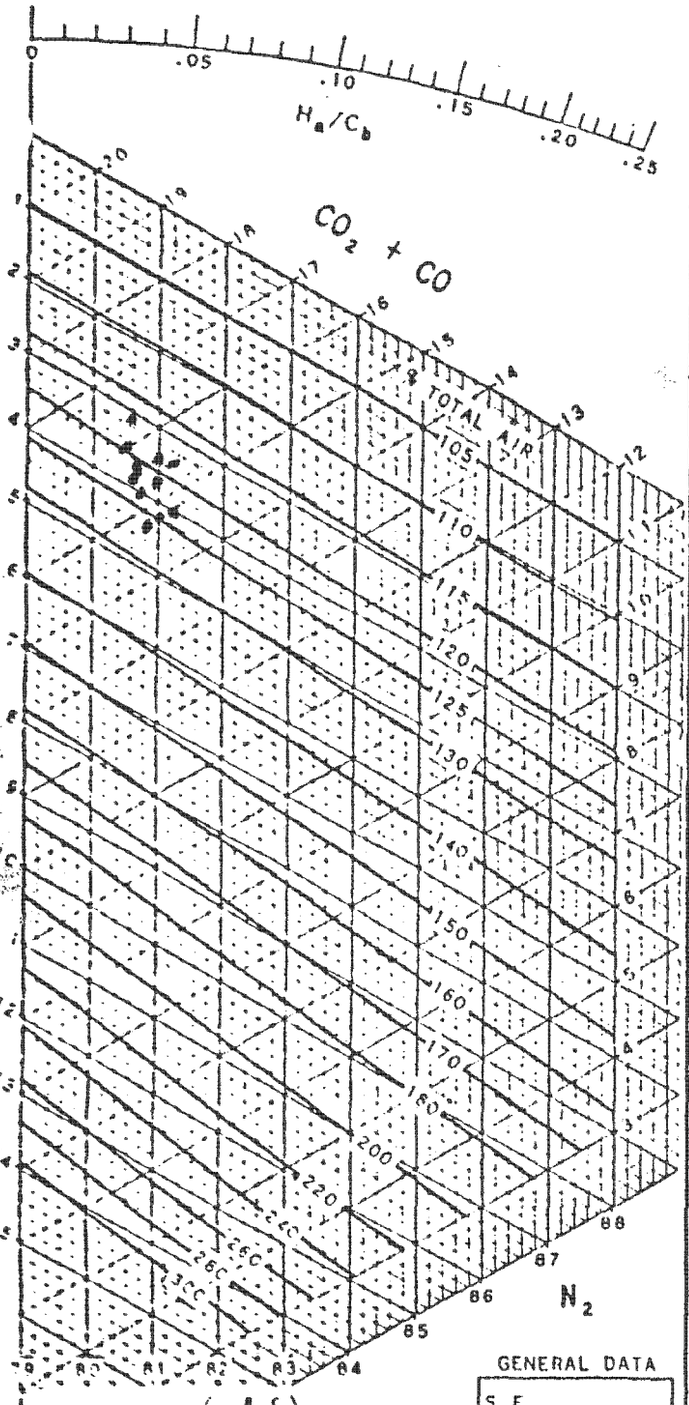

TIME	LOCATION	CO_2	+ O_2	+ CO	O_2	CO		BY
1:55	EE 1	15.2	19.2	—	4.0	—		RAS
~~2:15~~								
2:15	EF 7	14.8	18.8	—	4.0	—		RAS
2:18	EF 6	15.4	18.8	—	3.4	—		RAS
2:21	EF 5	15.4	18.8	—	3.4	—		RAS
2:25	EF 4	15.5	19.0	—	4.5	—		RAS
2:28	EF 3	15.4	19.3	—	3.9	—		RAS
2:36	EF 2	15.2	19.0	—	4.2	—		RAS
2:41	EF 1	14.8	19.2	—	4.4	—		RAS
2:56	EG 7	15.4	19.2	—	3.8	—	—	RAS
3:00	EG 6	15.4	19.2	—	3.8	—		RAS
3:04	EG 5	16.2	19.4	—	3.2	—		RAS
3:08	EG 4	16.0	19.5	—	3.5	—		RAS
3:11	EG 3	15.6	19.4	—	3.8	—		RAS
3:13	EG 2	15.2	19.3	—	4.1	—		RAS
3:16	EG 1	14.8	19.0	—	4.2	—	—	RAS

Combined Loss % = $\left(1 - \frac{H_a C}{H_a C_b}\right) \frac{C \times 14500}{\text{Btu lb.}}$

Where

$\frac{H_a}{C_b}$ is from gas analysis

$\frac{H_a}{C}$ Btu lb. is from coal analysis

Note: For complete uniform combustion, all points should lie along straight line drawn through pivot point

GENERAL DATA

S.F.
A.F.

FUEL ANALYSIS

H
O
C
BTU/LB
H_a/C

SUBJECT Economizer Gas Outlet
Delta, IPP, Unit 1, East Flue
Team of RAS, VKU, JAW

FILE NO.
BY JAW
DATE 6-26-87
REV.

THE BABCOCK & WILCOX CO.
RESEARCH LABORATORY
ALLIANCE, OHIO

DRAWING NO.

IP14_001983

Babcock & Wilcox
GENERAL CALCULATIONS

PROBE TIP E8

1/3

TAP	POINT	STATIC IN.	TEMP.	ΔP IN.	ANGLE (DEGREE)	DATA BY	LOCATION (REMARKS)
EN	7	-3.0	756.8	.488	50E	PC	1002
EN	6	-3.1	751.0	.568	50E	PC	1006
EN	5	-3.2	748.2	.605	40E	PC	1010
EN	4	-3.9	730.6	.749	70W	PC	1014
EN	3	-3.8	730.2	.327	70W	PC	1017
EN	2	-3.5	741.2	.031	70W	PC	1019 swung around completely
EN	1	-3.3	712.6	.031	70W	PC	1022
⇒ REPEAT	PORT	#EN →	UNIT	UPSET			
EN	7	-3.0	749.0	.376	40E	PC	1045
EN	6	-3.0	745.6	.505	50E	PC	1048
EN	5	-3.0	741.4	.578	40E	PC	1051
EN	4	-3.0	728.2	.705	50E	PC	1055
EN	3	-3.4	730.0	.131	50E	PC	1058
EN	2	-3.2	738.0	.034	60E	PC	1101 swung around comp
EN	1	-3.4	710.8	.029	50E	PC	1105
EM	7	-2.8	751.0	.441	40E	PC	1127
EM	6	-2.7	748.6	.505	30E	PC	1131
EM	5	-2.8	752.4	.627	30E	PC	1134
EM	4	-2.8	745.8	.744	30E	PC	1137
EM	3	-3.2	749.0	.075	30W	PC	1140 swung around comp
EM	2	-3.2	746.0	.004	0	PC	1143 swung around comp
EM	1	-3.3	714.8	.004	0	PC	1146

IPP

Fechheimer Traverse - Economizer Outlet | P. Chu | 6/26/8

IP14_001984

Babcock & Wilcox

PROBE TIP E8 GENERAL CALCULATIONS

TAP	POINT	STATIC IN.	TEMP.	ΔP IN.	ANGLE (DEGREE)	DATA BY	LOCATION (REFERENCE)
EL	7	-3.4	739.4	.312	30W	PC	1221
EL	6	-3.6	744.4	.471	30W	PC	1226
EL	5	-3.6	759.2	.502	30W	PC	1229
EL	4	-3.7	762.0	.026	30W	PC	1233 swing completely as argum
EL	3	-3.6	774.6	.395	60W	PC	1236
EL	2	-3.5	764.2	.815	60W	PC	1239
EL	1	-3.5	690	1.181	60W	PC	1242 - took 'average' temp temp - not steady
EK	7	-3.1	734.4	.209	60E	PC	1257
EK	6	-3.1	739.4	.310	50E	PC	1301
EK	5	-3.5	750.0	.444	30W	PC	1304
EK	4	-3.7	775.0	.388	40W	PC	1307
EK	3	-3.7	770.6	.732	40W	PC	1311
EK	2	-3.4	764.6	.087	0	PC	1314 swing around
EK	1	-3.4	734.4	.039	40W	PC	1317
EJ	7	-3.3	750.6	.151	40W	PC	1335 swing around
EJ	6	-3.3	749.4	.368	50W	PC	1338
EJ	5	-3.5	746.6	.461	30W	PC	1341
EJ	4	-3.5	773.6	.517	40W	PC	1344
EJ	3	-3.5	779.2	.390	30W	PC	1347
EJ	2	-3.4	772.0	.139	40W	PC	1350
EJ	1	-3.4	722.6	.043	40W PC	PC	1353

IPP

Fechheimer Traverse - Economizer Outlet P. Chw 6/26/87

Babcock & Wilcox
GENERAL CALCULATIONS

PROBE TIP ES

3/3

TAP	POINT	STATIC IN.	TEMP.	Δp IN.	ANGLE (DEGREE)	DATA BY	LOCATION (CLEARANCE)
I	7	-3.5	760.2	.124	50EW PC	PC	1416
EI	6	-3.4	760.2	.119	60EW PC	PC	1419
EI	5	-3.5	759.6	.166	40EW PC	PC	1422
EI	4	-3.7	785.2	.241	40EW PC	PC	1425
EI	3	-3.8	770.8	.217	30EW PC	PC	1429
EI	2	-3.7	767.4	.053	30W	PC	1432 swung around completely
EI	1	-3.6	752.0	.043	40W	PC	1435
EH	7	-3.4	773.2	.197	35W	PC	1458
EH	6	-3.2	778.0	.356	50E	PC	1501
EH	5	-3.1	770.4	.432	60E	PC	1505
EH	4	-2.8	777.7	.595	60E PC	PC	1508
EH	3	-3.1	776.2	.634	60E PC	PC	1510
EH	2	-3.5	776.4	.046	50E	PC	1513 swung around completely
EH	1	-3.4	748.2	.041	40E	PC	1516

IPP

Fechheimer Traverse - Economizer Outlet P. Chu 6/26/87

IP14_001986

RD 26

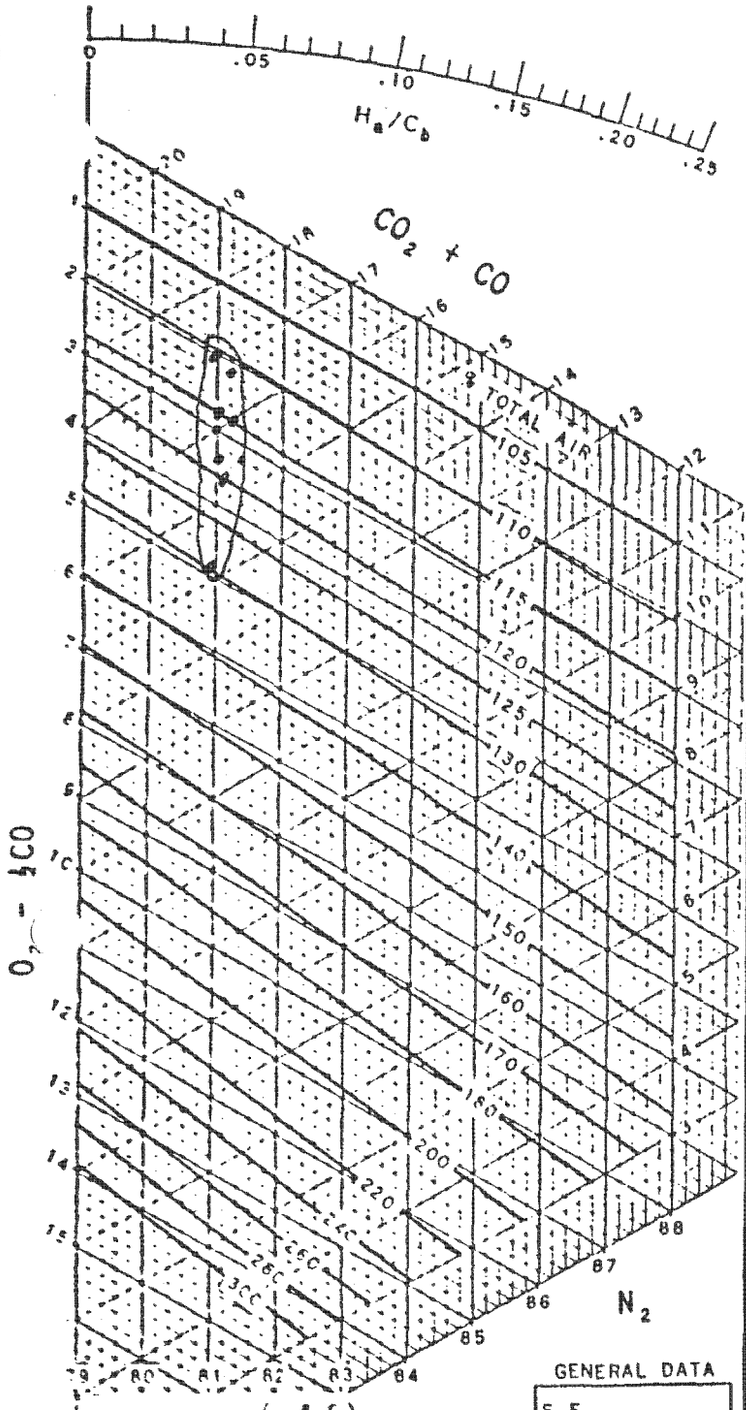

TIME	LOCATION	CO_2	$+O_2$	$+CO$	O_2	CO	%	BY
0855	ORSAT	REJUVENATED AND						BJJ
	LEAK	CHECKED; OKV						
1000	BEGIN	TEST						
1005	EN7	15.4	18.6		3.2			BJJ
1008	EN6	16.0	18.8		2.8			BJJ
1012	EN5	16.2	19.0		2.8			BJJ
1016	EN4	16.0	19.0		3.0			BJJ
1019	EN3	16.0	19.0		3.0			BJJ
1023	EN2	16.2	19.2		3.0			BJJ
1028	EN1	15.0	19.2		4.2			BJJ
	TEST	ABORT						
1048	EN7	16.0	18.8		2.8			BJJ
1052	EN6	16.4	19.0		2.6			BJJ
1055	EN5	16.2	18.8		2.6			BJJ
1059	EN4	16.4	19.0		2.6			BJJ
1103	EN3	15.6	19.0		3.4			BJJ
1106	EN2	16.0	19.0		3.0			BJJ
1109	EN1	15.4	19.2		3.8			BJJ
1127	EM7	15.6	19.0		3.4			BJJ
1132	EM6	16.2	19.0		2.8			BJJ
1136	EM5	16.0	19.0		3.0			BJJ
1139	EM4	17.0	19.0		2.0			BJJ
1142	EM3	16.4	19.0		2.6			BJJ
1146	EM2	15.8	18.8		3.0			BJJ
1149	EM1	15.2	18.8		3.6			BJJ
1224	EL7	16.2	19.0		2.8			BJJ
1228	EL6	16.0	19.2		3.2			BJJ
1232	EL5	16.2	19.0		2.8			BJJ
1235	EL4	16.6	18.8		2.2			BJJ
1238	EL3	16.6	18.8		2.2			BJJ
1241	EL2	16.0	19.2		3.2			BJJ
1244	EL1	14.2	19.2		5.0			BJJ

Unburned Loss % = $\left(1 - \frac{H_a/C}{H_a/C_b}\right) \frac{C \times 14500}{Btu/lb.}$

Where

$\frac{H_a}{C_b}$ is from gas analysis

$\frac{H_a}{C}$ Btu/lb is from coal analysis

Note: For complete uniform combustion, all points should lie along straight line drawn through pivot point

GENERAL DATA

S.F.	
A.F.	

FUEL ANALYSIS

H	
O	
C	
BTU/LB	
H_a/C	

SUBJECT DELTA UTAH AIR HEATER TEST
ECONOMIZER OUTLET

FILE NO.
BY JANKURA
DATE 6-26-87
REV.

THE BABCOCK & WILCOX CO.
RESEARCH LABORATORY
ALLIANCE, OHIO

DRAWING NO.

PAGE 1 OF 2

IP14_001987

RD 26

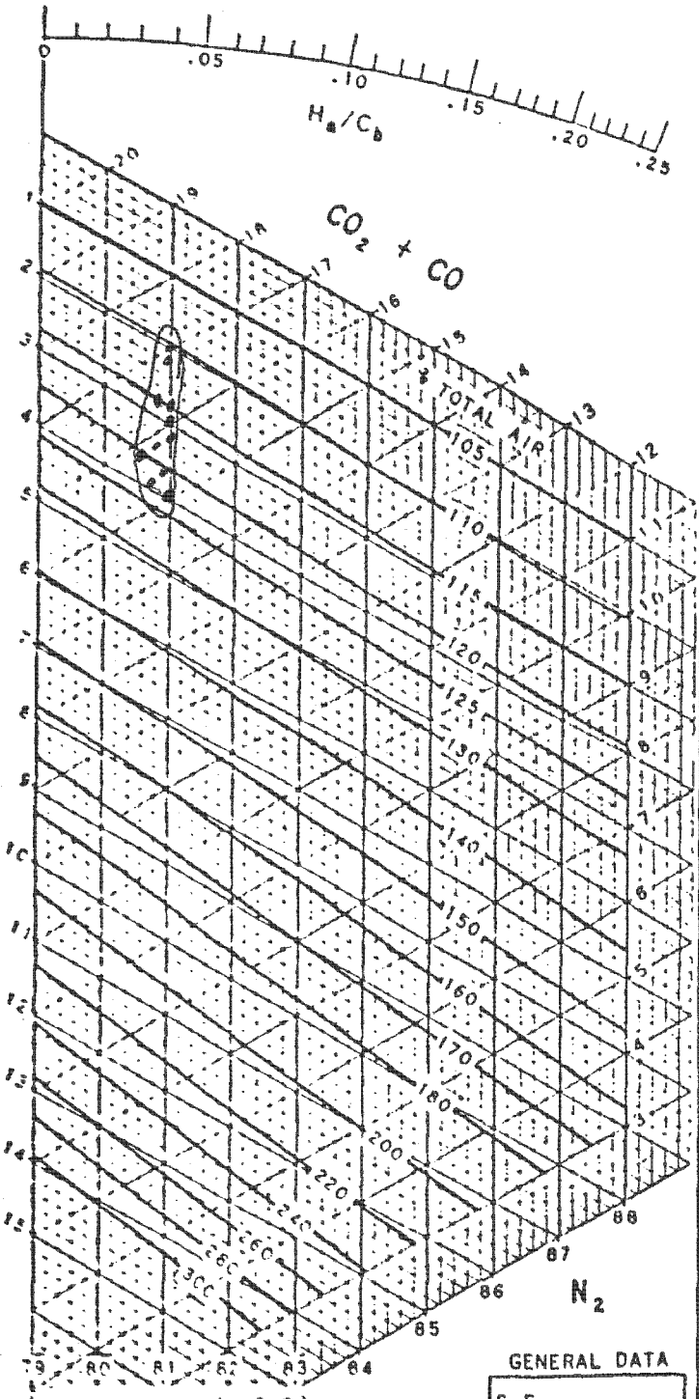

TIME	LOCATION	CO_2	+ O_2	+ CO	O_2	CO	% UNBURNED	BY
1256	EK7	15.8	19.0		3.2			BJJ
1301	EK6	15.8	19.4		3.6			BJJ
1306	EK5	15.8	19.2		3.4			BJJ
1310	EK4	16.8	19.0		2.2			BJJ
1313	EK3	17.0	19.2		2.0			BJJ
1317	EK2	16.0	19.0		3.0			BJJ
1320	EK1	15.8	19.0		3.2			BJJ
1335	EJ7	15.2	19.0		3.8			BJJ
1339	EJ6	15.4	19.4		4.0			BJJ
1342	EJ5	15.6	19.0		3.4			BJJ
1345	EJ4	16.4	19.0		2.6			BJJ
1349	EJ3	16.4	19.0		2.6			BJJ
1352	EJ2	15.8	19.2		3.4			BJJ
1355	EJ1	16.0	19.2		2.8			BJJ
1418	EI7	15.0	19.0		4.0			BJJ
1421	EI6	15.4	19.0		3.6			BJJ
1425	EI5	15.6	19.2		3.6			BJJ
1429	EI4	16.4	19.2		2.8			BJJ
1432	EI3	16.2	19.0		2.8			BJJ
1435	EI2	16.2	19.0		2.8			BJJ
1439	EI1	15.8	19.0		3.2			BJJ
1458	EH7	15.0	19.0		4.0			BJJ
1502	EH6	15.6	19.2		3.6			BJJ
1506	EH5	16.4	19.2		2.8			BJJ
1509	EH4	15.8	19.0		3.2			BJJ
1512	EH3	15.4	19.2		3.8			BJJ
1516	EH2	16.0	19.0		3.0			BJJ
1519	EH1	14.6	18.8		4.2			BJJ

Unburned Loss % = $\left(1 - \frac{H_a C}{H_a C_b}\right) \frac{C \times 14500}{Btu\ lb.}$

Where

$\frac{H_a}{C_b}$ is from gas analysis

$\frac{H_a}{C}$ Btu lb is from coal analysis

Note For complete uniform combustion, all points should lie along straight line drawn through pivot point

GENERAL DATA

S.F.
A.F.

FUEL ANALYSIS

H
O
C
BTU/LB
H_a/C

SUBJECT DELTA UTAH AIR HEATER TEST
ECONOMIZER OUTLET

FILE NO.
BY JANKURA
DATE 6-26-87
REV.

THE BABCOCK & WILCOX CO.
RESEARCH LABORATORY
ALLIANCE, OHIO

DRAWING NO.

PAGE 2 OF 2

IP14_001988

6-26-87

Babcock & Wilcox
GENERAL CALCULATIONS

PROBE E-27
SER GAS IN
EAST

10:00 TAP	POINT	STATIC IN.	TEMP.	Δp IN.	ANGLE (DEGREE)	DATA BY	LOCATION (REMARKS)
	1	-3.9	737	0.397	7	MPH	
	2	-4.0	741	0.415	10	MPH	
	3	-4.0	740	0.432	10	MPH	
	4	-3.9	739	0.383	15	MPH	
	5	-3.95	735	0.236	10	MPH	
	6	-3.9	723	0.141	5	MPH	
	7	-3.9	714	0.043	0	MPH	
B	1	-3.9	738	0.378	0	MPH	
	2	-3.9	747	0.363	15	MPH	
	3	-3.9	747	0.400	20	MPH	
	4	-3.95	746	0.378	20	MPH	
	5	-3.9	743	0.307	15	MPH	
	6	-3.9	741	0.178	17	MPH	
	7	-4.0	737	0.021	25	MPH	
11:00							
C	1	-3.9	739	0.378	10	MPH	
	2	-3.9	751	0.368	20	MPH	
	3	-3.8	752	0.412	25	MPH	
	4	-4.0	750	0.356	22	MPH	
	5	-3.9	749	0.324	15	MPH	
	6	-3.8	746	0.253	20	MPH	
	7	-3.9	740	0.024	18	MPH	

IP14_001989

1115 E-27 6/26/87

Babcock & Wilcox
GENERAL CALCULATIONS

SEC EAST GAS INLET

FAP	POINT	STATIC IN.	TEMP.	ΔP IN.	ANGLE (DEGREE)	DATA BY	LOCATION (REMARKS)
D	1	-3.9	737	.361	15	[illegible]	
	2	-4.0	753	.419	25	[illegible]	
	3	-4.0	752	.371	25	[illegible]	
	4	-3.9	750	.339	15	[illegible]	
	5	-4.0	749	.287	10	[illegible]	
	6	-4.0	743	.185	15	[illegible]	
	7	-3.9	742	.009	0	[illegible]	
E	1	-3.9	740	.434	15	[illegible]	
	2	-3.9	752	.432	25	[illegible]	
	3	-4.0	750	.400	30	[illegible]	
	4	-4.0	749	.317	10	[illegible]	
	5	-4.0	746	.302	5	[illegible]	
	6	-3.9	740	.200	5	[illegible]	
	7	-4.0	735	.083	0	[illegible]	
F	1	-4.0	744	.466	15	[illegible]	
	2	-4.0	753	.405	25	[illegible]	
	3	-4.1	751	.415	22	[illegible]	
	4	-4.0	749	.324	10	[illegible]	
	5	-4.0	746	.310	0	[illegible]	
	6	-4.0	744	.212	0	[illegible]	
	7	-4.0	740	.056	0	[illegible]	

IP14_001990

6-26-87

Babcock & Wilcox
GENERAL CALCULATIONS

PROBE E-27
SEC. GAS IN
EAST

11:20 TAP	POINT	STATIC IN.	TEMP.	ΔP IN.	ANGLE (DEGREE)	DATA BY	LOCATION (REMARKS)
G	1	-3.7	737	0.231	15	MPH	
	2	-3.8	755	0.434	35	MPH	
	3	-3.8	758	0.297	25	MPH	
	4	-3.8	757	0.222	5	MPH	
	5	-3.8	753	0.280	0	MPH	
	6	-3.8	752	0.122	7	MPH	
	7	-3.8	750	0.053	0	MPH	
H	1	-3.5	742	0.327	15	MPH	
	2	-3.6	756	0.395	15	MPH	
	3	-3.7	758	0.461	10	MPH	
	4	-3.7	757	0.244	0	MPH	
	5	-3.8	755	0.126	10	MPH	
	6	-3.9	751	0.056	30	MPH	
	7	-3.9	749	0.009	0	MPH	
I	1	-3.6	747	0.534	20	MPH	
	2	-3.8	757	0.473	15	MPH	
	3	-3.8	759	0.439	10	MPH	
	4	-3.8	759	0.197	0	MPH	
	5	-3.8	756	0.090	0	MPH	
	6	-3.9	754	0.051	15	MPH	
	7	-3.8	753	0.007	0	MPH	

6-26-87 1140

Babcock & Wilcox
GENERAL CALCULATIONS

PROBE E-27
SEC. GAS IN
EAST

TAP	POINT	STATIC IN.	TEMP.	ΔP IN.	ANGLE (DEGREE)	DATA BY	LOCATION (REMARKS)
J	1	-3.9	742	.561	15	[illegible]	
	2	-4.0	752	.549	15	[illegible]	
	3	-4.0	755	.483	5	[illegible]	
	4	-4.1	752	.236	0	[illegible]	
	5	-4.0	751	.058	0	[illegible]	
	6	-4.0	752	.012	0	[illegible]	
	7	-4.0	752	.004	0	[illegible]	
K	1	-3.9	744	.515	15	[illegible]	
	2	-4.0	752	.515	15	[illegible]	
	3	-3.7	752	.468	5	[illegible]	
	4	-3.9	751	.307	0	[illegible]	
	5	-4.0	751	.100	0	[illegible]	
	6	-4.0	751	.090	0	[illegible]	
	7	-4.0	751	.017	0	[illegible]	
L	1	-3.9	740	.537	15	[illegible]	
	2	-3.8	750	.495	15	[illegible]	
	3	-4.0	750	.363	3	[illegible]	
	4	-4.0	749	.175	0	[illegible]	
	5	-4.1	751	.046	0	[illegible]	
	6	-4.1	752	.004	0	[illegible]	
	7	-4.1	751	.007	0	[illegible]	

IP14_001992

6-26-87

11:50

Babcock & Wilcox
GENERAL CALCULATIONS

PROBE E-27
SEC. GAS IN
EAST

TAP	POINT	STATIC IN.	TEMP.	ΔP IN.	ANGLE (DEGREE)	DATA BY	LOCATION (REMARKS)
M	1	-3.7	740	0.456	10	MPH	
	2	-3.6	747	0.481	10	MPH	
	3	-3.8	746	0.273	15	MPH	
	4	-4.0	744	0.080	15	MPH	
	5	-4.0	739	0.012	0	MPH	
	6	-3.9	740	0.007	0	MPH	
	7	-3.9	735	0.019	0	MPH	
N	1	-3.5	741	0.031	8	MPH	
	2	-3.6	747	0.029	5	MPH	
	3	-3.7	746	0.205	10	MPH	
	4	-3.9	744	0.180	17	MPH	
	5	-4.0	739	0.188	15	MPH	
	6	-3.9	737	0.029	0	MPH	
	7	-3.9	735	0.112	0	MPH	

IP14_001993

6-26-87

1#30

Babcock & Wilcox
GENERAL CALCULATIONS

PROBE E-27
SEC GAS IN
~~EAST~~ WEST

TAP	POINT	STATIC IN.	TEMP.	ΔP IN.	ANGLE (DEGREE)	DATA BY	LOCATION (REMARKS)
A	1	-3.8	734	.227	10	[illegible]	
	2	-3.9	735	.249	10	[illegible]	
	3	-4.0	729	.156	10	[illegible]	
	4	-4.0	727	.114	3	[illegible]	
	5	-4.1	718	.180	12	[illegible]	
	6	-4.0	720	.185	15	[illegible]	
	7	-4.1	715	.126	25	[illegible]	
B	1	-3.7	731	.288	17	[illegible]	
	2	-3.9	746	.173	20	[illegible]	
	3	-4.0	745	.170	20	[illegible]	
	4	-4.0	740	.131	10	[illegible]	
	5	-4.0	730	.190	17	[illegible]	
	6	-4.0	726	.205	25	[illegible]	
	7	-4.0	714	.104	35	[illegible]	
C	1	-3.8	730	.295	10	[illegible]	
	2	-3.8	749	.234	10	[illegible]	
	3	-3.9	748	.205	10	[illegible]	
	4	-3.9	745	.156	5	[illegible]	
	5	-4.1	741	.197	20	[illegible]	
	6	-3.9	737	.104	30	[illegible]	
	7	-4.0	730	.058	50	[illegible]	

IP14_001994

6-26-87

14:40

Babcock & Wilcox

GENERAL CALCULATIONS

PROBE E-27
SEC GAS IN
~~[illegible]~~ WEST

TP°	POINT	STATIC IN.	TEMP.	ΔP IN.	ANGLE (DEGREE)	DATA BY	LOCATION (REMARKS)
D	1	-3.5	740	0.307	8	MPH	
	2	-3.5	753	0.258	5	MPH	
	3	-3.6	751	0.249	5	MPH	
	4	-3.8	751	0.190	0	MPH	
	5	-3.8	745	0.102	10	MPH	
	6	-3.9	746	0.019	30	MPH	
	7	-3.9	747	0.009	20	MPH	
E	1	-3.4	755	0.334	15	MPH	
	2	-3.6	757	0.244	0	MPH	
	3	-3.6	755	0.251	0	MPH	
	4	-3.7	753	0.209	0	MPH	
	5	-3.8	750	0.048	0	MPH	
	6	-3.8	749	0.007	0	MPH	
	7	-3.8	749	0.043	20	MPH	
F	1	-3.6	761	0.361	23	MPH	
	2	-3.55	759	0.236	0	MPH	
	3	-3.7	751	0.271	0	MPH	
	4	-3.7	752	0.216	0	MPH	
	5	-3.8	748	0.056	17	MPH	
	6	-3.9	744	0.019	30	MPH	
	7	-3.8	740	0.012	18	MPH	

IP14_001995

15:00 6-26-87

Babcock & Wilcox
GENERAL CALCULATIONS

PROBE E-27
SEC GAS IN
WEST

TAP	POINT	STATIC IN.	TEMP.	ΔP IN.	ANGLE (DEGREE)	DATA BY	LOCATION (REMARKS)
6	1	-3.6	720	.244	13	[illegible]	
	2	-3.8	754	.256	10	[illegible]	
	3	-3.9	745	.275	5	[illegible]	
	4	-4.0	744	.222	5	[illegible]	
	5	-4.0	740	.122	20	[illegible]	
	6	-4.1	740	.046	20	[illegible]	
	7	-4.1	743	.051	60	[illegible]	
4	1	-3.9	796	.146	5	[illegible]	
	2	-3.8	756	.351	35	[illegible]	
	3	-3.9	738	.202	15	[illegible]	
	4	-3.8	736	.178	10	[illegible]	
	5	-4.0	725	.163	5	[illegible]	
	6	-4.0	712	.070	10	[illegible]	
	7	-3.9	706	.029	35	[illegible]	
7	1	-3.9	733	.268	8	[illegible]	
	2	-3.8	749	.246	20	[illegible]	
	3	-3.9	745	.268	15	[illegible]	
	4	-3.8	744	.249	10	[illegible]	
	5	-4.0	739	.227	10	[illegible]	
	6	-4.1	734	.126	10	[illegible]	
	7	-4.2	730	.058	40	[illegible]	

15:10 6-26-87

Babcock & Wilcox
GENERAL CALCULATIONS

PROBE E-27
SEC GAS IN
WEST

TAP	POINT	STATIC IN.	TEMP.	Δp IN.	ANGLE (DEGREE)	DATA BY	LOCATION (REMARKS)
–	1	-3.5	740	0.241	15	MPH	
	2	-3.7	755	0.290	20	MPH	
	3	-3.6	748	0.266	17	MPH	
	4	-3.6	746	0.222	12	MPH	
	5	-3.8	745	0.209	5	MPH	
	6	-3.8	741	0.192	12	MPH	
	7	-3.9	740	0.065	30	MPH	
K	1	-3.7	749	0.209	5	MPH	
	2	-3.6	756	0.288	20	MPH	
	3	-3.6	749	0.236	15	MPH	
	4	-3.7	750	0.241	10	MPH	
	5	-3.7	750	0.188	0	MPH	
	6	-3.7	750	0.141	15	MPH	
	7	-3.7	740	0.051	20	MPH	
15:20							
L	1	-3.6		0.156	15	MPH	
	2	-3.6		0.163	10	MPH	
	3	-3.6	747	0.217	20	MPH	
	4	-3.5	747	0.192	16	MPH	
	5	-3.7	746	0.178	5	MPH	
	6	-3.6	745	0.126	0	MPH	
	7	-3.7	740	0.056	0	MPH	

IP14_001997

1535 6-26-87

Babcock & Wilcox
GENERAL CALCULATIONS

PROBE E-27
SEC GAS IN
WEST

TAP	POINT	STATIC IN.	TEMP.	Δ P IN.	ANGLE (DEGREE)	DATA BY	LOCATION (REMARKS)
	1	-3.6	751	.166	40	[illegible]	
	2	-3.7	754	.139	20	[illegible]	
	3	-3.7	754	.199	15	[illegible]	
	4	-3.8	755	.192	10	[illegible]	
	5	-3.7	754	.214	10	[illegible]	
	6	-3.8	753	.153	10	[illegible]	
	7	-3.7	749	.036	15	[illegible]	
N	1	-3.6	750	.205	30		
	2	-3.5	753	.175	20		
	3	-3.6	752	.158	15		
	4	-3.6	752	.129	15		
	5	-3.7	751	.141	10		
	6	-3.7	750	.039	15		
	7	-3.6	750	.029	20	[illegible]	
			END	OF	TEST	1550	

IP14_001998

Babcock & Wilcox
GENERAL CALCULATIONS

FECHEIMER NO. E-4

CCW=+ CW=-

TAP	POINT	STATIC IN.	TEMP.	ΔP IN.	ANGLE (DEGREE)	DATA BY	LOCATION (REMARKS)
A	1	-2.3	655.8	.537	0	JJL	1'10" FROM BOTTOM
A	2	-2.6	656.6	.087	0	JJL	4'10" FROM BOTTOM
A	3	-2.8	655.0	.075	-20	JJL	7'10" FROM BOTTOM
A	4	-2.7	653.4	.083	-10	JJL	10'10" FROM BOTTOM
A	5	-2.7	653.0	.356	-15	JJL	13'10" FROM BOTTOM
A	6	-3.0	648.8	.117	0	JJL	16'10" FROM BOTTOM
A	7	-3.3	667.6	.170	0	JJL	19'10" FROM BOTTOM
A	8	-3.2	674.8	.222	-15	JJL	22'10" FROM BOTTOM
A	9	-3.2	658.4	.195	-15	JJL	25'10" FROM BOTTOM
B	1	-2.1	656.8	.036	-45	JJL	1'10" FROM BOTTOM
B	2	-2.6	654.6	.117	0	JJL	4'10" FROM BOTTOM
B	3	-2.8	655.4	.219	-30	JJL	7'10" FROM BOTTOM
B	4	-3.0	659.8	.292	-20	JJL	10'10" FROM BOTTOM
B	5	-3.3	660.6	.053	-10	JJL	13'10" FROM BOTTOM
B	6	-3.3	664.0	.278	-5	JJL	16'10" FROM BOTTOM
B	7	-3.3	667.0	.221	0	JJL	19'10" FROM BOTTOM
B	8	-3.3	672.0	.258	0	JJL	22'10" FROM BOTTOM
B	9	-3.2	664.0	.256	-5	JJL	25'10" FROM BOTTOM

Secondary Air Heater Outlet
East Side Started 1045 Completed 2:10 P.M.

J.J. Lechnick 6/26/87

Babcock & Wilcox

GENERAL CALCULATIONS FECHEIMER NO. E-4

CCW=+ CW=−

FAP	POINT	STATIC IN.	TEMP.	AP IN.	ANGLE (DEGREE)	DATA BY	LOCATION (FEET)
C	1	−2.5	654.8	.354	0	21 f L	1'10" FROM BOTTOM
C	2	−2.2	653.6	.039	0	21 f L	4'10" FROM BOTTOM
C	3	−2.5	655.0	.117	−45	21 f L	7'10" FROM BOTTOM
C	4	−2.7	658.0	.344	−30	21 f L	10'10" FROM BOTTOM
C	5	−2.9	665.0	.234	−30	21 f L	13'10" FROM BOTTOM
C	6	−2.8	666.2	.336	−15	21 f L	16'10" FROM BOTTOM
C	7	−2.9	667.6	.317	−20	21 f L	19'10" FROM BOTTOM
C	8	−3.1	672.4	.295	−20	21 f L	22'10" FROM BOTTOM
C	9	−3.2	657.4	.266	−15	21 f L	25'10" FROM BOTTOM
D	1	−2.5	656.6	.429	+10	21 f L	1'10" FROM BOTTOM
D	2	−2.4	655.6	.061	0	21 f L	4'10" FROM BOTTOM
D	3	−2.4	657.2	.048	−45	21 f L	7'10" FROM BOTTOM
D	4	−2.6	661.4	.236	−40	21 f L	10'10" FROM BOTTOM
D	5	−2.5	668.2	.290	−35	21 f L	13'10" FROM BOTTOM
D	6	−2.7	667.2	.366	−25	21 f L	16'10" FROM BOTTOM
D	7	−2.8	672.4	.397	−30	21 f L	19'10" FROM BOTTOM
D	8	−3.0	673.4	.366	−20	21 f L	22'10" FROM BOTTOM
D	9	−3.2	672.8	.197	−20	21 f L	25'10" FROM BOTTOM

2 of 5

Secondary Air Heater Outlet - East

21 f. Lechnick 6/26/87

IP14_002000

Babcock & Wilcox
GENERAL CALCULATIONS FECHEIMER NO, E-4

CCW=+ CW=−

TAP	POINT	STATIC IN.	TEMP.	Δ P IN.	ANGLE (DEGREE)	DATA BY	LOCATION (REMARKS)
E	1	−2.0	656.6	.031	0	21 L	1'10" FROM BOTTOM
E	2	−2.3	656.6	.039	0	21 L	4'10" FROM BOTTOM
E	3	−2.2	655.2	.039	−45	21 L	7'10" FROM BOTTOM
E	4	−2.5	659.6	.454	−25	21 L	10'10" FROM BOTTOM
E	5	−2.7	665.4	.300	−25	21 L	13'10" FROM BOTTOM
E	6	−2.7	669.6	.424	−20	21 L	16'10" FROM BOTTOM
E	7	−3.0	672.6	.424	−20	21 L	19'10" FROM BOTTOM
E	8	−3.0	672.0	.371	−25	21 L	22'10" FROM BOTTOM
E	9	−2.7	660.2	.493	−15	21 L	25'10" FROM BOTTOM
		~~−2.~~					
F	1	−2.0	658.6	.056	~~0~~ −35	21 L	1'10" FROM BOTTOM
F	2	−2.1	658.2	.065	0	21 L	4'10" FROM BOTTOM
F	3	−2.5	655.8	.148	−25	21 L	7'10" FROM BOTTOM
F	4	−2.5	667.8	.517	−30	21 L	10'10" FROM BOTTOM
F	5	−2.3	668.6	.241	−20	21 L	13'10" FROM BOTTOM
F	6	−2.5	669.2	.483	−30	21 L	16'10" FROM BOTTOM
F	7	−2.3	670.0	.488	−10	21 L	19'10" FROM BOTTOM
F	8	−2.7	674.0	.214	−30	21 L	22'10" FROM BOTTOM
F	9	−2.8	678.8	.515	−10	21 L	25'10" FROM BOTTOM

3 of 5

Secondary Air Heater Outlet - East

21 L. Lechnick 6/26/87

Babcock & Wilcox
GENERAL CALCULATIONS

FECHEIMER NO. E-4

CCW=+ CW=-

TAP	POINT	STATIC IN.	TEMP.	Δ P IN.	ANGLE (DEGREE)	DATA BY	LOCATION (REMARKS)
G	1	-2.4	662.0	.415	+20	21 J L	1'10" FROM BOTTOM
G	2	-2.3	661.4	.285	0	21 J L	4'10" FROM BOTTOM
G	3	-2.3	657.0	.188	0	21 J L	7'10" FROM BOTTOM
G	4	-2.3	670.0	.068	-10	21 J L	10'10" FROM BOTTOM
G	5	-2.1	671.8	.373	0	21 J L	13'10" FROM BOTTOM
G	6	-2.0	674.8	.451	-15	21 J L	16'10" FROM BOTTOM
G	7	-2.3	688.0	.544	-10	21 J L	19'10" FROM BOTTOM
G	8	-2.4	678.2	.515	-10	21 J L	22'10" FROM BOTTOM
G	9	-2.9	657.0	.546	0	21 J L	25'10" FROM BOTTOM
H	1	-2.7	641.8	.380	+15	21 J L	1'10" FROM BOTTOM
H	2	-2.7	608.6	.317	0	21 J L	4'10" FROM BOTTOM
H	3	-2.5	633.6	.383	-10	21 J L	7'10" FROM BOTTOM
H	4	-2.3	645.0	.324	-10	21 J L	10'10" FROM BOTTOM
H	5	-2.3	643.0	.156	-25	21 J L	13'10" FROM BOTTOM
H	6	-2.0	638.6	.048	-35	21 J L	16'10" FROM BOTTOM
H	7	-2.5	631.2	.029	-30	21 J L	19'10" FROM BOTTOM
H	8	-2.5	634.0	.031	-30	21 J L	22'10" FROM BOTTOM
H	9	-2.3	636.2	.510	-30	21 J L	25'10" FROM BOTTOM

Secondary Air Heater Outlet - East

4 of 5

21 J Lechnick 6/26/87

IP14_002002

Babcock & Wilcox

GENERAL CALCULATIONS

FECHEIMER NO, E-4

CCW=+ CW=-

TAP	POINT	STATIC IN.	TEMP.	ΔP IN.	ANGLE (DEGREE)	DATA BY	LOCATION (REMARKS)
I	1	-1.9	591.4	.087	-20	JJ & L	1'10" FROM BOTTOM
I	2	-2.2	601.8	.112	-20	JJ & L	4' 10" FROM BOTTOM
I	3	-2.2	632.4	.014	0	JJ & L	7' 10" FROM BOTTOM
I	4	-2.0	548.8	.014	0	JJ & L	10' 10" FROM BOTTOM
I	5	-2.2	524.0	.029	0	JJ & L	13'10" FROM BOTTOM
I	6	-2.2	580.8	.031	0	JJ & L	16'10" FROM BOTTOM
I	7	-2.2	574.2	.029	0	JJ & L	19' 10" FROM BOTTOM
I	8	-2.3	570.0	.031	0	JJ & L	22'10" FROM BOTTOM
I	9	-2.3	575.2	.041	0	JJ & L	25'10" FROM BOTTOM

5 of 5

Secondary Air Heater Outlet - East

Test Started ~~10:28~~ 10:45 A.M.

J. J. Lechnick 6/26/87

IP14_002003

Babcock & Wilcox
GENERAL CALCULATIONS

FECHEIMER NO. E-4

CCW = + CW = -

TAP	POINT	STATIC IN.	TEMP.	ΔP IN.	ANGLE (DEGREE)	DATA BY	LOCATION (REMARKS)
WA	1	-2.2	636.4	.065	0	21 of 2	1'10" FROM BOTTOM
WA	2	-2.0	634.8	.363	+10	21 of 2	4'10" FROM BOTTOM
WA	3	-2.3	640.6	.068	+20	21 of 2	7'10" FROM BOTTOM
WA	4	-2.3	642.4	.034	+20	21 of 2	10'10" FROM BOTTOM
WA	5	-2.4	647.0	.019	+20	21 of 2	13'10" FROM BOTTOM
WA	6	-2.4	645.4	.116	0	21 of 2	16'10" FROM BOTTOM
WA	7	-2.2	637.2	.036	0	21 of 2	19'10" FROM BOTTOM
WA	8	-2.3	630.8	.039	0	21 of 2	22'10" FROM BOTTOM
WA	9	-2.5	628.6	.034	0	21 of 2	25'10" FROM BOTTOM
WB	1	-2.3	642.2	.061	0	21 of 2	1'10" FROM BOTTOM
WB	2	-2.4	639.2	.170	-5	21 of 2	4'10" FROM BOTTOM
WB	3	-2.5	647.0	.087	+5	21 of 2	7'10" FROM BOTTOM
WB	4	-2.5	656.4	.129	+10	21 of 2	10'10" FROM BOTTOM
WB	5	-2.2	655.6	.029	+5	21 of 2	13'10" FROM BOTTOM
WB	6	-2.4	656.4	.288	+15	21 of 2	16'10" FROM BOTTOM
WB	7	-2.6	656.8	.126	+20	21 of 2	19'10" FROM BOTTOM
WB	8	-2.8	653.6	.417	+15	21 of 2	22'10" FROM BOTTOM
WB	9	-2.3	654.4	.031	0	21 of 2	25'10" FROM BOTTOM

1 of 5

Secondary Air Heater Outlet - West

West Side Started 2:35 P.M.
Ended 1710 P

IP14_002004

Babcock & Wilcox
GENERAL CALCULATIONS

FECHEIMER NO. E-4

CCW = + CW = −

TAP	POINT	STATIC IN.	TEMP.	ΔP IN.	ANGLE (DEGREE)	DATA BY	LOCATION (REMARKS)
WC	1	−2.4	643.0	.070	0	21 J L	1' 10" FROM BOTTOM
WC	2	−2.5	640.0	.029	+25	21 J L	4' 10" FROM BOTTOM
WC	3	−2.4	642.8	.217	0	21 J L	7' 10" FROM BOTTOM
WC	4	−2.5	652.2	.583	+5	21 J L	10' 10" FROM BOTTOM
WC	5	−2.7	655.6	.300	0	21 J L	13' 10" FROM BOTTOM
WC	6	−2.7	656.0	.490	0	21 J L	16' 10" FROM BOTTOM
WC	7	−3.0	660.0	.520	0	21 J L	19' 10" FROM BOTTOM
WC	8	−2.9	663.2	.507	+10	21 J L	22' 10" FROM BOTTOM
WC	9	−3.5	663.0	.590	0	21 J L	25' 10" FROM BOTTOM
WD	1	−2.0	647.0	.026	0	21 J L	1' 10" FROM BOTTOM
WD	2	−2.2	640.0	.048	0	21 J L	4' 10" FROM BOTTOM
WD	3	−2.3	639.4	.107	+15	21 J L	7' 10" FROM BOTTOM
WD	4	−2.5	648.6	.429	+35	21 J L	10' 10" FROM BOTTOM
WD	5	−2.9	654.2	.397	+5	21 J L	13' 10" FROM BOTTOM
WD	6	−2.9	656.8	.356	+15	21 J L	16' 10" FROM BOTTOM
WD	7	−2.9	659.8	.327	0	21 J L	19' 10" FROM BOTTOM
WD	8	−2.8	667.4	.417	+5	21 J L	22' 10" FROM BOTTOM
WD	9	−3.0	650.8	.456	+5	21 J L	25' 10" FROM BOTTOM

Secondary Air Heater Outlet - West

Babcock & Wilcox

CCW=+ CW=− GENERAL CALCULATIONS FECHEIMER NO. E-4

TAP	POINT	STATIC IN.	TEMP.	ΔP IN.	ANGLE (DEGREE)	DATA BY	LOCATION (REMARKS)
WE	1	−2.3	640.4	.305	−35	21 L	1'10" FROM BOTTOM
WE	2	−2.1	639.6	.035	0	21 L	4'10" FROM BOTTOM
WE	3	−2.4	647.2	.122	+20	21 L	7'10" FROM BOTTOM
WE	4	−2.6	645.0	.455	+15	21 L	10'10" FROM BOTTOM
WE	5	−2.8	654.6	.400	+5	21 L	13'10" FROM BOTTOM
WE	6	−2.9	657.2	.318	0	21 L	16'10" FROM BOTTOM
WE	7	−2.9	660.8	.434	+5	21 L	19'10" FROM BOTTOM
WE	8	−2.8	669.0	.114	−10	21 L	22'10" FROM BOTTOM
WE	9	−2.6	660.6	.188	0	21 L	25'10" FROM BOTTOM
WF	1	−2.0	640.0	.080	0	21 L	1'10" FROM BOTTOM
WF	2	−2.3	638.2	.058	0	21 L	4'10" FROM BOTTOM
WF	3	−2.4	638.4	.083	+5	21 L	7'10" FROM BOTTOM
WF	4	−3.2	645.2	.197	+35	21 L	10'10" FROM BOTTOM
WF	5	−3.0	649.2	.290	+10	21 L	13'10" FROM BOTTOM
WF	6	−2.8	654.6	.119	+20	21 L	16'10" FROM BOTTOM
WF	7	−3.0	660.0	.341	+15	21 L	19'10" FROM BOTTOM
WF	8	−3.0	667.2	.405	+25	21 L	22'10" FROM BOTTOM
WF	9	−2.7	652.0	.021	−45	21 L	25'10" FROM BOTTOM

3 of 5

Secondary Air Heater Outlet - West

IP14_002006

Babcock & Wilcox

CCW=+ CW=− GENERAL CALCULATIONS FECHEIMER NO. E-4

TAP	POINT	STATIC IN.	TEMP.	ΔP IN.	ANGLE (DEGREE)	DATA BY	LOCATION (REMARKS)
WG	1	2.0	639.8	.014	+20		1' 10" FROM BOTTOM
WG	2	2.2	637.8	.021	+35		4' 10" FROM BOTTOM
WG	3	2.4	639.2	.126	0		7' 10" FROM BOTTOM
WG	4	2.4	645.0	.236	+10		10' 10" FROM BOTTOM
WG	5	2.6	647.6	.170	0		13' 10" FROM BOTTOM
WG	6	2.8	652	.202	+5		16' 10" FROM BOTTOM
WG	7	-3	653	.268	0	WJR	19' 10" FROM BOTTOM
WG	8	-3.0	667.8	.468	0	DRM	22' 10" FROM BOTTOM
WG	9	-3.3	662.8	.188	0	21/2	25' 10" FROM BOTTOM
WH	1				10	~~TJF~~	1' 10" FROM BOTTOM
WH	2	-2.5	645	0.478	10	TJF	4' 10" FROM BOTTOM
WH	3	-2.7	642	0.209	+15	TJF	7' 10" FROM BOTTOM
WH	4	-2.5	642	0.039	+15	TJF	10' 10" FROM BOTTOM
WH	5	-2.7	646	0.263	0	TJF	13' 10" FROM BOTTOM
WH	6	-2.9	647	0.225	0	TJF	16' 10" FROM BOTTOM
WH	7	-3.0	652.6	.205	+5	21/2	19' 10" FROM BOTTOM
WH	8	-3.2	660.8	.227	+10	21/2	22' 10" FROM BOTTOM
WH	9	-3.1	661.0	.190	+10	21/2	25' 10" FROM BOTTOM

Secondary Air Heater Outlet - West

4 of 5

IP14_002007

Babcock & Wilcox

CCW=+ CW=− GENERAL CALCULATIONS FECHEIMER NO. E-4

TAP	POINT	STATIC IN.	TEMP.	ΔP IN.	ANGLE (DEGREE)	DATA BY	LOCATION (REMARKS)
WI	1	−2.7	651	0.275	5	TJF	1' 10" FROM BOTTOM
WI	2	−2.7	646	0.217	5	TJF	4' 10" FROM BOTTOM
WI	3	−2.9	646	0.146	5	TJF	7' 10" FROM BOTTOM
WI	4	−2.7	650	0.278	0	TJF	10' 10" FROM BOTTOM
WI	5	−2.7	650	0.092	25	TJF	13' 10" FROM BOTTOM
WI	6	−2.7	650	0.100	30	TJF	16' 10" FROM BOTTOM
WI	7	−2.9	654	0.241	20	TJF	19' 10" FROM BOTTOM
WI	8	−2.9	658	0.200	20	TJF	22' 10" FROM BOTTOM
WI	9	−2.9	655	0.307	10	TJF	25' 10" FROM BOTTOM

5 of 5

Secondary Air Heater Outlet – West

West Side Stop time 1710

IP14_002008

FD 26

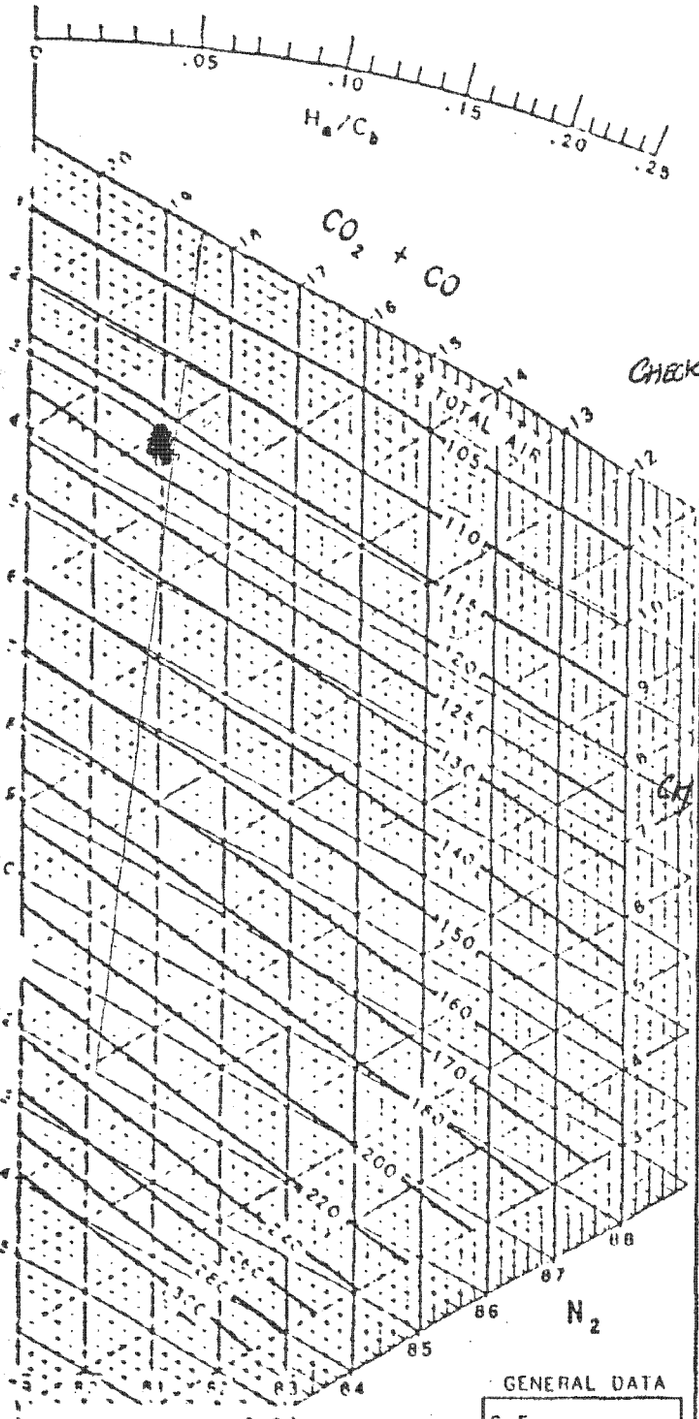

TIME	LOCATION	CO_2	$+O_2$	+CO	O_2	CO		BY
1050	EAST F-1	15.7	19.0		3.3			MJH
1053	EAST F-2	15.9	19.0		3.1			MJH
1057	EAST F-3	15.9	19.0		3.1			MJH
1103	EAST E-1	15.9	18.9		3.0			MJH
1106	EAST E-2	15.8	18.9		3.1			MJH
1110	EAST E-3	16.1	19.1		3.0			MJH
CHECK 1113	EAST E-3	16.1	19.1		3.0			MJH
1118	EAST D-1	15.7	19.0		3.3			MJH
1121	EAST D-2	16.1	19.1		3.0			MJH
1124	EAST D-3	16.1	19.1		3.0			MJH
1130	EAST C-1	15.8	18.9		3.1			MJH
1134	EAST C-2	15.9	19.0		3.1			MJH
1137	EAST C-3	16.0	19.1		3.1			MJH
1141	EAST B-1	15.6	19.1		3.5			MJH
1146	EAST B-1	15.8	19.1		3.3			MJH
1151	EAST B-2	15.9	19.0		3.1			MJH
1154	EAST B-3	15.9	19.1		3.2			MJH
1159	EAST A-1	15.6	18.9		3.3			MJH
1203	EAST A-2	15.8	19.0		3.2			MJH
1206	EAST A-3	15.7	18.9		3.2			MJH

GENERAL DATA

S.F.

A.F.

FUEL ANALYSIS

H

O

C

BTU/LB

H_a/C

SUBJECT: EAST PRIMARY AH GAS INLET

FILE NO.

BY GAB/MJH/DJL

DATE 6-26-87

REV.

THE BABCOCK & WILCOX CO.
RESEARCH LABORATORY
ALLIANCE, OHIO

DRAWING NO.

IP14_002009

Babcock & Wilcox
GENERAL CALCULATIONS

E1 START TIME 1050
FINISH TIME 1210

PA	POINT	STATIC IN.	TEMP.	ΔP IN.	ANGLE (DEGREE)	DATA BY	LOCATION (REMARKS)
EAST F	1	-4.0	735	.112	5	GPB/DJL	EAST PRIMARY GAS INLET
EAST F	2	-4.0	741	.107	14	GPB/DJL	" " " "
EAST F	3	-4.0	737	.117	2	GPB/DJL	" " " "
EAST E	1	-4.0	735	.078	10	GPB/DJL	EAST PRIMARY GAS INLET
EAST E	2	-4.0	744	.136	30	GPB/DJL	" " " "
EAST E	3	-4.0	737	.102	0	GPB/DJL	" " " "
EAST D	1	-4.0	731	.070	3	GPB/DJL	EAST PRIMARY GAS INLET
EAST D	2	-4.0	743	.119	20	GPB/DJL	" " " "
EAST D	3	-4.0	739	.092	5	GPB/DJL	" " " "
EA	1	-4.0	739	.100	0	GPB/DJL	EAST PRIMARY GAS IN
EAST C	2	-4.0	741	.039	5	HPB/DJL	" " " "
EAST C	3	-4.0	738	.065	3	GPB/DJL	" " " "
EAST B	1	-4.0	734	.021	0	GPB/DJL	EAST PRIMARY GAS IN
EAST B	2	-4.0	738	.007	0	GPB/DJL	" " " "
EAST B	3	-4.0	739	.070	0	GPB/DJL	" " " "
EAST A	1	-4.0	738	.002	0	GPB/DJL	EAST PRIMARY GAS IN
EAST A	2	-4.0	742	.002	0	GPB/DJL	" " " "
EAST A	3	-4.0	740	.029	0	GPB/DJL	" " " "

EAST PRIMARY AH GAS INLET

FECHEIMER EN
GPB/MJH/DJL 6-26-87

IP14_002010

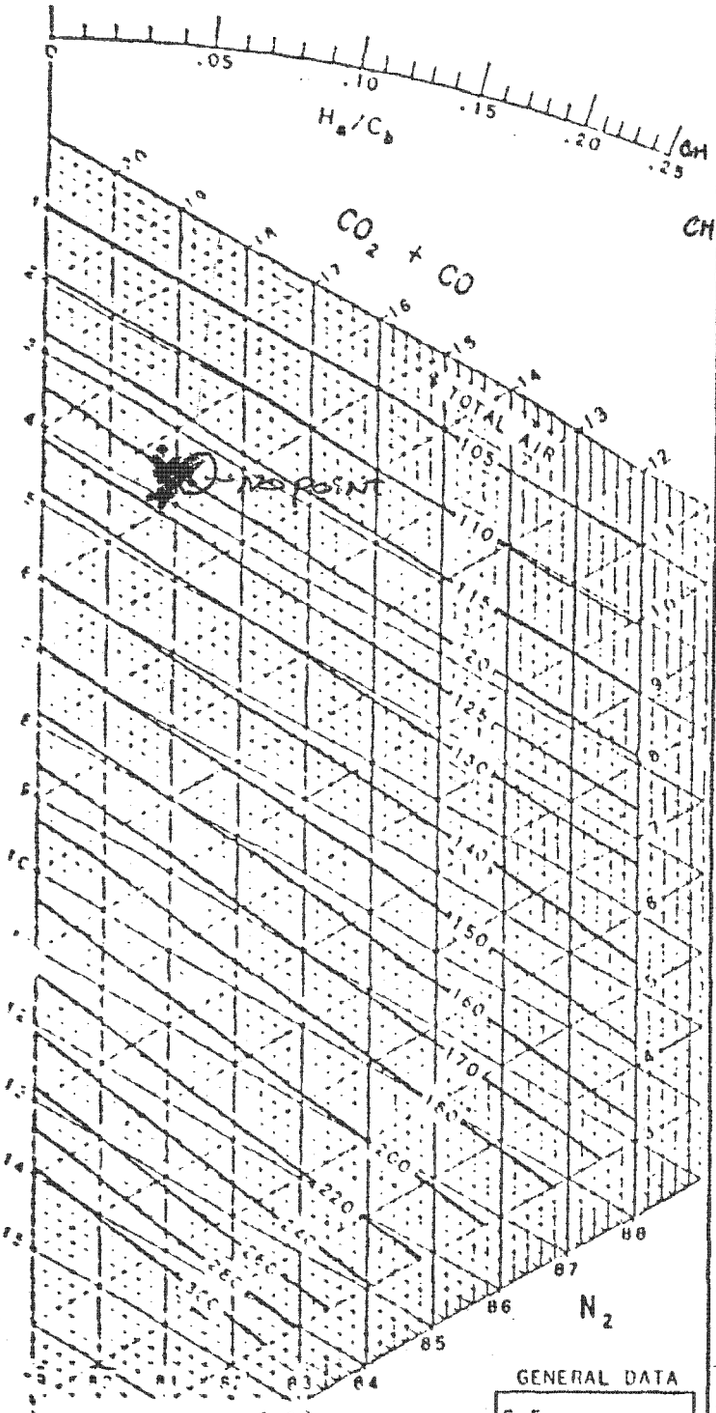

TIME	LOCATION	CO_2	$+O_2$	+CO	O_2	CO		BY
1430	WEST A-1	15.6	19.3		3.7			MJH
1433	WEST A-1	15.6	19.3		3.7			MJH
1437	WEST A-2	15.1	19.2		4.1			MJH
1440	WEST A-2	15.3	19.3		4.0			MJH
1444	WEST A-3	15.6	19.2		3.6			MJH
1449	WEST B-1	15.1	19.2		4.1			MJH
1452	WEST B-2	15.2	19.3		4.1			MJH
1455	WEST B-3	15.4	19.3		3.9			MJH
1500	WEST C-1	15.3	19.1		3.8			MJH
1504	WEST C-2	15.2	19.1		3.9			MJH
1509	WEST C-3	15.7	19.2		3.5			MJH
1513	WEST D-1	15.4	19.2		3.8			MJH
1516	WEST D-2	15.6	19.2		3.6			MJH
1519	WEST D-3	15.5	19.1		3.6			MJH
1523	WEST E-1	15.5	19.1		3.6			MJH
1528	WEST E-2	15.6	19.2		3.6			MJH
1531	WEST E-3	15.8	19.2		3.4			MJH
1538	WEST F-1	15.5	19.1		3.6			MJH
1540	WEST F-2	15.3	19.2		3.9			MJH
1550	WEST F-3	15.6	19.2		3.6			MJH

GENERAL DATA

S.F.

A.F.

FUEL ANALYSIS

H

O

C

BTU/LB

H_a C

SUBJECT

WEST PRIMARY AIR HEATER GAS INLET

FILE NO.

BY GPB/MJH/DWL

DATE 6-26-87

REV.

THE BABCOCK & WILCOX CO.
RESEARCH LABORATORY
ALLIANCE, OHIO

DRAWING NO.

IP14_002011

Babcock & Wilcox
GENERAL CALCULATIONS

START TIME 1430
FINISH TIME 1550

TAP	POINT	STATIC IN.	TEMP.	ΔP IN.	ANGLE (DEGREE)	DATA BY	LOCATION (REMARKS)
WEST A	1	-4.0	740	.097	10	GPB/DJL	WEST PRIMARY GAS IN
WEST A	2	-4.0	742	.090	0	GPB/DJL	" " " "
WEST A	3	-4.0	740	.100	8	GPB/DJL	" " " "
WEST B	1	-4.0	745	.075	30	GPB/DJL	WEST PRIMARY GAS IN
WEST B	2	-4.0	745	.095	20	GPB/DJL	" " " "
WEST B	3	-4.0	741	.102	7	GPB/DJL	" " " "
WEST C	1	-4.0	745	.068	20	GPB/DJL	WEST PRIMARY GAS INLET
WEST C	2	-4.0	743	.087	11	GPB/DJL	" " " "
WEST C	3	-4.0	741	.068	4	GPB/DJL	" " " "
W -D	1	-4.0	744	.043	7	GPB/DJL	WEST PRIMARY GAS IN
WEST D	2	-4.0	744	.007	25	GPB/DJL	" " " "
WEST D	3	-4.0	741	.056	7	GPB/DJL	" " " "
WEST E	1	-4.0	741	.029	0	GPB/DJL	WEST PRIMARY GAS I
WEST E	2	-4.0	742	.026	0	GPB/DJL	" " " "
WEST E	3	-4.0	741	.039	0	GPB/DJL	" " " "
WEST F	1	-4.0	739	.031	0	GPB/DJL	WEST PRIMARY GAS I
WEST F	2	-4.0	738	.031	0	GPB/DJL	" " " "
WEST F	3	-4.0	737	.014	0	GPB/DJL	" " " "

FECHEIMER E11

WEST PRIMARY AH GAS INLET

GPB/MJH/DJL 6-26-87

IP14_002012

FO 26

EAST PRIMARY A.H. GAS OUT

Probe E1

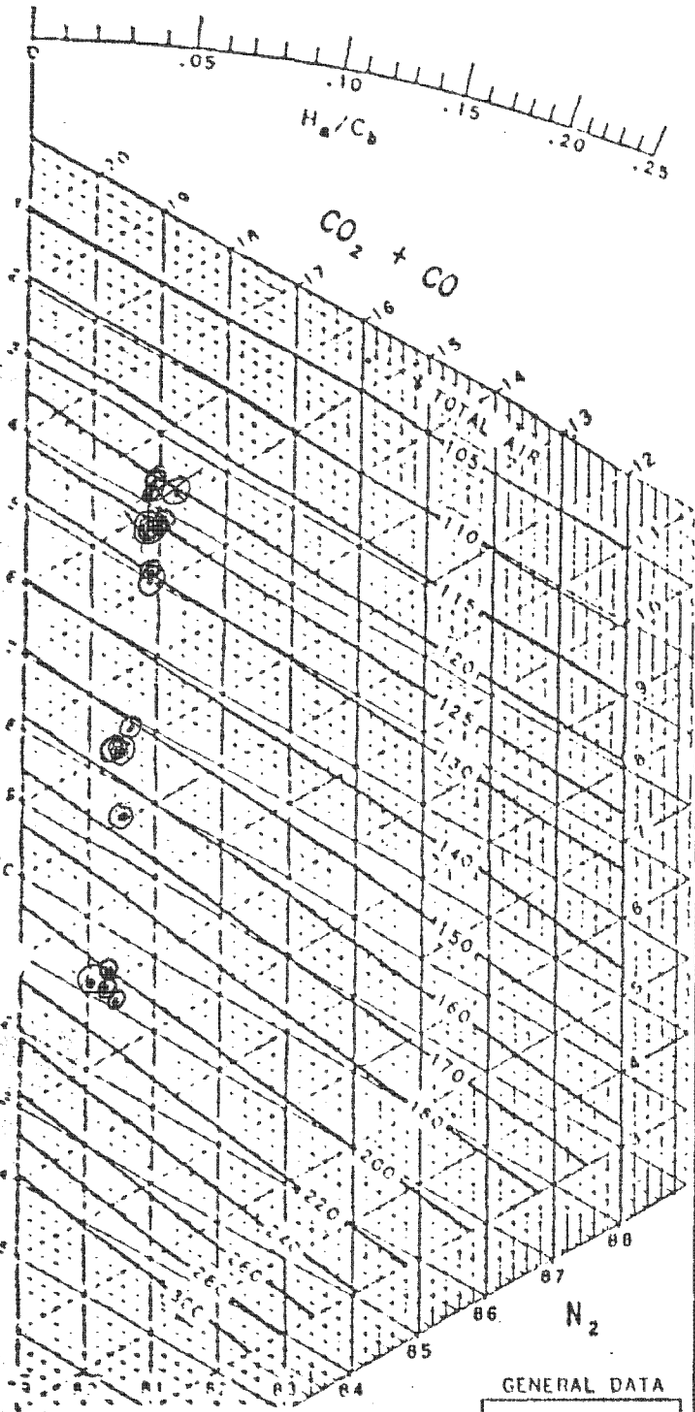

TIME	LOCATION	CO_2	$+O_2$	$+CO$	O_2	CO	[illegible]	BY
	EPGO							
1003	A4	11.9	19.4	—	7.5	—	—	CRV
1010	A3	14.8	19.2	—	4.4	—	—	CRV
1017	A2	14.1	19.1	—	5.0	—	—	CRV
1024	A1	9.1	19.9	—	10.8	—	—	CRV
1031	B4	12.0	19.6	—	7.6	—	—	CRV
1038	B3	15.1	18.7	—	3.6	—	—	CRV
~~1045~~	B2			—		—	—	CRV
	B1			—		—	—	CRV
~~1048~~	RESTART 1045							
1048	A4	12.2	19.4	—	7.2	—	—	CRV
1055	A3	14.8	18.9	—	4.1	—	—	CRV
1102	A2	14.2	19.1	—	4.9	—	—	CRV
1109	A1	8.9	19.8	—	10.9	—	—	CRV
1116	B4	12.0	19.5	—	7.5	—	—	CRV
1123	B3	15.3	19.0	—	3.7	—	—	CRV
1130	B2	15.2	19.1	—	3.9	—	—	CRV
1137	B1	8.7	19.6	—	10.9	—	—	CRV
1144	C4	11.0	19.4	—	8.4	—	—	CRV
1151	C3	14.7	19.0	—	4.3	—	—	CRV
1158	C2	14.8	19.2	—	4.4	—	—	CRV
1205	C1	9.2	19.8	—	10.6	—	—	CRV

(INITIAL)

START TEST 10 00

END TEST 10 42

RESTART

START TEST 10 45

END TEST 12 08

GENERAL DATA

S.F.

A.F.

FUEL ANALYSIS

H

O

C

BTU/LB

H_a/C

SUBJECT

EAST PRIMARY A.H. GAS OUT

(POINT 1 AT TOP) 1 of 1

FILE NO.

BY CLIFF VOTAW

DATE 6/26/87

REV.

THE BABCOCK & WILCOX CO.
RESEARCH LABORATORY
ALLIANCE, OHIO

DRAWING NO.

IP14_002013

Babcock & Wilcox

26 JUNE 87 GENERAL CALCULATIONS PROBE # E1

TAP	POINT	STATIC IN.	TEMP.	ΔP IN.	ANGLE (DEGREE)	DATA BY	LOCATION (REMARKS)
A	1	-8.5"	250°F	-0.253"	10°	DEW	E PGO 1024
A	2	-8.5"	297°F	0.035"	8°	DEW	E PGO 1017
A	3	-8.5"	303°F	0.132"	0°	DEW	E PGO 1010
A	4	-8.5"	295°F	0.114"	4°	DEW	E PGO 1003
B	1	-8.5"				DEW	E PGO
B	2	-8.5"				DEW	E PGO
B	3	-8.5"	313°F	0.156"	7°	DEW	E PGO 1038
B	4	-8.5"	297°F	0.147"	0°	DEW	E PGO 1031
C	1					DEW	E PGO
C	2					DEW	E PGO
C	3					DEW	E PGO
C	4					DEW	E PGO

START 1000

END 1042

EAST PRIMARY

GAS OUTLET

IP14_002014

Babcock & Wilcox

26 JUNE 87

GENERAL CALCULATIONS PROBE #E1

TAP	POINT	STATIC IN.	TEMP.	ΔP IN.	ANGLE (DEGREE)	DATA BY	LOCATION (REMARKS)
H	1	-8.5"	251°F	-0.109"	10°	DEW	EPGO 1109
A	2	-8.5"	307°F	0.029"	6°	DEW	EPGO 1102
A	3	-8.5"	318°F	0.178"	2°	DEW	EPGO 1055
A	4	-8.5"	311°F	0.130"	3°	DEW	EPGO 1048
B	1	-8.5"	240°F	-0.031"	10°	DEW	EPGO 1137
B	2	-8.5"	305°F	0.177"	2°	DEW	EPGO 1130
B	3	-8.5"	312°F	0.143"	7°	DEW	EPGO 1123
B	4	-8.5"	301°F	0.123"	6°	DEW	EPGO 1116
C	1	-8.5"	262°F	-0.172"	6°	DEW	EPGO 1207
C	2	-8.5"	308°F	-0.034"	8°	DEW	EPGO 1158
C	3	-8.5"	314°F	0.161"	5°	DEW	EPGO 1151
C	4	-8.5"	292°F	0.158"	0°	DEW	EPGO 1144
		RE-START		1045			
		END		1208			

IP14_002015

FD 26

WEST PRIMARY A.H. GAS OUT

Probe E1

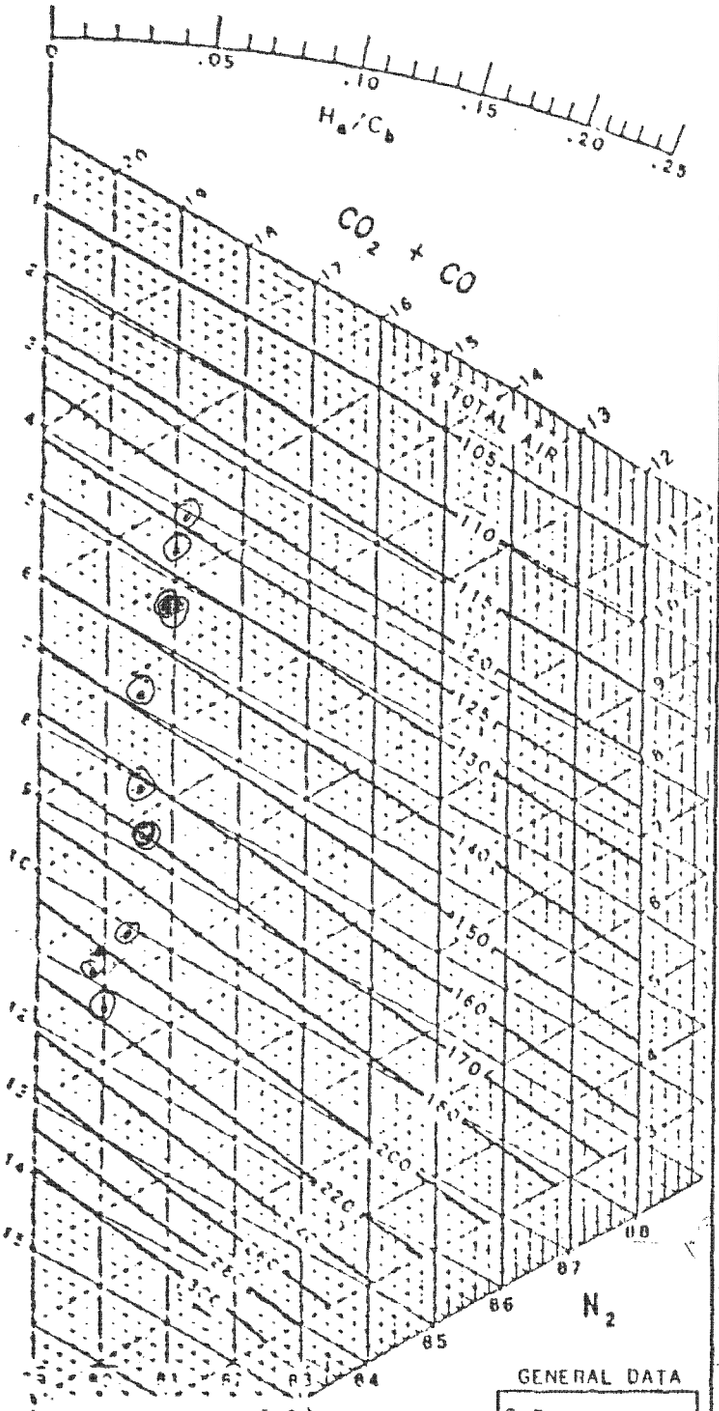

TIME	LOCATION	CO_2	O_2	+ CO	O_2	CO		BY
	WPGO							
1432	A4	9.5	19.6	—	10.1	—	—	CRV
1439	A3	13.6	19.1	—	5.5	—	—	CRV
1446	A2	14.7	18.8	—	4.1	—	—	CRV
1453	A1	10.6	19.4	—	8.8	—	—	CRV
1500	B4	9.2	20.1	—	10.9	—	—	CRV
1507	B3	13.7	19.2	—	5.5	—	—	CRV
1514	B2	14.4	19.0	—	4.6	—	—	CRV
1521	B1	10.7	19.4	—	8.7	—	—	CRV
1528	C4	8.6	19.8	—	11.2	—	—	CRV
1535	C3	12.6	19.4	—	6.8	—	—	CRV
1542	C2	13.6	19.1	—	5.5	—	—	CRV
1549	C1	11.3	19.4	—	8.1	—	—	CRV
		START TEST				14	30	
		END TEST				15	52	

GENERAL DATA

S.F.

A.F.

FUEL ANALYSIS

H

O

C

BTU/LB

H_a/C

SUBJECT

WEST PRIMARY A.H. GAS OUT

(POINT 1 at TOP) 1 of 1

FILE NO.

BY CLIFF VOTAW

DATE 6/26/87

REV.

THE BABCOCK & WILCOX CO.
RESEARCH LABORATORY
ALLIANCE, OHIO

DRAWING NO.

IP14_002016

Babcock & Wilcox

26 JUNE 87 GENERAL CALCULATIONS PROBE # E1

TAP	POINT	STATIC IN.	TEMP.	ΔP IN.	ANGLE (DEGREE)	DATA BY	LOCATION (REMARKS)
A	1	-8.5"	269°F	-0.236"	10°	DEW	WPGO 1453
A	2	-8.5"	311°F	0.102"	6°	DEW	WPGO 1446
A	3	-8.5"	302°F	0.114"	0°	DEW	WPGO 1439
A	4	-8.5"	283°F	0.075"	0°	DEW	WPGO 1432
B	1	-8.5"	279°F	-0.209	4°	DEW	WPGO 1521
B	2	-8.5"	308°F	0.112"	0°	DEW	WPGO 1514
B	3	-8.5"	298°F	0.109"	4°	DEW	WPGO 1507
B	4	-8.5"	278°F	0.073"	8°	DEW	WPGO 1500
C	1	-8.5"	276°F	-0.048"	10°	DEW	WPGO 1549
C	2	-8.5"	301°F	0.112"	6°	DEW	WPGO 1542
C	3	-8.5"	296°F	0.083"	0°	DEW	WPGO 1535
C	4	-8.5"	266°F	0.070"	2°	DEW	WPGO 1528
			START	1430			
			END	1552			

IP14_002017

Babcock & Wilcox

GENERAL CALCULATIONS

26 JUNE 87 PROBE # E1

TAP	POINT	STATIC IN.	TEMP.	ΔP IN.	ANGLE (DEGREE)	DATA BY	LOCATION (REMARKS)
A	1	31"	469°F	0.061"	-5°	DEW	EPAO 1239
A	2	31"	458°F	0.073"	-5°	DEW	EPAO 1238
A	3	30"	423°F	0.053"	-10°	DEW	EPAO 1237
B	1	31"	493°F	0.034"	-20°	DEW	EPAO 1243
B	2	31"	482°F	0.058"	-10°	DEW	EPAO 1242
B	3	31"	458°F	0.056"	-5°	DEW	EPAO 1241
C	1	31"	494°F	0.024"	-5°	DEW	EPAO 1246
C	2	31"	487°F	0.031"	-15°	DEW	EPAO 1245
C	3	31"	475°	0.021"	0°	DEW	EPAO 1245
D	1	31"	507°F	-0.014"	-15°	DEW	EPAO 1252
D	2	31"	492°F	0.080"	-10	DEW	EPAO 1251
D	3	31"	472°F	0.051"	-15°	DEW	EPAO 1250
E	1	31"	507°F	0.061"	0°	DEW	EPAO 1256
E	2	31"	499°F	0.092"	0°	DEW	EPAO 1255
E	3	31"	479°F	0.097"	0°	DEW	EPAO 1254
			START	1235			
			END	1257			

IP14_002018

Babcock & Wilcox

26 JUNE 87 GENERAL CALCULATIONS PROBE # E1

TAP	POINT	STATIC IN.	TEMP.	ΔP IN.	ANGLE (DEGREE)	DATA BY	LOCATION (REMARKS)
A	1	31"	479°F	0.031"	-15°	DEW	WPAO 1352
A	2	31"	483°F	0.047"	-5°	DEW	WPAO 1351
A	3	31"	482°F	0.070"	0°	DEW	WPAO 1350
B	1	31"	475°F	0.070"	-10°	DEW	WPAO 1357
B	2	31"	468°F	0.056"	0°	DEW	WPAO 1356
B	3	31"	459°F	0.100"	5°	DEW	WPAO 1355
C	1	31"	480°F	0.004"	-10°	DEW	WPAO 1401
C	2	31"	472°F	0.036"	0°	DEW	WPAO 1400
C	3	31"	465°F	0.002"	5°	DEW	WPAO 1400
D	1	31"	483°F	~~0.043"~~ 0.056"	5°	DEW	WPAO 1406
D	2	31"	464°F	0.058"	-10°	DEW	WPAO 1405
D	3	31"	445°F	0.117"	0°	DEW	WPAO 1404
E	1	31"	474°F	0.041"	0°	DEW	WPAO 1412
E	2	31"	456°F	0.063"	-5°	DEW	WPAO 1411
E	3	31"	449°F	0.087"	-5°	DEW	WPAO 1410
			START	1350			
			END	1414			

IP14_002019

Babcock & Wilcox

GENERAL CALCULATIONS

SHEET 1 OF 2

START 1305
FINISH 1335

TAP	POINT	STATIC IN.	TEMP.	ΔP IN.	ANGLE (DEGREE)	DATA BY	LOCATION (REMARKS)
W. A	1	32	111	.156	0	GPB DJL MJH	WEST TEMPERING AIR
WEST A	2	32	112	.041	5	GPB DJL MJH	WEST TEMPERING AIR
WEST A	3	32	112	.004	0	GPB DJL MJH	WEST TEMPERING AIR
WEST A	4	32	111	.004	0	GPB DJL MJH	WEST TEMPERING AIR
WEST B	1	32	112	.136	0	GPB DJL MJH	WEST TEMPERING AIR
WEST B	2	32	112	.053	15	GPB DJL MJH	"
WEST B	3	32	113	.007	0	GPB DJL MJH	"
WEST B	4	32	113	.002	0	GPB DJL MJH	"
						~~GPB DJL MJH~~	
WEST C	1	32	114	.163	3	GPB DJL MJH	WEST TEMPERING AIR
WEST C	2	32	114	.056	20	GPB DJL MJH	"
WEST C	3	32	113	.004	0	GPB DJL MJH	"
WEST C	4	32	113	.002	0	GPB DJL MJH	"
WEST D	1	32	113	.168	5	GPB DJL MJH	WEST TEMPERING AIR
WEST D	2	32	113	.043	10	GPB DJL MJH	"
WEST D	3	32	113	.002	5	GPB DJL MJH	"
WEST D	4	32	112	.002	0	GPB DJL MJH	"
WEST E	1	32	111	.136	5	GPB DJL MJH	WEST TEMPERING AIR
WEST E	2	32	111	.056	15	GPB DJL MJH	"
WEST E	3	32	110	.004	0	GPB DJL MJH	"
WEST E	4	32	110	.004	0	GPB DJL MJH	"

FECHEIMER E-9

WEST TEMPERING AIR SHEET 1 OF 2 GPB/DJL/MJH 6-26-87

IP14_002020

Babcock & Wilcox

GENERAL CALCULATIONS

SHEET 2 OF 2

TAP	POINT	STATIC IN.	TEMP.	ΔP IN.	ANGLE (DEGREE)	DATA BY	LOCATION (REMARKS)
WEST F	1	32	110	.144	2	GPB DJL MJH	WEST TEMPERING AIR
WEST F	2	32	111	.104	10	GPB DJL MJH	"
WEST F	3	32	110	.036	15	GPB DJL MJH	"
WEST F	4	32	110	.002	0	GPB DJL MJH	"

FECHEIMER E-9

WEST TEMPERING AIR SHEET 2 OF 2 GPB/DJL/MJH 6-26-87

IP14_002021

Babcock & Wilcox

SHEET 2 OF 2 GENERAL CALCULATIONS

TAP	POINT	STATIC IN.	TEMP.	ΔP IN.	ANGLE (DEGREE)	DATA BY	LOCATION (REMARKS)
E. F	1	32	115	.068	5	GPB DJL MJH	EAST TEMPERING AIR
EAST F	2	32	115	.053	10	GPB DJL MJH	" " "
EAST F	3	32	114	.019	0	GPB DJL MJH	" " "
EAST F	4	32	114	.007	0	GPB DJL MJH	" " "

EAST TEMPERING AIR SHEET 2 OF 2 GPB/DJL/MJH 6-26-87

IP14_002022

Babcock & Wilcox
GENERAL CALCULATIONS

SHEET 1 OF 2

START TIME 1235
FINISH TIME 1305

RA	POINT	STATIC IN.	TEMP.	ΔP IN.	ANGLE (DEGREE)	DATA BY	LOCATION (REMARKS)
EAST A	1	32	126	.095	10	GPB DJL MJH	EAST TEMPERING AIR
EAST A	2	32	127	.014	0	GPB ~~DJL~~ MJH	" " "
EAST A	3	32	127	.004	0	GPB DJL MJH	" " "
EAST A	4	32	127	.014	0	GPB DJL MJH	" " "
EAST B	1	32	125	.065	10	GPB DJL MJH	EAST TEMPERING AIR
EAST B	2	32	125	.029	10	GPB DJL MJH	" " "
EAST B	3	32	125	.004	0	GPB DJL MJH	" " "
EAST B	4	32	124	.002	0	GPB DJL MJH	" " "
EAST C	1	32	122	.109	5	GPB DJL MJH	EAST TEMPERING AIR
EAST C	2	32	123	.036	10	GPB DJL MJH	" " "
EA	3	32	121	.004	0	GPB DJL MJH	" " "
EAST C	4	32	120	.002	0	GPB DJL MJH	" " "
EAST D	1	32	120	.080	5	GPB DJL MJH	EAST TEMPERING AIR
EAST D	2	32	120	.029	15	GPB DJL MJH	" " "
EAST D	3	32	119	.014	0	GPB DJL MJH	" " "
EAST D	4	32	118	.036	7	GPB DJL MJH	" " "
EAST E	1	32	116	.073	5	GPB DJL MJH	EAST TEMPERING AIR
EAST E	2	32	115	.014	20	GPB DJL MJH	" " "
EAST E	3	32	114	.017	0	GPB DJL MJH	" " "
EAST E	4	32	114	.036	5	GPB DJL MJH	" " "

FECHEIMER E9

EAST TEMPERING AIR SHEET 1 OF 2 GPB/MJH/DJL 6-26-87

IP14_002023

		10:00	10:30	11:00	11:30	12:00	12:30	1:00	1:30	2:00	2:30	3:00	3:30	4:00
WPAH	1			112.2	99.4	113.2		121.0	122.6	120.2	129.6	118.4		131.4
	2			112.6	98.8	112.2		120.8	122.8	120.4	128.6	120.0		129.0
	3			112.2	99.0	112.0		120.6	122.8	119.6	128.4	120.2		128.0
	4			112.6	99.6	112.0		120.0	122.8	119.4	127.8	119.8		120.6
	5			111.4	99.2	111.2		120.2	121.0	118.8	127.0	119.2		119.0
	6			111.2	99.4	111.6		119.0	121.0	119.0	126.8	119.6		118.2
WSAH	1			89.2	78.6	89.4		97.0	99.0	97.4	104.6	97.4		96.8
	2			89.0	79.0	89.2		97.2	98.8	97.4	104.0	97.6		96.8
	3			88.0	78.2	88.4		95.2	97.4	96.4	102.8	96.4		95.8
	4			87.8	79.6	88.2		95.4	97.4	96.4	101.8	96.6		96.2
	5			86.2	78.6	87.6		94.0	96.6	95.6	101.0	95.4		95.2
	6			85.0	80.0	87.6		94.0	95.8	95.6	101.2	95.6		96.0
	7			85.2	80.0	87.4		93.4	95.8	95.4	101.0	95.2		95.2
	8			85.2	80.8	87.0		93.2	96.0	95.6	101.2	95.6		96.0
EPAH	1			105.0	101.8	107.6		110.2	114.4	113.2	116.8	109.8		109.6
	2			104.2	102.0	107.2		109.6	114.2	112.8	116.6	110.4		109.2
	3			107.2	106.6	110.8		113.0	118.2	116.4	121.0	114.6		113.8
	4			106.0	105.4	110.0		112.0	116.6	115.4	119.6	114.0		112.6
	5			103.2	102.8	107.2		109.8	114.2	113.0	116.8	111.2		109.4
	6			102.4	102.8	107.4		109.6	114.2	112.4	116.6	111.2		109.4
ESAH	1			80.6	81.4	85.6		88.0	92.0	92.2	95.8	90.2		88.6
	2			79.2	81.2	85.0		87.0	91.2	91.6	94.4	90.2		88.0
	3			79.4	80.4	84.0		86.2	90.2	91.6	94.4	89.6		88.0
	4			79.0	80.4	84.0		86.0	90.6	90.8	93.8	90.0		87.2
	5			78.0	79.4	83.2		84.8	90.4	90.6	93.6	88.8		86.8
	6			78.4	80.6	84.2		85.8	91.2	91.4	94.4	90.2		87.6
	7			79.0	80.6	84.8		86.6	91.8	91.8	95.6	91.6		89.6
	8			77.8	81.0	85.0		86.0	91.0	91.8	94.8	91.6		89.4

IP14_002024

	10:00	10:30	11:00	11:30	12:00	NOON	1:00	1:30	2:00	2:30	3:00	3:30	4:00
EPAH AIR TO GAS OUT			41.0	40.8	40.8		40.7	40.3	40.3	40.5		40.0	40.0
EPAH AIR IN STATIC			33.7	33.6	33.1		33.2	33.0	32.9	32.8		32.7	32.4
ESAH AIR IN TO GAS OUT			12.4	12.4	12.7		12.7	12.5	12.7	12.7		12.3	12.4
ESAH AIR IN STATIC			4.5	4.5	4.6		4.3	4.6	4.2	4.3		4.2	4.3
WPAH AIR IN TO GAS OUT			41.5	41.6	41.5		41.6	41.2	41.6	41.1		40.8	40.9
WPAH AIR IN STATIC			34.2	34.3	33.8		33.8	33.5	33.5	33.5		33.3	33.1
WSAH AIR IN TO GAS OUT			12.6	12.6	12.7		12.5	12.6	12.5	12.5		12.2	12.5
WSAH AIR IN STATIC			4.4	4.4	4.3		4.4	4.5	4.3	4.3		4.4	4.3

20.9
19.9
40.8

19.8
21.1
40.9

19.5
13.8
33.3

IP14_002025

RB-614 27 Jun 1987 17:07:11

TEST NO.		2A	3A	4A	5A	
TEST SEQ. NO.		1	2	3	4	
DATE		06/23/87	06/24/87	06/25/87	06/26/87	
TIME START		1050	1110	1015	1045	
TIME END		1735	1645	1530	1625	
LOAD MW		857	850	847	853	
FUEL		PC	PC	PC	PC	

2A AVERAGE OF SCANS 1-81
3A AVERAGE OF SCANS 1 - 68
4A AVERAGE OF SCANS 1 - 64
5A AVERAGE OF SCANS 1 - 69

DATA PAGE NO. 2 FLOWS MLB/HR

LOAD MW		857.2	850.1	846.6	853.0	2	1
HP STEAM FLOW		6213.1	6183.8	6140.4	6217.7	2	2
FW FLOW		6155.5	6142.4	6050.3	6159.4	2	3
BLOW DOWN FLOW		0.0	0.0	0.0	0.0	2	4
RH-1 SP FLOW		5.1725	5.6713	3.8197	4.2307	2	5
SH-1 SP FLOW W		0.0	0.0	0.0	0.0	2	7
SH-1 SP FLOW E		13.00	13.83	14.23	14.14	2	8
SH-2 SP FLOW W		16.90	0.00	32.23	11.42	2	9
SH-2 SP FLOW E		19.24	11.92	32.17	17.87	2	10
TOTAL AIR FLOW		79.71	78.51	78.16	81.18	2	18
TOTAL FUEL FLOW		337.5	333.5	328.4	336.0	2	19
FEGT - PYROSONICS	TG	100.0	100.0	100.0	100.0	2	20

DATA PAGE NO. 3 FLUID TEMPERATURES F - PLANT

SSH OUT T (P)		1004.8	1007.1	1005.0	1005.4	3	1
TURB THROT T (P)		1004.0	1006.4	1004.1	1005.0	3	3
ECON IN T (P)		551.8	551.0	550.9	551.8	3	5
SH-1 SPRAY TEMP		337.5	333.9	337.5	341.1	3	7
LVG 1st STG ATT(P)-W		719.0	717.3	718.1	724.7	3	8
LVG 1st STG ATT(P)-E		725.0	726.0	728.2	729.3	3	9
ENT 1st STG ATT(P)-W		718.9	718.9	719.7	722.2	3	10
ENT 1st STG ATT(P)-E		724.4	724.7	726.2	727.6	3	11
LVG RH-1 T (P)-N		1006.9	1008.3	996.3	997.1	3	12
LVG RH-1 T (P)-S		1009.9	1011.3	1000.5	1001.6	3	13
HRH AT TURB (P)-N		1009.0	1009.4	998.3	999.7	3	14
HRH AT TURB (P)-S		1011.9	1012.4	1001.3	1003.4	3	15
ENT RH-1 T (P)		625.1	617.4	624.2	624.8	3	16
CRH ENT ATT (P)	SGJ024	626.6	627.7	626.1	626.4	3	18

TEST NO.		2A	3A	4A	5A		
TEST SEQ. NO.		1	2	3	4		
DATE		06/23/87	06/24/87	06/25/87	06/26/87		
TIME START		1050	1110	1015	1045		
TIME END		1735	1645	1530	1625		
LOAD MW		857	850	847	853		

DATA PAGE NO. 3 FLUID TEMPERATURES F - PLANT

RH DSUPHTR INL T (P)	COA06A	624.6	625.5	623.5	624.1	3	19
RH-1 SPRAY T (P)		150.3	275.8	164.3	276.2	3	20
LVG 2nd STG AT (P)-W		788.8	792.4	790.2	789.7	3	21
LVG 2nd STG AT (P)-E		779.4	779.4	767.8	777.5	3	22
ENT 2nd STG AT (P)-L		792.6	789.2	796.7	792.6	3	23
ENT 2nd STG AT (P)-R		783.9	779.1	778.0	781.3	3	24
ECON OUT T (P)		573.4	571.8	571.8	572.2	3	27
ECON OUT T (P)		571.1	570.6	574.2	574.2	3	28
SAT CON TUBE(P)		678.4	678.0	678.0	676.7	3	29

DATA PAGE NO. 5 FLUID PRESSURES PSIG

SEC SH OUT PRESS (P)		2439.5	2460.1	2445.8	2460.9	5	2
DRUM PRESS (P)		2667.3	2682.0	2666.8	2686.8	5	3
HRH RH-1 PRESS (P)		523.4	520.9	517.8	522.8	5	4
CRH RH-1 PRESS (P)		556.6	553.9	549.8	555.9	5	5
NO.1 HTR EXT P (P)-A		171.9	270.9	1044.9	1055.7	5	6
NO.1 HTR EXT P (P)-B		1053.0	1045.9	1043.2	1054.1	5	7
NO.2 HTR EXT P (P)-A		546.1	543.1	539.9	545.3	5	8
NO.2 HTR EXT P (P)-B		549.7	546.7	543.2	549.0	5	9
ECON IN PRESS (P)		36.25	36.25	36.25	36.25	5	12
SEC SH IN PRES (P) E		2564.9	2582.1	2568.3	2585.6	5	13
SEC SH IN PRES (P) W		0.0	0.0	0.0	0.0	5	14

DATA PAGE NO. 6 AIR & GAS DATA - PLANT

AMBIENT AIR TEMP		83.19	86.02	87.11	90.44	6	1
AIR ENT SEC AH (P)-A		87.06	90.52	91.94	94.72	6	2
AIR ENT SEC AH (P)-B		86.11	89.87	91.42	93.78	6	3
AIR ENT PRI AH (P)-A		108.2	111.2	112.6	115.1	6	4
AIR ENT PRI AH (P)-B		106.3	109.4	110.6	113.0	6	5
AIR LVG SEC AH (P)-A		655.5	658.9	655.7	659.9	6	6
AIR LVG SEC AH (P)-B		667.4	670.9	672.1	675.1	6	7
AIR LVG PRI AH (P)-A		536.7	537.0	534.0	532.7	6	8
AIR LVG PRI AH (P)-B		499.1	502.1	500.6	498.7	6	9
GAS LVG SEC AH (P)-A		307.0	310.6	312.9	314.9	6	10
GAS LVG SEC AH (P)-B		318.4	323.2	318.7	321.8	6	11
GAS LVG PRI AH (P)-A		307.3	306.0	304.8	306.3	6	12
GAS LVG PRI AH (P)-B		309.6	308.4	307.5	306.9	6	13
GAS LVG ECON (P)-E		750.8	752.7	757.3	761.6	6	14
GAS LVG ECON (P)-W		748.3	748.0	750.3	756.0	6	15
O2 LVG ECON (P)-W		2.5930	2.4666	2.4691	2.8116	6	20
O2 LVG ECON (P)-E		2.7013	2.8213	2.7730	2.7988	6	21
NOX @ STACK (P)		256.3	234.2	238.5	236.1	6	24
O2 @ STACK (P)		256.3	234.2	238.4	236.1	6	25

TEST NO.		2A	3A	4A	5A	
TEST SEQ. NO.		1	2	3	4	
DATE		06/23/87	06/24/87	06/25/87	06/26/87	
TIME START		1050	1110	1015	1045	
TIME END		1735	1645	1530	1625	
LOAD MW		857	850	847	853	

DATA PAGE NO. 6 AIR & GAS DATA - PLANT

BAROMETRIC PRESS (P)		25.45	25.55	25.52	25.49	6 29
DRY BULB TEMP (B)		81.00	83.40	84.10	86.00	7 26
WET BULB TEMP (B)		55.00	56.10	55.30	56.40	7 27
MOIST IN AIR (B)		.0049	.0050	.0044	.0046	7 28
REL HUMIDITY (P)		-25.00	-25.00	-25.00	-25.00	7 30

DATA PAGE NO. 7 AIR & GAS DATA - TEST

AIR ENT SEC AH (B) W	GRID	86.40	83.60	93.80	0.00	7 2
AIR ENT SEC AH (B) E	GRID	87.00	83.70	87.10	0.00	7 3
AIR ENT PRI AH (B) W	GRID	107.8	105.9	115.8	0.0	7 4
AIR ENT PRI AH (B) E	GRID	111.1	109.1	111.9	0.0	7 5
AIR LVG SEC AH (B) W	TRAV	0.0	655.0	636.0	0.0	7 6
AIR LVG SEC AH (B) E	TRAV	0.0	663.0	661.0	0.0	7 7
AIR LVG PRI AH (B) W	TRAV	474.0	452.0	470.0	0.0	7 8
AIR LVG PRI AH (B) E	TRAV	513.0	469.0	489.0	0.0	7 9
GAS LVG PRI AH (B) W	TRAV	287.0	290.0	288.0	0.0	7 12
GAS LVG PRI AH (B) E	TRAV	296.0	307.0	295.0	0.0	7 13
GAS LVG ECON (B) W	GRID	769.1	771.1	768.4	775.8	7 14
GAS LVG ECON (B) E	GRID	771.3	775.0	770.2	775.7	7 15
GAS ENT SEC AH (B) W	TRAV	0.0	747.0	747.0	0.0	7 16
GAS ENT SEC AH (B) E	TRAV	0.0	722.0	747.0	0.0	7 17
GAS ENT PRI AH (B) W	TRAV	734.0	742.0	731.0	0.0	7 18
GAS ENT PRI AH (B) E	TRAV	742.0	740.0	737.0	0.0	7 19
O2 LVG ECON (B) W	TELE	4.3679	3.1774	2.9530	3.5826	7 20
O2 LVG ECON (B) E	TELE	3.1506	3.5595	3.2767	4.2640	7 21

DATA PAGE NO. 8 FW HTR TEMPERATURES F - PLANT

NO.1 HTR EXT T (P)-A		799.5	800.0	798.6	799.5	8 1
NO.1 HTR EXT T (P)-B		799.5	800.2	798.6	799.9	8 2
NO.2 HTR EXT T (P)-A		625.6	627.1	624.8	625.7	8 3
NO.2 HTR EXT T (P)-B		625.9	626.9	625.4	625.2	8 4
NO.1 FW LVG T (P)-A		553.1	552.8	552.8	553.2	8 5
NO.1 FW LVG T (P)-B		553.3	552.2	551.9	553.1	8 6
NO.1 FW ENT T (P)-A		478.2	478.8	478.0	478.3	8 7
NO.1 FW ENT T (P)-B		480.1	480.1	479.6	480.2	8 8
NO.2 FW ENT T (P)-A		395.0	394.5	394.2	394.2	8 11
NO.2 FW ENT T (P)-B		394.5	393.9	394.7	395.0	8 12
NO.1 DRAIN T (P)-A		489.8	488.7	488.4	489.0	8 13
NO.1 DRAIN T (P)-B		488.1	488.1	487.3	487.8	8 14
NO.2 DRAIN T (P)-A		402.0	402.2	402.8	403.1	8 15
NO.2 DRAIN T (P)-B		401.4	402.7	401.0	401.4	8 16
INT SSH MANIF (P)-1		879.7	876.7	870.3	883.4	8 17
INT SSH MANIF (P)-2		907.4	908.9	902.6	915.8	8 18

TEST NO.	2A	3A	4A	5A		
TEST SEQ. NO.	1	2	3	4		
DATE	06/23/87	06/24/87	06/25/87	06/26/87		
TIME START	1050	1110	1015	1045		
TIME END	1735	1645	1530	1625		
LOAD MW	857	850	847	853		

DATA PAGE NO. 8 FW HTR TEMPERATURES F - PLANT

INT SSH MANIF (P)-3		915.8	907.4	907.0	919.3	8	19
INT SSH MANIF (P)-4		954.8	949.5	948.4	962.7	8	20
INT SSH MANIF (P)-5		930.9	923.0	920.3	924.8	8	21
INT SSH MANIF (P)-6		961.5	956.3	950.4	953.5	8	22
INT SSH MANIF (P)-7		924.1	925.7	916.0	920.6	8	23
INT SSH MANIF (P)-8		948.3	952.5	942.7	949.4	8	24
INT SSH MANIF (P)-9		907.9	905.1	899.1	905.2	8	25
INT SSH MANIF (P)-10		948.9	944.7	932.7	935.1	8	26
INT SSH MANIF (P)-11		906.3	905.7	895.6	900.6	8	27
INT SSH MANIF (P)-12		943.8	938.2	925.3	927.6	8	28
INT SSH MANIF (P)-13		904.4	901.3	895.0	901.6	8	29
INT SSH MANIF (P)-14		939.9	935.7	919.2	925.0	8	30
INT SSH MANIF (P)-15		913.3	916.6	915.2	910.2	9	17
INT SSH MANIF (P)-16		951.2	948.3	947.4	939.9	9	18
INT SSH MANIF (P)-17		910.8	920.1	916.7	911.1	9	19
INT SSH MANIF (P)-18		937.1	946.4	944.3	936.5	9	20
INT SSH MANIF (P)-19		919.6	928.7	927.8	919.0	9	21
INT SSH MANIF (P)-20		947.8	958.7	952.7	947.1	9	22
INT SSH MANIF (P)-21		922.1	930.1	928.7	919.4	9	23
INT SSH MANIF (P)-22		952.2	959.3	960.1	950.9	9	24
INT SSH MANIF (P)-23		924.5	933.7	934.4	925.7	9	25
INT SSH MANIF (P)-24		958.3	967.6	968.1	958.8	9	26
INT SSH MANIF (P)-25		923.5	928.0	930.1	925.3	9	27
INT SSH MANIF (P)-26		957.5	963.8	965.0	961.7	9	28
INT SSH MANIF (P)-27		888.3	893.4	889.1	891.8	9	29
INT SSH MANIF (P)-28		911.9	918.1	915.0	916.5	9	30

DATA PAGE NO. 10 PULVERIZER COAL AND PA FLOW

PULV A COAL FLOW		48.31	47.79	46.95	48.17	10	1
PULV B COAL FLOW		48.08	47.56	46.71	47.93	10	2
PULV C COAL FLOW		-.05	47.94	47.09	48.34	10	3
PULV D COAL FLOW		49.32	48.77	47.94	49.19	10	4
PULV E COAL FLOW		48.49	47.97	47.13	48.37	10	5
PULV F COAL FLOW		48.29	.15	.15	.15	10	6
PULV G COAL FLOW		48.68	48.12	47.26	48.49	10	7
PULV H COAL FLOW		48.91	48.39	47.54	48.79	10	8
PULV A PA FLOW		85.24	85.77	87.25	87.92	10	16
PULV B PA FLOW		88.11	87.72	87.25	87.92	10	17
PULV C PA FLOW		3.92	87.67	87.12	87.81	10	18
PULV D PA FLOW		87.30	86.90	86.34	87.23	10	19
PULV E PA FLOW		86.25	85.92	85.46	86.22	10	20
PULV F PA FLOW		87.91	0.00	0.00	0.00	10	21
PULV G PA FLOW		84.03	84.92	86.76	88.40	10	22
PULV H PA FLOW		87.71	87.23	86.85	87.64	10	23

TEST NO.		2A	3A	4A	5A	
TEST SEQ. NO.		1	2	3	4	
DATE		06/23/87	06/24/87	06/25/87	06/26/87	
TIME START		1050	1110	1015	1045	
TIME END		1735	1645	1530	1625	
LOAD MW		857	850	847	853	

DATA PAGE NO. 11 PULVERIZER INLET TEMP AND PA DIFF

PULV A INLET T		326.7	311.2	308.3	319.0	11	1
PULV B INLET T		337.1	320.3	310.0	340.2	11	2
PULV C INLET T		97.2	336.1	329.3	299.4	11	3
PULV D INLET T		347.6	334.3	330.3	339.4	11	4
PULV E INLET T		343.9	333.3	318.8	333.4	11	5
PULV F INLET T		378.3	112.3	103.8	104.9	11	6
PULV G INLET T		365.2	345.4	326.0	337.7	11	7
PULV H INLET T		370.4	342.3	333.7	365.6	11	8
PULV A DIFF P		13.90	13.60	12.46	12.10	11	24
PULV B DIFF P		12.38	12.23	11.67	11.82	11	25
PULV C DIFF P		.04	12.02	11.12	11.84	11	26
PULV D DIFF P		13.29	12.94	12.78	12.61	11	27
PULV E DIFF P		13.20	12.60	12.21	12.52	11	28
PULV F DIFF P		12.13	0.00	0.00	0.00	11	29
PULV G DIFF P		13.86	13.63	13.63	13.60	11	30
PULV H DIFF P		13.35	13.04	12.49	12.47	11	9

DATA PAGE NO. 12 OPERATOR POSITIONS %

RH-1 SP VLV POSIT		0.0	0.0	0.0	0.0	12	1
SH-1 SP VLV POSIT-A		0.0	0.0	0.0	0.0	12	3
SH-1 SP VLV POSIT-B		0.0	0.0	0.0	0.0	12	4
SH-2 SP VLV POSIT-A		0.0	0.0	0.0	0.0	12	5
SH-2 SP VLV POSIT-B		0.0	0.0	0.0	0.0	12	6
RH PASS DMPR POS-A		0.0	0.0	0.0	0.0	12	15
RH PASS DMPR POS-B		0.0	0.0	0.0	0.0	12	16
SH PASS DMPR POS-A		0.0	0.0	0.0	0.0	12	17
SH PASS DMPR POS-B		0.0	0.0	0.0	0.0	12	18

DATA PAGE NO. 13 MISCELLANEOUS GAS DATA - TEST

O2 LVG PRI AH W	TRAV	6.8000	8.3000	7.2000	0.0000	13	5
O2 LVG PRI AH E	TRAV	6.5000	6.5000	6.9000	0.0000	13	6
CO2 LVG PRI AH W	TRAV	12.40	11.40	12.20	0.00	13	7
CO2 LVG PRI AH E	TRAV	12.30	12.80	12.60	0.00	13	8
O2 ENT PRI AH W	TRAV	4.2000	3.0000	3.4000	0.0000	13	13
O2 ENT PRI AH E	TRAV	3.6000	3.2000	3.1000	0.0000	13	14
CO2 ENT PRI AH W	TRAV	14.60	15.90	15.60	0.00	13	15
CO2 ENT PRI AH E	TRAV	15.30	15.80	15.80	0.00	13	16
GAS LVG RH PS (B)SW	GRID	750.7	751.8	742.6	739.7	13	21
GAS LVG RH PS (B)SE	GRID	755.8	753.8	743.7	740.9	13	22
GAS LVG PSH PS (B)NW	GRID	766.7	768.2	769.1	779.4	13	23
GAS LVG PSH PS (B)NE	GRID	767.3	770.5	771.8	779.7	13	24
STACK O2/CO2 (P)		5.1897	5.1991	5.2697	5.5532	13	25
		0.0	0.0	0.0	0.0	13	28

TEST NO.	2A	3A	4A	5A		
TEST SEQ. NO.	1	2	3	4		
DATE	06/23/87	06/24/87	06/25/87	06/26/87		
TIME START	1050	1110	1015	1045		
TIME END	1735	1645	1530	1625		
LOAD MW	857	850	847	853		

DATA PAGE NO. 13 MISCELLANEOUS GAS DATA - TEST

A = RIGHT = EAST		0.0	0.0	0.0	0.0	13 29
GAS LVG ECON T A-G W	TRAV	0.0	0.0	0.0	0.0	13 30

DATA PAGE NO. 14 MISCELLANEOUS

GAS LVG ECON T A-G W	TRAV	746.0	748.0	744.0	0.0	14 1
GAS LVG ECON T H-N W	TRAV	751.0	757.0	750.0	0.0	14 2
GAS LVG ECON T A-G E	TRAV	739.0	746.0	751.0	0.0	14 3
GAS LVG ECON T H-N E	TRAV	750.0	757.0	743.0	0.0	14 4
O2 LVG ECON A-G W	TRAV	4.7000	3.6000	3.8000	0.0000	14 5
O2 LVG ECON H-N W	TRAV	3.9000	3.9000	4.5000	0.0000	14 6
O2 LVG ECON A-G E	TRAV	3.1000	3.9000	3.9000	0.0000	14 7
O2 LVG ECON H-N E	TRAV	4.5000	3.3000	3.2000	0.0000	14 8
CO2 LVG ECON A-G W	TRAV	14.60	15.60	15.40	0.00	14 9
CO2 LVG ECON H-N W	TRAV	14.90	15.20	14.60	0.00	14 10
CO2 LVG ECON A-G E	TRAV	15.80	15.10	15.10	0.00	14 11
CO2 LVG ECON H-N E	TRAV	15.50	15.80	15.90	0.00	14 12
GAS ENT BAG HS T W	TRAV	295.0	299.0	302.0	0.0	14 13
GAS ENT BAG HS T C	TRAV	337.0	337.0	338.0	0.0	14 14
GAS ENT BAG HS T E	TRAV	299.0	317.0	322.0	0.0	14 15
O2 ENT BAG HS W	TRAV	6.0000	4.9000	4.9000	0.0000	14 16
O2 ENT BAG HS C	TRAV	4.2000	4.3000	4.5000	0.0000	14 17
O2 ENT BAG HS E	TRAV	4.7000	5.0000	4.8000	0.0000	14 18
CO2 ENT BAG HS W	TRAV	13.10	14.10	14.10	0.00	14 19
CO2 ENT BAG HS C	TRAV	14.80	14.80	14.50	0.00	14 20
CO2 ENT BAG HS E	TRAV	14.30	14.10	14.20	0.00	14 21
TEMP AIR T W	TRAV	110.0	110.0	113.0	0.0	14 22
TEMP AIR T E	TRAV	109.0	112.0	110.0	0.0	14 23

DATA PAGE NO. 15 MISCELLANEOUS

PRI AH AIR IN P W	MANO	0.00	31.10	31.80	0.00	15 1
PRI AH AIR IN P E	MANO	0.00	30.40	31.10	0.00	15 2
PRI AH AIR OUT P W	TRAV	29.00	29.00	30.00	0.00	15 3
PRI AH AIR OUT P E	TRAV	29.00	29.10	30.00	0.00	15 4
PRI AH GAS IN P W	TRAV	-3.8000	-4.0000	-4.0000	0.0000	15 5
PRI AH GAS IN P E	TRAV	-3.9000	-4.0000	-4.0000	0.0000	15 6
PRI AH GAS OUT P W	TRAV	-8.5000	-8.0000	-8.0000	0.0000	15 7
PRI AH GAS OUT P E	TRAV	-8.2000	-8.0000	-8.0000	0.0000	15 8
PRI AH AIR-GAS DP W	MANO	38.50	38.40	39.20	0.00	15 9
PRI AH AIR-GAS DP E	MANO	35.70	37.50	38.10	0.00	15 10
SEC AH AIR IN P W	MANO	0.0000	3.9000	4.0000	0.0000	15 11
SEC AH AIR IN P E	MANO	0.0000	4.0000	4.0000	0.0000	15 12
SEC AH GAS IN P W	TRAV	0.0000	-3.6000	-3.7000	0.0000	15 13
SEC AH GAS IN P E	TRAV	0.0000	-3.8000	-3.6000	0.0000	15 14

TEST NO.		2A	3A	4A	5A	
TEST SEQ. NO.		1	2	3	4	
DATE		06/23/87	06/24/87	06/25/87	06/26/87	
TIME START		1050	1110	1015	1045	
TIME END		1735	1645	1530	1625	
LOAD MW		857	850	847	853	

DATA PAGE NO. 15 MISCELLANEOUS

SEC AH AIR-GAS DP	W	MANO	11.90	11.60	11.80	0.00	15 15
SEC AH AIR-GAS DP	E	MANO	11.80	11.40	11.70	0.00	15 16
SEC AH AIR OUT P	W	TRAV	0.0000	2.0000	2.0000	0.0000	15 17
SEC AH AIR OUT P	E	TRAV	0.0000	1.9000	1.9000	0.0000	15 18

Babcock & Wilcox

a McDermott company

Suite 410
7401 West Mansfield Avenue
Lakewood, CO 80235
(303) 988-8203

September 24, 1987

Intermountain Power Service Corporation
Route #1, Box 864
Brush Wellman Road
Delta, Utah 84624

Attn: Mr. Chuck Finnigan

Re: Air Heater Test Data
Unit #1 - June 26, 1987

Dear Chuck,

Enclosed for your use is all of the data taken during the air heater test on June 26, 1987.

Should you require any additional information, please do not hesitate to contact me in the Denver office.

Sincerely,

BABCOCK & WILCOX COMPANY

Frank J. McGinley, Jr.
District Service Engineer

FJM:jd

W/Attachments

****
****

PRELIMINARY CALCULATIONS !!!!!!!!!
FINAL CALCULATIONS TO BE RUN AFTER
FECHHEIMER PROBES ARE
INDEPENDENTLY CALIBRATED

****
****

DATE = 6-26-87
LOCATION = ECON WEST
FILE IDENITY = IP6_26EWH
BAROMETRIC PRESSURE = 25.49
PROBE IDENTY = E-6
DUCT AREA = 850.0

TAP	POINT	CORR V	%02	% CO2	V LOC/AVG	WTD % O2	WTD %CO2	WTD TEMP
1	1	0	5.1	13.7	0.00	0.0	0.0	0
1	2	2833	5.1	14.1	1.26	6.4	17.8	967
1	3	1462	4.9	14.1	.65	3.2	9.2	495
1	4	2011	5.0	14.2	.89	4.5	12.7	680
1	5	2487	4.6	14.4	1.11	5.1	15.9	835
1	6	2558	4.8	14.4	1.14	5.5	16.4	851
1	7	2926	4.8	14.4	1.30	6.2	18.7	940

TAP	POINT	CORR V	%02	% CO2	V LOC/AVG	WTD % O2	WTD %CO2	WTD TEMP
2	1	0	5.2	14.0	0.00	0.0	0.0	0
2	2	0	5.2	14.0	0.00	0.0	0.0	0
2	3	6736	5.2	14.0	3.00	15.6	42.0	2250
2	4	980	5.2	14.0	.44	2.3	6.1	333
2	5	796	5.0	14.2	.35	1.8	5.0	269
2	6	2007	4.9	14.3	.89	4.4	12.8	675
2	7	2418	4.4	14.8	1.08	4.7	15.9	809

TAP	POINT	CORR V	%02	% CO2	V LOC/AVG	WTD % O2	WTD %CO2	WTD TEMP
3	1	0	6.1	13.5	0.00	0.0	0.0	0
3	2	0	5.2	13.8	0.00	0.0	0.0	0
3	3	4060	4.8	14.4	1.81	8.7	26.0	1378
3	4	2520	5.2	14.0	1.12	5.8	15.7	858
3	5	2918	4.6	14.5	1.30	6.0	18.8	990
3	6	3149	4.4	14.6	1.40	6.2	20.5	1067
3	7	2967	4.6	14.4	1.32	6.1	19.0	998

TAP	POINT	CORR V	%02	% CO2	V LOC/AVG	WTD % O2	WTD %CO2	WTD TEMP
4	1	0	7.1	12.4	0.00	0.0	0.0	0
4	2	0	4.9	14.4	0.00	0.0	0.0	0
4	3	6353	4.4	14.8	2.83	12.4	41.8	2149
4	4	4448	4.7	14.6	1.98	9.3	28.9	1504
4	5	3424	5.0	14.4	1.52	7.6	21.9	1168
4	6	2833	4.7	14.5	1.26	5.9	18.3	962
4	7	2837	4.4	14.8	1.26	5.6	18.7	967

TAP	POINT	CORR V	%02	% CO2	V LOC/AVG	WTD % O2	WTD %CO2	WTD TEMP
5	1	0	7.4	12.2	0.00	0.0	0.0	0
5	2	0	4.4	14.8	0.00	0.0	0.0	0
5	3	1290	5.2	14.2	.57	3.0	8.1	444
5	4	4494	4.5	14.7	2.00	9.0	29.4	1532
5	5	3452	4.4	14.8	1.54	6.8	22.7	1180
5	6	3095	3.9	15.5	1.38	5.4	21.3	1055
5	7	1266	4.2	15.1	.56	2.4	8.5	432

TAP	POINT	CORR V	%02	% CO2	V LOC/AVG	WTD % O2	WTD %CO2	WTD TEMP
6	1	0	7.1	12.5	0.00	0.0	0.0	0
6	2	0	4.4	14.8	0.00	0.0	0.0	0
6	3	3718	4.7	14.5	1.65	7.8	24.0	1278
6	4	4030	4.0	15.0	1.79	7.2	26.9	1381
6	5	3340	4.2	14.8	1.49	6.2	22.0	1138
6	6	2632	4.4	14.8	1.17	5.2	17.3	892
6	7	1132	5.2	13.9	.50	2.6	7.0	383

TAP	POINT	CORR V	%02	% CO2	V LOC/AVG	WTD % O2	WTD %CO2	WTD TEMP
7	1	0	7.4	12.0	0.00	0.0	0.0	0
7	2	0	4.6	14.4	0.00	0.0	0.0	0
7	3	5845	4.7	14.5	2.60	12.2	37.7	2024
7	4	3406	4.0	15.2	1.52	6.1	23.0	1165
7	5	4127	3.6	15.4	1.84	6.6	28.3	1382
7	6	3594	4.4	14.8	1.60	7.0	23.7	1212
7	7	2002	4.2	14.8	.89	3.7	13.2	680

LOCATION = ECON WEST
FILE IDENITY = IP6_26EWH

AVERAGE VELOCITY = 2248 FPM

AVERAGE (WEIGHTED) % O2 = 4.6
AVERAGE (WEIGHTED) % CO2 = 14.6
AVERAGE (WEIGHTED) TEMPERATURE = 762

AVERAGE (ARITHMATIC) % O2 = 4.9
AVERAGE (ARITHMATIC) % CO2 = 14.3
AVERAGE (ARITHMATIC) TEMPERATURE = 757

AVERAGE STATIC PRESSURE (in. H2O) = -2.9
AVERAGE DENSITY (LBM/FT^3) = .02814

ACFM (ACTUAL FT^3/MIN) = 1910735
LB/HR (WET) = 3226339

****
****

PRELIMINARY CALCULATIONS !!!!!!!!!
FINAL CALCULATIONS TO BE RUN AFTER
FECHHEIMER PROBES ARE
INDEPENDENTLY CALIBRATED

****
****

DATE = 6-26-87
LOCATION = ECON WEST
FILE IDENITY = IP6_26EWA
BAROMETRIC PRESSURE = 25.49
PROBE IDENTY = E-43
DUCT AREA = 850.0

TAP	POINT	CORR V	%02	% CO2	V LOC/AVG	WTD % O2	WTD %CO2	WTD TEMP
1	1	1469	3.7	15.5	.50	1.9	7.8	368
1	2	1481	4.6	14.8	.51	2.3	7.5	377
1	3	1471	3.7	15.6	.50	1.9	7.9	371
1	4	3810	4.4	15.0	1.30	5.7	19.5	951
1	5	3383	4.0	15.2	1.16	4.6	17.6	848
1	6	3379	4.1	15.4	1.16	4.7	17.8	851
1	7	2592	3.6	15.3	.89	3.2	13.6	649

TAP	POINT	CORR V	%02	% CO2	V LOC/AVG	WTD % O2	WTD %CO2	WTD TEMP
2	1	1526	7.5	12.5	.52	3.9	6.5	360
2	2	1509	3.8	16.0	.52	2.0	8.3	386
2	3	1381	3.0	15.3	.47	1.4	7.2	353
2	4	3604	3.8	15.6	1.23	4.7	19.2	919
2	5	2016	3.7	15.5	.69	2.6	10.7	515
2	6	3077	3.0	16.3	1.05	3.2	17.2	785
2	7	3702	3.6	15.4	1.27	4.6	19.5	945

TAP	POINT	CORR V	%02	% CO2	V LOC/AVG	WTD % O2	WTD %CO2	WTD TEMP
3	1	1472	4.9	14.7	.50	2.5	7.4	367
3	2	1596	4.0	15.0	.55	2.2	8.2	415
3	3	3617	4.0	15.4	1.24	4.9	19.1	947
3	4	4055	3.9	15.4	1.39	5.4	21.4	1048
3	5	3390	3.1	16.1	1.16	3.6	18.7	880
3	6	2998	4.1	15.4	1.03	4.2	15.8	772
3	7	3974	3.7	15.0	1.36	5.0	20.4	1019

TAP	POINT	CORR V	%02	% CO2	V LOC/AVG	WTD % O2	WTD %CO2	WTD TEMP
4	1	1636	4.1	15.2	.56	2.3	8.5	423
4	2	2170	3.6	15.4	.74	2.7	11.4	570
4	3	4375	4.2	15.2	1.50	6.3	22.7	1155
4	4	4198	3.6	15.8	1.44	5.2	22.7	1100
4	5	3340	3.5	15.5	1.14	4.0	17.7	859
4	6	3350	3.3	15.6	1.15	3.8	17.9	860
4	7	4063	3.6	15.2	1.39	5.0	21.1	1041

TAP	POINT	CORR V	%02	% CO2	V LOC/AVG	WTD % O2	WTD %CO2	WTD TEMP
5	1	1633	3.8	15.2	.56	2.1	8.5	414
5	2	2138	3.9	15.4	.73	2.9	11.3	562
5	3	4538	4.0	15.4	1.55	6.2	23.9	1197
5	4	4107	3.6	15.6	1.40	5.1	21.9	1072
5	5	3470	3.9	15.4	1.19	4.6	18.3	890
5	6	3860	3.5	15.4	1.32	4.6	20.3	993
5	7	4468	3.8	15.0	1.53	5.8	22.9	1148

TAP	POINT	CORR V	%02	% CO2	V LOC/AVG	WTD % O2	WTD %CO2	WTD TEMP
6	1	1669	4.2	15.2	.57	2.4	8.7	435
6	2	2111	3.8	15.6	.72	2.7	11.3	554
6	3	3105	3.7	15.6	1.06	3.9	16.6	815
6	4	4195	4.0	15.0	1.43	5.7	21.5	1089
6	5	3106	4.0	15.2	1.06	4.2	16.1	799
6	6	2792	4.2	15.4	.96	4.0	14.7	721
6	7	3565	3.6	15.4	1.22	4.4	18.8	915

TAP	POINT	CORR V	%02	% CO2	V LOC/AVG	WTD % O2	WTD %CO2	WTD TEMP
7	1	1762	4.8	15.0	.60	2.9	9.0	429
7	2	2214	4.0	15.2	.76	3.0	11.5	581
7	3	2632	4.4	15.1	.90	4.0	13.6	690
7	4	4473	3.8	15.4	1.53	5.8	23.6	1161
7	5	3804	4.2	15.2	1.30	5.5	19.8	981
7	6	3017	4.5	15.1	1.03	4.6	15.6	787
7	7	1949	4.3	14.7	.67	2.9	9.8	510

LOCATION = ECON WEST
FILE IDENITY = IP6_26EWA

AVERAGE VELOCITY = 2923 FPM

AVERAGE (WEIGHTED) % O2 = 3.9
AVERAGE (WEIGHTED) % CO2 = 15.3
AVERAGE (WEIGHTED) TEMPERATURE = 753

AVERAGE (ARITHMATIC) % O2 = 4.0
AVERAGE (ARITHMATIC) % CO2 = 15.3
AVERAGE (ARITHMATIC) TEMPERATURE = 751

AVERAGE STATIC PRESSURE (in. H2O) = -3.6
AVERAGE DENSITY (LBM/FT^3) = .02827

ACFM (ACTUAL FT^3/MIN) = 2484849
LB/HR (WET) = 4214437

****
****

PRELIMINARY CALCULATIONS !!!!!!!!!
FINAL CALCULATIONS TO BE RUN AFTER
FECHHEIMER PROBES ARE
INDEPENDENTLY CALIBRATED

****
****

DATE = 6-26-87
LOCATION = ECON EAST
FILE IDENITY = IP6_26EEA
BAROMETRIC PRESSURE = 25.49
PROBE IDENTY = 28
DUCT AREA = 850.0

TAP	POINT	CORR V	%02	% CO2	V LOC/AVG	WTD % O2	WTD %CO2	WTD TEMP
1	1	5554	4.7	14.3	1.32	6.2	18.9	993
1	2	3973	4.6	14.4	.94	4.3	13.6	701
1	3	3534	4.5	14.5	.84	3.8	12.2	624
1	4	3674	4.8	14.2	.87	4.2	12.4	648
1	5	3743	4.5	14.7	.89	4.0	13.1	654
1	6	3695	4.6	14.6	.88	4.0	12.8	635
1	7	5113	4.4	14.4	1.21	5.3	17.5	871

TAP	POINT	CORR V	%02	% CO2	V LOC/AVG	WTD % O2	WTD %CO2	WTD TEMP
2	1	5093	4.7	14.5	1.21	5.7	17.5	905
2	2	4185	4.7	14.5	.99	4.7	14.4	739
2	3	2963	4.0	15.0	.70	2.8	10.5	520
2	4	2530	4.8	14.2	.60	2.9	8.5	445
2	5	4536	4.4	14.6	1.08	4.7	15.7	790
2	6	6615	4.5	14.8	1.57	7.1	23.2	1150
2	7	3124	4.7	14.2	.74	3.5	10.5	544

TAP	POINT	CORR V	%02	% CO2	V LOC/AVG	WTD % O2	WTD %CO2	WTD TEMP
3	1	6150	4.6	14.2	1.46	6.7	20.7	1096
3	2	5814	4.8	14.2	1.38	6.6	19.6	1048
3	3	4593	4.3	14.7	1.09	4.7	16.0	816
3	4	3748	4.1	14.6	.89	3.6	13.0	670
3	5	2146	4.3	15.0	.51	2.2	7.6	378
3	6	3821	4.2	15.2	.91	3.8	13.8	669
3	7	3269	4.4	14.3	.78	3.4	11.1	572

TAP	POINT	CORR V	%02	% CO2	V LOC/AVG	WTD % O2	WTD %CO2	WTD TEMP
4	1	7727	5.0	14.2	1.83	9.2	26.0	1386
4	2	5636	4.4	14.9	1.34	5.9	19.9	1031
4	3	4289	4.4	14.9	1.02	4.5	15.2	777
4	4	2550	4.3	15.0	.61	2.6	9.1	462
4	5	2253	4.6	14.6	.53	2.5	7.8	404
4	6	3805	4.5	14.5	.90	4.1	13.1	679
4	7	4029	4.1	14.5	.96	3.9	13.9	722

TAP	POINT	CORR V	%02	% CO2	V LOC/AVG	WTD % O2	WTD %CO2	WTD TEMP
5	1	6873	4.0	15.2	1.63	6.5	24.8	1270
5	2	6301	4.4	15.0	1.50	6.6	22.4	1164
5	3	5432	4.2	15.2	1.29	5.4	19.6	994
5	4	2497	4.2	15.0	.59	2.5	8.9	460
5	5	2633	4.2	15.0	.62	2.6	9.4	483
5	6	3487	4.2	15.0	.83	3.5	12.4	634
5	7	4006	4.7	14.2	.95	4.5	13.5	714

TAP	POINT	CORR V	%02	% CO2	V LOC/AVG	WTD % O2	WTD %CO2	WTD TEMP
6	1	7006	4.4	14.8	1.66	7.3	24.6	1191
6	2	6350	4.2	15.2	1.51	6.3	22.9	1173
6	3	3146	3.9	15.4	.75	2.9	11.5	588
6	4	3921	4.5	15.5	.93	4.2	14.4	731
6	5	4294	3.4	15.4	1.02	3.5	15.7	797
6	6	4050	3.4	15.4	.96	3.3	14.8	747
6	7	3921	4.0	14.8	.93	3.7	13.8	724

TAP	POINT	CORR V	%02	% CO2	V LOC/AVG	WTD % O2	WTD %CO2	WTD TEMP
7	1	4472	4.2	14.8	1.06	4.5	15.7	82
7	2	3876	4.1	15.2	.92	3.8	14.0	710
7	3	2703	3.8	15.6	.64	2.4	10.0	500
7	4	2544	3.5	16.0	.60	2.1	9.7	469
7	5	2993	3.2	16.2	.71	2.3	11.5	557
7	6	4084	3.8	15.4	.97	3.7	14.9	733
7	7	3696	3.8	15.4	.88	3.3	13.5	685

LOCATION = ECON EAST
FILE IDENITY = IP6_26EEA

AVERAGE VELOCITY = 4213 FPM

AVERAGE (WEIGHTED) % O2 = 4.3
AVERAGE (WEIGHTED) % CO2 = 14.8
AVERAGE (WEIGHTED) TEMPERATURE = 742

AVERAGE (ARITHMATIC) % O2 = 4.3
AVERAGE (ARITHMATIC) % CO2 = 14.8
AVERAGE (ARITHMATIC) TEMPERATURE = 743

AVERAGE STATIC PRESSURE (in. H2O) = -3.3
AVERAGE DENSITY (LBM/FT^3) = .02885

ACFM (ACTUAL FT^3/MIN) = 3581171
LB/HR (WET) = 6199981

****
****

PRELIMINARY CALCULATIONS !!!!!!!!!
FINAL CALCULATIONS TO BE RUN AFTER
FECHHEIMER PROBES ARE
INDEPENDENTLY CALIBRATED

****
****

DATE = 6-26-87
LOCATION = ECON EAST
FILE IDENITY = IP6_26EEH
BAROMETRIC PRESSURE = 25.49
PROBE IDENTY = E-8
DUCT AREA = 850.0

TAP	POINT	CORR V	%02	% CO2	V LOC/AVG	WTD % O2	WTD %CO2	WTD TEMP
1	1	1074	4.2	14.6	.42	1.8	6.2	316
1	2	965	3.0	16.0	.38	1.1	6.1	295
1	3	2759	3.8	15.4	1.09	4.1	16.7	842
1	4	2673	3.2	15.8	1.05	3.4	16.6	818
1	5	2274	2.8	16.4	.89	2.5	14.7	689
1	6	2667	3.6	15.6	1.05	3.8	16.4	816
1	7	2531	4.0	15.0	1.00	4.0	14.9	770

TAP	POINT	CORR V	%02	% CO2	V LOC/AVG	WTD % O2	WTD %CO2	WTD TEMP
2	1	1101	3.2	15.8	.43	1.4	6.8	326
2	2	1388	2.8	16.2	.55	1.5	8.8	417
2	3	2804	2.8	16.2	1.10	3.1	17.9	850
2	4	2627	2.8	16.4	1.03	2.9	16.9	811
2	5	2161	3.6	15.6	.85	3.1	13.3	646
2	6	1196	3.6	15.4	.47	1.7	7.2	358
2	7	1570	4.0	15.0	.62	2.5	9.3	470

TAP	POINT	CORR V	%02	% CO2	V LOC/AVG	WTD % O2	WTD %CO2	WTD TEMP
3	1	1087	2.8	16.0	.43	1.2	6.8	309
3	2	1988	3.4	15.8	.78	2.7	12.4	604
3	3	3760	2.6	16.4	1.48	3.8	24.3	1152
3	4	3815	2.6	16.4	1.50	3.9	24.6	1161
3	5	4032	3.4	15.6	1.59	5.4	24.7	1184
3	6	2679	4.0	15.4	1.05	4.2	16.2	790
3	7	2054	3.8	15.2	.81	3.1	12.3	607

TAP	POINT	CORR V	%02	% CO2	V LOC/AVG	WTD % O2	WTD %CO2	WTD TEMP
4	1	1041	3.2	15.8	.41	1.3	6.5	301
4	2	2050	3.0	16.0	.81	2.4	12.9	617
4	3	4525	2.0	17.0	1.78	3.6	30.3	1372
4	4	3311	2.2	16.8	1.30	2.9	21.9	1009
4	5	3962	3.4	15.8	1.56	5.3	24.6	1169
4	6	2449	3.6	15.8	.96	3.5	15.2	712
4	7	1564	3.2	15.8	.62	2.0	9.7	452

TAP	POINT	CORR V	%02	% CO2	V LOC/AVG	WTD % O2	WTD %CO2	WTD TEMP
5	1	3623	5.0	14.2	1.43	7.1	20.2	983
5	2	3108	3.2	16.0	1.22	3.9	19.6	934
5	3	2180	2.2	16.6	.86	1.9	14.2	664
5	4	972	2.2	16.6	.38	.8	6.3	291
5	5	4227	2.8	16.2	1.66	4.7	26.9	1262
5	6	4070	3.2	16.0	1.60	5.1	25.6	1192
5	7	3311	2.8	16.2	1.30	3.6	21.1	963

TAP	POINT	CORR V	%02	% CO2	V LOC/AVG	WTD % O2	WTD %CO2	WTD TEMP
6	1	433	3.6	15.2	.17	.6	2.6	122
6	2	439	3.0	15.8	.17	.5	2.7	129
6	3	1637	2.6	16.4	.64	1.7	10.6	482
6	4	5097	2.0	17.0	2.00	4.0	34.1	1495
6	5	4701	3.0	16.0	1.85	5.5	29.6	1391
6	6	4215	2.8	16.2	1.66	4.6	26.9	1241
6	7	3492	3.4	15.6	1.37	4.7	21.4	1032

TAP	POINT	CORR V	%02	% CO2	V LOC/AVG	WTD % O2	WTD %CO2	WTD TEMP
7	1	746	3.8	15.4	.29	1.1	4.5	209
7	2	635	3.0	16.0	.25	.7	4.0	184
7	3	1592	3.4	15.6	.63	2.1	9.8	457
7	4	3659	2.6	16.4	1.44	3.7	23.6	1048
7	5	3976	2.6	16.2	1.56	4.1	25.3	1159
7	6	3125	2.6	16.4	1.23	3.2	20.2	917
7	7	3224	2.8	16.0	1.27	3.6	20.3	950

LOCATION = ECON EAST
FILE IDENITY = IP6_26EEH

AVERAGE VELOCITY = 2542 FPM

AVERAGE (WEIGHTED) % O2 = 3.0
AVERAGE (WEIGHTED) % CO2 = 16.0
AVERAGE (WEIGHTED) TEMPERATURE = 754

AVERAGE (ARITHMATIC) % O2 = 3.1
AVERAGE (ARITHMATIC) % CO2 = 15.9
AVERAGE (ARITHMATIC) TEMPERATURE = 753

AVERAGE STATIC PRESSURE (in. H2O) = -3.3
AVERAGE DENSITY (LBM/FT^3) = .02826

ACFM (ACTUAL FT^3/MIN) = 2160906
LB/HR (WET) = 3663859

****
****

PRELIMINARY CALCULATIONS !!!!!!!!!
FINAL CALCULATIONS TO BE RUN AFTER
FECHHEIMER PROBES ARE
INDEPENDENTLY CALIBRATED

****
****

DATE = 6-26-87
LOCATION = ESAH AIR OUT
FILE IDENITY = IP6_26ESAO
BAROMETRIC PRESSURE = 25.49
PROBE IDENTY = E-4
DUCT AREA = 602.5

TAP	POINT	CORR V V	LOC/AVG	WTD TEMP
1	1	4842	1.71	1124
1	2	1963	.69	456
1	3	1712	.61	397
1	4	1886	.67	436
1	5	3809	1.35	880
1	6	2265	.80	520
1	7	2749	.97	649
1	8	3041	1.08	726
1	9	2831	1.00	660

TAP	POINT	CORR V V	LOC/AVG	WTD TEMP
2	1	896	.32	208
2	2	2272	.80	526
2	3	2686	.95	623
2	4	3367	1.19	786
2	5	1512	.54	354
2	6	3489	1.23	820
2	7	3130	1.11	739
2	8	3387	1.20	806
2	9	3350	1.19	787

TAP	POINT	CORR V V	LOC/AVG	WTD TEMP
3	1	3936	1.39	912
3	2	1316	.47	304
3	3	1607	.57	373
3	4	3365	1.19	783
3	5	2788	.99	656
3	6	3723	1.32	878
3	7	3520	1.25	832
3	8	3403	1.20	810
3	9	3301	1.17	768

TAP	POINT	CORR V V	LOC/AVG	WTD TEMP
4	1	4267	1.51	991
4	2	1645	.58	382
4	3	1033	.37	240
4	4	2473	.88	579
4	5	2939	1.04	695
4	6	3646	1.29	861
4	7	3636	1.29	865
4	8	3790	1.34	903
4	9	2787	.99	664

TAP	POINT	CORR V V	LOC/AVG	WTD TEMP
5	1	1176	.42	273
5	2	1318	.47	306
5	3	931	.33	216
5	4	4044	1.43	944
5	5	3301	1.17	777
5	6	4071	1.44	965
5	7	4075	1.44	970
5	8	3677	1.30	874
5	9	4490	1.59	1049

TAP	POINT	CORR V V	LOC/AVG	WTD TEMP
6	1	1294	.46	302
6	2	1701	.60	396
6	3	2316	.82	537
6	4	4137	1.46	978
6	5	3077	1.09	728
6	6	4002	1.42	948
6	7	4577	1.62	1085
6	8	2679	.95	639
6	9	4716	1.67	1133

TAP	POINT	CORR V V	LOC/AVG	WTD TEMP
7	1	4016	1.42	941
7	2	3547	1.26	830
7	3	2880	1.02	670
7	4	1721	.61	408
7	5	4073	1.44	968
7	6	4329	1.53	1034
7	7	4870	1.72	1186
7	8	4718	1.67	1132
7	9	4881	1.73	1135

TAP	POINT	CORR V V	LOC/AVG	WTD TEMP
8	1	3913	1.38	889
8	2	3646	1.29	785
8	3	3991	1.41	895
8	4	3694	1.31	843
8	5	2364	.84	538
8	6	1188	.42	268
8	7	973	.34	217
8	8	1007	.36	226
8	9	4051	1.43	912

TAP	POINT	CORR V V	LOC/AVG	WTD TEMP
9	1	1791	.63	375
9	2	2040	.72	434
9	3	782	.28	175
9	4	752	.27	146
9	5	1067	.38	198
9	6	1135	.40	233
9	7	1094	.39	222
9	8	1128	.40	228
9	9	1300	.46	265

LOCATION = ESAH AIR OUT
FILE IDENITY = IP6_26ESAO

AVERAGE VELOCITY = 2826 FPM

AVERAGE (WEIGHTED) TEMPERATURE = 658
AVERAGE (ARITHMATIC) TEMPERATURE = 651

AVERAGE STATIC PRESSURE (in. H2O) = 2.6
AVERAGE DENSITY (LBM/FT^3) = .03069

ACFM (ACTUAL FT^3/MIN) = 1702532
LB/HR (WET) = 3135474

****
****

PRELIMINARY CALCULATIONS !!!!!!!!!
FINAL CALCULATIONS TO BE RUN AFTER
FECHHEIMER PROBES ARE
INDEPENDENTLY CALIBRATED

****
****

DATE = 6-26-87
LOCATION = WSAH AIR OUT
FILE IDENITY = IP6_26WSAO
BAROMETRIC PRESSURE = 25.49
PROBE IDENTY = E-4
DUCT AREA = 602.5

TAP	POINT	CORR V V	LOC/AVG	WTD TEMP
1	1	1684	.61	388
1	2	3892	1.41	894
1	3	1621	.59	376
1	4	1149	.42	267
1	5	862	.31	202
1	6	2254	.82	526
1	7	1255	.45	289
1	8	1302	.47	297
1	9	1215	.44	276

TAP	POINT	CORR V V	LOC/AVG	WTD TEMP
2	1	1635	.59	380
2	2	2707	.98	626
2	3	1947	.70	456
2	4	2351	.85	558
2	5	1132	.41	268
2	6	3436	1.24	816
2	7	2218	.80	527
2	8	4119	1.49	974
2	9	1174	.42	278

TAP	POINT	CORR V V	LOC/AVG	WTD TEMP
3	1	1752	.63	407
3	2	1022	.37	237
3	3	3072	1.11	714
3	4	5014	1.81	1183
3	5	3627	1.31	860
3	6	4625	1.67	1097
3	7	4770	1.73	1139
3	8	4647	1.68	1115
3	9	5081	1.84	1218

TAP	POINT	CORR V V	LOC/AVG	WTD TEMP
4	1	1073	.39	251
4	2	1450	.52	336
4	3	2086	.75	482
4	4	3536	1.28	830
4	5	4147	1.50	981
4	6	3814	1.38	906
4	7	3791	1.37	905
4	8	4275	1.55	1032
4	9	4434	1.60	1044

TAP	POINT	CORR V V	LOC/AVG	WTD TEMP
5	1	2976	1.08	689
5	2	1239	.45	287
5	3	2173	.79	509
5	4	4286	1.55	1000
5	5	4164	1.51	986
5	6	3734	1.35	888
5	7	4347	1.57	1039
5	8	2223	.80	538
5	9	2883	1.04	689

TAP	POINT	CORR V V	LOC/AVG	WTD TEMP
6	1	1870	.68	433
6	2	1592	.58	367
6	3	1895	.69	438
6	4	2398	.87	560
6	5	3500	1.27	822
6	6	2153	.78	510
6	7	3738	1.35	892
6	8	3832	1.39	925
6	9	683	.25	161

TAP	POINT	CORR V V	LOC/AVG	WTD TEMP
7	1	738	.27	171
7	2	786	.28	181
7	3	2342	.85	541
7	4	3157	1.14	736
7	5	2727	.99	639
7	6	2964	1.07	699
7	7	3424	1.24	809
7	8	4544	1.64	1097
7	9	2883	1.04	691

TAP	POINT	CORR V V	LOC/AVG	WTD TEMP
8	1	4478	1.62	1045
8	2	2910	1.05	676
8	3	1264	.46	293
8	4	3383	1.22	790
8	5	3131	1.13	733
8	6	2805	1.01	661
8	7	2986	1.08	705
8	8	3115	1.13	745
8	9	2853	1.03	682

TAP	POINT	CORR V V	LOC/AVG	WTD TEMP
9	1	3453	1.25	813
9	2	3063	1.11	716
9	3	2516	.91	588
9	4	3483	1.26	819
9	5	1823	.66	429
9	6	1816	.66	427
9	7	3054	1.10	722
9	8	2789	1.01	664
9	9	3610	1.31	855

LOCATION = WSAH AIR OUT
FILE IDENITY = IP6_26WSAO

AVERAGE VELOCITY = 2765 FPM

AVERAGE (WEIGHTED) TEMPERATURE = 652
AVERAGE (ARITHMATIC) TEMPERATURE = 650

AVERAGE STATIC PRESSURE (in. H2O) = 2.6
AVERAGE DENSITY (LBM/FT^3) = .03071

ACFM (ACTUAL FT^3/MIN) = 1665758
LB/HR (WET) = 3069249

****
****

PRELIMINARY CALCULATIONS !!!!!!!!!
FINAL CALCULATIONS TO BE RUN AFTER
FECHHEIMER PROBES ARE
INDEPENDENTLY CALIBRATED

****
****

DATE = 6-26-87
LOCATION = TEMP AIR EAST
FILE IDENITY = IP6_26ETA
BAROMETRIC PRESSURE = 25.49
PROBE IDENTY = E-9
DUCT AREA = 120.0

TAP	POINT	CORR V V	LOC/AVG	WTD TEMP
1	1	1396	1.86	235
1	2	549	.73	93
1	3	294	.39	50
1	4	549	.73	93

TAP	POINT	CORR V V	LOC/AVG	WTD TEMP
2	1	1156	1.54	193
2	2	775	1.03	129
2	3	294	.39	49
2	4	208	.28	34

TAP	POINT	CORR V V	LOC/AVG	WTD TEMP
3	1	1506	2.01	245
3	2	861	1.15	141
3	3	293	.39	47
3	4	207	.28	33

TAP	POINT	CORR V V	LOC/AVG	WTD TEMP
4	1	1290	1.72	207
4	2	756	1.01	121
4	3	545	.73	87
4	4	864	1.15	136

TAP	POINT	CORR V V	LOC/AVG	WTD TEMP
5	1	1229	1.64	190
5	2	510	.68	78
5	3	597	.80	91
5	4	864	1.15	131

TAP	POINT	CORR V V	LOC/AVG	WTD TEMP
6	1	1185	1.58	182
6	2	1035	1.38	159
6	3	631	.84	96
6	4	384	.51	58

LOCATION = TEMP AIR EAST
FILE IDENITY = IP6_26ETA

AVERAGE VELOCITY = 749 FPM

AVERAGE (WEIGHTED) TEMPERATURE = 120
AVERAGE (ARITHMATIC) TEMPERATURE = 120

AVERAGE STATIC PRESSURE (in. H2O) = 32.0
AVERAGE DENSITY (LBM/FT^3) = .06366

ACFM (ACTUAL FT^3/MIN) = 89886
LB/HR (WET) = 343345

****
****

PRELIMINARY CALCULATIONS !!!!!!!!!
FINAL CALCULATIONS TO BE RUN AFTER
FECHHEIMER PROBES ARE
INDEPENDENTLY CALIBRATED

****
****

DATE = 6-26-87
LOCATION = TEMP AIR WEST
FILE IDENITY = IP6_26WTA
BAROMETRIC PRESSURE = 25.49
PROBE IDENTY = E-9
DUCT AREA = 120.0

TAP	POINT	CORR V V	LOC/AVG	WTD TEMP
1	1	1788	2.09	232
1	2	920	1.07	120
1	3	290	.34	38
1	4	290	.34	38

TAP	POINT	CORR V V	LOC/AVG	WTD TEMP
2	1	1672	1.95	218
2	2	1013	1.18	132
2	3	384	.45	51
2	4	206	.24	27

TAP	POINT	CORR V V	LOC/AVG	WTD TEMP
3	1	1830	2.13	243
3	2	1014	1.18	135
3	3	291	.34	38
3	4	206	.24	27

TAP	POINT	CORR V V	LOC/AVG	WTD TEMP
4	1	1851	2.16	244
4	2	932	1.09	123
4	3	205	.24	27
4	4	205	.24	27

TAP	POINT	CORR V V	LOC/AVG	WTD TEMP
5	1	1664	1.94	215
5	2	1040	1.21	135
5	3	290	.34	37
5	4	290	.34	37

TAP	POINT	CORR V V	LOC/AVG	WTD TEMP
6	1	1716	2.00	220
6	2	1441	1.68	187
6	3	835	.97	107
6	4	205	.24	26

LOCATION = TEMP AIR WEST
FILE IDENITY = IP6_26WTA

AVERAGE VELOCITY = 857 FPM

AVERAGE (WEIGHTED) TEMPERATURE = 112
AVERAGE (ARITHMATIC) TEMPERATURE = 112

AVERAGE STATIC PRESSURE (in. H2O) = 32.0
AVERAGE DENSITY (LBM/FT^3) = .06460

ACFM (ACTUAL FT^3/MIN) = 102890
LB/HR (WET) = 398777

****
****

PRELIMINARY CALCULATIONS !!!!!!!!!
FINAL CALCULATIONS TO BE RUN AFTER
FECHHEIMER PROBES ARE
INDEPENDENTLY CALIBRATED

****
****

DATE = 6-26-87
LOCATION = WPAH AIR OUT
FILE IDENITY = IP6_26WPAO
BAROMETRIC PRESSURE = 25.49
PROBE IDENTY = E-1
DUCT AREA = 129.0

TAP	POINT	CORR V V	LOC/AVG	WTD TEMP
1	1	1000	.77	371
1	2	1271	.98	476
1	3	1554	1.20	581

TAP	POINT	CORR V V	LOC/AVG	WTD TEMP
2	1	1525	1.18	561
2	2	1380	1.07	501
2	3	1825	1.41	649

TAP	POINT	CORR V V	LOC/AVG	WTD TEMP
3	1	368	.28	137
3	2	1111	.86	406
3	3	261	.20	94

TAP	POINT	CORR V V	LOC/AVG	WTD TEMP
4	1	1386	1.07	519
4	2	1380	1.07	496
4	3	1965	1.52	678

TAP	POINT	CORR V V	LOC/AVG	WTD TEMP
5	1	1186	.92	436
5	2	1449	1.12	512
5	3	1694	1.31	589

LOCATION = WPAH AIR OUT
FILE IDENITY = IP6_26WPAO

AVERAGE VELOCITY = 1290 FPM

AVERAGE (WEIGHTED) TEMPERATURE = 467
AVERAGE (ARITHMATIC) TEMPERATURE = 469

AVERAGE STATIC PRESSURE (in. H2O) = 31.0
AVERAGE DENSITY (LBM/FT^3) = .03967

ACFM (ACTUAL FT^3/MIN) = 166446
LB/HR (WET) = 396130

****
****

PRELIMINARY CALCULATIONS !!!!!!!!!
FINAL CALCULATIONS TO BE RUN AFTER
FECHHEIMER PROBES ARE
INDEPENDENTLY CALIBRATED

****
****

DATE = 6-26-87
LOCATION = EPAH AIR OUT
FILE IDENITY = IP6_26EPAO
BAROMETRIC PRESSURE = 25.49
PROBE IDENTY = E-1
DUCT AREA = 129.0

TAP	POINT	CORR V V	LOC/AVG	WTD TEMP
1	1	1436	1.14	536
1	2	1560	1.24	568
1	3	1290	1.03	434

TAP	POINT	CORR V V	LOC/AVG	WTD TEMP
2	1	1026	.82	402
2	2	1394	1.11	535
2	3	1368	1.09	498

TAP	POINT	CORR V V	LOC/AVG	WTD TEMP
3	1	915	.73	360
3	2	1004	.80	389
3	3	851	.68	321

TAP	POINT	CORR V V	LOC/AVG	WTD TEMP
4	1	0	0.00	0
4	2	1644	1.31	644
4	3	1276	1.01	479

TAP	POINT	CORR V V	LOC/AVG	WTD TEMP
5	1	1471	1.17	593
5	2	1796	1.43	713
5	3	1824	1.45	695

LOCATION = EPAH AIR OUT
FILE IDENITY = IP6_26EPAO

AVERAGE VELOCITY = 1257 FPM

AVERAGE (WEIGHTED) TEMPERATURE = 478
AVERAGE (ARITHMATIC) TEMPERATURE = 480

AVERAGE STATIC PRESSURE (in. H2O) = 31.0
AVERAGE DENSITY (LBM/FT^3) = .03923

ACFM (ACTUAL FT^3/MIN) = 162148
LB/HR (WET) = 381630

****
****

PRELIMINARY CALCULATIONS !!!!!!!!!
FINAL CALCULATIONS TO BE RUN AFTER
FECHHEIMER PROBES ARE
INDEPENDENTLY CALIBRATED

****
****

DATE = 6-26-87
LOCATION = WPAH GAS OUT
FILE IDENITY = IP6_26WPGO
BAROMETRIC PRESSURE = 25.49
PROBE IDENTY = E-1
DUCT AREA = 90.3

TAP	POINT	CORR V	%02	% CO2	V LOC/AVG	WTD % O2	WTD %CO2	WTD TEMP
1	1	0	8.8	10.6	0.00	0.0	0.0	0
1	2	1758	4.1	14.7	1.40	5.7	20.6	435
1	3	1859	5.5	13.6	1.48	8.1	20.1	447
1	4	1497	10.1	9.5	1.19	12.0	11.3	337

TAP	POINT	CORR V	%02	% CO2	V LOC/AVG	WTD % O2	WTD %CO2	WTD TEMP
2	1	0	8.7	10.7	0.00	0.0	0.0	0
2	2	1848	4.6	14.4	1.47	6.8	21.2	453
2	3	1808	5.5	13.7	1.44	7.9	19.7	429
2	4	1457	10.9	9.2	1.16	12.6	10.7	323

TAP	POINT	CORR V	%02	% CO2	V LOC/AVG	WTD % O2	WTD %CO2	WTD TEMP
3	1	0	8.1	11.3	0.00	0.0	0.0	0
3	2	1831	5.5	13.6	1.46	8.0	19.8	439
3	3	1583	6.8	12.6	1.26	8.6	15.9	373
3	4	1430	11.2	8.6	1.14	12.7	9.8	303

LOCATION = WPAH GAS OUT
FILE IDENITY = IP6_26WPGO

AVERAGE VELOCITY = 1256 FPM

AVERAGE (WEIGHTED) % O2 = 6.9
AVERAGE (WEIGHTED) % CO2 = 12.4
AVERAGE (WEIGHTED) TEMPERATURE = 295

AVERAGE (ARITHMATIC) % O2 = 7.5
AVERAGE (ARITHMATIC) % CO2 = 11.9
AVERAGE (ARITHMATIC) TEMPERATURE = 289

AVERAGE STATIC PRESSURE (in. H2O) = -8.5
AVERAGE DENSITY (LBM/FT^3) = .04479

ACFM (ACTUAL FT^3/MIN) = 113414
LB/HR (WET) = 304803

****
****

PRELIMINARY CALCULATIONS !!!!!!!!!
FINAL CALCULATIONS TO BE RUN AFTER
FECHHEIMER PROBES ARE
INDEPENDENTLY CALIBRATED

****
****

DATE = 6-26-87
LOCATION = EPAH GAS OUT
FILE IDENITY = IP6_26EPGO
BAROMETRIC PRESSURE = 25.49
PROBE IDENTY = E-1
DUCT AREA = 90.3

TAP	POINT	CORR V	%02	% CO2	V LOC/AVG	WTD % O2	WTD %CO2	WTD TEMP
1	1	0	10.9	8.9	0.00	0.0	0.0	0
1	2	940	4.9	14.2	.71	3.5	10.1	218
1	3	2338	4.1	14.8	1.77	7.2	26.1	561
1	4	1921	7.2	12.2	1.45	10.4	17.7	436

TAP	POINT	CORR V	%02	% CO2	V LOC/AVG	WTD % O2	WTD %CO2	WTD TEMP
2	1	0	10.9	8.7	0.00	0.0	0.0	0
2	2	2311	3.9	15.2	1.74	6.8	26.5	532
2	3	2074	3.7	15.3	1.57	5.8	24.0	489
2	4	1921	7.5	12.0	1.45	10.9	17.4	437

TAP	POINT	CORR V	%02	% CO2	V LOC/AVG	WTD % O2	WTD %CO2	WTD TEMP
3	1	0	10.6	9.2	0.00	0.0	0.0	0
3	2	0	4.4	14.8	0.00	0.0	0.0	0
3	3	2212	4.3	14.7	1.67	7.2	24.6	524
3	4	2176	8.4	11.0	1.64	13.8	18.1	480

LOCATION = EPAH GAS OUT
FILE IDENITY = IP6_26EPGO

AVERAGE VELOCITY = 1324 FPM

AVERAGE (WEIGHTED) % O2 = 5.5
AVERAGE (WEIGHTED) % CO2 = 13.7
AVERAGE (WEIGHTED) TEMPERATURE = 306

AVERAGE (ARITHMATIC) % O2 = 6.7
AVERAGE (ARITHMATIC) % CO2 = 12.6
AVERAGE (ARITHMATIC) TEMPERATURE = 293

AVERAGE STATIC PRESSURE (in. H2O) = -8.5
AVERAGE DENSITY (LBM/FT^3) = .04466

ACFM (ACTUAL FT^3/MIN) = 119589
LB/HR (WET) = 320434

****
****

PRELIMINARY CALCULATIONS !!!!!!!!!
FINAL CALCULATIONS TO BE RUN AFTER
FECHHEIMER PROBES ARE
INDEPENDENTLY CALIBRATED

****
****

DATE = 6-26-87
LOCATION = EPAH GAS IN
FILE IDENITY = IP6_26EPGI
BAROMETRIC PRESSURE = 25.49
PROBE IDENTY = E-11
DUCT AREA = 162.0

TAP	POINT	CORR V	%02	% CO2	V LOC/AVG	WTD % O2	WTD %CO2	WTD TEMP
1	1	310	3.3	15.6	.19	.6	2.9	138
1	2	310	3.2	15.8	.19	.6	3.0	139
1	3	1176	3.2	15.7	.71	2.3	11.2	527

TAP	POINT	CORR V	%02	% CO2	V LOC/AVG	WTD % O2	WTD %CO2	WTD TEMP
2	1	999	3.5	15.6	.61	2.1	9.4	444
2	2	578	3.3	15.8	.35	1.2	5.5	259
2	3	1822	3.2	15.9	1.10	3.5	17.5	816

TAP	POINT	CORR V	%02	% CO2	V LOC/AVG	WTD % O2	WTD %CO2	WTD TEMP
3	1	2176	3.1	15.8	1.32	4.1	20.8	974
3	2	1358	3.1	15.9	.82	2.6	13.1	610
3	3	1753	3.1	16.0	1.06	3.3	17.0	784

TAP	POINT	CORR V	%02	% CO2	V LOC/AVG	WTD % O2	WTD %CO2	WTD TEMP
4	1	1814	3.3	15.7	1.10	3.6	17.3	803
4	2	2232	3.0	16.1	1.35	4.1	21.8	1005
4	3	2079	3.0	16.1	1.26	3.8	20.3	931

TAP	POINT	CORR V	%02	% CO2	V LOC/AVG	WTD % O2	WTD %CO2	WTD TEMP
5	1	1891	3.0	15.9	1.15	3.4	18.2	842
5	2	2200	3.1	15.8	1.33	4.1	21.1	991
5	3	2195	3.0	16.1	1.33	4.0	21.4	980

TAP	POINT	CORR V	%02	% CO2	V LOC/AVG	WTD % O2	WTD %CO2	WTD TEMP
6	1	2289	3.3	15.7	1.39	4.6	21.8	1019
6	2	2185	3.1	15.9	1.32	4.1	21.0	981
6	3	2349	3.1	15.9	1.42	4.4	22.6	1049

LOCATION = EPAH GAS IN
FILE IDENITY = IP6_26EPGI

AVERAGE VELOCITY = 1651 FPM

AVERAGE (WEIGHTED) % O2 = 3.1
AVERAGE (WEIGHTED) % CO2 = 15.9
AVERAGE (WEIGHTED) TEMPERATURE = 738

AVERAGE (ARITHMATIC) % O2 = 3.2
AVERAGE (ARITHMATIC) % CO2 = 15.8
AVERAGE (ARITHMATIC) TEMPERATURE = 738

AVERAGE STATIC PRESSURE (in. H2O) = -4.0
AVERAGE DENSITY (LBM/FT^3) = .02854

ACFM (ACTUAL FT^3/MIN) = 267451
LB/HR (WET) = 457954

****
****

PRELIMINARY CALCULATIONS !!!!!!!!!
FINAL CALCULATIONS TO BE RUN AFTER
FECHHEIMER PROBES ARE
INDEPENDENTLY CALIBRATED

****
****

DATE = 6-26-87
LOCATION = WPAH GAS IN
FILE IDENITY = IP6_26WPGI
BAROMETRIC PRESSURE = 25.49
PROBE IDENTY = E-11
DUCT AREA = 162.0

TAP	POINT	CORR V	%02	% CO2	V LOC/AVG	WTD % O2	WTD %CO2	WTD TEMP
1	1	2112	3.7	15.6	1.35	5.0	21.1	1001
1	2	2068	4.0	15.3	1.32	5.3	20.3	983
1	3	2156	3.6	15.6	1.38	5.0	21.5	1021

TAP	POINT	CORR V	%02	% CO2	V LOC/AVG	WTD % O2	WTD %CO2	WTD TEMP
2	1	1638	4.1	15.1	1.05	4.3	15.8	782
2	2	1999	4.1	15.2	1.28	5.2	19.5	954
2	3	2183	3.9	15.4	1.40	5.5	21.5	1036

TAP	POINT	CORR V	%02	% CO2	V LOC/AVG	WTD % O2	WTD %CO2	WTD TEMP
3	1	1693	3.8	15.3	1.08	4.1	16.6	808
3	2	1998	3.9	15.2	1.28	5.0	19.4	950
3	3	1793	3.5	15.7	1.15	4.0	18.0	851

TAP	POINT	CORR V	%02	% CO2	V LOC/AVG	WTD % O2	WTD %CO2	WTD TEMP
4	1	1423	3.8	15.4	.91	3.5	14.0	678
4	2	526	3.6	15.6	.34	1.2	5.3	250
4	3	1621	3.6	15.5	1.04	3.7	16.1	769

TAP	POINT	CORR V	%02	% CO2	V LOC/AVG	WTD % O2	WTD %CO2	WTD TEMP
5	1	1177	3.6	15.5	.75	2.7	11.7	558
5	2	1115	3.6	15.6	.71	2.6	11.1	530
5	3	1363	3.4	15.8	.87	3.0	13.8	647

TAP	POINT	CORR V	%02	% CO2	V LOC/AVG	WTD % O2	WTD %CO2	WTD TEMP
6	1	1215	3.6	15.5	.78	2.8	12.1	575
6	2	1215	3.9	15.3	.78	3.0	11.9	574
6	3	817	3.6	15.6	.52	1.9	8.2	386

LOCATION = WPAH GAS IN
FILE IDENITY = IP6_26WPGI

AVERAGE VELOCITY = 1562 FPM

AVERAGE (WEIGHTED) % O2 = 3.8
AVERAGE (WEIGHTED) % CO2 = 15.4
AVERAGE (WEIGHTED) TEMPERATURE = 742

AVERAGE (ARITHMATIC) % O2 = 3.7
AVERAGE (ARITHMATIC) % CO2 = 15.5
AVERAGE (ARITHMATIC) TEMPERATURE = 742

AVERAGE STATIC PRESSURE (in. H2O) = -4.0
AVERAGE DENSITY (LBM/FT^3) = .02845

ACFM (ACTUAL FT^3/MIN) = 253006
LB/HR (WET) = 431868

****
****

PRELIMINARY CALCULATIONS !!!!!!!!!
FINAL CALCULATIONS TO BE RUN AFTER
FECHHEIMER PROBES ARE
INDEPENDENTLY CALIBRATED

****
****

DATE = 6-26-87
LOCATION = BAG IN EAST
FILE IDENITY = IP6_26BHE
BAROMETRIC PRESSURE = 25.49
PROBE IDENTY = E-45
DUCT AREA = 346.5

TAP	POINT	CORR V	%02	% CO2	V LOC/AVG	WTD % O2	WTD %CO2	WTD TEMP
1	1	0	4.6	14.6	0.00	0.0	0.0	0
1	2	3052	4.7	14.5	.83	3.9	12.0	264
1	3	1098	4.6	14.4	.30	1.4	4.3	94
1	4	4896	4.6	14.3	1.32	6.1	18.9	417
1	5	2617	4.8	14.4	.71	3.4	10.2	222
1	6	3685	4.6	14.6	1.00	4.6	14.6	310
1	7	4708	4.6	14.5	1.27	5.9	18.5	397

TAP	POINT	CORR V	%02	% CO2	V LOC/AVG	WTD % O2	WTD %CO2	WTD TEMP
2	1	2905	4.4	14.8	.79	3.5	11.6	253
2	2	3429	4.7	14.6	.93	4.4	13.5	291
2	3	2508	4.4	14.2	.68	3.0	9.6	206
2	4	2909	5.4	13.8	.79	4.2	10.9	236
2	5	2906	5.2	13.8	.79	4.1	10.9	240
2	6	3297	4.8	14.2	.89	4.3	12.7	288
2	7	4073	5.4	13.7	1.10	6.0	15.1	346

TAP	POINT	CORR V	%02	% CO2	V LOC/AVG	WTD % O2	WTD %CO2	WTD TEMP
3	1	3853	4.7	14.5	1.04	4.9	15.1	335
3	2	3752	4.9	14.2	1.02	5.0	14.4	313
3	3	4351	4.9	14.1	1.18	5.8	16.6	363
3	4	4617	4.9	14.0	1.25	6.1	17.5	385
3	5	4006	5.0	14.0	1.08	5.4	15.2	334
3	6	3898	5.5	13.7	1.05	5.8	14.4	326
3	7	4221	4.8	14.2	1.14	5.5	16.2	360

TAP	POINT	CORR V	%02	% CO2	V LOC/AVG	WTD % O2	WTD %CO2	WTD TEMP
4	1	3932	4.6	14.6	1.06	4.9	15.5	324
4	2	4050	5.1	14.0	1.10	5.6	15.3	299
4	3	3670	5.0	14.0	.99	5.0	13.9	261
4	4	3620	5.3	13.8	.98	5.2	13.5	262
4	5	3750	5.2	13.7	1.01	5.3	13.9	285
4	6	4110	5.2	13.8	1.11	5.8	15.3	345
4	7	4721	4.5	14.5	1.28	5.7	18.5	419

TAP	POINT	CORR V	%02	% CO2	V LOC/AVG	WTD % O2	WTD %CO2	WTD TEMP
5	1	3925	4.6	14.3	1.06	4.9	15.2	339
5	2	3854	4.6	14.4	1.04	4.8	15.0	304
5	3	3667	4.8	14.2	.99	4.8	14.1	286
5	4	3772	4.9	14.2	1.02	5.0	14.5	295
5	5	3737	5.2	13.4	1.01	5.3	13.5	305
5	6	3912	4.8	14.2	1.06	5.1	15.0	332
5	7	4307	4.7	14.4	1.17	5.5	16.8	383

TAP	POINT	CORR V	%02	% CO2	V LOC/AVG	WTD % O2	WTD %CO2	WTD TEMP
6	1	3526	4.8	14.2	.95	4.6	13.5	321
6	2	3533	4.8	14.3	.96	4.6	13.7	342
6	3	3696	4.7	14.6	1.00	4.7	14.6	368
6	4	3732	4.8	14.3	1.01	4.8	14.4	374
6	5	3663	5.1	13.9	.99	5.1	13.8	368
6	6	3584	4.8	14.2	.97	4.7	13.8	351
6	7	3908	4.8	14.2	1.06	5.1	15.0	362

TAP	POINT	CORR V	%02	% CO2	V LOC/AVG	WTD % O2	WTD %CO2	WTD TEMP
7	1	4050	4.4	14.8	1.10	4.8	16.2	346
7	2	3933	4.4	14.8	1.06	4.7	15.7	319
7	3	3952	4.7	14.5	1.07	5.0	15.5	305
7	4	3523	5.1	13.8	.95	4.9	13.2	278
7	5	3903	5.3	13.8	1.06	5.6	14.6	309
7	6	4067	4.8	14.4	1.10	5.3	15.8	339
7	7	1005	4.7	14.4	.27	1.3	3.9	90

TAP	POINT	CORR V	%02	% CO2	V LOC/AVG	WTD % O2	WTD %CO2	WTD TEMP
8	1	4255	4.6	14.6	1.15	5.3	16.8	388
8	2	4155	4.7	14.2	1.12	5.3	16.0	359
8	3	4529	4.7	14.2	1.23	5.8	17.4	395
8	4	4652	4.7	14.1	1.26	5.9	17.7	415
8	5	4590	5.2	13.8	1.24	6.5	17.1	405
8	6	4399	4.6	14.2	1.19	5.5	16.9	400
8	7	4529	5.6	13.5	1.23	6.9	16.5	415

LOCATION = BAG IN EAST
FILE IDENITY = IP6_26BHE

AVERAGE VELOCITY = 3696 FPM

AVERAGE (WEIGHTED) % O2 = 4.9
AVERAGE (WEIGHTED) % CO2 = 14.2
AVERAGE (WEIGHTED) TEMPERATURE = 315

AVERAGE (ARITHMATIC) % O2 = 4.8
AVERAGE (ARITHMATIC) % CO2 = 14.2
AVERAGE (ARITHMATIC) TEMPERATURE = 316

AVERAGE STATIC PRESSURE (in. H2O) = -8.9
AVERAGE DENSITY (LBM/FT^3) = .04338

ACFM (ACTUAL FT^3/MIN) = 1280755
LB/HR (WET) = 3333887

****
****

PRELIMINARY CALCULATIONS !!!!!!!!!
FINAL CALCULATIONS TO BE RUN AFTER
FECHHEIMER PROBES ARE
INDEPENDENTLY CALIBRATED

****
****

DATE = 6-26-87
LOCATION = BAG IN CENTER
FILE IDENITY = IP6_26BHC
BAROMETRIC PRESSURE = 25.49
PROBE IDENTY = E-42
DUCT AREA = 346.5

TAP	POINT	CORR V	%02	% CO2	V LOC/AVG	WTD % O2	WTD %CO2	WTD TEMP
1	1	3446	5.3	13.8	1.20	6.4	16.6	381
1	2	1289	5.4	13.6	.45	2.4	6.1	143
1	3	453	5.5	13.7	.16	.9	2.2	50
1	4	3828	5.6	13.5	1.34	7.5	18.0	422
1	5	968	5.3	13.8	.34	1.8	4.7	107
1	6	1591	5.0	14.0	.56	2.8	7.8	174
1	7	2908	5.2	13.8	1.02	5.3	14.0	320

TAP	POINT	CORR V	%02	% CO2	V LOC/AVG	WTD % O2	WTD %CO2	WTD TEMP
2	1	1195	5.0	14.1	.42	2.1	5.9	134
2	2	1792	5.2	14.0	.63	3.3	8.8	201
2	3	2504	5.0	13.8	.87	4.4	12.1	281
2	4	2459	5.3	13.7	.86	4.5	11.8	276
2	5	3349	5.4	13.6	1.17	6.3	15.9	376
2	6	3052	4.9	13.9	1.07	5.2	14.8	342
2	7	1967	5.5	13.6	.69	3.8	9.3	218

TAP	POINT	CORR V	%02	% CO2	V LOC/AVG	WTD % O2	WTD %CO2	WTD TEMP
3	1	2010	5.0	14.0	.70	3.5	9.8	230
3	2	2323	5.2	13.9	.81	4.2	11.3	263
3	3	2196	5.3	13.9	.77	4.1	10.7	251
3	4	3104	5.0	13.7	1.08	5.4	14.8	358
3	5	3458	5.6	13.2	1.21	6.8	15.9	397
3	6	2989	5.3	13.9	1.04	5.5	14.5	342
3	7	3075	5.3	13.9	1.07	5.7	14.9	353

TAP	POINT	CORR V	%02	% CO2	V LOC/AVG	WTD % O2	WTD %CO2	WTD TEMP
4	1	3023	4.6	14.4	1.06	4.9	15.2	364
4	2	3947	4.9	14.0	1.38	6.8	19.3	471
4	3	4115	4.8	14.2	1.44	6.9	20.4	494
4	4	3999	5.2	14.0	1.40	7.3	19.5	481
4	5	3621	5.1	13.9	1.26	6.4	17.6	431
4	6	3916	4.9	13.8	1.37	6.7	18.9	462
4	7	3928	5.1	13.7	1.37	7.0	18.8	459

TAP	POINT	CORR V	%02	% CO2	V LOC/AVG	WTD % O2	WTD %CO2	WTD TEMP
5	1	2911	4.9	14.0	1.02	5.0	14.2	353
5	2	4143	4.6	14.2	1.45	6.7	20.5	503
5	3	4399	4.8	13.9	1.54	7.4	21.3	531
5	4	4177	4.8	14.0	1.46	7.0	20.4	500
5	5	4109	5.0	14.0	1.43	7.2	20.1	490
5	6	4076	5.0	13.9	1.42	7.1	19.8	484
5	7	3906	4.7	14.2	1.36	6.4	19.4	462

TAP	POINT	CORR V	%02	% CO2	V LOC/AVG	WTD % O2	WTD %CO2	WTD TEMP
6	1	1696	4.8	14.2	.59	2.8	8.4	206
6	2	3666	4.8	14.2	1.28	6.1	18.2	452
6	3	4173	4.8	14.3	1.46	7.0	20.8	516
6	4	4514	5.0	14.0	1.58	7.9	22.1	559
6	5	3985	5.0	13.9	1.39	7.0	19.3	494
6	6	3738	4.6	14.4	1.30	6.0	18.8	462
6	7	3515	4.6	14.2	1.23	5.6	17.4	429

TAP	POINT	CORR V	%02	% CO2	V LOC/AVG	WTD % O2	WTD %CO2	WTD TEMP
7	1	745	4.9	14.2	.26	1.3	3.7	91
7	2	890	5.0	14.1	.31	1.6	4.4	109
7	3	2176	4.9	14.2	.76	3.7	10.8	269
7	4	3201	4.8	14.2	1.12	5.4	15.9	397
7	5	3917	4.7	14.1	1.37	6.4	19.3	488
7	6	3381	4.8	14.4	1.18	5.7	17.0	420
7	7	4104	5.0	14.2	1.43	7.2	20.3	503

TAP	POINT	CORR V	%02	% CO2	V LOC/AVG	WTD % O2	WTD %CO2	WTD TEMP
8	1	4462	4.4	14.6	1.56	6.9	22.7	545
8	2	944	5.0	14.2	.33	1.6	4.7	116
8	3	1365	4.6	14.5	.48	2.2	6.9	168
8	4	2471	5.0	14.0	.86	4.3	12.1	306
8	5	874	4.7	14.1	.31	1.4	4.3	108
8	6	451	4.9	14.1	.16	.8	2.2	55
8	7	1952	4.6	14.4	.68	3.1	9.8	238

LOCATION = BAG IN CENTER
FILE IDENITY = IP6_26BHC

AVERAGE VELOCITY = 2865 FPM

AVERAGE (WEIGHTED) % O2 = 5.0
AVERAGE (WEIGHTED) % CO2 = 14.0
AVERAGE (WEIGHTED) TEMPERATURE = 340

AVERAGE (ARITHMATIC) % O2 = 5.0
AVERAGE (ARITHMATIC) % CO2 = 14.0
AVERAGE (ARITHMATIC) TEMPERATURE = 339

AVERAGE STATIC PRESSURE (in. H2O) = -8.5
AVERAGE DENSITY (LBM/FT^3) = .04214

ACFM (ACTUAL FT^3/MIN) = 992760
LB/HR (WET) = 2509920

****
****

PRELIMINARY CALCULATIONS !!!!!!!!!
FINAL CALCULATIONS TO BE RUN AFTER
FECHHEIMER PROBES ARE
INDEPENDENTLY CALIBRATED

****
****

DATE = 6-26-87
LOCATION = BAG IN WEST
FILE IDENITY = IP6_26BHW
BAROMETRIC PRESSURE = 25.49
PROBE IDENTY = E-44
DUCT AREA = 346.5

TAP	POINT	CORR V	%02	% CO2	V LOC/AVG	WTD % O2	WTD %CO2	WTD TEMP
1	1	2988	5.3	13.9	.92	4.9	12.8	273
1	2	3340	5.2	13.7	1.03	5.4	14.1	305
1	3	3876	5.8	13.1	1.20	6.9	15.7	352
1	4	4085	6.1	13.0	1.26	7.7	16.4	365
1	5	4173	6.5	12.7	1.29	8.4	16.4	369
1	6	3797	6.1	13.1	1.17	7.2	15.4	334
1	7	3956	6.5	12.8	1.22	7.9	15.6	347

TAP	POINT	CORR V	%02	% CO2	V LOC/AVG	WTD % O2	WTD %CO2	WTD TEMP
2	1	4037	5.3	13.7	1.25	6.6	17.1	372
2	2	3856	5.4	13.7	1.19	6.4	16.3	354
2	3	2176	6.2	12.9	.67	4.2	8.7	198
2	4	1234	6.2	12.9	.38	2.4	4.9	111
2	5	3233	6.4	12.5	1.00	6.4	12.5	288
2	6	3171	6.2	13.0	.98	6.1	12.7	282
2	7	2632	5.7	13.1	.81	4.6	10.7	234

TAP	POINT	CORR V	%02	% CO2	V LOC/AVG	WTD % O2	WTD %CO2	WTD TEMP
3	1	2086	5.3	13.9	.64	3.4	9.0	194
3	2	3207	5.2	14.0	.99	5.2	13.9	296
3	3	3277	5.9	13.4	1.01	6.0	13.6	299
3	4	5883	5.8	13.4	1.82	10.5	24.3	534
3	5	5861	5.7	13.3	1.81	10.3	24.1	529
3	6	5450	6.0	13.0	1.68	10.1	21.9	492
3	7	4026	5.8	13.4	1.24	7.2	16.7	366

TAP	POINT	CORR V	%02	% CO2	V LOC/AVG	WTD % O2	WTD %CO2	WTD TEMP
4	1	5074	5.2	13.8	1.57	8.1	21.6	475
4	2	2166	5.4	13.7	.67	3.6	9.2	199
4	3	2998	5.8	13.2	.93	5.4	12.2	272
4	4	3181	6.0	13.0	.98	5.9	12.8	291
4	5	2978	5.6	13.4	.92	5.2	12.3	278
4	6	2940	5.4	13.6	.91	4.9	12.3	268
4	7	3567	5.3	13.9	1.10	5.8	15.3	328

TAP	POINT	CORR V	%02	% CO2	V LOC/AVG	WTD % O2	WTD %CO2	WTD TEMP
5	1	3565	4.8	14.2	1.10	5.3	15.6	336
5	2	3436	5.5	13.7	1.06	5.8	14.5	323
5	3	3622	5.7	13.6	1.12	6.4	15.2	336
5	4	3385	5.8	13.4	1.05	6.1	14.0	308
5	5	3482	5.7	13.5	1.08	6.1	14.5	314
5	6	3292	5.7	13.5	1.02	5.8	13.7	304
5	7	3941	5.1	14.0	1.22	6.2	17.0	364

TAP	POINT	CORR V	%02	% CO2	V LOC/AVG	WTD % O2	WTD %CO2	WTD TEMP
6	1	2911	4.9	14.1	.90	4.4	12.7	274
6	2	3013	5.2	13.8	.93	4.8	12.8	282
6	3	3720	5.0	14.0	1.15	5.7	16.1	344
6	4	3655	5.5	13.5	1.13	6.2	15.2	335
6	5	3676	5.4	13.6	1.14	6.1	15.4	335
6	6	3107	5.2	13.8	.96	5.0	13.2	284
6	7	3556	5.2	14.0	1.10	5.7	15.4	328

TAP	POINT	CORR V	%02	% CO2	V LOC/AVG	WTD % O2	WTD %CO2	WTD TEMP
7	1	2016	4.9	14.3	.62	3.1	8.9	192
7	2	1270	4.9	14.3	.39	1.9	5.6	120
7	3	456	4.8	14.3	.14	.7	2.0	43
7	4	1176	5.3	13.9	.36	1.9	5.0	109
7	5	1765	5.4	13.8	.55	2.9	7.5	163
7	6	971	5.2	14.0	.30	1.6	4.2	90
7	7	2884	5.3	13.8	.89	4.7	12.3	266

TAP	POINT	CORR V	%02	% CO2	V LOC/AVG	WTD % O2	WTD %CO2	WTD TEMP
8	1	4308	4.3	14.7	1.33	5.7	19.6	411
8	2	4249	5.1	14.0	1.31	6.7	18.4	404
8	3	1832	4.4	14.6	.57	2.5	8.3	172
8	4	4762	4.8	14.2	1.47	7.1	20.9	446
8	5	1774	4.9	13.7	.55	2.7	7.5	165
8	6	1960	4.7	14.2	.61	2.8	8.6	182
8	7	4268	4.6	14.3	1.32	6.1	18.9	399

LOCATION = BAG IN WEST
FILE IDENITY = IP6_26BHW

AVERAGE VELOCITY = 3237 FPM

AVERAGE (WEIGHTED) % O2 = 5.5
AVERAGE (WEIGHTED) % CO2 = 13.6
AVERAGE (WEIGHTED) TEMPERATURE = 297

AVERAGE (ARITHMATIC) % O2 = 5.4
AVERAGE (ARITHMATIC) % CO2 = 13.6
AVERAGE (ARITHMATIC) TEMPERATURE = 297

AVERAGE STATIC PRESSURE (in. H2O) = -9.0
AVERAGE DENSITY (LBM/FT^3) = .04432

ACFM (ACTUAL FT^3/MIN) = 1121778
LB/HR (WET) = 2983309

****
****

PRELIMINARY CALCULATIONS !!!!!!!!!
FINAL CALCULATIONS TO BE RUN AFTER
FECHHEIMER PROBES ARE
INDEPENDENTLY CALIBRATED

****
****

DATE = 6/26/87
LOCATION = EAST SEC GAS IN
FILE IDENITY = IP6_26ESGI
BAROMETRIC PRESSURE = 25.49
PROBE IDENTY = E-27
DUCT AREA = 789.2

TAP	POINT	CORR V	%02	% CO2	V LOC/AVG	WTD % O2	WTD %CO2	WTD TEMP
1	1	4277	3.7	15.4	1.39	5.1	21.4	1023
1	2	4346	3.7	15.4	1.41	5.2	21.7	1045
1	3	4432	3.7	15.4	1.44	5.3	22.1	1064
1	4	4093	3.7	15.4	1.33	4.9	20.5	981
1	5	3277	3.7	15.4	1.06	3.9	16.4	782
1	6	2554	3.7	15.4	.83	3.1	12.8	599
1	7	1415	3.7	15.4	.46	1.7	7.1	328

TAP	POINT	CORR V	%02	% CO2	V LOC/AVG	WTD % O2	WTD %CO2	WTD TEMP
2	1	4208	3.7	15.4	1.37	5.1	21.0	1008
2	2	3999	3.7	15.4	1.30	4.8	20.0	969
2	3	4082	3.7	15.4	1.32	4.9	20.4	989
2	4	3968	3.7	15.4	1.29	4.8	19.8	960
2	5	3674	3.7	15.4	1.19	4.4	18.4	886
2	6	2758	3.7	15.4	.89	3.3	13.8	663
2	7	907	3.7	15.4	.29	1.1	4.5	217

TAP	POINT	CORR V	%02	% CO2	V LOC/AVG	WTD % O2	WTD %CO2	WTD TEMP
3	1	4145	3.7	15.4	1.35	5.0	20.7	994
3	2	3923	3.7	15.4	1.27	4.7	19.6	956
3	3	4003	3.7	15.4	1.30	4.8	20.0	977
3	4	3807	3.7	15.4	1.24	4.6	19.0	926
3	5	3783	3.7	15.4	1.23	4.5	18.9	919
3	6	3251	3.7	15.4	1.05	3.9	16.2	787
3	7	1018	3.7	15.4	.33	1.2	5.1	244

TAP	POINT	CORR V	%02	% CO2	V LOC/AVG	WTD % O2	WTD %CO2	WTD TEMP
4	1	3971	3.7	15.4	1.29	4.8	19.8	950
4	2	4039	3.7	15.4	1.31	4.8	20.2	987
4	3	3801	3.7	15.4	1.23	4.6	19.0	928
4	4	3870	3.7	15.4	1.26	4.6	19.3	942
4	5	3695	3.7	15.4	1.20	4.4	18.5	898
4	6	2858	3.7	15.4	.93	3.4	14.3	689
4	7	657	3.7	15.4	.21	.8	3.3	158

TAP	POINT	CORR V	%02	% CO2	V LOC/AVG	WTD % O2	WTD %CO2	WTD TEMP
5	1	4356	3.7	15.4	1.41	5.2	21.8	1046
5	2	4099	3.7	15.4	1.33	4.9	20.5	1000
5	3	3767	3.7	15.4	1.22	4.5	18.8	917
5	4	3816	3.7	15.4	1.24	4.6	19.1	927
5	5	3764	3.7	15.4	1.22	4.5	18.8	911
5	6	3060	3.7	15.4	.99	3.7	15.3	735
5	7	1981	3.7	15.4	.64	2.4	9.9	472

TAP	POINT	CORR V	%02	% CO2	V LOC/AVG	WTD % O2	WTD %CO2	WTD TEMP
6	1	4520	3.7	15.4	1.47	5.4	22.6	1091
6	2	3972	3.7	15.4	1.29	4.8	19.8	970
6	3	4110	3.7	15.4	1.33	4.9	20.5	1002
6	4	3858	3.7	15.4	1.25	4.6	19.3	938
6	5	3827	3.7	15.4	1.24	4.6	19.1	926
6	6	3167	3.7	15.4	1.03	3.8	15.8	765
6	7	1632	3.7	15.4	.53	2.0	8.2	392

TAP	POINT	CORR V	%02	% CO2	V LOC/AVG	WTD % O2	WTD %CO2	WTD TEMP
7	1	3182	3.7	15.4	1.03	3.8	15.9	761
7	2	3717	3.7	15.4	1.21	4.5	18.6	911
7	3	3412	3.7	15.4	1.11	4.1	17.1	839
7	4	3245	3.7	15.4	1.05	3.9	16.2	797
7	5	3649	3.7	15.4	1.18	4.4	18.2	892
7	6	2397	3.7	15.4	.78	2.9	12.0	585
7	7	1594	3.7	15.4	.52	1.9	8.0	388

TAP	POINT	CORR V	%02	% CO2	V LOC/AVG	WTD % O2	WTD %CO2	WTD TEMP
8	1	3787	3.7	15.4	1.23	4.5	18.9	912
8	2	4184	3.7	15.4	1.36	5.0	20.9	1026
8	3	4609	3.7	15.4	1.50	5.5	23.0	1134
8	4	3413	3.7	15.4	1.11	4.1	17.1	838
8	5	2420	3.7	15.4	.79	2.9	12.1	593
8	6	1420	3.7	15.4	.46	1.7	7.1	346
8	7	659	3.7	15.4	.21	.8	3.3	160

TAP	POINT	CORR V	%02	% CO2	V LOC/AVG	WTD % O2	WTD %CO2	WTD TEMP
9	1	4708	3.7	15.4	1.53	5.7	23.5	1141
9	2	4578	3.7	15.4	1.49	5.5	22.9	1124
9	3	4502	3.7	15.4	1.46	5.4	22.5	1109
9	4	3073	3.7	15.4	1.00	3.7	15.4	757
9	5	2080	3.7	15.4	.67	2.5	10.4	510
9	6	1514	3.7	15.4	.49	1.8	7.6	370
9	7	582	3.7	15.4	.19	.7	2.9	142

TAP	POINT	CORR V	%02	% CO2	V LOC/AVG	WTD % O2	WTD %CO2	WTD TEMP
10	1	4951	3.7	15.4	1.61	5.9	24.7	1192
10	2	4919	3.7	15.4	1.60	5.9	24.6	1200
10	3	4768	3.7	15.4	1.55	5.7	23.8	1168
10	4	3352	3.7	15.4	1.09	4.0	16.8	818
10	5	1669	3.7	15.4	.54	2.0	8.3	407
10	6	762	3.7	15.4	.25	.9	3.8	186
10	7	440	3.7	15.4	.14	.5	2.2	107

TAP	POINT	CORR V	%02	% CO2	V LOC/AVG	WTD % O2	WTD %CO2	WTD TEMP
11	1	4749	3.7	15.4	1.54	5.7	23.7	1147
11	2	4766	3.7	15.4	1.55	5.7	23.8	1163
11	3	4686	3.7	15.4	1.52	5.6	23.4	1143
11	4	3816	3.7	15.4	1.24	4.6	19.1	930
11	5	2188	3.7	15.4	.71	2.6	10.9	533
11	6	2076	3.7	15.4	.67	2.5	10.4	506
11	7	906	3.7	15.4	.29	1.1	4.5	221

TAP	POINT	CORR V	%02	% CO2	V LOC/AVG	WTD % O2	WTD %CO2	WTD TEMP
12	1	4840	3.7	15.4	1.57	5.8	24.2	1162
12	2	4668	3.7	15.4	1.51	5.6	23.3	1136
12	3	4140	3.7	15.4	1.34	5.0	20.7	1008
12	4	2886	3.7	15.4	.94	3.5	14.4	701
12	5	1487	3.7	15.4	.48	1.8	7.4	362
12	6	440	3.7	15.4	.14	.5	2.2	107
12	7	582	3.7	15.4	.19	.7	2.9	142

TAP	POINT	CORR V	%02	% CO2	V LOC/AVG	WTD % O2	WTD %CO2	WTD TEMP
13	1	4550	3.7	15.4	1.48	5.5	22.7	1092
13	2	4685	3.7	15.4	1.52	5.6	23.4	1136
13	3	3470	3.7	15.4	1.13	4.2	17.3	840
13	4	1886	3.7	15.4	.61	2.3	9.4	455
13	5	757	3.7	15.4	.25	.9	3.8	182
13	6	579	3.7	15.4	.19	.7	2.9	139
13	7	951	3.7	15.4	.31	1.1	4.8	227

TAP	POINT	CORR V	%02	% CO2	V LOC/AVG	WTD % O2	WTD %CO2	WTD TEMP
14	1	1204	3.7	15.4	.39	1.4	6.0	289
14	2	1175	3.7	15.4	.38	1.4	5.9	285
14	3	3069	3.7	15.4	1.00	3.7	15.3	743
14	4	2792	3.7	15.4	.91	3.4	14.0	674
14	5	2876	3.7	15.4	.93	3.5	14.4	690
14	6	1175	3.7	15.4	.38	1.4	5.9	281
14	7	2298	3.7	15.4	.75	2.8	11.5	548

LOCATION = EAST SEC GAS IN
FILE IDENITY = IP6_26ESGI

AVERAGE VELOCITY = 3082 FPM

AVERAGE (WEIGHTED) % O2 = 3.7
AVERAGE (WEIGHTED) % CO2 = 15.4
AVERAGE (WEIGHTED) TEMPERATURE = 747

AVERAGE (ARITHMATIC) % O2 = 3.7
AVERAGE (ARITHMATIC) % CO2 = 15.4
AVERAGE (ARITHMATIC) TEMPERATURE = 747

AVERAGE STATIC PRESSURE (in. H2O) = -3.9
AVERAGE DENSITY (LBM/FT^3) = .02834

ACFM (ACTUAL FT^3/MIN) = 2432198
LB/HR (WET) = 4135054

****
****

PRELIMINARY CALCULATIONS !!!!!!!!!
FINAL CALCULATIONS TO BE RUN AFTER
FECHHEIMER PROBES ARE
INDEPENDENTLY CALIBRATED

****
****

DATE = 6/26/87
LOCATION = WEST SEC GAS IN
FILE IDENITY = IP6_26WSGI
BAROMETRIC PRESSURE = 25.49
PROBE IDENTY = E-27
DUCT AREA = 789.2

TAP	POINT	CORR V	%02	% CO2	V LOC/AVG	WTD % O2	WTD %CO2	WTD TEMP
1	1	3514	4.5	15.1	1.35	6.1	20.5	994
1	2	3365	4.5	15.1	1.30	5.8	19.6	954
1	3	2662	4.5	15.1	1.03	4.6	15.5	748
1	4	2308	4.5	15.1	.89	4.0	13.4	647
1	5	2825	4.5	15.1	1.09	4.9	16.4	782
1	6	2830	4.5	15.1	1.09	4.9	16.5	786
1	7	2190	4.5	15.1	.84	3.8	12.8	604

TAP	POINT	CORR V	%02	% CO2	V LOC/AVG	WTD % O2	WTD %CO2	WTD TEMP
2	1	3505	4.5	15.1	1.35	6.1	20.4	988
2	2	2693	4.5	15.1	1.04	4.7	15.7	774
2	3	2669	4.5	15.1	1.03	4.6	15.5	767
2	4	2452	4.5	15.1	.95	4.3	14.3	700
2	5	2852	4.5	15.1	1.10	4.9	16.6	803
2	6	2802	4.5	15.1	1.08	4.9	16.3	784
2	7	1799	4.5	15.1	.69	3.1	10.5	495

TAP	POINT	CORR V	%02	% CO2	V LOC/AVG	WTD % O2	WTD %CO2	WTD TEMP
3	1	3652	4.5	15.1	1.41	6.3	21.3	1028
3	2	3282	4.5	15.1	1.27	5.7	19.1	948
3	3	3073	4.5	15.1	1.18	5.3	17.9	886
3	4	2711	4.5	15.1	1.05	4.7	15.8	779
3	5	2867	4.5	15.1	1.11	5.0	16.7	819
3	6	1920	4.5	15.1	.74	3.3	11.2	546
3	7	1063	4.5	15.1	.41	1.8	6.2	299

TAP	POINT	CORR V	%02	% CO2	V LOC/AVG	WTD % O2	WTD %CO2	WTD TEMP
4	1	3760	4.5	15.1	1.45	6.5	21.9	1073
4	2	3489	4.5	15.1	1.35	6.1	20.3	1013
4	3	3426	4.5	15.1	1.32	5.9	19.9	992
4	4	3008	4.5	15.1	1.16	5.2	17.5	871
4	5	2170	4.5	15.1	.84	3.8	12.6	623
4	6	827	4.5	15.1	.32	1.4	4.8	238
4	7	619	4.5	15.1	.24	1.1	3.6	178

TAP	POINT	CORR V	%02	% CO2	V LOC/AVG	WTD % O2	WTD %CO2	WTD TEMP
5	1	3847	4.5	15.1	1.48	6.7	22.4	1120
5	2	3413	4.5	15.1	1.32	5.9	19.9	996
5	3	3458	4.5	15.1	1.33	6.0	20.1	1007
5	4	3156	4.5	15.1	1.22	5.5	18.4	916
5	5	1518	4.5	15.1	.59	2.6	8.8	439
5	6	581	4.5	15.1	.22	1.0	3.4	168
5	7	1350	4.5	15.1	.52	2.3	7.9	390

TAP	POINT	CORR V	%02	% CO2	V LOC/AVG	WTD % O2	WTD %CO2	WTD TEMP
6	1	1217	4.5	15.1	.47	2.1	7.1	357
6	2	3359	4.5	15.1	1.30	5.8	19.6	983
6	3	3587	4.5	15.1	1.38	6.2	20.9	1038
6	4	3206	4.5	15.1	1.24	5.6	18.7	930
6	5	1566	4.5	15.1	.60	2.7	9.1	452
6	6	826	4.5	15.1	.32	1.4	4.8	237
6	7	720	4.5	15.1	.28	1.2	4.2	206

TAP	POINT	CORR V	%02	% CO2	V LOC/AVG	WTD % O2	WTD %CO2	WTD TEMP
7	1	3273	4.5	15.1	1.26	5.7	19.1	909
7	2	3439	4.5	15.1	1.33	6.0	20.0	1000
7	3	3591	4.5	15.1	1.38	6.2	20.9	1031
7	4	3228	4.5	15.1	1.24	5.6	18.8	926
7	5	2259	4.5	15.1	.87	3.9	13.1	644
7	6	1391	4.5	15.1	.54	2.4	8.1	397
7	7	780	4.5	15.1	.30	1.4	4.5	223

TAP	POINT	CORR V	%02	% CO2	V LOC/AVG	WTD % O2	WTD %CO2	WTD TEMP
8	1	2624	4.5	15.1	1.01	4.6	15.3	755
8	2	3347	4.5	15.1	1.29	5.8	19.5	976
8	3	2979	4.5	15.1	1.15	5.2	17.3	848
8	4	2850	4.5	15.1	1.10	4.9	16.6	809
8	5	2747	4.5	15.1	1.06	4.8	16.0	768
8	6	1775	4.5	15.1	.68	3.1	10.3	487
8	7	950	4.5	15.1	.37	1.6	5.5	258

TAP	POINT	CORR V	%02	% CO2	V LOC/AVG	WTD % O2	WTD %CO2	WTD TEMP
9	1	3506	4.5	15.1	1.35	6.1	20.4	991
9	2	3210	4.5	15.1	1.24	5.6	18.7	927
9	3	3438	4.5	15.1	1.33	6.0	20.0	987
9	4	3377	4.5	15.1	1.30	5.9	19.7	969
9	5	3220	4.5	15.1	1.24	5.6	18.7	917
9	6	2400	4.5	15.1	.93	4.2	14.0	679
9	7	1267	4.5	15.1	.49	2.2	7.4	357

TAP	POINT	CORR V	%02	% CO2	V LOC/AVG	WTD % O2	WTD %CO2	WTD TEMP
10	1	3252	4.5	15.1	1.25	5.6	18.9	928
10	2	3491	4.5	15.1	1.35	6.1	20.3	1016
10	3	3394	4.5	15.1	1.31	5.9	19.8	979
10	4	3171	4.5	15.1	1.22	5.5	18.5	912
10	5	3134	4.5	15.1	1.21	5.4	18.2	900
10	6	2945	4.5	15.1	1.14	5.1	17.1	841
10	7	1522	4.5	15.1	.59	2.6	8.9	434

TAP	POINT	CORR V	%02	% CO2	V LOC/AVG	WTD % O2	WTD %CO2	WTD TEMP
11	1	3138	4.5	15.1	1.21	5.4	18.3	906
11	2	3480	4.5	15.1	1.34	6.0	20.3	1014
11	3	3232	4.5	15.1	1.25	5.6	18.8	933
11	4	3331	4.5	15.1	1.28	5.8	19.4	963
11	5	2990	4.5	15.1	1.15	5.2	17.4	865
11	6	2504	4.5	15.1	.97	4.3	14.6	724
11	7	1463	4.5	15.1	.56	2.5	8.5	417

TAP	POINT	CORR V	%02	% CO2	V LOC/AVG	WTD % O2	WTD %CO2	WTD TEMP
12	1	2629	4.5	15.1	1.01	4.6	15.3	757
12	2	2740	4.5	15.1	1.06	4.8	15.9	789
12	3	3013	4.5	15.1	1.16	5.2	17.5	868
12	4	2937	4.5	15.1	1.13	5.1	17.1	846
12	5	2894	4.5	15.1	1.12	5.0	16.9	832
12	6	2446	4.5	15.1	.94	4.2	14.2	703
12	7	1631	4.5	15.1	.63	2.8	9.5	465

TAP	POINT	CORR V	%02	% CO2	V LOC/AVG	WTD % O2	WTD %CO2	WTD TEMP
13	1	2154	4.5	15.1	.83	3.7	12.5	624
13	2	2423	4.5	15.1	.93	4.2	14.1	704
13	3	2976	4.5	15.1	1.15	5.2	17.3	865
13	4	2983	4.5	15.1	1.15	5.2	17.4	868
13	5	3146	4.5	15.1	1.21	5.5	18.3	914
13	6	2663	4.5	15.1	1.03	4.6	15.5	773
13	7	1270	4.5	15.1	.49	2.2	7.4	367

TAP	POINT	CORR V	%02	% CO2	V LOC/AVG	WTD % O2	WTD %CO2	WTD TEMP
14	1	2703	4.5	15.1	1.04	4.7	15.7	782
14	2	2715	4.5	15.1	1.05	4.7	15.8	788
14	3	2652	4.5	15.1	1.02	4.6	15.4	769
14	4	2398	4.5	15.1	.92	4.2	14.0	695
14	5	2554	4.5	15.1	.98	4.4	14.9	740
14	6	1322	4.5	15.1	.51	2.3	7.7	382
14	7	1109	4.5	15.1	.43	1.9	6.5	321

LOCATION = WEST SEC GAS IN
FILE IDENITY = IP6_26WSGI

AVERAGE VELOCITY = 2594 FPM

AVERAGE (WEIGHTED) % O2 = 4.5
AVERAGE (WEIGHTED) % CO2 = 15.1
AVERAGE (WEIGHTED) TEMPERATURE = 744

AVERAGE (ARITHMATIC) % O2 = 4.5
AVERAGE (ARITHMATIC) % CO2 = 15.1
AVERAGE (ARITHMATIC) TEMPERATURE = 743

AVERAGE STATIC PRESSURE (in. H2O) = -3.8
AVERAGE DENSITY (LBM/FT^3) = .02843

ACFM (ACTUAL FT^3/MIN) = 2047011
LB/HR (WET) = 3491700

****
****

PRELIMINARY CALCULATIONS !!!!!!!!!
FINAL CALCULATIONS TO BE RUN AFTER
FECHHEIMER PROBES ARE
INDEPENDENTLY CALIBRATED

****
****

DATE = 6-26-87
LOCATION = BAG IN WEST
FILE IDENITY = IP6_26BHW
BAROMETRIC PRESSURE = 25.49
PROBE IDENTY = E-44
DUCT AREA = 346.5

TAP	POINT	CORR V	%02	% CO2	V LOC/AVG	WTD % O2	WTD %CO2	WTD TEMP
1	1	2989	5.3	13.9	.92/ .92	4.9	12.7	273
1	2	3342	5.2	13.7	1.02/1.03	5.3	14.0	305
1	3	3878	5.8	13.1	1.19/1.20	6.9	15.6	352
1	4	4088	6.1	13.0	1.25/1.26	7.6	16.3	365
1	5	4176	6.5	12.7	1.28/1.29	8.3	16.2	369
1	6	3800	6.1	13.1	1.16/1.17	7.1	15.2	334
1	7	3959	6.5	12.8	1.21/1.22	7.9	15.5	347

TAP	POINT	CORR V	%02	% CO2	V LOC/AVG	WTD % O2	WTD %CO2	WTD TEMP
2	1	4040	5.3	13.7	1.24/1.25	6.6	16.9	372
2	2	3859	5.4	13.7	1.18/1.19	6.4	16.2	354
2	3	2177	6.2	12.9	.67/ .67	4.1	8.6	198
2	4	1235	6.2	12.9	.38/ .38	2.3	4.9	111
2	5	3235	6.4	12.5	.99/1.00	6.3	12.4	288
2	6	3173	6.2	13.0	.97/ .98	6.0	12.6	282
2	7	2634	5.7	13.1	.81/ .81	4.6	10.6	234

TAP	POINT	CORR V	%02	% CO2	V LOC/AVG	WTD % O2	WTD %CO2	WTD TEMP
3	1	2087	5.3	13.9	.64/ .64	3.4	8.9	194
3	2	3209	5.2	14.0	.98/ .99	5.1	13.8	296
3	3	3279	5.9	13.4	1.00/1.01	5.9	13.5	299
3	4	5887	5.8	13.4	1.80/1.82	10.5	24.2	534
3	5	5865	5.7	13.3	1.80/1.81	10.2	23.9	529
3	6	5454	6.0	13.0	1.67/1.68	10.0	21.7	492
3	7	4029	5.8	13.4	1.23/1.24	7.2	16.5	366

TAP	POINT	CORR V	%02	% CO2	V LOC/AVG	WTD % O2	WTD %CO2	WTD TEMP
4	1	5077	5.2	13.8	1.55/1.57	8.1	21.4	475
4	2	2167	5.4	13.7	.66/ .67	3.6	9.1	199
4	3	3000	5.8	13.2	.92/ .93	5.3	12.1	272
4	4	3183	6.0	13.0	.97/ .98	5.8	12.7	291
4	5	2980	5.6	13.4	.91/ .92	5.1	12.2	278
4	6	2942	5.4	13.6	.90/ .91	4.9	12.2	268
4	7	3569	5.3	13.9	1.09/1.10	5.8	15.2	328

TAP	POINT	CORR V	%02	% CO2	V LOC/AVG	WTD % O2	WTD %CO2	WTD TEMP
5	1	3567	4.8	14.2	1.09/1.10	5.2	15.5	336
5	2	3439	5.5	13.7	1.05/1.06	5.8	14.4	323
5	3	3624	5.7	13.6	1.11/1.12	6.3	15.1	336
5	4	3388	5.8	13.4	1.04/1.05	6.0	13.9	308
5	5	3484	5.7	13.5	1.07/1.08	6.1	14.4	314
5	6	3295	5.7	13.5	1.01/1.02	5.7	13.6	304
5	7	3944	5.1	14.0	1.21/1.22	6.2	16.9	364

TAP	POINT	CORR V	%02	% CO2	V LOC/AVG	WTD % O2	WTD %CO2	WTD TEMP
6	1	2913	4.9	14.1	.89/ .90	4.4	12.6	274
6	2	3015	5.2	13.8	.92/ .93	4.8	12.7	282
6	3	3722	5.0	14.0	1.14/1.15	5.7	16.0	344
6	4	3657	5.5	13.5	1.12/1.13	6.2	15.1	335
6	5	3678	5.4	13.6	1.13/1.14	6.1	15.3	335
6	6	3109	5.2	13.8	.95/ .96	4.9	13.1	284
6	7	3558	5.2	14.0	1.09/1.10	5.7	15.3	328

TAP	POINT	CORR V	%02	% CO2	V LOC/AVG	WTD % O2	WTD %CO2	WTD TEMP
7	1	2017	4.9	14.3	.62/ .62	3.0	8.8	192
7	2	1271	4.9	14.3	.39/ .39	1.9	5.6	120
7	3	456	4.8	14.3	.14/ .14	.7	2.0	43
7	4	1177	5.3	13.9	.36/ .36	1.9	5.0	109
7	5	1766	5.4	13.8	.54/ .55	2.9	7.5	163
7	6	972	5.2	14.0	.30/ .30	1.5	4.2	90
7	7	2886	5.3	13.8	.88/ .89	4.7	12.2	266

TAP	POINT	CORR V	%02	% CO2	V LOC/AVG	WTD % O2	WTD %CO2	WTD TEMP
8	1	4311	4.3	14.7	1.32/1.33	5.7	19.4	411
8	2	4252	5.1	14.0	1.30/1.31	6.6	18.2	404
8	3	1834	4.4	14.6	.56/ .57	2.5	8.2	172
8	4	4765	4.8	14.2	1.46/1.47	7.0	20.7	446
8	5	1776	4.9	13.7	.54/ .55	0.0	0.0	165
8	6	1962	4.7	14.2	.60/ .61	2.8	8.5	182
8	7	4270	4.6	14.3	1.31/1.32	6.0	18.7	399

DATE = 6-26-87
LOCATION = BAG IN WEST
FILE IDENITY = IP6_26BHW
BAROMETRIC PRESSURE = 25.49
PROBE IDENTY = E-44
DUCT HEIGHT = 19.3
DUCT WIDTH = 18.0

TAP	POINT	STAT P	TEMP	DELTA P	YAW ANGL	%02	% CO2
1	1	-8.8	296	.302	5	5.3	13.9
1	2	-8.9	296	.378	5	5.2	13.7
1	3	-9.1	294	.507	0	5.8	13.1
1	4	-8.9	289	.568	0	6.1	13.0
1	5	-9.0	286	.595	0	6.5	12.7
1	6	-8.9	285	.493	0	6.1	13.1
1	7	-9.0	284	.544	7	6.5	12.8

TAP	POINT	STAT P	TEMP	DELTA P	YAW ANGL	%02	% CO2
2	1	-8.7	298	.549	0	5.3	13.7
2	2	-8.7	297	.505	5	5.4	13.7
2	3	-8.9	294	.158	0	6.2	12.9
2	4	-8.9	290	.051	5	6.2	12.9
2	5	-9.0	288	.354	0	6.4	12.5
2	6	-9.0	288	.341	0	6.2	13.0
2	7	-9.0	288	.234	0	5.7	13.1

TAP	POINT	STAT P	TEMP	DELTA P	YAW ANGL	%02	% CO2
3	1	-8.9	301	.144	0	5.3	13.9
3	2	-9.2	299	.344	0	5.2	14.0
3	3	-9.2	295	.361	1	5.9	13.4
3	4	-9.2	294	1.196	7	5.8	13.4
3	5	-9.0	292	1.186	6	5.7	13.3
3	6	-8.7	292	1.013	0	6.0	13.0
3	7	-8.9	294	.551	4	5.8	13.4

TAP	POINT	STAT P	TEMP	DELTA P	YAW ANGL	%02	% CO2
4	1	-9.0	303	.871	5	5.2	13.8
4	2	-9.1	298	.156	2	5.4	13.7
4	3	-9.3	294	.302	2	5.8	13.2
4	4	-9.2	296	.339	0	6.0	13.0
4	5	-9.1	302	.295	2	5.6	13.4
4	6	-9.1	295	.290	0	5.4	13.6
4	7	-9.2	298	.427	0	5.3	13.9

TAP	POINT	STAT P	TEMP	DELTA P	YAW ANGL	%02	% CO2
5	1	-9.0	305	.425	4	4.8	14.2
5	2	-8.9	304	.395	4	5.5	13.7
5	3	-9.0	300	.446	7	5.7	13.6
5	4	-9.0	295	.390	6	5.8	13.4
5	5	-9.0	292	.412	4	5.7	13.5
5	6	-9.1	299	.363	2	5.7	13.5
5	7	-9.1	299	.522	0	5.1	14.0

TAP	POINT	STAT P	TEMP	DELTA P	YAW ANGL	%02	% CO2
6	1	-9.0	305	.283	5	4.9	14.1
6	2	-9.1	303	.302	2	5.2	13.8
6	3	-9.1	299	.468	5	5.0	14.0
6	4	-9.0	297	.449	0	5.5	13.5
6	5	-9.1	295	.456	2	5.4	13.6
6	6	-9.0	296	.324	0	5.2	13.8
6	7	-9.1	299	.424	0	5.2	14.0

TAP	POINT	STAT P	TEMP	DELTA P	YAW ANGL	%02	% CO2
7	1	-9.1	308	.151	20	4.9	14.3
7	2	-9.1	306	.053	5	4.9	14.3
7	3	-9.3	305	.007	12	4.8	14.3
7	4	-9.4	300	.046	7	5.3	13.9
7	5	-9.4	299	.104	6	5.4	13.8
7	6	-9.2	300	.031	4	5.2	14.0
7	7	-9.1	299	.278	2	5.3	13.8

TAP	POINT	STAT P	TEMP	DELTA P	YAW ANGL	%02	% CO2
8	1	-8.9	309	.637	10	4.3	14.7
8	2	-9.0	308	.644	15	5.1	14.0
8	3	-9.0	304	.114	10	4.4	14.6
8	4	-9.0	303	.761	0	4.8	14.2
8	5	-9.1	301	.107	10	* 4.9	*13.7
8	6	-9.1	301	.131	10	4.7	14.2
8	7	-8.9	303	.615	5	4.6	14.3

* - O2/CO2 DATA WITH ERROR GREATER THAN .35 NOT USED

LOCATION = BAG IN WEST
FILE IDENITY = IP6_26BHW

AVERAGE VELOCITY = 3240 FPM

AVERAGE (WEIGHTED) % O2 = 5.48 *
AVERAGE (WEIGHTED) % CO2 = 13.60 *
AVERAGE (WEIGHTED) TEMPERATURE = 297

AVERAGE (ARITHMETIC) % O2 = 5.45 *
AVERAGE (ARITHMETIC) % CO2 = 13.64 *
AVERAGE (ARITHMETIC) TEMPERATURE = 297

AVERAGE STATIC PRESSURE (in. H2O) = -9.0
AVERAGE DENSITY (LBM/FT^3) = .04426

ACFM (ACTUAL FT^3/MIN) = 1122520
LB/HR (WET) = 2981201

* - O2/CO2 DATA WITH ERROR GREATER THAN .35 NOT USED
NO. OF POINTS NOT USED = 1 OUT OF 56

LOCATION = BAG IN WEST
FILE IDENITY = IP6_26BHW

AVERAGE VELOCITY = 3240 FPM

AVERAGE (WEIGHTED) % O2 = 5.48
AVERAGE (WEIGHTED) % CO2 = 13.60
AVERAGE (WEIGHTED) TEMPERATURE = 297

AVERAGE (ARITHMETIC) % O2 = 5.44
AVERAGE (ARITHMETIC) % CO2 = 13.64
AVERAGE (ARITHMETIC) TEMPERATURE = 297

AVERAGE STATIC PRESSURE (in. H2O) = -9.0
AVERAGE DENSITY (LBM/FT^3) = .04426

ACFM (ACTUAL FT^3/MIN) = 1122520
LB/HR (WET) = 2981201

DATE = 6-26-87
LOCATION = BAG IN CENTER
FILE IDENITY = IP6_26BHC
BAROMETRIC PRESSURE = 25.49
PROBE IDENTY = E-42
DUCT HEIGHT = 19.3
DUCT WIDTH = 18.0

TAP	POINT	STAT P	TEMP	DELTA P	YAW ANGL	%02	% CO2
1	1	-8.5	317	.441	20	5.3	13.8
1	2	-8.6	318	.065	25	5.4	13.6
1	3	-8.6	317	.007	15	5.5	13.7
1	4	-8.5	316	.485	5	5.6	13.5
1	5	-8.5	316	.031	10	5.3	13.8
1	6	-8.5	314	.100	25	5.0	14.0
1	7	-8.3	315	.314	20	5.2	13.8

TAP	POINT	STAT P	TEMP	DELTA P	YAW ANGL	%02	% CO2
2	1	-8.4	321	.046	5	5.0	14.1
2	2	-8.4	322	.104	5	5.2	14.0
2	3	-8.4	322	.209	10	5.0	13.8
2	4	-8.2	322	.197	5	5.3	13.7
2	5	-8.4	322	.376	10	5.4	13.6
2	6	-8.4	321	.305	5	4.9	13.9
2	7	-8.7	318	.129	10	5.5	13.6

TAP	POINT	STAT P	TEMP	DELTA P	YAW ANGL	%02	% CO2
3	1	-8.6	328	.129	0	5.0	14.0
3	2	-8.6	324	.175	5	5.2	13.9
3	3	-8.4	328	.175	20	5.3	13.9
3	4	-8.6	330	.319	10	5.0	13.7
3	5	-8.4	329	.388	5	5.6	13.2
3	6	-8.2	328	.297	10	5.3	13.9
3	7	-8.2	329	.314	10	5.3	13.9

TAP	POINT	STAT P	TEMP	DELTA P	YAW ANGL	%02	% CO2
4	1	-8.6	345	.297	10	4.6	14.4
4	2	-8.6	342	.495	0	4.9	14.0
4	3	-8.8	344	.537	0	4.8	14.2
4	4	-8.8	345	.522	10	5.2	14.0
4	5	-8.9	341	.429	10	5.1	13.9
4	6	-8.8	338	.493	5	4.9	13.8
4	7	-8.6	335	.510	10	5.1	13.7

TAP	POINT	STAT P	TEMP	DELTA P	YAW ANGL	%O2	% CO2
5	1	-8.6	347	.268	5	4.9	14.0
5	2	-8.5	348	.542	0	4.6	14.2
5	3	-8.7	346	.632	10	4.8	13.9
5	4	-8.4	343	.559	5	4.8	14.0
5	5	-8.5	342	.554	10	5.0	14.0
5	6	-8.7	340	.546	10	5.0	13.9
5	7	-8.7	339	.502	10	4.7	14.2

TAP	POINT	STAT P	TEMP	DELTA P	YAW ANGL	%O2	% CO2
6	1	-8.4	348	.090	5	4.8	14.2
6	2	-8.5	353	.434	10	4.8	14.2
6	3	-8.6	354	.546	0	4.8	14.3
6	4	-8.4	355	.644	5	5.0	14.0
6	5	-8.5	355	.512	10	5.0	13.9
6	6	-8.6	354	.437	0	4.6	14.4
6	7	-8.5	350	.400	10	4.6	14.2

TAP	POINT	STAT P	TEMP	DELTA P	YAW ANGL	%O2	% CO2
7	1	-8.6	350	.017	0	4.9	14.2
7	2	-8.8	351	.026	15	5.0	14.1
7	3	-8.8	354	.166	20	4.9	14.2
7	4	-8.7	355	.329	10	4.8	14.2
7	5	-8.8	357	.478	0	4.7	14.1
7	6	-8.7	356	.356	0	4.8	14.4
7	7	-8.5	351	.534	5	5.0	14.2

TAP	POINT	STAT P	TEMP	DELTA P	YAW ANGL	%O2	% CO2
8	1	-8.2	350	.649	10	4.4	14.6
8	2	-8.5	351	.031	20	5.0	14.2
8	3	-8.5	353	.065	20	4.6	14.5
8	4	-8.6	355	.195	10	5.0	14.0
8	5	-8.6	355	.024	10	4.7	14.1
8	6	-8.7	352	.007	20	4.9	14.1
8	7	-8.5	350	.122	10	4.6	14.4

* - O2/CO2 DATA WITH ERROR GREATER THAN .35 NOT USED

****
****

PRELIMINARY CALCULATIONS !!!!!!!!!
FINAL CALCULATIONS TO BE RUN AFTER
FECHHEIMER PROBES ARE
INDEPENDENTLY CALIBRATED

****
****

DATE = 6-26-87
LOCATION = BAG IN CENTER
FILE IDENITY = IP6_26BHC
BAROMETRIC PRESSURE = 25.49
PROBE IDENTY = E-42
DUCT AREA = 346.5

TAP	POINT	CORR V	%02	% CO2	V LOC/AVG	WTD % O2	WTD %CO2	WTD TEMP
1	1	3448	5.3	13.8	1.20/1.20	6.4	16.6	381
1	2	1290	5.4	13.6	.45/ .45	2.4	6.1	143
1	3	453	5.5	13.7	.16/ .16	.9	2.2	50
1	4	3831	5.6	13.5	1.34/1.34	7.5	18.0	422
1	5	969	5.3	13.8	.34/ .34	1.8	4.7	107
1	6	1592	5.0	14.0	.56/ .56	2.8	7.8	174
1	7	2910	5.2	13.8	1.02/1.02	5.3	14.0	320

TAP	POINT	CORR V	%02	% CO2	V LOC/AVG	WTD % O2	WTD %CO2	WTD TEMP
2	1	1195	5.0	14.1	.42/ .42	2.1	5.9	134
2	2	1793	5.2	14.0	.63/ .63	3.3	8.8	201
2	3	2505	5.0	13.8	.87/ .87	4.4	12.1	281
2	4	2461	5.3	13.7	.86/ .86	4.5	11.8	276
2	5	3351	5.4	13.6	1.17/1.17	6.3	15.9	376
2	6	3054	4.9	13.9	1.07/1.07	5.2	14.8	342
2	7	1969	5.5	13.6	.69/ .69	3.8	9.3	218

TAP	POINT	CORR V	%02	% CO2	V LOC/AVG	WTD % O2	WTD %CO2	WTD TEMP
3	1	2011	5.0	14.0	.70/ .70	3.5	9.8	230
3	2	2324	5.2	13.9	.81/ .81	4.2	11.3	263
3	3	2197	5.3	13.9	.77/ .77	4.1	10.7	251
3	4	3106	5.0	13.7	1.08/1.08	5.4	14.8	358
3	5	3461	5.6	13.2	1.21/1.21	6.8	15.9	397
3	6	2991	5.3	13.9	1.04/1.04	5.5	14.5	342
3	7	3077	5.3	13.9	1.07/1.07	5.7	14.9	353

TAP	POINT	CORR V	%02	% CO2	V LOC/AVG	WTD % O2	WTD %CO2	WTD TEMP
4	1	3025	4.6	14.4	1.06/1.06	4.9	15.2	364
4	2	3949	4.9	14.0	1.38/1.38	6.8	19.3	471
4	3	4117	4.8	14.2	1.44/1.44	6.9	20.4	494
4	4	4001	5.2	14.0	1.40/1.40	7.3	19.5	481
4	5	3623	5.1	13.9	1.26/1.26	6.4	17.6	431
4	6	3919	4.9	13.8	1.37/1.37	6.7	18.9	462
4	7	3931	5.1	13.7	1.37/1.37	7.0	18.8	459

TAP	POINT	CORR V	%02	% CO2	V LOC/AVG	WTD % O2	WTD %CO2	WTD TEMP
5	1	2913	4.9	14.0	1.02/1.02	5.0	14.2	353
5	2	4145	4.6	14.2	1.45/1.45	6.7	20.5	503
5	3	4402	4.8	13.9	1.54/1.54	7.4	21.3	531
5	4	4180	4.8	14.0	1.46/1.46	7.0	20.4	500
5	5	4112	5.0	14.0	1.43/1.43	7.2	20.1	490
5	6	4079	5.0	13.9	1.42/1.42	7.1	19.8	484
5	7	3909	4.7	14.2	1.36/1.36	6.4	19.4	462

TAP	POINT	CORR V	%02	% CO2	V LOC/AVG	WTD % O2	WTD %CO2	WTD TEMP
6	1	1697	4.8	14.2	.59/ .59	2.8	8.4	206
6	2	3668	4.8	14.2	1.28/1.28	6.1	18.2	452
6	3	4176	4.8	14.3	1.46/1.46	7.0	20.8	516
6	4	4517	5.0	14.0	1.58/1.58	7.9	22.1	559
6	5	3988	5.0	13.9	1.39/1.39	7.0	19.3	494
6	6	3740	4.6	14.4	1.30/1.30	6.0	18.8	462
6	7	3517	4.6	14.2	1.23/1.23	5.6	17.4	429

TAP	POINT	CORR V	%02	% CO2	V LOC/AVG	WTD % O2	WTD %CO2	WTD TEMP
7	1	745	4.9	14.2	.26/ .26	1.3	3.7	91
7	2	890	5.0	14.1	.31/ .31	1.6	4.4	109
7	3	2177	4.9	14.2	.76/ .76	3.7	10.8	269
7	4	3203	4.8	14.2	1.12/1.12	5.4	15.9	397
7	5	3920	4.7	14.1	1.37/1.37	6.4	19.3	488
7	6	3383	4.8	14.4	1.18/1.18	5.7	17.0	420
7	7	4106	5.0	14.2	1.43/1.43	7.2	20.3	503

TAP	POINT	CORR V	%02	% CO2	V LOC/AVG	WTD % O2	WTD %CO2	WTD TEMP
8	1	4464	4.4	14.6	1.56/1.56	6.9	22.7	545
8	2	945	5.0	14.2	.33/ .33	1.6	4.7	116
8	3	1366	4.6	14.5	.48/ .48	2.2	6.9	168
8	4	2473	5.0	14.0	.86/ .86	4.3	12.1	306
8	5	874	4.7	14.1	.31/ .31	1.4	4.3	108
8	6	451	4.9	14.1	.16/ .16	.8	2.2	55
8	7	1953	4.6	14.4	.68/ .68	3.1	9.8	238

LOCATION = BAG IN CENTER
FILE IDENITY = IP6_26BHC

AVERAGE VELOCITY = 2867 FPM

AVERAGE (WEIGHTED) % O2 = 4.97 *
AVERAGE (WEIGHTED) % CO2 = 14.00 *
AVERAGE (WEIGHTED) TEMPERATURE = 340

AVERAGE (ARITHMETIC) % O2 = 4.99 *
AVERAGE (ARITHMETIC) % CO2 = 14.00 *
AVERAGE (ARITHMETIC) TEMPERATURE = 339

AVERAGE STATIC PRESSURE (in. H2O) = -8.5
AVERAGE DENSITY (LBM/FT^3) = .04208

ACFM (ACTUAL FT^3/MIN) = 993400
LB/HR (WET) = 2508190

* - O2/CO2 DATA WITH ERROR GREATER THAN .35 NOT USED
NO. OF POINTS NOT USED = 0 OUT OF 56

CENTER BAG HOUSE INLET DATA FOR LEFT AND RIGHT SIDES
FILE IDENTITY = IP6_26BHC

AVG FLOW	L/R	1179.5	1328.7
AVG TEMP	L/R	326.68	350.50
WT'D AVG TEMP	L/R	328.97	350.02
AVG O2	L/R	5.17	4.81
WT'D AVG O2	L/R	5.15	4.80
AVG CO2	L/R	13.84	14.17
WT'D AVG CO2	L/R	13.83	14.16

DATE = 6-26-87
LOCATION = BAG IN EAST
FILE IDENITY = IP6_26BHE
BAROMETRIC PRESSURE = 25.49
PROBE IDENTY = E-45
DUCT HEIGHT = 19.3
DUCT WIDTH = 18.0

TAP	POINT	STAT P	TEMP	DELTA P	YAW ANGL	%02	% CO2
1	1	-8.8	323	.120	90	4.6	14.6
1	2	-8.8	320	.370	25	4.7	14.5
1	3	-8.8	315	.040	10	4.6	14.4
1	4	-8.8	315	.850	15	4.6	14.3
1	5	-8.8	313	.300	30	4.8	14.4
1	6	-8.5	311	.510	20	4.6	14.6
1	7	-8.5	312	.790	15	4.6	14.5

TAP	POINT	STAT P	TEMP	DELTA P	YAW ANGL	%02	% CO2
2	1	-8.8	322	.410	35	4.4	14.8
2	2	-8.8	314	.390	5	4.7	14.6
2	3	-9.0	303	.210	5	* 4.4	*14.2
2	4	-9.0	300	.320	20	5.4	13.8
2	5	-9.0	305	.300	15	5.2	13.8
2	6	-9.0	323	.430	25	4.8	14.2
2	7	-8.8	314	.620	20	5.4	13.7

TAP	POINT	STAT P	TEMP	DELTA P	YAW ANGL	%02	% CO2
3	1	-8.8	321	.550	20	4.7	14.5
3	2	-8.8	308	.530	20	4.9	14.2
3	3	-8.8	308	.650	10	4.9	14.1
3	4	-9.0	308	.710	0	4.9	14.0
3	5	-8.8	308	.550	10	5.0	14.0
3	6	-9.0	309	.540	15	5.5	13.7
3	7	-8.8	315	.630	15	4.8	14.2

TAP	POINT	STAT P	TEMP	DELTA P	YAW ANGL	%02	% CO2
4	1	-9.0	305	.690	30	4.6	14.6
4	2	-9.0	273	.590	10	5.1	14.0
4	3	-9.0	263	.580	25	5.0	14.0
4	4	-9.0	268	.560	25	5.3	13.8
4	5	-9.0	281	.590	25	5.2	13.7
4	6	-9.0	310	.600	15	5.2	13.8
4	7	-8.8	328	.730	5	4.5	14.5

TAP	POINT	STAT P	TEMP	DELTA P	YAW ANGL	%02	% CO2
5	1	-9.0	319	.520	10	4.6	14.3
5	2	-9.0	292	.520	10	4.6	14.4
5	3	-8.8	288	.520	20	4.8	14.2
5	4	-8.8	289	.520	15	4.9	14.2
5	5	-9.0	302	.500	15	5.2	13.9
5	6	-9.0	314	.520	10	4.8	14.2
5	7	-9.2	329	.600	0	4.7	14.4

TAP	POINT	STAT P	TEMP	DELTA P	YAW ANGL	%02	% CO2
6	1	-8.5	337	.400	5	4.8	14.2
6	2	-8.8	358	.400	10	4.8	14.3
6	3	-9.0	368	.450	15	4.7	14.6
6	4	-8.8	370	.430	5	4.8	14.3
6	5	-8.8	371	.410	0	5.1	13.9
6	6	-8.8	362	.400	5	4.8	14.2
6	7	-9.0	342	.500	10	4.8	14.2

TAP	POINT	STAT P	TEMP	DELTA P	YAW ANGL	%02	% CO2
7	1	-9.0	316	.540	0	4.4	14.8
7	2	-9.0	300	.520	0	4.4	14.8
7	3	-9.0	285	.540	5	4.7	14.5
7	4	-9.0	292	.420	0	5.1	13.8
7	5	-9.0	293	.520	5	5.3	13.8
7	6	-9.0	308	.550	0	4.8	14.4
7	7	-9.0	332	.180	65	4.7	14.4

TAP	POINT	STAT P	TEMP	DELTA P	YAW ANGL	%02	% CO2
8	1	-9.0	337	.580	0	4.6	14.6
8	2	-9.0	319	.570	5	4.7	14.2
8	3	-9.2	322	.670	0	4.7	14.2
8	4	-9.0	330	.700	0	4.7	14.1
8	5	-9.0	326	.690	5	5.2	13.8
8	6	-9.0	336	.640	10	4.6	14.2
8	7	-9.0	339	.660	5	5.6	13.5

* - O2/CO2 DATA WITH ERROR GREATER THAN .35 NOT USED

****
****

PRELIMINARY CALCULATIONS !!!!!!!!!
FINAL CALCULATIONS TO BE RUN AFTER
FECHHEIMER PROBES ARE
INDEPENDENTLY CALIBRATED

****
****

DATE = 6-26-87
LOCATION = BAG IN EAST
FILE IDENITY = IP6_26BHE
BAROMETRIC PRESSURE = 25.49
PROBE IDENTY = E-45
DUCT AREA = 346.5

TAP	POINT	CORR V	%O2	% CO2	V LOC/AVG	WTD % O2	WTD %CO2	WTD TEMP
1	1	0	4.6	14.6	0.00/0.00	0.0	0.0	0
1	2	3054	4.7	14.5	.82/ .83	3.9	11.9	264
1	3	1099	4.6	14.4	.30/ .30	1.4	4.3	94
1	4	4899	4.6	14.3	1.32/1.32	6.1	18.8	417
1	5	2619	4.8	14.4	.70/ .71	3.4	10.1	222
1	6	3687	4.6	14.6	.99/1.00	4.6	14.5	310
1	7	4711	4.6	14.5	1.27/1.27	5.8	18.4	397

TAP	POINT	CORR V	%O2	% CO2	V LOC/AVG	WTD % O2	WTD %CO2	WTD TEMP
2	1	2907	4.4	14.8	.78/ .79	3.4	11.6	253
2	2	3431	4.7	14.6	.92/ .93	4.3	13.5	291
2	3	2510	4.4	14.2	.67/ .68	0.0	0.0	206
2	4	2911	5.4	13.8	.78/ .79	4.2	10.8	236
2	5	2908	5.2	13.8	.78/ .79	4.1	10.8	240
2	6	3299	4.8	14.2	.89/ .89	4.3	12.6	288
2	7	4076	5.4	13.7	1.10/1.10	5.9	15.0	346

TAP	POINT	CORR V	%O2	% CO2	V LOC/AVG	WTD % O2	WTD %CO2	WTD TEMP
3	1	3855	4.7	14.5	1.04/1.04	4.9	15.0	335
3	2	3754	4.9	14.2	1.01/1.02	4.9	14.3	313
3	3	4354	4.9	14.1	1.17/1.18	5.7	16.5	363
3	4	4620	4.9	14.0	1.24/1.25	6.1	17.4	385
3	5	4008	5.0	14.0	1.08/1.08	5.4	15.1	334
3	6	3901	5.5	13.7	1.05/1.05	5.8	14.4	326
3	7	4224	4.8	14.2	1.14/1.14	5.4	16.1	360

TAP	POINT	CORR V	%02	% CO2	V LOC/AVG	WTD % O2	WTD %CO2	WTD TEMP
4	1	3934	4.6	14.6	1.06/1.06	4.9	15.4	324
4	2	4053	5.1	14.0	1.09/1.10	5.6	15.3	299
4	3	3673	5.0	14.0	.99/ .99	4.9	13.8	261
4	4	3623	5.3	13.8	.97/ .98	5.2	13.4	263
4	5	3752	5.2	13.7	1.01/1.01	5.2	13.8	285
4	6	4112	5.2	13.8	1.11/1.11	5.7	15.3	345
4	7	4724	4.5	14.5	1.27/1.28	5.7	18.4	419

TAP	POINT	CORR V	%02	% CO2	V LOC/AVG	WTD % O2	WTD %CO2	WTD TEMP
5	1	3927	4.6	14.3	1.06/1.06	4.9	15.1	339
5	2	3856	4.6	14.4	1.04/1.04	4.8	14.9	304
5	3	3669	4.8	14.2	.99/ .99	4.7	14.0	286
5	4	3774	4.9	14.2	1.01/1.02	5.0	14.4	295
5	5	3737	5.2	13.9	1.00/1.01	5.2	14.0	305
5	6	3915	4.8	14.2	1.05/1.06	5.1	14.9	332
5	7	4309	4.7	14.4	1.16/1.17	5.4	16.7	383

TAP	POINT	CORR V	%02	% CO2	V LOC/AVG	WTD % O2	WTD %CO2	WTD TEMP
6	1	3528	4.8	14.2	.95/ .95	4.6	13.5	321
6	2	3535	4.8	14.3	.95/ .96	4.6	13.6	342
6	3	3698	4.7	14.6	.99/1.00	4.7	14.5	368
6	4	3734	4.8	14.3	1.00/1.01	4.8	14.4	374
6	5	3665	5.1	13.9	.99/ .99	5.0	13.7	368
6	6	3586	4.8	14.2	.96/ .97	4.6	13.7	351
6	7	3910	4.8	14.2	1.05/1.06	5.0	14.9	362

TAP	POINT	CORR V	%02	% CO2	V LOC/AVG	WTD % O2	WTD %CO2	WTD TEMP
7	1	4052	4.4	14.8	1.09/1.10	4.8	16.1	346
7	2	3935	4.4	14.8	1.06/1.06	4.7	15.7	319
7	3	3954	4.7	14.5	1.06/1.07	5.0	15.4	305
7	4	3525	5.1	13.8	.95/ .95	4.8	13.1	278
7	5	3906	5.3	13.8	1.05/1.06	5.6	14.5	309
7	6	4069	4.8	14.4	1.09/1.10	5.3	15.8	339
7	7	1005	4.7	14.4	.27/ .27	1.3	3.9	90

TAP	POINT	CORR V	%02	% CO2	V LOC/AVG	WTD % O2	WTD %CO2	WTD TEMP
8	1	4257	4.6	14.6	1.14/1.15	5.3	16.7	388
8	2	4158	4.7	14.2	1.12/1.12	5.3	15.9	359
8	3	4532	4.7	14.2	1.22/1.23	5.7	17.3	395
8	4	4655	4.7	14.1	1.25/1.26	5.9	17.6	415
8	5	4593	5.2	13.8	1.23/1.24	6.4	17.0	405
8	6	4402	4.6	14.2	1.18/1.19	5.4	16.8	400
8	7	4532	5.6	13.5	1.22/1.23	6.8	16.4	415

LOCATION = BAG IN EAST
FILE IDENITY = IP6_26BHE

AVERAGE VELOCITY = 3699 FPM

AVERAGE (WEIGHTED) % O2 = 4.86 *
AVERAGE (WEIGHTED) % CO2 = 14.20 *
AVERAGE (WEIGHTED) TEMPERATURE = 315

AVERAGE (ARITHMETIC) % O2 = 4.85 *
AVERAGE (ARITHMETIC) % CO2 = 14.21 *
AVERAGE (ARITHMETIC) TEMPERATURE = 316

AVERAGE STATIC PRESSURE (in. H2O) = -8.9
AVERAGE DENSITY (LBM/FT^3) = .04333

ACFM (ACTUAL FT^3/MIN) = 1281548
LB/HR (WET) = 3331675

* - O2/CO2 DATA WITH ERROR GREATER THAN .35 NOT USED
NO. OF POINTS NOT USED = 1 OUT OF 56

LOCATION = BAG IN EAST
FILE IDENITY = IP6_26BHE

AVERAGE VELOCITY = 3699 FPM

AVERAGE (WEIGHTED) % O2 = 4.85
AVERAGE (WEIGHTED) % CO2 = 14.20
AVERAGE (WEIGHTED) TEMPERATURE = 315

AVERAGE (ARITHMETIC) % O2 = 4.84
AVERAGE (ARITHMETIC) % CO2 = 14.21
AVERAGE (ARITHMETIC) TEMPERATURE = 316

AVERAGE STATIC PRESSURE (in. H2O) = -8.9
AVERAGE DENSITY (LBM/FT^3) = .04333

ACFM (ACTUAL FT^3/MIN) = 1281548
LB/HR (WET) = 3331675

DATE = 6-26-87
LOCATION = ECON WEST
FILE IDENITY = IP6_26EWA
BAROMETRIC PRESSURE = 25.49
PROBE IDENTY = E-43
DUCT HEIGHT = 21.2
DUCT WIDTH = 20.0

TAP	POINT	STAT P	TEMP	DELTA P	YAW ANGL	%02	% CO2
1	1	-3.8	733	.046	5	3.7	15.5
1	2	-3.5	743	.046	0	4.6	14.8
1	3	-3.7	737	.046	5	3.7	15.6
1	4	-3.5	729	.417	30	4.4	15.0
1	5	-3.5	733	.366	35	4.0	15.2
1	6	-3.5	736	.297	25	4.1	15.4
1	7	-3.4	732	.214	35	3.6	15.3

TAP	POINT	STAT P	TEMP	DELTA P	YAW ANGL	%02	% CO2
2	1	-3.7	689	.051	0	* 7.5	*12.5
2	2	-3.5	749	.048	5	* 3.8	*16.0
2	3	-3.5	748	.041	10	* 3.0	*15.3
2	4	-3.4	745	.336	25	3.8	15.6
2	5	-3.4	746	.114	30	3.7	15.5
2	6	-3.3	746	.268	30	3.0	16.3
2	7	-3.3	747	.354	25	3.6	15.4

TAP	POINT	STAT P	TEMP	DELTA P	YAW ANGL	%02	% CO2
3	1	-3.5	728	.046	0	4.9	14.7
3	2	-3.6	761	.053	5	4.0	15.0
3	3	-3.7	766	.292	15	4.0	15.4
3	4	-3.5	756	.422	25	3.9	15.4
3	5	-3.5	758	.322	30	3.1	16.1
3	6	-3.5	753	.214	20	4.1	15.4
3	7	-3.5	749	.344	10	* 3.7	*15.0

TAP	POINT	STAT P	TEMP	DELTA P	YAW ANGL	%02	% CO2
4	1	-3.8	755	.056	5	4.1	15.2
4	2	-3.8	768	.097	0	3.6	15.4
4	3	-3.7	772	.410	10	4.2	15.2
4	4	-3.6	766	.449	25	3.6	15.8
4	5	-3.5	752	.351	35	3.5	15.5
4	6	-3.6	751	.268	20	3.3	15.6
4	7	-3.6	749	.349	0	* 3.6	*15.2

TAP	POINT	STAT P	TEMP	DELTA P	YAW ANGL	%02	% CO2
5	1	-3.6	742	.056	0	3.8	15.2
5	2	-3.5	769	.095	5	3.9	15.4
5	3	-3.6	771	.432	5	4.0	15.4
5	4	-3.6	763	.400	20	3.6	15.6
5	5	-3.5	750	.288	20	3.9	15.4
5	6	-3.6	752	.356	20	3.5	15.4
5	7	-3.4	751	.422	0	* 3.8	*15.0

TAP	POINT	STAT P	TEMP	DELTA P	YAW ANGL	%02	% CO2
6	1	-3.8	762	.058	5	4.2	15.2
6	2	-3.8	767	.092	0	3.8	15.6
6	3	-3.7	767	.200	0	3.7	15.6
6	4	-3.5	759	.372	5	4.0	15.0
6	5	-3.6	752	.209	10	4.0	15.2
6	6	-3.5	755	.244	35	4.2	15.4
6	7	-3.5	750	.268	0	3.6	15.4

TAP	POINT	STAT P	TEMP	DELTA P	YAW ANGL	%02	% CO2
7	1	-3.6	712	.067	0	* 4.8	*15.0
7	2	-3.5	767	.102	5	4.0	15.2
7	3	-3.5	766	.148	10	4.4	15.1
7	4	-3.5	759	.434	10	3.8	15.4
7	5	-3.5	754	.307	5	4.2	15.2
7	6	-3.7	763	.253	30	4.5	15.1
7	7	-3.6	765	.134	40	4.3	14.7

* - O2/CO2 DATA WITH ERROR GREATER THAN .35 NOT USED

****
****

PRELIMINARY CALCULATIONS !!!!!!!!!
FINAL CALCULATIONS TO BE RUN AFTER
FECHHEIMER PROBES ARE
INDEPENDENTLY CALIBRATED

****
****

DATE = 6-26-87
LOCATION = ECON WEST
FILE IDENITY = IP6_26EWA
BAROMETRIC PRESSURE = 25.49
PROBE IDENTY = E-43
DUCT AREA = 425.0

TAP	POINT	CORR V	%02	% CO2	V LOC/AVG	WTD % O2	WTD %CO2	WTD TEMP
1	1	1470	3.7	15.5	.50/ .50	1.8	7.7	368
1	2	1482	4.6	14.8	.50/ .51	2.3	7.4	377
1	3	1472	3.7	15.6	.50/ .50	1.8	7.7	371
1	4	3812	4.4	15.0	1.28/1.30	5.7	19.3	951
1	5	3385	4.0	15.2	1.14/1.16	4.6	17.3	848
1	6	3380	4.1	15.4	1.14/1.16	4.7	17.5	851
1	7	2593	3.6	15.3	.87/ .89	3.1	13.4	649

TAP	POINT	CORR V	%02	% CO2	V LOC/AVG	WTD % O2	WTD %CO2	WTD TEMP
2	1	1528	7.5	12.5	.51/ .52	0.0	0.0	360
2	2	1510	3.8	16.0	.51/ .52	0.0	0.0	386
2	3	1381	3.0	15.3	.47/ .47	0.0	0.0	353
2	4	3606	3.8	15.6	1.22/1.23	4.6	19.0	919
2	5	2017	3.7	15.5	.68/ .69	2.5	10.5	515
2	6	3079	3.0	16.3	1.04/1.05	3.1	16.9	785
2	7	3704	3.6	15.4	1.25/1.27	4.5	19.2	945

TAP	POINT	CORR V	%02	% CO2	V LOC/AVG	WTD % O2	WTD %CO2	WTD TEMP
3	1	1473	4.9	14.7	.50/ .50	2.4	7.3	367
3	2	1597	4.0	15.0	.54/ .55	2.2	8.1	415
3	3	3619	4.0	15.4	1.22/1.24	4.9	18.8	947
3	4	4057	3.9	15.4	1.37/1.39	5.3	21.1	1048
3	5	3392	3.1	16.1	1.14/1.16	3.5	18.4	880
3	6	3000	4.1	15.4	1.01/1.03	4.1	15.6	772
3	7	3976	3.7	15.0	1.34/1.36	0.0	0.0	1019

TAP	POINT	CORR V	%02	% CO2	V LOC/AVG	WTD % O2	WTD %CO2	WTD TEMP
4	1	1637	4.1	15.2	.55/ .56	2.3	8.4	423
4	2	2171	3.6	15.4	.73/ .74	2.6	11.3	570
4	3	4378	4.2	15.2	1.48/1.50	6.2	22.4	1155
4	4	4200	3.6	15.8	1.42/1.44	5.1	22.4	1100
4	5	3342	3.5	15.5	1.13/1.14	3.9	17.5	859
4	6	3352	3.3	15.6	1.13/1.15	3.7	17.6	860
4	7	4066	3.6	15.2	1.37/1.39	0.0	0.0	1041

TAP	POINT	CORR V	%02	% CO2	V LOC/AVG	WTD % O2	WTD %CO2	WTD TEMP
5	1	1634	3.8	15.2	.55/ .56	2.1	8.4	414
5	2	2140	3.9	15.4	.72/ .73	2.8	11.1	562
5	3	4541	4.0	15.4	1.53/1.55	6.1	23.6	1197
5	4	4109	3.6	15.6	1.38/1.40	5.0	21.6	1072
5	5	3472	3.9	15.4	1.17/1.19	4.6	18.0	890
5	6	3862	3.5	15.4	1.30/1.32	4.6	20.0	993
5	7	4470	3.8	15.0	1.51/1.53	0.0	0.0	1148

TAP	POINT	CORR V	%02	% CO2	V LOC/AVG	WTD % O2	WTD %CO2	WTD TEMP
6	1	1670	4.2	15.2	.56/ .57	2.4	8.6	435
6	2	2112	3.8	15.6	.71/ .72	2.7	11.1	554
6	3	3106	3.7	15.6	1.05/1.06	3.9	16.3	815
6	4	4197	4.0	15.0	1.41/1.43	5.7	21.2	1089
6	5	3108	4.0	15.2	1.05/1.06	4.2	15.9	799
6	6	2793	4.2	15.4	.94/ .96	4.0	14.5	721
6	7	3567	3.6	15.4	1.20/1.22	4.3	18.5	915

TAP	POINT	CORR V	%02	% CO2	V LOC/AVG	WTD % O2	WTD %CO2	WTD TEMP
7	1	1763	4.8	15.0	.59/ .60	0.0	0.0	429
7	2	2215	4.0	15.2	.75/ .76	3.0	11.3	581
7	3	2634	4.4	15.1	.89/ .90	3.9	13.4	690
7	4	4476	3.8	15.4	1.51/1.53	5.7	23.2	1161
7	5	3807	4.2	15.2	1.28/1.30	5.4	19.5	981
7	6	3018	4.5	15.1	1.02/1.03	4.6	15.4	787
7	7	1951	4.3	14.7	.66/ .67	2.8	9.7	510

LOCATION = ECON WEST
FILE IDENITY = IP6_26EWA

AVERAGE VELOCITY = 2925 FPM

AVERAGE (WEIGHTED) % O2 = 3.87 *
AVERAGE (WEIGHTED) % CO2 = 15.38 *
AVERAGE (WEIGHTED) TEMPERATURE = 753

AVERAGE (ARITHMETIC) % O2 = 3.90 *
AVERAGE (ARITHMETIC) % CO2 = 15.35 *
AVERAGE (ARITHMETIC) TEMPERATURE = 751

AVERAGE STATIC PRESSURE (in. H2O) = -3.6
AVERAGE DENSITY (LBM/FT^3) = .02823

ACFM (ACTUAL FT^3/MIN) = 1243149
LB/HR (WET) = 2105932

* - O2/CO2 DATA WITH ERROR GREATER THAN .35 NOT USED
NO. OF POINTS NOT USED = 7 OUT OF 49

LOCATION = ECON WEST
FILE IDENITY = IP6_26EWA

AVERAGE VELOCITY = 2925 FPM

AVERAGE (WEIGHTED) % O2 = 3.90
AVERAGE (WEIGHTED) % CO2 = 15.32
AVERAGE (WEIGHTED) TEMPERATURE = 753

AVERAGE (ARITHMETIC) % O2 = 3.96
AVERAGE (ARITHMETIC) % CO2 = 15.28
AVERAGE (ARITHMETIC) TEMPERATURE = 751

AVERAGE STATIC PRESSURE (in. H2O) = -3.6
AVERAGE DENSITY (LBM/FT^3) = .02823

ACFM (ACTUAL FT^3/MIN) = 1243149
LB/HR (WET) = 2105932

DATE - 6-26-87
LOCATION - ECON WEST
FILE IDENITY - IP6_26EWH
BAROMETRIC PRESSURE - 25.49
PROBE IDENTY - E-6
DUCT HEIGHT - 21.2
DUCT WIDTH - 20.0

TAP	POINT	STAT P	TEMP	DELTA P	YAW ANGL	%02	% CO2
1	1	-3.1	722	0.000	0	* 5.1	*13.7
1	2	-2.8	767	.673	60	5.1	14.1
1	3	-2.8	761	.050	20	4.9	14.1
1	4	-2.7	760	.476	65	5.0	14.2
1	5	-2.8	755	.417	56	4.6	14.4
1	6	-2.7	748	.402	54	4.8	14.4
1	7	-2.9	722	.371	45	4.8	14.4

TAP	POINT	STAT P	TEMP	DELTA P	YAW ANGL	%02	% CO2
2	1	-2.7	763	0.000	0	5.2	14.0
2	2	-2.8	765	0.000	0	5.2	14.0
2	3	-2.8	751	.998	10	5.2	14.0
2	4	-2.7	765	.024	25	5.2	14.0
2	5	-2.7	760	.014	15	5.0	14.2
2	6	-2.7	756	.112	30	4.9	14.3
2	7	-2.8	752	.183	35	4.4	14.8

TAP	POINT	STAT P	TEMP	DELTA P	YAW ANGL	%02	% CO2
3	1	-2.8	737	0.000	0	6.1	13.5
3	2	-3.0	765	0.000	0	5.2	13.8
3	3	-3.1	763	.590	40	4.8	14.4
3	4	-2.9	765	.532	60	5.2	14.0
3	5	-3.0	763	.432	50	4.6	14.5
3	6	-3.0	761	.416	45	4.4	14.6
3	7	-2.9	756	.190	10	4.6	14.4

TAP	POINT	STAT P	TEMP	DELTA P	YAW ANGL	%02	% CO2
4	1	-2.8	710	0.000	0	7.1	12.4
4	2	-2.9	767	0.000	0	4.9	14.4
4	3	-2.9	760	.854	0	4.4	14.8
4	4	-2.8	760	.419	5	4.7	14.6
4	5	-3.0	767	.417	40	5.0	14.4
4	6	-2.9	763	.407	50	4.7	14.5
4	7	-2.8	766	.286	40	4.4	14.8

TAP	POINT	STAT P	TEMP	DELTA P	YAW ANGL	%O2	% CO2
5	1	-2.7	738	0.000	0	7.4	12.2
5	2	-2.7	764	0.000	0	4.4	14.8
5	3	-2.9	773	.034	0	5.2	14.2
5	4	-3.0	766	.422	0	4.5	14.7
5	5	-2.9	768	.424	40	4.4	14.8
5	6	-2.9	766	.401	45	3.9	15.5
5	7	-2.8	768	.034	10	4.2	15.1

TAP	POINT	STAT P	TEMP	DELTA P	YAW ANGL	%O2	% CO2
6	1	-2.8	676	0.000	0	7.1	12.5
6	2	-2.9	771	0.000	0	4.4	14.8
6	3	-3.1	773	.576	45	4.7	14.5
6	4	-3.1	770	.505	35	4.0	15.0
6	5	-3.0	766	.397	40	4.2	14.8
6	6	-3.1	762	.351	50	4.4	14.8
6	7	-3.0	760	.401	75	5.2	13.9

TAP	POINT	STAT P	TEMP	DELTA P	YAW ANGL	%O2	% CO2
7	1	-2.8	709	0.000	0	7.4	12.0
7	2	-2.9	771	0.000	0	4.6	14.4
7	3	-3.0	778	.710	0	4.7	14.5
7	4	-2.9	769	.241	0	4.0	15.2
7	5	-3.0	753	.439	25	3.6	15.4
7	6	-3.0	758	.307	20	4.4	14.8
7	7	-2.9	763	.124	35	4.2	14.8

* - O2/CO2 DATA WITH ERROR GREATER THAN .35 NOT USED

****
****

PRELIMINARY CALCULATIONS !!!!!!!!!
FINAL CALCULATIONS TO BE RUN AFTER
FECHHEIMER PROBES ARE
INDEPENDENTLY CALIBRATED

****
****

DATE = 6-26-87
LOCATION = ECON WEST
FILE IDENITY = IP6_26EWH
BAROMETRIC PRESSURE = 25.49
PROBE IDENTY = E-6
DUCT AREA = 425.0

TAP	POINT	CORR V	%02	% CO2	V LOC/AVG	WTD % O2	WTD %CO2	WTD TEMP
1	1	0	5.1	13.7	0.00/0.00	0.0	0.0	0
1	2	2835	5.1	14.1	1.23/1.26	6.3	17.4	967
1	3	1463	4.9	14.1	.64/ .65	3.1	9.0	495
1	4	2012	5.0	14.2	.88/ .89	4.4	12.4	680
1	5	2488	4.6	14.4	1.08/1.11	5.0	15.6	835
1	6	2560	4.8	14.4	1.11/1.14	5.4	16.1	851
1	7	2928	4.8	14.4	1.28/1.30	6.1	18.4	940

TAP	POINT	CORR V	%02	% CO2	V LOC/AVG	WTD % O2	WTD %CO2	WTD TEMP
2	1	0	5.2	14.0	0.00/0.00	0.0	0.0	0
2	2	0	5.2	14.0	0.00/0.00	0.0	0.0	0
2	3	6740	5.2	14.0	2.94/3.00	15.3	41.1	2250
2	4	980	5.2	14.0	.43/ .44	2.2	6.0	333
2	5	797	5.0	14.2	.35/ .35	1.7	4.9	269
2	6	2008	4.9	14.3	.87/ .89	4.3	12.5	675
2	7	2419	4.4	14.8	1.05/1.08	4.6	15.6	809

TAP	POINT	CORR V	%02	% CO2	V LOC/AVG	WTD % O2	WTD %CO2	WTD TEMP
3	1	0	6.1	13.5	0.00/0.00	0.0	0.0	0
3	2	0	5.2	13.8	0.00/0.00	0.0	0.0	0
3	3	4062	4.8	14.4	1.77/1.81	8.5	25.5	1378
3	4	2522	5.2	14.0	1.10/1.12	5.7	15.4	858
3	5	2920	4.6	14.5	1.27/1.30	5.9	18.4	990
3	6	3151	4.4	14.6	1.37/1.40	6.0	20.0	1067
3	7	2969	4.6	14.4	1.29/1.32	5.9	18.6	998

TAP	POINT	CORR V	%O2	% CO2	V LOC/AVG	WTD % O2	WTD %CO2	WTD TEMP
4	1	0	7.1	12.4	0.00/0.00	0.0	0.0	0
4	2	0	4.9	14.4	0.00/0.00	0.0	0.0	0
4	3	6357	4.4	14.8	2.77/2.83	12.2	41.0	2148
4	4	4451	4.7	14.6	1.94/1.98	9.1	28.3	1504
4	5	3426	5.0	14.4	1.49/1.52	7.5	21.5	1168
4	6	2835	4.7	14.5	1.23/1.26	5.8	17.9	962
4	7	2839	4.4	14.8	1.24/1.26	5.4	18.3	967

TAP	POINT	CORR V	%O2	% CO2	V LOC/AVG	WTD % O2	WTD %CO2	WTD TEMP
5	1	0	7.4	12.2	0.00/0.00	0.0	0.0	0
5	2	0	4.4	14.8	0.00/0.00	0.0	0.0	0
5	3	1291	5.2	14.2	.56/ .57	2.9	8.0	444
5	4	4497	4.5	14.7	1.96/2.00	8.8	28.8	1532
5	5	3455	4.4	14.8	1.50/1.54	6.6	22.3	1180
5	6	3097	3.9	15.5	1.35/1.38	5.3	20.9	1055
5	7	1267	4.2	15.1	.55/ .56	2.3	8.3	432

TAP	POINT	CORR V	%O2	% CO2	V LOC/AVG	WTD % O2	WTD %CO2	WTD TEMP
6	1	0	7.1	12.5	0.00/0.00	0.0	0.0	0
6	2	0	4.4	14.8	0.00/0.00	0.0	0.0	0
6	3	3721	4.7	14.5	1.62/1.65	7.6	23.5	1278
6	4	4033	4.0	15.0	1.76/1.79	7.0	26.3	1381
6	5	3342	4.2	14.8	1.46/1.49	6.1	21.5	1138
6	6	2634	4.4	14.8	1.15/1.17	5.0	17.0	892
6	7	1133	5.2	13.9	.49/ .50	2.6	6.9	383

TAP	POINT	CORR V	%O2	% CO2	V LOC/AVG	WTD % O2	WTD %CO2	WTD TEMP
7	1	0	7.4	12.0	0.00/0.00	0.0	0.0	0
7	2	0	4.6	14.4	0.00/0.00	0.0	0.0	0
7	3	5849	4.7	14.5	2.55/2.60	12.0	36.9	2024
7	4	3408	4.0	15.2	1.48/1.51	5.9	22.6	1165
7	5	4130	3.6	15.4	1.80/1.84	6.5	27.7	1382
7	6	3596	4.4	14.8	1.57/1.60	6.9	23.2	1212
7	7	2003	4.2	14.8	.87/ .89	3.7	12.9	680

LOCATION = ECON WEST
FILE IDENITY = IP6_26EWH

AVERAGE VELOCITY = 2249 FPM

AVERAGE (WEIGHTED) % O2 = 4.58 *
AVERAGE (WEIGHTED) % CO2 = 14.60 *
AVERAGE (WEIGHTED) TEMPERATURE = 762

AVERAGE (ARITHMETIC) % O2 = 4.90 *
AVERAGE (ARITHMETIC) % CO2 = 14.31 *
AVERAGE (ARITHMETIC) TEMPERATURE = 757

AVERAGE STATIC PRESSURE (in. H2O) = -2.9
AVERAGE DENSITY (LBM/FT^3) = .02811

ACFM (ACTUAL FT^3/MIN) = 955959
LB/HR (WET) = 1612075

* - O2/CO2 DATA WITH ERROR GREATER THAN .35 NOT USED
NO. OF POINTS NOT USED = 1 OUT OF 49

LOCATION = ECON WEST
FILE IDENITY = IP6_26EWH

AVERAGE VELOCITY = 2249 FPM

AVERAGE (WEIGHTED) % O2 = 4.58
AVERAGE (WEIGHTED) % CO2 = 14.60
AVERAGE (WEIGHTED) TEMPERATURE = 762

AVERAGE (ARITHMETIC) % O2 = 4.91
AVERAGE (ARITHMETIC) % CO2 = 14.29
AVERAGE (ARITHMETIC) TEMPERATURE = 757

AVERAGE STATIC PRESSURE (in. H2O) = -2.9
AVERAGE DENSITY (LBM/FT^3) = .02811

ACFM (ACTUAL FT^3/MIN) = 955959
LB/HR (WET) = 1612075

DATE = 6-26-87
LOCATION = ECON EAST
FILE IDENITY = IP6_26EEA
BAROMETRIC PRESSURE = 25.49
PROBE IDENTY = 28
DUCT HEIGHT = 21.2
DUCT WIDTH = 20.0

TAP	POINT	STAT P	TEMP	DELTA P	YAW ANGL	%02	% CO2
1	1	-3.2	753	.874	30	4.7	14.3
1	2	-3.3	743	.380	20	4.6	14.4
1	3	-3.1	744	.300	20	4.5	14.5
1	4	-3.2	743	.349	25	4.8	14.2
1	5	-3.2	736	.400	30	4.5	14.7
1	6	-3.1	724	.334	20	4.6	14.6
1	7	-3.2	718	.588	10	* 4.4	*14.4

TAP	POINT	STAT P	TEMP	DELTA P	YAW ANGL	%02	% CO2
2	1	-3.1	748	.737	30	4.7	14.5
2	2	-3.1	744	.454	25	4.7	14.5
2	3	-3.0	739	.200	15	4.0	15.0
2	4	-3.0	742	.202	35	4.8	14.2
2	5	-2.9	734	.539	25	4.4	14.6
2	6	-2.9	733	1.269	30	4.5	14.8
2	7	-3.0	734	1.816	70	4.7	14.2

TAP	POINT	STAT P	TEMP	DELTA P	YAW ANGL	%02	% CO2
3	1	-3.4	751	.810	5	* 4.6	*14.2
3	2	-3.6	760	.734	10	4.8	14.2
3	3	-3.3	749	.461	10	4.3	14.7
3	4	-3.2	753	.317	15	* 4.1	*14.6
3	5	-3.2	743	.104	15	4.3	15.0
3	6	-3.5	738	.314	5	4.2	15.2
3	7	-3.3	737	.229	5	* 4.4	*14.3

TAP	POINT	STAT P	TEMP	DELTA P	YAW ANGL	%02	% CO2
4	1	-3.5	756	1.269	0	5.0	14.2
4	2	-3.3	771	.664	0	4.4	14.9
4	3	-3.4	763	.385	0	4.4	14.9
4	4	-3.2	764	.136	5	4.3	15.0
4	5	-3.3	756	.109	10	4.6	14.6
4	6	-3.4	752	.307	5	4.5	14.5
4	7	-3.2	755	.344	5	* 4.1	*14.5

TAP	POINT	STAT P	TEMP	DELTA P	YAW ANGL	%02	% CO2
5	1	-3.1	778	.986	0	4.0	15.2
5	2	-3.2	778	.827	0	4.4	15.0
5	3	-3.2	771	.617	0	4.2	15.2
5	4	-3.2	776	.129	5	4.2	15.0
5	5	-3.1	772	.144	5	4.2	15.0
5	6	-3.1	766	.253	0	4.2	15.0
5	7	-3.2	751	.341	5	4.7	14.2

TAP	POINT	STAT P	TEMP	DELTA P	YAW ANGL	%02	% CO2
6	1	-3.5	716	1.079	0	4.4	14.8
6	2	-3.6	779	.839	0	4.2	15.2
6	3	-3.5	787	.202	0	3.9	15.4
6	4	-3.3	785	.316	0	* 4.5	*15.5
6	5	-3.2	782	.380	0	3.4	15.4
6	6	-3.3	777	.339	0	3.4	15.4
6	7	-3.2	778	.317	0	4.0	14.8

TAP	POINT	STAT P	TEMP	DELTA P	YAW ANGL	%02	% CO2
7	1	-3.4	77	.985	5	4.2	14.8
7	2	-3.4	772	.314	5	4.1	15.2
7	3	-3.4	780	.151	5	3.8	15.6
7	4	-3.3	777	.134	5	* 3.5	*16.0
7	5	-3.3	784	.185	5	* 3.2	*16.2
7	6	-3.4	756	.362	10	3.8	15.4
7	7	-3.3	781	.290	10	3.8	15.4

* - O2/CO2 DATA WITH ERROR GREATER THAN .35 NOT USED

****
****

PRELIMINARY CALCULATIONS !!!!!!!!!
FINAL CALCULATIONS TO BE RUN AFTER
FECHHEIMER PROBES ARE
INDEPENDENTLY CALIBRATED

****
****

DATE = 6-26-87
LOCATION = ECON EAST
FILE IDENITY = IP6_26EEA
BAROMETRIC PRESSURE = 25.49
PROBE IDENTY = 28
DUCT AREA = 425.0

TAP	POINT	CORR V	%02	% CO2	V LOC/AVG	WTD % O2	WTD %CO2	WTD TEMP
1	1	5558	4.7	14.3	1.30/1.32	6.1	18.6	993
1	2	3976	4.6	14.4	.93/ .94	4.3	13.4	701
1	3	3537	4.5	14.5	.83/ .84	3.7	12.0	624
1	4	3677	4.8	14.2	.86/ .87	4.1	12.2	648
1	5	3745	4.5	14.7	.88/ .89	4.0	12.9	654
1	6	3697	4.6	14.6	.87/ .88	4.0	12.7	635
1	7	5116	4.4	14.4	1.20/1.21	0.0	0.0	871

TAP	POINT	CORR V	%02	% CO2	V LOC/AVG	WTD % O2	WTD %CO2	WTD TEMP
2	1	5096	4.7	14.5	1.20/1.21	5.6	17.3	905
2	2	4187	4.7	14.5	.98/ .99	4.6	14.2	739
2	3	2965	4.0	15.0	.70/ .70	2.8	10.4	520
2	4	2532	4.8	14.2	.59/ .60	2.9	8.4	445
2	5	4539	4.4	14.6	1.06/1.08	4.7	15.5	790
2	6	6619	4.5	14.8	1.55/1.57	7.0	23.0	1150
2	7	3126	4.7	14.2	.73/ .74	3.4	10.4	544

TAP	POINT	CORR V	%02	% CO2	V LOC/AVG	WTD % O2	WTD %CO2	WTD TEMP
3	1	6154	4.6	14.2	1.44/1.46	0.0	0.0	1096
3	2	5818	4.8	14.2	1.36/1.38	6.6	19.4	1049
3	3	4595	4.3	14.7	1.08/1.09	4.6	15.8	816
3	4	3750	4.1	14.6	.88/ .89	0.0	0.0	670
3	5	2147	4.3	15.0	.50/ .51	2.2	7.6	378
3	6	3824	4.2	15.2	.90/ .91	3.8	13.6	669
3	7	3271	4.4	14.3	.77/ .78	0.0	0.0	572

TAP	POINT	CORR V	%02	% CO2	V LOC/AVG	WTD % O2	WTD %CO2	WTD TEMP
4	1	7732	5.0	14.2	1.81/1.83	9.1	25.8	1387
4	2	5639	4.4	14.9	1.32/1.34	5.8	19.7	1031
4	3	4292	4.4	14.9	1.01/1.02	4.4	15.0	777
4	4	2552	4.3	15.0	.60/ .61	2.6	9.0	462
4	5	2254	4.6	14.6	.53/ .53	2.4	7.7	404
4	6	3807	4.5	14.5	.89/ .90	4.0	12.9	680
4	7	4032	4.1	14.5	.95/ .96	0.0	0.0	722

TAP	POINT	CORR V	%02	% CO2	V LOC/AVG	WTD % O2	WTD %CO2	WTD TEMP
5	1	6877	4.0	15.2	1.61/1.63	6.5	24.5	1270
5	2	6305	4.4	15.0	1.48/1.50	6.5	22.2	1164
5	3	5435	4.2	15.2	1.27/1.29	5.4	19.4	994
5	4	2499	4.2	15.0	.59/ .59	2.5	8.8	460
5	5	2634	4.2	15.0	.62/ .62	2.6	9.3	483
5	6	3489	4.2	15.0	.82/ .83	3.4	12.3	634
5	7	4009	4.7	14.2	.94/ .95	4.4	13.4	714

TAP	POINT	CORR V	%02	% CO2	V LOC/AVG	WTD % O2	WTD %CO2	WTD TEMP
6	1	7010	4.4	14.8	1.64/1.66	7.2	24.3	1191
6	2	6353	4.2	15.2	1.49/1.51	6.3	22.7	1173
6	3	3148	3.9	15.4	.74/ .75	2.9	11.4	588
6	4	3923	4.5	15.5	.92/ .93	0.0	0.0	731
6	5	4296	3.4	15.4	1.01/1.02	3.4	15.5	797
6	6	4052	3.4	15.4	.95/ .96	3.2	14.6	747
6	7	3923	4.0	14.8	.92/ .93	3.7	13.6	724

TAP	POINT	CORR V	%02	% CO2	V LOC/AVG	WTD % O2	WTD %CO2	WTD TEMP
7	1	4475	4.2	14.8	1.05/1.06	4.4	15.5	82
7	2	3878	4.1	15.2	.91/ .92	3.7	13.8	710
7	3	2704	3.8	15.6	.63/ .64	2.4	9.9	500
7	4	2545	3.5	16.0	.60/ .60	0.0	0.0	469
7	5	2995	3.2	16.2	.70/ .71	0.0	0.0	557
7	6	4086	3.8	15.4	.96/ .97	3.6	14.8	733
7	7	3698	3.8	15.4	.87/ .88	3.3	13.4	685

LOCATION = ECON EAST
FILE IDENITY = IP6_26EEA

AVERAGE VELOCITY = 4216 FPM

AVERAGE (WEIGHTED) % O2 = 4.34 *
AVERAGE (WEIGHTED) % CO2 = 14.81 *
AVERAGE (WEIGHTED) TEMPERATURE = 742

AVERAGE (ARITHMETIC) % O2 = 4.32 *
AVERAGE (ARITHMETIC) % CO2 = 14.82 *
AVERAGE (ARITHMETIC) TEMPERATURE = 743

AVERAGE STATIC PRESSURE (in. H2O) = -3.3
AVERAGE DENSITY (LBM/FT^3) = .02882

ACFM (ACTUAL FT^3/MIN) = 1791676
LB/HR (WET) = 3098026

* - O2/CO2 DATA WITH ERROR GREATER THAN .35 NOT USED
NO. OF POINTS NOT USED = 8 OUT OF 49

LOCATION = ECON EAST
FILE IDENITY = IP6_26EEA

AVERAGE VELOCITY = 4216 FPM

AVERAGE (WEIGHTED) % O2 = 4.32
AVERAGE (WEIGHTED) % CO2 = 14.81
AVERAGE (WEIGHTED) TEMPERATURE = 742

AVERAGE (ARITHMETIC) % O2 = 4.29
AVERAGE (ARITHMETIC) % CO2 = 14.84
AVERAGE (ARITHMETIC) TEMPERATURE = 743

AVERAGE STATIC PRESSURE (in. H2O) = -3.3
AVERAGE DENSITY (LBM/FT^3) = .02882

ACFM (ACTUAL FT^3/MIN) = 1791676
LB/HR (WET) = 3098026

DATE = 6-26-87
LOCATION = ECON EAST
FILE IDENITY = IP6_26EEH
BAROMETRIC PRESSURE = 25.49
PROBE IDENTY = E-8
DUCT HEIGHT = 21.2
DUCT WIDTH = 20.0

TAP	POINT	STAT P	TEMP	DELTA P	YAW ANGL	%02	% CO2
1	1	-3.4	748	.041	40	* 4.2	*14.6
1	2	-3.5	776	.046	50	3.0	16.0
1	3	-3.1	776	.634	60	3.8	15.4
1	4	-2.8	778	.595	60	3.2	15.8
1	5	-3.1	770	.432	60	2.8	16.4
1	6	-3.2	778	.356	50	3.6	15.6
1	7	-3.4	773	.197	35	4.0	15.0

TAP	POINT	STAT P	TEMP	DELTA P	YAW ANGL	%02	% CO2
2	1	-3.6	752	.043	40	3.2	15.8
2	2	-3.7	764	.053	30	2.8	16.2
2	3	-3.8	771	.217	30	2.8	16.2
2	4	-3.7	785	.241	40	2.8	16.4
2	5	-3.5	760	.166	40	3.6	15.6
2	6	-3.4	760	.119	60	3.6	15.4
2	7	-3.5	760	.124	50	4.0	15.0

TAP	POINT	STAT P	TEMP	DELTA P	YAW ANGL	%02	% CO2
3	1	-3.4	723	.043	40	2.8	16.0
3	2	-3.4	772	.139	40	3.4	15.8
3	3	-3.5	779	.390	30	2.6	16.4
3	4	-3.5	774	.517	40	2.6	16.4
3	5	-3.5	747	.461	30	3.4	15.6
3	6	-3.3	749	.368	50	4.0	15.4
3	7	-3.3	751	.151	40	3.8	15.2

TAP	POINT	STAT P	TEMP	DELTA P	YAW ANGL	%02	% CO2
4	1	-3.4	734	.039	40	3.2	15.8
4	2	-3.4	765	.087	0	3.0	16.0
4	3	-3.7	771	.732	40	2.0	17.0
4	4	-3.7	775	.388	40	2.2	16.8
4	5	-3.5	750	.444	30	3.4	15.8
4	6	-3.1	739	.310	50	3.6	15.8
4	7	-3.1	734	.209	60	3.2	15.8

TAP	POINT	STAT P	TEMP	DELTA P	YAW ANGL	%02	% CO2
5	1	-3.5	690	1.181	60	5.0	14.2
5	2	-3.5	764	.815	60	3.2	16.0
5	3	-3.6	775	.395	60	2.2	16.6
5	4	-3.7	762	.026	30	2.2	16.6
5	5	-3.6	759	.502	30	2.8	16.2
5	6	-3.6	744	.471	30	3.2	16.0
5	7	-3.4	739	.312	30	2.8	16.2

TAP	POINT	STAT P	TEMP	DELTA P	YAW ANGL	%02	% CO2
6	1	-3.3	715	.004	0	3.6	15.2
6	2	-3.2	746	.004	0	3.0	15.8
6	3	-3.2	749	.075	30	2.6	16.4
6	4	-2.8	746	.744	30	2.0	17.0
6	5	-2.8	752	.627	30	3.0	16.0
6	6	-2.7	749	.505	30	2.8	16.2
6	7	-2.8	751	.441	40	3.4	15.6

TAP	POINT	STAT P	TEMP	DELTA P	YAW ANGL	%02	% CO2
7	1	-3.4	711	.029	50	3.8	15.4
7	2	-3.2	738	.034	60	3.0	16.0
7	3	-3.4	730	.131	50	3.4	15.6
7	4	-3.0	728	.705	50	2.6	16.4
7	5	-3.0	741	.578	40	2.6	16.2
7	6	-3.0	746	.505	50	2.6	16.4
7	7	-3.0	749	.376	40	2.8	16.0

* - O2/CO2 DATA WITH ERROR GREATER THAN .35 NOT USED

****
****

PRELIMINARY CALCULATIONS !!!!!!!!!
FINAL CALCULATIONS TO BE RUN AFTER
FECHHEIMER PROBES ARE
INDEPENDENTLY CALIBRATED

****
****

DATE = 6-26-87
LOCATION = ECON EAST
FILE IDENITY = IP6_26EEH
BAROMETRIC PRESSURE = 25.49
PROBE IDENTY = E-8
DUCT AREA = 425.0

TAP	POINT	CORR V	%02	% CO2	V LOC/AVG	WTD % O2	WTD %CO2	WTD TEMP
1	1	1075	4.2	14.6	.42/ .42	0.0	0.0	316
1	2	965	3.0	16.0	.37/ .38	1.1	6.0	295
1	3	2760	3.8	15.4	1.07/1.09	4.1	16.5	842
1	4	2675	3.2	15.8	1.04/1.05	3.3	16.4	818
1	5	2275	2.8	16.4	.88/ .89	2.5	14.5	689
1	6	2668	3.6	15.6	1.04/1.05	3.7	16.2	816
1	7	2533	4.0	15.0	.98/1.00	3.9	14.8	770

TAP	POINT	CORR V	%02	% CO2	V LOC/AVG	WTD % O2	WTD %CO2	WTD TEMP
2	1	1102	3.2	15.8	.43/ .43	1.4	6.8	326
2	2	1389	2.8	16.2	.54/ .55	1.5	8.7	417
2	3	2805	2.8	16.2	1.09/1.10	3.1	17.7	850
2	4	2628	2.8	16.4	1.02/1.03	2.9	16.7	811
2	5	2162	3.6	15.6	.84/ .85	3.0	13.1	646
2	6	1197	3.6	15.4	.46/ .47	1.7	7.2	358
2	7	1571	4.0	15.0	.61/ .62	2.4	9.2	470

TAP	POINT	CORR V	%02	% CO2	V LOC/AVG	WTD % O2	WTD %CO2	WTD TEMP
3	1	1088	2.8	16.0	.42/ .43	1.2	6.8	309
3	2	1989	3.4	15.8	.77/ .78	2.6	12.2	604
3	3	3762	2.6	16.4	1.46/1.48	3.8	24.0	1152
3	4	3817	2.6	16.4	1.48/1.50	3.9	24.3	1161
3	5	4035	3.4	15.6	1.57/1.59	5.3	24.4	1184
3	6	2681	4.0	15.4	1.04/1.05	4.2	16.0	790
3	7	2056	3.8	15.2	.80/ .81	3.0	12.1	607

TAP	POINT	CORR V	%02	% CO2	V LOC/AVG	WTD % O2	WTD %CO2	WTD TEMP
4	1	1041	3.2	15.8	.40/ .41	1.3	6.4	301
4	2	2051	3.0	16.0	.80/ .81	2.4	12.7	617
4	3	4527	2.0	17.0	1.76/1.78	3.5	29.9	1372
4	4	3313	2.2	16.8	1.29/1.30	2.8	21.6	1009
4	5	3965	3.4	15.8	1.54/1.56	5.2	24.3	1169
4	6	2450	3.6	15.8	.95/ .96	3.4	15.0	712
4	7	1564	3.2	15.8	.61/ .62	1.9	9.6	452

TAP	POINT	CORR V	%02	% CO2	V LOC/AVG	WTD % O2	WTD %CO2	WTD TEMP
5	1	3625	5.0	14.2	1.41/1.43	7.0	20.0	983
5	2	3110	3.2	16.0	1.21/1.22	3.9	19.3	934
5	3	2182	2.2	16.6	.85/ .86	1.9	14.1	664
5	4	973	2.2	16.6	.38/ .38	.8	6.3	291
5	5	4229	2.8	16.2	1.64/1.66	4.6	26.6	1262
5	6	4072	3.2	16.0	1.58/1.60	5.1	25.3	1192
5	7	3312	2.8	16.2	1.29/1.30	3.6	20.8	963

TAP	POINT	CORR V	%02	% CO2	V LOC/AVG	WTD % O2	WTD %CO2	WTD TEMP
6	1	433	3.6	15.2	.17/ .17	.6	2.6	122
6	2	439	3.0	15.8	.17/ .17	.5	2.7	129
6	3	1638	2.6	16.4	.64/ .64	1.7	10.4	482
6	4	5099	2.0	17.0	1.98/2.00	4.0	33.7	1495
6	5	4703	3.0	16.0	1.83/1.85	5.5	29.2	1391
6	6	4217	2.8	16.2	1.64/1.66	4.6	26.5	1241
6	7	3494	3.4	15.6	1.36/1.37	4.6	21.2	1032

TAP	POINT	CORR V	%02	% CO2	V LOC/AVG	WTD % O2	WTD %CO2	WTD TEMP
7	1	747	3.8	15.4	.29/ .29	1.1	4.5	209
7	2	635	3.0	16.0	.25/ .25	.7	3.9	184
7	3	1593	3.4	15.6	.62/ .63	2.1	9.7	457
7	4	3661	2.6	16.4	1.42/1.44	3.7	23.3	1048
7	5	3978	2.6	16.2	1.55/1.56	4.0	25.0	1159
7	6	3127	2.6	16.4	1.21/1.23	3.2	19.9	917
7	7	3226	2.8	16.0	1.25/1.27	3.5	20.1	950

LOCATION = ECON EAST
FILE IDENITY = IP6_26EEH

AVERAGE VELOCITY = 2544 FPM

AVERAGE (WEIGHTED) % O2 = 3.04 *
AVERAGE (WEIGHTED) % CO2 = 16.01 *
AVERAGE (WEIGHTED) TEMPERATURE = 754

AVERAGE (ARITHMETIC) % O2 = 3.10 *
AVERAGE (ARITHMETIC) % CO2 = 15.93 *
AVERAGE (ARITHMETIC) TEMPERATURE = 753

AVERAGE STATIC PRESSURE (in. H2O) = -3.3
AVERAGE DENSITY (LBM/FT^3) = .02823

ACFM (ACTUAL FT^3/MIN) = 1081049
LB/HR (WET) = 1830859

* - O2/CO2 DATA WITH ERROR GREATER THAN .35 NOT USED
NO. OF POINTS NOT USED = 1 OUT OF 49

LOCATION = ECON EAST
FILE IDENITY = IP6_26EEH

AVERAGE VELOCITY = 2544 FPM

AVERAGE (WEIGHTED) % O2 = 3.05
AVERAGE (WEIGHTED) % CO2 = 15.99
AVERAGE (WEIGHTED) TEMPERATURE = 754

AVERAGE (ARITHMETIC) % O2 = 3.13
AVERAGE (ARITHMETIC) % CO2 = 15.90
AVERAGE (ARITHMETIC) TEMPERATURE = 753

AVERAGE STATIC PRESSURE (in. H2O) = -3.3
AVERAGE DENSITY (LBM/FT^3) = .02823

ACFM (ACTUAL FT^3/MIN) = 1081049
LB/HR (WET) = 1830859

DATE = 6-26-87
LOCATION = WPAH GAS IN
FILE IDENITY = IP6_26WPGI
BAROMETRIC PRESSURE = 25.49
PROBE IDENTY = E-11
DUCT HEIGHT = 9.0
DUCT WIDTH = 18.0

TAP	POINT	STAT P	TEMP	DELTA P	YAW ANGL	%02	% CO2
1	1	-4.0	740	.097	10	3.7	15.6
1	2	-4.0	742	.090	0	4.0	15.3
1	3	-4.0	740	.100	8	3.6	15.6

TAP	POINT	STAT P	TEMP	DELTA P	YAW ANGL	%02	% CO2
2	1	-4.0	745	.075	30	4.1	15.1
2	2	-4.0	745	.095	20	4.1	15.2
2	3	-4.0	741	.102	7	3.9	15.4

TAP	POINT	STAT P	TEMP	DELTA P	YAW ANGL	%02	% CO2
3	1	-4.0	745	.068	20	3.8	15.3
3	2	-4.0	743	.087	11	3.9	15.2
3	3	-4.0	741	.068	4	3.5	15.7

TAP	POINT	STAT P	TEMP	DELTA P	YAW ANGL	%02	% CO2
4	1	-4.0	744	.043	7	3.8	15.4
4	2	-4.0	744	.007	25	3.6	15.6
4	3	-4.0	741	.056	7	3.6	15.5

TAP	POINT	STAT P	TEMP	DELTA P	YAW ANGL	%02	% CO2
5	1	-4.0	741	.029	0	3.6	15.5
5	2	-4.0	742	.026	0	3.6	15.6
5	3	-4.0	741	.039	0	3.4	15.8

TAP	POINT	STAT P	TEMP	DELTA P	YAW ANGL	%02	% CO2
6	1	-4.0	739	.031	0	3.6	15.5
6	2	-4.0	738	.031	0	3.9	15.3
6	3	-4.0	737	.014	0	3.6	15.6

* - O2/CO2 DATA WITH ERROR GREATER THAN .35 NOT USED

****
****

PRELIMINARY CALCULATIONS !!!!!!!!!
FINAL CALCULATIONS TO BE RUN AFTER
FECHHEIMER PROBES ARE
INDEPENDENTLY CALIBRATED

****
****

DATE = 6-26-87
LOCATION = WPAH GAS IN
FILE IDENITY = IP6_26WPGI
BAROMETRIC PRESSURE = 25.49
PROBE IDENTY = E-11
DUCT AREA = 162.0

TAP	POINT	CORR V	%O2	% CO2	V LOC/AVG	WTD % O2	WTD %CO2	WTD TEMP
1	1	2113	3.7	15.6	1.35	5.0	21.1	1001
1	2	2069	4.0	15.3	1.32	5.3	20.3	983
1	3	2157	3.6	15.6	1.38	5.0	21.5	1021

TAP	POINT	CORR V	%O2	% CO2	V LOC/AVG	WTD % O2	WTD %CO2	WTD TEMP
2	1	1639	4.1	15.1	1.05	4.3	15.8	782
2	2	2000	4.1	15.2	1.28	5.2	19.5	954
2	3	2185	3.9	15.4	1.40	5.5	21.5	1036

TAP	POINT	CORR V	%O2	% CO2	V LOC/AVG	WTD % O2	WTD %CO2	WTD TEMP
3	1	1694	3.8	15.3	1.08	4.1	16.6	808
3	2	1999	3.9	15.2	1.28	5.0	19.4	950
3	3	1794	3.5	15.7	1.15	4.0	18.0	851

TAP	POINT	CORR V	%O2	% CO2	V LOC/AVG	WTD % O2	WTD %CO2	WTD TEMP
4	1	1424	3.8	15.4	.91	3.5	14.0	678
4	2	526	3.6	15.6	.34	1.2	5.3	250
4	3	1622	3.6	15.5	1.04	3.7	16.1	769

TAP	POINT	CORR V	%O2	% CO2	V LOC/AVG	WTD % O2	WTD %CO2	WTD TEMP
5	1	1177	3.6	15.5	.75	2.7	11.7	558
5	2	1115	3.6	15.6	.71	2.6	11.1	530
5	3	1364	3.4	15.8	.87	3.0	13.8	647

TAP	POINT	CORR V	%O2	% CO2	V LOC/AVG	WTD % O2	WTD %CO2	WTD TEMP
6	1	1216	3.6	15.5	.78	2.8	12.1	575
6	2	1216	3.9	15.3	.78	3.0	11.9	574
6	3	818	3.6	15.6	.52	1.9	8.2	386

LOCATION = WPAH GAS IN
FILE IDENITY = IP6_26WPGI

AVERAGE VELOCITY = 1563 FPM

AVERAGE (WEIGHTED) % O2 = 3.77 *
AVERAGE (WEIGHTED) % CO2 = 15.44 *
AVERAGE (WEIGHTED) TEMPERATURE = 742

AVERAGE (ARITHMETIC) % O2 = 3.74 *
AVERAGE (ARITHMETIC) % CO2 = 15.46 *
AVERAGE (ARITHMETIC) TEMPERATURE = 742

AVERAGE STATIC PRESSURE (in. H2O) = -4.0
AVERAGE DENSITY (LBM/FT^3) = .02842

ACFM (ACTUAL FT^3/MIN) = 253153
LB/HR (WET) = 431611

* - O2/CO2 DATA WITH ERROR GREATER THAN .35 NOT USED
NO. OF POINTS NOT USED = 0 OUT OF 18

DATE = 6-26-87
LOCATION = WPAH GAS OUT
FILE IDENITY = IP6_26WPGO
BAROMETRIC PRESSURE = 25.49
PROBE IDENTY = E-1
DUCT HEIGHT = 10.5
DUCT WIDTH = 8.6

TAP	POINT	STAT P	TEMP	DELTA P	YAW ANGL	%O2	% CO2
1	1	-8.5	269	0.000	10	8.8	10.6
1	2	-8.5	311	.102	6	4.1	14.7
1	3	-8.5	302	.114	0	5.5	13.6
1	4	-8.5	283	.075	0	10.1	9.5

TAP	POINT	STAT P	TEMP	DELTA P	YAW ANGL	%O2	% CO2
2	1	-8.5	279	0.000	4	8.7	10.7
2	2	-8.5	308	.112	0	4.6	14.4
2	3	-8.5	298	.109	4	5.5	13.7
2	4	-8.5	278	.073	8	10.9	9.2

TAP	POINT	STAT P	TEMP	DELTA P	YAW ANGL	%O2	% CO2
3	1	-8.5	276	0.000	10	8.1	11.3
3	2	-8.5	301	.112	6	5.5	13.6
3	3	-8.5	296	.083	0	6.8	12.6
3	4	-8.5	266	.070	2	11.2	8.6

* - O2/CO2 DATA WITH ERROR GREATER THAN .35 NOT USED

****
****

PRELIMINARY CALCULATIONS !!!!!!!!!
FINAL CALCULATIONS TO BE RUN AFTER
FECHHEIMER PROBES ARE
INDEPENDENTLY CALIBRATED

****
****

DATE = 6-26-87
LOCATION = WPAH GAS OUT
FILE IDENITY = IP6_26WPGO
BAROMETRIC PRESSURE = 25.49
PROBE IDENTY = E-1
DUCT AREA = 90.3

TAP	POINT	CORR V	%O2	% CO2	V LOC/AVG	WTD % O2	WTD %CO2	WTD TEMP
1	1	0	8.8	10.6	0.00	0.0	0.0	0
1	2	1759	4.1	14.7	1.40	5.7	20.6	435
1	3	1860	5.5	13.6	1.48	8.1	20.1	447
1	4	1498	10.1	9.5	1.19	12.0	11.3	337

TAP	POINT	CORR V	%O2	% CO2	V LOC/AVG	WTD % O2	WTD %CO2	WTD TEMP
2	1	0	8.7	10.7	0.00	0.0	0.0	0
2	2	1850	4.6	14.4	1.47	6.8	21.2	453
2	3	1809	5.5	13.7	1.44	7.9	19.7	429
2	4	1459	10.9	9.2	1.16	12.7	10.7	323

TAP	POINT	CORR V	%O2	% CO2	V LOC/AVG	WTD % O2	WTD %CO2	WTD TEMP
3	1	0	8.1	11.3	0.00	0.0	0.0	0
3	2	1832	5.5	13.6	1.46	8.0	19.8	439
3	3	1584	6.8	12.6	1.26	8.6	15.9	373
3	4	1431	11.2	8.6	1.14	12.8	9.8	303

LOCATION = WPAH GAS OUT
FILE IDENITY = IP6_26WPGO

AVERAGE VELOCITY = 1257 FPM

AVERAGE (WEIGHTED) % O2 = 6.88 *
AVERAGE (WEIGHTED) % CO2 = 12.43 *
AVERAGE (WEIGHTED) TEMPERATURE = 295

AVERAGE (ARITHMETIC) % O2 = 7.48 *
AVERAGE (ARITHMETIC) % CO2 = 11.88 *
AVERAGE (ARITHMETIC) TEMPERATURE = 289

AVERAGE STATIC PRESSURE (in. H2O) = -8.5
AVERAGE DENSITY (LBM/FT^3) = .04472

ACFM (ACTUAL FT^3/MIN) = 113495
LB/HR (WET) = 304550

* - O2/CO2 DATA WITH ERROR GREATER THAN .35 NOT USED
NO. OF POINTS NOT USED = 0 OUT OF 12

DATE = 6-26-87
LOCATION = EPAH GAS IN
FILE IDENITY = IP6_26EPGI
BAROMETRIC PRESSURE = 25.49
PROBE IDENTY = E-11
DUCT HEIGHT = 9.0
DUCT WIDTH = 18.0

TAP	POINT	STAT P	TEMP	DELTA P	YAW ANGL	%02	% CO2
1	1	-4.0	738	.002	0	3.3	15.6
1	2	-4.0	742	.002	0	3.2	15.8
1	3	-4.0	740	.029	0	3.2	15.7

TAP	POINT	STAT P	TEMP	DELTA P	YAW ANGL	%02	% CO2
2	1	-4.0	734	.021	0	3.5	15.6
2	2	-4.0	738	.007	0	3.3	15.8
2	3	-4.0	739	.070	0	3.2	15.9

TAP	POINT	STAT P	TEMP	DELTA P	YAW ANGL	%02	% CO2
3	1	-4.0	739	.100	0	3.1	15.8
3	2	-4.0	741	.039	5	3.1	15.9
3	3	-4.0	738	.065	3	3.1	16.0

TAP	POINT	STAT P	TEMP	DELTA P	YAW ANGL	%02	% CO2
4	1	-4.0	731	.070	3	3.3	15.7
4	2	-4.0	743	.119	20	3.0	16.1
4	3	-4.0	739	.092	5	3.0	16.1

TAP	POINT	STAT P	TEMP	DELTA P	YAW ANGL	%02	% CO2
5	1	-4.0	735	.078	10	3.0	15.9
5	2	-4.0	744	.136	30	3.1	15.8
5	3	-4.0	737	.102	0	3.0	16.1

TAP	POINT	STAT P	TEMP	DELTA P	YAW ANGL	%02	% CO2
6	1	-4.0	735	.112	5	3.3	15.7
6	2	-4.0	741	.107	14	3.1	15.9
6	3	-4.0	737	.117	2	3.1	15.9

* - O2/CO2 DATA WITH ERROR GREATER THAN .35 NOT USED

****
****

PRELIMINARY CALCULATIONS !!!!!!!!!
FINAL CALCULATIONS TO BE RUN AFTER
FECHHEIMER PROBES ARE
INDEPENDENTLY CALIBRATED

****
****

DATE = 6-26-87
LOCATION = EPAH GAS IN
FILE IDENITY = IP6_26EPGI
BAROMETRIC PRESSURE = 25.49
PROBE IDENTY = E-11
DUCT AREA = 162.0

TAP	POINT	CORR V	%02	% CO2	V LOC/AVG	WTD % O2	WTD %CO2	WTD TEMP
1	1	310	3.3	15.6	.19	.6	2.9	138
1	2	310	3.2	15.8	.19	.6	3.0	139
1	3	1177	3.2	15.7	.71	2.3	11.2	527

TAP	POINT	CORR V	%02	% CO2	V LOC/AVG	WTD % O2	WTD %CO2	WTD TEMP
2	1	999	3.5	15.6	.61	2.1	9.4	444
2	2	579	3.3	15.8	.35	1.2	5.5	259
2	3	1823	3.2	15.9	1.10	3.5	17.5	816

TAP	POINT	CORR V	%02	% CO2	V LOC/AVG	WTD % O2	WTD %CO2	WTD TEMP
3	1	2177	3.1	15.8	1.32	4.1	20.8	974
3	2	1359	3.1	15.9	.82	2.6	13.1	610
3	3	1754	3.1	16.0	1.06	3.3	17.0	784

TAP	POINT	CORR V	%02	% CO2	V LOC/AVG	WTD % O2	WTD %CO2	WTD TEMP
4	1	1815	3.3	15.7	1.10	3.6	17.3	803
4	2	2234	3.0	16.1	1.35	4.1	21.8	1005
4	3	2080	3.0	16.1	1.26	3.8	20.3	931

TAP	POINT	CORR V	%02	% CO2	V LOC/AVG	WTD % O2	WTD %CO2	WTD TEMP
5	1	1892	3.0	15.9	1.15	3.4	18.2	842
5	2	2201	3.1	15.8	1.33	4.1	21.1	991
5	3	2196	3.0	16.1	1.33	4.0	21.4	980

TAP	POINT	CORR V	%O2	% CO2	V LOC/AVG	WTD % O2	WTD %CO2	WTD TEMP
6	1	2291	3.3	15.7	1.39	4.6	21.8	1019
6	2	2186	3.1	15.9	1.32	4.1	21.0	981
6	3	2350	3.1	15.9	1.42	4.4	22.6	1049

LOCATION = EPAH GAS IN
FILE IDENITY = IP6_26EPGI

AVERAGE VELOCITY = 1652 FPM

AVERAGE (WEIGHTED) % O2 = 3.13 *
AVERAGE (WEIGHTED) % CO2 = 15.88 *
AVERAGE (WEIGHTED) TEMPERATURE = 738

AVERAGE (ARITHMETIC) % O2 = 3.16 *
AVERAGE (ARITHMETIC) % CO2 = 15.85 *
AVERAGE (ARITHMETIC) TEMPERATURE = 738

AVERAGE STATIC PRESSURE (in. H2O) = -4.0
AVERAGE DENSITY (LBM/FT^3) = .02851

ACFM (ACTUAL FT^3/MIN) = 267601
LB/HR (WET) = 457688

* - O2/CO2 DATA WITH ERROR GREATER THAN .35 NOT USED
NO. OF POINTS NOT USED = 0 OUT OF 18

DATE = 6-26-87
LOCATION = EPAH GAS OUT
FILE IDENITY = IP6_26EPGO
BAROMETRIC PRESSURE = 25.49
PROBE IDENTY = E-1
DUCT HEIGHT = 10.5
DUCT WIDTH = 8.6

TAP	POINT	STAT P	TEMP	DELTA P	YAW ANGL	%02	% CO2
1	1	-8.5	251	0.000	10	10.9	8.9
1	2	-8.5	307	.029	6	4.9	14.2
1	3	-8.5	318	.178	2	4.1	14.8
1	4	-8.5	301	.123	6	7.2	12.2

TAP	POINT	STAT P	TEMP	DELTA P	YAW ANGL	%02	% CO2
2	1	-8.5	240	0.000	10	10.9	8.7
2	2	-8.5	305	.177	2	3.9	15.2
2	3	-8.5	312	.143	7	3.7	15.3
2	4	-8.5	301	.123	6	7.5	12.0

TAP	POINT	STAT P	TEMP	DELTA P	YAW ANGL	%02	% CO2
3	1	-8.5	262	0.000	6	10.6	9.2
3	2	-8.5	308	0.000	8	4.4	14.8
3	3	-8.5	314	.161	5	4.3	14.7
3	4	-8.5	292	.158	0	8.4	11.0

* - O2/CO2 DATA WITH ERROR GREATER THAN .35 NOT USED

****
****

PRELIMINARY CALCULATIONS !!!!!!!!!
FINAL CALCULATIONS TO BE RUN AFTER
FECHHEIMER PROBES ARE
INDEPENDENTLY CALIBRATED

****
****

DATE = 6-26-87
LOCATION = EPAH GAS OUT
FILE IDENITY = IP6_26EPGO
BAROMETRIC PRESSURE = 25.49
PROBE IDENTY = E-1
DUCT AREA = 90.3

TAP	POINT	CORR V	%02	% CO2	V LOC/AVG	WTD % O2	WTD %CO2	WTD TEMP
1	1	0	10.9	8.9	0.00	0.0	0.0	0
1	2	940	4.9	14.2	.71	3.5	10.1	218
1	3	2340	4.1	14.8	1.77	7.2	26.1	561
1	4	1922	7.2	12.2	1.45	10.4	17.7	437

TAP	POINT	CORR V	%02	% CO2	V LOC/AVG	WTD % O2	WTD %CO2	WTD TEMP
2	1	0	10.9	8.7	0.00	0.0	0.0	0
2	2	2312	3.9	15.2	1.74	6.8	26.5	532
2	3	2076	3.7	15.3	1.57	5.8	24.0	489
2	4	1922	7.5	12.0	1.45	10.9	17.4	437

TAP	POINT	CORR V	%02	% CO2	V LOC/AVG	WTD % O2	WTD %CO2	WTD TEMP
3	1	0	10.6	9.2	0.00	0.0	0.0	0
3	2	0	4.4	14.8	0.00	0.0	0.0	0
3	3	2214	4.3	14.7	1.67	7.2	24.6	524
3	4	2177	8.4	11.0	1.64	13.8	18.1	480

LOCATION = EPAH GAS OUT
FILE IDENITY = IP6_26EPGO

AVERAGE VELOCITY = 1325 FPM

AVERAGE (WEIGHTED) % O2 = 5.47 *
AVERAGE (WEIGHTED) % CO2 = 13.70 *
AVERAGE (WEIGHTED) TEMPERATURE = 306

AVERAGE (ARITHMETIC) % O2 = 6.73 *
AVERAGE (ARITHMETIC) % CO2 = 12.58 *
AVERAGE (ARITHMETIC) TEMPERATURE = 293

AVERAGE STATIC PRESSURE (in. H2O) = -8.5
AVERAGE DENSITY (LBM/FT^3) = .04459

ACFM (ACTUAL FT^3/MIN) = 119668
LB/HR (WET) = 320171

* - O2/CO2 DATA WITH ERROR GREATER THAN .35 NOT USED
NO. OF POINTS NOT USED = 0 OUT OF 12

DATE = 6/26/87
LOCATION = WEST SEC GAS IN
FILE IDENITY = IP6_26WSGI
BAROMETRIC PRESSURE = 25.49
PROBE IDENTY = E-27
DUCT HEIGHT = 19.7
DUCT WIDTH = 40.0

TAP	POINT	STAT P	TEMP	DELTA P	YAW ANGL	%02	% CO2
1	1	-3.8	734	.272	10	4.2	15.0
1	2	-3.9	735	.249	10	4.2	15.0
1	3	-4.0	729	.156	10	4.2	15.0
1	4	-4.0	727	.114	3	4.2	15.0
1	5	-4.1	718	.180	12	4.2	15.0
1	6	-4.0	720	.185	15	4.2	15.0
1	7	-4.1	715	.126	25	4.2	15.0

TAP	POINT	STAT P	TEMP	DELTA P	YAW ANGL	%02	% CO2
2	1	-3.7	731	.288	17	4.2	15.0
2	2	-3.9	746	.173	20	4.2	15.0
2	3	-4.0	745	.170	20	4.2	15.0
2	4	-4.0	740	.131	10	4.2	15.0
2	5	-4.0	730	.190	17	4.2	15.0
2	6	-4.0	726	.205	25	4.2	15.0
2	7	-4.0	714	.104	35	4.2	15.0

TAP	POINT	STAT P	TEMP	DELTA P	YAW ANGL	%02	% CO2
3	1	-3.8	730	.295	10	4.2	15.0
3	2	-3.8	749	.234	10	4.2	15.0
3	3	-3.9	748	.205	10	4.2	15.0
3	4	-3.9	745	.156	5	4.2	15.0
3	5	-4.1	741	.197	20	4.2	15.0
3	6	-3.9	737	.104	30	4.2	15.0
3	7	-4.0	730	.058	50	4.2	15.0

TAP	POINT	STAT P	TEMP	DELTA P	YAW ANGL	%02	% CO2
4	1	-3.5	740	.307	8	4.2	15.0
4	2	-3.5	753	.258	5	4.2	15.0
4	3	-3.6	751	.249	5	4.2	15.0
4	4	-3.8	751	.190	0	4.2	15.0
4	5	-3.8	745	.102	10	4.2	15.0
4	6	-3.9	746	.019	30	4.2	15.0
4	7	-3.9	747	.009	20	4.2	15.0

TAP	POINT	STAT P	TEMP	DELTA P	YAW ANGL	%02	% CO2
5	1	-3.4	755	.334	15	4.2	15.0
5	2	-3.6	757	.244	0	4.2	15.0
5	3	-3.6	755	.251	0	4.2	15.0
5	4	-3.7	753	.209	0	4.2	15.0
5	5	-3.8	750	.048	0	4.2	15.0
5	6	-3.8	749	.007	0	4.2	15.0
5	7	-3.8	749	.043	20	4.2	15.0

TAP	POINT	STAT P	TEMP	DELTA P	YAW ANGL	%02	% CO2
6	1	-3.6	761	.036	23	4.2	15.0
6	2	-3.5	759	.236	0	4.2	15.0
6	3	-3.7	751	.271	0	4.2	15.0
6	4	-3.7	752	.216	0	4.2	15.0
6	5	-3.8	748	.056	17	4.2	15.0
6	6	-3.9	744	.019	30	4.2	15.0
6	7	-3.8	740	.012	18	4.2	15.0

TAP	POINT	STAT P	TEMP	DELTA P	YAW ANGL	%02	% CO2
7	1	-3.6	720	.244	13	4.2	15.0
7	2	-3.8	754	.256	10	4.2	15.0
7	3	-3.9	745	.275	5	4.2	15.0
7	4	-4.0	744	.222	5	4.2	15.0
7	5	-4.0	740	.122	20	4.2	15.0
7	6	-4.1	740	.046	20	4.2	15.0
7	7	-4.1	743	.051	60	4.2	15.0

TAP	POINT	STAT P	TEMP	DELTA P	YAW ANGL	%02	% CO2
8	1	-3.9	746	.146	5	4.2	15.0
8	2	-3.8	756	.351	35	4.2	15.0
8	3	-3.9	738	.202	15	4.2	15.0
8	4	-3.8	736	.178	10	4.2	15.0
8	5	-4.0	725	.163	5	4.2	15.0
8	6	-4.0	712	.070	10	4.2	15.0
8	7	-3.9	706	.029	35	4.2	15.0

TAP	POINT	STAT P	TEMP	DELTA P	YAW ANGL	%02	% CO2
9	1	-3.9	733	.268	8	4.2	15.0
9	2	-3.8	749	.246	20	4.2	15.0
9	3	-3.9	745	.268	15	4.2	15.0
9	4	-3.8	744	.249	10	4.2	15.0
9	5	-4.0	739	.227	10	4.2	15.0
9	6	-4.1	734	.126	10	4.2	15.0
9	7	-4.2	730	.058	40	4.2	15.0

TAP	POINT	STAT P	TEMP	DELTA P	YAW ANGL	%02	% CO2
10	1	-3.5	740	.241	15	4.2	15.0
10	2	-3.7	755	.290	20	4.2	15.0
10	3	-3.6	748	.266	17	4.2	15.0
10	4	-3.6	746	.222	12	4.2	15.0
10	5	-3.8	745	.209	5	4.2	15.0
10	6	-3.8	741	.192	12	4.2	15.0
10	7	-3.9	740	.065	30	4.2	15.0

TAP	POINT	STAT P	TEMP	DELTA P	YAW ANGL	%02	% CO2
11	1	-3.7	749	.209	5	4.2	15.0
11	2	-3.6	756	.288	20	4.2	15.0
11	3	-3.6	749	.236	15	4.2	15.0
11	4	-3.7	750	.241	10	4.2	15.0
11	5	-3.7	750	.188	0	4.2	15.0
11	6	-3.7	750	.141	15	4.2	15.0
11	7	-3.7	740	.051	20	4.2	15.0

TAP	POINT	STAT P	TEMP	DELTA P	YAW ANGL	%02	% CO2
12	1	-3.6	747	.156	15	4.2	15.0
12	2	-3.6	747	.163	10	4.2	15.0
12	3	-3.6	747	.217	20	4.2	15.0
12	4	-3.5	747	.197	16	4.2	15.0
12	5	-3.7	746	.178	5	4.2	15.0
12	6	-3.6	745	.126	0	4.2	15.0
12	7	-3.7	740	.056	0	4.2	15.0

TAP	POINT	STAT P	TEMP	DELTA P	YAW ANGL	%02	% CO2
13	1	-3.6	751	.166	40	4.2	15.0
13	2	-3.7	754	.139	20	4.2	15.0
13	3	-3.7	754	.199	15	4.2	15.0
13	4	-3.8	755	.192	10	4.2	15.0
13	5	-3.7	754	.214	10	4.2	15.0
13	6	-3.8	753	.153	10	4.2	15.0
13	7	-3.7	749	.036	15	4.2	15.0

TAP	POINT	STAT P	TEMP	DELTA P	YAW ANGL	%02	% CO2
14	1	-3.6	750	.205	30	4.2	15.0
14	2	-3.5	753	.175	20	4.2	15.0
14	3	-3.6	752	.158	15	4.2	15.0
14	4	-3.6	752	.129	15	4.2	15.0
14	5	-3.7	751	.141	10	4.2	15.0
14	6	-3.7	750	.039	15	4.2	15.0
14	7	-3.6	750	.029	20	4.2	15.0

****
****

PRELIMINARY CALCULATIONS !!!!!!!!!
FINAL CALCULATIONS TO BE RUN AFTER
FECHHEIMER PROBES ARE
INDEPENDENTLY CALIBRATED

****
****

DATE - 6/26/87
LOCATION - WEST SEC GAS IN
FILE IDENITY - IP6_26WSGI
BAROMETRIC PRESSURE - 25.49
PROBE IDENTY - E-27
DUCT AREA - 789.2

TAP	POINT	CORR V	%02	% CO2	V LOC/AVG	WTD % O2	WTD %CO2	WTD TEMP
1	1	3517	4.2	15.0	1.35/1.35	5.7	20.3	994
1	2	3368	4.2	15.0	1.30/1.30	5.5	19.4	954
1	3	2664	4.2	15.0	1.03/1.03	4.3	15.4	748
1	4	2310	4.2	15.0	.89/ .89	3.8	13.3	647
1	5	2828	4.2	15.0	1.09/1.09	4.6	16.3	782
1	6	2833	4.2	15.0	1.09/1.09	4.6	16.4	786
1	7	2192	4.2	15.0	.84/ .84	3.6	12.7	604

TAP	POINT	CORR V	%02	% CO2	V LOC/AVG	WTD % O2	WTD %CO2	WTD TEMP
2	1	3508	4.2	15.0	1.35/1.35	5.7	20.3	988
2	2	2695	4.2	15.0	1.04/1.04	4.4	15.6	774
2	3	2671	4.2	15.0	1.03/1.03	4.3	15.4	767
2	4	2454	4.2	15.0	.95/ .95	4.0	14.2	700
2	5	2854	4.2	15.0	1.10/1.10	4.6	16.5	803
2	6	2804	4.2	15.0	1.08/1.08	4.6	16.2	784
2	7	1800	4.2	15.0	.69/ .69	2.9	10.4	495

TAP	POINT	CORR V	%02	% CO2	V LOC/AVG	WTD % O2	WTD %CO2	WTD TEMP
3	1	3655	4.2	15.0	1.41/1.41	5.9	21.1	1028
3	2	3285	4.2	15.0	1.27/1.27	5.3	19.0	948
3	3	3075	4.2	15.0	1.18/1.18	5.0	17.8	886
3	4	2713	4.2	15.0	1.05/1.05	4.4	15.7	779
3	5	2869	4.2	15.0	1.11/1.11	4.7	16.6	819
3	6	1922	4.2	15.0	.74/ .74	3.1	11.1	546
3	7	1064	4.2	15.0	.41/ .41	1.7	6.1	299

TAP	POINT	CORR V	%02	% CO2	V LOC/AVG	WTD % O2	WTD %CO2	WTD TEMP
4	1	3763	4.2	15.0	1.45/1.45	6.1	21.7	1073
4	2	3492	4.2	15.0	1.35/1.35	5.7	20.2	1013
4	3	3429	4.2	15.0	1.32/1.32	5.6	19.8	992
4	4	3011	4.2	15.0	1.16/1.16	4.9	17.4	871
4	5	2172	4.2	15.0	.84/ .84	3.5	12.5	623
4	6	828	4.2	15.0	.32/ .32	1.3	4.8	238
4	7	619	4.2	15.0	.24/ .24	1.0	3.6	178

TAP	POINT	CORR V	%02	% CO2	V LOC/AVG	WTD % O2	WTD %CO2	WTD TEMP
5	1	3851	4.2	15.0	1.48/1.48	6.3	22.2	1120
5	2	3416	4.2	15.0	1.32/1.32	5.6	19.7	996
5	3	3461	4.2	15.0	1.33/1.33	5.6	20.0	1007
5	4	3159	4.2	15.0	1.22/1.22	5.1	18.2	916
5	5	1519	4.2	15.0	.59/ .59	2.5	8.8	439
5	6	582	4.2	15.0	.22/ .22	.9	3.4	168
5	7	1351	4.2	15.0	.52/ .52	2.2	7.8	390

TAP	POINT	CORR V	%02	% CO2	V LOC/AVG	WTD % O2	WTD %CO2	WTD TEMP
6	1	1219	4.2	15.0	.47/ .47	2.0	7.0	357
6	2	3362	4.2	15.0	1.30/1.30	5.5	19.4	983
6	3	3590	4.2	15.0	1.38/1.38	5.8	20.7	1038
6	4	3209	4.2	15.0	1.24/1.24	5.2	18.5	930
6	5	1567	4.2	15.0	.60/ .60	2.6	9.0	452
6	6	827	4.2	15.0	.32/ .32	1.3	4.8	237
6	7	721	4.2	15.0	.28/ .28	1.2	4.2	206

TAP	POINT	CORR V	%02	% CO2	V LOC/AVG	WTD % O2	WTD %CO2	WTD TEMP
7	1	3276	4.2	15.0	1.26/1.26	5.3	18.9	909
7	2	3442	4.2	15.0	1.33/1.33	5.6	19.9	1000
7	3	3594	4.2	15.0	1.38/1.38	5.8	20.8	1031
7	4	3231	4.2	15.0	1.24/1.24	5.3	18.7	926
7	5	2261	4.2	15.0	.87/ .87	3.7	13.1	644
7	6	1392	4.2	15.0	.54/ .54	2.3	8.0	397
7	7	781	4.2	15.0	.30/ .30	1.3	4.5	223

TAP	POINT	CORR V	%02	% CO2	V LOC/AVG	WTD % O2	WTD %CO2	WTD TEMP
8	1	2626	4.2	15.0	1.01/1.01	4.3	15.2	755
8	2	3350	4.2	15.0	1.29/1.29	5.5	19.3	976
8	3	2982	4.2	15.0	1.15/1.15	4.9	17.2	848
8	4	2852	4.2	15.0	1.10/1.10	4.6	16.5	809
8	5	2750	4.2	15.0	1.06/1.06	4.5	15.9	768
8	6	1776	4.2	15.0	.68/ .68	2.9	10.3	487
8	7	950	4.2	15.0	.37/ .37	1.5	5.5	258

TAP	POINT	CORR V	%02	% CO2	V LOC/AVG	WTD % O2	WTD %CO2	WTD TEMP
9	1	3509	4.2	15.0	1.35/1.35	5.7	20.3	991
9	2	3213	4.2	15.0	1.24/1.24	5.2	18.6	927
9	3	3441	4.2	15.0	1.33/1.33	5.6	19.9	987
9	4	3380	4.2	15.0	1.30/1.30	5.5	19.5	969
9	5	3223	4.2	15.0	1.24/1.24	5.2	18.6	917
9	6	2402	4.2	15.0	.93/ .93	3.9	13.9	679
9	7	1269	4.2	15.0	.49/ .49	2.1	7.3	357

TAP	POINT	CORR V	%02	% CO2	V LOC/AVG	WTD % O2	WTD %CO2	WTD TEMP
10	1	3255	4.2	15.0	1.25/1.25	5.3	18.8	928
10	2	3495	4.2	15.0	1.35/1.35	5.7	20.2	1016
10	3	3397	4.2	15.0	1.31/1.31	5.5	19.6	979
10	4	3174	4.2	15.0	1.22/1.22	5.2	18.3	912
10	5	3136	4.2	15.0	1.21/1.21	5.1	18.1	900
10	6	2948	4.2	15.0	1.14/1.14	4.8	17.0	841
10	7	1523	4.2	15.0	.59/ .59	2.5	8.8	434

TAP	POINT	CORR V	%02	% CO2	V LOC/AVG	WTD % O2	WTD %CO2	WTD TEMP
11	1	3141	4.2	15.0	1.21/1.21	5.1	18.1	906
11	2	3484	4.2	15.0	1.34/1.34	5.7	20.1	1014
11	3	3235	4.2	15.0	1.25/1.25	5.3	18.7	933
11	4	3334	4.2	15.0	1.28/1.28	5.4	19.3	963
11	5	2993	4.2	15.0	1.15/1.15	4.9	17.3	865
11	6	2506	4.2	15.0	.97/ .97	4.1	14.5	724
11	7	1465	4.2	15.0	.56/ .56	2.4	8.5	418

TAP	POINT	CORR V	%02	% CO2	V LOC/AVG	WTD % O2	WTD %CO2	WTD TEMP
12	1	2632	4.2	15.0	1.01/1.01	4.3	15.2	757
12	2	2742	4.2	15.0	1.06/1.06	4.5	15.8	789
12	3	3016	4.2	15.0	1.16/1.16	4.9	17.4	868
12	4	2940	4.2	15.0	1.13/1.13	4.8	17.0	846
12	5	2897	4.2	15.0	1.12/1.12	4.7	16.7	832
12	6	2448	4.2	15.0	.94/ .94	4.0	14.1	703
12	7	1633	4.2	15.0	.63/ .63	2.7	9.4	465

TAP	POINT	CORR V	%02	% CO2	V LOC/AVG	WTD % O2	WTD %CO2	WTD TEMP
13	1	2156	4.2	15.0	.83/ .83	3.5	12.4	624
13	2	2425	4.2	15.0	.93/ .93	3.9	14.0	704
13	3	2979	4.2	15.0	1.15/1.15	4.8	17.2	865
13	4	2985	4.2	15.0	1.15/1.15	4.9	17.2	868
13	5	3149	4.2	15.0	1.21/1.21	5.1	18.2	914
13	6	2665	4.2	15.0	1.03/1.03	4.3	15.4	773
13	7	1271	4.2	15.0	.49/ .49	2.1	7.3	367

TAP	POINT	CORR V	%02	% CO2	V LOC/AVG	WTD % O2	WTD %CO2	WTD TEMP
14	1	2706	4.2	15.0	1.04/1.04	4.4	15.6	782
14	2	2717	4.2	15.0	1.05/1.05	4.4	15.7	788
14	3	2654	4.2	15.0	1.02/1.02	4.3	15.3	769
14	4	2400	4.2	15.0	.92/ .92	3.9	13.9	695
14	5	2557	4.2	15.0	.98/ .98	4.2	14.8	740
14	6	1323	4.2	15.0	.51/ .51	2.2	7.6	382
14	7	1110	4.2	15.0	.43/ .43	1.8	6.4	321

LOCATION = WEST SEC GAS IN
FILE IDENITY = IP6_26WSGI

AVERAGE VELOCITY = 2596 FPM

AVERAGE (WEIGHTED) % O2 = 4.23
AVERAGE (WEIGHTED) % CO2 = 14.99
AVERAGE (WEIGHTED) TEMPERATURE = 744

AVERAGE (ARITHMETIC) % O2 = 4.23
AVERAGE (ARITHMETIC) % CO2 = 14.99
AVERAGE (ARITHMETIC) TEMPERATURE = 743

AVERAGE STATIC PRESSURE (in. H2O) = -3.8
AVERAGE DENSITY (LBM/FT^3) = .02838

ACFM (ACTUAL FT^3/MIN) = 2048891
LB/HR (WET) = 3488318

DATE = 6/26/87
LOCATION = EAST SEC GAS IN
FILE IDENITY = IP6_26ESGI
BAROMETRIC PRESSURE = 25.49
PROBE IDENTY = E-27
DUCT HEIGHT = 19.7
DUCT WIDTH = 40.0

TAP	POINT	STAT P	TEMP	DELTA P	YAW ANGL	%02	% CO2
1	1	-3.9	737	.397	7	3.7	15.4
1	2	-4.0	741	.415	10	3.7	15.4
1	3	-4.0	740	.432	10	3.7	15.4
1	4	-3.9	739	.383	15	3.7	15.4
1	5	-4.0	735	.236	10	3.7	15.4
1	6	-3.9	723	.141	5	3.7	15.4
1	7	-3.9	714	.043	0	3.7	15.4

TAP	POINT	STAT P	TEMP	DELTA P	YAW ANGL	%02	% CO2
2	1	-3.9	738	.378	0	3.7	15.4
2	2	-3.9	747	.363	15	3.7	15.4
2	3	-3.9	747	.400	20	3.7	15.4
2	4	-4.0	746	.378	20	3.7	15.4
2	5	-3.9	743	.307	15	3.7	15.4
2	6	-3.9	741	.178	18	3.7	15.4
2	7	-4.0	737	.021	25	3.7	15.4

TAP	POINT	STAT P	TEMP	DELTA P	YAW ANGL	%02	% CO2
3	1	-3.9	739	.378	10	3.7	15.4
3	2	-3.9	751	.368	20	3.7	15.4
3	3	-3.8	752	.412	25	3.7	15.4
3	4	-4.0	750	.356	22	3.7	15.4
3	5	-3.9	749	.324	15	3.7	15.4
3	6	-3.8	746	.253	20	3.7	15.4
3	7	-3.9	740	.024	18	3.7	15.4

TAP	POINT	STAT P	TEMP	DELTA P	YAW ANGL	%02	% CO2
4	1	-3.9	737	.361	15	3.7	15.4
4	2	-4.0	753	.419	25	3.7	15.4
4	3	-4.0	752	.371	25	3.7	15.4
4	4	-3.9	750	.339	15	3.7	15.4
4	5	-4.0	749	.297	10	3.7	15.4
4	6	-4.0	743	.185	15	3.7	15.4
4	7	-3.9	742	.009	0	3.7	15.4

TAP	POINT	STAT P	TEMP	DELTA P	YAW ANGL	%02	% CO2
5	1	-3.9	740	.434	15	3.7	15.4
5	2	-3.9	752	.432	25	3.7	15.4
5	3	-4.0	750	.400	30	3.7	15.4
5	4	-4.0	749	.317	10	3.7	15.4
5	5	-4.0	746	.302	5	3.7	15.4
5	6	-3.9	740	.200	5	3.7	15.4
5	7	-4.0	735	.083	0	3.7	15.4

TAP	POINT	STAT P	TEMP	DELTA P	YAW ANGL	%02	% CO2
6	1	-4.0	744	.466	15	3.7	15.4
6	2	-4.0	753	.405	25	3.7	15.4
6	3	-4.1	751	.415	22	3.7	15.4
6	4	-4.0	749	.324	10	3.7	15.4
6	5	-4.0	746	.310	0	3.7	15.4
6	6	-4.0	744	.212	0	3.7	15.4
6	7	-4.0	740	.056	0	3.7	15.4

TAP	POINT	STAT P	TEMP	DELTA P	YAW ANGL	%02	% CO2
7	1	-3.7	737	.231	15	3.7	15.4
7	2	-3.8	755	.434	35	3.7	15.4
7	3	-3.8	758	.297	25	3.7	15.4
7	4	-3.8	757	.222	5	3.7	15.4
7	5	-3.8	753	.280	0	3.7	15.4
7	6	-3.8	752	.122	7	3.7	15.4
7	7	-3.8	750	.053	0	3.7	15.4

TAP	POINT	STAT P	TEMP	DELTA P	YAW ANGL	%02	% CO2
8	1	-3.5	742	.327	15	3.7	15.4
8	2	-3.6	756	.395	15	3.7	15.4
8	3	-3.7	758	.461	10	3.7	15.4
8	4	-3.7	757	.244	0	3.7	15.4
8	5	-3.8	755	.126	10	3.7	15.4
8	6	-3.9	751	.056	30	3.7	15.4
8	7	-3.9	749	.009	0	3.7	15.4

TAP	POINT	STAT P	TEMP	DELTA P	YAW ANGL	%02	% CO2
9	1	-3.6	747	.534	20	3.7	15.4
9	2	-3.8	757	.473	15	3.7	15.4
9	3	-3.8	759	.439	10	3.7	15.4
9	4	-3.8	759	.197	0	3.7	15.4
9	5	-3.8	756	.090	0	3.7	15.4
9	6	-3.9	754	.051	15	3.7	15.4
9	7	-3.8	753	.007	0	3.7	15.4

TAP	POINT	STAT P	TEMP	DELTA P	YAW ANGL	%02	% CO2
10	1	-3.9	742	.561	15	3.7	15.4
10	2	-4.0	752	.549	15	3.7	15.4
10	3	-4.0	755	.483	5	3.7	15.4
10	4	-4.1	752	.236	0	3.7	15.4
10	5	-4.0	751	.058	0	3.7	15.4
10	6	-4.0	752	.012	0	3.7	15.4
10	7	-4.0	752	.004	0	3.7	15.4

TAP	POINT	STAT P	TEMP	DELTA P	YAW ANGL	%02	% CO2
11	1	-3.9	744	.515	15	3.7	15.4
11	2	-4.0	752	.515	15	3.7	15.4
11	3	-3.7	752	.468	5	3.7	15.4
11	4	-3.9	751	.307	0	3.7	15.4
11	5	-4.0	751	.100	0	3.7	15.4
11	6	-4.0	751	.090	0	3.7	15.4
11	7	-4.0	751	.017	0	3.7	15.4

TAP	POINT	STAT P	TEMP	DELTA P	YAW ANGL	%02	% CO2
12	1	-3.9	740	.537	15	3.7	15.4
12	2	-3.8	750	.495	15	3.7	15.4
12	3	-4.0	750	.363	3	3.7	15.4
12	4	-4.0	749	.175	0	3.7	15.4
12	5	-4.1	751	.046	0	3.7	15.4
12	6	-4.1	752	.004	0	3.7	15.4
12	7	-4.1	751	.007	0	3.7	15.4

TAP	POINT	STAT P	TEMP	DELTA P	YAW ANGL	%02	% CO2
13	1	-3.7	740	.456	10	3.7	15.4
13	2	-3.6	747	.481	10	3.7	15.4
13	3	-3.8	746	.273	15	3.7	15.4
13	4	-4.0	744	.080	15	3.7	15.4
13	5	-4.0	739	.012	0	3.7	15.4
13	6	-3.9	740	.007	0	3.7	15.4
13	7	-3.9	735	.019	0	3.7	15.4

TAP	POINT	STAT P	TEMP	DELTA P	YAW ANGL	%02	% CO2
14	1	-3.5	741	.031	8	3.7	15.4
14	2	-3.6	747	.029	5	3.7	15.4
14	3	-3.7	746	.205	10	3.7	15.4
14	4	-3.9	744	.180	17	3.7	15.4
14	5	-4.0	739	.188	15	3.7	15.4
14	6	-3.9	737	.029	0	3.7	15.4
14	7	-3.9	735	.112	0	3.7	15.4

****
****

PRELIMINARY CALCULATIONS !!!!!!!!!
FINAL CALCULATIONS TO BE RUN AFTER
FECHHEIMER PROBES ARE
INDEPENDENTLY CALIBRATED

****
****

DATE = 6/26/87
LOCATION = EAST SEC GAS IN
FILE IDENITY = IP6_26ESGI
BAROMETRIC PRESSURE = 25.49
PROBE IDENTY = E-27
DUCT AREA = 789.2

TAP	POINT	CORR V	%02	% CO2	V LOC/AVG	WTD % O2	WTD %CO2	WTD TEMP
1	1	4280	3.7	15.4	1.39	5.1	21.4	1023
1	2	4349	3.7	15.4	1.41	5.2	21.7	1045
1	3	4434	3.7	15.4	1.44	5.3	22.1	1064
1	4	4095	3.7	15.4	1.33	4.9	20.5	981
1	5	3279	3.7	15.4	1.06	3.9	16.4	782
1	6	2555	3.7	15.4	.83	3.1	12.8	599
1	7	1416	3.7	15.4	.46	1.7	7.1	328

TAP	POINT	CORR V	%02	% CO2	V LOC/AVG	WTD % O2	WTD %CO2	WTD TEMP
2	1	4210	3.7	15.4	1.37	5.1	21.0	1008
2	2	4001	3.7	15.4	1.30	4.8	20.0	969
2	3	4084	3.7	15.4	1.32	4.9	20.4	989
2	4	3970	3.7	15.4	1.29	4.8	19.8	960
2	5	3676	3.7	15.4	1.19	4.4	18.4	886
2	6	2760	3.7	15.4	.89	3.3	13.8	663
2	7	907	3.7	15.4	.29	1.1	4.5	217

TAP	POINT	CORR V	%02	% CO2	V LOC/AVG	WTD % O2	WTD %CO2	WTD TEMP
3	1	4148	3.7	15.4	1.35	5.0	20.7	994
3	2	3926	3.7	15.4	1.27	4.7	19.6	956
3	3	4005	3.7	15.4	1.30	4.8	20.0	977
3	4	3809	3.7	15.4	1.24	4.6	19.0	926
3	5	3785	3.7	15.4	1.23	4.5	18.9	919
3	6	3253	3.7	15.4	1.05	3.9	16.2	787
3	7	1019	3.7	15.4	.33	1.2	5.1	244

TAP	POINT	CORR V	%02	% CO2	V LOC/AVG	WTD % O2	WTD %CO2	WTD TEMP
4	1	3973	3.7	15.4	1.29	4.8	19.8	950
4	2	4042	3.7	15.4	1.31	4.8	20.2	987
4	3	3804	3.7	15.4	1.23	4.6	19.0	928
4	4	3873	3.7	15.4	1.26	4.6	19.3	942
4	5	3697	3.7	15.4	1.20	4.4	18.5	898
4	6	2860	3.7	15.4	.93	3.4	14.3	689
4	7	657	3.7	15.4	.21	.8	3.3	158

TAP	POINT	CORR V	%02	% CO2	V LOC/AVG	WTD % O2	WTD %CO2	WTD TEMP
5	1	4358	3.7	15.4	1.41	5.2	21.8	1046
5	2	4101	3.7	15.4	1.33	4.9	20.5	1000
5	3	3769	3.7	15.4	1.22	4.5	18.8	917
5	4	3818	3.7	15.4	1.24	4.6	19.1	927
5	5	3766	3.7	15.4	1.22	4.5	18.8	911
5	6	3062	3.7	15.4	.99	3.7	15.3	735
5	7	1982	3.7	15.4	.64	2.4	9.9	472

TAP	POINT	CORR V	%02	% CO2	V LOC/AVG	WTD % O2	WTD %CO2	WTD TEMP
6	1	4523	3.7	15.4	1.47	5.4	22.6	1091
6	2	3974	3.7	15.4	1.29	4.8	19.8	970
6	3	4112	3.7	15.4	1.33	4.9	20.5	1002
6	4	3860	3.7	15.4	1.25	4.6	19.3	938
6	5	3830	3.7	15.4	1.24	4.6	19.1	926
6	6	3169	3.7	15.4	1.03	3.8	15.8	765
6	7	1633	3.7	15.4	.53	2.0	8.2	392

TAP	POINT	CORR V	%02	% CO2	V LOC/AVG	WTD % O2	WTD %CO2	WTD TEMP
7	1	3184	3.7	15.4	1.03	3.8	15.9	761
7	2	3719	3.7	15.4	1.21	4.5	18.6	911
7	3	3414	3.7	15.4	1.11	4.1	17.1	839
7	4	3247	3.7	15.4	1.05	3.9	16.2	797
7	5	3651	3.7	15.4	1.18	4.4	18.2	892
7	6	2398	3.7	15.4	.78	2.9	12.0	585
7	7	1595	3.7	15.4	.52	1.9	8.0	388

TAP	POINT	CORR V	%02	% CO2	V LOC/AVG	WTD % O2	WTD %CO2	WTD TEMP
8	1	3789	3.7	15.4	1.23	4.5	18.9	912
8	2	4186	3.7	15.4	1.36	5.0	20.9	1026
8	3	4612	3.7	15.4	1.50	5.5	23.0	1134
8	4	3415	3.7	15.4	1.11	4.1	17.1	838
8	5	2421	3.7	15.4	.79	2.9	12.1	593
8	6	1421	3.7	15.4	.46	1.7	7.1	346
8	7	659	3.7	15.4	.21	.8	3.3	160

TAP	POINT	CORR V	%02	% CO2	V LOC/AVG	WTD % O2	WTD %CO2	WTD TEMP
9	1	4711	3.7	15.4	1.53	5.7	23.5	1141
9	2	4580	3.7	15.4	1.49	5.5	22.9	1124
9	3	4504	3.7	15.4	1.46	5.4	22.5	1109
9	4	3074	3.7	15.4	1.00	3.7	15.4	757
9	5	2081	3.7	15.4	.67	2.5	10.4	510
9	6	1514	3.7	15.4	.49	1.8	7.6	370
9	7	582	3.7	15.4	.19	.7	2.9	142

TAP	POINT	CORR V	%02	% CO2	V LOC/AVG	WTD % O2	WTD %CO2	WTD TEMP
10	1	4953	3.7	15.4	1.61	5.9	24.7	1192
10	2	4922	3.7	15.4	1.60	5.9	24.6	1200
10	3	4771	3.7	15.4	1.55	5.7	23.8	1168
10	4	3354	3.7	15.4	1.09	4.0	16.8	818
10	5	1670	3.7	15.4	.54	2.0	8.3	407
10	6	762	3.7	15.4	.25	.9	3.8	186
10	7	440	3.7	15.4	.14	.5	2.2	107

TAP	POINT	CORR V	%02	% CO2	V LOC/AVG	WTD % O2	WTD %CO2	WTD TEMP
11	1	4752	3.7	15.4	1.54	5.7	23.7	1147
11	2	4769	3.7	15.4	1.55	5.7	23.8	1163
11	3	4689	3.7	15.4	1.52	5.6	23.4	1143
11	4	3819	3.7	15.4	1.24	4.6	19.1	930
11	5	2189	3.7	15.4	.71	2.6	10.9	533
11	6	2077	3.7	15.4	.67	2.5	10.4	506
11	7	906	3.7	15.4	.29	1.1	4.5	221

TAP	POINT	CORR V	%02	% CO2	V LOC/AVG	WTD % O2	WTD %CO2	WTD TEMP
12	1	4843	3.7	15.4	1.57	5.8	24.2	1162
12	2	4671	3.7	15.4	1.51	5.6	23.3	1136
12	3	4142	3.7	15.4	1.34	5.0	20.7	1008
12	4	2888	3.7	15.4	.94	3.5	14.4	701
12	5	1488	3.7	15.4	.48	1.8	7.4	362
12	6	441	3.7	15.4	.14	.5	2.2	107
12	7	582	3.7	15.4	.19	.7	2.9	142

TAP	POINT	CORR V	%02	% CO2	V LOC/AVG	WTD % O2	WTD %CO2	WTD TEMP
13	1	4552	3.7	15.4	1.48	5.5	22.7	1092
13	2	4688	3.7	15.4	1.52	5.6	23.4	1136
13	3	3472	3.7	15.4	1.13	4.2	17.3	840
13	4	1887	3.7	15.4	.61	2.3	9.4	455
13	5	758	3.7	15.4	.25	.9	3.8	182
13	6	579	3.7	15.4	.19	.7	2.9	139
13	7	951	3.7	15.4	.31	1.1	4.8	227

TAP	POINT	CORR V	%O2	% CO2	V LOC/AVG	WTD % O2	WTD %CO2	WTD TEMP
14	1	1205	3.7	15.4	.39	1.4	6.0	289
14	2	1175	3.7	15.4	.38	1.4	5.9	285
14	3	3071	3.7	15.4	1.00	3.7	15.3	743
14	4	2794	3.7	15.4	.91	3.4	14.0	674
14	5	2878	3.7	15.4	.93	3.5	14.4	690
14	6	1175	3.7	15.4	.38	1.4	5.9	281
14	7	2300	3.7	15.4	.75	2.8	11.5	548

LOCATION = EAST SEC GAS IN
FILE IDENITY = IP6_26ESGI

AVERAGE VELOCITY = 3084 FPM

AVERAGE (WEIGHTED) % O2 = 3.70
AVERAGE (WEIGHTED) % CO2 = 15.40
AVERAGE (WEIGHTED) TEMPERATURE = 747

AVERAGE (ARITHMETIC) % O2 = 3.70
AVERAGE (ARITHMETIC) % CO2 = 15.40
AVERAGE (ARITHMETIC) TEMPERATURE = 747

AVERAGE STATIC PRESSURE (in. H2O) = -3.9
AVERAGE DENSITY (LBM/FT^3) = .02830

ACFM (ACTUAL FT^3/MIN) = 2433610
LB/HR (WET) = 4132553

DATE = 6-26-87
LOCATION = WPAH AIR OUT
FILE IDENITY = IP6_26WPAO
BAROMETRIC PRESSURE = 25.49
PROBE IDENTY = E-1
DUCT HEIGHT = 8.6
DUCT WIDTH = 15.0

TAP	POINT	STAT P	TEMP	DELTA P	YAW ANGL
1	1	31.0	479	.031	15
1	2	31.0	483	.047	5
1	3	31.0	482	.070	0

TAP	POINT	STAT P	TEMP	DELTA P	YAW ANGL
2	1	31.0	475	.070	10
2	2	31.0	468	.056	0
2	3	31.0	459	.100	5

TAP	POINT	STAT P	TEMP	DELTA P	YAW ANGL
3	1	31.0	480	.004	10
3	2	31.0	472	.036	0
3	3	31.0	465	.002	5

TAP	POINT	STAT P	TEMP	DELTA P	YAW ANGL
4	1	31.0	483	.056	5
4	2	31.0	464	.058	10
4	3	31.0	445	.117	0

TAP	POINT	STAT P	TEMP	DELTA P	YAW ANGL
5	1	31.0	474	.041	0
5	2	31.0	456	.063	5
5	3	31.0	449	.087	5

****
****

PRELIMINARY CALCULATIONS !!!!!!!!!
FINAL CALCULATIONS TO BE RUN AFTER
FECHHEIMER PROBES ARE
INDEPENDENTLY CALIBRATED

****
****

DATE = 6-26-87
LOCATION = WPAH AIR OUT
FILE IDENITY = IP6_26WPAO
BAROMETRIC PRESSURE = 25.49
PROBE IDENTY = E-1
DUCT AREA = 129.0

TAP	POINT	CORR V V	LOC/AVG	WTD TEMP
1	1	1000	.77	371
1	2	1271	.98	476
1	3	1554	1.20	581

TAP	POINT	CORR V V	LOC/AVG	WTD TEMP
2	1	1525	1.18	561
2	2	1380	1.07	501
2	3	1825	1.41	649

TAP	POINT	CORR V V	LOC/AVG	WTD TEMP
3	1	368	.28	137
3	2	1111	.86	406
3	3	261	.20	94

TAP	POINT	CORR V V	LOC/AVG	WTD TEMP
4	1	1386	1.07	519
4	2	1380	1.07	496
4	3	1965	1.52	678

TAP	POINT	CORR V V	LOC/AVG	WTD TEMP
5	1	1186	.92	436
5	2	1449	1.12	512
5	3	1694	1.31	589

LOCATION - WPAH AIR OUT
FILE IDENITY - IP6_26WPAO

AVERAGE VELOCITY = 1290 FPM

AVERAGE (WEIGHTED) TEMPERATURE = 467

AVERAGE (ARITHMETIC) TEMPERATURE = 469

AVERAGE STATIC PRESSURE (in. H2O) = 31.0
AVERAGE DENSITY (LBM/FT^3) = .03967

ACFM (ACTUAL FT^3/MIN) = 166446
LB/HR (WET) = 396130

DATE = 6-26-87
LOCATION = EPAH AIR OUT
FILE IDENITY = IP6_26EPAO
BAROMETRIC PRESSURE = 25.49
PROBE IDENTY = E-1
DUCT HEIGHT = 8.6
DUCT WIDTH = 15.0

TAP	POINT	STAT P	TEMP	DELTA P	YAW ANGL
1	1	31.0	469	.061	5
1	2	31.0	458	.073	5
1	3	31.0	423	.053	10

TAP	POINT	STAT P	TEMP	DELTA P	YAW ANGL
2	1	31.0	493	.034	20
2	2	31.0	482	.058	10
2	3	31.0	458	.056	5

TAP	POINT	STAT P	TEMP	DELTA P	YAW ANGL
3	1	31.0	494	.024	5
3	2	31.0	487	.031	15
3	3	31.0	475	.021	0

TAP	POINT	STAT P	TEMP	DELTA P	YAW ANGL
4	1	31.0	507	0.000	15
4	2	31.0	492	.080	10
4	3	31.0	472	.051	15

TAP	POINT	STAT P	TEMP	DELTA P	YAW ANGL
5	1	31.0	507	.061	0
5	2	31.0	499	.092	0
5	3	31.0	479	.097	0