11/22/87
Nissen

RAH

CE Lungstrum RAH

- Review CE-APH Operating Instructions from Lungstrom
  - Startup Procedures CE | B&W | LA | IPSC
  - Controllable Parameters List out
  - Operator Guidance List out
    - Contract 62.3401 Contract # 2010N
    - ~~B&W Proposal~~
  - B&W - Instr Manuals
    - System Analysis - B&W Design
    - System Description B&W
  - Operating Procedures - LADWP | IPSC
  - Startup Procedures - IPSC
  - Simulator info?
  - P&ID's
  - Training Library Previous ~~RAH training sessions taped?~~

MEMO

- Operations
  - → Startup Procedures PAH
    - ↓ Gas Outlet Setpoint
    - Leave PAH off until start PA fan
- Maintenance
  - → New Seal Settings

TRAINING

Operations | Maintenance | I&C
Engineering
additional required?

DEFICIENCY LIST

checkout / makeup new list
all previous deficiency lists
inspection notes

DEFICIENCY LIST

pg 1

B&W manual deficiencies:

comparision → update my copy

Missing sections {Itemize} B&W Instruction Manuals

CE manual vs B&W Instr

Updates: Required

1) SAH 1A Rotation Reversal

Clutches, etc / direction seal placement

2) New seal settings Coldend radials

Need statement / recommendation from CE What is excessive seal clearance? → Maintenance required resetting / replacement

Upgrades:

Ted Phil Anderson upgrade

IDS - changeout to ~~[illegible]~~ New electronic parts

all 4 RAH's parts problem

IDS alarm pt upgrade alarm only if system doesn't checkout

timer sequence manual ~~reset~~ required daily

~~Training~~:

~~Operations / Maintenance / Ind~~

~~Additional~~ ~~Engineering~~

Upgrades:

Potential:

SAH future layer baskets 8"

PAH future layer baskets 8"

Potential:

SAH ALC - cold end sector plates

PAH ALC - hot end sector plates

Deficiencies/Upgrades

Glass Inspection Ports

- Ports need moveable steel shield (same as other ports)

CMP - PAH maintenance platforms for IDS PM's

CMP PAH - ladders inspection access

SAH / PAH slip joint shield Air Side sector plates

prevent ash accumulation

CE - design modification

Deficiencies:

Install Basket removal - monorail
(all 4) project
Unit #2 - RAH test taps need to be added
Press Measurement Taps - 45° up (won't plug off)
→ write CMP

Clarification: from Rafi

Warranty
1) Required coverage by B&W
(responsible for all work?)

2) Service calls
per unit
duration

Design Specs: RAH

B&W - Instr Manual

G.C.

Contract B&Y / B&W-CE

62.3401 Contract # 2010N

→ B&W Proposal Need copy

Calculations - Review

RAH - perf summary

Warranty # factory service calls per unit duration /

Spare Parts Itemize out

Put together SUMMARY Unit #1 + #2

Design data

Test

expected

actual

INFO General

Power safety B&W - Technical Papers

EPRI

ASME - Technical Papers

FOMTS

TESTING

ASME PTC- RAH Test Codes

- Fans
- Boiler
- Orsats

copy sections B+W - STEAM

CE - COMBUSTION

CE - APH report

B+W Brent Sizzler Info coffee pot

B+V calcs

B+W Calcs

Pictures: setup

Writeup: TEST TECHNIQUES

Equipment Required / Instrumentation

Orsats / O_2/CO_2 monitor (continuous)

polyflow tubing / fittings

vacuum pumps / bubblers / knockout bottles / chillers

Probes / T/C's shielded Computers: DAS / reduction calculations / corrections

test taps / test probes / VPAS

Calculations: method 1) actual fuel measurement 2) air/gas flow determination

CORRECTIONS- list

- Air Inlet temp

List out existing temp grids installed permanently above dampers

Writeup-

→ List all Test Pt Locations diagrams / locations

methods of testing pt by pt traverse continuous grid sampling

all at 1 time / A side then B side / etc

Testing

Problem - Ductwork arrangement
common PAH/SAH outlet
then combines prior to Baghouse
cant test SAH individually
→ back calculate from common duct

Test Schematics:
gas side (cycle diagrams)
air side

Modeling
BHW Diag 140
PEPSE / BETH

COMPUTERIZE Calcs
data sampling
data reduction

Performance Testing

setup → routine testing program
before/after each major outage

Procedures Writeup / Manual
- calculations

Economic Evaluation
Leakage
cost justification
excessive seal clearance

Factors:
PA fan / SAH fan - ID fan HP
↓ air outlet temp (bypassing)
↓ gas outlet temp (diluting)
↑ air flow required
↑ gas flow ID fans
↓ Perf Baghouse / Scrubbers / FGR

→ Need
B&W design curves
PA flow requirements

Establish: Operating Curves
versus load (air/gas flow)
leakage, perf., air outlet temp / gas outlet temp

PAH
Amount leakage
vs PA duct Press

IP14_000937

Perf Testing -RAH

Objective:

diagnostics

actual perf numbers

multiple pts in/outlet sources

high accuracy / repeatable #'s

→ Perf #'s γ-ratio / η_{avr} / ϵ

leakage ΔP

comparison w/ design, as-new

Setup Data Base

Design

As New

Expected

Actual

Diagnostics

PA H leakage consideration

→ other sources

TSO dampers PulV o/s

↑ PA duct ΔP

Determine point of excessive leakage

when maintenance to replace/reset seal clearances

Perf Testing

X-ratio $_{L}^{NL}$

η_{air} $_{L}^{NL}$

ϵ $_{L}^{NL}$

Leakage

ΔP

Perf. Mon.

Tgas out L expected

NL "

Dev Tgas out = exp - act

Penalty in TPH | #

Perf Monitoring - RAH

Objective - on-line perf monitoring

instead of η or ϵ numbers

~~redefine~~ translate definitions to get expected #'s temps outlet press outlet

easily understandable parameters

assume or measure leakage

Based upon expected perf.

Gas Outlet Temp expected L or NL

Gas Outlet Temp actual L or NL

→ Dev alarm + investigate above certain #

calc action

Key parameters:

Gas Outlet Temp NL

Air Outlet Temp NL

leakage → leakage control system

~~ΔP~~ Press Outlet → sootblowing

ΔPexpected

monitoring pts:

gas in temp

air in temp

ACET → (APH System)

gas out temp → baghouse conditions High/low temps

RAH

PERFORMANCE MONITORING

FOXIA

Instrumentation — multiple pt grids averaging

Point checkout + Review

Instrumentation adequate / upgrades

markup P+IDs — Press taps 45° up

List include list all pts to RAH system analog + digital

Class I Calcs: Perf. Monitoring

Based on setpoints / perf w/ respect to air/gas flow or deviation calcs w/ other RAH

List out Class I Id Pts (include) - descriptions

Class II calcs: Perf. Testing (assumed leakage) back calculates SAH conditions common duct

List out Class II calc Pts (include) - descriptions

Operator Guidance Messages

Measurement Displays

videocopy

Screens - update

markup

Alarm Points

PERF MONITORING

→ Instr. upgrade

- Acc Points 45° up
- Install 2 - O_2 analyzers
  SAH/PAH common duct
- Temps longer probes or T/Cs shielded - attach to dampers or other structure
  multiple points

Perf Monitoring calc. Air Leakage Based on O_2 ASME method

~~X ratio~~ gas outlet temp

~~Nox~~ air outlet temp

ΔP's Normalized w/air flow
~~check out locations~~
before/after dampers

ACET - APH system

ϵ?

Leakage/No leakage

% gas flow curves BKW
PAH

Perf. Monitoring

Permissives to start / operate

Control systems / points
PAH gas Outlet - temp control

Alarm Points
Review
Bearings
Vibration
Gas In / Out
Air In / Out
motor overload

Fox1A - implement

Rockchester Alarms

IDS alarm pts
Fire

Alarm:
Rotor. Stoppage

Air Motors - Operating

Motors - motor overload curve

Baghouse - High / Low gas outlet trip points

Operator Guidance Messages:

Alarms IDS Observation Ports
gas outlet

Fire

Action - Writeup procedure

Fire Nozzles
Water Wash headers

isolate - No gas flow / Air flow
open doors?

~~Bottled Conditions~~

Bottled Conditions

Off / ON motor

Sootblowing

Firing on Oil
startup
shutdown

frequency / coverage ⇒ schedule
Press Set Points

AP's - normalized
ϵ

Rotor Stoppage:

Air Motors

LIST
→ out all potential hazards
actions to prevent / resolve

Decision Tree / Troubleshooting

LIMITS / ALARMS:

Tair in	Low
ACET	Low
Tgas in	High
Tgas out	High
Leakage	Low

Operator Guidance:

Bottle Up Conditions
verify gas inlet damper full closed
stop RAH

FIRE

22-141 50 SHEETS
22-142 100 SHEETS
22-144 200 SHEETS
AMPAD

OPERATION: RAH

- taking RAH o/s - placing I/s
  procedures warmup max temp 900° o/s 400° I/s
  gas flow isolated / air flow isolated
  shut off motor
  {cool down before placing back in-service
  air flow {open gas side doors - if have to}

Other systems which effect RAH
  Baghouse High/Low gas outlet conditions
  PA Fans
  FD Fans
  ID Fans
  } o/s Fans

  Boiler Econ - Biasing Dampers
  SBring High inlet conditions

RAH - Flyash hoppers
  - Operation of

Operation

attach schedule

SB- frequency

startup

press setpoints

Maintenance:

Water Washing
- cleaning

Low Press
Intermediate Press
High Press

Available Pumps

Procedure: Off-Line

Drain Air/Gas Ducts

Drying Requirements

Preventive Maintenance:
filters

planners / supv
dedicated personnel

Lubrication

oil changeouts
lubrication - analysis

Inspections:

ON LINE

Walkdown Sheet

OFF LINE

Walkdown Sheet

seal clearance measurements

pulling baskets / splitting

monorail

Seals: replacement

jigs mounted inside

IP14_000951

I&C

PM's - ALC
IDS

CONSTRUCTION

General Information

SAH's - shipped basket assemblies shipped preassembled

PAH's - baskets shipped out and PAH assembled baskets individually on-site

BWFP 1810-6

A — FUEL AS FIRED

SAMPLES			
ANALYSES			
COAL SOURCE	MINE		
	SEAM		
	DISTRICT		
	COUNTY		
	STATE		UTAH
SIZE		-5/8"x0	-5/8"x0
GRINDABILITY		55	48
SURFACE MOISTURE, %			
ASH SOFT. TEMP., F (REDUCING)		2350	2215(H-W)
PROXIMATE ANALYSIS	MOISTURE, TOTAL	18.8	8.3
	VOLATILE MATTER	35.5	37.1
	FIXED CARBON	37.9	40.6
	ASH	7.8	14.0
	TOTAL	100.0	100.0

ULTIMATE ANALYSIS FUEL	PULV.DES WT.	RANGE PC WT.	COAL "P" WT.	PERF.COAL WT.
B.B?				
ASH		8.0-16.0	7.81	14.00
S		0.4- 0.7	0.93	0.55
N_2		4.3- 4.9	4.13	4.56
C		58.5-64.5	55.60	61.45
CH_4				
C_2H_4				
C_2H_6				
C_3H_8				
C_4H_{10}				
C_5H_{12}				
C_6H_{14}				
CI		0-0.04	0.04	0.02
CO_2				
SO_2				
H_2O	12.0	7.4-9.3	18.80	8.30
H_2		1.0-1.5	0.86	1.20
O_2		9.3-10.5	11.83	9.92
TOTAL	43 GRIND		100.00	100.00
BTU/LB	10,700	10,500 to 12,100	9,962	11,010
BTU/CU FT AT 60F 30 IN.HG				

COAL "P" WILL NOT EXCEED 50% BY WT. OF A COAL MIXTURE

* NOT INCLUDING VALVES & STATIC HEAD

▲ AT PULVERIZER INLET

** INCLUDES (-1.5 INCHES WG) FOR STACK EFFECT

UTILITY BOILER PERFORMANCE SUMMARY

BY RJK APPL. DATE 12/2/81

BABCOCK & WILCOX

P23-310-0-150

B — PREDICTED PERFORMANCE

STEAM LEAVING SH, M LB/HR	3965	3965	6100	6100	6600
STEAM LEAVING RH, M LB/HR	3250	3250	5000	5000	5500
AUX. STEAM M LB/HR	0	450	0	450	0
FUEL OR FUELS	PERF.COAL	PERF.COAL	PERF.COAL	PERF.COAL	PERF.COAL
LOAD CONDITION	65%	65%	100%	100%	MCR
EXCESS AIR LEAVING ECON., %	23	23	17	17	17
NO. OF BURNERS IN OPERATION	42	42	42	42	42
HEAT. AVAIL., MKB/HR (FUEL & HEATED AIR)	5494	5908	7968	8374	8500
TOTAL INPUT, MKB/HR (FUEL & HT. CREDITS)	5261	5662	7563	7940	8049
HEAT CREDITS, MKB/HR	6.3	6.5	7.6	7.8	7.9
FUEL INPUT MKB/HR	5255	5655	7555	7932	8040
QUANTITY, M LB/HR — FUEL (MCFH-NAT. GAS)	477.5	513.6	686.2	720.4	730.2
FLUE GAS ENTERING AIR HTRS.	5274	5611	7241	7600	7703
AIR TO BURNING EQUIPMENT	4765	5064	6538	6862	6956
AIR HEATER LEAKAGE	367	378	477	498	505
PRESSURE, PSIG — STEAM AT SH OUTLET	2440	2440	2515	2515	2640
STEAM AT RH¹ INLET	350	350	539	539	590
STEAM AT RH² INLET					
PRESS. DROP — REHEATER 1	16	16	25	28	28
REHEATER 2					
ECONOMIZER *	11	13	25	29	29
DRUM TO SH OUTLET	68	73	160	172	182
TEMPERATURE, F — STEAM — LEAVING SUPERHEATER	1005	1005	1005	1005	1005
LEAVING REHEATER 1	1005	1005	1005	1005	1005
ENTERING REHEATER 1	580	580	620	620	630
LEAVING REHEATER 2					
ENTERING REHEATER 2					
FLUE GAS — LEAVING ECONOMIZER	686	675	725	730	740
LEAVING AH (INCL. LKG) P/S	312/276	311/277	310/286	311/289	311/294
LEAVING AH (INCL. LKG) P/S	280/267	280/268	280/276	280/279	280/280
WATER ENTERING ECONOMIZER	490	490	543	543	555
AIR — ENTERING UNIT PRI/SEC	74/62	74/63	72/64	78/65	78/65
LEAVING AIR HEATER P▲/SEC	355/618	375/624	412/635	418/636	420/645
RESISTANCE, IN. OF WATER — GAS — FURNACE & CONVECTION BANKS	2.2	1.9	2.7	3.3	3.1
FLUES TO AH OUTLET	0.9	1.0	1.4	1.5	1.5
AIR HEATER	2.1	2.3	3.8	4.1	4.2
TOT. FROM FURNACE TO AH OUTLET	5.2	5.2	7.9	8.9	8.8
AIR — FUEL BURNERS & WINDBOX **	-0.3	0.0	1.1	1.4	1.4
DUCTS & FLOW METER	1.0	1.2	2.1	2.3	2.3
AIR HEATER	1.1	1.2	2.0	2.3	2.3
TOT. FROM AH INLET TO FURN.	1.8	2.2	5.2	6.0	6.0
HEAT LOSS-EFF., % — DRY GAS	4.92	4.84	4.84	4.86	4.98
H_2 & H_2O IN FUEL	5.14	5.14	5.15	5.15	5.16
MOISTURE IN AIR	0.07	0.07	0.07	0.07	0.07
UNBURNED COMBUSTIBLE	0.2	0.2	0.2	0.2	0.2
RADIATION	0.24	0.22	0.17	0.16	0.15
UNACC. FOR & MFRS. MARGIN	1.00	1.00	1.00	1.00	1.00
TOTAL HEAT LOSS	11.57	11.47	11.43	11.44	11.56
*GROSS EFFICIENCY OF UNIT, %	88.43	88.53	88.57	88.56	88.44
HEAT CREDITS ADJUSTMENT, %	0.01	0.01	0.01	0.01	0.01
NET EFFICIENCY A.S.M.E. PTC-4.1, %	88.44	88.54	88.58	88.57	88.45
FUEL EFFICIENCY, % (OUTPUT/FUEL INPUT)	88.55	88.65	88.67	88.66	88.54

PULVERIZER PERFORMANCE										
NO. IN USE PER BOILER	4	7	5	7	6	7	6	7	6	7
TOTAL POWER, KW HR/TON MOTOR OUTPUT										
% THRU 200 U.S.S. SIEVE	71	76	72	75	71	73	71	72	70	72

PREDICTED PERFORMANCE IS BASED ON COMBUSTION AIR ENTERING UNIT WITH .0067 LB MOISTURE/LB DRY AIR, ON 25.18 IN. HG. BAROMETRIC PRESSURE, ON CONDITIONS & EQUIPMENT GIVEN ON THIS SUMMARY SHEET & ON ARRANGEMENT SHOWN ON DRAWING

C — EQUIPMENT PER UNIT

TYPE RADIANT

SIZE RBC

DESIGN PRESSURE (SH/RH) - 2975 PSIG/750 PSIG

FURNACE	WATER COOLED SCREEN (CIRCUMFERENTIAL)	
	WATER COOLED (PROJECTED)	59,130
	SUPERHEATER (PERIPHERAL) 54" CENTERLINE	23,244
	SUPERHEATER (PERIPHERAL) 24" CENTERLINE	35,665
	SUPERHEATER (PROJECTED)	4,367
	TOTAL FURNACE HEATING SURFACE	122,406
CONVECTION	SATURATED (CIRCUMFERENTIAL)	13,035
	SUPERHEATER (CIRCUMFERENTIAL)	279,082
	REHEATER 1 (CIRCUMFERENTIAL	300,263
	REHEATER 2 (CIRCUMFERENTIAL)	
	ECONOMIZER	99,902
	TOTAL CONVECTION HEATING SURFACE	692,282
TOTAL FURN. & CONV. PRESSURE PART. HTG. SURF.		814,688
FLAT PROJECTED FURNACE HEATING SURFACE		
	TO FACE OF PLATENS (24" CENTERLINE)	87,405
	TO FACE OF CONVECTION SURFACE (12" CENTERLINE)	125,510
FURNACE VOLUME, CU FT		962,055
AIR HEATER	TYPE REGENERATIVE-SECONDARY	NO.2-33-1/2-VI-64
	TOTAL HEATING SURFACE, SQ FT	1,047,800
	TYPE REGENERATIVE-PRIMARY	NO. 2-24-1/2-VI-44
	TOTAL HEATING SURFACE, SQ.FT.	735,600
FUEL BURNER	TYPE DUAL REGISTER	
	NO. 48 (6 BURNERS PER PULVERIZER)	
PULVERIZER	TYPE MPS SIZE 89GB NO. 8	
	CAPACITY OF 6 PULV. IS 6600 M LB STEAM/HR BASED ON 68 GRIND	
	11.010 BTU COAL AT 70 % THRU 200 U.S.S. SIEVE	
	FOR 113.3 M LB COAL/PULV.-HR AT 70 % THRU 200 U.S.S. SIEVE MIN. GRIND	
	IS 43. MAXIMUM TOTAL MOISTURE IS 12 % REQUIRING 465 F AIR	
	22% TOTAL MOISTURE COAL REQUIRES 540 F AIR.	
STEAM TEMP. CONTROL	SUPERHEAT BY SPRAY ATTEMPERATION	
	REHEAT BY GAS BIASING	
UNIT CONSTRUCTION FEATURES	MEMBRANE WALL	
	BALANCE DRAFT	
	INDOOR UNIT	

"AS SOLD" ARRANGEMENT

*CORRESPONDING TO ABB. METHOD PAR. 1.07 A.S.M.E. PTC-4.1

REVISIONS NO.	DESCRIPTION	BY	DATE

INTERMOUNTAIN POWER PROJECT

THIS SUMMARY SHEET IS THE PROPERTY OF THE BABCOCK & WILCOX COMPANY AND IS LOANED UPON CONDITION THAT IT IS NOT TO BE COPIED, IN WHOLE OR IN PART OR USED FOR FURNISHING INFORMATION TO OTHERS, OR FOR ANY OTHER PURPOSE DETRIMENTAL TO THE INTERESTS OF THE BABCOCK & WILCOX COMPANY AND IS TO BE RETURNED UPON REQUEST.

IP14_000954

GO 1032-1
(For blueprinting, use Form GO 1032T)

BABCOCK & WILCOX

INTERMOUNTAIN POWER PROJECT - RB-614
STEAM GENERATOR UNITS 1-4
PROJECT FILE 9255.62.3401
IPA CONTRACT 2010N

RECEIVED FOR DISTRIBUTION
SEP 7 1982
BECHTEL & VEATCH

SUBJECT Customer Information per Div. F1 Article 7 DATE 12-8-81 PAGE 1 OF 3

Article 1(c)(1)

	MCR PRESS PSIG	MCR TEMP °F	100% P PSIG	100% T °F	75% P PSIG	75% T °F	50% P PSIG	50% T °F	25% P PSIG	25% T °F
Economizer Inlet Header	2880	554	2723	545	2600	512	2510	470	2458	405
Economizer Intermediate Hdr.	2866	571	2711	561	2590	526	2501	481	2450	438
Economizer Outlet Header	2841	574	2686	565	2567	529	2480	484	2430	443
Steam Drum	2822	687	2670	679	2558	671	2475	667	2428	665
Furnace Lower Wall Hdrs.	2879	667	2723	659	2608	656	2523	654	2472	651
Furnace Upper Wall Hdrs.	2827	687	2675	679	2562	671	2478	667	2430	665
Primary SH Inlet Headers	2791	695	2644	687	2544	683	2469	679	2426	674
Primary SH Outlet Header	2773	720	2628	720	2536	709	2464	692	2425	692
Furn. Platen SH Inlet Hdr.	2758	717	2615	706	2529	694	2461	692	2425	692
Furn. Platen SH Outlet Hdr.	2732	784	2592	777	2516	777	2455	782	2423	781
Secondary SH Inlet Hdrs.	2717	784	2579	777	2508	764	2452	775	2422	781
Sec. SH Intermediate Manifolds	2699	914	2563	912	2500	908	2448	919	2421	892
Secondary SH Outlet Hdr.	2645	1005	2515	1005	2473	1005	2436	1005	2418	950
Reheat Inlet Header	575	625	546	623	420	583	287	553	143	530
Reheat Outlet Headers	551	1005	524	1005	402	1005	275	975	143	850

Article (c)(2)

	MCR	100%	75%	50%	25%
First Stage Attemperator Data					
(Lb/Hr) Total Expected Flow	43608	183359	161831	0.0	0.0
" " Design "	653453	616547	462909	222656	84201
(psi) Expected Nozzle Δ P	1.0	11.1	8.2	0.0	0.0
" Design " "	77.7	66.6	38.6	8.7	1.2
Second Stage Attemp. Data					
(Lb/Hr) Total Expected Flow	0.0	0.0	49581	18374	0.0
" " Design "	248392	384586	456107	230490	23201
(psi) Expected Nozzle Δ P	0.0	0.0	1.2	1.0	0.0
" Design " "	24.4	57.7	81.4	20.0	[illegible]
Reheat Attemperator Data					
(Lb/Hr) Total Design Flow	207480	197000	151600	103200	45480
(psi) Design Nozzle Δ P	88.8	81.0	47.3	21.6	4.3
(°F) Spray Water Temp.	343	342	325	302	265

Article 7.1(c)(3) a, b, c

Gas Pressure (in. H_2O)	MCR	100%	75%	50%	25%
Leaving Furnace	-0.1	-0.1	-0.1	-0.1	-0.1
Ent. Sec. SH $S_\perp$ = 24"	-0.1	-0.1	-0.1	-0.1	-0.1
Ent. SSH Out. $S_\perp$ = 12"	-0.21	-0.20	-0.17	-0.14	-0.11
Ent. RH Outlet Bank	-0.32	-0.30	-0.23	-0.17	-0.12
Ent. RH Pend. Bank	-0.49	-0.47	-0.35	-0.23	-0.14
Ent. Horiz. RH (4)	-0.72	-0.64	-0.46	-0.29	-0.16
Ent. Horiz. RH (3)	-1.10	-1.02	-0.93	-0.63	-0.27
Ent. Horiz. RH (2)	-1.30	-1.23	-1.19	-0.85	-0.33
Ent. Horiz. RH (1)	-1.58	-1.52	-1.56	-1.15	-0.42
Ent. Pri. SSH Outlet Bank	-0.61	-0.55	-0.40	-0.23	-0.15
Ent. Horiz. PSH (3)	-0.72	-0.64	-0.43	-0.24	-0.17
Ent. Horiz. PSH (2)	-0.88	-0.77	-0.47	-0.25	-0.19
Ent. Horiz. PSH (1)	-1.09	-0.93	-0.53	-0.26	-0.21
Ent. Econ. Bank (2)	-1.27	-1.07	-0.58	-0.27	-0.23
Ent. Econ. Bank (1)	-1.38	-1.16	-0.61	-0.28	-0.24
Econ. Hopper Press.	-2.07	-2.01	-2.11	-1.62	-0.56
Press. Ent. Pri. AH*	-4.20	-4.07	-3.86	-3.15	-1.54
Press. Ent. Sec. AH*	-3.71	-3.64	-3.52	-2.94	-1.45
Press. Lvg. Pri. AH	-6.05	-5.77	-5.26	-4.10	-2.09
Press. Lvg. Sec. AH	-7.81	-7.44	-6.12	-4.44	-2.00

*Including stack effect

THIS INFORMATION IS SUBMITTED FOR THE PURCHASER'S CONVENIENCE AND THE PERFORMANCE INDICATED THEREON SHALL NOT BE OFFERED BY THE COMPANY OR CONSTRUED BY THE PURCHASER AS A PROPOSAL OR CONTRACT OBLIGATION (DWG. JN-120881-1-0)

6-10078

IP14_0009955

GO 1032-1 BABCOCK & WILCOX
(For blueprinting, use Form GO 1032F)

INTERMOUNTAIN POWER PROJECT - RB-614
STEAM GENERATOR UNITS 1-4
PROJECT FILE 9255.62.3401
IPA CONTRACT 2010N

SUBJECT Customer Information per Div. F1 Article 7 DATE 12-8-81 PAGE 2 OF 3

ticle 1(c)(4) (5)	ALL TEMPERATURES - HVT (°F)	MCR	100%	75%	50%	25%
	Gas Temp. Entering Platens	2471	2440	2327	2080	1662
	Gas Temp. Leaving Platens	2108	2076	1963	1739	1375
	" " Ent. SSH $S_\perp$ = 24"	2108	2076	1963	1739	1375
	" " Lvg. SSH $S_\perp$ = 24"	1830	1804	1690	1500	1203
	" " Ent. SSH $S_\perp$ = 12"	1750	1776	1660	1475	1184
	" " Lvg. SSH $S_\perp$ = 12"	1640	1615	1520	1351	1104
	" " Ent. RH Outlet Bank	1615	1588	1488	1335	1085
	" " Lvg. RH Outlet Bank	1470	1449	1360	1231	996
	" " Ent. RH Intermed. Pendant	1460	1435	1350	1220	988
	" " Lvg. RH Intermed. Pend.Bank	1365	1340	1270	1147	926
	" " Ent. Horiz. RH Bank (4)	1305	1285	1214	1093	886
	" " Ent. Horiz. RH Bank (3)	1104	1094	1055	975	764
	" " Ent. Horiz. RH Bank (2)	988	962	958	899	701
	" " Ent. Horiz. RH Bank (1)	862	860	844	802	635
	" " Ent. Pri. SH Outlet Bank	1285	1269	1191	1062	877
	" " Lvg. Pri. SH Outlet Bank	1230	1211	1119	978	845
	" " Ent. Horiz. Pri.SH Bank (3)	1190	1167	1063	910	815
	" " Ent. Horiz. Pri.SH Bank (2)	1055	1034	938	808	768
	" " Ent. Horiz. Pri.SH Bank (1)	920	903	826	736	724
	" " Ent. Econ. Bank (2)	842	827	764	694	693
	" " Ent. Econ. Bank (1)	765	751	686	603	598
	" " Ent. Airheaters	744	736	707	675	567

	MCR	100%	75%	50%	25%	
Flue Gas Temperature Lvg AH's (uncor/corr)						Article 7.1(c)(5)
Pri AH	313/279	312/280	316/281	323/280	335/280	
Sec AH	295/285	292/282	273/263	253/243	222/210	
Gas CFM Lvg. AH's at T corrected						Article 7.1(c)(6)
Total Air Pri AH	414437	400069	355460	288912	219685	
Sec AH	2566844	2433861	1900740	1344646	730180	
Gas Flow Eng. AH's (MLB/HR) Pri AH	962.0	924.0	817.0	646.0	463.5	Article 7.1(c)(7) a & b
" Sec AH	6588.2	6285.5	5054.9	3665.1	2024.8	
Gas Flow Lvg. AH's (MLB/HR) Pri AH	1132.2	1093.0	971.0	793.0	601.5	
Sec AH	6918.2	6600.5	5307.9	3881.1	2218.9	
Gas Distribution through horiz. convection pass (%) RH/PSH	41/59	44/56	60/40	75/25	38/62	Article 7.1(c)(8)
Excess Air - %						Article 7.1(c)(9)
leaving furnace	16	16	19.5	27	50	a
leaving econ.	17	17	20.5	28	51	b
*leaving airheaters	26	26	29.5	37	74	c

*Primary & Secondary Airheaters Combined

RECEIVED FOR DISTRIBUTION SEP 7 1982 BLACK & VEATCH

THIS INFORMATION IS SUBMITTED FOR THE PURCHASER'S CONVENIENCE AND THE PERFORMANCE INDICATED THEREON SHALL NOT BE OFFERED BY THE COMPANY OR CONSTRUED BY THE PURCHASER AS A PROPOSAL OR CONTRACT OBLIGATION.

DWG. JN-120881-2-0

6-10079

IP14_000956

GO 1032-1
(For Blueprinting, use Form GO 1032F)

BABCOCK & WILCOX

INTERMOUNTAIN POWER PROJECT - RB-614
STEAM GENERATOR UNITS 1-4
PROJECT FILE 9255.62.3401
IPA CONTRACT 2010N

SUBJECT Customer Information per Div. F1 Article 7 DATE 12-8-81 PAGE 3 OF 3

	MCR	100%	75%	50%	25%
MLB/HR Air: Tot.Air Ent. Pri. AH	1066.100	1006.100	833.7	623.7	393.5
Tot.Air Ent. Sec. AH	5788.694	5498.660	4449.569	3263.112	1911.132
Tot.Air Lvg. Pri. AH	896.1	837.1	679.7	476.7	255.5
Tot.Air Lvg. Sec. AH	5458.694	5183.660	4196.569	3047.112	1717.132
Air Ent. Pri.AH @ 80° - CFM	282516	267287	222876	167152	105786
Total Air					
Air Ent. Sec.AH @ 80° - CFM	1431737	1363668	1112392	822304	488294
Air Temp. Ent. Pri. AH	78	77	75	75	75
" " Ent. Sec. AH	65	64	63	62	88
Air Temp. Lvg. Pri. AH	580	582	584	590	533
" " Lvg. Sec. AH	651	647	628	611	525
Air Pressure - (inches H_2O)					
loss through air htr pri/sec	1.25/2.2	1.10/2.0	0.75/1.35	0.40/0.80	0.15/0.30
loss through duct work	1.55	1.38	1.13	0.58	0.39
required at bnr. windbox	3.16	2.83	2.60	1.93	3.85
total required at AH inlet*	5.64	4.94	3.82	2.07	3.34
Heat Absorbed by Boiler %	88.41	88.44	88.43	88.68	88.61
Heat Loss % Due to:					
H_2O from combustion of hydrogen & moisture in fuel	5.17	5.16	5.15	5.10	5.06
Theoretical dry gas	4.28	4.24	4.16	3.68	3.12
Excess air & moisture @ air heater outlet (uncorrected)	0.78	0.78	0.84	1.02	1.36
Moisture in theoretical air	0.01	0.01	0.01	0.02	0.04
Radiation loss	0.15	0.17	0.21	0.30	0.61
Unburned carbon	0.20	0.20	0.20	0.20	0.20
Unacct. for & Manuf. margin	1.00	1.00	1.00	1.00	1.00

*including stack effect

	MCR	100%	75%	50%	25%
Gas Velocity - fps					
Ent. Sec. SH S_L = 24"	39	36.8	28.6	19.0	9.2
Ent. Sec. SH S_L = 12"	42.4	39.9	30.8	20.6	10.2
Ent. Pendant RH	49.6	46.7	36.1	24.3	12.3
Ent. Horiz. RH	49.9	50.1	53.8	46.3	12.0
Ent. Horiz. SH	37.3	33.6	18.3	7.7	10.4
Coal Consumption LB/HR	717790	685200	542240	375300	182900

Article 7.1(c)(16) a b c

Article 7.1(c)(17)

THIS INFORMATION IS SUBMITTED FOR THE PURCHASER'S CONVENIENCE AND THE PERFORMANCE INDICATED THEREON SHALL NOT BE OFFERED BY THE COMPANY OR CONSTRUED BY THE PURCHASER AS A PROPOSAL OR CONTRACT OBLIGATION.

DWG. JN-120881-3-0

RECEIVED FOR DISTRIBUTION SEP 7 1982 BLACK & VEATCH

6-10080

IP14_000957

12.3 Supplementary Data - Boiler Units: In addition to the foregoing Guaranteed Data, the Contractor is furnishing the following Supplementary Data for the Boiler Units to be furnished, based upon Maximum Capacity as defined in Article 2 of Division G3 and using coal as specified in Article 3 of Division G3:

	Hybrid		Constant Pressure				
Load.....percent of Maximum Capacity	25	50	25	50	75	100	MCR
Superheater outlet pressure.....psig	820	1770	2405	2430	2460	2515	2640
Superheater flow.....Mlb/hr	1525	3050	1525	3050	4575	6100	6600
Superheater temp.....F	975	1005	950	1005	1005	1005	1005
Superheater spray.....1000.....lb/hr	0	0	0	0	144.0	211.0	75.9
Drum pressure.....psig	870	1850	2415	2470	2550	2675	2827
Economizer inlet pressure*.....psig	880	1862	2417	2476	2564	2700	2856
Economizer inlet temperature.....F	393	459	382	467	507	543	555
Economizer outlet temperature.....F	414	482	401.	488	527	565	578
Reheater inlet flow.....Mlb/hr	1250	2500	1250	2500	3750	5000	5500
Reheater inlet pressure.....psig	124	266	120	275	402	539	590
Reheater inlet temperature.....F	560	585	440	565	591	620	630
Reheater spray flow.....lb/hr	0	0	0	0	0	0	0
Reheater outlet pressure.....psig	118	262	114	262	383	514	562
Reheater outlet temperature.....F	900	1005	850	975	1005	1005	1005
Fuel flow.....ton/hr	98.1	190.8	95.5	185.6	269.5	343.1	365.2
Number of pulverizers in service.....	2	5	2	5	6	7	7

*Excluding valves and static head.

Based on P23-310-36Y Drawing with 24-1/2 VI 44 Primary and 33-1/2 VI 64 Secondary Airheaters

IP14_000958

	Hybrid		Constant Pressure				
Load.....percent of Maximum Capacity	25	50	25	50	75	100	105
Expansion Efficiency.....percent	82	81	62	72			
Desuperheater spray water temperature...F	299	354	300	356	378	412	419

IP14_000959

	Hybrid		Constant Pressure				
Load.....percent of Maximum Capacity	25	50	25	50	75	100	105
Air flow rates:							
Theoretical air for combustion..Mlb/hr	1641	3162	1636	3104	4463	5685	6047
Total air for combustion, including excess air.....Mlb/hr	2257	3952	2248	3880	5266	6538	6954
Air from primary air fans.....Mlb/hr	550.0	1038.5	541.0	1037.5	1293.0	1552.0	1601.0
Tempering air.....Mlb/hr	98.2	370.3	101.1	376.9	425.2	485.8	484.6
Air to primary air heaters.....Mlb/hr	451.8	668.2	439.9	660.6	867.8	1066.2	1116.4
Air from primary air heaters, exclusive of tempering air....Mlb/hr	300.8	528.2	293.9	521.6	713.8	903.2	947.4
Air from F. D. fans.....Mlb/hr	2066	3305.5	2062	3231.5	4443	5540	5935
Sealing air*.....Mlb/hr	22	55	22	55	66	77	77*
Air to secondary air heaters....Mlb/hr	2066	3305.5	2062	3231.5	4443	5540	5935
Air from secondary air heaters.....Mlb/hr	1880	3108.5	1875.0	3036.5	4193	5226	5599
Air pressures:							
Air from primary air fans.in. of water	30.1	26.0	29.4	25.7	30.1	34.2	36.3
Air to primary air heaters.....in. of water	29.7	24.3	29.0	24.0	28.3	31.5	33.4
Air from primary air heaters.....in. of water	29.5	23.8	28.8	23.5	27.5	30.2	32.0
Air to secondary air heaters.....in. of water	1.8	1.3	1.7	1.2	3.6	5.2	6.0
Air from secondary air heaters.....in. of water	1.4	0.5	1.3	0.4	2.2	3.2	3.7
Air at windbox.....in. of water	1.0	-0.2	0.9	-0.3	0.8	1.1	1.4

*Sealing air is taken from primary tempering air.

IP14_000960

	Hybrid		Constant Pressure				
Load.....percent of Maximum Capacity	25	50	25	50	75	100	105
Air temperatures:							
Minimum ambient temperature not requiring preheating.....F	84	60	94	60	50	37	34
Air to secondary air heater.....F	89**	62	99 **	62	63	64	65
Air from secondary air heater.....F	534	590	507	590	615	635	645
Air from primary air heater, excluding tempering air.....F	511	562	510	561	567	564	569
Air to pulverizers.....F	420	380	415	375	402	412	420
Air to Primary AH.....F	75	75	75	75	75	77	78
Flue gas flow rates:							
Leaving furnace.....Mlb/hr	2492	4343	2484	4264	5787	7184	7643
Leaving economizer.....Mlb/hr	2509	4375	2500	4295	5832	7241	7703
Entering primary air heaters....Mlb/hr	363.9	682	439.8	670	839	972	991
Entering secondary air heaters.....Mlb/hr	2145.1	3693	2060.2	3625	4993	6269	6712
Leaving primary air heaters.....Mlb/hr	514.9	822	585.8	809	993	1135	1160
Leaving secondary air heaters...Mlb/hr	2331.1	3890	2247.2	3820	5243	6583	7048
Maximum velocity of gases in superheater net free area.....ft/sec	11	22	11	22	26	45	51
Maximum velocity of gases in reheater net free area.....ft/sec	23	39	28	40	50	46	47
Maximum velocity of gases in economizer net free area.....ft/sec	6	14	4	13	22	36.2	41

**Steam Coil Heating used to heat the air from a temperature of 62 F.

IP14_000961

	Hybrid		Constant Pressure				
Load.....percent of Maximum Capacity	25	50	25	50	75	100	105
Flue gas pressures:							
In furnace.....in. of water	0	0	0	0	0	0	0
Leaving furnace.....in. of water	-0.0	-0.0	-0.0	-0.0	-0.1	-0.1	-0.1
Entering economizer.....in. of water							
Leaving economizer.....in. of water	-0.9	-1.5	-1.0	-1.5	-2.4	-2.7	-3.1
Entering primary air heater.....in. of water	-1.6	-2.4	-1.7	-2.4	-3.7	-4.1	-4.6
Entering secondary air heater.....in. of water	-1.6	-2.4	-1.7	-2.4	-3.7	-4.1	-4.6
Leaving primary air heater.....in. of water	-2.0	-3.4	-2.2	-3.4	-5.2	-6.0	-6.4
Leaving secondary air heater.....in. of water	-2.2	-3.9	-2.3	-3.9	-6.2	-7.9	-8.8
Flue gas temperatures:							
Leaving furnace (12" SS).....F	1190	1480	1170	1470	1650	1780	1815
Entering superheater (24" SS).....F	1375	1740	1360	1725	1940	2075	2115
Entering reheater (PENDANT).....F	1092	1330	1064	1325	1480	1590	1625
Entering economizer.....F	589	710	653	723	773	828	848
Leaving economizer.....F	581	654	554	653	694	724	740
Entering primary air heater.....F	581	654	554	653	694	724	740
Entering secondary air heater.....F	581	654	554	653	694	724	740
Leaving primary air heater (Incl LKG)F	200	278	237	277	280	280/280	280
Leaving secondary air heater (Incl LKG)F	211	237	203	237	263	276/280	280

7 Mills/8 Mills

IP14_000962

	Hybrid		Constant Pressure				
Load.....percent of Maximum Capacity	25	50	25	50	75	100	105
Excess air:							
Leaving furnace.....percent	42	27	42	27	19.3	16	16
Leaving economizer.....percent	43	28	43	28	20.3	17	17
Leaving primary air heater.....percent	64*	39*	63*	39*	29*	26*	26*
Leaving secondary air heater...percent							
					* Pri. and Sec. AH's combined		
Emission concentrations:							
Dust loading lvg. Ah's-grains/SCF	4.73	5.52	4.74	5.51	5.88	6.04	6.04
Dust loading leaving economizer.....grains/SCF	5.37	5.94	5.37	5.94	6.29	6.44	6.44
SO_2 concentration leaving economizer.....ppm	8.7	9.3	8.5	9.3	9.9	10.1	10.1
NO_x leaving economizer.....lb/MMBtu	---	---	Maximum of 0.55 lb/MKB		---	---	---
NO_x leaving air heaters.....lb/MMBtu	Maximum of 0.55 lb/MKB (corrected for leakage) across load range.						
Heat absorbed by Boiler:							
					**H_2 and H_2O combined		
Losses:							
Hydrogen in fuel.....percent	4.93	5.10	4.89	5.10	5.13	5.15	5.16**
Moisture in fuel.....percent	---	---	---	---	---	---	---
Moisture in air.....percent	.05	0.06	0.05	0.06	.06	0.07	0.07
Dry gas.....percent	3.63	4.57	3.42	4.57	4.74	4.84	4.98
Combustible in refuse.....percent	0.20	0.20	0.20	0.20	0.20	0.20	0.20
Radiation.....percent	0.57	0.30	0.58	0.30	0.21	0.17	0.15
Unaccount & mfg margin.....percent	1	1	1	1	1	1	1
Total heat absorbed.....percent	10.38	11.23	10.14	11.23	11.34	11.43	11.56
Boiler Efficiency (Per ASME PTC 4.1 abbrev. test method)	89.63	88.78	89.87	88.78	88.67	88.58	88.45
Fuel efficiency (with heat credits)	89.72	88.88	89.96	88.87	88.76	88.67	88.54

IP14_000963

	Hybrid		Constant Pressure				
Load.....percent of Maximum Capacity	25	50	25	50	75	100	105
Power input to motors:							
Number of pulverizers operating.....	2	5	2	5	6	7	7
Pulverizer motors.....kW	886	1904	876	1886	2494	3048	3152
Number of primary air fans operating.....	1	1	1	1	2	2	2
Primary air fan motors.....kW	1098(.920)	1341(.935)	1058(.920)	1325(.935)	2132(.933)	2447(.934)	2549(.935)▲
Number of coal feeders operating.....	2	5	2	5	6	7	7
Coal feeder motors.....kW	3	8	3	8	10	11	11*
Number of boiler circulation pumps operating.....	N/A	N/A	N/A	N/A	N/A	N/A	N/A
Boiler ciculation pump motors.....kW	N/A	N/A	N/A	N/A	N/A	N/A	N/A
All other motors.....kW	103	128	103	128	133	138	138**

* Based on Merrick Feeders

** Seal Air Fans and Regenerative Air Heaters
(Two 24-1/2 VI 44 Primary and Two 33-1/2 VI 64 Secondary's)

▲ Westinghouse Two Speed Fans (23120D) with Two Speed Motors.

( ) Indicates Expected Motor Efficiency

IP14_000964

	Based on 7 Mills in Operation	
	Coal Reserve B and F*	Coal Reserve F
Boiler efficiency.....percent	88.82	87.07
Total pressure loss from the air heater air inlet to the furnace.....in. of water	5.3	5.4
Total pressure loss from the furnace to the air heater flue gas outlet.....in. of water	8.3	8.8
Excess air at the economizer outlet.....percent	17	17
Excess air at the air heater gas outlet.....percent	26	26
Dust loading in the flue gas leaving the economizer.....grains/scf	5.21	3.96
Capacity with only 2 pulverizers in service.....percent Maximum Capacity	30	29
Capacity with only 2 pulverizers cut of service.....percent Maximum Capacity	100	97
Air flow rates:		
Theoretical air for combustion....Mlb/hr	5781	5880
Total air for combustion including excess air.....Mlb/hr	6651	6762
Air from primary air fans.....Mlb/hr	1533	1600
Tempering air.....Mlb/hr	246	142
Air from primary air heaters excluding tempering air.....Mlb/hr	1111	1260
Air from forced draft fans.....Mlb/hr	5693	5763
Sealing air, from tempering air duct.....Mlb/hr	77	77
Air to secondary air heaters.....Mlb/hr	5693	5763
Air from secondary air heaters....Mlb/hr	5371	5437

* Mixture of coals from Coal Reserves B and F on an equal weight basis.

IP14_000965

		Based on 7 Mills in Operation	
		Coal Reserve B and F*	Coal Reserve F
Air pressures:			
Air from primary air fans	in. cf water	36.8	39.2
Air to primary air heaters	in. cf water	33.9	36.1
Air from primary air heaters	in. cf water	32.1	34.1
Air to secondary air heaters	in. of water	5.3	5.4
Air from secondary air heaters	in. of water	3.1	3.2
Air at windbox	in. cf water	1.1	1.1
Air temperatures:			
Minimum ambient temperature not requiring air preheating	F	155F average air heater cold end temperature required	
Air to secondary air heaters	F	65	65
Air from secondary air heaters	F	632	628
Air from primary air heaters excluding tempering air	F	542	536
Air to pulverizers	F	452	487
Flue gas flow rates:			
Leaving economizer	Mlb/hr	7456	7627
Leaving primary air heaters	Mlb/hr	1226	1381
Leaving secondary air heaters	Mlb/hr	6730	6770
Flue gas pressures:			
Leaving economizer	in. cf water	-4.3	-4.5
Leaving primary air	in. cf water	-6.5	-7.2
Leaving secondary air heaters	in. cf water	-9.3	-9.4

* Mixture of coals from Coal Reserves B and F on an equal weight basis.

IP14_000966

	Based on 7 Mills in Operation	
	Coal Reserve B and F*	Coal Reserve F
Flue gas temperatures:		
Leaving economizer.....F	723	723
Leaving primary air heaters, corrected.....F	279	281
Leaving secondary air heaters, corrected.....F	273	272

	Based on 2 Mills in Operation	
	Coal Reserve B and F*	Coal Reserve F
Flue gas exit temperature at 25 percent of Maximum Capacity:		
Leaving economizer.....F	556	557
Leaving primary air heaters.....F	274	275
Leaving secondary air heaters.....F	197	194

* Mixture of coals from Coal Reserves B and F on an equal weight basis.

12.4 Supplementary Data - Option for Burner Management Control System: In addition to the foregoing Guaranteed Data, the Contractor is furnishing the following Supplementary Data for the Burner Management Control System specified in Division G5 of the Specifications:

12.4.1 Bailey Controls Company:

Relays:

Make.....Struthers-Dunn

Model.....219

Circuit breakers:

Make....._____

Model....._____

Current rating....._____

IP14_000967

STEAM GENERATOR

per B&W

GUARANTY SUMMARY

CATEGORY	UNITS	GUAR	ACT	ACT RANGE	REMARKS
Efficiency	%	88.57	88.19	87.54 - 88.49	
SH Steam Temp	F	1005 +/-10	1005	960 - 1015	
RH Steam Temp	F	1005 +/-10	1005	950 - 1015	
SH Press Drop	PSIG	160	-		Not Available
RH Press Drop	PSIG	25	-		Not Available
Econ Prs Drop	PSIG	25	-		Not Available
Steam Solids	ppm	0.08	-		Not Tested
Air Resistance	inWC	5.2	3.81	3.18 - 5.37	
Draft Loss	inWC	7.9	7.48	6.90 - 8.62	
SH Spray	Klb/hr	335	0.0		
RH Spray	Klb/hr	0	0.0		
MCR Capacity	Klb/hr	6600	6600		
SH/RH Control Range	Klb/hr	3965	4089 3076		31 % XS Air 59 % XS Air
Excess Air Lvg AH's	%	27	25.5	25.5 - 48	Guaranty AH Lkg Assumed
Pri AH Lkg	Klb/hr	163	178	130 - 244	AH Not Ready Test
Sec AH Lkg	Klb/hr	314	488	331 - 599	AH Not Ready Test Guar IPP/APCO
NOX	lb/MKB	.55	.23	.21 - .47	
Pulv Capacity	Klb/hr	130.3	-		Assumed Met
Pulv Fineness	% 200 % 50	70 99	62 99+		43 Hg Coal vs 48 Hg Spec
Power (Major Access.)	KW	5955			Verbally OK
Dust Loading	gr/SCF	6.44	-		Not Tested
Noise/Oil Consumption	-	-	-		Not Tested

TCH-041087

TABLE I

GUARANTY SUMMARY

CATEGORY	UNITS	GUAR	ACT	ACT RANGE	REMARKS
Efficiency	%	88.57	88.19	87.54 - 88.49	
SH Steam Temp	F	1005 +/-10	1005	960 - 1015	
RH Steam Temp	F	1005 +/-10	1005	950 - 1015	
SH Press Drop	PSIG	160	-		Not Available
RH Press Drop	PSIG	25	-		Not Available
Econ Prs Drop	PSIG	25	-		Not Available
Steam Solids	ppm	0.08	-		Not Tested
Air Resistance	inWC	5.2	3.81	3.18 - 5.37	
Draft Loss	inWC	7.9	7.48	6.90 - 8.62	
SH Spray	Klb/hr	335	0.0		
RH Spray	Klb/hr	0	0.0		
MCR Capacity	Klb/hr	6600	6600		
SH/RH Control Range	Klb/hr	3965	4089 3076		31 % XS Air 59 % XS Air
Excess Air Lvg AH's	%	27	25.5	25.5 - 48	Guaranty AH Lkg Assumed
Pri AH Lkg	Klb/hr	163	178	130 - 244	AH Not Ready Test
Sec AH Lkg	Klb/hr	314	488	331 - 599	AH Not Ready Test Guar IPP/APCO
NOX	lb/MKB	.55	.23	.21 - .47	
Pulv Capacity	Klb/hr	130.3	-		Assumed Met
Pulv Fineness	% 200 % 50	70 99	62 99+		43 Hg Coal vs 48 Hg Spec
Power (Major Access.)	KW	5955			Verbally OK
Dust Loading	gr/SCF	6.44	-		Not Tested
Noise/Oil Consumption	-	-	-		Not Tested

TCH-041087

TABLE I

BABCOCK & WILCOX

CONTRACT INFORMATION SHEET

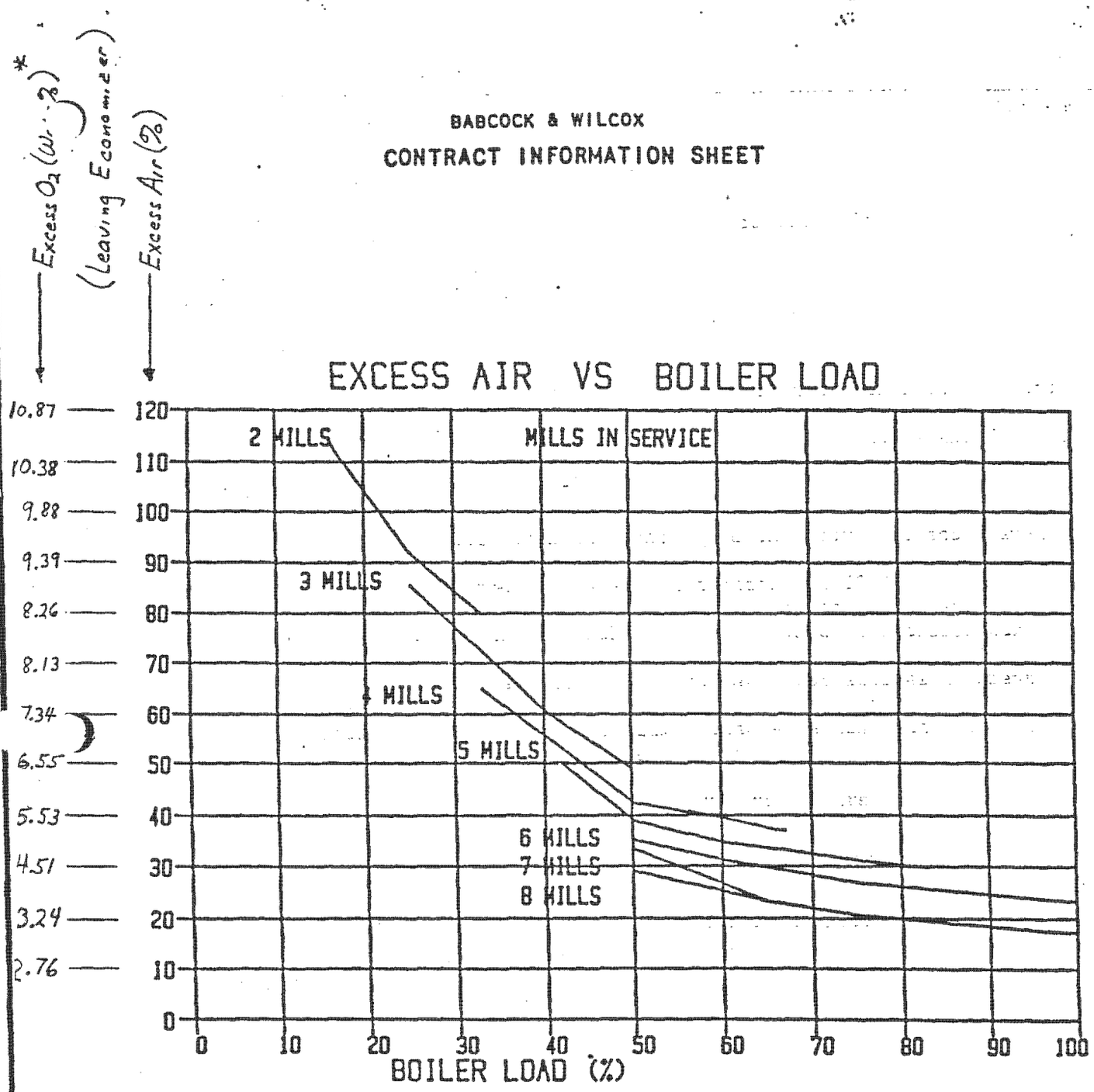

11/20/86

* Based On IPSC Analysis Of Sample Taken 10-14-86 (Ult. By Wyoming Anal. Labs # 2082)

THESE CURVES ARE SUBMITTED FOR THE PURCHASER'S CONVENIENCE AND THE PERFORMANCE INDICATED THEREON SHALL NOT BE OFFERED BY THE COMPANY OR CONSTRUED BY THE PURCHASER AS A PROPOSAL OR CONTRACT OBLIGATION.

DRAWN BY	DATE	APPROVED BY	DATE	A.O.
JAJ	6-17-86	FMA	6-17-86	

REL. NO. AND DATE	CONTRACT NO.	FILE NO.
	334-0614	RB-614

TITLE — EXCESS AIR VS. BOILER LOAD

CIS— 101.02A

IP14_000970

K+E 5 X 5 TO THE CENTIMETER 18 X 24 CM.
KEUFFEL & ESSER CO. MADE IN U.S.A.

46 1610

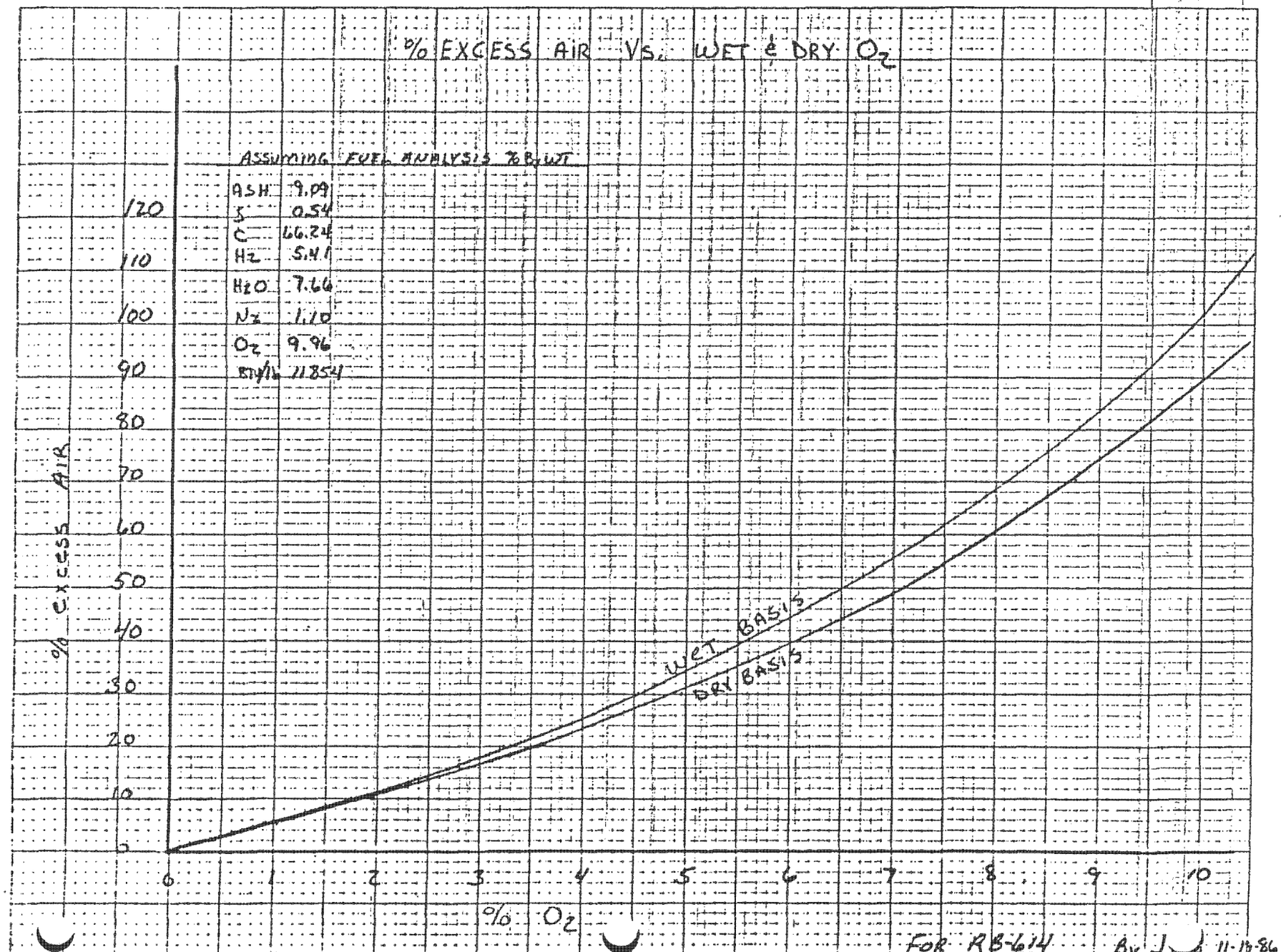

IP14_000971

PG 896 4

Babcock & Wilcox

CONTRACT INFORMATION SHEET

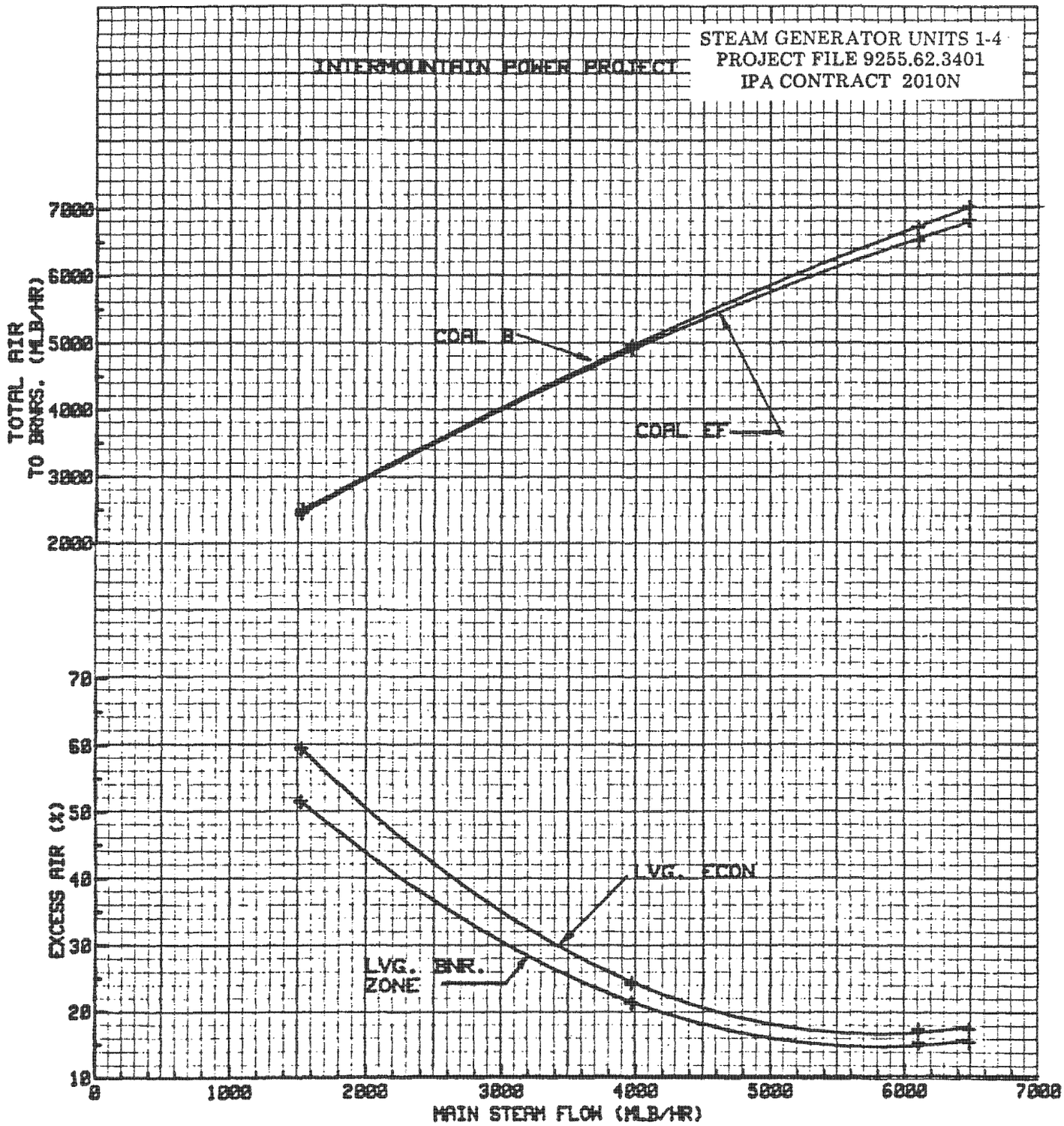

THESE CURVES ARE SUBMITTED FOR THE PURCHASER'S CONVENIENCE AND THE PERFORMANCE INDICATED THEREON SHALL NOT BE OFFERED BY THE COMPANY OR CONSTRUED BY THE PURCHASER AS A PROPOSAL OR CONTRACT OBLIGATION

DRAWN BY	DATE	APPROVED BY	DATE	A O
M. BOCK	7-21-82	RGH	7-21-82	

REL NO AND DATE	CONTRACT NO.	FILE NO
1 8-3-82	334-0614	RB-614

TITLE – AIR QUANTITIES VS. MAIN STEAM FLOW

CIS– 101.02

IP14_000972

PG 896-4

Babcock & Wilcox

CONTRACT INFORMATION SHEET

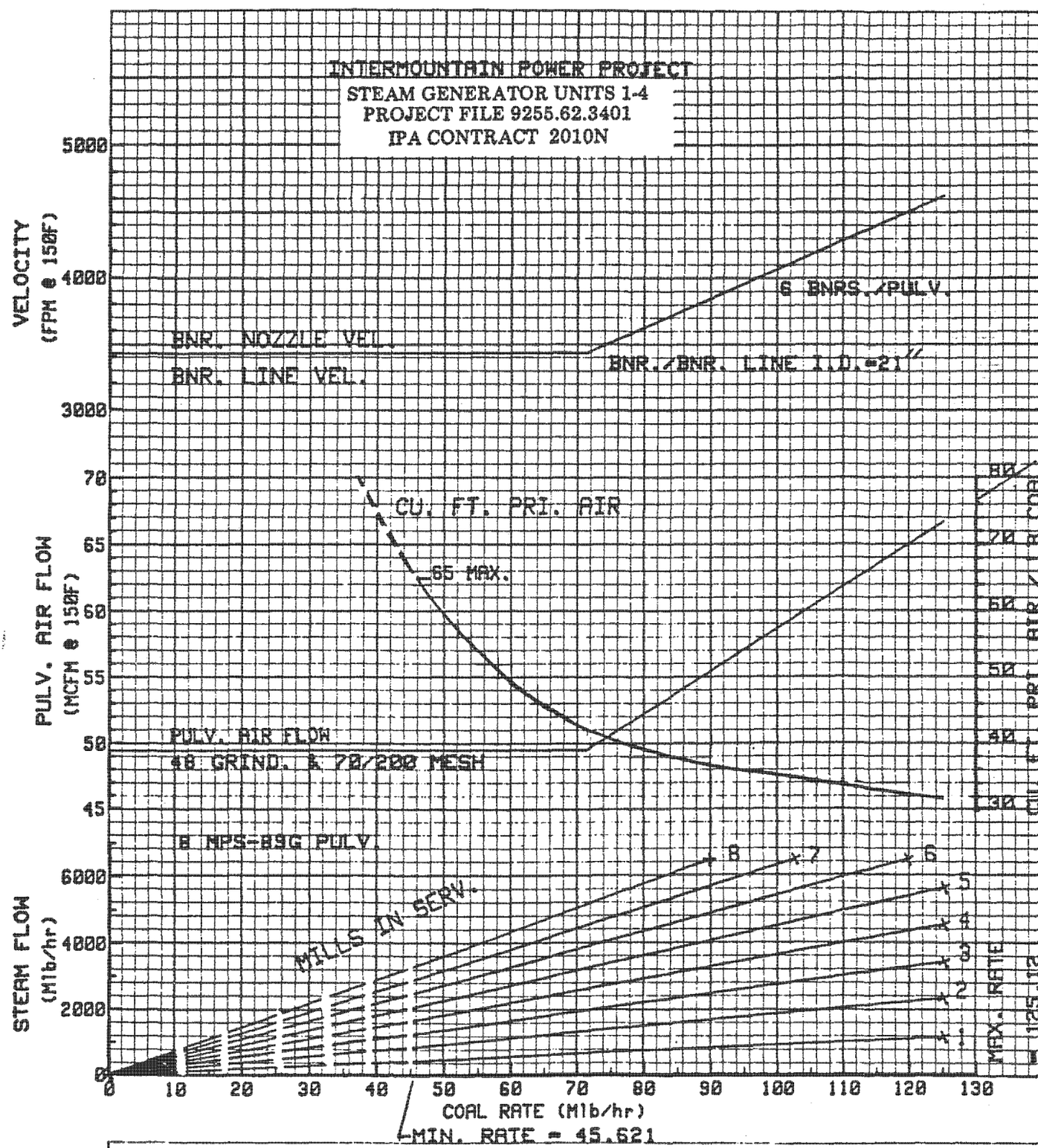

THESE CURVES ARE SUBMITTED FOR THE PURCHASER'S CONVENIENCE AND THE PERFORMANCE INDICATED THEREON SHALL NOT BE OFFERED BY THE COMPANY OR CONSTRUED BY THE PURCHASER AS A PROPOSAL OR CONTRACT OBLIGATION.

DRAWN BY	DATE	APPROVED BY	DATE	A.O.
J. NEIDERT	2-1-82	RBW	2-5-82	

REL. NO. AND DATE	CONTRACT NO	FILE NO.
1 9-8-82	334-0614	RB-614

TITLE – PULVERIZER-BURNER COORDINATION CURVES - COAL (B)

CIS– 101.05

IP14_000973

PG-1979-1

Babcock & Wilcox
GENERAL CALCULATIONS

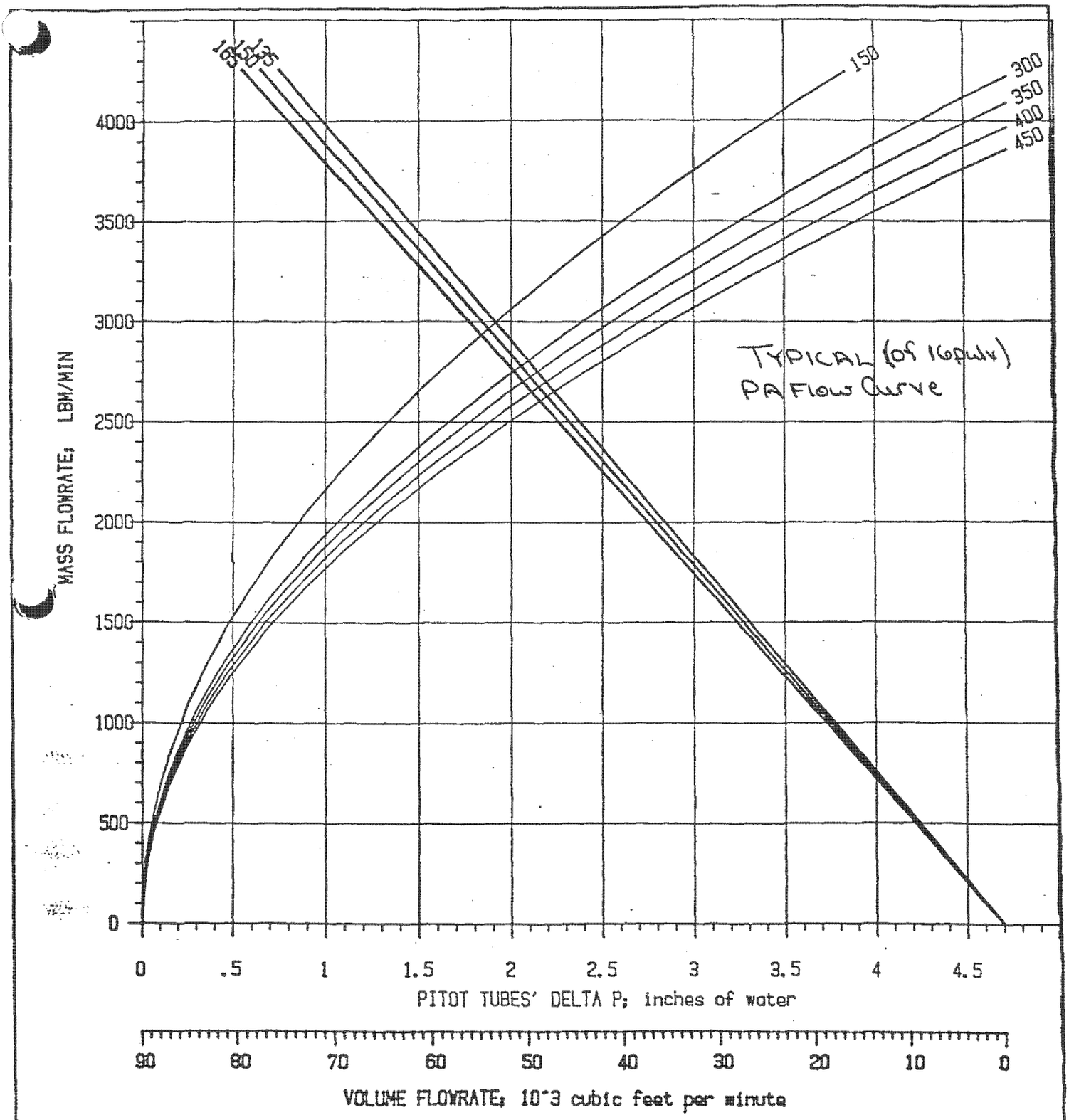

K-FACTOR = 8868 DESIGN TEMP = 350

CUSTOMER INTERMOUNTAIN POWER PROJECT		FILE NO. MILL 18	
SUBJECT PRIMARY AIR CALIBRATION	PREPARED BY RBK	DATE 4/3/87	

IP14_000974

ONE FD FAN OPERATION

Tabulation shows recommended guideline temperature for Ljungstrom air preheater to preclude seal damage during start-up and/or operation on one F.D. fan on installations with more than one F.D. fan and two or more air preheaters.

For gas entering temperature noted, maintain gas out temperature as noted, or less.		FOR TEMPERATURE ENTERING AIR HEATER OF					
		Temperature Air In = 50°F		Temperature Air In - 100°F		Temperature Air In = 150°F	
Gas Entering	Gas Out	Minimum Air Out Temperature	Maximum Air Out Temperature	Minimum Air Out Temperature	Maximum Air Out Temperature	Minimum Air Out Temperature	Maximum Air Out Temperature
401°F	350°F	100	200	150	250	200	300
450°F	350°F	150	250	200	300	250	350
500°F	350°F	200	300	250	350	300	400
550°F	350°F	250	350	300	400	350	450
600°F	350°F	300	400	350	450	400	500
650°F	350°F	350	450	400	500	450	550
700°F	350°F	400	500	450	550	500	600
750°F	350°F	450	550	500	600	550	650

For detailed instructions, see section entitled "Instructions for Placing The Air Preheater in Service".

When the inlet gas temperature is less than 400°F no special precautions are necessary insofar as damage to the air heater sealing system. However, when operating on one fan on multi-fan air heater installations, sufficient air pressure and flow should be provided so that hot air from the wind box does not flow back through the idle F.D. fan(s). A crossover duct should be provided connecting the discharge of the F.D. fans. The crossover duct should have sufficient size to handle the air-to-gas leakage of the air preheater(s), leakage of air through the idle F.D. fan(s) dampers, and the air flow through the air preheater to satisfy the above temperature guideline.

IP14_000975

The following will apply only when the unit is operated other than as a cycling unit and the air preheater seals have been set for contract temperature conditions.

Excessive Seal Wear

The air preheater seals and sealing surfaces are positioned to provide best leakage control at design load. The following operating conditions will result in excessive seal wear, thus higher leakage during normal operation:

1. Gas temperatures entering the preheater in excess of the design point.

2. Reduced air flow through the heater. The degree of seal wear increases as the air flow approaches zero. Whenever there is gas flow through the heater, air flow should also be maintained.

3. Bottled-up conditions with no air flow or gas flow, but with heat maintained in the boiler and air heater or heaters.

4. Lower than design rotor speeds while operating the air heater on an auxiliary drive can cause seal wear which will take place at rotor speeds less than 1/8 rpm. The degree of seal wear increases as the rotor speed decreases. An exception to this is during on-stream washing of the heater. See instructions for on-stream washing procedure if this method of washing is used.

5. Operation of air heater prior to its being insulated.

Rotor trip-out may occur if the seal drag is such as to overload the drive motor.

Gas temperatures of 400°F or less entering the air heater will cause no problems with regard to excessive seal wear.

IP14_000976

Guide for Bituminous Coal Firing

This guide can also be used for subbituminous and lignite coals by adjusting for the sulfur content. Refer to the text on the left for details.

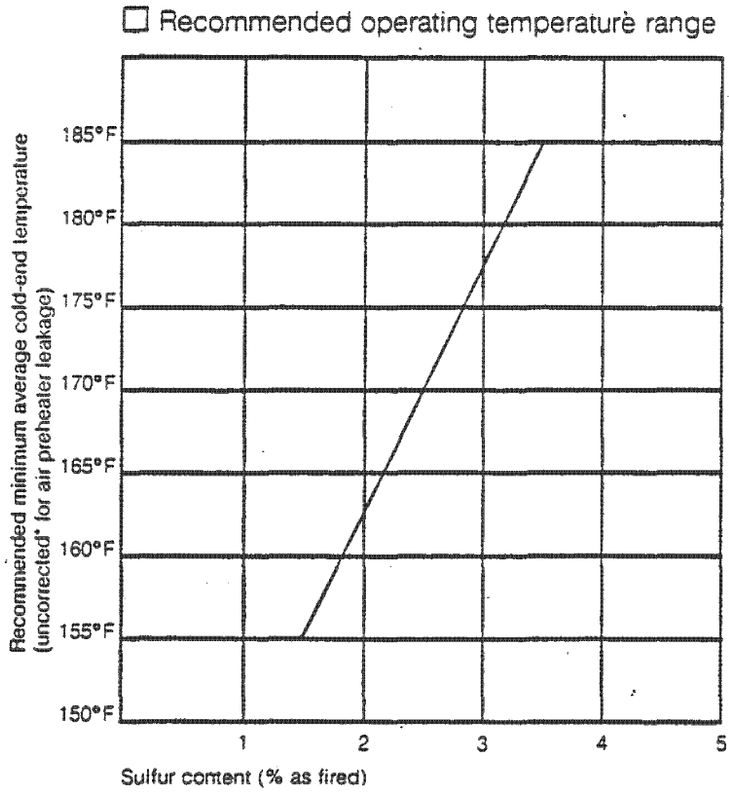

Recommended minimum average cold-end temperature

Pulverized Anthracite:	150°F
Natural Gas (sulfur-free):	150°F

Gases other than sulfur-free natural gas must be considered individually.

IP14_000977

Babcock & Wilcox

CONTRACT INFORMATION SHEET

INTERMOUNTAIN POWER PROJECT
STEAM GENERATOR UNITS 1, 2, 3 & 4
PROJECT FILE 9255.62.3401
IPA CONTRACT 2010N

Note: Flue gas temp. rise above inlet air temp. Vs. load as based on minimum expected time for ramping from cold start to 100% load. Flue gas temp. rise above inlet air temp. during steady state conditions at higher loads will be higher than that indicated below.

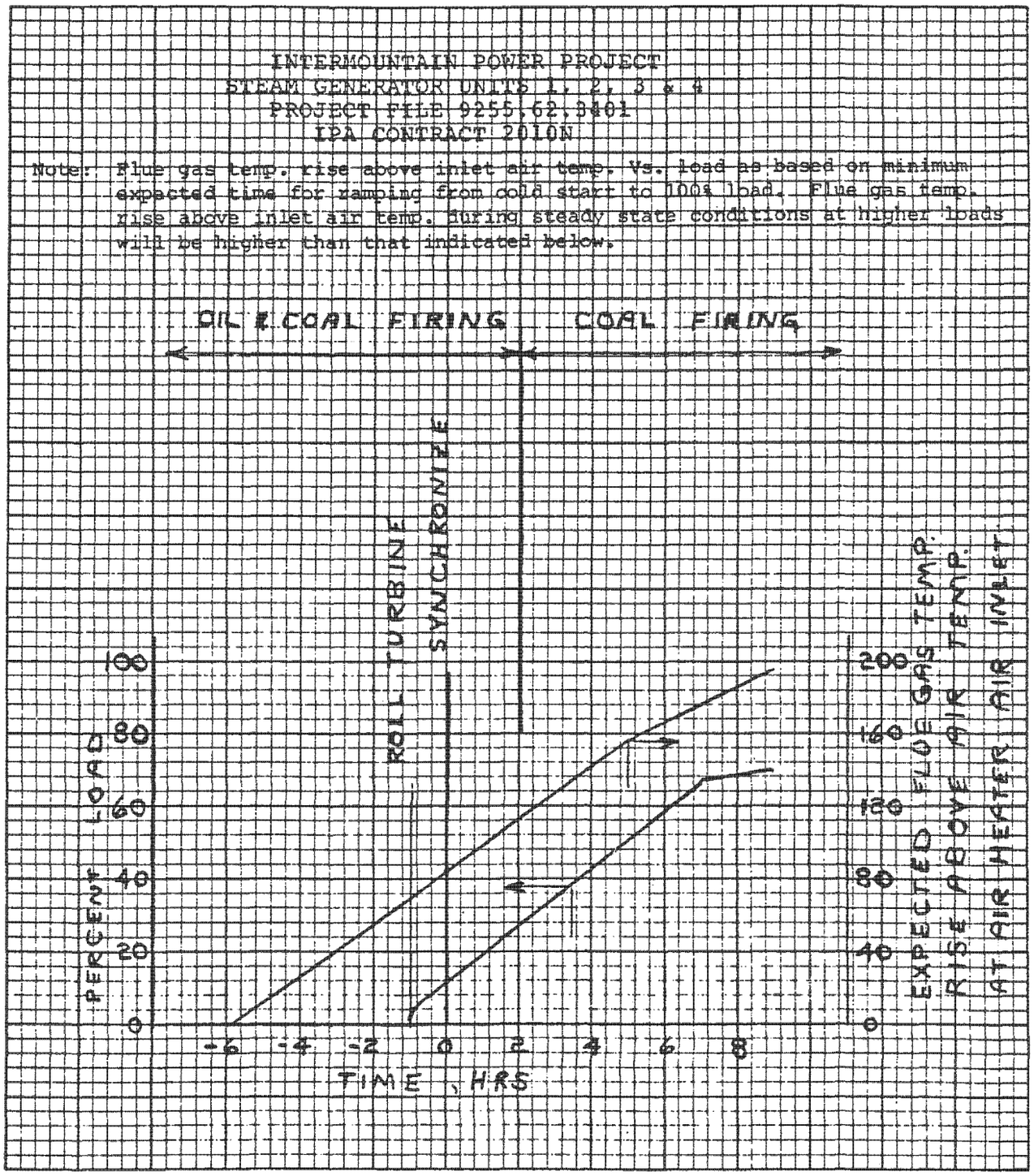

THESE CURVES ARE SUBMITTED FOR THE PURCHASER'S CONVENIENCE AND THE PERFORMANCE INDICATED THEREON SHALL NOT BE OFFERED BY THE COMPANY OR CONSTRUED BY THE PURCHASER AS A PROPOSAL OR CONTRACT OBLIGATION

DRAWN BY	DATE	APPROVED BY	DATE	A.O.
WJS	8-4-83			

REF. NO. AND DATE	CONTRACT NO.	FILE NO.
1 9-16-83 2. 10-05-83	334.0614	RB-614

TITLE – AIR HEATER GAS OUTLET TEMPERATURE VS TIME FOR TYPICAL COLD START-UP (APPROXIMATE DATA) CIS-101.09

SAHHS

91.6 AMPS MAX

I ELECTRICAL feeds

SAH 1A MOTOR MCC 1A02 Cub1C
SAH 1A Support Bearing L.O. UNIT MCC1A24 8A
SAH 1A Guide Bearing LO. UNT MCC 1A24 8B
SAH 1B MOTOR MCC 1B02 1D
SAH 1B Support BRNG LO. UNIT 1B24 3A
SAH 1B Guide BRNG LO UNIT 1B24 3B

II 1. NOTE: Secondary AIR HTR AIR MOTORS
Both AIR MOTORS START upon Command - After 5 seconds the High TORQUE AIR MOTOR STOPS and the EMERGENCY MOTOR CONTINUES TO TURN THE AIR HEATER

2. Guide and support bearing Lube oil Pumps do NOT START UNTIL Lube Oil TEMP REACHES 85°F. L.O. Pumps SHUT OFF AT 100°F

High TEMP TRIP - 345°F GAS OUTLET TEMP. from the SECONDARY AIR HEATERS

IP14_000979

PRIMARY AIR HEATERS

PAH 2A MOTOR MCC 1A02 3C
PAH 2B MOTOR MCC 1B02 3C

PAH Support Brg LO. UNIT 1A24 8C
PAH Guide " LO UNIT 1B24 3D

PAH 2B Support Brg LO UNIT 1B24 3C
PAH " Guide " " " 1A24 8D

Guide & Support Brng
L.O. Pumps NOT come on
until Temp Reaches 160°F
Shuts OFF AT 100°F decreasing

PRIMARY MAX AMPS 13.6

IP14_000980

List all dampers
control instr pts
Fox IA pts
test pts

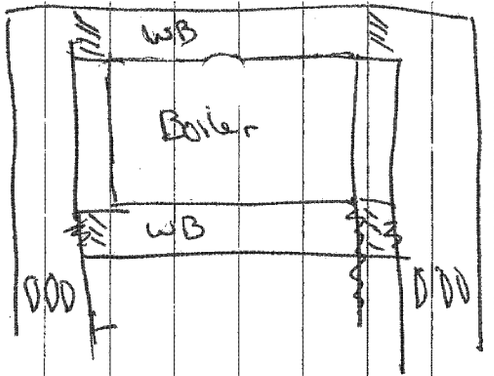

Air Side

Duct Work

→ P&ID's

Summary

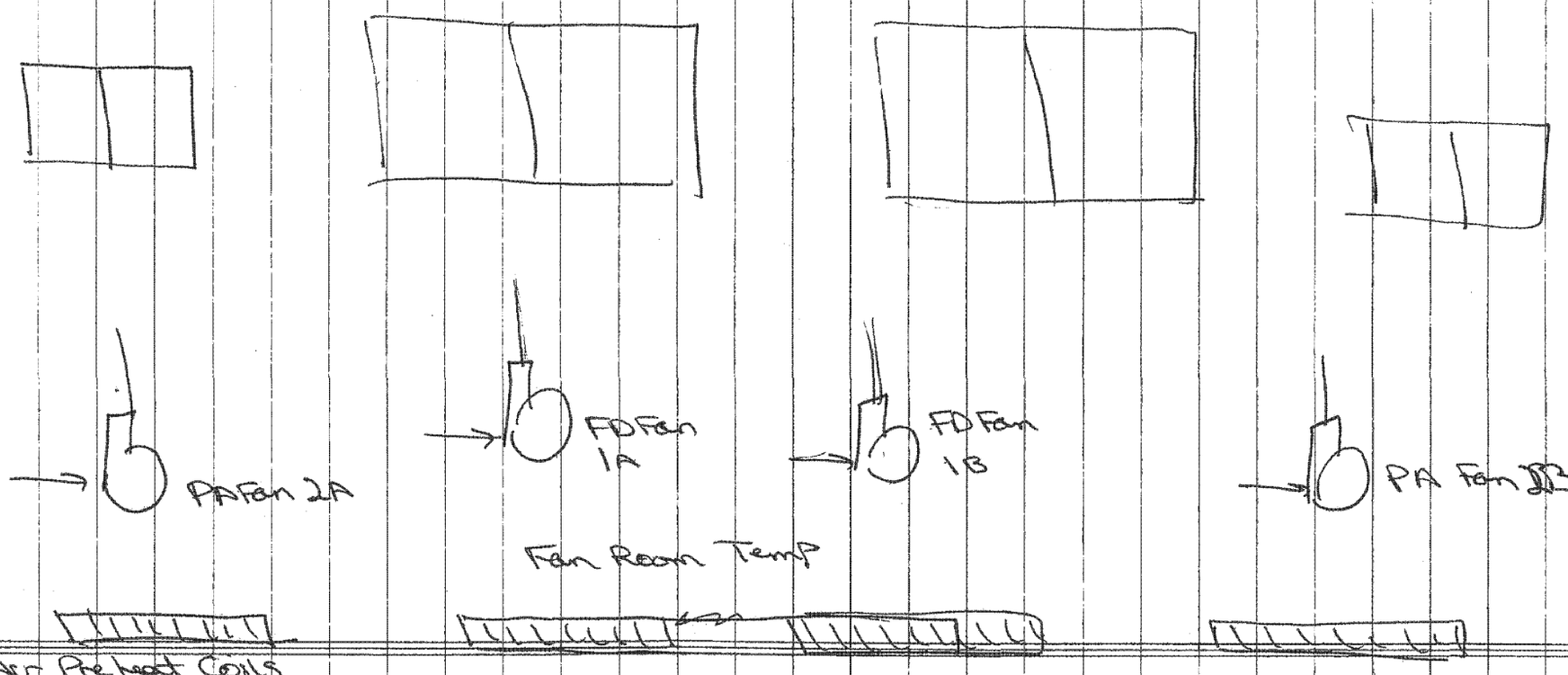

IP14_0009981

List all dampers
control str pts
Fox 1A pts
test pts

GAS SIDE
Duct Work
→ P+ID's
→ Summary

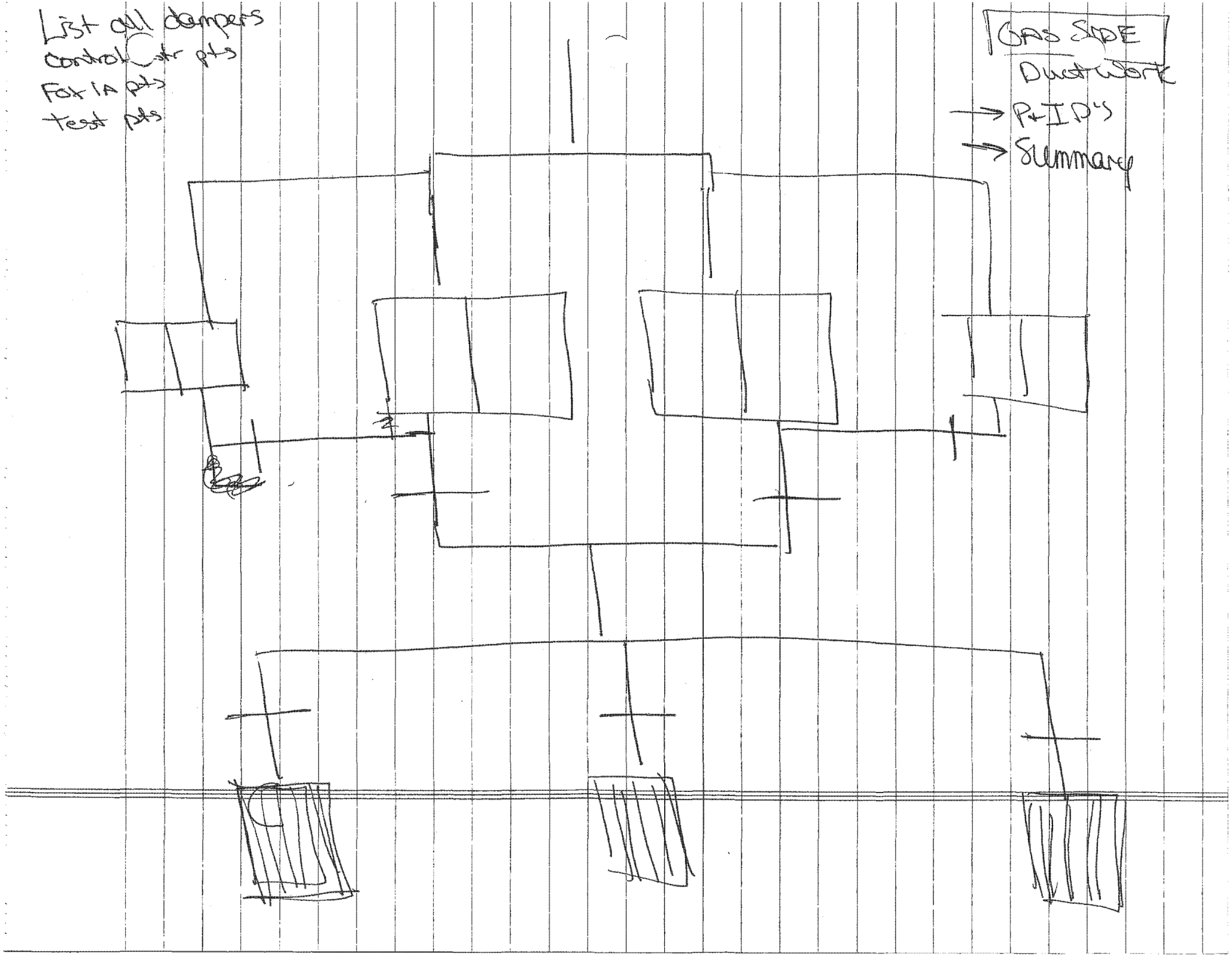

IP14_000982

BWFP 31154-1

THE BABCOCK & WILCOX COMPANY
FOSSIL POWER GENERATION DIVISION
CONTRACT INFORMATION SHEET

IPP-STEAM GENERATORS
UNITS 1 THRU 4
PROJECT FILE 925562.340
IPA CONTRACT 2010N

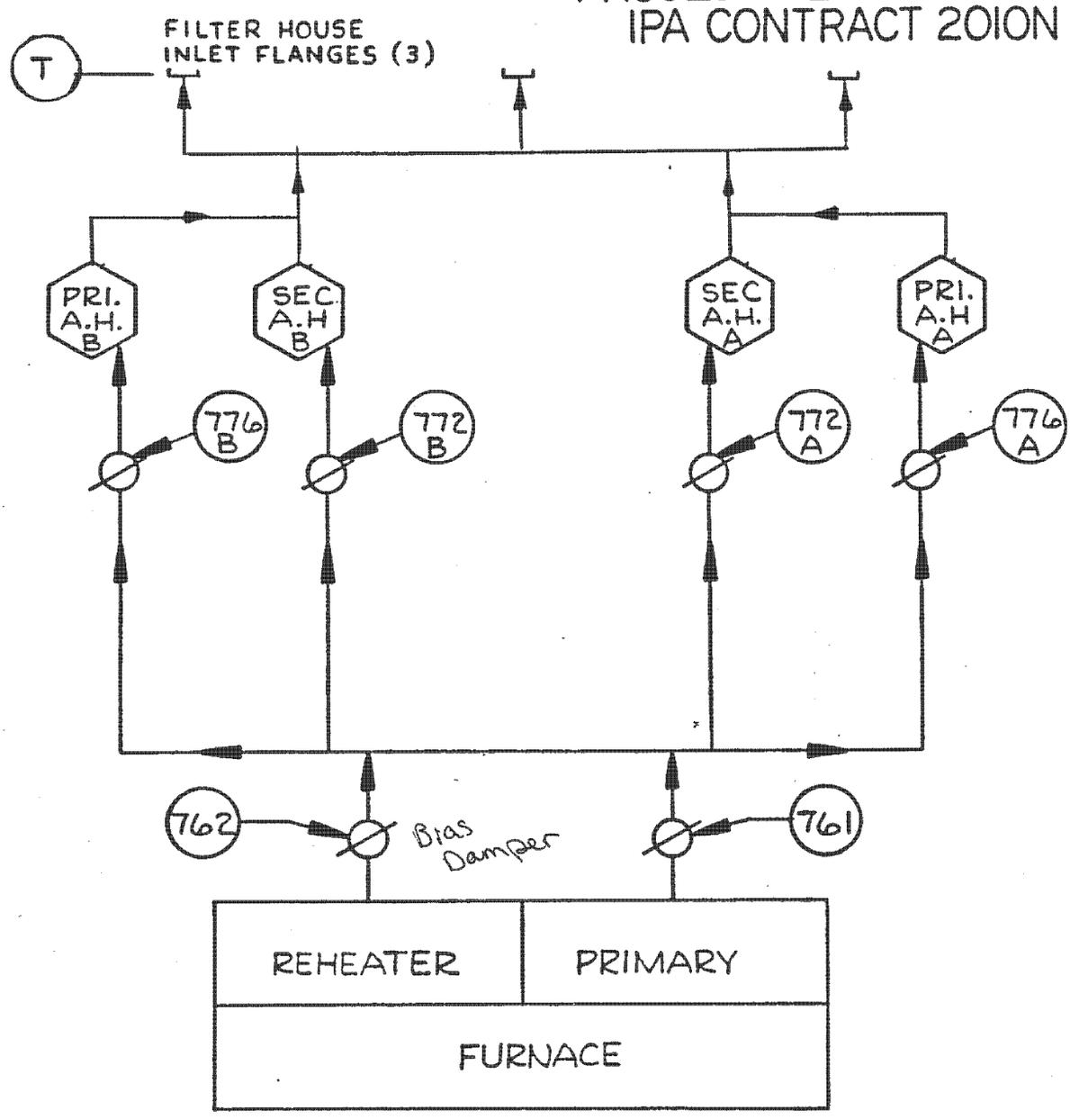

REL. NO. AND DATE 1 (8-19-81), 2 2-5-82 3 5-20-83	CONTRACT NO. 334-0614	FILE NO. RB-614

GAS SYSTEM SCHEMATIC FPGD CIS-40.1 1
5-10200

IP14_000983

BWFP 31154-1

THE BABCOCK & WILCOX COMPANY
FOSSIL POWER GENERATION DIVISION
CONTRACT INFORMATION SHEET

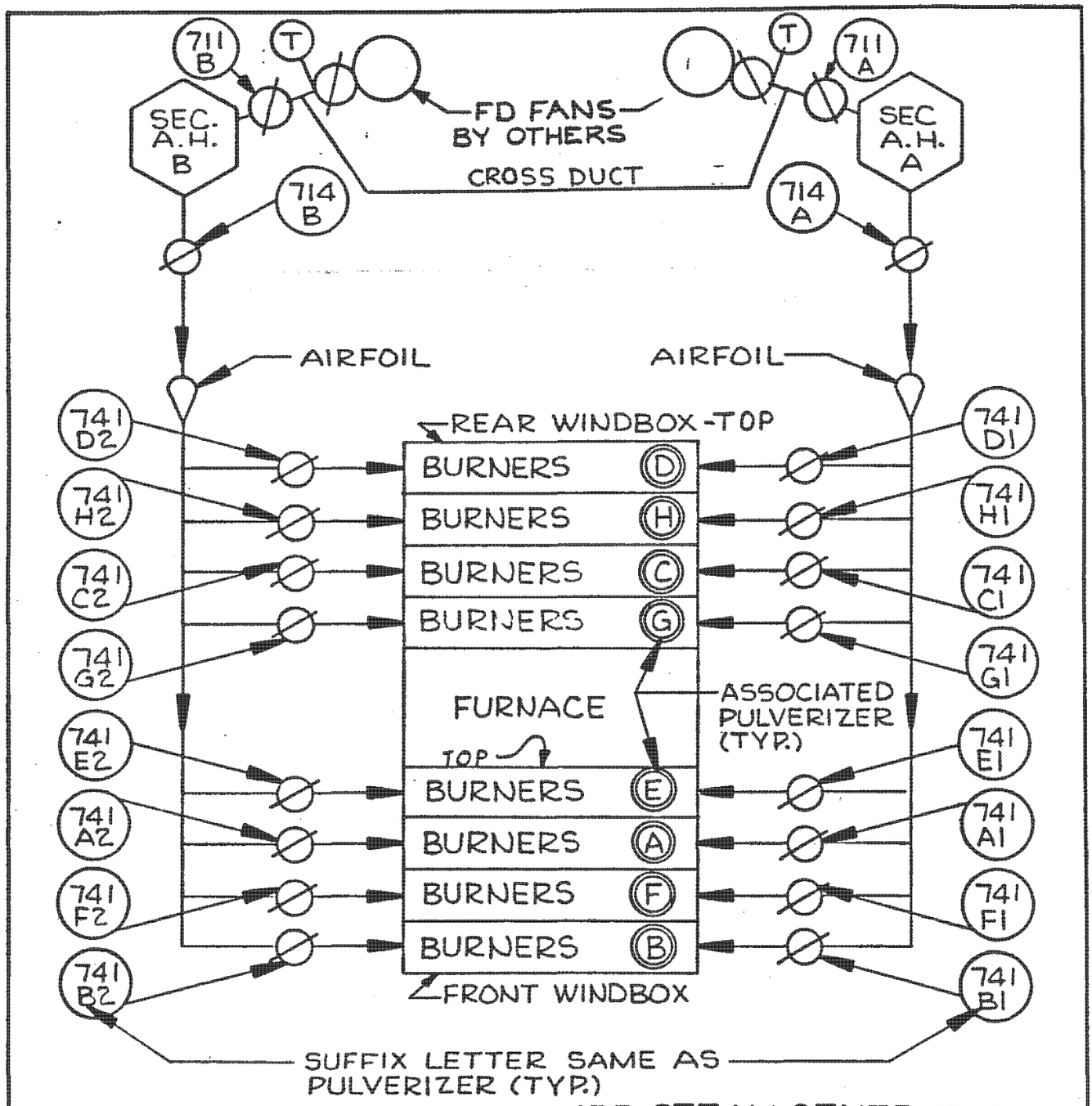

IPP-STEAM GENERATORS
UNITS 1 THRU 4
PROJECT FILE 9255.62340
IPA CONTRACT 2010N

REL. NO. AND DATE 1 (8-19-81), 2 (2-5-82) 3 9-8-82 4 5-20-83	CONTRACT NO. 334-0614	FILE NO. RB-614

SEC AIR- SYSTEM SCHEMATIC FPGD CIS-40.1 2
5-10201

IP14_000984

BWFP 31154-1

THE BABCOCK & WILCOX COMPANY
FOSSIL POWER GENERATION DIVISION
CONTRACT INFORMATION SHEET

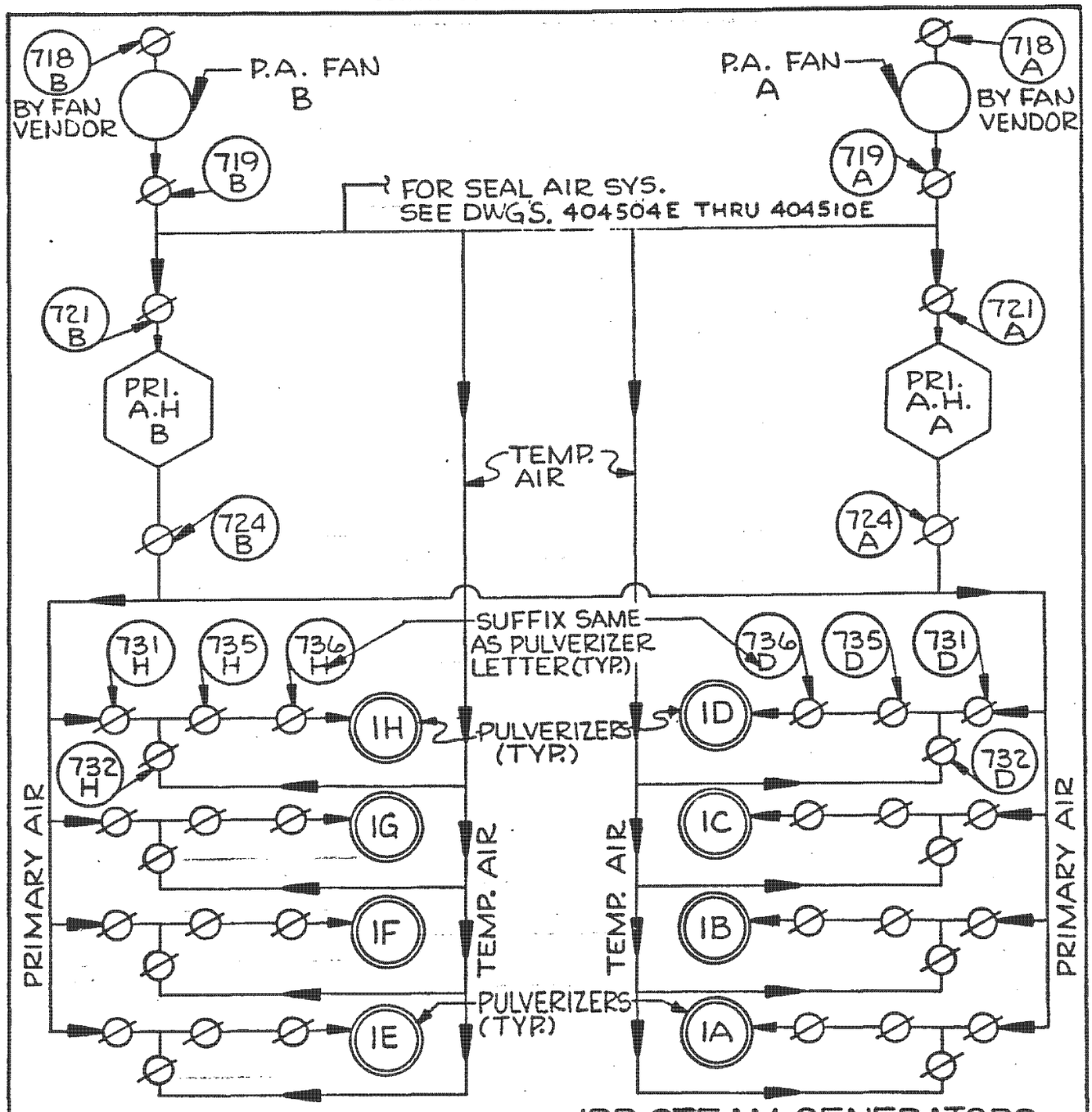

IPP-STEAM GENERATORS
UNITS 1 THRU 4
PROJECT FILE 9255.62.340
IPA CONTRACT 2010N

REL. NO. AND DATE 1 (8-19-81), 2 (2-5-82) 3 (5-20-83)	CONTRACT NO. 334-0614	FILE NO. RB-614

PRI AIR · SYSTEM SCHEMATIC FPGD CIS-40.1 3
5-10202

IP14_000985

BWFP 31154-1

BABCOCK & WILCOX
FOSSIL POWER GENERATION DIVISION
CONTRACT INFORMATION SHEET

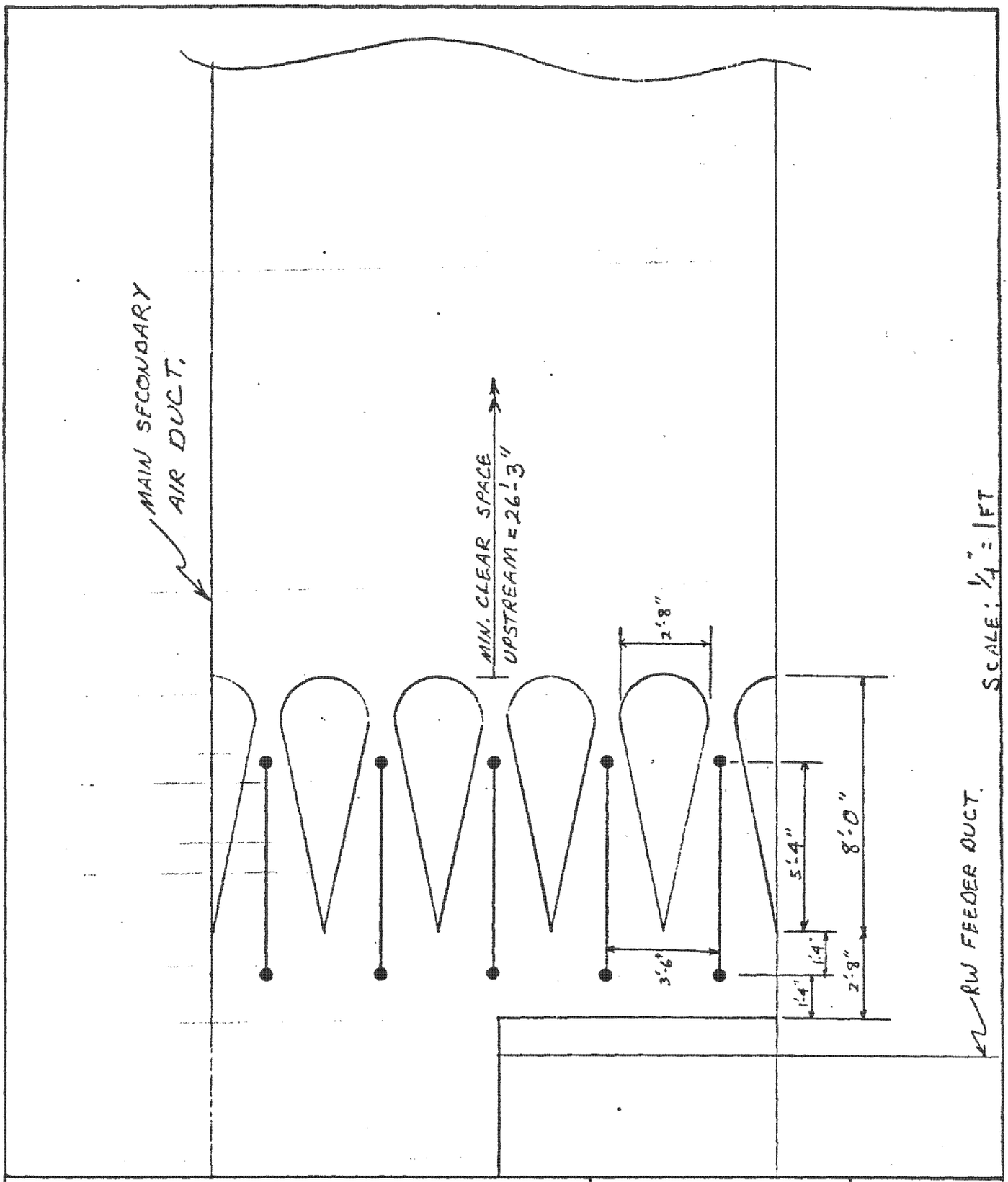

REL. NO. AND DATE	CONTRACT NO.	FILE NO.
1 2-5-82	334-0614-41	RB-614

AIR SYSTEM SCHEMATIC - AIR FOILS FPGD CIS-40.1 4

IP14_000986

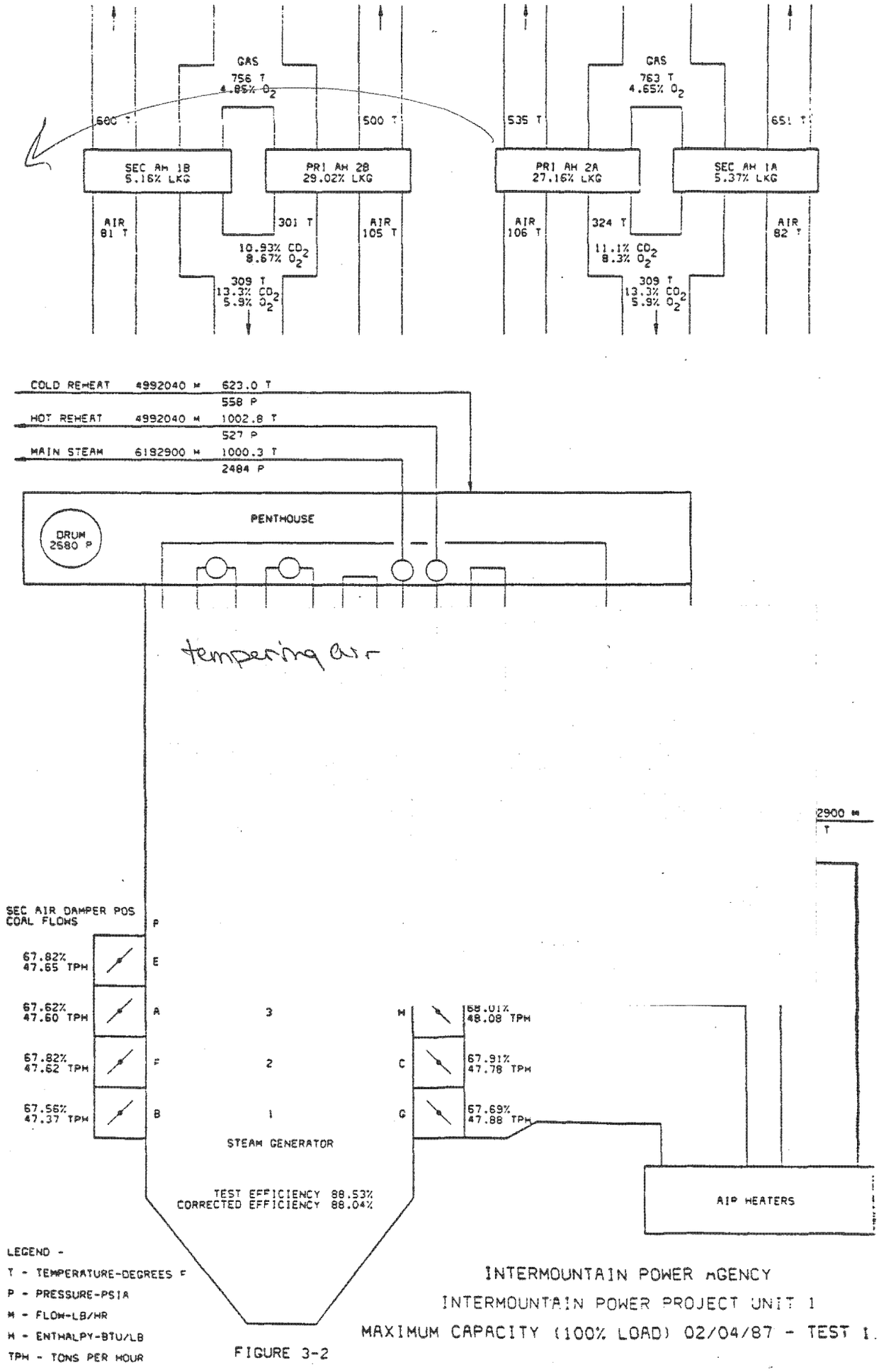
GAS
756 T
4.85% O_2
600 T
500 T
535 T
651 T
SEC AH 1B
5.16% LKG
PRI AH 2B
29.02% LKG
PRI AH 2A
27.16% LKG
SEC AH 1A
5.37% LKG
AIR
81 T
301 T
AIR
105 T
10.93% CO_2
8.67% O_2
309 T
13.3% CO_2
5.9% O_2
GAS
763 T
4.65% O_2
AIR
106 T
324 T
AIR
82 T
11.1% CO_2
8.3% O_2
309 T
13.3% CO_2
5.9% O_2
COLD REHEAT 4992040 M 623.0 T
558 P
HOT REHEAT 4992040 M 1002.8 T
527 P
MAIN STEAM 6182900 M 1000.3 T
2484 P
PENTHOUSE
DRUM
2680 P
tempering air
2900 M
T
SEC AIR DAMPER POS
COAL FLOWS
P
67.82%
47.65 TPH
E
67.62%
47.60 TPH
A
3
M
68.01%
48.08 TPH
67.82%
47.62 TPH
F
2
C
67.91%
47.78 TPH
67.56%
47.37 TPH
B
1
G
67.69%
47.88 TPH
STEAM GENERATOR
TEST EFFICIENCY 88.53%
CORRECTED EFFICIENCY 88.04%
AIR HEATERS
LEGEND -
T - TEMPERATURE-DEGREES F
P - PRESSURE-PSIA
M - FLOW-LB/HR
H - ENTHALPY-BTU/LB
TPH - TONS PER HOUR
INTERMOUNTAIN POWER AGENCY
INTERMOUNTAIN POWER PROJECT UNIT 1
MAXIMUM CAPACITY (100% LOAD) 02/04/87 - TEST 1

FIGURE 3-2

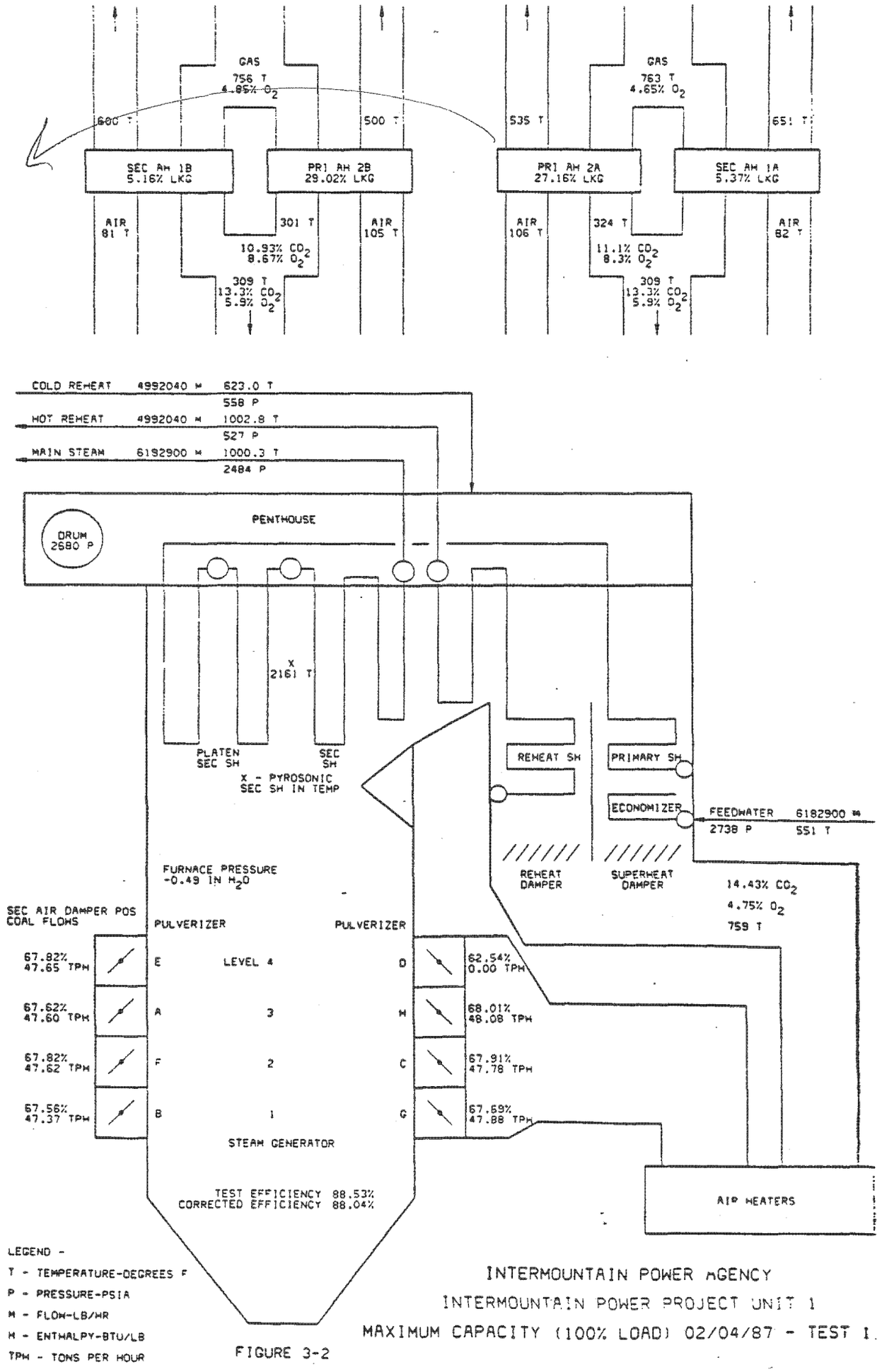

INTERMOUNTAIN POWER AGENCY
INTERMOUNTAIN POWER PROJECT UNIT 1
MAXIMUM CAPACITY (100% LOAD) 02/04/87 - TEST 1

FIGURE 3-2

Unit #2

UNDER SOFTWARE LOCK 11/22/97 14:01:38 MAIN

SGB004 SUBSYSTEM - SECONDARY AIR HEATERS PG 5 OF 5

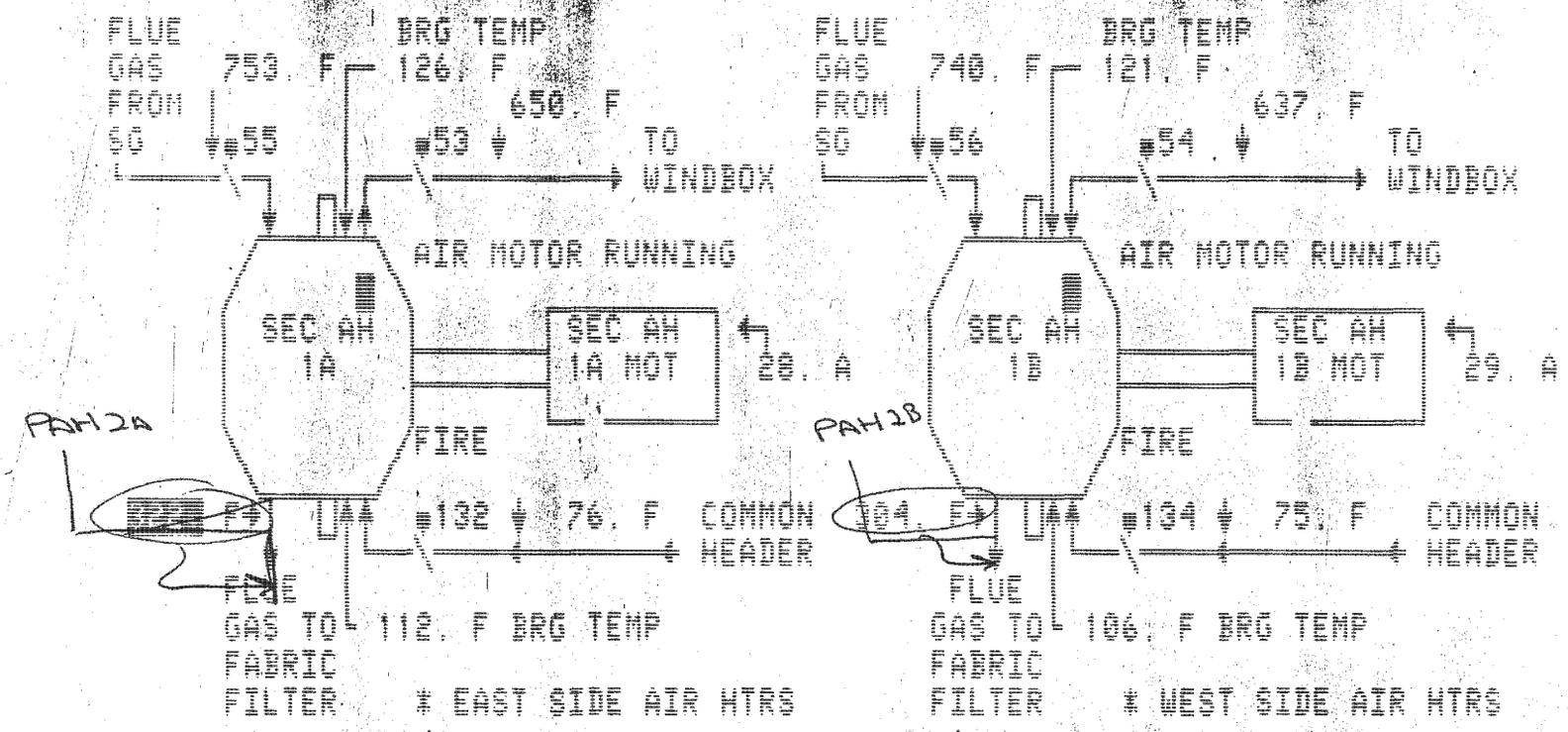

Clean up: air side
gas side (split)
air motors
bearing temps

Perf Monitoring
Calcs

Measurement Displays

Operator Guidance

Unit #2

UNDER SOFTWARE LOCK 11/22/87 13:59:27 MAIN

SGBG06 SUBSYSTEM - PRIMARY AIR HEATERS PG 6 OF 6

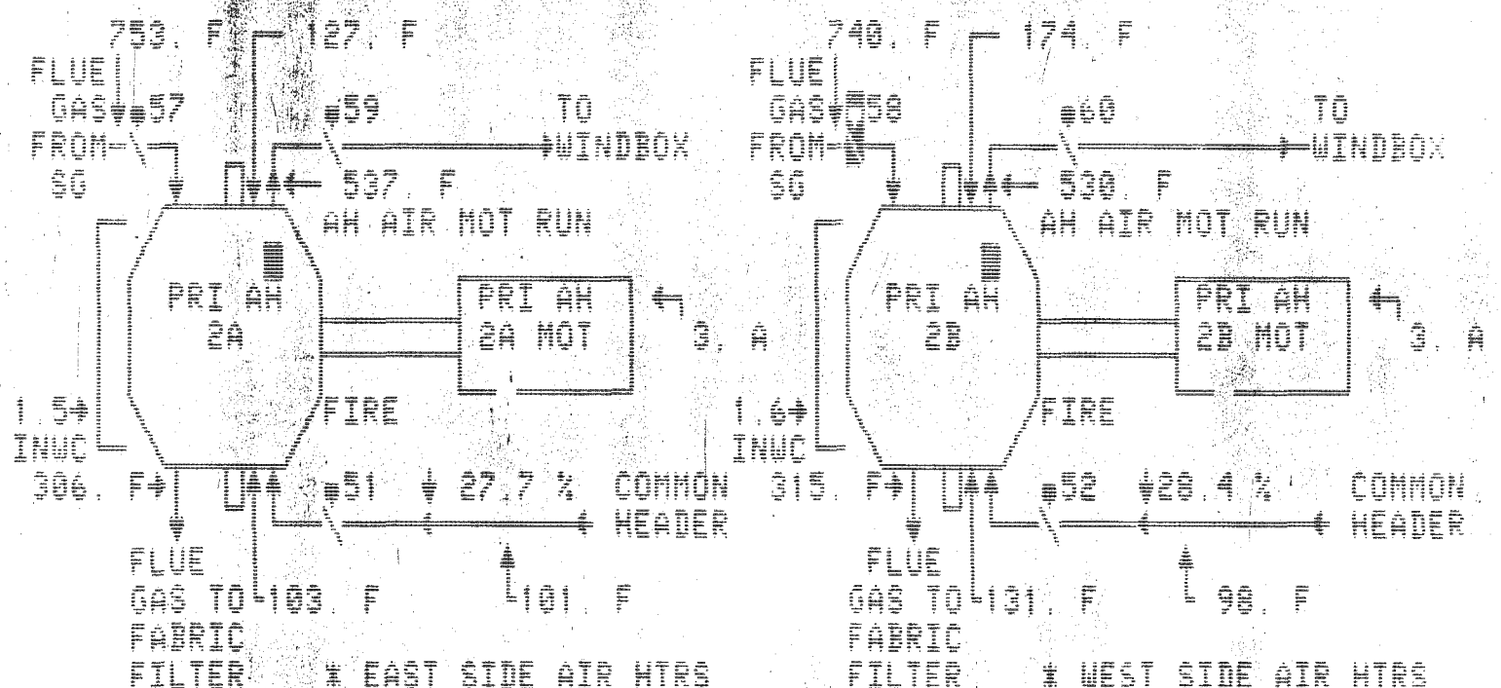

* Sec Air Htrs * Prim Air

FORWARD PAGING SGBG06

IP14_000990

Unit #2

UNDER SOFTWARE LOCK 11/22/87 13:59:55 MAIN

SGBG07 SUBSYSTEM - EAST SIDE AIR HEATERS

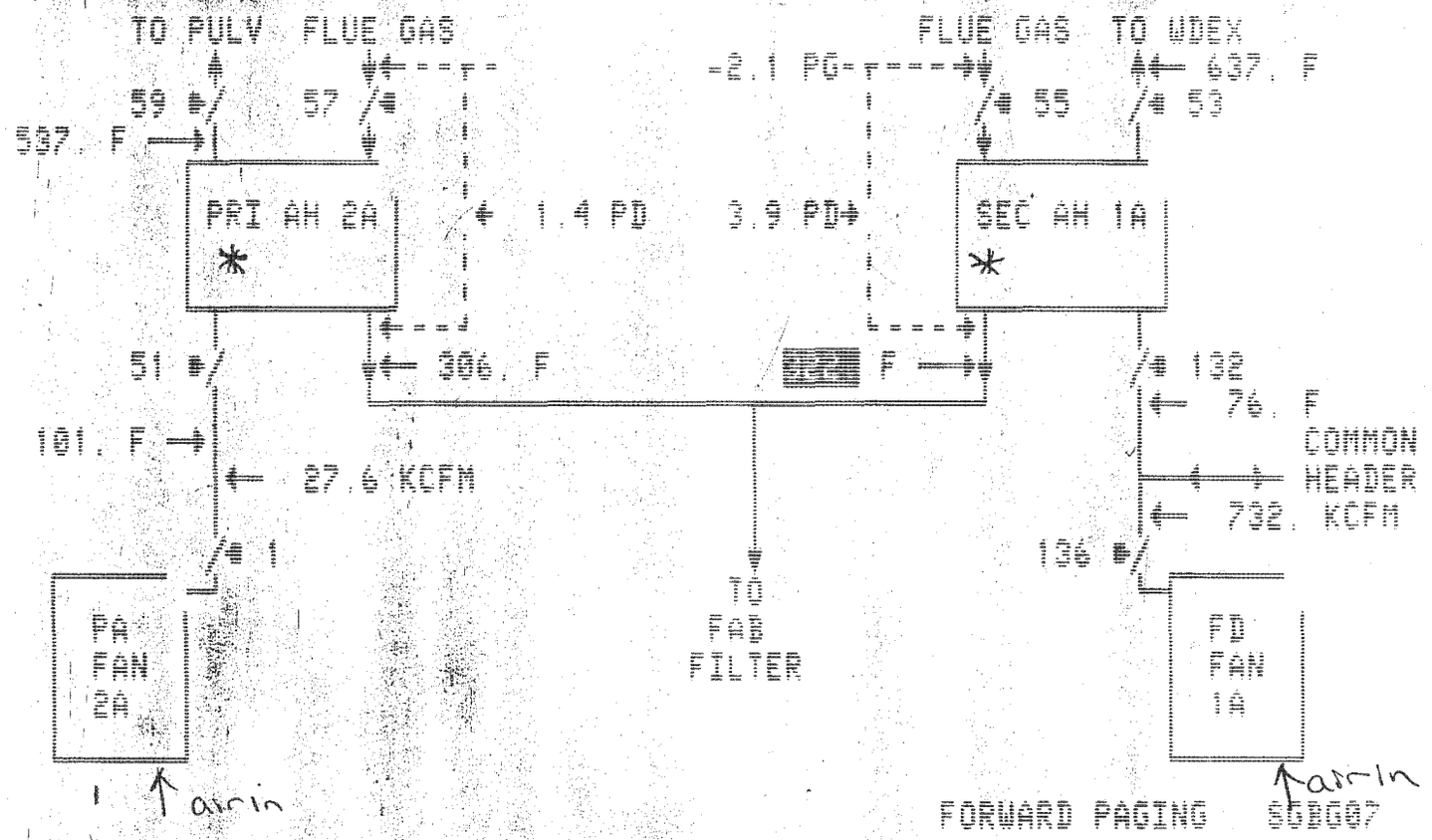

add poke pts

IP14_000991

Unit #2

UNDER SOFTWARE LOCK 11/22/87 14:00:30 MAIN

SGBG08 SUBSYSTEM - WEST SIDE AIR HEATERS

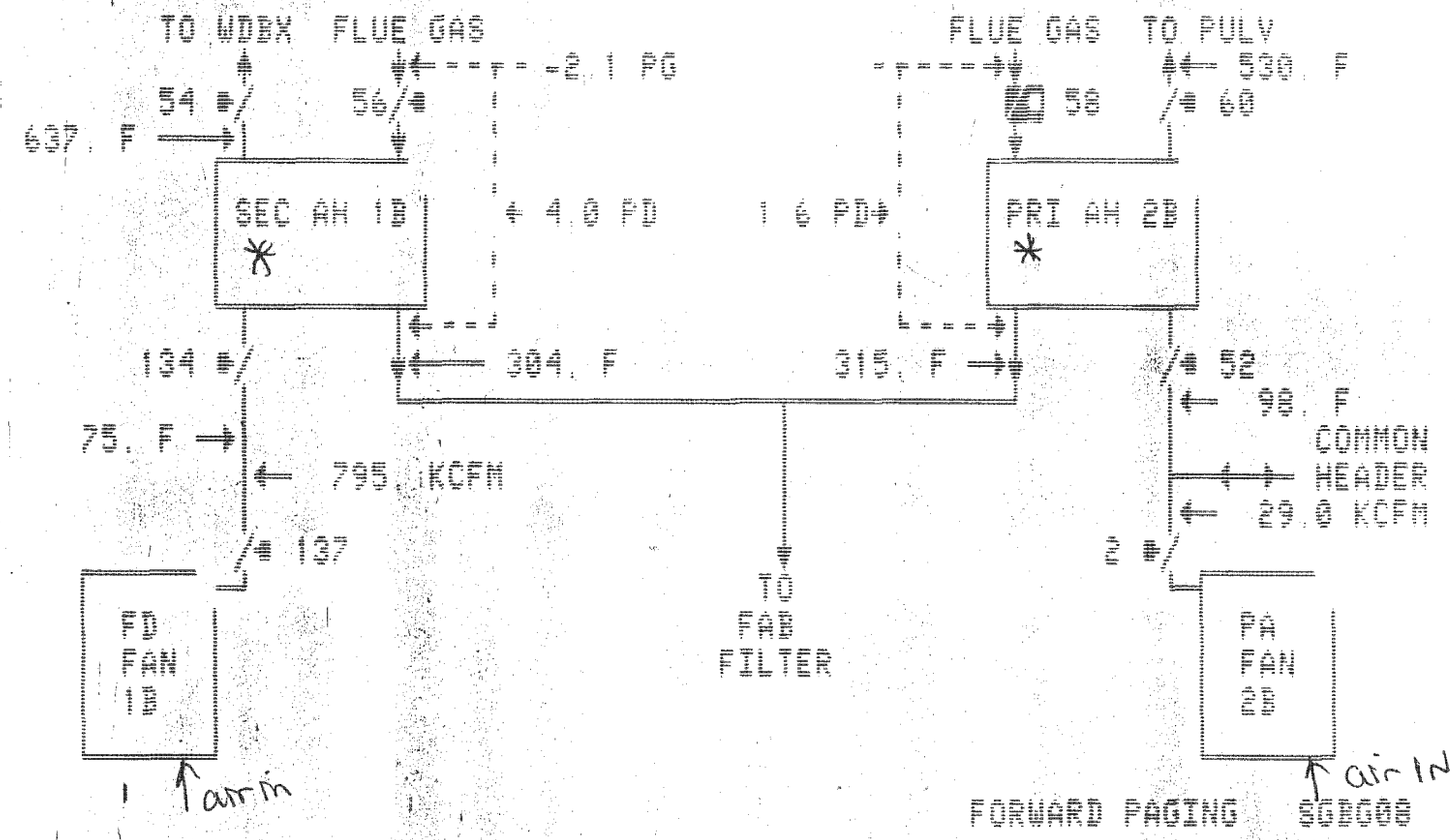

FORWARD PAGING SGBG08

Add pokepts

IP14_000992

Unit #2

UNDER SOFTWARE LOCK 11/22/87 14:01:13 MAIN
UNIT LOAD 848. MW SGBG01 SYSTEM - COMBUSTION AIR PG 1 OF 5

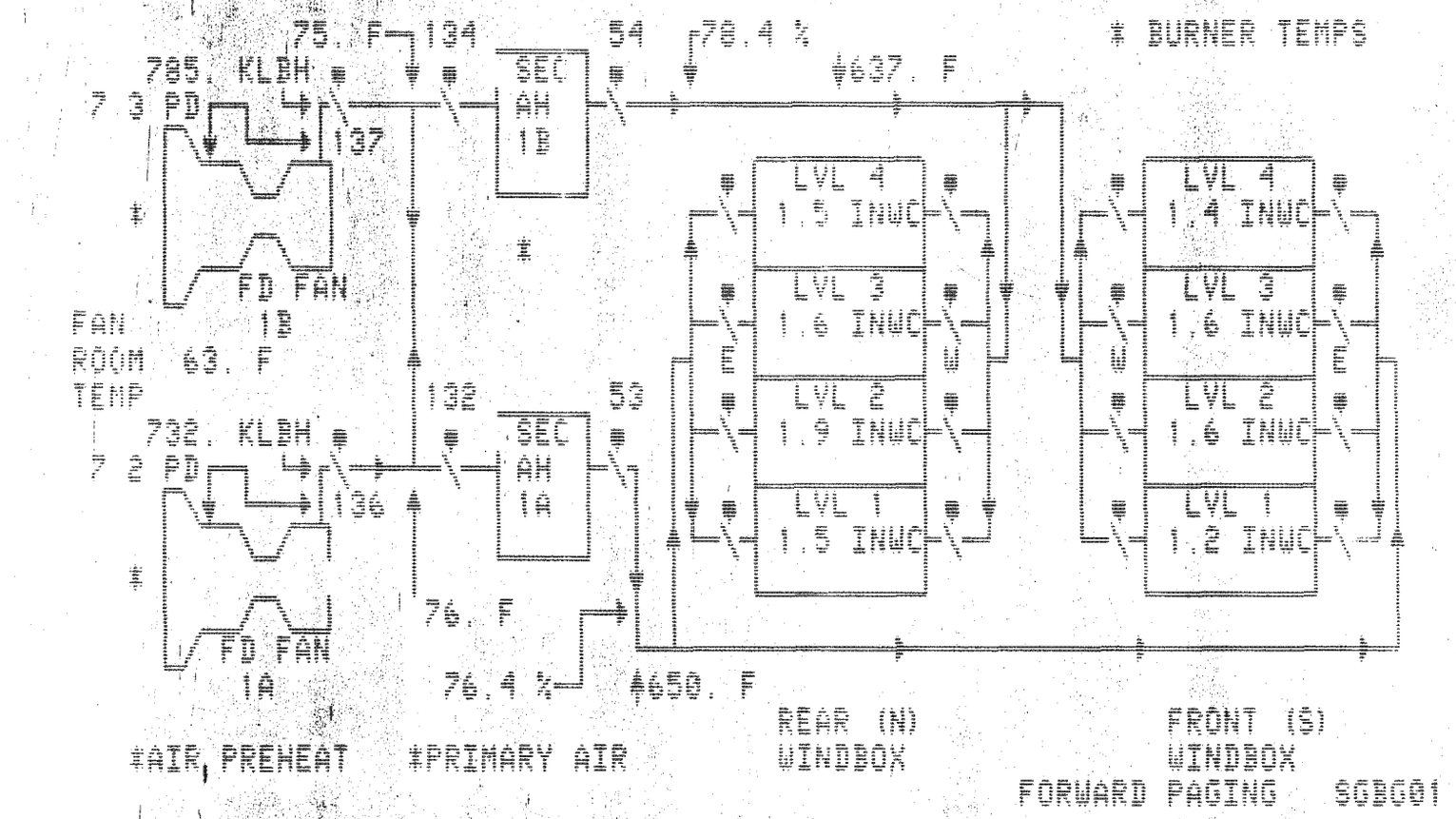

IP14_000993

Unit #1

UNDER SOFTWARE LOCK 11/22/87 13:59:04 MAIN

SGB005 SYSTEM - PRIMARY AIR PG 4 OF 6

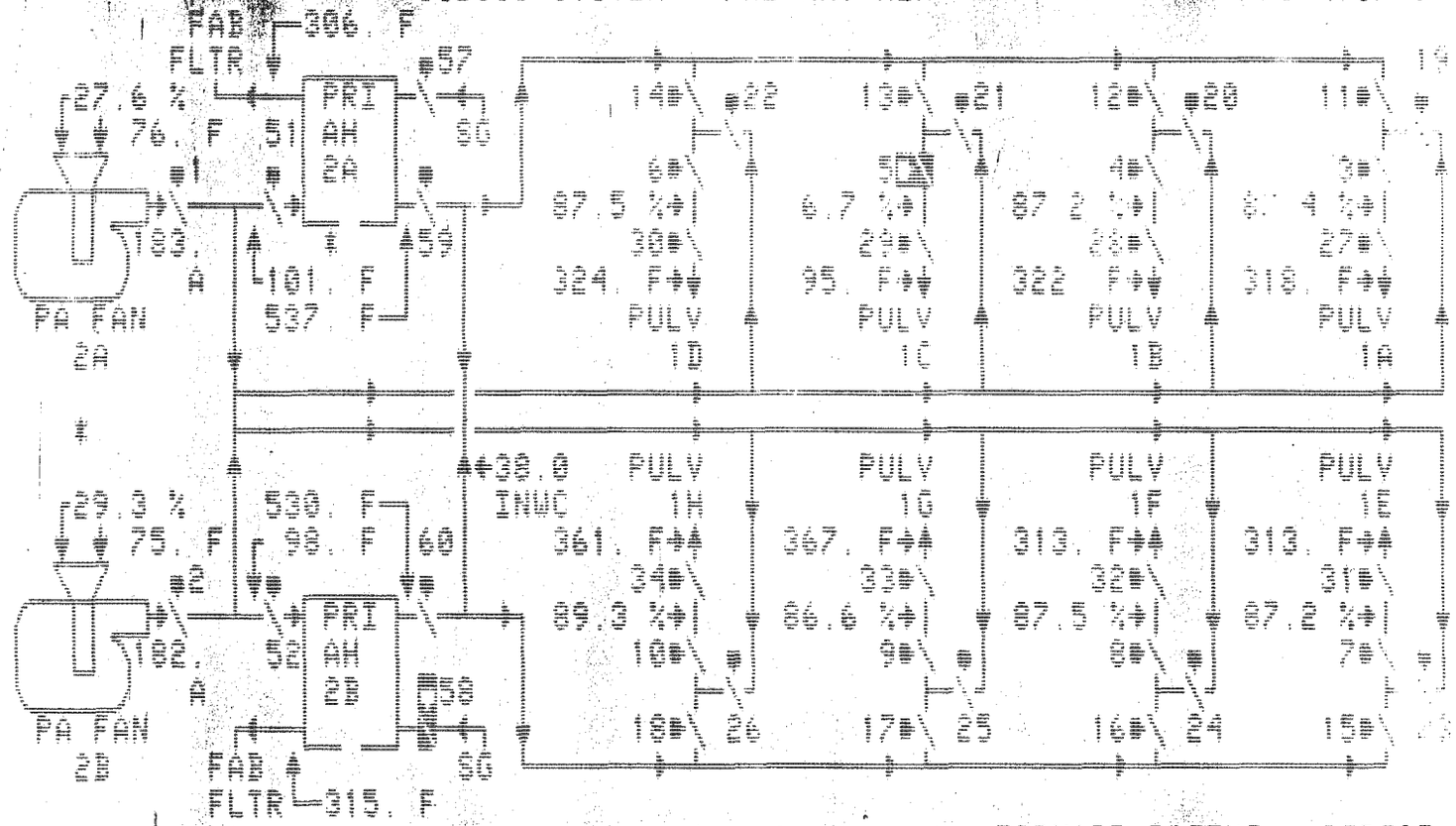

FORWARD PAGING SGB005

IP14_000994

Unit #2

UNDER SOFTWARE LOCK 11/22/87 14:02:11 MAIN
UNIT LOAD 843. MW COCG01 SYSTEM - GAS PATH P 1 OF 3

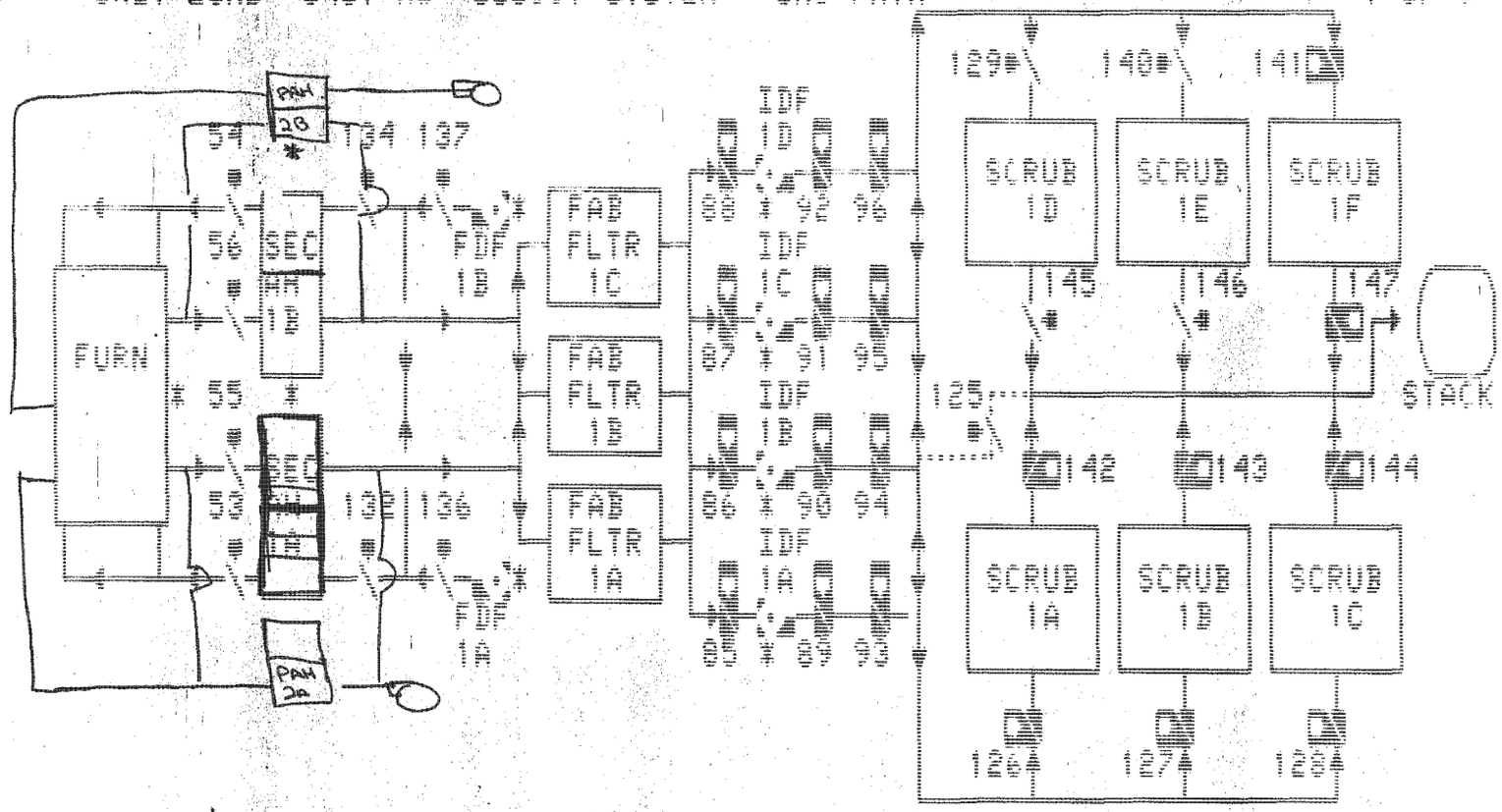

FORWARD PAGING COCG01

include PAH (gas side)
poke point

IP14_000995

UNDER SOFTWARE LOCK 11/22/87 14:17:21 MAIN

SGC001 SUBSYSTEM - AIR PREHEAT PG 4 OF 5

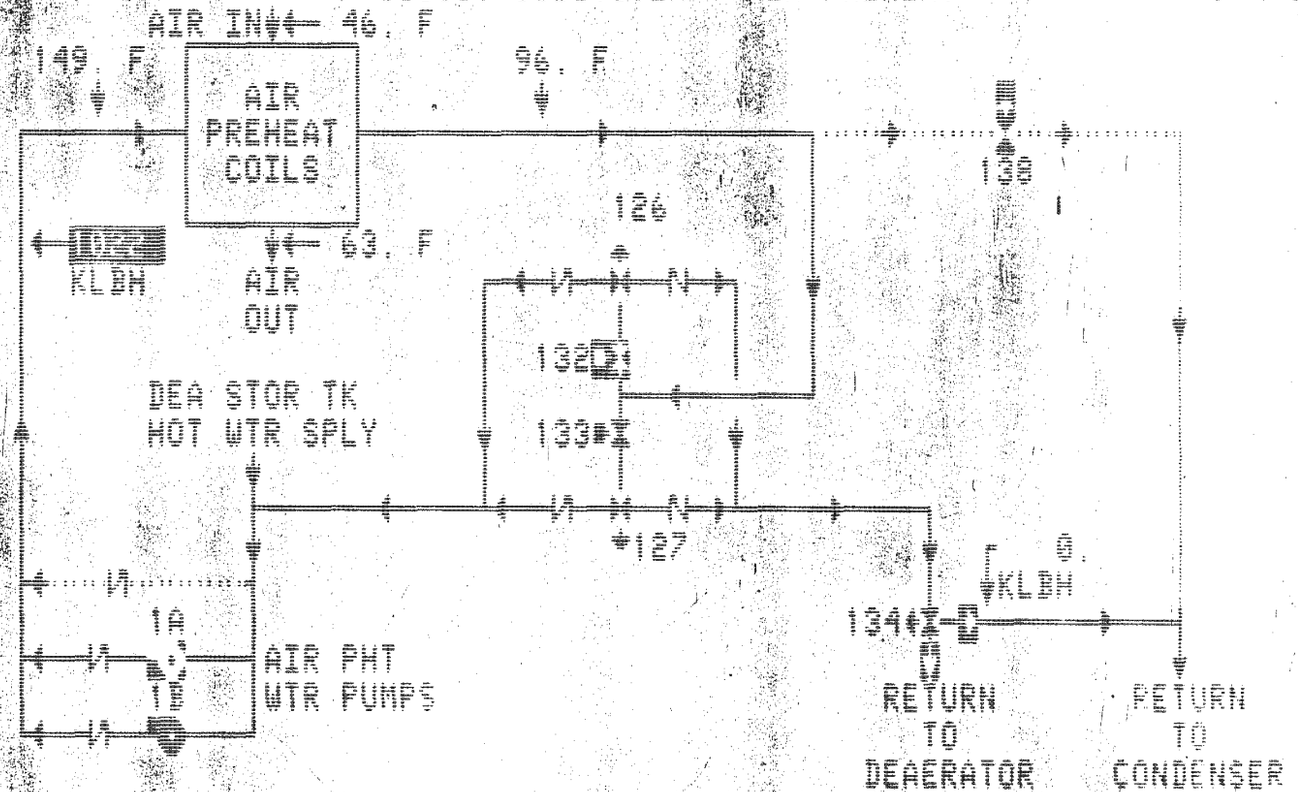

FORWARD PAGING SGC001

IP14_000996

Unit #2

UNDER SOFTWARE LOCK

11/22/87 14:20:07 MAIN

SGBG02 SUBSYSTEM - FORCED DRAFT FAN 1A PG 2 OF 5

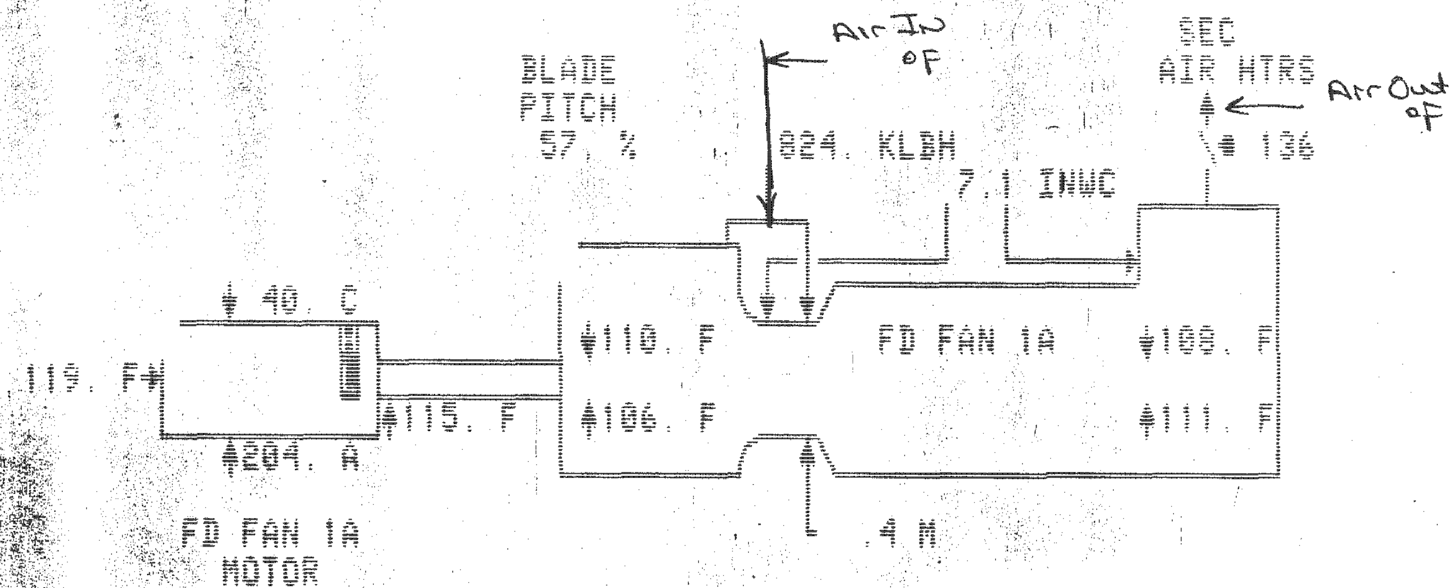

High speed
Low speed

* Comb Air
* FD Fan 1B
* PA Fans

BACKWARD PAGING SGBG02

UNDER SOFTWARE LOCK

11/22/87 14:19:18 MAIN

SCBG03 SUBSYSTEM - FORCED DRAFT FAN 1B

PG 3 OF 5

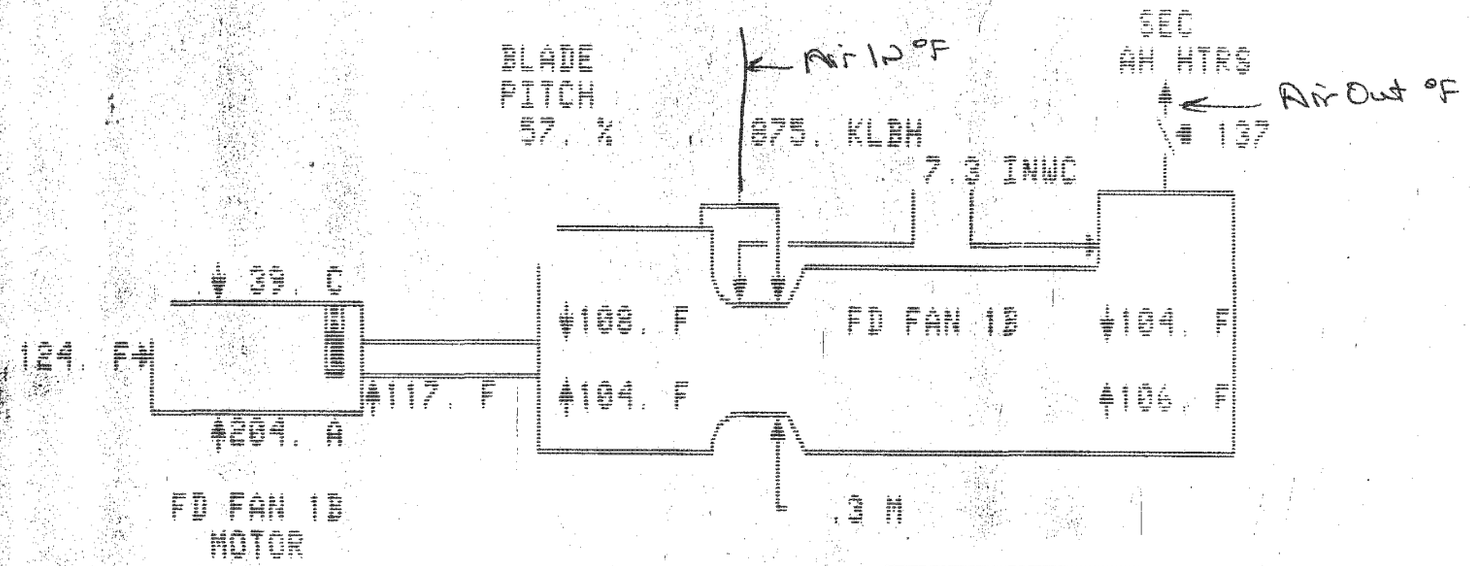

High Speed
Low Speed

* Comb Air
* FD Fan 1A
* PA Fans

FORWARD PAGING SCBG03

IP14_000998

UNDER SOFTWARE LOCK 11/22/87 14:20:53 MAIN

SGBC09 SUBSYSTEM -PRIMARY AIR FANS

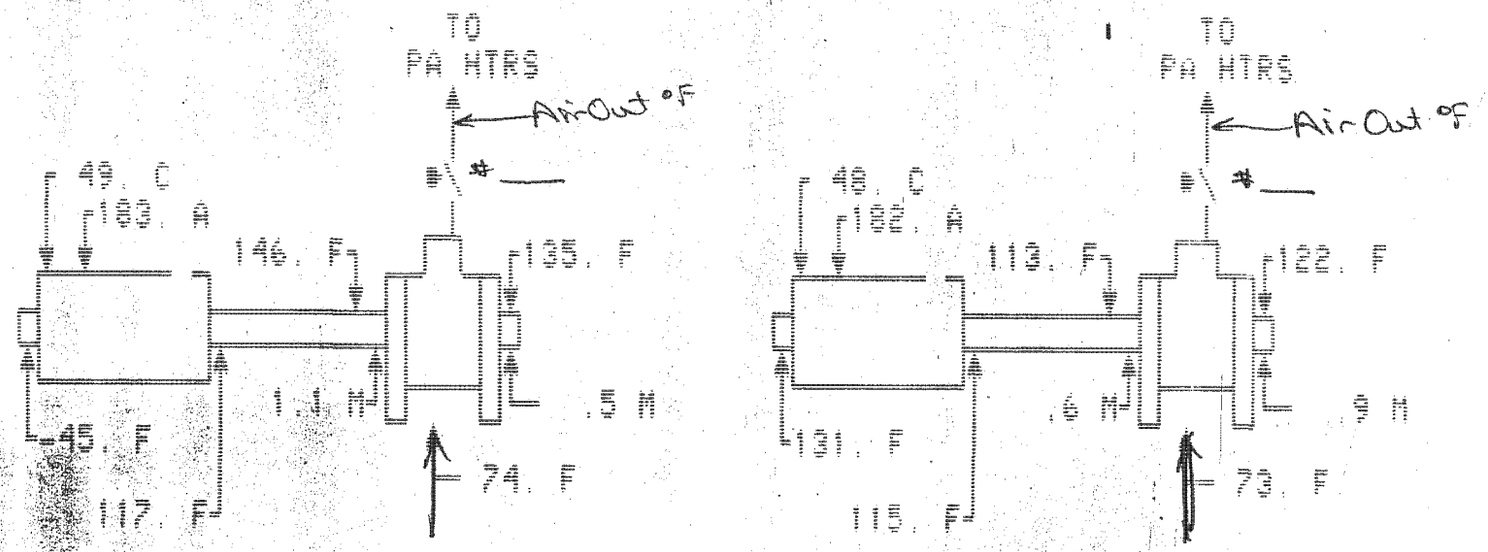

* Prim Air
* FD Fan 1A
* FD Fan 1B

FORWARD PACING SGBC09

IP14_000999

Unit #2

UNDER SOFTWARE LOCK 11/22/87 14:01:38 MAIN

SGB004 SUBSYSTEM - SECONDARY AIR HEATERS PG 5 OF 5

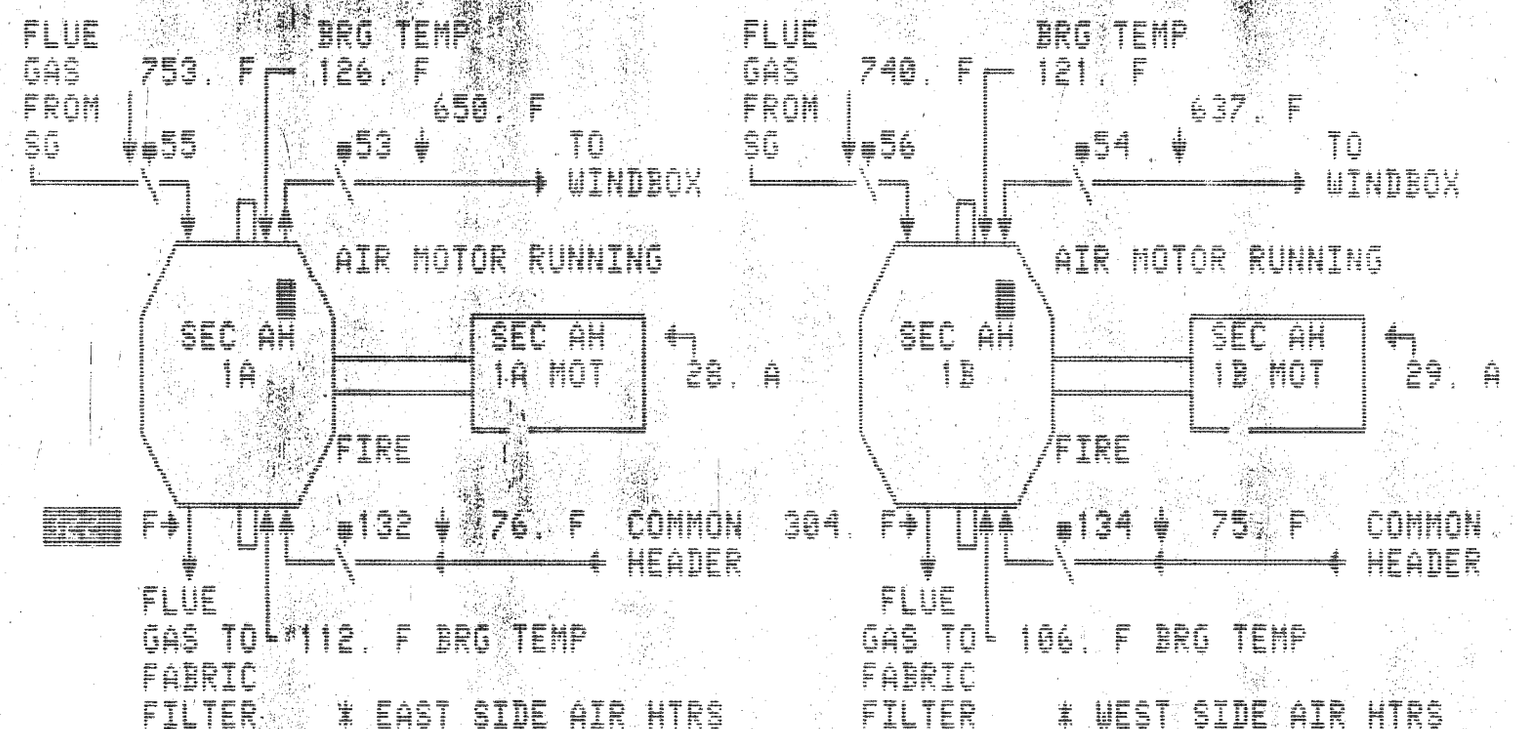

FORWARD PAGING SGB004

IP14_001000

Unit #2

UNDER SOFTWARE LOCK 11/22/87 13:59:27 MAIN

SGBG06 SUBSYSTEM - PRIMARY AIR HEATERS PG 6 OF 6

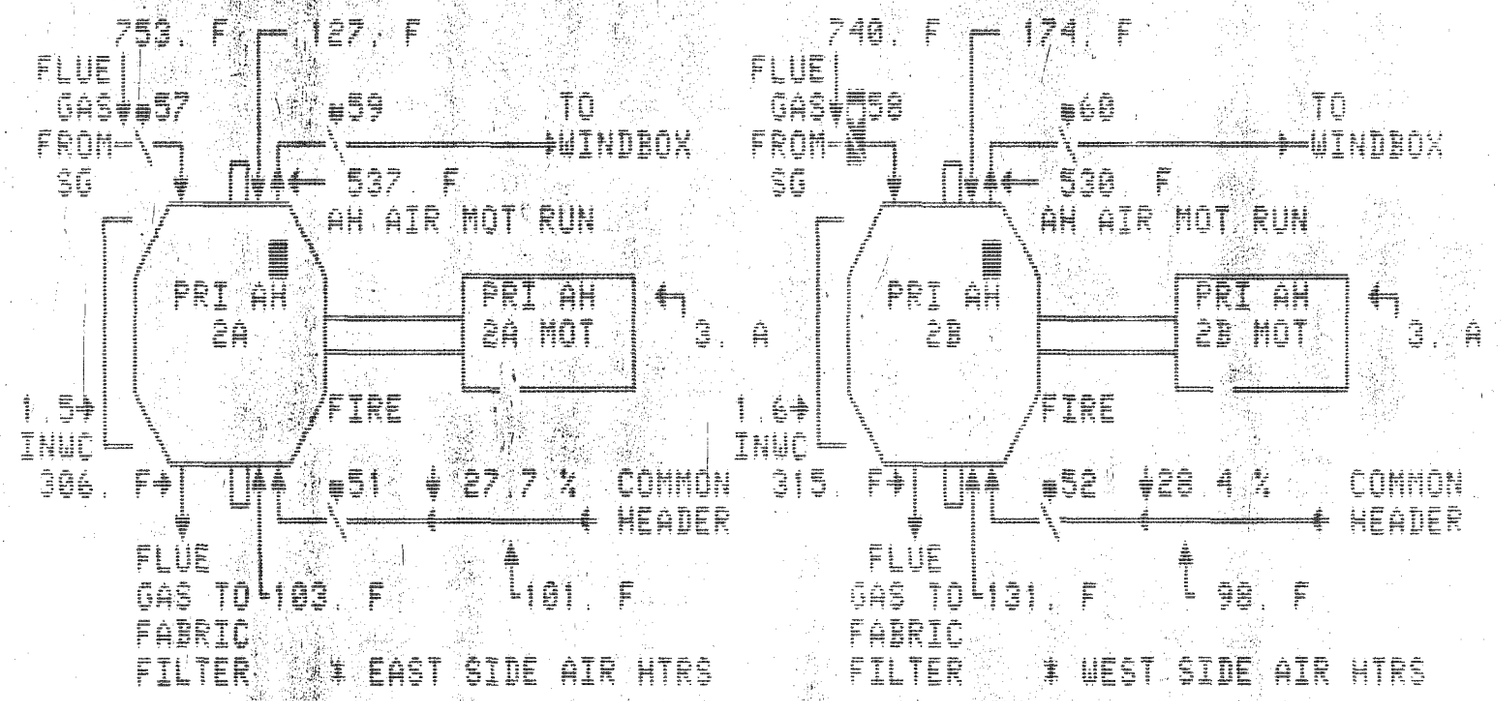

FORWARD PAGING SGBG06

IP14_001001

Unit #2

UNDER SOFTWARE LOCK 11/22/87 13:59:55 MAIN

SGBG07 SUBSYSTEM - EAST SIDE AIR HEATERS

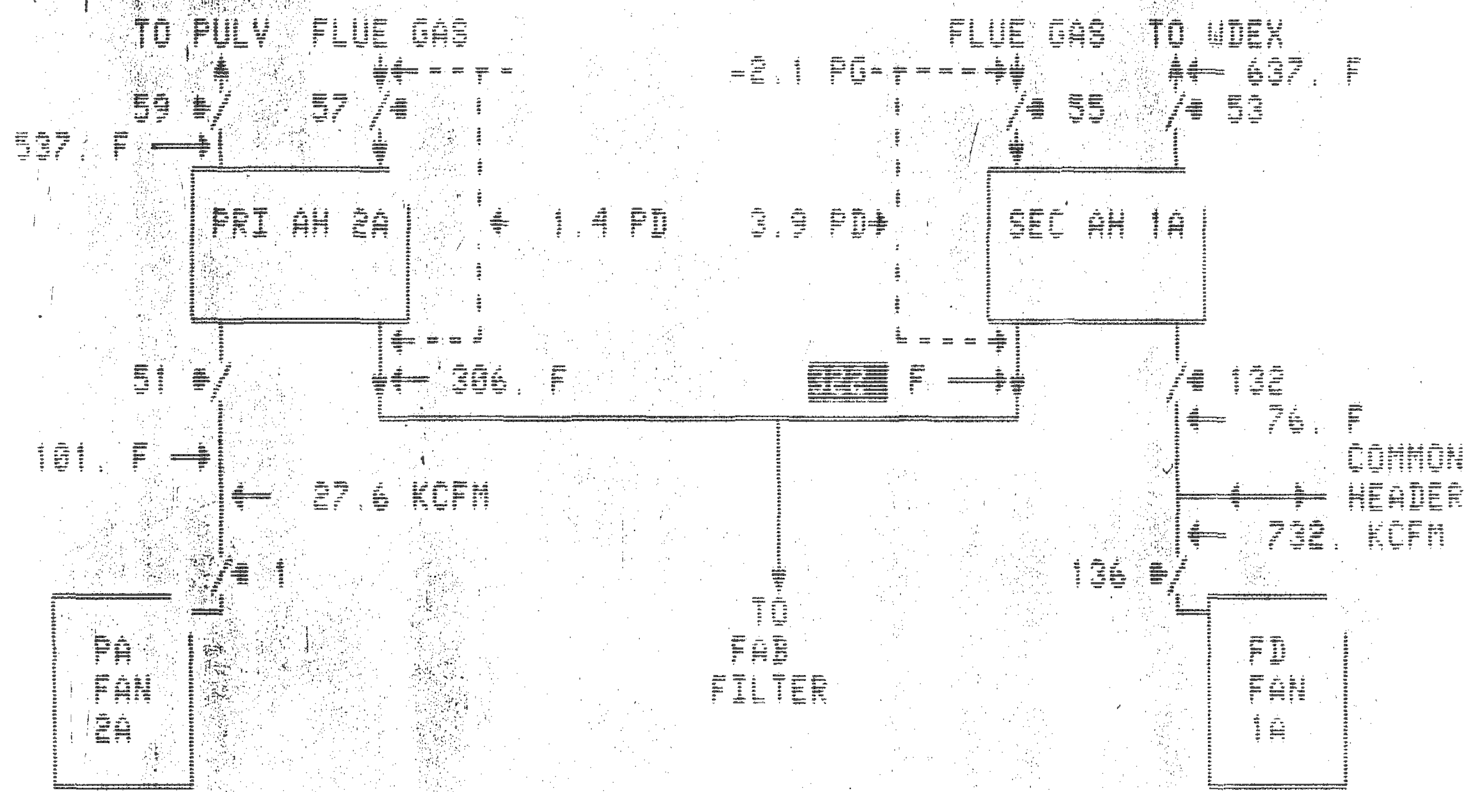

FORWARD PAGING SGBG07

IP14_001002

Unit #2

UNDER SOFTWARE LOCK 11/22/87 14:00:30 MAIN

SGBC08 SUBSYSTEM - WEST SIDE AIR HEATERS

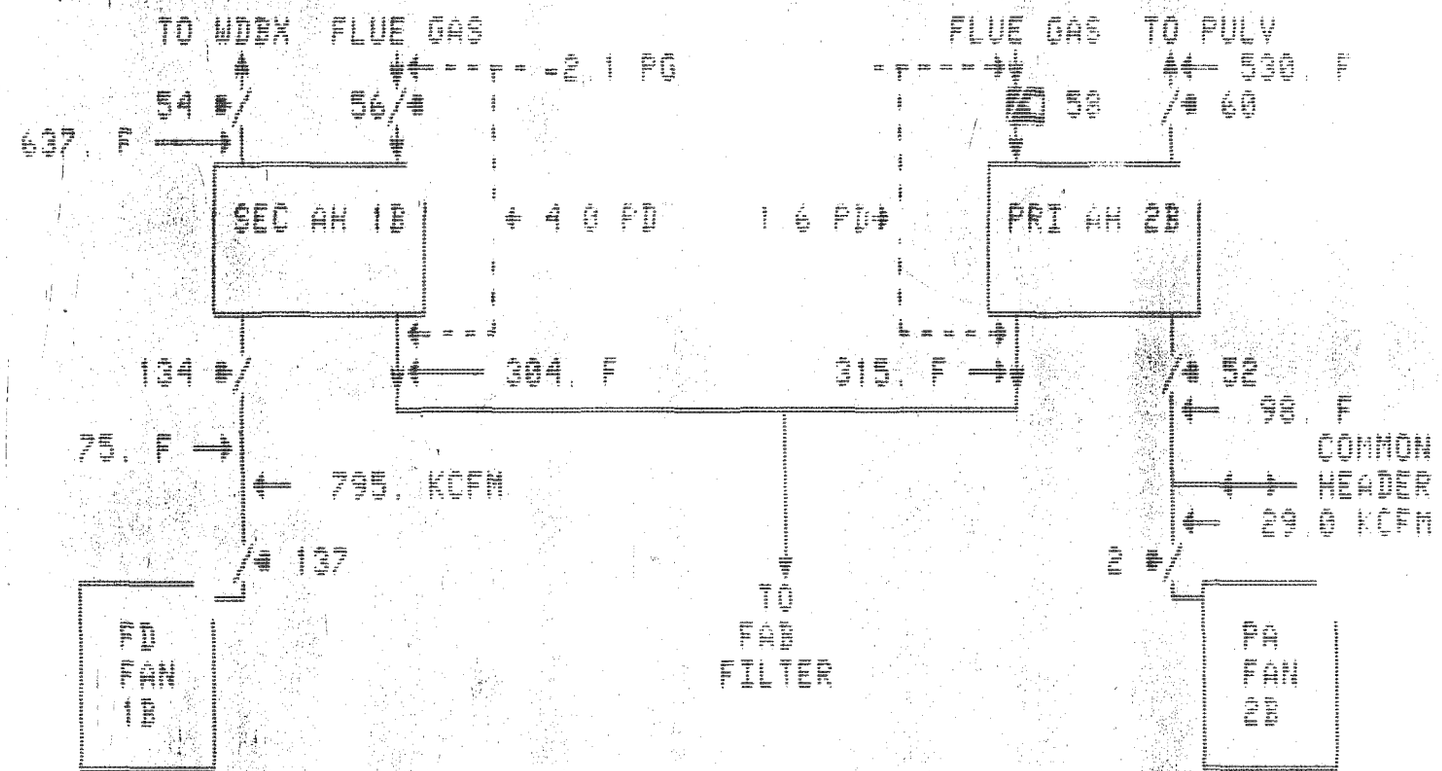

FORWARD PAGING SGBC08

IP14_001003

Unit #2

UNDER SOFTWARE LOCK 11/22/87 14:01:13 MAIN

UNIT LOAD 848. MW SOBG01 SYSTEM - COMBUSTION AIR PG 1 OF 5

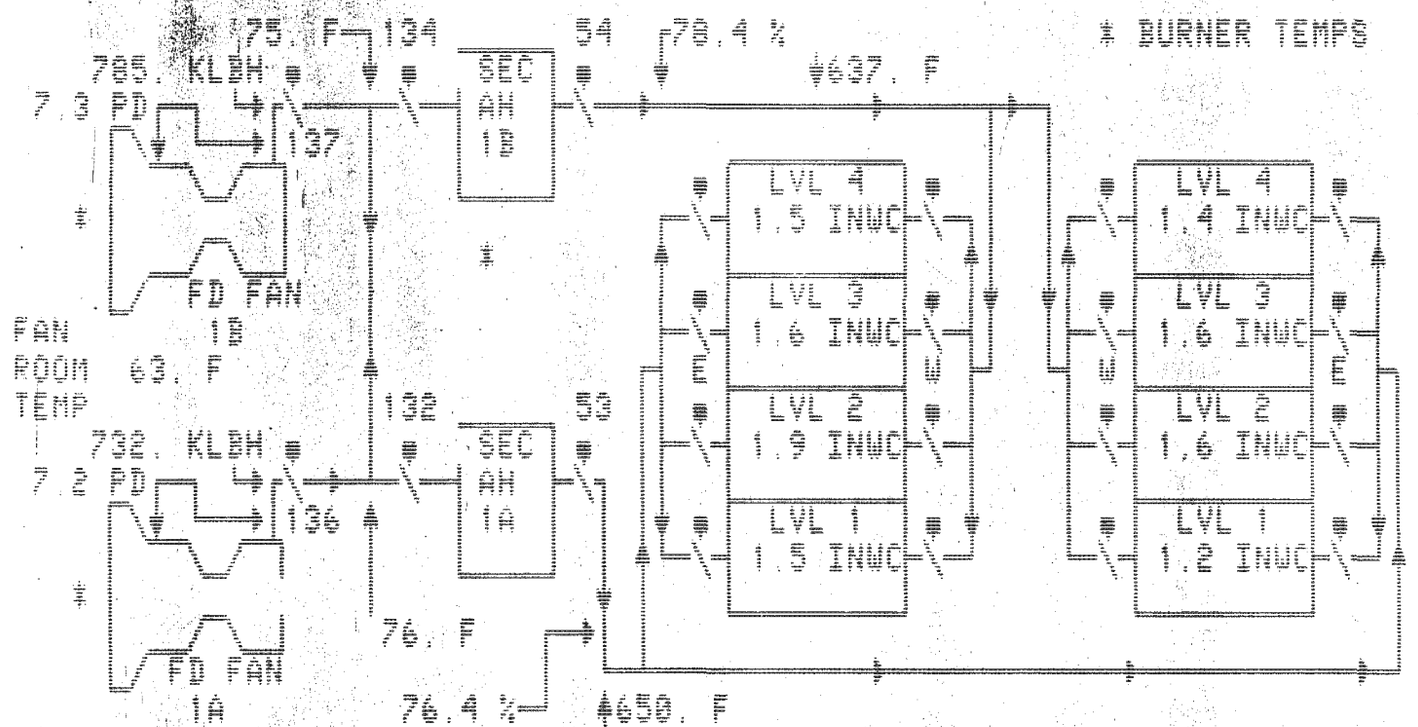

FORWARD PAGING SOBG01

IP14_001004

Unit #2

UNDER SOFTWARE LOCK 11/22/87 13:59:04 MAIN

SGBG05 SYSTEM - PRIMARY AIR PG 4 OF 6

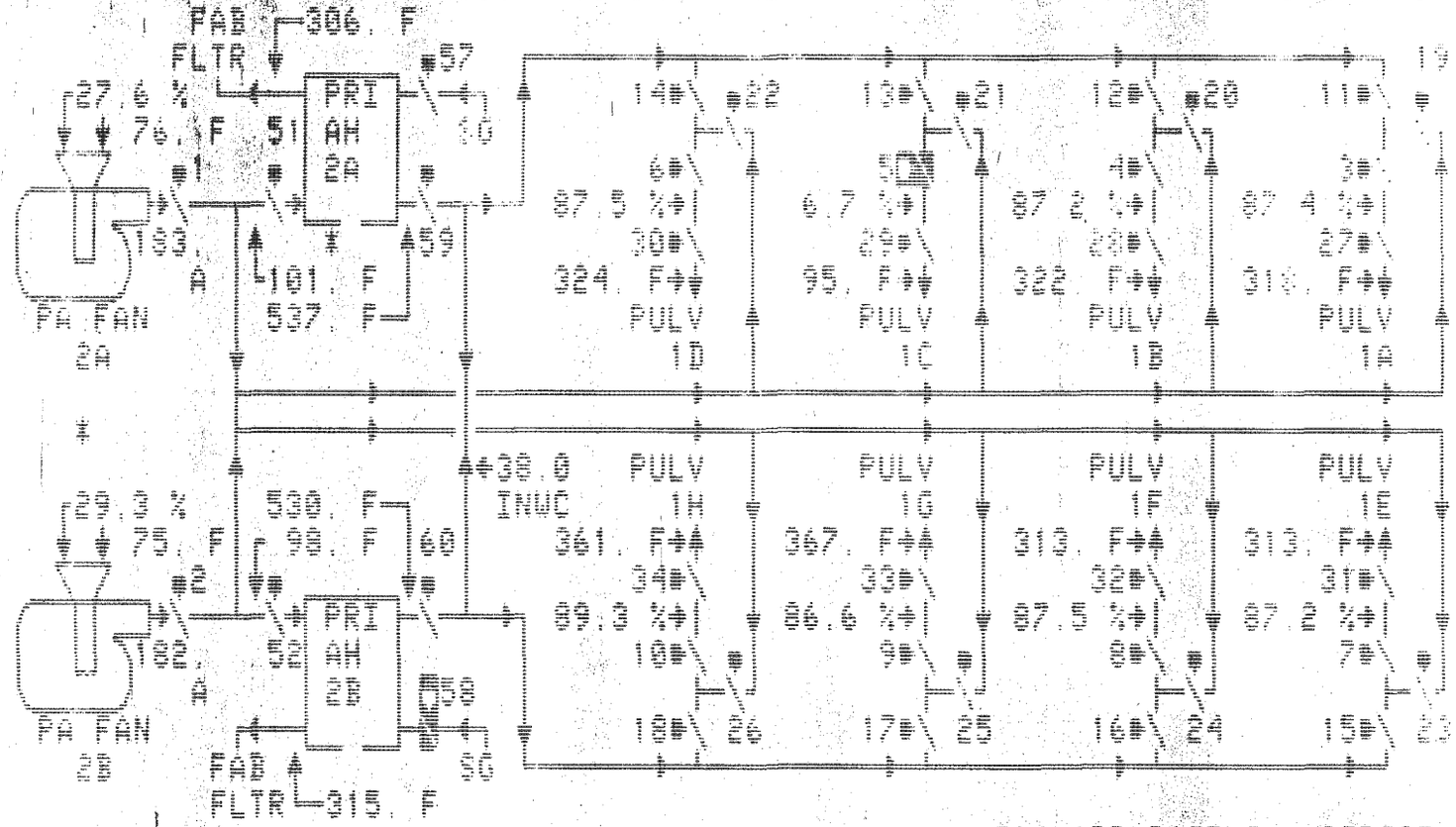

FORWARD PAGING SGBG05

IP14_001005

IP14_001006

UNDER SOFTWARE LOCK 11/22/87 14:17:21 MAIN

SCC001 SUBSYSTEM - AIR PREHEAT PG 4 OF 5

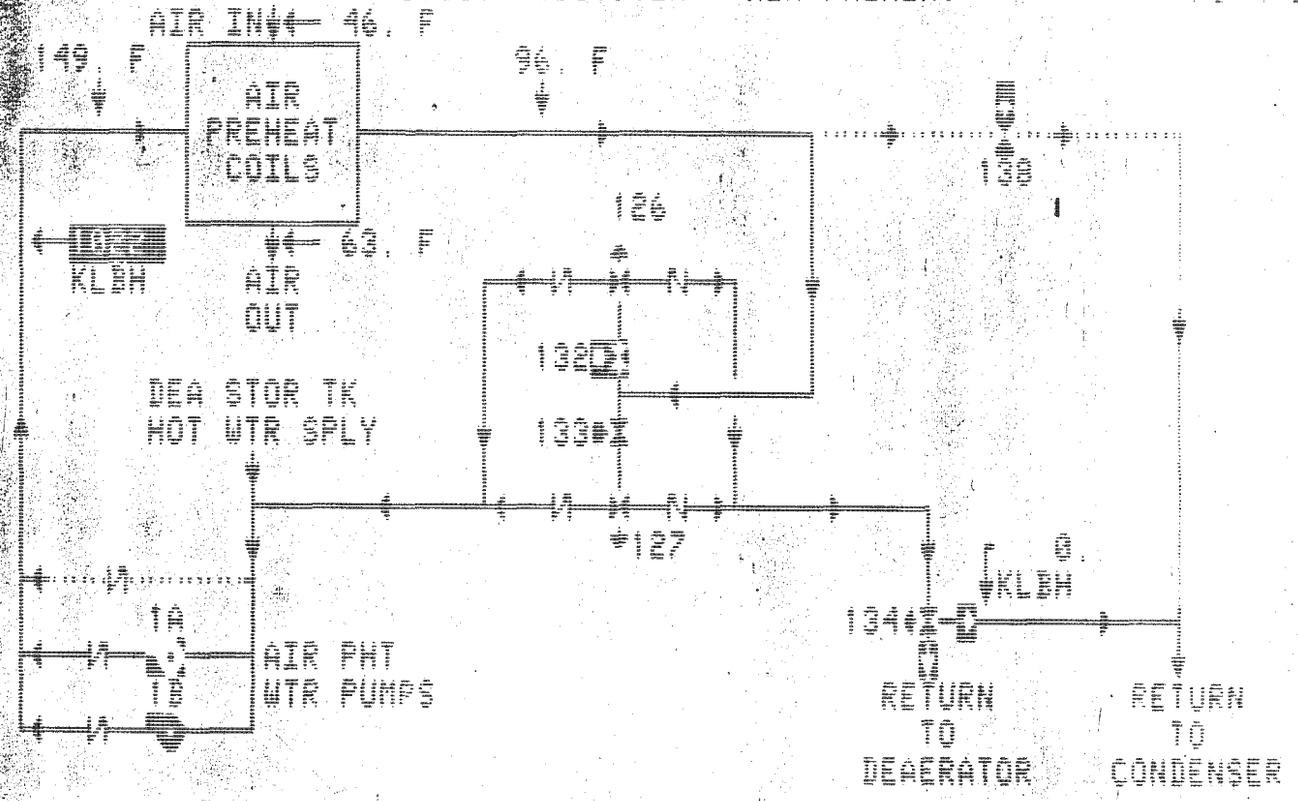

FORWARD PAGING SCC001

IP14_001007

UNDER SOFTWARE LOCK 11/22/87 14:20:07 MAIN

SGBG02 SUBSYSTEM - FORCED DRAFT FAN 1A PG 2 OF 5

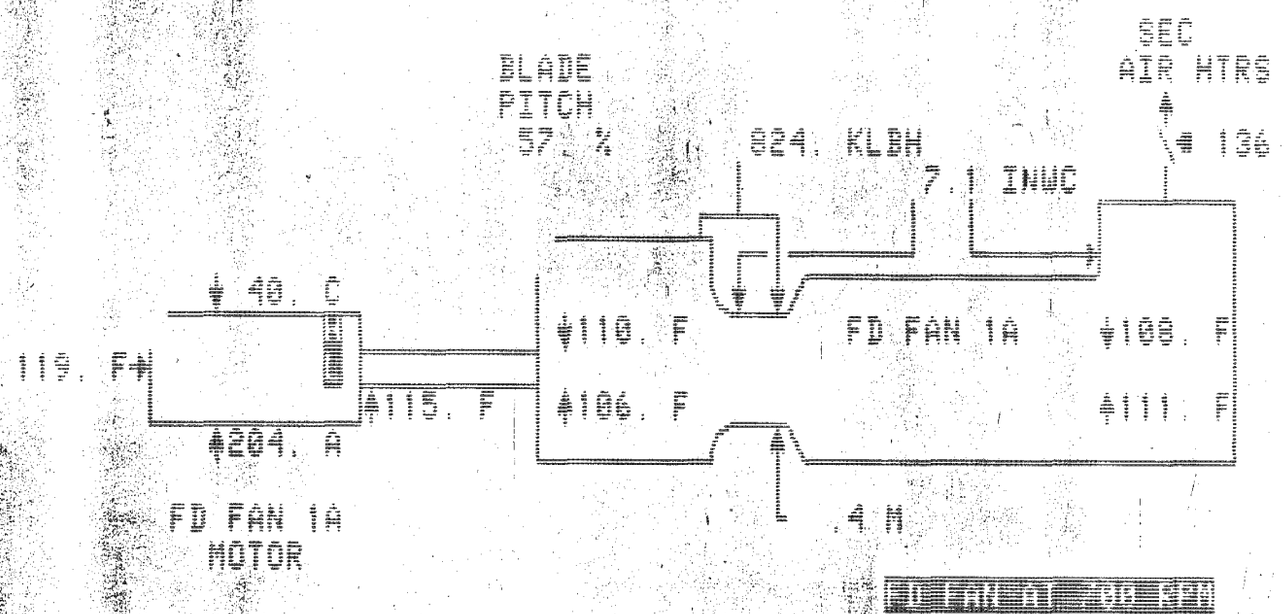

BACKWARD PAGING SGBG02

IP14_001008

UNDER SOFTWARE LOCK 11/22/87 14:19:18 MAIN

SCB003 SUBSYSTEM - FORCED DRAFT FAN 1B PG 3 OF 5

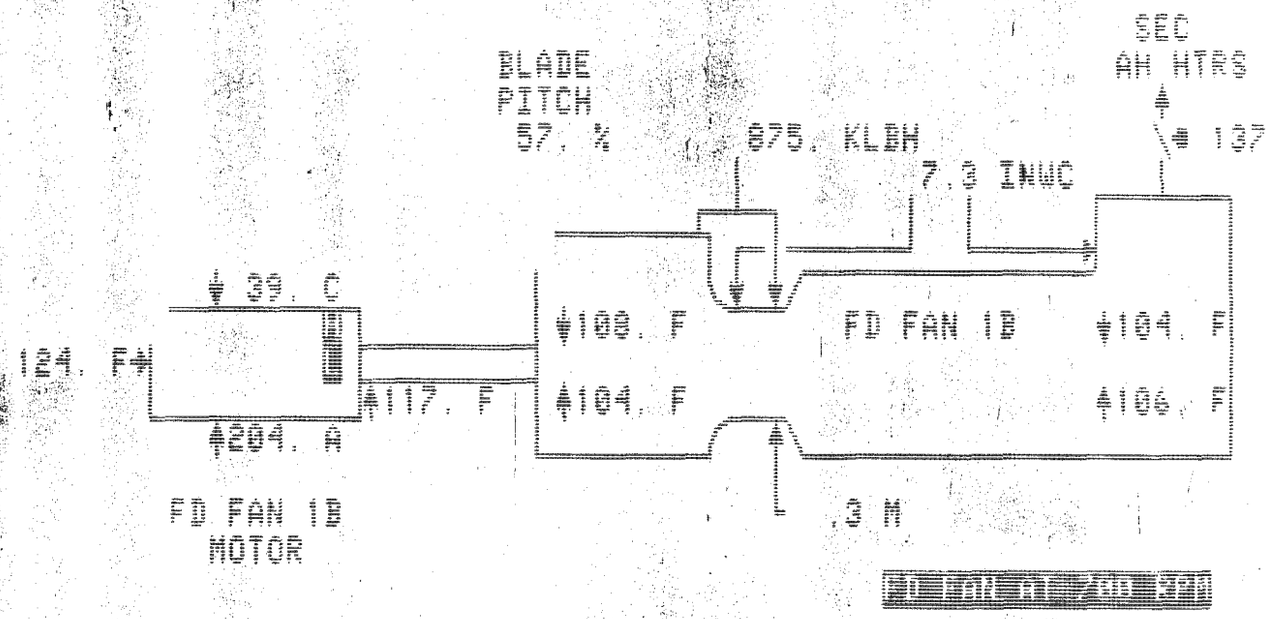

FORWARD PACING SCB003

IP14_001009

UNDER SOFTWARE LOCK 11/22/87 14:20:53 MAIN

SGBC09 SUBSYSTEM -PRIMARY AIR FANS

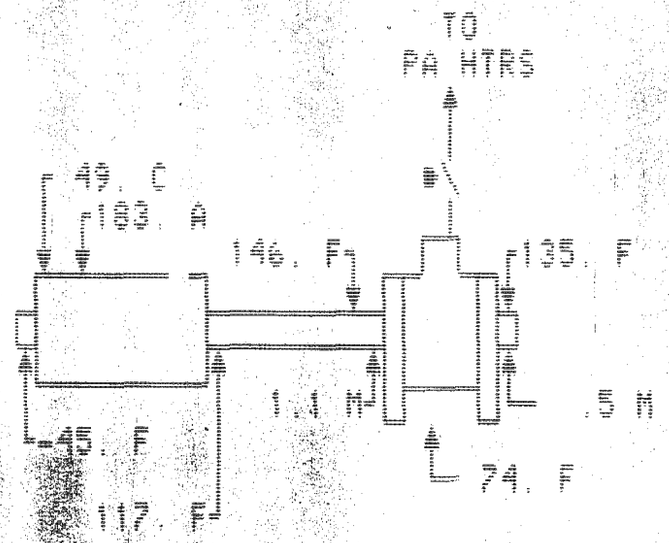

PA FAN 2A

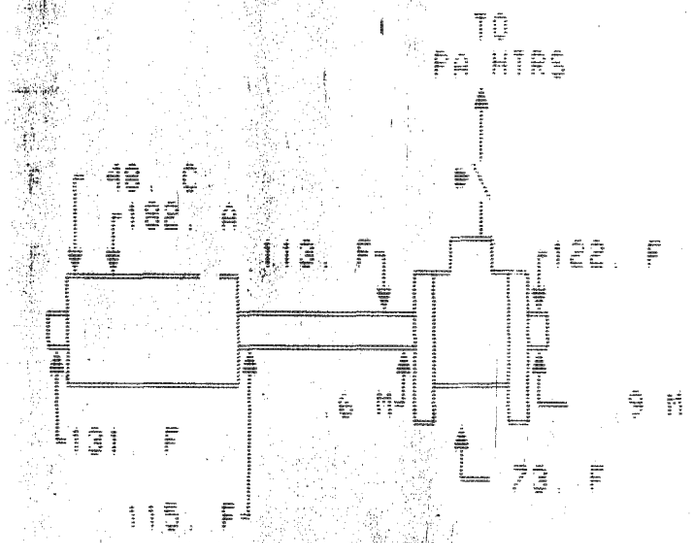

PA FAN 2B

FORWARD PAGING SGBC09

IP14_001010

R. Kulcsar

STEAM GENERATOR ACCEPTANCE TESTS AND METHODS

A. Acceptance Tests that can be completed before Efficiency Tests.

1. Rotary Equipment
   - Dave E. → a. Noise Levels
   - Was B. → b. Vibration Levels

2. Pulverizers
   - a. Coal Fineness
   - b. Capacity

3. Boiler Capacity
   - a. One Secondary Air Heater Out-of-Service
   - b. One Primary Air Heater Out-of-Service
   - c. One Forced Draft Fan Out-of-Service
   - d. One Primary Air Fan Out-of-Service
   - e. Two Pulverizers In Service
   - f. Range of Operation Without Continuous Supplemental Fuel

4. Steam Temperature Variations

B. Acceptance Tests that can be completed during Efficiency Tests.

1. Soot Blowers

2. Air Heaters
   - a. Excess Air at Gas Outlet
   - b. Temperature at Gas Outlet
   - c. Leakage

3. Pressure Drops
   - a. Air and Gas Side Drops
   - b. Fluid Side Drops

4. Attemperator Spray Water Flows

5. Steam Purity

6. Flue Gas
   - a. NO_x Concentration
   - b. Dust Loading
   - c. Temperature Entering Close Space Platen or Pendant Surfaces

7. Boiler Capacity
   - a. Maximum Continuous Rating
   - b. Maximum Capacity at Reduced Pressure

8. Boiler Auxiliary Electrical Power

C. Acceptance Tests that can be completed after Efficiency Tests.

1. Boiler Runback

2. Boiler Variable Pressure Operation

3. Plasma Torches

4. Pulverizer Inerting

5. Ductwork Insulation

D. Test Methods

A.1.a. Rotating Equipment Noise Levels. Equivalent A-weighted sound level measured at a distance of five feet from each fan inlet. Average overall sound pressure level (C scale-flat response) measured for motors 1,000 HP and larger.

A.1.b. Rotating Equipment Vibration Levels. Peak-to-peak displacement versus frequency signatures measured on the bearing housings of the fan and motor.

A.2.a. Pulverizer Coal Fineness. ASME PTC 4.2 Paragraph 5.4.1.

A.2.b. Pulverizer Capacity. ASME PTC 4.2 Paragraphs 5.1.1 through 5.1.3.

A.3.a. Boiler Capacity With One Secondary Air Heater Out-of-Service. Isolate air and gas side of one secondary air heater with motor running.

A.3.b. Boiler Capacity With One Primary Air Heater Out-of-Service. Isolate air and gas side of one primary air heater with motor running.

A.3.c. Boiler Capacity With One Forced Draft Fan Out-of-Service. Operate with one forced draft fan in service at low speed, and again at high speed, with excess air set correctly.

A.3.d. Boiler Capacity With One Primary Air Fan Out-of-Service. Operate with one primary air fan in service at low speed, and again at high speed, with duct pressure set correctly.

A.3.e. Boiler Capacity With Two Pulverizers In Service. Operate with boiler hot and at full pressure, with correct excess air, correct coal air outlet temperature, two pulverizers at maximum capacity, and no supplemental fuel.

A.3.f. Range of Operation Without Continuous Supplemental Fuel. With boiler operating as above under A.3.e., determine minimum boiler capacity without continuous supplemental fuel.

A.4 Steam Temperature Variations. Verify from past and/or future plant data that the difference in steam temperature between the hot reheat connections does not exceed 20 F and that under all conditions of operation above 15 percent of maximum capacity the superheat and reheat temperatures are less that 150 F apart.

B.1 Soot Blowers. Complete recommended soot blowing cycle two hours before beginning of efficiency test run. No additional soot blowing during four hour test run.

B.2.a. Air Heater Excess Air at Gas Outlet. Determined from boiler efficiency fuel analysis and average flue gas oxygen concentration at fabric filter inlet test connections.

B.2.b. Air Heaters Temperature at Gas Outlet. Average measured gas temperatures at Fabric Filter inlet test connections, with excess air determined from B.2.a. above not greater than 27 percent.

B.2.c. Air Heaters Leakage. ASME PTC 4.3 Paragraph 7.03 and 7.13.

B.3.a. Pressure Drops-Air and Gas Side. Measured by water filled U-tube manometers between the air inlets of the air heaters and the furnace for air side drop and between the furnace and air heater flue gas outlets for gas side drop.

B.3.b. Pressure Drops-Fluid Side. Measured by calibrated electronic static or differential pressure transmitters between the economizer inlet connection and steam drum, between the steam drum and the superheater outlet connection, and between the reheater inlet and outlet connections. Corrections to design flow rates will be made, if required.

B.4 Attemperator Spray Water Flows. Superheat spray flow measured by total superheat spray flow nozzle and station transmitter. Reheat spray flow measured by flow nozzle and station transmitter. Gas proportioning dampers and excess air should be adjusted properly.

B.5 Steam Purity. IPSC to propose method.

B.6.a. Flue Gas-NO_x Concentration. Measured from multi-point grid at economizer outlet using calibrated electronic gas analyzer.

B.6.b. Flue Gas-Dust Loading. B&W to investigate and propose method if they can do it.

B.6.c. Flue Gas-Temperature Entering Close Space Platen or Pendant Surfaces. B&W to investigate and propose method if they can do it.

B.7.a. Boiler Capacity-Maximum Continuous Rating. Boiler output determined from measured final feedwater and total superheat spray flows using station transmitters.

B.7.b. Boiler Capacity-Maximum Capacity at Reduced Pressure. Boiler output determined as above under B.7.a. with superheat outlet pressure as measured by station transmitter at 2,365 psig.

B.8. Boiler Auxiliary Electrical Power. Electrical power for pulverizers and primary air fans measured with portable watt hour meter at switchgear. Volts, amperes, and phase angle measured for feeders, airheaters, and seal air blower.

C.1 Boiler Runback. After proper control system tuning, perform unit runbacks from full load to half load.

C.2 Boiler Variable Pressure Operation. Method to be proposed by LADWP.

C.3 Plasma Torches. Method to be proposed by B&W.

C.4 Pulverizer Inerting. Determined by oxygen concentration measured in pulverizer during performance of recommended inerting and clearing procedure.

C.5 Ductwork Insulation. Method to be prepared by Black & Veatch and reviewed by B&W.

R. Kubow

STEAM GENERATOR ACCEPTANCE TESTS AND METHODS

A. Acceptance Tests that can be completed before Efficiency Tests.

1. Rotary Equipment
   - Dave E. → a. Noise Levels
   - Wes B. → b. Vibration Levels

2. Pulverizers
   - a. Coal Fineness
   - b. Capacity

3. Boiler Capacity
   - a. One Secondary Air Heater Out-of-Service
   - b. One Primary Air Heater Out-of-Service
   - c. One Forced Draft Fan Out-of-Service
   - d. One Primary Air Fan Out-of-Service
   - e. Two Pulverizers In Service
   - f. Range of Operation Without Continuous Supplemental Fuel

4. Steam Temperature Variations

B. Acceptance Tests that can be completed during Efficiency Tests.

1. Soot Blowers

2. Air Heaters
   - a. Excess Air at Gas Outlet
   - b. Temperature at Gas Outlet correct for HL?
   - c. Leakage

3. Pressure Drops
   - a. Air and Gas Side Drops
   - b. Fluid Side Drops

4. Attemperator Spray Water Flows

5. Steam Purity

6. Flue Gas
   - a. NO_x Concentration
   - b. Dust Loading
   - c. Temperature Entering Close Space Platen or Pendant Surfaces

7. Boiler Capacity
   - a. Maximum Continuous Rating
   - b. Maximum Capacity at Reduced Pressure

8. Boiler Auxiliary Electrical Power

C. Acceptance Tests that can be completed after Efficiency Tests.

1. Boiler Runback

2. Boiler Variable Pressure Operation

3. Plasma Torches

4. Pulverizer Inerting

5. Ductwork Insulation

D. Test Methods

A.1.a. Rotating Equipment Noise Levels. Equivalent A-weighted sound level measured at a distance of five feet from each fan inlet. Average overall sound pressure level (C scale-flat response) measured for motors 1,000 HP and larger.

A.1.b. Rotating Equipment Vibration Levels. Peak-to-peak displacement versus frequency signatures measured on the bearing housings of the fan and motor.

A.2.a. Pulverizer Coal Fineness. ASME PTC 4.2 Paragraph 5.4.1.

A.2.b. Pulverizer Capacity. ASME PTC 4.2 Paragraphs 5.1.1 through 5.1.3.

A.3.a. Boiler Capacity With One Secondary Air Heater Out-of-Service. Isolate air and gas side of one secondary air heater with motor running.

A.3.b. Boiler Capacity With One Primary Air Heater Out-of-Service. Isolate air and gas side of one primary air heater with motor running.

A.3.c. Boiler Capacity With One Forced Draft Fan Out-of-Service. Operate with one forced draft fan in service at low speed, and again at high speed, with excess air set correctly.

A.3.d. Boiler Capacity With One Primary Air Fan Out-of-Service. Operate with one primary air fan in service at low speed, and again at high speed, with duct pressure set correctly.

A.3.e. Boiler Capacity With Two Pulverizers In Service. Operate with boiler hot and at full pressure, with correct excess air, correct coal air outlet temperature, two pulverizers at maximum capacity, and no supplemental fuel.

A.3.f. Range of Operation Without Continuous Supplemental Fuel. With boiler operating as above under A.3.e., determine minimum boiler capacity without continuous supplemental fuel.

A.4 Steam Temperature Variations. Verify from past and/or future plant data that the difference in steam temperature between the hot reheat connections does not exceed 20 F and that under all conditions of operation above 15 percent of maximum capacity the superheat and reheat temperatures are less that 150 F apart.

B.1 Soot Blowers. Complete recommended soot blowing cycle two hours before beginning of efficiency test run. No additional soot blowing during four hour test run.

B.2.a. Air Heater Excess Air at Gas Outlet. Determined from boiler efficiency fuel analysis and average flue gas oxygen concentration at fabric filter inlet test connections.

B.2.b. Air Heaters Temperature at Gas Outlet. Average measured gas temperatures at Fabric Filter inlet test connections, with excess air determined from B.2.a. above not greater than 27 percent.

B.2.c. Air Heaters Leakage. ASME PTC 4.3 Paragraph 7.03 and 7.13.

B.3.a. Pressure Drops-Air and Gas Side. Measured by water filled U-tube manometers between the air inlets of the air heaters and the furnace for air side drop and between the furnace and air heater flue gas outlets for gas side drop.

B.3.b. Pressure Drops-Fluid Side. Measured by calibrated electronic static or differential pressure transmitters between the economizer inlet connection and steam drum, between the steam drum and the superheater outlet connection, and between the reheater inlet and outlet connections. Corrections to design flow rates will be made, if required.

B.4 Attemperator Spray Water Flows. Superheat spray flow measured by total superheat spray flow nozzle and station transmitter. Reheat spray flow measured by flow nozzle and station transmitter. Gas proportioning dampers and excess air should be adjusted properly.

B.5 Steam Purity. IPSC to propose method.

B.6.a. Flue Gas-NO_x Concentration. Measured from multi-point grid at economizer outlet using calibrated electronic gas analyzer.

1. The pulverizer can be operated at a capacity of 130,300 lbs. per hour when firing the specified 48 Hardgrove grindability performance coal, ground to a fineness of not less than 70 percent through 200 USS Sieve and 99 percent through a 50 USS Sieve provided total moisture in the coal does not exceed 8.3 percent and the temperature of the preheated air supplied is not less than 450°F.

(343.5TPH)

2. When pulverizing 687,000 lbs. per hour of the specified 48 grind performance coal with total moisture not exceeding 8.3 percent, the fineness will not be less than 99 percent through 50 USS Sieve and not less than 70 percent through 200 USS Sieve and the total power to the pulverizers, primary air fans, feeders, airheaters and pulverizer seal air blower with a power factor not less than .80, and an assumed motor efficiency of not less than .92, with 7 pulverizers, 7 Merrick feeders, 2 Westinghouse (23120D) primary air fans with two speed motors, 2 Ljungstrom (24-1/2 VI-44) primary and 2 Ljungstrom (33-1/2 VI-64) secondary airheaters, and 1 pulverizer seal air blower in service, total power will not exceed 5955 KW's, when operating at a fan shaft speed of 897 rpm.

PA

E. [redacted] Heaters

Based on the unit being fired with the specified performance fuel and on the other performance conditions shown on Boiler Performance Summary Sheet P23-310-0-1S:

1. Primary Air Heaters

The leakage from the air to the gas side of the air heaters will not exceed 163,000 pounds of air per hour with a gas flow entering of 972,000 pounds per hour, provided the total pressure differential between the air entering and gas leaving the air heater does not exceed 37.3 inches of water.

37.3

2. Secondary Air Heaters

The leakage from the air to the gas side of the air heaters will not exceed 314,000 pounds of air per hour with a gas flow entering of 6,269,000 pounds per hour, provided the total pressure differential between the air entering and gas leaving the air heater does not exceed 12.85 inches of water.

F. Flue Gas Contaminants

1. Oxides of Nitrogen in the Flue Gas:

When the steam generating unit is operated at all normal loads up to the specified MCR capacity and in accordance with the information given in the Boiler Performance Summary Sheet P23-310-0-1S and operating instructions, and when firing the summary sheet performance coal fuel or any of the other specified* coals A through G (Specification 2010 Page G3-6 thru G3-12), the COMPANY makes the following guarantee:

a. The NOx concentration in the flue gases at a point between economizer outlet and the air heater inlet will not exceed .55 lbs. per million Btu heat input from fuel (using HHV).

b. Should the PURCHASER elect to fire sub-bituminous** coal only, the NOx concentration in the flue gases at a point between economizer outlet and the air heater inlet will not exceed .50 lbs. per million Btu heat input from fuel (using HHV).

*Coal F, when fired, is not to exceed 50 percent by weight of coal mixture using any of the other specified coals A through G.

**As defined by ASTM D388.

2. Dust Loading Leaving the Economizer:

When the steam generating unit is operated at all normal loads up to the maximum normal capacity and in accordance with the information given on the Boiler Performance Summary Sheet P23-310-0-1S and operating instructions and when firing the Summary Sheet specified performance fuel the COMPANY makes the following guarantee:

The average dust loading leaving the economizer will not be greater than 6.44 grains/SCF during a twenty-four hour period based on a soot blowing schedule of once per eight-hour shift.

G. Noise Control

With respect to the sound levels, the COMPANY-furnished fans, blowers, and all motors 1000 hp and larger, when serviced and operated in accordance with the COMPANY'S operation manual, shall comply with the level set forth in Division G3, Subarticles 21.2 and 29.10 of the specification.

II. ACCEPTANCE

The equipment shall be considered as accepted and all performance guarantees shall be deemed fully achieved after test(s) show that the performance guarantees have been fulfilled. If the PURCHASER shall fail to have said equipment tested within the time period mentioned, the equipment shall be conclusively deemed to have achieved guaranteed performance and will be considered completed accepted.

It is expressly understood and agreed by IPA that the leakage guarantee on the secondary air heaters is the sole and direct responsibility of Air Preheater Co. and is included herein solely as a pass thru guarantee by B&W from Air Preheater Co. and in case of failure to achieve said guarantees, IPA shall have no cause of action or remedy against B&W but shall look solely to Air Preheater Co.

dm/400

7. The maximum excess air at the air heater flue gas outlet shall be 27 percent.

8. The average dust loading in the flue gas leaving the economizer shall not be greater than 6.44 grains/SCF during a 24 hour period, based on a soot blowing schedule of once per 8 hour shift.

9. The maximum leakage from the air to the gas side of the primary air heaters shall not exceed 163,000 pounds of air per hour with a gas flow entering of 972,000 pounds per hour, provided the total pressure differential between the air entering and gas leaving the primary air heater does not exceed 37.3" inches of water.

   The maximum leakage from the air to the gas side of the secondary air heaters shall not exceed 314,000 pounds of air per hour with gas flow entering of 6,269,000 pounds per hour, provided the total pressure differential between the air entering and gas leaving the secondary air heater does not exceed 12.85 inches of water.

   Test procedures shall be in accordance with Air Heater Test Code ASME - PTC 4.3.

10. When pulverizing 687,000 lbs. per hour of the specified 48 grind performance coal with total moisture not exceeding 8.3 percent, the fineness will not be less than 99 percent through 50 USS Sieve and not less than 70 percent through 200 USS Sieve and the total power to the pulverizers, primary air fans, feeders, airheaters, and pulverizer seal air blower with a power factor not less than 0.80, and an assumed motor efficiency of not less than 0.92, with 7 pulverizers, 7 Merrick feeders, 2 Westinghouse (23120D) primary air fans with two speed motors, 2 Ljungstrom

IP14_001021

7. The boiler shall be designed to reduce load to a load not greater than 50 percent of Maximum Capacity from any load greater than 50 percent of Maximum Capacity at the rate of not less than 5 percent of Maximum Capacity per minute without lifting safety valves, without tripping pulverizers, and without the use of supplemental fuel.

Article 2, Page G3-5

8. The maximum gas side pressure drop between the furnace and the air heater outlet shall be not more than 12 inches wg at MCR.

Article 2, Page G3-5

9. The gas temperature entering close space platen or pendant surfaces shall be not greater than 1,900 F at MCR. The gas temperature, as measured by high velocity thermocouple (HVT), shall be the maximum temperature.

Article 2, Pages G3-5, G3-6

10. The boiler shall be capable of complying with all requirements of these specifications when operating with coal from any of the coal reserves listed in this Article, either individually or in any combination, and with sodium oxide content to 4.5 percent in the coal ash. However, when coal from Coal Reserve F is supplied to the boiler, Coal Reserve F will not exceed 50 percent by weight of a coal mixture. The typical analysis of coal Reserve B shall be used by the Contractor for providing performance guarantees and for providing Supplementary data required in Subarticle 12.3 of the Execution Document. Coal Reserve B will be used by the Owner for performing guarantee tests of boiler performance. See attached coal tables.

Article 3, Page G3-6

IP14_001022

Pulverizers. Subject to raw coal being prepared so that all will pass through a 1-5/8 inch ring, the pulverizer driving motor being operated at 870 RPM, and the conditions specified on the Boiler Performance Summary Sheet P23-310-0-1S, the Contractor makes the following guarantees on the specified performance coal:

1. The pulverizer can be operated at a capacity of 130,300 lbs per hour when firing the specified 48 Hardgrove grindability performance coal, ground to a fineness of not less than 70 percent through a 200 USS Sieve and 99 percent through a 50 USS Sieve provided total moisture in the coal does not exceed 8.3 percent and the temperature of the preheated air supplied is not less than 450 F.

2. When pulverizing 687,000 lbs per hour of the specified 48 grind performance coal with total moisture not exceeding 8.3 percent, the fineness will not be less than 99 percent through 50 USS Sieve and not less than 70 percent through 200 USS Sieve and the total power to the pulverizers, primary air fans, feeders, airheaters, and pulverizer seal air blower with a power factor not less than 0.80, and an assumed motor efficiency of not less than 0.92, with 7 pulverizers, 7 Merrick feeders, 2 Westinghouse (23120D) primary air fans with two speed motors, 2 Ljungstrom (24-1/2 VI-44) primary and 2 Ljungstrom (33-1/2 VI-64) secondary air heaters, and 1 pulverizer seal air blower in service, total power will not exceed 5,955 KW's, when operating at a fan shaft speed of 897 RPM.

   Performance tests on pulverizers shall be in accordance with Pulverizer Test Code ASME - PTC 4.2.

Air Heaters. Based on the unit being fired with the specified performance fuel and on the other performance conditions shown on Boiler Performance Summary Sheet P23-310-0-1S:

IP14_001023

1. Primary Air Heaters. The leakage from the air to the gas side of the air heaters will not exceed 163,000 pounds of air per hour with a gas flow entering of 972,000 pounds per hour, provided the total pressure differential between the air entering and gas leaving the air heater does not exceed 37.3 inches of water.

2. Secondary Air Heaters. The leakage from the air to the gas side of the air heaters will not exceed 314,000 pounds of air per hour with a gas flow entering of 6,269,000 pounds per hour, provided the total pressure differential between the air entering and gas leaving the air heater does not exceed 12.85 inches of water.

   Test procedures shall be in accordance with Air Heater Test Code ASME - PTC 4.3.

Flue Gas Contaminants

1. Oxides of Nitrogen in the Flue Gas. When the steam generating unit is operated at all normal loads up to the specified MCR capacity and in accordance with the information given in the Boiler Performance Summary Sheet P23-310-0-1S and operating instructions, and when firing the summary sheet performance coal fuel or any of the other specified* coals A through G (Specification 2010 Page G3-6 thru G3-12), the Contractor makes the following guarantee:

   a. The NO_x concentration in the flue gases at a point between economizer outlet and the air heater inlet will not exceed 0.55 lbs per million Btu heat input from fuel (using HHV).

   b. Should the Owner elect to fire sub-bituminous** coal only, the NO_x concentration in the flue gases at a point between economizer outlet and the air heater inlet will not exceed 0.50 lbs per million Btu heat input from fuel (using HHV).

IP14_001024

STEAM GENERATOR ACCEPTANCE

I. GUARANTEE

A. Boiler At Maximum Normal Operation (100% Load)

Based on the unit being fired with the specified performance coal fuel and on the other performance conditions shown on Boiler Performance Summary Sheet P23-310-0-1S at the capacity of 6,100,000 lbs./hr. (no auxiliary steam) at 2515 psig at the superheater outlet with a feedwater temperature of 543°F and reheater inlet steam conditions of 5,000,000 lbs./hr. and 539 psig and 620°F and with 7 mills in operation:

1. The efficiency of the unit will not be less than 88.57 percent.

2. The average temperature of the steam leaving the heater will be 1005°F, plus or minus 10°F.

3. The average temperature of the steam leaving the reheater will be 1005°F, plus or minus 10°F.

4. The steam pressure drop between boiler drum and the COMPANY'S superheater outlet terminals will not exceed 160 psi. (See Note Below).

5. The steam pressure drop through the reheater between the COMPANY'S inlet and outlet terminals will not exceed 25 psi. (See Note Below.)

6. The pressure drop through the economizer, (not including valves, or static head) will not exceed 25 psi.

7. The average solids content in steam leaving boiler will not exceed 0.08 ppm (total solids rather than specific ions) with the following maximum boiler water conditions:

Total boiler water solids	50 ppm.
Chloride ion concentration	2 ppm.
Boiler water pH	10.0

The water conditions stated above are the maximum values permitted to qualify for the steam purity guarantee and are not to be construed as water treatment specifications. Refer to B&W Operating Instructions for proper boiler water requirements.

The steam purity guarantee is exclusive of vaporous silica carry-over and, unless otherwise agreed, shall be applicable at full-load steam flow and at normal water levels and drum pressure.

8. The average net resistance from the air heater inlet to the furnace will not exceed 5.2 inches of water. The average net resistance from the furnace through the unit to the air heater gas outlet will not exceed 7.9 inches of water.

9. Spray water quantities required for main steam temperature control will not exceed 335,000 lbs./hr. provided that spray water temperature is 390°F or less, and all feedwater heaters are in service.

10. Spray water quantities required for reheater temperature control will be 0 (zero) lbs./hr. provided that spray water temperature is 390°F or less, and all feedwater heaters are in service.

11. The excess air leaving the airheaters will not exceed 27%.

NOTE: Steam pressure drop is calculated to the COMPANY'S terminal point. No pressure drop allowance has been made for the size transition between the COMPANY'S terminal size and the PURCHASER'S pipe size.

B. Boiler At Maximum Continuous Rating

Based on the unit being fired with the specified performance coal fuel and on the other performance conditions shown on Boiler Performance Summary Sheet P23-310-0-1S, the unit will have a maximum normal capacity of 6,600,000 lbs. of main steam flow per hour at 2640 psig at the superheater outlet, with a feedwater temperature of 555°F and reheater inlet steam conditions of 5,500,000 lbs./hr. and 590 psig and 630°F.

C. Superheater and Reheater Control Range

Based on the unit being fired with the specified performance coal fuel and on the other performance conditions shown on Boiler Performance Summary Sheet P23-310-0-1S at any stead load from 3,965,000 to 6,600,000 lbs. of main steam flow per hour:

1. The average temperature of the steam leaving the superheater will be 1005°F, plus or minus 10°F.

2. The average temperature of steam leaving the reheater will be 1005°F, plus or minus 10°F.

D. Pulverizers

Subject to raw coal being prepared so that all will pass through a 1-5/8 inch ring, the pulverizer driving motor being operated at 870 rpm, and the conditions specified on the Boiler Performance Summary Sheet P23-310-0-1S, the COMPANY makes the following guarantees on the specified performance coal:

1. The pulverizer can be operated at a capacity of 130,300 lbs. per hour when firing the specified 48 Hardgrove grindability performance coal, ground to a fineness of not less than 70 percent through 200 USS Sieve and 99 percent through a 50 USS Sieve provided total moisture in the coal does not exceed 8.3 percent and the temperature of the preheated air supplied is not less than 450°F.

(343.5TPH)

2. When pulverizing 687,000 lbs. per hour of the specified 48 grind performance coal with total moisture not exceeding 8.3 percent, the fineness will not be less than 99 percent through 50 USS Sieve and not less than 70 percent through 200 USS Sieve and the total power to the pulverizers, primary air fans, feeders, airheaters and pulverizer seal air blower with a power factor not less than .80, and an assumed motor efficiency of not less than .92, with 7 pulverizers, 7 Merrick feeders, 2 Westinghouse (23120D) primary air fans with two speed motors, 2 Ljungstrom (24-1/2 VI-44) primary and 2 Ljungstrom (33-1/2 VI-64) secondary airheaters, and 1 pulverizer seal air blower in service, total power will not exceed 5955 KW's, when operating at a fan shaft speed of 897 rpm.

PA

E. <u>Air Heaters</u>

Based on the unit being fired with the specified performance fuel and on the other performance conditions shown on Boiler Performance Summary Sheet P23-310-0-1S:

1. Primary Air Heaters

The leakage from the air to the gas side of the air heaters will not exceed 163,000 pounds of air per hour with a gas flow entering of 972,000 pounds per hour, provided the total pressure differential between the air entering and gas leaving the air heater does not exceed 37.3 inches of water.

37.3

2. Secondary Air Heaters

The leakage from the air to the gas side of the air heaters will not exceed 314,000 pounds of air per hour with a gas flow entering of 5,269,000 pounds per hour, provided the total pressure differential between the air entering and gas leaving the air heater does not exceed 12.85 inches of water.

F. Flue Gas Contaminants

1. Oxides of Nitrogen in the Flue Gas:

When the steam generating unit is operated at all normal loads up to the specified MCR capacity and in accordance with the information given in the Boiler Performance Summary Sheet P23-310-0-1S and operating instructions, and when firing the summary sheet performance coal fuel or any of the other specified* coals A through G (Specification 2010 Page G3-6 thru G3-12), the COMPANY makes the following guarantee:

a. The NOx concentration in the flue gases at a point between economizer outlet and the air heater inlet will not exceed .55 lbs. per million Btu heat input from fuel (using HHV).

b. Should the PURCHASER elect to fire sub-bituminous** coal only, the NOx concentration in the flue gases at a point between economizer outlet and the air heater inlet will not exceed .50 lbs. per million Btu heat input from fuel (using HHV).

*Coal F, when fired, is not to exceed 50 percent by weight of coal mixture using any of the other specified coals A through G.

**As defined by ASTM D388.

2. Dust Loading Leaving the Economizer:

When the steam generating unit is operated at all normal loads up to the maximum normal capacity and in accordance with the information given on the Boiler Performance Summary Sheet P23-310-0-1S and operating instructions and when firing the Summary Sheet specified performance fuel the COMPANY makes the following guarantee:

The average dust loading leaving the economizer will not be greater than 6.44 grains/SCF during a twenty-four hour period based on a soot blowing schedule of once per eight-hour shift.

G. Noise Control

With respect to the sound levels, the COMPANY-furnished fans, blowers, and all motors 1000 hp and larger, when serviced and operated in accordance with the COMPANY'S operation manual, shall comply with the level set forth in Division G3, Subarticles 21.2 and 29.10 of the specification.

II. ACCEPTANCE

The equipment shall be considered as accepted and all performance guarantees shall be deemed fully achieved after test(s) show that the performance guarantees have been fulfilled. If the PURCHASER shall fail to have said equipment tested within the time period mentioned, the equipment shall be conclusively deemed to have achieved guaranteed performance and will be considered completed accepted.

It is expressly understood and agreed by IPA that the leakage guarantee on the secondary air heaters is the sole and direct responsibility of Air Preheater Co. and is included herein solely as a pass thru guarantee by B&W from Air Preheater Co. and in case of failure to achieve said guarantees, IPA shall have no cause of action or remedy against B&W but shall look solely to Air Preheater Co.

dm/400

A — FUEL AS FIRED

SAMPLES			
ANALYSIS			
COAL — BASIS — MINE			
CLASS			
GROUP			
MINE			
SEAM			
DISTRICT			
COUNTY			
STATE			UTAH
SIZE		1-5/8"x0	1-5/8"x0
GRINDABILITY		55	48
SURFACE MOISTURE, %			
ASH SOFT. TEMP. F (REDUCING)		2350	2215(H+W)
PROX. ANAL. % — MOISTURE, TOTAL		18.8	8.3
VOLATILE MATTER		35.5	37.1
FIXED CARBON		37.9	40.6
ASH		7.8	14.0
TOTAL		100.0	100.0

ULTIMATE ANALYSIS — FUEL	PULV.DES WT.	RANGE PC WT.	COAL "F" WT.	PERF.COAL WT.
% BY				
ASH		8.0-16.0	7.81	14.00
S		0.4-0.7	0.93	0.55
H_2		4.3-4.9	4.13	4.56
C		58.5-64.5	55.60	61.45
CH_4				
C_2H_6				
C_3H_8				
C_4H_{10}				
C_5H_{12}				
Cl		0-0.04	0.04	0.02
CO				
SO_2				
SO_3				
H_2O	12.0	7.4-9.3	18.80	8.30
N_2		1.0-1.5	0.86	1.20
O_2		9.3-10.5	11.83	9.92
TOTAL 43 GRIND			100.00	100.00
BTU/LB	10,700	10,500 to	9,962	11,010
BTU/CU FT AT 60F 30 IN.HG		12,100		

COAL "F" WILL NOT EXCEED 50% BY WT. OF A COAL MIXTURE

*NOT INCLUDING VALVES & STATIC HEAD

▲ AT PULVERIZER INLET

**INCLUDES(-1.5 INCHES WG)FOR STACK EFFECT

UTILITY BOILER PERFORMANCE SUMMARY

BY KJK APD. CATE 12/2/81

THE BABCOCK & WILCOX COMPANY

P23-310-0-150

B — PREDICTED PERFORMANCE

STEAM LEAVING SH. M LB/HR	3965	3965	6100	6100	6600
STEAM LEAVING RH², M LB/HR	3250	3250	5000	5000	5500
AUX. STEAM , M LB/HR	0	450	0	450	0
TYPE OF FUEL	PERF.COAL	PERF.COAL	PERF.COAL	PERF.COAL	PERF.COAL
LOAD CONDITION	65%	65%	100%	100%	MCR
EXCESS AIR LEAVING ECON., %	23	23	17	17	17
NO. OF BURNERS IN OPERATION	42	42	42	42	42
HEAT. BASIS, MBB/HR (FUEL & HEATED AIR)	5496	5908	7968	8374	8500
TOTAL INPUT MBB/HR (FUEL & HT. CREDITS)	5261	5662	7563	7960	8069
HEAT CREDITS, MBB/HR	6.3	6.5	7.6	7.8	7.9
FUEL INPUT, MBB/HR	5255	5655	7555	7932	8060
QUANTITY — FUEL (MCF@-BAT. GAS)	477.3	513.6	686.2	720.6	730.2
FLUE GAS ENTERING AIR HTRS.	5274	5611	7241	7600	7703
AIR TO BURNING EQUIPMENT	4765	5064	6538	6862	6954
AIR HEATER LEAKAGE	367	375	477	488	509
PRESSURE, PSIG — STEAM AT SH OUTLET	2440	2440	2515	2515	2640
STEAM AT RH² INLET	350	350	539	539	590
STEAM AT RH² INLET					
*PRESSURE DROP — REHEATER 1	16	16	25	28	29
REHEATER 2					
ECONOMIZER ▲	11	13	25	29	29
DRUM TO SH OUTLET	68	73	160	172	187
TEMPERATURE, F — STEAM — LEAVING SUPERHEATER	1005	1005	1005	1005	1005
LEAVING REHEATER 1	1005	1005	1005	1005	1005
ENTERING REHEATER 1	580	580	620	620	630
LEAVING REHEATER 2					
ENTERING REHEATER 2					
GAS — LEAVING ECONOMIZER	686	675	725	730	740
LEAVING AH (EXCL. LKG) P/S	312/276	311/277	311/286	311/289	311/294
LEAVING AH (INCL. LKG) P/S	280/267	280/268	280/278	280/279	280/280
WATER ENTERING ECONOMIZER	490	490	543	543	555
AIR — ENTERING UNIT PRI/SEC	76/62	74/63	77/64	78/65	78/65
LEAVING AIR HEATER P²/SEC	355/618	375/624	412/635	418/636	420/645
MOISTURE, % OF WATER — GAS — FURNACE & CONVECTION BANKS	2.2	1.9	2.7	3.3	3.1
FLUES TO AH OUTLET	0.9	1.0	1.4	1.5	1.5
AIR HEATER	2.1	2.3	3.8	4.1	4.2
DIT FROM FURN TO AH OUT	5.2	5.2	7.9	8.9	8.8
AIR — FUEL BURNERS & WINDBOX ▲▲	0.3	0.0	1.1	1.4	1.4
DUCTS & FLOW METER	1.0	1.2	2.1	2.3	2.3
AIR HEATER	1.1	1.2	2.0	2.3	2.3
TOT. FROM AH INLET TO FURN	1.8	2.2	5.2	6.0	6.0
*HEAT LOSS-BTU/LB — DRY GAS	4.92	4.84	4.84	4.86	4.98
H_2 & H_2O IN FUEL	5.14	5.14	5.15	5.15	5.16
MOISTURE IN AIR	0.07	0.07	0.07	0.07	0.07
UNBURNED COMBUSTIBLE	0.2	0.2	0.2	0.2	0.2
RADIATION	0.24	0.22	0.17	0.16	0.15
UNMEA. FOR & MFRS. MARGIN	1.00	1.00	1.00	1.00	1.00
TOTAL HEAT LOSS	11.57	11.47	11.43	11.44	11.56
*CROSS EFFICIENCY OF UNIT, %	88.43	88.53	88.57	88.56	88.44
HEAT CREDITS ADJUSTMENT, %	0.01	0.01	0.01	0.01	0.01
NET EFFICIENCY A.S.M.E. PTC-4.1, %	88.44	88.54	88.58	88.57	88.45
FUEL EFFICIENCY, % (OUTPUT/FUEL INPUT)	88.55	88.63	88.67	88.66	88.54
NO. TO USE PER BOILER	6 / 7	5 / 7	6 / 1	6 / 7	6 / 7
TOTAL POWER, BH MOTOR OUTPUT					
% THRU 200 U.S.S. SIEVE	71 / 76	72 / 75	71 / 71	71 / 72	70 / 72

PREDICTED PERFORMANCE IS BASED ON COMBUSTION AIR ENTERING UNIT WITH .0067 LB MOISTURE/LB DRY AIR, ON 25.18 IN. HG. BAROMETRIC PRESSURE, ON CONDITIONS & EQUIPMENT GIVEN ON THIS SUMMARY SHEET & ON ARRANGEMENT SHOWN ON DRAWING

C — EQUIPMENT PER UNIT

TYPE RADIANT

SIZE RBC

DESIGN PRESSURE (SH/RH) - 2975PSIG/750PSIG

FURNACE SURFACE — WATER COOLED SCREEN (CIRCUMFERENTIAL)		
WATER COOLED (PROJECTED)	59130	
SUPERHEATER (PERIPHERAL) 54" CENTERLINE	23244	
SUPERHEATER (PERIPHERAL) 24" CENTERLINE	35665	
SUPERHEATER (PROJECTED)	6367	
TOTAL FURNACE HEATING SURFACE	122406	
CONVECTION SURFACE — SATURATED (CIRCUMFERENTIAL)	13035	
SUPERHEATER (CIRCUMFERENTIAL)	279032	
REHEATER 1 (CIRCUMFERENTIAL	300163	
REHEATER 2 (CIRCUMFERENTIAL)		
ECONOMIZER	99902	
TOTAL CONVECTION HEATING SURFACE	692282	
TOTAL FURN. & CONV. PRESSURE PART. HTG. SURF.	816688	
FLAT PROJECTED FURNACE HEATING SURFACE		
TO FACE OF PLATERS (24" CENTERLINE)	87405	
TO FACE OF CONVECTION SURFACE (12" CENTERLINE)	125510	
FURNACE VOLUME, CU FT	962055	

AIR HEATER — TYPE: REGENERATIVE-SECONDARY NO. 2-- 33-1/2 VI-64 — TOTAL HEATING SURFACE, SQ FT 1,047,800

TYPE: REGENERATIVE-PRIMARY NO. 2 - 24-1/2 VI-44 — TOTAL HEATING SURFACE, SQ. FT. 135,600

FUEL BURNER — TYPE DUAL REGISTER — NO. 48 (6 BURNERS PER PULVERIZER)

PULVERIZER — TYPE MPS SIZE 89GR NO. 8

CAPACITY OF 6 PULV. IS 6600 M LB STEAM/HR BASED ON 48 GRIND 11010 BTU COAL AT 70 % THRU 200 U.S.S. SIEVE

FOR 111 MLB COAL/PULV.-HR AT 70 % THRU 200 U.S.S. SIEVE MIN. GRIND IS 43, MAXIMUM TOTAL MOISTURE IS 12 % REQUIRING 465 F AIR

22% TOTAL MOISTURE COAL REQUIRES 540 F AIR.

STEAM TEMP. CONTROL — SUPERHEAT BY SPRAY ATTEMPERATION

REHEAT BY GAS BIASING

UNIT CONFIGURATION & FEATURES — MEMBRANE WALL

BALANCE DRAFT

INDOOR UNIT

"AS SOLD" ARRANGEMENT

*CORRESPONDING TO ABB. METHOD PAR. 1.87 A.S.M.E. PTC-4.1

REVISIONS NO.	DESCRIPTION	BY	DATE

INTERMOUNTAIN POWER PROJECT

THIS SUMMARY SHEET IS THE PROPERTY OF THE BABCOCK & WILCOX COMPANY AND IS LOANED UPON CONDITION THAT IT IS NOT TO BE COPIED, IN WHOLE OR IN PART OR USED FOR PURPOSES DETRIMENTAL TO THE INTERESTS OF THE BABCOCK & WILCOX COMPANY AND IS TO BE RETURNED UPON REQUEST.

IP14_001031

INTERMOUNTAIN POWER PROJECT
UNIT 1
STEAM GENERATOR ACCEPTANCE

Has been updated/corrected

A. GENERAL

1. Performance tests for boiler efficiency shall be made on the basis of the abbreviated heat loss method in accordance with ASME PTC 4.1, -1964 and as specified below.

ASME PTC 4.1 (Par. No.)	Agreement
3.01.01.1	General, method shall be the abbreviated heat loss method.
3.01.01.2	No heat credits shall be measured.
3.01.01.3	No heat credits shall be assigned.
3.01.01.4	Carbon losses shall be included.
3.01.01.5	Assigned heat losses shall be: (a) Sensible heat in the fly ash. (b) Radiation to the ash pit. (c) Radiation heat loss in accordance with ABMA Standard Radiation Loss Chart, Fig E. of PTC 4.1. The total of (a) and (b) above shall not exceed 0.5 percent.
3.01.01.6	Permissible deviation in efficiency between duplicate tests shall be 0.5 percent.
3.01.03	Superheat and reheat steam temperatures shall be 1005 F plus or minus 10 F. Air heater leakage shall be corrected to the specified value, if required.
3.01.06	The official test point shall be maximum capacity.

IP14_001032

ASME PTC 4.1 (Par. No.)	Agreement
3.01.07	Cleanliness of the unit shall be achieved by using the normal sootblowing cycle.
3.01.10	Fuel sampling shall be one quart from each feeder, and samples shall be quartered. Analysis shall be in accordance with ASTM standards.
3.01.13	Test results shall be reported as computed from test observations with proper correction for calibrations.
3.01.14	Distribution of fuel refuse quantities between the boiler and stack shall be 10 percent and 90 percent, respectively. The boiler 10 percent shall be broken down by assuming 70 percent in the hopper and 30 percent in the economizer hopper.
3.01.15	Corrections to be made for deviation from specified operation conditions shall be made in accordance with the PTC 4.1.

Article 9., 9.2 Pages G1-7 and G1-8

Performance Calculations shall be based on the ASME Steam Tables published in 1967.

IP14_001033

2. The term "Maximum Capacity" shall be defined as the following conditions:

	Maximum Capacity
Steam at superheater outlet:	
Flow, lb/hr	6,100,000
Temperature, F	1,005
Pressure, psig	2,515
Steam at reheater inlet:	
Flow, lb/hr	5,000,000
Temperature, F	620
Pressure, psig	539
Steam temperature at reheater outlet, F	1,005
Feedwater temperature to economizer, F	543
Desuperheater spray water temperature, F	390
Air temperature to fans, F	60

100%

Article 2., Pages G3-2, G3-3

3. All ambient air calculations, including those used in efficiency calculations, shall be based on an air temperature of 60 F and 60 percent relative humidity (0.0067 pound of moisture per pound of dry air).

Article 2., Page G3-2

4. Test Basis for Flue Gas Contaminants:

Guaranteed particulate matter emission is to be determined from flue gas samples collected and analyzed in accordance with Paragraph 60.46, Test Methods and Procedures of the E.P.A. Standards of Performance for New Stationary Sources, published December 23, 1971, in the Federal Register, Volume 36, No. 247, Part II.

IP14_001034

Heat input, expressed in Btu per hour, determined by suitable fuel flow meters shall be confirmed by a material balance over the steam generator system in accordance with ASME Power Test code 4.1. Also, the volumetric flue gas flow as determined by Method I of the E.P.A. Standards shall be confirmed in accordance with the ASME Power Test Code 4.1. Confirmation of the heat input and flue gas flow rate by the material and heat balance method set forth in the ASME Power Test Code 4.1 is highly important since direct measurement of these values is very difficult.

The nitrogen content of the solid fuel is to be based on fuel samples taken during the NO_x test and analyzed by the Kjeldahl method as described in ASTM specification D-271-70.

B. GUARANTEES

1. The minimum boiler efficiency shall be 88.57 percent.

2. The maximum total pressure loss from the air inlet of the air heater to the furnace shall be 5.2 inches of water.

3. The maximum pressure loss from the furnace to the air heater flue gas outlet shall be 7.9 inches of water.

4. The maximum pressure drop excluding static head, between the Owner's economizer inlet connection and the steam drum shall be 25 psi.

5. The maximum total pressure drop between the steam drum and the Owner's superheater outlet connection shall be 160 psi.

6. The maximum steam pressure drop between the Owner's connection to the reheater inlet and outlet shall be 25 psi.

IP14_001035

7. The maximum excess air at the air heater flue gas outlet shall be 27 percent.

8. The average dust loading in the flue gas leaving the economizer shall not be greater than 6.44 grains/SCF during a 24 hour period, based on a soot blowing schedule of once per 8 hour shift.

9. The maximum leakage from the air to the gas side of the primary air heaters shall not exceed 163,000 pounds of air per hour with a gas flow entering of 972,000 pounds per hour, provided the total pressure differential between the air entering and gas leaving the primary air heater does not exceed 37.3" inches of water.

   The maximum leakage from the air to the gas side of the secondary air heaters shall not exceed 314,000 pounds of air per hour with gas flow entering of 6,269,000 pounds per hour, provided the total pressure differential between the air entering and gas leaving the secondary air heater does not exceed 12.85 inches of water.

   Test procedures shall be in accordance with Air Heater Test Code ASME - PTC 4.3.

10. When pulverizing 687,000 lbs. per hour of the specified 48 grind performance coal with total moisture not exceeding 8.3 percent, the fineness will not be less than 99 percent through 50 USS Sieve and not less than 70 percent through 200 USS Sieve and the total power to the pulverizers, primary air fans, feeders, airheaters, and pulverizer seal air blower with a power factor not less than 0.80, and an assumed motor efficiency of not less than 0.92, with 7 pulverizers, 7 Merrick feeders, 2 Westinghouse (23120D) primary air fans with two speed motors, 2 Ljungstrom

IP14_001036

(24-1/2 VI-44) primary and 2 Ljungstrom (33-1/2 VI-64) secondary air heaters, and 1 pulverizer seal air blower in service, will not exceed 5,955 KW, with the primary air fans operating at a fan shaft speed of 876 RPM.

11. Provided that spray water temperature is 390 F or less and all feedwater heaters are in service, the maximum spray water flow for main steam temperature control at any load under steady state conditions shall not exceed 335,000 lbs/hr.

12. Provided that spray water temperature is 390 F or less and all feedwater heaters are in service, the required spray water flow for reheater steam temperature control at any load under steady stated conditions shall be 0 (zero) lbs/hr.

13. All pulverizers are guaranteed to operate at a capacity of 130,300 lbs/hr when firing the specified 48 Hardgrove grindability performance coal, ground to a fineness of not less than 70 percent through a 200 USS Sieve and 99 percent through a 50 USS Sieve, provided that total moisture in the coal does not exceed 8.3 percent and the temperature of the preheated air supplied is not less than 450 F.

14. All pulverizers are guaranteed to operate at the capacity of 687,000 lbs/hr when firing the specified 48 Hardgrove grindability performance coal, ground to a fineness of not less than 70 percent through a 200 USS Sieve and 99 percent through a 50 USS Sieve, provided that total moisture in the coal does not exceed 8.3 percent.

Performance tests on pulverizers shall be in accordance with Pulverizer Test Code ASME-PTC 4.2.

IP14_001037

15. The average temperature of the steam leaving the superheater shall be 1005 F, plus or minus 10 F.

16. The average temperature of the steam leaving the reheater shall be 1005 F, plus or minus 10 F.

17. The average solids content in steam leaving the boiler shall not exceed 0.08 ppm with the following maximum boiler water conditions:

    Total boiler water solids 50 ppm
    Chloride ion concentration 2 ppm
    Boiler water pH 10.0

18. When the boiler is operated at all normal loads up to the specified MCR capacity, the NO_x concentration in the flue gases at a point between the economizer outlet and the air heater inlet shall not exceed 0.55 lbs per million BTU input from fuel (using HHV).

    When firing sub-bituminous coal only, the NO_x concentration in the flue gases at a point between the economizer outlet and the air heater inlet shall not exceed 0.50 lbs per million BTU heat input from fuel (using HHV).

19. The Contractor-furnished fans, blowers, and all motors 1,000 HP and larger, shall comply with the noise level set forth in Division G3, Subarticles 21.2 and 29.10 of the contract specification.

IP14_001038

C. SPECIFICATION REQUIREMENTS

1. The boiler shall be designed and capable of operating continuously at the following conditions defined as Maximum Continuous Rating:

	Maximum Continuous Rating
Steam at superheater outlet:	
Flow, lb/hr	6,600,000
Temperature, F	1,005
Pressure, psig	2,640
Steam at reheater outlet:	
Flow, lb/hr	5,500,000
Temperature, F	1,005
Steam temperature at reheater inlet, F	630
Reheater heat absorption, MMBtu/hr	1,100
Feedwater temperature to economizer, F	555

Article 2, Pages G3-3, G3-4

2. The requirement shall be met that the boiler operate in the constant pressure mode, the variable pressure mode, and hybrid pressure modes. In the variable pressure mode of operation, the superheater outlet pressure will be varied from approximately 630 psig to approximately 2,515 psig over the load range of 25 percent of Maximum Capacity to 100 percent of Maximum Capacity. In the hybrid pressure mode of operation, the superheater outlet pressure will be varied in any combination of variable pressure and constant pressure bounded by the above referenced variable pressure and constant pressure modes of operation. With a typical hybrid pressure mode of operation that may be used, the superheater outlet pressure will be varied from 820 psig at 25

IP14_001039

percent of Maximum Capacity to approximately 2,515 psig at 68 percent of Maximum Capacity and will be operated at constant pressure above 68 percent of Maximum Capacity.

Article 1, Page G3-1

3. The requirement shall be met that the boiler operate at flow rates and temperatures listed for operation at Maximum Capacity but with the inlet pressure to the economizer reduced such that the superheater outlet pressure is not greater than 2,365 psig.

Article 1, Page G3-1

4. The requirement shall be met that the flue gas temperature leaving the air heater shall be 280 F ± 10 F, corrected for air heater leakage, at Maximum Capacity when firing coal. For the purposes of design and calculations including efficiency, a flue gas temperature of 280 F leaving the air heater shall be used.

Article 1, Page G3-2

5. The boiler shall be designed for a reheater pressure of not less than 200 psi higher than the pressure of the steam at the reheater inlet at Maximum Capacity.

Article 1, Page G3-2

6. The boiler shall be designed so that the unit can operate at not less than 60 percent of Maximum Capacity with any one air heater, forced draft fan, or primary air fan out of service.

Article 2, Page G3-5

IP14_001040

7. The boiler shall be designed to reduce load to a load not greater than 50 percent of Maximum Capacity from any load greater than 50 percent of Maximum Capacity at the rate of not less than 5 percent of Maximum Capacity per minute without lifting safety valves, without tripping pulverizers, and without the use of supplemental fuel.

Article 2, Page G3-5

8. The maximum gas side pressure drop between the furnace and the air heater outlet shall be not more than 12 inches wg at MCR.

Article 2, Page G3-5

9. The gas temperature entering close space platen or pendant surfaces shall be not greater than 1,900 F at MCR. The gas temperature, as measured by high velocity thermocouple (HVT), shall be the maximum temperature.

Article 2, Pages G3-5, G3-6

10. The boiler shall be capable of complying with all requirements of these specifications when operating with coal from any of the coal reserves listed in this Article, either individually or in any combination, and with sodium oxide content to 4.5 percent in the coal ash. However, when coal from Coal Reserve F is supplied to the boiler, Coal Reserve F will not exceed 50 percent by weight of a coal mixture. The typical analysis of coal Reserve B shall be used by the Contractor for providing performance guarantees and for providing Supplementary data required in Subarticle 12.3 of the Execution Document. Coal Reserve B will be used by the Owner for performing guarantee tests of boiler performance. See attached coal tables.

Article 3, Page G3-6

IP14_001041

11. The Contractor shall furnish equipment to maintain main steam and reheat steam temperatures constant at 1,005 F from 65 percent of Maximum Capacity to Maximum Capacity without the use of reheat desuperheating spray.

In addition to the equipment necessary to control reheat steam temperature, the Contractor shall furnish spray desuperheating equipment for the reheater with sufficient capacity to maintain steam temperature for upset conditions of boiler operation.

There shall be no more than 20 F difference in steam temperature between the connections for the reheater.

The superheat and reheat temperatures shall be less than 150 F apart under all conditions of operation at loads above 15 percent of Maximum Capacity.

Article 4, Page G3-14

12. The maximum total solids in the steam leaving each drum shall be not more than 0.08 part per million by weight at all steam flows and all operating pressures. The concentration of solids in the boiler water will be approximately 50 parts per million with no oil or organic matter present.

Article 7, Page G3-17

Reference: TEST PROCEDURE FOR SOLIDS IN STEAM, Item 3 under Conditions for Guaranteed Performance, Pages 9-3 and 9-4 behind Tab "PERFORMANCE" in B&W Proposal.

IP14_001042

COAL RESERVE A

Proximate Analysis, as received, diluted	Typical	Range	
Moisture	8.6	6.5	11.0
Ash	15.6	10.0	21.5
Volatile	36.0	33.2	38.2
Fixed Carbon	39.8	36.1	43.5
Btu	10,930	9,980	11,885
Miscellaneous, undiluted			
Sulfur Forms, dry basis			
Pyritic	0.19	0.04	0.25
Sulphate	0.00	0.00	0.01
Organic	0.56	0.45	0.68
Equilibrium Moisture	6.8	4.7	9.0
Grindability	46	41	52
Fusion Temperatures, undiluted			
Reducing			
I.D.	2300	2110	2505
H=W	2470	2270	2700+
H=½W	2515	2335	2700+
Fluid	2615	2470	2700+
Oxidizing			
I.D.	2420	2270	2570
H=W	2560	2420	2700+
H=½W	2580	2450	2700+
Fluid	2670	2600	2700+
Ultimate Analysis, diluted			
Carbon	59.90	56.90	62.90
Hydrogen	4.50	4.10	4.90
Nitrogen	0.93	0.73	1.13
Chlorine	0.02	0.00	0.04
Sulfur	0.75	0.59	0.91
Ash	15.60	10.00	21.50
Oxygen	9.70	7.70	11.70
Moisture	8.60	6.50	11.00
Mineral Analysis, ignited basis, undiluted			
Phos. pentoxide, P_2O_5	0.4	0.2	1.1
Silica, SiO_2	61.1	57.1	65.1
Ferric oxide, Fe_2O_3	4.6	3.0	8.0
Alumina, Al_2O_3	21.6	18.6	24.6
Titania, TiO_2	1.1	0.8	1.4
Lime, CaO	4.6	2.5	6.8
Magnesia, MgO	1.0	0.7	1.3
Sulfur trioxide, SO_3	2.9	1.4	4.7
Potassium oxide, K_2O	1.2	0.6	1.6
Sodium oxide, Na_2O	1.0	0.5	1.5
Undetermined	0.5	0.1	1.0
Free Swelling Index	--	--	--
Calculated Values, diluted where applicable			
Lbs Ash/MMBtu	14.3	8.0	19.0
Base/Acid	0.15	0.10	0.21
Na_2O/MMBtu	0.14	0.06	0.20
Fe_2O_3/CaO	1.00	0.70	2.00
$SiO_2 + Al_2O_3$/MMBtu	11.83	6.47	18.82
Fe_2O_3 + CaO	9.20	5.94	12.47
SiO_2 X % Ash dry	0.10	0.07	0.15
M & A free Btu	14,420	--	--

IP14_001043

COAL RESERVE B

Pert Coal

Proximate Analysis, as received, diluted	Typical	Range	
Moisture	8.3	7.4	9.4
Ash	14.0	8.0	16.0
Volatile	37.1	35.0	40.0
Fixed Carbon	40.6	38.0	44.0
Btu	11,010	10,500	12,100
Miscellaneous, undiluted			
Sulfur Forms, dry basis			
Pyritic	0.18	0.11	0.25
Sulphate	0.00	0.00	0.00
Organic	0.37	0.29	0.45
Equilibrium Moisture ?	6.5	6.0	7.0
Grindability	48	43	53
Fusion Temperatures, undiluted			
Reducing			
I.D.	2180	2075	2300
H=W	2215	2095	2340
H=½W	2245	2115	2380
Fluid	2330	2190	2470
Oxidizing			
I.D.	2240	2130	2355
H=W	2300	2135	2455
H=½W	2325	2200	2450
Fluid	2410	2255	2570
Ultimate Analysis, diluted			
Carbon	61.45	58.50	64.50
Hydrogen	4.56	4.26	4.86
Nitrogen	1.20	0.95	1.45
Chlorine	0.02	0.00	0.04
Sulfur	0.55	0.40	0.70
Ash	14.00	8.00	16.00
Oxygen	9.92	9.32	10.52
Moisture	8.30	7.40	9.30
Mineral Analysis, ignited basis, undiluted			
Phos. pentoxide, P_2O_5	0.3	0.1	1.0
Silica, SiO_2	58.8	49.3	62.0
Ferric oxide, Fe_2O_3	5.9	3.9	7.9
Alumina, Al_2O_3	13.5	10.7	16.8
Titania, TiO_2	0.7	0.5	0.9
Lime, CaO	9.3	3.9	14.6
Magnesia, MgO	2.0	0.8	3.0
Sulfur trioxide, SO_3	5.9	2.9	8.9
Potassium oxide, K_2O	0.9	0.6	1.3
Sodium oxide, Na_2O	1.6	0.6	3.0*
Undetermined	1.1	0.3	3.0
Free Swelling Index	1.5	1.0	1.5
Calculated Values, diluted where applicable			
Lbs Ash/MMBtu	12.71	--	--
Base/Acid	0.27	--	--
Na_2O/MMBtu	0.20	--	--
Fe_2O_3/CaO	0.63	--	--
SiO_2 + Al_2O_3/MMBtu	9.19	--	--
Fe_2O_3 + CaO	15.20	--	--
SiO_2 X % Ash dry	0.09	--	--
M & A free Btu	14,172	--	--

*Core samples indicate an absolute maximum of approximately 5.1 percent.

IP14_001044

COAL RESERVE C

Proximate Analysis, as received, diluted	Typical	Range	
Moisture	10.5	9.5	11.4
Ash	7.2	6.4	8.0
Volatile	39.4	38.2	40.7
Fixed Carbon	42.9	41.8	44.0
Btu	11,577	11,427	11,727
Miscellaneous, undiluted			
Sulfur Forms, dry basis			
Pyritic	---	---	---
Sulphate	---	---	---
Organic	---	---	---
Equilibrium Moisture	---	---	---
Grindability	49	47	51
Fusion Temperatures, undiluted			
Reducing			
I.D.	2140	2095	2190
H=W	2170	2110	2220
H=½W	2195	2130	2260
Fluid	2245	2150	2335
Oxidizing			
I.D.	2205	2145	2265
H=W	2230	2165	2295
H=½W	2260	2190	2330
Fluid	2310	2220	2400
Ultimate Analysis, diluted			
Carbon	65.43	63.16	67.70
Hydrogen	4.88	4.70	5.06
Nitrogen	1.26	1.07	1.45
Chlorine	0.01	0.00	0.02
Sulfur	0.48	0.37	0.59
Ash	7.20	6.40	8.00
Oxygen	10.24	9.66	10.82
Moisture	10.50	9.50	11.40
Mineral Analysis, ignited basis, undiluted			
Phos. pentoxide, P_2O_5	0.2	0.1	0.3
Silica, SiO_2	53.6	47.4	59.8
Ferric oxide, Fe_2O_3	7.1	5.5	8.7
Alumina, Al_2O_3	13.2	10.5	15.9
Titania, TiO_2	0.7	0.6	0.8
Lime, CaO	12.3	6.7	17.9
Magnesia, MgO	2.5	1.0	4.0
Sulfur trioxide, SO_3	8.4	5.7	11.1
Potassium oxide, K_2O	1.0	0.6	1.8
Sodium oxide, Na_2O	0.5	0.4	0.6
Undetermined	0.5	0.1	0.9
Free Swelling Index			
Calculated Values, diluted where applicable			
Lbs Ash/MMBtu	6.22	5.78	6.67
Base/Acid	0.35	0.23	0.48
Na_2O/MMBtu	0.031	0.021	0.041
Fe_2O_3/CaO	0.58	0.47	0.69
SiO_2 + Al_2O_3/MMBtu	4.15	3.55	4.75
Fe_2O_3 + CaO	19.40	13.13	25.67
SiO_2 X % Ash dry	0.04	0.01	0.05
M & A free Btu	14,067	---	---

IP14_001045

COAL RESERVE D

Proximate Analysis, as received, diluted	Typical	Range	
Moisture	9.8	8.4	[illegible]
Ash	8.8	6.5	[illegible]
Volatile	38.2	34.5	40.0
Fixed Carbon	43.2	39.5	45.5
Btu	11,690	10,5[illegible]	12,300
Miscellaneous, undiluted			
Sulfur Forms, dry basis			
Pyritic	0.09	0.07	0.12
Sulphate	0.01	0.00	0.03
Organic	0.49	0.39	0.59
Equilibrium Moisture	5.8	5.0	6.6
Grindability	47	45	49
Fusion Temperatures, undiluted			
Reducing			
I.D.	2335	2145	2520
H=W	2355	2170	2540
H=½W	2380	2200	2560
Fluid	2415	2235	2600
Oxidizing			
I.D.	2395	2200	2590
H=W	2415	2230	2600
H=½W	2435	2250	2620
Fluid	2470	2290	2650
Ultimate Analysis, diluted			
Carbon	66.20	56.07	76.33
Hydrogen	4.91	4.12	5.70
Nitrogen	1.31	1.05	1.57
Chlorine	0.02	0.01	0.03
Sulfur	0.59	0.49	0.69
Ash	8.80	6.50	11.00
Oxygen	8.37	7.14	9.60
Moisture	9.80	8.40	11.20
Mineral Analysis, ignited basis, undiluted			
Phos. pentoxide, P_2O_5	0.6	0.2	1.0
Silica, SiO_2	52.6	45.1	60.0
Ferric oxide, Fe_2O_3	4.4	2.9	6.0
Alumina, Al_2O_3	22.8	15.7	29.9
Titania, TiO_2	1.0	0.7	1.3
Lime, CaO	7.8	6.8	9.8
Magnesia, MgO	1.1	0.7	1.5
Sulfur trioxide, SO_3	5.5	3.5	7.5
Potassium oxide, K_2O	0.6	0.4	0.8
Sodium oxide, Na_2O	2.6	1.3	3.9 *
Undetermined	1.0	0.6	1.4
Free Swelling Index	---	---	---
Calculated Values, diluted where applicable			
Lbs Ash/MMBtu	7.53	4.79	10.27
Base/Acid	0.22	0.13	0.31
Na_2O/MMBtu	0.20	0.11	0.29
Fe_2O_3/CaO	0.56	0.39	0.73
SiO_2 + Al_2O_3/MMBtu	5.68	3.85	7.51
Fe_2O_3 + CaO	12.20	8.89	15.51
SiO_2 X % Ash dry	0.05	0.04	0.07
M & A free Btu	14,360	---	---

*Core samples indicate an absolute maximum of approximately 5.1 percent.

IP14_001046

COAL RESERVE E

Proximate Analysis, as received, diluted	Typical	Range	
Moisture	10.6	11.4	11.8
Ash	9.3	6.0	12.6
Volatile	35.8	33.0	38.0
Fixed Carbon	44.3	41.7	46.2
Btu	11,060	10,540	11,440
Miscellaneous, undiluted			
Sulfur Forms, dry basis			
Pyritic	0.09	0.02	0.40
Sulphate	0.00	0.00	0.00
Organic	0.36	0.28	0.60
Equilibrium Moisture	--	--	--
Grindability	--	--	--
Fusion Temperatures, undiluted			
Reducing			
I.D.	2160	2060	2270
H=W	2180	2070	2290
H=½W	2195	2080	2310
Fluid	2220	2100	2340
Oxidizing			
I.D.	2190	2095	2285
H=W	2210	2110	2305
H=½W	2225	2120	2325
Fluid	2255	2150	2360
Ultimate Analysis, diluted			
Carbon	63.66	60.67	66.67
Hydrogen	4.37	4.07	4.67
Nitrogen	1.05	0.87	1.17
Chlorine	0.02	0.00	0.03
Sulfur	0.44	0.29	0.69
Ash	9.30	6.0	12.60
Oxygen	10.56	10.06	11.06
Moisture	10.6	11.4	11.8
Mineral Analysis, ignited basis, undiluted			
Phos. pentoxide, P_2O_5	0.20	0.10	0.30
Silica, SiO_2	51.00	44.00	58.00
Ferric oxide, Fe_2O_3	5.20	3.20	6.60
Alumina, Al_2O_3	13.00	11.00	15.00
Titania, TiO_2	0.70	0.60	0.80
Lime, CaO	14.60	9.40	16.00
Magnesia, MgO	3.00	1.30	4.50
Sulfur trioxide, SO_3	7.80	6.00	9.60
Potassium oxide, K_2O	0.60	0.35	1.00
Sodium oxide, Na_2O	3.10	0.20	4.70*
Undetermined	0.80	0.00	2.00
Free Swelling Index	--	--	--
Calculated Values, diluted where applicable			
Lbs Ash/MMBtu	8.41	5.80	11.02
Base/Acid	0.41	0.25	0.57
Na_2O/MMBtu	0.26	0.15	0.37
Fe_2O_3/CaO	0.36	0.22	0.50
SiO_2 + Al_2O_3/MMBtu	5.38	3.06	7.70
Fe_2O_3 + CaO	19.80	14.10	25.50
SiO_2 X % Ash dry	0.05	0.03	0.07
M & A free Btu	13,310	--	--

*Core samples indicate an absolute maximum of approximately 5.1 percent.

IP14_001047

COAL RESERVE F

Proximate Analysis, as received, diluted	Typical	Range	
Moisture	18.8	13.00	21.00
Ash	7.8	5.0	12.0
Volatile	35.5	33.3	37.5
Fixed Carbon	37.9	35.9	39.9
Btu	9,662	9,400	10,000
Miscellaneous, undiluted			
Sulfur Forms, dry basis			
Pyritic	---	---	---
Sulphate	---	---	---
Organic	---	---	---
Equilibrium Moisture	---	---	---
Grindability	55	53	57
Fusion Temperatures, undiluted			
Reducing			
I.D.	2250	2045	2300
H=W	2350	2155	2400
H=½W	2380	2210	2430
Fluid	2400	2315	2525
Oxidizing			
I.D.	---	---	---
H=W	---	---	---
H=½W	---	---	---
Fluid	---	---	---
Ultimate Analysis, diluted			
Carbon	55.60	52.00	58.00
Hydrogen	4.13	3.80	4.40
Nitrogen	0.86	0.70	1.00
Chlorine	0.04	0.00	0.05
Sulfur	0.93	0.80	1.10
Ash	7.81	5.00	12.00
Oxygen	11.83	11.30	12.30
Moisture	18.80	13.00	21.00
Mineral Analysis, ignited basis, undiluted			
Phos. pentoxide, P_2O_5	0.2	0.1	0.4
Silica, SiO_2	41.7	45.0	38.0
Ferric oxide, Fe_2O_3	7.0	5.5	8.5
Alumina, Al_2O_3	26.4	23.0	29.0
Titania, TiO_2	1.7	1.5	1.9
Lime, CaO	6.8	6.3	7.3
Magnesia, MgO	1.4	1.2	1.6
Sulfur trioxide, SO_3	10.6	8.6	12.6
Potassium oxide, K_2O	0.2	0.1	0.3
Sodium oxide, Na_2O	3.0	1.0	3.5
Undetermined	1.0	0.5	2.0
Free Swelling Index	0	0	0
Calculated Values, diluted where applicable			
Lbs Ash/MMBtu	8.07	---	---
Base/Acid	0.26	---	---
Na_2O/MMBtu	0.24	---	---
Fe_2O_3/CaO	1.03	---	---
SiO_2 + Al_2O_3/MMBtu	5.50	---	---
Fe_2O_3 + CaO	13.80	---	---
SiO_2 X % Ash dry	0.04	---	---
M & A free Btu	13,160	---	---

IP14_001048

COAL RESERVE G

Proximate Analysis, as received, diluted	Typical	Range	
Moisture	6.5	5.7	7.1
Ash	15.8	10.7	20.6
Volatile	33.2	29.8	36.6
Fixed Carbon	44.5	41.1	48.1
Btu	11,205	10,375	12,055
Miscellaneous, undiluted			
Sulfur Forms, dry basis			
Pyritic			
Sulphate			
Organic			
Equilibrium Moisture	4.2	3.5	5.0
Grindability	44	41	46
Fusion Temperatures, undiluted			
Reducing			
I.D.	2330	2200	2460
H=W	2400	2265	2540
H=½W	2475	2335	2620
Fluid	2560	2430	2690
Oxidizing			
I.D.	2395	2265	2530
H=W	2465	2330	2600
H=½W	2525	2400	2650
Fluid	2595	2480	2715
Ultimate Analysis, diluted			
Carbon	63.40	59.4	67.4
Hydrogen	4.32	4.12	4.52
Nitrogen	1.17	1.02	1.32
Chlorine	0.03	0.00	0.06
Sulfur	0.61	0.46	0.76
Ash	15.80	10.7	20.80
Oxygen	8.17	7.57	8.77
Moisture	6.50	5.7	7.1
Mineral Analysis, ignited basis, undiluted			
Phos. pentoxide, P_2O_5	0.6	0.2	1.0
Silica, SiO_2	58.7	53.7	63.7
Ferric oxide, Fe_2O_3	3.4	2.6	4.2
Alumina, Al_2O_3	20.7	17.0	25.0
Titania, TiO_2	0.8	0.7	0.9
Lime, CaO	6.6	4.6	8.6
Magnesia, MgO	1.6	0.9	2.3
Sulfur trioxide, SO_3	5.3	3.3	7.3
Potassium oxide, K_2O	0.7	0.3	1.1
Sodium oxide, Na_2O	0.9	0.5	1.3
Undetermined	0.7	0.1	1.3
Free Swelling Index	3	2	4
Calculated Values, diluted where applicable			
Lbs Ash/MMBtu	14.10	8.84	20.58
Base/Acid	0.16	0.12	0.21
Na_2O/MMBtu	0.13	0.05	0.30
Fe_2O_3/CaO	0.52	0.27	0.92
SiO_2 + Al_2O_3/MMBtu	11.20	6.49	17.06
Fe_2O_3 + CaO	10.00	7.64	12.47
SiO_2 X % Ash dry	0.09	0.05	0.13
M & A free Btu	14,420	--	--

*Core samples indicate an absolute maximum of approximately 5.1 percent.

IP14_001049

13. The sootblowers when operated through a blowing cycle not more than once each shift shall maintain boiler cleanliness such that guaranteed performance is obtained continuously.

Article 19.1, Page G3-29

14. The Boiler Unit shall be capable of operation at any load from 20 percent of Maximum Capacity to Maximum Continuous Rating without continuous use of supplemental fuels.

The Boiler Unit shall be capable of the following:

(a) Operation of 20 percent of Maximum Capacity with two pulverizers in service.

A pulverizer shall be considered in worn condition when its coal output can be increased by 11 percent by replacement of worn grinding surfaces.

Article 20.1, Page G3-36

15. Pulverizers shall pulverize, dry and classify the coal for satisfactory burner operation. Each pulverizer shall be capable of supplying coal pulverized to not less than 70 percent through a 200 mesh USS Sieve and 99 percent through a 50 mesh USS Sieve throughout its required coal output range and until after the pulverizer is in a worn condition. Coal fineness shall be independent of output. Each pulverizer shall provide quick response to required output changes.

Article 20.7.3, Page G3-41

16. A fan unit shall not have a vibration in any plane greater than 1-1/2 mils, peak-to-peak, as measured on the bearing housings of the fan and motor nor shall the displacement exceed the region shown as "GOOD" on the General Machinery Vibration Chart published in Vibration Tolerances for Industry by R. L. Baxter

IP14_001050

and D. L. Bernhard, ASME Publication 67-PEM-14, presented at the ASME Plant Engineering and Maintenance Conference, Detroit, Michigan, April 10 - 12, 1967 (also published as Curve 305D by IRD Mechanalysis, Inc., 6150 Huntley Road, Columbus, Ohio 43229). The design resonant speed shall be not less than 30 percent above the maximum operating speed of the assembled unit. The design resonant speed is defined as that speed equal to the natural frequency of the combined spring-mass system of the rotor, bearing housings, oil film, and Contractor-furnished bearing pedestal but excluding the Owner-furnished reinforced concrete foundation. The critical speed is defined as that speed equal to the natural frequency of the combined spring-mass system of rotor, bearing housing, oil film, and bearing pedestal, but excluding the reinforced concrete foundation.

Rotor tip speed of each fan shall not exceed 35,000 fpm. All fan wheels with tip speeds greater than 25,000 fpm shall be stress relieved after fabrication. Each fan shall be capable of continuous operation at any load from 15 percent of test block capacity to test block capacity and shall be suitable for sudden load changes within these limits. Each fan shall have no inflection points in its head-capacity curve and shall have a nonoverloading horsepower characteristic. If applicable, fans shall be designed to operate smoothly in parallel.

Equivalent A-weighted sound level shall not exceed 85 dB measured at a distance of 5 feet from each fan inlet. If the fan complies with the aforementioned requirements, the Owner will be responsible for OSHA compliance.

Article 21.2, Pages G3-43 G3-44

IP14_001051

17. Primary air fans shall be provided as necessary for proper boiler operation. With one primary fan out of service the remaining fans shall be capable of providing sufficient primary air to permit boiler operation up to not less than 60 percent of Maximum Capacity with each of the specified coals. Test block performance of each fan with inlet boxes and silencers shall be greater than its expected operating performance by not less than 25 percent for weight flow, not less than 50 percent for static discharge pressure, and not less than 25 F for temperature at the plant's elevation for each of the specified coals.

Article 21.9, Page G3-46

18. The Boiler Unit shall incorporate the best available technology applicable to the boiler being offered and shall be designed to minimize air pollution emissions without causing Boiler Unit operating problems including tube wastage, ash slagging, ash fouling, and boiler vibrations. Air pollution emissions to be minimized shall include nitrogen oxides, sulfur oxides, carbon monoxide, hydrocarbons, unburned carbon, and particulates.

Each Boiler Unit shall not cause nitrogen oxides (expressed as nitrogen dioxide) to be discharged into the atmosphere at a rate exceeding 0.55 pound per million Btu heat input. NO_x emissions shall be determined in accordance with applicable provisions of 40 CFR60 Subpart D.

The nitrogen oxides emission limitations shall be applicable throughout the load range for all the specified coals and for all combinations of pulverizers in operation.

IP14_001052

The Contractor shall provide all necessary changes to the Boiler Unit at his own expense, which may be required to obtain approval of NO_x emission levels by the cognizant regulatory agencies on the effective date of the contract.

Article 30., Pages G3-70, G3-71

IP14_001053

BLW 10/16/86

STEAM GENERATOR ACCEPTANCE

I. GUARANTEE

A. Boiler At Maximum Normal Operation (100% Load)

Based on the unit being fired with the specified performance coal fuel and on the other performance conditions shown on Boiler Performance Summary Sheet P23-310-0-1S at the capacity of 6,100,000 lbs./hr. (no auxiliary steam) at 2515 psig at the superheater outlet with a feedwater temperature of 543°F and reheater inlet steam conditions of 5,000,000 lbs./hr. and 539 psig and 620°F and with 7 mills in operation:

1. The efficiency of the unit will not be less than 88.57 percent.

2. The average temperature of the steam leaving the heater will be 1005°F, plus or minus 10°F.

3. The average temperature of the steam leaving the reheater will be 1005°F, plus or minus 10°F.

4. The steam pressure drop between boiler drum and the COMPANY'S superheater outlet terminals will not exceed 160 psi. (See Note Below).

5. The steam pressure drop through the reheater between the COMPANY'S inlet and outlet terminals will not exceed 25 psi. (See Note Below.)

6. The pressure drop through the economizer, (not including valves, or static head) will not exceed 25 psi.

7. The average solids content in steam leaving boiler will not exceed 0.08 ppm (total solids rather than specific ions) with the following maximum boiler water conditions:

Total boiler water solids	50 ppm.
Chloride ion concentration	2 ppm.
Boiler water pH	10.0

The water conditions stated above are the maximum values permitted to qualify for the steam purity guarantee and are not to be construed as water treatment specifications. Refer to B&W Operating Instructions for proper boiler water requirements.

The steam purity guarantee is exclusive of vaporous silica carry-over and, unless otherwise agreed, shall be applicable at full-load steam flow and at normal water levels and drum pressure.

8. The average net resistance from the air heater inlet to the furnace will not exceed 5.2 inches of water. The average net resistance from the furnace through the unit to the air heater gas outlet will not exceed 7.9 inches of water.

9. Spray water quantities required for main steam temperature control will not exceed 335,000 lbs./hr. provided that spray water temperature is 390°F or less, and all feedwater heaters are in service.

10. Spray water quantities required for reheater temperature control will be 0 (zero) lbs./hr. provided that spray water temperature is 390°F or less, and all feedwater heaters are in service.

11. The excess air leaving the airheaters will not exceed 27%.

NOTE: Steam pressure drop is calculated to the COMPANY'S terminal point. No pressure drop allowance has been made for the size transition between the COMPANY'S terminal size and the PURCHASER'S pipe size.

B. Boiler At Maximum Continuous Rating

Based on the unit being fired with the specified performance coal fuel and on the other performance conditions shown on Boiler Performance Summary Sheet P23-310-0-1S, the unit will have a maximum normal capacity of 6,600,000 lbs. of main steam flow per hour at 2640 psig at the superheater outlet, with a feedwater temperature of 555°F and reheater inlet steam conditions of 5,500,000 lbs./hr. and 590 psig and 630°F.

C. Superheater and Reheater Control Range

Based on the unit being fired with the specified performance coal fuel and on the other performance conditions shown on Boiler Performance Summary Sheet P23-310-0-1S at any stead load from 3,965,000 to 6,600,000 lbs. of main steam flow per hour:

1. The average temperature of the steam leaving the superheater will be 1005°F, plus or minus 10°F.

2. The average temperature of steam leaving the reheater will be 1005°F, plus or minus 10°F.

D. Pulverizers

Subject to raw coal being prepared so that all will pass through a 1-5/8 inch ring, the pulverizer driving motor being operated at 870 rpm, and the conditions specified on the Boiler Performance Summary Sheet P23-310-0-1S, the COMPANY makes the following guarantees on the specified performance coal:

1. The pulverizer can be operated at a capacity of 130,300 lbs. per hour when firing the specified 48 Hardgrove grindability performance coal, ground to a fineness of not less than 70 percent through 200 USS Sieve and 99 percent through a 50 USS Sieve provided total moisture in the coal does not exceed 8.3 percent and the temperature of the preheated air supplied is not less than 450°F.

2. When pulverizing 687,000 lbs. per hour of the specified 48 grind performance coal with total moisture not exceeding 8.3 percent, the fineness will not be less than 99 percent through 50 USS Sieve and not less than 70 percent through 200 USS Sieve and the total power to the pulverizers, primary air fans, feeders, airheaters and pulverizer seal air blower with a power factor not less than .80, and an assumed motor efficiency of not less than .92, with 7 pulverizers, 7 Merrick feeders, 2 Westinghouse (23120D) primary air fans with two speed motors, 2 Ljungstrom (24-1/2 VI-44) primary and 2 Ljungstrom (33-1/2 VI-64) secondary airheaters, and 1 pulverizer seal air blower in service, total power will not exceed 5955 KW's, when operating at a fan shaft speed of 897 rpm.

E. Air Heaters

Based on the unit being fired with the specified performance fuel and on the other performance conditions shown on Boiler Performance Summary Sheet P23-310-0-1S:

1. Primary Air Heaters

The leakage from the air to the gas side of the air heaters will not exceed 163,000 pounds of air per hour with a gas flow entering of 972,000 pounds per hour, provided the total pressure differential between the air entering and gas leaving the air heater does not exceed 37.3 inches of water.

2. Secondary Air Heaters

The leakage from the air to the gas side of the air heaters will not exceed 314,000 pounds of air per hour with a gas flow entering of 6,269,000 pounds per hour, provided the total pressure differential between the air entering and gas leaving the air heater does not exceed 12.85 inches of water.

F. Flue Gas Contaminants

1. Oxides of Nitrogen in the Flue Gas:

When the steam generating unit is operated at all normal loads up to the specified MCR capacity and in accordance with the information given in the Boiler Performance Summary Sheet P23-310-0-1S and operating instructions, and when firing the summary sheet performance coal fuel or any of the other specified* coals A through G (Specification 2010 Page G3-6 thru G3-12), the COMPANY makes the following guarantee:

a. The NOx concentration in the flue gases at a point between economizer outlet and the air heater inlet will not exceed .55 lbs. per million Btu heat input from fuel (using HHV).

b. Should the PURCHASER elect to fire sub-bituminous** coal only, the NOx concentration in the flue gases at a point between economizer outlet and the air heater inlet will not exceed .50 lbs. per million Btu heat input from fuel (using HHV).

*Coal F, when fired, is not to exceed 50 percent by weight of coal mixture using any of the other specified coals A through G.

**As defined by ASTM D388.

2. Dust Loading Leaving the Economizer:

When the steam generating unit is operated at all normal loads up to the maximum normal capacity and in accordance with the information given on the Boiler Performance Summary Sheet P23-310-0-1S and operating instructions and when firing the Summary Sheet specified performance fuel the COMPANY makes the following guarantee:

The average dust loading leaving the economizer will not be greater than 6.44 grains/SCF during a twenty-four hour period based on a soot blowing schedule of once per eight-hour shift.

G. Noise Control

With respect to the sound levels, the COMPANY-furnished fans, blowers, and all motors 100 hp and larger, when serviced and operated in accordance with the COMPANY'S operation manual, shall comply with the level set forth in Division G3, Subarticles 21.2 and 29.10 of the specification.

II. ACCEPTANCE

The equipment shall be considered as accepted and all performance guarantees shall be deemed fully achieved after test(s) show that the performance guarantees have been fulfilled. If the PURCHASER shall fail to have said equipment tested within the time period mentioned, the equipment shall be conclusively deemed to have achieved guaranteed performance and will be considered completed accepted.

It is expressly understood and agreed by IPA that the leakage guarantee on the secondary air heaters is the sole and direct responsibility of Air Preheater Co. and is included herein solely as a pass thru guarantee by B&W from Air Preheater Co. and in case of failure to achieve said guarantees, IPA shall have no cause of action or remedy against B&W but shall look solely to Air Preheater Co.

dm/400

THIS DOCUMENT SHEET IS THE PROPERTY OF THE BABCOCK & WILCOX COMPANY AND IS LOANED UPON CONDITION THAT IT IS NOT TO BE COPIED, IN WHOLE OR IN PART OR USED FOR PURCHASING INFORMATION TO OTHERS, OR FOR ANY OTHER PURPOSE DETRIMENTAL TO THE INTERESTS OF THE BABCOCK & WILCOX COMPANY AND IS TO BE RETURNED UPON REQUEST.

BWP (REV 6

A — FUEL AS FIRED

SAMPLES			
FOR(TYP)			
FUEL SOURCE	BLEND		
	CLASS		
	GROUP		
	MINE		
	SEAM		
	DISTRICT		
	COUNTY		
	STATE		UTAH
SIZE		1-5/8"x0	1-5/8"x0
GRINDABILITY		55	48
SURFACE MOISTURE, %			
ANALYSIS, %	ASH SOFT.TEMP. F (REDUCING)	2350	2215(H=W)
	MOISTURE, TOTAL	18.8	8.3
	VOLATILE MATTER	35.5	37.1
	FIXED CARBON	37.9	40.6
	ASH	7.8	14.0
	TOTAL	100.0	100.0

FUEL	PULV.DES	RANGE PC	COAL "F"	PERF.COAL
ULTIMATE ANALYSIS % BY	WT.	WT.	WT.	WT.
ASH		8.0-16.0	7.81	14.00
S		0.4-0.7	0.93	0.55
H_2		4.3-4.9	4.13	4.56
C		58.5-64.5	55.60	61.45
CH_4				
C_2H_6				
C_3H_8				
C_4H_{10}				
C_5H_{12}				
Cl		0-0.04	0.04	0.02
CO				
CO_2				
SO_2				
H_2O	12.0	7.4-9.3	18.80	8.30
N_2		1.0-1.5	0.86	1.20
O_2		9.3-10.5	11.83	9.92
TOTAL	43 GRIND		100.00	100.00
BTU/LB	10,700	10,500	9,962	11,010
BTU/CU FT AT 60F 30 IN.HG		12,100		

COAL "F" WILL NOT EXCEED 50% BY WT.
OF A COAL MIXTURE

*NOT INCLUDING VALVES & STATIC HEAD
▲ AT PULVERIZER INLET
**INCLUDES(-1.5 INCHES WG)FOR STACK EFFECT

UTILITY BOILER PERFORMANCE SUMMARY
BY R.K.K. APPD. RLC DATE 12/2/81

THE BABCOCK & WILCOX COMPANY

P23-310-0-150

B — PREDICTED PERFORMANCE

STEAM LEAVING SH, M LB/HR	3965	3965	6100	6100	6600
STEAM LEAVING RH, M LB/HR	3250	3250	5000	5000	5500
AUX. STEAM, M LB/HR	0	450	0	450	0
TYPE OF FUEL	PERF.COAL	PERF.COAL	PERF.COAL	PERF.COAL	PERF.COAL
LOAD CONDITION	65%	65%	100%	100%	MCR
EXCESS AIR LEAVING ECON., %	23	23	17	17	17
NO. OF BURNERS IN OPERATION	62	62	62	62	62
HEAT AVAIL. MBB/HR (FUEL & HEATED AIR)	5494	5908	7968	8374	8500
TOTAL INPUT, MBB/HR (FUEL & HT. CREDITS)	5261	5662	7563	7940	8069
HEAT CREDITS, MBB/HR	6.3	6.5	7.6	7.8	7.9
FUEL INPUT, MBB/HR	5255	5655	7555	7932	8060
QUANTITY & LOSS	FUEL (MCF@-NAT. GAS)	627.3	513.6	636.2	720.6	730.2
	FLUE GAS ENTERING AIR HTRS.	5224	5613	7241	7600	7703
	AIR TO BURNING EQUIPMENT	4765	5064	6539	6862	6954
	AIR HEATER LEAKAGE	367	273	477	498	504
PRESSURE, PSIG	STEAM AT SH OUTLET	2440	2440	2515	2515	2640
	STEAM AT RH INLET	350	350	539	539	590
	STEAM AT RH² INLET					
	REHEATER 1	16	16	25	28	28
	REHEATER 2					
	ECONOMIZER *	11	13	25	29	29
	DRUM TO SH OUTLET	68	73	160	172	187
TEMPERATURE, F	BELOW	LEAVING SUPERHEATER	1005	1005	1005	1005	1005
		LEAVING REHEATER 1	1005	1005	1005	1005	1005
		ENTERING REHEATER 1	580	580	620	620	630
		LEAVING REHEATER 2					
		ENTERING REHEATER 2					
	GAS	LEAVING ECONOMIZER	686	675	725	730	740
		LEAVING AH (EXCL. LKG) P/S	312/276	311/277	311/286	311/289	311/294
		LEAVING AH (INCL. LKG) P/S	280/262	280/268	280/278	280/279	280/280
		WATER ENTERING ECONOMIZER	490	490	543	543	555
	AIR	ENTERING UNIT PRI/SEC	74/62	74/63	77/64	78/65	78/65
		LEAVING AIR HEATER P/SEC	355/618	375/624	412/635	418/636	420/645
RESISTANCE, IN. OF WATER	GAS	FURNACE & CONVECTION BANKS	2.2	1.9	2.7	3.3	3.1
		FLUES TO AH OUTLET	0.9	1.0	1.4	1.5	1.5
		AIR HEATER	2.1	2.3	3.8	4.1	4.2
		TOT. FROM FURN TO AH OUT	5.2	5.2	7.9	8.9	8.8
	AIR	FUEL BURNERS & WINDBOX **	-0.3	0.0	1.1	1.4	1.4
		DUCTS & FLOW METER	1.0	1.2	2.3	2.3	2.3
		AIR HEATER	1.3	1.2	2.0	2.3	2.3
		TOT. FROM AH INLET TO FURN	1.8	2.2	5.2	6.0	6.0
HEAT LOSSES, %	DRY GAS	4.92	4.84	4.84	4.86	4.98
	H_2 & H_2O IN FUEL	5.14	5.14	5.15	5.15	5.16
	MOISTURE IN AIR	0.07	0.07	0.07	0.07	0.07
	UNBURNED COMBUSTIBLE	0.2	0.2	0.2	0.2	0.2
	RADIATION	0.24	0.22	0.17	0.16	0.15
	UNACC. FOR & MFRS. MARGIN	1.00	1.00	1.00	1.00	1.00
	TOTAL HEAT LOSS	11.57	11.47	11.43	11.44	11.56
	*GROSS EFFICIENCY OF UNIT, %	88.43	88.53	88.57	88.56	88.44
HEAT CREDITS ADJUSTMENT, %		0.01	0.01	0.01	0.01	0.01
NET EFFICIENCY A.S.M.E. PTC-4.1, %		88.44	88.54	88.58	88.57	88.43
FUEL EFFICIENCY, %, (OUTPUT/FUEL INPUT)		88.55	88.65	88.67	88.66	88.54
PULVERIZERS	NO. IN USE PER BOILER	4 / 7	5 / 7	6 / 7	6 / 7	6 / 7
	TOTAL POWER, BW MOTOR MOTOR OUTPUT					
	% THRU 200 U.S.S. SIEVE	71 / 76	72 / 75	71 / 73	71 / 72	70 / 72

PREDICTED PERFORMANCE IS BASED ON COMBUSTION AIR ENTERING UNIT WITH .0062 LB MOISTURE/LB DRY AIR, ON 25.18 IN. HG. BAROMETRIC PRESSURE, ON CONDITIONS & EQUIPMENT GIVEN ON THIS SUMMARY SHEET & ON ARRANGEMENT SHOWN ON DRAWING

C — EQUIPMENT PER UNIT

TYPE RADIANT
SIZE RBC

DESIGN PRESSURE (SH/RH) - 2975PSIG/770PSIG

PRESSURE PART. HEATING SURFACE	WATER COOLED SCREEN (CIRCUMFERENTIAL)	
	WATER COOLED (PROJECTED)	59130
	SUPERHEATER (PERIPHERAL) 54" CENTERLINE	23244
	SUPERHEATER (PERIPHERAL) 24" CENTERLINE	35565
	SUPERHEATER (PROJECTED)	43147
	TOTAL FURNACE HEATING SURFACE	122506
	SATURATED (CIRCUMFERENTIAL)	13035
	SUPERHEATER (CIRCUMFERENTIAL)	279082
	REHEATER 1 (CIRCUMFERENTIAL	300243
	REHEATER 2 (CIRCUMFERENTIAL)	
	ECONOMIZER	99902
	TOTAL CONVECTION HEATING SURFACE	692282
TOTAL FURN. & CONV. PRESSURE PART. HTG. SURF.		814688
FLAT PROJECTED FURNACE HEATING SURFACE		
	TO FACE OF PLATERS (24" CENTERLINE)	87405
	TO FACE OF CONVECTION SURFACE (12" CENTERLINE)	125510
FURNACE VOLUME, CU FT		962055
AIR HEATER	TYPE REGENERATIVE-SECONDARY	NO. 2 - 33-1/2 VI-64
	TOTAL HEATING SURFACE, SQ FT	1,047,800
TYPE: REGENERATIVE-PRIMARY		NO. 2 - 24-1/2 VI-44
TOTAL HEATING SURFACE, SQ. FT.		135,600

FUEL BURNER: TYPE DUAL REGISTER
NO. 48 (6 BURNERS PER PULVERIZER)

PULVERIZER: TYPE MPS SIZE 89GR NO. 8
CAPACITY OF 6H PULV. 156600 M LB STEAM/HR BASED ON 48 GRIND
11010 BTU COAL AT 70 % THRU 200 U.S.S. SIEVE
FOR 71.3 MT COAL/PULV.-HR AT 70 % THRU 200 U.S.S. SIEVE MIN. GRIND
IS 43, MAXIMUM TOTAL MOISTURE IS 12 % REQUIRING 465 F AIR
22% TOTAL MOISTURE COAL REQUIRES 540 F AIR.

STEAM TEMP. CONTROL: SUPERHEAT BY SPRAY ATTEMPERATION
REHEAT BY GAS BIASING

UNIT STRUCTURE PRESSURES: MEMBRANE WALL
BALANCE DRAFT
INDOOR UNIT

"AS SOLD" ARRANGEMENT

*CORRESPONDING TO ABB. METHOD PAR. 1.07 A.S.M.E. PTC-4.1

REVISIONS	NO.	DESCRIPTION	BY	DATE

INTERMOUNTAIN POWER PROJECT

IP14_001060

Revised

APPROVED ISSUE:

INTERMOUNTAIN POWER PROJECT
UNIT 1
STEAM GENERATOR ACCEPTANCE

A. GENERAL - CONTRACT WORDING RELATED TO TEST METHODS

1. Performance tests for boiler efficiency shall be made on the basis of the abbreviated heat loss method in accordance with ASME PTC 4.1, -1964 and as specified below.

ASME PTC 4.1 (Par. No.)	Agreement
3.01.01.1	General, method shall be the abbreviated heat loss method.
3.01.01.2	No heat credits shall be measured.
3.01.01.3	No heat credits shall be assigned.
3.01.01.4	Carbon losses shall be included.
3.01.01.5	Assigned heat losses shall be: (a) Sensible heat in the fly ash. (b) Radiation to the ash pit. (c) Radiation heat loss in accordance with ABMA Standard Radiation Loss Chart, Fig E. of PTC 4.1. The total of (a) and (b) above shall not exceed 0.5 percent.
3.01.01.6	Permissible deviation in efficiency between duplicate tests shall be 0.5 percent.
3.01.03	Superheat and reheat steam temperatures shall be 1005 F plus or minus 10 F. Air heater leakage shall be corrected to the specified value, if required.
3.01.06	The official test point shall be maximum capacity.

102286

IP14_001061

ASME PTC 4.1 (Par. No.)	Agreement
3.01.07	Cleanliness of the unit shall be achieved by using the normal sootblowing cycle.
3.01.10	Fuel sampling shall be one quart from each feeder, and samples shall be quartered. Analysis shall be in accordance with ASTM standards.
3.01.13	Test results shall be reported as computed from test observations with proper correction for calibrations.
3.01.14	Distribution of fuel refuse quantities between the boiler and stack shall be 10 percent and 90 percent, respectively. The boiler 10 percent shall be broken down by assuming 70 percent in the hopper and 30 percent in the economizer hopper.
3.01.15	Corrections to be made for deviation from specified operation conditions shall be made in accordance with the PTC 4.1.

Article 9., 9.2 Pages G1-7 and G1-8

Performance Calculations shall be based on the ASME Steam Tables published in 1967.

IP14_001062

2. The term "Maximum Capacity" shall be defined as the following conditions:

	Maximum Capacity
Steam at superheater outlet:	
Flow, lb/hr	6,100,000
Temperature, F	1,005
Pressure, psig	2,515
Steam at reheater inlet:	
Flow, lb/hr	5,000,000
Temperature, F	620
Pressure, psig	539
Steam temperature at reheater outlet, F	1,005
Feedwater temperature to economizer, F	543
Desuperheater spray water temperature, F	390
Air temperature to fans, F	60

Article 2., Pages G3-2, G3-3

3. All ambient air calculations, including those used in efficiency calculations, shall be based on an air temperature of 60 F and 60 percent relative humidity (0.0067 pound of moisture per pound of dry air).

Article 2., Page G3-2

4. Test Basis for Flue Gas Contaminants:

Guaranteed particulate matter emission is to be determined from flue gas samples collected and analyzed in accordance with Paragraph 60.46, Test Methods and Procedures of the E.P.A. Standards of Performance for New Stationary Sources, published December 23, 1971, in the Federal Register, Volume 36, No. 247, Part II.

IP14_001063

Heat input, expressed in Btu per hour, determined by suitable fuel flow meters shall be confirmed by a material balance over the steam generator system in accordance with ASME Power Test code 4.1. Also, the volumetric flue gas flow as determined by Method I of the E.P.A. Standards shall be confirmed in accordance with the ASME Power Test Code 4.1. Confirmation of the heat input and flue gas flow rate by the material and heat balance method set forth in the ASME Power Test Code 4.1 is highly important since direct measurement of these values is very difficult.

The nitrogen content of the solid fuel is to be based on fuel samples taken during the NO_x test and analyzed by the Kjeldahl method as described in ASTM specification D-271-70. NO_x emissions shall be determined in accordance with applicable provisions of 40 CFR60 Subpart DA.

B. GUARANTEES

Boiler at Maximum Normal Operation (100 Percent Load). Based on the unit being fired with the specified performance coal fuel and on the other performance conditions shown on Boiler Performance Summary Sheet P23-310-0-1S at the capacity of 6,100,000 lbs/hr (no auxiliary steam) at 2,515 psig at the superheater outlet with a feedwater temperature of 543 F and reheater inlet steam conditions of 5,000,000 lbs/hr and 539 psig and 620 F and with 7 mills in operation:

1. The efficiency of the unit will not be less than 88.57 percent.

2. The average temperature of the steam leaving the superheater will be 1,005 F, plus or minus 10 F.

3. The average temperature of the steam leaving the reheater will be 1,005 F, plus or minus 10 F.

IP14_001064

4. The steam pressure drop between boiler drum and the Contractor's superheater outlet terminals will not exceed 160 psi. (See Note Below.)

5. The steam pressure drop through the reheater between the Contractor's inlet and outlet terminals will not exceed 25 psi. (See Note Below.)

6. The pressure drop through the economizer, (not including valves, or static head) will not exceed 25 psi.

7. The average solids content in steam leaving boiler will not exceed 0.08 ppm with the following maximum boiler water conditions:

Total boiler water solids	50 ppm.
Chloride ion concentration	2 ppm.
Boiler water pH	10.0

The water conditions stated above are the maximum values permitted to qualify for the steam purity guarantee and are not to be construed as water treatment specifications. Refer to B&W Operating Instructions for proper boiler water requirements.

The steam purity guarantee is exclusive of vaporous silica carry-over and, unless otherwise agreed, shall be applicable at full-load steam flow and at normal water level and drum pressure.

8. The average net resistance from the air heater air inlet to the furnace will not exceed 5.2 inches of water. The average net resistance from the furnace through the unit to the air heater gas outlet will not exceed 7.9 inches of water.

IP14_001065

9. Spray water quantities required for main steam temperature control will not exceed 335,000 lbs/hr provided that spray water temperature is 390 F or less, and all feedwater heaters are in service.

10. Spray water quantities required for reheater temperature control will be 0 (zero) lbs/hr provided that spray water temperature is 390 F or less, and all feedwater heaters are in service.

11. The excess air leaving the airheaters will not exceed 27 percent.

NOTE: Steam pressure drop is calculated to the Contractor's terminal point. No pressure drop allowance has been made for the size transition between the Contractor's terminal size and the Owner's pipe size.

Boiler at Maximum Continuous Rating. Based on the unit being fired with the specified performance coal fuel and on the other performance conditions shown on Boiler Performance Summary Sheet P23-310-0-1S, the unit will have a maximum normal capacity of 6,600,000 lbs. of main steam flow per hour at 2,640 psig at the superheater outlet, with a feedwater temperature of 555 F and reheater inlet steam conditions of 5,500,000 lbs/hr and 590 psig and 630 F.

Superheater and Reheater Control Range. Based on the unit being fired with the specified performance coal fuel and on the other performance conditions shown on Boiler Performance Summary Sheet P23-310-0-1S at any steady load from 3,965,000 to 6,600,000 lbs at main steam flow per hour:

1. The average temperature of the steam leaving the superheater will be 1,005 F, plus or minus 10 F.

2. The average temperature of steam leaving the reheater will be 1,005 F, plus or minus 10 F.

IP14_001066

Pulverizers. Subject to raw coal being prepared so that all will pass through a 1-5/8 inch ring, the pulverizer driving motor being operated at 870 RPM, and the conditions specified on the Boiler Performance Summary Sheet P23-310-0-1S, the Contractor makes the following guarantees on the specified performance coal:

1. The pulverizer can be operated at a capacity of 130,300 lbs per hour when firing the specified 48 Hardgrove grindability performance coal, ground to a fineness of not less than 70 percent through a 200 USS Sieve and 99 percent through a 50 USS Sieve provided total moisture in the coal does not exceed 8.3 percent and the temperature of the preheated air supplied is not less than 450 F.

2. When pulverizing 687,000 lbs per hour of the specified 48 grind performance coal with total moisture not exceeding 8.3 percent, the fineness will not be less than 99 percent through 50 USS Sieve and not less than 70 percent through 200 USS Sieve and the total power to the pulverizers, primary air fans, feeders, airheaters, and pulverizer seal air blower with a power factor not less than 0.80, and an assumed motor efficiency of not less than 0.92, with 7 pulverizers, 7 Merrick feeders, 2 Westinghouse (23120D) primary air fans with two speed motors, 2 Ljungstrom (24-1/2 VI-44) primary and 2 Ljungstrom (33-1/2 VI-64) secondary air heaters, and 1 pulverizer seal air blower in service, total power will not exceed 5,955 KW's, when operating at a fan shaft speed of 897 RPM.

   Performance tests on pulverizers shall be in accordance with Pulverizer Test Code ASME - PTC 4.2.

Air Heaters. Based on the unit being fired with the specified performance fuel and on the other performance conditions shown on Boiler Performance Summary Sheet P23-310-0-1S:

IP14_001067

1. Primary Air Heaters. The leakage from the air to the gas side of the air heaters will not exceed 163,000 pounds of air per hour with a gas flow entering of 972,000 pounds per hour, provided the total pressure differential between the air entering and gas leaving the air heater does not exceed 37.3 inches of water.

2. Secondary Air Heaters. The leakage from the air to the gas side of the air heaters will not exceed 314,000 pounds of air per hour with a gas flow entering of 6,269,000 pounds per hour, provided the total pressure differential between the air entering and gas leaving the air heater does not exceed 12.85 inches of water.

   Test procedures shall be in accordance with Air Heater Test Code ASME - PTC 4.3.

Flue Gas Contaminants

1. Oxides of Nitrogen in the Flue Gas. When the steam generating unit is operated at all normal loads up to the specified MCR capacity and in accordance with the information given in the Boiler Performance Summary Sheet P23-310-0-1S and operating instructions, and when firing the summary sheet performance coal fuel or any of the other specified* coals A through G (Specification 2010 Page G3-6 thru G3-12), the Contractor makes the following guarantee:

   a. The NO_x concentration in the flue gases at a point between economizer outlet and the air heater inlet will not exceed 0.55 lbs per million Btu heat input from fuel (using HHV).

   b. Should the Owner elect to fire sub-bituminous** coal only, the NO_x concentration in the flue gases at a point between economizer outlet and the air heater inlet will not exceed 0.50 lbs per million Btu heat input from fuel (using HHV).

IP14_001068

*Coal F, when fired, is not to exceed 50 percent by weight of a coal mixture using any of the other specified coals A through G.

**As defined by ASTM D388.

2. Dust Loading Leaving the Economizer. When the steam generating unit is operated at all normal loads up to the maximum normal capacity and in accordance with the information given on the Boiler Performance Summary Sheet P23-310-0-1S and operating instructions and when firing the Summary Sheet specified performance fuel the Contractor makes the following guarantee:

   The average dust loading leaving the economizer will not be greater than 6.44 grains/SCF during a twenty-four hour period based on a soot blowing schedule of once per eight-hour shift.

NOISE CONTROL

With respect to sound levels, the Contractor-furnished fans, blowers, and all motors 1,000 hp and larger, when serviced and operated in accordance with the Contractor's operation manual, shall comply with the level set forth in Division G3, Subarticles 21.2 and 29.10 of the specification.

C. SPECIFICATION REQUIREMENTS

1. The boiler shall be designed to operate at flow rates and temperatures listed for operation at Maximum Capacity but with the inlet pressure to the economizer reduced such that the superheater outlet pressure is not greater than 2,365 psig.

   Article 1, Page G3-1

IP14_001069

2. The boiler shall be designed as follows: The flue gas temperature leaving the air heater shall be 280 F ± 10 F, corrected for air heater leakage, at Maximum Capacity when firing coal. For the purposes of design and calculations including efficiency, a flue gas temperature of 280 F leaving the air heater shall be used.

Article 1, Page G3-2

3. The boiler shall be provided with the following feature: designed so that the unit can operate at not less than 60 percent of Maximum Capacity with any one air heater, forced draft fan, or primary air fan out of service.

Article 2, Page G3-5

4. The boiler shall be provided with the following feature: designed to reduce load to a load not greater than 50 percent of Maximum Capacity from any load greater than 50 percent of Maximum Capacity at the rate of not less than 5 percent of Maximum Capacity per minute without lifting safety valves, without tripping pulverizers, and without the use of supplemental fuel.

Article 2, Page G3-5

5. The maximum gas side pressure drop between the furnace and the air heater outlet shall be not more than 12 inches wg at MCR.

Article 2, Page G3-5

6. The gas temperature entering close space platen or pendant surfaces shall be not greater than 1,900 F at MCR. The gas temperature, as measured by high velocity thermocouple (HVT), shall be the maximum temperature.

Article 2, Pages G3-5, G3-6

IP14_001070

7. There shall be no more than 20 F difference in steam temperature between the connections for the reheater.

The superheat and reheat temperatures shall be less than 150 F apart under all conditions of operation at loads above 15 percent of Maximum Capacity.

Article 4, Page G3-14

8. The maximum total solids in the steam leaving each drum shall be not more than 0.08 part per million by weight at all steam flows and all operating pressures. The concentration of solids in the boiler water will be approximately 50 parts per million with no oil or organic matter present.

Article 7, Page G3-17

Reference: TEST PROCEDURE FOR SOLIDS IN STEAM, Item 3 under Conditions for Guaranteed Performance, Pages 9-3 and 9-4 behind Tab "PERFORMANCE" in B&W Proposal.

9. The sootblowers when operated through a blowing cycle not more than once each shift shall maintain boiler surface cleanliness such that guaranteed performance is obtained continuously.

Article 19.1, Page G3-29

10. The Boiler Unit shall be capable of operating at any load from 20 percent of Maximum Capacity to Maximum Continuous Rating without continuous use of supplemental fuels.

The Boiler Unit shall be capable of the following:

IP14_001071

(a) Operation of 20 percent of Maximum Capacity with two pulverizers in service.

Article 20.1, Page G3-36

11. A fan unit shall not have a vibration in any plane greater than 1-1/2 mils, peak-to-peak, as measured on the bearing housings of the fan and motor nor shall the displacement exceed the region shown as "GOOD" on the General Machinery Vibration Chart published in Vibration Tolerances for Industry by R. L. Baxter and D. L. Bernhard, ASME Publication 67-PEM-14, presented at the ASME Plant Engineering and Maintenance Conference, Detroit, Michigan, April 10 - 12, 1967 (also published as Curve 305D by IRD Mechanalysis, Inc., 6150 Huntley Road, Columbus, Ohio 43229). The design resonant speed shall be not less than 30 percent above the maximum operating speed of the assembled unit. The design resonant speed is defined as that speed equal to the natural frequency of the combined spring-mass system of the rotor, bearing housings, oil film, and Contractor-furnished bearing pedestal but excluding the Owner-furnished reinforced concrete foundation. The critical speed is defined as that speed equal to the natural frequency of the combined spring-mass system of rotor, bearing housing, oil film, and bearing pedestal, but excluding the reinforced concrete foundation.

Rotor tip speed of each fan shall not exceed 35,000 fpm. All fan wheels with tip speeds greater than 25,000 fpm shall be stress relieved after fabrication. Each fan shall be capable of continuous operation at any load from 15 percent of test block capacity to test block capacity and shall be suitable for sudden load changes within these limits. Each fan shall have no inflection points in its head-capacity curve and shall have a nonoverloading horsepower characteristic. If applicable, fans shall be designed to operate smoothly in parallel.

IP14_001072

Equivalent A-weighted sound level shall not exceed 85 dB measured at a distance of 5 feet from each fan inlet. If the fan complies with the aforementioned requirements, the Owner will be responsible for OSHA compliance.

Article 21.2, Pages G3-43 G3-44

12. Primary air fans shall be provided as necessary for proper boiler operation. With one primary fan out of service the remaining fans shall be capable of providing sufficient primary air to permit boiler operation up to not less than 60 percent of Maximum Capacity with each of the specified coals.

Article 21.9, Page G3-46

13. The Boiler Unit shall incorporate the best available technology applicable to the boiler being offered and shall be designed to minimize air pollution emissions without causing Boiler Unit operating problems including tube wastage, ash slagging, ash fouling, and boiler vibrations. Air pollution emissions to be minimized shall include nitrogen oxides, sulfur oxides, carbon monoxide, hydrocarbons, unburned carbon, and particulates.

Each Boiler Unit shall not cause nitrogen oxides (expressed as nitrogen dioxide) to be discharged into the atmosphere at a rate exceeding 0.55 pound per million Btu heat input.

The nitrogen oxides emission limitations shall be applicable throughout the load range for all the specified coals and for all combinations of pulverizers in operation.

IP14_001073

The Contractor shall provide all necessary changes to the Boiler Unit at his own expense, which may be required to obtain approval of NO_x emission levels by the cognizant regulatory agencies on the effective date of the contract.

Article 30., Pages G3-70, G3-71

IP14_001074

C-E Air Preheater
Combustion Engineering, Inc.
Andover Road
Wellsville, New York 14895

Tel. 716/593-2700

AIR PREHEATER

August 31, 1981

Babcock & Wilcox Company
Boiler Division
20 Van Buren Avenue, South
Barberton, Ohio 44203

Attention: Mr. T. W. Hood

Gentlemen:

Intermountain Power Agency
Lynndyl, Utah
Your Reference: P23-310
Our Reference: OG-164-S

We are pleased to submit our proposal OG-164-S, dated August 31, 1981, covering eight (8) size 33-1/2-VI-64 (72" casing) Secondary Modular Ljungstrom air preheaters. This quotation will supersede our proposal OG-164-N, dated June 9, 1981.

The Leakage Guarantee is being extended to cover a period of five (5) years. A copy of this guarantee is included.

We are attaching an extended warranty for a period of five (5) years after commercial operation. This extended warranty will be used in place of the warranty article in our Conditions of Sale, Form GS-138-B, dated June 20, 1980, which shall otherwise, apply to this proposal.

In this warranty, the term: "excessive wear" is used. We define "excessive wear" as that condition when a component or part requires replacement so that the air preheater can perform as specified in the contract.

We will provide the following services at no additional charge:

A) We will conduct a training session for IPA operating and maintenance personnel, covering proper operating techniques for the Ljungstrom air preheater.

B) We will arrange to have a qualified, trained service representative visit the plant where the Ljungstrom air preheaters are in operation a minimum of three (3) times per year. We have service representatives permanently located in Salt Lake City.

We wish to make the following comments with respect to the portion of the Black & Veatch specifications which you submitted:

Page G3-6 through G3-12: The material in this selection is suitable for firing the coals covered on these pages if an average cold end temperature of 155° F.

ATTACHMENT C
Page 2 of 2

LJUNGSTROM AIR PREHEATER
FIVE YEAR WARRANTY
INTERMOUNTAIN POWER AGENCY

The Air Preheater Co., Inc. warrants to the Purchaser and Owner that the equipment will be free from defects in design, material, workmanship, and excessive wear for a period of five (5) years from the commercial operation date (the date the generator is first synchronized into the Intermountain Power System), the warranty period ending no later than eight (8) years from the date of shipment.

If during the warranty period, any part of the equipment is found to be defective in design, material, workmanship, or excessive wear, the Seller will at its option repair or replace the defective part, in place, provided the Purchaser or User stores, installs and operates the equipment according to the conditions of operation specified in the contract documents and operating and maintenance manuals furnished herewith all in accordance with generally accepted industry practices, and further provided that the Purchaser notifies the Seller in writing as soon as any defect is discovered.

The Seller warrants that at the time of delivery of the equipment to Purchaser, the Seller shall have full title to the equipment and such equipment shall be free from liens and encumbrances.

THE EXPRESS WARRANTIES, GUARANTEES, AND REMEDIES, SET FORTH IN THIS PROPOSAL OR ANY CONTRACT RESULTING FROM THIS PROPOSAL ARE EXCLUSIVE, AND NO OTHER WARRANTIES, GUARANTEES, OR REMEDIES OF ANY KIND, WHETHER STATUTORY, WRITTEN, ORAL, EXPRESS OR IMPLIED, INCLUDING THE IMPLIED WARRANTIES OF FITNESS FOR A PARTICULAR PURPOSE OR MERCHANTABILITY SHALL APPLY. THE PURCHASER'S EXCLUSIVE REMEDY AND THE SELLER'S SOLE OBLIGATION AFTER ACCEPTANCE OF THE EQUIPMENT SHALL BE AS STATED HEREIN.

From B&W Boiler Contract
62.3401

12. Data Tabulation:

12.1 Guaranteed Data - Boiler Units: The Contractor guarantees the following data for the Boiler Units to be furnished while operating under steady state conditions at Maximum Capacity as defined in Article 2 of Division G3 and using coal as specified in Article 3 of Division G3 of the Specifications:

CE Lungstrum Air Preheater
Subcontracted by B&W
to supply RAH's

IP14_001077

		Boiler Units at Maximum Capacity
Minimum Boiler efficiency	percent	*
Maximum total pressure loss from the air inlet of the air heater to the furnace	inches of water	*
Maximum pressure loss from the furnace to the air heater flue gas outlet	inches of water	*
Maximum pressure drop, excluding static head, between the IPA's economizer inlet connection and the steam drum	psi	*
Maximum total pressure drop between the steam drum and IPA's superheater outlet connection	psi	*
Maximum steam pressure drop between the IPA's connection to the reheater inlet and outlet	psi	*
Maximum excess air at the air heater flue gas outlet	percent	*
Maximum dust loading in the flue gas leaving the economizer	grains/scf	*
Maximum air heater leakage as a percent of inlet air	percent	*
Auxiliary power requirements:		
Number of pulverizers in use		*
Maximum total power for pulverizer motors	kW	*
Maximum total power for primary air fan motors	kW	*
Maximum total power for motors not included above	kW	*

* See the performance section of the Contractor's Proposal

IP14_001078

Boiler
Units

With coal firing, maximum spray water for steam temperature control at any load under steady state conditions for the following:

Superheater.....lb/hr *

Reheater.....lb/hr *

Pulverizer capacity at specified fineness.....lb/hr *

12.2 Guaranteed Data - Option Burner Management Control Systems: The Contractor guarantees the following data for the optional equipment specified hereunder:

12.2.1 Bailey Controls Company:

Voltage requirement to systems cabinet.....V 118

KVA requirement to systems cabinet.....kVA 8.2

The following data shall be for the conditions specified in Division G5:

Maximum allowable voltage fluctuation:

During a 3-second interval.....V ±10%

On a continuous basis.....V ±10%

Maximum allowable switch time in cycles to transfer backup power supply into service at 60 hertz.....cycles On line

Total load required from IPA's 125-volt station battery.....W 0

Ambient temperature range in which equipment will operate in the cabinet:

Maximum degrees.....C 70

Minimum degrees.....C 0

Maximum loading of components:

Resistors.....percent of rated power N/A

Diodes.....percent of rated power N/A

Transistors.....percent of rated power N/A

* See the performance section of the Contractor's Proposal

IP14_001079

Boiler
Units

12.2.2 Forney Engineering Company:

Voltage requirement to systems cabinet.....V 120 ac 120 dc

Amperage requirement to systems cabinet.....kVA 7.5

The following data shall be for the conditions specified in Division G5:

Maximum allowable voltage fluctuation:

During a 3-second interval.....V 120 ac 10-15

On a continuous basis.....V 120 ac 10-15

Maximum allowable switch time in cycles to transfer backup power supply into service at 60 hertz.....cycles System stays status quo on transfer

Total load required from IPA's 125-volt station battery..... 40 amps max. for 30 milliseconds, normal 2 amps

Ambient temperature range in which equipment will operate in the cabinet:

Maximum degrees.....F 125

Minimum degrees.....F 0

Maximum loading of components:

Resistors.....percent of rated power N/A

Diodes.....percent of rated power N/A

Transistors.....percent of rated power N/A

EXACT VOLTAGES AND AMPERES AVAILABLE WHEN SYSTEM IS FINALLY DESIGNED.

12.3 Supplementary Data - Boiler Units: In addition to the foregoing Guaranteed Data, the Contractor is furnishing the following Supplementary Data for the Boiler Units to be furnished, based upon Maximum Capacity as defined in Article 2 of Division G3 and using coal as specified in Article 3 of Division G3:

	Hybrid		Constant Pressure				
Load.....percent of Maximum Capacity	25	50	25	50	75	100	MCR
Superheater outlet pressure.....psig	820	1770	2405	2430	2460	2515	2640
Superheater flow.....Mlb/hr	1525	3050	1525	3050	4575	6100	6600
Superheater temp.....F	975	1005	950	1005	1005	1005	1005
Superheater spray.....1000.....lb/hr	0	0	0	0	144.0	211.0	75.9
Drum pressure.....psig	870	1850	2415	2470	2550	2675	2827
Economizer inlet pressure*.....psig	880	1862	2417	2476	2564	2700	2856
Economizer inlet temperature.....F	393	459	382	467	507	543	555
Economizer outlet temperature.....F	414	482	401.	488	527	565	578
Reheater inlet flow.....Mlb/hr	1250	2500	1250	2500	3750	5000	5500
Reheater inlet pressure.....psig	124	266	120	275	402	539	590
Reheater inlet temperature.....F	560	585	440	565	591	620	630
Reheater spray flow.....lb/hr	0	0	0	0	0	0	0
Reheater outlet pressure.....psig	118	262	114	262	383	514	562
Reheater outlet temperature.....F	900	1005	850	975	1005	1005	1005
Fuel flow.....ton/hr	98.1	190.8	95.5	185.6	269.5	343.1	365.2
Number of pulverizers in service.....	2	5	2	5	6	7	7

*Excluding valves and static head.

Based on P23-310-36Y Drawing with 24-1/2 VI 44 Primary and 33-1/2 VI 64 Secondary Airheaters

IP14_001081

	Hybrid		Constant Pressure				
Load.....percent of Maximum Capacity	25	50	25	50	75	100	105
Expansion Efficiency.....percent	82	81	62	72			
Desuperheater spray water temperature...F	299	354	300	356	378	412	419

IP14_001082

	Hybrid		Constant Pressure				
Load.....percent of Maximum Capacity	25	50	25	50	75	100	105
Air flow rates:							
Theoretical air for combustion..Mlb/hr	1641	3162	1636	3104	4463	5685	6047
Total air for combustion, including excess air.....Mlb/hr	2257	3952	2248	3880	5266	6538	6954
Air from primary air fans.....Mlb/hr	550.0	1038.5	541.0	1037.5	1293.0	1552.0	1601.0
Tempering air.....Mlb/hr	98.2	370.3	101.1	376.9	425.2	485.8	484.6
Air to primary air heaters.....Mlb/hr	451.8	668.2	439.9	660.6	867.8	1066.2	1116.4
Air from primary air heaters, exclusive of tempering air....Mlb/hr	300.8	528.2	293.9	521.6	713.8	903.2	947.4
Air from F. D. fans.....Mlb/hr	2066	3305.5	2062	3231.5	4443	5540	5935
Sealing air*.....Mlb/hr	22	55	22	55	66	77	77*
Air to secondary air heaters....Mlb/hr	2066	3305.5	2062	3231.5	4443	5540	5935
Air from secondary air heaters.....Mlb/hr	1880	3108.5	1875.0	3036.5	4193	5226	5599
Air pressures:							
Air from primary air fans.in. of water	30.1	26.0	29.4	25.7	30.1	34.2	36.3
Air to primary air heaters.....in. of water	29.7	24.3	29.0	24.0	28.3	31.5	33.4
Air from primary air heaters.....in. of water	29.5	23.8	28.8	23.5	27.5	30.2	32.0
Air to secondary air heaters.....in. of water	1.8	1.3	1.7	1.2	3.6	5.2	6.0
Air from secondary air heaters.....in. of water	1.4	0.5	1.3	0.4	2.2	3.2	3.7
Air at windbox.....in. of water	1.0	-0.2	0.9	-0.3	0.8	1.1	1.4

*Sealing air is taken from primary tempering air.

IP14_001083

	Hybrid		Constant Pressure				
Load.....percent of Maximum Capacity	25	50	25	50	75	100	105
Air temperatures:							
Minimum ambient temperature not requiring preheating.....F	84	60	94	60	50	37	34
Air to secondary air heater.....F	89**	62	99 **	62	63	64	65
Air from secondary air heater.....F	534	590	507	590	615	635	645
Air from primary air heater, excluding tempering air.....F	511	562	510	561	567	564	569
Air to pulverizers.....F	420	380	415	375	402	412	420
Air to Primary AH.....F	75	75	75	75	75	77	78
Flue gas flow rates:							
Leaving furnace.....Mlb/hr	2492	4343	2484	4264	5787	7184	7643
Leaving economizer.....Mlb/hr	2509	4375	2500	4295	5832	7241	7703
Entering primary air heaters....Mlb/hr	363.9	682	439.8	670	839	972	991
Entering secondary air heaters.....Mlb/hr	2145.1	3693	2060.2	3625	4993	6269	6712
Leaving primary air heaters.....Mlb/hr	514.9	822	585.8	809	993	1135	1160
Leaving secondary air heaters...Mlb/hr	2331.1	3890	2247.2	3820	5243	6583	7048
Maximum velocity of gases in superheater net free area.....ft/sec	11	22	11	22	26	45	51
Maximum velocity of gases in reheater net free area.....ft/sec	23	39	28	40	50	46	47
Maximum velocity of gases in economizer net free area.....ft/sec	6	14	4	13	22	36.2	41

**Steam Coil Heating used to heat the air from a temperature of 62 F.

IP14_001084

	Hybrid		Constant Pressure				
Load.....percent of Maximum Capacity	25	50	25	50	75	100	105
Flue gas pressures:							
In furnace.....in. of water	0	0	0	0	0	0	0
Leaving furnace.....in. of water	-0.0	-0.0	-0.0	-0.0	-0.1	-0.1	-0.1
Entering economizer.....in. of water							
Leaving economizer.....in. of water	-0.9	-1.5	-1.0	-1.5	-2.4	-2.7	-3.1
Entering primary air heater.....in. of water	-1.6	-2.4	-1.7	-2.4	-3.7	-4.1	-4.6
Entering secondary air heater.....in. of water	-1.6	-2.4	-1.7	-2.4	-3.7	-4.1	-4.6
Leaving primary air heater.....in. of water	-2.0	-3.4	-2.2	-3.4	-5.2	-6.0	-6.4
Leaving secondary air heater.....in. of water	-2.2	-3.9	-2.3	-3.9	-6.2	-7.9	-8.8
Flue gas temperatures:							
Leaving furnace (12" SS).....F	1190	1480	1170	1470	1650	1780	1815
Entering superheater (24" SS).....F	1375	1740	1360	1725	1940	2075	2115
Entering reheater (PENDANT).....F	1092	1330	1064	1325	1480	1590	1625
Entering economizer.....F	589	710	653	723	773	828	848
Leaving economizer.....F	581	654	554	653	694	724	740
Entering primary air heater.....F	581	654	554	653	694	724	740
Entering secondary air heater.....F	581	654	554	653	694	724	740
Leaving primary air heater (Incl. LKG).....F	200	278	237	277	280	280/280	280
Leaving secondary air heater (Incl. LKG).....F	211	237	203	237	263	276/280	280

7 Mills/8 Mills

IP14_001085

	Hybrid		Constant Pressure				
Load.....percent of Maximum Capacity	25	50	25	50	75	100	105
Excess air:							
Leaving furnace.....percent	42	27	42	27	19.3	16	16
Leaving economizer.....percent	43	28	43	28	20.3	17	17
Leaving primary air heater.....percent	64*	39*	63*	39*	29*	26*	26*
Leaving secondary air heater...percent							

* Pri. and Sec. AH's combined

Emission concentrations:							
Dust loading lvg. Ah's-grains/SCF	4.73	5.52	4.74	5.51	5.88	6.04	6.04
Dust loading leaving economizer.....grains/SCF	5.37	5.94	5.37	5.94	6.29	6.44	6.44
SO_2 concentration leaving economizer.....ppm	8.7	9.3	8.5	9.3	9.9	10.1	10.1
NO_x leaving economizer.....lb/MMBtu	---	---	Maximum of 0.55 lb/MKB		---	---	---
NO_x leaving air heaters.....lb/MMBtu	Maximum of 0.55 lb/MKB (corrected for leakage) across load range.						

**H_2 and H_2O combined

Heat absorbed by Boiler:							
Losses:							
Hydrogen in fuel.....percent	4.93	5.10	4.89	5.10	5.13	5.15	5.16**
Moisture in fuel.....percent	---	---	---	---	---	---	---
Moisture in air.....percent	.05	0.06	0.05	0.06	.06	0.07	0.07
Dry gas.....percent	3.63	4.57	3.42	4.57	4.74	4.84	4.98
Combustible in refuse.....percent	0.20	0.20	0.20	0.20	0.20	0.20	0.20
Radiation.....percent	0.57	0.30	0.58	0.30	0.21	0.17	0.15
Unaccount & mfg margin.....percent	1	1	1	1	1	1	1
Total heat absorbed.....percent	10.38	11.23	10.14	11.23	11.34	11.43	11.56
Boiler Efficiency (Per ASME PTC 4.1 abbrev. test method)	89.63	88.78	89.87	88.78	88.67	88.58	88.45
Fuel efficiency (with heat credits)	89.72	88.88	89.96	88.87	88.76	88.67	88.54

IP14_001086

	Hybrid		Constant Pressure				
Load.....percent of Maximum Capacity	25	50	25	50	75	100	105
Power input to motors:							
Number of pulverizers operating.....	2	5	2	5	6	7	7
Pulverizer motors.....kW	886	1904	876	1886	2494	3048	3152
Number of primary air fans operating.....	1	1	1	1	2	2	2
Primary air fan motors.....kW	1098(.920)	1341(.935)	1058(.920)	1325(.935)	2132(.933)	2447(.934)	2549(.935)▲
Number of coal feeders operating.....	2	5	2	5	6	7	7
Coal feeder motors.....kW	3	8	3	8	10	11	11*
Number of boiler circulation pumps operating.....	N/A	N/A	N/A	N/A	N/A	N/A	N/A
Boiler ciculation pump motors.....kW	N/A	N/A	N/A	N/A	N/A	N/A	N/A
All other motors.....kW	103	128	103	128	133	138	138**

* Based on Merrick Feeders

** Seal Air Fans and Regenerative Air Heaters
(Two 24-1/2 VI 44 Primary and Two 33-1/2 VI 64 Secondary's)

▲ Westinghouse Two Speed Fans (23120D) with Two Speed Motors.

( ) Indicates Expected Motor Efficiency

IP14_001087

	Based on 7 Mills in Operation	
	Coal Reserve B and F*	Coal Reserve F
Boiler efficiency.....percent	88.82	87.07
Total pressure loss from the air heater air inlet to the furnace.....in. of water	5.3	5.4
Total pressure loss from the furnace to the air heater flue gas outlet.....in. of water	8.3	8.8
Excess air at the economizer outlet.....percent	17	17
Excess air at the air heater gas outlet.....percent	26	26
Dust loading in the flue gas leaving the economizer.....grains/scf	5.21	3.96
Capacity with only 2 pulverizers in service.....percent Maximum Capacity	30	29
Capacity with only 2 pulverizers out of service.....percent Maximum Capacity	100	97
Air flow rates:		
Theoretical air for combustion....Mlb/hr	5781	5880
Total air for combustion including excess air.....Mlb/hr	6651	6762
Air from primary air fans.....Mlb/hr	1533	1600
Tempering air.....Mlb/hr	246	142
Air from primary air heaters excluding tempering air.....Mlb/hr	1111	1260
Air from forced draft fans.....Mlb/hr	5693	5763
Sealing air, from temperature air duct.....Mlb/hr	77	77
Air to secondary air heaters.....Mlb/hr	5693	5763
Air from secondary air heaters....Mlb/hr	5371	5437

* Mixture of coals from Coal Reserves B and F on an equal weight basis.

IP14_001088

	Based on 7 Mills in Operation	
	Coal Reserve B and F*	Coal Reserve F
Air pressures:		
Air from primary air fans...in. cf water	36.8	39.2
Air to primary air heaters..in. cf water	33.9	36.1
Air from primary air heaters.....in. cf water	32.1	34.1
Air to secondary air heaters.....in. of water	5.3	5.4
Air from secondary air heaters.....in. of water	3.1	3.2
Air at windbox.....in. cf water	1.1	1.1
Air temperatures:	155F average air heater cold end temperature required	
Minimum ambient temperature not requiring air preheating.....F		
Air to secondary air heaters.....F	65	65
Air from secondary air heaters.....F	632	628
Air from primary air heaters excluding tempering air.....F	542	536
Air to pulverizers.....F	452	487
Flue gas flow rates:		
Leaving economizer.....Mlb/hr	7456	7627
Leaving primary air heaters.....Mlb/hr	1226	1381
Leaving secondary air heaters.....Mlb/hr	6730	6770
Flue gas pressures:		
Leaving economizer.....in. cf water	-4.3	-4.5
Leaving primary air.....in. cf water	-6.5	-7.2
Leaving secondary air heaters.....in. cf water	-9.3	-9.4

* Mixture of coals from Coal Reserves B and F on an equal weight basis.

IP14_001089

	Based on 7 Mills in Operation	
	Coal Reserve B and F*	Coal Reserve F
Flue gas temperatures:		
Leaving economizer.....F	723	723
Leaving primary air heaters, corrected.....F	279	281
Leaving secondary air heaters, corrected.....F	273	272

	Based on 2 Mills in Operation	
	Coal Reserve B and F*	Coal Reserve F
Flue gas exit temperature at 25 percent of Maximum Capacity:		
Leaving economizer.....F	556	557
Leaving primary air heaters.....F	274	275
Leaving secondary air heaters.....F	197	194

* Mixture of coals from Coal Reserves B and F on an equal weight basis.

12.4 Supplementary Data - Option for Burner Management Control System: In addition to the foregoing Guaranteed Data, the Contractor is furnishing the following Supplementary Data for the Burner Management Control System specified in Division G5 of the Specifications:

12.4.1 Bailey Controls Company:

Relays:

Make.....Struthers-Dunn

Model.....219

Circuit breakers:

Make....._____

Model....._____

Current rating....._____

IP14_001090

TABLE A
SPARE PARTS

B&W ITEM NUMBER	QTY	U/M	DESCRIPTION	NOTE	PRICE PER UNIT OF MEASURE	B&W FOLIO NUMBER
			PRIMARY AIR HEATERS			
370	8	st	Radial Seals for Cold End of Rotor Only	bfg	567.00/st	
371	8	st	Holding Strips for Cold End Radial Seals	bfg	198.90/st	
372	8	st	Cold End Rotor Post Seals	bfg	54.00/st	
373	8	st	Bolts, Nuts and Washers for Cold End of Rotor Only	bfg	135.00/st	
374	8	st	Circular Seals for Cold End of Rotor Only	bfg	280.80/st	
375	8	st	Holding Strips for Circular Seals for Cold End of Rotor Only	bfg	122.40/st	
376	8	st	Circular Seals, Bolts, Nuts and Washers for Cold End of Rotor	bfg	68.40/st	
377	8	st	Axial Seal for Hot and Cold End of Rotor	bfg	191.70/st	
378	8	st	Holding Strips for Axial Seals, Hot and Cold Ends of Rotor	bfg	127.80/st	
379	8	st	Bolts, Nuts and Washers for Axial Seal	bfg	99.00/st	
380	8	st	Radial Seals for Hot End of Rotor Only	bfg	567.00/st	
381	8	st	Holding Strips for Hot End Radial Seals	bfg	198.90/st	
382	8	st	Hot End Rotor Post Seals	bfg	54.00/st	
383	8	st	Bolts, Nuts and Washers for Hot End Radial Seals	bfg	135.00/st	
384	8	st	Circular Seals for Hot End of Rotor Only	bfg	280.80/st	
385	8	st	Holding Strips for Circular Seals for Hot End of Rotor Only	bfg	122.40/st	
386	8	st	Circular Seals, Bolts, Nuts and Washers for Hot End of Rotor	bfg	68.40/st	
			AIR HEATER BLOWERS SB			
387	1	ea	Diaphragm	afg	48.47/ea	
388	1	ea	Valve Disc and Stem Assembly	afg	62.85/ea	
389	1	ea	Valve Guide Washer	afg	.69/ea	
390	1	ea	Trigger Pin	afg	1.55/ea	
391	1	ea	Valve Spring	afg	3.16/ea	
392	1	ea	Valve Spring Retainer	afg	.86/ea	
393	1	ea	Valve Yoke	afg	.92/ea	
394	1	ea	Yoke Pin	afg	.63/ea	
395	1	ea	Packig Washer	afg	4.54/ea	
396	1	ea	Lock Pin Plug	afg	10.47/ea	
397	1	ea	Air Relief Valve	afg	119.49/ea	
398	2	ea	Flange Gasket	afg	65.90/ea	

IP14_001091

BDS
410
018
10-64

TABLE A
SPARE PARTS

B&W ITEM NUMBER	QTY	U/M	DESCRIPTION	NOTE	PRICE PER UNIT OF MEASURE	B&W FOLIO NUMBER
			PRIMARY AIR HEATERS			
			AIR HEATER DRIVE, BEARINGS AND LUBE UNIT			
399	1	lt	Drive Unit	cfg	72260.00/lt	
400	1	ea	Air Motor	bfg	Inc'l	
401	1	ea	Overrunning Clutch Coupling	bfg	Inc'l	
402	1	ea	Electric Motor	cfg	Inc'l	
403	1	ea	Gear Coupling	bfg	Inc'l	
404	4	ea	Solenoid Air Valve	afg	Inc'l	
405	2	ea	Rotor Guide Bearing	cfg	Inc'l	
406	1	ea	Rotor Support Bearing Runner	cfg	Inc'l	
407	1	ea	Rotor Support Bearing Shoes	cfg	Inc'l	
408	1	ea	Lube Oil Motor for Support Bearing	cfg	Inc'l	
409	1	ea	Lube Oil Motor for Guide Bearing	cfg	Inc'l	
410	1	ea	Lube Oil Pump for Support Bearing	cfg	Inc'l	
411	1	ea	Lube Oil Pump for Guide Bearing	cfg	Inc'l	
412	1	ea	Lube Oil Cooler for Guide Bearing	cfg	Inc'l	
413	4	ea	Immersion Thermostats	beg	Inc'l	
414	4	ea	Lube Oil Filter Cartridges	aog	Inc'l	
415	1	ea	Lube Oil Drive Coupling	bfg	Inc'l	
416	1	ea	Lube Oil Drive Coupling	bfg	Inc'l	
417	1	ea	Dial Thermometer	adi	Inc'l	

TABLE A

SPARE PARTS

B&W ITEM NUMBER	QTY	U/M	DESCRIPTION	NOTE	PRICE PER UNIT OF MEASURE	B&W FOLIO NUMBER
			SECONDARY AIR HEATERS			
418	8	st	Radial Seals for Cold End of Rotor Only	bfg	2506.50/st	
419	8	st	Holding Strips for Cold End Radial Seals	bfg	885.60/st	
420	8	st	Diaphragm Seals for Cold End of Rotor Only	bfg	1982.70/st	
421	8	st	Bolts, Nuts and Washers for Cold End of Radial Seals	bfg	635.40/st	
422	8	st	By-Pass Seals for Cold End of Rotor Only	bfg	980.10/st	
423	8	st	Holding Strips for By-Pass Seals for Cold End of Rotor Only	bfg	248.40/st	
424	8	st	By-Pass Seals, Bolts, Nuts and Washers for Cold End of Rotor	bfg	127.80/st	
425	8	st	Axial Seal for Hot and Cold End of Rotor	bfg	396.90/st	
426	8	st	Holding Strips for Axial Seals, Hot and Cold Ends of Rotor	bfg	779.40/st	
427	8	st	Bolts, Nuts and Washers for Axial Seal	bfg	170.10/st	
428	8	st	Radial Seals for Hot End of Rotor Only	bfg	2506.50/st	
429	8	st	Holding Strips for Hot End Radial Seals	bfg	885.60/st	
430	8	st	Diaphragm Seals for Hot End of Rotor Only	bfg	1982.70/st	
431	8	st	Bolts, Nuts and Washers for Hot End Radial Seals	bfg	635.40/st	
432	8	st	By-Pass Seals for Hot End of Rotor Only	bfg	980.10/st	
433	8	st	Holding Strips for By-Pass Seals for Hot End of Rotor Only	bfg	248.40/st	
434	8	st	By-Pass Seals, Bolts, Nuts and Washers for Hot End of Rotor	bfg	127.80/st	
			AIR HEATER BLOWERS SB			
435	1	ea	Diaphragm	afg	48.47/ea	
436	1	ea	Valve Disc and Stem Assembly	afg	62.85/ea	
437	1	ea	Valve Guide Washer	afg	.69/ea	
438	1	ea	Trigger Pin	afg	1.55/ea	
439	1	ea	Valve Spring	afg	3.16/ea	
440	1	ea	Valve Spring Retainer	afg	.86/ea	
441	1	ea	Valve Yoke	afg	.92/ea	
442	1	ea	Yoke Pin	afg	.63/ea	
443	1	ea	Packig Washer	afg	4.54/ea	
444	1	ea	Lock Pin Plug	afg	10.47/ea	
445	1	ea	Air Relief Valve	afg	119.49/ea	
446	2	ea	Flange Gasket	afg	65.90/ea	

IP14_001093

TABLE A

SPARE PARTS

B&W ITEM NUMBER	QTY	U/M	DESCRIPTION	NOTE	PRICE PER UNIT OF MEASURE	B&W FOLIO NUMBER
			SECUNDARY AIR HEATERS			
			AIR HEATER DRIVE, BEARINGS AND LUBE UNIT			
447	1	lt	Drive Unit	cfg	72260.00/lt	
448	1	ea	Air Motor	bfg	Inc'l	
449	1	ea	Overrunning Clutch Coupling	bfg	Inc'l	
450	1	ea	Electric Motor	cfg	Inc'l	
451	1	ea	Gear Coupling	bfg	Inc'l	
452	4	ea	Solenoid Air Valve	afg	Inc'l	
453	2	ea	Rotor Guide Bearing	cfg	Inc'l	
454	1	ea	Rotor Support Bearing Runner	cfg	Inc'l	
455	1	ea	Rotor Support Bearing Shoes	cfg	Inc'l	
456	1	ea	Lube Oil Motor for Support Bearing	cfg	Inc'l	
457	1	ea	Lube Oil Motor for Guide Bearing	cfg	Inc'l	
458	1	ea	Lube Oil Pump for Support Bearing	cfg	Inc'l	
459	1	ea	Lube Oil Pump for Guide Bearing	cfg	Inc'l	
460	1	ea	Lube Oil Cooler for Guide Bearing	cfg	Inc'l	
461	4	ea	Immersion Thermostats	beg	Inc'l	
462	4	ea	Lube Oil Filter Cartridges	adg	Inc'l	
463	1	ea	Lube Oil Drive Coupling	bfg	Inc'l	
464	1	ea	Lube Oil Drive Coupling	bfg	Inc'l	
465	1	ea	Dial Thermometer	adi	Inc'l	

IP14_001094

Material Indexes and an arithmetical average for the Shop Labor Indexes will be computed for the period beginning a month before the shop fabrication for the parts is started, to and including the month in which the parts are delivered. If the parts are not delivered within the period specified, the Material and Shop Labor Indexes shall be either the Material and Shop Labor Indexes computed above or the arithmetical average of the Indexes for each month for the period beginning a month before the shop fabrication for the parts is started, to and including the month starting on the last day of the period specified, whichever results in the lower monetary cost to the IPA.

21. Acceptance: Start-up and Acceptance Tests and inspections will be performed on a Boiler Unit by the Engineer, with assistance, in an advisory capacity, from the Contractor if requested. The Contractor will be notified of and may be represented at such tests and inspections.

When a Boiler Unit has been tested in accordance with the Operating Tests specified in Article 4 of Division G1, has operated correctly for 60 calendar days as shown on the operating daily log, has met the NOx emission limitations, and complies with the requirements of the contract, written Acceptance thereof will be made by the Project Director which will not be unreasonably withheld. If through no fault of the Contractor the Project Manager delays for a period of 365 calendar days after date of initial turbine synchronization in notifying the Contractor of such Acceptance, that Boiler Unit shall be deemed to have been accepted upon the last day of such 365 calendar day period.

If such Acceptance Tests and inspections show that a Boiler Unit does not meet the requirements set forth in these specifications, the Project Manager will promptly notify the Contractor of such deficiency, whereupon the Project Manager may elect to (a) accept the Unit; or (b) make the Unit available to the Contractor for correction within 6 months after notice of such deficiency, and retest the Unit within 45 days after correction; or (c) in the event the Project Manager does not accept the Unit under (a) and the Project Manager does not make the Unit available to correct the deficiencies under (b), then the Project Manager can refuse to accept the Boiler Unit and negotiate a settlement in accordance with Article 22.2 of this Division; in such case the conclusion of such settlement shall be considered as Acceptance.

All deficiencies shall be corrected at the Contractor's own expense with due diligence and dispatch, and the corrected Boiler Unit shall be retested and inspected, as

IP14_001095

appropriate, to demonstrate satisfactory completion of the Acceptance Tests and inspections. The Contractor shall replace all replacement parts, including those parts that have to be replaced due to abnormal wear if such parts preclude the achievement of the performance guarantees. The IPA shall not be responsible for any materials or services which the Contractor provides in conducting additional tests and inspections.

22. Guarantee:

22.1 General Guarantee: The Contractor shall guarantee until one year after Acceptance of a Boiler Unit that all design, equipment, materials, and workmanship of that Boiler Unit shall be free from defects. The Contractor, at his option, shall modify, adjust, repair, or replace all such defective equipment, materials, or workmanship in place and use at his own expense on a straight-time basis. The Project Manager will remove and replace all peripheral equipment or facilities necessary to provide the Contractor access to the Boiler Units for corrective work at the Contractor's sole expense on a straight-time basis. If, after Acceptance, the Boiler Unit is not available for normal operation due to any failure to meet the guarantee requirements, such time of forced outage shall not be counted as part of the 12-month general guarantee period.

22.2 Performance Guarantee: The Contractor shall guarantee that the Boiler Unit will meet the guaranteed performance conditions as set forth in the specifications for the guaranteed period and any extensions thereof.

If the field tests, performed at any time during the guarantee period, indicate that such guaranteed performance conditions are not met, the Contractor shall correct the defects in accordance with Article 21 of this Division.

If the Contractor and IPA agree that such deficient performance condition cannot be corrected, the IPA shall be entitled to an amount negotiated by the parties as an equitable settlement based on the amount and scope of such deficient performance. The IPA will deduct such amount from the final payment and, if such amount is in excess of the final payment, invoice the Contractor for the difference.

22.3 Disclaimers: The sole liability of the Contractor under this Article and the exclusive remedy of IPA arising out of the manufacture, sale, furnishing, or erection of the equipment hereunder or its use whether arising under contract, tort (including negligence), strict liability, or

IP14_001096

otherwise, shall be the modification, adjustment, repair, or replacement as set forth above.

THE CONTRACTOR AND IPA AGREE THAT, IN CONSIDERATION OF 792
THE ABOVE EXPRESS GENERAL GUARANTEE AND THE ENUMERATED 793
PERFORMANCE GUARANTEE(S), ALL OTHER WARRANTIES AND GUARANTEES,
OTHER THAN TITLE, EITHER EXPRESSED OR IMPLIED, WHETHER ARISING 794
UNDER LAW OR EQUITY, INCLUDING WARRANTIES OF MERCHANTABLITY AND
FITNESS FOR A PARTICULAR PURPOSE, ARE EXCLUDED FROM THIS 795
CONTRACT.

23. Conditions of Guarantees: The guarantees set 798
forth in Article 22 of this Division shall be subject to the
following conditions applicable to the item for which a breach 799
of guarantee is claimed:

23.1 The Project Director will give the Contractor 801
written notification of any defect in the work within a
reasonable time after the Project Director becomes aware of such 802
defect.

23.2 The Project Manager will operate and maintain 804
the Boiler Units in accordance with the operation and 805
maintenance procedures agreed upon by the parties.

23.3 The Project Manager will, at its option and at 807
no cost to the Contractor, make available facilities at the 808
jobsite during normal working hours to enable the Contractor in
making guarantee corrections or repairs.

23.4 Completion of payments by the IPA for the Boiler 810
Units shall not relieve the Contractor of any of its guarantee 811
obligations.

23.5 Should the Contractor fail to promptly make the 813
necessary corrections of defects, the Project Manager may 814
perform or have performed the necessary guarantee correction
work and backcharge the Contractor. Such work performed by or 815
for the Project Manager shall not be construed so as to void the
guarantee provisions.

23.6 This guarantee does not cover the effects of 817
normal wear and tear; or abuse of the equipment; or the effects 818
of normal abrasions, erosion, or corrosion; or the effects of
improper storage or erection, if not within the Contractor's 819
scope of work hereunder.

24. Consequential Damages and Limitation of 821
Liability: In no event, whether as a result of breach of 823

IP14_001097

1.7 Page E1-21: Subarticle 22.1 is replaced with the following:

"22.1 General Guarantee: The Contractor shall guarantee until 2 years after Acceptance of a Boiler Unit that all design, equipment, materials, and workmanship of that Boiler Unit shall be free from defects. The Contractor, at his option, shall modify, adjust, repair, or replace all such defective equipment, materials, or workmanship in place and use at his own expense on a straight-time basis. The Project Manager will remove and replace all peripheral equipment or facilities necessary to provide the Contractor access to the Boiler Units for corrective work at the Contractor's sole expense on a straight-time basis. If, after Acceptance, the Boiler Unit is not available for normal operation due to any failure to meet the guarantee requirements, such time of forced outage shall not be counted as part of the 2-year general guarantee period. Additionally, the Contractor shall guarantee that each Boiler Unit shall achieve 92 percent operational testing for each month of the guarantee period. If during any month of the guarantee period operational testing is less than 92 percent, that month shall not be credited toward the 24-month guarantee period; in such event, the guarantee period shall be extended as required to obtain 24 calendar months of 92 percent operational testing.

"Operational testing shall refer to the ratio, expressed as a percentage, of the number of hours during a month in which the equipment is capable of a main steam flow of 6.6 million lbs/hr, with other corresponding conditions as specified in Article 2 of Division G3 of these specifications, divided by the total hours in the monthly period. During operational testing, equipment will be operated and maintained by IPA in accordance with procedures in the Contractor's Operating Instructions, as mutually agreed to, and the advice of the Contractor's Service representative.

"Each Boiler Unit shall be determined to be capable of operation when the following conditions are met:

"(a) Contractor's equipment is available to operate or is undergoing inspection or preventive maintenance while balance of plant equipment is undergoing repair; and maintenance or inspection not being mandatory prior to restarting boiler unit.

"(b) A minimum of 6 pulverizers are in operation or available for operation when using all specified

IP14_001098

coals except the blend of Coal Reserves B and F which may require 7 pulverizers in operation. 333

"The optional extension of the guarantee period to 335
provide 24 months of 92 percent "operational testing" during the 336
guarantee period represents the exclusive liability for the
"operational testing" of each unit. No other guarantee is made 338
or shall be implied as to the availability of the unit."

1.8 Page E1-23: Article 25 is replaced with the 341
following:

"25. Termination for Breach: 344

"25.1 If the work to be done under this contract 346
shall be abandoned by the Contractor, or if the Contractor shall 347
be adjudged a bankrupt, or shall make a general assignment for
the benefit of creditors, or if a receiver of his property or 348
business be appointed by a court of competent jurisdiction, or 349
if this contract shall be assigned by him otherwise than as
herein specified, or if at any time the Project Director shall 350
determine that the performance of the Contractor is
unnecessarily or unreasonably delayed, or that the Contractor is 351
negligently or wilfully violating any of the covenants or 352
conditions of the contract, or is executing the same in bad
faith or not in accordance with the terms thereof, or refused or 354
fails to prosecute the work or any separable part thereof with
such diligence as will insure its completion within the time 355
specified, or any extension thereof, or fails to complete the 356
work within such time, the Project Director may in writing
notify and instruct the Contractor to discontinue all work, or 357
any part thereof under this contract.

"25.2 When such written notice is served upon the 360
Contractor, as provided in Article 2 of Division E1, he shall 361
immediately discontinue the work or such part thereof as is
covered by the notice, and shall not resume the same except by 362
written instructions from the Project Director. In any such 363
case the IPA may take charge of the work and complete it by a
new contract. In so doing, the IPA may take possession of and 364
use any of the materials, plant, tools, equipment, supplies, and 365
property of every kind provided by the Contractor for the
purposes of his work. The IPA may procure other materials and 366
provide labor for the completion of the same, or contract 367
therefor, and charge the expense of completion by either method
to the Contractor. These charges shall be deducted from such 368
moneys as may be due or may at any time hereafter become due the 369
Contractor under and by virtue of this contract, or any part

IP14_001099

(4) The diameters and the bearing-to-bearing 378
length of the shaft.

(5) Fan drawings indicating dimensions and 380
total weight.

(6) The amplitude (Fo) and frequency (w) of the 382
dynamic force resulting from rotor imbalance in the form F(t) = 383
Fo sin wt such that the Engineer can predict the motion of the
foundation.

(c) Complete performance data, including the 385
following, for the Boiler Units at steam output of 100, 75, 50, 386
and 25 percent of the steam flow at Maximum Capacity and at
maximum continuous rating:

(1) Pressure and temperature of the fluid in 388
all drums and headers.

(2) Pressure drop and capacity of spray 390
desuperheaters.

(3) Flue gas pressure in inches of water 392
entering and leaving:

[a] Furnace. 394

[b] Each superheater, reheater, and 396
economizer section.

[c] Air heater. 398

(4) Temperature of flue gas entering and 400
leaving each superheater, reheater, and economizer section. 401

(5) Corrected and uncorrected flue gas 403
temperature leaving air heater.

(6) Flue gas rate of flow leaving air heater at 405
corrected temperature stated above - cfm.

(7) Flue gas rate of flow - 10^3 lb/hr, as follows: 408

[a] Entering air heater. 411

[b] Leaving air heater. 413

IP14_001100

(8) Distribution percentages of total gas flow through each superheater and reheater section if dampers are provided to control steam temperature. 415 416

(9) Excess air - percent, as follows: 418

[a] Leaving furnace. 420

[b] Leaving economizer. 422

[c] Leaving air heater. 424

(10) Air - 10^3 lb/hr, as follows: 426

[a] Entering air heater. 428

[b] Leaving air heater. 430

(11) Air entering air heater at 80F - cfm. 432

(12) Air temperature - F, as follows: 434

[a] Entering air heater. 436

[b] Leaving air heater. 438

(13) Air pressure - inches of water, as follows: 440

[a] Loss through air heater. 442

[b] Permanent loss through air flow measuring device, dampers, and ducts. 444

[c] Required at burner windbox. 446

[d] Total required at air heater inlet. 448

(14) Heat absorbed by Boiler Unit percent. 450

(15) Heat loss, percent, due to: 452

[a] Water from combustion of hydrogen. 454

[b] Theoretical dry gas. 456

[c] Excess air and moisture contained therein, measured at the gas outlet of the air heater. 458

IP14_001101

[d] Moisture in theoretical air. 460

[e] Moisture in fuel. 462

[f] Radiation. 464

[g] Carbon in ash. 466

(16) Combustion gas velocity per square foot of free area - fps, as follows: 468

[a] Leaving the furnace. 470

[b] Entering the superheater. 472

[c] Entering the reheater. 474

(17) Coal consumption - pounds per hour. 476

(d) Recommended chemical treatment of boiler feedwater. 478

(e) Curves showing temperature gradient through the water and steam circuits of the boiler. 480

(f) Curves of average steam temperature, design steam temperature, average and maximum heat absorbtion rates, and design metal temperatures plotted against the length of superheater and reheater tubing. 482 483

(g) Sootblower system including supports, recommended wiring, piping, and controls. 485

(h) Coal and ignitor oil systems including assembly details and controls. 487

(i) Superheat and reheat temperature, combustion, and feedwater systems. 489

7.2 Information to be furnished within 240 calendar days after the effective date of contract shall include the following: 491 492

(a) Functional details of all instruments and controls furnished including all interface requirements. 494

(b) Sufficient computations to justify the design of the boiler suspension steel and those portions of the seismic supports that are attached to the IPA's frame. These 496 497 498

IP14_001102

the Contractor, shall be relieved of claims by the Contractor that failure is due to improper work of erection.

In addition to the service engineers from the Contractor's company, the Contractor shall furnish service engineers from the companies furnishing the following equipment:

(a) Air heaters.

(b) Soot blowers.

(c) Safety valves.

(d) Burners.

(e) Boiler circulation pumps, if furnished.

(f) Coal feeders.

(g) Coal pulverizers.

(h) Primary air fans.

(i) Burner management logic control system, if furnished.

(j) Mechanical continuous ash removal system, if furnished.

The service engineer shall determine that each Boiler Unit and appurtenances were properly installed and made ready to operate. The service engineer shall furnish instructions to IPA personnel as to proper procedure for installation, starting up, and initial operation of the equipment; however, the service engineer shall not assume executive charge of such work but shall provide technical direction and instructions so that the IPA, to the extent that it follows the recommendations of the Contractor, shall be relieved of claims by the Contractor that failure is due to improper work of installation. The service engineer shall also determine and report to the IPA the limits of proper operating conditions, particularly for excess air, pulverizer and burner ranges, steam temperature control ranges, maximum steam generation capability, maximum load pickup rates, and boiler water purity.

The Contractor shall instruct plant supervisory operating personnel on all special requirements for operating and maintaining the equipment furnished.

IP14_001103

17. Future Engineering Services: When requested by the IPA, the Contractor shall furnish engineering services from time to time for the life of the Boiler Units for services related to design, repair, modification, and operation of the Boiler Units. Such services shall be provided at the Contractor's standard fee for engineering services or in the event that the Contractor does not normally provide such engineering services for others at a fee of cost plus 15 percent.

The services of key service engineers identified in accordance with Article 15 of this Division shall be available, as required, during the guarantee period of each Boiler Unit.

18. Right to Operate Unsatisfactory Equipment: If the operation of the equipment after installation proves to be unsatisfactory to the Engineer, the IPA shall have the right to operate such equipment until it can be taken out of service without injury to the IPA for the correction of defects, errors, or omissions, provided the period of such operation pending the correction of defects, errors, or omissions shall not exceed one year without written consent of the IPA and the Contractor.

19. Cooperation of Contractor: The Contractor shall cooperate with the Engineer in the design of adjacent or connecting equipment and steel work furnished by the IPA and shall provide information for this purpose as required by the Engineer's time schedule.

Extra expense by the IPA caused by access requirements not identified by the Contractor in accordance with Articles 6 and 7 of this Division shall be the sole responsibility of the Contractor and such extra expense will be charged against the Contractor.

20. Instruction Books: The Contractor shall furnish 3 complete identical sets of detailed instruction books for all equipment furnished under these specifications. These books shall be accompanied by a letter of transmittal and shall contain all illustrations, detailed drawings, wiring diagrams, and instructions necessary for installing, operating, and maintaining the equipment. The instruction books shall also contain 11-inch by 17-inch copies of all approved drawings. The illustrated parts shall be numbered for identification. All information contained therein shall apply specifically to the equipment furnished and shall not include instructions not applicable. Photographs, ozalids, Xerox, and similar types of reproductions shall not be attached to pages. All such

IP14_001104

illustrations shall be incorporated within the printing of the page to form a durable and permanent reference book.

The instruction books shall be delivered not later than 12 months prior to the scheduled date for boilout of Boiler Unit 1.

The IPA will inform the Contractor by letter within 45 calendar days after receipt of the instruction books either that the instruction books are approved as submitted or that revisions are required. If approved, the Contractor shall promptly furnish 13 additional sets identical to the approved copy. If revisions are required, one set will be returned to the Contractor with the required revisions indicated. The required revisions shall be promptly incorporated in the instruction books, and a total of 16 complete, identical sets of such revised instruction books shall be furnished to the Engineer. Delay in delivery of the instruction books or revisions thereto will be cause for delay in acceptance of the equipment.

21. Contractor's Erection Information Packages: The Contractor shall furnish 2 complete identical sets of detailed erection information packages for the Boiler Units. These erection information packages shall be accompanied by a letter of transmittal and shall contain all illustrations and instructions necessary for the scheduling, unloading, storage, uncrating, preparing equipment for installation, cleaning, erection and assembly, welding, alignment, and checking work performed. The illustrated parts shall be numbered and indexed for identification. All information contained therein shall apply specifically to the Boiler Units furnished and shall not include instructions not applicable. Contractor's drawings submitted under Article 6 of this Division may be referred to in these erection information packages as necessary. A list of such Contractor's drawings shall be included giving the title and drawing number; copies of such drawings need not be included in these erection information packages.

Information contained in the erection information packages shall include the following:

(a) Scope of work identifying termination points.

(b) Breakdown of boiler parts and associated equipment with weights, specifications, and drawing references.

(c) Bills of material for piping, instruments, hangers, clips, spacers, and anchors.

IP14_001105

optional radiographs show defects, the Contractor shall bear all costs for such additional radiographs, the repairs, and the radiograph after repairs.

All radiographic examination film shall be subject to approval of the Engineer as to compliance with these specifications.

All pressure tubes in the boiler shall be ultrasonically examined.

All nondestructive examination and acceptance levels shall be governed by the applicable section of the ASME Boiler and Pressure Vessel Code regardless of whether the examination is required by the Code or at the Engineer's option.

All panel wall tube welds shall be fluoroscope examined. If for any reason the fluoroscope is unavailable, then weld quality shall be monitored by radiography of at least 5 percent of each welder's work. If the rejection rate exceeds the Contractor's standard acceptance level criteria, then additional controls shall be initiated.

The Contractor shall have one certified copy of all required mill test reports and one copy of all purchase orders issued by the Contractor available at the point of manufacture for the Engineer. When the Engineer is not at the point of manufacture, the mill test reports and the purchase orders shall be sent to him at an address to be furnished after date of award of contract. Mill test report shall be available for all material used in pressure parts and primary air fans, and if furnished, all material used in the Boiler recirculation pumps. If mill test reports are not available for the specified fans and pumps, a physical test or chemical analysis, or both, shall be performed by the Contractor at the request of the Engineer.

4. Operating Tests: The Contractor shall submit separate written notices when each Boiler Unit is erected complete in accordance with the contract and ready for Operating Tests.

The Boiler Unit will then be operated not less than 30 days on coal-firing before Operating Tests are performed. Operating Tests and other tests will be made by the Engineer in accordance with ASME Power Test Codes to determine compliance with the contract.

IP14_001106

Calculations shall be based on ASME Thermodynamic and Transport Properties of Steam, published in 1967.

Before the tests are made, the Contractor shall furnish the IPA with 8 copies of all correction curves that may be necessary to correct test data to design conditions.

If a Boiler Unit fails to meet the requirements of the specifications, the Contractor shall bear the expense of all necessary corrections and subsequent Operating Tests required to prove that the Boiler Unit meets the requirements of these specifications.

5. Motor Tests and Inspection: Routine tests shall be made at the motor factory on each integral horsepower motor in accordance with NEMA MG-1 and IEEE 112A, both as last revised.

Tests performed on all motors above 300 horsepower shall be witness tests. Winding resistance measurements and vibration measurements at the bearing housings shall be performed on all motors above 300 horsepower.

In addition to the tests specified above, octave band sound level measurements in accordance with IEEE 85, as last revised, shall be made on each motor rated above 3,000 horsepower.

Five certified copies of all test reports on motors shall be furnished to the IPA.

The IPP will field test the 6,600-volt rated motors by applying a d-c Acceptance Proof Test voltage of 10 kV, applied in accordance with the IEEE 95, as last revised. The motor shall successfully withstand the test.

6. Burner Management Control (BMC) System Tests: If the Option for the Burner Management Control (BMC) System has been exercised, the following factory and acceptance tests shall be performed on the BMC System:

(a) Factory Tests: The following factory tests shall be witness tests:

(1) Electrical tests shall include functional tests on factory assemblies and point-to-point continuity checks, in accordance with the standards. High-voltage tests shall not be applied to coaxial or shielded cables and systems

IP14_001107

and equipment components not designed for such tests. The Contractor shall verify which instruments and control equipment can safely withstand high-voltage tests.

(2) System functional simulation.

After these tests have been completed and all corrections and modifications resulting from these tests have been made so that the system complies with the requirements of the specifications, no further modifications shall be made without the written approval of the Engineer.

(b) Acceptance Tests:

(1) Acceptance tests shall consist of a complete check out of the control system, control panel inserts, and all other related equipment furnished.

(2) Acceptance tests shall include a point-by-point check out of all systems to verify input/output values and functions. The installed systems shall be calibrated and all functions specified shall be performed using actual or simulated system inputs.

(3) Check out shall be performed after the peripheral equipment, control panels, field instruments, control module cabinets, and all other related equipment are assembled and installed, all interconnecting cables are connected, and all field terminations have been made. Such check out shall be made in the presence of the Engineer and shall serve as a part of the operating personnel's training program.

7. Welder Qualification: Welds shall be made only by welders and welding operators who have been previously qualified by tests to perform the type of work required as prescribed in the Standard Code for Welding in Building Construction of the American Welding Society and the ASME Code. Copies of all welder qualifications shall be furnished to the Engineer.

8. Inspection of Surface Preparation and Painting: Surface preparation and painting of all structural steel and miscellaneous iron and steel shall be subject to inspection by the Engineer.

Conformity to the specified dry-film thickness of the coating material shall be checked with Mikrotest, Elcometer, or an equivalent nondestructive gaging instrument.

IP14_001108

9. ASME Performance Test: The performance test shall be the abbreviated heat loss method in accordance with ASME PTC 4.1, -1964, and as specified hereinafter.

9.1 Information Furnished by Contractor: The Contractor shall furnish test grids for oxygen and gas temperature measurements at the economizer, the primary air heater, and the secondary air heater.

9.2 Agreement on Items in Section 3 of PTC 4.1: The following Items in Section 3 of PTC 4.1 are agreed to:

Item (Par. No.)	Agreement
3.01.01.1	General, method shall be the abbreviated heat loss method.
3.01.01.2	No heat credits shall be measured.
3.01.01.3	No heat credits shall be assigned.
3.01.01.4	Carbon losses shall be included.
3.01.01.5	Assigned heat losses shall be: (a) Sensible heat in the fly ash. (b) Radiation to the ash pit. (c) Radiation heat loss in accordance with ABMA Standard Radiation Loss Chart, Fig. E of PTC 4.1. The total of (a) and (b) above shall not exceed 0.5 percent.
3.01.01.6	Permissible deviation in efficiency between duplicate tests shall be 0.5 percent.
3.01.03	Superheat and reheat steam temperatures shall be 1005F plus or minus 10F. Air heater leakage shall be corrected to the specified value, if required.
3.01.06	The official test point shall be maximum capacity.

IP14_001109

Item (Par. No.)	Agreement
3.01.07	Cleanliness of the unit shall be achieved by using the normal sootblowing cycle.
3.01.10	Fuel sampling shall be one quart from each feeder, and samples shall be quartered. Analysis shall be in accordance with ASTM standards.
3.01.13	Test results shall be reported as computed from test observations with proper correction for calibrations.
3.01.14	Distribution of fuel refuse quantities between the boiler and stack shall be 10 percent and 90 percent, respectively. The boiler 10 percent shall be broken down by assuming 70 percent in the hopper and 30 percent in the economizer hopper.
3.01.15	Corrections to be made for deviation from specified operating conditions shall be made in accordance with the PTC 4.1.

9.3 Agreement on Remaining Items in Section 3 of PTC 4.1: Agreement on the remaining Items in Section 3 of PTC 4.1 shall be reached prior to testing.

IP14_001110

PART G - DETAILED SPECIFICATIONS 15

DIVISION G2 - CONTRACT ITEMS 17

1. General: The Contractor shall furnish and deliver 21
for the IPA, complete and ready for Operating Tests, 4 Boiler Units.

Each Boiler Unit furnished hereunder shall be complete 23
with the following and as further specified in these 24
specifications:

(a) Water-cooled furnace walls. 26

(b) Steam drums and headers. 28

(c) Superheater with an auxiliary steam 30
connection.

(d) Reheater. 32

(e) Economizer. 34

(f) Safety and electromatic relief valves. 36

(g) Two regenerative secondary air heaters 38
complete with air heater sootblowers.

(h) Sootblowing systems using steam. 40

(i) Primary air system including fans, motors, 42
regenerative heaters, and sootblowers.

(j) Coal pulverizing equipment including the 44
following:

(1) Pulverizers. 46

(2) Gravimetric coal feeders with control 48
cabinets.

(3) Piping and valves from coal silos to coal 50
feeders.

(4) Piping from coal feeders to the coal 52
pulverizer.

(k) Ducts complete with dampers, expansion joints 54
and hangers for the following:

IP14_001111

(1) Air ducts, as follows: 56

[a] Air heaters to windbox. 58

[b] Primary air fans to air preheater coils. 60

[c] Air preheater coils to air heaters. 62

[d] Air heaters to pulverizers. 64

[e] Tempering air to pulverizers. 66

(2) Coal-air ducts from the pulverizers to the burners. 68

(3) Flue gas ducts. 70

(l) Hopper, below economizer. 72

(m) Windboxes. 74

(n) Control drives. 76

(o) Thermal insulation with aluminum lagging. 78

(p) Air systems, as follows: 80

(1) Seal air. 82

(2) Ignition air. 84

(3) Flame scanner air. 86

(q) Valves and accessories. 88

(r) Firing equipment, as follows: 90

(1) Coal burners. 92

(2) No. 2 fuel oil warm-up burners, if required. 95

(3) No. 2 fuel oil ignitors. 98

(4) Dampers. 100

(5) Power positioners. 102

(6) Ignitor proving. 104

IP14_001112

(s) Boiler water wall recirculation system. 106

(t) NOx control system. 108

(u) Superheater and reheater attemperators. 110

(v) Thermoprobes. 112

(w) Suspension steel including top grid steel, 114
buckstays, seismic ties, hangers, and spring supports.

2. Terminal Points: Terminal points of the equipment 117
furnished for the Boiler Units and for the Optional Burner
Management Control System shall be as follows and as further 118
specified in these specifications:

(a) One economizer inlet connection terminating 120
outside the boiler casing.

(b) Two superheater outlet connections. 122

(c) One primary superheater auxiliary steam outlet 124
connection terminating outside the boiler casing and downstream 125
of a manually-operated stop valve.

(d) Two reheater inlet connections. 127

(e) Two reheater outlet connections. 129

(f) Primary air at the primary air fans inlet and 131
the primary air fans evase outlet.

(g) Primary air at the air preheater coil outlet. 133

(h) Secondary air at the air heater inlet. 135

(i) Flue gas outlet from the air heaters. 137

(j) Refractory, insulation, casing, and lagging 139
necessary for all supplied equipment.

(k) Warm-up oil valves and atomizing air valves at 141
the burners and outside the casing.

(l) Ignitor oil valves and atomizing air valves at 143
the ignitors and outside the casing.

(m) Coal fuel system inlet at the coal silo 145
outlet.

IP14_001113

(n) Coal ash outlet at the pulverizer reject opening, economizer ash hopper outlets, and the furnace hopper bottom at the ash hopper seal plate.

(o) Air heater ash hopper outlet.

(p) Safety, vent, sampling point, drain, and blowdown valve outlets.

(q) If the Option for the Burner Management Control System (BMC) is exercised, then the terminal points shall be the BMC System sensors and control bench mounted control panel.

IP14_001114

PART G - DETAILED SPECIFICATIONS 15

DIVISION G3 - DETAILED REQUIREMENTS FOR ITEM 1 17

1. General: The requirements hereinafter refer to 21
one Boiler Unit and shall also apply to each of 4 identical
Boiler Units furnished under these specifications. 22

The term "Boiler" or "Boiler Unit", as used in these 24
specifications, shall be considered to mean a complete steam 25
generating unit.

The Contractor shall furnish and deliver all necessary 27
equipment for a complete installation unless stated otherwise 28
herein.

The Contractor shall design the boiler using designs 30
and design criteria which have margins of safety proven by past 31
performance and shall furnish equipment which has demonstrated
reliable operation.

The boiler shall be designed as follows: 33

(a) For operation at an altitude of 4,700 feet 35
above sea level with a barometric pressure of approximately
25.18 inches Hg and an ambient temperature range of 30F below 36
zero to 110F.

(b) To operate the constant pressure mode, the 38
variable pressure mode, and hybrid pressure modes. In the 39
variable pressure mode of operation, the superheater outlet
pressure will be varied from approximately 630 psig to 40
approximately 2,515 psig over the load range of 25 percent of
Maximum Capacity to 100 percent of Maximum Capacity. In the 42
hybrid pressure mode of operation, the superheater outlet
pressure will be varied in any combination of variable pressure 43
and constant pressure bounded by the above referenced variable
pressure and constant pressure modes of operation. With a 45
typical hybrid pressure mode of operation that may be used, the
superheater outlet pressure will be varied from 820 psig at 25 47
percent of Maximum Capacity to approximately 2,515 psig at 68
percent of Maximum Capacity and will be operated at constant 48
pressure above 68 percent of Maximum Capacity.

(c) To operate at flow rates and temperatures 50
listed for operation at Maximum Capacity but with the inlet 51
pressure to the economizer reduced such that the superheater
outlet pressure is not greater than 2,365 psig. 52

IP14_001115

(d) To operate with an IPA furnished turbine bypass system designed to maintain steam flow through the boiler including the reheater while bypassing the turbine. Such bypass system may be used during boiler start-up, to maintain boiler operation during and after a turbine runback to any load, and to maintain boiler operation during and after a turbine trip.

RAH

(e) The flue gas temperature leaving the air heater shall be 280F±10F, corrected for air heater leakage, at Maximum Capacity when firing coal. For the purposes of design and calculations including efficiency, a flue gas temperature of 280F leaving the air heater shall be used.

(f) For extracting auxiliary steam from the boiler, as described in Article 8 of Division G3, from unit capacity of 50 percent of Maximum Capacity to Maximum Capacity, a quantity of steam which will vary from zero to 450,000 pounds per hour.

(g) For a reheater pressure of not less than 200 psi higher than the pressure of the steam at the reheater inlet at Maximum Capacity.

2. Design Points: The boiler shall be capable of operating continuously at all steam flows from cold start-up to Maximum Continuous Rating (MCR).

All specified design points and maximum and minimum parameters shall be considered at their most severe operating condition.

All ambient air calculations, including those used in efficiency calculations, shall be based on an air temperature of 60F and 60 percent relative humidity (0.0067 pound of moisture per pound of dry air).

As used elsewhere herein, the term "Maximum Capacity" shall represent the conditions below.

IP14_001116

	Maximum Capacity	
		85
		86
Steam at superheater outlet:		88
Flow, lb/hr	6,100,000	90
Temperature, F	1,005	92
Pressure, psig	2,515	94
Steam at reheater inlet:		96
Flow, lb/hr	5,000,000	98
Temperature, F	620	100
Pressure, psig	539	102
Steam temperature at reheater outlet, F	1,005	104
Feedwater temperature to economizer, F	543	106
Desuperheater spray water temperature, F	390	108
Air temperature to fans, F	60	110

The boiler shall also be designed and capable of 114
operating continuously at the following conditions defined as 115
Maximum Continuous Rating:

IP14_001117

	Maximum Continuous Rating
Steam at superheater outlet:	
Flow, lb/hr	6,600,000
Temperature, F	1,005
Pressure, psig	2,640
Steam at reheater outlet:	
Flow, lb/hr	5,500,000
Temperature, F	1,005
Steam temperature at reheater inlet, F	630
Reheater heat absorption, MMBtu/hr	1,100
Feedwater temperature to economizer, F	555

The boiler shall be provided with the following features:

(a) Pulverized coal-fired; dry bottom furnace; balanced draft; single reheat; drum-type design.

(b) Designed for indoor service. All joints, including insulation covering, shall be weathertight.

(c) Openings shall be provided to ventilate all cavities for inspection and repair.

(d) Provisions shall be made to drain, by gravity, all waterwall and drainable pressure parts within 2 hours.

(e) Hinged doors shall be located symmetrically about the boiler to provide easy access to all parts of the boiler for inspection and repair.

(f) All tubes, nozzles, and connections to drums and headers shall be strength welded. All tubing in the boiler shall be seamless.

(g) All parts of the boiler to which the IPA will connect shall be designed to be brought outside the setting by

IP14_001118

the Contractor or outside an area enclosed by boiler equipment. All piping connections shall be prepared for welding.

(h) The boiler parts shall be arranged to avoid interferences and inaccessibilities of equipment which would hamper normal operating and maintenance procedures.

(i) Seals for openings in the boiler shall be welded gastight where practicable. Pulverizers, feeders, damper shafts, and other equipment subject to leakage of pressurized flue gases or air coal mixtures shall be equipped with pressure seals. The IPA will furnish air piping or ducting to the pressure seals.

(j) All parts exposed to flue gas shall be designed to resist attack by sulfur and alkali metal compounds.

(k) All component parts downstream of the economizer shall be designed for a temperature at least 50F higher than the maximum temperature of the gases leaving the economizer.

(l) Designed so that the unit can operate at not less than 60 percent of Maximum Capacity with any one air heater, forced draft fan, or primary air fan out of service.

(m) Designed to reduce load to a load not greater than 50 percent of Maximum Capacity from any load greater than 50 percent of Maximum Capacity at the rate of not less than 5 percent of Maximum Capacity per minute without lifting safety valves, without tripping pulverizers, and without the use of supplemental fuel.

(n) The burner level heat release rate shall be not more than 1,600,000 Btu per hour per square foot. The burner level heat release rate shall be calculated as follows: The typical higher heating value for Coal B times the pounds of fuel burned at MCR divided by the product of the width and depth of the furnace at the top burner level.

(o) The maximum gas side pressure drop between the furnace and the air heater outlet shall be not more than 12 inches wg at MCR.

(p) Furnace platens or extended surface shall be not less than 80 feet above the top burner centerline.

(q) The gas temperature entering close space platen or pendant surfaces shall be not greater than 1900F at

IP14_001119

MCR. The gas temperature, as measured by high velocity thermocouple (HVT), shall be the maximum temperature. 199

The Contractor shall furnish all valves, piping, fittings, and insulation required to make connections between equipment which the Contractor provides, except as specified in Subarticle 22.6 of this Division. 201 202

The Contractor shall furnish all replacement gaskets required for installation following preliminary boiler operations consisting of hydrostatic test, boilout, and acid cleaning. 204 205

The IPA will furnish and install manually operated block valves, piping, fittings, and insulation between the Contractor's equipment and the equipment furnished by the IPA, except as specified in Article 27 of this Division. 207 208 209

3. Fuels: The coal analyses for Coal Reserves A through G, which are the fuels to be supplied by the IPA to the boiler, are shown on Pages G3-7 through G3-13. The analyses for each coal reserve includes an analysis which is typical for that reserve and 2 additional analyses which represent the range of individual characteristics or constituents that can reasonably be expected from the reserve. Approximately equal quantities of fuel will be purchased from each reserve. 212 214 215 217

The boiler shall be capable of complying with all requirements of these specifications when operating with coal from any of the coal reserves listed in this Article, either individually or in any combination, and with sodium oxide content to 4.5 percent in the coal ash. However, when coal from Coal Reserve F is supplied to the boiler, Coal Reserve F will not exceed 50 percent by weight of a coal mixture. The typical analysis of Coal Reserve B shall be used by the Contractor for providing performance guarantees and for providing Supplementary Data required in Subarticle 12.3 of the Execution Document. Coal Reserve B will be used by the IPA for performing guarantee tests of boiler performance. 219 220 221 222 224 225 226

IP14_001120

COAL RESERVE A

Proximate Analysis, as received, diluted	Typical	Range	
Moisture	8.6	6.5	11.0
Ash	15.6	10.0	21.5
Volatile	36.0	33.2	38.2
Fixed Carbon	39.8	36.1	43.5
Btu	10,930	9,980	11,885
Miscellaneous, undiluted			
Sulfur Forms, dry basis			
Pyritic	0.19	0.04	0.25
Sulphate	0.00	0.00	0.01
Organic	0.56	0.45	0.68
Equilibrium Moisture	6.8	4.7	9.0
Grindability	46	41	52
Fusion Temperatures, undiluted			
Reducing			
I.D.	2300	2110	2505
H=W	2470	2270	2700+
H=½W	2515	2335	2700+
Fluid	2615	2470	2700+
Oxidizing			
I.D.	2420	2270	2570
H=W	2560	2420	2700+
H=½W	2580	2450	2700+
Fluid	2670	2600	2700+
Ultimate Analysis, diluted			
Carbon	59.90	56.90	62.90
Hydrogen	4.50	4.10	4.90
Nitrogen	0.93	0.73	1.13
Chlorine	0.02	0.00	0.04
Sulfur	0.75	0.59	0.91
Ash	15.60	10.00	21.50
Oxygen	9.70	7.70	11.70
Moisture	8.60	6.50	11.00
Mineral Analysis, ignited basis, undiluted			
Phos. pentoxide, P_2O_5	0.4	0.2	1.1
Silica, SiO_2	61.1	57.1	65.1
Ferric oxide, Fe_2O_3	4.6	3.0	8.0
Alumina, Al_2O_3	21.6	18.6	24.6
Titania, TiO_2	1.1	0.8	1.4
Lime, CaO	4.6	2.5	6.8
Magnesia, MgO	1.0	0.7	1.3
Sulfur trioxide, SO_3	2.9	1.4	4.7
Potassium oxide, K_2O	1.2	0.6	1.6
Sodium oxide, Na_2O	1.0	0.5	1.5
Undetermined	0.5	0.1	1.0
Free Swelling Index	--	--	--
Calculated Values, diluted where applicable			
Lbs Ash/MMBtu	14.3	8.0	19.0
Base/Acid	0.15	0.10	0.21
Na_2O/MMBtu	0.14	0.06	0.20
Fe_2O_3/CaO	1.00	0.70	2.00
SiO_2 + Al_2O_3/MMBtu	11.83	6.47	18.82
Fe_2O_3 + CaO	9.20	5.94	12.47
SiO_2 X % Ash dry	0.10	0.07	0.15
M & A free Btu	14,420	--	--

IP14_001121

COAL RESERVE B

Proximate Analysis, as received, diluted	Typical	Range	
Moisture	8.3	7.4	9.4
Ash	14.0	8.0	16.0
Volatile	37.1	35.0	40.0
Fixed Carbon	40.6	38.0	44.0
Btu	11,010	10,500	12,100
Miscellaneous, undiluted			
Sulfur Forms, dry basis			
Pyritic	0.18	0.11	0.25
Sulphate	0.00	0.00	0.00
Organic	0.37	0.29	0.45
Equilibrium Moisture	6.5	6.0	7.0
Grindability	48	43	53
Fusion Temperatures, undiluted			
Reducing			
I.D.	2180	2075	2300
H=W	2215	2095	2340
H=½W	2245	2115	2380
Fluid	2330	2190	2470
Oxidizing			
I.D.	2240	2130	2355
H=W	2300	2135	2455
H=½W	2325	2200	2450
Fluid	2410	2255	2570
Ultimate Analysis, diluted			
Carbon	61.45	58.50	64.50
Hydrogen	4.56	4.26	4.86
Nitrogen	1.20	0.95	1.45
Chlorine	0.02	0.00	0.04
Sulfur	0.55	0.40	0.70
Ash	14.00	8.00	16.00
Oxygen	9.92	9.32	10.52
Moisture	8.30	7.40	9.30
Mineral Analysis, ignited basis, undiluted			
Phos. pentoxide, P_2O_5	0.3	0.1	1.0
Silica, SiO_2	58.8	49.3	62.0
Ferric oxide, Fe_2O_3	5.9	3.9	7.9
Alumina, Al_2O_3	13.5	10.7	16.8
Titania, TiO_2	0.7	0.5	0.9
Lime, CaO	9.3	3.9	14.6
Magnesia, MgO	2.0	0.8	3.0
Sulfur trioxide, SO_3	5.9	2.9	8.9
Potassium oxide, K_2O	0.9	0.6	1.3
Sodium oxide, Na_2O	1.6	0.6	3.0*
Undetermined	1.1	0.3	3.0
Free Swelling Index	1.5	1.0	1.5
Calculated Values, diluted where applicable			
Lbs Ash/MMBtu	12.71	--	--
Base/Acid	0.27	--	--
Na_2O/MMBtu	0.20	--	--
Fe_2O_3/CaO	0.63	--	--
SiO_2 + Al_2O_3/MMBtu	9.19	--	--
Fe_2O_3 + CaO	15.20	--	--
SiO_2 X % Ash dry	0.09	--	--
M & A free Btu	14,172	--	--

*Core samples indicate an absolute maximum of approximately 5.1 percent.

IP14_001122

COAL RESERVE C

Proximate Analysis, as received, diluted	Typical	Range	
Moisture	10.5	9.5	11.4
Ash	7.2	6.4	8.0
Volatile	39.4	38.2	40.7
Fixed Carbon	42.9	41.8	44.0
Btu	11,577	11,427	11,727
Miscellaneous, undiluted			
Sulfur Forms, dry basis			
Pyritic	---	---	---
Sulphate	---	---	---
Organic	---	---	---
Equilibrium Moisture	---	---	---
Grindability	49	47	51
Fusion Temperatures, undiluted			
Reducing			
I.D.	2140	2095	2190
H=W	2170	2110	2220
H=½W	2195	2130	2260
Fluid	2245	2150	2335
Oxidizing			
I.D.	2205	2145	2265
H=W	2230	2165	2295
H=½W	2260	2190	2330
Fluid	2310	2220	2400
Ultimate Analysis, diluted			
Carbon	65.43	63.16	67.70
Hydrogen	4.88	4.70	5.06
Nitrogen	1.26	1.07	1.45
Chlorine	0.01	0.00	0.02
Sulfur	0.48	0.37	0.59
Ash	7.20	6.40	8.00
Oxygen	10.24	9.66	10.82
Moisture	10.50	9.50	11.40
Mineral Analysis, ignited basis, undiluted			
Phos. pentoxide, P_2O_5	0.2	0.1	0.3
Silica, SiO_2	53.6	47.4	59.8
Ferric oxide, Fe_2O_3	7.1	5.5	8.7
Alumina, Al_2O_3	13.2	10.5	15.9
Titania, TiO_2	0.7	0.6	0.8
Lime, CaO	12.3	6.7	17.9
Magnesia, MgO	2.5	1.0	4.0
Sulfur trioxide, SO_3	8.4	5.7	11.1
Potassium oxide, K_2O	1.0	0.6	1.8
Sodium oxide, Na_2O	0.5	0.4	0.6
Undetermined	0.5	0.1	0.9
Free Swelling Index			
Calculated Values, diluted where applicable			
Lbs Ash/MMBtu	6.22	5.78	6.67
Base/Acid	0.35	0.23	0.48
Na_2O/MMBtu	0.031	0.021	0.041
Fe_2O_3/CaO	0.58	0.47	0.69
SiO_2 + Al_2O_3/MMBtu	4.15	3.55	4.75
Fe_2O_3 + CaO	19.40	13.13	25.67
SiO_2 X % Ash dry	0.04	0.01	0.05
M & A free Btu	14,067	---	---

IP14_001123

COAL RESERVE D

Proximate Analysis, as received, diluted	Typical	Range	
Moisture	9.8	8.4	11.2
Ash	8.8	6.5	11.0
Volatile	38.2	34.5	40.0
Fixed Carbon	43.2	39.5	45.5
Btu	11,690	10,590	12,300
Miscellaneous, undiluted			
Sulfur Forms, dry basis			
Pyritic	0.09	0.07	0.12
Sulphate	0.01	0.00	0.03
Organic	0.49	0.39	0.59
Equilibrium Moisture	5.8	5.0	6.6
Grindability	47	45	49
Fusion Temperatures, undiluted			
Reducing			
I.D.	2335	2145	2520
H=W	2355	2170	2540
H=½W	2380	2200	2560
Fluid	2415	2235	2600
Oxidizing			
I.D.	2395	2200	2590
H=W	2415	2230	2600
H=½W	2435	2250	2620
Fluid	2470	2290	2650
Ultimate Analysis, diluted			
Carbon	66.20	56.07	76.33
Hydrogen	4.91	4.12	5.70
Nitrogen	1.31	1.05	1.57
Chlorine	0.02	0.01	0.03
Sulfur	0.59	0.49	0.69
Ash	8.80	6.50	11.00
Oxygen	8.37	7.14	9.60
Moisture	9.80	8.40	11.20
Mineral Analysis, ignited basis, undiluted			
Phos. pentoxide, P_2O_5	0.6	0.2	1.0
Silica, SiO_2	52.6	45.1	60.0
Ferric oxide, Fe_2O_3	4.4	2.9	6.0
Alumina, Al_2O_3	22.8	15.7	29.9
Titania, TiO_2	1.0	0.7	1.3
Lime, CaO	7.8	6.8	9.8
Magnesia, MgO	1.1	0.7	1.5
Sulfur trioxide, SO_3	5.5	3.5	7.5
Potassium oxide, K_2O	0.6	0.4	0.8
Sodium oxide, Na_2O	2.6	1.3	3.9 *
Undetermined	1.0	0.6	1.4
Free Swelling Index	---	---	---
Calculated Values, diluted where applicable			
Lbs Ash/MMBtu	7.53	4.79	10.27
Base/Acid	0.22	0.13	0.31
Na_2O/MMBtu	0.20	0.11	0.29
Fe_2O_3/CaO	0.56	0.39	0.73
SiO_2 + Al_2O_3/MMBtu	5.68	3.85	7.51
Fe_2O_3 + CaO	12.20	8.89	15.51
SiO_2 X % Ash dry	0.05	0.04	0.07
M & A free Btu	14,360	---	---

*Core samples indicate an absolute maximum of approximately 5.1 percent.

IP14_001124

COAL RESERVE E

Proximate Analysis, as received, diluted	Typical	Range	
Moisture	10.6	11.4	11.8
Ash	9.3	6.0	12.6
Volatile	35.8	33.0	38.0
Fixed Carbon	44.3	41.7	46.2
Btu	11,060	10,540	11,440
Miscellaneous, undiluted			
Sulfur Forms, dry basis			
Pyritic	0.09	0.02	0.40
Sulphate	0.00	0.00	0.00
Organic	0.36	0.28	0.60
Equilibrium Moisture	--	--	--
Grindability	--	--	--
Fusion Temperatures, undiluted			
Reducing			
I.D.	2160	2060	2270
H=W	2180	2070	2290
H=½W	2195	2080	2310
Fluid	2220	2100	2340
Oxidizing			
I.D.	2190	2095	2285
H=W	2210	2110	2305
H=½W	2225	2120	2325
Fluid	2255	2150	2360
Ultimate Analysis, diluted			
Carbon	63.66	60.67	66.67
Hydrogen	4.37	4.07	4.67
Nitrogen	1.05	0.87	1.17
Chlorine	0.02	0.00	0.03
Sulfur	0.44	0.29	0.69
Ash	9.30	6.0	12.60
Oxygen	10.56	10.06	11.06
Moisture	10.6	11.4	11.8
Mineral Analysis, ignited basis, undiluted			
Phos. pentoxide, P_2O_5	0.20	0.10	0.30
Silica, SiO_2	51.00	44.00	58.00
Ferric oxide, Fe_2O_3	5.20	3.20	6.60
Alumina, Al_2O_3	13.00	11.00	15.00
Titania, TiO_2	0.70	0.60	0.80
Lime, CaO	14.60	9.40	16.00
Magnesia, MgO	3.00	1.30	4.50
Sulfur trioxide, SO_3	7.80	6.00	9.60
Potassium oxide, K_2O	0.60	0.35	1.00
Sodium oxide, Na_2O	3.10	0.20	4.70*
Undetermined	0.80	0.00	2.00
Free Swelling Index	--	--	--
Calculated Values, diluted where applicable			
Lbs Ash/MMBtu	8.41	5.80	11.02
Base/Acid	0.41	0.25	0.57
Na_2O/MMBtu	0.26	0.15	0.37
Fe_2O_3/CaO	0.36	0.22	0.50
SiO_2 + Al_2O_3/MMBtu	5.38	3.06	7.70
Fe_2O_3 + CaO	19.80	14.10	25.50
SiO_2 X % Ash dry	0.05	0.03	0.07
M & A free Btu	13,310	--	--

*Core samples indicate an absolute maximum of approximately 5.1 percent.

IP14_001125

COAL RESERVE F

Proximate Analysis, as received, diluted	Typical	Range	
Moisture	18.8	13.00	21.00
Ash	7.8	5.0	12.0
Volatile	35.5	33.3	37.5
Fixed Carbon	37.9	35.9	39.9
Btu	9,662	9,400	10,000
Miscellaneous, undiluted			
Sulfur Forms, dry basis			
Pyritic	---	---	---
Sulphate	---	---	---
Organic	---	---	---
Equilibrium Moisture	---	---	---
Grindability	55	53	57
Fusion Temperatures, undiluted			
Reducing			
I.D.	2250	2045	2300
H=W	2350	2155	2400
H=½W	2380	2210	2430
Fluid	2400	2315	2525
Oxidizing			
I.D.	---	---	---
H=W	---	---	---
H=½W	---	---	---
Fluid	---	---	---
Ultimate Analysis, diluted			
Carbon	55.60	52.00	58.00
Hydrogen	4.13	3.80	4.40
Nitrogen	0.86	0.70	1.00
Chlorine	0.04	0.00	0.05
Sulfur	0.93	0.80	1.10
Ash	7.81	5.00	12.00
Oxygen	11.83	11.30	12.30
Moisture	18.80	13.00	21.00
Mineral Analysis, ignited basis, undiluted			
Phos. pentoxide, P_2O_5	0.2	0.1	0.4
Silica, SiO_2	41.7	45.0	38.0
Ferric oxide, Fe_2O_3	7.0	5.5	8.5
Alumina, Al_2O_3	26.4	23.0	29.0
Titania, TiO_2	1.7	1.5	1.9
Lime, CaO	6.8	6.3	7.3
Magnesia, MgO	1.4	1.2	1.6
Sulfur trioxide, SO_3	10.6	8.6	12.6
Potassium oxide, K_2O	0.2	0.1	0.3
Sodium oxide, Na_2O	3.0	1.0	3.5
Undetermined	1.0	0.5	2.0
Free Swelling Index	0	0	0
Calculated Values, diluted where applicable			
Lbs Ash/MMBtu	8.07	---	---
Base/Acid	0.26	---	---
Na_2O/MMBtu	0.24	---	---
Fe_2O_3/CaO	1.03	---	---
SiO_2 + Al_2O_3/MMBtu	5.50	---	---
Fe_2O_3 + CaO	13.80	---	---
SiO_2 X % Ash dry	0.04	---	---
M & A free Btu	13,160	---	---

IP14_001126

COAL RESERVE G

Proximate Analysis, as received, diluted	Typical	Range	
Moisture	6.5	5.7	7.1
Ash	15.8	10.7	20.8
Volatile	33.2	29.8	36.6
Fixed Carbon	44.5	41.1	48.1
Btu	11,205	10,375	12,055
Miscellaneous, undiluted			
Sulfur Forms, dry basis			
Pyritic			
Sulphate			
Organic			
Equilibrium Moisture	4.2	3.5	5.0
Grindability	44	41	46
Fusion Temperatures, undiluted			
Reducing			
I.D.	2330	2200	2460
H=W	2400	2265	2540
H=½W	2475	2335	2620
Fluid	2560	2430	2690
Oxidizing			
I.D.	2395	2265	2530
H=W	2465	2330	2600
H=½W	2525	2400	2650
Fluid	2595	2480	2715
Ultimate Analysis, diluted			
Carbon	63.40	59.4	67.4
Hydrogen	4.32	4.12	4.52
Nitrogen	1.17	1.02	1.32
Chlorine	0.03	0.00	0.06
Sulfur	0.61	0.46	0.76
Ash	15.80	10.7	20.80
Oxygen	8.17	7.57	8.77
Moisture	6.50	5.7	7.1
Mineral Analysis, ignited basis, undiluted			
Phos. pentoxide, P_2O_5	0.6	0.2	1.0
Silica, SiO_2	58.7	53.7	63.7
Ferric oxide, Fe_2O_3	3.4	2.6	4.2
Alumina, Al_2O_3	20.7	17.0	25.0
Titania, TiO_2	0.8	0.7	0.9
Lime, CaO	6.6	4.6	8.6
Magnesia, MgO	1.6	0.9	2.3
Sulfur trioxide, SO_3	5.3	3.3	7.3
Potassium oxide, K_2O	0.7	0.3	1.1
Sodium oxide, Na_2O	0.9	0.5	1.3
Undetermined	0.7	0.1	1.3
Free Swelling Index	3	2	4
Calculated Values, diluted where applicable			
Lbs Ash/MMBtu	14.10	8.84	20.58
Base/Acid	0.16	0.12	0.21
Na_2O/MMBtu	0.13	0.05	0.30
Fe_2O_3/CaO	0.52	0.27	0.92
SiO_2 + Al_2O_3/MMBtu	11.20	6.49	17.06
Fe_2O_3 + CaO	10.00	7.64	12.47
SiO_2 X % Ash dry	0.09	0.05	0.13
M & A free Btu	14,420	--	--

*Core samples indicate an absolute maximum of approximately 5.1 percent.

IP14_001127

The boiler shall be designed to use fuel oil for coal burner ignition. Warm-up burner fuel, if required, will be fuel oil. Fuel oil will be Grade No. 2 in accordance with ASTM D 396.

4. Steam Temperature Control: The Contractor shall furnish equipment to maintain main steam and reheat steam temperatures constant at 1005F from 65 percent of Maximum Capacity to Maximum Capacity without the use of reheat desuperheating spray.

In addition to the equipment necessary to control reheat steam temperature, the Contractor shall furnish spray desuperheating equipment for the reheater with sufficient capacity to maintain steam temperatures for upset conditions of boiler operation.

There shall be no more than 20F difference in steam temperature between the connections for the superheater and not more than 20F difference in steam temperature between the connections for the reheater.

The superheat and reheat temperatures shall be less than 150F apart under all conditions of operation at loads above 15 percent of Maximum Capacity.

5. Design Pressure of Air and Gas Side of Boiler: All parts of the boiler from the air preheater coils air inlet to the air heater flue gas outlet, including the furnace, shall be designed to withstand an internal positive pressure not less than 130 percent of the pressure loss from the air preheater coils inlet to the furnace at Maximum Capacity and to withstand an internal negative pressure. The absolute value of the designed internal negative pressure shall be not less than 130 percent of the sum of 21 inches of water and the pressure loss from the furnace to the air heater gas outlet.

6. Furnace: The water walls of the furnace shall be of the welded wall (membrane wall) design.

The furnace shall be considered as the surfaces surrounding or in the combustion chamber from the projected low point of the hopper bottom to the point where the hot gases enter convection surfaces. Tube elements spaced on less than 18-inch centers measured at right angles to the gas flow shall be considered convection surfaces.

The furnace shall be designed to burn the specified fuels at all load conditions such that neither slag accumulation

IP14_001128

The design stress of SA-213, Grade TP347H, shall be not greater than 95 percent of the stress allowed by Section I, Power Boilers, of the ASME Boiler and Pressure Vessel Code, for metal temperatures which exceed 1,150F.

Maximum external metal temperature shall be calculated in accordance with the procedures as shown in the Contractor's Proposal and titled Superheater and Reheater Design. Steam temperatures used to select tube materials for tubes outside of heat transfer zones, such as in the penthouse, shall be not less than the steam temperatures calculated by the referenced procedures.

All functional and stress calculations shall be checked by an independent engineer within the Contractor's company.

All hangers within areas housing boiler parts above 775F shall be designed for not less than 900F. Hanger components attached to boiler parts above 900F, or passing through insulation of these parts, shall be designed for not less than 1,000F.

11. Air Heaters: Two separate primary and 2 separate secondary air heaters shall be furnished for heating the primary and secondary air. Regenerative air heaters utilizing rotating heat transfer elements shall be furnished. The air heaters shall be vertical shaft type and shall have the air heater gas outlet and the air heater air inlet located at the bottom of the air heater.

The air heater shall be designed for future increase in the depth of the air heating elements by not less than 8 inches.

The air heater shall be of the loose pack design and fabricated of Corten steel. The hot layer and intermediate layer of the surface shall be not thinner than 22 USS gage, and the cold layer shall be not thinner than 18 USS gage.

The cold layer of surface shall be the basketed type, reversible, and designed for side removal. The cold end of the rotor encompassing the full depth of the cold layer and the cold end connecting plate shall be fabricated of Corten steel.

The flue gas ducts to the air heaters shall consist of either horizontal or vertical duct sections. The flue gas ducts to the secondary air heaters shall contain a short toggle section of approximately 16 feet in length measured at the

IP14_001129

outside ends of the expansion joints and as shown on Drawing P23-310-36Y0 in the Contractor's Proposal. 545

IPA will furnish air preheater coils to maintain the 547
proper cold end air-in, gas-out average temperature for air 548
heater protection during low ambient air temperature conditions.
The maximum pressure drop of the air across the coils will be 549
3.0 inches wg.

Each air heater shall be equipped with: 551

(a) Complete driving mechanism including speed 553
reducer and electric motor.

(b) Auxiliary air motor drive. 555

(c) Observation port at hot gas inlet. 557

(d) Glass porthole and observation light at cold 559
air inlet.

(e) Cleaning devices consisting of a water washing 561
system and hot and cold side sootblowing systems.

(f) Deluge type fire fighting system. 563

(g) Permanent ladders or platforms inside all 565
access openings which are more than 3 feet above the internal 566
structure.

(h) Rotor stoppage alarm contacts to provide 568
indication in the control room of a rotor stoppage.

(i) Redundant pressure taps to monitor the 570
pressure drop across each air heater. Pressure taps shall be 571
one-inch NPT, extending 3 inches beyond the insulation and shall
be capped. (Should be at an upward 45° angle)

(j) Four access doors, one each at the air inlet 573
and outlet ducts and flue gas inlet and outlet ducts.

A complete system for lubricating and cooling the 575
bearings shall be provided as required by the air heater design. 576
The system shall include thermometers, pressure gages, 577
temperature and pressure switches for alarm and control, piping, 578
and other accessories. Separate systems shall be provided for 579
each air heater.

IP14_001130

The heat exchanger shall have 90-10 copper-nickel 581
tubes and bronze tube sheets. The heat exchanger shall be sized 582
for 105F cooling water at 150 psi. The oil reservoir tank shall 583
be coated internally with Rustban. The reservoir shall be 584
complete with dual 480-volt, 3-phase, 60-hertz, electric heaters
and an oil level sight gage. The heaters shall be complete with 586
combination thermostat and contactor controls. The heater shall 587
automatically maintain the temperature of the oil in the
reservoir at the selected temperature when the air heater is 588
idle.

12. Penthouse: The steam drums, except for the drum 591
ends, and all headers, tubes, and piping above the furnace and 592
convection pass roof shall be enclosed in a penthouse. The 593
penthouse shall be constructed of steel plate suitably
reinforced to adequately support construction and maintenance 594
loads.

Pipe sleeves for introduction of maintenance scaffold 596
rigging cables into the interior of the boiler shall be provided 597
through the penthouse. The pipe sleeves shall be seal welded at 598
the furnace roof and shall be capped above the penthouse roof.
The sleeves shall be not less than 1-1/2-inch pipe. The sleeves 600
shall be of sufficient number to permit access from suspended 601
scaffolds to all interior surfaces including the furnace,
superheater and reheater areas, each side of platen surfaces, 602
and the rear pass above the economizer.

Ample heat release openings and air inlets in the 604
penthouse enclosure walls and roof for accelerated cooling shall 605
be provided to permit access to the penthouse immediately
following outage of the unit. 606

13. Air and Flue Gas Ducts: Air and flue gastight 609
ducts shall be provided for conducting the air from the air
heaters to the burner windbox, for conducting the flue gas from 610
the boiler to the air heaters, and as necessary for conducting
primary air. Duct velocities shall be limited to 3,000 feet per 611
minute at Maximum Capacity and 30 percent excess air.

Provisions shall be made for the isolation of each air 613
heater for washing while maintaining the boiler in service to 614
not less than 60 percent of Maximum Capacity. Such provisions 615
shall include necessary air ducts and burner windbox to insure
equal air flow to all burners. Such provisions shall also 616
include automatically-operated tight shutoff isolation dampers
at the combustion air outlet and at the flue gas inlet. 617

IP14_001131

A final coating of finishing cement shall be applied and finished to a smooth, uniform contour of the bend. After drying, an aluminum jacket shall be applied.

Aluminum jackets shall overlap at all joints in such a manner as to be weathertight and shall be held in place by means of straps or metal screws.

(c) Pipe Fittings and Valves: The insulation on all fittings and valves, 4-inch pipe size and larger, shall be the same thickness and material as the adjacent piping insulation with either pipe or block insulation secured in place. All joints shall be pointed or filled with insulating cement and the entire insulation covered with a coat of finishing cement troweled to a smooth surface and contour and then covered.

Valves and fittings, 3-1/2 inches and smaller, shall be insulated with insulating cement having a total thickness equal to that of the adjacent piping insulation. Two or more layers of this cement, 1/2 inch thick, shall be applied with each layer being completely dried before proceeding with the next layer. After the final layer of insulating cement has thoroughly dried, the insulation shall be given a coat of finishing cement and then covered.

Elbow insulation with an outside diameter of 3 through 12-1/2 inches shall be covered with a General Aluminum Supply Company Gasco humped elbow. This jacket may be secured in place by means of straps or metal screws. All other fittings and valves shall be covered with glass cloth.

The bodies and bonnets of valves shall be insulated.

19. Steam Sootblower System:

19.1 General: A steam sootblower system shall be furnished. Equipment shall be of the Copes Vulcan or Diamond Power design. Sootblowers shall be located for efficient cleaning of the boiler surfaces including air heaters. The sootblowers when operated through a blowing cycle not more than once each shift shall maintain boiler surface cleanliness such that guaranteed performance is obtained continuously. The sootblowing system shall be designed to provide a minimum cleaning time consistent with good practice. The sootblower system shall be designed with capability for simultaneous blowing of the 2 highest usage retractables, 2 wall blowers, and 2 air heater cleaners. If the sootblower system proves to be

IP14_001132

inadequate during the guarantee period, the Contractor shall furnish and install the additional equipment necessary to maintain guaranteed performance.

The sootblower system shall include all piping and equipment necessary to supply boiler produced steam for sootblowing.

The steam supply for the boiler sootblowers, excluding the air heater sootblowers, shall be from the superheater at a location such that the reduced pressure steam or conditioned steam will contain not less than 50F superheat. Two separate sources on the superheater shall be provided such that the steam supply piping on each side of the boiler will be designed as an independent piping system. Each source shall be provided with a pressure regulating valve and manual isolating valves such that the regulating valve can be removed from service during operation of the boiler. The 2 steam supply piping systems shall be connected by a valved crossover connection located downstream of the pressure regulating valve and shall be capable of meeting the steam capacity requirements specified above with one pressure regulating valve out of service.

The steam supply for the air heater sootblowers shall be from the superheater at a location such that the reduced pressure steam or conditioned steam will contain not less than 250F superheat. A single source for air heater sootblowing steam shall be provided. A pressure regulating valve shall be provided with manual isolating valves.

All piping, insulations, valves, control valves, safety valves, drain valves, pressure switches, orifices, steam traps, and other accessories required for a complete operating sootblower system shall be furnished including all piping from the steam supply to the sootblowers and all drain piping. A maually-operated isolation valve shall be provided in the steam supply piping to each sootblower. A motor-operated block valve shall be provided upstream of the pressure reducing valves. A motor-operated isolation valve, interlocked to close when no sootblowers are in service, shall be provided in the sootblowing system drain line.

The piping shall be sloped and routed to assure drainage of condensate and to assure correct steam temperature to each blower. The piping shall be routed in a downward arrangement such that sootblowers are supplied from looped headers encircling the boiler to minimize pressure drop. Each vertical header shall terminate with an automatic condensate trap.

IP14_001133

A thermal drain valve and temperature controller shall be furnished at the low points of all supply piping to assure complete drainage of condensate. The thermal drain valve shall be sized to assure drainage of any condensate while the sootblower system is not in service and to maintain the correct blower-steam temperature when the system is in service. Each thermal drain valve shall be provided with upstream and downstream isolation valves.

All control valve stations shall be firmly anchored.

The sootblowers shall be electric motor-driven, electrically controlled, and enclosed in a housing designed to protect the lances and moving parts from the environment.

All sootblowers in gas temperatures above 1900F and sootblowers with a travel exceeding 35 feet in gas temperatures above 1100F shall be provided with either pressure or flow measuring devices on the main headers or individual pressure switches.

Provisions shall be included to manually retract equipment in the event of power loss. Manual retraction shall be by hand crank or hand held power-driven source.

Each sootblower lance shall be capable of being removed while the unit is in operation. The boiler shall be provided with 6 sootblower wallbox blanking fixtures.

Each sootblower shall have an admissions valve. This valve shall not open until the lance clears the wall tubes and shall close before the lance retracts to the face of the wall tube. Steam blowing admission valves shall have valve seat and seat rim of stellite or stainless steel.

A local push-button station shall be furnished for each retractable sootblower. The local control push button at each sootblower shall be mounted on the sootblower electrical connection box, except when the sootblower is located more than 6 feet above an access platform. Each sootblower shall be wired to disconnect type terminal blocks so that either the power or control supply can disconnect individually. The terminal blocks shall be States Company Type ZWM. The valves and fittings necessary to furnish scavenging air to each sootblower lance shall be furnished.

19.2 Retractable Sootblowers: Long retractable sootblowers shall be designed to eliminate the possiblity of a lance tube being propelled into the boiler setting by thrust of

IP14_001134

the blowing medium in the event of a power failure or malfunction of a drive motor. The lance tube-carriage design shall provide for minimum lance deflection at full extension. The lance tube nozzle shall have a helical pattern for optimum cleaning. Sootblowers shall be capable of variable travel speeds up to a maximum of 200 inches per minute while maintaining an effective cleaning pattern. A front support assembly shall be furnished to ensure proper lance tube alignment in the wallbox. Rollers on the front mounting bracket shall allow true rolling contact to minimize wear on both the rollers and lances. Provisions shall be made for scheduled lubrication.

19.3 Wall Blowers: The furnace wall blower operation shall be such that the blowing medium supply valve will open when the nozzle is in the correct position for blowing. Provision shall be made for field adjustment of wall blower nozzles both longitudinally and radially. The wall blowers located in corners shall be made for blowing arcs of less than 360 degrees.

19.4 Air Preheater: The air preheater sootblowers shall be capable of cleaning the full surface of the air heater baskets.

19.5 Control System: The control system shall be microprocessor based and shall be designed to provide individual or automatic sequential operation of the sootblower units. The control system shall consist of 3 sections: (1) a power control cabinet located remote from the control room, (2) an operator's panel located in the control room, and (3) a free-standing logic cabinet located remote from the control room. The power control cabinet shall include an individual reversing starter for each sootblower, overcurrent protective devices, and motor-current transducers for the blower motors and a 480/120-volt control power transformer to supply the control circuits. An overload and stall overcurrent device shall be furnished to monitor each motor. Each power control cabinet shall be equipped with a circuit breaker to allow isolation for maintenance. The power control cabinet shall have a total of 5 spare starters and sufficient space for all future sootblowers.

The operator's panel shall include a boiler/mimic diagram having individual unit indicating lights representing the sootblower locations, operator controls, and the system status and alarm indicators. The sootblower control system shall be arranged with not less than 3 subsystems; i.e., furnace wall, long retractable, and air heater sootblowers. These components shall be logically grouped by function or subsystem,

IP14_001135

(2) Methods adequate for shielding thermocouple junctions.

(3) Location, type, and spacing of supports to prevent sagging or flexing and abrasion of the thermocouple leads.

23.5 Thermowells for Control and Test: The Contractor shall furnish and install control and test thermowells. The thermowells shall be made of the same material as the line in which they are installed. All test thermowells shall be accessible from outside the boiler. If thermowell extension necks are necessary, they shall be fabricated from straight lengths of 1/2-inch Schedule 40 pipe and shall terminate with a threaded pipe cap.

23.6 Connections for Pressure Instruments: The Contractor shall furnish and install all connections for pressure instruments.

23.7 Flue Gas Sampling Point: Flanged 4-inch flue gas sampling ports shall be furnished with probes and their supports. The probes shall be as near the economizer exit as possible and shall sample each side of the boiler. The probes shall be of the dry type. The flue gas sampling point will be used for combustion control by CO or percent oxygen and shall be located by the Contractor.

Thirty 4-inch flanged sampling ports shall be furnished with probes and their supports for air pollution sampling and for determining guaranteed excess air and air leakages. Five ports shall each be located at each side of the boiler economizer outlet, the air heater inlet, and the air heater outlet. The ports shall be located so that each duct is divided into 5 equal segments with a port in the center of each segment.

23.8 Steam Sample Nozzles: All steam sample nozzles shall be furnished and installed by the Contractor in accordance with ASTM Standards.

23.9 Sleeve Bearing RTD Openings: Sleeve bearings on equipment furnished shall have provisions for RTD mountings.

23.10 Oxygen and Carbon Monoxide Analyzer: The IPA will furnish and install the flue gas sampling system from the flue gas sampling probes including permanent recorders for a continuous check on excess air and carbon monoxide.

IP14_001136

THE BABCOCK & WILCOX COMPANY

CONTRACT INFORMATION SHEET

A.O.

PERFORMANCE PARALLEL DOWNPASS
MILLS LOCATED ON BOTH SIDES

D. Pulverizers (Cont'd)

Guarantees (Cont'd) 343.50 tons/hr

2. When pulverizing 687,000 lbs. per hour of the specified 48 grind performance coal with total moisture not exceeding 8.3 percent, the fineness will not be less than 99 percent through 50 USS Sieve and not less than 70 percent through 200 USS Sieve and the total power to the pulverizers, primary air fans, feeders, airheaters and pulverizer seal air blower with a power factor not less than .80, and an assumed motor efficiency of not less than .92, with 7 pulverizers, 7 Merrick feeders, 2 Westinghouse (23120D) primary air fans with two speed motors, 2 Ljungstrom (24-1/2 VI-44) primary and 2 Ljungstrom (33-1/2 VI-64) secondary airheaters, and 1 pulverizer seal air blower in service, total power will not exceed 5955 KW's, when operating at a fan shaft speed of 876 RPM.

[redacted]

Air Heater Leakage - Ljungstrom Regenerative Type, Two (2) 24-1/2 VI-44 Primary and Two (2) 33-1/2 VI-64 Secondary

Based on the unit being fired with the specified performance fuel and on the other performance conditions shown on Boiler Performance Summary Sheet P23-310-0-1S:

(a) Primary Air Heaters

The leakage from the air to the gas side of the air heaters will not exceed 163,000 pounds of air per hour with a gas flow entering of 972,000 pounds per hour, provided the total pressure differential between the air entering and gas leaving the air heater does not exceed 37.3 inches of water.

16.8% Leakage

(b) Secondary Air Heaters#

The leakage from the air to the gas side of the air heaters will not exceed 314,000 pounds of air per hour with a gas flow entering of 6,269,000 pounds per hour, provided the total pressure differential between the air entering and gas leaving the air heater does not exceed 12.85 inches of water.

5.0% Leakage

REL. NO. AND DATE	CODE NO.	COMPONENT NO.	CONTRACT NO.
1 8-19-81 2 2-5-82	334-0614		RB-614

SUPPLEMENTARY INFORMATION SHEET

BDM-898

THE BABCOCK & WILCOX COMPANY

CONTRACT INFORMATION SHEET

A.O.

Our liability under this guarantee shall be limited to the necessary repairs or replacements to permit such performance. To establish compliance with this guarantee, test procedures will be in accordance with Air Heater Test Code ASME - PTC 4.3

This leakage guarantee will be in effect for five (5) years from the date of first use of the equipment for the purpose intended and subject to the items listed in our Conditions of Sale, GS-138-B, dated 1/3/77.

* It is expressly understood and agreed by IPA that the guarantee on the secondary air heaters is the sole and direct responsibility of Air Preheater Co. and is included herein solely as a pass thru guarantee by B&W from Air Preheater Co. and in case of failure to achieve said guarantees, IPA shall have no cause of action or remedy against B&W but shall look solely to Air Preheater Co.

REL. NO. AND DATE	CODE NO. COMPONENT NO.	CONTRACT NO.
1 8-19-81 2 2-5-82	334-0614	RB-614

SUPPLEMENTARY INFORMATION SHEET

EPGD CIS-4.05

IP14_001138

THE BABCOCK & WILCOX COMPANY
FOSSIL POWER GENERATION DIVISION

CONTRACT INFORMATION SHEET

A.O.

A. Guaranteed Performance (Cont'd)

8a. Ljungstrom Airheater Arrangement - As Shown on P23-310-42X

The average net resistance from the air heater air inlet to the furnace will not exceed 5.2 inches of water. The average net resistance from the furnace through the unit to the air heater gas outlet will not exceed 7.9 inches of water.

8

9. Spray water quantities required for main steam temperature control will not exceed 335,000 lbs/hr. provided that spray water temperature is 390 F or less, and all feedwater heaters are in service.

10. Spray water quantities required for reheater temperature control will be 0 (zero) lbs/hr. provided that spray water temperature is 390 F or less, and all feedwater heaters are in service.

11a. Ljungstrom Airheater Arrangement - As Shown on P23-310-42X

The excess air leaving the airheaters will not exceed 27%.

NOTE: Steam pressure drop is calculated to the COMPANY'S terminal point for the sizes listed in the Summary Section of the Proposal. No pressure drop allowance has been made for the size transition between the COMPANY'S terminal size and the PURCHASER'S pipe size.

B. Maximum Normal Capacity ? MCR

Based on the unit being fired with the specified performance coal fuel and on the other performance conditions shown on Boiler Performance Summary Sheet P23-310-0-1S the unit will have a maximum normal capacity of 6,600,000 lbs. of main steam flow per hour at 2640 psig at the superheater outlet, with a feedwater temperature of 555 F and reheater inlet steam conditions of 5,500,000 lbs./hr. and 590 psig and 630 F.

REL. NO. AND DATE	CONTRACT NO.	COMP NO.	FILE NO.
1 8-19-81 2 2-5-82 3 6-14-82	334-0614		RB-614

SPECIAL REQUIREMENTS

FPGD CIS- 4.01

THIS DOCUMENT SUBJECT TO THE PROPERTY OF THE BABCOCK & WILCOX COMPANY AND IS LOANED UPON CONDITION THAT IT IS NOT TO BE COPIED, TO WHOLE OR IN PART OR USED FOR PURPOSES INTERMINGLED TO OTHERS, OR FOR ANY OTHER PURPOSE DETRIMENTAL TO THE INTERESTS OF THE BABCOCK & WILCOX COMPANY AND IS TO BE RETURNED UPON REQUEST.

A — FUEL AS FIRED

SAMPLES			
ANALYSIS			
COAL — BLEND			
SOURCE — CLASS			
GROUP			
MINE			
SEAM			
DISTRICT			
COUNTY			
STATE			UTAH
SIZE		1-5/8"x0	1-5/8"x0
GRINDABILITY		55	68
SURFACE MOISTURE, %			
ASH SOFT. TEMP., F (REDUCING)		2350	2215(H-W)
PROXIMATE ANALYSIS — MOISTURE, TOTAL		18.8	8.3
VOLATILE MATTER		35.5	37.1
FIXED CARBON		37.9	40.6
ASH		7.8	14.0
TOTAL		100.0	100.0

FUEL	PULV.DES	RANGE PC	COAL "F"	PERF.COAL
% BY	WT.	WT.	WT.	WT.
ASH		8.0-16.0	7.81	14.00
S		0.4-0.7	0.93	0.55
H_2		4.3-4.9	4.13	4.56
C		8.5-64.5	55.60	61.45
CH_4				
C_2H_6				
C_3H_8				
C_4H_{10}				
C_5H_{12}				
C1		0-0.04	0.04	0.02
CO				
CO_2				
SO_2				
H_2O	12.0	7.4-9.3	18.80	8.30
N_2		1.0-1.5	0.86	1.20
O_2		9.3-10.5	11.83	9.92
TOTAL	43 GRIND		100.00	100.00
BTU/LB	10,700	10,500 to	9,962	11,010
BTU/CU FT AT 60F 30 IN.HG		12,100		

COAL "F" WILL NOT EXCEED 50% BY WT. OF A COAL MIXTURE

*NOT INCLUDING VALVES & STATIC HEAD A AT PULVERIZER INLET

**INCLUDES(-1.5 INCHES WG)FOR STACK EFFECT

UTILITY BOILER PERFORMANCE SUMMARY

BY KJK APP. G. [illegible] DATE 12/2/81

THE BABCOCK & WILCOX COMPANY

P23-310-0-150

B — PREDICTED PERFORMANCE

STEAM FLOWING, SH, M LB/HR	3965	3965	6100	6100	6600
SIDE STEAM, BH, M LB/HR	3250	3250	5000	5000	5500
AUX. STEAM, M LB/HR	0	450	0	450	0
TYPE OF FUEL	PERF.COAL	PERF.COAL	PERF.COAL	PERF.COAL	PERF.COAL
LOAD CONDITION	65%	65%	100%	100%	MCR
EXCESS AIR LEAVING ECON., %	23	23	17	17	17
NO. OF BURNERS IN OPERATION	42	42	42	42	42
HEAT. INPUT, MMB/HR (FUEL & PREHEATED AIR)	5494	5908	7969	8174	8500
TOTAL INPUT, MMB/HR (FUEL & HT. CREDITS)	5261	5662	7563	7960	8069
HEAT CREDITS, MMB/HR	6.3	6.5	7.6	7.8	7.9
FUEL INPUT, MMB/HR	5255	5655	7555	7952	8060
QUANTITIES & LOADS — FUEL (INCLUD. GAS)	427.3	513.6	686.2	720.6	710.2
FLUE GAS ENTERING AIR HTRS.	5224	5611	7241	7600	7703
AIR TO BURNING EQUIPMENT	4765	5064	6538	6862	6954
AIR HEATER LEAKAGE	367	379	472	488	505
PRESSURE, PSIG — STEAM AT SH OUTLET	2440	2440	2515	2515	2640
STEAM AT RH INLET	350	350	539	539	590
STEAM AT RH INLET					
PRESSURE DROPS — REHEATER 1	16	16	25	28	29
REHEATER 2					
ECONOMIZER *	11	13	25	29	29
DRUM TO SH OUTLET	68	71	160	172	187
TEMPERATURE, F — STEAM — LEAVING SUPERHEATER	1005	1005	1005	1005	1005
LEAVING REHEATER 1	1005	1005	1005	1005	1005
ENTERING REHEATER 1	580	580	620	620	630
LEAVING REHEATER 2					
ENTERING REHEATER 2					
GAS — LEAVING ECONOMIZER	686	675	725	730	740
LEAVING AH (INCL. LKG) P/S	312/276	313/277	313/286	313/289	313/294
LEAVING AH (INCL. LKG) P/S	280/262	280/268	[illegible]	280/279	280/280
WATER ENTERING ECONOMIZER	490	490	543	543	555
AIR — ENTERING UNIT PRI/SEC*	74/62	74/63	[illegible]	78/65	78/65
LEAVING AIR HEATER P*/SEC	355/618	375/624	[illegible]	618/636	620/645
RESISTANCE, IN. OF WATER — GAS — FURNACE & CONVECTION BANKS	2.2	1.9	2.7	3.3	3.1
FLUES TO AH OUTLET	0.9	1.0	1.4	1.5	1.5
[illegible]	2.1	1.3	[illegible]	3.1	4.2
TOT FROM FURN TO AH OUT	5.2	5.2	[illegible]	8.9	8.8
AIR — FUEL BURNERS & WINDBOX AB	-0.3	0.0	1.1	1.4	1.4
DUCTS & FLOW METER	1.0	1.2	2.1	2.3	2.3
AIR HEATER	1.1	1.1	[illegible]	2.1	2.3
TOT. FROM AH INLET TO FURN	1.8	2.2	[illegible]	6.0	6.0
HEAT LOSSES, % — DRY GAS	4.92	4.84	4.84	4.86	4.98
H_2 & H_2O IN FUEL	5.14	5.14	5.15	5.15	5.16
MOISTURE IN AIR	0.07	0.07	0.07	0.07	0.07
UNBURNED COMBUSTIBLE	0.2	0.2	0.2	0.2	0.2
RADIATION	0.24	0.22	0.17	0.16	0.15
UNACC. FOR & MFRS. MARGIN	1.00	1.00	1.00	1.00	1.00
TOTAL HEAT LOSS	11.57	11.47	11.43	11.44	11.56
*CROSS EFFICIENCY OF UNIT, %	88.43	88.53	88.57	88.56	88.44
HEAT CREDITS ADJUSTMENT, %	0.01	0.01	0.01	0.01	0.01
HEE EFFICIENCY A.S.M.E. PTC-4.1, %	88.44	88.54	88.58	88.57	88.45
FUEL EFFICIENCY, % (OUTPUT/FUEL INPUT)	88.55	88.65	88.67	88.66	88.54
NOISE — NO. IN USE PER BOILER	6 / 7	5 / 7	6 / 7	6 / 7	6 / 7
TOTAL POWER, KW NATION MOTOR OUTPUT					
% THRU 200 U.S.S. SIEVE	71 / 76	72 / 75	71 / 73	71 / 72	70 / 72

PREDICTED PERFORMANCE IS BASED ON COMBUSTION AIR ENTERING UNIT WITH .0067LB MOISTURE/LB DRY AIR, ON 25.18 IN. HG. BAROMETRIC PRESSURE, ON CONDITIONS & EQUIPMENT GIVEN ON THIS SUMMARY SHEET & ON ARRANGEMENT SHOWN ON DRAWING

C — EQUIPMENT PER UNIT

TYPE	RADIANT
SIZE	RBC
DESIGN PRESSURE (SH/RH) - 2975PSIG/750PSIG	
SURFACE — WATER COOLED SCREEN (CIRCUMFERENTIAL)	
WATER COOLED (PROJECTED)	59130
SUPERHEATED (PERIPHERAL) 54" CENTERLINE	21244
SUPERHEATED (PERIPHERAL) 24" CENTERLINE	35665
SUPERHEATER (PROJECTED)	4367
TOTAL FURNACE HEATING SURFACE	122406
CONVECTION — SATURATED (CIRCUMFERENTIAL)	13035
SUPERHEATER (CIRCUMFERENTIAL)	278032
REHEATER 1 (CIRCUMFERENTIAL)	300203
REHEATER 2 (CIRCUMFERENTIAL)	
ECONOMIZER	99902
TOTAL CONVECTION HEATING SURFACE	692282
TOTAL FURN. & CONV. PRESSURE PART. HTG. SURF.	814688
FLAT PROJECTED FURNACE HEATING SURFACE	
TO FACE OF PLATERS (24" CENTERLINE)	87405
TO FACE OF CONVECTION SURFACE (12" CENTERLINE)	125510
FURNACE VOLUME, CU FT	962055
AIR HEATER — TYPE REGENERATIVE-SECONDARY	NO. 2-33-1/2 VI-64
TOTAL HEATING SURFACE, SQ FT	1,047,800
TYPE: REGENERATIVE-PRIMARY	NO. 2 - 26-1/2 VI-44
TOTAL HEATING SURFACE, SQ. FT.	135,600
FUEL BURNER — TYPE	DUAL REGISTER
NO.	48 (6 BURNERS PER PULVERIZER)
PULVERIZER — TYPE MPS	SIZE 89GR NO. 8
CAPACITY OF 64 PULV. 136600 M LB STEAM/HR BASED ON 48	GRIND
11010 BTU COAL AT 70 % THRU 200 U.S.S. SIEVE	
FOR 113 THLB COAL/PULV.-HR AT 70 % THRU 200 U.S.S. SIEVE MTR. GR: 48	
IS 43. MAXIMUM TOTAL MOISTURE IS 12 % REQUIRING 465 F AIR	
22% TOTAL MOISTURE COAL REQUIRES 540 F AIR.	
STEAM TEMP. CONTROL — SUPERHEAT BY SPRAY ATTEMPERATION	
REHEAT BY GAS BIASING	
UNIT CONSTRUCTION FEATURES — MEMBRANE WALL	
BALANCE DRAFT	
INDOOR UNIT	

"AS SOLD" ARRANGEMENT

*CORRESPONDING TO ABB. METHOD PAR. 1.87 A.S.M.E. PTC-4.1

NO.	DESCRIPTION	BY	DATE

INTERMOUNTAIN POWER PROJECT

IP14_001140

B&W proposal?

Jane 9

BDP-898

THE BABCOCK & WILCOX COMPANY

CONTRACT INFORMATION SHEET

A.O.

A. Guaranteed Performance

Based on the unit being fired with the specified performance coal fuel and on the other performance conditions shown on Boiler Performance Summary Sheet P23-310-0-1S at the capacity of 6,100,000 lbs./hr. (no auxiliary steam) at 2515 psig at the superheater outlet with a feedwater temperature of 543 F and reheater inlet steam conditions of 5,000,000 lbs./hr. and 539 psig and 620 F and with 7 mills in operation: 5

1. The efficiency of the unit will not be less than 88.57 percent.

2. The average temperature of the steam leaving the superheater will be 1005 F, plus or minus 10 F.

3. The average temperature of the steam leaving the reheater will be 1005 F, plus or minus 10 F.

4. The steam pressure drop between boiler drum and the COMPANY'S superheater outlet terminals will not exceed 160 psi. (See Note Below.)

5. The steam pressure drop through the reheater between the COMPANY'S inlet and outlet terminals will not exceed 25 psi. (See Note Below.)

6. The pressure drop through the economizer, (not including valves, or static head) will not exceed 25 psi.

7. The average solids content in steam leaving boiler will not exceed 0.08 ppm with the following maximum boiler water conditions:

Total boiler water solids	50 ppm.
Chloride ion concentration	2 ppm.
Boiler water pH	10.0

The water conditions stated above are the maximum values permitted to qualify for the steam purity guarantee and are not to be construed as water treatment specifications. Refer to B&W Operating Instructions for proper boiler water requirements.

REL. NO. AND DATE 1 8-19-81 2 2-5-82	CODE NO. COMPONENT NO.	CONTRACT NO.
	334-0614	RB-614

SUPPLEMENTARY INFORMATION SHEET

FPGD CIS-4.01

IP14_001141

THE BABCOCK & WILCOX COMPANY
FOSSIL POWER GENERATION DIVISION

CONTRACT INFORMATION SHEET

A.O.

A. Guaranteed Performance (Cont'd)

8a. Ljungstrom Airheater Arrangement - As Shown on P23-310-42X

The average net resistance from the air heater air inlet to the furnace will not exceed 5.2 inches of water. The average net resistance from the furnace through the unit to the air heater gas outlet will not exceed 7.9 inches of water.

8

9. Spray water quantities required for main steam temperature control will not exceed 335,000 lbs/hr. provided that spray water temperature is 390 F or less, and all feedwater heaters are in service.

10. Spray water quantities required for reheater temperature control will be 0 (zero) lbs/hr. provided that spray water temperature is 390 F or less, and all feedwater heaters are in service.

11a. Ljungstrom Airheater Arrangement - As Shown on P23-310-42X

The excess air leaving the airheaters will not exceed 27%.

NOTE: Steam pressure drop is calculated to the COMPANY'S terminal point for the sizes listed in the Summary Section of the Proposal. No pressure drop allowance has been made for the size transition between the COMPANY'S terminal size and the PURCHASER'S pipe size.

B. Maximum Normal Capacity ? MCR

Based on the unit being fired with the specified performance coal fuel and on the other performance conditions shown on Boiler Performance Summary Sheet P23-310-0-1S the unit will have a maximum normal capacity of 6,600,000 lbs. of main steam flow per hour at 2640 psig at the superheater outlet, with a feedwater temperature of 555 F and reheater inlet steam conditions of 5,500,000 lbs./hr. and 590 psig and 630 F.

REL. NO. AND DATE	CONTRACT NO.	COMP NO.	FILE NO.
1 8-19-81 2 2-5-82 3 6-14-82	334-0614		RB-614

SPECIAL REQUIREMENTS

FPGD CIS- 4.01

THE BABCOCK & WILCOX COMPANY

CONTRACT INFORMATION SHEET

A.O.

C. Superheater and Reheater Control Range

Based on the unit being fired with the specified performance coal fuel and on the other performance conditions shown on Boiler Performance Summary Sheet P23-310-0-1S. 5

1. The average temperature of the steam leaving the superheater at any steady load from 3,965,000 lbs. of main steam flow per hour to 6,600,000 lbs. of main steam flow per hour will be 1005 F, plus or minus 10 F.

2. The average temperature of steam leaving the reheater at any steady load from 3,965,000 lbs. of main steam flow per hour to 6,600,000 lbs. of main steam flow per hour will be 1005 F, plus or minus 10 F.

D. Pulverizers

Conditions

1. The raw coal shall be prepared so that all will pass through a 1-5/8 inch ring.

2. The pulverizer driving motor shall be operated at speeds of 870 RPM.

Tests

1. Performance tests on pulverizers, if required, shall be in accordance with the ASME Test Code P.T.C. -4.2 for pulverizers.

Guarantees

Subject to the conditions specified above and on the Boiler Performance Summary Sheet P23-310-0-1S , the COMPANY makes the following guarantees on the specified performance coal: 5

65.15 tons/hr

1. The pulverizer can be operated at a capacity of 130,300 lbs. per hour when firing the specified 48 Hardgrove grindability performance coal, ground to a fineness of not less than 70 percent through a 200 USS Sieve and 99 percent through a 50 USS Sieve provided total moisture in the coal does not exceed 8.3 percent and the temperature of the preheated air supplied is not less than 450 F.

REL. NO. AND DATE	CODE NO. COMPONENT NO.	CONTRACT NO.
1 8-19-81 2 2-5-82	334-0614	RB-614

SUPPLEMENTARY INFORMATION SHEET

FPGD CIS-4.03

THE BABCOCK & WILCOX COMPANY

CONTRACT INFORMATION SHEET

A.O.

PERFORMANCE PARALLEL DOWNPASS
MILLS LOCATED ON BOTH SIDES

D. Pulverizers (Cont'd)

Guarantees (Cont'd) 342.50 tons/hr

2. When pulverizing 687,000 lbs. per hour of the specified 48 grind performance coal with total moisture not exceeding 8.3 percent, the fineness will not be less than 99 percent through 50 USS Sieve and not less than 70 percent through 200 USS Sieve and the total power to the pulverizers, primary air fans, feeders, airheaters and pulverizer seal air blower with a power factor not less than .80, and an assumed motor efficiency of not less than .92, with 7 pulverizers, 7 Merrick feeders, 2 Westinghouse (23120D) primary air fans with two speed motors, 2 Ljungstrom (24-1/2 VI-44) primary and 2 Ljungstrom (33-1/2 VI-64) secondary airheaters, and 1 pulverizer seal air blower in service, total power will not exceed 5955 KW's, when operating at a fan shaft speed of 876 RPM.

E. Air Heaters

Air Heater Leakage - Ljungstrom Regenerative Type, Two (2) 24-1/2 VI-44 Primary and Two (2) 33-1/2 VI-64 Secondary

Based on the unit being fired with the specified performance fuel and on the other performance conditions shown on Boiler Performance Summary Sheet P23-310-0-1S:

(a) Primary Air Heaters

The leakage from the air to the gas side of the air heaters will not exceed 163,000 pounds of air per hour with a gas flow entering of 972,000 pounds per hour, provided the total pressure differential between the air entering and gas leaving the air heater does not exceed 37.3 inches of water.

(b) Secondary Air Heaters*

The leakage from the air to the gas side of the air heaters will not exceed 314,000 pounds of air per hour with a gas flow entering of 6,269,000 pounds per hour, provided the total pressure differential between the air entering and gas leaving the air heater does not exceed 12.85 inches of water.

REL. NO. AND DATE	CODE NO. COMPONENT NO.	CONTRACT NO.
1 8-19-81 2 2-5-82	334-0614	RB-614

SUPPLEMENTARY INFORMATION SHEET

BDW-898

THE BABCOCK & WILCOX COMPANY

CONTRACT INFORMATION SHEET

A.O.

Our liability under this guarantee shall be limited to the necessary repairs or replacements to permit such performance. To establish compliance with this guarantee, test procedures will be in accordance with Air Heater Test Code ASME - PTC 4.3

This leakage guarantee will be in effect for five (5) years from the date of first use of the equipment for the purpose intended and subject to the items listed in our Conditions of Sale, GS-138-B, dated 1/3/77.

* It is expressly understood and agreed by IPA that the guarantee on the secondary air heaters is the sole and direct responsibility of Air Preheater Co. and is included herein solely as a pass thru guarantee by B&W from Air Preheater Co. and in case of failure to achieve said guarantees, IPA shall have no cause of action or remedy against B&W but shall look solely to Air Preheater Co.

REL. NO. AND DATE	CODE NO. COMPONENT NO.	CONTRACT NO.
1 8-19-81 2 2-5-82	334-0614	RB-614

SUPPLEMENTARY INFORMATION SHEET

FRCD CTS-4 05

IP14_001145

THE BABCOCK & WILCOX COMPANY

CONTRACT INFORMATION SHEET

A.O.

G. Flue Gas Contaminants

1. Test Basis for Flue Gas Contaminants:

Guaranteed particulate matter emission is to be determined from flue gas samples collected and analyzed in accordance with Paragraph 60.46, Test Methods and Procedures of the E.P.A. Standards of Performance for New Stationary Sources, published December 23, 1971, in the Federal Register, Volume 36, No. 247, Part II.

Heat input, expressed in Btu per hour, determined by suitable fuel flow meters shall be confirmed by a material balance over the steam generator system in accordance with ASME Power Test Code 4.1. Also, the volumetric flue gas flow as determined by Method I of the E.P.A. Standards shall be confirmed in accordance with the ASME Power Test Code 4.1. Confirmation of the heat input and flue gas flow rate by the material and heat balance method set forth in the ASME Power Test Code 4.1 is highly important since direct measurement of these values is very difficult.

The nitrogen content of the solid fuel is to be based on fuel samples taken during the NOx test and analyzed by the Kjeldahl method as described in ASTM Specification D-271-70.

2. Oxides of Nitrogen in the Flue Gas:

When the steam generating unit is operated at all normal loads up to the specified MCR capacity and in accordance with the information given in the Boiler Performance Summary Sheet P23-310-0-1S and operating instructions, and when firing the summary sheet performance coal fuel or any of the other specified* coals A through G (Specification 2010 Page G3-6 thru G3-12), the COMPANY makes the following guarantee: 5

a. The NOx concentration in the flue gases at a point between economizer outlet and the air heater inlet will not exceed .55 lbs. per million Btu heat input from fuel (using HHV).

b. Should the PURCHASER elect to fire sub-bituminous** coal only, the NOx concentration in the flue gases at a point between economizer outlet and the air heater inlet will not exceed .50 lbs. per million Btu heat input from fuel (using HHV).

*Coal F, when fired, is not to exceed 50 percent by weight of a coal mixture using any of the other specified coals A through G.

**As defined by ASTM D388.

REL. NO. AND DATE	CODE NO. COMPONENT NO.	CONTRACT NO.
1 8-19-81 2 2-5-82	334-0614	RB-614

SUPPLEMENTARY INFORMATION SHEET

FPGD CIS-4.06

THE BABCOCK & WILCOX COMPANY

CONTRACT INFORMATION SHEET

A.O.

G. Flue Gas Contaminants

3. Dust Loading Leaving the Economizer:

When the steam generating unit is operated at all normal loads up to the maximum normal capacity and in accordance with the information given on the Boiler Performance Summary Sheet P23-310-0-1S and operating instructions and when firing the Summary Sheet specified performance fuel the COMPANY makes the following guarantee: 5

The average dust loading leaving the economizer will not be greater than 6.44 grains/SCF during a twenty-four hour period based on a soot blowing schedule of once per eight-hour shift.

H. NOISE CONTROL

The COMPANY has included a noise control package for all fans and blowers in its scope of supply. The COMPANY makes the following guarantees:

1. With respect to sound levels, the COMPANY-furnished fans, blowers and all motors 1000 hp and larger, when serviced and operated in accordance with the COMPANY'S operation manual, shall comply with the level set forth in Subarticles 21.2 and 29.10 of the specification.

In the event the Equipment supplied by the Seller is found not to be in compliance with Subarticles 21.2 and 29.10, the COMPANY'S sole liability and the PURCHASER'S exclusive remedy with respect to such non-compliance shall be limited to the cost of repair, replacement or modification of the Equipment so that it will comply.

REL. NO. AND DATE	CODE NO. COMPONENT NO.	CONTRACT NO.
1 8-19-81 2 2-5-82	334-0614	RB-614

SUPPLEMENTARY INFORMATION SHEET

FPGD CIS-4.07

THE BABCOCK & WILCOX COMPANY

CONTRACT INFORMATION SHEET

A.O.

I. Oil Consumption Guarantee.

"Based on the unit being operated and maintained in accordance with operating instructions and provided 130 F primary and secondary air is available at start up, the COMPANY guarantees the oil consumption required to bring the unit to full boiler load with 7 pulverizers in service as follows:

1. Base offering

A. Cold Start

Total oil consumption will not exceed 5000 gallons based on a normal start up time of 6 hours from light off to 20% load.

B. Hot Start

Total oil consumption will not exceed 1100 gallons based on a normal start up time of 1 hour from light off to 20% load.

12

12

12

12

12

12

12

12

3. Plasma Torch System (Initial Installation).

"Based on the unit being operated and maintained in accordance with operating instructions and provided 130 F primary and secondary air is available at start-up, the COMPANY guarantees that the plasma torch system will allow boiler start-up and warm-up to a stable load condition without the requirement for fuel oil.

The COMPANY further guarantees that additional pulverizer/burner groups can be brought into stable operation on coal firing utilizing not more than 100 gallons of No. 2 fuel oil and that full boiler load may be attained with 7 pulverizers in service utilizing not more than 500 gallons of No. 2 fuel oil."

REL. NO. AND DATE	CODE NO. COMPONENT NO.	CONTRACT NO.
1 8-19-81 2 3-25-83	334-0614	RB-614

SUPPLEMENTARY INFORMATION SHEET

FPGD CIS-4.08

INTERMOUNTAIN POWER PROJECT
UNIT NO. 1 - RB-614

AIR HEATER/EFFICIENCY TEST - JUNE 1987

8/6/87 Meeting Draft
Preliminary

OVERVIEW

Boiler performance tests were conducted on Unit No. 1 from June 22 through June 27, 1987. The purpose of the tests was to was to determine efficiency, air heater leakage and air heater performance. The test method was specified by Air Preheater Co. and consisted of point by point traverses for velocity, temperature, and orsat where applicable at the economizer gas outlet, bag house inlet, primary and secondary air heater gas inlets and air outlets, primary air heater gas outlet, and tempering air. Denver Service was contracted by IPP to conduct the tests. The tests were witnessed by Air Preheater Co.

On Saturday, June 27, performance tests were conducted to obtain quality data with an upper mill out of service. Data was collected with balanced firing, normal high cooling air to the idle burner compartment, pulverizers biased up with normal cooling air and pulverizers biased up with reduced cooling air.

The test results are summarized on Table I. The conclusions are:

1. The average efficiency corrected to guarantee conditions was 88.61 % when corrected to contract conditions versus the guarantee value of 88.57 %.

2. The average total leakage value was 461 Klb/hr versus a guarantee of 477 Klb/hr.

3. The calculated gas temperature leaving the secondary air heaters was 6 to 7 F less than expected which is within the guarantee margin and within the test tolerances.

4. The gas temperature leaving the primary air heaters was on the order of 65 F less than expected. This translates to approximately 6 to 7 F on final end temperature since only 10 % of the gas weight passes through the primary air heaters

5. The composite gas temperature leaving the air heaters (excluding leakage), entering the bag house, corrected to contract conditions is 20 F higher than expected. Two thirds of this is due to poorer than expected air heater performance and one third due to higher than expected economizer gas outlet temperature. The addition of economizer sootblowers is expected to reduce economizer gas outlet temperature to expected.

6. Steam Temperature - With the upper rear wall burners out of service, pulverizers biased toward the upper burners and reduced cooling air to the idle compartment, superheat and reheat temperatures were 1008 and 1013 respectively with 22 % excess air. Steam temperature would be expected to be within guarantee with 17 % excess air (contract).

TCH-080587

Aaron Nielsen
Gerry Christensen
8-6-87

IP14_001149

INTERMOUNTAIN POWER PROJECT
AIR HEATER/EFFICIENCY TEST SUMMARY

Preliminary Draft

	Expected ~~GUAR~~	6/24/87	6/25/87	6/26/87
EFFICIENCY, %				
TEST	---	---	88.53	88.51
CORRECTED	88.57*	---	88.60	88.62
AH LEAKAGE, KLB/HR				
TOTAL	477	446	430	508
PRIMARY	163*	266	176	120
SECONDARY (BY DIFFERENCE)	314*	180	254	388
AIR TEMP ENT AIR HEATERS, F				
PRIMARY TEST	---	---	114	114
PRIMARY CORRECTED	77	---	77	77
SECONDARY TEST	---	---	90	91
SECONDARY CORRECTED	64	---	64	64
GAS TEMP LVG AH'S (EXCL LKG), F				
EXPECTED (TEST CONDITIONS)	---	---	321	318
TEST	---	---	333	331
CORRECTED-	295	---	315	314
GAS TEMP LVG PRI AH (EXCL LKG), F				
EXPECTED (TEST CONDITIONS)	---	---	269	264
TEST	---	---	334	330
CORRECTED	313	---	310	306
GAS TEMP LVG SEC AH (EXCL LKG), F				
EXPECTED (TEST CONDITIONS)	---	---	326	324
TEST	---	---	332	331
CORRECTED	292	---	316	314
Economizer gas outlet				~~[illegible]~~ 753 754

Calculations based on O2 and measured primary air flow from plant computer.

SH/RH TEMPERATURES	
BALANCED FIRING, NORM COOLING	968/965
BIAS UP, NORM COOLING	986/977
BIAS UP, MIN COOLING	1008/1013

* Guarantees

TABLE I

INTERMOUNTAIN POWER PROJECT
AIR HEATER/EFFICIENCY TEST SUMMARY

Preliminary Draft

	Expected ~~GUAR~~	6/24/87	6/25/87	6/26/87
EFFICIENCY, %				
TEST	---	---	88.53	88.51
CORRECTED	88.57*	---	88.60	88.62
AH LEAKAGE, KLB/HR				
TOTAL	477	446	430	508
PRIMARY	163*	266	176	120
SECONDARY (BY DIFFERENCE)	314*	180	254	388
AIR TEMP ENT AIR HEATERS, F				
PRIMARY TEST	---	---	114	114
PRIMARY CORRECTED	77	---	77	77
SECONDARY TEST	---	---	90	91
SECONDARY CORRECTED	64	---	64	64
GAS TEMP LVG AH'S (EXCL LKG), F				
EXPECTED (TEST CONDITIONS)	---	---	321	318
TEST	---	---	333	331
CORRECTED-	295	---	315	314
GAS TEMP LVG PRI AH (EXCL LKG), F				
EXPECTED (TEST CONDITIONS)	---	---	269	264
TEST	---	---	334	330
CORRECTED	313	---	310	306
GAS TEMP LVG SEC AH (EXCL LKG), F				
EXPECTED (TEST CONDITIONS)	---	---	326	324
TEST	---	---	332	331
CORRECTED	292	---	316	314
Economizer gas outlet				753 754

Calculations based on O2 and measured primary air flow from plant computer.

SH/RH TEMPERATURES	
BALANCED FIRING, NORM COOLING	968/965
BIAS UP, NORM COOLING	986/977
BIAS UP, MIN COOLING	1008/1013

* Guarantees

TABLE I

EFFICIENCY SUMMARY

TEST NO	(1) EFF %	MILL OUT	STM TEMP	EXCESS AIR	(2) AH GAS OUT TEMP W/LKG	W/O LKG	ECON GAS OUT TEMP	(3) ECON GAS OUT TEMP
GUAR	88.57	ONE	1005	17	-	295	736	-
11A	87.99	D	1005	28.6	298	317	759	740
12A	88.20	H	1005	25.9	299	316	762	740
13A	88.41	H	959	24.4	293	309	742	721
14A	88.40	E	959	25.1	291	306	740	722
15A	88.49	F	1005	17.0	297	316	753	734
16A	87.54	E	1005	37.3	300	319	767	744
17A	88.34	B	1005	17.0	302	325	759	740
18A	88.26	B	1005	17.0	304	327	752	738

(1) Efficiency corrected to contract conditions
(2) AH gas outlet temperatures corrected to contract entering air temp
(3) Expected economizer exit temperature with sootblowers

Figure 4

TCH-041087

	UNITS									
DATE			01/28/87	01/29/87	02/10/87	01/29/87	02/08/87	02/04/87	02/07/87	02/05/87
TIME			1300 1700	1240 1630	1500 1900	1745 1905	1300 1700	0900 1325	1330 1730	1425 1820
LOAD IDENT		FUL	4A	5A	16A	6A	14A	11A	13A	12A
RUN NO.		1	2	3	4	5	6	7	8	9
LOAD	MW	6100	902 MW	854 MW	846 MW	862 MW	825 MW	850 MW	830 MW	850 MW
FUEL		PC	PC	PC	PC	PC	PC	PC	PC	PC
BURNERS OUT OF SERVICE			C	E	E	E	E	D	D	H
		EXPECTED	0	0	0	0	0	0	0	0
		SUM SHT	0	0	0	0	0	0	0	0
STEAM AND WATER FLOWS										
H.P. STEAM FLOW	MLB/HR	6100.00	6605.76	6238.45	6099.90	6515.92	6187.73	6161.37	6274.92	6136.38
1ST STAGE SPRAY		35.57	0.02	0.01	0.01	0.02	0.02	0.01	0.02	0.01
2ND STAGE SPRAY		20.59	0.01	0.01	0.01	0.01	0.01	0.01	0.01	0.01
RH-1 TURBINE LEAKAGE		0.00	59.45	56.15	54.90	58.64	55.69	55.45	56.47	55.23
NO. 1 HTR. EXTR.		0.00	644.81	603.44	585.72	645.77	602.62	593.19	611.35	590.56
NO. 2 HTR. EXTR.		0.00	598.66	563.10	538.89	595.15	559.54	558.49	567.36	547.36
LEAVING REHEAT-1		4925.00	5302.83	5015.77	4920.39	5216.36	4969.87	4954.23	5039.73	4943.23
RH-1 SPRAY		0.00	0.00	0.00	0.00	0.00	0.00	0.00	0.00	0.00
AIR AND GAS FLOWS										
XS AIR LVG ECO	PERCENT	17.0	25.6	33.2	37.3	28.1	25.2	28.5	24.5	25.9
XS AIR TO BURNERS		15.0	23.6	31.2	35.3	26.1	23.2	26.5	22.5	23.9
GAS LVG FURNACE	MLB/HR	7174.0	8219.6	8265.6	8364.0	8059.3	7527.9	7858.9	7555.8	7685.2
GAS ENT AIR HTRS		7230.7	8280.5	8323.6	8421.1	8118.0	7583.9	7916.0	7612.3	7742.0
AIR LVG AIR HTRS		6528.1	7536.1	7615.0	7724.1	7401.4	6900.1	7219.2	6922.4	7047.6
AIR TREATED AS RECIRC		0.0	524.4	940.3	1158.9	651.5	453.7	656.3	418.2	506.2
FLUID TEMPERATURES	DEG F									
SEC SH OUTLET		1005.	998.	1001.	1005.	965.	958.	1002.	961.	1003.
REHEAT-1 OUT		1005.	1005.	997.	1007.	951.	959.	1000.	957.	1005.
RH-1 IN		624.	620.	623.	626.	594.	587.	622.	589.	626.
RH-1 ATTEMP IN		624.	620.	623.	626.	594.	587.	622.	589.	626.
PRI-1 SH OUT		720.	726.	726.	728.	714.	708.	722.	710.	721.
ATTEMP-1 OUT		717.	726.	726.	728.	714.	708.	722.	710.	721.
PRI-2 (PLATEN) OUT		780.	783.	786.	789.	762.	759.	785.	766.	784.
ATTEMP-2 OUT		777.	783.	786.	789.	762.	759.	785.	766.	784.
ECO WATER IN		545.	552.	548.	551.	548.	544.	551.	549.	551.
ECO WATER OUT		575.	574.	570.	573.	568.	561.	571.	566.	571.
SH SPRAY WATER		342.	322.	327.	279.	311.	308.	312.	300.	318.
RH-1 SPRAY WATER		342.	275.	282.	265.	236.	242.	294.	261.	253.

IP14_001153

DATE			01/28/87	01/29/87	02/10/87	01/29/87	02/08/87	02/04/87	02/07/87	02/05/87
TIME			1300 1700	1240 1630	1500 1900	1745 1905	1300 1700	0900 1325	1330 1730	1425 1820
LOAD IDENT		FUL	4A	5A	16A	6A	14A	11A	13A	12A
RUN NO.		1	2	3	4	5	6	7	8	9
	UNITS									
LOAD	MW	6100	902 MW	854 MW	846 MW	862 MW	825 MW	850 MW	830 MW	850 MW
NO. 1 HTR WATER IN		0.	483.	480.	478.	480.	477.	478.	477.	478.
NO. 1 HTR DRAIN		0.	493.	491.	489.	491.	488.	489.	489.	490.
NO. 2 HTR WATER IN		0.	396.	393.	393.	394.	392.	391.	392.	392.
NO. 2 HTR DRAIN		0.	400.	399.	401.	402.	400.	400.	401.	400.
NO. 1 HTR APPROACH		0.	10.	11.	11.	11.	11.	11.	12.	12.
NO. 1 HTR TERM T.D.		0.	-1.	-4.	-4.	-1.	-3.	-3.	-2.	-3.
NO. 2 HTR APPROACH		0.	4.	6.	8.	8.	8.	9.	9.	8.
NO. 2 HTR TERM T.D.		0.	-2.	-4.	-4.	-2.	-3.	-4.	-2.	-3.
DRUM SAT. TEMP		679.	686.	679.	678.	682.	678.	679.	678.	677.
PSH IN TEMP		679.	686.	679.	678.	682.	678.	679.	678.	677.
SAT. CONN. TUBE		685.	685.	0.	678.	0.	677.	679.	677.	677.
PRESSURES	PSIG									
DRUM		2670.	2811.	2681.	2649.	2733.	2649.	2668.	2652.	2647.
SEC SH OUT		2510.	2594.	2468.	2456.	2518.	2455.	2471.	2453.	2450.
REHEAT-1 IN		546.	587.	559.	544.	571.	543.	545.	547.	547.
REHEAT-1 OUT		521.	552.	525.	513.	536.	513.	515.	517.	517.
AIR AND GAS TEMPS	DEG F									
GAS LVG ECO		736.	770.	768.	767.	752.	740.	759.	742.	762.
GAS LVG AIR HTRS		293.	320.	332.	327.	329.	323.	330.	323.	331.
AVG AIR ENT AH'S		66.	74.	87.	77.	85.	85.	86.	83.	86.
AVG AIR LVG AH'S		598.	605.	598.	591.	583.	577.	591.	578.	595.
MEAS. GAS LVG PATH 1		765.	744.	744.	746.	714.	732.	749.	731.	749.
MEAS. GAS LVG PATH 2		733. 1	774. 1	769. 1	768. 1	753. 1	733. 1	758. 1	737. 1	755. 1
PYROSONIC FEGT	DEG F	0.0	2227.2	2130.1	2090.8	2117.2	2076.2	2161.0	2146.5	2176.1
GAS TEMP LVG RH PASS	DEG F	0.0	744.0	744.0	746.0	714.0	732.0	749.0	731.0	749.0
GAS TEMP LVG PSH PASS	DEG F	0.0	774.0	769.0	768.0	753.0	733.0	758.0	737.0	755.0

IP14_001154

	UNITS								
DATE		01/30/87	01/30/87	02/09/87	02/11/87	02/12/87	01/27/87	02/02/87	02/02/87
TIME		1140 1540	1615 1815	1300 1700	1530 1925	1230 1630	1430 1640	0330 0510	0030 0230
LOAD IDENT		7A	8A	15A	17A	18A	3A	10A	9A
RUN NO.		10	11	12	13	14	15	16	17
LOAD	MW	851 MW	844 MW	847 MW	846 MW	842 MW	607 MW	467 MW	467 MW
FUEL		PC	PC	PC	PC	PC	PC	PC	PC
BURNERS OUT OF SERVICE		F	F	F	B	B	ADG	EFH	EFH
		0	0	0	0	0	0	0	0
		0	0	0	0	0	0	0	0
STEAM AND WATER FLOWS									
H.P. STEAM FLOW	MLB/HR	6017.55	5989.46	6121.99	6037.79	5977.05	4089.20	3075.76	3178.42
1ST STAGE SPRAY		0.01	0.01	0.02	0.01	0.01	0.01	0.01	0.01
2ND STAGE SPRAY		12.37	31.51	0.01	0.01	60.62	0.01	0.00	0.00
RH-1 TURBINE LEAKAGE		54.16	53.91	55.10	54.34	53.79	38.85	31.07	32.10
NO. 1 HTR. EXTR.		571.83	561.47	590.11	576.49	558.49	334.32	229.59	240.93
NO. 2 HTR. EXTR.		533.24	532.31	542.22	531.50	522.91	330.28	228.15	241.98
LEAVING REHEAT-1		4858.32	4841.77	4934.55	4875.45	4841.85	3385.75	2586.95	2663.41
RH-1 SPRAY		0.00	0.00	0.00	0.00	0.00	0.00	0.00	0.00
AIR AND GAS FLOWS									
XS AIR LVG ECO	PERCENT	17.2	17.9	19.5	16.7	18.1	30.9	58.5	42.4
XS AIR TO BURNERS		15.2	15.9	17.5	14.7	16.1	28.1	54.9	38.8
GAS LVG FURNACE	MLB/HR	7092.5	7076.9	7302.3	7073.5	7089.0	5658.2	5297.8	4790.0
GAS ENT AIR HTRS		7148.7	7132.6	7359.0	7129.7	7144.7	5714.9	5355.0	4847.2
AIR LVG AIR HTRS		6463.6	6452.9	6666.4	6443.8	6464.9	5188.0	4916.7	4408.6
AIR TREATED AS RECIRC		11.2	50.1	141.8	0.0	55.7	372.6	1003.0	492.3
FLUID TEMPERATURES	DEG F								
SEC SH OUTLET		1016.	1009.	1002.	1013.	1006.	1001.	1002.	979.
REHEAT-1 OUT		1010.	999.	1001.	1015.	1005.	1004.	1005.	962.
RH-1 IN		636.	630.	625.	633.	626.	570.	555.	534.
RH-1 ATTEMP IN		636.	630.	625.	633.	626.	570.	555.	534.
PRI-1 SH OUT		717.	719.	715.	717.	718.	704.	702.	694.
ATTEMP-1 OUT		717.	719.	715.	717.	718.	704.	702.	694.
PRI-2 (PLATEN) OUT		783.	783.	778.	783.	786.	771.	771.	757.
ATTEMP-2 OUT		781.	778.	778.	783.	776.	771.	771.	757.
ECO WATER IN		547.	546.	547.	551.	550.	506.	482.	483.
ECO WATER OUT		566.	566.	566.	569.	569.	526.	506.	504.
SH SPRAY WATER		336.	336.	324.	327.	338.	299.	299.	307.
RH-1 SPRAY WATER		289.	308.	247.	282.	285.	251.	255.	286.

IP14_001155

DATE			01/30/87	01/30/87	02/09/87	02/11/87	02/12/87	01/27/87	02/02/87	02/02/87
TIME			1140 1540	1615 1815	1300 1700	1530 1925	1230 1630	1430 1640	0330 0510	0030 0230
LOAD IDENT			7A	8A	15A	17A	18A	3A	10A	9A
RUN NO.			10	11	12	13	14	15	16	17
		UNITS								
LOAD		MW	851 MW	844 MW	847 MW	846 MW	842 MW	607 MW	467 MW	467 MW
NO. 1 HTR	WATER IN		478.	478.	479.	478.	477.	444.	420.	421.
NO. 1 HTR	DRAIN		489.	488.	490.	489.	488.	449.	425.	425.
NO. 2 HTR	WATER IN		392.	392.	394.	393.	392.	365.	346.	346.
NO. 2 HTR	DRAIN		400.	400.	402.	401.	400.	368.	350.	350.
NO. 1 HTR	APPROACH		11.	10.	11.	11.	11.	5.	5.	4.
NO. 1 HTR	TERM T.D.		-4.	-4.	-3.	-4.	-3.	-7.	-9.	-8.
NO. 2 HTR	APPROACH		8.	8.	8.	8.	8.	3.	4.	4.
NO. 2 HTR	TERM T.D.		-4.	-5.	-4.	-4.	-4.	-6.	-7.	-7.
DRUM SAT.	TEMP		678.	678.	678.	678.	677.	671.	665.	665.
PSH IN	TEMP		678.	678.	678.	678.	677.	671.	665.	665.
SAT. CONN. TUBE			677.	677.	678.	678.	677.	670.	663.	663.
PRESSURES		PSIG								
DRUM			2663.	2661.	2652.	2650.	2639.	2536.	2427.	2427.
SEC SH OUT			2462.	2462.	2454.	2460.	2450.	2428.	2351.	2349.
REHEAT-1 IN			547.	545.	550.	541.	538.	380.	292.	297.
REHEAT-1 OUT			513.	512.	519.	511.	508.	355.	272.	277.
AIR AND GAS TEMPS		DEG F								
GAS LVG ECO			757.	753.	753.	759.	752.	723.	703.	677.
GAS LVG AIR HTRS			330.	330.	325.	327.	330.	300.	288.	294.
AVG AIR ENT AH'S			86.	84.	80.	77.	76.	76.	74.	89.
AVG AIR LVG AH'S			594.	587.	588.	592.	579.	575.	555.	538.
MEAS. GAS LVG PATH 1			745.	723.	750.	760.	749.	738.	724.	688.
MEAS. GAS LVG PATH 2			742. 1	734. 1	741. 1	745. 1	741. 1	683. 1	656. 1	642. 1
PYROSONIC FEGT		DEG F	2188.1	2171.3	2167.7	2188.9	2175.5	1999.1	1807.0	1806.5
GAS TEMP LVG RH	PASS	DEG F	745.0	723.0	750.0	760.0	749.0	738.0	724.0	688.0
GAS TEMP LVG PSH	PASS	DEG F	742.0	734.0	741.0	745.0	741.0	683.0	656.0	642.0

IP14_001156

BDS-1293

BABCOCK & WILCOX

DATA TABULATION WORK SHEET

1	2	3	4	5	6	7	8	9	10	11	12	13	14	15	16	17	18	19	20	21
TEST NO.				EXP	11 A		12 A		13 A		14 A		15 A		16 A		17 A		18 A	
					W	E	W	E	W	E	W	E	W	E	W	E	W	E	W	E
GAS TEMP ENT			F	736	755.2	762.8	763.6	759.8	742.0	741.7	740.1	739.3	752.9	753	767.4	766.7	759.2	758.9	752.5	752.0
AIR TEMP ENT			F	64	82.0	81.2	80.8	81.3	78.7	79.0	79.8	80.3	75.9	76.3	72.8	73.9	72.5	73.4	71.1	71.8
O2 ENT			%	—	4.85	4.65	4.22	4.61	4.37	4.06	4.35	4.28	3.42	3.59	5.79	5.82	3.21	2.91	3.23	3.35
CO2 ENT (1)			%	—	14.19	14.37	14.47	14.12	14.33	14.60	14.49	14.55	15.17	15.02	13.24	13.22	15.54	15.80	15.56	15.45
O2 LVG - ORSAT			%	—	5.87	5.89	5.3	5.7	5.2	5.3	5.1	5.4	5.0	4.8	7.0	6.9	4.80	4.60	4.70	4.90
CO2 LVG - ORSAT			%	—	13.3	13.3	13.9	13.5	14.0	13.9	14.0	13.8	14.2	14.2	12.4	12.4	14.4	14.5	14.4	14.2
CO2 LVG - (1)			%		13.29	13.28	13.53	13.18	13.60	13.52	13.84	13.57	13.80	13.97	12.18	12.27	14.15	14.32	14.26	14.44
MOIST GAS ENT			%	—	4.41	4.46	4.66	4.56	5.15	5.22	4.64	4.65	4.74	4.70	4.40	4.39	4.99	5.06	4.82	4.79
MOIST AIR			LB/LBDA	—	.0033		.0049		.0032		.0032		.0036		.0036		.0038		.0032	
AH LKG (2)			%	—	6.16	7.49	6.31	6.49	4.78	7.17	4.30	6.54	8.94	6.77	7.94	7.04	8.88	9.30	8.16	8.72
AH LKG (3)			KLB/HR	315	431	524	454	467	331	499	294	446	597	452	599	531	558	584	507	541
GAS FLOW ENT (4)			KLB/HR	6286	7002		7197		6928		6826		6680		7542		6280		6209	
AIR FLOW LVG (4)			"	5184	5777		5937		5745		5642		5460		6285		5074		4888	
GAS TEMP LVG - ACT			W/LKG	—	308.8	311.6	308.2	312.7	300.0	303.2	300.0	303.0	303.0	305.7	304.7	308.2	304.8	308.6	306.7	311.8
" " " - EXP			"	282	299	299	302	301	294	290	295	291	291	295	294	296	292	292	297	296
GAS TEMP LVG - ACT			W/O LKG	—	322	328	322	327	310	318	309	317	322	320	322	324	324	329	325	332
" " " - EXP			"	292	312	314	315	314	304	304	304	304	308	309	310	310	310	311	314	314
AIR TEMP LVG - ACT			F	—	650	626	652	628	638	611	631	609	645	623	653	626	652	632	650	632
" " " - EXP			F	649	664	671	670	667	651	651	651	651	666	666	669	668	675	675	675	674

(1) CALCULATED PER PTC 19.10 PARA 6.04

(2) USED CALCULATED CO2

(3) TOTAL FOR TWO AIR HEATERS BASED ON GAS FLOW ON LINE 19

(4) CALCULATED

Customer IPP	Contract RB-614	File Name TCH	SECONDARY AH
Sta	Blr. No.	Dwg. No.	Date 3/23/87	JAN/FEB 1987 TESTS

FIG 5

IP14_001157

BDS-1293

BABCOCK & WILCOX

DATA TABULATION WORK SHEET

TEST NO.		EXP	11A W	11A E	12A W	12A E	13A W	13A E	14A W	14A E	15A W	15A E	16A W	16A E	17A W	17A E	18A W	18A E
GAS TEMP ENT	F	736	755.2	762.8	763.6	759.8	742.0	741.7	740.1	739.3	752.9	753	767.4	766.7	759.2	758.9	752.5	752.0
AIR TEMP ENT	F	77	106.1	105.2	104.6	104.2	102.0	101.5	103.6	103.0	97.8	97.8	93.3	93.6	93.8	92.8	92.2	91.5
GAS FLOW ENT	MLB/HR	924	795		760		811		802		775		768		773		856	
AIR FLOW LVG	MLB/HR	837	814		812		824		821		803		803		821		731	
MOIS GAS ENT	%	6.0	4.5		4.9		5.0		4.95		5.2		4.66		5.35		5.23	
AH LKG	MLB/HR	169	226	207	181	130	185	181	164	181	173	129	244	94	215	179	230	181
EXP GAS TEMP LVG	W/O LKG	313	303	304	294	292	299	299	297	297	294	294	292	292	288	287	332	337
ACT " " "	"	—	353	363	346	361	344	371	339	372	345	360	364	351	358	376	356	372
EXP GAS TEMP LVG	W/LKG	279	261	265	259	266	264	264	266	263	260	267	246	271	247	252	288	296
ACT " " "	"	—	300.8	324.4	301.4	325.1	301.	324.7	300.6	325.3	302.1	324.8	301.5	324.5	302.6	325.5	302.8	325.8
EXP AIR TEMP LVG	F	582	583	588	579	576	572	572	570	569	576	576	585	584	574	573	617	616
ACT AIR TEMP LVG	F	—	535.1	499.8	534	500	526.7	494.4	524.8	492.3	533.3	500.8	541.6	506.0	539.2	504.1	539.2	507.4
AH By-PASS FLOW	MLB/HR	498	518		506		479		482		506		533		478		697	

Customer JPP

Sta

Blr. No.

Contract RB-614

Dwg. No.

File

Name TCH/BQS

Date 3/11/87

PRIMARY AH - EXPECTED PERF - JAN/FEB 1987 TESTS

FIG. 6

IP14_001158

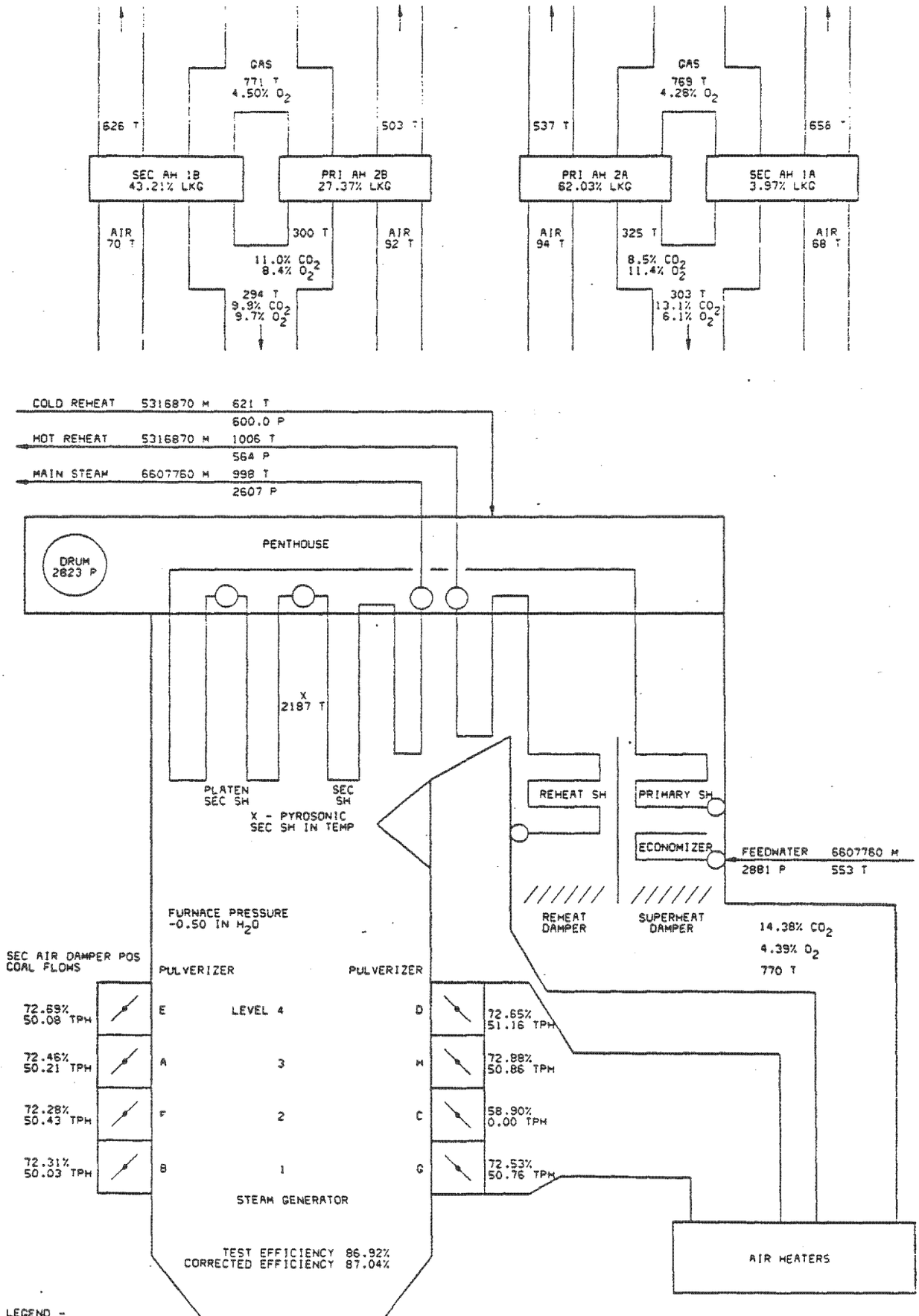

INTERMOUNTAIN POWER AGENCY
INTERMOUNTAIN POWER PROJECT UNIT 1
MCR (105% LOAD) 01/28/87 - TEST 4A

FIGURE 3-1

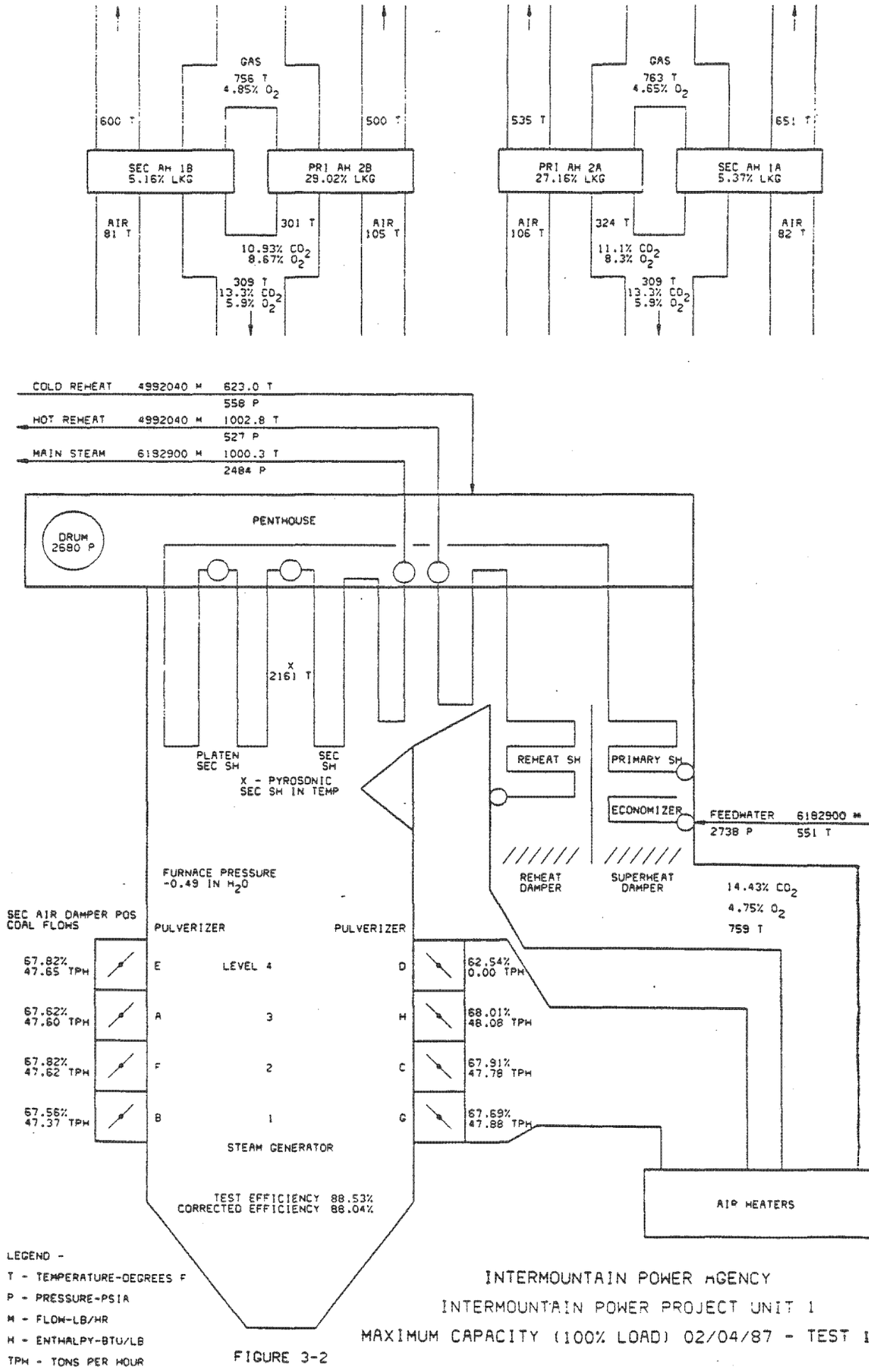

INTERMOUNTAIN POWER AGENCY

INTERMOUNTAIN POWER PROJECT UNIT 1

MAXIMUM CAPACITY (100% LOAD) 02/04/87 - TEST 1

FIGURE 3-2

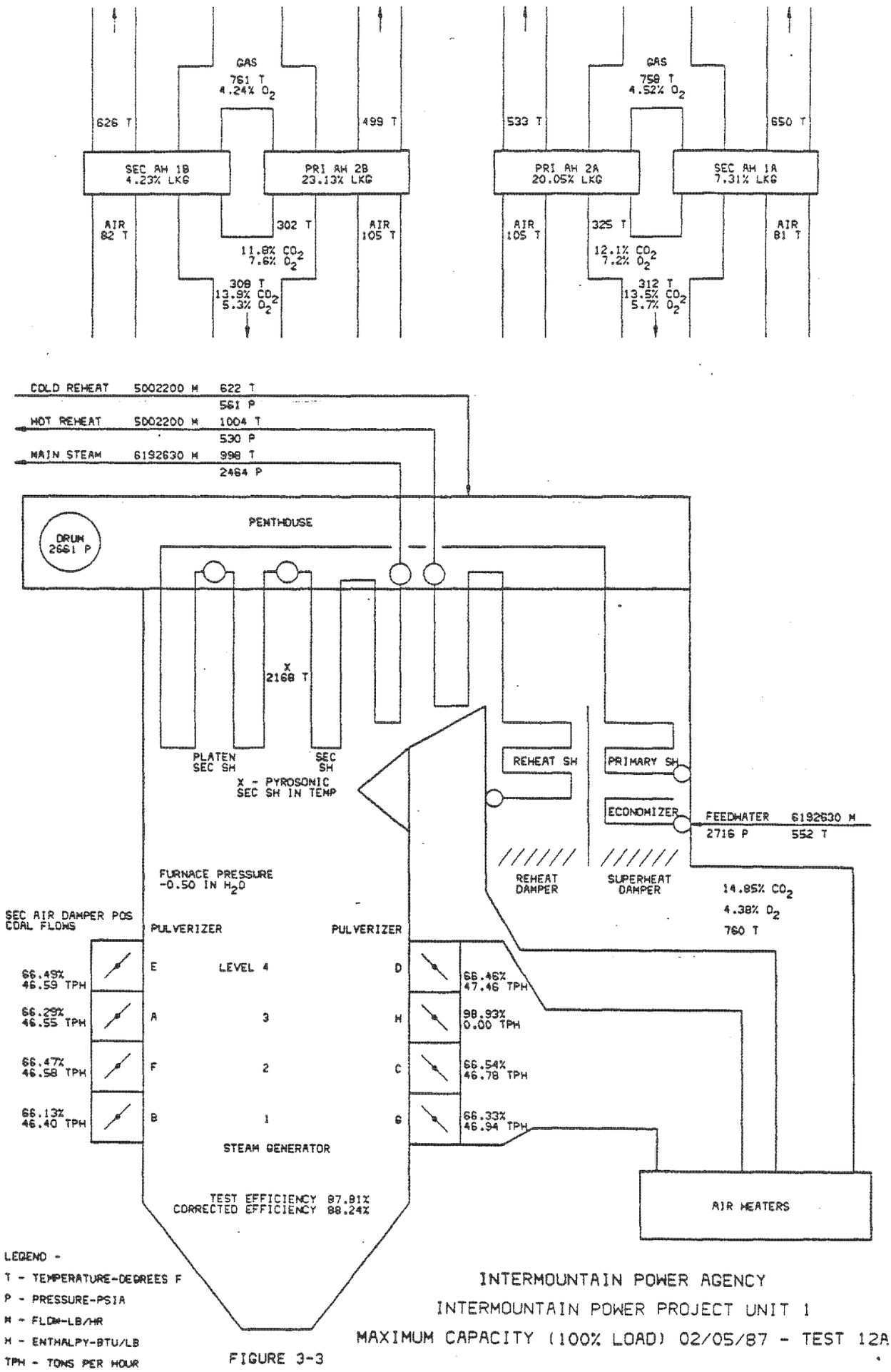

FIGURE 3-3

INTERMOUNTAIN POWER AGENCY

INTERMOUNTAIN POWER PROJECT UNIT 1

MAXIMUM CAPACITY (100% LOAD) 02/05/87 - TEST 12A

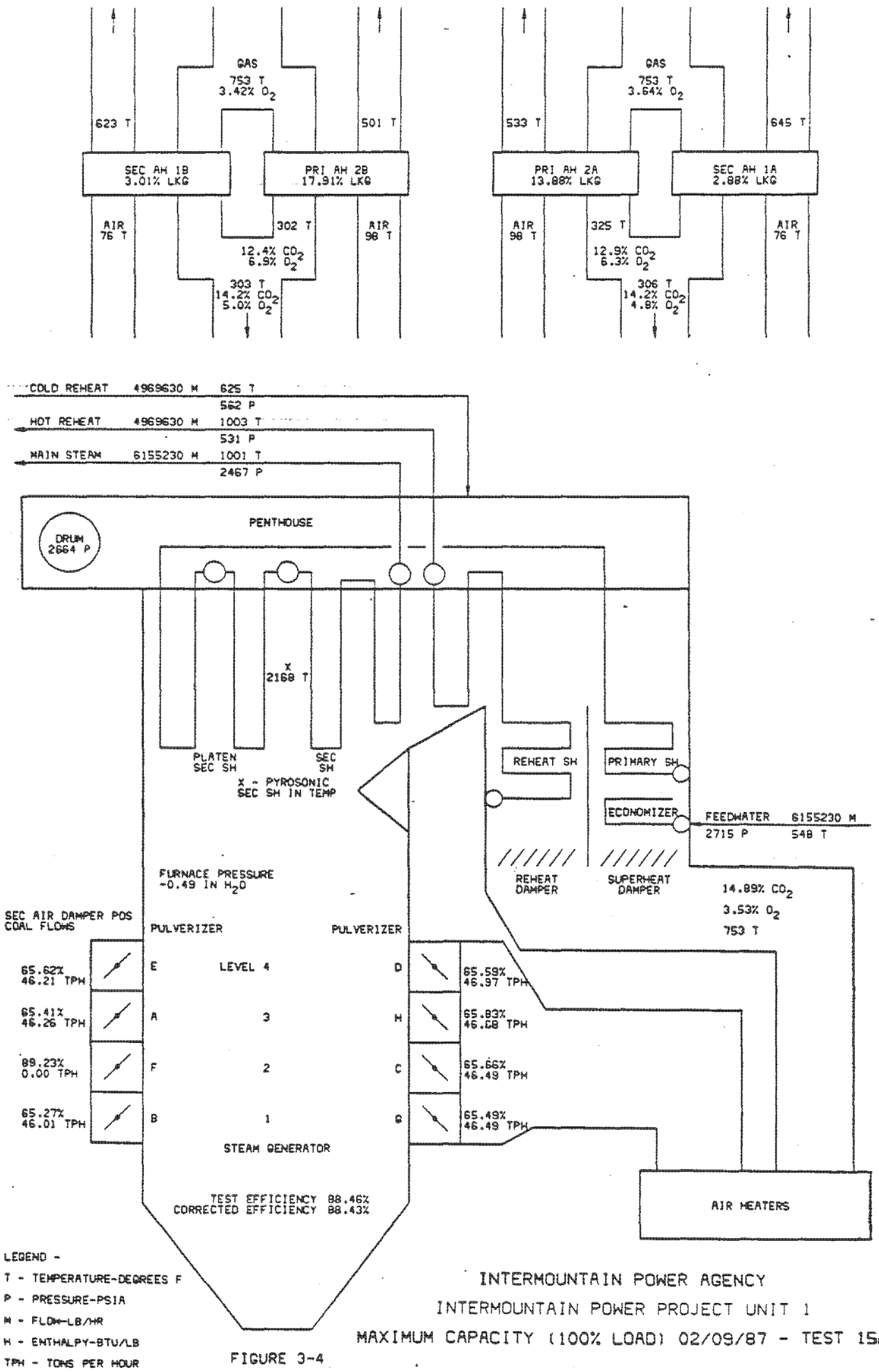

INTERMOUNTAIN POWER AGENCY

INTERMOUNTAIN POWER PROJECT UNIT 1

MAXIMUM CAPACITY (100% LOAD) 02/09/87 - TEST 15F

FIGURE 3-4

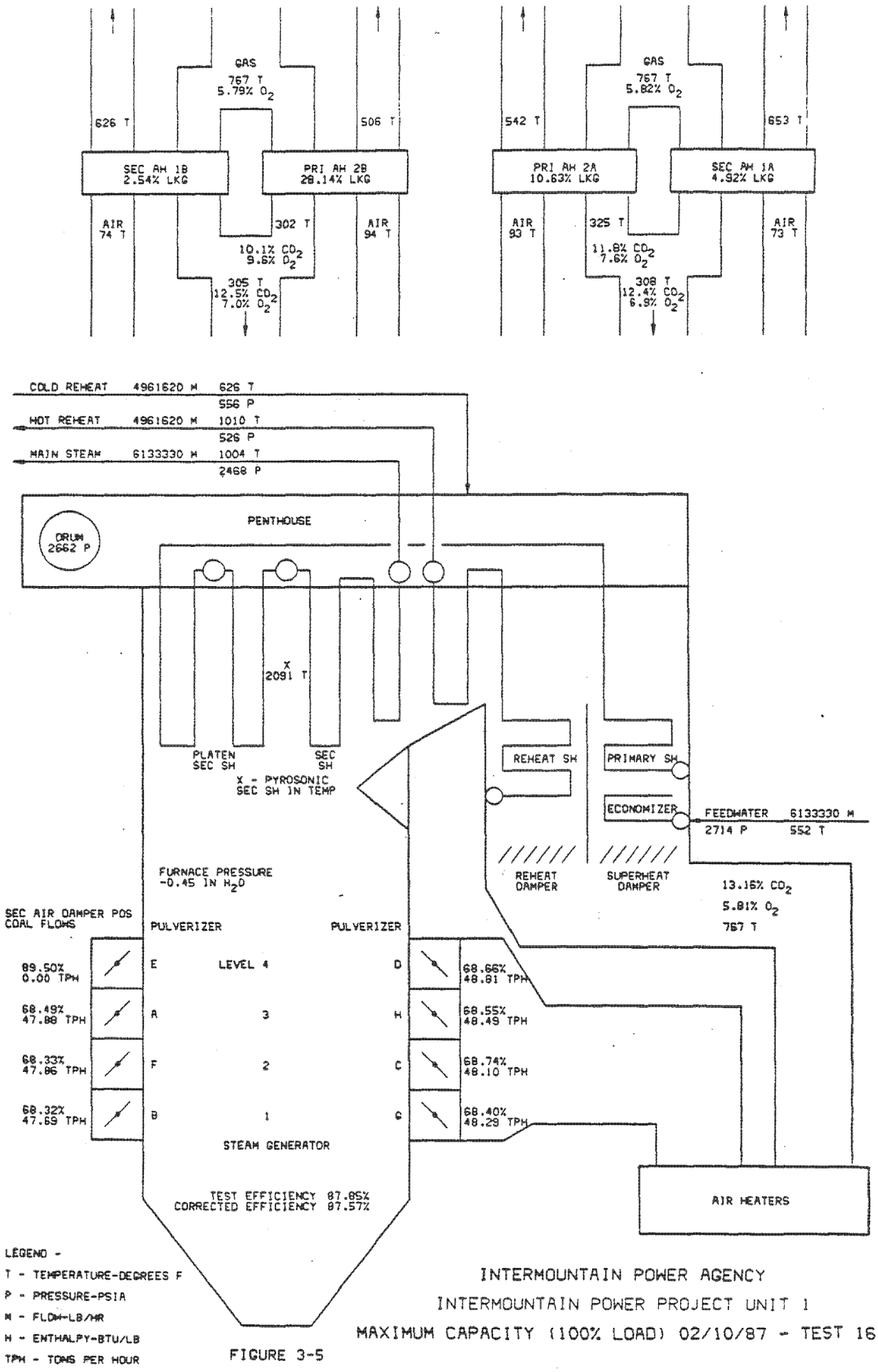

LEGEND -

T - TEMPERATURE-DEGREES F

P - PRESSURE-PSIA

M - FLOW-LB/HR

H - ENTHALPY-BTU/LB

TPH - TONS PER HOUR

FIGURE 3-5

INTERMOUNTAIN POWER AGENCY

INTERMOUNTAIN POWER PROJECT UNIT 1

MAXIMUM CAPACITY (100% LOAD) 02/10/87 - TEST 16

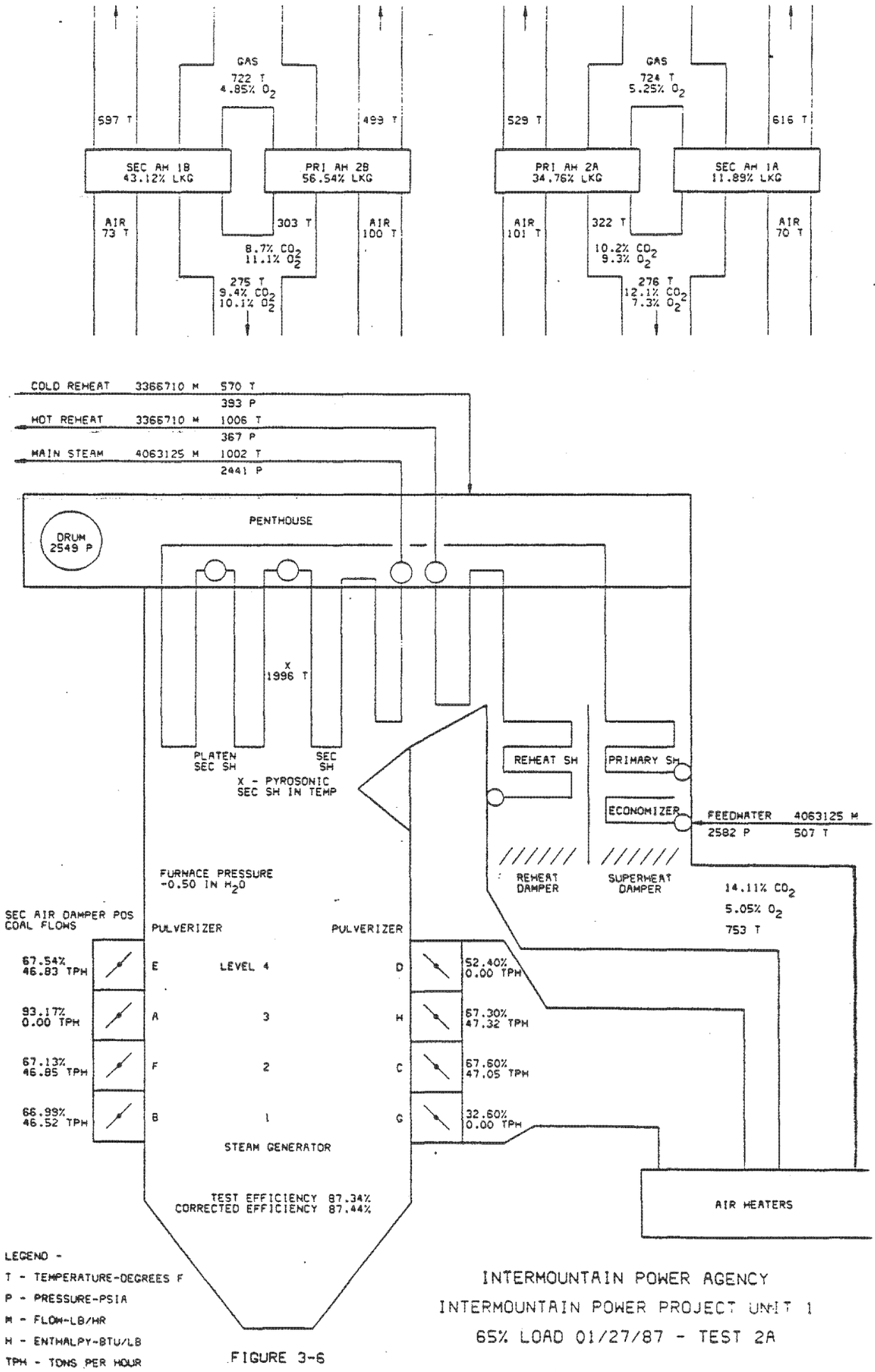

FIGURE 3-6

INTERMOUNTAIN POWER AGENCY
INTERMOUNTAIN POWER PROJECT UNIT 1
65% LOAD 01/27/87 - TEST 2A

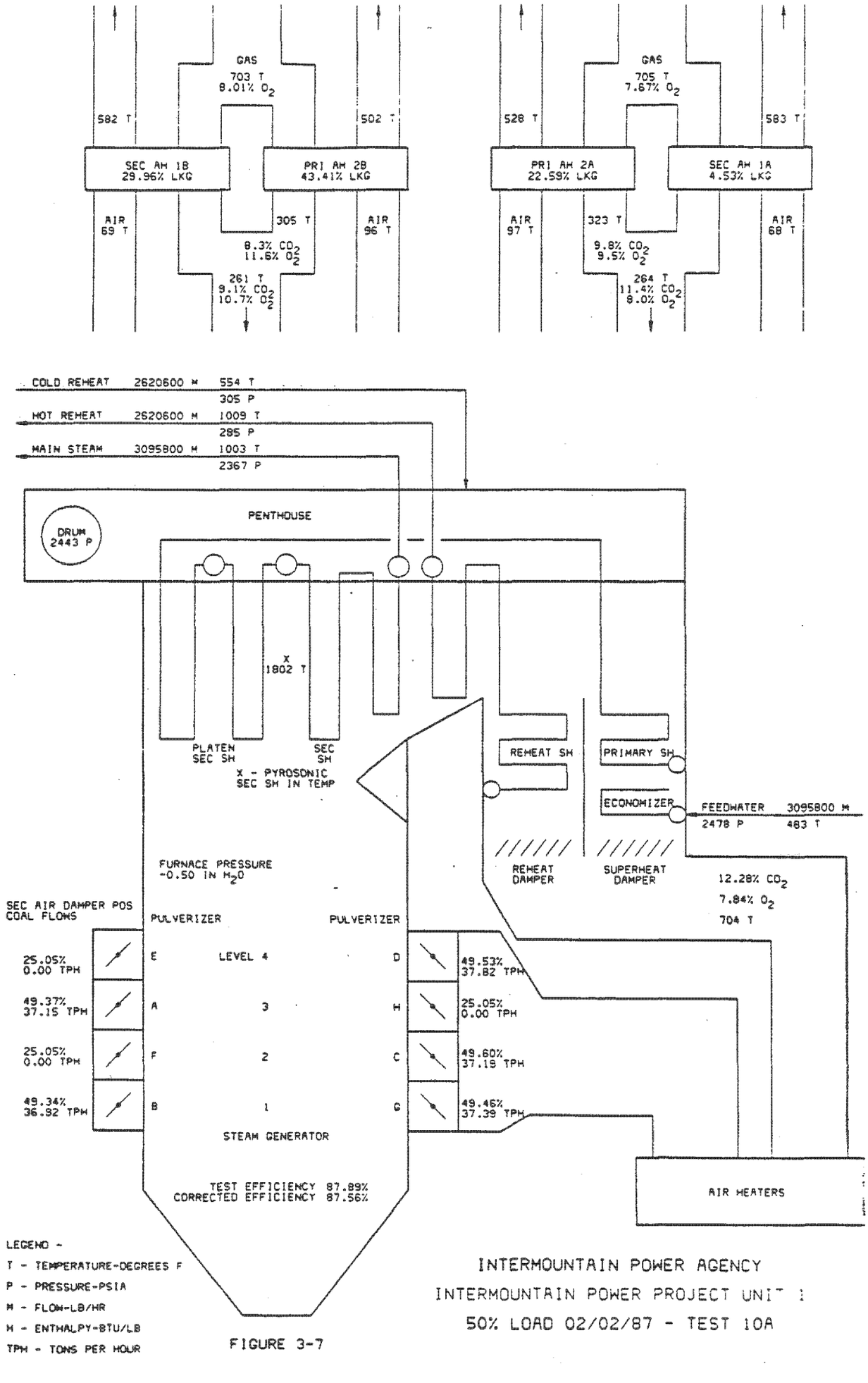

INTERMOUNTAIN POWER AGENCY
INTERMOUNTAIN POWER PROJECT UNIT 1
50% LOAD 02/02/87 - TEST 10A

FIGURE 3-7

file original letter

Babcock & Wilcox

a McDermott company

Power Generation

20 S. Van Buren Avenue
P.O. Box 351
Barberton, Ohio 44203
(216) 753-4511

September 3, 1987

cc: [redacted]
S-Up file, " "
GTR, " "

Intermountain Power Project
Department of Water & Power
City of Los Angeles
P.O. Box 111, Room 658
Los Angeles, CA 90051

Attn: Mr. T.H. McGuiness

Re: Intermountain Power Project
B&W Ref: RB-614/615
Subject: Airheater Performance Test Results

Gentlemen:

Attached please find two (2) copies of B&W's report on the unit #1 airheater tests performed in June 1987. If you have questions or comments, call me at (216) 860-2532.

Very truly yours,

Carl A. Palmberg

C.A. Palmberg
Contract Manager

CAP:nk

cc: RK Krikorian w/copy
GT Rose "

CAP3396

RECEIVED
SEP 08 1987
I.P.P.

IP14_001166

INTERMOUNTAIN POWER PROJECT

UNIT NO. 1 - (B&W RB-614)

DELTA, UTAH

AIR HEATER / EFFICIENCY TESTS

JUNE 22 - JUNE 17, 1987

Prepared by
The Babcock & Wilcox Co.
Domestic Fossil Operations

IP14_001167

INTERMOUNTAIN POWER PROJECT
UNIT NO. 1 - RB-614

AIR HEATER/EFFICIENCY TEST - JUNE 1987

OVERVIEW

Boiler performance tests were conducted on Unit No. 1 from June 22 through June 27, 1987. The purpose of the tests was to was to determine boiler efficiency, air heater leakage and air heater performance. The test method was specified by Air Preheater Co. and consisted of point by point traverses for velocity, temperature, and orsat (where applicable) at the economizer gas outlet, bag house inlet, primary and secondary air heater gas inlets and air outlets, primary air heater gas outlet, and tempering air. Denver Service was contracted by IPP to conduct the tests. The tests were witnessed by Air Preheater Co.

On Saturday, June 27, performance tests were conducted to obtain quality data with an upper mill out of service. Data was collected with balanced firing, normal high cooling air to the idle burner compartment, pulverizers biased up with normal cooling air and pulverizers biased up with reduced cooling air.

The test results are summarized on Table I. The conclusions are:

1. The average efficiency the 6/25 and 6/26 tests was 88.61 % when corrected to contract conditions versus the guarantee value of 88.57 %.

2. The average total air heater leakage for the 6/24, 6/25 and 6/26 tests was 461 Klb/hr versus a guarantee of 477 Klb/hr.

3. The calculated gas temperature leaving the secondary air heaters was 6 to 7 F more than expected for the test conditions which is within APCO's guarantee margin when considering test uncertainty.

4. The gas temperature leaving the primary air heaters was on the order of 65 F more than expected for the test conditions. This translates to approximately 6 to 7 F on final end temperature since only 10 % of the gas weight passes through the primary air heaters.

5. The composite gas temperature leaving the air heaters (excluding leakage) when corrected to contract conditions is 20 F higher than expected. Two thirds of this is due to poorer than expected air heater performance and one third due to higher than expected economizer gas outlet temperature. The addition of economizer sootblowers is expected to reduce economizer gas outlet temperature to expected.

6. Steam Temperature - With the upper rear wall burners out of service, pulverizers biased toward the upper burners and reduced cooling air to the idle compartment, superheat and reheat temperatures were 1008 and 1013 respectively with 22 % excess air. Steam temperature would be expected to be within guarantee with 17 % excess air (contract).

IP14_001168

INTERMOUNTAIN POWER PROJECT
AIR HEATER/EFFICIENCY TEST SUMMARY

	EXPECTED	6/24/87	6/25/87	6/26/87	AVE
EFFICIENCY, %					
TEST	---	---	88.53	88.51	88.52
CORRECTED	* 88.57	---	88.60	88.62	88.61
AH LEAKAGE, KLB/HR					
TOTAL	477	446	430	508	461
PRIMARY	* 163	216	176	120	171
SECONDARY (BY DIFFERENCE)	* 314	230	254	388	291
AIR TEMP ENT AIR HEATERS, F					
PRIMARY TEST	---	---	114	114	---
PRIMARY CORRECTED	77	---	77	77	77
SECONDARY TEST	---	---	90	91	---
SECONDARY CORRECTED	64	---	64	64	64
GAS TEMP LVG AH'S (EXCL LKG), F					
EXPECTED (TEST CONDITIONS)	---	---	321	318	320
TEST	---	---	333	331	332
CORRECTED	295	---	315	314	315
GAS TEMP LVG PRI AH (EXCL LKG), F					
EXPECTED (TEST CONDITIONS)	---	---	264	268	267
TEST	---	---	334	330	332
CORRECTED	313	---	310	306	308
GAS TEMP LVG SEC AH (EXCL LKG), F					
EXPECTED (TEST CONDITIONS)	---	---	326	324	325
TEST	---	---	332	331	332
CORRECTED	292	---	316	314	315

* Guaranteed
Calculations based on O2 and measured primary air flow from plant computer.

TEMPERATURES, F	SH	RH
BALANCED FIRING - NORM COOLING	968	965
BIAS UP - NORM COOLING	986	977
BIAS UP - MIN COOLING	1008	1013

TABLE I

IP14_001169

INSTRUMENTATION AND TEST PROCEDURE

The test procedure used was essentially in accordance with Air Preheater Co's requirements for an acceptance. The only exception was that the conditions at the secondary air heater gas outlets could not be measured directly. For air and gas side measurements, APCO requires a point by point traverse (with the exception of the air heater air inlets where a thermocouple grid was installed). The number of points per flue or duct was determined by dividing the flue or duct into equal areas not to exceed 3 ft. by 3 ft. A table showing the test locations, measurements required at each location and the number of points per location is contained in Appendix C. A sketch showing the physical dimensions of each location is also included. One complete traverse constituted one test. The economizer gas outlet, bag house inlet (air heater gas outlets), secondary air heater gas in and air out were coordinated such that the start and stop times coincided. Since these locations had the most points, they governed the length of a test. The primary air heaters were measured individually during the test period. The gas inlet and gas outlet of each primary air heater were traversed simultaneously and the primary air outlet and tempering air were traversed either immediately before or after the gas side traverses.

Water manometers were installed at the air heater air inlets and gas outlets to measure static pressure and air to gas pressure differential.

Coal and ash samples were obtained by IPP personnel. The ash and fuel analysis results are contained in Appendix I. IPP personnel also obtained local barometric pressure and wet and dry bulb temperatures to calculate moisture in air.

The remaining data necessary to determine output and efficiency were obtained from the plant computer. Data was obtained at five (5) minute intervals and later downloaded to an HP-9816 computer for averaging and reporting.

DATA REDUCTION AND CALCULATION METHODOLOGY

Static pressure and velocity head was measured at each traverse point with a Fechheimer probe and B&W's Velocity Pressure Averaging System (VPAS). Velocities were calculated for each point in accordance with PTC-11 Fans. Flue gas density was calculated in accordance with PTC-4.1 Steam Generators. All temperatures and O_2/CO_2 readings were weight averaged based on velocity as well as arithmetically averaged. A linear regression analysis was used to determine the combustion line (with respect to the flue gas volumetric combustion chart) for each orsat station. The combustion line relationship was then used to eliminate obviously bad orsat points; points with a CO_2 deviation greater than 0.35 from expected for the measured O_2. The point by point data listing, calculated velocity and weight average calculations are contained in appendices D, E and F. The orsat points that were eliminated are indicated as well as the weighted and arithmetic averages for each test station.

IP14_001170

A comparison of the arithmetic versus weighted average is summarized in Appendix K. It will be observed that there is virtually no difference between the weighted average results and the arithmetic average results. Thus, for future testing, B&W recommends that multi-point grids and the composite sampling method be employed. This has the benefit of reducing uncertainty by virtue of more samples.

For the test, there were eleven orsat stations. All orsat results were to the left of the flue gas combustion line. Refer to Appendix J for a tabulation of the combustion line results (maximum CO_2 at zero O_2) for each test station for each of the test days. It will be observed that the results for each test station are very consistent between the test days. The average combustion line based on the orsat results was 18.6 % CO_2 +/- 0.25 % at 0 % O_2. This order of variation is typically as good as one can achieve with an orsat. For the final fuel analysis, the expected CO_2 at zero O_2 is 18.3 %. If the O_2/CO_2 data is not on the combustion line, the CO_2 method (PTC 4.1 paragraphs 9.1 and 9.2) for calculating excess air and air and gas weights can be erroneous, especially when comparing differentials as when calculating air heater leakage. For this reason, B&W has more confidence in the calculations based on O_2 than CO_2, however, both are reported for comparison.

Unit efficiency was calculated in accordance with ASME PTC 4.1 Heat Loss Method, Abbreviated Efficiency Form. The key measurement points for determining efficiency by the heat loss method are average air temperature entering the unit and average gas temperature and excess air leaving the unit. The average air inlet temperature is a weighted average of the air temperature entering the primary and secondary air heaters. The alternate methods for determining the primary/secondary air flow split are described below. The average gas temperature/excess air leaving the air heaters (unit) is a composite sample of the gas entering the bag house which is a mix of the gas leaving the primary and secondary air heaters. This is the most accurate measurement location for determining unit efficiency. Flue gas sampling at the economizer gas outlet in conjunction with the bag house inlet enables calculation of total air heater leakage with a high confidence level.

Problems were encountered with measuring the air temperature at the air heater air inlets on 6/24. For purposes of evaluating air heater leakage, the difference between the plant and test averages on 6/25 and 6/26 was used to adjust the plant air heater air inlet temperature in order to calculate efficiency and gas flow. These results were not used for evaluation of unit efficiency and/or air heater performance, however, any error in the efficiency calculation has negligible impact on calculated air heater leakage mass flows.

In order to evaluate individual air heater performance and leakage, it is desirable to measure the conditions at the gas and air inlets and outlets of each air heater. On this unit, it was not possible to measure the secondary air heater gas outlet temperature and flue gas analysis directly due to the flue arrangement. Therefore, it was necessary to calculate the secondary air heater gas outlet conditions based on the primary air heater gas outlet and bag house gas inlet conditions. The following describes this calculation as well as the alternate methods used to determine air and gas mass flow splits.

IP14_001171

Total gas mass flow leaving the economizer and air heaters (entering the bag house) was calculated stoichiometrically based on the gas analysis data and fuel input. Fuel input was calculated from measured unit output and efficiency determined as described above.

Gas mass flow splits - B&W preferred method - Based on measured primary air flow to the pulverizers, mill inlet temperature, hot and cold primary air temperature; calculate air flow through the primary air heater by heat balance. Calculate the gas flow through the primary air heater by heat balance from the primary air heater gas side data and heat added to the primary air as measured and calculated above. It is noted that the pulverizers and primary air flow pressure transducers had been recently calibrated. The plant indication of percent primary air flow was converted to primary element pressure differential based on the latest calibration data. Primary air flow to each pulverizer was then calculated from this pressure differential, mill inlet temperature, and calibration ('K') factors for each mill. The gas mass flow entering the secondary air heaters is the difference between total gas mass flow leaving the economizer and the gas mass flow entering the primary air heaters.

Gas mass flow splits - APCO method - The measured gas flows entering the primary and secondary air heaters are adjusted proportionally by the ratio of calculated gas mass flow leaving the economizer divided by the sum of the measured gas mass flows entering the air heaters. These calculations are contained in Appendix H. It will be observed that the gas flow correction factors are reasonable.

Secondary air heater gas outlet conditions - Total leakage between the economizer gas outlet and bag house gas inlet (composite leaving all air heaters) was calculated as described above. The primary air heater leakage was calculated from the primary air heater gas inlet and outlet orsat data and gas mass flow entering as determined by either of the methods above. The secondary air heater leakage is the difference between the total air heater leakage and primary air heater leakage. Knowing the secodary air heater leakage, gas temperature leaving the primary air heater, average gas temperature leaving all the air heaters and gas mass flows, it is possible to calculate the average gas temperature leaving the secondary air heaters. A detailed description of this calculation procedure and calculations are contained in Appendix H.

For air heater evaluation and efficiency calculations using measured gas flows, the air flow through the air heaters was determined by heat balance. For efficiency calculated by the B&W method for calculating gas flow splits, the total air flow was calculated stoichiometrically assuming 2 % setting infiltration. Secondary air flow is the difference between total air flow and the measured air flow entering the pulverizers. The primary/secondary air flow split is required to determine the average entering air temperature for the efficiency calculations, and is not critical.

IP14_001172

TEST RESULTS

For the final analysis of the results, B&W considers the following methods for reducing the data and calculating the results to be the most accurate:

1. O2 method for calculating excess air and efficiency.

2. Utilizing the primary air flow measured by the plant instrumentation for calculating air/gas flow splits.

In this section, the results of the different calculation methods are presented and discussed. For simplicity of presentation in the tables and discussion, the following nomenclature is used:

1. O2 - O2 method for calculating excess air.

2. CO2 - CO2 method for calculating excess air.

3. MPAF - Calculated air/gas flow splits based on primary air flow to the pulverizers measured by the plant control system. In the text, this is referred to as the 'heat balance method'.

4. TRAV - Calculated air/gas flow splits based on the point by point velocity measurements. In the text, 'measured air/gas flow' refers to directly measured or calculated flows based upon the traverse data.

A summary of the air and gas flow results are shown in Table II. The calculations are contained in Appendix _H. Items of note are:

1. The measured primary air heater gas flow is higher than the gas flow calculated by heat balance. Since the primary air heater gas flow is only about 10 % of the total gas weight, this has no significant impact on the calculations except primary air heater versus secondary air heater leakage. The differences in secondary air heater gas flow follow the primary air heater gas flow, but the percent error is significantly less by virtue of the higher gas flow for the same error.

2. For the 6/25 and 6/26 tests, there is resonable agreement between the calculation methods for air flow to the pulverizers and secondary air heaters. The plant instrumentation is repeatable and thus more believable. Differences would have a slight impact on the weighted average entering air temperature and thus efficiency.

IP14_001173

	6/24/87 AVE		6/25/87 AVE		6/26/87 AVE	
	WEST	EAST	WEST	EAST	WEST	EAST
PRI AH GAS FLOW, KLB/HR						
MPAF / O2	372		349		360	
MPAF / CO2	370		348		362	
TRAV / O2	406	529	373	413	394	418
TRAV / CO2	394	514	363	402	384	407
PRI AH AIR FLOW, KLB/HR						
TO MILLS, TOTAL						
MPAF	1441		1451		1455	
TRAV / O2	1848		1471		1624	
TRAV / CO2	1766		1421		1563	
THRU AH, AVE PER HTR						
MPAF	453		411		443	
TRAV / O2	569		456	471	501	498
TRAV / CO2	555		445	462	486	484
PULV TEMP AIR, TOTAL						
MPAF	536		629		569	
TRAV / O2	711		544		625	
TRAV / CO2	656		514		594	
SEC AH GAS FLOW, KLB/HR						
MPAF / O2	6824		6827		7056	
MPAF / CO2	6610		6634		6846	
TRAV / O2	6633		6739		6963	
TRAV / CO2	6442		6564		6778	
SEC AH AIR FLOW, KLB/HR						
MPAF / O2	5425		5380		5623	
MPAF / CO2	5168		5148		5380	
TRAV / O2	5018		5359		5454	
TRAV / CO2	4842		5178		5272	

TABLE II
AIR & GAS FLOW CALCULATION SUMMARY

TCH-082787

A summary of the air heater leakage results is shown in Table III. The calculations are contained in Appendix H.

1. The composite air heater leakage was very repeatable for all three tests. The maximum deviation from the average is 10 % (0.6 % of total gas weight).

2. The leakage using the CO_2 method is higher than that calculated using the O_2 method, approximately 1.0 % of total gas weight. Due to the average O_2/CO_2 relationship being above the combustion line, B&W considers the O_2 method to be more believable.

3. The west primary air heater leakage is out of line (high) on 6/24 versus 6/25 and 6/26. The east primary air heater leakage is out of line (low) on 6/26 versus 6/24 and 6/25. The average air heater leakage column reflects deleting these two points from the average.

4. There is no significant difference in the primary air heater leakage calculated by either the O_2 or CO_2 method.

5. The primary air heater leakage is higher utilizing the measured gas flow data than the heat balance method since the traverse data indicates a higher primary air heater gas flow.

6. Based on the O_2 method and gas flow calculated by heat balance, the primary air heater leakage guarantee of 163 Klb/hr and secondary air heater leakage guarantee of 314 Klb/hr are met.

	6/24/87		6/25/87		6/26/87		AVERAGE *	
AH LEAKAGE, KLB/HR	TRAV	MPAF	TRAV	MPAF	TRAV	MPAF	TRAV	MPAF
COMPOSITE OF ALL AH'S								
O_2	446		430		509		462	
CO_2	518		525		616		553	
WEST PRI AH								
O_2	150	138	90	84	79	72	85	78
CO_2	140	131	86	82	83	78	85	80
EAST PRI AH								
O_2	111	78	109	92	57	49	110	85
CO_2	105	76	100	86	58	51	103	81
AVE PRI AH								
O_2	266	216	199	176	136	121	195	163
CO_2	250	207	186	168	141	129	188	161
AVE SEC AH								
O_2	180	234	231	254	373	388	267	299
CO_2	268	314	339	356	476	487	365	392

* AVERAGE OMITS 6/24 WEST PAH AND 6/26 EAST PAH DATA

TABLE III - AIR HEATER LEAKAGE SUMMARY

IP14_001175

A comparison of the results of the gas temperature entering the bag house (composite leaving the air heaters) is shown on Table IV and discussed below. The results for the individual air heaters is discussed later.

1. The corrected gas temperature entering the bag house (temperature excluding leakage) is 2 F to 3 F higher using the CO_2 method versus the O_2 method. This is due to the higher calculated leakage. The difference translates to 0.07 % in calculated efficiency.

2. Some concern has been expressed about the high gas temperature (including AH leakage) entering the bag house. The design target value was 280 F. The average for the three tests was 319 F. However, the average entering air temperature during the tests was 95 F versus the average design value of 67 F (64 F entering the secondary and 77 F entering the primary air heaters). Correcting the exit gas temperature for entering air temperature yields an average exit gas temperature of 300 F. The air heater exit gas temperature is expected to decrease on the order of 5 F with the addition of economizer sootblowers.

		6/24/87	6/25/87	6/26/87
GAS ENT BAG HOUSE, F				
	(INCL LKG)	318	321	317
O_2 BASIS	(EXCL LKG)	330	333	331
CO_2 BASIS	(EXCL LKG)	332	336	334
AVE AIR IN TEMP		93	95	96
*ENT BAG HOUSE	(INCL LKG)	301	302	298
AVE ECON GAS OUT		752	747	753

* CORRECTED FOR CONTRACT AVERAGE ENTERING AIR TEMP OF 67 F

TABLE IV - GAS TEMPERATURE ENTERING BAG HOUSE SUMMARY

The efficiency results are shown on Table V. Efficiency was first calculated based on the composite gas temperature entering the bag house. These results were used to calculate total gas flow and air heater leakage. The plant measured primary air flow was used for these calculations. From these results, the measured gas flow data entering the air heaters was adjusted to agree with the total leaving the economizer calculated stoichiometrically. Also the gas conditions leaving the secondary air heater were calculated. A summary of the composite efficiency calculations is contained in Appendix H.

Efficiency was then re-calculated based on the separate primary and secondary air heater data and calculated results. These efficiency calculation results were also corrected to contract conditions (identified by CORR). The correction to contract conditions are for entering air temperature, fuel analysis and excess air. A summary of the composite efficiency calculations is contained in Appendix G.

IP14_001176

It will be observed that the test efficiencies are the same for both the composite and individual air heater basis. Other items of note are:

1. The efficiency for the test conditions is higher using the CO2 method than the O2 method because the calculated excess air and thus dry gas weight is lower even though the gas temperature leaving (excluding leakage) is higher.

2. The method for determining gas and air splits has no impact on the calculated or corrected efficiency.

3. The corrected efficiency is 0.06 % to 0.08 % lower using the CO2 method than the O2 method. This is due to the higher calculated exit gas temperature (excluding leakage) using the CO2 method.

	6/24/87		6/25/87		6/26/87	
EXCESS AIR MEAS BASIS	O2	CO2	O2	CO2	O2	CO2
EXCESS AIR LVG ECON, %	21	16	21	17	23	19
EFFICIENCY, %						
COMPOSITE ANALYSIS						
TEST - MPAF	88.40	88.50	88.53	88.61	88.50	88.58
INDIVIDUAL PRI/SEC AH						
TEST - MPAF	---	---	88.53	---	88.51	---
CORR - MPAF	---	---	88.60	---	88.62	---
TEST - TRAV	---	---	88.54	88.62	88.52	88.60
CORR - TRAV	---	---	88.61	88.53	88.63	88.57

TABLE V - EFFICIENCY SUMMARY

Table VI shows actual versus expected exit gas temperature for the air heaters. This table shows the air heater exit gas temperature as measured (including leakage) and corrected for no leakage for both the O2 and CO2 methods for calculating leakage. Also shown is the expected air heater exit gas temperature for the test conditions for both the measured flow (TRAV) and heat balance (MPAF) methods for determining air and gas flows. B&W's first principle air heater model was used to determine expected air heater performance based on the original predicted performance for the air heaters.

1. The secondary air heater exit gas temperature is 2 to 11 F higher than expected depending upon the test and calculation method. This is well within Air Preheater's guarantee considering test uncertainty.

IP14_001177

2. The primary air heater exit gas temperature is 56 to 70 F higher than expected. The performance of the east and west primary air heaters is similar and repeatable for the two tests. The expected exit gas temperature is approximately the same for the alternate calculation methods.

		6/25/87	6/26/87
SEC AH EXIT GAS TEMPERATURE, F			
TST	(INCL LKG)	324	319
TST - O2	(EXCL LKG)	332	331
EXP - O2 - MPAF	(EXCL LKG)	326	324
EXP - O2 - TRAV	(EXCL LKG)	323	329
TST - CO2	(EXCL LKG)	336	335
EXP - CO2 - TRAV	(EXCL LKG)	325	330

		AVE		AVE	
PRI AH EXIT GAS TEMPERATURE, F		WEST	EAST	WEST	EAST
TST	(INCL LKG)	289	293	295	306
TST - O2	(EXCL LKG)	329	339	329	331
EXP - O2 - MPAF	(EXCL LKG)	264		269	
EXP - O2 - TRAV	(EXCL LKG)	264	283	267	272
TST - CO2	(EXCL LKG)	328	336	332	333
EXP - CO2 - TRAV	(EXCL LKG)	262	280	267	273

TABLE VI - ACTUAL VS EXPECTED AH PERFORMANCE

SUMMARY AND CONCLUSIONS

1. The average efficiency corrected to contract conditions was 88.61 % by the O2 method and 88.55 % by the CO2 method. This meets the guarantee of 88.57 %.

2. The total air heater leakage was 462 Klb/hr by the O2 method and 553 Klb/hr by the CO2 method. The guarantee is 477 Klb/hr. The calculated primary air heater leakage varies between 161 and 195 Klb/hr depending upon the calculation method versus a guarantee of 163 Klb/hr. The calculated secondary air heater leakage varies between 267 and 392 Klb/hr depending upon the calculation method versus a guarantee of 314 Klb/hr. Note that the secondary air heater leakage is the difference between the measured total air heater leakage and the measured primary air heater leakage, thus the high secondary air heater leakage corresponds to the low primary air heater leakage and vice versa.

IP14_001178

3. The secondary air heater exit gas temperature (excluding leakage) is 6 to 7 F higher than expected which is within normal design tolerances when considering test uncertainty.

4. The primary air heaters are not performing as well as expected. The exit gas temperature is on the order of 55 to 65 F higher than expected. This conclusion is independent of the test calculation procedure. The primary air heaters only handle approximately 10 % of the gas flow, thus, the impact of primary air heater performance on average exit temperature is on the order of 6 F.

5. The average gas temperature entering the bag house (including air heater leakage) was 319 F with an entering air temperature of 95 F. Correcting for the contract average entering air temperature of 67 F, the gas temperature entering the bag house would be 300 F, or 20 F higher than expected. Two thirds of this is attributed to air heater performance and one third due to higher than expected gas temperature leaving the boiler. The addition of economizer sootblowers is expected to reduce the boiler gas outlet temperature.

6. Excessive cooling air to upper burner compartments was demonstrated to have a significant impact on steam temperature. Steam temperatures can be maintained by minimizing cooling air and bias firing.

7. While the test results utilizing point by point traverses were repeatable, there is concern on the part of B&W about the uncertainty introduced due to variations with time and coordination between test locations. The test results demonstrated that the arithmetic average of the individual traverse points agreed with the weighted average. For future testing, it is recommended that temperature grids and composite flue gas analysis be utilized. This would have the advantage of reducing test uncertainty by virtue of more samples as well as eliminate the uncertainty due to time and coordination between test locations in that all test locations are measured simultaneously.

IP14_001179

IP14_001180

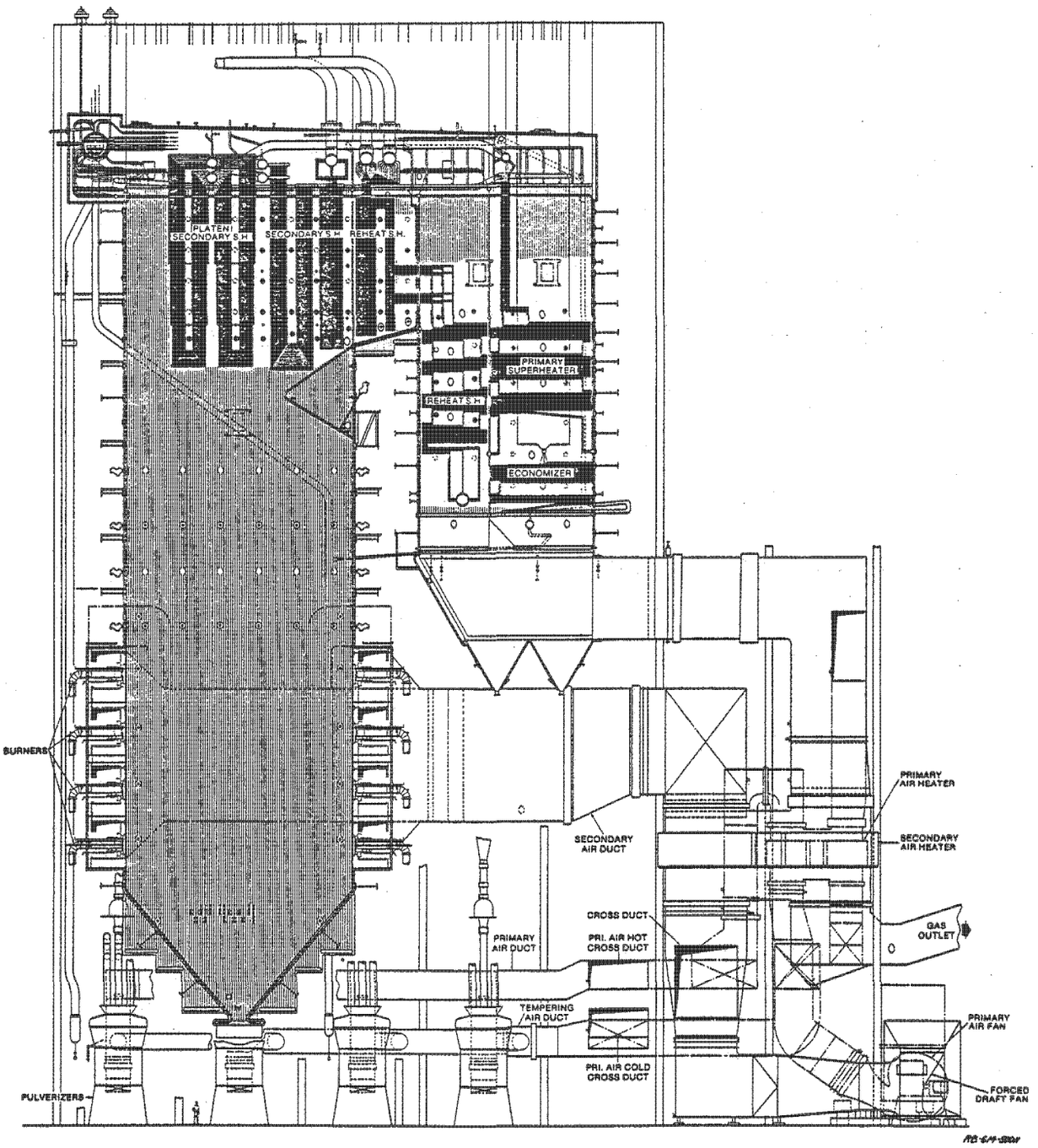

INTERMOUNTAIN POWER PROJECT
UNIT NO. 1
LYNNDYL, UTAH

CAPACITY, LB STEAM PER HOUR 6,480,000
SUPERHEATER OUTLET PRESS., PSI.....2975
SUPERHEATER OUTLET TEMPERATURE, F 1005
REHEATER OUTLET TEMPERATURE, F 1005

BLACK & VEATCH ENGINEERS

BABCOCK & WILCOX RADIANT REHEAT BOILER

BWFP 1810-6

THIS SUMMARY SHEET IS THE PROPERTY OF THE BABCOCK & WILCOX COMPANY AND IS LOANED UPON CONDITION THAT IT IS NOT TO BE COPIED, IN WHOLE OR IN PART OR USED FOR FURNISHING INFORMATION TO OTHERS, OR FOR ANY OTHER PURPOSE DETRIMENTAL TO THE INTERESTS OF THE BABCOCK & WILCOX COMPANY AND IS TO BE RETURNED UPON REQUEST

A — FUEL AS FIRED

SAMPLES		
ANALYSES		
COAL SOURCE: KIND		
CLASS		
SEAM		
MINE		
DISTRICT		
COUNTY		
STATE		UTAH
SIZE	1-5/8"x0	1-5/8"x0
GRINDABILITY	55	48
SURFACE MOISTURE, %		
ASH SOFT. TEMP., F (REDUCING)	2350	2215(H=W
PROX. ANAL.: MOISTURE, TOTAL	18.8	8.3
VOLATILE MATTER	35.5	37.1
FIXED CARBON	37.9	40.6
ASH	7.8	14.0
TOTAL	100.0	100.0

ULTIMATE ANALYSIS FUEL $ BY	PULV. DES WT.	RANGE PC WT.	COAL "F" WT.	PERF. COAL WT.
ASH		8.0-16.0	7.81	14.00
S		0.4- 0.7	0.93	0.55
H_2		4.3- 4.9	4.13	4.56
C		58.5-64.5	55.60	61.45
CH_4				
C_2H_4				
C_2H_6				
C_3H_8				
C_4H_{10}				
C_5H_{12}				
C_6H_{14}				
Cl		0-0.04	0.04	0.02
CO_2				
SO_2				
H_2O	12.0	7.4-9.3	18.80	8.30
N_2		1.0-1.5	0.86	1.20
O_2		9.3-10.5	11.83	9.92
TOTAL	43 GRIND		100.00	100.00
BTU/LB	10,700	10,500 to	9,962	11,010
BTU/CU FT AT 60F 30 IN.HG		2,100		

COAL "F" WILL NOT EXCEED 50% BY WT. OF A COAL MIXTURE

* NOT INCLUDING VALVES & STATIC HEAD

▲ AT PULVERIZER INLET

** INCLUDES (-1.5 INCHES WG) FOR STACK EFFECT

UTILITY BOILER PERFORMANCE SUMMARY

BY RJK APPD. [illegible] DATE 12/2/81

BABCOCK & WILCOX

P23-310-0-150

B — PREDICTED PERFORMANCE

STEAM LEAVING SH, M LB/HR	3965	3965	6100	6100	6600
STEAM LEAVING RH, M LB/HR	3250	3250	5000	5000	5500
AUX. STEAM M LB/HR	0	450	0	450	0
TYPE OF FUEL	PERF.COAL	PERF.COAL	PERF.COAL	PERF.COAL	PERF.COAL
LOAD CONDITION	65%	65%	100%	100%	MCR
EXCESS AIR LEAVING BLOW., %	23	23	17	17	17
NO. OF BURNERS IN OPERATION	42	42	42	42	42
HEAT. AVAIL., MKB/HR (FUEL & HEATED AIR)	5494	5908	7968	8374	8500
TOTAL INPUT, MKB/HR (FUEL & HT. CREDITS)	5261	5662	7563	7940	8049
HEAT CREDITS, MKB/HR	6.3	6.5	7.6	7.8	7.9
FUEL INPUT, MKB/HR	5255	5655	7555	7932	8040
QUANTITY, M LB/HR: FUEL (MCFH-NAT. GAS)	477.3	513.6	686.2	720.4	730.2
FLUE GAS ENTERING AIR HTRS.	5274	5611	7241	7600	7703
AIR TO BURNING EQUIPMENT	4765	5064	6538	6862	6954
AIR HEATER LEAKAGE	367	378	477	498	505
PRESSURE, PSIG: STEAM AT SH OUTLET	2440	2440	2515	2515	2640
STEAM AT RH1 INLET	350	350	539	539	590
STEAM AT RH2 INLET					
PRESSURE DROP: REHEATER 1	16	16	25	28	28
REHEATER 2					
ECONOMIZER *	11	13	25	29	29
DRUM TO SH OUTLET	68	73	160	172	187
TEMPERATURE, F: STEAM: LEAVING SUPERHEATER	1005	1005	1005	1005	1005
LEAVING REHEATER 1	1005	1005	1005	1005	1005
ENTERING REHEATER 1	580	580	620	620	630
LEAVING REHEATER 2					
ENTERING REHEATER 2					
FLUE GAS: LEAVING ECONOMIZER	686	675	725	730	740
LEAVING AH (EXCL. LKG) P/S	312/276	311/277	311/286	311/289	311/294
LEAVING AH (INCL. LKG) P/S	280/267	280/268	280/276	280/279	280/280
WATER ENTERING ECONOMIZER	490	490	543	543	555
AIR: ENTERING UNIT PRI/SEC	74/62	74/63	77/64	78/65	78/65
LEAVING AIR HEATER PRI/SEC	355/618	375/624	412/635	418/636	420/645
RESISTANCE, IN. OF WATER: GAS: FURNACE & CONVECTION BANKS	2.2	1.9	2.7	3.3	3.1
FLUES TO AH OUTLET	0.9	1.0	1.4	1.5	1.5
AIR HEATER	2.1	2.3	3.8	4.1	4.2
TOT. FROM FURNACE TO AH OUTLET	5.2	5.2	7.9	8.9	8.8
AIR: FUEL BURNERS & WINDBOX **	-0.3	0.0	1.1	1.4	1.4
DUCTS & FLOW METER	1.0	1.2	2.1	2.3	2.3
AIR HEATER	1.1	1.2	2.0	2.3	2.3
TOT. FROM AH INLET TO FURN.	1.8	2.2	5.2	6.0	6.0
HEAT LOSS-EFF., %: DRY GAS	4.92	4.84	4.84	4.86	4.98
H_2 & H_2O IN FUEL	5.14	5.14	5.15	5.15	5.16
MOISTURE IN AIR	0.07	0.07	0.07	0.07	0.07
UNBURNED COMBUSTIBLE	0.2	0.2	0.2	0.2	0.2
RADIATION	0.24	0.22	0.17	0.16	0.15
UNACC. FOR & MFRS. MARGIN	1.00	1.00	1.00	1.00	1.00
TOTAL HEAT LOSS	11.57	11.47	11.43	11.44	11.56
*GROSS EFFICIENCY OF UNIT, %	88.43	88.53	88.57	88.56	88.44
HEAT CREDITS ADJUSTMENT, %	0.01	0.01	0.01	0.01	0.01
NET EFFICIENCY A.S.M.E. PTC-4.1, %	88.44	88.54	88.58	88.57	88.45
FUEL EFFICIENCY, % (OUTPUT/FUEL INPUT)	88.55	88.65	88.67	88.66	88.54
PULVERIZERS: NO. IN USE PER BOILER	4 7	5 7	6 7	6 7	6 7
TOTAL POWER, KW HP/ON MOTOR OUTPUT					
% THRU 200 U.S. SIEVE	71 76	72 75	71 73	71 72	70 72

PREDICTED PERFORMANCE IS BASED ON COMBUSTION AIR ENTERING UNIT WITH .0067 LB MOISTURE/LB DRY AIR, ON 25.18 IN. HG. BAROMETRIC PRESSURE, ON CONDITIONS & EQUIPMENT GIVEN ON THIS SUMMARY SHEET & ON ARRANGEMENT SHOWN ON DRAWING

C — EQUIPMENT PER UNIT

TYPE	RADIANT
BY	RBC
DESIGN PRESSURE (SH/RH) - 2975 PSIG/750 PSIG	
FURNACE PRESSURE PART. HEATING SURFACE, SQ FT: WATER COOLED SCREEN (CIRCUMFERENTIAL)	
WATER COOLED (PROJECTED)	59,130
SUPERHEATER (PERIPHERAL) 54" CENTERLINE	23,244
SUPERHEATER (PERIPHERAL) 24" CENTERLINE	35,665
SUPERHEATER (PROJECTED)	4,367
TOTAL FURNACE HEATING SURFACE	122,406
CONVECTION: SATURATED (CIRCUMFERENTIAL)	13,035
SUPERHEATER (CIRCUMFERENTIAL)	279,082
REHEATER 1 (CIRCUMFERENTIAL	300,263
REHEATER 2 (CIRCUMFERENTIAL)	
ECONOMIZER	99,902
TOTAL CONVECTION HEATING SURFACE	692,282
TOTAL FURN. & CONV. PRESSURE PART. HTG. SURF.	814,688
FLAT PROJECTED FURNACE HEATING SURFACE: TO FACE OF PLATENS (24" CENTERLINE)	87,405
TO FACE OF CONVECTION SURFACE (12" CENTERLINE)	125,510
FURNACE VOLUME, CU FT	962,055
AIR HEATER: TYPE REGENERATIVE-SECONDARY	NO.2-33-1/2 VI-64
TOTAL HEATING SURFACE, SQ FT	1,047,800
TYPE: REGENERATIVE-PRIMARY	NO. 2-24-1/2 VI-44
TOTAL HEATING SURFACE, SQ.FT.	135,600
FUEL BURNER: TYPE DUAL REGISTER	
NO. 48 (6 BURNERS PER PULVERIZER)	
PULVERIZER: TYPE MPS SIZE 89GR NO. 8	
CAPACITY OF 6 PULV. IS 6600 M LB STEAM/HR BASED ON 48 GRIND	
11,010 BTU COAL AT 70 % THRU 200 U.S.S. SIEVE	
FOR 113.3 LB COAL/PULV.-HR AT 70 % THRU 200 U.S.S. SIEVE MIN. GRIND	
IS 43. MAXIMUM TOTAL MOISTURE IS 12 % REQUIRING 465 % AIR	
22% TOTAL MOISTURE COAL REQUIRES 540 % AIR	
STEAM TEMP. CONTROL: SUPERHEAT BY SPRAY ATTEMPERATION	
REHEAT BY GAS BIASING	
UNIT CONSTRUCTION FEATURES: MEMBRANE WALL	
BALANCE DRAFT	
INDOOR UNIT	

"AS SOLD" ARRANGEMENT

*CORRESPONDING TO ABB. METHOD PAR. 1.07 A.S.M.E. PTC-4.1

REVISIONS NO.	DESCRIPTION	BY	DATE

INTERMOUNTAIN POWER PROJECT

IP14_001181

ATTACHMENTS

A DATA LISTING - AIR HEATER/EFFICIENCY TEST

B DATA LISTING - BIAS FIRING TEST

C LOCATION OF AIR AND FLUE GAS TRAVERSE POINTS

D TRAVERSE DATA & CALCULATIONS - TEST 6/24/87

E TRAVERSE DATA & CALCULATIONS - TEST 6/25/87

F TRAVERSE DATA & CALCULATIONS - TEST 6/26/87

G EFFICIENCY CALCULATIONS - INDIVIDUAL AH BASIS

H AIR AND GAS FLOW CALCULATIONS

- CALCULATION METHODOLOGY
- EFFICIENCY CALCULATIONS - COMPOSITE GAS OUTLET
- SECONDARY AH GAS OUTLET CALCULATIONS
- MEASURED AIR AND GAS FLOW CALCULATIONS

I FUEL & ASH ANALYSIS - UNBURNED CARBON CALCULATIONS

J O2 VS CO2 LINEAR REGRESSION ANALYSIS RESULTS

K TABULATION OF ARITHMETIC VS WEIGHTED AVE AIR AND FLUE GAS DATA

L EXPECTED AIR HEATER PERFORMANCE CALCULATIONS

M BOILER OUTPUT CALCULATIONS

IP14_001182

ATTACHMENT C

LOCATION OF AIR AND FLUE GAS TRAVERSE POINTS

	VEL HD	STATIC PRESS	TEMP	ORSAT	NO POINTS
SEC AH AIR IN	---	+	+	---	16
SEC AH AIR OUT	+	+	+	---	162
ECON GAS OUT	+	+	+	+	196
BAG HOUSE IN	+	+	+	+	168
SEC AH GAS IN	+	+	+	---	196
SEC AH GAS OUT	---	+	---	---	1
PRI AH AIR IN	---	+	+	---	12
PRI AH AIR OUT	+	+	+	---	30
PRI AH GAS IN	+	+	+	+	36
PRI AH GAS OUT	+	+	+	+	24
COLD AIR TO MILLS	+	+	---	---	48

AH TEST DATA SUMMARY RB-614

IP14_001184

'S 247-1

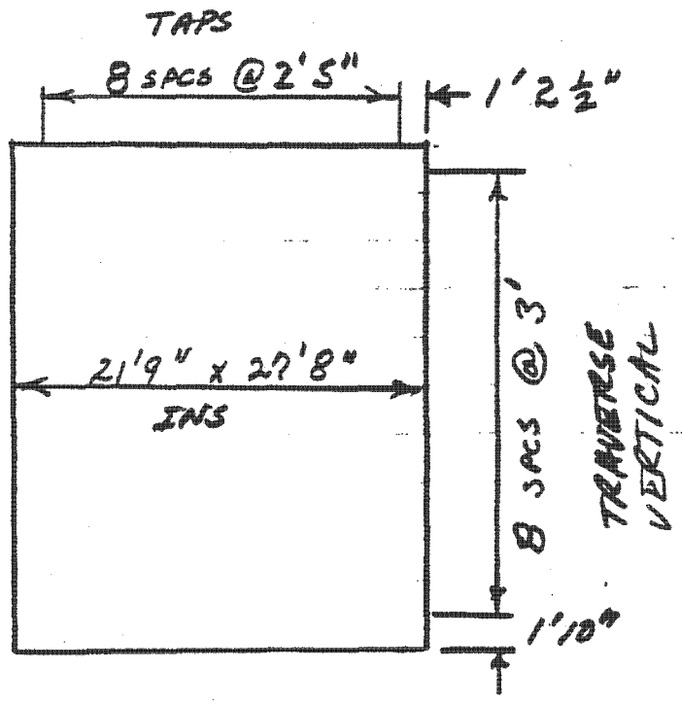

SEC AH AIR OUT
(ONE OF TWO AH's)

81 POINTS / AH

TAPS EXISTING

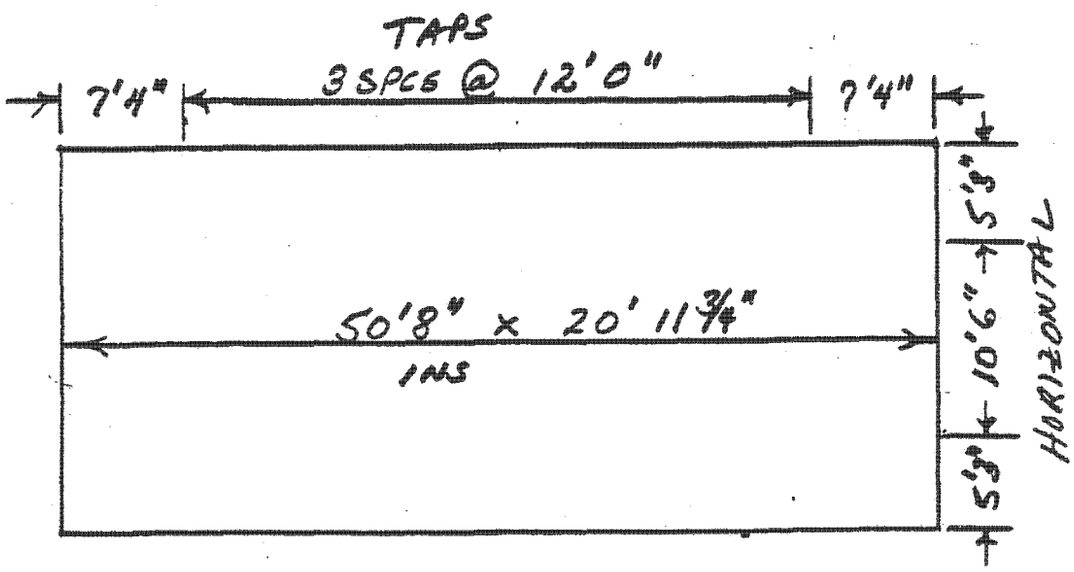

SEC AH
AIR INLET

(ONE OF
TWO SHOWN)

8 POINTS
PER SIDE

TAPS EXISTING
INSTALL PROBES w/TC @ INTERSECTIONS SHOWN

BABCOCK & WILCOX		REVISION
DEPARTMENT	DATE 4/27/87 BY TCH	REV 5/3/87
TRAVERSE POINTS	CHECKED DATE BY	REV 8/26/87
	JOB NO. RB-614	SHEET 1 OF 1

IP14_001185

S 247-1

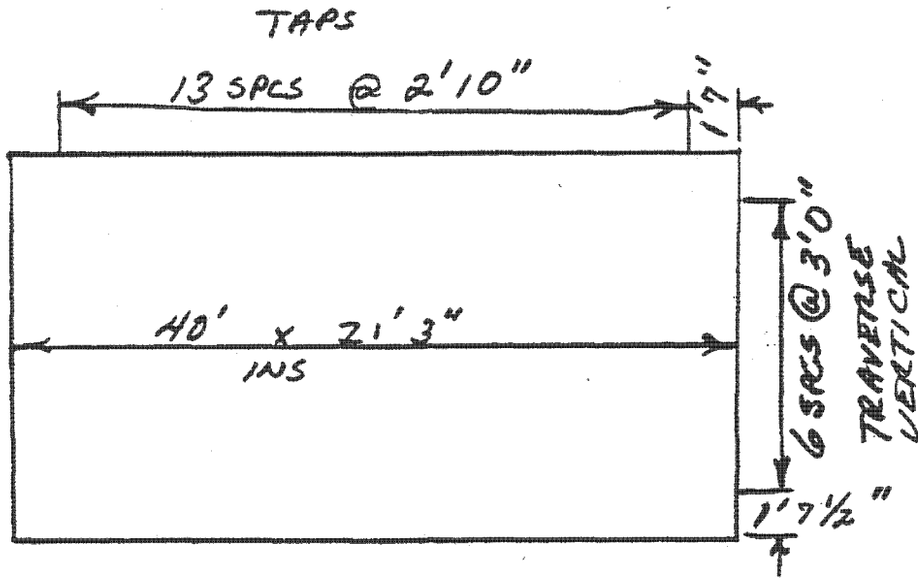

ECONOMIZER GAS OUTLET

(ONE SIDE SHOWN)

98 POINTS/SIDE

INSTALL NEW TAPS DOWNSTREAM OF EXISTING GRID

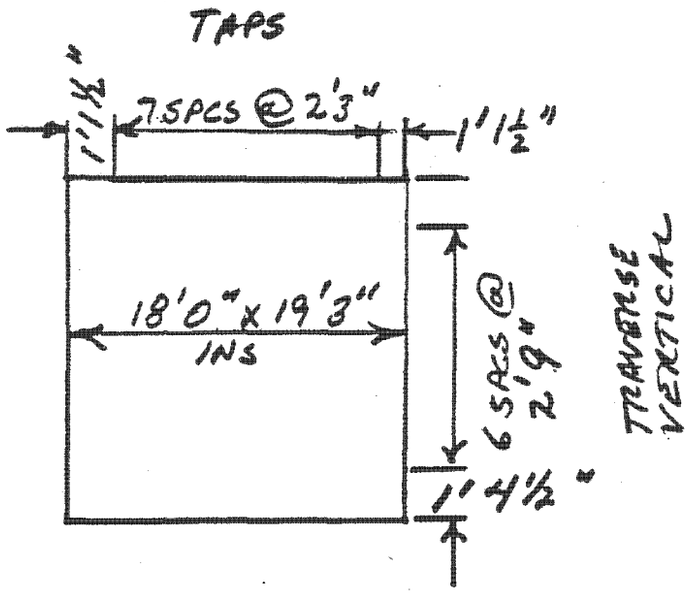

BAG HOUSE INLET COMPOSITE OF PRI & SEC AH GAS OUTLETS

(ONE OF THREE OUTLETS SHOWN)

56 POINTS/OUTLET

TAPS EXISTING FLANGES W/2" CONNECTION REQ'D FOR TRAVERSING

BABCOCK & WILCOX		REVISION REV 5/3/87
DEPARTMENT TRAVERSE POINTS	DATE 4/27/87 BY TCH	
	CHECKED DATE BY	
	JOB NO. RB-614	SHEET 2 OF

IP14_001186

'S 247-1

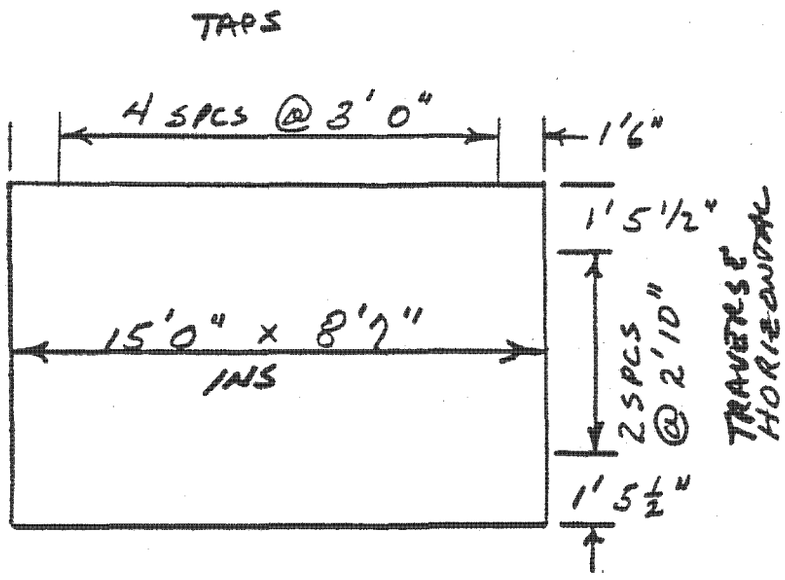

PRIMARY AH
AIR OUT

(ONE OF TWO AH'S)

15 POINTS PER AH

INSTALL NEW TAPS (SEE SKETCH SIDE ELEV.)

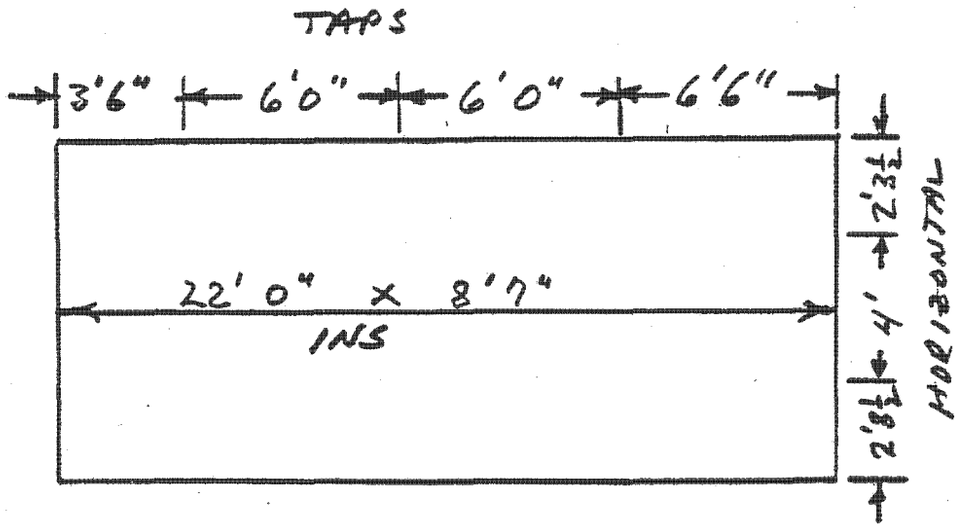

PRIMARY AH
AIR INLET

(ONE OF TWO AH'S)

6 POINTS PER AH

TAPS EXISTING
INSTALL PROBES W/TC'S
AT INTERSECTIONS SHOWN

BABCOCK & WILCOX DEPARTMENT TRAVERSE POINTS	DATE 4/27/87 BY TCH CHECKED DATE BY JOB NO. RB-614	REVISION REV 5/3/87 SHEET 3 OF 7

IP14_001187

247-1

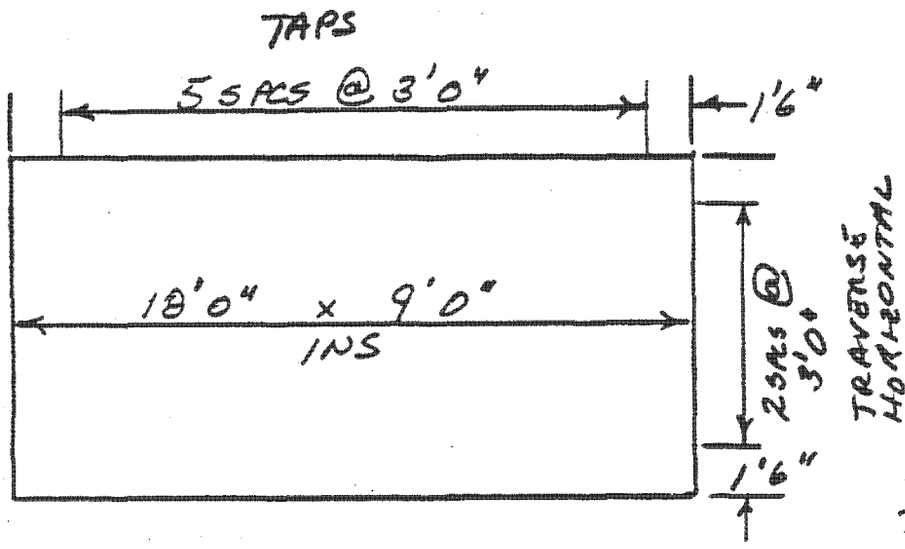

PRI AH GAS INLET

(ONE OF TWO AH's)

18 PTS PER AH

INSTALL NEW TAPS (SEE SKETCH SECT. SIDE VIEW)

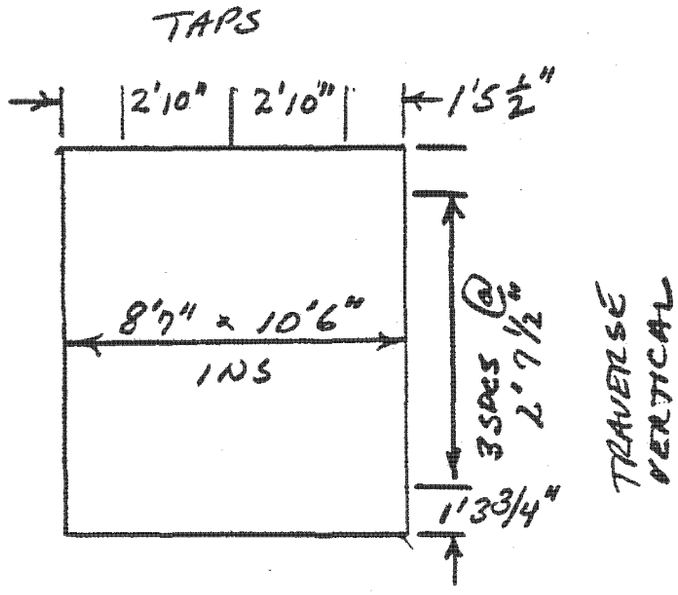

PRI AH GAS OUTLET

(ONE OF TWO AH's)

12 PTS PER AH

TAPS EXISTING (REMOVE EXISTING TEST PROBES)

BABCOCK & WILCOX		REVISION REV 5/3/87
DEPARTMENT	DATE 4/27/87 BY TCH	
TRAVERSE POINTS	CHECKED DATE BY	
	JOB NO. RB-614	SHEET 4 OF

IP14_001188

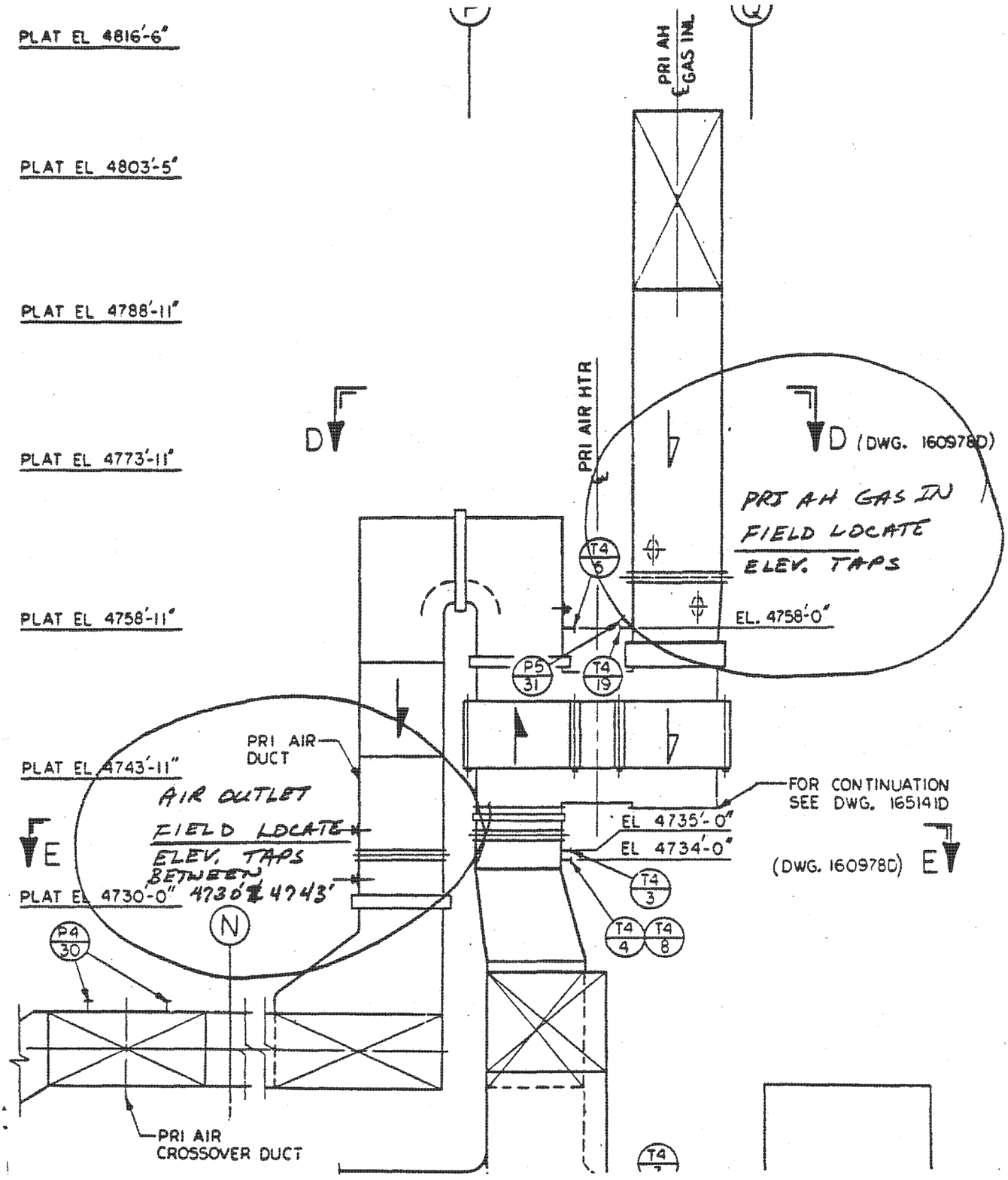

PRI AH - SIDE ELEV.

RB-614
TCH
5/3/87
SHEET 5 OF 7

IP14_001189

S 247-1

TAPS
TRAVERSE HORIZONTAL

COLD AIR TO MILLS

(ONE OF TWO AH'S)

24 POINTS PER AH

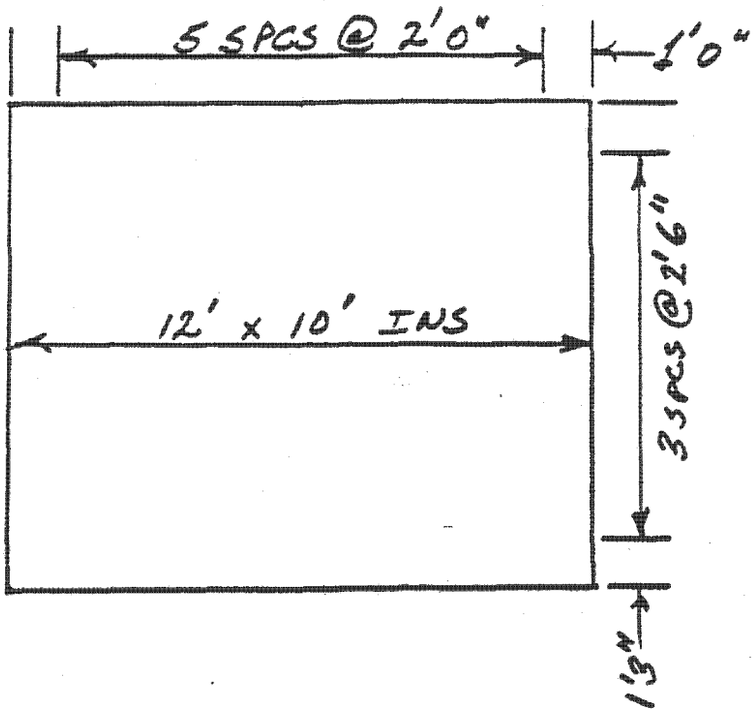

BABCOCK & WILCOX		REVISION
DEPARTMENT	DATE 8/26/87 BY TCH	
TRAVERSE POINTS	CHECKED DATE BY	
	JOB NO. RB-614	SHEET 6 OF 2

IP14_001190

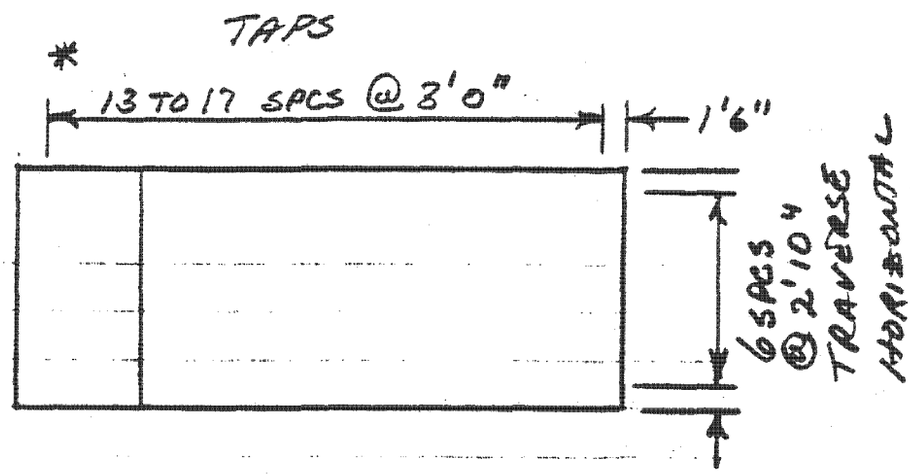

* QUANTITY DEPENDS ON ELEVATION TO BE LOCATED IN FIELD

FINAL - 14 TAPS @ 2' 10"

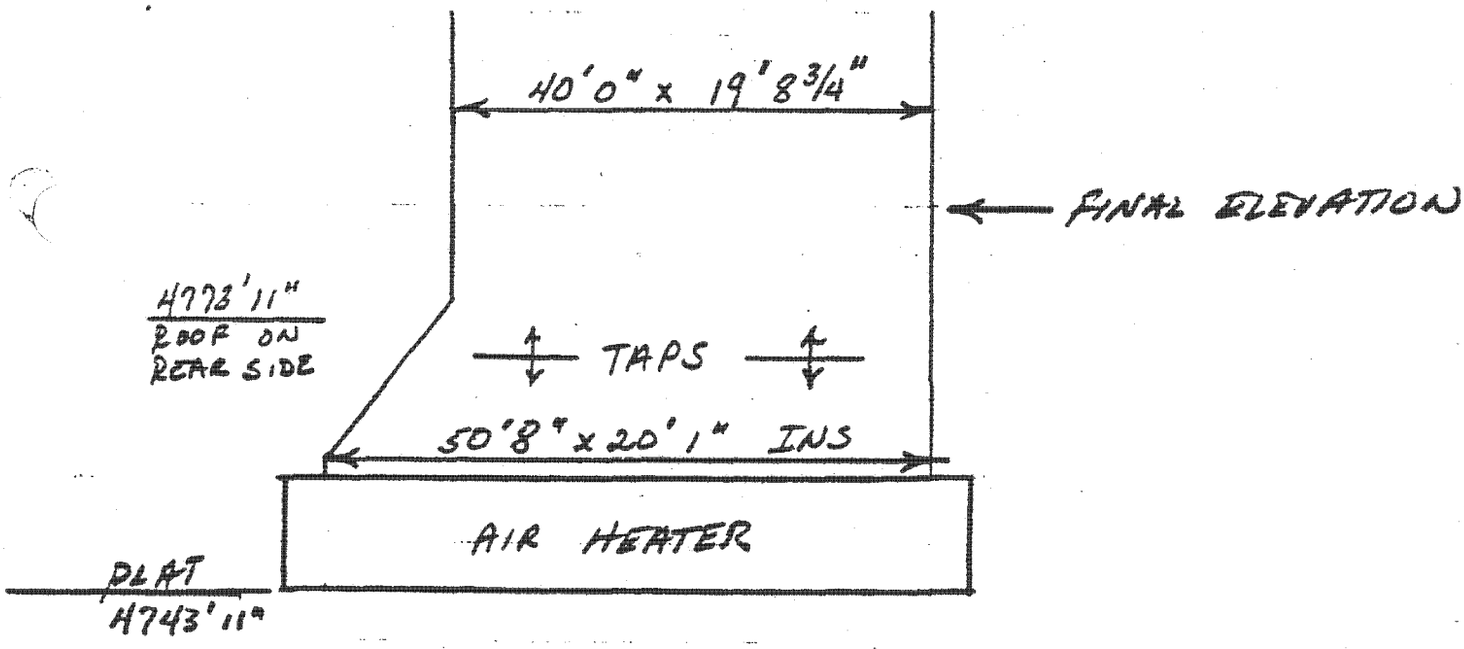

91 - 119 POINTS PER AH

∴ INSTALL NEW TAPS - ELEV. TO BE LOCATED IN FIELD

SEC AH GAS INLET
(WEST SIDE SHOWN)

RB-614
TCH
5/3/87
REV 8/26/87
SHEET 7 OF 7

ATTACHMENT G

EFFICIENCY CALCULATIONS - INDIVIDUAL AH BASIS

ATTACHMENT G

EFFICIENCY CALCULATIONS

4A	7
4M	9
4MC	11
5A	1
5M	3
5MC	5

			CONTRACT SUMMARY SHEET	TEST 4A CORRECTED FOR CONTR. CONDITIONS	TEST 4A WITH TEST CONDITIONS
Fuel			CONTRACT	CONTRACT	TEST
Air Temp Ent AH	PRI/SEC	F	77/ 64	77/ 64	114/ 90
Air Temp Lvg AH	PRI/SEC	F	582/ 647	0/ 0	480/ 648
Air Flow Lvg AH (1)	PRI/SEC	MLB/HR	1335/5184	1451/5094	1451/5380
AH Air By-Pass Flow		MLB/HR	497.8	629.0	629.0
Mill Inlet Temp		F	397.2	0.0	322.3
Ave Air Temp Ent AH		F	66.7	66.9	95.4
Gas Temp Lvg Econ		F	736.0	747.0	747.0
Gas Temp Ent AH	PRI/SEC	F	736/ 736	734/ 747	734/ 747
Gas Temp Lvg AH (Incl Lkg)	PRI/SEC	F	279/ 282	-/ -	291/ 324
Gas Temp Lvg AH (Excl Lkg)	PRI/SEC	F	313/ 292	310/ 316	334/ 332
Gas Flow Ent AH	PRI/SEC	MLB/HR	924/6286	698/6546	698/6827
Ave Gas Temp Lvg AH (Excl Lkg)		F	294.7	315.3	332.6
Excess Air Lvg Econ		%	17.0	17.0	21.0
Excess Air Ent Pri AH		%	---	17.0	18.2
Excess Air Ent Sec AH		%	---	17.0	21.0
Excess Air Lvg Sec AH		%	---	---	25.9
Excess Air Lvg Pri AH		%	---	---	50.4
Excess Air to Burners		%	15.0	15.0	18.9
Sec AH Leakage		MLB/HR	315	---	254
Pri AH Leakage		MLB/HR	169	---	176
Moisture In Air		LB/LB DA	.0067	.0067	.0044
Dry Gas Wt Lvg Econ		LB/LB Fuel	---	10.005	11.471
Dry Air Wt to Burners		LB/LB Fuel	---	9.477	10.918
Wet Gas Wt Lvg Econ		LB/LB Fuel	---	10.561	12.080
Losses		%			
Dry Gas			4.84	5.42	5.41
H2O in Fuel			(2) 5.15	.88	.70
H2 in Fuel			---	4.32	4.62
Moisture in Air			.07	.07	.04
Unburned Combustible			.20	.04	.04
Radiation			.17	.17	.16
Unaccounted			(3) 1.00	.50	.50
Summation of Losses			11.43	11.40	11.47
Efficiency		%	88.57	88.60	88.53
Unit Output		MKB	6691.5	6691.5	6662.5
Fuel Input		MKB	7555.0	7552.5	7525.7
Fuel Rate		MLB/HR	686.2	686.0	623.0

(1) Includes By-Pass Flow (2) Includes H2 in Fuel Loss
(3) Includes Manufacturer's Margin of .5 %

TEST 4A : 06/25/87 : 1015-1530 : 847 MW : O2/PRI-SEC TCH-080487

			CONTRACT SUMMARY SHEET	TEST 4M CORRECTED FOR CONTR. CONDITIONS	TEST 4M WITH TEST CONDITIONS
Fuel			CONTRACT	CONTRACT	TEST
Air Temp Ent AH	PRI/SEC	F	77/ 64	77/ 64	114/ 90
Air Temp Lvg AH	PRI/SEC	F	582/ 647	0/ 0	480/ 648
Air Flow Lvg AH (1)	PRI/SEC	MLB/HR	1335/5184	1471/5073	1471/5360
AH Air By-Pass Flow		MLB/HR	497.8	544.0	544.0
Mill Inlet Temp		F	397.2	0.0	322.3
Ave Air Temp Ent AH		F	66.7	66.9	95.5
Gas Temp Lvg Econ		F	736.0	747.0	747.0
Gas Temp Ent AH	PRI/SEC	F	736/ 736	734/ 747	734/ 747
Gas Temp Lvg AH (Incl Lkg)	PRI/SEC	F	279/ 282	-/ -	291/ 325
Gas Temp Lvg AH (Excl Lkg)	PRI/SEC	F	313/ 292	310/ 316	334/ 332
Gas Flow Ent AH	PRI/SEC	MLB/HR	924/6286	786/6457	786/6739
Ave Gas Temp Lvg AH (Excl Lkg)		F	294.7	315.2	332.6
Excess Air Lvg Econ		%	17.0	17.0	21.0
Excess Air Ent Pri AH		%	---	17.0	18.2
Excess Air Ent Sec AH		%	---	17.0	21.0
Excess Air Lvg Sec AH		%	---	---	25.5
Excess Air Lvg Pri AH		%	---	---	50.4
Excess Air to Burners		%	15.0	15.0	18.9
Sec AH Leakage		MLB/HR	315	---	231
Pri AH Leakage		MLB/HR	169	---	198
Moisture In Air		LB/LB DA	.0067	.0067	.0044
Dry Gas Wt Lvg Econ		LB/LB Fuel	---	10.005	11.471
Dry Air Wt to Burners		LB/LB Fuel	---	9.477	10.918
Wet Gas Wt Lvg Econ		LB/LB Fuel	---	10.561	12.080
Losses		%			
Dry Gas			4.84	5.41	5.40
H2O in Fuel			(2) 5.15	.88	.70
H2 in Fuel			---	4.32	4.62
Moisture in Air			.07	.07	.04
Unburned Combustible			.20	.04	.04
Radiation			.17	.17	.16
Unaccounted			(3) 1.00	.50	.50
Summation of Losses			11.43	11.39	11.46
Efficiency		%	88.57	88.61	88.54
Unit Output		MKB	6691.5	6691.5	6662.5
Fuel Input		MKB	7555.0	7551.6	7524.8
Fuel Rate		MLB/HR	686.2	685.9	622.9

(1) Includes By-Pass Flow (2) Includes H2 in Fuel Loss
(3) Includes Manufacturer's Margin of .5 %

TEST 4M : 06/25/87 : 1015-1530 : 847 MW : O2/PRI-SEC/MEAS FLOW |TCH-080587

			CONTRACT SUMMARY SHEET	TEST 4MC CORRECTED FOR CONTR. CONDITIONS	TEST 4MC WITH TEST CONDITIONS
Fuel			CONTRACT	CONTRACT	TEST
Air Temp Ent AH	PRI/SEC	F	77/ 64	77/ 64	114/ 90
Air Temp Lvg AH	PRI/SEC	F	582/ 647	0/ 0	480/ 648
Air Flow Lvg AH (1)	PRI/SEC	MLB/HR	1335/5184	1421/5129	1421/5177
AH Air By-Pass Flow		MLB/HR	497.8	514.0	514.0
Mill Inlet Temp		F	397.2	0.0	322.3
Ave Air Temp Ent AH		F	66.7	66.8	95.5
Gas Temp Lvg Econ		F	736.0	747.0	747.0
Gas Temp Ent AH	PRI/SEC	F	736/ 736	734/ 747	734/ 747
Gas Temp Lvg AH (Incl Lkg)	PRI/SEC	F	279/ 282	-/ -	291/ 325
Gas Temp Lvg AH (Excl Lkg)	PRI/SEC	F	313/ 292	309/ 319	333/ 336
Gas Flow Ent AH	PRI/SEC	MLB/HR	924/6286	765/6485	765/6563
Ave Gas Temp Lvg AH (Excl Lkg)		F	294.7	318.1	335.5
Excess Air Lvg Econ		%	17.0	17.0	17.1
Excess Air Ent Pri AH		%	---	17.0	15.4
Excess Air Ent Sec AH		%	---	17.0	17.1
Excess Air Lvg Sec AH		%	---	---	24.4
Excess Air Lvg Pri AH		%	---	---	45.8
Excess Air to Burners		%	15.0	15.0	15.0
Sec AH Leakage		MLB/HR	315	---	327
Pri AH Leakage		MLB/HR	169	---	186
Moisture In Air		LB/LB DA	.0067	.0067	.0044
Dry Gas Wt Lvg Econ		LB/LB Fuel	---	10.005	11.167
Dry Air Wt to Burners		LB/LB Fuel	---	9.477	10.556
Wet Gas Wt Lvg Econ		LB/LB Fuel	---	10.561	11.774
Losses		%			
Dry Gas			4.84	5.48	5.32
H2O in Fuel			(2) 5.15	.88	.70
H2 in Fuel			---	4.33	4.62
Moisture in Air			.07	.07	.04
Unburned Combustible			.20	.04	.04
Radiation			.17	.17	.16
Unaccounted			(3) 1.00	.50	.50
Summation of Losses			11.43	11.47	11.38
Efficiency		%	88.57	88.53	88.62
Unit Output		MKB	6691.5	6691.5	6662.5
Fuel Input		MKB	7555.0	7558.5	7518.1
Fuel Rate		MLB/HR	686.2	686.5	622.4

(1) Includes By-Pass Flow (2) Includes H2 in Fuel Loss
(3) Includes Manufacturer's Margin of .5 %

TEST 4MC: 06/25/87 : 1015-1530 : 847 MW :CO2/PRI-SEC/MEAS FLOW |TCH-080587

			CONTRACT SUMMARY SHEET	TEST 5A CORRECTED FOR CONTR. CONDITIONS	TEST 5A WITH TEST CONDITIONS
Fuel			CONTRACT	CONTRACT	TEST
Air Temp Ent AH	PRI/SEC	F	77/ 64	77/ 64	114/ 91
Air Temp Lvg AH	PRI/SEC	F	582/ 647	0/ 0	473/ 655
Air Flow Lvg AH (1)	PRI/SEC	MLB/HR	1335/5184	1455/5087	1455/5622
AH Air By-Pass Flow		MLB/HR	497.8	568.9	568.9
Mill Inlet Temp		F	397.2	0.0	333.5
Ave Air Temp Ent AH		F	66.7	66.9	95.5
Gas Temp Lvg Econ		F	736.0	752.8	752.8
Gas Temp Ent AH	PRI/SEC	F	736/ 736	740/ 746	740/ 746
Gas Temp Lvg AH (Incl Lkg)	PRI/SEC	F	279/ 282	-/ -	300/ 319
Gas Temp Lvg AH (Excl Lkg)	PRI/SEC	F	313/ 292	306/ 314	330/ 331
Gas Flow Ent AH	PRI/SEC	MLB/HR	924/6286	720/6521	720/7055
Ave Gas Temp Lvg AH (Excl Lkg)		F	294.7	313.5	331.1
Excess Air Lvg Econ		%	17.0	17.0	22.6
Excess Air Ent Pri AH		%	---	17.0	19.1
Excess Air Ent Sec AH		%	---	17.0	22.6
Excess Air Lvg Sec AH		%	---	---	29.9
Excess Air Lvg Pri AH		%	---	---	40.6
Excess Air to Burners		%	15.0	15.0	20.5
Sec AH Leakage		MLB/HR	315	---	388
Pri AH Leakage		MLB/HR	169	---	120
Moisture In Air		LB/LB DA	.0067	.0067	.0046
Dry Gas Wt Lvg Econ		LB/LB Fuel	---	10.003	11.848
Dry Air Wt to Burners		LB/LB Fuel	---	9.475	11.287
Wet Gas Wt Lvg Econ		LB/LB Fuel	---	10.558	12.458
Losses		%			
Dry Gas			4.84	5.38	5.49
H2O in Fuel			(2) 5.15	.88	.69
H2 in Fuel			---	4.32	4.54
Moisture in Air			.07	.07	.05
Unburned Combustible			.20	.06	.06
Radiation			.17	.17	.16
Unaccounted			(3) 1.00	.50	.50
Summation of Losses			11.43	11.38	11.49
Efficiency		%	88.57	88.62	88.51
Unit Output		MKB	6691.5	6691.5	6734.6
Fuel Input		MKB	7555.0	7550.8	7608.9
Fuel Rate		MLB/HR	686.2	685.8	624.1

(1) Includes By-Pass Flow (2) Includes H2 in Fuel Loss
(3) Includes Manufacturer's Margin of .5 %

TEST 5A : 06/26/87 : 1045-1625 : 853 MW : O2/PRI-SEC TCH-080487

			CONTRACT SUMMARY SHEET	TEST 5AM CORRECTED FOR CONTR. CONDITIONS	TEST 5AM WITH TEST CONDITIONS
Fuel			CONTRACT	CONTRACT	TEST
Air Temp Ent AH	PRI/SEC	F	77/ 64	77/ 64	114/ 91
Air Temp Lvg AH	PRI/SEC	F	582/ 647	0/ 0	476/ 651
Air Flow Lvg AH (1)	PRI/SEC	MLB/HR	1335/5184	1624/4917	1624/5452
AH Air By-Pass Flow		MLB/HR	497.8	625.0	625.0
Mill Inlet Temp		F	397.2	0.0	333.5
Ave Air Temp Ent AH		F	66.7	67.2	96.1
Gas Temp Lvg Econ		F	736.0	752.8	752.8
Gas Temp Ent AH	PRI/SEC	F	736/ 736	740/ 746	740/ 746
Gas Temp Lvg AH (Incl Lkg)	PRI/SEC	F	279/ 282	-/ -	300/ 319
Gas Temp Lvg AH (Excl Lkg)	PRI/SEC	F	313/ 292	306/ 314	330/ 331
Gas Flow Ent AH	PRI/SEC	MLB/HR	924/6286	813/6428	813/6961
Ave Gas Temp Lvg AH (Excl Lkg)		F	294.7	313.4	331.1
Excess Air Lvg Econ		%	17.0	17.0	22.6
Excess Air Ent Pri AH		%	---	17.0	19.1
Excess Air Ent Sec AH		%	---	17.0	22.6
Excess Air Lvg Sec AH		%	---	---	29.9
Excess Air Lvg Pri AH		%	---	---	40.6
Excess Air to Burners		%	15.0	15.0	20.5
Sec AH Leakage		MLB/HR	315	---	383
Pri AH Leakage		MLB/HR	169	---	135
Moisture In Air		LB/LB DA	.0067	.0067	.0046
Dry Gas Wt Lvg Econ		LB/LB Fuel	---	10.003	11.848
Dry Air Wt to Burners		LB/LB Fuel	---	9.475	11.287
Wet Gas Wt Lvg Econ		LB/LB Fuel	---	10.558	12.458
Losses		%			
Dry Gas			4.84	5.37	5.48
H2O in Fuel			(2) 5.15	.88	.69
H2 in Fuel			---	4.32	4.54
Moisture in Air			.07	.07	.05
Unburned Combustible			.20	.06	.06
Radiation			.17	.17	.16
Unaccounted			(3) 1.00	.50	.50
Summation of Losses			11.43	11.37	11.48
Efficiency		%	88.57	88.63	88.52
Unit Output		MKB	6691.5	6691.5	6734.6
Fuel Input		MKB	7555.0	7549.9	7608.0
Fuel Rate		MLB/HR	686.2	685.7	624.0

(1) Includes By-Pass Flow (2) Includes H2 in Fuel Loss
(3) Includes Manufacturer's Margin of .5 %

TEST 5M : 06/26/87 : 1045-1625 : 853 MW : O2/PRI-SEC/MEAS FLOW TCH-080487

			CONTRACT SUMMARY SHEET	TEST 5MC CORRECTED FOR CONTR. CONDITIONS	TEST 5MC WITH TEST CONDITIONS
Fuel			CONTRACT	CONTRACT	TEST
Air Temp Ent AH	PRI/SEC	F	77/ 64	77/ 64	114/ 91
Air Temp Lvg AH	PRI/SEC	F	582/ 647	0/ 0	476/ 660
Air Flow Lvg AH (1)	PRI/SEC	MLB/HR	1335/5184	1563/4983	1563/5270
AH Air By-Pass Flow		MLB/HR	497.8	594.0	594.0
Mill Inlet Temp		F	397.2	0.0	333.5
Ave Air Temp Ent AH		F	66.7	67.1	96.0
Gas Temp Lvg Econ		F	736.0	752.8	752.8
Gas Temp Ent AH	PRI/SEC	F	736/ 736	740/ 746	740/ 746
Gas Temp Lvg AH (Incl Lkg)	PRI/SEC	F	279/ 282	-/ -	300/ 319
Gas Temp Lvg AH (Excl Lkg)	PRI/SEC	F	313/ 292	308/ 317	332/ 334
Gas Flow Ent AH	PRI/SEC	MLB/HR	924/6286	791/6454	791/6777
Ave Gas Temp Lvg AH (Excl Lkg)		F	294.7	316.3	333.8
Excess Air Lvg Econ		%	17.0	17.0	18.6
Excess Air Ent Pri AH		%	---	17.0	15.2
Excess Air Ent Sec AH		%	---	17.0	18.6
Excess Air Lvg Sec AH		%	---	---	28.3
Excess Air Lvg Pri AH		%	---	---	37.9
Excess Air to Burners		%	15.0	15.0	16.5
Sec AH Leakage		MLB/HR	315	---	462
Pri AH Leakage		MLB/HR	169	---	141
Moisture In Air		LB/LB DA	.0067	.0067	.0046
Dry Gas Wt Lvg Econ		LB/LB Fuel	---	10.003	11.531
Dry Air Wt to Burners		LB/LB Fuel	---	9.475	10.909
Wet Gas Wt Lvg Econ		LB/LB Fuel	---	10.558	12.138
Losses		%			
Dry Gas			4.84	5.43	5.40
H2O in Fuel			(2) 5.15	.88	.69
H2 in Fuel			---	4.32	4.54
Moisture in Air			.07	.07	.05
Unburned Combustible			.20	.06	.06
Radiation			.17	.17	.16
Unaccounted			(3) 1.00	.50	.50
Summation of Losses			11.43	11.43	11.40
Efficiency		%	88.57	88.57	88.60
Unit Output		MKB	6691.5	6691.5	6734.6
Fuel Input		MKB	7555.0	7555.0	7601.1
Fuel Rate		MLB/HR	686.2	686.2	623.5

(1) Includes By-Pass Flow (2) Includes H2 in Fuel Loss
(3) Includes Manufacturer's Margin of .5 %

TEST 5MC: 06/26/87 : 1045-1625 : 853 MW :CO2/PRI-SEC/MEAS FLOW |TCH-080487

ATTACHMENT H

AIR AND GAS FLOW CALCULATIONS

CALCULATION METHODOLOGY

EFFICIENCY CALCULATIONS - COMPOSITE GAS OUTLET

SECONDARY AH GAS OUTLET CALCULATIONS

MEASURED AIR AND GAS FLOW CALCULATIONS

IP14_001200

CALCULATION METHODOLOGY FOR SECONDARY AIR HEATER
GAS OUTLET CONDITIONS AND AIR/GAS FLOW DISTRIBUTION

The secondary air heater gas outlet temperature and gas analysis can not be measured directly on this unit due to the arrangement of the air heater gas outlet flues. However, the sampling locations are excellent for the primary air heater gas outlet and composite of all the air heater gas outlets, and can be measured with the accuracy equivalent to any unit. Since two out of three locations can be measured, the third location (secondary air heater gas outlet) can be calculated as accurately as the measurements at any of the other locations.

Below is the calculation methodolgy used for this contract.

Attachment C contains a summary of the sampling locations and the measurements that were performed at each location, as well as sketches showing the sampling grid size for each test station. With the exception of the air heater air inlets, the temperatures, O2 and CO2 were weight averaged based on the velocity head measurements. Input (fuel flow) was calculated based on measured output and efficiency calculated per PTC 4.1, Heat Loss Method.

For heat balance calculations, B&W enthalpy/specific heat of air and flue gas are based upon NASA-272.

Referring to the attached schematic of the actual arrangement of the air heaters, Figure 1, calculate the following (the average of two air heaters is depicted below for simplicity, however, there is sufficient test data that calculations may be performed on an individual air heater basis):

1. Total gas flow to air heaters, Wg14 - Calculate per PTC 4.3/4.1 based on O2 & CO2 leaving the economzier, and fuel input.

2A. APCO method for calculating gas flow to individual air heaters - Gas flow is calculated by proportioning the total calculated gas flow to the air heaters (Item 1 above) based on the measured gas flow entering the air heaters.

Wgm14 = Wgm14A + Wgm14B = Total measured gas flow to air heaters.
Wg14 = Total calculated gas flow to air heaters.
Wg14A = Wgm14A * Wg14 / Wgm14 = Gas flow to secondary AH's.
Wg14B = Wgm14B * Wg14 / Wgm14 = Gas flow to primary AH's

IP14_001201

2B. B&W method for calculating gas flow to individual air heaters - Calculate gas flow through the primary air heater by heat balance based on measured primary air flow to the pulverizers. Secondary air heater gas flow is the difference between total gas flow to the air heaters and gas flow entering the primary air heater.

Wg14B = Wam11 * (Ham11 - Ha8B) / (Hg14B - Hg15B)
Wg14A = Wg14 - Wg14B

Where:

Wam11 = Measured air flow to pulverizers (plant computer).
Ham11 = Average enthalpy of air entering pulverizers, Btu/lbm.
Hg = Enthalpy of flue gas, Btu/lbm. See below.

3. Calculate the primary air heater leakage, Wah115B, conventionally per PTC 4.3.

4. Calculate the gas temperature leaving the primary air heater excluding leakage, Tg15BNL, conventionally per PTC 4.3.

Figure 2 is an equivalent schematic of the air heaters for purposes of explaining the calculation of total air heater leakage and secondary air heater gas outlet temperature excluding leakage. Individual secondary air heater performance may be calculated using measured data from the right or left side of the boiler.

5. Calculate total air heater leakage, Wah115, per PTC 4.3 conventionally based on O2 and CO2 measurements at [14] and [15].

6. Calculate the secondary air heater leakage, Wah115A, by difference.

Wah115A = Wah115 - Wah115B

7. Calculate the gas temperature leaving the heaters excluding leakage, Tg15NL, per PTC 4.3 conventionally based on the average air temperature of the infiltrating air, Tah115.

Tah115 = (Tah115A * Wah115A + Tah115B * Wah115B) / Wah115

8. Calculate the gas temperature leaving the secondary air heater(s) excluding leakage, Tg15ANL, by heat balance in accordance with the following equations:

Tg15ANL f(Hg15ANL) where Hg15ANL = Enthalpy of flue gas @ Tg15ANL

Hg15ANL = (Wg15NL * Hg15NL - Wg15BNL * Hg15BNL) / Wg15ANL

The enthalpy of flue gas required in the equation above is a function of moisture in the flue gas as well as the dry flue gas composition. Moisture in flue gas is a function of excess air at the location in question, and must be calculated for each location as described below.

IP14_001202

9. Calculate moisture in flue gas leaving the economizer, M14, and moisture entering the primary air heater, M14B, per PTC 4.3.

10. Calculate moisture in flue gas leaving the secondary air heater by mass balance per the following equation:

$$M14A = (M14 * Wg14 - M14B * Wg14B) / Wg14A$$

11A. APCO method - Calculate air flow through individual air heaters by heat balance.

11B. B&W method - Calculate air flow through the primary air heater by heat balance. Secondary air flow is the difference between total air flow to the burners less the primary air flow. Total air flow to the burners is calculated stoichiometrically assuming 2 % setting infiltration at full load.

S 247-1

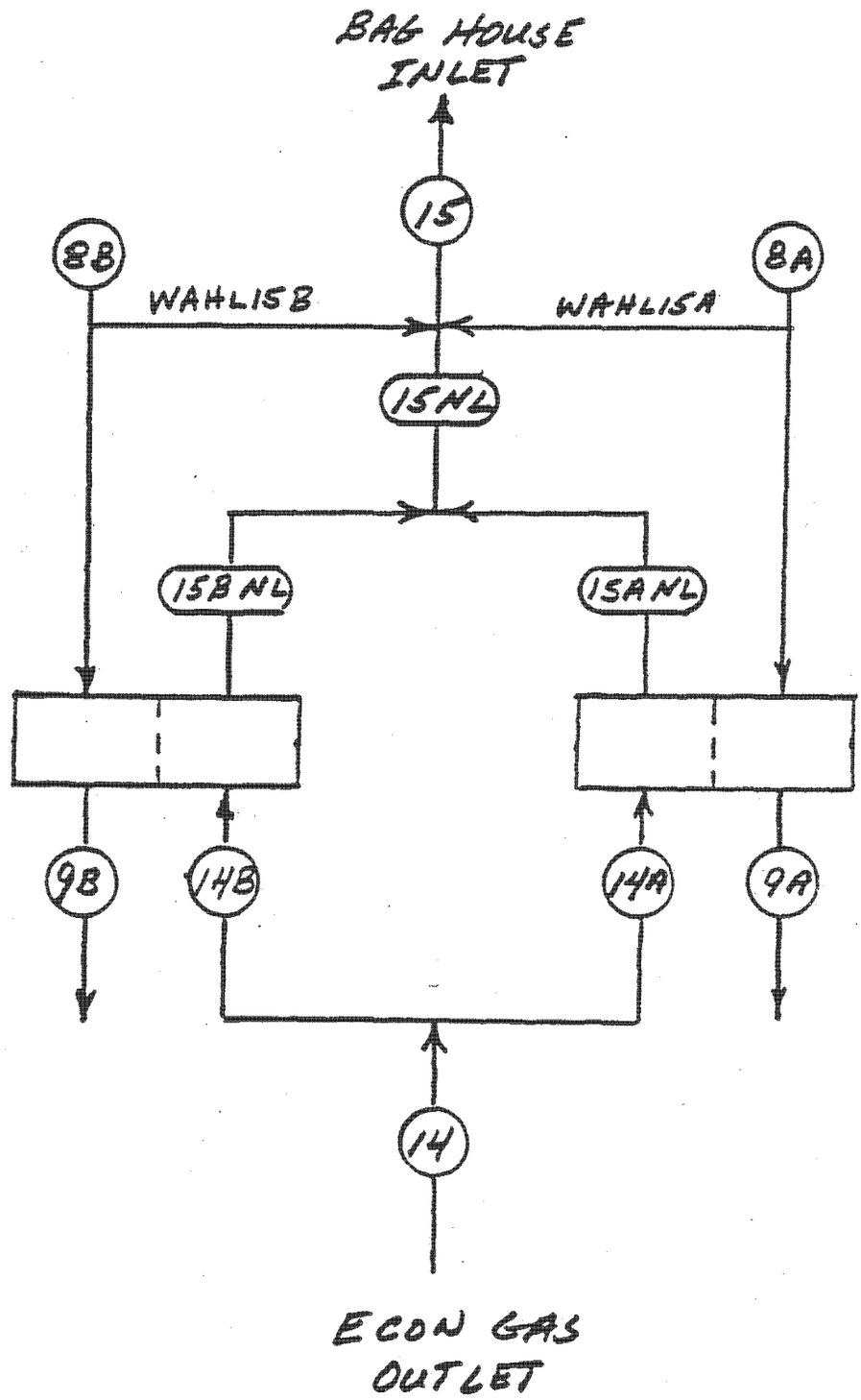

FIG. 2 - SCHEMATIC EQUIVALENT FOR NO LEAKAGE

BABCOCK & WILCOX		REVISION
DEPARTMENT	DATE 6/8/87 BY TCH	
IPP	CHECKED DATE BY	
	JOB NO.	SHEET OF

IP14_001204

247-1

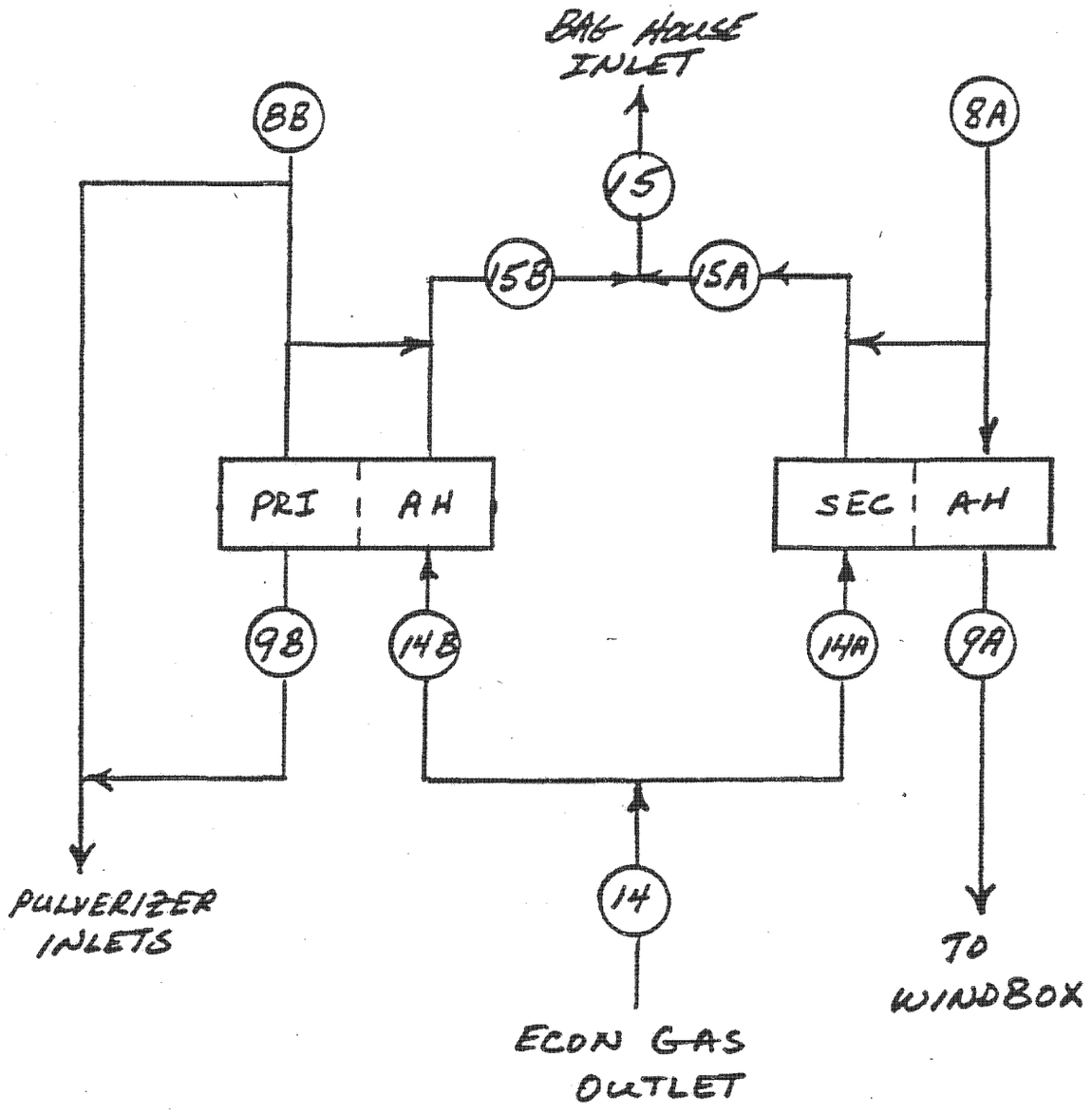

FIG. 1 - SCHEMATIC OF PHYSICAL ARRANGEMENT

BABCOCK & WILCOX		REVISION
DEPARTMENT	DATE 6/8/87 BY TCM	
IPP	CHECKED DATE BY	
	JOB NO.	SHEET ____ OF ____

			CONTRACT SUMMARY SHEET	TEST 3A CORRECTED FOR CONTR. CONDITIONS	TEST 3A WITH TEST CONDITIONS
Fuel			CONTRACT	CONTRACT	TEST
Air Temp Ent AH	PRI/SEC	F	77/ 64	77/ 64	112/ 89
Air Temp Lvg AH	PRI/SEC	F	582/ 647	0/ 0	461/ 659
Air Flow Lvg AH (1)	PRI/SEC	MLB/HR	1335/5184	1441/5101	1441/5425
AH Air By-Pass Flow		MLB/HR	497.8	536.4	536.4
Mill Inlet Temp		F	397.2	0.0	331.8
Ave Air Temp Ent AH		F	66.7	66.9	93.4
Gas Temp Lvg Econ		F	736.0	752.0	752.0
Gas Flow Ent AH		MLB/HR	7210	7241	7568
Ave Gas Temp Lvg AH (Incl Lkg)		F	281.6	---	317.7
Ave Gas Temp Lvg AH (Excl Lkg)		F	294.7	313.4	330.1
Excess Air Lvg Econ		%	17.0	17.0	20.7
Excess Air Lvg AH		%	---	---	28.4
Excess Air to Burners		%	15.0	15.0	18.6
AH Leakage		MLB/HR	484	---	446
Moisture In Air		LB/LB DA	.0067	.0067	.0050
Dry Gas Wt Lvg Econ		LB/LB Fuel	---	10.003	11.403
Dry Air Wt to Burners		LB/LB Fuel	---	9.475	10.867
Wet Gas Wt Lvg Econ		LB/LB Fuel	---	10.558	12.037
Losses		%			
Dry Gas			4.84	5.38	5.35
H2O in Fuel			(2) 5.15	.88	.73
H2 in Fuel			---	4.32	4.75
Moisture in Air			.07	.07	.05
Unburned Combustible			.20	.06	.06
Radiation			.17	.17	.16
Unaccounted			(3) 1.00	.50	.50
Summation of Losses			11.43	11.38	11.60
Efficiency		%	88.57	88.62	88.40
Unit Output		MKB	6691.5	6691.5	6730.5
Fuel Input		MKB	7555.0	7550.8	7613.7
Fuel Rate		MLB/HR	686.2	685.8	628.7

(1) Includes By-Pass Flow (2) Includes H2 in Fuel Loss
(3) Includes Manufacturer's Margin of .5 %

TEST 3A : 06/24/87 : 1110-1645 : 850 MW : COMPOSITE/ O2 ADJ AIR IN : TCH-080287

TEST 3A : 06/24/87 : 1110-1645 : 850 MW : COMPOSITE/ O2 ADJ AIR IN : TCH-080287

EXCESS AIR = 20.70 O2 % = 3.68 CO % = 0.00 CO2 % = 14.88 SO2 % = .04
DRY AIR = 11.06 MOIS AIR = .055 MOIS ADD = 0.000 H2O FUEL = .578 LB/LB FUEL
DRY GAS = 11.403 WET GAS = 12.037 LB/LB FUEL MOIS GAS, % = 5.26

EXCESS AIR = 28.38 O2 % = 4.74 CO % = 0.00 CO2 % = 13.96 SO2 % = .04
DRY AIR = 11.77 MOIS AIR = .059 MOIS ADD = 0.000 H2O FUEL = .578 LB/LB FUEL
DRY GAS = 12.109 WET GAS = 12.745 LB/LB FUEL MOIS GAS, % = 5.00
Cpa = .243 Cpg = .255 AH LKG, % = 5.89 GAS LVG AH (EXCL LKG) = 330.1

TEST 3A : 06/24/87 : 1110-1645 : 850 MW : USING O2 TCH-080387

EXCESS AIR = 16.92 O2 % = 3.11 CO % = 0.00 CO2 % = 15.37 SO2 % = .05
DRY AIR = 10.71 MOIS AIR = .054 MOIS ADD = 0.000 H2O FUEL = .578 LB/LB FUEL
DRY GAS = 11.057 WET GAS = 11.688 LB/LB FUEL MOIS GAS, % = 5.40

EXCESS AIR = 53.05 O2 % = 7.40 CO % = 0.00 CO2 % = 11.66 SO2 % = .03
DRY AIR = 14.03 MOIS AIR = .070 MOIS ADD = 0.000 H2O FUEL = .578 LB/LB FUEL
DRY GAS = 14.371 WET GAS = 15.019 LB/LB FUEL MOIS GAS, % = 4.31
Cpa = .242 Cpg = .255 AH LKG, % = 28.50 GAS LVG AH (EXCL LKG) = 349.0

TEST 3A : 06/24/87 : 1110-1645 : 850 MW : USING O2 TCH-080387

CALCULATED SECONDARY AH GAS OUTLET CONDITIONS

		LVG ECON	ENT PRI	LVG PRI	ENT SEC	LVG SEC	TOTAL LVG AH'S
O2,	%	3.68*	3.11*	7.40*	3.68*	4.31	4.74*
CO2,	%	14.88	15.37	11.66	14.88	14.33	13.96
EXCESS AIR,	%	20.7	16.9	53.0	20.7	25.2	28.4
H2O IN GAS,	%	5.26	5.40	4.31	5.26	5.09	5.00
T AIR,	F		111.8*	460.5*	88.5*	659.0*	
H AIR,	BTU/LB		7.7		2.1		
T AIR CALC,	F			461.0		635.9	
T GAS,	F	752.0*	741.0*	298.5*	734.5*	320.2	317.7*
H GAS,	BTU/LB			54.2		60.1	59.4
H GASC,	BTU/LB			67.5		62.1	62.6
T GAS (W/O LKG),	F			348.5		327.7	329.8
WT AIR,	KLB/HR			904.6		5425.0	0.0
WT GAS,	KLB/HR	7568.0	744.1	956.1	6823.9	7057.4	8013.5
AH LKG,	KLB/HR			212.0*		233.5	445.5*

* DENOTES MEASURED VALUES.

PRI AH AIR BY-PASS FLOW = 536.4
MOIS IN AIR, LB/LB DA = .0050

TEST 3A : 06/24/87 : 1110-1645 : 850 MW : USING O2 TCH-080387

CALCULATED SECONDARY AH GAS OUTLET CONDITIONS

		LVG ECON	ENT PRI	LVG PRI	ENT SEC	LVG SEC	TOTAL LVG AH'S
O2,	%	3.68*	3.11*	7.40*	3.68*	4.19	4.74*
CO2,	%	14.88	15.37	11.66	14.88	14.44	13.96
EXCESS AIR,	%	20.7	16.9	53.0	20.7	24.2	28.4
H2O IN GAS,	%	5.26	5.40	4.31	5.26	5.12	5.00
T AIR,	F		111.8*	460.5*	88.5*	659.0*	
H AIR,	BTU/LB		7.7		2.1		
T AIR CALC,	F			548.8		622.0	
T GAS,	F	752.0*	741.0*	298.5*	734.5*	321.0	317.7*
H GAS,	BTU/LB			54.2		60.3	59.4
H GASC,	BTU/LB			67.5		61.9	62.6
T GAS (W/O LKG),	F			348.5		326.9	329.6
WT AIR,	KLB/HR			904.6		5425.0	0.0
WT GAS,	KLB/HR	7568.0	935.0	1201.4	6633.0	6812.1	8013.5
AH LKG,	KLB/HR			266.4*		179.1	445.5*

* DENOTES MEASURED VALUES. PRI AH AIR BY-PASS FLOW = 536.4
MOIS IN AIR, LB/LB DA = .0050

			CONTRACT SUMMARY SHEET	TEST 3AC CORRECTED FOR CONTR. CONDITIONS	TEST 3AC WITH TEST CONDITIONS
Fuel			CONTRACT	CONTRACT	TEST
Air Temp Ent AH	PRI/SEC	F	77/ 64	77/ 64	112/ 89
Air Temp Lvg AH	PRI/SEC	F	582/ 647	0/ 0	461/ 659
Air Flow Lvg AH (1)	PRI/SEC	MLB/HR	1335/5184	1441/5105	1441/5168
AH Air By-Pass Flow		MLB/HR	497.8	536.4	536.4
Mill Inlet Temp		F	397.2	0.0	331.8
Ave Air Temp Ent AH		F	66.7	66.9	93.6
Gas Temp Lvg Econ		F	736.0	752.0	752.0
Gas Flow Ent AH		MLB/HR	7210	7245	7350
Ave Gas Temp Lvg AH (Incl Lkg)		F	281.6	---	317.7
Ave Gas Temp Lvg AH (Excl Lkg)		F	294.7	315.8	332.5
Excess Air Lvg Econ		%	17.0	17.0	16.4
Excess Air Lvg AH		%	---	---	25.7
Excess Air to Burners		%	15.0	15.0	14.3
AH Leakage		MLB/HR	484	---	518
Moisture In Air		LB/LB DA	.0067	.0067	.0050
Dry Gas Wt Lvg Econ		LB/LB Fuel	---	10.003	11.073
Dry Air Wt to Burners		LB/LB Fuel	---	9.475	10.471
Wet Gas Wt Lvg Econ		LB/LB Fuel	---	10.558	11.704
Losses		%			
Dry Gas			4.84	5.43	5.24
H2O in Fuel			(2) 5.15	.88	.73
H2 in Fuel			---	4.32	4.76
Moisture in Air			.07	.07	.05
Unburned Combustible			.20	.06	.06
Radiation			.17	.17	.16
Unaccounted			(3) 1.00	.50	.50
Summation of Losses			11.43	11.43	11.50
Efficiency		%	88.57	88.57	88.50
Unit Output		MKB	6691.5	6691.5	6730.5
Fuel Input		MKB	7555.0	7555.0	7605.1
Fuel Rate		MLB/HR	686.2	686.2	628.0

(1) Includes By-Pass Flow (2) Includes H2 in Fuel Loss
(3) Includes Manufacturer's Margin of .5 %

TEST 3AC: 06/24/87 : 1110-1645 : 850 MW : COMPOSITE/CO2 ADJ AIR IN : TCH-080287

TEST 3AC: 06/24/87 : 1110-1645 : 850 MW : COMPOSITE/CO2 ADJ AIR IN : TCH-080287

EXCESS AIR = 0.00 O2 % = 3.68 CO % = 0.00 CO2 % = 15.41 SO2 % = 0.00
DRY AIR = 10.65 MOIS AIR = .053 MOIS ADD = 0.000 H2O FUEL = .578 LB/LB FUEL
DRY GAS = 11.073 WET GAS = 11.704 LB/LB FUEL MOIS GAS, % = 5.39

EXCESS AIR = 0.00 O2 % = 4.74 CO % = 0.00 CO2 % = 14.28 SO2 % = 0.00
DRY AIR = 11.50 MOIS AIR = .058 MOIS ADD = 0.000 H2O FUEL = .578 LB/LB FUEL
DRY GAS = 11.893 WET GAS = 12.528 LB/LB FUEL MOIS GAS, % = 5.07
Cpa = .243 Cpg = .255 AH LKG, % = 7.05 GAS LVG AH (EXCL LKG) = 332.5

TEST 3AC : 06/24/87 : 1110-1645 : 850 MW : USING CO2 TCH-080387

EXCESS AIR = 0.00 O2 % = 3.11 CO % = 0.00 CO2 % = 15.84 SO2 % = 0.00
DRY AIR = 10.37 MOIS AIR = .052 MOIS ADD = 0.000 H2O FUEL = .578 LB/LB FUEL
DRY GAS = 10.783 WET GAS = 11.413 LB/LB FUEL MOIS GAS, % = 5.52

EXCESS AIR = 0.00 O2 % = 7.40 CO % = 0.00 CO2 % = 12.12 SO2 % = 0.00
DRY AIR = 13.48 MOIS AIR = .067 MOIS ADD = 0.000 H2O FUEL = .578 LB/LB FUEL
DRY GAS = 13.908 WET GAS = 14.553 LB/LB FUEL MOIS GAS, % = 4.43
Cpa = .242 Cpg = .255 AH LKG, % = 27.51 GAS LVG AH (EXCL LKG) = 347.3

TEST 3AC: 06/24/87 : 1110-1645 : 850 MW : USING CO2 TCH-080387

CALCULATED SECONDARY AH GAS OUTLET CONDITIONS

		LVG ECON	ENT PRI	LVG PRI	ENT SEC	LVG SEC	TOTAL LVG AH'S
O2,	%	3.68*	3.11*	7.40*	3.68*	3.93	4.74*
CO2,	%	15.41*	15.84*	12.12*	15.41*	14.66	14.28*
EXCESS AIR,	%	16.4	13.3	47.3	16.4	22.4	25.7
H2O IN GAS,	%	5.39	5.52	4.43	5.39	5.16	5.07
T AIR,	F		111.8*	460.5*	88.5*	659.0*	
H AIR,	BTU/LB		7.7		2.1		
T AIR CALC,	F			460.9		641.6	
T GAS,	F	752.0*	741.0*	298.5*	734.5*	320.3	317.7*
H GAS,	BTU/LB			54.3		60.1	59.4
H GASC,	BTU/LB			67.1		62.9	63.3
T GAS (W/O LKG),	F			346.7		330.6	332.3
WT AIR,	KLB/HR			904.6		5169.0	0.0
WT GAS,	KLB/HR	7350.0	740.1	943.7	6609.9	6924.2	7867.9
AH LKG,	KLB/HR			203.6*		314.3	517.9*

* DENOTES MEASURED VALUES.

PRI AH AIR BY-PASS FLOW = 536.4
MOIS IN AIR, LB/LB DA = .0050

TEST 3AC: 06/24/87 : 1110-1645 : 850 MW : USING CO2 TCH-080387

CALCULATED SECONDARY AH GAS OUTLET CONDITIONS

		LVG ECON	ENT PRI	LVG PRI	ENT SEC	LVG SEC	TOTAL LVG AH'S
O2,	%	3.68*	3.11*	7.40*	3.68*	3.82	4.74*
CO2,	%	15.41*	15.84*	12.12*	15.41*	14.76	14.28*
EXCESS AIR,	%	16.4	13.3	47.3	16.4	21.7	25.7
H2O IN GAS,	%	5.39	5.52	4.43	5.39	5.18	5.07
T AIR,	F		111.8*	460.5*	88.5*	659.0*	
H AIR,	BTU/LB		7.7		2.1		
T AIR CALC,	F			538.6		628.7	
T GAS,	F	752.0*	741.0*	298.5*	734.5*	320.9	317.7*
H GAS,	BTU/LB			54.3		60.3	59.4
H GASC,	BTU/LB			67.1		62.8	63.3
T GAS (W/O LKG),	F			346.7		330.0	332.1
WT AIR,	KLB/HR			904.6		5168.0	0.0
WT GAS,	KLB/HR	7350.0	908.0	1157.8	6442.0	6710.1	7867.9
AH LKG,	KLB/HR			249.8*		268.1	517.9*

* DENOTES MEASURED VALUES.

PRI AH AIR BY-PASS FLOW = 536.4

MOIS IN AIR, LB/LB DA = .0050

IP14_001215

PG-1980-1

Babcock & Wilcox
GENERAL CALCULATIONS

	WPAH	EPAH	WSAH	ESAH	TOTAL
MEAS GAS ENT	403	526	3468	3121	7518
CORR FACTOR/CALC TOTAL		1.0067			7568
ADJUSTED GAS FLOW	406	529	6633		
	935				
O2 ENT	3.05	3.11 3.17			
CO2 ENT	15.92	15.85 15.77			
O2 LVG	8.27	7.40 6.53			
CO2 LVG	11.40	12.12 12.83			
% LKG	37.05	28.50 20.97			
TAIR ENT		111.8		88.5	
TG LVG W/LKG	290	298.5 307		321.0	
TG LVG W/O LKG		349.0		326.9	
W LKG	150	266 111		180	446
TAIR LVG	452	460.5 469	655	664 673	
TGAS ENT	742	741 740	747	734.5 722	
% MOIS		5.4		5.26	
HA ENT		7.67		2.05	
HA LVG		92.75		143.75	
HG ENT		171.05		169.08	
HG LVG		67.61		61.89	
W AIR LVG AH		1137		5018	6866
TO MILLS		1848			
W AIR BY-PASS					711
BY PULV HT BAL					536
MEAS TEMPER	723-93 (PULV SEAL AIR)				630

CUSTOMER IPP	TEST NO. 3A	FILE NO. RB-614
SUBJECT CALC AIR/GAS FLOWS USING O2	PREPARED BY TCH	DATE 8/13/87

IP14_001216

PG-1980-1

Babcock & Wilcox
GENERAL CALCULATIONS

	WPAH	EPAH	WSAH	ESAH	TOTA
MEAS GAS ENT	403	526	3468	3121	7518
CORR FACTOR/CALC TOTAL		.9777			7350
ADJUSTED GAS FLOW	394	514	6442		
	908				
O2 ENT	3.05	3.11 3.17			
CO2 ENT	15.92	15.85 15.77			
O2 LVG	8.27	14.80 6.53			
CO2 LVG	11.40	12.12 12.83			
% LKG	35.41	27.5 20.48			
TAIR ENT		111.8	88.5		
TG LVG W/LKG	290	298.5 307	320.9		
TG LVG W/O LKG		349.2	330.0		
W LKG	140	250 105			518
TAIR LVG	452	460.5 469	655 664	673	
TGAS ENT	742	741 740	747 734.5	722	
% MOIS		5.52	5.39		
HA ENT		7.67	2.05		
HA LVG		92.95	143.75		
HG ENT		171.23	169.27		
HG LVG		67.22	62.75		
W AIR LVG AH		1110	4842		6609
W AIR By-PASS					656
By PASS HT BAL					536

CUSTOMER: IPP — TEST NO. 3AC — FILE NO. RB-614

SUBJECT: CALC AIR/GAS FLOWS Using CO2 — PREPARED BY: TCH — DATE: 8/3/87

IP14_001217

ATTACHMENT J

O2 VS CO2 LINEAR REGRESSION ANALYSIS RESULTS

IP14_001218

			6/24	6/25	6/26
BH W			18.36	18.41	18.41
BH C			18.53	18.46	18.37
BH E			18.44	18.42	18.48
ECON	W	A-G	18.83	18.85	18.85
"	W	H-N	18.60	18.63	18.66
"	E	A-G	18.57	18.63	18.65
"	E	H-N	18.72	18.72	18.68
WEST	PRI	GAS IN	18.62	18.60	18.80
"	"	" OUT	18.78	18.61	18.44
EAST	PRI	GAS IN	18.57	18.58	18.66
"	"	" OUT	18.61	18.77	18.54
AVE			18.60	18.61	18.59

AVERAGE COL AT Ø O2

LINEAR REGRESSION ANALYSIS RESULTS

TCH

ATTACHMENT K

TABULATION OF ARITHMETIC VS WEIGHTED AVE AIR AND FLUE GAS DATA

IP14_001220

TEST 6/24/87 ARITH AVE/WTD AVE

		T	O_2	CO_2
BH IN	L	311.7/310.4	4.70/4.72	14.28/14.26
	R	323.7/321.9	4.78/4.83	14.28/14.22
	AVE	317.7/316.7	4.74/4.78	14.28/14.24
ECON OUT	L	752.5/752.0	3.77/3.75	15.37/15.39
	R	751.5/749.4	3.60/3.70	15.45/15.33
	AVE	752.0/750.6	3.67/3.73	15.41/15.36
PRI GAS IN		741.0/740.9	3.11/3.12	15.84/15.84
PRI GAS OUT		298.5/299.4	7.40/7.31	12.12/12.19
PRI AIR OUT		460.5/461.0		
TEMP		111.0/110.9		
SAH GAS IN		734.5/735.2		
SAH AIR OUT		664.0/663.3		

TEST 6/25/87 ARITH AVE / WTD AVE

		T	O2	CO2
BH	L	314.3/313.5	4.79/4.80	14.22/14.21
	R	327.7/326.5	4.72/4.74	14.29/14.27
	AVE	321.0/320.5	4.75/4.77	14.26/14.24
ECON	L	750.5/750.3	3.92/3.91	15.27/15.28
	R	744.0/746.4	3.55/3.69	15.53/15.40
	AVE	746.7/748.0	3.70/3.78	15.42/15.35
PRI GAS IN		734/734.2	3.30/3.29	15.66/15.67
PRI GAS OUT		291.0/290.9	7.16/7.15	12.32/12.32
PRI AIR OUT		479/478.8		
TEMP		111.5/111.6		
SAH AIR OUT		650.0/649.6		

TEST 6/26 ARITH AVE/WTD AVE

		T	O2	CO2
BH IN	AVE	317.3/316.0	5.10/5.10	13.93/13.94
	L	311.3/309.7	5.31/5.33	13.73/13.72
	R	323.3/321.8	4.90/4.89	14.13/14.15
ECON	L	757.5/756.9	4.22/4.18	14.99/15.04
	R	748.0/746.5	3.69/3.86	15.41/15.26
	AVE	752.1/751.0	3.92/4.00	15.23/15.16
PAH GAS IN		740/739.9	3.45/3.44	15.66/15.67
PAH GAS OUT		300.5/300.6	6.18/6.16	13.07/13.08
PAH AIR OUT		472.5/472.4		
TEMP AIR		116.0/115.7		

ATTACHMENT L

EXPECTED AIR HEATER PERFORMANCE CALCULATIONS

IP14_001224

TEST 4A : 06/25/87 : SEC AH / O2 / PLANT PA FLOW TCH-080587

	BASE	NEW		BASE	NEW			
GAS WT ENT =	6286	6827	AIR WT LVG =	5184	5380	MOIST =	6.6	5.0
GAS TEMP ENT =	736	747	GAS TEMP LVG =	292	326	EXCL. LKG		
AH LKG, %		3.72	GAS TEMP LVG =		318	INCL. LKG		
			AVE COLD END =	178	208			
AIR TEMP ENT =	64	90	AIR TEMP LVG =	647	668			

TEST 4M : 06/25/87 : SEC AH / O2 / MEAS AIR-GAS FLOW TCH-080587

	BASE	NEW		BASE	NEW			
GAS WT ENT =	6286	6739	AIR WT LVG =	5184	5360	MOIST =	6.6	5.0
GAS TEMP ENT =	736	747	GAS TEMP LVG =	292	323	EXCL. LKG		
AH LKG, %		3.43	GAS TEMP LVG =		316	INCL. LKG		
			AVE COLD END =	178	207			
AIR TEMP ENT =	64	90	AIR TEMP LVG =	647	666			

TEST 4MC: 06/25/87 : SEC AH / CO2 / MEAS AIR-GAS FLOW TCH-080587

	BASE	NEW		BASE	NEW			
GAS WT ENT =	6286	6563	AIR WT LVG =	5184	5177	MOIST =	6.6	5.2
GAS TEMP ENT =	736	747	GAS TEMP LVG =	292	325	EXCL. LKG		
AH LKG, %		4.98	GAS TEMP LVG =		314	INCL. LKG		
			AVE COLD END =	178	207			
AIR TEMP ENT =	64	90	AIR TEMP LVG =	647	669			

TEST 4M : 06/25/87 : W PRI AH / O2 / MEAS AIR-GAS FLOW TCH-081
887

	BASE	NEW		BASE	NEW		
GAS WT ENT =	924	746	AIR WT LVG =	837	886	MOIST = 6.0	5.0
GAS TEMP ENT =	736	731	GAS TEMP LVG =	313	264	EXCL. LKG	
AH LKG, %		24.13	GAS TEMP LVG =		235	INCL. LKG	
			AVE COLD END =	195	185		
AIR TEMP ENT =	77	106	AIR TEMP LVG =	582	529		

TEST 4M : 06/25/87 : E PRI AH / O2 / MEAS AIR-GAS FLOW TCH-081
887

	BASE	NEW		BASE	NEW		
GAS WT ENT =	924	826	AIR WT LVG =	837	946	MOIST = 6.0	5.0
GAS TEMP ENT =	736	737	GAS TEMP LVG =	313	283	EXCL. LKG	
AH LKG, %		26.39	GAS TEMP LVG =		249	INCL. LKG	
			AVE COLD END =	195	198		
AIR TEMP ENT =	77	114	AIR TEMP LVG =	582	541		

TEST 4MC: 06/25/87 : W PRI AH / CO2 / MEAS AIR-GAS FLOW TCH-081
887

	BASE	NEW		BASE	NEW		
GAS WT ENT =	924	726	AIR WT LVG =	837	866	MOIST = 6.0	5.2
GAS TEMP ENT =	736	731	GAS TEMP LVG =	313	262	EXCL. LKG	
AH LKG, %		23.69	GAS TEMP LVG =		234	INCL. LKG	
			AVE COLD END =	195	184		
AIR TEMP ENT =	77	106	AIR TEMP LVG =	582	529		

TEST 4MC: 06/25/87 : E PRI AH / CO2 / MEAS AIR-GAS FLOW TCH-081
887

	BASE	NEW		BASE	NEW		
GAS WT ENT =	924	804	AIR WT LVG =	837	929	MOIST = 6.0	5.2
GAS TEMP ENT =	736	737	GAS TEMP LVG =	313	280	EXCL. LKG	
AH LKG, %		24.88	GAS TEMP LVG =		249	INCL. LKG	
			AVE COLD END =	195	197		
AIR TEMP ENT =	77	114	AIR TEMP LVG =	582	540		

TEST 5A : 06/26/87 : SEC AH / O2 / PLANT PA FLOW TCH-080587

	BASE	NEW		BASE	NEW			
GAS WT ENT =	6286	7055	AIR WT LVG =	5184	5622	MOIST =	6.6	4.9
GAS TEMP ENT =	736	746	GAS TEMP LVG =	292	324	EXCL. LKG		
AH LKG, %		5.50	GAS TEMP LVG =		313	INCL. LKG		
			AVE COLD END =	178	208			
AIR TEMP ENT =	64	91	AIR TEMP LVG =	647	664			

TEST 5M : 06/26/87 : SEC AH / O2 / MEAS AIR-GAS FLOW TCH-080587

	BASE	NEW		BASE	NEW			
GAS WT ENT =	6286	6961	AIR WT LVG =	5184	5452	MOIST =	6.6	4.9
GAS TEMP ENT =	736	746	GAS TEMP LVG =	292	329	EXCL. LKG		
AH LKG, %		5.50	GAS TEMP LVG =		317	INCL. LKG		
			AVE COLD END =	178	210			
AIR TEMP ENT =	64	91	AIR TEMP LVG =	647	668			

TEST 5MC: 06/26/87 : SEC AH / CO2 / MEAS AIR-GAS FLOW TCH-080587

	BASE	NEW		BASE	NEW			
GAS WT ENT =	6286	6777	AIR WT LVG =	5184	5270	MOIST =	6.6	5.0
GAS TEMP ENT =	736	746	GAS TEMP LVG =	292	330	EXCL. LKG		
AH LKG, %		6.82	GAS TEMP LVG =		316	INCL. LKG		
			AVE COLD END =	178	211			
AIR TEMP ENT =	64	91	AIR TEMP LVG =	647	670			

TEST 5M : 06/26/87 : W PRI AH / O2 / MEAS AIR-GAS FLOW TCH-081
887

	BASE	NEW		BASE	NEW		
GAS WT ENT =	924	788	AIR WT LVG =	837	1020	MOIST =	6.0 4.9
GAS TEMP ENT =	736	742	GAS TEMP LVG =	313	267	EXCL. LKG	
AH LKG, %		20.05	GAS TEMP LVG =		245	INCL. LKG	
			AVE COLD END =	195	196		
AIR TEMP ENT =	77	124	AIR TEMP LVG =	582	519		

TEST 5M : 06/26/87 : E PRI AH / O2 / MEAS AIR-GAS FLOW TCH-081
887

	BASE	NEW		BASE	NEW		
GAS WT ENT =	924	836	AIR WT LVG =	837	988	MOIST =	6.0 4.9
GAS TEMP ENT =	736	738	GAS TEMP LVG =	313	272	EXCL. LKG	
AH LKG, %		13.64	GAS TEMP LVG =		253	INCL. LKG	
			AVE COLD END =	195	189		
AIR TEMP ENT =	77	106	AIR TEMP LVG =	582	531		

TEST 5MC: 06/26/87 : W PRI AH / CO2 / MEAS AIR-GAS FLOW TCH-081
887

	BASE	NEW		BASE	NEW		
GAS WT ENT =	924	768	AIR WT LVG =	837	988	MOIST =	6.0 4.9
GAS TEMP ENT =	736	742	GAS TEMP LVG =	313	267	EXCL. LKG	
AH LKG, %		21.61	GAS TEMP LVG =		243	INCL. LKG	
			AVE COLD END =	195	196		
AIR TEMP ENT =	77	124	AIR TEMP LVG =	582	522		

TEST 5MC: 06/26/87 : E PRI AH / CO2 / MEAS AIR-GAS FLOW TCH-081
887

	BASE	NEW		BASE	NEW		
GAS WT ENT =	924	814	AIR WT LVG =	837	954	MOIST =	6.0 5.0
GAS TEMP ENT =	736	738	GAS TEMP LVG =	313	273	EXCL. LKG	
AH LKG, %		14.25	GAS TEMP LVG =		253	INCL. LKG	
			AVE COLD END =	195	189		
AIR TEMP ENT =	77	106	AIR TEMP LVG =	582	534		

ATTACHMENT M

BOILER OUTPUT CALCULATIONS

IP14_001229

RB-614 25 Jun 1987 14:42:24

TEST NO 3A DATE 06/24/87 TIME START 1110 TIME END 1645

USING MEASURED HP STEAM FLOW
USING DATA CHOICE 1

DRUM, SAT FLUID	P = 2682.0 PSIG	T = 679.3 F	H = 756.9 BTU/LB
DRUM, SAT VAPOR	P = 2682.0 PSIG	T = 679.3 F	H = 1070.1 BTU/LB
DRUM, BLOWDOWN	P = 2682.0 PSIG	T = 679.3 F	H = 756.9 BTU/LB
SH SPRAY	P = 2832.0 PSIG	T = 333.9 F	H = 309.6 BTU/LB
ENT SEC.	P = 2562.8 PSIG	T = 792.4 F	H = 1290.6 BTU/LB
LVG PRI-2	P = 2562.8 PSIG	T = 789.2 F	H = 1287.3 BTU/LB
ENT PRI-2	P = 2614.1 PSIG	T = 721.7 F	H = 1196.7 BTU/LB
LVG PRI-1	P = 2614.1 PSIG	T = 721.8 F	H = 1196.9 BTU/LB
CORR LVG PRI-2	P = 2562.8 PSIG	T = 790.8 F	H = 1289.0 BTU/LB
CORR ENT SEC	P = 2562.8 PSIG	T = 790.8 F	H = 1289.0 BTU/LB
ENT ECON	P = 2732.0 PSIG	T = 551.0 F	H = 547.7 BTU/LB
LVG SEC SH	P = 2460.1 PSIG	T = 1007.1 F	H = 1463.1 BTU/LB
ENT RH-1 ATTEMP	P = 553.9 PSIG	T = 627.7 F	H = 1310.6 BTU/LB
ENT RH-1	P = 553.9 PSIG	T = 617.4 F	H = 1304.2 BTU/LB
LVG RH-1	P = 520.9 PSIG	T = 1009.8 F	H = 1524.6 BTU/LB
NO. 1 HTR FW ENT	P = 2732.0 PSIG	T = 479.5 F	H = 464.3 BTU/LB
NO. 1 HTR FW LVG	P = 2732.0 PSIG	T = 552.5 F	H = 549.5 BTU/LB
NO. 1 HTR DRAIN	P = 1045.9 PSIG	T = 488.4 F	H = 474.2 BTU/LB
NO. 1 HTR EXTR	P = 1045.9 PSIG	T = 800.1 F	H = 1386.7 BTU/LB
NO. 2 HTR FW ENT	P = 2732.0 PSIG	T = 394.2 F	H = 372.0 BTU/LB
NO. 2 HTR FW LVG	P = 2732.0 PSIG	T = 479.5 F	H = 464.3 BTU/LB
NO. 2 HTR DRAIN	P = 544.9 PSIG	T = 402.4 F	H = 378.1 BTU/LB
NO. 2 HTR EXTR	P = 544.9 PSIG	T = 627.0 F	H = 1310.9 BTU/LB
RH-1 SPRAY	P = 753.9 PSIG	T = 275.8 F	H = 246.3 BTU/LB

1st STAGE SPRAY	MEASURED	13.8	CALCULATED	1.5	USED C
2nd STAGE SPRAY	MEASURED	11.9	CALCULATED	0.0	USED C
RH-1 SPRAY	MEASURED	0.0	CALCULATED	30.2	USED M

FLOWS MLB/HR

STEAM LVG SEC SH	=	6183.8
STEAM LVG PRI-2 SH	=	6183.8
STEAM LVG PRI-1 SH	=	6182.4
FEEDWATER TO ECON	=	6182.4
BLOWDOWN	=	0.0
SH EXTRACTION	=	0.0
STEAM LVG RH-1	=	4998.5
STEAM ENT RH-1 ATTEMP	=	4998.5
NO. 1 HTR. EXTR. FLOW	=	577.4
NO. 2 HTR. EXTR. FLOW	=	552.1
TURB LKG	=	55.8

HEAT ABSORPTION MKB/HR

BOILER	=	3229.8
BLOWDOWN HEAT	=	0.0
EXTRACTION HEAT	=	0.0
SUPERHEATER	=	2431.3
REHEATER 1	=	1069.4
REHEATER 2	=	0.0
TOTAL OUTPUT	=	6730.5

To BILL ARVAN - DENVER SERVICE	
From T. C. HEIL - ESSD TECHNOLOGY, BVCE1J - 2650	
Cust. INTERMOUNTAIN POWER PROJECT	File No. or Ref. RB-614
Subj. AH TEST CALCULATION METHODOLOGY	Date June 11, 1987

Please find attached the calculation methodology proposed to Air Preheater Co. for calculating the gas temperature leaving the secondary air heaters and air flow leaving individual air heaters. APCO has not had time to respond as yet, however, based upon experience with APCO to date, it is highly probable that the procedure will be unacceptable to them.

The changes to the test and corrected efficiency calculation procedure submitted previously are as follows:

1. Measured O2 and CO2 will be used to calculate excess air, gas flow, and air heater leakage rather than calculating CO2 and SO2 per PTC 19.10.

2. Flue gas flow through the air heaters will be calculated in accordance with the attached procedure.

3. Air flow through the air heaters will be calculated by heat balance across the air heaters. Tempering air flow to the pulverizers will be calculated by difference from the total air flow calculated based on excess air leaving the economizer less 2 % excess air for setting infiltration.

4. Test efficiency will be calculated based on both the composite gas analysis entering the bag house as well as individual primary and secondary air heater performance. These results will be the same within .02 % efficiency.

5. Efficiency corrected to contract conditions will be based on individual air heater performance and as described previously. Air heater exit gas temperature will be corrected for entering air temperature, as well as design entering gas weight and Xratio correction curves to be supplied by Air Preheater (reference PTC 4.3 paragraphs 7.10 and 7.11).

We will advise of any changes that APCO may have upon receipt. If you or the customer have any questions, please call (Phone 216-860-2650).

T. C. Heil

IP14_001231

To C. A. PALMBERG - CONTRACT MANAGER DPG PROJECT MANAGEMENT - PGG - BVCB3K	
From T. C. HEIL - E&SD TECHNOLOGY, BVCE1J - 2650	
Cust. INTERMOUNTAIN POWER PROJECT	File No. or Ref. RB-614
Subj. AIR HEATER TEST CALCULATION METHODOLOGY	Date June 11, 1987

As a result of our June 19 phone conversation with Don Gorsky, Air Preheater Co., I think I finally understand APCO's concerns and calculation philosophy on more conventional air heater arrangements.

As I understand it, APCO's standard calculation method is to calculate total gas flow to the air heaters based on the economizer gas outlet gas sample. Gas flow is proportioned to each air heater based on the weighted average of the measured gas flow entering each air heater. Air flow through the air heaters is calculated by heat balance from the gas side mass flows and temperature drop. The concern on this unit is that the secondary air heater gas outlet can not be measured directly. However, the sampling locations are excellent for the primary air heater gas outlet and composite of all the air heater gas outlets, and can be measured with the accuracy equivalent to any unit. Since two out of three locations can be measured, the third location (secondary air heater gas outlet) can be calculated as accurately as the measurements at any of the other locations.

Below is an outline of B&W's recommended calculation methodology.

Attachment I contains a summary of the sampling locations and the measurements that will be performed at each location, as well as sketches showing the sampling grid size for each test station. With the exception of the air heater air inlets, the temperatures, O2 and CO2 will be weight averaged based on the velocity head measurements. Input (fuel flow) will be calculated based on measured output and efficiency calculated per PTC 4.1, Heat Loss Method.

For heat balance calculations, B&W enthalpy/specific heat of air and flue gas are based upon NASA-272. Based upon APCO AH performance data reported over the years, APCO's air/flue gas physical property data base is similar and also acceptable. This should not be interpreted to be an exception to the PTC 4.3/4.1 Code, just that either company's computer generated air/flue gas properties are more accurate than the Figures listed in PTC 4.1 and preferable for heat balance calculations, including gas temperature leaving the air heater corrected for no leakage.

Referring to the attached schematic of the actual arrangement of the air heaters, Figure 1, calculate the following (the average of two air heaters is depicted below for simplicity, however, there is sufficient test data that calculations may be performed on an individual air heater basis).

1. Total gas flow to air heaters, Wg14 - Calculate per PTC 4.3/4.1 based on O2 & CO2 leaving the economzier, and fuel input.

2. Gas flow to individual air heaters will be calculated by proportioning the total calculated gas flow to the air heaters (Item 1 above) based on the measured gas flow entering the air heaters.

   Wgm14 = Wgm14A + Wgm14B = Total measured gas flow to air heaters.
   Wg14 = Total calculated gas flow to air heaters.
   Wg14A = Wgm14A * Wg14 / Wgm14 = Gas flow to secondary AH's.
   Wg14B = Wgm14B * Wg14 / Wgm14 = Gas flow to primary AH's

3. Calculate the primary air heater leakage, Wahl15B, conventionally per PTC 4.3.

4. Calculate the gas temperature leaving the primary air heater excluding leakage, Tg15BNL, conventionally per PTC 4.3.

Figure 2 is an equivalent schematic of the air heaters for purposes of explaining the calculation of total air heater leakage and secondary air heater gas outlet temperature excluding leakage. Individual secondary air heater performance may be calculated using measured data from the right or left side of the boiler.

5. Calculate total air heater leakage, Wahl15, per PTC 4.3 conventionally based on O2 and CO2 measurements at [14] and [15].

6. Calculate the secondary air heater leakage, Wahl15A, by difference.

   Wahl15A = Wahl15 - Wahl15B

7. Calculate the gas temperature leaving the heaters excluding leakage, Tg15NL, per PTC 4.3 conventionally based on the average air temperature of the infiltrating air, Tahl15.

   Tahl15 = (Tahl15A * Wahl15A + Tahl15B * Wahl15B) / Wahl15

8. Calculate the gas temperature leaving the secondary air heater(s) excluding leakage, Tg15ANL, by heat balance in accordance with the following equations:

   Tg15ANL f(Hg15ANL) where Hg15ANL = Enthalpy of flue gas @ Tg15ANL

   Hg15ANL = (Wg15NL * Hg15NL - Wg15BNL * Hg15BNL) / Wg15ANL

The enthalpy of flue gas required in the equation above is a function of moisture in the flue gas as well as the dry flue gas composition. Moisture in flue gas is a function of excess air at the location in question, and must be calculated for each location as described below. (See Attachment II for B&W correlation.

9 Calculate moisture in flue gas leaving the economizer, M14, and moisture entering the primary air heater, M14B, per PTC 4.3.

10 Calculate moisture in flue gas leaving the secondary air heater by mass balance per the following equation:

$$M14A = (M14 * Wg14 - M14B * Wg14B) / Wg14A$$

11 Calculate air flow through individual air heaters by heat balance utilizing APCO/B&W air/flue gas specific heat/enthalpy correlations.

APCO has expressed that their primary concern about testing the air heater arrangement on this unit is the determination of air flow. APCO has advised that for a standard PTC 4.3 test, air flow is determined by heat balance across the air heater. On this unit, the gas conditions leaving the secondary air heater can not be measured directly. The primary air heater air and gas side can be measured in accordance with accepted PTC 4.3/APCO procedures. The economizer gas outlet, secondary air heater gas inlet and all air heater air inlet and air outlet conditions can be measured in accordance with accepted PTC 4.3/APCO procedures. The composite gas leaving all of the air heaters can be measured with accepted PTC 4.3/APCO procedures. The calculation of the secondary air heater gas outlet conditions by mass balance is identical to design practices and has no inherent error. While the side to side composite analysis is not defined as well as with individual ducts, utilizing the average values from each half of the boiler, it is possible to evaluate the performance of each individual air heater.

In conclusion, B&W's evaluation of the test and calculation procedure is that there is no uncertainty over and above an arrangement where the secondary air heater gas outlet conditions can be measured directly. If APCO judges that there is additional uncertainty, it is requested that they express their concerns in a quantified manner. In particular, what does APCO consider a standard test procedure when there are separate primary and secondary air heaters. B&W/IPP have been attempting to do everything within our power to satisfy APCO's desires.

T. C. Heil

	VEL HD	STATIC PRESS	TEMP	ORSAT	NO POINTS
SEC AH AIR IN	---	+	+	---	12
SEC AH AIR OUT	+	+	+	---	72
ECON GAS OUT	+	+	+	+	196
BAG HOUSE IN	+	+	+	+	168
SEC AH GAS IN	+	+	+	---	182/238
SEC AH GAS OUT	---	+	---	---	1
PRI AH AIR IN	---	+	+	---	12
PRI AH AIR OUT	+	+	+	---	30
PRI AH GAS IN	+	+	+	+	36
PRI AH GAS OUT	+	+	+	+	24
COLD AIR TO MILLS	+	+	---	---	18

AH TEST DATA SUMMARY RB-614

IP14_001235

Babcock & Wilcox
a McDermott company

Power Generation Group
20 S. Van Buren Avenue
P.O. Box 351
Barberton, OH 44203-0351
(216) 753-4511

April 4, 1986

Black & Veatch
Consulting Engineers
P.O. Box 8405
Kansas City, MO 64114

Attn: Mr. Roger Dutton

Re: Intermountain Power Project
Specification 2010
B&V Ref: 9255.62.3401
B&W Ref: RB-614/615
Subject: Test Procedures/
Correction Curves
Corres. No.: BV-0530

Gentlemen:

Please find attached eight copies of our recommended test and correction calculation procedure. Included in this procedure are correction curves required by Article 4, Section G1 of the contract. Other than the airheater correction curves for air and gas weight, B&W relies upon calculation methods to correct test conditions to contract conditions. The airheater correction curves would only be applicable if the unit is tested with a gross imbalance in gas weight or excessive tempering air due to dry coal and/or severe imbalance in gas weight to the primary and secondary airheaters. The following items should be included in your test procedure:

- The pulverizers shall be operated with a coal air outlet temperature of 150 F.

- During the air resistance tests, the secondary air pressure set point shall be established such that at least one secondary air compartment damper is at least 90% open to avoid testing with excessive pressure drop across the secondary air dampers.

- The primary airheater/secondary airheater gas split shall be set at approximately the design value (13%). This corresponds to approximately equal gas temperatures leaving both the primary and secondary airheaters.

- During the pulverizer power guarantee tests, the primary air pressure set point shall be established such that at least one pulverizer primary air damper is at least 90% open to avoid excessive pressure drop across the primary air dampers.

April 4, 1986

B&W needs to review your test procedure when it is completed and participate in a pre-test meeting where test procedures and calculation methods are agreed to.

If you have any questions or comments, please advise.

Very truly yours,

Carl A. Palmberg

C.A. Palmberg
Contract Manager

CAP:nk

cc: JS Laing
JA Shildmyer
DW Fowler
WK Carson
RC Miller
RJ Clark
RL Nelson
JT Tyrrell
RP Siegfried

NK2322

ACCEPTANCE TEST CALCULATION

AND CORRECTION PROCEDURE

PREPARED FOR RB-614
INTERMOUNTAIN POWER PROJECT

EFFICIENCY CALCULATION PROCEDURE FOR TEST CONDITIONS

The ASME PTC 4.1 does not explicitly address how efficiency is calculated for units with cold primary air fans and a primary as well as a secondary air heater. Also, B&W prefers to use the long calculation methods for calculating excess air and gas weights referenced in the Code as opposed to the shorter empirical and rounded off equations. To facilitate the calculations, the attached calculation sheets, CS-1 through CS-5 have been prepared and included as attachment 2.

1. Calculate boiler output conventionally. Reheat flow will be calculated by subtracting feed water heater extraction steam flow, measured extraction steam flow between the superheater outlet and the reheater inlet, and turbine seal and shaft leakages. Extraction steam flow to the feedwater heaters is to be calculated by heat balance around the heaters. Turbine seal and shaft leakages will be taken from the manufacturers data sheets or turbine test data if available.

2. As outlined in paragraph 3.01.10 of specification 2010N the following refuse split shall be used for all calculations in which ash splits are required:
   90 % Flyash
   3 % Economizer Ash
   7 % Bottom Ash

IP14_001239

3. It is recommended that the excess air leaving the economizer and air heaters be calculated using measured O2 in the flue gas, per CS-4. This method is taken from PTC 19.10, paragraph 6.04.1. Using O2 to calculate excess air has several advantages:

- NO - Not ASME Correction for EA

- Allows the use of a continuous O2 analyzer.
- Excess air versus O2 is relatively insensitive to the fuel analysis; i.e. excess air is constant for a given O2 for the range of fuel that may be burned during the test, whereas, CO2 varies with the fuel for a constant excess air.
- Paragraph 6.04.1 provides a method for calculating O2 and CO2+SO2, air and gas weights for contract excess air.

Validation of orsat readings - To be considered valid, the average O2 and CO2 results from each orsat location shall fall within +/- 0.2 % of the average combustion line (as determined by the average of all orsat results) on the dry flue gas volumetric combustion chart. If a discrepancy results that can not be resolved, the O2 (excess oxygen) results for those orsat loctions that are not within tolerance shall be assumed correct.

4. Calculate air heater leakage and corrected air heater exit gas temperature (excluding leakage) per PTC 4.3 using CS-2. This calculation form includes the calculation of dry gas weight leaving the economizer, air flow to the boiler, wet gas weight leaving the economizer and moisture in the flue gas. These items are required to calculate gas weight through the primary air heater by heat balance and total air and gas weights for correcting air resistance and draft loss.

IP14_001240

5. The average air temperature entering the unit is the weighted average of the measured primary air flow to the pulverizers and the calculated secondary air flow to the secondary air heaters.

   The average gas temperature leaving the unit is the weighted average of the gas temperature leaving the primary and secondary air heaters (excluding leakage). The gas flow through the primary air heater is calculated by heat balance based on the average air temperature entering the primary air heater and pulverizers, and the average gas temperature entering and leaving (excluding leakage) the primary air heater. The gas flow through the secondary air heater is calculated from the difference in the total calculated gas weight and the calculated primary air heater gas weight.

   This calculation procedure is outlined on CS-5.

6. Calculate heat losses and efficiency per standard ASME Short Form pages 'a' and 'b'. Add moisture in air loss:

$$L_{mA} = W_{mA'} \times C_{pwv} \times (T_{gl} - T_{ae}) \times 100 / HHV \quad , \%$$

7. The unmeasured and unaccounted for losses are estimated at less than 0.50% per ASME PTC 4.1 (see attachment 1) and 0.50% shall be used for the calculation of boiler efficiency in accordance with paragraph 3.01.01.5 in specification 2010N. An ash split of 90% at the economizer gas outlet, 3% to the economizer hoppers, and 7% to the furnace hopper is assumed in the estimation of the unmeasured and unaccounted for losses.

IP14_001241

CALCULATION OF EFFICIENCY CORRECTED TO CONTRACT CONDITIONS

In order to evaluate the results of the efficiency test, the heat losses must be corrected to baseline or contract conditions. The items that must be corrected for contract conditions are the fuel analysis (referred to as the Performance fuel herein), excess air, moisture in air, air temperature entering the air heaters and possibly the gas weight split between the primary and secondary air heaters. The correction procedure and calculations are described below.

1. The unburned carbon for the Performance coal shall be assumed to be proportional to the ratio of the higher heating value of the Performance coal to the higher heating value of the test coal.
   Cu(corrected) = Cu(test) * HHV(design) / HHV(test)

2. Calculate the dry gas weight for the Performance coal and Contract Summary Sheet (P23-310-0-1S0) excess air (17 %). Referring to CS-4, calculate O2 for 17 % excess air, using the unburned carbon as determined above and the Performance coal analysis, from:

$$O_2 = \frac{2.73 \times [3] \times [12]}{[5] + 0.13068 \times [3] \times [12]} \quad , \%$$

   Calculate CO2+SO2 from CS-4 using the O2 calculated above. Calculate dry gas weight per line 27 on CS-2, or line 25 on PTC 4.1b.

3. Use the Contract Summary Sheet value for moisture in air, 0.0067 lb mois/lb dry air.

IP14_001242

4. Correct the air heater gas outlet temperature (excluding leakage) for the entering air temperature on the Contract Summary Sheet (64 F entering the secondary air heater and 77 F entering the primary air heater) per PTC 4.3, paragraph 7.08, or referring to CS-5:

$$T_{GC} = T_{G3} - T_{G2} - \frac{(T_{G3} - T_{G2})}{(T_{G3} - T_{A1})} \times (T_{G3} - T_{AD})$$

Where T_{AD} = Design entering air temperature

The Summary Sheet entering air temperature and corrected air heater gas outlet temperature calculated above are utilized to calculate the corrected dry gas, water from fuel, and moisture in air losses.

5. The tests should be conducted with the proper primary air heater/secondary air heater gas split. The design values for primary air heater gas and air flow at full load are 13.0% and 20.1% respectively. The primary air heater gas flow shall be controlled to avoid excessive gas temperature leaving the primary air heaters. The primary air heater gas outlet temperature should be approximately equal to the secondary air heater gas outlet temperature. In the event that this is not possible, the primary and secondary air heater gas outlet temperatures will be corrected for off design air and gas flows per figures 1.1 and 1.2. The air and gas flow corrections will be based on correcting the primary air heater air and gas flows to the design values for the tested load. The resulting secondary air heater air and gas flows will then be used to correct the secondary air heater gas outlet temperature. The gas temperature corrections will be additive to the gas temperature calculated in four above.

IP14_001243

Figures 1.1 and 1.2 were developed based on the expected primary and secondary air heater performance. A more accurate way to correct the air heater gas outlet temperatures for off design flows would be to base figures 1.1 and 1.2 on actual air heater performance. If it is acceptable to all parties, and an air or gas flow correction is necessary, figures 1.1 and 1.2 will be revised, after the performance tests, to reflect actual primary and secondary air heater performance.

6. The measured air resistance shall be corrected by the square of the ratio of the contract air weight to the test air weight as determined above. Similarly, the measured gas side pressure drop will be corrected by the square of the ratio of contract gas weight to the test gas weight.

7. The fluid side pressure drops will be corrected by the square of the ratio of the flow at guarantee conditions to the flow at test conditions. If the fluid side pressure differs from the design value, the measured pressure drop will also be corrected for the average specific volume change due to the difference between measured pressure and expected pressure.

IP14_001244

THE BABCOCK & WILCOX COMPANY

FIGURE 1.1

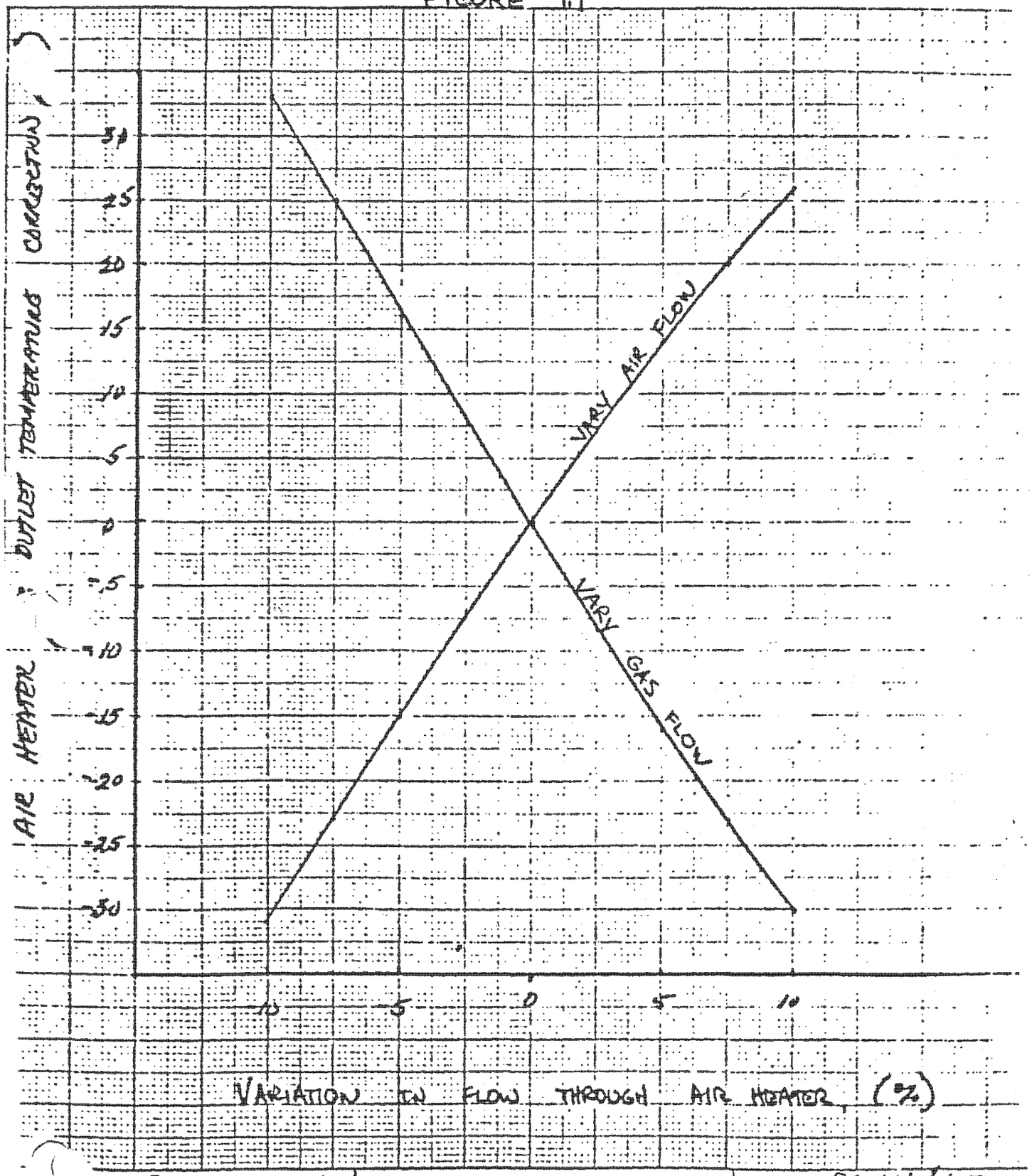

USER INTERMOUNTAIN	JOB NO RB-614/617
SUBJECT SECONDARY AIR HEATER TEMPERATURE CORRECTION VS. VARIATION IN AIR AND GAS FLOW	BY S. A. SCAVUZZO
	DATE 3/19/86

IP14_001245

THE BABCOCK & WILCOX COMPANY

FIGURE 1.2

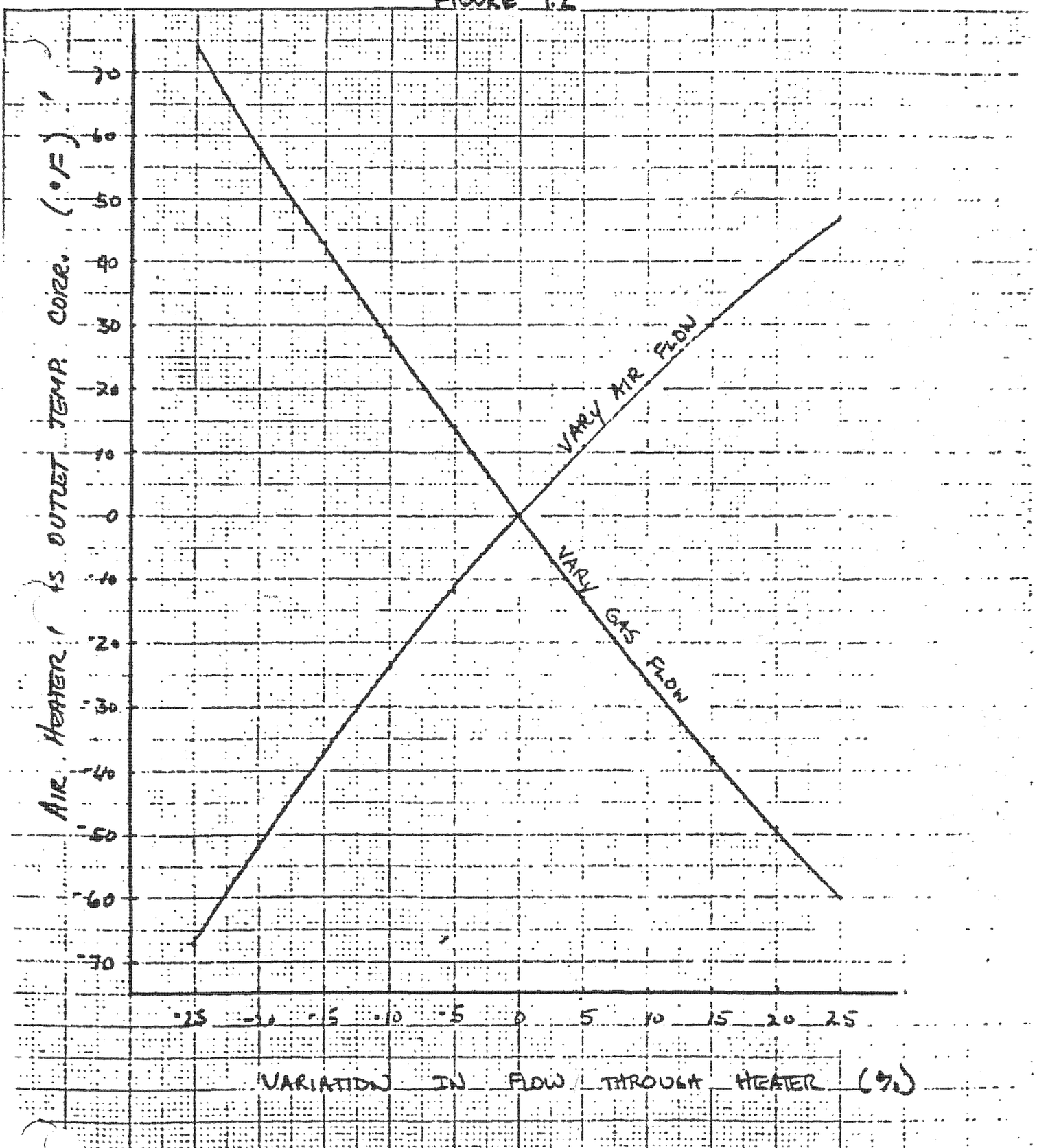

CUSTOMER INTERMOUNTAIN

JOB NO RB-614/617

SUBJECT PRIMARY AIR HEATER GAS OUTLET TEMPERATURE CORRECTION VS. VARIATION IN AIR AND GAS FLOW.

BY S. A. SCAVUZZO

DATE 3/19/86

IP14_001246

ATTACHMENT 1

ESTIMATION OF UNMEASURED AND UNACCOUNTED FOR LOSSES

Unmeasured and unaccounted for losses= Lr + Lp + La -- where:

Lr = Radiation loss to ash pit

Lp = Heat loss in pulv. rejects

La = Sensible heat in ash

Radiation loss to the ash pit :

Area= 4 * 85 = 340 Square Feet

Assume radiation rate to ash pit= 15,000 BTU/(FT-FT-HR)

Heat loss (BTU/HR)= 340 * 15000= 5,100,000 BTU/HR

Boiler input= 7,563,000,000 BTU/HR

Heat loss (%)= 100 * 5.1/7563= 0.07%

Heat loss due to pulverizer rejects :

Assume 50 LB COAL/HR/MILL rejects

HHV= 11010

For 7 mill operation

Heat loss (BTU/HR)= 7 * 50 * 11010 = 3,853,500 BTU/HR

Heat loss (%)= 100 * 3.853/7563= 0.05%

IP14_001247

Heat loss due to sensible heat in flue dust :

Ash by weight (from contract fuel)= 14.00%

HHV (from contract fuel)=11010 BTU/Lb

Assume 0.2% unburned carbon

Cu=Unburned carbon in fuel (% by mass)= 100 * (0.2 * HHV/100/14500)

= .152 (LB UBC)/(100 LB FUEL)

Total refuse = 14.00 + 0.152 = 14.15 (LB REFUSE)/(100 LB FUEL)

Using :

Assumed ash splits

66F air entering temp

2000F Furnace temp @ ash pit

725F Economizer exit temp

290F Air heater exit temp

0.25 BTU/(LB F) Specific heat of refuse at furnace ash pit

0.20 BTU/(LB F) Specific heat of refuse at econ and AH gas out

IP14_001248

Calculation procedure:

% Heat loss due to the sensible heat of flue dust=

$$\frac{\% \text{ split} * \text{Lb refuse} * \text{specific heat BTU} * \text{delta T F} * 100 \text{ Lb fuel}}{\text{Lb fuel} \quad \text{Lb refuse-F} \quad \text{HHV BTU}}$$

Losses:

Bottom ash - (.07) * 0.1415 * (.25) * (2000-66)* 100/11010 = .044%

Econ ash - (.03) * 0.1415 * (.20) * (725-66) * 100/11010 = .005%

AH exit ash - (.73) * 0.1415 * (.20) * (290-66) * 100/11010 = .052%

Heat loss due to sensible heat of refuse = .10%

Summation of estimated unmeasured losses = 0.05 + 0.07 + 0.10 = 0.22%

IP14_001249

wner of plant _____ Test No. _____ Date _____

onducted by _____

Plant name _____ Steam flow _____

Unit No. _____ Drum pressure _____

TEMPERATURES, °F

1	Air temp. around boiler *(ambient)*	
2	Air temp. entering air heater AT DESIGN CONDITIONS	
3	Gas temp. leaving air heater	
4	Gas temp. entering air heater	
5	Air temp. entering air heater	
6	Air temp. leaving air heater	

7	Gas temp. leaving air heater corrected for no leakage	

FLUE GAS ANALYSIS, % by volume

		Economizer Outlet	Air Heater Outlet
	CO_2		
9	O_2		
10	CO		
11	N_2 *(by difference)*		
12	Excess air		

FUEL ANALYSIS AS FIRED
ULTIMATE ANALYSIS, % by weight

13	Carbon	
14	Hydrogen	
15	Oxygen	
16	Nitrogen	
17	Sulphur	
18	Ash	
19	Moisture	
20	Btu/lb *(as fired)*	
41	Unburned carbon in bottom ash, % by weight	

FLY ASH ANALYSIS
ULTIMATE ANALYSIS, % by weight

21	Carbon	
22	Relative humidity, %	
23	Fuel quantity, lb/hr	
51	Unburned carbon in economizer ash, % by weight	
44	Weighted average of % carbon in refuse (Item 10 from CS-1A)	

IP14_001250

UNBURNED CARBON AND REFUSE CALCULATIONS

Data Required

1	Ash in Fuel	_____	% by Mass
2	HHV of Fuel	_____	Btu/lbm
3	Fuel Mass Flow Rate	_____	Klbm/hr

REFUSE DATA AT EACH COLLECTION LOCATION

A. If HHV of refuse reported - enter in Col [5] and calculate Col [6]
B. If % Carbon in refuse reported - enter in Col [6]
C. Enter measured refuse mass flow rates in Col [4]. Where refuse not measured at all locations, estimate split and enter in Col [7]

Location	4 Refuse Mass flow lbm/hr	5 HHV Refuse Btu/lbm	6 % C in Refuse [5]/145	7 Refuse Split % 100×[4]/[9]	8 C Refuse Wtd Ave % [6]×[7]/100
Furnace					
Econ Hop					
Stack					
Other					
9 Total				10 Ave CR, %	

11	CU - Unburned Carbon, % [1]×[10]/(100-[10]) × /(100 -)	
12	Total Refuse, Klbm/hr ([1] + [11]) × [3] / 100 (+)× / 100	
13	Total Refuse, lbm/10KBtu ([1] + [11]) / (HHV / 100) (+)× /(/100)	

NAME OF PLANT		UNIT NO.
TEST NO.	DATE	LOAD
TIME START:	END:	CALC BY
		DATE
		SHEET OF

CS 1A

IP14_001251

42	Lb. refuse produced per lb. fuel burned $\frac{\text{Item 18}}{100 - \text{Item 44}} \times 100$	
43	Heating value of refuse $\frac{\text{Item 44} \times 14500}{100}$	
24	Carbon burned per lb. as fired fuel = C_b $\frac{\text{Item 13}}{100} - \left(\frac{\text{Item 42}}{100} \times \frac{\text{Item 44}}{100}\right)$	
25	Lbs. dry air per lb. as fired fuel (W_A') $W_A' = \frac{\frac{28.02\,(\text{Item 11})}{12.01\,(\text{Item 8} + \text{Item 10})}\left(\text{Item 24} + \frac{12.01}{32.07}\,\frac{(\text{Item 17})}{100}\right) - \frac{\text{Item 16}}{100}}{0.7685}$ Use Economizer outlet values	
26	Lbs. moisture in flue gas per lb. as fired fuel (W_{MG}) $W_{MG} = 8.936\,\frac{(\text{Item 14})}{100} + (\text{Item 25})\,(W_{MA}') + \frac{\text{Item 19}}{100}$ W_{MA}' = Lbs. moisture per lb. dry air at boiler inlet. Obtained from psychrometric chart using ambient air temperature and relative humidity.	
27	Lbs. dry gas per lb. as fired fuel *entering* air heater ($W_G'14$) $W_G'14 = \frac{44.01\,(\text{Item 8}) + 32\,(\text{Item 9}) + 28.01\,(\text{Item 10}) + 28.02\,(\text{Item 11})}{12.01\,(\text{Item 8} + \text{Item 10})}\left(\text{Item 24} + \frac{12.01}{32.07}\,\frac{\text{Item 17}}{100}\right)$ Use values from ECONOMIZER OUTLET.	
28	Lbs. dry gas per lb. as fired fuel *leaving* air heater ($W_G'15$) $W_G'15 = \frac{44.01\,(\text{Item 8}) + 32\,(\text{Item 9}) + 28.01\,(\text{Item 10}) + 28.02\,(\text{Item 11})}{12.01\,(\text{Item 8} + \text{Item 10})}\left(\text{Item 24} + \frac{12.01}{32.07}\,\frac{\text{Item 17}}{100}\right)$ Use values from AIR HEATER OUTLET.	
29	Moisture correction term = (Item 28 − 27) (W_{MA}') W_{MA}' from psychrometric chart	
30	Lbs. wet gas per lb. as fired fuel *entering* air heater (W_G) W_G = Item 27 + Item 26	
31	Lbs. wet gas per lb. as fired fuel *leaving* air heater (W_G) W_G = Item 28 + Item 26 + Item 29	
32	Leakage across air heater % (A_{LD}) $\frac{(\text{Item 31} - \text{Item 30})}{\text{Item 30}} \times 100$	
7	Exit gas temperature corrected for no leakage ($T_G 15_{NL}$) $T_{G\,NL} = \frac{(\text{Item 32})(C_{pA})(\text{Item 3} - \text{Item 5})}{100\,(C_{pG})} + \text{Item 3}$ C_{pA} = Specific heat of air C_{pG} = Specific heat of flue gas } From Figures 16 & 17 (Wet basis)	

IP14_001252

ITEM	HEAT LOSS EFFICIENCY		HEAT LOSS %
33	HEAT LOSS DUE TO DRY GAS = (ITEM 27) (C_{pg}) (ITEM 7 - ITEM 5) =	$\frac{\text{ITEM 33}}{\text{ITEM 20}} \times 100 =$	
34	HEAT LOSS DUE TO MOISTURE IN FUEL $\frac{\text{ITEM 19}}{100} \times \left[\left(\text{ENTHALPY OF VAPOR AT 1 PSIA AND T ITEM 7}\right) - \left(\text{ENTHALPY OF LIQUID AT T ITEM 5}\right)\right] =$	$\frac{\text{ITEM 34}}{\text{ITEM 20}} \times 100 =$	
35	HEAT LOSS DUE TO H_2O FROM COMBUSTION OF H_2 $9 \times \frac{\text{ITEM 14}}{100} \times \left[\left(\text{ENTHALPY OF VAPOR AT 1 PSIA AND T ITEM 7}\right) - \left(\text{ENTHALPY OF LIQUID AT T ITEM 5}\right)\right] =$	$\frac{\text{ITEM 35}}{\text{ITEM 20}} \times 100 =$	
36	HEAT LOSS DUE TO COMBUSTIBLE IN REFUSE $\frac{\text{ITEM 42}}{100} \times \text{ITEM 43}$	$\frac{\text{ITEM 36}}{\text{ITEM 20}} \times 100 =$	
37	HEAT LOSS DUE TO RADIATION ITEM 23 X ITEM 20 = USING THIS VALUE GO TO GRAPH FOR RADIATION LOSS		
38	HEAT LOSS DUE TO MOISTURE IN AIR ITEM 25 X $W_{mA'}$ X $\left[\left(\text{ENTHALPY OF VAPOR AT 1 PSIA AND T ITEM 7}\right) - \left(\text{ENTHALPY OF SATURATED VAPOR AT ITEM 5}\right)\right] =$	$\frac{\text{ITEM 38}}{\text{ITEM 20}} \times 100 =$	
39	HEAT LOSS DUE TO HOT PRECIPITATOR ENTER VALUE FROM CS-4 (ITEM 4B)		
40	UNMEASURED LOSSES		
41	TOTAL RIGHT HAND COLUMN		
45	EFFICIENCY = 100 - ITEM 41		

IP14_001253

GENERAL COMBUSTION CALCULATIONS

LB/LB FUEL

(1) UBC = $\frac{\text{Item } 42}{100} \times \frac{\text{Item } 44}{100}$ =

			Theor. Air (3)		H_2O	(4)	Dry Gas Vol. (5)		Wet Gas Vol. (6)	
(2) Ash										
S			x4.335				x11.528			
H_2			x34.3		x8.94				x32.08	
C										
-UBC										
C_b			x11.51				x31.32			
H_2O					x1.00				x119.17	
N_2							x13.443			
O_2			x(-4.32)							
(7) HHV			(3) Σ		(4) Σ		10.331x(3)		(5)	
							(5) Σ		(6) Σ	

Based on Ultimate Fuel Analysis

	Lvg.Econ.	Ent. AH	Lvg. AH
(8) Flue Gas O_2% (avg.)			
(9) (Item 8 x Item 5)/Item 3			
(10) .13068 x Item 8			
(11) 2.73-Item 10			
Percent Excess Air = $\frac{\text{Item } 9}{\text{Item } 11}$	(12)	(13)	(14)

$$\text{Percent } CO_2+SO_2 = 100 \frac{31.32\ C_b + 11.528\ S}{[5] + .13068\ [3]\ [X5]}, \%$$

$$\text{Percent } CO_2+SO_2 = 100 \frac{31.32 \times \qquad + 11.528 \times}{+ .13068 \times \qquad \times} =$$

Reference PTC 19.10, paragraph 6.04.1

TEST NO.	DATE
CALC BY	DATE

IP14_001254

AVERAGE AIR AND GAS TEMPERATURE CALCULATIONS

REQUIRED DATA

				PRI AH		SEC AH
1	AIR TEMP. ENTERING	F	1A.	_____	1B.	_____
2	GAS TEMP. LEAVING (EXCL. LKG)	F	2A.	_____	2B.	_____
3	GAS TEMP. ENTERING	F	3A.	_____	3B.	_____
4	AIR TEMP. ENTERING PULVERIZERS	F				
5	PRIMARY AIR FLOW	KLB/HR		_____		
6	FUEL FLOW	KLB/HR		_____		
7	EXCESS AIR LVG ECON	%		_____		
8	DRY AIR (Item 25, C5-2)	LB/LB FUEL		_____		
9	MOISTURE IN AIR	LB/LB AIR		_____		
10	TOTAL WET GAS FLOW (Item 30, C5-2)	LB/LB FUEL		_____		
11	MOISTURE IN GAS (Item 26, C5-2)	LB/LB FUEL		_____		

CALCULATIONS

12	MOISTURE IN GAS 100 x [11] / [10]	%	
13	SPECIFIC HEAT OF WET AIR	BTU/LB F	_____
14	SPECIFIC HEAT OF WET GAS	BTU/LB F	_____
15	PRI AH GAS FLOW	KLB/HR	_____
	([5]x[13]x([4]-[1A]))/([14]x([3A]-[2A]))		
16	TOTAL WET GAS FLOW [6] x [10]	KLB/HR	_____
17	TOTAL WET AIR FLOW	KLB/HR	_____
	(1 + [9]) x [6] x [8]		
18	PAH AIR FRACT [5] / [17]		_____
19	PAH GAS FRACTION [15] / [16]		_____
20			_____
21	AVE AIR ENT TEMP [1B]x[1A]+(1-[1B])x1B		
22	AVE GAS LVG TEMP [19]x[2A]+(1-[1B])x[2B]		_____
			_____

TEST NO.	DATE
CALC BY	DATE

IP14_001255

RECEIVED
MAY 14 1986
BLACK ...
Intermountain Power Project

INTERMOUNTAIN POWER PROJECT

INTERMOUNTAIN GENERATING STATION

UNITS 1 & 2

PERFORMANCE TEST PROCEDURES

Initial Issue May 13, 1986

PERFORMANCE TEST PROCEDURES

CONTENTS

		Page
1.0	INTRODUCTION	1-1
2.0	STEAM GENERATOR	2-1
	2.1 STEAM GENERATOR TEST METHOD	2-1
	2.2 STEAM GENERATOR GUARANTEED CONDITIONS	2-3
	2.3 ORSAT SAMPLING PROCEDURES	2-3
	2.4 FUEL SAMPLING PROCEDURES	2-5
	2.5 REFUSE SAMPLING PROCEDURES	2-6
	2.6 TEST DATA AND CALCULATIONS	2-6
	2.6.1 Measured Data	2-7
	2.6.2 Calculated Data	2-8
	2.6.3 Calculated Heat Loss	2-9
	2.6.4 Corrections to Guarantee Inlet Temperature	2-11
3.0	TURBINE GENERATOR	3-1
	3.1 TURBINE GENERATOR PERFORMANCE TEST	3-1
	3.2 TURBINE GENERATOR GUARANTEED CONDITIONS	3-2
	3.3 TURBINE GENERATOR TEST METHOD	3-2
	3.4 TURBINE GENERATOR PERFORMANCE TEST RUNS	3-4
	3.5 TURBINE GENERATOR PERFORMANCE CALCULATIONS	3-4
4.0	BOILER FEED PUMP TURBINE	4-1
	4.1 TEST PROCEDURE	4-1
	4.2 CALCULATIONS AND RESULTS	4-3
5.0	BALANCE OF PLANT	5-1
	5.1 FEEDWATER CYCLE EQUIPMENT PERFORMANCE	5-1
	5.2 PLANT HEAT RATE	5-1
	5.3 BENCH MARK DATA	5-1
6.0	CYCLE ISOLATION	6-1

RECEIVED

MAY 14 1986

CLARK & VEAT
Intermountain Power Project

IP14_001257

LIST OF TABLES

		Page
TABLE 2-1	STEAM GENERATOR GUARANTEE CONDITIONS	2-4
TABLE 3-1	MEASUREMENT UNCERTAINTIES	3-7
TABLE 4-1	BOILER FEED PUMP TURBINE GUARANTEED CONDITIONS	4-2
TABLE 5-1	FEEDWATER PUMPS GUARANTEE CONDITIONS	5-2
TABLE 5-2	CONDENSER GUARANTEED PERFORMANCE	5-3
TABLE 5-3	FEEDWATER HEATER GUARANTEE CONDITIONS	5-4
TABLE 5-4	DEAERATOR HEATER GUARANTEE CONDITIONS	5-7

LIST OF FIGURES

		Page
FIGURE 2-1	STEAM GENERATOR HEAT BALANCE	2-2

MAY 14 198[illegible]

IP14_001258

INTERMOUNTAIN POWER PROJECT

INTERMOUNTAIN GENERATING STATION

UNITS 1 & 2

PERFORMANCE TEST PROCEDURES

1.0 INTRODUCTION

This report outlines the performance test procedures to be followed for the testing of the Intermountain Generating Station Unit 1. The main purpose of the testing is to determine the net plant heat rate and the performance and efficiencies of the major pieces of cycle equipment. Bench mark data will also be collected. The same procedures may be used for testing Unit 2.

The performance test will be conducted by Intermountain Power Project personnel. Black & Veatch representatives will be available for consultation services as required. The cycle isolation and data requirements are provided herein. Collected data and corrections will be included in the Performance Test Report.

Data will be collected by several methods, through the devices on the Main Control Panel, from the Control and Information Computer System, and from predetermined instrument areas distributed throughout the plant and boiler platforms.

Several tests at different unit loads will be conducted and the data obtained will be used to determine the performance of the various equipment. The data gathered in each of these test runs will be evaluated to select the readings to be used in the performance calculations. The result of these calculations will also be evaluated to judge the impact of the plant instrumentation and other test factors on the results. The results of these tests, including correction factors to adjust the results for differences between test conditions and guaranteed conditions, will be compared with the manufacturer's predicted and guaranteed performance.

At the time of each test period, the plant Information Computer will also perform the Unit Performance test calculations for comparison with test results.

The analysis of the fuel used during the test should be available prior to the final evaluation of the test data to determine the actual performance of the equipment, as it affects directly the steam generator efficiency. The ultimate analysis of the fuel as-fired may be different from the fuel analysis

MAY 14 1986

BLACK & VEATCH
Intermountain Power Project

IP14_001259

used by the manufacturer for the design and guarantee of the equipment, and if this is the case, the performance calculations will be compensated to account for these differences.

The data obtained during the performance runs will generally be obtained from plant instruments; that is, instrumentation used for normal operation of the unit, and special calibrated instruments used for the ASME performance testing of the turbine. The readings from the latter instruments are considered more accurate than plant instruments and, therefore, should be preferred for use in the computation of equipment efficiencies. All instruments should be calibrated before the performance test runs, especially those used for the determination of unit efficiency.

A preliminary test run should be conducted before the first performance test is run for the purpose of checking the operation and readings of all instruments directly related to the test and for the training of observers and other test personnel. Proper combustion conditions should be established before commencing the test. The unit should be brought up to test load and maintained in this condition for a period of time before the test run is scheduled to begin. The time between reaching test load and the beginning of the test (normally from one to three hours) should be adequate to assure that the unit has reached equilibrium conditions. During the testing periods, the steam cycle should be isolated from blowdown and makeup conditions as much as possible. Combustion conditions, rate of fuel flow, rate of feedwater flow, water level in drum, excess air, and all controllable temperatures and pressures shall be maintained as constant as possible for the duration of the test run.

The test runs should preferably be started one hour after the unit becomes stable and each run should not be less than four hours in duration if possible. For runs to determine the maximum output at which the unit can be operated for a short period of time, the run should be started as soon as maximum output is reached and continued until conditions necessitate terminating the run.

It is recommended that a minimum of seven tests be performed; two at valves wide open (full load), two at the third valve point (90 percent load), two at the second valve point (60 percent load) and one at 5 percent over pressure with valves wide open (maximum capability).

MAY 14 1986
BLACK & VEATCH
Intermountain Power

IP14_001260

Several readings should be made at each load to obtain representative values of the conditions of the unit at that specific load.

All observations, measurements, and instrument readings necessary to the object of the test shall be recorded as observed. Should serious inconsistencies in the observed data be detected during a run or during the computation of the results, the run shall be rejected completely, or may be rejected in part if the affected data is at the beginning or at the end of the run. A run that has been rejected shall be repeated if necessary to attain the objectives of the test.

The procedures outlined in this report follow in general the recommendations of the ASME Power Test Codes for testing steam turbines and steam generating units. When tested simultaneously, and especially with benefit of the ASME turbine test data, sufficient data will be available for evaluation of the performance of all major equipment in the cycle.

The data obtained during the performance test runs will be analyzed and the findings will be summarized in the Performance Test Report prepared by Black & Veatch. This document will be issued after the performance tests have been completed.

MAY 14 1986

IP14_001261

PERFORMANCE TEST PROCEDURES

2.0 STEAM GENERATOR

2.1 STEAM GENERATOR TEST METHOD

The Steam Generator Performance Test will be conducted in accordance with the general procedures outlined in the ASME Power Test Code, Bulletin PTC-4.1. In-plant instruments, where possible will be used for the test. Orsat apparatus connected to test taps on the ductwork will be used for the analysis of flue gases.

There are two methods approved by the ASME Power Test Codes for determining the efficiency of a steam generator: the Heat Loss Method and the Input-Output Method. The Heat Loss Method provides a more accurate determination of the efficiency of the steam generation, and an abbreviated heat loss method is the contract basis for acceptance testing.

The Heat Loss Method is predicated upon obtaining accurate and complete data which will make it possible to determine all accountable heat losses and heat credits. The efficiency then is equal to 100 percent minus a total heat loss quotient expressed in percent. The total heat loss quotient is made up of the sum of all accountable heat losses as the numerator, and the heat in the fuel plus heat credits as the denominator. The abbreviated heat loss method ignores the minor losses and heat credits. The accuracy of the Heat Loss Method depends upon an accurate flue gas sample and ultimate analysis of the fuel being fired. The analysis should break the fuel constituents into the various chemical elements which are combustible or take part in the chemical reaction. Those elements are determined in percent by weight of the fuel as-fired.

During steam generator tests, it is necessary that the steam generator be operated without blowdown and sootblowing as these quantities cannot be accurately measured and directly affect the efficiency of the steam generator. It has also been assumed that air preheating will not be used and no main steam will be required to drive the boiler feed pumps. On the following page, Figure 2-1 demonstrates expected parameters for the Heat Loss Method.

14 1986
& VEATCH
Power Project

IP14_001262

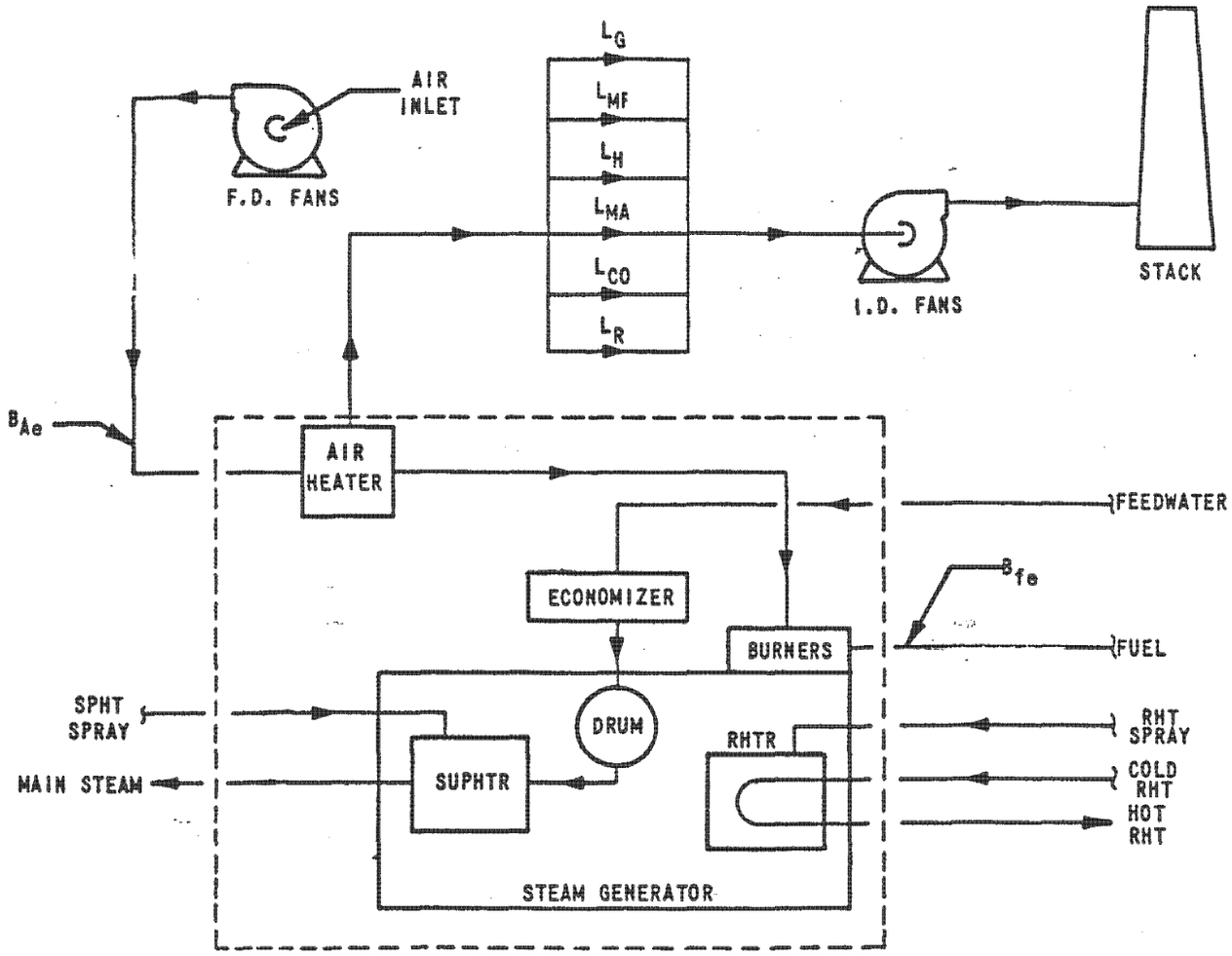

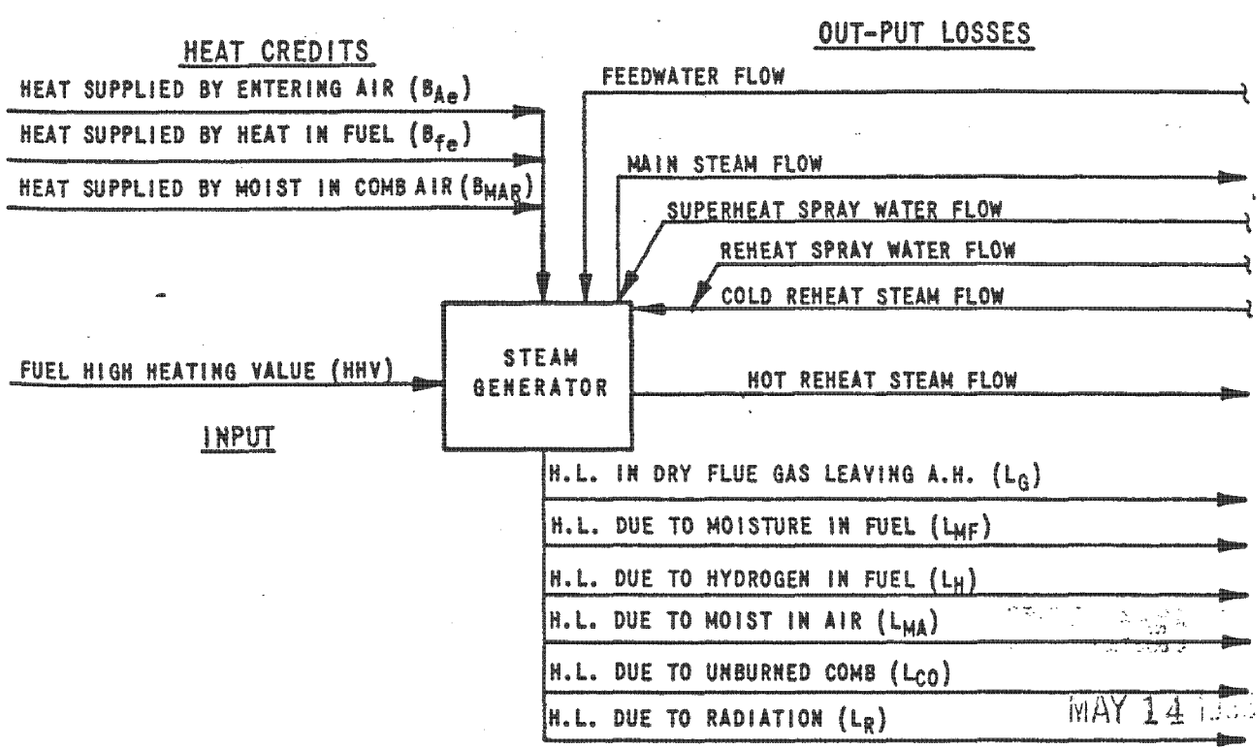

MAY 14
BLACK & V
Intermountain

STEAM GENERATOR HEAT BALANCE

FIGURE 2-1

051386

IP14_001263

The data obtained during the performance of the tests will be used to obtain two sets of values: the actual performance of the unit and the performance adjusted for guaranteed conditions. It is important that the efficiency of the unit, based on actual conditions, be determined so that a bench mark can be established to monitor equipment efficiencies in the future. A detailed description of each one of these methods is included in this section.

The results of the performance test are dependent on the quality of the instruments and equipment used for obtaining the data. The code has determined certain tolerances and limits of error that can be expected when testing a steam generator. From this information it can be determined that the expected error in calculated steam generator efficiency from the important measurements is ± 0.33 percent.

2.2 STEAM GENERATOR GUARANTEED CONDITIONS

The steam generator should be tested for performance based on the conditions stated in the contract. Guarantee conditions for the steam generator are listed in Table 2-1.

2.3 ORSAT SAMPLING PROCEDURES

The performance of a steam generator is normally obtained by the analysis of the flue gases. The flue gas sampling is made by a portable Orsat which measures the percentage by volume of CO_2 and O_2 present in the flue gas. The presence of CO in the combustion process indicates incomplete combustion and is normally present in the flue gas in very small quantities. High percentage of CO in the gas stream is not likely to occur, especially with high excess air conditions. If significant amounts of CO are present, it must be measured and included in the heat loss calculations.

The sampling method is very important in obtaining a representative sample for an accurate flue gas analysis. The location and type of the sample probe and the number and frequency of samples taken depends on the accuracy desired.

MAY 14 1986
BLACK & [illegible]
Intermountain Power [illegible]

IP14_001264

TABLE 2-1. STEAM GENERATOR GUARANTEE CONDITIONS

Description	
Superheater Outlet Flow (lb/hr)	6,100,000
Superheater Outlet Pressure (psig)	2,515
Feedwater Inlet Temperature (F)	543
Reheater Inlet Flow (lb/hr)	5,000,000
Reheater Inlet Pressure (psig)	539
Reheater Inlet Temperature (F)	620
Mills in Operation	7
Excess Air (%)	17
Reference Air Tempeature (F)	60
Moisture in Air (Lb/Lb Dry Air)	0.0067
Barometric Pressure (IN.HG)	25.18
Fuel	Performance Coal

MAY 14 1986
DATCH
Power Projec

IP14_001265

Flue gas sampling at a large number of points in duct traverses is advisable to obtain an indicative sample of the combustion gases in the duct. Multipoint collection and mixing manifolds are recommended for use with either permanent or temporary probes. The probes should be located immediately after the steam generator flue gas outlets and the combined primary and secondary air heater gas outlet connections. Gas sampling downstream of the air heaters is required to determine leakage in the air heaters.

The probes should include thermocouples for accurate determination of the gas temperatures.

Prior to obtaining the test samples, one or more samples should be taken to familiarize the operator with the Orsat instrument and to assure that the results obtained from the gas analysis are reasonable.

The chemical reagents used for the analysis of the flue gas sample in the Orsat instrument are affected by the combustion gases, and after a period of time, they become unreliable. Therefore, the Orsat instrument should be filled with a new supply of reagents before the instrument is used in the performance of the test.

2.4 FUEL SAMPLING PROCEDURES

The steam generator contract requires fuel sampling to consist of one quart from each feeder, quartered, and analyzed in accordance with ASTM standards.

In order to make an accurate moisture determination, a special sample just for this purpose should be separated from the general sample and quickly placed in a non-corrosive air tight container and sealed immediately. Every effort should be made to avoid loss of moisture due to strong drafts at the point of sampling. This sample for moisture should not be quartered or crushed prior to moisture determination in the laboratory.

The high heat value of the fuel is determined at constant volume in a bomb calorimeter. However, the fuel is burned at constant pressure in the steam generator. The high-heat value may be converted by one of the methods provided in the code, but for coal, the difference is only about 0.1 percent (whereas the error in measurement of heating value is + 0.5 percent).

MAY 14 1986

IP14_001266

2.5 REFUSE SAMPLING PROCEDURES

Measurement of the quantities of refuse produced is impractical. The heat loss due to unburned combustibles in the refuse will be determined by sampling the refuse from the bottom ash hopper, economizer ash hopper, and either the air heater ash hoppers or baghouse hoppers. The percent by weight of unburned combustibles, which will be assumed to be totally carbon, will be determined for each location. The quantity and average heating value of the refuse will be determined using the ash content in the fuel analysis, with the expected distribution between the collection locations, and the heating values for each location. The distribution, from the contract, is to be 90 percent fly ash, 7 percent bottom ash, and 3 percent economizer ash.

The minor losses in pulverizer rejects will not be determined.

2.6 TEST DATA AND CALCULATIONS

After the raw test data has been analyzed, corrected, and reduced, the appropriate values should be assigned to the measured data in this section and the calculations performed. This will allow for quick determination of any problems with test data or procedures. Efficiencies determined from duplicate tests should agree within 0.5 percent.

In order to minimize the data required and to make the calculations in this section as simple as possible, they are based on the expected operating conditions for the tests as follows.

(a) Air preheating will not be required.

(b) Sootblowing will not be required during data taking.

(c) No appreciable unburned hydrocarbons or combustibles in the flue gas.

(d) No appreciable air infiltration between the economizer flue gas outlets and air heater inlets.

(e) No operation of igniters during data taking.

The deviations from specified operating conditions for which corrections shall be made should be agreed to prior to testing.

MAY 14 1986
SATCH
Power Project

IP14_001267

2.6.1 Measured Data

Item	
1	Fan room relative humidity, %
2	Fan room temperature, F
3	Air heater flue gas outlet temperature, F
4	Air heater flue gas inlet temperature, F
5	Air heater air inlet temperature, F
6	Air heater air outlet temperature, F
7	Economizer flue gas outlet CO_2, % by volume
8	Economizer flue gas outlet O_2, % by volume
9	Air heater flue gas outlet CO_2, % by volume
10	Air heater flue gas outlet O_2, % by volume
11	Carbon in as-fired ultimate fuel analysis, % by weight
12	Hydrogen in as-fired ultimate fuel analysis, % by weight
13	Oxygen in as-fired ultimate fuel analysis, % by weight
14	Nitrogen in as-fired ultimate fuel analysis, % by weight
15	Sulphur in as-fired ultimate fuel analysis, % by weight
16	Ash in as-fired ultimate fuel analysis, % by weight
17	Moisture in as-fired ultimate fuel analysis, % by weight
18	High-heat value of as-fired fuel, Btu/lb
19	Unburned carbon in bottom ash, % by weight
20	Unburned carbon in economizer ash, % by weight
21	Unburned carbon in fly ash, % by weight
22	Coal flow, lbs/hr

MAY 14 1986
BLACK
Intermountain Power Project

IP14_001268

2.6.2 Calculated Data

Item

23 Dry refuse per lb as-fired fuel =

$$\frac{\text{Item 16}}{100 - [(\text{Item 19})(.07) + (\text{Item 20})(.03) + (\text{Item 21})(.90)]}$$

24 Btu/lb in refuse =

$$\frac{(\text{Item 19})(.07) + (\text{Item 20})(.03) + (\text{Item 21})(.90)}{100} \times 14{,}500$$

25 Carbon burned per lb as-fired fuel =

$$\frac{\text{Item 11}}{100} - \frac{(\text{Item 23})(\text{Item 24})}{14{,}500}$$

26 Lbs dry air per lb as-fired fuel =

$$\frac{\dfrac{28.02\,[100-(\text{Item 7} + \text{Item 8})]}{12.01\,(\text{Item 7})}\left[\text{Item 25} + \dfrac{12.01}{32.07}\,\dfrac{(\text{Item 15})}{100}\right] - \dfrac{\text{Item 14}}{100}}{0.7685}$$

27 Lbs moisture per lb dry air at boiler inlet

Obtain from psychrometric chart using Item 1 and Item 2

28 Lbs moisture in flue gas per lb as-fired fuel =

$$8.936\,\frac{(\text{Item 12})}{100} + (\text{Item 26})(\text{Item 27}) + \frac{\text{Item 17}}{100}$$

29 Lbs dry gas per lb as-fired fuel entering air heaters =

$$\frac{44.01\,(\text{Item 7}) + 32\,(\text{Item 8}) + 28.02\,[100-(\text{Item 7} + \text{Item 8})]}{12.01\,(\text{Item 7})}$$

$$\times \left[\text{Item 25} + \frac{12.01}{32.07}\,\frac{(\text{Item 15})}{100}\right]$$

MAY 14 1986
BLACK & ...
Intermountain Power ...

IP14_001269

Item

30 Lbs dry gas per lb as-fired fuel leaving air heaters =

$$\frac{44.01\ (\text{Item } 9) + 32\ (\text{Item } 10) + 28.02\ [100-(\text{Item } 7 + \text{Item } 8)]}{12.01\ (\text{Item } 7)}$$

$$\times\ [\text{Item } 25 + \frac{12.01}{32.07}\ \frac{(\text{Item } 15)}{100}]$$

31 Moisture correction term =

(Item 30 - Item 29) Item 27

32 Lbs wet gas per lb as-fired fuel entering air heaters =

Item 29 + Item 28

33 Lbs wet gas per lb as-fired fuel leaving air heaters =

Item 30 + Item 28 + Item 31

34 Leakage across air heaters in percentage =

$$\frac{(\text{Item } 33 - \text{Item } 32)}{\text{Item } 32} \times 100$$

35 Exit gas temperature corrected for no leakage =

$$\frac{(\text{Item } 34)(C_{pA})(\text{Item } 3 - \text{Item } 5)}{100\ (C_{pG})} + \text{Item } 3$$

Where: C_{pA} = Specific heat of Item 5

C_{pG} = Specific heat of Item 3

2.6.3 Calculated Heat Loss

Item

36 Heat loss due to dry gas (percentage) =

$$\frac{(\text{Item } 29)(0.24)(\text{Item } 35 - \text{Item } 2)}{\text{Item } 18} \times 100$$

MAY 14 1986
BLACK & VEATCH
Intermountain Power

IP14_001270

Item

37 Heat loss due to moisture in fuel (percentage) =

$$\frac{\frac{\text{Item 17}}{100}(h_{gG} - h_{fA})}{\text{Item 18}} \times 100$$

Where: h_{gG} = enthalpy of vapor at 1 psia and Item 35

h_{fA} = enthalpy of liquid at Item 2

38 Heat loss due to moisture from combustion of H_2 (percentage) =

$$\frac{8.936 \times \frac{\text{Item 12}}{100}(h_{gG} - h_{fA})}{\text{Item 18}} \times 100$$

39 Heat loss due to combustible in refuse (percentage) =

$$\frac{(\text{Item 23})\ (\text{Item 24})}{\text{Item 18}} \times 100$$

40 Heat loss due to radiation (percentage)

Obtain from ABMA Standard Radiation Loss Chart using Actual Output = Item 22 x Item 18

41 Unmeasured losses (percentage)

Use assigned value of 0.5 percent

42 Efficiency (percentage) =

100 - (Item 36 + Item 37 + Item 38 + Item 39 + Item 40 + Item 41)

MAY 14 1986
Project

IP14_001271

2.6.4 Corrections to Guarantee Inlet Temperature

Item

43 Exit gas temperature corrected for guarantee inlet temperature =

$$\frac{(\text{Guar Inlet Temp})\,(\text{Item 4} - \text{Item 3}) + \text{Item 4}\,(\text{Item 3} - \text{Item 5})}{(\text{Item 4} - \text{Item 5})}$$

44 Corrected heat loss due to dry gas (percentage) =

$$\frac{(\text{Item 29})(0.24)(\text{Item 43} - \text{Guar Inlet Temp})}{\text{Item 18}} \times 100$$

45 Corrected heat loss due to moisture in fuel (percentage) =

$$\frac{\frac{\text{Item 17}}{100}\,(h_{gG}' - h_{fA}')}{\text{Item 18}} \times 100$$

Where: h_{gG}' = enthalpy of vapor at 1 psia and Item 43

h_{fA}' = enthalpy of liquid at Guar Inlet Temp

46 Corrected heat loss due to moisture from combustion of H_2 (percentage) =

$$\frac{8.936 \times \frac{\text{Item 12}}{100}\,(h_{gG}' - h_{fA}')}{\text{Item 18}} \times 100$$

47 Corrected Efficiency (percentage) =

100 - (Item 44 + Item 45 + Item 46 + Item 39 + Item 40 + Item 41)

MAY 14 1986
VEATCH
Power Project

IP14_001272

B&W calc methods

STEAM GENERATOR EFFICIENCY TEST PROCEDURES

Performance tests for boiler efficiency will be made on the basis of the abbreviated heat loss method in accordance with ASME PTC 4.1, -1974 and as follows.

- No heat credits will be measured.
- No heat credits will be assigned.
- Carbon losses will be included.
- Unmeasured and unaccounted for losses will be assigned as 0.5 percent. (See Attachment 1 for estimations of the unmeasured and unaccounted for losses.)
- Radiation heat loss will be in accordance with ABMA Standard Radiation Loss Chart, Figure E, of PTC 4.1.
- Permissible deviation in efficiency between duplicate tests will be 0.5 percent.
- Superheat and reheat steam temperatures will be 1,005 F plus or minus 10 F.
- Air heater leakage will be corrected to the specified value, if required. ?
- The official test point will be maximum capacity. Two official test runs will be made with a middle level pulverizer out of service. Two additional test runs at maximum capacity will be made with a top level pulverizer out of service. One test run each will be made for MCR, 65 percent, and 50 percent capacity.
- Cleanliness of the unit will be achieved by using the normal sootblowing cycle recommended by B&W for the load and conditions expected for each test run. Sootblowing will be completed two hours before the start of the four hour test run.
- Fuel sampling will be one quart from each feeder, and samples will be quartered. Analysis will be in accordance with ASTM standards. A special sample will be separated from the general sample and placed in a non-corrosive air tight container and sealed immediately. This sample will not be quartered or crushed

110586

prior to moisture determination in the laboratory. IPSC will perform a short proximate analysis. An independent test lab will perform complete proximate and ultimate analyses.

- Test results will be reported as computed from test observations with proper correction for calibrations.
- Distribution of fuel refuse quantities between the boiler and stack will be determined by measurement of the stack gas dust loading. In the absence of a valid measurement, the distribution between the boiler and stack will be 10 percent and 90 percent, respectively. The boiler 10 percent will be broken down by assuming 70 percent in the hopper and 30 percent in the economizer hopper. Ash analysis for carbon content will be performed by an independent test laboratory.
- Corrections to be made for deviation from specified operation conditions will be made in accordance with the PTC 4.1 and as described in the attached Calculation of Efficiency Corrected to Contract Conditions. No O_2 correction
- Performance calculations will be based on the ASME Steam Tables published in 1967.
- The pulverizers will be operated with a coal air outlet temperature at 150 F.
- The primary air heater/secondary air heater gas split will be set at approximately the design value by operating with approximately equal gas temperatures leaving both the primary and secondary air heaters.
- The fan room temperature will be maintained at 60 F by air Fan Inlets weighted average preheating.
- The official test will be based on the unit being fired with the specified performance coal fuel and on the other performance conditions shown on Boiler Performance Summary Sheet P23-310-0-1S at the capacity of 6,100,000 lbs/hr (no auxiliary steam) at 2,515 psig at the superheater outlet with a feedwater temperature of 543 F and reheater inlet steam conditions of 5,000,000 lbs/hr and 539 psig and 620 F and with seven mills in operation.

110586

- Calculations will be in accordance with the PTC 4.1 and as described in the attached Efficiency Calculation Procedure for Test Conditions.

110586

ATTACHMENT 1

ESTIMATION OF UNMEASURED AND UNACCOUNTED FOR LOSSES

Unmeasured and unaccounted for losses= Lr + Lp + La -- where:

Lr = Radiation loss to ash pit

Lp = Heat loss in pulv. rejects

La = Sensible heat in ash

Radiation loss to the ash pit :

Area= 4 * 85 = 340 Square Feet

Assume radiation rate to ash pit= 15,000 BTU/(FT-FT-HR)

Heat loss (BTU/HR)= 340 * 15000= 5,100,000 BTU/HR

Boiler input= 7,563,000,000 BTU/HR

Heat loss (%)= 100 * 5.1/7563= 0.07%

Heat loss due to pulverizer rejects :

Assume 50 LB COAL/HR/MILL rejects

NHV= 11010

For 7 mill operation

Heat loss (BTU/HR)= 7 * 50 * 11010 = 3,853,500 BTU/HR

Heat loss (%)= 100 * 3.853/7563= 0.05%

IP14_001276

Heat loss due to sensible heat in flue dust :

Ash by weight (from contract fuel)= 14.00%
HHV (from contract fuel)=11010 BTU/Lb
Assume 0.2% unburned carbon
Cu=Unburned carbon in fuel (% by mass)= 100 * (0.2 * HHV/100/14500)
= .152 (LB UBC)/(100 LB FUEL)

Total refuse = 14.00 + 0.152 = 14.15 (LB REFUSE)/(100 LB FUEL)
Using :

Assumed ash splits
66F air entering temp
2000F Furnace temp @ ash pit
725F Economizer exit temp
290F Air heater exit temp
0.25 BTU/(LB F) Specific heat of refuse at furnace ash pit
0.20 BTU/(LB F) Specific heat of refuse at econ and AH gas out

IP14_001277

Calculation procedure:

% Heat loss due to the sensible heat of flue dust=

$$\frac{\%\ \text{split} * \text{Lb refuse} * \text{specific heat BTU} * \text{delta T F} * 100\ \text{Lb fuel}}{\text{Lb fuel} \quad \text{Lb refuse-F} \quad \text{HHV BTU}}$$

Losses:

Bottom ash - (.07) * 0.1415 * (.25) * (2000-66)* 100/11010 = .044%

Econ ash - (.03) * 0.1415 * (.20) * (725-66) * 100/11010 = .005%

AH exit ash - (.73) * 0.1415 * (.20) * (290-66) * 100/11010 = .052%

Heat loss due to sensible heat of refuse = .10%

Summation of estimated unmeasured losses = 0.05 + 0.07 + 0.10 = 0.22%

IP14_001278

CALCULATION OF EFFICIENCY CORRECTED TO CONTRACT CONDITIONS

In order to evaluate the results of the efficiency test, the heat losses must be corrected to baseline or contract conditions. The items that must be corrected for contract conditions are the fuel analysis (referred to as the Performance fuel herein), excess air, moisture in air, air temperature entering the air heaters and possibly the gas weight split between the primary and secondary air heaters. The correction procedure and calculations are described below.

1. The unburned carbon for the Performance coal shall be assumed to be proportional to the ratio of the higher heating value of the Performance coal to the higher heating value of the test coal.
   Cu(corrected) = Cu(test) * HHV(design) / HHV(test)

2. Calculate the dry gas weight for the Performance coal and Contract Summary Sheet (P23-310-0-1S0) excess air (17 %). Referring to CS-4, calculate O2 for 17 % excess air, using the unburned carbon as determined above and the Performance coal analysis, from:

$$O_2 = \frac{2.73 \times [3] \times [12]}{[5] + 0.13068 \times [3] \times [12]} \quad , \%$$

   Calculate CO2+SO2 from CS-4 using the O2 calculated above. Calculate dry gas weight per line 27 on CS-2, or line 25 on PTC 4.1b.

3. Use the Contract Summary Sheet value for moisture in air, 0.0067 lb mois/lb dry air.

IP14_001279

4. Correct the air heater gas outlet temperature (excluding leakage) for the entering air temperature on the Contract Summary Sheet (64 F entering the secondary air heater and 77 F entering the primary air heater) per PTC 4.3, paragraph 7.08, or referring to CS-5:

$$T_{GC} = T_{G3} - T_{G2} - \frac{(T_{G3} - T_{G2})}{(T_{G3} - T_{A1})} \times (T_{G3} - T_{AD})$$

Where T_{AD} = Design entering air temperature

The Summary Sheet entering air temperature and corrected air heater gas outlet temperature calculated above are utilized to calculate the corrected dry gas, water from fuel, and moisture in air losses.

5. The tests should be conducted with the proper primary air heater/secondary air heater gas split. The design values for primary air heater gas and air flow at full load are 13.0% and 20.1% respectively. The primary air heater gas flow shall be controlled to avoid excessive gas temperature leaving the primary air heaters. The primary air heater gas outlet temperature should be approximately equal to the secondary air heater gas outlet temperature. In the event that this is not possible, the primary and secondary air heater gas outlet temperatures will be corrected for off design air and gas flows per figures 1.1 and 1.2. The air and gas flow corrections will be based on correcting the primary air heater air and gas flows to the design values for the tested load. The resulting secondary air heater air and gas flows will then be used to correct the secondary air heater gas outlet temperature. The gas temperature corrections will be additive to the gas temperature calculated in four above.

IP14_001280

Figures 1.1 and 1.2 were developed based on the expected primary and secondary air heater performance. A more accurate way to correct the air heater gas outlet temperatures for off design flows would be to base figures 1.1 and 1.2 on actual air heater performance. If it is acceptable to all parties, and an air or gas flow correction is necessary, figures 1.1 and 1.2 will be revised, after the performance tests, to reflect actual primary and secondary air heater performance.

6. The measured air resistance shall be corrected by the square of the ratio of the contract air weight to the test air weight as determined above. Similarly, the measured gas side pressure drop will be corrected by the square of the ratio of contract gas weight to the test gas weight.

7. The fluid side pressure drops will be corrected by the square of the ratio of the flow at guarantee conditions to the flow at test conditions. If the fluid side pressure differs from the design value, the measured pressure drop will also be corrected for the average specific volume change due to the difference between measured pressure and expected pressure.

IP14_001281

THE BABCOCK & WILCOX COMPANY

FIGURE 1.1

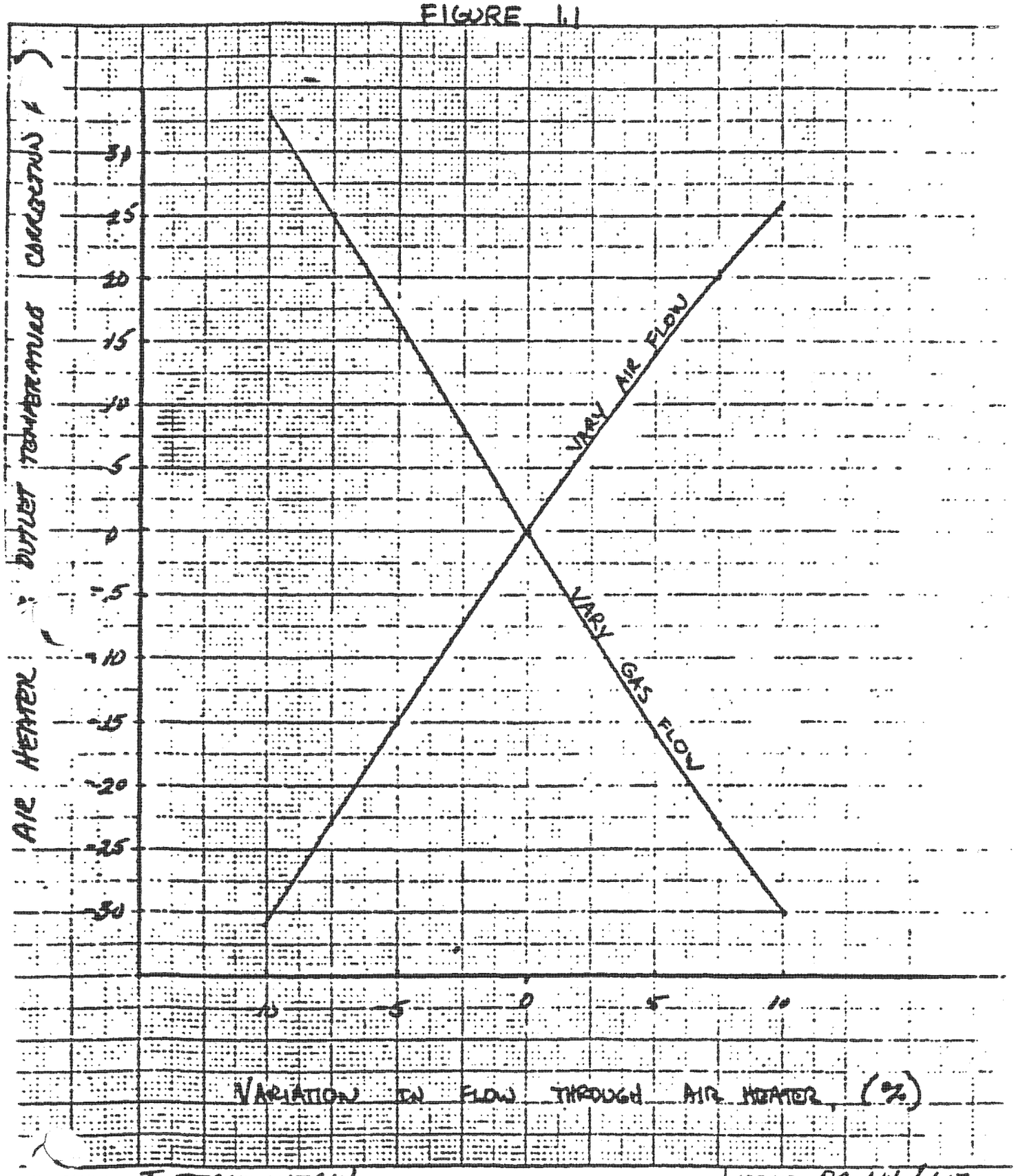

CUSTOMER INTERMOUNTAIN

SUBJECT SECONDARY AIR HEATER TEMPERATURE CORRECTION VS. VARIATION IN AIR AND GAS FLOW

JOB NO RB-614/617

BY S. A. SCAVUZZO

DATE 3/19/86

IP14_001282

THE BABCOCK & WILCOX COMPANY

FIGURE 1.2

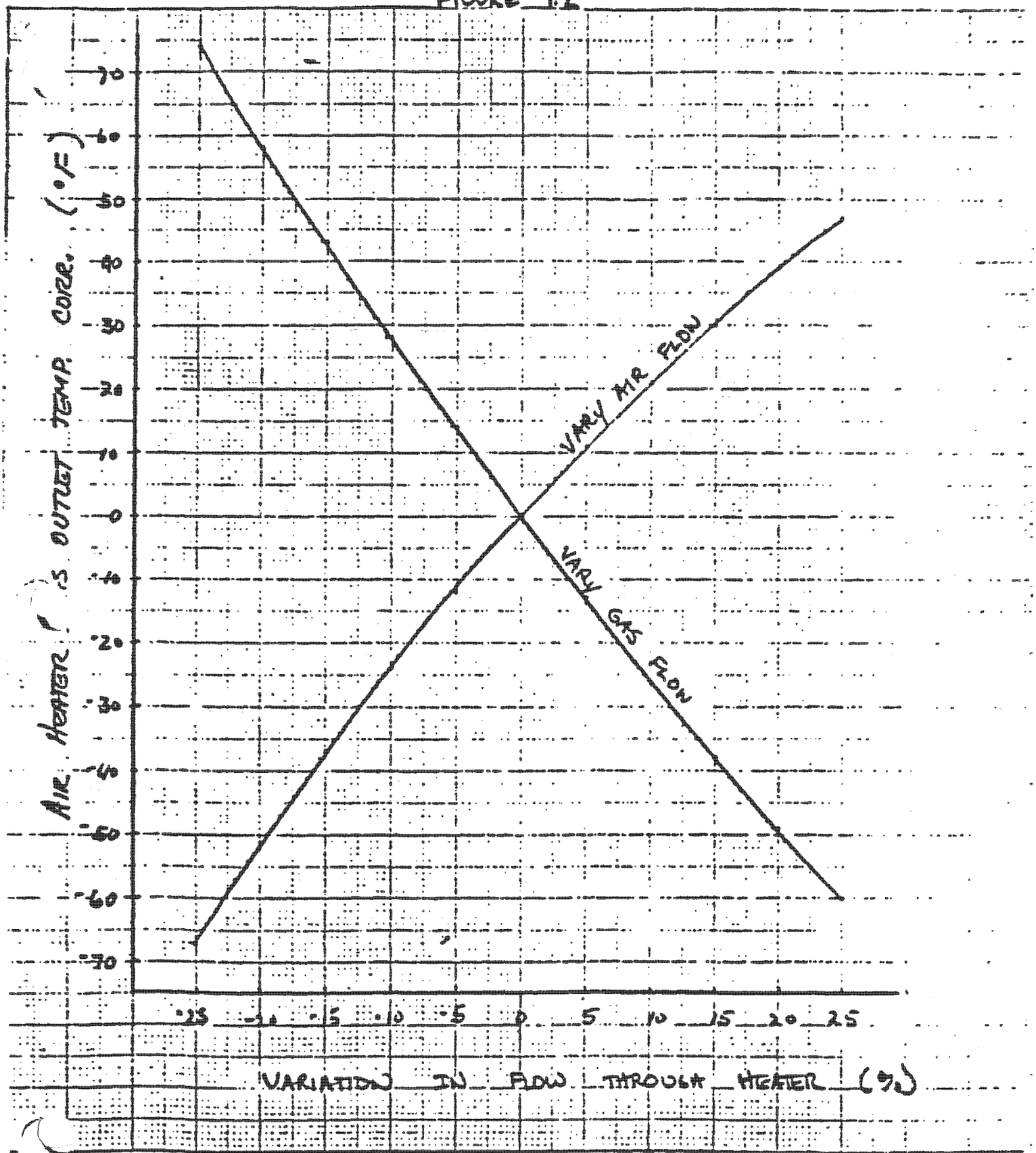

CUSTOMER INTERMOUNTAIN	JOB NO RB-614/617
SUBJECT PRIMARY AIR HEATER GAS OUTLET TEMPERATURE CORRECTION VS VARIATION IN AIR AND GAS FLOW.	BY S. A. SCAVUZZO
	DATE 3/19/86

IP14_001283

EFFICIENCY CALCULATION PROCEDURE FOR TEST CONDITIONS

The ASME PTC 4.1 does not explicitly address how efficiency is calculated for units with cold primary air fans and a primary as well as a secondary air heater. Also, B&W prefers to use the long calculation methods for calculating excess air and gas weights referenced in the Code as opposed to the shorter empirical and rounded off equations. To facilitate the calculations, the attached calculation sheets, CS-1 through CS-5 have been prepared and included as attachment 2.

1. Calculate boiler output conventionally. Reheat flow will be calculated by subtracting feed water heater extraction steam flow, measured extraction steam flow between the superheater outlet and the reheater inlet, and turbine seal and shaft leakages. Extraction steam flow to the feedwater heaters is to be calculated by heat balance around the heaters. Turbine seal and shaft leakages will be taken from the manufacturers data sheets or turbine test data if available.

2. As outlined in paragraph 3.01.10 of specification 2010N the following refuse split shall be used for all calculations in which ash splits are required:
   90 % Flyash
   3 % Economizer Ash
   7 % Bottom Ash

IP14_001284

3. It is recommended that the excess air leaving the economizer and air heaters be calculated using measured O_2 in the flue gas, per CS-4. This method is taken from PTC 19.10, paragraph 6.04.1. Using O_2 to calculate excess air has several advantages:

- Allows the use of a continuous O_2 analyzer.
- Excess air versus O_2 is relatively insensitive to the fuel analysis; i.e. excess air is constant for a given O_2 for the range of fuel that may be burned during the test, whereas, CO_2 varies with the fuel for a constant excess air.
- Paragraph 6.04.1 provides a method for calculating O_2 and CO_2+SO_2, air and gas weights for contract excess air.

Validation of orsat readings - To be considered valid, the average O_2 and CO_2 results from each orsat location shall fall within +/- 0.2 % of the average combustion line (as determined by the average of all orsat results) on the dry flue gas volumetric combustion chart. If a discrepancy results that can not be resolved, the O_2 (excess oxygen) results for those orsat loctions that are not within tolerance shall be assumed correct.

4. Calculate air heater leakage and corrected air heater exit gas temperature (excluding leakage) per PTC 4.3 using CS-2. This calculation form includes the calculation of dry gas weight leaving the economizer, air flow to the boiler, wet gas weight leaving the economizer and moisture in the flue gas. These items are required to calculate gas weight through the primary air heater by heat balance and total air and gas weight's for correcting air resistance and draft loss.

IP14_001285

5. The average air temperature entering the unit is the weighted average of the measured primary air flow to the pulverizers and the calculated secondary air flow to the secondary air heaters.

   The average gas temperature leaving the unit is the weighted average of the gas temperature leaving the primary and secondary air heaters (excluding leakage). The gas flow through the primary air heater is calculated by heat balance based on the average air temperature entering the primary air heater and pulverizers, and the average gas temperature entering and leaving (excluding leakage) the primary air heater. The gas flow through the secondary air heater is calculated from the difference in the total calculated gas weight and the calculated primary air heater gas weight.

   This calculation procedure is outlined on CS-5.

6. Calculate heat losses and efficiency per standard ASME Short Form pages 'a' and 'b'. Add moisture in air loss:

$$L_{mA} = W_{mA'} \times C_{pwv} \times (T_{gl} - T_{ae}) \times 100 / HHV \quad , \%$$

7. The unmeasured and unaccounted for losses are estimated at less than 0.50% per ASME PTC 4.1 (see attachment 1) and 0.50% shall be used for the calculation of boiler efficiency in accordance with paragraph 3.01.01.5 in specification 2010N. An ash split of 90% at the economizer gas outlet, 3% to the economizer hoppers, and 7% to the furnace hopper is assumed in the estimation of the unmeasured and unaccounted for losses.

IP14_001286

wner of plant _____ Test No. _____ Date _____

conducted by _____

Plant name _____ Steam flow _____

Unit No. _____ Drum pressure _____

TEMPERATURES, °F

1	Air temp. around boiler *(ambient)*	
2	Air temp. entering air heater AT DESIGN CONDITIONS	
3	Gas temp. leaving air heater	
4	Gas temp. entering air heater	
5	Air temp. entering air heater	
6	Air temp. leaving air heater	

7	Gas temp. leaving air heater corrected for no leakage	

FLUE GAS ANALYSIS, % by volume

		Economizer Outlet	Air Heater Outlet
	CO_2		
9	O_2		
10	CO		
11	N_2 *(by difference)*		
12	Excess air		

FUEL ANALYSIS AS FIRED
ULTIMATE ANALYSIS, % by weight

13	Carbon	
14	Hydrogen	
15	Oxygen	
16	Nitrogen	
17	Sulphur	
18	Ash	
19	Moisture	
	Btu/lb *(as fired)*	
41	Unburned carbon in bottom ash, % by weight	

FLY ASH ANALYSIS
ULTIMATE ANALYSIS, % by weight

21	Carbon	
22	Relative humidity, %	
23	Fuel quantity, lb/hr	
51	Unburned carbon in economizer ash, % by weight	
44	Weighted average of % carbon in refuse (Item 10 from CS-1A)	

IP14_001287

UNBURNED CARBON AND REFUSE CALCULATIONS

Data Required

1	Ash in Fuel	_____	% by Mass
2	HHV of Fuel	_____	Btu/lbm
3	Fuel Mass Flow Rate	_____	Klbm/hr

REFUSE DATA AT EACH COLLECTION LOCATION

A. If HHV of refuse reported - enter in Col [5] and calculate Col [6]
B. If % Carbon in refuse reported - enter in Col [6]
C. Enter measured refuse mass flow rates in Col [4]. Where refuse not measured at all locations, estimate split and enter in Col [7]

Location	4 Refuse Mass flow lbm/hr	5 HHV Refuse Btu/lbm	6 % C in Refuse [5]/145	7 Refuse Split % 100-[4]/[9]	8 C Refuse Wtd Ave % [6]x[7]/100
Furnace					
Econ Hpr					
Stack					
Other					
9 Total				10 Ave CR, %	

11 CU - Unburned Carbon, %	[1]x[10]/(100-[10]) x /(100 -)	
12 Total Refuse, Klbm/hr	([1] + [11]) x [3] / 100 (+)x / 100	
13 Total Refuse, lbm/10⁶Btu	([1] + [11]) / (HHV / 100) (+)x /(/100)	

NAME OF PLANT		UNIT NO.
TEST NO.	DATE	LOAD
TIME START:	END:	CALC BY
		DATE
		SHEET OF

IP14_001288

42	Lb. refuse produced per lb. fuel burned $\frac{\text{Item 18}}{100 - \text{Item 44}} \times 100$	
43	Heating value of refuse $\frac{\text{Item 44} \times 14500}{100}$	
24	Carbon burned per lb. as fired fuel = C_b $\frac{\text{Item 13}}{100} - \left(\frac{\text{Item 42}}{100} \times \frac{\text{Item 44}}{100}\right)$	
25	Lbs. dry air per lb. as fired fuel (W_A') $W_A' = \frac{\frac{28.02\,(\text{Item 11})}{12.01\,(\text{Item 8} + \text{Item 10})}\left(\text{Item 24} + \frac{12.01}{32.07}\,\frac{(\text{Item 17})}{100}\right) - \frac{\text{Item 16}}{100}}{0.7685}$ Use Economizer outlet values	
26	Lbs. moisture in flue gas per lb. as fired fuel (W_{MG}) $W_{MG} = 8.936\,\frac{(\text{Item 14})}{100} + (\text{Item 25})\,(W_{MA}') + \frac{\text{Item 19}}{100}$ W_{MA}' = Lbs. moisture per lb. dry air at boiler inlet. Obtained from psychrometric chart using ambient air temperature and relative humidity.	
27	Lbs. dry gas per lb. as fired fuel *entering* air heater ($W_G'14$) $W_G'14 = \frac{44.01\,(\text{Item 8}) + 32\,(\text{Item 9}) + 28.01\,(\text{Item 10}) + 28.02\,(\text{Item 11})}{12.01\,(\text{Item 8} + \text{Item 10})}\left(\text{Item 24} + \frac{12.01}{32.07}\,\frac{\text{Item 17}}{100}\right)$ Use values from ECONOMIZER OUTLET.	
28	Lbs. dry gas per lb. as fired fuel *leaving* air heater ($W_G'15$) $W_G'15 = \frac{44.01\,(\text{Item 8}) + 32\,(\text{Item 9}) + 28.01\,(\text{Item 10}) + 28.02\,(\text{Item 11})}{12.01\,(\text{Item 8} + \text{Item 10})}\left(\text{Item 24} + \frac{12.01}{32.07}\,\frac{\text{Item 17}}{100}\right)$ Use values from AIR HEATER OUTLET.	
29	Moisture correction term = $(\text{Item 28} - 27)\,(W_{MA}')$ W_{MA}' from psychrometric chart	
30	Lbs. wet gas per lb. as fired fuel *entering* air heater (W_G) W_G = Item 27 + Item 26	
31	Lbs. wet gas per lb. as fired fuel *leaving* air heater (W_G) W_G = Item 28 + Item 26 + Item 29	
32	Leakage across air heater % (A_D) $\frac{(\text{Item 31} - \text{Item 30})}{\text{Item 30}} \times 100$	
7	Exit gas temperature corrected for no leakage ($T_G 15$ NL) T_G NL $= \frac{(\text{Item 32})(C_{PA})(\text{Item 3} - \text{Item 5})}{100\,(C_{PG})} + \text{Item 3}$ C_{PA} = Specific heat of air C_{PG} = Specific heat of flue gas } From Figures 16 & 17 (Wet basis)	

IP14_001289

ITEM	HEAT LOSS EFFICIENCY		HEAT LOSS %
33	HEAT LOSS DUE TO DRY GAS = (ITEM 27) (C_{pg}) (ITEM 7 - ITEM 5) =	$\frac{\text{ITEM 33}}{\text{ITEM 20}} \times 100 =$	
34	HEAT LOSS DUE TO MOISTURE IN FUEL $\frac{\text{ITEM 19}}{100} \times \left[\left(\begin{matrix}\text{ENTHALPY OF VAPOR AT}\\ \text{1 PSIA AND T ITEM 7}\end{matrix}\right) - \left(\begin{matrix}\text{ENTHALPY OF LIQUID}\\ \text{AT T ITEM 5}\end{matrix}\right)\right] =$	$\frac{\text{ITEM 34}}{\text{ITEM 20}} \times 100 =$	
35	HEAT LOSS DUE TO H_2O FROM COMBUSTION OF H_2 $9 \times \frac{\text{ITEM 14}}{100} \times \left[\left(\begin{matrix}\text{ENTHALPY OF VAPOR AT}\\ \text{1 PSIA AND T ITEM 7}\end{matrix}\right) - \left(\begin{matrix}\text{ENTHALPY OF LIQUID}\\ \text{AT T ITEM 5}\end{matrix}\right)\right] =$	$\frac{\text{ITEM 35}}{\text{ITEM 20}} \times 100 =$	
36	HEAT LOSS DUE TO COMBUSTIBLE IN REFUSE $\frac{\text{ITEM 42}}{100} \times \text{ITEM 43}$	$\frac{\text{ITEM 36}}{\text{ITEM 20}} \times 100 =$	
37	HEAT LOSS DUE TO RADIATION ITEM 23 X ITEM 20 = USING THIS VALUE GO TO GRAPH FOR RADIATION LOSS		
38	HEAT LOSS DUE TO MOISTURE IN AIR $\text{ITEM 25} \times W_{mA'} \times \left[\left(\begin{matrix}\text{ENTHALPY OF VAPOR AT}\\ \text{1 PSIA AND T ITEM 7}\end{matrix}\right) - \left(\begin{matrix}\text{ENTHALPY OF SATURATED}\\ \text{VAPOR AT ITEM 5}\end{matrix}\right)\right] =$	$\frac{\text{ITEM 38}}{\text{ITEM 20}} \times 100 =$	
39	HEAT LOSS DUE TO HOT PRECIPITATOR ENTER VALUE FROM CS-4 (ITEM 4B)		
40	UNMEASURED LOSSES		
41	TOTAL RIGHT HAND COLUMN		
45	EFFICIENCY = 100 - ITEM 41		

IP14_001290

GENERAL COMBUSTION CALCULATIONS

LB/LB FUEL

(1) UBC = $\frac{\text{Item } 42}{100} \times \frac{\text{Item } 44}{100}$ =

			Theor. Air (3)		H_2O	(4)	Dry Gas	Vol. (5)	Wet Gas	Vol. (6)
(2) Ash										
S			x4.335				x11.528			
H_2			x34.3		x8.94				x32.08	
C										
-UBC										
C_b			x11.51				x31.32			
H_2O					x1.00				x119.17	
N_2							x13.443			
O_2			x(-4.32)							
(7) HHV			(3) Σ		(4) Σ		10.331x(3)		(5)	
							(5) Σ		(6) Σ	

Based on Ultimate Fuel Analysis

	Lvg.Econ.	Ent. AH	Lvg. AH
(8) Flue Gas O_2% (avg.)			
(9) (Item 8 x Item 5)/Item 3			
(10) .13068 x Item 8			
(11) 2.73-Item 10			
Percent Excess Air = $\frac{\text{Item } 9}{\text{Item } 11}$	(12)	(13)	(14)

Percent CO_2+SO_2 = 100 $\frac{31.32\ C_b + 11.528\ S}{[5] + .13068\ [3]\ [X5]}$, %

Percent CO_2+SO_2 = 100 $\frac{31.32 \times \qquad + 11.528 \times}{\qquad + .13068 \times \qquad \times}$ =

Reference PTC 19.10, paragraph 6.04.1

TEST NO.	DATE
CALC BY	DATE

IP14_001291

AVERAGE AIR AND GAS TEMPERATURE CALCULATIONS

REQUIRED DATA

				PRI AH		SEC AH
1	AIR TEMP. ENTERING	F	1A.	_____	1B.	_____
2	GAS TEMP. LEAVING (EXCL. LKG)	F	2A.	_____	2B.	_____
3	GAS TEMP. ENTERING	F	3A.	_____	3B.	_____
4	AIR TEMP. ENTERING PULVERIZERS	F				
5	PRIMARY AIR FLOW	KLB/HR		_____		
6	FUEL FLOW	KLB/HR		_____		
7	EXCESS AIR LVG ECON	%		_____		
8	DRY AIR (Item 25, CS-2)	LB/LB FUEL		_____		
9	MOISTURE IN AIR	LB/LB AIR		_____		
10	TOTAL WET GAS FLOW (Item 30, CS-2)	LB/LB FUEL		_____		
11	MOISTURE IN GAS (Item 26, CS-2)	LB/LB FUEL		_____		

CALCULATIONS

12	MOISTURE IN GAS 100 x [11] / [10]	%	_____
13	SPECIFIC HEAT OF WET AIR	BTU/LB F	_____
14	SPECIFIC HEAT OF WET GAS	BTU/LB F	_____
15	PRI AH GAS FLOW	KLB/HR	
	([5]x[13]x([4]-[1A]))/([14]x([3A]-[2A]))		_____
16	TOTAL WET GAS FLOW [6] x [10]	KLB/HR	_____
17	TOTAL WET AIR FLOW	KLB/HR	
	(1 + [9]) x [6] x [8]		_____
18	PAH AIR FRACT [5] / [17]		_____
19	PAH GAS FRACTION [15] / [16]		_____
20			
21	AVE AIR ENT TEMP [1B]x[1A]+(1-[1B])x1B		_____
22	AVE GAS LVG TEMP [19]x[2A]+(1-[1B])x[2B]		_____

TEST NO.	DATE
CALC BY	DATE

IP14_001292

Boiler Testing: Data Calculations

EFFICIENCY

In order to perform the calculations, it is necessary to have the following items:

a) Averaged data obtained during steady state operating conditions (listed in Figure 8).

b) A set of steam tables.

c) A psychrometric chart.

d) Specific heat or enthalpy of air.

e) Specific heat or enthalpy of gas.

Usually the calculations on a coal-fired boiler use only a fuel analysis and a grab sample fly ash analysis. If a high carbon loss is suspected, the fly ash sample must be measured in relation to the fuel flow and a bottom ash sample must be obtained in order to determine an ash split. These calculations are shown in Figure 9.

When determining the dry refuse loss there are three (3) areas to consider: (1) the ash which is collected in the furnace ash pit; (2) the ash in the economizer or other hoppers on the boiler; and (3) the ash which is entrained in the flue gas leaving the boiler. It has been determined through historical test data on pulverized coal boilers that 80% of the ash is entrained in the flue gas and 20% remains in the boiler ash pit and economizer hopper. Of this split 75% goes to the ash pit and 25% to the economizer hopper.

On cyclone-fired boilers 30% is entrained in the flue gas and 70% remains in the boiler, with 60% of this entering the slag tank and 10% in the economizer hoppers.

On oil-fired boilers, about 95% of any ash present is entrained in the flue gas and 5% remains in the economizer hopper. Rarely is there any ash in the furnace.

IP14_001293

Owner of plant _____ Test No. _____ Date _____

Test conducted by _____

Plant name _____ Steam flow _____

Unit No. _____ Drum pressure _____

TEMPERATURES, °F

1	Air temp. around boiler *(ambient)*	
2	Air temp. entering air heater AT DESIGN CONDITIONS	
3	Gas temp. leaving air heater	
4	Gas temp. entering air heater	
5	Air temp. entering air heater	
6	Air temp. leaving air heater	

7	Gas temp. leaving air heater corrected for no leakage	

FLUE GAS ANALYSIS, % by volume

		Economizer Outlet	Air Heater Outlet
8	CO_2		
9	O_2		
10	CO		
11	N_2 *(by difference)*		
12	Excess air		

FUEL ANALYSIS AS FIRED
ULTIMATE ANALYSIS, % by weight

13	Carbon	66.54
14	Hydrogen	
15	Oxygen	
16	Nitrogen	
17	Sulphur	
18	Ash	18.94
19	Moisture	
20	Btu/lb *(as fired)*	

41	Unburned carbon in bottom ash, % by weight	

FLY ASH ANALYSIS
ULTIMATE ANALYSIS, % by weight

21	Carbon	
22	Relative humidity, %	
23	Fuel quantity, lb/hr	
51	Unburned carbon in economizer ash, % by weight	
44	Weighted average of % carbon in refuse (Item 10 from CS-1A)	

Figure 8

Using split of 90% of refuse to stack and 10% to bottom ash hoppers.

IP14_001294

The calculations begin by determining the weighted average of % carbon in refuse (Item 44) and % refuse in fuel burned (Item 42). Dry refuse is the solid product left in the boiler after combustion, and contains some of the ash from the fuel. Since combustion is never perfect, all of the combustible constituents in the fuel are not burned and these also make up part of the refuse. These constituents that are not burned are called unburned combustibles, and are expressed in percent. In this case, 90% of the total refuse went to the stack, of which 14.3% of that 90% was unburned combustible. Likewise, the other 10% of the total refuse went to bottom ash, of which .98% was unburned combustible. Therefore, Dry refuse (as lb dry refuse per lb as-fired fuel) can be calculated as follows:

$$\text{Dry Refuse} = \frac{\text{Item 18 Ash in Fuel}}{100 - \text{Item 44}}$$

Item 44 = Weighted average of % carbon in refuse (Item 10 from CS-1A)

$$= \left(\frac{\text{lb UBC}}{\text{lb refuse}_{\text{stack}}} \times 100\right)\left(\frac{\text{lb refuse}_{\text{stack}}}{\text{lb refuse}}\right) + \left(\frac{\text{lb UBC}}{\text{lb refuse}_{\text{bottom ash}}} \times 100\right)\left(\frac{\text{lb refuse}_{\text{bottom ash}}}{\text{lb refuse}}\right)$$

= (Unburned combustible in fly ash, Item 21) (.90) + (Unburned combustible in bottom ash, Item 41) (.10)

Item 44 = (14.3) (.90) + (.98) (.10) = 12.87 + .10 = 12.97%*

$$\text{Dry Refuse} = \frac{12.24}{100 - (12.97)} = .1406 \frac{\text{lb refuse}}{\text{lb fuel}}$$

NOTE: Refuse = Ash + UBC

$$1 - \frac{\text{lb UBC}}{\text{lb refuse}} = \frac{\text{lb ash}}{\text{lb refuse}}$$

$$\frac{\text{lb ash}}{\text{lb fuel}} \times \frac{\text{lb refuse}}{\text{lb ash}} = \frac{\text{lb refuse}}{\text{lb fuel}}$$

Item 42 = Dry Refuse x 100
= 14.06%

Item 43, the weighted average of the heating value left in the refuse, must be calculated next. It is:

Btu/lb in Refuse =

$$\frac{(\text{Item 44})\ (14500)}{100} \qquad \frac{\text{lb UBC}}{\text{lb refuse}} \times \text{HHV of carbon}$$

$$= \frac{(12.97)\ (14500)}{100}$$

= 1880 Btu/lb = HHV of refuse

* Item 44 may instead be calculated using Figure 9A.

Figure 9

IP14_001295

UNBURNED CARBON AND REFUSE CALCULATIONS

DATA REQUIRED

1 ASH IN FUEL _____ % BY MASS
2 HHV OF FUEL _____ BTU/LBM
3 FUEL MASS FLOW RATE _____ KLBM/HR

REFUSE DATA AT EACH COLLECTION LOCATION

A. IF HHV OF REFUSE REPORTED - ENTER IN COL (5) AND CALCULATE COL (6).
B. IF % CARBON IN REFUSE REPORTED - ENTER IN COL (6).
C. ENTER MEASURED REFUSE MASS FLOW RATES IN COL (4). WHERE REFUSE NOT MEASURED AT ALL LOCATIONS, ESTIMATE SPLIT AND ENTER IN COL (7).

LOCATION	4 REFUSE MASS FLOW LBM/HR	5 HHV REFUSE BTU/LBM	6 % C IN REFUSE (5) / 145	7 REFUSE SPLIT % 100 X (4) / (9)	8 C REFUSE WTD AVE % (6) X (7) / 100
FURNACE					
ECON HOP					
STACK					
OTHER					
9 TOTAL				10 AVE CR. %	

100 LB VOC / LB Fuel =

11	CU - UNBURNED CARBON, % [1] X [10] / (100 - [10]) X / (100 –)	
12	TOTAL REFUSE, KLBM/HR ([1] + [11]) X [3] / 100 (+) X / 100	
13	TOTAL REFUSE, LBM/10 KBTU ([1] + [11]) / (HHV / 100) (+) / (/ 100)	

Figure 9A

Air Heater Leakage and Corrected Exit Gas Temperature Calculations

42	Refuse in fuel burned, % $\frac{\text{Item 18}}{100 - \text{Item 44}} \times 100$
43	Heating value of refuse, Btu/lb refuse $\frac{\text{Item 44} \times 14500}{100}$
24	Carbon burned per lb. as fired fuel = C_b $\frac{\text{Item 13}}{100} - \left(\frac{\text{Item 42}}{100} \times \frac{\text{Item 44}}{100}\right)$
25	Lbs. dry air per lb. as fired fuel (W_A') $W_A' = \frac{\frac{28.02\,(\text{Item 11})}{12.01\,(\text{Item 8} + \text{Item 10})}\left(\text{Item 24} + \frac{12.01}{32.07}\,\frac{(\text{Item 17})}{100}\right) - \frac{\text{Item 16}}{100}}{0.7685}$ Use Economizer outlet values
26	Lbs. moisture in flue gas per lb. as fired fuel (W_{MG}) $W_{MG} = 8.936\,\frac{(\text{Item 14})}{100} + (\text{Item 25})\,(W_{MA}') + \frac{\text{Item 19}}{100}$ W_{MA}' = Lbs. moisture per lb. dry air at boiler inlet. Obtained from psychrometric chart using ambient air temperature and relative humidity.
27	Lbs. dry gas per lb. as fired fuel *entering* air heater ($W_G'14$) $W_G'14 = \frac{44.01\,(\text{Item 8}) + 32\,(\text{Item 9}) + 28.01\,(\text{Item 10}) + 28.02\,(\text{Item 11})}{12.01\,(\text{Item 8} + \text{Item 10})}\left(\text{Item 24} + \frac{12.01}{32.07}\,\frac{\text{Item 17}}{100}\right)$ Use values from ECONOMIZER OUTLET.
28	Lbs. dry gas per lb. as fired fuel *leaving* air heater ($W_G'15$) $W_G'15 = \frac{44.01\,(\text{Item 8}) + 32\,(\text{Item 9}) + 28.01\,(\text{Item 10}) + 28.02\,(\text{Item 11})}{12.01\,(\text{Item 8} + \text{Item 10})}\left(\text{Item 24} + \frac{12.01}{32.07}\,\frac{\text{Item 17}}{100}\right)$ Use values from AIR HEATER OUTLET.
29	Moisture correction term = $(\text{Item 28} - 27)\,(W_{MA}')$ W_{MA}' from psychrometric chart.
30	Lbs. wet gas per lb. as fired fuel *entering* air heater (W_G) W_G = Item 27 + Item 26
31	Lbs. wet gas per lb. as fired fuel *leaving* air heater (W_G) W_G = Item 28 + Item 26 + Item 29
32	Leakage across air heater % ($A_{(L)}$) $\frac{(\text{Item 31} - \text{Item 30})}{\text{Item 30}} \times 100$
7	Exit gas temperature corrected for no leakage ($T_G 15_{(NL)}$) $T_{G\,(NL)} = \frac{(\text{Item 32})(C_{PA})\,(\text{Item 3} - \text{Item 5})}{100\,(C_{PG})} + \text{Item 3}$ C_{PA} = Specific heat of air, C_{PG} = Specific heat of flue gas } From Figures 14 & 15 (wet basis)

Figure 10

IP14_001297

Item 42 - Refuse in fuel burned

$$= \frac{12.24}{100 - 12.97} \times 100 = 14.06\%$$

Item 43 - Heating value of refuse

$$= \frac{12.97 \times 14500}{100} = 1880 \text{ Btu/lb}$$

Item 24 - Carbon burned per lb. as fired fuel

$$= \frac{66.54}{100} - \left(\frac{14.06}{100} \times \frac{12.97}{100}\right) = .6654 - .0172 = .6472 \text{ lb/lb}$$

Item 25 - Lbs. dry air per lb. as fired fuel

$$= \frac{\frac{28.02\,(81.0)}{12.01\,(13.1 + 0)}\left(.6472 + \frac{12.01}{32.07}\left(\frac{1.59}{100}\right)\right) - \frac{1.41}{100}}{.7685} = 12.24 \text{ lb/lb}$$

Item 26 - Lbs. moisture in flue gas per lb. as fired fuel

$$= 8.936\,\frac{(4.70)}{100} + (12.24)\,(.0061) + \frac{6.57}{100} = .5604 \text{ lb/lb}$$

Item 27 - Lbs. dry gas per lb. as fired fuel *entering* air heater

$$= \frac{44.01\,(13.1) + 32\,(5.9) + 28.01\,(0) + 28.02\,(81.0)}{12.01\,(13.1 + 0)}\left(.6472 + \frac{12.01}{32.07}\left(\frac{1.59}{100}\right)\right) = 12.60 \text{ lb/lb}$$

Item 28 - Lbs. dry gas per lb. as fired fuel *leaving* air heater

$$= \frac{44.01\,(9.8) + 32\,(9.4) + 28.01\,(0) + 28.02\,(80.8)}{12.01\,(9.8 + 0)}\left(.6472 + \frac{12.01}{32.07}\left(\frac{1.59}{100}\right)\right) = 16.63 \text{ lb/lb}$$

Item 29 - Moisture corrected term

$$= (16.63 - 12.60)\,(.0061) = .0246$$

Item 30 - Lbs. wet gas per lb. as fired fuel entering air heater

$$= 12.60 + .5604 = 13.16 \text{ lb/lb}$$

Item 31 - Lbs. wet gas per lb. as fired fuel leaving air heater

$$= 16.63 + .5604 + .0246 = 17.22 \text{ lb/lb}$$

Item 32 - Leakage across air heater

$$= \frac{17.22 - 13.16}{13.16} \times 100 = 30.85$$

Item 7 - Corrected exit gas temperature

$$= \frac{30.85\,(.242)\,(318 - 64)}{100\,(.255)} + 318 = 392$$

Moisture in gas $= \frac{\text{Item 26}}{\text{Item 30}} = \frac{.5604}{13.16} \times 100 = 4.26\%$

C_{pg} wet basis = At average gas temp. between corrected and uncorrected outlet

Assume outlet corrected $\frac{318 + 395}{2} = 356.5$

$C_{pg} = .255$ Btu/lbm-°F

C_pAir wet basis = At average between air inlet and gas outlet temp.

$\frac{64 + 318}{2} = 191$ Moisture content = $W_{ma} = .0061$

$C_{pa} = .242$

Figure 11

IP14_001298

BWFP 1910-6

THIS SUMMARY SHEET IS THE PROPERTY OF THE BABCOCK & WILCOX COMPANY AND IS LOANED UPON CONDITION THAT IT IS NOT TO BE COPIED, IN WHOLE OR IN PART OR USED FOR FURNISHING INFORMATION TO OTHERS, OR FOR ANY OTHER PURPOSE DETRIMENTAL TO THE INTERESTS OF THE BABCOCK & WILCOX COMPANY AND IS TO BE RETURNED UPON REQUEST.

A — FUEL AS FIRED

SAMPLES		
ANALYSES		
KIND		Bit Coal
COAL — GRAIN — CLASS		
COAL — GRAIN — GROUP		
COAL — SOURCE — MINE		
COAL — SOURCE — SEAM		
COAL — SOURCE — DISTRICT		
COAL — SOURCE — COUNTY		
COAL — SOURCE — STATE		
COAL — SIZE		
COAL — GRINDABILITY		57
COAL — SURFACE MOISTURE, %		5.0
ASH SOFT. TEMP., F (REDUCING)		
PROX. ANAL. % — MOISTURE, TOTAL		7.0
PROX. ANAL. % — VOLATILE MATTER		33.2
PROX. ANAL. % — FIXED CARBON		55.8
PROX. ANAL. % — ASH		4.0
PROX. ANAL. % — TOTAL		100.0

ULTIMATE ANALYSIS			
FUEL	Coal		
% BY	WT		
ASH	4.0		
S	.65		
N_2	4.85		
C	76.0		
CH_4			
C_2H_4			
C_2H_6			
C_3H_8			
C_4H_{10}			
C_5H_{12}			
C_6H_{14}			
CO			
CO_2			
SO_2			
H_2O	7.0		
H_2	13.9		
O_2	6.13		
TOTAL	100		
BTU/LB	13550		
BTU/CU FT AT 60F 30 IN.HG			

B — PREDICTED PERFORMANCE

STEAM LEAVING SH, M LB/HR		30	30	78	78	175	330
STEAM LEAVING RH1, M LB/HR							
STEAM LEAVING RH2, M LB/HR							
TYPE OF FUEL		PC	PC	PC	PC	PC	PC
LOAD CONDITION		MIN	MIN				COMT
EXCESS AIR LEAVING ECON., %		40	40	28	28	25	25
NO. OF BURNERS IN OPERATION		2	2	3	4	6	6
HEAT. AVAIL., MKB/HR (FUEL & HEATED AIR)							
TOTAL INPUT, MKB/HR (FUEL & HT. CREDITS)							
HEAT CREDITS, MKB/HR							
FUEL INPUT, MKB/HR							
QUANTITY M LB/HR	FUEL (MCFH-NAT. GAS)	3.21	3.4	7.18	7.16	16.1	206
	FLUE GAS ENTERING AIR HTRS.	58		118	174	244	312
	AIR TO BURNING EQUIPMENT	21.9	21.9	64.4	66.0	188.2	204.7
	AIR HEATER LEAKAGE						
PRESSURE, PSIG	STEAM AT SH OUTLET	875	875	875	875	875	875
	STEAM AT RH1 INLET						
	STEAM AT RH2 INLET						
PRESSURE DROP	REHEATER 1						
	REHEATER 2						
	ECONOMIZER			5	3	12	20
	TO SH OUTLET			3	5	24	42
TEMPERATURE, F — STEAM	LEAVING SUPERHEATER	745	745	790	790	860	860
	LEAVING REHEATER 1						
	ENTERING REHEATER 1						
	LEAVING REHEATER 2						
	ENTERING REHEATER 2						
FLUE GAS	LEAVING ECONOMIZER		490	520	520	620	675
	LEAVING AH (EXCL. LKG)	396	334	298	270	308	330
	LEAVING AH (INCL. LKG)						307
	WATER ENTERING ECONOMIZER	250	272	305	305	365	380
AIR	ENTERING UNIT	100	100	100	100	100	100
	LEAVING AIR HEATER	330	452	307	407	564	604
RESISTANCE, IN. OF WATER — GAS	FURNACE & CONVECTION BANKS	.35	.35	.85	.85	2.45	4.95
	FLUES TO AH OUTLET						
	AIR HEATER	.26	.25	.45	.45	1.70	2.80
AIR	FUEL BURNERS & WINDBOX	.33	.33	1.20	.90	1.60	2.50
	DUCTS & FLOW METER	7.5	5.7	4.5	4.0	4.7	5.3
	AIR HEATER	.22	.22	.40	.40	1.70	2.00
	TOT. FROM						
HEAT LOSS-EFF., %	DRY GAS	7.5	5.7	4.5	4.0	4.7	5.3
	H_2 & H_2O IN FUEL	4.4	4.3	4.1	4.1	4.1	4.1
	MOISTURE IN AIR	.2	.2	.1	.1	.1	.1
	UNBURNED COMBUSTIBLE	3.5	3.5	2.4	2.4	1.2	.9
	RADIATION	4.2	4.2	1.6	1.6	.7	.5
	UNACC. FOR & MFRS. MARGIN	1.5	1.5	1.5	1.5	1.5	1.5
	TOTAL HEAT LOSS	21.3	19.4	14.2	13.7	12.3	12.4
	*GROSS EFFICIENCY OF UNIT, %	78.7	80.6	83.8	86.3	87.7	87.6
HEAT CREDITS ADJUSTMENT, %							
NET EFFICIENCY A.S.M.E. PTC-4.1, %							
FUEL EFFICIENCY, %, (OUTPUT/FUEL INPUT)							
PULVERIZER — NO. IN USE PER BOILER		2	2	3	2	3	3
PULVERIZER — TOTAL POWER, KW-HR/TON MOTOR OUTPUT							
PULVERIZER — % THRU 200 U.S.S. SIEVE		85	85	85	85	83	80

PREDICTED PERFORMANCE IS BASED ON COMBUSTION AIR ENTERING UNIT WITH 0.013 LB MOIST. PER LB DRY AIR, ON IN. HG. BAROMETRIC PRESSURE, ON CONDITIONS & EQUIPMENT GIVEN ON THIS SUMMARY SHEET & ON ARRANGEMENT SHOWN ON DRAWING

UTILITY BOILER PERFORMANCE SUMMARY

BY APPD. DATE 8/9/46

BABCOCK & WILCOX

P-29301-4X2-1S0

Figure 12

IP14_001299

At this point the numbers needed to calculate the air heater leakage are available. LBS. DRY AIR PER LB. AS FIRED FUEL (W_A') must be completed first. The gas analysis substitutions are from the economizer outlet.

$$W_{A'} = \frac{\frac{28.02\ N_2}{12.01\ (CO_2 + CO)} \left(C_b + \frac{12.01}{32.07} S \right) - N}{.7685}$$

Or

$$W_{A'} = \frac{\frac{28.02\ (\text{Item } 11)}{12.01\ (\text{Item } 8 + \text{Item } 10)} \left(\text{Item } 24 + \frac{12.01}{32.07} \frac{(\text{Item } 17)}{100} \right) - \frac{\text{Item } 16}{100}}{.7685}$$

$$W_{A'} = \frac{\frac{28.02\ (81.0)}{12.01\ (13.1 + 0)} \left(.6472 + \frac{12.01}{32.07} (.0159) \right) - .0141}{.7685}$$

$$W_{A'} = 12.24 \text{lb/lb}$$

W_{mG}, the pounds of moisture in the flue gas per pound as fired fuel is next. There is one term that is ignored in this case: moisture evaporated from the ash pit. This contribution is extremely small and will not affect the final outcome. Atomizing steam is of concern on oil-fired units only, and applies to main burners. Steam to lighters is minimal, and the added moisture does not affect the final valves significantly. There is another term of concern in the equation, W_mA', the pounds of moisture per pound of dry air at the boiler inlet. This is where the humidity is used. Using the psychrometric chart, Figure 13, find the ambient air temperature, in this case 64°F. Then move up that line to the humidity reading, which is 48%. Now move to the right and read the pounds moisture per lb. dry air, 0061. The symbol m_f is the moisture in the fuel and H is the hydrogen in the fuel, both from the fuel analysis. The equation can now be solved:

IP14_001300

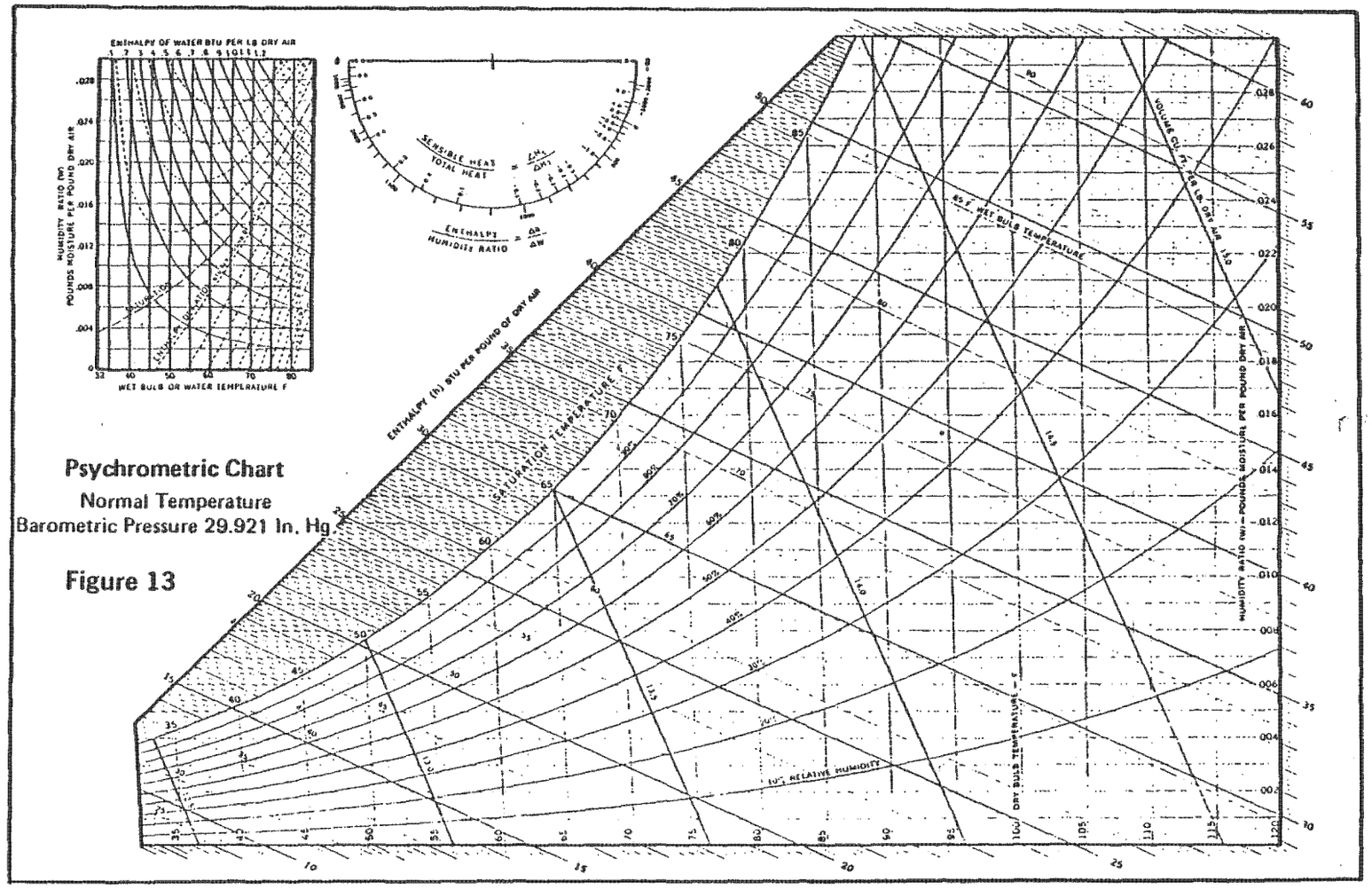

Psychrometric Chart

Normal Temperature

Barometric Pressure 29.921 In. Hg.

Figure 13

IP14_001301

$$W_mG = 8.936\ (H) + (W_{mA'})\ (W_{A'}) + m_f$$

$$= 8.936\ \frac{(\text{Item } 14)}{100} + (W_{mA'})\ (W_{A'}) + \frac{\text{Item } 19}{100}$$

$$= 8.936\ (.0470) + (.0061)\ (12.24) + .0657$$

$$= .4200 + .0747 + .0657$$

$$= .5604 \text{ lb/lb}$$

The next step necessary for finding the air heater leakage is to determine the pounds of dry gas per pound as fired fuel, $W_{G'}$. This is shown as $W_{G'}$ 14 and $W_{G'}$ 15. $W_{G'}$ 14 is for the gas entering the air heater and $W_{G'}$ 15 is for the gas leaving the air heater. The unknowns are taken from the flue gas analysis, the economizer outlet numbers are substituted into $W_{G'}$ 14 and the air heater outlet numbers are substituted into $W_{G'}$ 15.

$$W_{G'}\ 14, 15 = \frac{44.01\ (CO_2) + 32\ (O_2) + 28.01\ (CO) + 28.02\ (N_2)}{12.01\ (CO_2 + CO)} \left(C_b + \frac{12.01}{32.07}\ \frac{S}{100} \right)$$

$$= \frac{44.01\ (\text{Item } 8) + 32\ (\text{Item } 9) + 28.01\ (\text{Item } 10) + 28.02\ (\text{Item } 11)}{12.01\ (\text{Item } 8 + \text{Item } 10)} \left(\text{Item } 24 + \frac{12.01}{32.07}\ \frac{(\text{Item } 17)}{100} \right)$$

For Gas Entering the Air Heater:

$$W_{G'}14 = \frac{44.01\ (13.1) + 32\ (5.9) + 28.01\ (0) + 28.02\ (81.0)}{12.01\ (13.1 + 0)} \left(.6472 + \frac{12.01}{32.07}\ (.0159) \right)$$

$$= \left(\frac{576.5 + 188.8 + 0 + 2269.6}{157.3} \right) (.6532)$$

$$= 12.60 \text{ lb/lb}$$

IP14_001302

For Gas Leaving the Air Heater:

$$W_G'15 = \frac{44.01\,(9.8) + 32\,(9.4) + 28.01\,(0) + 28.02\,(80.8)}{12.01\,(9.8 + 0)} \left(.6472 + \frac{12.01}{32.07}(.0159) \right)$$

$$= \left(\frac{431.1 + 300.8 + 0 + 2264}{117.7} \right) (.6532)$$

$$= 16.63 \text{ lb/lb}$$

The leakage across the air heater A_L can now be determined. There is a moisture term that may or may not be included in this calculation. It is very small, but will be demonstrated here so that the reader can be familiar with it. This moisture correction is as follows:

$$(W_{G'}15 - W_{G'}14)\ (W_mA')$$

$$= (16.63 - 12.60)\ (.0061)$$

$$= .0246$$

$$W_G 15 = W_{G'} 15 + W_mG + .0246$$

$$= 16.63 + .5604 + .0246$$

$$= 17.22$$

$$W_G 14 = W_{G'} 14 + W_mG$$

$$= 12.60 + .5604$$

$$= 13.16$$

$$A_L = \frac{W_G 15 - W_G 14}{W_G 14} \times 100$$

$$= \frac{17.22 - 13.16}{13.16} \times 100$$

$$= 30.85$$

IP14_001303

The point of all the calculations done so far is to be able to find the corrected exit gas temperature t_G 15 (NL) from the air heater. That number is used to find the heat losses that dictate the efficiency. In this equation, the specific heat of air (C_pA) and flue gas (C_pG) is necessary. They may be taken from Figures 14 and 15, respectively. Their use is self-explanatory so it won't be discussed here. The other quantities needed are t_G15, which is the exit gas temperature observed entering the air heater, Item 5. With the temperatures and specific heats, the corrected gas temperature for no leakage can be calculated:

$$t_G15\ (NL) = \frac{A_{(L)}\ C_pA\ (t_G15 - t_{AB})}{C_pG\ (100)} + t_G15$$

$$= \frac{A_{(L)}\ C_pA\ (t_G15 - \text{Item 5})}{C_pG\ (100)} + t_G15$$

$$= \frac{(30.85)\ (.242)\ (318 - 64)}{(.255)\ (100)} + 318$$

$$= 74.2 + 318$$

$$= 392°F\ (\text{Item 7})$$

At this point, all of the numbers are available for finding the boiler efficiency. Items 33 through 42 (Figure 17) are self-explanatory. In Items 34 and 35, the steam tables will have to be used to find the enthalpys needed.

Item 37, the heat loss due to radiation, is taken from Figure 16. For this, the amount of coal burned during the four hours of the test is needed. For this test 94,200 pounds of coal was burned. To find the Btu's per hour:

$$\text{Btu/hr} = \frac{(\text{amount burned in 4 hours in lbs.})\ (\text{Btu/lb})}{4\ \text{hrs.}}$$

$$\text{Btu/hr} = \frac{(94{,}200)\ (12019)}{4}$$

$$= 2.83 \times 10^8$$

$$= 283{,}000{,}000$$

IP14_001304

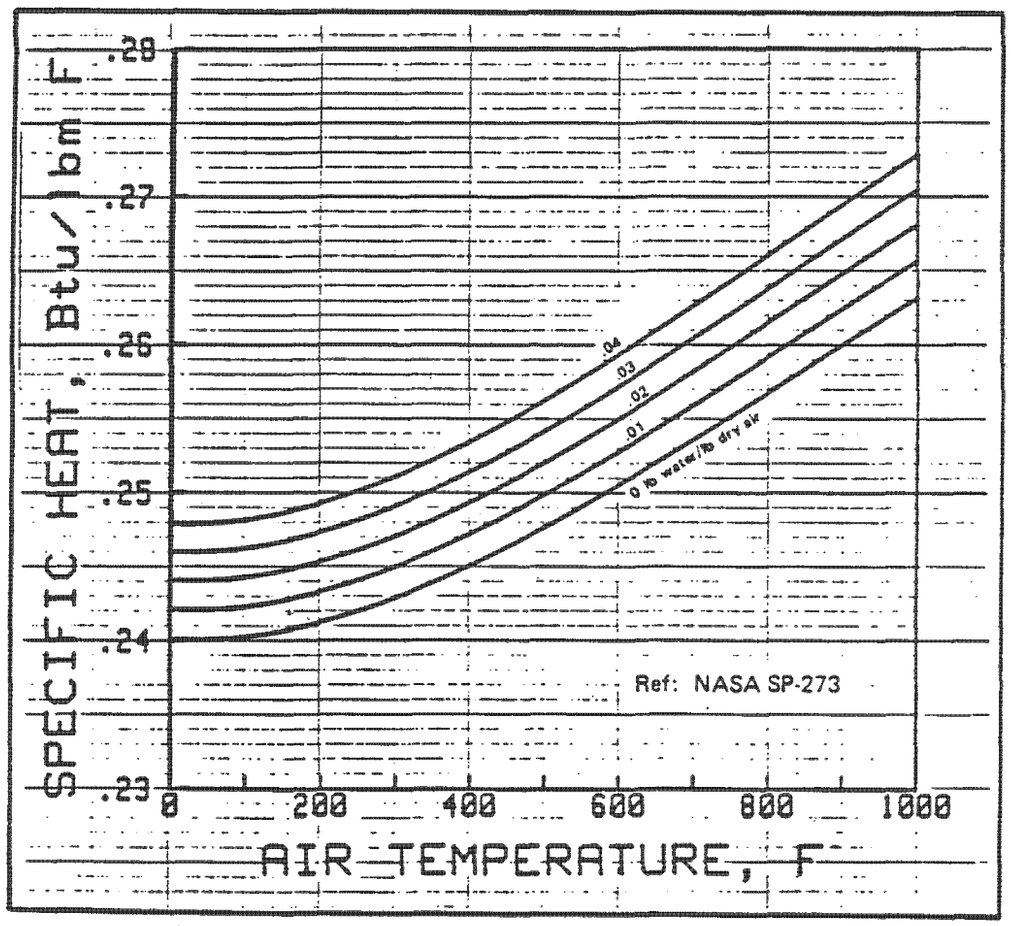

Instantaneous Specific Heat of Air

Figure 14

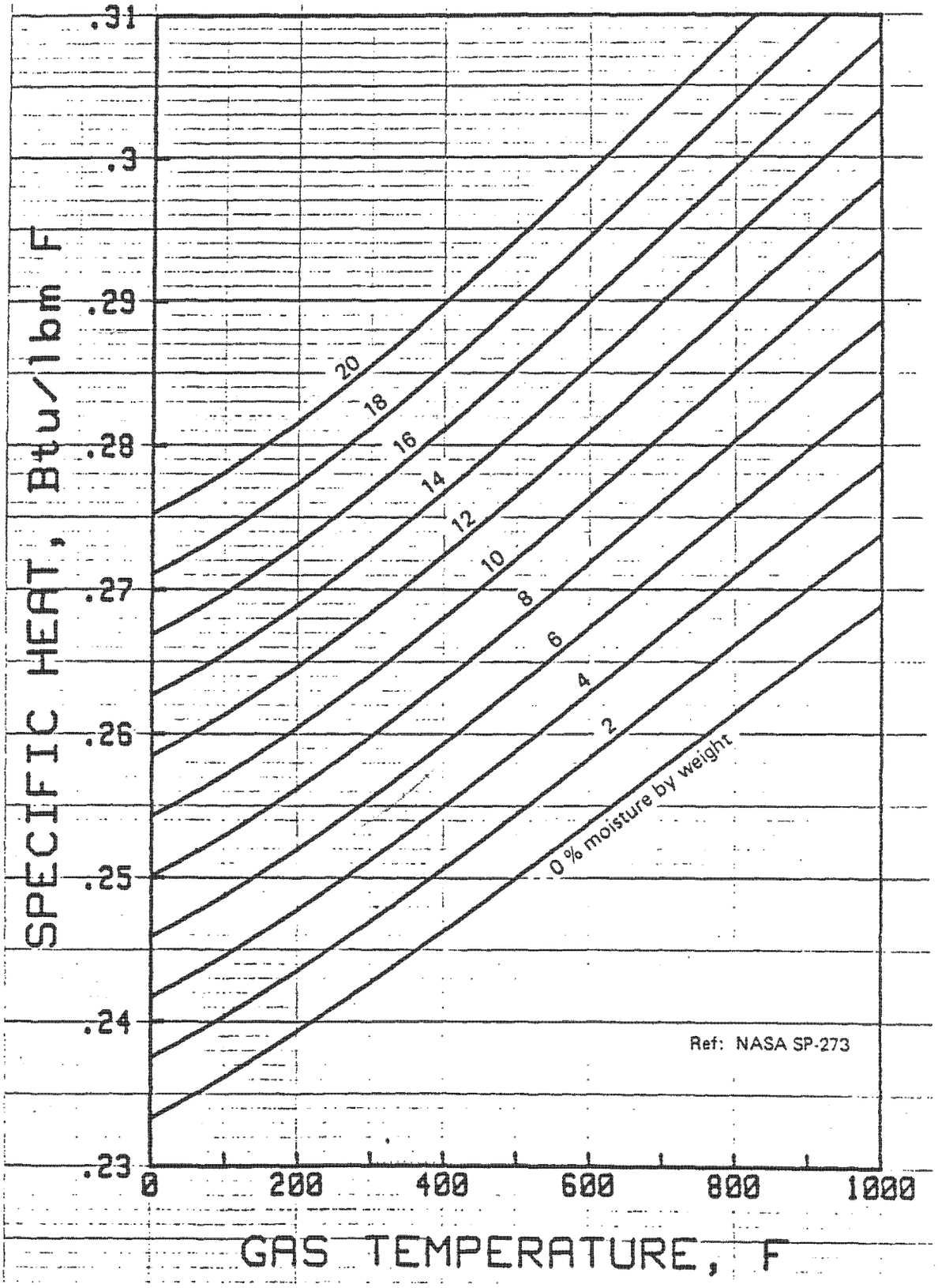

Instantaneous Specific Heat of Flue Gas

Figure 15

IP14_001306

Using this value, come up to the curved line going through Figure 16, and then follow it to the left. The boiler tested had four water cooled walls, so angle your line downward from the 0 water cooled wall line, as shown in the Figure. The heat loss due to radiation is .34%.

This is an approximate method only. The chart in Figure 16 is developed with boiler output as a base. Since output is difficult without accurate steam flow meters and pressures, this approximation will be used for all of the radiation loss calculations in this book.

DATA ANALYSIS

Test Efficiency vs. Expected

Heat Loss, %	Test Data	Expected Data (From Summary Sheet)	Difference
Dry Gas	8.32	5.30	3.02
H_2 and H_2O in Fuel	4.90	4.10	0.80
H_2O in Air	0.09	0.10	—0.01
Unburned Combustible	2.19	.90	1.29
Radiation	0.34	.50	—0.16
Unaccounted for	0.50	1.50	—1.00
Efficiency, %	83.66	87.60	3.94

Determine the Differences and Apply Corrections

By inspecting the unit summary sheet (Figure 12) several differences can be seen immediately. The first thing to check is the air temperature entering the air heater at design conditions (Item 2). For this test, the air entering the air heater was at 64°F. The guarantee calculations were made using an air inlet temperature of 100°F. Therefore, to compare the test data with the expected data, the test data must be recalculated. The only calculations affected are Items 7, 33, 34, 35, and 38. Item 7, the corrected exit gas temperature, must

IP14_001307

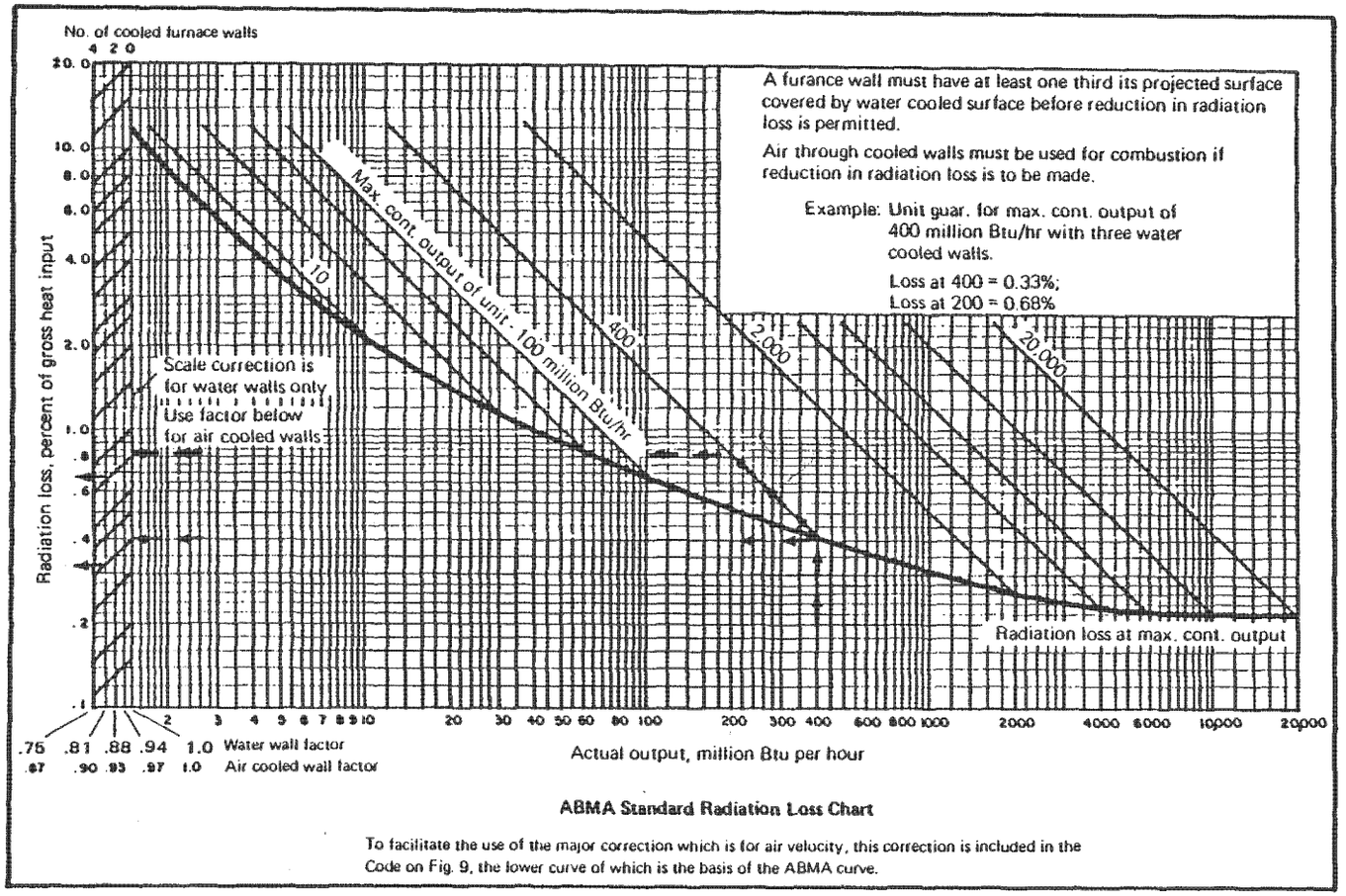

ABMA Standard Radiation Loss Chart

To facilitate the use of the major correction which is for air velocity, this correction is included in the Code on Fig. 9, the lower curve of which is the basis of the ABMA curve.

Figure 16

IP14_001308

ITEM	HEAT LOSS EFFICIENCY		HEAT LOSS %
33	HEAT LOSS DUE TO DRY GAS = C_{pg} DRY = .242 A AVG T OF 359 & 0 MOIST (ITEM 27) (C_{pg}) (ITEM 7 - ITEM 5) = 12.60 (.242) (392 – 64) = 1001.7	1000.1 $\frac{\text{ITEM 33}}{\text{ITEM 20}} \times 100 =$ 12019	8.32
34	HEAT LOSS DUE TO MOISTURE IN FUEL $\frac{6.57}{\text{ITEM 19}}{100} \times \left[\left(\text{ENTHALPY OF VAPOR AT 1 PSIA AND T ITEM 7}\ 1238\right) - \left(\text{ENTHALPY OF LIQUID AT T ITEM 5}\ 32.09\right)\right] = 79.23$	79.23 $\frac{\text{ITEM 34}}{\text{ITEM 20}} \times 100 =$ 12019	.66
35	HEAT LOSS DUE TO H_2O FROM COMBUSTION OF H_2 $9 \times \frac{4.7\ \text{ITEM 14}}{100} \times \left[\left(\text{ENTHALPY OF VAPOR AT 1 PSIA AND T ITEM 7}\ 1238\right) - \left(\text{ENTHALPY OF LIQUID AT T ITEM 5}\ 32.09\right)\right] = 510.1$	510.1 $\frac{\text{ITEM 35}}{\text{ITEM 20}} \times 100 =$ 12019	4.24
36	HEAT LOSS DUE TO COMBUSTIBLE IN REFUSE $\frac{14.06\ \text{ITEM 42}}{100} \times 1880\ \text{ITEM 43}$	264.3 $\frac{\text{ITEM 36}}{\text{ITEM 20}} \times 100 =$ 12019	2.19
37	HEAT LOSS DUE TO RADIATION ITEM 23 X ITEM 20 = 23550 X 12019 = 283,000,000 USING THIS VALUE GO TO GRAPH FOR RADIATION LOSS		.34
38	HEAT LOSS DUE TO MOISTURE IN AIR $\text{ITEM 25} \times W_{mA'} \times \left[\left(\text{ENTHALPY OF VAPOR AT 1 PSIA AND T ITEM 7}\ 1238\right) - \left(\text{ENTHALPY OF SATURATED VAPOR AT ITEM 5}\ 1089.4\right)\right] =$ (ITEM 25 = 12.24, $W_{mA'}$ = .0061)	11.10 $\frac{\text{ITEM 38}}{\text{ITEM 20}} \times 100 =$ 12019	.09
39	HEAT LOSS DUE TO HOT PRECIPITATOR ENTER VALUE FROM CS-4		0
40	UNMEASURED LOSSES 0.5% FOR PULV COAL 0.7% FOR CYCLONE FIRING 0.1% FOR OIL		0.5
41	TOTAL RIGHT HAND COLUMN		16.34%
45	EFFICIENCY = 100 - ITEM 41 16.34		83.66%

FROM CS-3

Figure 17

be recalculated to account for the higher inlet air temperature. First however, the measured exit gas temperature must be corrected for the higher air inlet temperature. This calculation is shown below.

T_G15_S = Exit gas temperature corrected for guarantee inlet temperature.

$$T_G15_S = \frac{\text{Item 2 (Item 4 — Item 3) + Item 4 (Item 3 — Item 5)}}{\text{(Item 4 — 5)}}$$

$$= \frac{100\ (577 - 318) + 577\ (318 - 64)}{(577 - 64)}$$

T_G15_S = 336°F = New Item 3

Now Item 7 can be recalculated. But, note that for recalculating this and Items 33, 34, 35, and 38, the old Item 5 should be replaced with Item 2.

$$\text{Item 7} = \frac{\text{(Item 32)}\ C_{PA}\ \ \text{(Item 3 — Item 2)}}{100\ C_{PG}} + \text{Item 3}$$

$$= \frac{30.77\ (.242)\ (336 - 100)}{100\ (.255)} + 336$$

Item 7 = 405°F

By using this value for Item 7 and the guarantee value of 100°F for Item 2, the remaining items can be recalculated (Items 33, 34, 35, and 38) and the new values listed below.

$$\text{Item 33} = 12.60\ (.242)\ (405 - 100) = 930.00\ \frac{930.00}{12019}\ X\ 100 = 7.74\%$$

$$\text{Item 34} = \frac{6.57}{100}\ (1244 - 68.76) = 77.21\ \frac{77.21}{12019}\ X\ 100 = .64$$

IP14_001310

$$\text{Item 35} = 9\,\frac{(4.7)}{100}\,(1244 - 68.76) = 497.1\,\frac{497.1}{12019} \times 100 = 4.14$$

$$\text{Item 38} = 12.24\,(.0061)\,(1244 - 1105) = 10.37\,\frac{10.37}{12019} \times 100 = .09$$

Heat Loss, %	Corrected Test Data	Expected Data	Difference
Dry Gas	7.74	5.30	2.44
H_2 and H_2O in Fuel	4.78	4.10	0.68
H_2O in Air	0.09	0.10	—0.01
Unburned Combustible	2.19	0.90	1.29
Radiation	0.34	0.50	—0.16
Unaccounted for	0.50	1.50	—1.00
Efficiency, %	84.36	87.60	3.24

Now that the numbers have been calculated to the same reference, some comparisons can be made.

The coal used during the test was of a lower quality than the coal specified in the summary sheets. This will account for some of the difference in the efficiencies.

For the load conditions of this test, the excess air should have been about 25%. The actual measured excess air was 39%. As mentioned previously, a 3% increase in excess air will decrease efficiency by about 0.1%. By reducing the excess air, the efficiency could be increased by .5% in the dry flue gas area. However, unburned combustibles increase as excess air is decreased. Since the data indicates that unburned combustibles are already a problem area, this would not appear to be a good solution to the immediate problem.

However, by obtaining a better air/fuel mix at the burners, a considerable portion of the losses might be eliminated.

IP14_001311

Another problem that does not show up in these calculations is the extra power consumed by the fans, due to the high air heater leakage. This will not affect the boiler efficiency, but does have an effect on overall plant efficiency, by way of power consumption.

DATA ANALYSIS FOR LOAD CAPABILITIES

In order to make any valid comparisons of test data with expected performance, the test conditions must be close to the conditions listed on the unit's summary sheet. As can be seen from the previous efficiency example, the test conditions were different enough from the summary sheet to make it impossible to determine if the unit was performing at design efficiency.

IP14_001312

CORRECTIONS TO STANDARD OR GUARANTEE CONDITIONS

It is usually not possible to test a unit with the standard or guarantee fuel and at the exact standard or guarantee operating conditions. By correcting the test results to standard or guarantee conditions, it is possible to make a more meaningful comparison and evaluation of efficiency and performance.

The corrections to efficiency described in this section specifically address efficiency calculated by the heat loss method. When efficiency is calculated by the input-output method, corrections are limited to the calculation of heat credits.

Corrections to efficiency described in this section consist of using the standard or guarantee air inlet temperature, correcting air heater gas outlet temperature for deviations between the test and reference conditions and repeating the efficiency calculations utilizing the standard or guarantee fuel and other operating variables described below. The corrections noted are the most common variables. However, other corrections may be agreed upon for a specific unit between the test parties.

ENTERING AIR TEMPERATURE

Corrections to the heat credits for changes in test entering air temperature to a standard or guaranteed entering air temperature are made by substituting the standard or guaranteed temperature for the test temperature in the applicable heat credit equations.

GAS OUTLET TEMPERATURE

When an air heater is used, the gas outlet temperature shall be corrected for the standard or guaranteed conditions based upon the test air heater performance. Conditions for which the air heater gas outlet temperature may need to be corrected are described below. Corrections to the heat losses are made by substituting the corrected air heater gas outlet temperature for the test conditions in the applicable heat loss equations.

IP14_001313

The corrected air heater gas outlet temperature is equal to the test exit gas temperature (excluding leakage) plus the sum of the individual corrections in 2A, 2B, 2C, and 2D below.

$$t_{G15NL}\,total = t_{G15NL} + Dt_{G15NLA} + Dt_{G15NLB} + Dt_{G15NLC} + Dt_{G15NLD}$$

Where: $t_{G15NL}\,total$ = Totally corrected air heater gas outlet temperature.

t_{G15NL} = Test gas temperature leaving air heater excluding leakage.

Entering Air Temperature

Correction to the air heater exit gas temperature for a change in entering air temperature is given in the Test Code for Air Heaters, PTC 4.3, and uses the following formula:

$$Dt_{G15NLA} = (t_{G14} - t_{G15NL}) \cdot \frac{(t_{G14} - t_{G15NL})}{(t_{G14} - t_{AB})} \times (t_{G14} - t_{ABD})$$

Where t_{AB} = Test entering air temperature

t_{ABD} = Design entering air temperature

t_{G14} = Test gas temperature entering the air heater

Entering Gas Temperature

An example of where this correction may be necessary to correct to guarantee conditions is when equipment between the steam generator air inlet and gas outlet is supplied separately from the steam generator vendor. An example is hot air quality control equipment where the gas temperature change across the equipment is specified. The air heater gas outlet temperature shall be corrected for the gas temperature entering the air heater that would occur using the specified temperature change and the measured gas temperature entering the equipment in concern. The corrected air heater gas outlet temperature is given in PTC 4.3 and uses the following formula:

IP14_001314

$$Dt_{G15NLB} = (t_{G14D} - t_{G15NL}) - \frac{(t_{G14} - t_{G15NL})}{(t_{G14} - t_{AB})} \times (t_{G14D} - t_{AB})$$

Where t_{G14D} = Design gas temperature entering the air heater.

Entering Gas Mass Flow

An example of where this correction may be necessary to correct to guarantee conditions is when equipment between the steam generator air inlet and gas outlet is supplied separately from the steam generator vendor. An example is hot air quality control equipment where the tested air infiltration across the equipment is different than specified. The air heater gas outlet temperature shall be corrected for the gas mass flow entering the air heater that would occur using the specified infiltration and the gas mass flow that would occur with efficiency and operating conditions corrected to guarantee conditions. The procedure for correcting air heater gas outlet temperature is given in PTC 4.3. Dt_{G15NLC} is obtained from a gas mass flow correction curve prepared for the specific air heater.

Entering Air Mass Flow

An example of when this correction may be required would be when the moisture in the coal during the test is significantly different from the standard or guarantee coal, impacting pulverizer tempering air mass flow which bypasses the air heater. Corrections to the air heater gas outlet temperature are calculated in accordance with PTC 4.3. Dt_{G15NLD} is obtained from an air flow correction curve prepared for the specific air heater.

REFUSE

The considerations for refuse are losses related to unburned combustible in the refuse, refuse split between the various boiler collection points and the ash quantity in the fuel.

IP14_001315

Unburned Carbon Loss

It is beyond the scope of this code to adjust unburned carbon with respect to the fuel burning characteristics, or operating parameters. Therefore, unless otherwise agreed to, unburned carbon shall be considered proportional to the fuel input. The unburned carbon for the standard or guaranteed fuel shall be calculated by multiplying the unburned carbon measured during the test by the ratio of the higher heating value of the standard or guarantee fuel divided by the higher heating value of the test fuel.

Refuse Split

The refuse split between the various collection locations shall be assumed to be the same as tested unless otherwise agreed upon. The refuse quantity at each location shall be calculated based upon the mass of ash and unburned carbon in the standard or guarantee fuel and the sensible heat in refuse calculated accordingly, using the test temperatures (corrected to standard or guarantee conditions).

INLET AIR

Correction to losses and credits due to excess air and moisture in entering air are made by substituting the standard or guarantee conditions in the applicable equations.

FUEL ANALYSIS

Corrections to credits and losses are made by utilizing the standard or guarantee fuel analysis in the applicable computations.

It is assumed that the differences between the test and reference fuel do not impact the thermal performance of the steam generator. This is not to preclude an agreement between parties as to an agreed upon method for compensating for differences in thermal performance of the steam generator between the test and standard or guarantee fuels.

IP14_001316

MISCELLANEOUS EFFICIENCY CORRECTIONS

Surface Radiation and Convection Loss - When this item is measured or corrected for ambient conditions, the standard or guarantee conditions shall be used for the efficiency corrected to reference conditions.

Blowdown - The standard or specified quantity used as the basis for guarantee conditions shall be used.

Sootblowing Steam - A standard or specified quantity used as the basis for guarantee conditions shall be used.

RESISTANCE TO AIR OR GAS MASS FLOW

The measured resistance shall be corrected to standard or guarantee conditions due to the difference in mass flow of the flowing fluid and the specific volume of the fluid between the test condition and the reference conditions.

PRESSURE LOSS

The measured pressure differential across a steam generating unit or a portion of the unit shall be corrected to standard or guarantee conditions due to the difference in mass flow of the flowing fluid and the specific volume between the test condition and the reference conditions.

IP14_001317

CALCULATION OF REHEAT FLOW

RH FLOW = W(HP STM FLOW) — W(STM TO FW HTR) — W(TURB LKG)
— W(MISC CRH EXTR) + W(RH SPRAY)

HP STEAM FLOW IS NORMALLY DETERMINED FROM FW FLOW:

W HP STM = WFW — CBD — AUX STM + *(W SH SPRAY)

*DEPENDS ON LOCATION OF FW FLOW NOZZLE WITH RELATION TO SH SPRAY & RH SPRAY EXTRACTION POINT.

W TURB LEAKAGE — ASSUMED TO BE EQUAL TO ESTIMATED VALUE SHOWN ON TURBINE MANUFACTURER HEAT BALANCES

W TURB LKG = W(HP STM) — W(CRH) — W(STEAM TO HTR)

1ST STAGE PRESSURE AND EXPECTED HP STEAM FLOW BASED ON MW ARE ALSO ACCEPTABLE MEANS FOR DETERMINING HP STEAM FLOW.

Figure 18

IP14_001318

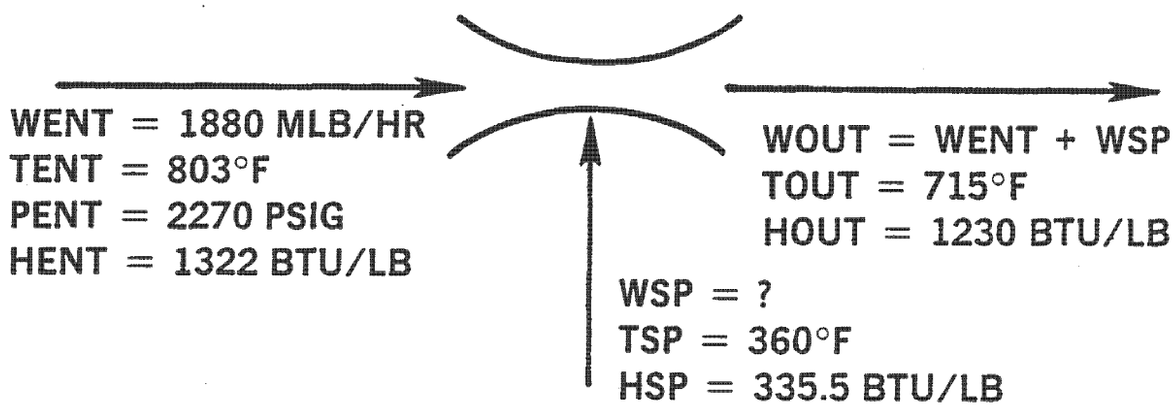

HEAT IN = HEAT OUT

WENT HENT + WSP HSP = WENT HOUT + WSP HOUT

WSP HSP — WSP HOUT = WENT HOUT — WENT HENT

WSP (HSP — HOUT) = WENT (HOUT — HENT)

$$WSP = WENT \left[\frac{HENT - HOUT}{HOUT - HSP} \right]$$

OR IF WOUT IS KNOWN

$$WSP = WOUT \left[\frac{HENT - HOUT}{HENT - HSP} \right]$$

$$WSP = 1880 \left[\frac{1322 - 1230}{1230 - 335.5} \right]$$

WSP = 193.4 MLB/HR

Figure 19

IP14_001319

1ST POINT FW HEATER

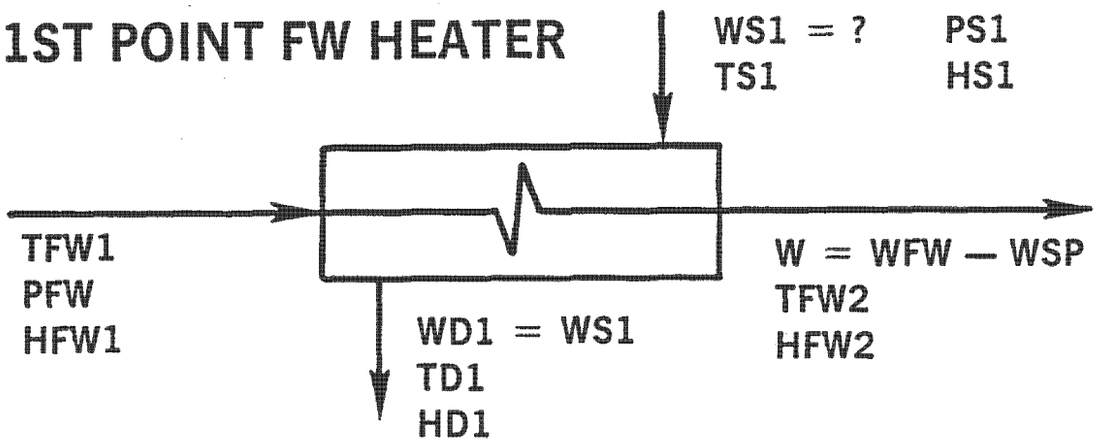

$$W\ (HFW2 - HFW1) = WD1\ \ (HS1 - HD1)$$

$$WD1 = W \left[\frac{HFW2 - HFW1}{HS1 - HD1} \right]$$

2ND OR 3RD POINT HEATER

(RECEIVES DRAINS FROM HIGHER PRESSURE HEATER)

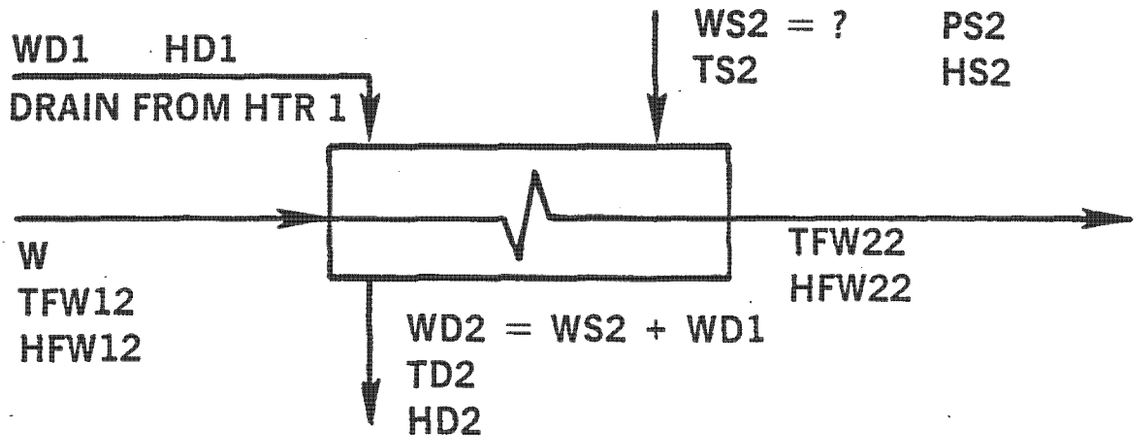

$$W\ (HFW22 - HFW12) = WS2\ \ HS2 + WD1\ HD1 - HD2\ (WS2 + WD1)$$

$$WS2 = \frac{W\ (HFW22 - HFW12) - WD1\ (HD1 - HD2)}{HS2 - HD2}$$

Figure 20

IP14_001320

CALCULATION OF EXCESS AIR

Excess air is the difference between the actual quantity of air supplied for combustion and the theoretical air required for combustion. Also, air infiltration, such as air heater leakage, is calculated by determining the level of excess air between two points (entering and leaving the air heater for example). Excess air may be calculated based on measured percent O_2 in the flue gas or percent CO_2 in the flue gas. Referring to the Dry Flue Gas Volumetric Combustion Chart (attached), it is observed that for a constant excess air, CO_2 varies significantly depending upon the type of fuel. However, O_2 varies very little for a constant excess air. Therefore, the preferred method for determining excess air is to measure the excess O_2 in the flue gas. B&W considers the O_2 method for calculating excess air and/or air heater leakage to be the most reliable method.

When an extractive sampling system is used, such as an orsat analysis, the gas analysis is on a **dry basis.** When the flue gas sample includes moisture, such as in-situ monitors used by most plants today, the gas analysis is on a **wet basis.** The O_2 on a wet basis will read lower than O_2 on a dry basis for the same excess air. The amount of the difference depends on the moisture in the flue gas, which is primarily dependent upon the moisture and hydrogen in the fuel. There are equations below for excess air and flue gas constituents on both a dry and wet basis. It is noted that the ASME efficiency forms require the flue gas constituents to be expressed on a dry basis.

The equation for excess air given on the ASME PTC 4.1 Short Form (shown below) should only be used for approximation:

$$\text{EXCESS AIR} = 100 \left(\frac{O_2 - \frac{CO}{2}}{.2682\, N_2 - (O_2 - \frac{CO}{2})} \right), \% \qquad (1)$$

The expression '.2682 N_2' is an approximation of the total mole of O_2 in the combustion air per mole of dry flue gas. The N_2 term should be corrected for N_2 in the fuel. Secondly, the constant 0.2682 is the ratio of mole of O_2 in air to the mole of N_2 in air and should be 0.2650 (.2095/.7905). The alternate method for

IP14_001321

calculating excess air in ASME PTC 4.1, Steam Generating Units (efficiency calculations), utilizes CO_2. Before using this method, the relationship between measured O_2 and CO_2 should be confirmed based on stoichiometric combustion calculations or the expected combustion line on the Dry Flue Gas Volumetric Combustion Chart. Alternate methods of calculating excess air can be obtained from ASME PTC 19.10, Flue and Exhaust Gas Analyses. The ASME approved Code method using O_2 and PTC 19.10 is an acceptable method and is described at the end of this section. At the present time, there is no ASME procedure for determining excess air based on O_2 measured on a wet basis.

A more rigorous determination of excess air and flue gas constituents when O_2 is measured is described below. This method is being proposed for the new Efficiency Test Code and is applicable for O_2 measured on either a wet or dry basis. Equations 1 through 8 are general and fuel related, and therefore need only be calculated once for a given fuel and unburned carbon loss. The excess air and flue gas constituent equations which follow utilize these values essentially as constants.

GENERAL CALCULATIONS - DEPENDENCE UPON UNBURNED CARBON AND FUEL ANALYSIS

$$Cb = C - Cu \quad ,\% \tag{2}$$

$$THAIR = .1151\ Cb + .3429\ H + .04335\ S - .0432\ O \quad , \text{lbm/lbm fuel "as fired"} \tag{3}$$

$$MATH = THAIR\ /\ 28.966 \quad , \text{Mols/lbm fuel} \tag{4}$$

$$QATH = 10000\ THAIR\ /\ HHV \quad , \text{lbm/10 kB} \tag{5}$$

$$MDP = Cb/1201 + S/3206.4 + N/2801.6 \quad , \text{Mols/lbm fuel} \tag{6}$$

$$O_2C = (O_2 - CO/2) \div (1 - CO/200) \quad ,\% \tag{7}$$

IP14_001322

Where: C = Carbon in the fuel, "as fired", %

Cb = Carbon burned, %

Cu = Unburned carbon, %. When the amount of unburned carbon is not known, it may be estimated from the unburned carbon loss shown on the Boiler Summary Sheet as follows:

Cu = UBCL x HHV / 14500 (8)

UBCL = Unburned combustible loss, %

HHV = Higher heating value of the fuel, "as fired", Btu/lbm

THAIR = Theoretical air, lbm/lbm fuel

MATH = Mols of theoretical air, Mols/lbm fuel

QATH = Theoretical air normalized to a Btu basis, lbm/10 kB. This is used as a check on the fuel analysis, and should fall within the ranges below:

Bit. & Subbituminous coal, 7.35 - 7.76

Oil, 7.35 - 7.55

Natural Gas, 7.15 - 7.35

MDP = Dry products of combustion, Mols/lbm fuel

O_2C = O_2 corrected for CO, %

H, S, O, N = Constituents in fuel, %. Note that for calculation of excess air and air heater leakage, the fuel analysis is not critical. If a recent fuel analysis is not available use the Boiler Summary Sheet value. For excess air or AH leakage on a wet basis, accuracy can be improved if the ultimate fuel analysis is adjusted for moisture in fuel.

IP14_001323

DRY BASIS - EX. ORSAT, EXTRACTIVE SAMPLING SYSTEM

$$AX = 100 \left(\frac{O_2C\,(MDP + .7905\ MATH)}{MATH\,(20.95 - O_2C)} \right) \quad ,\% \tag{9}$$

$$MDG = (1 + CO/200)\,(MDP + MATH\,(.7905 + AX/100)) \quad , \text{Mols/lbm fuel} \tag{10}$$

$$O_2 = AX\ MATH\ .2095\ /\ MDG + CO/2 \quad ,\% \tag{11}$$

$$CO_2 + SO_2 = \frac{\left(\frac{Cb}{12.01} + \frac{S}{32.064} \right)}{MDG} - CO \quad ,\% \tag{12}$$

Where: AX = Excess air, %

$CO_2 + SO_2$ = Carbon dioxide plus sulfur dioxide in the flue gas, %. This is the stoichiometrically calculated equivalent of the CO_2 measured by an orsat. This calculation can be used to determine the combustion line on the Dry Flue Gas Volumetric Combustion Chart. If an orsat is used, the orsat reading should be within +/- 0.2% to be considered valid. When AH leakage is being checked and the ASME PTC 4.3 (and 4.1) gas weight calculations are used (these are based upon CO_2), the error for the inlet and outlet should be no more than 0.2% different from each other calculated stoichiometrically.

IP14_001324

WET BASIS - EX. IN-SITU MONITORS

$$AX = 100 \left(\frac{O_2C\,(MWP + MATH\,(.7905 + MMA))}{MATH\,(20.95 - O_2C\,(1 + MMA))} \right) \quad ,\% \qquad (13)$$

$$MWP = MDP + H/201.6 + H_2O/1801.6 + WAM/1801.6 \text{ , Mols/lbm fuel} \qquad (14)$$

$$MMA = 1.608\ WMA\text{, Mols/Mol dry air} \qquad (15)$$

$$MWG = (1 + CO/200)\ (MWP + MATH\,(.7905 + MMA + AX\,(1 + MMA)/100)) \qquad (16)$$

$$O_2 = AX\ MATH\ .2095\ /\ MWG + CO/2 \qquad (17)$$

$$CO_2 + SO_2 = \frac{\left(\frac{Cb}{12.01} + \frac{S}{32.064} \right)}{MWG} - CO \quad ,\% \qquad (18)$$

Where:
- AX = Excess air, %.
- MWP = Wet products of combustion, Mols/lbm fuel.
- H = Hydrogen in fuel, as fired, %.
- H_2O = Water in fuel, as fired, %.
- WAM = Additional moisture introduced into the flue gas, such as atomizing steam, lbm/lbm fuel.
- MMA = Moisture in air, Mols/Mol of dry air.
- WMA = Moisture in air, lbs H_2O lbm dry air. If not measured, use Summary Sheet value or 0.013 as average.

As noted above, the above equations do not have an ASME reference at this time, but are preferred by B&W. Determining excess air and air heater leakage based on measured O_2 is the preferred B&W method on the basis it is considered to be the most accurate. Should an ASME reference be required, the following equations are excerpted from PTC 19.10, Flue and Exhaust Gas Analyses. No corrections are made for CO (usually insignificant), and are on a dry basis only.

IP14_001325

$$AX = \frac{O_2\,(.3132\ Cb + .11528\ S + .13443\ N + 10.331\ THAIR)}{THAIR\ (2.73 - .13068\ O_2)}\ ,\ \% \qquad (19)$$

$$O_2 = \frac{2.73\ THAIR\ AX}{.3132\ Cb + .11528\ S + .13443\ N + THAIR\ (10.331 + .13068\ AX)}\ ,\ \% \qquad (20)$$

$$CO_2 + SO_2 = \frac{31.32\ Cb + 11.528\ S}{.3132\ Cb + .11528\ S + .13443\ N + THAIR(10.331 + .13068\ AX)}\ ,\ \% \qquad (21)$$

IP14_001326

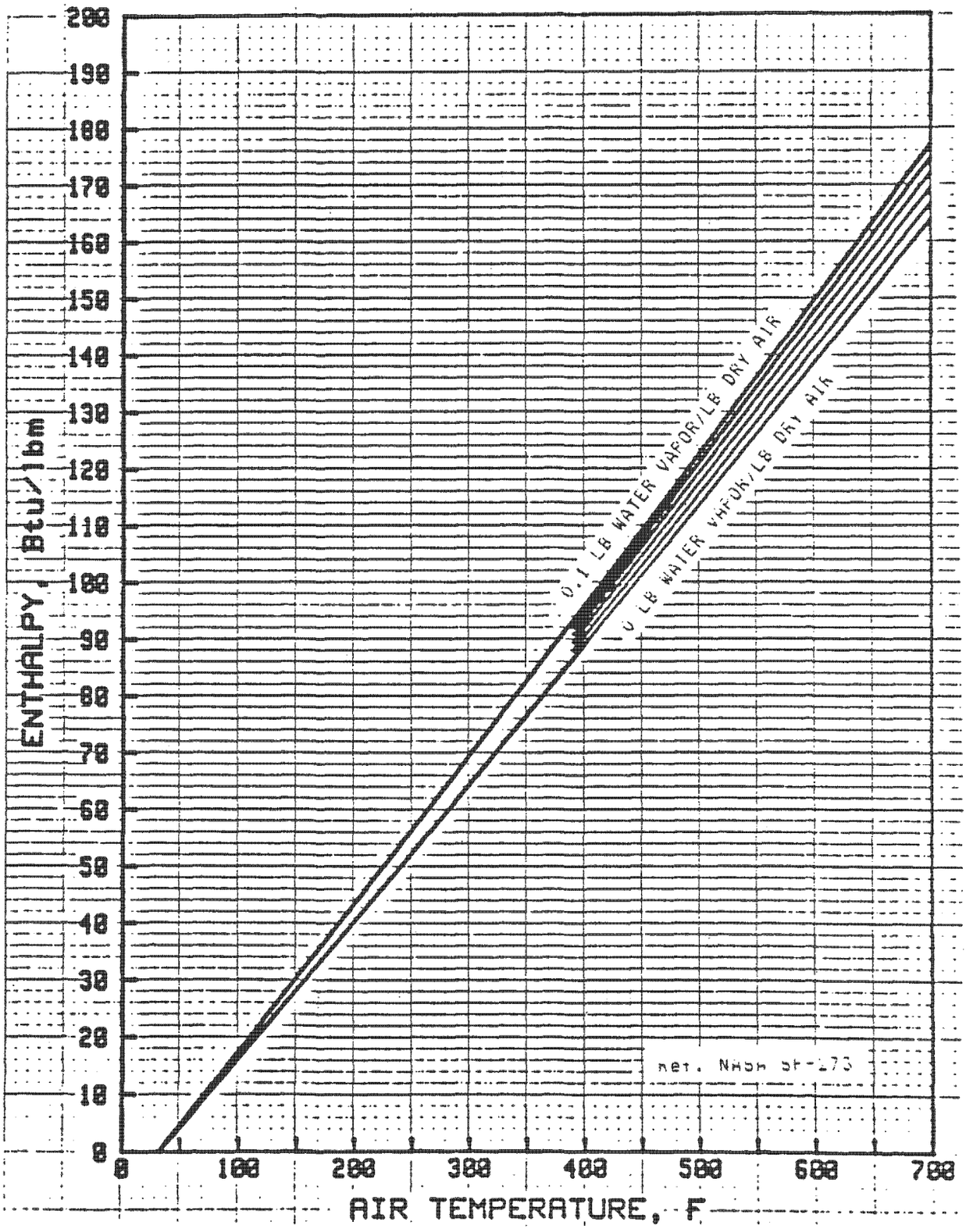

Enthalpy of Air

Figure 21

IP14_001327

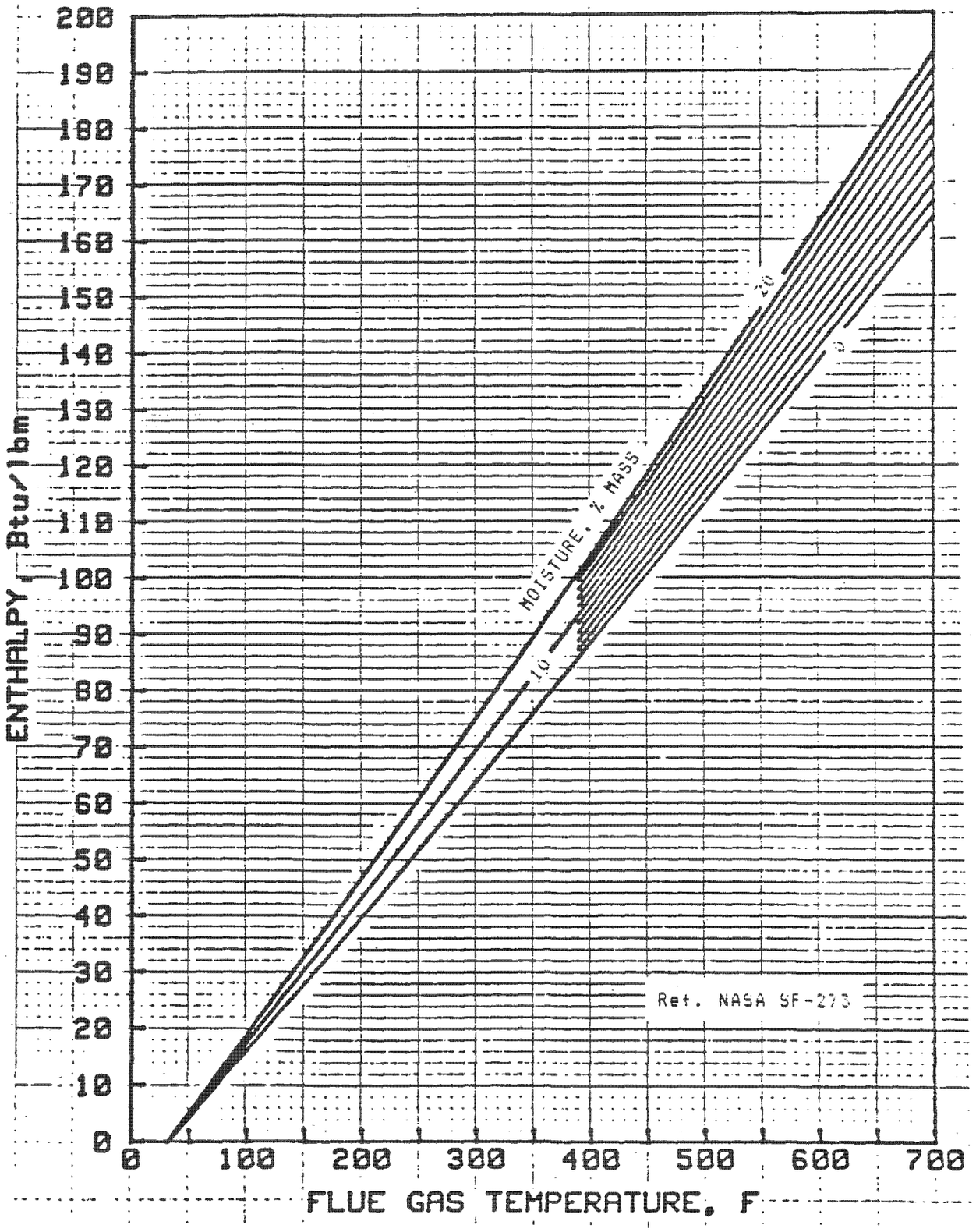

Enthalpy of Flue Gas

Figure 22

IP14_001328

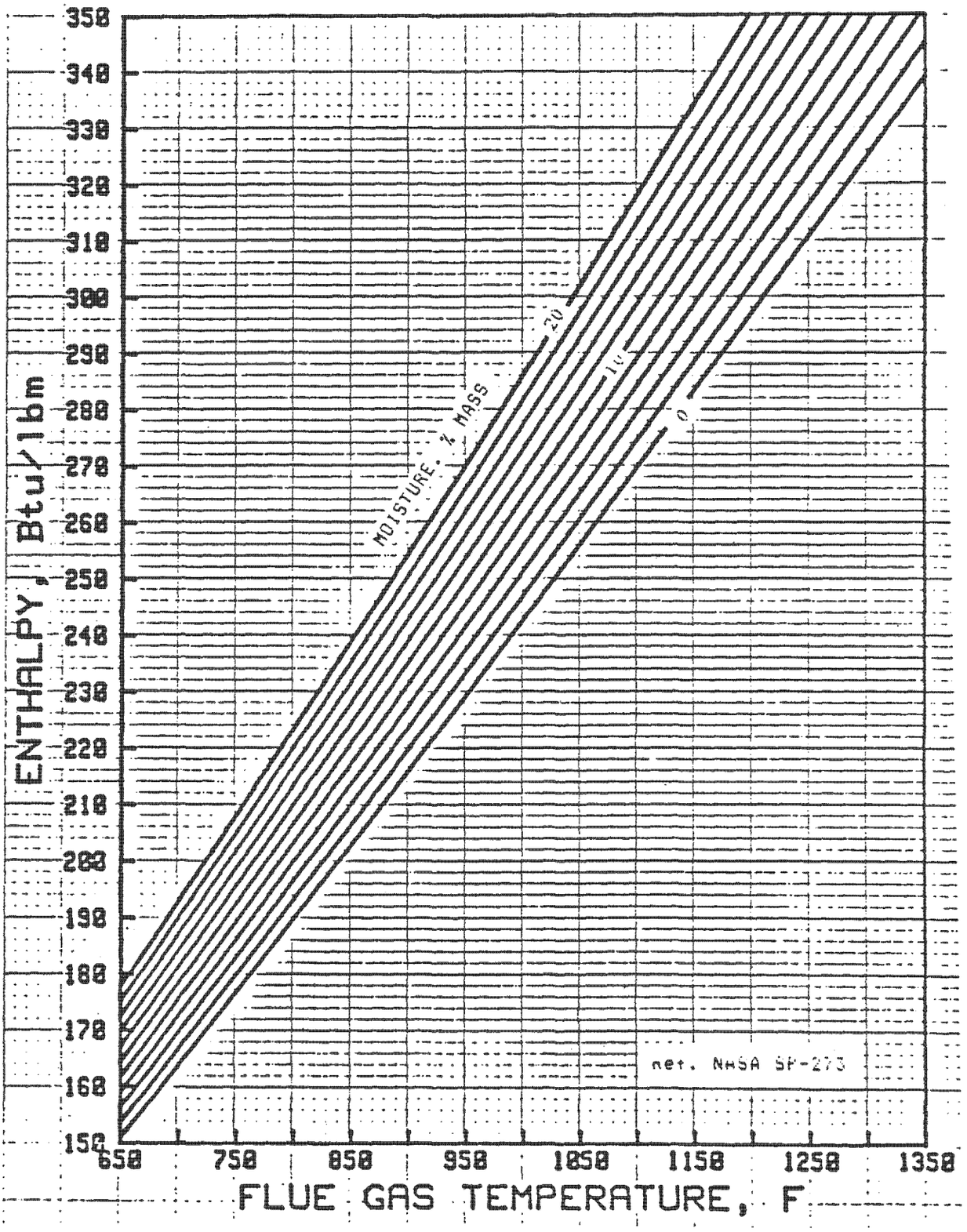

Enthalpy of Flue Gas

Figure 23

IP14_001329

w_D = drain flow from top feedwater heater (1000 lb/hr)

w_{TL} = estimated total HP turbine leakage (1000 lb/hr) (This is a plant-specific value. A typical curve showing turbine leakage at varying loads is shown in Figure 5-61.)

5.3.3.5.6 Calculation of Total Heat Output

$$HO = w_P(h_2 - h_1) + w_{SS}(h_2 - h_5) + w_{RS}(h_4 - h_5) + w_{CR}(h_4 - h_3) \quad (5\text{-}52)$$

where HO = heat output (Btu/hr)

h_1 = specific enthalpy of feedwater at economizer entrance (Btu/lb)

h_2 = throttle steam specific enthalpy (Btu/lb)

h_3 = cold reheat steam specific enthalpy (Btu/lb)

h_4 = hot reheat steam specific enthalpy (Btu/lb)

h_5 = spray water specific enthalpy (Btu/lb)

5.3.3.6 Calculation of Steam Generator Efficiency

$$\eta_g = \frac{HO}{HI + B_e} \times 100 \quad (5\text{-}53)$$

where η_g = boiler efficiency (%)

HO = heat output (Btu/hr)

HI = heat input (Btu/hr)

B_e = total heat credits (Btu/hr)

5.3.4 Air Heater Testing

The air heaters are major components that have great influence on boiler efficiency. Their effect on boiler efficiency is reflected primarily in the flue gas exit temperature. Generally, flue gas exit temperature tends to increase as air heater efficiency decreases. Flue gas exit temperatures may, on the other hand, be decreased by excessive leakage of combustion air into the flue gas in the air heaters. Flue gas exit temperatures are, however, also affected by the amount of excess air, which is not related to air heater performance. It is necessary to test the air heaters separately to distinguish the performance of the heaters from the boiler.

IP14_001330

Air heater testing is described in detail in PTC 4.3. As with the steam generator, strict adherence to all provisions of the code will result in the best accuracy reasonably achievable. The efforts and expense required to follow the code to the letter, however, are often not practical for routine performance testing. In the section that follows, the "performance factors" defined in the code are described. An example of a simplified calculation is given, which is based on the code.

5.3.4.1 Performance Factors Considered

PTC 4.3 describes determination of the following "performance factors":

- Air heater leakage
- Gas side efficiency
- Flue gas exit temperature
- X-Ratio
- Gas side pressure drop
- Air side pressure drop

Only the first three factors are considered here for the simplified procedure. The remaining factors are required when testing for warranty purposes and can be helpful in diagnosis of specific problems. Their determination requires the taking of additional data, however, so they are often not considered in routine testing.

5.3.4.1.1 Air Heater Leakage

The code defines air heater leakage as the weight of air passing from the air side to the gas side of the heater. A method of determining leakage by weight is given. That method requires considerable data, including flue gas analysis, ultimate analysis, ash analysis, and relative humidity.

The code also describes a much simpler volumetric method. In this method, only the flue gas entering and exiting the air heater has to be analyzed. The leakage is then determined by using the change in the concentration of CO_2 in the flue gas. This method is justified by empirical results and is commonly used for routine testing.

IP14_001331

5.3.4.1.2 Gas Side Efficiency

Gas side efficiency (or simply efficiency) is defined as the ratio of the temperature drop, corrected for leakage, to the temperature head, expressed as a percentage. The temperature drop is defined as the change in flue gas temperature from the entrance to the exit of the air heater. The temperature head is defined as the difference between the temperature of the flue gas and air entering the heater. Note that it is is necessary to determine air leakage before efficiency can be calculated because of the correction necessary for the temperature drop.

5.3.4.1.3 Flue Gas Exit Temperature

This temperature is determined directly by measurement. It is corrected as described later. This factor is important because it is used to calculate boiler efficiency.

5.3.4.1.4 X-Ratio

The X-Ratio is defined as the ratio of the heat capacity of the air passing through the heater to the heat capacity of the flue gas passing through the heater. This factor can help determine the reason for the difference in the design and test performance of an air heater. This is because the performance of the air heater may be affected by differences in these heat capacities that occur due to air infiltration, tempering air flow, and other parameters not related to the condition of the air heater.

5.3.4.1.5 Air Side and Gas Side Pressure Drops

These pressure drops are important to the designer in the sizing of forced and induced draft fans. They can also provide another clue as to the reason for differences between design and test performance. If there is a higher-than-normal pressure drop, it is an indication that there is an obstruction in the heater, probably due to fouling.

IP14_001332

5.3.4.2 Corrections

The code describes a number of corrections as explained in Section 5.3.1.3. Many of these are for performance factors that will not be determined in our simplified procedure, so they are not considered. Others apply to the three performance factors that are determined, and if no additional data are required for their application, they are applied. Corrections that have not been applied have a small influence on test results and repeatability. The corrections to be considered are described below.

5.3.4.2.1 Leakage

Gas side efficiency is corrected for leakage. This is accomplished by using the flue gas exit temperature corrected for no leakage.

5.3.4.2.2 Air and Gas Inlet Temperatures

The flue gas exit temperature is corrected for deviations of these inlet temperatures from design values.

5.3.4.3 Calculation of Performance Factors

These factors are air heater leakage, gas side efficiency, and flue gas exit temperature. In many routine test programs, these are the only parameters considered.

5.3.4.3.1 Calculation of Air Heater Leakage

Note that the calculations that follow are for one air heater. Most units have two air heaters. Leakage is generally to be calculated separately for each heater.

The equation below is an empirical approximation for calculating air heater leakage; it does not account for moisture in the flue gas. The equation is found in PTC 4.3, Paragraph 7.03.1.

$$A_{L} = \frac{CO_{2(E)} - CO_{2(L)}}{CO_{2(L)}} \times 90 \qquad (5\text{-}54)$$

IP14_001333

where $A_{(L)}$ = air heater leakage in percent of total air flow

$CO_{2(E)}$ = percent by volume of CO_2 in economizer exit flue gas as determined from combustion chart

$CO_{2(L)}$ = percent by volume of CO_2 in flue gas leaving air heater as determined from combustion chart

90 = constant

5.3.4.3.2 Calculation of Gas Side Efficiency

1. Corrected Temperature for Leakage of Gas Leaving Heater

Gas side efficiency is the ratio of the gas temperature drop corrected for no leakage to the temperature head. To calculate efficiency, first it is necessary to determine the air heater gas exit temperature, corrected for no leakage. (It is assumed that the ratio of the specific heats of the air and flue gas is equal to 1.0.)

$$T_{G\delta L} = \frac{(A_{(L)})(T_{GL} - T_{AE})}{100} + T_{GL} \qquad (5\text{-}55)$$

where $T_{G\delta L}$ = temperature of the flue gas leaving the heater, corrected for no leakage (°F)

$A_{(L)}$ = air heater air leakage, as determined previously (%)

T_{GL} = measured temperature of gas leaving the air heater (°F)

T_{AE} = measured temperature of air entering the air heater (°F)

100 = constant to convert percent to ratio

2. Calculation of Efficiency

The next step is to determine efficiency.

$$\eta_H = \frac{T_{GE} - T_{G\delta L}}{T_{GE} - T_{AE}} \times 100 \qquad (5\text{-}56)$$

where η_H = gas side efficiency, uncorrected (%)

T_{GE} = measured temperature of gas entering the air heater (°F)

$T_{G\delta L}$ = temperature of the flue gas leaving the heater, corrected for no leakage (°F)

T_{AE} = measured temperature of air entering the air heater (°F)

IP14_001334

5.3.4.3.3 Calculation of Corrected Flue Gas Exit Temperature

The temperature of flue gas leaving the heater, corrected for leakage and temperature of entering air, becomes

$$T_{G\delta 1} = \frac{T_{AED}(T_{GE} - T_{GL}) + T_{GE}(T_{GL} - T_{AE})}{(T_{GE} - T_{AE})} \qquad (5\text{-}35)$$

where $T_{G\delta 1}$ = temperature of flue gas leaving the air heater, corrected for leakage and for entering air corrected to design temperature (°F)

T_{AED} = inlet air design temperature (°F)

The temperature of flue gas corrected for leakage and for the temperature of the entering flue gas is

$$T_{G\delta 2} = \frac{T_{GED}(T_{GL} - T_{AE}) + T_{AE}(T_{GE} - T_{GL})}{T_{GE} - T_{AE}} \qquad (5\text{-}36)$$

where $T_{G\delta 2}$ = temperature of flue gas leaving the air heater, corrected for entering flue gas temperature (°F)

T_{GED} = design temperature of gas entering the heater at full load (°F)

The flue gas exit temperature, corrected for deviations from design, is

$$T_{G\delta} = T_{G\delta 1} + T_{G\delta 2} - T_{GL} \qquad (5\text{-}37)$$

where $T_{G\delta}$ = temperature of flue gas leaving the heater, corrected for leakage, entering gas temperature and entering temperature (°F)

5.4 Improving Steam Generator Efficiency

Steam generator efficiency can be improved by (1) operating efficiently and (2) monitoring the steam generator for problems that can reduce efficiency.

5.4.1 Operating Efficiently

Three paramaters affecting operating efficiency are excess air, pulverizer classifier settings, and gas temperature.

IP14_001335

5.4.1.1 Excess Air

We have shown that fuel and air must be precisely mixed to achieve efficient combustion, and also that excess air must be supplied beyond that required for the theoretical (or stoichiometric) air-to-fuel ratio.

Excess air has to be supplied to ensure satisfactory combustion. But there is an upper economic limit to this excess air. Figure 5-62 graphically illustrates the relationship between excess air and total losses in the combustion process.

Note that optimum steam generator efficiency is a trade-off between fuel losses and stack losses. If too little air is supplied with the fuel, incomplete combustion will occur, which will produce carbon monoxide in the flue gas, and in the case of pulverized fuel and possibly oil-fired boilers, an increase in unburned carbon in the ash.

On the other hand, as combustion air is increased, an increased volume of flue gas is produced, which normally causes an increase in flue gas temperature at the exit of the steam generator. The air heater will recover some, but not all of the heat represented by this higher quantity of flue gas at a higher temperature. Therefore, the net result of increasing combustion air is to increase the heat loss up the stack.

Obviously, there is a range in which these losses approach a minimum. This range varies with different loads and fuels on different steam generators.

The following factors directly influence overall steam generator efficiency by the approximate amount shown:

Carbon loss in ash	0.12% for each 1% combustible
Unburned CO	0.35% for each 0.1% CO
Exit gas temperature	0.25% for each 10°F

At a fuel cost of $2.50 per million Btu (not unusual in today's power plants) and a 400-MW unit operating at a 70% load factor, approximate annual cost increases for reduced boiler efficiency related to the above factors are

IP14_001336

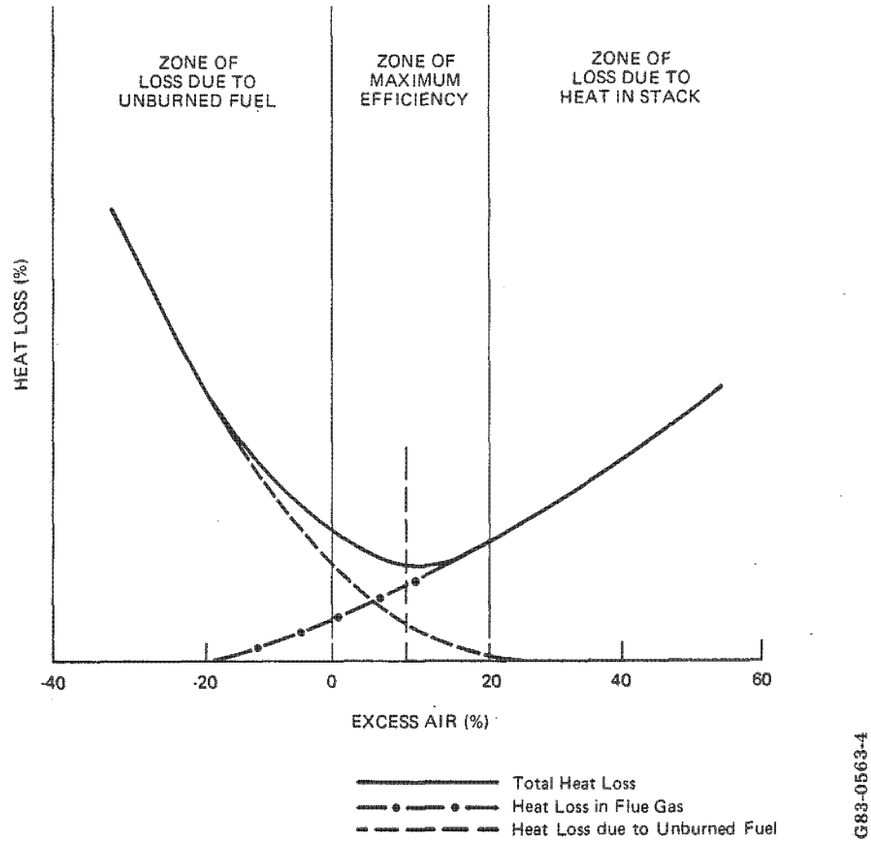

Figure 5-62. Efficiency and Excess Air

1% increase in combustible in refuse	$ 70,650
0.1% increase in CO in flue gas	$206,000
10°F increase in stack temperature	$147,200

It is clear that large costs are involved. The savings will outweigh the cost of performing spot tests and checks to reduce these losses. Details of these checks and tests are in the following subsections.

5.4.1.2 Pulverizer Classifier Settings

Another important parameter that influences boiler efficiency when coal is used as the fuel is the setting of pulverizer classifiers. These settings have a direct effect on boiler efficiency because they control the fineness of the pulverized fuel delivered to the burners, which in turn affects the amount

IP14_001337

of combustible in the refuse. It is quite possible in most pulverizers to vary the percentage of fuel passing through a standard 200 mesh sieve as much as 25% by adjustment of the classifiers through their full range of operation.

Classifiers could be set to achieve the maximum fineness with resultant minimum carbon loss in ash. But here again, we are faced with a trade-off. As fuel fineness increases and raises boiler efficiency, pulverizer component wear increases, requiring more overhauls. In addition, pulverizer power usage increases. Thus, a continuing program is needed to optimize the trade-off between fuel fineness (boiler efficiency) and the cost of pulverizer maintenance and power consumption.

5.4.1.3 Gas Temperature

Boiler exit gas temperature has an effect on boiler efficiency of approximately 0.25% for each 10°F change in temperature. It is desirable to size boiler heat transfer surfaces and operate with minimum excess combustion air to achieve the lowest possible exit temperature.

Again, a compromise must be made. Air heater exit gas temperature must be maintained sufficiently high to guard against acid corrosion and fouling. Figure 5-63 illustrates minimum allowable air heater metal temperature (cold-end temperature) versus fuel sulfur content to avoid these problems.

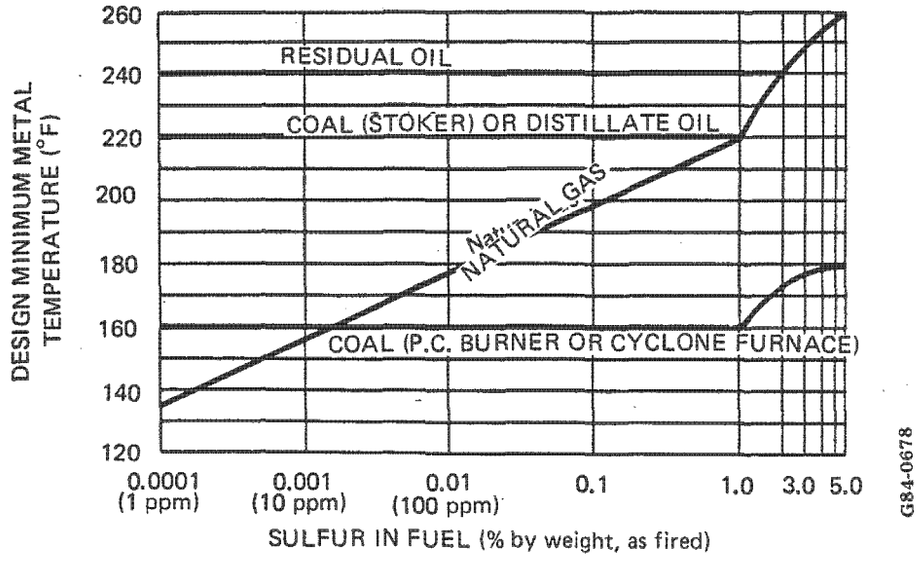

Courtesy: Babcock & Wilcox
Source: Steam: Its Generation and Use, *Figure 4, page 13-4.*

Figure 5-63. Minimum Air Heater Metal Temperature versus Fuel Sulfur Content

IP14_001338

Different methods, such as bypassing or preheating inlet air, are used to keep boiler exit gas temperatures sufficiently high at lower boiler ratings to avoid reaching acid dew points. Care must be exercised that these control methods keep gas temperatures sufficiently, but not excessively, high. Excessive inlet air temperature must be avoided to keep exit gas temperature as low as possible. This condition should be carefully monitored by plant operators and verified by performance engineers.

5.4.2 Monitoring Steam Generator Efficiency

The following subsections discuss various observations and spot tests that should be performed regularly on an operating steam generator and its auxiliaries to detect situations that can contribute to lower efficiency.

5.4.2.1 Combustion Conditions

A spot check of combustion conditions using stack measurements of oxygen (or CO_2), CO, smoke, and temperature is an effective method of evaluating performance. These measurements should be taken when the steam generator is operating at steady-state conditions and compared to those obtained during previous tests. These data help identify any deterioration in combustion efficiency, as well as the possible causes. In many plants, efficiency-related data are checked on a daily basis, sometimes during each work shift.

Changes in the level of excess oxygen might be caused by problems in the air or fuel supply systems, or might reflect changes in fuel properties. Other possibilities include deterioration in furnace baffling or setting leakage, excessive tube fouling, air heater plugging, or changes in atmospheric conditions. If excess oxygen has remained constant, but smoke or CO has increased, fuel quality may have changed, or there may be a problem with burner operation.

If stack temperatures have increased by 20°F or more, but excess oxygen, CO, and smoke have remained the same, this may indicate excessive tube fouling, soot blower malfunction, or the early stages of deterioration of baffling.

IP14_001339

w_D = drain flow from top feedwater heater (1000 lb/hr)

w_{TL} = estimated total HP turbine leakage (1000 lb/hr) (This is a plant-specific value. A typical curve showing turbine leakage at varying loads is shown in Figure 5-61.)

5.3.3.5.6 Calculation of Total Heat Output

$$HO = w_P(h_2 - h_1) + w_{SS}(h_2 - h_5) + w_{RS}(h_4 - h_5) + w_{CR}(h_4 - h_3) \quad (5\text{-}52)$$

where HO = heat output (Btu/hr)

h_1 = specific enthalpy of feedwater at economizer entrance (Btu/lb)

h_2 = throttle steam specific enthalpy (Btu/lb)

h_3 = cold reheat steam specific enthalpy (Btu/lb)

h_4 = hot reheat steam specific enthalpy (Btu/lb)

h_5 = spray water specific enthalpy (Btu/lb)

5.3.3.6 Calculation of Steam Generator Efficiency

$$\eta_g = \frac{HO}{HI + B_e} \times 100 \quad (5\text{-}53)$$

where η_g = boiler efficiency (%)

HO = heat output (Btu/hr)

HI = heat input (Btu/hr)

B_e = total heat credits (Btu/hr)

5.3.4 Air Heater Testing

The air heaters are major components that have great influence on boiler efficiency. Their effect on boiler efficiency is reflected primarily in the flue gas exit temperature. Generally, flue gas exit temperature tends to increase as air heater efficiency decreases. Flue gas exit temperatures may, on the other hand, be decreased by excessive leakage of combustion air into the flue gas in the air heaters. Flue gas exit temperatures are, however, also affected by the amount of excess air, which is not related to air heater performance. It is necessary to test the air heaters separately to distinguish the performance of the heaters from the boiler.

IP14_001340

Air heater testing is described in detail in PTC 4.3. As with the steam generator, strict adherence to all provisions of the code will result in the best accuracy reasonably achievable. The efforts and expense required to follow the code to the letter, however, are often not practical for routine performance testing. In the section that follows, the "performance factors" defined in the code are described. An example of a simplified calculation is given, which is based on the code.

5.3.4.1 Performance Factors Considered

PTC 4.3 describes determination of the following "performance factors":

- Air heater leakage
- Gas side efficiency
- Flue gas exit temperature
- X-Ratio
- Gas side pressure drop
- Air side pressure drop

Only the first three factors are considered here for the simplified procedure. The remaining factors are required when testing for warranty purposes and can be helpful in diagnosis of specific problems. Their determination requires the taking of additional data, however, so they are often not considered in routine testing.

5.3.4.1.1 Air Heater Leakage

The code defines air heater leakage as the weight of air passing from the air side to the gas side of the heater. A method of determining leakage by weight is given. That method requires considerable data, including flue gas analysis, ultimate analysis, ash analysis, and relative humidity.

The code also describes a much simpler volumetric method. In this method, only the flue gas entering and exiting the air heater has to be analyzed. The leakage is then determined by using the change in the concentration of CO_2 in the flue gas. This method is justified by empirical results and is commonly used for routine testing.

IP14_001341

5.3.4.1.2 Gas Side Efficiency

Gas side efficiency (or simply efficiency) is defined as the ratio of the temperature drop, corrected for leakage, to the temperature head, expressed as a percentage. The temperature drop is defined as the change in flue gas temperature from the entrance to the exit of the air heater. The temperature head is defined as the difference between the temperature of the flue gas and air entering the heater. Note that it is is necessary to determine air leakage before efficiency can be calculated because of the correction necessary for the temperature drop.

5.3.4.1.3 Flue Gas Exit Temperature

This temperature is determined directly by measurement. It is corrected as described later. This factor is important because it is used to calculate boiler efficiency.

5.3.4.1.4 X-Ratio

The X-Ratio is defined as the ratio of the heat capacity of the air passing through the heater to the heat capacity of the flue gas passing through the heater. This factor can help determine the reason for the difference in the design and test performance of an air heater. This is because the performance of the air heater may be affected by differences in these heat capacities that occur due to air infiltration, tempering air flow, and other parameters not related to the condition of the air heater.

5.3.4.1.5 Air Side and Gas Side Pressure Drops

These pressure drops are important to the designer in the sizing of forced and induced draft fans. They can also provide another clue as to the reason for differences between design and test performance. If there is a higher-than-normal pressure drop, it is an indication that there is an obstruction in the heater, probably due to fouling.

IP14_001342

5.3.4.2 Corrections

The code describes a number of corrections as explained in Section 5.3.1.3. Many of these are for performance factors that will not be determined in our simplified procedure, so they are not considered. Others apply to the three performance factors that are determined, and if no additional data are required for their application, they are applied. Corrections that have not been applied have a small influence on test results and repeatability. The corrections to be considered are described below.

5.3.4.2.1 Leakage

Gas side efficiency is corrected for leakage. This is accomplished by using the flue gas exit temperature corrected for no leakage.

5.3.4.2.2 Air and Gas Inlet Temperatures

The flue gas exit temperature is corrected for deviations of these inlet temperatures from design values.

5.3.4.3 Calculation of Performance Factors

These factors are air heater leakage, gas side efficiency, and flue gas exit temperature. In many routine test programs, these are the only parameters considered.

5.3.4.3.1 Calculation of Air Heater Leakage

Note that the calculations that follow are for one air heater. Most units have two air heaters. Leakage is generally to be calculated separately for each heater.

The equation below is an empirical approximation for calculating air heater leakage; it does not account for moisture in the flue gas. The equation is found in PTC 4.3, Paragraph 7.03.1.

$$A_{L} = \frac{CO_{2(E)} - CO_{2(L)}}{CO_{2(L)}} \times 90 \qquad (5\text{-}54)$$

IP14_001343

where $A_{(L)}$ = air heater leakage in percent of total air flow

$CO_{2(E)}$ = percent by volume of CO_2 in economizer exit flue gas as determined from combustion chart

$CO_{2(L)}$ = percent by volume of CO_2 in flue gas leaving air heater as determined from combustion chart

90 = constant

5.3.4.3.2 Calculation of Gas Side Efficiency

1. Corrected Temperature for Leakage of Gas Leaving Heater

Gas side efficiency is the ratio of the gas temperature drop corrected for no leakage to the temperature head. To calculate efficiency, first it is necessary to determine the air heater gas exit temperature, corrected for no leakage. (It is assumed that the ratio of the specific heats of the air and flue gas is equal to 1.0.)

$$T_{G\delta L} = \frac{(A_{(L)})(T_{GL} - T_{AE})}{100} + T_{GL} \qquad (5\text{-}55)$$

where $T_{G\delta L}$ = temperature of the flue gas leaving the heater, corrected for no leakage (°F)

$A_{(L)}$ = air heater air leakage, as determined previously (%)

T_{GL} = measured temperature of gas leaving the air heater (°F)

T_{AE} = measured temperature of air entering the air heater (°F)

100 = constant to convert percent to ratio

2. Calculation of Efficiency

The next step is to determine efficiency.

$$\eta_H = \frac{T_{GE} - T_{G\delta L}}{T_{GE} - T_{AE}} \times 100 \qquad (5\text{-}56)$$

where η_H = gas side efficiency, uncorrected (%)

T_{GE} = measured temperature of gas entering the air heater (°F)

$T_{G\delta L}$ = temperature of the flue gas leaving the heater, corrected for no leakage (°F)

T_{AE} = measured temperature of air entering the air heater (°F)

IP14_001344

5.3.4.3.3 Calculation of Corrected Flue Gas Exit Temperature

The temperature of flue gas leaving the heater, corrected for leakage and temperature of entering air, becomes

$$T_{G\delta 1} = \frac{T_{AED}(T_{GE} - T_{GL}) + T_{GE}(T_{GL} - T_{AE})}{(T_{GE} - T_{AE})} \qquad (5\text{-}35)$$

where $T_{G\delta 1}$ = temperature of flue gas leaving the air heater, corrected for leakage and for entering air corrected to design temperature (°F)

T_{AED} = inlet air design temperature (°F)

The temperature of flue gas corrected for leakage and for the temperature of the entering flue gas is

$$T_{G\delta 2} = \frac{T_{GED}(T_{GL} - T_{AE}) + T_{AE}(T_{GE} - T_{GL})}{T_{GE} - T_{AE}} \qquad (5\text{-}36)$$

where $T_{G\delta 2}$ = temperature of flue gas leaving the air heater, corrected for entering flue gas temperature (°F)

T_{GED} = design temperature of gas entering the heater at full load (°F)

The flue gas exit temperature, corrected for deviations from design, is

$$T_{G\delta} = T_{G\delta 1} + T_{G\delta 2} - T_{GL} \qquad (5\text{-}37)$$

where $T_{G\delta}$ = temperature of flue gas leaving the heater, corrected for leakage, entering gas temperature and entering temperature (°F)

5.4 Improving Steam Generator Efficiency

Steam generator efficiency can be improved by (1) operating efficiently and (2) monitoring the steam generator for problems that can reduce efficiency.

5.4.1 Operating Efficiently

Three paramaters affecting operating efficiency are excess air, pulverizer classifier settings, and gas temperature.

IP14_001345

5.4.1.1 Excess Air

We have shown that fuel and air must be precisely mixed to achieve efficient combustion, and also that excess air must be supplied beyond that required for the theoretical (or stoichiometric) air-to-fuel ratio.

Excess air has to be supplied to ensure satisfactory combustion. But there is an upper economic limit to this excess air. Figure 5-62 graphically illustrates the relationship between excess air and total losses in the combustion process.

Note that optimum steam generator efficiency is a trade-off between fuel losses and stack losses. If too little air is supplied with the fuel, incomplete combustion will occur, which will produce carbon monoxide in the flue gas, and in the case of pulverized fuel and possibly oil-fired boilers, an increase in unburned carbon in the ash.

On the other hand, as combustion air is increased, an increased volume of flue gas is produced, which normally causes an increase in flue gas temperature at the exit of the steam generator. The air heater will recover some, but not all of the heat represented by this higher quantity of flue gas at a higher temperature. Therefore, the net result of increasing combustion air is to increase the heat loss up the stack.

Obviously, there is a range in which these losses approach a minimum. This range varies with different loads and fuels on different steam generators.

The following factors directly influence overall steam generator efficiency by the approximate amount shown:

Carbon loss in ash	0.12% for each 1% combustible
Unburned CO	0.35% for each 0.1% CO
Exit gas temperature	0.25% for each 10°F

At a fuel cost of $2.50 per million Btu (not unusual in today's power plants) and a 400-MW unit operating at a 70% load factor, approximate annual cost increases for reduced boiler efficiency related to the above factors are

IP14_001346

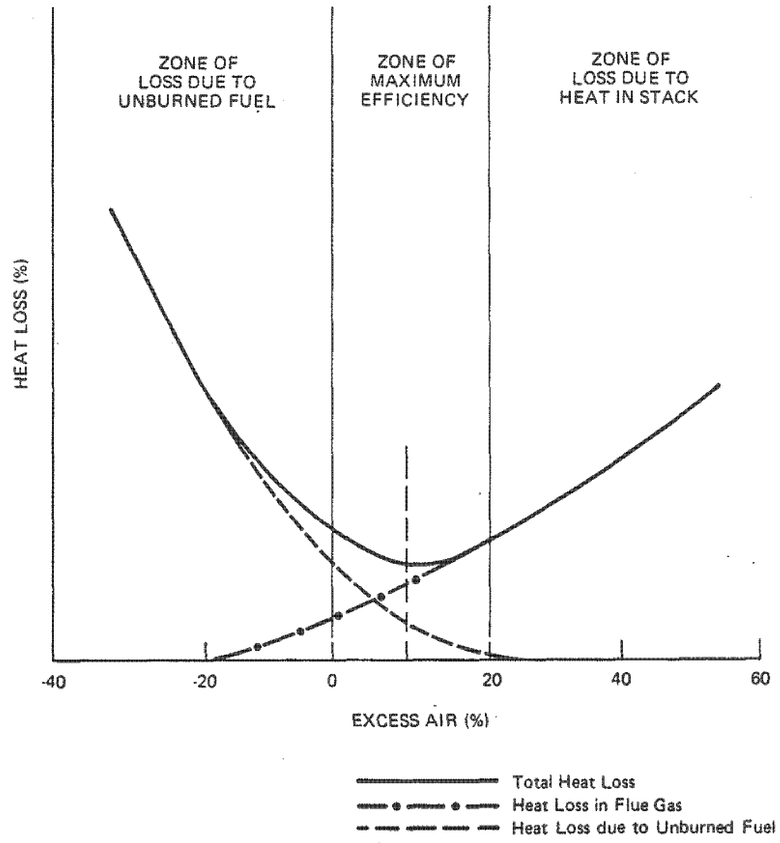

Figure 5-62. Efficiency and Excess Air

1% increase in combustible in refuse	$ 70,650
0.1% increase in CO in flue gas	$206,000
10°F increase in stack temperature	$147,200

It is clear that large costs are involved. The savings will outweigh the cost of performing spot tests and checks to reduce these losses. Details of these checks and tests are in the following subsections.

5.4.1.2 Pulverizer Classifier Settings

Another important parameter that influences boiler efficiency when coal is used as the fuel is the setting of pulverizer classifiers. These settings have a direct effect on boiler efficiency because they control the fineness of the pulverized fuel delivered to the burners, which in turn affects the amount

IP14_001347

A typical switchboard varmeter is illustrated Figure 8-34. Note that the meter indicates reactive power in the lag and lead directions. Reactive power in the lagging direction indicates that (1) the current is lagging behind the voltage, (2) the circuit being measured is inductive in nature, and (3) the power factor is lagging. Reactive power in the leading direction indicates that (1) the current is leading the voltage, (2) the circuit being measured is capacitive in nature, and (3) the power factor is leading.

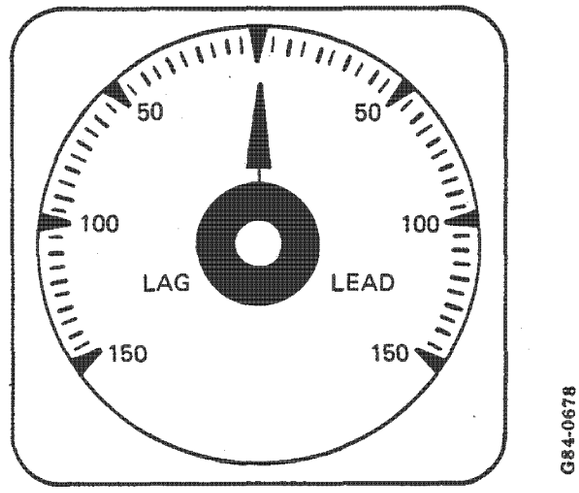

Figure 8-34. Varameter

This reading is needed to obtain the power factor, which in turn is used to determine the generator correction factor. Usually switchboard meters are used. Acceptance tests require higher accuracy measurement and generally require separate volt-ampere meters for each phase.

Vars are equal to the current times the voltage times the phase angle between the voltage and current.

8.5 Flue Gas Analysis

Flue gas analysis is used to determine quantitative values for the gases resulting from combustion. The three gases tested for are CO, O_2, and CO_2. PTC 19.10, a supplement entitled Flue and Exhaust Gas Analyses, give guidance

IP14_001348

on different instruments and their application to measuring the constituents of flue gas. Many types of instruments can be used to determine the major constituents present in flue gas.

8.5.1 Orsat Analyzer

The most commonly used instrument for flue gas analysis is the Orsat apparatus, shown in Figure 8-35. Basically, the Orsat apparatus has three absorption pipettes, each containing 50 cc of reagent. To determine the amount of CO_2 concentration in the sample, the sample is forced into the CO_2 pipette, passed back and forth between the burette and pipette, and the absorption measured. This same basic procedure is followed to measure the O_2 and CO concentrations.

Some disadvantages of using the Orsat apparatus are that it is a slow process, the reagents become exhausted and need replacing, and accurate results depend on the skill of the operator. To check the accuracy of the readings, the readings should be plotted on a dry flue gas volumetric combustion chart (Figure 8-36). The oxygen minus 1/2 the CO (if any) and the CO_2 plus oxygen reading should intersect close to the line drawn for a typical fuel (in this case bituminous coal). Readings at higher or lower excess air should fall in a straight line drawn through the points. If there are discrepancies, the reagents are used up, the readings have been incorrectly taken, or the reagents have been inadvertently mixed. Electronic instrumentation offers a solution to the above disadvantages, providing a faster and more accurate means of conducting flue gas analysis.

8.5.2 Electronic Analyzers

There are a variety of electronic instruments that may also be used to measure constituents of flue gas, some of which are portable and thus useful in performance testing. Most of these instruments cannot measure all three components (O_2, CO_2, and CO). The most common measure oxygen only, while some others measure oxygen and "combustibles." Combustibles may consist of small amounts of substances other than carbon monoxide, such as hydrogen.

IP14_001349

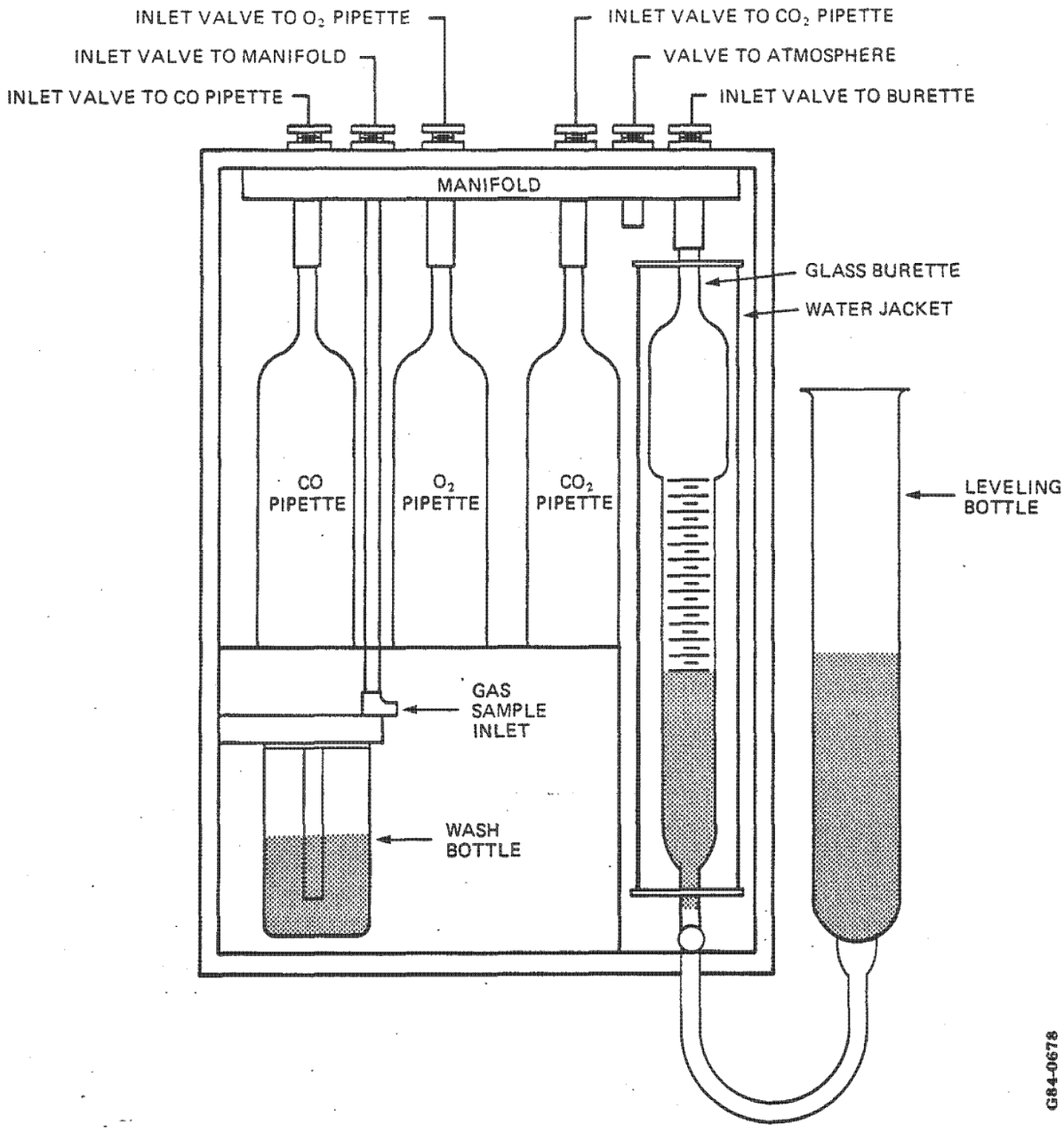

Courtesy: ASME
Source: PTC 19.10, Figure 6.

Figure 8-35. Typical Orsat Apparatus

IP14_001350

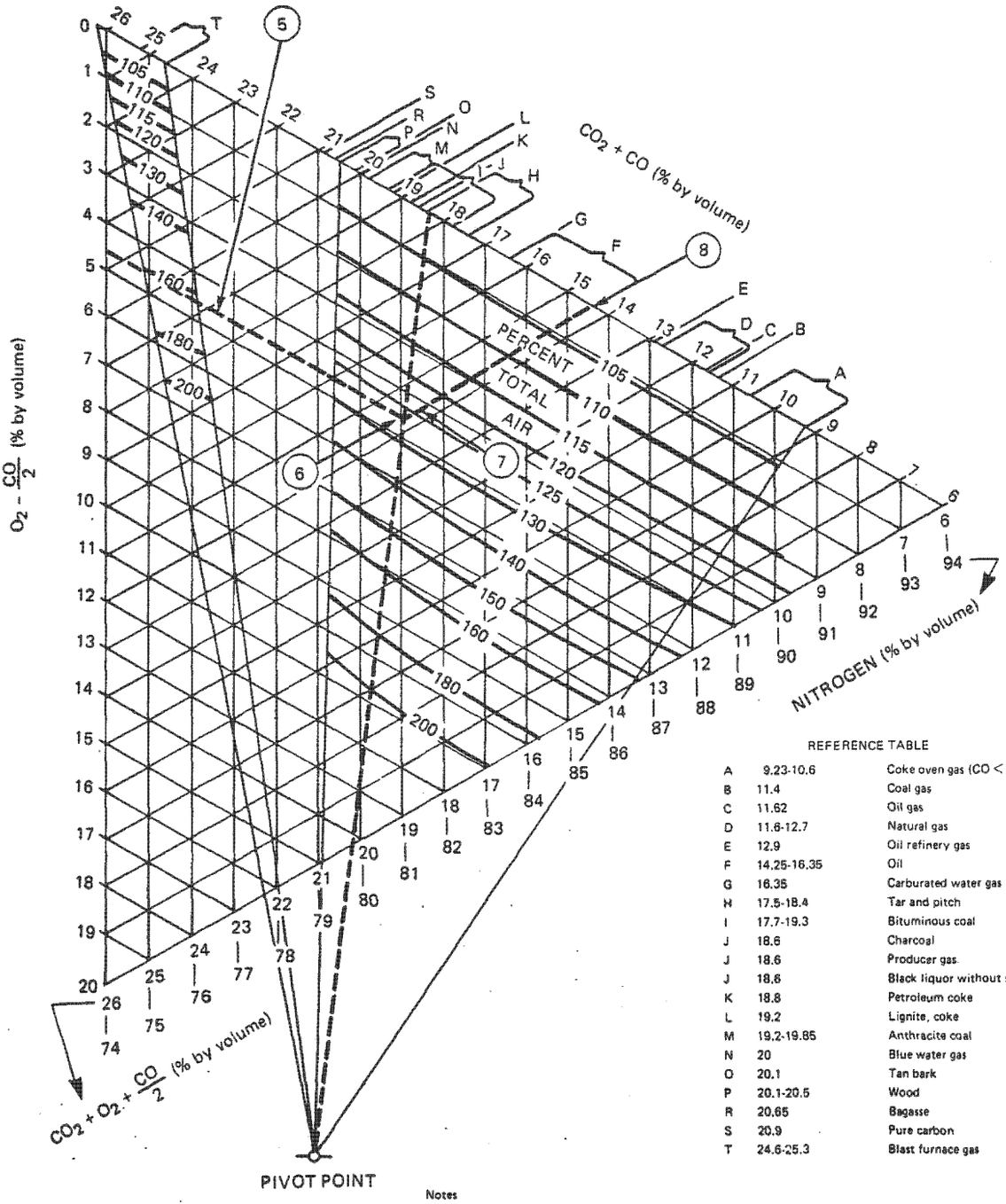

REFERENCE TABLE

A	9.23-10.6	Coke oven gas (CO < 6%)
B	11.4	Coal gas
C	11.62	Oil gas
D	11.6-12.7	Natural gas
E	12.9	Oil refinery gas
F	14.25-16.35	Oil
G	16.35	Carburated water gas
H	17.5-18.4	Tar and pitch
I	17.7-19.3	Bituminous coal
J	18.6	Charcoal
J	18.6	Producer gas
J	18.6	Black liquor without saltcake
K	18.8	Petroleum coke
L	19.2	Lignite, coke
M	19.2-19.85	Anthracite coal
N	20	Blue water gas
O	20.1	Tan bark
P	20.1-20.5	Wood
R	20.65	Bagasse
S	20.9	Pure carbon
T	24.6-25.3	Blast furnace gas

Notes

1. Nitrogen scale not exact when CO is formed.
2. For any fuel, Orsat analysis will lie along a straight line drawn between pivot point and maximum CO_2 on maximum CO_2 line.
3. Percent total air lines are not applicable to bagasse, blue water gas, producer gas, or carburated water gas fuels or to any fuel containing more than 6% CO by volume in fuel. Chart otherwise applicable.

G84-0678

Courtesy: ASME
Source: PTC 19.10, Figure 7.

Figure 8-36. Dry Flue Gas Volumetric Combustion Chart

IP14_001351

Carbon dioxide concentration in flue gas is usually measured with electronic analyzers using the thermal conductivity principle. The thermal conductivity analyzer incorporates two electrically heated filaments mounted in separate cells. These filaments have identical characteristics. One cell is the measuring cell and the other is the reference cell. The two heated filaments are connected to form half of a Wheatstone bridge circuit. When conducting a CO_2 analysis, the measuring cell receives the gas sample. The reference cell is sealed and contains air at a constant temperature or resistance. The gas sample conducts heat away from the measuring cell, decreasing the temperature or resistance. The difference in temperature between the measuring cell and the reference cell unbalances the Wheatstone bridge in proportion to the amount of carbon dioxide found in the sample. Millivoltmeters connected across the bridge indicate in percent the amount of CO_2 found in the sample of flue gas.

Oxygen and combustibles (CO and H_2) found in flue gas can also be measured by electronic analyzers. An electrochemical sensor detects the oxygen and causes a chemical reaction to take place between electrodes. This reaction in turn generates a current proportional to the oxygen concentration. This signal is amplified and then read out on a precision meter.

The concentration of the combustibles (CO and H_2) created in flue gas is determined by measuring the thermal conductivity of H_2. H_2 has a very high thermal conductivity that can be read on a meter whose scale is proportional to the total combustibles (CO + H_2) in the flue gas.

The oxygen concentration can be determined up to 25%, with an accuracy of ±2% of full scale. The combustible concentration can be determined up to 10%, with an accuracy of ±0.2 to 0.4% of full scale depending on temperature.

Infrared analyzers offer another way to measure the carbon dioxide concentration in flue gas. Infrared analyzers operate on the principle that a gas absorbs a unique portion of the infrared spectrum. Two paths for infrared radiation are provided. One path is through a reference cell with windows, and the other is through a sample cell with windows. The difference in radiation passed between these two cells is equivalent to the amount of carbon dioxide in the sample.

IP14_001352

surface and total moisture in coal, (4) moisture and fineness of pulverized coal, (5) grindability of raw coal, (6) temperatures of room air, tempering air, raw coal, and coal/air from mill, (7) pressures and quantities of air into pulverizer, and (8) pulverizer power. The section defines the instruments and apparatus required, and references PTC 3.2 for additional details in pulverized coal sampling.

Section 5 is simply a detailed explanation of obtaining measurements of such quantities as amount of coal pulverized, power consumption, and air flow. It also describes the sampling of raw and pulverized coal. Applicable supporting PTCs are addressed as necessary.

In summary, pulverizer testing is primarily a check of vendor-predicted or guaranteed results, and very few calculations are involved. Because several variables, including coal grindability, coal surface moisture, available inlet air temperature, and classifier settings, have a large effect on such other variables as capacity, power consumption, and fineness, a great deal of data must be taken and corrected back to standard specified conditions for comparison with vendor values.

Figure 5-49 shows the relationship between pulverizer capacity and coal grindability or fineness at a specific value of surface moisture. Note the sharp decrease in capacity as fineness is increased through classifier adjustment.

Figures 5-50 shows details of a device suitable under the code for sampling of pulverized coal.

Figure 5-51 shows a Rosin and Rammler Chart for determining the accuracy of pulverized coal sampling. The results of the sieve analysis from the sample are plotted on the chart. If points fall on a fairly straight line, the sample is considered to be representative. If the plot is curved or has sharp breaks, it is probable that a truly representative sample was not obtained.

5.3.1.3 ASME PTC 4.31, Air Heaters

Section 1 defines the objectives and scope of PTC 4.3 (1969 and 1974, reaffirmed 1979). Basically, the code establishes procedures for tests to determine

IP14_001353

I.P.S.C. ENGINEERING
LIBRARY
BOOK # 427

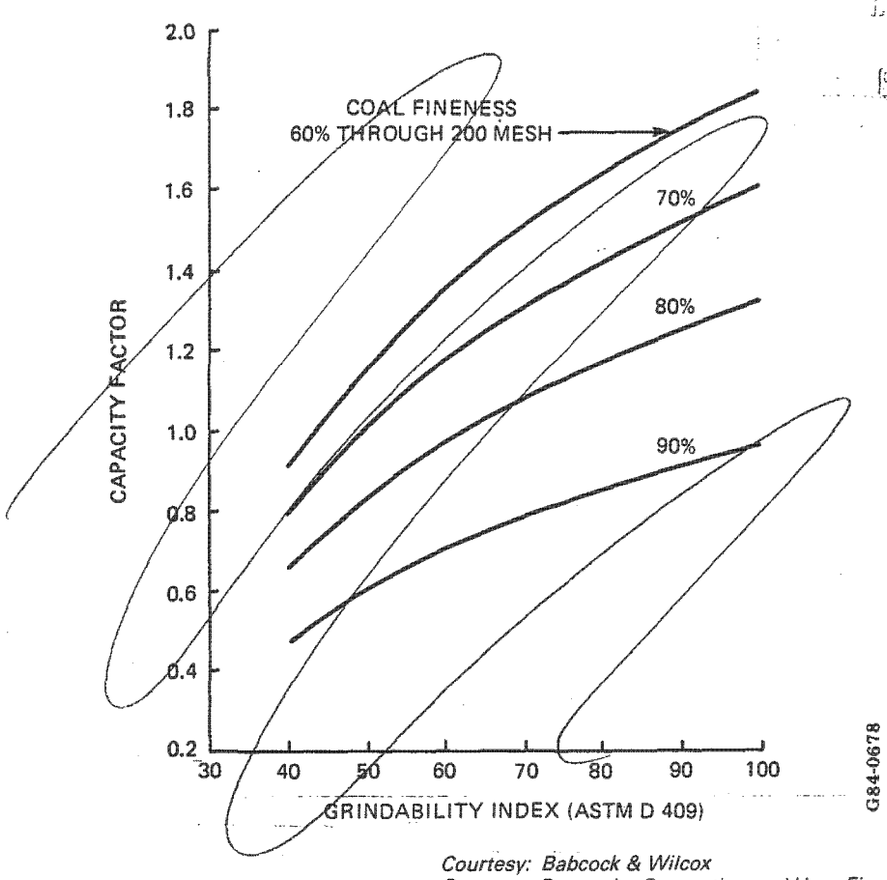

Courtesy: *Babcock & Wilcox*
Source: Steam: Its Generation and Use, *Figure 10, page 9-8.*

~~Figure 5-49. Pulverizer Capacity versus Coal Grindability~~

- Gas side efficiency
- Air leakage
- Operating characteristics such as X-Ratio, gas and air pressure losses, and gas and air temperatures
- Performance standards and to check deviations from these standards

The code applies to regenerative (Ljungstrom) and tubular air heaters. It excludes supplementary steam, condensate, or glycol air preheaters.

Section 2 provides definitions of all terms used in the code and includes symbols, descriptions, and units. Of special importance are the following definitions:

IP14_001354

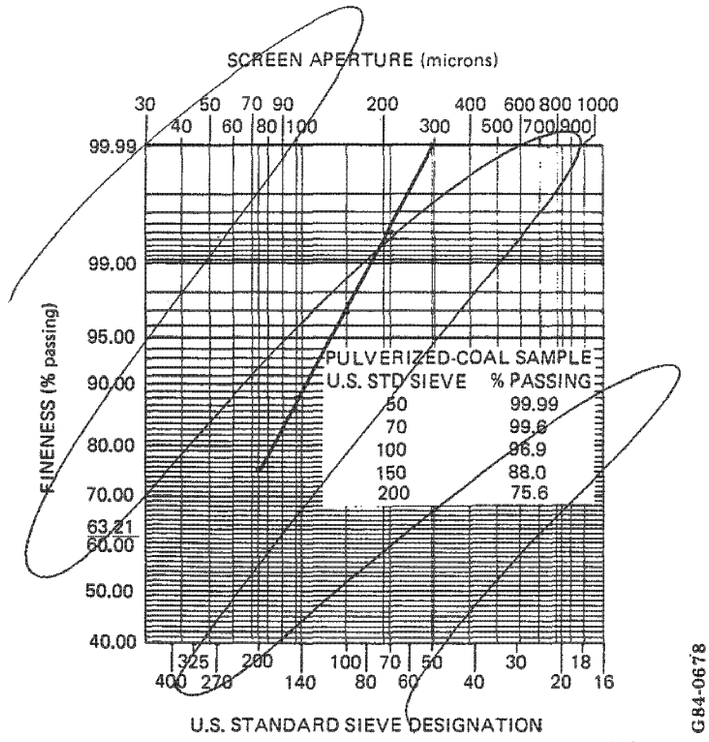

Courtesy: *Babcock & Wilcox*
Source: Steam: Its Generation and Use, *Figure 12, page 9-9.*

Figure 5-51. Rosin and Rammler Chart for Pulverized Coal Sampling Analysis

- Air leakage - weight of air leaking from air side to gas side. This leakage is assumed to occur entirely between air inlet and gas outlet.
- Exit gas temperature (no leakage) - corrected temperature, if no leakage were present.
- Temperature head - temperature of gas entering air heater minus temperature of air entering air heater.
- Gas side efficiency - ratio of gas temperature drop, corrected for air leakage, to temperature head.
- X-Ratio - ratio of the heat capacities of the air to the gas passing through the heater.

Figure 5-52 shows the various arrangements for air heaters that are covered by this code.

Section 3, "Guiding Principles," establishes the operational and test conditions on which agreement must be reached before testing. It also speci-

IP14_001355

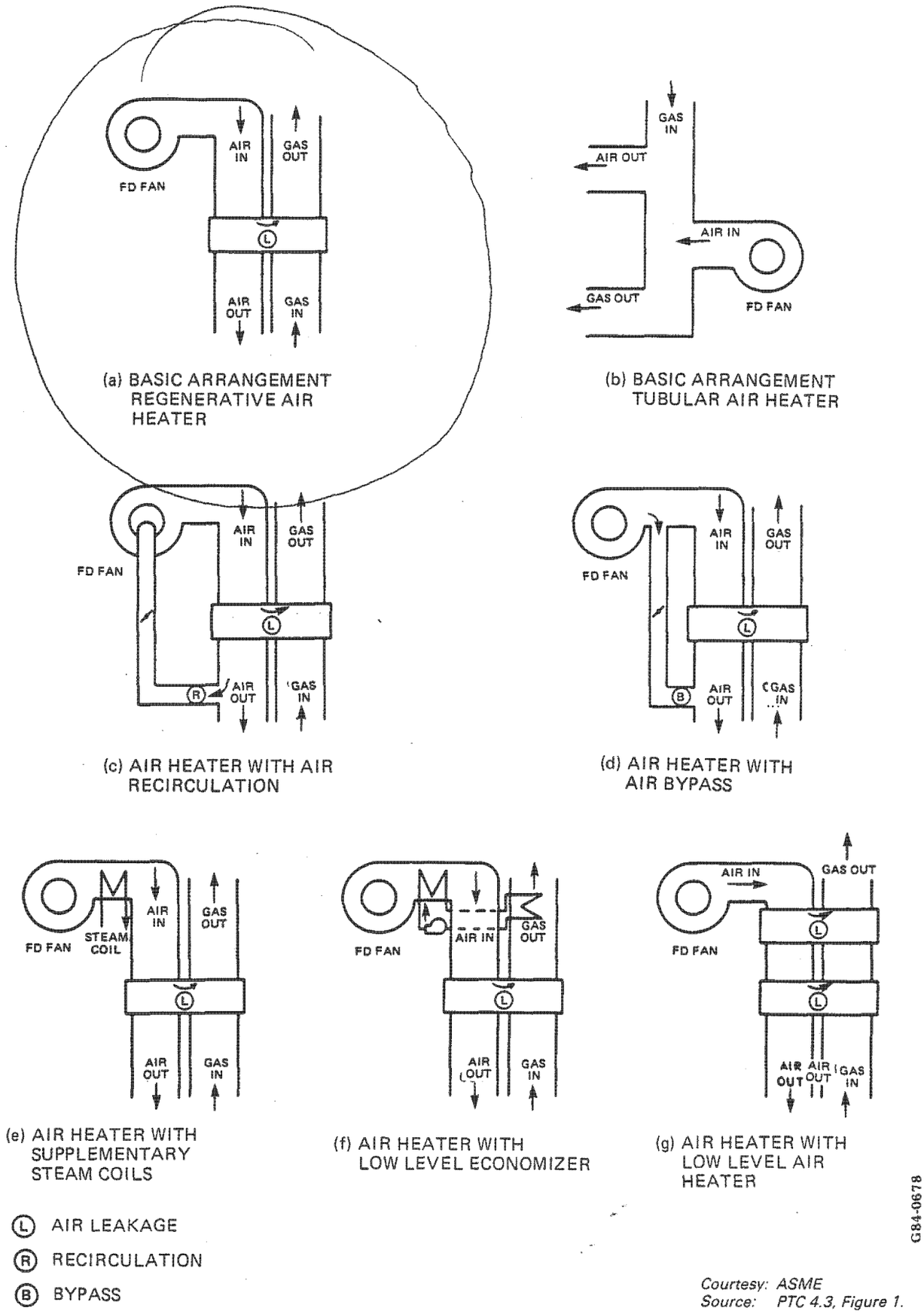

Courtesy: ASME
Source: PTC 4.3, Figure 1.

Figure 5-52. Air Heater Arrangements

IP14_001356

fies what conditions must be in effect before acceptance (warranty) testing. It specifies the need for a preliminary test run and sets the duration of the test (at least 2 hours) and the frequency of readings (at least every 15 minutes).

Section 4 defines the data required to be accumulated from testing, as well as the instruments and apparatus to be used in the test. Basically, all air and gas temperatures, pressures, and flow quantities are specified as being needed. In addition, a flue gas analysis is required of the gas entering and leaving the air heater, plus the ultimate analysis of the fuel being burned. The types of instrumentation to be used are specified.

Section 5 defines how the various data must be taken. It specifies the number of sample points for obtaining representative temperatures and gas analysis for rectangular and round ducts.

Section 6, "Performance Factors," describes the analysis of overall performance of the air heater, describes operating conditions that have influence on the performance of the air heater, and defines and briefly describes air heater performance factors that are considered. These factors include the following:

- X-Ratio
- Air heater leakage
- Exit gas temperature
- Pressure loss, both on the gas and air sides of the heater

Note that the gas side efficiency, which is given as one of the objects of the test in Section 1 of the code, is not mentioned here. This is apparently an oversight.

Section 7 of the code is the calculation section. It describes in detail the calculation of the test results, including all the performance factors described above, and also corrections to test results. These corrections are for correcting air heater performance for deviation of several design parameters not related to the condition of the air heater, including the following:

IP14_001357

- Gas temperature entering the heater
- Air temperature entering the heater
- Gas flow through the heater
- X-Ratio

5.3.2 Steam Generator Efficiency Testing Using the Heat Loss Method

Most routine testing of steam generators is done by the heat loss method. As explained earlier, there are a number of heat losses that the code specifies to be considered. This section discusses these heat losses as well as the various heat credits and corrections to test results that are described in the code. Careful adherence to every provision of the code will result in the best accuracy achievable. The effort and expense required to follow the code to the letter are often not practical for many situations where it is desirable to perform routine testing. A sample method is presented for calculating test results; it is more complete than the short form method but still neglects those factors that have little effect on the test results and are difficult to apply. Such a method of testing should produce better accuracy than short form testing and may satisfy the accuracy requirements of many programs.

5.3.2.1 Heat Losses

PTC 4.1 defines a number of losses and provides forms for abbreviated tests to aid in the calculation of test results. On those forms (see Figures 5-53 and 5-54), five losses and a sixth item called "unmeasured losses" are listed. Unmeasured losses can be either measured or estimated; however, it is common in routine steam generator testing to ignore some and lump the rest into the sixth item. The first five losses are described below.

- <u>Heat Losses due to Dry Gas (Item 65), Moisture in Fuel (Item 66), and Water from Combustion of Hydrogen (Item 67)</u> - These losses are the most fundamental. They are determined from the ultimate analysis of the "as fired" fuel, the flue gas analysis, and the temperature of the entering air and exiting flue gas. Those parameters are determined from test data, and the losses calculated as specified by

IP14_001358

ID fans are usually quite similar in appearance to FD fans. They may utilize either adjustable dampers (just ahead of the fan) or speed control to control the amount of flue gas through the fan.

ID fans are normally larger than FD fans for any given system. These fans must be sufficiently sized to handle the required flue gas flow at maximum boiler firing rate, plus any leakage of air past the seals of the rotary air preheaters. This leakage is always from the air to the gas side of the preheater and acts to increase the total flow through the fan.

As with FD fans, ID fans utilize adjustable dampers or vanes to counteract the fact that, as fan flow increases, the fan discharge pressure decreases; whereas just the opposite effect - an increase in pressure as flow increases - is required. ID fans are usually powered by one-speed motors, although turbine drives are occasionally used.

5.2.2.3 Air Heaters

The air heater heats the air before admitting it to the furnace by using the hot gases leaving the steam generator. Combustion and efficiency improve with the use of an air preheating system. See Figure 5-28. The efficiency of the boiler will increase approximately 1% for every 40°F decrease in exit gas temperature. An air heating system supplying air at temperatures of 300°F or more achieves a 5% to 10% fuel savings over a unit operating without heated air.

Heating is usually achieved in two steps. First, the outside air travels through a steam or condensate coil preheater. Some preheaters use glycol, which is heated by steam or condensate and prevents freezing of the liquid inside the coil. Air preheating helps keep the cold end temperature of the air heater above the flue gas dew point. This is important, especially when high sulfur fuels are used, because if the temperature of the air heater falls below the dewpoint of the flue gas, there will be condensation of moisture on the air heater surface. This moisture will combine with sulfur dioxide and trioxide in the flue gas to form sulfuric acid, which can quickly and severely damage the air heater. The air next goes to the air heater. Some steam gen-

IP14_001359

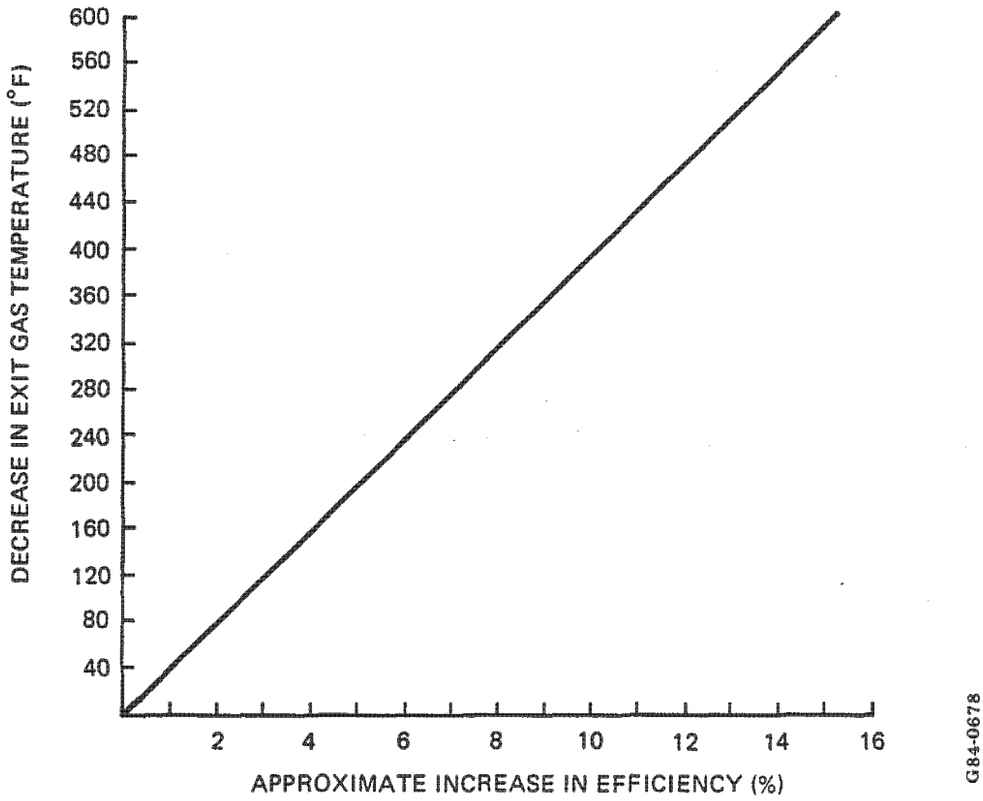

Figure 5-28. Increase in Boiler Efficiency versus Decrease in Exit Gas Temperature

erators have no coil preheaters. For such units, fans often take their suction from inside the plant (where the air is already warmed) to help prevent chilling the air heater.

Air heaters are classified as recuperative or regenerative. The recuperative air heaters are tubular. Tubular recuperative air heaters are basically straight tube and shell heat exchangers. The hot exit gas flows through the tubes, and the secondary or combustion air flows over the tubes. It is easier to clean the inside than to clean the outside of the tubes, so the flue gas travels inside the heat exchanger tubes. In some cases baffles are used to direct the air flow across the tubes. Bypass dampers can be used for temperature control. Figure 5-29 illustrates a typical tubular air heater. Because of size problems, recuperative tubular air preheaters are not often used on modern power plant steam generators.

IP14_001360

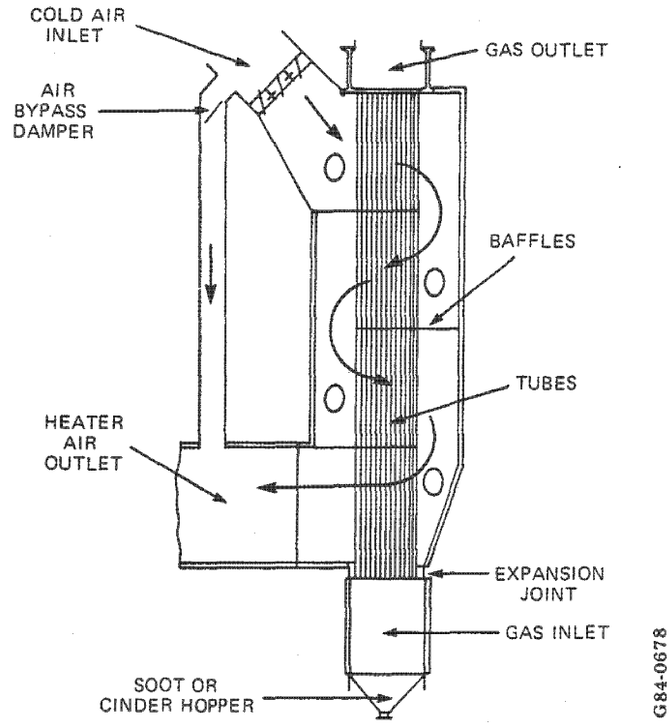

Courtesy: Babcock & Wilcox
Source: Steam: Its Generation and Use, *Figure 5, page 13-5.*

Figure 5-29. Tubular Air Heater

The most frequently used air heater in power plants today is the regenerative, rotating-type heater. In this design, flue gas heats corrugated metal plates. The corrugated plates are rotated into the path of incoming air, and the air is heated by passing over them. The whole assembly is rotated at a speed of 3 to 5 rpm. These corrugated plates are layered and segmented to form a rotor.

The housing surrounding the rotor is provided with duct connections at both ends and is sealed by radial and circumferential sealing members. This forms an air passage through one-half of the air preheater and a gas passage through the other. The seals limit the leakage of air into the gas passage and the leakage of air out of the air passage. Figure 5-30 illustrates a regenerative air preheater of the type manufactured by Combustion Engineering and is known as the Ljungstrom type. Another variation of the regenerative

IP14_001361

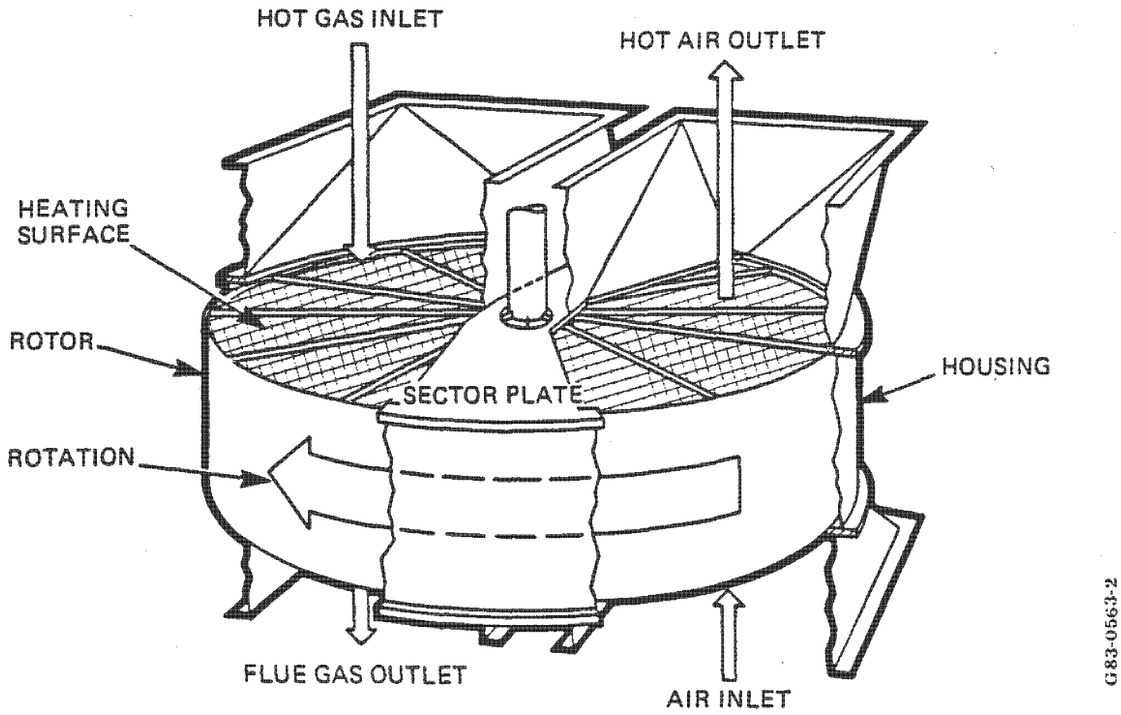

Figure 5-30. Regenerative Air Preheater

heater that uses a different arrangement of duct work is shown in Figure 5-31. This type of heater is manufactured by Babcock and Wilcox.

Each air preheater usually has tight shutoff dampers on the combustion air outlet (hot air) duct and the flue gas inlet (hot gas) duct to allow maintenance and repair of the air preheater during boiler operation. Seal air supplied from the FD fan discharge is often used to seal the air preheater dampers when closed; this minimizes leakage. A lighted observation port is typically installed in the air inlet duct for inspecting the "cold end" elements of the air preheater during operation.

To control the accumulation of soot and ash in the air preheater elements, the air preheaters are installed with a cleaning system. Fly ash accumulations on the heating elements could result in plugging of the air preheater. The air preheater cleaning system includes air or steam soot blowers and a water wash system.

The soot blowers are usually located in the gas outlet duct and are controlled by the main soot blower control panel in the control room. They may

IP14_001362

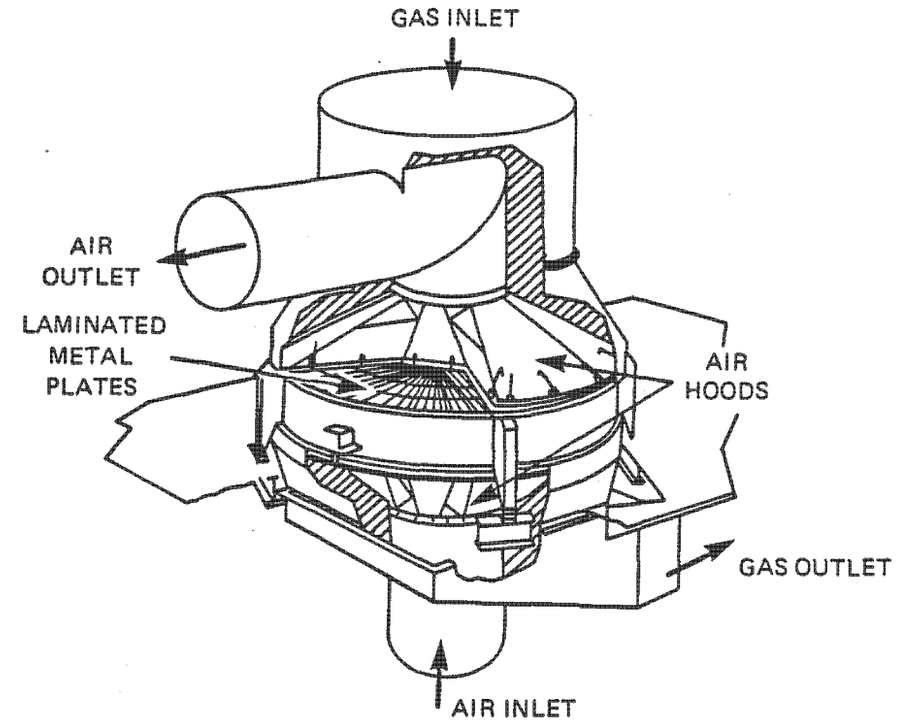

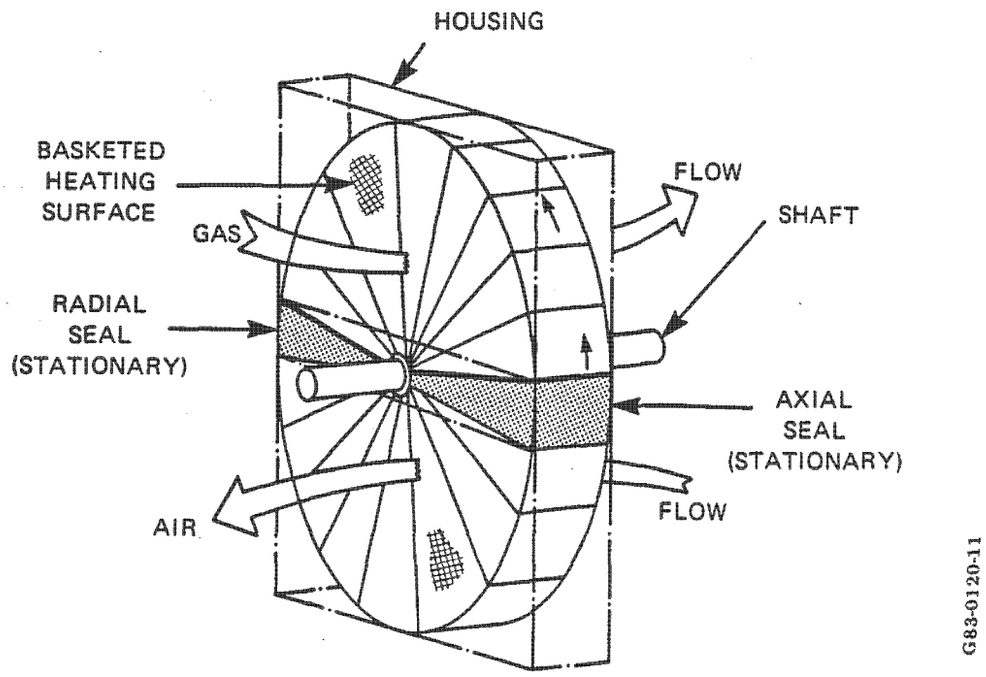

Courtesy: Babcock & Wilcox
Source: Steam: Its Generation and Use, *Figure 8, page 13-7.*

Figure 5-31. Regenerative Air Preheater

IP14_001363

also be controlled locally. Soot blowing is performed routinely during operation of the boiler. During oil firing on pulverized coal units, the air heaters are soot blown continuously.

On air preheaters with washwater systems, multinozzle water washing nozzles are installed in the gas inlet and gas outlet ducts. The washwater is generally supplied from an air heater washwater treatment system wash pump. Washing of the air preheater is normally performed when the unit is shut down. On some units, washing may be performed during low load boiler operation. The air preheater is turned by the auxiliary drive motor during washing.

Because of soot and ash accumulation, fires in air preheaters can easily start and are a serious problem. Therefore, many air preheaters are installed with deluge water systems for fire protection. They may be automatically or manually controlled. The washwater system may serve as the water deluge system.

5.2.2.4 Pulverizers

Pulverizers or mills are used to grind or pulverize the coal. Grinding mills use either one, two, or all three of the basic principles of particle size reduction--impact, attrition, and crushing. These are low, medium, or high speed machines. The four most commonly used pulverizers are the ball, the impact attrition, the ring roll, and the ball race type.

No pulverizer can economically pulverize a substance containing a large amount of surface moisture. Pulverizers take advantage of the greatly increased area of the coal particles and turbulence in the mill to remove most of the surface moisture by using hot primary air for drying. Since the sensible heat in the primary air is quickly absorbed by the latent heat of vaporization of the moisture, the temperature of the air-coal mixture is substantially lower than that of the entering air. The pulverizer's capacity to dry depends on the amount of heat that can be carried by the primary air at safe temperature, plus the heat generated during the grinding process.

IP14_001364

ASME PTC 4.3 – 1968

ANSI PTC 4.3 – 1974

REAFFIRMED 1979

Air Heaters

Supplement to Performance Test Code for Steam Generating Units, PTC 4.1

PERFORMANCE TEST CODES

THE AMERICAN SOCIETY OF MECHANICAL ENGINEERS
United Engineering Center
345 East 47th Street New York, N.Y. 10017

IP14_001365

Air Heaters

Supplement to Performance Test Code
for Steam Generating Units, PTC 4.1

PERFORMANCE
TEST
CODES

Library of Congress Catalog No. 68-21272

No part of this document may be reproduced in any form,
in an electronic retrieval system or otherwise,
without the prior written permission of the publisher.

Copyright, 1968, by
The American Society of Mechanical Engineers
Printed in the United States of America

IP14_001367

FOREWORD

Performance Test Code Committee No. 4 on Stationary Steam-Generating Units was reorganized in May, 1958 to rewrite and bring up to date the 1946 edition of the Test Code for Stationary Steam-Generating Units.

During the formulation of the new Test Code, PTC 4.1-1964, the technical committee brought to the attention of the Performance Test Codes Committee that for the Air Heater, an auxiliary heat absorption equipment common to all large steam generating units, there existed no power test code. PTC Committee No. 4 recommended the development of such a Test Code as part of its assignment.

The Performance Test Codes Committee instructed PTC Committee No. 4 to prepare such a Test Code as a Supplement to be known as PTC 4.3 on Air Heaters. This Test Code was developed and its format follows closely that of PTC 4.1, the Test Code for Steam Generating Units.

This Test Code was approved by the Performance Test Codes Committee on June 9, 1966. Final publication was delayed, however, until a number of suggestions made by the standing Committee were considered and satisfactorily resolved. It was approved and adopted by the Council as a standard practice of the Society by action of the Policy Board, Codes and Standards on November 8, 1967.

January, 1968

IP14_001368

PERSONNEL OF PERFORMANCE TEST CODE COMMITTEE

NO. 4 ON STATIONARY STEAM-GENERATING UNITS

John M. Driscoll, *Chairman*
John V. Cleary, Jr., *Secretary*

James U. Baley, General Superintendent, Electric Operations, Baltimore Gas and Electric Company, Gas and Electric Building, Baltimore, Maryland, 21203

Charles D. Birget, formerly Chief Mechanical Engineer, Commonwealth Associates, Inc., 209 E. Washington Avenue, Jackson, Michigan, 49201

John A. Bostic, General Supervising Engineer, Civil and Mechanical Engineering Department, The Cleveland Electric Illuminating Company, Box 5000, Cleveland, Ohio, 44101

Hugh J. Byrne, Steam-Power Engineer, Central Engineering Office, Crown Zellerbach Corporation, 6363 Airport Way, Seattle, Washington, 98108

John V. Cleary, Jr., Chief Cost Engineer, Cost Control Engineering Bureau, Consolidated Edison Company of New York, Inc., 4 Irving Place, New York, New York, 10003

Leonard Cohen, Head, Operation Management Department, Naval Ship Engineering Center, Philadelphia Division, U.S. Naval Base, Philadelphia, Pennsylvania, 19112

John M. Driscoll, Chief Mechanical Engineer, Consolidated Edison Company of New York, Inc., 4 Irving Place, New York, New York, 10003

John H. Fernandes, Senior Project Engineer, Product Diversification, Combustion Engineering, Inc., Prospect Hill Road, Windsor, Connecticut, 06095

William Z. Harper, Assistant Superintendent, Utilities Division, Kodak Park Works, Eastman Kodak Company, Rochester, New York, 14604

Edward C. Kistner, Engineer in Charge of Power Plant Section, Mechanical Engineering Division, Philadelphia Electric Company, 9th and Sansom Streets, Philadelphia, Pennsylvania, 19105

Frank C. Lisevick, Mechanical Engineer, Stone & Webster, Inc., 225 Franklin St., Boston, Mass. 02107

Robert A. Lorenzini, Senior Vice-President, Foster Wheeler Corporation, 110 South Orange Avenue, Livingston, New Jersey, 07039

John F. McLaughlin, Jr., Manager, Production Engineering, Union Electric Company, 315 North 12th Boulevard, St. Louis, Missouri, 63101

Silas L. Morse, Assistant Manager Field Engineering, The Babcock & Wilcox Company, 20 South Van Buren Avenue, Barberton, Ohio, 44203

Richard H. Pechstein, Assistant Chief Mechanical Engineer, American Electric Power Service Corporation, Two Broadway, New York, New York, 10008

Herbert C. Schweikart, Vice President and Chief Engineer, Gilbert Associates, Inc., 525 Lancaster Avenue, Reading, Pennsylvania, 19602

Lawson E. Stewart, Marketing Representative, International Business Machines Corporation, 2330 St. Paul Street, Baltimore, Maryland, 21218

Joseph A. Waddell, Assistant Chief Service Engineer, Riley Stoker Corporation, Worcester, Massachusetts, 01606

IP14_001369

Personnel of Performance Test Codes Committee

F. H. Light, *Chairman*
J. W. Murdock, *Vice-Chairman*

J. H. Anderson
Theodore Baumeister
H. S. Bean
K. C. Cotton
R. C. Dannettel
J. M. Driscoll
M. D. Engle
V. F. Estcourt
J. H. Fernandes
F. K. Fischer
L. J. Hooper
T. J. Judge
R. C. King, Jr.
E. L. Knoedler
R. T. Mathews
J. F. McLaughlin, Jr.
W. G. McLean
W. T. Moore
W. C. Osborne
W. A. Pollock
J. H. Potter
H. C. Schweikart
J. F. Sebald

IP14_001370

ASME PERFORMANCE TEST CODES

Test Code for AIR HEATERS

CONTENTS

Section		Pars.
0	INTRODUCTION	0.1-0.3
1	OBJECT AND SCOPE –	1.1-1.4
	Object	1.1
	Scope	1.2
2	DEFINITION OF TERMS, SYMBOLS AND THEIR DESCRIPTIONS –	2.1-2.2
	Air Leakage	2.1.1
	Exit Gas Temperature – With Leakage	2.1.2
	Exit Gas Temperature – No Leakage	2.1.3
	Air Temperature Rise	2.1.4
	Gas Temperature Drop	2.1.5
	Temperature Head	2.1.6
	Gas Side Efficiency	2.1.7
	X-Ratio	2.1.8
	Symbols	2.2
	Air Heater Arrangements	Fig. 1
3	GUIDING PRINCIPLES –	3.01-3.11
	Items on Which Agreement Shall be Reached Prior to Test	3.01
	Selection of Personnel	3.02
	Tolerances and Limits of Error	3.03
	Acceptance Test	3.04
	Preparation for Test	3.05
	Preliminary Run	3.06
	Test Conditions	3.07
	Duration	3.08
	Frequency and Consistency of Readings	3.09
	Rejection of Runs	3.10
	Records and Test Reports	3.11
4	DATA REQUIRED, INSTRUMENTS AND APPARATUS –	4.1-4.2.6
	Data Required	4.1
	Instruments and Apparatus	4.2
5	MEASUREMENT –	5.1-5.5
	Location of Test Sampling Points for Air and Gas Temperature and Gas Analysis	5.1
	Flue Gas and Air Temperatures	5.2
	Gas Analysis	5.3
	Flue Gas and Air Quantity	5.4
	Fuel Quantity	5.5
	Power	5.6
6	PERFORMANCE FACTORS –	6.1-6.6
	Analysis of Over-all Performance	6.1
	Operating Conditions	6.2
	Thermal Performance	6.3
	Air Heater Leakage	6.4
	Exit Gas Temperature	6.5
	Pressure Loss	6.6
7	COMPUTATIONS –	7.01-7.16
	Gas Side Efficiency	7.01
	Temperature of Exit Gas Corrected for No Leakage	7.02
	Per Cent Air Leakage	7.03
	Dry Gas	7.04
	Moisture Content of Flue Gas	7.05
	Dry Air	7.06
	Test X-Ratio	7.07
	Corrected Gas Temperature Leaving Air Heater for Deviation from Design Entering Air Temperature	7.08
	Corrected Gas Temperature Leaving Air Heater for Deviation from Design Entering Gas Temperature	7.09
	Corrected Gas Temperature Leaving Air Heater for Deviation from Design X-Ratio	7.10
	Corrected Gas Temperature Leaving Air Heater for Deviation from Design Entering Wet Flue Gas Flow	7.11
	Totally Corrected Gas Temperature Leaving Air Heater	7.12
	Air Leakage Corrected for Deviation from Design Pressure Differential and from Design Air Temperature	7.13
	Gas Side Pressure Loss of the Air Heater Corrected for Deviation from Design Flow and Temperatures	7.14
	Air Side Pressure Loss of the Air Heater Corrected for Deviation from Design Flow and Temperatures	7.15
	Accuracy of Correction to Pressure Loss for Turbulent and Laminar Flow	7.16

IP14_001371

SECTION 0, INTRODUCTION

0.1 This Code for air heater testing shall govern the preparation for tests, the taking of data, and the calculation of test results.

0.2 The air heater is defined as a heat exchanger used to transfer heat directly from combustion gases to combustion air without the use of an intermediate heat transfer fluid.

0.3 General instructions for the conduct of tests are given in the Code on General Instructions (PTC 1) which should be studied carefully. The Code on Definitions and Values (PTC 2) and the Test Code for Steam Generating Units (PTC 4.1) should be followed where applicable. The Supplements on Instruments and Apparatus (PTC 19) shall be used as a guide to the selection and use of test equipment not specified in this Code.

IP14_001372

SECTION 1, OBJECT AND SCOPE

1.1 Object. The purpose of this Code is to establish procedures for conducting performance tests to determine:

1.1.1 Gas side efficiency
1.1.2 Air leakage
1.1.3 Other related operating characteristics such as:
1.1.3.1 X-Ratio
1.1.3.2 Gas and air pressure loss
1.1.3.3 Gas and air temperature
1.1.4 A determination of any or all of the performance items specified above may be necessary for:
1.1.4.1 Checking the actual performance against the manufacturer's guarantee
1.1.4.2 Comparing these items with a standard of operation
1.1.4.3 Comparing performance when firing different fuels
1.1.4.4 Determining the effect of changes to equipment
1.1.4.5 Determining corrections to air heater exit gas temperature caused by variations in inlet air temperature in an efficiency test of a steam generator.
1.1.4.6 Obtaining any other pertinent information required.

1.2 Scope. This Code applies specifically to the regenerative and tubular type air heaters. It also applies to any combustion gas-to-air heat exchangers used in conjunction with a steam generator.

1.3 For the purpose of this Code, the air heater is defined as a heat exchanger used to transfer heat from gases of combustion to combustion air without the use of an intermediate heat transfer fluid. Specifically excluded are the supplementary steam coil air heater, direct-fired air heater and low temperature economizer. However, a separate low temperature air heater would be considered part of the air heater installation.

1.4 If the installation consists of more than one air heater in parallel, all air heaters are included as a unit. However, if the air heaters are in series and have other apparatus in between, then each air heater, or each group of parallel air heaters, shall be tested individually.

IP14_001373

SECTION 2, DEFINITION OF TERMS, SYMBOLS AND THEIR DESCRIPTIONS

2.1 The Code on Definitions and Values (PTC 2) defines the meaning and values of basic technical terms and numerical constants, which are used throughout this Code. Definitions of terms specific to this Code are as follows:

2.1.1 Air Leakage. Weight of air passing from the air side to the gas side. It is assumed in calculations to leak directly from the air inlet to the gas outlet.

2.1.2 Exit Gas Temperature – With Leakage. The measured exit gas temperature.

2.1.3 Exit Gas Temperature – No Leakage. The temperature at which the gas would have left the air heater if there were no leakage. This temperature must be calculated by heat balance, if leakage is present. See Computations, Section 7.

2.1.4 Air Temperature Rise. Increase in the temperature of the air in passing through the air heater.

2.1.5 Gas Temperature Drop. Decrease in the temperature of the gas in passing through the air heater, based on exit gas temperature – no leakage.

2.1.6 Temperature Head. Temperature of gas entering air heater minus temperature of air entering air heater.

2.1.7 Gas Side Efficiency. Ratio of gas temperature drop, corrected for no air leakage, to temperature head.

2.1.8 X-Ratio. This is the ratio of the heat capacity of the air passing through the air heater to the heat capacity of the gas passing through the air heater. See Pars. 6.3 and 7.07.

2.2 Symbols. A list of symbols used throughout this Code follows. With numerous quantities and points of reference, it has been found impractical to restrict the Code to the use of single subscripts. Where both letter and numerical subscripts are used, a numerical one is given second for example $W_{G\,14}$. This signifies the pounds of gas per pound of "as fired" fuel at location 14, Fig. 1.

Symbols and their Descriptions

Symbol	Description	Unit
A	Air	. . . . .
A'	Dry air	. . . . .
A.F.	As fired	. . . . .
$A_{(L)}$	Air leakage	per cent
(B)	Bypass	. . . . .
C	Pounds of carbon per pound of "as fired" fuel – (laboratory analysis)	lb per lb of A.F. fuel
C_b	Pounds of carbon burned per pound of "as fired" fuel	lb per lb of A.F. fuel
CO	Per cent carbon monoxide per volume of dry flue gas. Determined by flue gas analysis	per cent
CO_2	Per cent carbon dioxide per volume of dry flue gas. Determined by flue gas analysis	per cent
$c_{pA'}$	Mean specific heat of air at constant pressure	Btu per lb F

IP14_001374

Symbols and their Descriptions (Cont'd)

Symbol	Description	Unit
c_{pG}	Mean specific heat of the flue gas at constant pressure	Btu per lb F
D	Standard or guarantee	. . . . .
e	Elapsed time	hr
f	Fuel	. . . . .
G	Flue gas	. . . . .
Ⓖ	Flue gas flow	lb per hr
G'	Dry flue gas	. . . . .
H	Pounds of hydrogen exclusive of that in moisture per pound of "as fired" fuel – (laboratory analysis)	lb per lb of A.F. fuel
H_2	Hydrogen content of the dry flue gas – (laboratory analysis)	cu ft per cu ft dry gas
$H_{d'p'}$	High-heat value of the dry refuse (laboratory analysis)	Btu per lb of refuse
k	Constant	. . . . .
Ⓛ	Leakage	. . . . .
m	Moisture content	per cent by weight
m_f	Moisture in fuel	lb of water per lb of A.F. fuel
N	Pounds of nitrogen per pound of "as fired" fuel – (laboratory analysis)	lb per lb of A.F. fuel
N_2	Per cent nitrogen per volume of dry flue gas. Determined by subtracting the sum of the measured quantities CO_2, O_2 and CO from 100	per cent
ⓃⓁ	No leakage	. . . . .
O	Pounds of oxygen per pound "as fired" fuel – (laboratory analysis)	lb per lb of A.F. fuel
O_2	Per cent oxygen per volume of dry flue gas. Determined by flue gas analysis	per cent
P	Pressure	in. of water (gage)
$\boxed{p}$	Ashpit	. . . . .
p'	Dry pit refuse	lb
Ⓡ	Recirculation	. . . . .
S	Pounds of sulfur per pound of "as fired" fuel – (laboratory analysis)	lb per lb of A.F. fuel
T	Temperature Rankine	R
t	Temperature Fahrenheit	F

IP14_001375

Symbols and their Descriptions (Cont'd)

Symbol	Description	Unit
t_A	Temperature of air	F
t_G	Temperature of the flue gas	F
W	Weight	lb
W_A	Pounds of air supplied per pound of "as fired" fuel	lb per lb of A.F. fuel
$W_{A'}$	Pounds of dry air per pound of "as fired" fuel	lb per lb of A.F. fuel
$W_{A(L)}$	Pounds of air leakage per pound of "as fired" fuel	lb per lb of A.F. fuel
$W_{d'p'}$	Pounds of dry refuse per pound of "as fired" fuel	lb per lb of A.F. fuel
W_{fe}	Pounds of fuel fired (rate), either solid or liquid	lb per hr
$W_{G'}$	Pounds of dry gas leaving unit per pound of "as fired" fuel	lb per lb of A.F. fuel
$W_{mA'}$	Pounds of moisture per pound of dry air	lb per lb of dry air
X_R	X-Ratio	. . . . .
z	Atomizing steam	. . . . .
δ	Corrected	. . . . .
η	Efficiency	per cent
η_G	Gas side efficiency	per cent
Δ	Change	. . . . .
′(prime)	Dry	. . . . .

IP14_001376

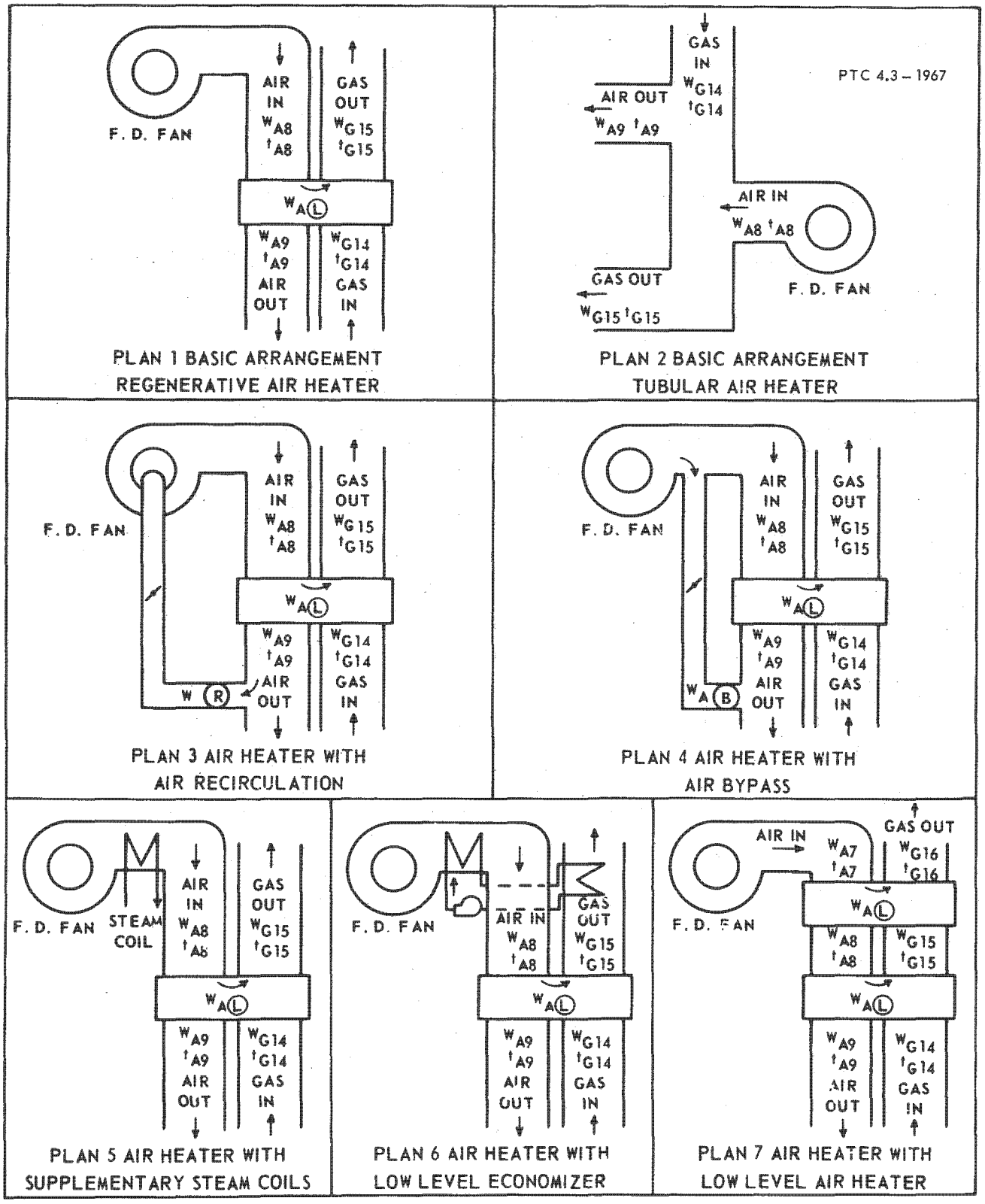

FIG. 1 AIR HEATER ARRANGEMENTS

IP14_001377

SECTION 3, GUIDING PRINCIPLES

3.01 Items on Which Agreement Shall be Reached Prior to Test:

3.01.01 Object of Test.

3.01.02 Permissible deviation in gas side efficiency between duplicate runs.

3.01.03 Air and gas flow quantities.

3.01.04 Allocation of responsibility for all performance and operating conditions which affect the test.

3.01.05 Selection of test personnel to conduct the test.

3.01.06 Establishment of acceptable operational conditions, number of load points, duration of runs, basis of rejection of runs and procedures to be followed during the test.

3.01.07 Cleanliness of unit initially and how this is to be maintained during the test. See Par. 3.04.2.

3.01.08 Condition of apparatus affecting air leakage.

3.01.09 The fuel to be fired, the method of obtaining fuel samples and the laboratory to make the analysis.

3.01.10 Observations and readings to be taken to comply with the object or objectives of the test.

3.01.11 Instruments to be used, calibration of instruments, methods of measurement and equipment to be used in testing the unit. The Performance Test Code Supplements on Instruments and Apparatus should be used, when applicable.

3.01.12 Tolerances and limits of error in measurement and sampling.

3.01.13 Distribution of fuel refuse quantities between various collection points and methods of sampling.

3.01.14 Corrections to be made for deviations from specified operating conditions.

3.02 Selection of Personnel. To insure obtaining reliable results, all personnel participating in the test shall be fully qualified to perform their particular function.

3.03 Tolerances and Limits of Error. This Code does not include consideration of *over-all tolerances or margins on performance guarantees.* The test results shall be reported as computed from test observations, with proper corrections for calibrations.

Allowances for *errors of measurement and sampling* are permissible provided they are agreed upon in advance by the parties to the test and clearly stated in the test report.

3.04 Acceptance Test. An acceptance test shall be undertaken only when the parties to the test certify that the unit is operating to their satisfaction and is, therefore, ready for test. Especially in the case of fuel burning equipment, adjustments and changes are sometimes necessary to obtain optimum performance. The acceptance test should be started as soon as the unit is in satisfactory condition for test, provided the load and other governing factors are suitable.

3.04.1 Parties to the test may designate a person to direct the test and to serve as arbiter in the event of disputes as to the accuracy of observations, conditions or methods of operation.

3.04.2 All heat transfer surfaces, both internal and external, should be commercially clean (normal operating cleanliness) before starting the test. During the test, only the amount of cleaning shall be permitted as is necessary to maintain normal operating cleanliness.

3.04.3 After a preliminary run has been made, it may be declared an acceptance run if agreed to and provided that all the requirements of a regular run have been met.

3.04.4 At least two runs shall be made approximating the load required for acceptance. If the results exceed the previously agreed upon deviation in efficiency between runs, a third run shall be required. The test efficiency at the required load will be the average of the two runs which fall within the permissible deviation in efficiency.

3.05 Preparation for Test. Install such measuring apparatus as may be required to attain the objective of the test. It is recommended that the air heater be inspected prior to the test to note the condition of all parts which can affect the performance. In particular, the tightness and cleanliness of air heater tubes and condition and cleanliness of elements and condition of the seals of regenerative air heater should be examined and the air heater placed in proper operating condition. The bypass or recirculating dampers should be checked for tight shutoff. A preliminary check of air leakage, calculated from Orsat analysis at the gas inlet and outlet should be conducted prior to the actual test.

IP14_001378

3.06 A Preliminary Run shall be made for the purpose of:

3.06.1 Checking the operation of all instruments.

3.06.2 Training the observers and other test personnel.

3.06.3 Making minor adjustments, the needs for which were not evident during the preparation for the test, and establishing proper combustion conditions for the particular fuel and rate of burning to be employed.

3.07 Test Conditions. It is important that air and gas flow through the air heater remain essentially constant throughout the test. The steam generator output shall be set as close as possible to that required of the test run and shall be held stable for at least 30 minutes prior to the start of the test.

3.08 Duration. Test runs shall be of at least two-hour duration but sufficiently long to permit the taking of at least two complete sets of consistent readings.

3.09 Frequency and Consistency of Readings. Except for quantity measurements (see Pars. 5.4 and 5.5), the readings shall be taken at 15 minute intervals. If, however, there are fluctuations, the readings shall be taken at such frequency as may be necessary to determine a value that represents a true average.

3.09.1 It is suggested that, in so far as is feasible, pertinent data of the run be plotted continuously, as the run progresses, on coordinate paper of suitable scale to permit a complete review of the conduct of the run, at least hourly.

3.10 Rejection of Runs. Should inconsistencies in the observed data be detected during a run or during the computations that would cause obviously untrue results, the run shall be rejected completely, or in part if the affected part is at the beginning or at the end of the run. A run that has been rejected shall be repeated, if necessary, to attain the objectives of the test.

3.11 Records and Test Reports. All observations, measurements and instrument readings necessary for the objective of the test shall be recorded as observed. Corrections and corrected values shall be entered separately in the test record.

IP14_001379

SECTION 4, DATA REQUIRED, INSTRUMENTS AND APPARATUS

4.1 Data Required. The following data are needed in order to determine the performance of the air heater:

4.1.01 Temperature of air entering air heater

4.1.02 Temperature of air leaving air heater

4.1.03 Temperature of gas entering air heater

4.1.04 Temperature of gas leaving air heater

4.1.05 Quantity of air entering air heater

4.1.06 Quantity of heated air leaving air heater

4.1.07 Quantity of gas entering air heater

4.1.08 Quantity of gas leaving air heater

4.1.09 Air side inlet and outlet static pressure

4.1.10 Air side inlet and outlet velocity pressure

4.1.11 Gas side inlet and outlet static pressure

4.1.12 Gas side inlet and outlet velocity pressure

4.1.13 Humidity of inlet air

4.1.14 Gas analysis of flue gas entering and leaving air heater

4.1.15 Quantity of fuel measured or computed by steam generator output and efficiency

4.1.16 Ultimate analysis of fuel

4.1.17 Quantity of fuel oil atomizing steam if burning oil.

4.2 Instruments and Apparatus. Directions regarding the characteristics, use and calibration of the apparatus required are given in PTC 19 Supplements on Instruments and Apparatus (I & A). The instruments and apparatus required for air heater tests are as follows:

4.2.1 Determining air and gas temperatures – Calibrated thermocouples shall be used with a calibrated potentiometer. The thermocouples shall be in accordance with I & A, Temperature Measurement (PTC 19.3) and arranged so that they can be traversed across the duct.

4.2.2 Determining air humidity adjacent to air inlet – A psychrometer shall be used.

4.2.3 Measuring air and gas pressure – U-tube or inclined manometers for determining pressure shall be filled with water or a light liquid of known specific gravity. (Refer to PTC 4.1, Pars. 8.06 and 8.07.)

4.2.4 Analyzing dry flue gas – Gas analyzer shall be used to determine percentages of carbon dioxide, oxygen and carbon monoxide.

4.2.5 Measuring fuel input, if required – Calibrated coal scales, oil meters, or gas meters shall be used.

4.2.6 Sampling of fuel – Air tight containers shall be used for individual fuel samples to avoid moisture loss.

IP14_001380

SECTION 5, MEASUREMENT

5.1 Location of Test Sampling Points for Air and Gas Temperature and Gas Analysis. Temperature and/or gas analysis sampling points in the inlet gas and inlet air ducts shall be located as close to the air heater as practical and as consistent as possible with good velocity measurement practice. Due to the probable stratification at the gas and air outlets and air infiltration of a regenerative air heater, the traverse section should be located as far from the heater as practical and be divided into equal areas for velocity measurement and simultaneous gas sampling from the center of these areas. A weighted average can then be calculated, taking into consideration the gas temperature, Par. 5.2, as well as a velocity function. See Performance Test Code for (PTC 11). The number and arrangement of the equal areas will depend on the size and layout of the gas passage. In rectangular ducts, the areas shall be approximately square and the sampling points shall be not more than three feet apart, and a total of not less than four points shall be used. Where judgment indicates a possible severe stratification, consideration should be given to a system of closer spacings. In round ducts, test points shall be located on two traverses along axes normal to each other as described in the Performance Test Code for Fans (PTC) 11). It is recognized that there may be cases in which the gas velocity is so low that velocity measurements would be impractical. In such cases an arithmetic rather than weighted average should be employed. When the importance of the test does not warrant making velocity measurements and taking individual samples from the equal areas, an aspirator and suitable apparatus for obtaining a composite sample from several sampling points may be employed. With the exception of the area sampling instruction above, all of the procedures are to be in accordance with recommendations of I & A, Part 10 on Flue and Exhaust Gas Analyses (PTC 19.10).

5.2 Flue Gas and Air Temperatures. Flue gas temperatures must be taken at the same locations as those used for flue gas sampling, Par. 5.1, to minimize the effect of probable gas temperature stratification.

5.2.1 If a preliminary survey of flue gas flow, Par. 5.1, indicates severe stratifications, it is recommended that the temperature measurements at individual locations in the duct cross section be weighted in proportion to the gas flow at the corresponding locations, and an average of the weighted temperatures be used as representing the gas temperature at that cross section.

5.2.2 Choice of temperature measuring instruments depends upon the conditions of the individual case. The selection, design, construction, calibration, installation, and operation of temperature measuring instruments shall be in accordance with I & A, Temperature Measurement (PTC 19.3).

5.2.3 For determination of the air temperature, the same general methods and the same precautions noted in Pars. 5.2.1 and 5.2.2 shall apply for the air entering and leaving the air heater.

5.3 Gas Analysis. Gas analysis is required to calculate gas flow. Analysis to be employed is dependent upon the type of fuel burned and upon the purpose of the test. Design, construction and operation of the apparatus and preparation of the reagents shall be in accordance with I & A, Flue and Exhaust Gas Analyses (PTC 19.10).

5.3.1 An analysis should be made to verify presence or absence of gaseous combustibles. If combustibles are found and cannot be eliminated by adjustment to the fuel burning equipment, the hydrogen and hydrocarbons shall be measured and the gas flow corrected following the principles covered in Section 7 of the Test Code for Steam Generating Units, (PTC 4.1).

5.3.2 For hydrogen and hydrocarbon analyses, it is necessary to obtain representative field samples of the gases for submission to an established laboratory. Refer to I & A, Flue and Exhaust Gas Analyses (PTC 19.10).

5.3.3 Proper steps shall be taken to prevent leakage to or from gas analyzing apparatus and sampling lines, to avoid contamination and devitalization of reagents, to provide fresh reagents when needed, to keep manifolds clear of reagents, to avoid errors due to physical solubility of gases in reagents and confining liquids, to avoid injury by contact with reagents, to allow for burette error and drainage time, to avoid change of sample temperature during analysis, to keep ap-

IP14_001381

paratus clean, to minimize human errors by employing careful operators who are given adequate information on common sources of error, to provide operators with adequate light and reasonable comfort, to verify results by checking against theoretical, and in all other ways, to assure that recorded data are correct and their degree of precision known. Sampling should be continuous when possible. Because all gases, especially SO_2 and CO_2, are soluble to some extent in water, the water in the levelling bottle shall be saturated with sample gas before taking any readings.

5.3.4 Detailed precautions given in I & A, Part 10 on Flue and Exhaust Gas Analyses (PTC 19.10) shall be followed.

5.4 Flue Gas and Air Quantity. Flue gas quantity shall be determined by calculation from fuel analysis and flue gas composition. Calculation procedure for gas weight per heat unit of fuel shall be as given in Par. 7.04.1. Similarly, air quantities shall be calculated as per Par. 7.06.

5.5 Fuel Quantity. The quantity of fuel may be obtained by measurement in accordance with procedures given in PTC 4.1, Section 4, or by computing from test efficiency and output of the steam generator.

5.6 Power. Power requirement of the regenerative air heaters may be disregarded for performance purposes.

IP14_001382

SECTION 6, PERFORMANCE FACTORS

6.1 Analysis of Over-all Performance. The analysis of air heater performance is confined to the following considerations:

6.1.1 Comparison of test thermal performance with design.

6.1.2 Comparison of test air leakage with design.

6.1.3 Comparison of test air and gas side pressure loss with design.

6.2 Operating Conditions. Conditions which affect the air heater performance and which should be given special consideration are:

6.2.1 Quantity of air passing through the air heater.

6.2.2 Temperature of air entering the air heater.

6.2.3 Recirculating or bypassing of air to control cold-end temperature.

6.2.4 Tempering air and setting infiltration which did not pass through the air heater.

6.2.5 Air heater leakage – condition of seals.

6.2.6 Quantity of gas passing through the air heater.

6.2.7 Temperature of gas entering the air heater.

6.2.8 Fouled or corroded elements or tubes.

6.3 Thermal Performance. A very important factor in evaluating the thermal performance of an air heater is X-Ratio. This factor is nondimensional and is obtained during test by recording gas side in and out temperatures, air side in and out temperatures and Orsat readings at gas inlet and outlet. From the latter two readings the air leakage to the gas side is obtained in pounds per pound of wet gas and permits correction of the test temperature of gas out to temperature of gas out with zero air heater leakage. The use of the X-Ratio accounts partially for differences between test and design values of air heater exit gas temperatures. The X-Ratio is also affected by tempering air flow, sealing air flows, setting infiltration and in some arrangements by gas recirculation.

6.4 Air Heater Leakage. From the Orsat readings used to obtain X-Ratio the amount of air leakage is determined and when corrected is compared with design.

6.5 Exit Gas Temperature. Test and design exit gas temperature should not be compared until corrections to the test values have been made in accordance with Section 7, Par. 7.07 through Par. 7.11.

6.6 Pressure Loss. After corrections for temperature and flow rate, test gas side and air side pressure losses are to be compared with design values.

IP14_001383

SECTION 7, COMPUTATIONS

The following computation procedures are for determining air heater performance.

7.01 η_G = per cent = Gas side efficiency.

$$\eta_G = \frac{t_{G14} - t_{G15}\,(NL)}{t_{G14} - t_{A8}} \times 100$$

Where

t_{G14} = F = Measured gas temperature entering air heater.

$t_{G15}\,(NL)$ = F = Calculated gas temperature leaving air heater corrected for no air leakage as given in Par. 7.02.

t_{A8} = F = Measured air temperature entering air heater.

7.02 $t_{G15}\,(NL)$ = F = Calculated gas temperature leaving air heater corrected for no air leakage.

$$t_{G15}\,(NL) = \frac{A_{(L)}\, c_{pA}\,(t_{G15} - t_{A8})}{100\, c_{pG}} + t_{G15}$$

Where

$A_{(L)}$ = Per cent = Air heater leakage as given in Par. 7.03

c_{pA} [1] $= \frac{\text{Btu}}{\text{lb} - \text{F}}$ = The mean specific heat between temperatures t_{A8} and t_{G15}

c_{pG} [1] $= \frac{\text{Btu}}{\text{lb} - \text{F}}$ = The mean specific heat between temperatures t_{G15} and $t_{G15}\,(NL)$

Where

t_{G15} = F = Measured gas temperature leaving air heater.

t_{A8} = F = Measured air temperature entering air heater.

7.03 $A_{(L)} = \frac{\text{lb wet air leakage}}{\text{lb wet gas entering air heater}} \times 100$ = Per cent air heater leakage, – defined as pounds of air leakage to the gas side divided by pounds gas entering the air heater.

$$A_{(L)} = \frac{W_{G15} - W_{G14}}{W_{G14}} \times 100$$

[1] For the determination of the mean specific heats use PTC 4.1, Fig. 3 for air and Fig. 7 for gas to calculate the weighted average specific heat for wet air and wet gas.

IP14_001384

$$W_{G15,14} = \frac{\text{lb wet gas leaving entering air heater}}{\text{lb A.F. fuel}}$$

$$= W_{G'15,14} + W_{mG}\ ^{(2)}$$

$$W_{G'15,14} = \frac{\text{lb dry gas}}{\text{lb A.F. fuel}} = \text{Dry gas flow leaving/entering the air heater as given in Par. 7.04}$$

$$W_{mG} = \frac{\text{lb moisture}}{\text{lb A.F. fuel}} = \text{Total moisture in flue gas entering the air heater as given in Par. 7.05}$$

7.03.1 While not a part of this Code, an interesting empirical approximation of percentage of leakage may be obtained by the use of the per cent volume of the CO_2 in the gas entering and leaving the heater. The approximation does not account for the moisture in the flue gas.

Thus:

$$\%\ \text{LEAKAGE} = \frac{\%\ CO_2 \text{ gas entering heater} - \%\ CO_2 \text{ gas leaving heater}}{\%\ CO_2 \text{ gas leaving heater}} \times 90$$

Experience has shown that the use of this factor, 90, will result in percentage leakage figures that are very close (plus or minus one percentage point) to leakage determined on a weight basis.

7.04

$$W_{G'} = \frac{\text{lb dry gas}}{\text{lb A.F. fuel}} = \text{Pounds of dry gas per pound of "as fired" fuel.}$$

7.04.1

$$W_{G'14,15} = \frac{44.01\ CO_2 + 32.00\ O_2 + 28.01\ CO + 28.02\ N_2}{12.01\ (CO_2 + CO)} \left(C_b + \frac{12.01}{32.07}\ S\right)$$

The above formula is based on molecular weights accurate to four significant figures, but it is not to be implied that the dry gas weight derived has this degree of accuracy. The four digit molecular weights are used to hold errors from calculation procedure to a minimum.

CO_2, O_2, and CO = per cent by volume of dry gas.

N_2 being determined by subtracting the total of CO_2, O_2, and CO from 100 per cent.

$$C_b = \frac{\text{lb carbon burned}}{\text{lb A.F. fuel}} = \text{Pounds of carbon burned per pound of "as fired" fuel.}$$

$$C_b = C - \left(\frac{W_{d'p'}\ H_{d'p'}}{14500}\right)$$

(2) In this Code, air leakage is assumed to bypass directly from the inlet air side to the outlet gas side. Therefore moisture in air leakage does not become a part of $W_{G'14} + W_{mG'}$ but does become a part of $W_{G'15} + W_{mG}$. The omission of this moisture in the latter term will not affect the accuracy of the leakage calculation since it is a very small part of the total moisture term. If it is desired to calculate this moisture term, the following procedure may be used:

1. Calculate the actual pounds of dry air leakage per pound of "as fired" fuel; $W_{G'15} - W_{G'14}$.
2. Multiply the result of (1) by the specific humidity (pounds moisture/pounds dry air) to get the pounds of moisture in leakage air per pound of "as fired" fuel.
3. Add the result of (2) to the W_{mG} term used to calculate W_{G15} and then recalculate A_L.

IP14_001385

Where

$$C = \frac{\text{lb carbon}}{\text{lb A.F. fuel}} = \text{Pounds of carbon in "as fired" fuel by laboratory analysis.}$$

$$W_{d'p'} = \frac{\text{lb}}{\text{lb A.F. fuel}} = \text{Pounds of dry refuse per pound of "as fired" fuel.}$$

$$W_{d'p'} = \frac{W_{d'p'e}}{W_{fe}}$$

Where

$$W_{d'p'e} = \frac{\text{lb}}{\text{hr}} = \text{Dry refuse rate}$$

Where refuse rate at various collection points, such as ashpit, dust collector, boiler hoppers, is not actually determined, it can be estimated if all parties agree.

$$W_{fe} = \frac{\text{lb}}{\text{hr}} = \text{Fuel rate}$$

If fuel rate is not measured, it shall be computed from steam generator test efficiency and output.

$$H_{d'p'} = \frac{\text{Btu}}{\text{lb dry refuse}} = \text{Laboratory determination of per cent combustible times 14500 Btu per lb}$$

or

$$H_{d'p'} = \frac{\text{Btu}}{\text{lb dry refuse}} = \text{Laboratory determination of heating value by bomb calorimeter}$$

$$14500 = \frac{\text{Btu}}{\text{lb}} = \text{Heat value of 1 lb of carbon as it occurs in refuse (see Par. 9.4 of the Test Code for Steam Generating Units, PTC 4.1)}$$

$$S = \frac{\text{lb}}{\text{lb A.F. fuel}} = \text{The "as fired" sulfur content of fuel as determined by laboratory analysis.}$$

7.05

$$W_{mG} = \frac{\text{lb}}{\text{lb A.F. fuel}} = \text{Pounds of moisture in the flue gas per pound of "as fired" fuel.}$$

$$W_{mG} = 8.936H + (W_{mA'} \times W_{A'}) + m_f + W_z + W_m \boxed{p}$$

Where

8.936 = 8.936 pounds of water produced from burning one pound of hydrogen.

$$H = \frac{\text{lb}}{\text{lb A.F. fuel}} = \text{Pounds of hydrogen from an "as fired" ultimate analysis.}$$

$$W_{mA'} = \frac{\text{lb}}{\text{lb dry air}} = \text{Pounds of moisture per pound of dry air at boiler inlet.}$$

$$W_{A'} = \frac{\text{lb}}{\text{lb A.F. fuel}} = \text{Pounds of dry air per pound of "as fired" fuel as given in Par. 7.06.}$$

IP14_001386

$m_f = \frac{\text{lb}}{\text{lb A.F. fuel}}$ = Pounds of moisture per pound of "as fired" fuel.

$W_z = \frac{\text{lb}}{\text{lb A.F. fuel}}$ = Pounds of atomizing steam per pound of "as fired" fuel. The procedure for obtaining this term is given in Pars. 4.17 and 7.3.2.06 of the Test Code for Steam Generating Units, PTC 4.1.

$W_m \boxed{p}$ [3] $= \frac{\text{lb}}{\text{lb A.F. fuel}}$ = Pounds of moisture evaporated in ashpit per pound of "as fired" fuel.

7.06

$W_{A'} = \frac{\text{lb}}{\text{lb A.F. fuel}}$ = Pounds of dry air per pound of "as fired" fuel.

$$W_{A'} = \frac{(W_{G'N_2} - N)}{0.7685}$$

Where

$W_{G'N_2} = \frac{\text{lb}}{\text{lb A.F. fuel}}$ = Pounds of nitrogen in dry gas per pound of "as fired" fuel.

$$W_{G'N_2} = \frac{28.02\ N_2}{12.01\ (CO_2 + CO)} \left(C_b + \frac{12.01}{32.07} S \right)$$

The preceding formula is based on molecular weights accurate to four significant figures, but it is not to be implied that the weight of dry air has this degree of accuracy. The four digit molecular weights are used to hold errors from calculation procedures to a minimum. The values used are from the National Bureau of Standards Circular 564, dated 11/1/55.

CO_2, O_2 and CO = Per cent by volume of dry flue gas. (Location 14 or 15, Fig. 1.)

N_2 being determined by subtracting the total of CO_2, O_2 and CO from 100 per cent.

$C_b = \frac{\text{lb}}{\text{lb A.F. fuel}}$ = Pounds of carbon burned per pound of "as fired" fuel.

$$C_b = C - \frac{W_{d'p'}\ H_{d'p'}}{14500}$$

Where

$C = \frac{\text{lb}}{\text{lb A.F. fuel}}$ = Pounds carbon in "as fired" fuel by laboratory analysis.

$W_{d'p'} = \frac{\text{lb}}{\text{lb A.F. fuel}}$ = Pounds of dry refuse per pound of "as fired" fuel, see Par. 7.04.

$H_{d'p'} = \frac{\text{Btu}}{\text{lb dry refuse}}$ = Heat value for dry refuse from laboratory determination.

[3] This term may be ignored, by agreement, inasmuch as its magnitude is such that it affects the wet gas weight on the order of the 0.1 per cent. If it is desired, this term may be calculated as outlined in Pars. 5.23 and 7.3.2.11 of the Test Code for Steam Generating Units, PTC 4.1.

IP14_001387

$14500 = \frac{\text{Btu}}{\text{lb}}$ = Heat value of 1 lb of carbon as it occurs in refuse (see Par. 9.4 of the Test Code for Steam Generating Units, PTC 4.1)

$S = \frac{\text{lb}}{\text{lb A.F. fuel}}$ = Pounds sulfur per pound of "as fired" fuel as determined by laboratory analysis.

$N = \frac{\text{lb}}{\text{lb A.F. fuel}}$ = Pounds of nitrogen per pound of "as fired" fuel.

0.7685 = Pounds of nitrogen per pound of standard air, $W_{A'}$ then becomes

$$W_{A'} = \frac{\frac{28.02\ N_2}{12.01\ (CO_2 + CO)}\left(C_b + \frac{12.01}{32.07}\ S\right) - N}{0.7685}$$

7.07 Test X-Ratio $= \frac{W_{A9}\ c_{pA}}{W_{G14}\ c_{pG}} = \frac{(t_{G14} - t_{G15}\ (NL))}{(t_{A9} - t_{A8})}$ and is the ratio of the heat capacity of the air passing through the heater to the heat capacity of the gas passing through the heater.

$W_{A9} = \frac{\text{lb wet air}}{\text{lb A.F. fuel}}$ = Wet air flow leaving air heater.

$W_{G14} = \frac{\text{lb wet gas}}{\text{lb A.F. fuel}}$ = Wet gas flow entering air heater as given in Par. 7.03.

c_{pA}[4] $= \frac{\text{Btu}}{\text{lb} - \text{F}}$ = Mean specific heat of air between temperatures t_{A9} and t_{A8}.

c_{pG}[4] $= \frac{\text{Btu}}{\text{lb} - \text{F}}$ = Mean specific heat of gas between temperatures t_{G14} and t_{G15} (NL).

t_{G14} = F = Measured gas temperature entering air heater.

t_{G15} (NL) = F = Calculated gas temperature leaving the air heater with no leakage as given in Par. 7.02.

t_{A9} = F = Measured air temperature leaving air heater.

t_{A8} = F = Measured air temperature entering air heater.

X-Ratio is derived from heat balance taken around an air heater corrected for no air leakage. Using the basic design diagram of Fig. 1, the heat balance is as follows:

$$W_{A9}\ c_{pA}\ (t_{A9} - t_{A8}) = W_{G14}\ c_{pG}\ (t_{G14} - t_{G15}\ (NL)).$$

$$\text{X-Ratio} = (X_R) = \frac{W_{A9}\ c_{pA}}{W_{G14}\ c_{pG}} = \frac{(t_{G14} - t_{G15}\ (NL))}{(t_{A9} - t_{A8})}$$

[4] For the determination of the mean specific heats use PTC 4.1, Fig. 3 for air and Fig. 7 for gas to calculate the weighted average specific heat for wet air and wet gas.

IP14_001388

7.07.1 Design X-Ratio is obtained by using the above formula and factoring into it the design data.

7.08

$t_{G15\,\delta A}$ = F = Corrected gas temperature leaving air heater for deviation from design entering air temperature.

$$t_{G15\,\delta A} = \frac{t_{A8D}\,(t_{G14} - t_{G15}) + t_{G14}\,(t_{G15} - t_{A8})}{(t_{G14} - t_{A8})}$$

Where

t_{A8D} = F = Design air temperature entering air heater

t_{G14} = F = Measured gas temperature entering air heater

t_{G15} = F = Measured gas temperature leaving air heater

t_{A8} = F = Measured air temperature entering air heater

The above equation is based on the test gas side efficiency remaining constant with changes in inlet air temperature. It's derivation follows:

$$\frac{t_{G14} - t_{G15}\,(NL)}{t_{G14} - t_{A8}} = \frac{t_{G14} - t_{G15}\,(NL)\,\delta A}{t_{G14} - t_{A8D}}$$

The nonleakage leaving gas temperature $t_{G15}\,(NL)\,\delta A$ is the corrected variable to be solved for. This temperature is related to the leaving gas temperature with leakage as shown by Par. 7.02. The two equations for the two nonleakage leaving gas temperatures in the above equation are shown as follows:

$$t_{G15}\,(NL) = \frac{A\,(L)\,c_{pA}}{100\,c_{pG}}\,(t_{G15} - t_{A8}) + t_{G15}$$

$$k = \frac{A\,(L)\,c_{pA}}{100\,c_{pG}}$$

$$t_{G15}\,(NL) = k\,(t_{G15} - t_{A8}) + t_{G15}$$

Rewriting the above equation to correct for the deviation from design entering air temperature.

$$t_{G15}\,(NL)\,\delta A = k\,(t_{G15\,\delta A} - t_{A8D}) + t_{G15\,\delta A}$$

Upon substitution of the above two nonleakage leaving gas temperature equations into the equated gas side efficiency equation, the corrected leaving gas temperature with leakage $t_{G15\,\delta A}$ can be solved for. The result of this substitution is as follows:

$$\frac{t_{G14} - k\,(t_{G15} - t_{A8}) - t_{G15}}{t_{G14} - t_{A8}} = \frac{t_{G14} - k\,(t_{G15\,\delta A} - t_{A8D}) - t_{G15\,\delta A}}{t_{G14} - t_{A8D}}$$

IP14_001389

The above equation reduces to:

$$t_{G15\,\delta A} = \frac{t_{A8D}\,(t_{G14} - t_{G15}) + t_{G14}\,(t_{G15} - t_{A8})}{(t_{G14} - t_{A8})}$$

7.09

$t_{G15\,\delta G}$ = F = Corrected Gas Temperature Leaving Air Heater for Deviation from Design Entering Gas Temperature

$$t_{G15\,\delta G} = \frac{t_{G14D}\,(t_{G15} - t_{A8}) + t_{A8}\,(t_{G14} - t_{G15})}{(t_{G14} - t_{A8})}$$

Where

t_{G14D} = F = Design gas temperature entering air heater

t_{G15} = F = Measured gas temperature leaving air heater

t_{A8} = F = Measured air temperature entering air heater

t_{G14} = F = Measured gas temperature entering air heater

The above equation is based on the test gas side efficiency remaining constant with changes in inlet gas temperature. The derivation follows:

$$\frac{t_{G14} - t_{G15}\,(NL)}{t_{G14} - t_{A8}} = \frac{t_{G14D} - t_{G15}\,(NL)\,\delta G}{t_{G14D} - t_{A8}}$$

The nonleakage leaving gas temperature $t_{G15}\,(NL)\,\delta G$ is the corrected variable to be solved for. This temperature is related to the leaving gas temperature with leakage as shown by Par. 7.02. The two equations for the two nonleakage leaving gas temperatures in the above equation are shown below:

$$t_{G15}\,(NL) = k\,(t_{G15} - t_{A8}) + t_{G15}$$

$$t_{G15}\,(NL)\,\delta G = k\,(t_{G15\,\delta G} - t_{A8}) + t_{G15\,\delta G}$$

Where $k = \dfrac{A(L)\,c_{pA}}{100\,c_{pG}}$

Upon substitution of these nonleakage leaving gas temperature equations into the equated gas side efficiency equation, the corrected leaving gas temperature with leakage $t_{G15\,\delta G}$ can be solved for. The result of this substitution is shown below

$$\frac{t_{G14} - k(t_{G15} - t_{A8}) - t_{G15}}{t_{G14} - t_{A8}} = \frac{t_{G14D} - k(t_{G15\,\delta G} - t_{A8}) - t_{G15\,\delta G}}{t_{G14D} - t_{A8}}$$

$$t_{G15\,\delta G} = \frac{t_{G14D}\,(t_{G15} - t_{A8}) + t_{A8}\,(t_{G14} - t_{G15})}{(t_{G14} - t_{A8})}$$

7.10 $t_{G15\,\delta}\,(X_R)$ = F = Corrected Gas Temperature Leaving Air Heater for Deviation from Design X-Ratio.

IP14_001390

Correction to measured gas temperature leaving the air heater for deviation from design X-Ratio may be made by the use of appropriate design correction curves.[5]

7.11 $t_{G15\delta G}$ = F = Corrected Gas Temperature Leaving Air Heater for Deviation from Design Entering Flue Gas Flow.

Correction to measured gas temperature leaving the air heater for deviation from design flue gas flows may be made by the use of appropriate design correction curves.[5]

7.12

$t_{G15\delta_{Total}}$ = F = Totally corrected gas temperature leaving air heater

$$t_{G15\delta_{Total}} = t_{G15\delta A} + t_{G15\delta G} + t_{G15\delta X_R} + t_{G15\delta G} - 3t_{G15}$$

Where

$t_{G15\delta A}$ = F = Gas temperature leaving the air heater corrected for deviation from design entering air temperature

$t_{G15\delta G}$ = F = Gas temperature leaving the air heater corrected for deviation from design entering gas temperature

$t_{G15\delta X_R}$ = F = Gas temperature leaving the air heater corrected for deviation from design X-Ratio

$t_{G15\delta G}$ = F = Gas temperature leaving the air heater corrected for deviation from design gas flow

t_{G15} = F = Measured gas temperature leaving the air heater.

7.13

$W_{AL\delta}$ = $\frac{\text{lb}}{\text{lb of A.F. fuel}}$ = Corrected Air Leakage for Deviation from Design Pressure Differential and from Design Air Temperature

$$W_{AL\delta} = W_{AL}\left[\frac{\Delta P_{(8-15)D}}{\Delta P_{(8-15)}}\left(\frac{T_{A8}}{T_{A8D}}\right)\right]^{1/2}$$

Where

W_{AL} = $\frac{\text{lb}}{\text{lb of A.F. fuel}}$ = Air leakage

$W_{GL} = W_{G15} - W_{G14}$

[5] These design correction curves can be substantiated by field tests although the procedures necessary may be considered impractical.

IP14_001391

Where

$$W_{G15,14} = \frac{\text{lb wet gas leaving/entering air heater}}{\text{lb A.F. fuel}}$$

$$= W_{G'15,14} + W_{mG}{}^{(6)}$$

$W_{G'15,14} = \frac{\text{lb dry gas}}{\text{lb A.F. fuel}}$ = Dry gas flow leaving/entering the air heater as given in Par. 7.04

$W_{mG} = \frac{\text{lb moisture}}{\text{lb A.F. fuel}}$ = Total moisture in flue gas entering the air heater as given in Par. 7.05

$\Delta P_{(8-15)D}$ = Inches of water = Design static pressure difference between air inlet at the duct connection flange and gas outlet at the duct connection flange.

$\Delta P_{(8-15)}$ = Inches of water = Measured static pressure difference between air inlet at the duct connection flange and gas outlet at the duct connection flange.

T_{A8} = R = Measured average Rankine temperature of air entering air heater.

T_{A8D} = R = Design Rankine temperature of air entering air heater.

It is recognized that the above orifice correction is not a rigorous treatment of the subject but is considered sufficiently accurate for the purpose of the Code.

7.13.1 To determine the above corrections when leakage is expressed on a percentage basis, use the following procedure:

$A(L)\,\delta D$ = Per cent = Corrected Air Leakage for Deviation from Design Pressure Differential and from Design Air Temperature

$$A(L)\,\delta D = A(L)\,\frac{W_{G14}}{W_{GD14}}\left[\frac{\Delta P_{(8-15)D}}{\Delta P_{(8-15)}}\left(\frac{T_{A8}}{T_{A8D}}\right)\right]^{1/2}$$

Where

$A(L)$ = Per cent = Air heater leakage as given in Par. 7.03

$W_{G14} = \frac{\text{lb wet gas}}{\text{lb A.F. fuel}}$ = Wet gas flow entering air heater as given in Par. 7.03

$W_{GD14} = \frac{\text{lb wet gas}}{\text{lb A.F. fuel}}$ = Wet gas flow entering air heater at design conditions

$\Delta P_{(8-15)D}$ = Inches of water = Design static pressure difference between air inlet at the duct connection flange and gas outlet at the duct connection flange.

(6) In this Code, air leakage is assumed to bypass directly from the inlet air side to the outlet gas side. Therefore moisture in air leakage does not become a part of $W_{G'14} + W_{mG}$, but does become a part of $W_{G'15} + W_{mG}$. The omission of this moisture in the latter term will not affect the accuracy of the leakage calculation since it is a very small part of the total moisture term. If it is desired to calculate this moisture term, the following procedure may be used:

1. Calculate the actual pounds of dry air leakage per pound of "as fired" fuel; $W_{G'15} - W_{G'14}$.
2. Multiply the result of (1) by the specific humidity (pounds moisture/pounds dry air) to get the pounds of moisture in leakage air per pound of "as fired" fuel.
3. Add the result of (2) to the W_{mG} term used to calculate W_{G15} and then recalculate $A(L)$.

IP14_001392

$\Delta P_{(8-15)}$ = Inches of water = Measured static pressure difference between air inlet at the duct connection flange and gas outlet at the duct connection flange.

T_{A8} = R = Measured average Rankine temperature of air entering air heater.

T_{A8D} = R = Design Rankine temperature of air entering air heater.

It is recognized that the above orifice correction is not a rigorous treatment of the subject but is considered sufficiently accurate for the purpose of the Code.

7.14

$\Delta P_{(14-15)\delta}$ = Inches of water = Gas Side Pressure Loss of the Air Heater Corrected for Deviation from Design Flow and Temperatures

$$\Delta P_{(14-15)\delta} = \Delta P_{(14-15)} \frac{W^2_{GD}\,(T_{G14D} + T_{G15D})}{W^2_G\,(T_{G14} + T_{G15})}$$

Where

$\Delta P_{(14-15)}$ = Inches of water = Measured pressure loss

$W_{GD} = \dfrac{\text{lb}}{\text{lb of A.F. fuel}}$ = Design gas flow

T_{G14D} = R = Design Rankine temperature of entering gas

T_{G15D} = R = Design Rankine temperature of leaving gas

$W_G = \dfrac{\text{lb}}{\text{lb of A.F. fuel}}$ = Test gas flow

T_{G14} = R = Measured Rankine temperature of entering gas

T_{G15} = R = Measured Rankine temperature of leaving gas

7.15

$\Delta P_{(8-9)\delta}$ = Inches of water = Air side pressure loss of the air heater corrected for deviation from design flow and temperatures.

$$\Delta P_{(8-9)\delta} = P_{(8-9)} \frac{W^2_{AD}\,(T_{A8D} + T_{A9D})}{W^2_A\,(T_{A8} + T_{A9})}$$

Where

$\Delta P_{(8-9)}$ = Inches of water = Measured pressure loss

$W_{AD} = \dfrac{\text{lb}}{\text{lb of A.F. fuel}}$ = Design air flow

T_{A8D} = R = Design Rankine temperature of entering air

T_{A9D} = R = Design Rankine temperature of leaving air

$W_A = \dfrac{\text{lb}}{\text{lb of A.F. fuel}}$ = Test air flow

IP14_001393

T_{A8} = R = Measured Rankine temperature of entering air

T_{A9} = R = Measured Rankine temperature of leaving air

7.16 Accuracy of Correction to Pressure Loss for Turbulent and Laminar Flow. It is recognized that the above corrections for pressure losses in Pars. 7.14 and 7.15 are not rigorous for turbulent flow but the approach is considered sufficiently accurate for the purpose of this Code. For correction to pressure losses in laminar flow air heaters coming on the market at the time of completion of this Code, the treatment is much less accurate and it is suggested the correction be made an item of agreement until such time as field testing firms up the basis of correction.

IP14_001394

PERFORMANCE TEST CODES

While providing for exhaustive tests, these Codes are so drawn that selected parts may be used for tests of limited scope.

A complete list of ASME publications will be furnished upon request.

D00034

C-E Air Preheater
Combustion Engineering, Inc.
Andover Road
Wellsville, New York 14895

Tel. 716/593-2700

Ted McIntosh

TRAINING

AIR PREHEATER

May 22, 1985

THE AIR PREHEATER CO., INC.
SANTA ANA
RECEIVED
MAY 24 1985

Intermountain Power Service Corporation
P.O. Box 864
Delta, Utah 84624

Attention: Mr. John Larsen

Reference: Requisition #PA 5-2190
Purchase Order #85-2417

Gentlemen:

During my May 16th conversation with Mr. Juan Pelez-Gary, we agreed to re-arrange your LJUNGSTROM* training seminar as follows:

JUNE 10, 1985 MONDAY

Travel.

JUNE 11, 1985 TUESDAY

8:00 A.M. - 12:00 P.M.	Seminar Sections 1, 4 and 10 for four (4) operations personnel.
1:00 P.M. - 5:00 P.M.	Seminar Sections 1, 5, 6, 7, 8 and 9 for twenty-five (25) maintenance personnel. (Part I of Maintenance Program).

JUNE 12, 1985 WEDNESDAY

8:00 A.M. - 12:00 P.M.	Part II of Maintenance Program.
1:00 P.M. - 5:00 P.M.	Part I of Maintenance Program.

JUNE 13, 1985 THURSDAY

8:00 A.M. - 12:00 P.M.	Part II of Maintenance Program.
1:00 P.M. - 5:00 P.M.	Discussion period for special areas of interest or particular problems.

JUNE 14, 1985 FRIDAY

Travel.

Should you have any questions regarding this schedule, please advise as soon as possible. Travel arrangements have already been made for Air Preheater personnel to insure that we can meet this schedule.

Sincerely,

Darr Pace
Manager, Customer Training

DP/ps

cc: Mr. Juan Pelez-Gary/Intermountain
D. Palmatier
F. Sharp

* A registered trademark of the Air Preheater Company, Inc.

C-E Air Preheater
Combustion Engineering, Inc.
Andover Road
Wellsville, New York 14895

Tel. 716/593-2700

AIR PREHEATER

THE AIR PREHEATER CO., INC.
RECEIVED
MAY 14 1984
RLH GER JMP FRS TJT DJR TRM

May 8, 1984

Intermountain Power Service Corp.
Brush Wellman Road
P.O. Box 864
Delta, Utah 84624

Attention: Juan I. Pelaez-Gary, Training Co-ordinator

Gentlemen:

At the request of our regional service manager, Mr. Fred Sharp, I am forwarding a copy of a general outline for our LJUNGSTROM* Training Programs.

Part I is a 40 minute color slide/synchronized tape program. The remainder of the program is custom-tailored to your specific application using slides and over/lays.

All attending personnel are provided with a handout containing much of the material presented, which they may keep.

Should you require additional information, please contact Mr. Sharp or myself at the phone numbers listed below.

Mr. Fred Sharp	Mr. Darr Pace
Santa Ana, California	Wellsville, New York
(714) 547-0374	(716) 593-2700 Ext. 362

Thank you for your interest.

Sincerely,

Darr Pace
Customer Service Department

DP/ps
Attachments

* A registered trademark of the Air Preheater Company, Inc.

cc: F. Linnecke
D. Palmatier
F. Sharp

C-E Air Preheater
Combustion Engineering, Inc.
Andover Road
Wellsville, New York 14895

Tel. 716/593-2700

AIR PREHEATER

May 8, 1984

Deseret Generating and Transmission Co-op.
180 S. 500 E.
Vernal, Utah 84078

Attention: Mr. Scott Kos, Training Supervisor

Gentlemen:

At the request of our regional service manager, Mr. Fred Sharp, I am forwarding a copy of a general outline for our LJUNGSTROM* Training Programs.

Part I is a 40 minute color slide/synchronized tape program. The remainder of the program is custom-tailored to your specific application using slides and over/lays.

All attending personnel are provided with a handout containing much of the material presented, which they may keep.

Should you require additional information, please contact Mr. Sharp or myself at the phone numbers listed below.

Mr. Fred Sharp	Mr. Darr Pace
Santa Ana, California	Wellsville, New York
(714) 547-0374	(716) 593-2700 Ext. 362

Thank you for your interest.

Sincerely,

Darr Pace
Customer Service Department

DP/ps
Attachments

* A registered trademark of the Air Preheater Company, Inc.

cc: F. Linnecke
D. Palmatier
F. Sharp

C-E Air Preheater
Combustion Engineering, Inc.
Andover Road
Wellsville, New York 14895

Tel. 716/593-2700

AIR PREHEATER

GENERAL OUTLINE

FOR

LJUNGSTROM* AIR PREHEATER

OPERATION AND MAINTENANCE TRAINING SEMINAR

* A REGISTERED TRADEMARK OF THE AIR PREHEATER COMPANY, INC.

I. INTRODUCTION

A.) Purpose of the combustion air preheater.

1.) Improve boiler efficiency.

2.) Preheat combustion air.

a.) Hot air permits the burning of lower grade fuels.

b.) Hot air needed to dry moisture from fuel on coal fired and certain other installations.

3.) Drop flue gas temperature down to a level suitable for downstream gas clean up equipment.

B.) Types of combustion air preheaters.

1.) Regenerative.

2.) Recouperative.

3.) Other.

II. BASIC ENGINEERING FUNDAMENTALS

A.) Flow diagram.

B.) Temperatures.

C.) Regenerative principle.

D.) Pressure drop.

E.) Thermal deformation.

Basic Engineering Fundamentals Continued -

F.) Leakage.

G.) Metal temperature variation.

H.) Fluid temperature variation.

I.) Seal settings.

III. FACTORS EFFECTING AIR PREHEATER PERFORMANCE

A.) Variations from contract conditions.

1.) Temperatures.

2.) Air flow.

3.) Gas flow.

4.) Rotor speed.

IV. COMBUSTION OF FUELS

A.) Basic relationships.

B.) Effects on air preheater.

1.) Plugging.

2.) Corrosion.

V. OPERATION

A.) Instructions - Pre-start-up.

B.) Instructions - Start-up.

1.) Light off - gaseous fuels.

2.) Light off - oil fuels.

C.) Recommendations.

D.) Stand-by and hot start-up.

E.) Cycling.

F.) Shutting down.

G.) Cleaning.

1.) Pre-commercial operation.

2.) Commercial operation.

3.) General.

H.) Excessive seal wear.

I.) Air heater fires.

VI. LJUNGSTROM O & M MANUAL

VII. MECHANICAL COMPONENTS OF THE AIR PREHEATER

A.) Rotor bearings.

1.) Support bearings.

a.) Radial pilot bearing.

b.) Kingsbury thrust bearing.

c.) Lubrication requirements and circulating system.

2.) Guide bearing.

a.) Type.

b.) Tracking arrangement.

c.) Lubrication requirements and circulating system.

d.) Precautions of overfilling (fire hazzard).

B.) Rotor drive.

1.) Speed reducer.

2.) Main drive motor.

3.) Auxiliary drive motor.

4.) Pin rack, pinion and pinion hub.

5.) High and low speed couplings.

6.) Fluid drive coupling.

7.) Overrunning clutch.

Mechanical Components Of The Air Preheater Continued -

B.) Rotor drive continued -

8.) Necessary clearances and alignments.

9.) Lubrication requirements.

C.) Cleaning equipment.

1.) Description.

2.) Operating instructions.

3.) Recommended steam conditions.

4.) Maintenance.

a.) Drive unit.

b.) Setting sweep.

c.) Inspection of nozzle.

d.) Barbco swivel joint.

e.) Lubrication requirements.

D.) Water washing equipment.

1.) Description and piping arrangement.

2.) Operating instructions.

Mechanical Components Of The Air Preheater Continued -

E.) Rotor seals.

1.) Description.

2.) Replacement and setting.

a.) Radial seals.

b.) Circumferential seals or by-pass seals.

c.) Axial seals.

d.) Rotor post seals.

e.) Trunnion air seals.

F.) Leakage control system ~~(if so equipped)~~ and P.M. spares.

G.) Infrared detection system ~~(if so equipped)~~.

VIII. PREVENTATIVE MAINTENANCE

A.) Daily in service maintenance.

1.) Check lubricant levels.

2.) Check bearing and reducer temperatures.

3.) Monitor draft loss.

Preventative Maintenance Continued -

B.) Maintenance during annual boiler outages.

1.) Change lubricants.

a.) Rotor bearings.

b.) Soot blower gear reducer.

c.) Rotor drive reducer.

d.) Rotor drive fluid coupling.

2.) Inspect and repack with #2 grease.

a.) High speed gear couplings on main drive motor.

b.) Auxiliary drive couplings.

c.) Soot blower worm gear drive housing.

3.) Remove and clean overrunning clutch.

4.) Inspect.

a.) All rotor seals and sealing surfaces.

b.) Heat transfer element.

c.) Heater housing and expansion arrangement.

d.) Soot blower nozzles.

e.) Pin rack and pinion gear.

IX. SPARE PARTS

A.) Normally renewable items.

B.) Components essential to operation of equipment.