TURBINE ASME PERFORMANCE
TEST ISOLATION LIST

UNIT #1
6/86 George Cross

DO NOT REMOVE
FROM CONTROL ROOM

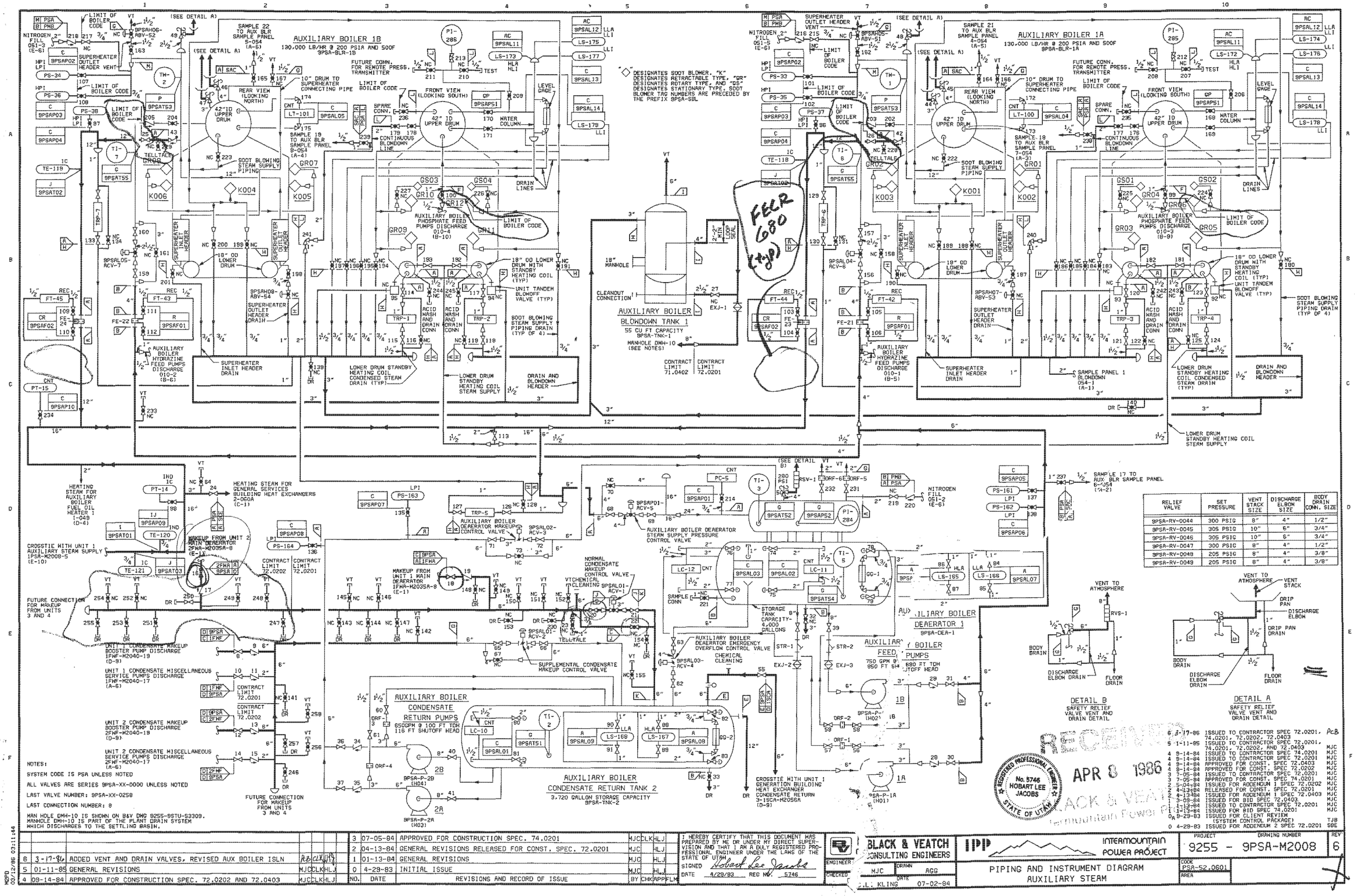

RELIEF VALVE	SET PRESSURE	VENT STACK SIZE	DISCHARGE ELBOW SIZE	BODY DRAIN CONN. SIZE
9PSA-RV-0044	300 PSIG	8"	4"	1/2"
9PSA-RV-0045	305 PSIG	10"	6"	3/4"
9PSA-RV-0046	305 PSIG	10"	6"	3/4"
9PSA-RV-0047	300 PSIG	8"	4"	1/2"
9PSA-RV-0048	205 PSIG	8"	4"	3/8"
9PSA-RV-0049	205 PSIG	8"	4"	3/8"

6	3-17-86	ISSUED TO CONTRACTOR SPEC 72.0201, 74.0201, 72.0202, 72.0403	PCB
5	1-11-85	ISSUED TO CONTRACTOR SPEC 72.0201, 74.0201, 72.0202, AND 72.0403	MJC
4	9-14-84	ISSUED TO CONTRACTOR SPEC 74.0201	MJC
4	9-14-84	ISSUED TO CONTRACTOR SPEC 72.0201	MJC
4	9-14-84	APPROVED FOR CONST. SPEC 72.0403	MJC
4	9-14-84	APPROVED FOR CONST. SPEC 72.0202	MJC
3	7-05-84	ISSUED TO CONTRACTOR SPEC 72.0201	MJC
3	7-05-84	APPROVED FOR CONST. SPEC 74.0201	MJC
2	5-04-84	ISSUED FOR ADDENDUM 1 SPEC 72.0202	MJC
2	4-13-84	RELEASED FOR CONST. SPEC 72.0201	MJC
2	4-13-84	ISSUED FOR ADDENDUM 1 SPEC 72.0403	MJC
1	3-05-84	ISSUED FOR BID SPEC 72.0403	MJC
1	1-13-84	ISSUED TO CONTRACTOR SPEC 72.0201	MJC
1	1-13-84	ISSUED FOR BID SPEC 74.0201	MJC
0A	9-29-83	ISSUED FOR CLIENT REVIEW (SYSTEM CONTROL PACKAGE)	TJB
0	4-29-83	ISSUED FOR ADDENDUM 2 SPEC 72.0201	SBE

					3	07-05-84	APPROVED FOR CONSTRUCTION SPEC. 74.0201	MJC	CLK	HLJ
					2	04-13-84	GENERAL REVISIONS RELEASED FOR CONST. SPEC. 72.0201	MJC		HLJ
6	3-17-86	ADDED VENT AND DRAIN VALVES, REVISED AUX BOILER ISLN	PCB	CLK	1	01-13-84	GENERAL REVISIONS	MJC		HLJ
5	01-11-85	GENERAL REVISIONS	MJC	CLK	HLJ	0	4-29-83	INITIAL ISSUE	MJC		HLJ
4	09-14-84	APPROVED FOR CONSTRUCTION SPEC. 72.0202 AND 72.0403	MJC	CLK	HLJ	NO.	DATE	REVISIONS AND RECORD OF ISSUE	BY	CHK	APP FLM

MDPD 02/12/86 03:11:44

IP14_000033

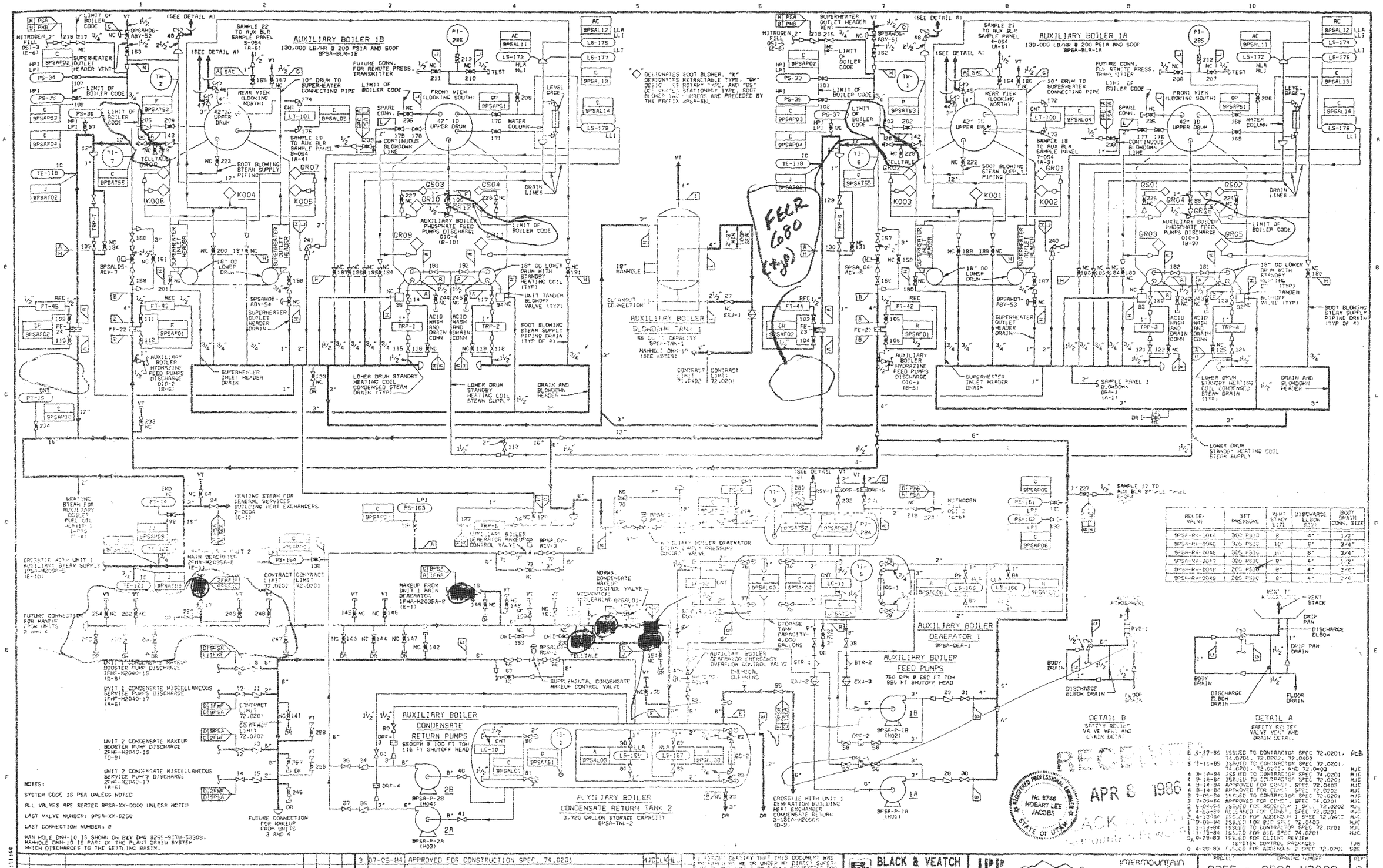

RELIEF VALVE	SET PRESSURE	VENT STACK SIZE	DISCHARGE ELBOW SIZE	BODY DRAIN CONN. SIZE
9PSA-RV-0044	300 PSIG	8"	4"	1/2"
9PSA-RV-0045	300 PSIG	10"	6"	3/4"
9PSA-RV-0046	300 PSIG	10"	6"	3/4"
9PSA-RV-0047	300 PSIG	8"	4"	1/2"
9PSA-RV-0048	205 PSIG	8"	4"	3/8"
9PSA-RV-0049	205 PSIG	8"	4"	3/8"

NOTES:

SYSTEM CODE IS PSA UNLESS NOTED

ALL VALVES ARE SERIES 9PSA-XX-0000 UNLESS NOTED

LAST VALVE NUMBER: 9PSA-XX-0258

LAST CONNECTION NUMBER: 8

MAN HOLE DMH-10 IS SHOWN ON B&V DWG 9255-9STU-S3309. MANHOLE DMH-10 IS PART OF THE PLANT DRAIN SYSTEM WHICH DISCHARGES TO THE SETTLING BASIN.

NO.	DATE	REVISIONS AND RECORD OF ISSUE	BY	CHK	APPR
6	3-17-86	ADDED VENT AND DRAIN VALVES, REVISED AUX BOILER ISLN	RBC	CLK	HLJ
5	01-11-85	GENERAL REVISIONS	MJC	CLK	HLJ
4	05-14-84	APPROVED FOR CONSTRUCTION SPEC. 72.0202 AND 72.0403	MJC	CLK	HLJ
3	07-05-84	APPROVED FOR CONSTRUCTION SPEC. 74.0201	MJC	CLK	HLJ
2	04-13-84	GENERAL REVISIONS RELEASED FOR CONST. SPEC. 72.0201	MJC	CLK	HLJ
1	01-13-84	GENERAL REVISIONS	MJC	CLK	HLJ
0	4-29-83	INITIAL ISSUE	MJC	CLK	HLJ

I HEREBY CERTIFY THAT THIS DOCUMENT WAS PREPARED BY ME OR UNDER MY DIRECT SUPERVISION AND THAT I AM A DULY REGISTERED PROFESSIONAL ENGINEER UNDER THE LAWS OF THE STATE OF UTAH

SIGNED Hobart Lee Jacobs

DATE 4/28/83 REG NO. 5746

BLACK & VEATCH CONSULTING ENGINEERS

ENGINEER MJC DRAWN AGC

CHECKED C.L. KLING DATE 07-02-84

IPP INTERMOUNTAIN POWER PROJECT

PIPING AND INSTRUMENT DIAGRAM AUXILIARY STEAM

PROJECT 9255 - DRAWING NUMBER 9PSA-M2008 REV 6

CODE PSA-SS-0601

MPRD 05/12/86 03:11:44

IP14_000034

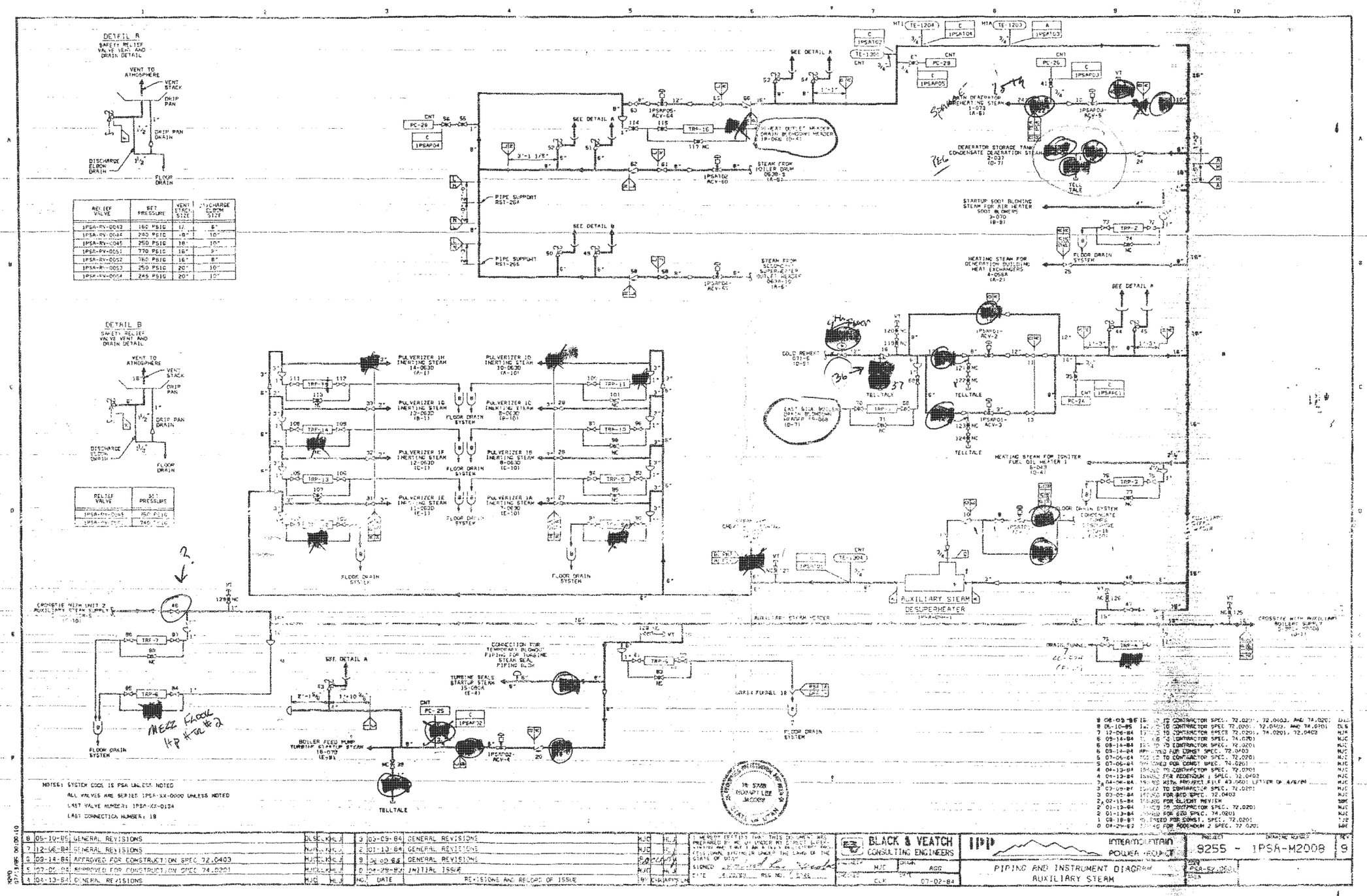

RELIEF VALVE	SET PRESSURE	VENT STACK SIZE	DISCHARGE ELBOW SIZE
1PSA-RV-0043	160 PSIG	12"	6"
1PSA-RV-0044	240 PSIG	18"	10"
1PSA-RV-0045	250 PSIG	18"	10"
1PSA-RV-0051	770 PSIG	16"	8"
1PSA-RV-0052	760 PSIG	16"	8"
1PSA-RV-0053	250 PSIG	20"	10"
1PSA-RV-0054	245 PSIG	20"	10"

RELIEF VALVE	SET PRESSURE
1PSA-RV-0045	750 PSIG
1PSA-RV-0051	740 PSIG

NO.	DATE	REVISIONS AND RECORD OF ISSUE	BY	CHK	APPD	CHK
8	05-10-85	GENERAL REVISIONS	DLS	CLK	HLJ	
7	12-06-84	GENERAL REVISIONS	NJC	CLK	HLJ	
6	09-14-84	APPROVED FOR CONSTRUCTION SPEC 72.0403	MJC	CLK	HLJ	
5	07-05-84	APPROVED FOR CONSTRUCTION SPEC 74.0201	MJC	CLK	HLJ	
4	04-13-84	GENERAL REVISIONS	MJC		HLJ	
3	03-09-84	GENERAL REVISIONS	MJC		HLJ	
2	01-13-84	GENERAL REVISIONS	MJC		HLJ	
1	08-10-83	GENERAL REVISIONS	MJC		HLJ	
0	04-29-83	INITIAL ISSUE	MJC		HLJ	

IP14_000035

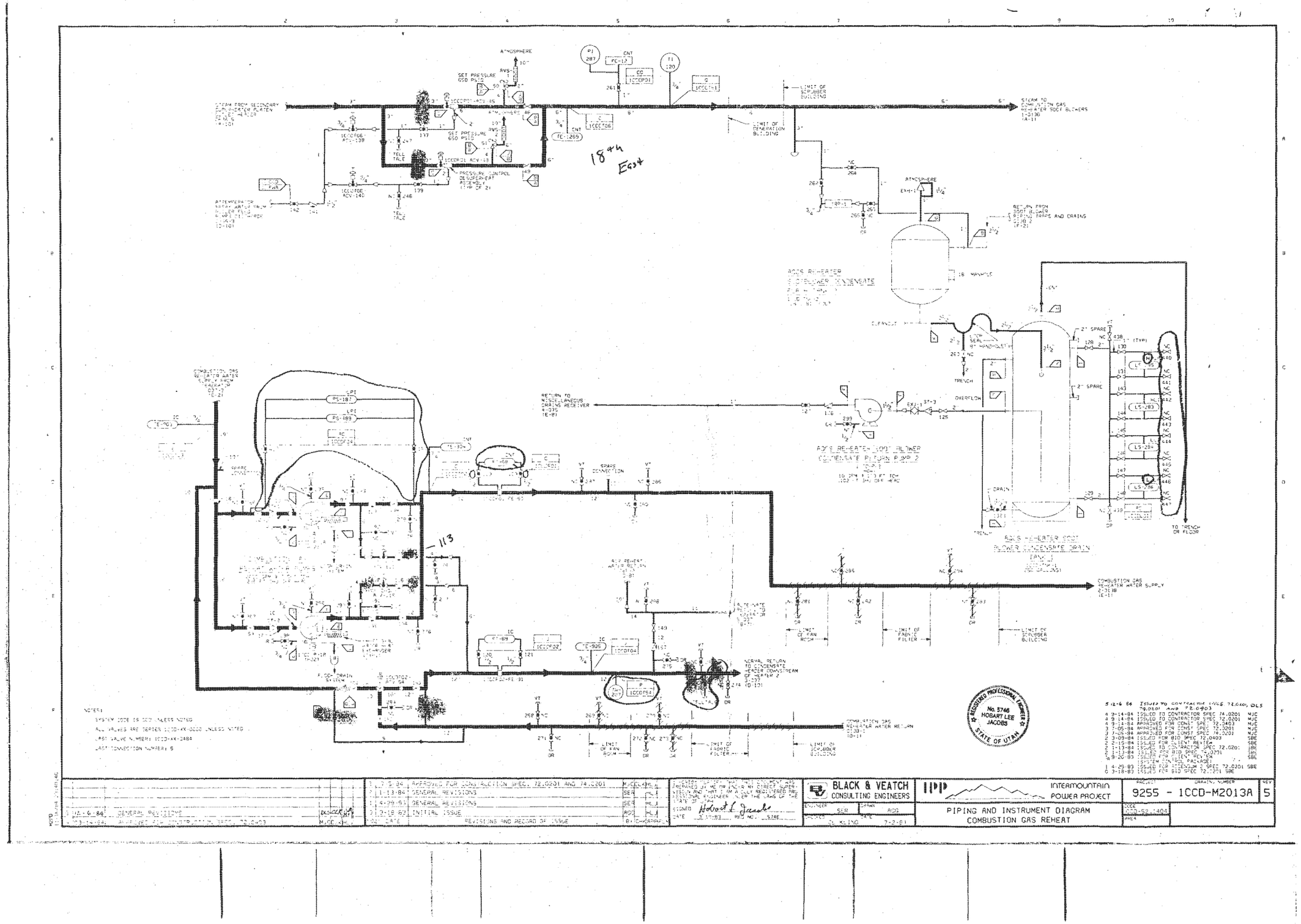

STEAM FROM SECONDARY SUPERHEATER PLATEN OUTLET HEADER
STEAM TO COMBUSTION GAS REHEATER SOOT BLOWERS
LIMIT OF SCRUBBER BUILDING
LIMIT OF GENERATION BUILDING
ATMOSPHERE
SET PRESSURE 650 PSIG
PRESSURE CONTROL DESUPERHEAT ASSEMBLY
18th East
RETURN FROM SOOT BLOWER PIPING TRAPS AND DRAINS
AQCS REHEATER SOOT BLOWER CONDENSATE
RETURN TO MISCELLANEOUS DRAINS RECEIVER
AQCS REHEATER SOOT BLOWER CONDENSATE RETURN PUMP 2
AQCS REHEATER SOOT BLOWER CONDENSATE DRAIN
TO TRENCH OR FLOOR
COMBUSTION GAS REHEATER WATER SUPPLY
COMBUSTION GAS REHEATER WATER RETURN
NORMAL RETURN TO CONDENSATE HEADER DOWNSTREAM OF HEATER 2
LIMIT OF FAN ROOM
LIMIT OF FABRIC FILTER
LIMIT OF SCRUBBER BUILDING
113
NOTES:
SYSTEM CODE IS 1CCD UNLESS NOTED
ALL VALVES ARE SERIES 1CCD-XX-0000 UNLESS NOTED
LAST VALVE NUMBER: 1CCD-XX-2484
LAST CONNECTION NUMBER: 5
REGISTERED PROFESSIONAL ENGINEER No. 5746 HOBART LEE JACOBS STATE OF UTAH
5-12-6-84 ISSUED TO CONTRACTOR SPEC 72.0201, DLS 74.0201 AND 72.0403
4 9-14-84 ISSUED TO CONTRACTOR SPEC 74.0201 MJC
4 9-14-84 ISSUED TO CONTRACTOR SPEC 72.0201 MJC
4 9-14-84 APPROVED FOR CONST SPEC 72.0403 MJC
3 7-05-84 APPROVED FOR CONST SPEC 72.0201 MJC
3 7-05-84 APPROVED FOR CONST SPEC 74.0201 MJC
2 3-09-84 ISSUED FOR BID SPEC 72.0403 SBE
2 2-15-84 ISSUED FOR CLIENT REVIEW SBE
2 1-13-84 ISSUED TO CONTRACTOR SPEC 72.0201 SBE
2 1-13-84 ISSUED FOR BID SPEC 74.0201 SBE
1A 9-20-83 ISSUED FOR CLIENT REVIEW SBE
(SYSTEM CONTROL PACKAGE)
1 4-29-83 ISSUED FOR ADDENDUM 2 SPEC 72.0201 SBE
0 3-18-83 ISSUED FOR BID SPEC 72.0201 SBE
5 12-6-84 GENERAL REVISIONS
4 9-14-84 APPROVED FOR CONSTRUCTION SPEC. 72.0403 MJC
3 7-5-84 APPROVED FOR CONSTRUCTION SPEC. 72.0201 AND 74.0201 MJC
2 1-13-84 GENERAL REVISIONS SER
1 4-29-83 GENERAL REVISIONS SER
0 3-18-83 INITIAL ISSUE AGG
REVISIONS AND RECORD OF ISSUE
BLACK & VEATCH CONSULTING ENGINEERS
ENGINEER SER
DRAWN AGG
CHECKED CL KLING
DATE 7-2-83
IPP INTERMOUNTAIN POWER PROJECT
PIPING AND INSTRUMENT DIAGRAM
COMBUSTION GAS REHEAT
PROJECT 9255 - 1CCD-M2013A
REV 5
CODE 1CCD-52.1404

IP14_000036

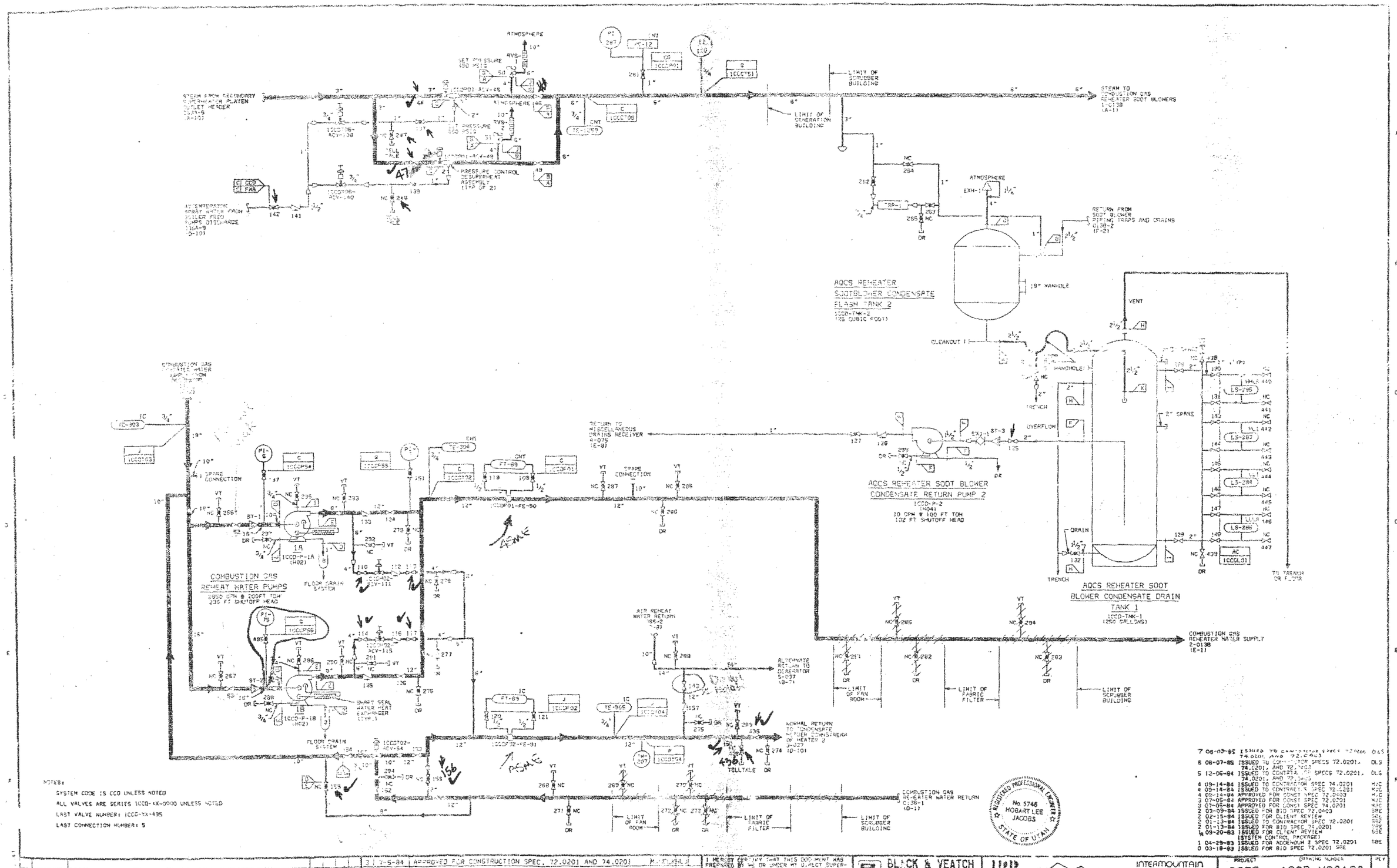

NOTES:

SYSTEM CODE IS CCD UNLESS NOTED

ALL VALVES ARE SERIES 1CCD-XX-0000 UNLESS NOTED

LAST VALVE NUMBER: 1CCD-XX-495

LAST CONNECTION NUMBER: 5

REV	DATE	REVISIONS AND RECORD OF ISSUE	BY	CH	APP
7	06-03-85	GENERAL REVISIONS			
6	06-07-85	GENERAL REVISIONS			
5	12-06-84	GENERAL REVISIONS			
4	09-14-84	GENERAL REVISIONS			
3	7-5-84	APPROVED FOR CONSTRUCTION SPEC. 72.0201 AND 74.0201			
2	11-13-84	GENERAL REVISIONS			
1	4-20-83	GENERAL REVISIONS			
0	03-18-83	INITIAL ISSUE			

I HEREBY CERTIFY THAT THIS DOCUMENT WAS PREPARED BY ME OR UNDER MY DIRECT SUPERVISION AND THAT I AM A DULY REGISTERED PROFESSIONAL ENGINEER UNDER THE LAWS OF THE STATE OF

SIGNED

DATE REG NO.

BLACK & VEATCH CONSULTING ENGINEERS

IPP INTERMOUNTAIN POWER PROJECT

PROJECT 9255 DRAWING NUMBER 1CCD-M2013A REV 7

PIPING AND INSTRUMENT DIAGRAM

IP14_000037

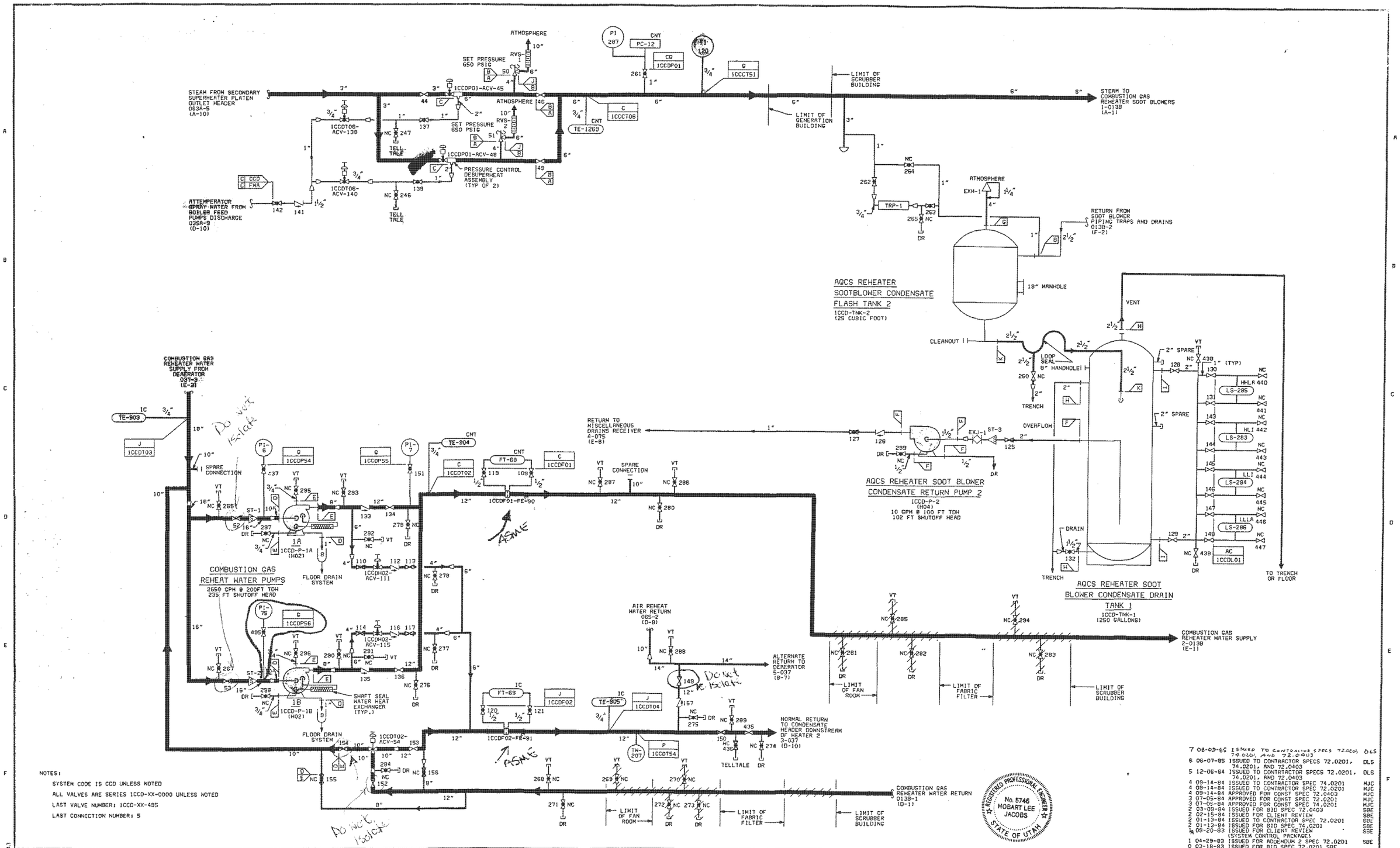

NOTES:

SYSTEM CODE IS CCD UNLESS NOTED

ALL VALVES ARE SERIES 1CCD-XX-0000 UNLESS NOTED

LAST VALVE NUMBER: 1CCD-XX-495

LAST CONNECTION NUMBER: 5

NO.	DATE	REVISIONS AND RECORD OF ISSUE	BY	CHK	APP	FLM
7	08-05-85	GENERAL REVISIONS				
6	06-07-85	GENERAL REVISIONS	DLS	CLK	HLJ	
5	12-06-84	GENERAL REVISIONS	DLS	CLK	HLJ	
4	09-14-84	APPROVED FOR CONSTRUCTION SPEC. 72.0403	MJC	CLK	HLJ	
3	7-5-84	APPROVED FOR CONSTRUCTION SPEC. 72.0201 AND 74.0201	MJC	CLK	HLJ	
2	1-13-84	GENERAL REVISIONS	SER		HLJ	
1	4-29-83	GENERAL REVISIONS	SER		HLJ	
0	3-18-83	INITIAL ISSUE	AGG		HLJ	

I HEREBY CERTIFY THAT THIS DOCUMENT WAS PREPARED BY ME OR UNDER MY DIRECT SUPERVISION AND THAT I AM A DULY REGISTERED PROFESSIONAL ENGINEER UNDER THE LAWS OF THE STATE OF

SIGNED Hobart Lee Jacobs

DATE 03-18-83 REG NO. 5746

BLACK & VEATCH CONSULTING ENGINEERS

ENGINEER SER DRAWN AGG

CHECKED CL KING DATE 7-2-86

IPP INTERMOUNTAIN POWER PROJECT

PIPING AND INSTRUMENT DIAGRAM
COMBUSTION GAS REHEAT

PROJECT 9255 DRAWING NUMBER 1CCD-M2013A REV 7

CODE 1CCD-52.1404

AREA

7 08-05-85 ISSUED TO CONTRACTOR SPECS 72.0201, 74.0201, AND 72.0403 DLS
6 06-07-85 ISSUED TO CONTRACTOR SPECS 72.0201, 74.0201, AND 72.0403 DLS
5 12-06-84 ISSUED TO CONTRACTOR SPECS 72.0201, 74.0201, AND 72.0403 DLS
4 09-14-84 ISSUED TO CONTRACTOR SPEC 74.0201 MJC
4 09-14-84 ISSUED TO CONTRACTOR SPEC 72.0201 MJC
4 09-14-84 APPROVED FOR CONST SPEC 72.0403 MJC
3 07-05-84 APPROVED FOR CONST SPEC 72.0201 MJC
3 07-05-84 APPROVED FOR CONST SPEC 74.0201 MJC
2 03-09-84 ISSUED FOR BID SPEC 72.0403 SBE
2 02-15-84 ISSUED FOR CLIENT REVIEW SBE
2 01-13-84 ISSUED TO CONTRACTOR SPEC 72.0201 SBE
2 01-13-84 ISSUED FOR BID SPEC 74.0201 SBE
1 09-20-83 ISSUED FOR CLIENT REVIEW (SYSTEM CONTROL PACKAGE) SBE
1 04-29-83 ISSUED FOR ADDENDUM 2 SPEC 72.0201 SBE
0 03-18-83 ISSUED FOR BID SPEC 72.0201 SBE

IP14_000038

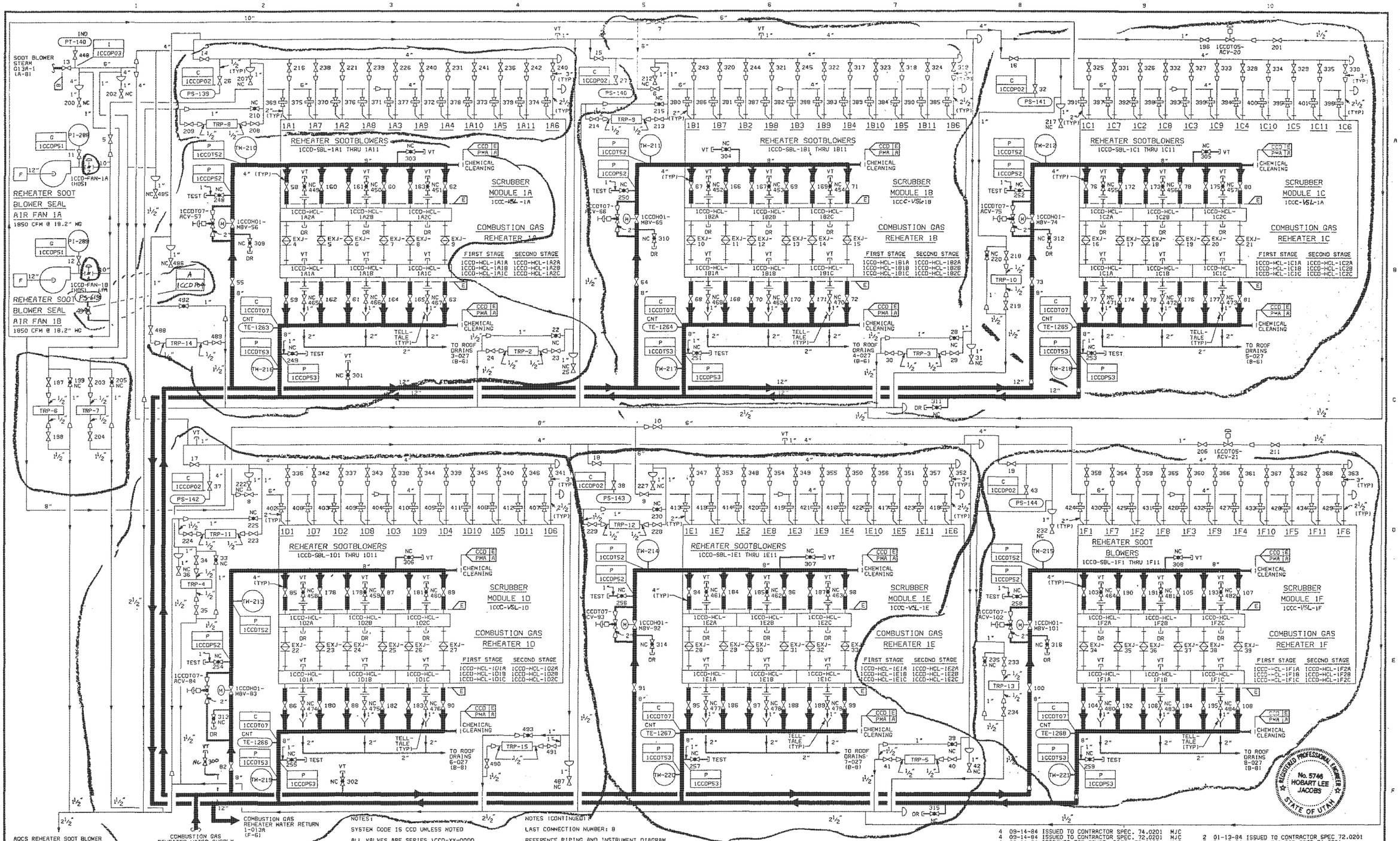

NOTES:

SYSTEM CODE IS CCD UNLESS NOTED

ALL VALVES ARE SERIES 1CCD-XX-0000 UNLESS NOTED

LAST VALVE NUMBER: 1CCD-XX-0494

NOTES (CONTINUED):

LAST CONNECTION NUMBER: 8

REFERENCE PIPING AND INSTRUMENT DIAGRAM 1PMA-M2050A FOR CHEMICAL CLEANING PIPING ARRANGEMENT.

REV	DATE	REVISIONS AND RECORD OF ISSUE	BY	CHK	APPR
5	5-10-85	GENERAL REVISIONS			
4	09-14-84	APPROVED FOR CONSTRUCTION SPEC. 74.0402	MJC	CLK	HLJ
3	07-05-84	APPROVED FOR CONSTRUCTION SPEC. 72.0201 AND 74.0201	MJC	CLK	HLJ
2	01-13-84	GENERAL REVISIONS	SBE		HLJ
1	04-29-83	GENERAL REVISIONS	SBE		HLJ
0	03-18-83	INITIAL ISSUE	AGG		HLJ

5 5-10-85 ISSUED TO CONTRACTOR 72.0403, 72.0201, 74.0201 DLS

4 09-14-84 ISSUED TO CONTRACTOR SPEC. 74.0201 MJC
4 09-14-84 ISSUED TO CONTRACTOR SPEC. 72.0201 MJC
4 09-14-84 APPROVED FOR CONST. SPEC. 72.0403 MJC
3 07-05-84 APPROVED FOR CONSTR. SPEC. 72.0201 MJC
3 07-05-84 APPROVED FOR CONST. SPEC. 74.0201 MJC
2 03-09-84 ISSUED FOR BID SPEC 72.0403 SBE
2 02-15-84 ISSUED FOR CLIENT REVIEW SBE
2 01-13-84 ISSUED TO CONTRACTOR SPEC 72.0201
2 01-13-84 ISSUED FOR BID SPEC 74.0201
1A 09-20-83 ISSUED FOR CLIENT REVIEW (SYSTEM CONTROL PACKAGE) SBE
1 04-29-83 ISSUED FOR ADDENDUM 2 SPEC 72.0201 SBE
0 03-18-83 ISSUED FOR BIDS SPEC 72.0201 MK

I HEREBY CERTIFY THAT THIS DOCUMENT WAS PREPARED BY ME OR UNDER MY DIRECT SUPERVISION AND THAT I AM A DULY REGISTERED PROFESSIONAL ENGINEER UNDER THE LAWS OF THE STATE OF UTAH

SIGNED Hobart Lee Jacobs
DATE 03-18-83 REG NO 5746

BLACK & VEATCH CONSULTING ENGINEERS

ENGINEER SER | DRAWN AGG | CHECKED C.L. KLING | DATE 07-02-86

IPP INTERMOUNTAIN POWER PROJECT

PIPING AND INSTRUMENT DIAGRAM
COMBUSTION GAS REHEAT

PROJECT DRAWING NUMBER: 9255 - 1CCD-M2013B REV 5

CODE CCD-52.1404
AREA

IP14_000039

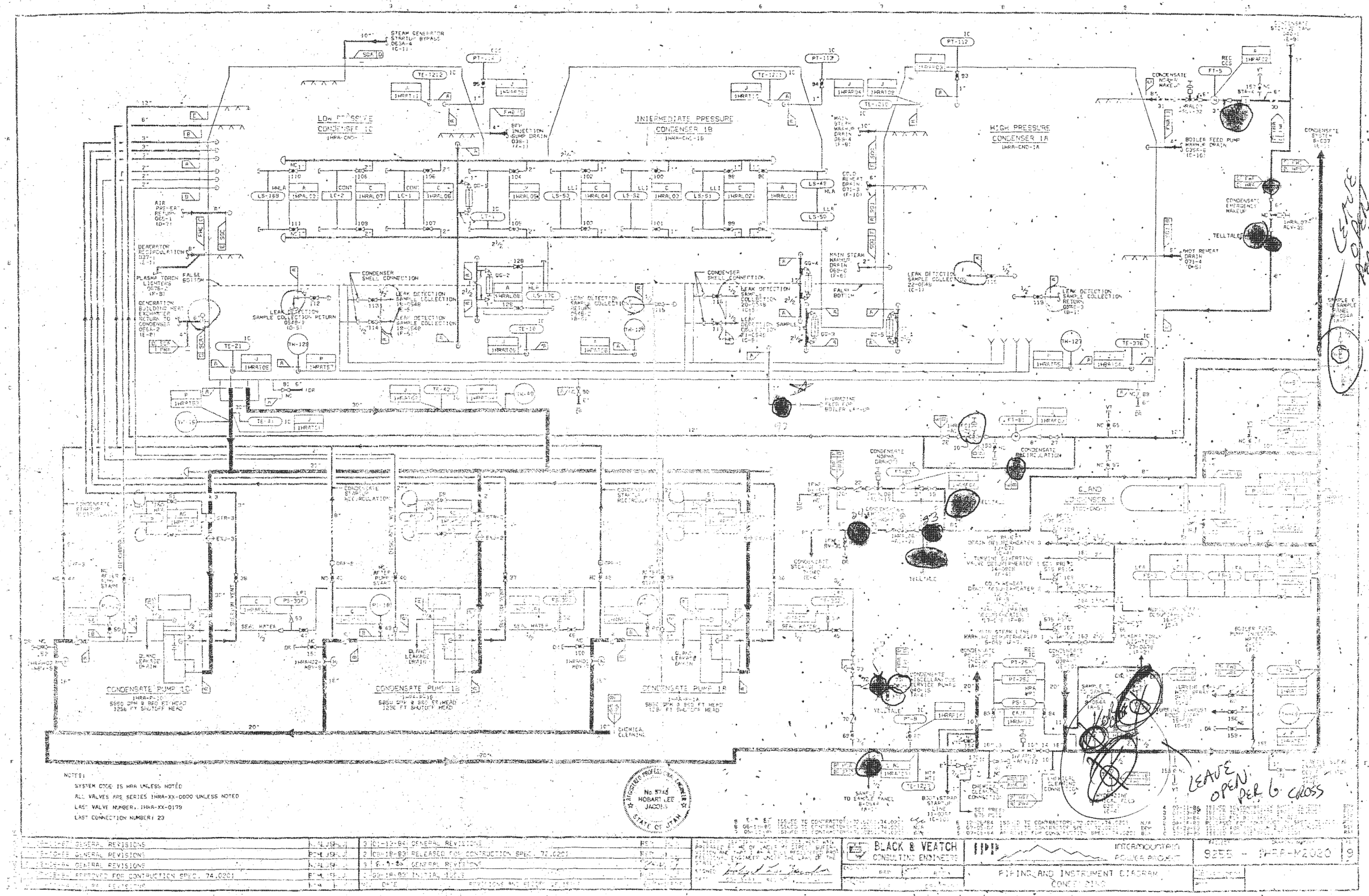

LEAVE OPEN PER G. CROSS

LEAVE OPEN PER G. CROSS

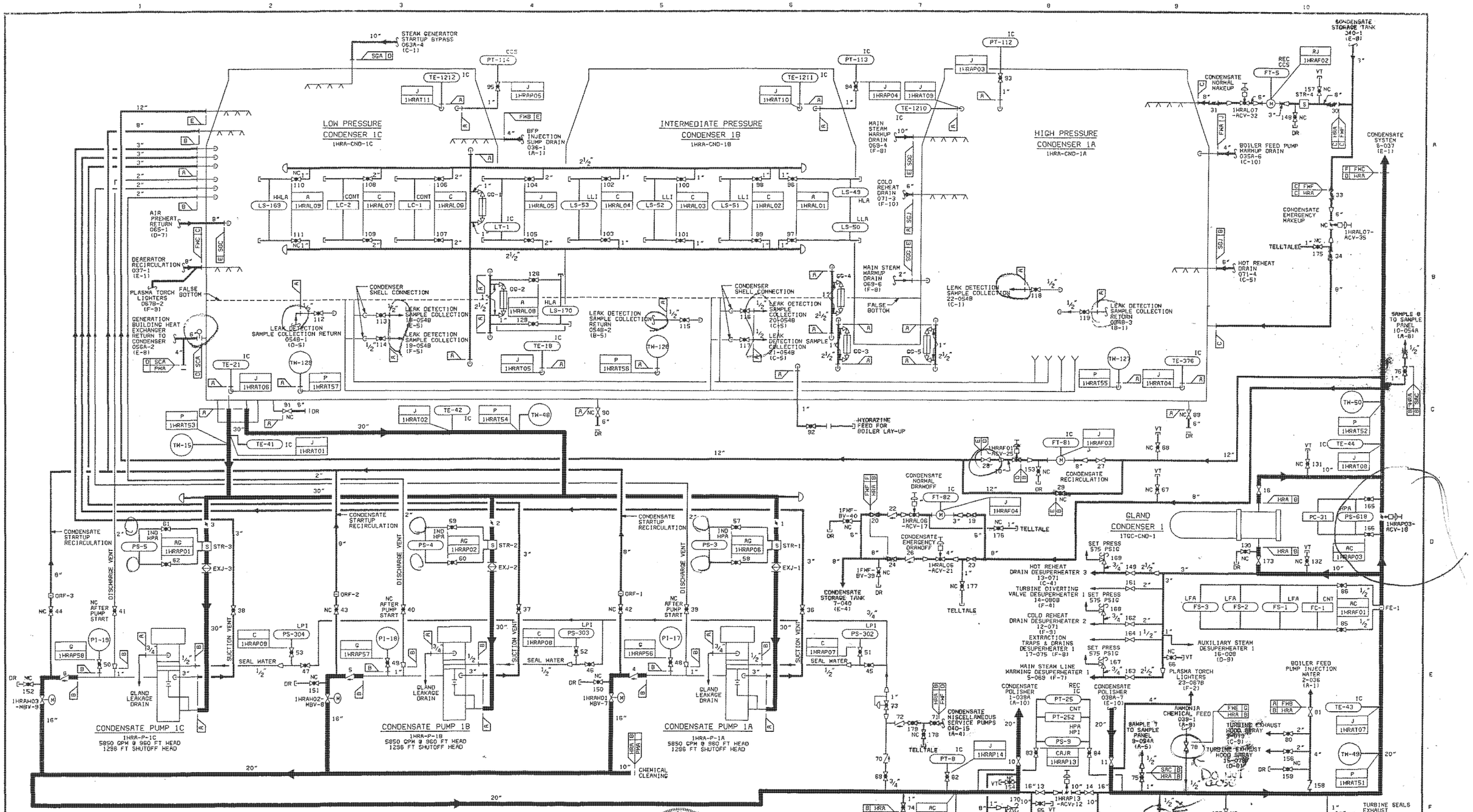

NOTES:

SYSTEM CODE IS HRA UNLESS NOTED

ALL VALVES ARE SERIES 1HRA-XX-0000 UNLESS NOTED

LAST VALVE NUMBER: 1HRA-XX-0179

LAST CONNECTION NUMBER: 23

REGISTERED PROFESSIONAL ENGINEER No. 5746 HOBART LEE JACOBS STATE OF UTAH

NO.	DATE	REVISIONS AND RECORD OF ISSUE	BY	CHK	APPR	FLM
9	08-11-85	GENERAL REVISIONS	NJA	LJS	HLJ	
8	06-25-85	GENERAL REVISIONS	BDM	LJS	HLJ	
7	05-10-85	GENERAL REVISIONS	NJA	LJS	HLJ	
6	12-06-84	GENERAL REVISIONS	BDM	LJS	HLJ	
5	07-05-84	APPROVED FOR CONTRUCTION SPEC. 74.0201	BDM	LJS	HLJ	
4	05-11-84	GENERAL REVISIONS	BDM	LJS	HLJ	
3	01-13-84	GENERAL REVISIONS	RSP		HLJ	
2	08-18-83	RELEASED FOR CONTRUCTION SPEC. 72.0201	RSP		HLJ	
1	8-9-83	GENERAL REVISIONS	RSP		HLJ	
0	03-18-83	INITIAL ISSUE	RSP		HLJ	

I HEREBY CERTIFY THAT THIS DOCUMENT WAS PREPARED BY ME OR UNDER MY DIRECT SUPERVISION AND THAT I AM A DULY REGISTERED PROFESSIONAL ENGINEER UNDER THE LAWS OF THE STATE OF UTAH

SIGNED Hobart Lee Jacobs

DATE 03-18-83 REG NO. 5746

BLACK & VEATCH CONSULTING ENGINEERS

ENGINEER RSP | DRAWN AGG | CHECKED LJS | DATE 09-07-84

IPP INTERMOUNTAIN POWER PROJECT

PIPING AND INSTRUMENT DIAGRAM
CONDENSING

PROJECT 9255 | DRAWING NUMBER 1HRA-M2020 | REV 9

CODE HRA-S2.2601

AREA

IP14_000041

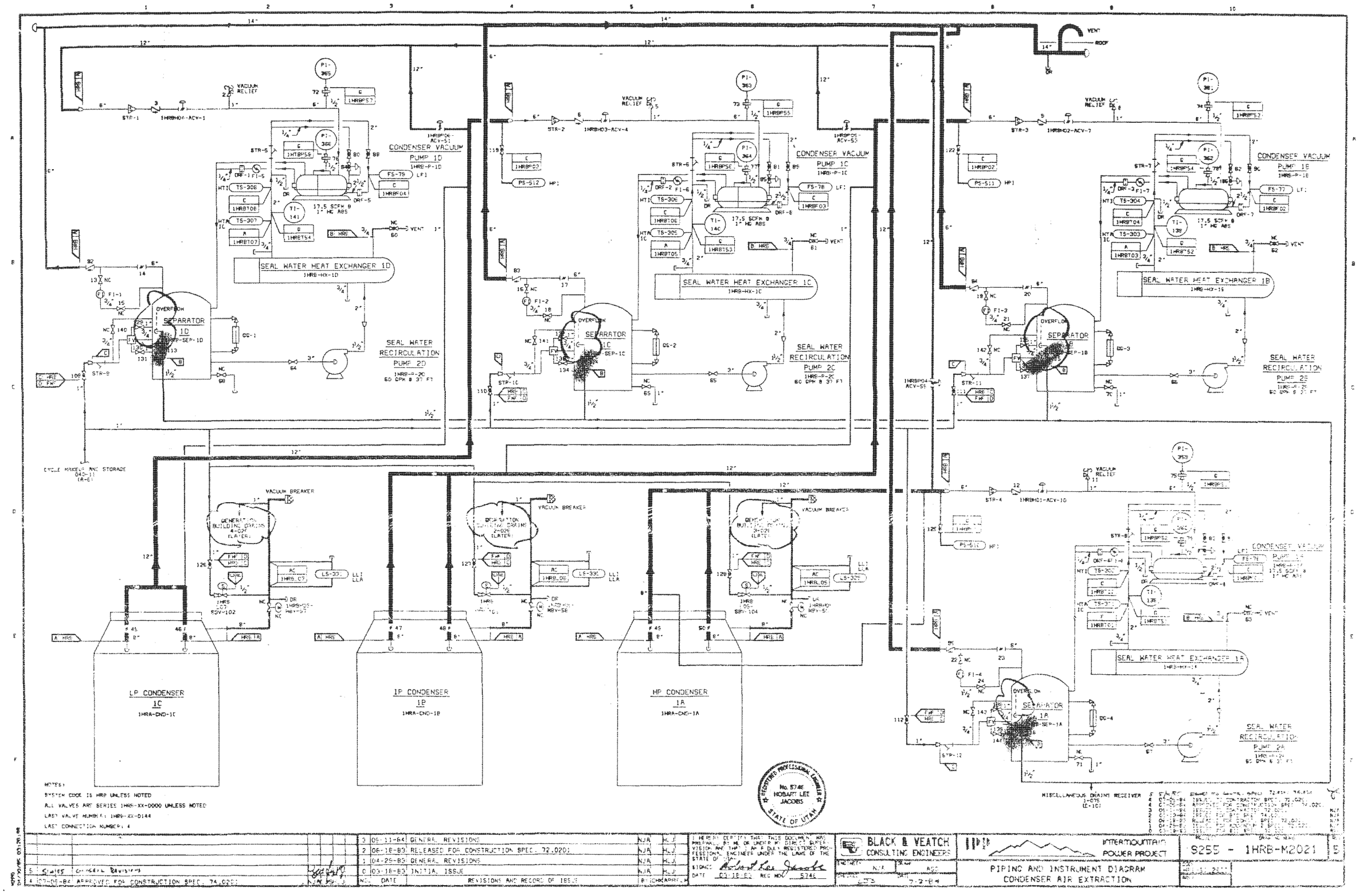
CONDENSER VACUUM PUMP 1D
1HRB-P-1D
SEAL WATER HEAT EXCHANGER 1D
1HRB-HX-1D
SEAL WATER RECIRCULATION PUMP 2D
1HRB-P-2D
60 GPM @ 35' FT
CONDENSER VACUUM PUMP 1C
1HRB-P-1C
SEAL WATER HEAT EXCHANGER 1C
1HRB-HX-1C
SEAL WATER RECIRCULATION PUMP 2C
1HRB-P-2C
60 GPM @ 35' FT
CONDENSER VACUUM PUMP 1B
1HRB-P-1B
SEAL WATER HEAT EXCHANGER 1B
1HRB-HX-1B
SEAL WATER RECIRCULATION PUMP 2B
1HRB-P-2B
60 GPM @ 35' FT
CONDENSER VACUUM PUMP 1A
1HRB-P-1A
SEAL WATER HEAT EXCHANGER 1A
1HRB-HX-1A
SEAL WATER RECIRCULATION PUMP 2A
1HRB-P-2A
60 GPM @ 35' FT
SEPARATOR 1D
1HRB-SEP-1D
SEPARATOR 1C
1HRB-SEP-1C
SEPARATOR 1B
1HRB-SEP-1B
SEPARATOR 1A
1HRB-SEP-1A
LP CONDENSER 1C
1HRA-CND-1C
IP CONDENSER 1B
1HRA-CND-1B
HP CONDENSER 1A
1HRA-CND-1A
VACUUM BREAKER
VACUUM RELIEF
VENT
ROOF
CYCLE MAKEUP AND STORAGE
MISCELLANEOUS DRAINS RECEIVER
NOTES:
SYSTEM CODE IS HRB UNLESS NOTED
ALL VALVES ARE SERIES 1HRB-XX-0000 UNLESS NOTED
LAST VALVE NUMBER: 1HRB-XX-0144
LAST CONNECTION NUMBER: 4
REGISTERED PROFESSIONAL ENGINEER
No. 5746
HOBART LEE JACOBS
STATE OF UTAH
BLACK & VEATCH
CONSULTING ENGINEERS
INTERMOUNTAIN POWER PROJECT
9255 - 1HRB-M2021
PIPING AND INSTRUMENT DIAGRAM
CONDENSER AIR EXTRACTION
REVISIONS AND RECORD OF ISSUE
3 05-11-84 GENERAL REVISIONS
2 06-16-83 RELEASED FOR CONSTRUCTION SPEC. 72.0201
1 04-29-83 GENERAL REVISIONS
0 03-18-83 INITIAL ISSUE
4 10-05-82 APPROVED FOR CONSTRUCTION SPEC. 74.0201

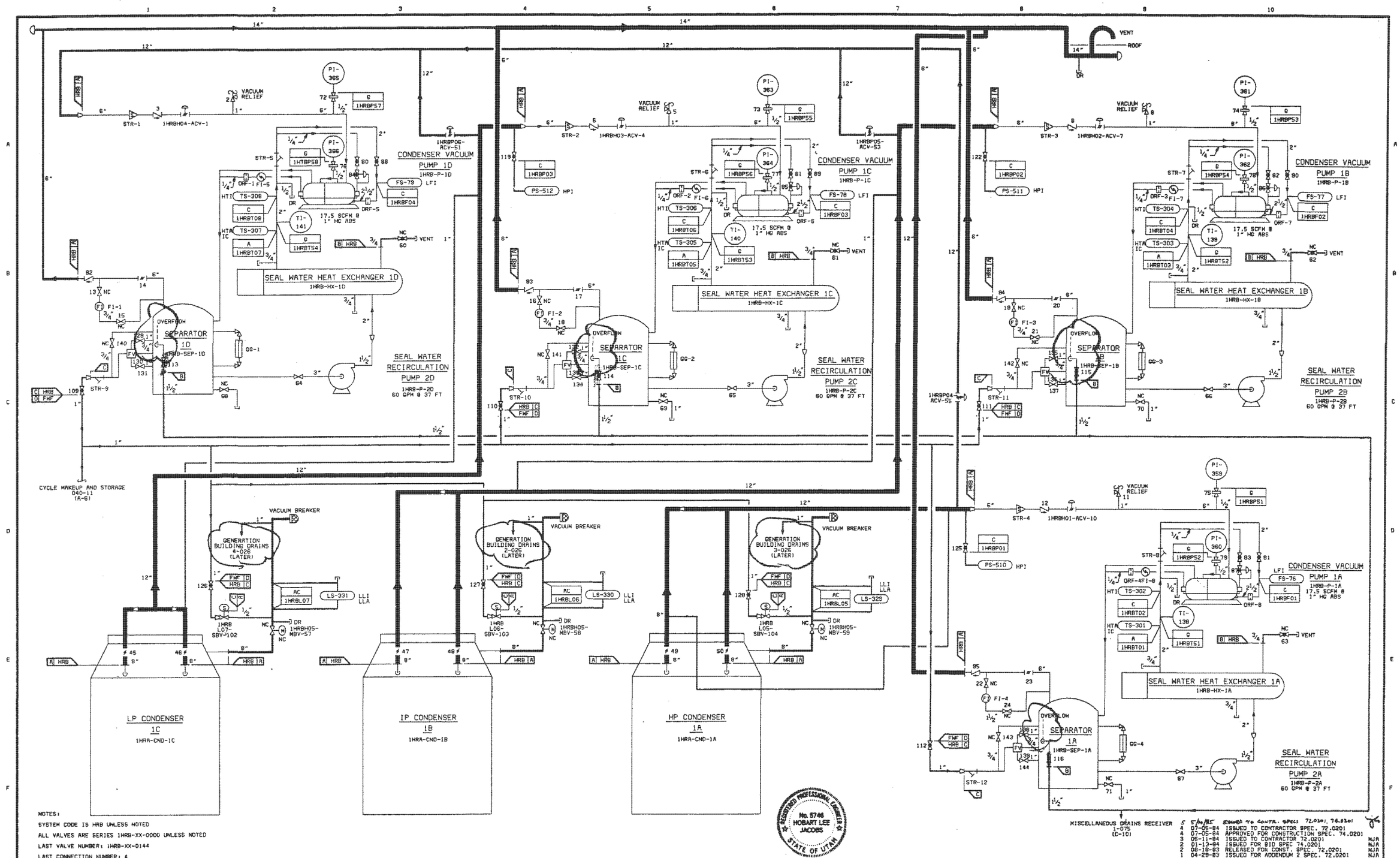

NOTES:
SYSTEM CODE IS HRB UNLESS NOTED
ALL VALVES ARE SERIES 1HRB-XX-0000 UNLESS NOTED
LAST VALVE NUMBER: 1HRB-XX-0144
LAST CONNECTION NUMBER: 4

NO.	DATE	REVISIONS AND RECORD OF ISSUE	BY	CHK	APP	FLM
5	5/10/85	GENERAL REVISIONS				
4	07-05-84	APPROVED FOR CONSTRUCTION SPEC. 74.0201	NJA	CJS	HLJ	
3	05-11-84	GENERAL REVISIONS	NJA		HLJ	
2	08-18-83	RELEASED FOR CONSTRUCTION SPEC. 72.0201	NJA		HLJ	
1	04-29-83	GENERAL REVISIONS	NJA		HLJ	
0	03-18-83	INITIAL ISSUE	NJA		HLJ	

I HEREBY CERTIFY THAT THIS DOCUMENT WAS PREPARED BY ME OR UNDER MY DIRECT SUPERVISION AND THAT I AM A DULY REGISTERED PROFESSIONAL ENGINEER UNDER THE LAWS OF THE STATE OF UTAH.
SIGNED Hobart Lee Jacobs
DATE 03-18-83 REG NO 5746

BLACK & VEATCH CONSULTING ENGINEERS
ENGINEER NJA DRAWN AGG
CHECKED LJS DATE 7-2-84

IPP INTERMOUNTAIN POWER PROJECT

PIPING AND INSTRUMENT DIAGRAM
CONDENSER AIR EXTRACTION

PROJECT 9255 - DRAWING NUMBER 1HRB-M2021 REV 5
CODE HRB-52.2602
AREA

M2PD 04/30/85 03:26:48

IP14_000043

Page 13

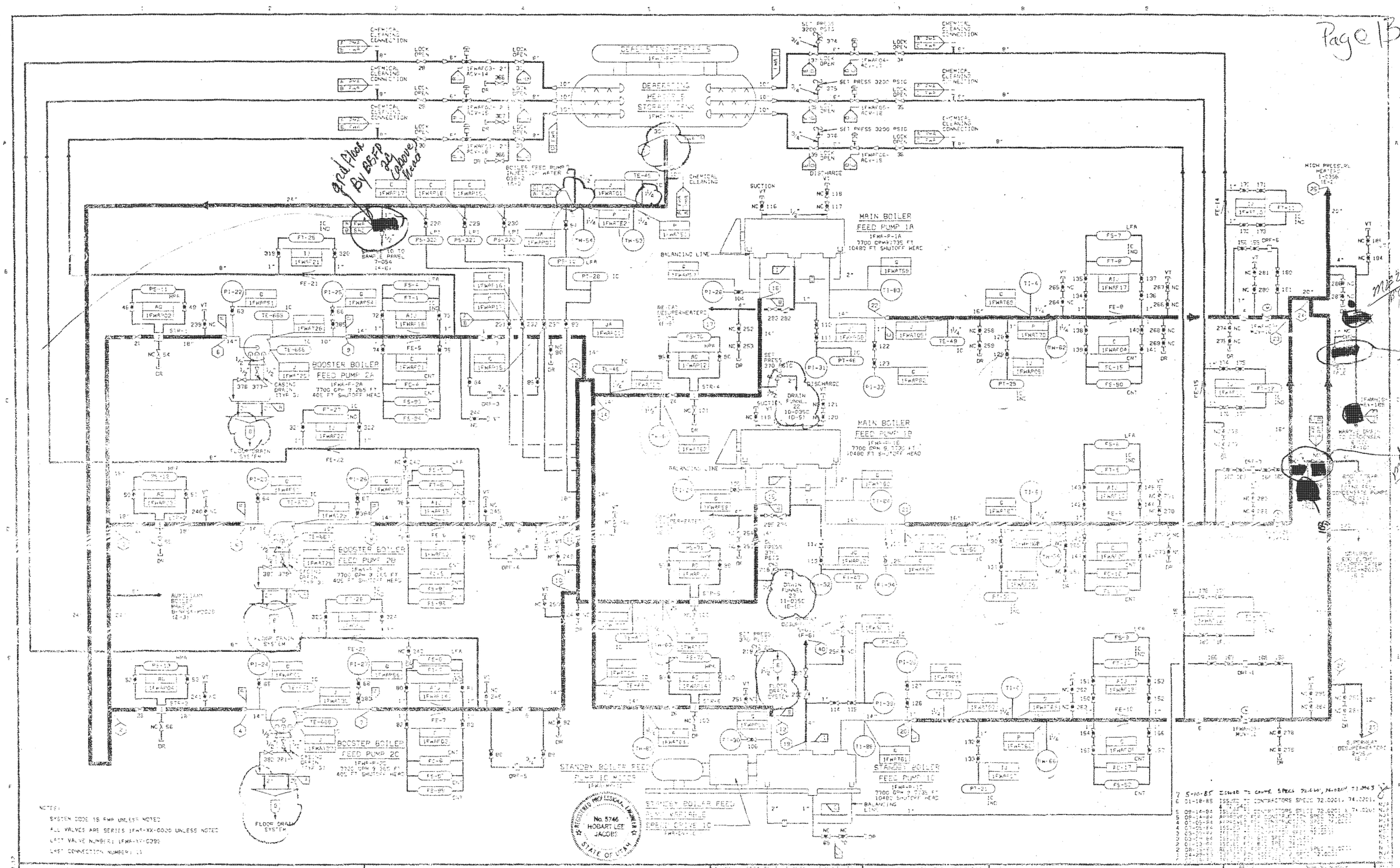

IP14_000044

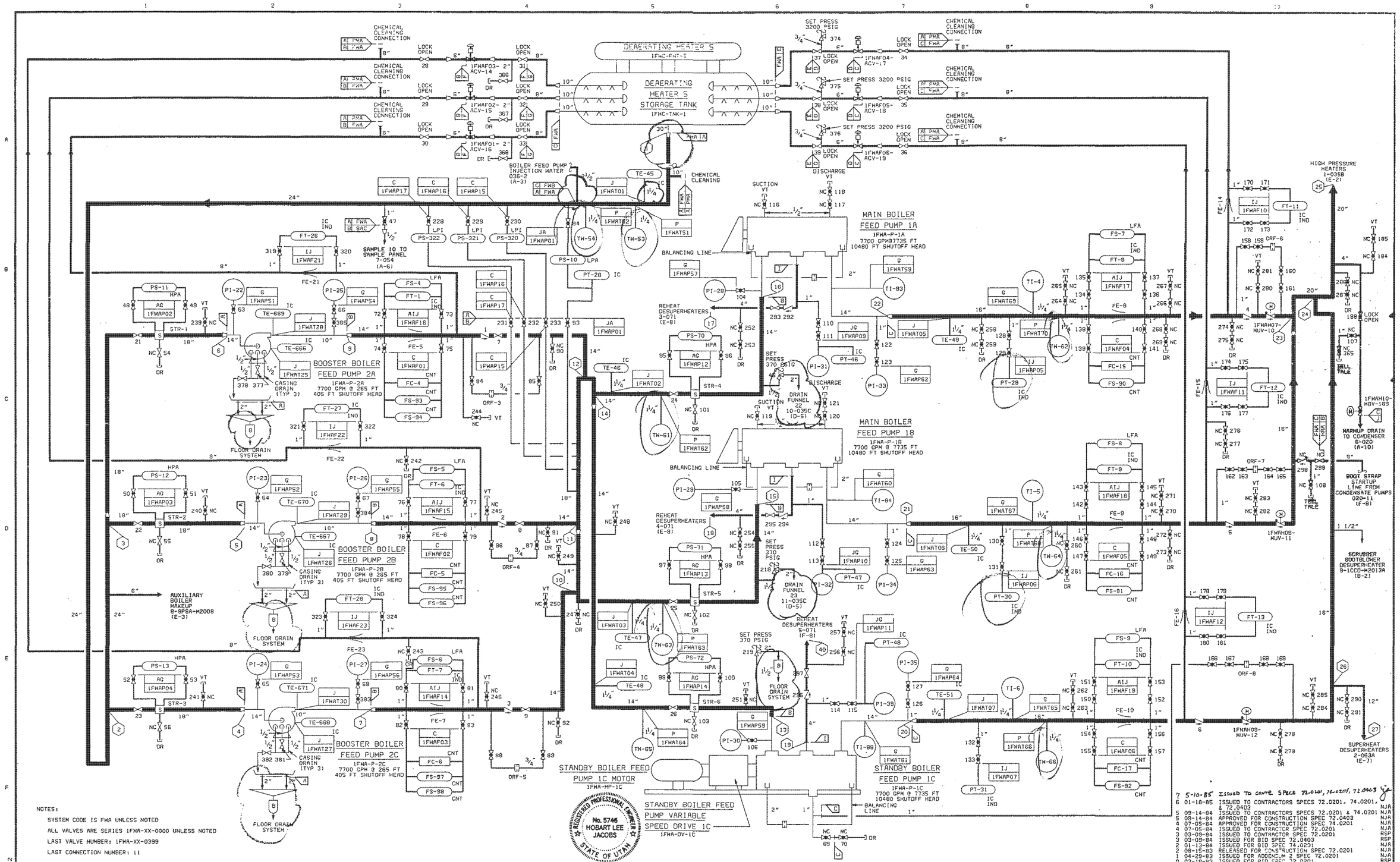

NOTES:

SYSTEM CODE IS FWA UNLESS NOTED

ALL VALVES ARE SERIES 1FWA-XX-0000 UNLESS NOTED

LAST VALVE NUMBER: 1FWA-XX-0399

LAST CONNECTION NUMBER: 11

REV	DATE	REVISIONS AND RECORD OF ISSUE	BY	CHK	APPD
7	5-10-85	GENERAL REVISIONS			
6	01-18-85	GENERAL REVISIONS	NJA	LJS	HLJ
5	09-14-84	APPROVED FOR CONSTRUCTION SPEC 72.0403	NJA	LJS	HLJ
4	07-05-84	APPROVED FOR CONSTRUCTION	NJA	LJS	HLJ
3	03-09-84	GENERAL REVISIONS	NJA		HLJ
2	08-18-83	RELEASED FOR CONSTRUCTION, SPEC 72.0201	NJA		HLJ
1	04-29-83	GENERAL REVISIONS	NJA		HLJ
0	03-18-83	INITIAL ISSUE	NJA		HLJ

I HEREBY CERTIFY THAT THIS DOCUMENT WAS PREPARED BY ME OR UNDER MY DIRECT SUPERVISION AND THAT I AM A DULY REGISTERED PROFESSIONAL ENGINEER UNDER THE LAWS OF THE STATE OF UTAH

SIGNED Hobart Lee Jacobs

DATE 3-18-83 REG NO. 5746

BLACK & VEATCH CONSULTING ENGINEERS

ENGINEER NJA DRAWN AGS

CHECKED LJS DATE 7/2/84

IPP INTERMOUNTAIN POWER PROJECT

PIPING AND INSTRUMENT DIAGRAM
BOILER FEED

PROJECT / DRAWING NUMBER: 9255 - 1FWA-M2035A REV 7

CODE FWA-52.3401

AREA

REV	DATE	REVISIONS	BY	CHK	APPD
7	5-10-85	ISSUED TO CONTR. SPECS 72.0201, 74.0201, 72.0403			
6	01-18-85	ISSUED TO CONTRACTORS SPECS 72.0201, 74.0201, & 72.0403	NJA		
5	09-14-84	ISSUED TO CONTRACTORS SPECS 72.0201 & 74.0201	NJA		
5	09-14-84	APPROVED FOR CONSTRUCTION SPEC 72.0403	NJA		
4	07-05-84	APPROVED FOR CONSTRUCTION SPEC 74.0201	NJA		
4	07-05-84	ISSUED TO CONTRACTOR SPEC 72.0201	NJA		
3	03-09-84	ISSUED TO CONTRACTOR SPEC 72.0201	RSP		
3	03-09-84	ISSUED FOR BID SPEC 72.0403	RSP		
2	01-13-84	ISSUED FOR BID SPEC 74.0251	NJA		
2	08-15-83	RELEASED FOR CONSTRUCTION SPEC 72.0201	NJA		
1	04-29-83	ISSUED FOR ADDENDUM 2 SPEC 72.0201	NJA		
0	03-18-83	ISSUED FOR BID SPEC 72.0201	RSP		

M210 04/30/85 17:00:12

IP14_000045

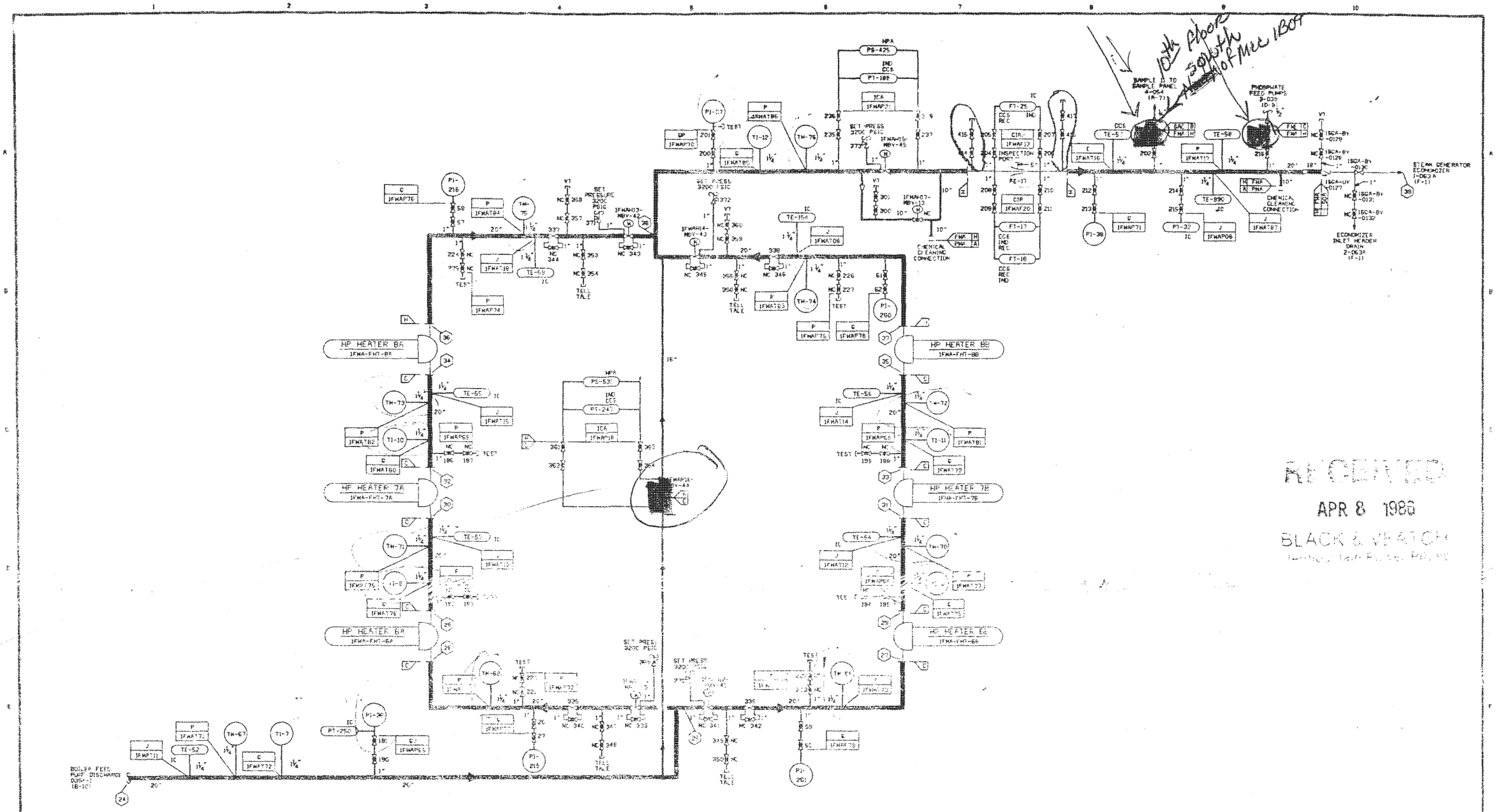

NOTES: SYSTEM CODE IS FWA UNLESS NOTED
ALL VALVES ARE SERIES 1FWA-XX-0000 UNLESS NOTED
LAST VALVE NUMBER: 1FWA-XX-0417
LAST CONNECTION NUMBER: 4

8	3-17-86	ADDED FE-17 TEST CONNECTION SHUTOFF VALVES	RCB	NJA	HLJ	3	3-9-84	GENERAL REVISIONS	NJA	HLJ
7	05-10-85	GENERAL REVISIONS	NJA	JSH	LJ	2	8-18-83	RELEASED FOR CONSTRUCTION SPEC 72.0201	NJA	HLJ
6	01-18-85	GENERAL REVISIONS	NJA	JSH	LJ	1	4-29-83	GENERAL REVISIONS	NJA	HLJ
5	09-14-84	APPROVED FOR CONSTRUCTION SPEC 72.0403	NJA	JSH	LJ	0	3-18-83	INITIAL ISSUE	NJA	HLJ
4	07-05-84	APPROVED FOR CONSTRUCTION SPEC 74.0201	NJA	JSH	LJ	NO.	DATE	REVISIONS AND RECORD OF ISSUE	BY	CHK

I HEREBY CERTIFY THAT THIS DOCUMENT WAS PREPARED BY ME OR UNDER MY DIRECT SUPERVISION AND THAT I AM A DULY REGISTERED PROFESSIONAL ENGINEER UNDER THE LAWS OF THE STATE OF UTAH.
SIGNED Richard Lee Jacobs
DATE 2-18-83 REG NO. 8748

REGISTERED PROFESSIONAL ENGINEER No. 8748 MORAR LEE JACOBS STATE OF UTAH

8	3-17-86	RCB	ISSUED TO CONTR SPEC 72.0201, 72.0403, 74.0201	RCB	
7	05-10-85	NJA	ISSUED TO CONTR SPEC 72.0201, 72.0403, 74.0201	NJA	
6	01-18-85	NJA	ISSUED TO CONTRACTORS SPECS 72.0201, 72.0403, 74.0201	NJA	
5	09-14-84	NJA	ISSUED TO CONTRACTORS SPECS 72.0403 & 72.0201	NJA	
5	09-14-84	NJA	APPROVED FOR CONSTRUCTION SPEC 72.0403	NJA	
4	07-05-84	NJA	ISSUED TO CONTRACTOR SPEC 72.0201	NJA	
4	07-05-84	NJA	APPROVED FOR CONSTRUCTION SPEC 74.0201	NJA	
3	03-09-84	RSP	ISSUED TO CONTRACTOR SPEC 72.0201	RSP	
3	03-09-84	RSP	ISSUED FOR BID SPEC 72.0403	RSP	
2	01-13-84	NJA	ISSUED FOR BID SPEC 74.0201	NJA	
2	08-18-83	NJA	RELEASED FOR CONST. SPEC. 72.0201	NJA	
1	04-29-83	NJA	ISSUED FOR ADDENDUM 2 SPEC 72.0201	NJA	
0	03-18-83	RSP	ISSUED FOR BID SPEC. 72.0201	RSP	

BLACK & VEATCH CONSULTING ENGINEERS

INTERMOUNTAIN POWER PROJECT

PROJ. 9255 - SCHEM. NUM. 1FWA-M2035B SHT. 8

DESIGNED NJA DRAWN AGS
CHECKED LJS DATE 07-07-84

PIPING AND INSTRUMENT DIAGRAM
BOILER FEED

DWG. 1-M-50 3403
REV.

RECEIVED
APR 8 1986
BLACK & VEATCH
CONSULTING ENGINEERS

IP14_000046

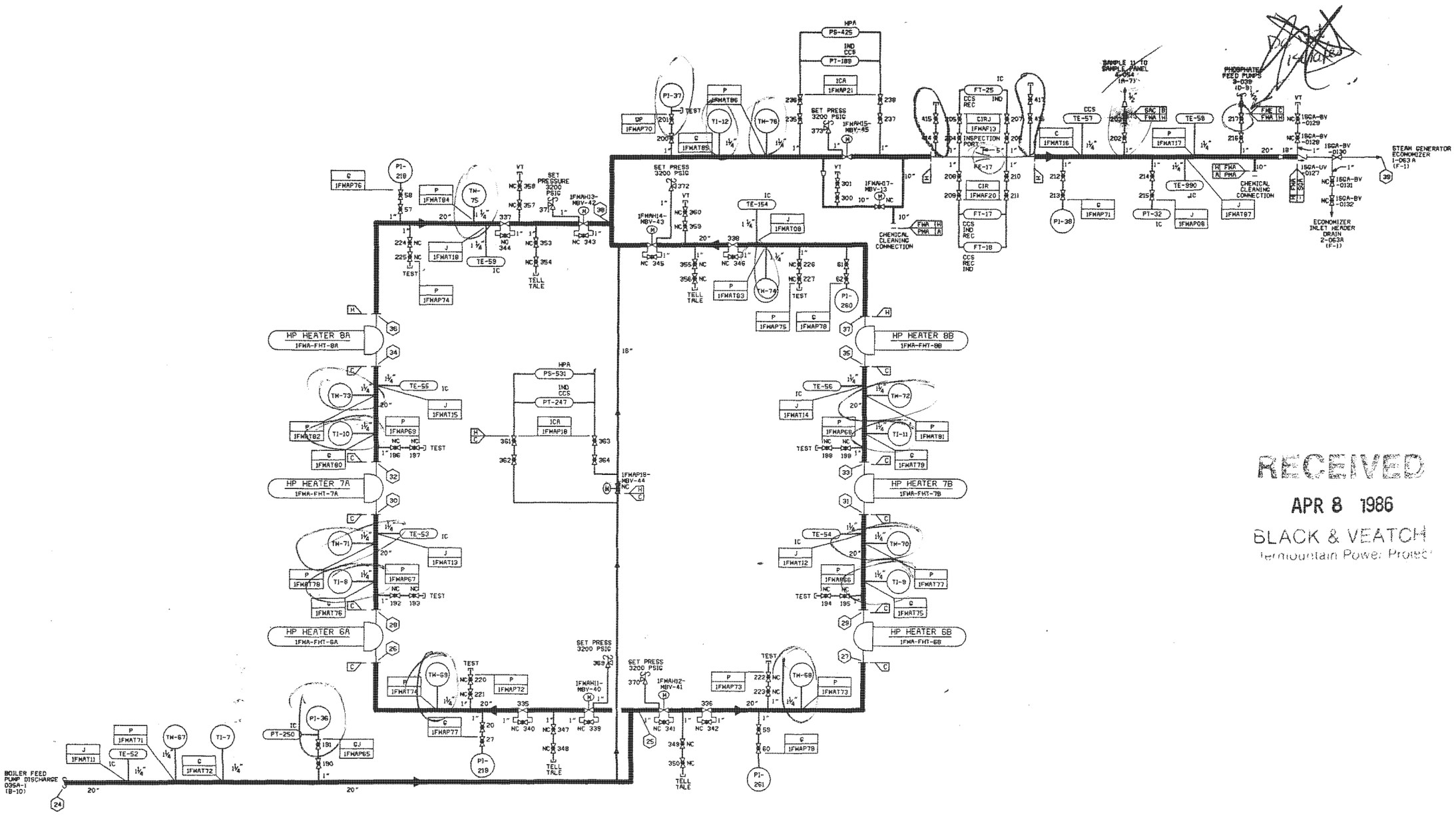

RECEIVED
APR 8 1986
BLACK & VEATCH
Intermountain Power Project

NOTES: SYSTEM CODE IS FWA UNLESS NOTED
ALL VALVES ARE SERIES 1FWA-XX-0000 UNLESS NOTED
LAST VALVE NUMBER: 1FWA-XX-0417
LAST CONNECTION NUMBER: 4

8	3-17-86	ISSUED TO CONTR SPEC 72.0201, 72.0403, 74.0201	RCB
7	05-10-85	ISSUED TO CONTR SPEC 72.0201, 72.0403, 74.0201	NJA
6	01-18-85	ISSUED TO CONTRACTORS SPECS 72.0201,72.0403,74.0201	NJA
5	09-14-84	ISSUED TO CONTRACTORS SPECS 72.0403 & 72.0201	NJA
5	09-14-84	APPROVED FOR CONSTRUCTION SPEC 72.0403	NJA
4	07-05-84	ISSUED TO CONTRACTOR SPEC 72.0201	NJA
4	07-05-84	APPROVED FOR CONSTRUCTION SPEC 74.0201	NJA
3	03-09-84	ISSUED TO CONTRACTOR SPEC 72.0201	RSP
3	03-09-84	ISSUED FOR BID SPEC 72.0403	RSP
2	01-13-84	ISSUED FOR BID SPEC 74.0201	NJA
2	09-18-83	RELEASED FOR CONST. SPEC. 72.0201	NJA
1	04-29-83	ISSUED FOR ADDENDUM 2 SPEC 72.0201	NJA
0	03-18-83	ISSUED FOR BID SPEC. 72.0201	RSP

NO.	DATE	REVISIONS AND RECORD OF ISSUE	BY	CHK	APP	LK
8	3-17-86	ADDED FE-17 TEST CONNECTION SHUTOFF VALVES	RCB			
7	05-10-85	GENERAL REVISIONS	NJA	JS	HL	J
6	01-18-85	GENERAL REVISIONS	NJA	JS	HL	J
5	09-14-84	APPROVED FOR CONSTRUCTION SPEC 72.0403	NJA	JS	HL	J
4	07-05-84	APPROVED FOR CONSTRUCTION SPEC 74.0201	NJA	JS	HL	J
3	3-9-84	GENERAL REVISIONS	NJA		HL	J
2	8-18-83	RELEASED FOR CONSTRUCTION SPEC 72.0201	NJA		HL	J
1	4-29-83	GENERAL REVISIONS	NJA		HL	J
0	3-18-83	INITIAL ISSUE	NJA		HL	J

I HEREBY CERTIFY THAT THIS DOCUMENT WAS PREPARED BY ME OR UNDER MY DIRECT SUPERVISION AND THAT I AM A DULY REGISTERED PROFESSIONAL ENGINEER UNDER THE LAWS OF THE STATE OF UTAH
SIGNED Hobart Lee Jacobs
DATE 3-18-83 REG NO. 5746

BLACK & VEATCH CONSULTING ENGINEERS
ENGINEER NJA DRAWN AGG
CHECKED LJS DATE 07-02-84

IPP INTERMOUNTAIN POWER PROJECT

PIPING AND INSTRUMENT DIAGRAM
BOILER FEED

PROJECT 9255 DRAWING NUMBER 1FWA-M2035B REV. 8
CODE 1FWA-52.3401
AREA

IP14_000047

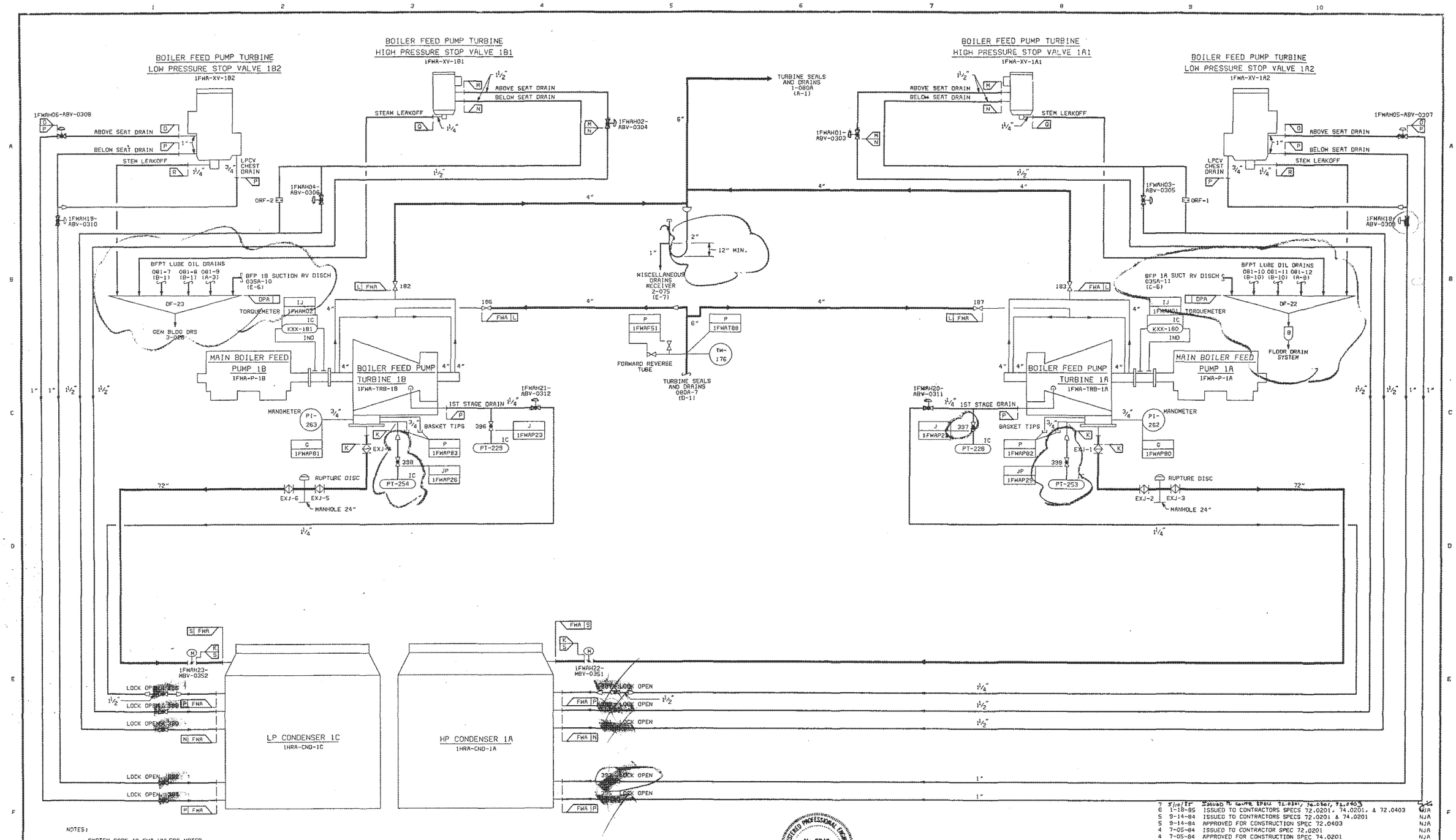

NOTES:

SYSTEM CODE IS FWA UNLESS NOTED

ALL VALVES ARE SERIES: 1FWA-XX-0000 UNLESS NOTED

LAST VALVE NUMBER: 1FWA-XX-0399

LAST CONNECTION NUMBER: 6

REGISTERED PROFESSIONAL ENGINEER No. 5746 HOBART LEE JACOBS STATE OF UTAH

BOILER FEED PUMP TURBINE
SEALS DRAINS AND EXHAUST

REV	DATE	REVISIONS AND RECORD OF ISSUE	BY	CHK	APPR
7	5/10/85	ISSUED TO CONTRACTORS SPECS 72.0201, 74.0201, 74.0403			
6	1-18-85	ISSUED TO CONTRACTORS SPECS 72.0201, 74.0201, & 72.0403	NJA		
5	9-14-84	ISSUED TO CONTRACTORS SPECS 72.0201 & 74.0201	NJA		
5	9-14-84	APPROVED FOR CONSTRUCTION SPEC 72.0403	NJA		
4	7-05-84	ISSUED TO CONTRACTOR SPEC 72.0201	NJA		
4	7-05-84	APPROVED FOR CONSTRUCTION SPEC 74.0201	NJA		
3	3-09-84	ISSUED TO CONTRACTOR SPEC 72.0201	RSP		
3	3-09-84	ISSUED FOR BID SPEC 72.0403	RSP		
2	1-13-84	ISSUED FOR BID SPEC 74.0201	NJA		
2	8-18-83	RELEASED FOR CONSTRUCTION SPEC 72.0201	NJA		
1	4-29-83	ISSUED FOR ADDENDUM 2 - SPEC 72.0201	NJA		
0	3-22-83	ISSUED FOR IN-HOUSE AND CLIENT REVIEW	SRE		
0	3-18-83	ISSUED FOR BID-SPEC 72.0201	NJA		

NO.	DATE	REVISIONS AND RECORD OF ISSUE	BY	CHK	APPR
7	5/10/85	GENERAL REVISIONS			
6	1-18-85	GENERAL REVISIONS	NJA	LJS	HLJ
5	9-14-84	APPROVED FOR CONSTRUCTION SPEC 72.0403	NJA	LJS	HLJ
4	7-5-84	APPROVED FOR CONSTRUCTION SPEC 74.0201	NJA	LJS	HLJ
3	3-9-84	GENERAL REVISIONS	NJA		HLJ
2	8-18-83	RELEASED FOR CONSTRUCTION SPEC 72.0201	NJA		HLJ
1	4-27-83	GENERAL REVISIONS	NJA		HLJ
0	3-18-83	INITIAL ISSUE	NJA		HLJ

I HEREBY CERTIFY THAT THIS DOCUMENT WAS PREPARED BY ME OR UNDER MY DIRECT SUPERVISION AND THAT I AM A DULY REGISTERED PROFESSIONAL ENGINEER UNDER THE LAWS OF THE STATE OF UTAH

SIGNED Hobart Lee Jacobs

DATE 3-18-83 REG NO. 5746

BLACK & VEATCH CONSULTING ENGINEERS

ENGINEER NJA | DRAWN AGG | CHECKED LJS | DATE 7/2/84

IPP INTERMOUNTAIN POWER PROJECT

PIPING AND INSTRUMENT DIAGRAM
BOILER FEED

PROJECT 9255 - 1FWA-M2035C | REV 7

CODE FWA-52.3401

AREA

IP14_000048

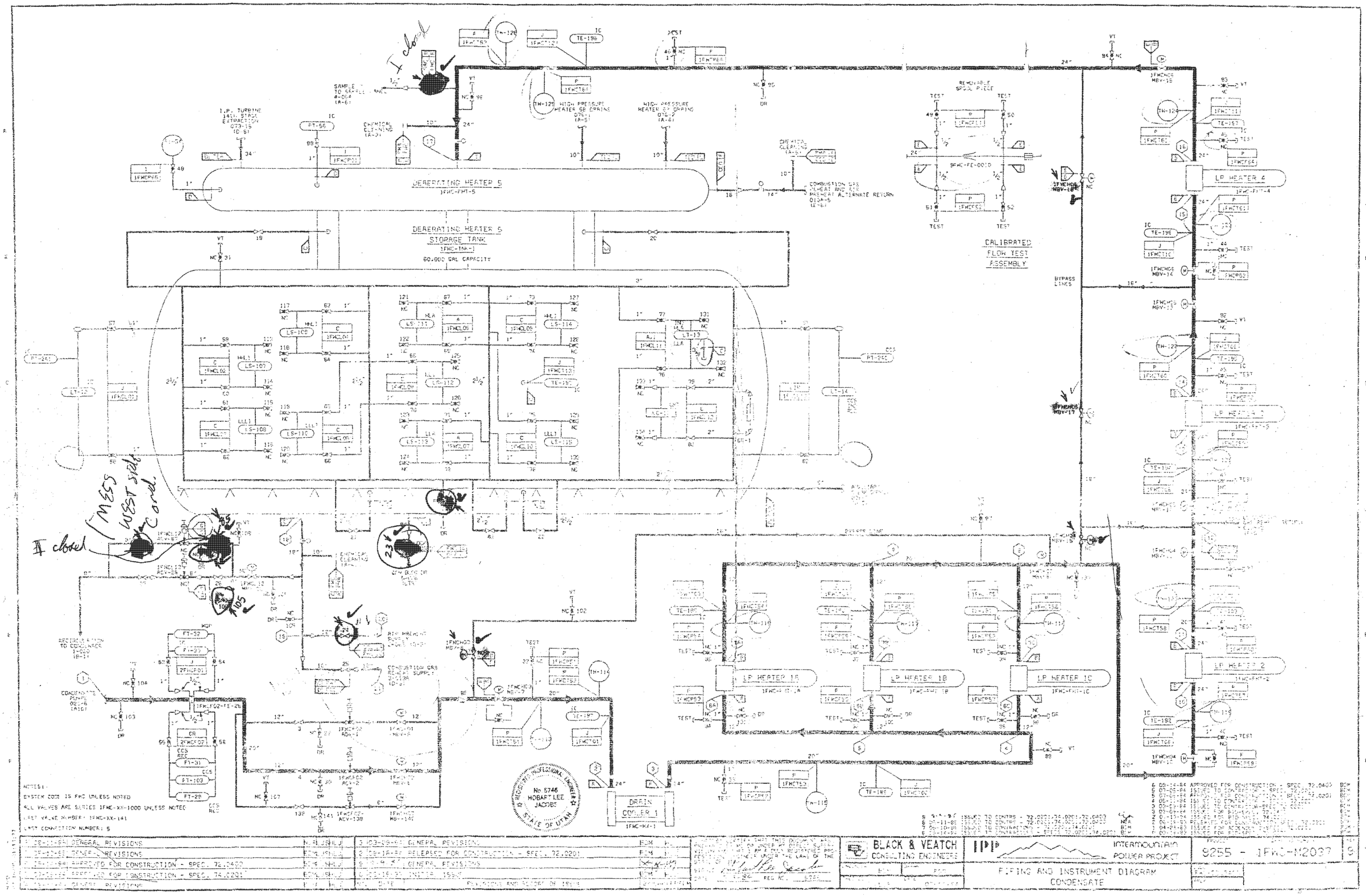
DEAERATING HEATER 5
DEAERATING HEATER 5 STORAGE TANK
60,000 GAL CAPACITY
CALIBRATED FLOW TEST ASSEMBLY
REMOVABLE SPOOL PIECE
LP HEATER 6
LP HEATER 1A
LP HEATER 1B
LP HEATER 1C
DRAIN COOLER 1
BYPASS LINES
CHEMICAL CLEANING
NOTES:
SYSTEM CODE IS FWC UNLESS NOTED
ALL VALVES ARE SERIES 1FWC-XX-1000 UNLESS NOTED
LAST VALVE NUMBER: 1FWC-XX-141
LAST CONNECTION NUMBER: 5
BLACK & VEATCH CONSULTING ENGINEERS
INTERMOUNTAIN POWER PROJECT
PIPING AND INSTRUMENT DIAGRAM CONDENSATE
9255 - 1FWC-M2037

IP14_000049

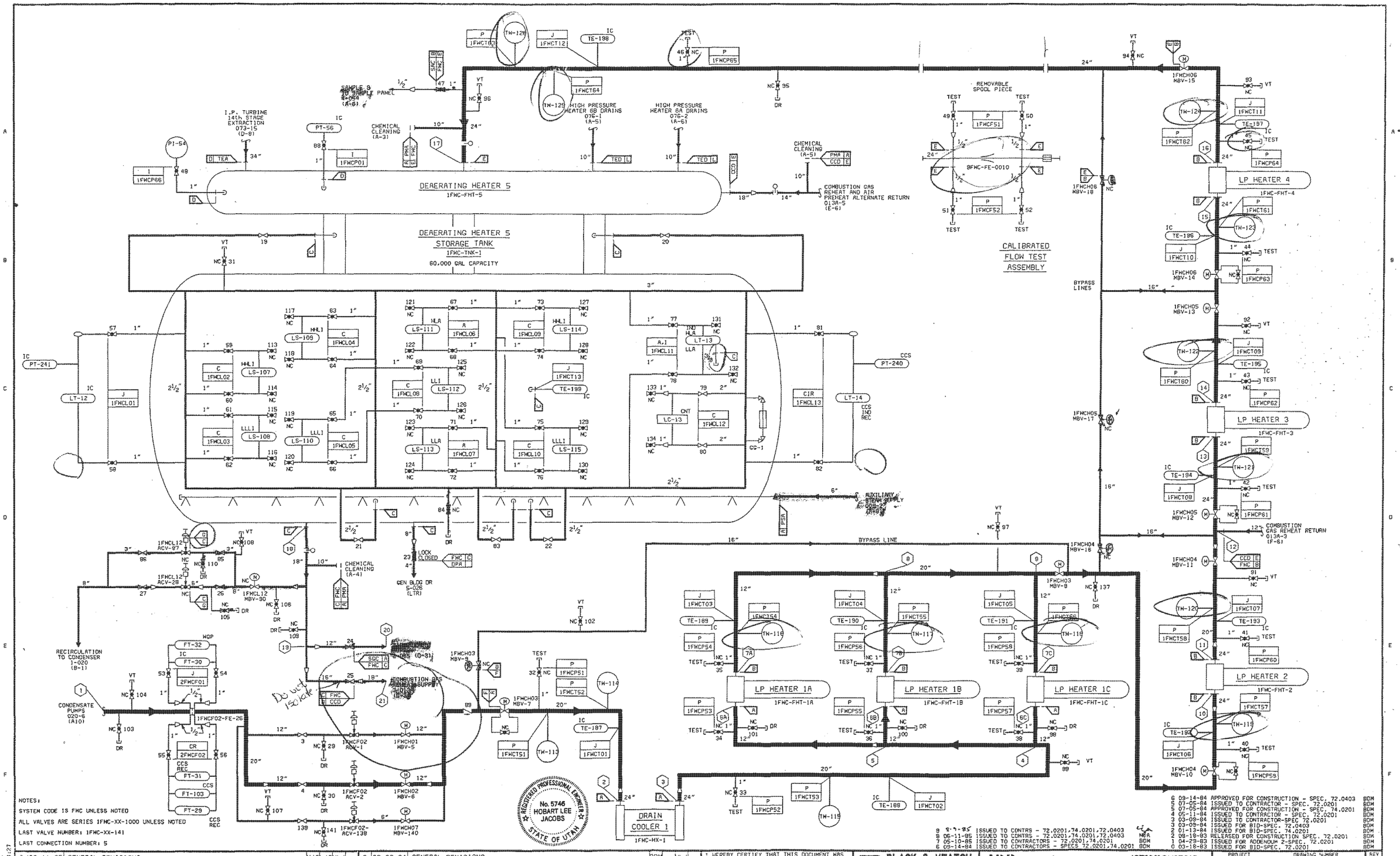

NOTES:

SYSTEM CODE IS FWC UNLESS NOTED

ALL VALVES ARE SERIES 1FWC-XX-1000 UNLESS NOTED

LAST VALVE NUMBER: 1FWC-XX-141

LAST CONNECTION NUMBER: 5

NO.	DATE	REVISIONS AND RECORD OF ISSUE	BY	CHK	APP	FLM
8	06-11-85	GENERAL REVISIONS	NJA	LJS	HLJ	
7	05-10-85	GENERAL REVISIONS	BDM	LJS	HLJ	
6	09-14-84	APPROVED FOR CONSTRUCTION - SPEC. 72.0403	BDM	LJS	HLJ	
5	07-05-84	APPROVED FOR CONSTRUCTION - SPEC. 74.0201	BDM	LJS	HLJ	
4	05-11-84	GENERAL REVISIONS	BDM		HLJ	
3	03-09-84	GENERAL REVISIONS	BDM		HLJ	
2	08-18-84	RELEASED FOR CONSTRUCTION - SPEC. 72.0201	BDM		HLJ	
9	8-9-85	GENERAL REVISIONS				
0	03-18-83	INITIAL ISSUE	BDM		HLJ	

I HEREBY CERTIFY THAT THIS DOCUMENT WAS PREPARED BY ME OR UNDER MY DIRECT SUPERVISION AND THAT I AM A DULY REGISTERED PROFESSIONAL ENGINEER UNDER THE LAWS OF THE STATE OF UTAH

SIGNED Robert Lee Jacobs

DATE 7-3-84 REG NO. 5746

NO.	DATE	REVISIONS AND RECORD OF ISSUE	BY	CHK	APP	FLM
9	8-9-85	ISSUED TO CONTRS - 72.0201,74.0201,72.0403				
8	06-11-85	ISSUED TO CONTRS - 72.0201,74.0201,72.0403	NJA			
7	05-10-85	ISSUED TO CONTRACTORS - 72.0201,74.0201	BDM			
6	09-14-84	ISSUED TO CONTRACTORS - SPECS 72.0201,74.0201	BDM			
6	09-14-84	APPROVED FOR CONSTRUCTION - SPEC. 72.0403	BDM			
5	07-05-84	ISSUED TO CONTRACTOR - SPEC. 72.0201	BDM			
5	07-05-84	APPROVED FOR CONSTRUCTION - SPEC. 74.0201	BDM			
4	05-11-84	ISSUED TO CONTRACTOR - SPEC. 72.0201	BDM			
3	03-09-84	ISSUED TO CONTRACTOR-SPEC 72.0201	BDM			
3	03-09-84	ISSUED FOR BID-SPEC. 72.0403	BDM			
2	01-13-84	ISSUED FOR BID-SPEC. 74.0201	BDM			
2	08-18-83	RELEASED FOR CONSTRUCTION SPEC. 72.0201	BDM			
1	04-29-83	ISSUED FOR ADDENDUM 2-SPEC. 72.0201	BDM			
0	03-18-83	ISSUED FOR BID-SPEC. 72.0201	BDM			

BLACK & VEATCH CONSULTING ENGINEERS

ENGINEER BDM DRAWN AGG

CHECKED LJS DATE 07-02-84

IPP INTERMOUNTAIN POWER PROJECT

PIPING AND INSTRUMENT DIAGRAM
CONDENSATE

PROJECT DRAWING NUMBER REV
9255 - 1FWC-M2037 9

CODE FWC-52.3403

AREA

M2PD 07/16/85 01:43:27

IP14_000050

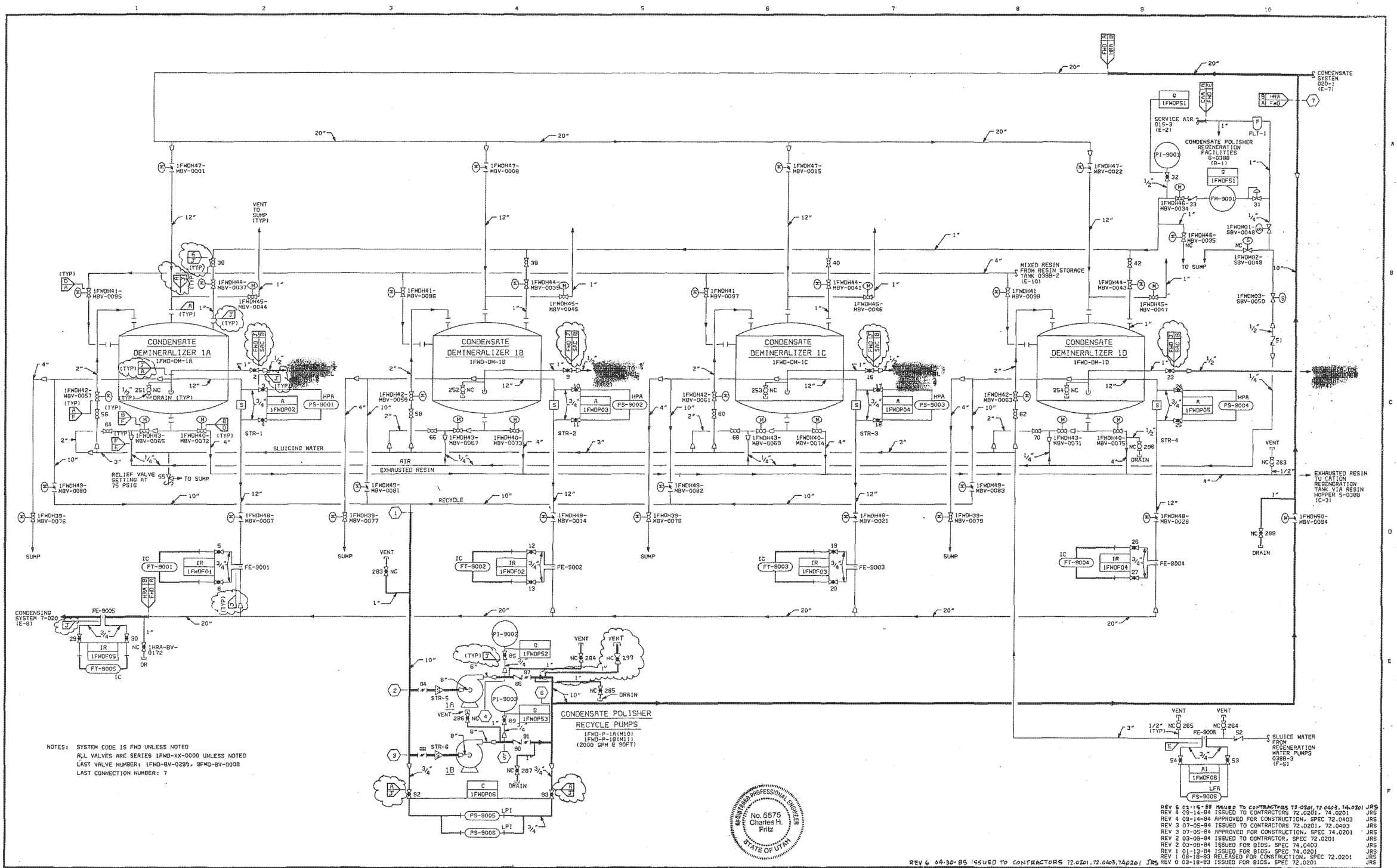
CONDENSATE DEMINERALIZER 1A
1FWD-DM-1A
CONDENSATE DEMINERALIZER 1B
1FWD-DM-1B
CONDENSATE DEMINERALIZER 1C
1FWD-DM-1C
CONDENSATE DEMINERALIZER 1D
1FWD-DM-1D
CONDENSATE SYSTEM 020-1 (E-7)
SERVICE AIR 015-3 (E-2)
CONDENSATE POLISHER REGENERATION FACILITIES 6-0388 (B-1)
MIXED RESIN FROM RESIN STORAGE TANK 0388-2 (E-10)
SLUICING WATER
EXHAUSTED RESIN
RECYCLE
RELIEF VALVE SETTING AT 75 PSIG
TO SUMP
VENT TO SUMP (TYP)
CONDENSING SYSTEM 7-020 (E-8)
CONDENSATE POLISHER RECYCLE PUMPS
1FWD-P-1A(M10)
1FWD-P-1B(M11)
(2000 GPM @ 90FT)
SLUICE WATER FROM REGENERATION WATER PUMPS 0388-3 (F-5)
EXHAUSTED RESIN TO CATION REGENERATION TANK VIA RESIN HOPPER S-0388 (C-3)
NOTES: SYSTEM CODE IS FWD UNLESS NOTED
ALL VALVES ARE SERIES 1FWD-XX-0000 UNLESS NOTED
LAST VALVE NUMBER: 1FWD-BV-0299, 9FWD-BV-0008
LAST CONNECTION NUMBER: 7
REV 5 03-15-85 ISSUED TO CONTRACTORS 72.0201, 72.0403, 74.0201 JRS
REV 4 09-14-84 ISSUED TO CONTRACTORS 72.0201, 74.0201 JRS
REV 4 09-14-84 APPROVED FOR CONSTRUCTION, SPEC 72.0403 JRS
REV 3 07-05-84 ISSUED TO CONTRACTORS 72.0201, 72.0403 JRS
REV 3 07-05-84 APPROVED FOR CONSTRUCTION, SPEC 74.0201 JRS
REV 2 03-09-84 ISSUED TO CONTRACTOR, SPEC 72.0201 JRS
REV 2 03-09-84 ISSUED FOR BIDS, SPEC 74.0403 JRS
REV 1 01-13-84 ISSUED FOR BIDS, SPEC 74.0201 JRS
REV 1 08-18-83 RELEASED FOR CONSTRUCTION, SPEC 72.0201 JRS
REV 0 03-18-83 ISSUED FOR BIDS, SPEC 72.0201 JRS
REV 6 04-30-85 ISSUED TO CONTRACTORS 72.0201, 72.0403, 74.0201 JRS
PROFESSIONAL ENGINEER No. 5575 Charles H. Fritz STATE OF UTAH
BLACK & VEATCH CONSULTING ENGINEERS
INTERMOUNTAIN POWER PROJECT
PIPING AND INSTRUMENT DIAGRAM
CONDENSATE POLISHING
9255 - 1FWD-M2038A
REV 6
ENGINEER T.L. STOUT
DRAWN AGG
FWD 52.3404
I HEREBY CERTIFY THAT THIS DOCUMENT WAS PREPARED BY ME OR UNDER MY DIRECT SUPERVISION AND THAT I AM A DULY REGISTERED PROFESSIONAL ENGINEER UNDER THE LAWS OF THE STATE OF UTAH.
SIGNED Charles H. Fritz
DATE 03-18-83 REG NO. 5575
6 04-30-85 GENERAL REVISIONS
5 02-15-85 GENERAL REVISIONS
4 09-14-84 APPROVED FOR CONSTRUCTION, SPEC 72.0403
3 07-05-84 APPROVED FOR CONSTRUCTION, SPEC 74.0201
2 03-09-84 GENERAL REVISIONS
1 08-18-83 RELEASED FOR CONSTRUCTION, SPEC 72.0201
0 03-18-83 INITIAL ISSUE
NO. DATE REVISIONS AND RECORD OF ISSUE BY CHK APP FLM

IP14_000051

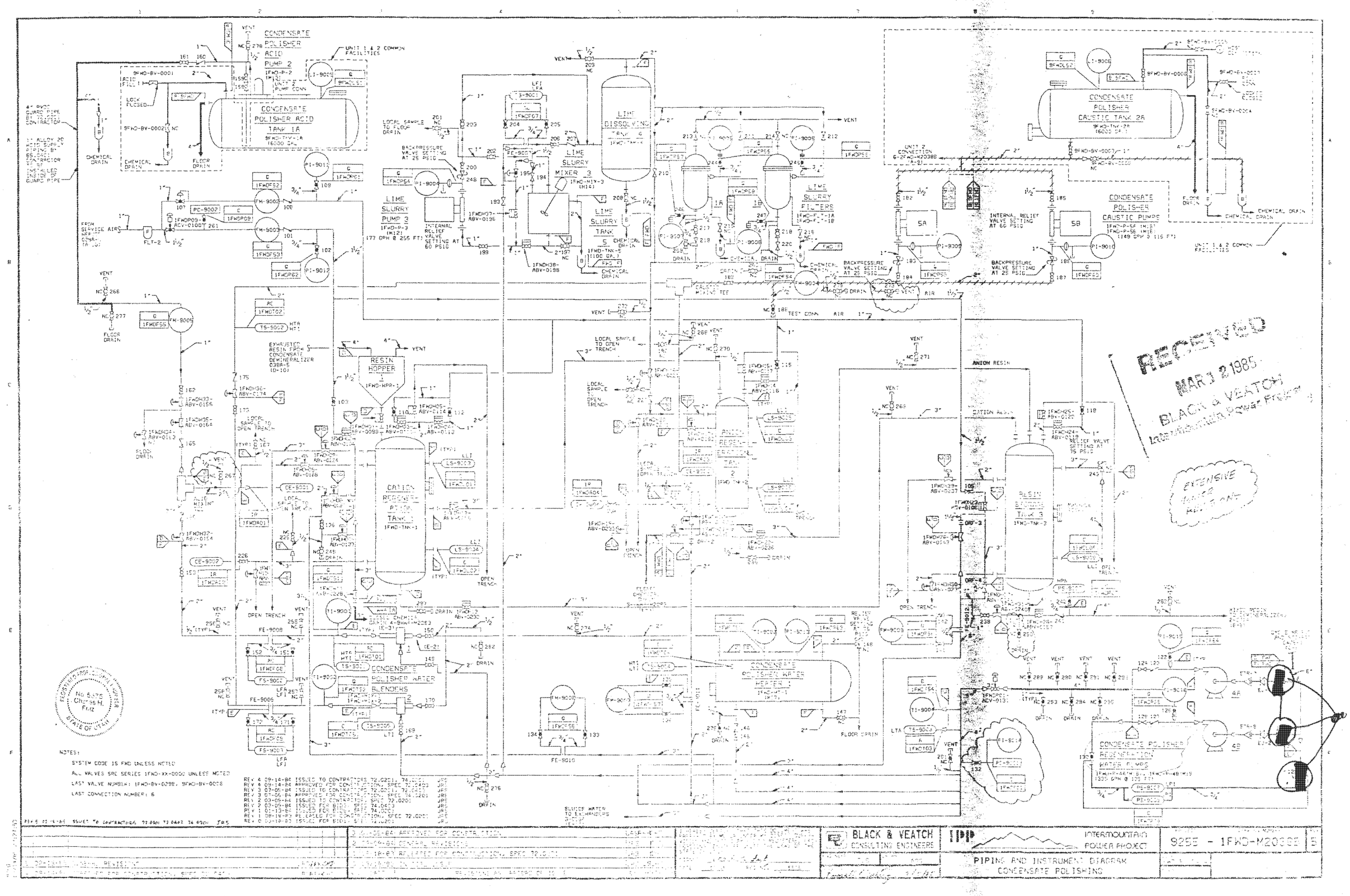

RECEIVED MAR 12 1985 BLACK & VEATCH Intermountain Power Project

EXTENSIVE WATER REVISIONS

IP14_000052

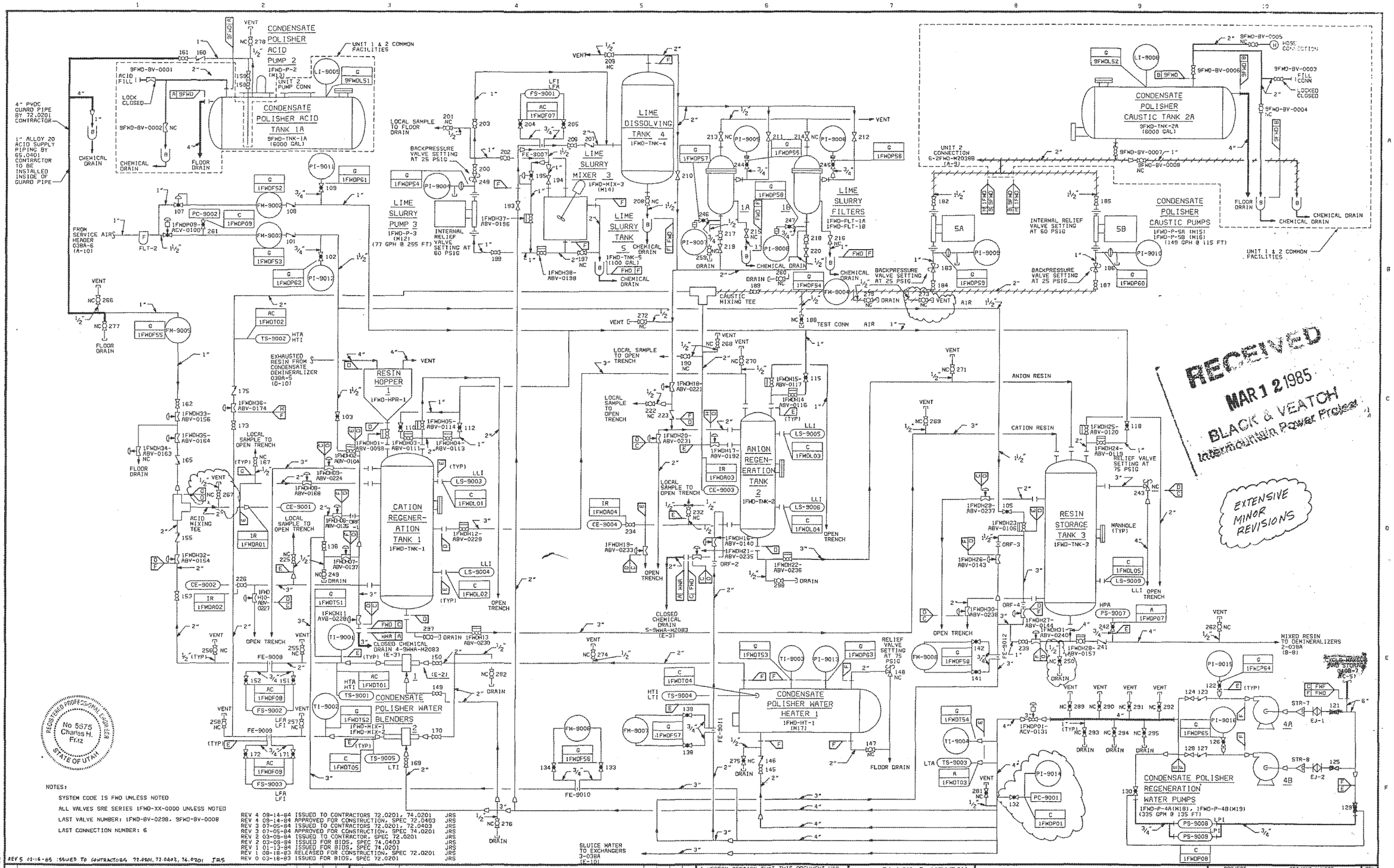

NOTES:

SYSTEM CODE IS FWD UNLESS NOTED

ALL VALVES SRE SERIES 1FWD-XX-0000 UNLESS NOTED

LAST VALVE NUMBER: 1FWD-BV-0298, 9FWD-BV-0008

LAST CONNECTION NUMBER: 6

REV 5 02-16-85	ISSUED TO CONTRACTORS 72.0201, 72.0403, 74.0201	JRS
REV 4 09-14-84	ISSUED TO CONTRACTORS 72.0201, 74.0201	JRS
REV 4 09-14-84	APPROVED FOR CONSTRUCTION, SPEC 72.0403	JRS
REV 3 07-05-84	ISSUED TO CONTRACTORS 72.0201, 72.0403	JRS
REV 3 07-05-84	APPROVED FOR CONSTRUCTION, SPEC 74.0201	JRS
REV 2 03-09-84	ISSUED TO CONTRACTOR, SPEC 72.0201	JRS
REV 2 03-09-84	ISSUED FOR BIDS, SPEC 74.0403	JRS
REV 1 01-13-84	ISSUED FOR BIDS, SPEC 74.0201	JRS
REV 1 08-18-83	RELEASED FOR CONSTRUCTION, SPEC 72.0201	JRS
REV 0 03-18-83	ISSUED FOR BIDS, SPEC 72.0201	JRS

NO.	DATE	REVISIONS AND RECORD OF ISSUE	BY	CHK	APPRL
5	02-15-85	GENERAL REVISIONS	JRS	RRH	CHF
4	09-14-84	APPROVED FOR CONSTRUCTION, SPEC 72.0403	JRS	RRH	CHF
3	07-05-84	APPROVED FOR CONSTRUCTION	JRS	RRH	CHF
2	03-09-84	GENERAL REVISIONS	JRS		CHF
1	08-18-83	RELEASED FOR CONSTRUCTION, SPEC 72.0201	JRS		CHF
0	03/18/83	INITIAL ISSUE	JRS	TLS	CHF

I HEREBY CERTIFY THAT THIS DOCUMENT WAS PREPARED BY ME OR UNDER MY DIRECT SUPERVISION AND THAT I AM A DULY REGISTERED PROFESSIONAL ENGINEER UNDER THE LAWS OF THE STATE OF UTAH

SIGNED Charles H. Fritz

DATE 03-18-83 REG NO. 5575

BLACK & VEATCH CONSULTING ENGINEERS

ENGINEER TLS DRAWN ACG

CHECKED Russell R. Kelley DATE 2/15/85

IPP INTERMOUNTAIN POWER PROJECT

PIPING AND INSTRUMENT DIAGRAM
CONDENSATE POLISHING

PROJECT / DRAWING NUMBER: 9255 - 1FWD-M2038B REV 5

CODE FWD 52.2404

AREA

IP14_000053

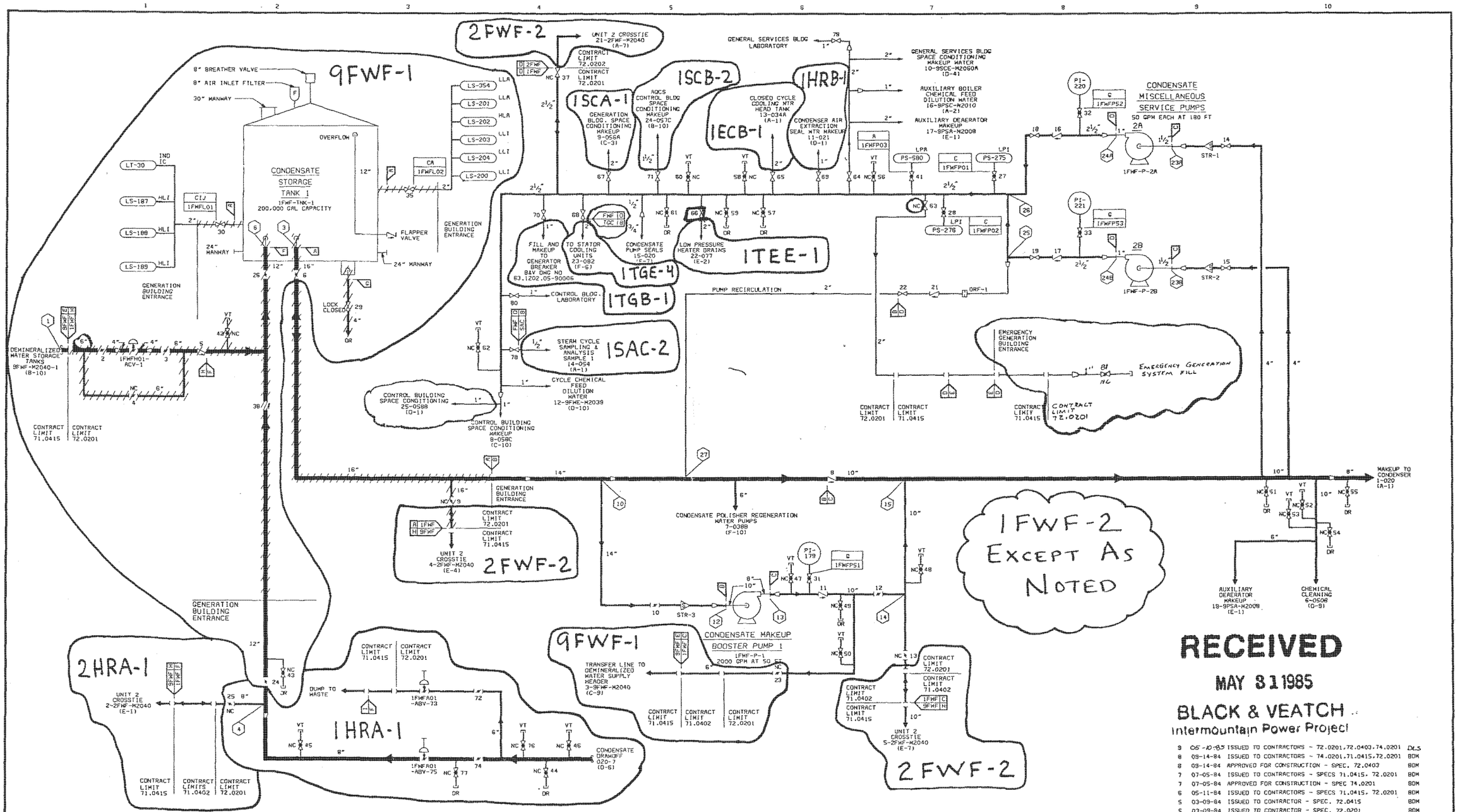

RECEIVED
MAY 31 1985
BLACK & VEATCH
Intermountain Power Project

9	05-10-85	ISSUED TO CONTRACTORS - 72.0201, 72.0403, 74.0201	DLS
8	09-14-84	ISSUED TO CONTRACTORS - 74.0201, 71.0415, 72.0201	BDM
8	09-14-84	APPROVED FOR CONSTRUCTION - SPEC. 72.0403	BDM
7	07-05-84	ISSUED TO CONTRACTORS - SPECS 71.0415, 72.0201	BDM
7	07-05-84	APPROVED FOR CONSTRUCTION - SPEC 74.0201	BDM
6	05-11-84	ISSUED TO CONTRACTORS - SPECS 71.0415, 72.0201	BDM
5	03-09-84	ISSUED TO CONTRACTOR - SPEC. 72.0415	BDM
5	03-09-84	ISSUED TO CONTRACTOR - SPEC. 72.0201	BDM
5	03-09-84	ISSUED FOR BID - SPEC. 72.0403	BDM
4	01-13-84	ISSUED FOR BID - SPEC. 74.0201	SBE
4	08-23-83	RELEASED FOR CONSTRUCTION - SPEC 71.0415	BDM
4	08-18-83	RELEASED FOR CONSTRUCTION - SPEC 72.0201	BDM
3	06-30-83	ISSUED FOR CLIENT REVIEW (CONTROL PACKAGE)	BDM
3	06-24-83	ISSUED FOR ADDENDUM 3 - SPEC 71.0415	BDM
2	06-10-83	ISSUED FOR ADDENDUM 2 - SPEC 71.0415	BDM
1	05-4-83	ISSUED FOR BID - SPEC 71.0415	BDM
0	03-18-83	ISSUED FOR BID - SPEC 72.0201	BDM

8	09-14-84	APPROVED FOR CONSTRUCTION - SPEC. 72.0403	BDM	LJS	HLJ	3	6-24-83	GENERAL REVISIONS	BDM		HLJ
7	07-05-84	APPROVED FOR CONSTRUCTION - SPEC. 74.0201	BDM	LJS	HLJ	2	6-10-83	GENERAL REVISIONS	BDM		HLJ
6	05-11-84	GENERAL REVISIONS	BDM		HLJ	9	5-10-85	GENERAL REVISIONS	[illegible]		
5	03-09-84	GENERAL REVISIONS	BDM		HLJ	0	3-18-83	INITIAL ISSUE	BDM		HLJ
4	08-18-83	RELEASED FOR CONSTRUCTION - SPEC. 72.0201 & 71.0415	BDM		HLJ	NO.	DATE	REVISIONS AND RECORD OF ISSUE	BY	CHK	APPD

I HEREBY CERTIFY THAT THIS DOCUMENT WAS PREPARED BY ME OR UNDER MY DIRECT SUPERVISION AND THAT I AM A DULY REGISTERED PROFESSIONAL ENGINEER UNDER THE LAWS OF THE STATE OF UTAH
SIGNED Hobart Lee Jacobs
DATE 3-18-83 REG NO. 5746

BLACK & VEATCH CONSULTING ENGINEERS
ENGINEER BDM DRAWN AGG
CHECKED LJS DATE 7-2-84

IPP INTERMOUNTAIN POWER PROJECT

PIPING AND INSTRUMENT DIAGRAM
CYCLE MAKEUP AND STORAGE

PROJECT 9255 - DRAWING NUMBER 1FWF-M2040 REV 9
CODE 1FWF-52.3406 AREA
5/4 REV. 2 6/17/85

M2PD 03/26/85 06:34:36

IP14_000054

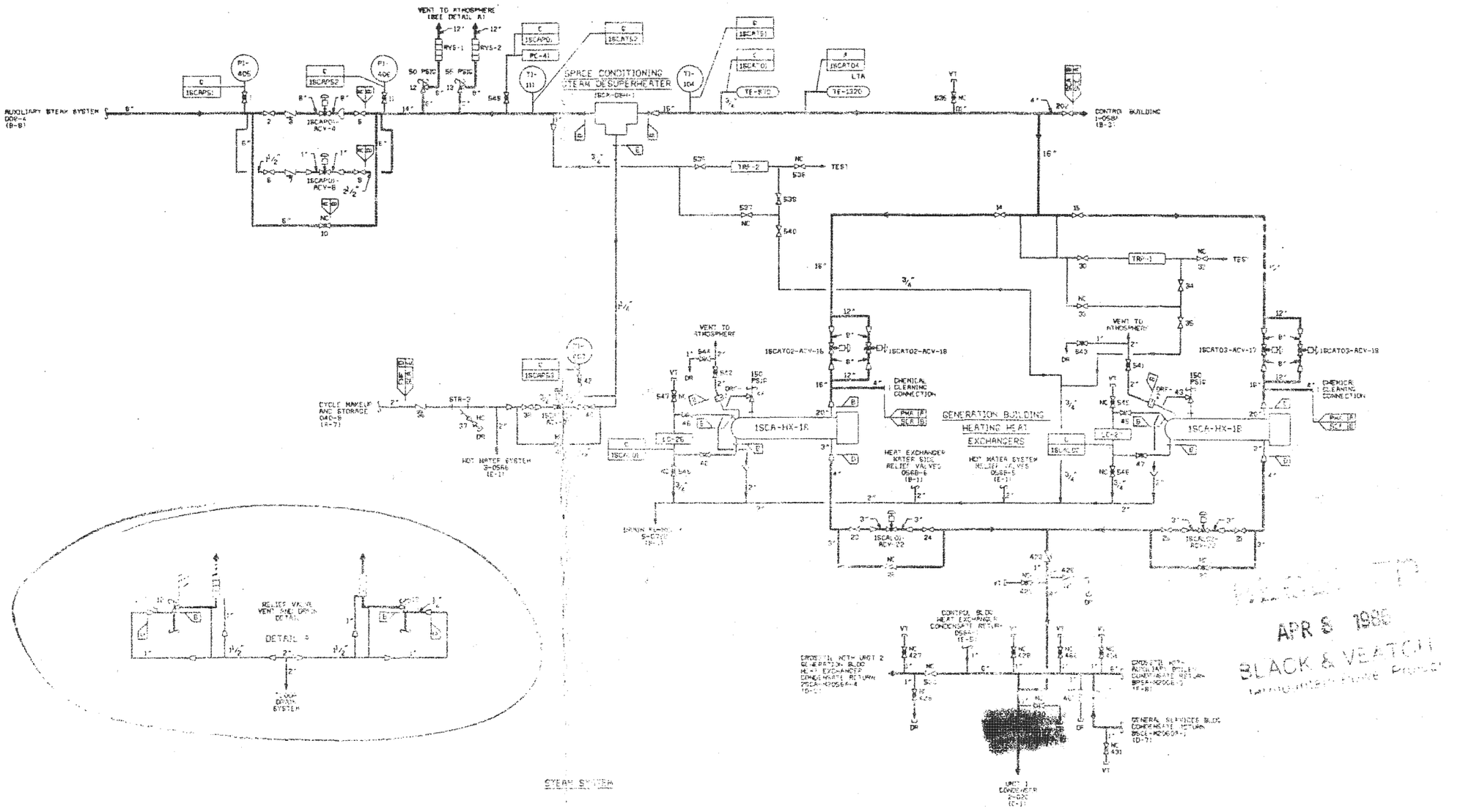

NOTES:

1. SYSTEM CODE IS 1SCA UNLESS OTHERWISE NOTED.
2. ALL VALVES ON THIS DRAWING ARE SERIES 1SCA-XXX-0000.
3. HOT WATER SIDE OF HEAT EXCHANGER HX-1A AND HX-1B SHOWN ON PAGE M20566.
4. INSTRUMENT, TRAP, TEST, AND DRAIN LINES SHALL BE 3/4" INCH UNLESS OTHERWISE NOTED.
5. LAST VALVE NUMBER: 1SCA-XXX-0467, THEN 525 TO 545
6. LAST CONNECTION NUMBER: 5

REV	DATE	REVISIONS AND RECORD OF ISSUE	BY	CHK	APPR
10	06-17-85	ISSUED TO CONTRACTOR BPEC 72.0201, 74.0201, AND 72.0402			
9	06-06-85	ISSUED TO CONTRACTOR BPEC 72.0201, 74.0201, AND 72.0402			
8	04-17-85	ISSUED TO CONTRACTOR BPEC 72.0201, 74.0201 & 72.0402			
7	06-14-84	ISSUED TO CONTRACTOR BPEC 72.0201, 74.0201			
6	07-05-84	APPROVED FOR CONSTRUCTION BPEC 72.0402			
5	07-05-84	ISSUED TO CONTRACTOR BPEC 72.0201			
4	06-19-84	APPROVED FOR CONSTRUCTION BPEC 74.0201			
3	06-13-84	ISSUED TO CONTRACTOR BPEC 72.0201			
2	06-13-84	ISSUED TO CONTRACTOR BPEC 72.0201			
1	06-12-84	ISSUED FOR BID BPEC 74.0201			
0	05-11-84	ISSUED TO CONTRACTOR BPEC 72.0201			
9	05-25-84	RELEASED FOR CONSTRUCTION BPEC 72.0201			
8	04-25-84	ISSUED FOR BIDDING & BPEC 72.0201			
0	03-19-84	ISSUED FOR BID BPEC 72.0201			

REV	DATE	REVISIONS AND RECORD OF ISSUE	BY	CHK	APPR
9	04-17-85	GENERAL REVISIONS	D.S.	JSH	JJ
7	06-14-84	APPROVED FOR CONSTRUCTION SPEC 72.0402	RDR	RGO	JJ
6	07-05-84	APPROVED FOR CONSTRUCTION - SPEC 74.0201	RDR	RGO	JJ
5	06-11-84	GENERAL REVISION	RDR	HJ	JJ
4	05-13-84	GENERAL REVISION	RDR	HJ	JJ
3	01-31-83	GENERAL REVISION	DAN	HJ	JJ
10	06-17-85	REVISED RELIEF VALVE VENT AND DRAIN DETAIL			
9	06-06-85	GENERAL REVISIONS	D.S.	JSH	JJ
0	07-18-83	INITIAL ISSUE	DAN	HJ	JJ

I HEREBY CERTIFY THAT THIS DOCUMENT WAS PREPARED BY ME OR UNDER MY DIRECT SUPERVISION AND THAT I AM A DULY REGISTERED PROFESSIONAL ENGINEER UNDER THE LAWS OF THE STATE OF UTAH.

NAME: _____
DATE: 05-15-85 REG. NO. 5244

BLACK & VEATCH CONSULTING ENGINEERS

CHECKED: J. A. NELSON
DRAWN: RGO
DATE: 01-03-84

INTERMOUNTAIN POWER PROJECT

PIPING AND INSTRUMENT DIAGRAM
GENERATION BUILDING SPACE CONDITIONING

DRAWING NUMBER: 9255 - 1SCA-M2056A
REV: 10

APR 8 1985
BLACK & VEATCH
INTERMOUNTAIN POWER PROJECT

IP14_000055

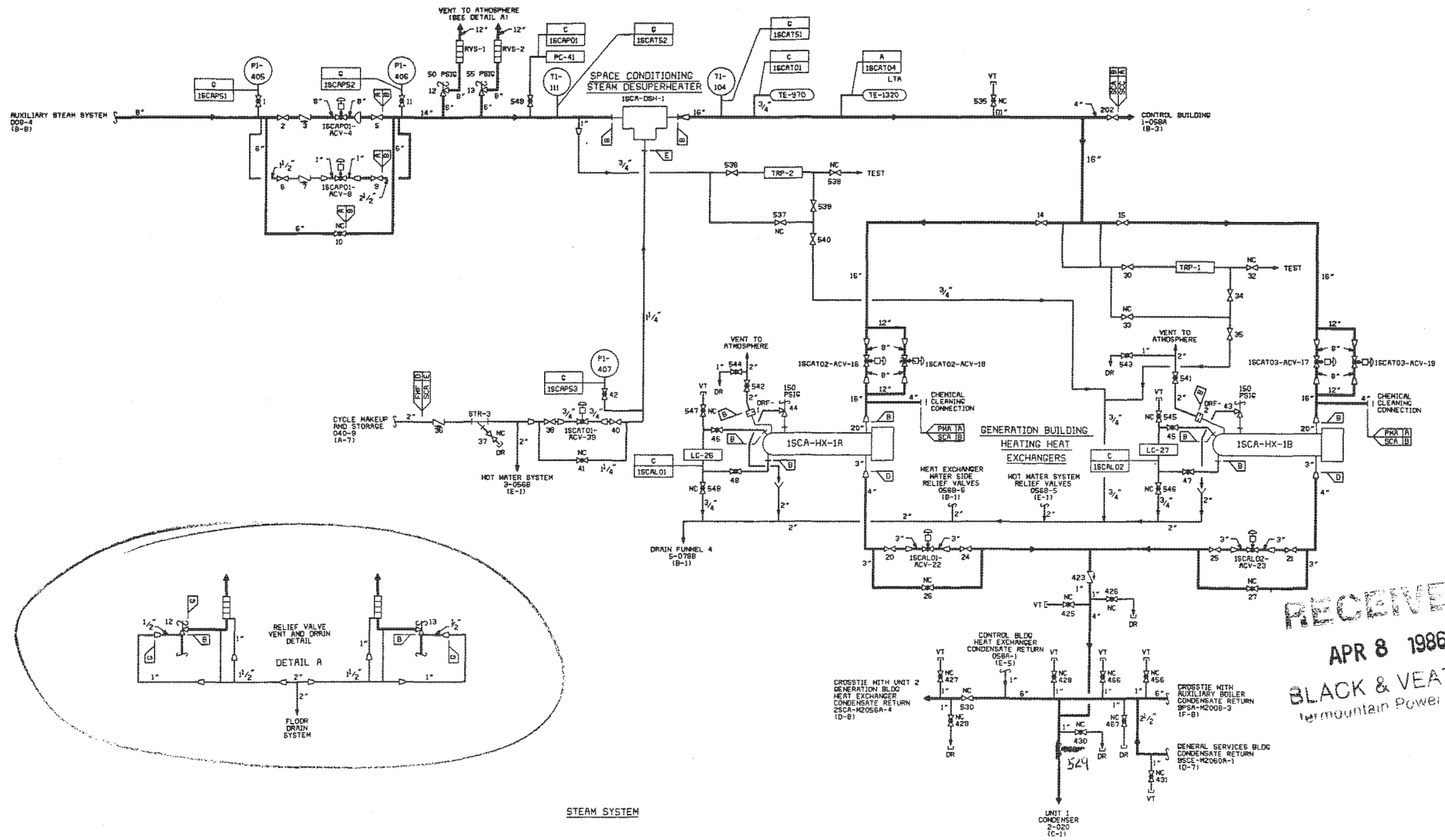

STEAM SYSTEM

RECEIVED
APR 8 1986
BLACK & VEATCH
Intermountain Power Project

NOTES:

1. SYSTEM CODE IS ISCA UNLESS OTHERWISE NOTED.
2. ALL VALVES ON THIS DRAWING ARE SERIES ISCA-XXX-0000.
3. HOT WATER SIDE OF HEAT EXCHANGER HX-1A AND HX-1B SHOWN ON P&ID M2056B.
4. INSTRUMENT,TRAP,TEST, AND DRAIN LINES SHALL BE 3/4 INCH UNLESS OTHERWISE NOTED.
5. LAST VALVE NUMBER: ISCA-XXX-0467, THEN 525 TO 549
6. LAST CONNECTION NUMBER: 5 .

REV	DATE	DESCRIPTION	BY	CHK	APP	FLM
10	02-17-86	ISSUED TO CONTRACTOR SPEC 72.0201, 74.0201, AND 72.0403	RGJ			
9	08-09-85	ISSUED TO CONTRACTOR SPEC 72.0201, 74.0201, AND 72.0403	DLS			
8	04-17-85	ISSUED TO CONTRACTOR SPEC 72.0201, 74.0201 & 72.0403	DLS			
7	09-14-84	ISSUED TO CONTRACTOR SPEC 72.0201, 74.0201	RDR			
7	09-14-84	APPROVED FOR CONSTRUCTION SPEC 72.0403	RDR			
6	07-05-84	ISSUED TO CONTRACTOR SPEC 72.0201	RDR			
6	07-05-84	APPROVED FOR CONSTRUCTION SPEC 74.0201	RDR			
5	05-11-84	ISSUED TO CONTRACTOR SPEC 72.0201	RDR			
4	01-13-84	ISSUED TO CONTRACTOR SPEC 72.0201	RDR			
4	01-13-84	ISSUED FOR BID SPEC 74.0201	RDR			
3	11-11-83	ISSUED TO CONTRACTOR SPEC 72.0201	DAN			
2	09-18-83	RELEASED FOR CONSTRUCTION SPEC 72.0201	DAN			
1	04-29-83	ISSUED FOR ADDENDUM 2 SPEC 72.0201	DAN			
0	03-18-83	ISSUED FOR BID SPEC 72.0201	DAN			

NO.	DATE	REVISIONS AND RECORD OF ISSUE	BY	CHK	APP	FLM
8	04-17-85	GENERAL REVISIONS	DLS	JS	HLJ	
7	09-14-84	APPROVED FOR CONSTRUCTION SPEC 72.0403	RDR	RGJ	HLJ	
6	07-05-84	APPROVED FOR CONSTRUCTION - SPEC 74.0201	RDR	RGJ	HLJ	
5	05-11-84	GENERAL REVISION	RDR		HLJ	
4	01-13-84	GENERAL REVISION	RDR		HLJ	
3	11-11-83	GENERAL REVISION	DAN		HLJ	
10	02-17-86	REVISED RELIEF VALVE VENT AND DRAIN DETAIL	RGJ			
9	08-09-85	GENERAL REVISIONS	DLS	JS	HLJ	
0	03-18-83	INITIAL ISSUE	DAN		HLJ	

I HEREBY CERTIFY THAT THIS DOCUMENT WAS PREPARED BY ME OR UNDER MY DIRECT SUPERVISION AND THAT I AM A DULY REGISTERED PROFESSIONAL ENGINEER UNDER THE LAWS OF THE STATE OF UTAH

SIGNED

DATE 03-18-83 REG NO. 5746

REGISTERED PROFESSIONAL ENGINEER No. 5746 HOBART LEE JACOBS STATE OF UTAH

BLACK & VEATCH CONSULTING ENGINEERS

ENGINEER G. A. NELSON | DRAWN AGG | CHECKED R JEFFERS | DATE 07-02-84

IPP INTERMOUNTAIN POWER PROJECT

PIPING AND INSTRUMENT DIAGRAM
GENERATION BUILDING SPACE CONDITIONING

PROJECT / DRAWING NUMBER: 9255 - ISCA-M2056A | REV 10

CODE SCA-52.5601 | AREA

HOPPO 01/30/86 16:37:38

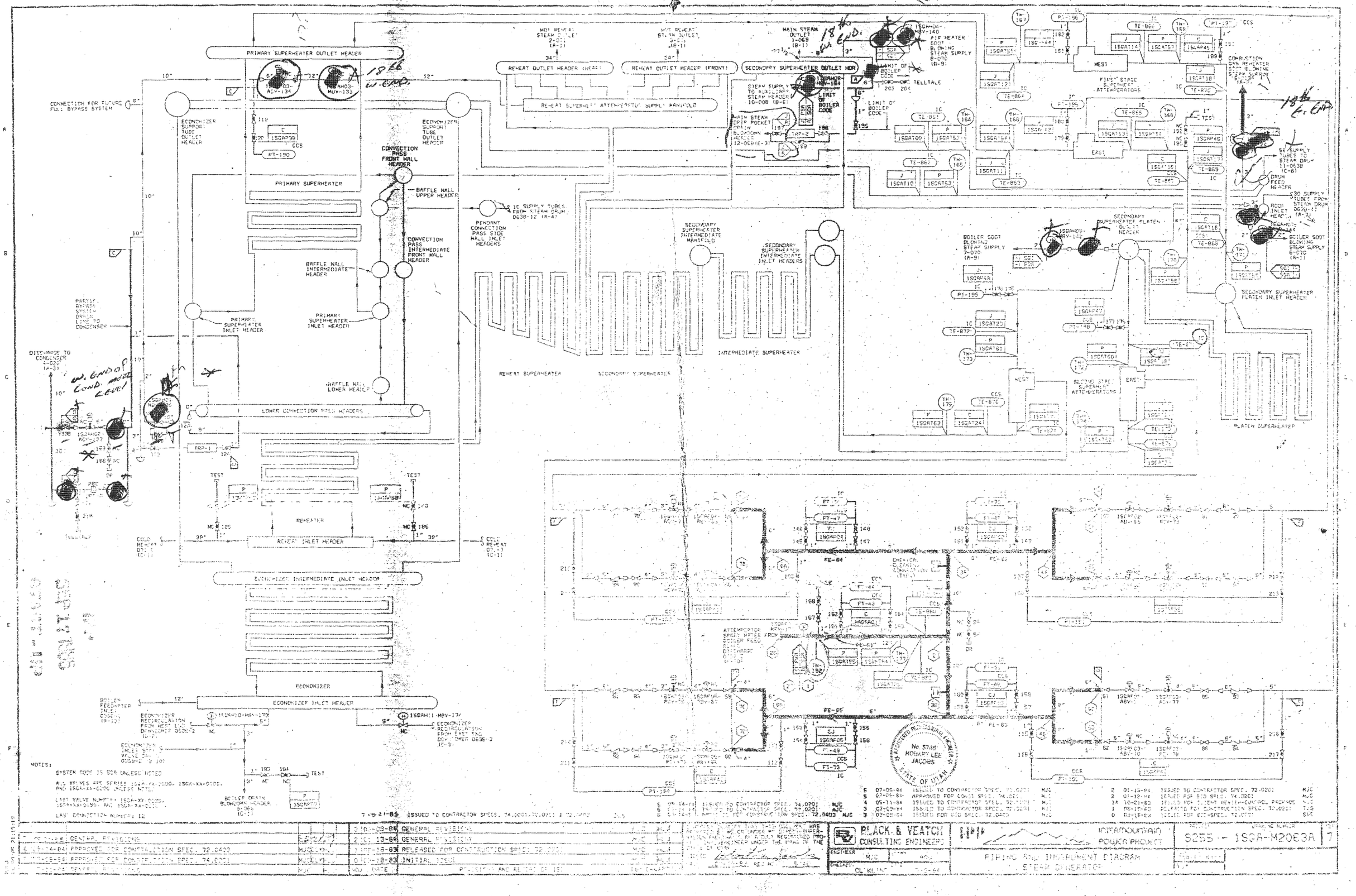
PRIMARY SUPERHEATER OUTLET HEADER
REHEAT OUTLET HEADER (REAR)
REHEAT OUTLET HEADER (FRONT)
SECONDARY SUPERHEATER OUTLET HDR
REHEAT SUPERHEAT ATTEMPERATOR SUPPLY MANIFOLD
CONNECTION FOR FUTURE FULL BYPASS SYSTEM
ECONOMIZER SUPPORT TUBE OUTLET HEADER
CONVECTION PASS FRONT WALL HEADER
PRIMARY SUPERHEATER
BAFFLE WALL UPPER HEADER
PENDANT CONVECTION PASS SIDE WALL INLET HEADERS
CONVECTION PASS INTERMEDIATE FRONT WALL HEADER
BAFFLE WALL INTERMEDIATE HEADER
PRIMARY SUPERHEATER INLET HEADER
BAFFLE WALL LOWER HEADER
LOWER CONVECTION PASS HEADERS
REHEAT SUPERHEATER
SECONDARY SUPERHEATER
INTERMEDIATE SUPERHEATER
SECONDARY SUPERHEATER INTERMEDIATE MANIFOLD
SECONDARY SUPERHEATER INTERMEDIATE INLET HEADERS
SECONDARY SUPERHEATER PLATEN OUTLET HEADER
SECONDARY SUPERHEATER PLATEN INLET HEADER
PLATEN SUPERHEATER
FIRST STAGE SUPERHEAT ATTEMPERATORS
SECOND STAGE SUPERHEAT ATTEMPERATORS
WEST
EAST
REHEATER
REHEAT INLET HEADER
ECONOMIZER INTERMEDIATE INLET HEADER
ECONOMIZER
ECONOMIZER INLET HEADER
BOILER DRAIN BLOWDOWN HEADER
NOTES:
SYSTEM CODE IS SGA UNLESS NOTED
LAST CONNECTION NUMBER: 12
7-18-21-85 ISSUED TO CONTRACTOR SPECS. 74.0201, 72.0201 & 72.0403
BLACK & VEATCH CONSULTING ENGINEERS
INTERMOUNTAIN POWER PROJECT
PIPING AND INSTRUMENT DIAGRAM STEAM GENERATOR
S255 - 1SGA-M2063A
7
GENERAL REVISIONS
APPROVED FOR CONSTRUCTION SPEC. 72.0403
APPROVED FOR CONSTRUCTION SPEC. 74.0201
RELEASED FOR CONSTRUCTION SPEC. 72.0201
INITIAL ISSUE
REVISIONS AND REPORT OF ISSUE
CL KLINE

IP14_000057

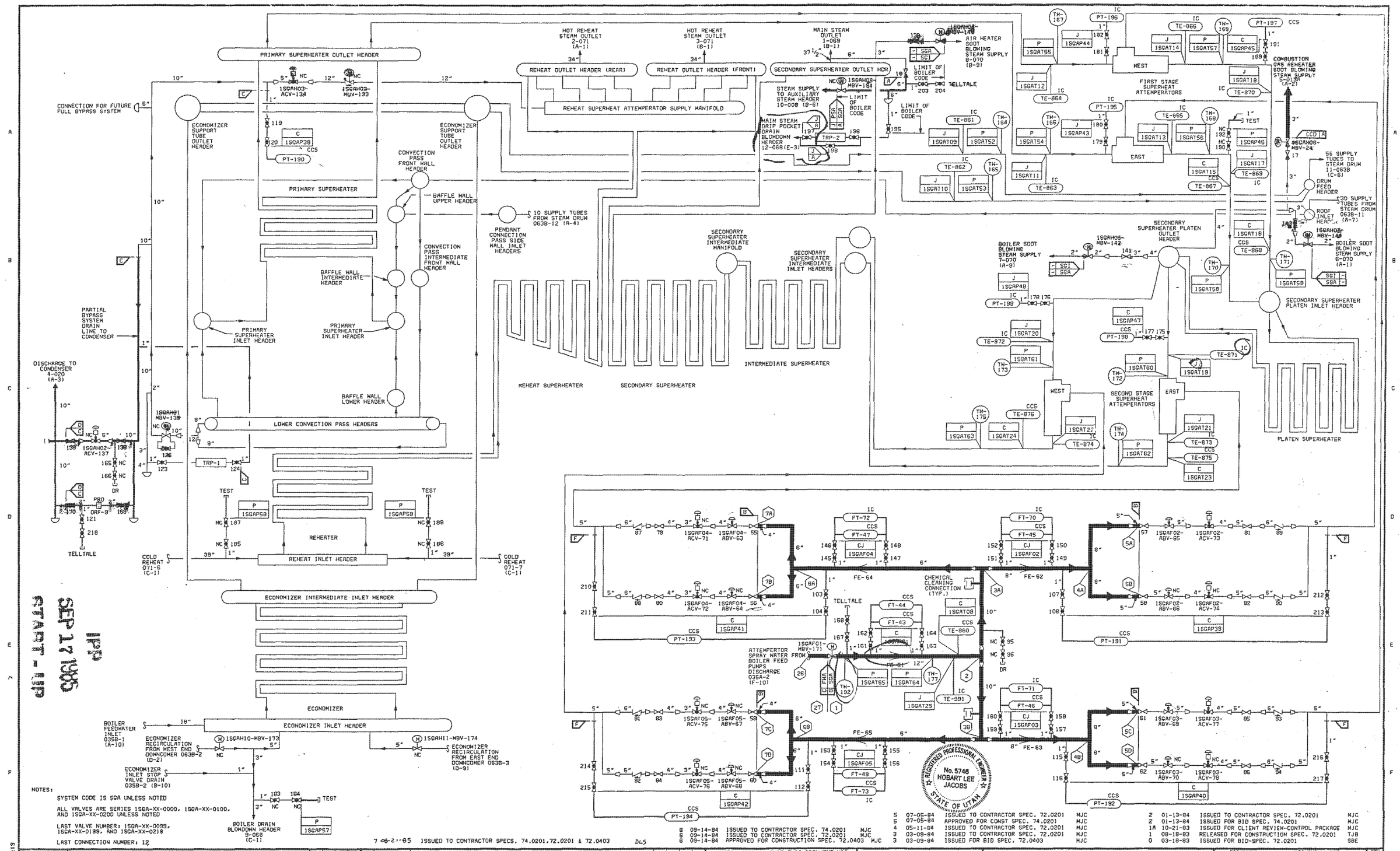

NOTES:

SYSTEM CODE IS SGA UNLESS NOTED

ALL VALVES ARE SERIES 1SGA-XX-0000, 1SGA-XX-0100, AND 1SGA-XX-0200 UNLESS NOTED

LAST VALVE NUMBER: 1SGA-XX-0099, 1SGA-XX-0199, AND 1SGA-XX-0218

LAST CONNECTION NUMBER: 12

7 08-21-85 ISSUED TO CONTRACTOR SPECS. 74.0201, 72.0201 & 72.0403 DLS

6 09-14-84 ISSUED TO CONTRACTOR SPEC. 74.0201 MJC
6 09-14-84 ISSUED TO CONTRACTOR SPEC. 72.0201 MJC
6 09-14-84 APPROVED FOR CONSTRUCTION SPEC. 72.0403 MJC

5 07-05-84 ISSUED TO CONTRACTOR SPEC. 72.0201 MJC
5 07-05-84 APPROVED FOR CONST SPEC. 74.0201 MJC
4 05-11-84 ISSUED TO CONTRACTOR SPEC. 72.0201 MJC
3 03-09-84 ISSUED TO CONTRACTOR SPEC. 72.0201 MJC
3 03-09-84 ISSUED FOR BID SPEC. 72.0403 MJC

2 01-13-84 ISSUED TO CONTRACTOR SPEC. 72.0201 MJC
2 01-13-84 ISSUED FOR BID SPEC. 74.0201 MJC
1A 10-21-83 ISSUED FOR CLIENT REVIEW-CONTROL PACKAGE MJC
1 08-18-83 RELEASED FOR CONSTRUCTION SPEC. 72.0201 TJB
0 03-18-83 ISSUED FOR BID-SPEC. 72.0201 SBE

NO.	DATE	REVISIONS AND RECORD OF ISSUE	BY	CHK	APP	FLM
7	08-21-85	GENERAL REVISIONS				
6	09-14-84	APPROVED FOR CONSTRUCTION SPEC. 72.0403	MJC	CLK	HLJ	
5	07-05-84	APPROVED FOR CONSTRUCTION SPEC. 74.0201	MJC	CLK	HLJ	
4	05-11-84	GENERAL REVISIONS	MJC		HLJ	
3	03-09-84	GENERAL REVISIONS	MJC		HLJ	
2	01-13-84	GENERAL REVISIONS	MJC		HLJ	
1	08-18-83	RELEASED FOR CONSTRUCTION SPEC. 72.0201	MJC		HLJ	
0	03-18-83	INITIAL ISSUE	MJC		HLJ	

I HEREBY CERTIFY THAT THIS DOCUMENT WAS PREPARED BY ME OR UNDER MY DIRECT SUPERVISION AND THAT I AM A DULY REGISTERED PROFESSIONAL ENGINEER UNDER THE LAWS OF THE STATE OF UTAH

SIGNED Hobart Lee Jacobs

DATE 03-18-83 REG NO. 5746

BLACK & VEATCH CONSULTING ENGINEERS

ENGINEER MJC DRAWN AGG

CHECKED CL KLING DATE 7-2-84

IPP INTERMOUNTAIN POWER PROJECT

PIPING AND INSTRUMENT DIAGRAM STEAM GENERATOR

PROJECT 9255 - DRAWING NUMBER 1SGA-M2063A REV 7

CODE SGA-S2.5801

AREA

IPP0 08/09/85 21:13:19

IP14_000058

2, 10, 11, 13
47 203

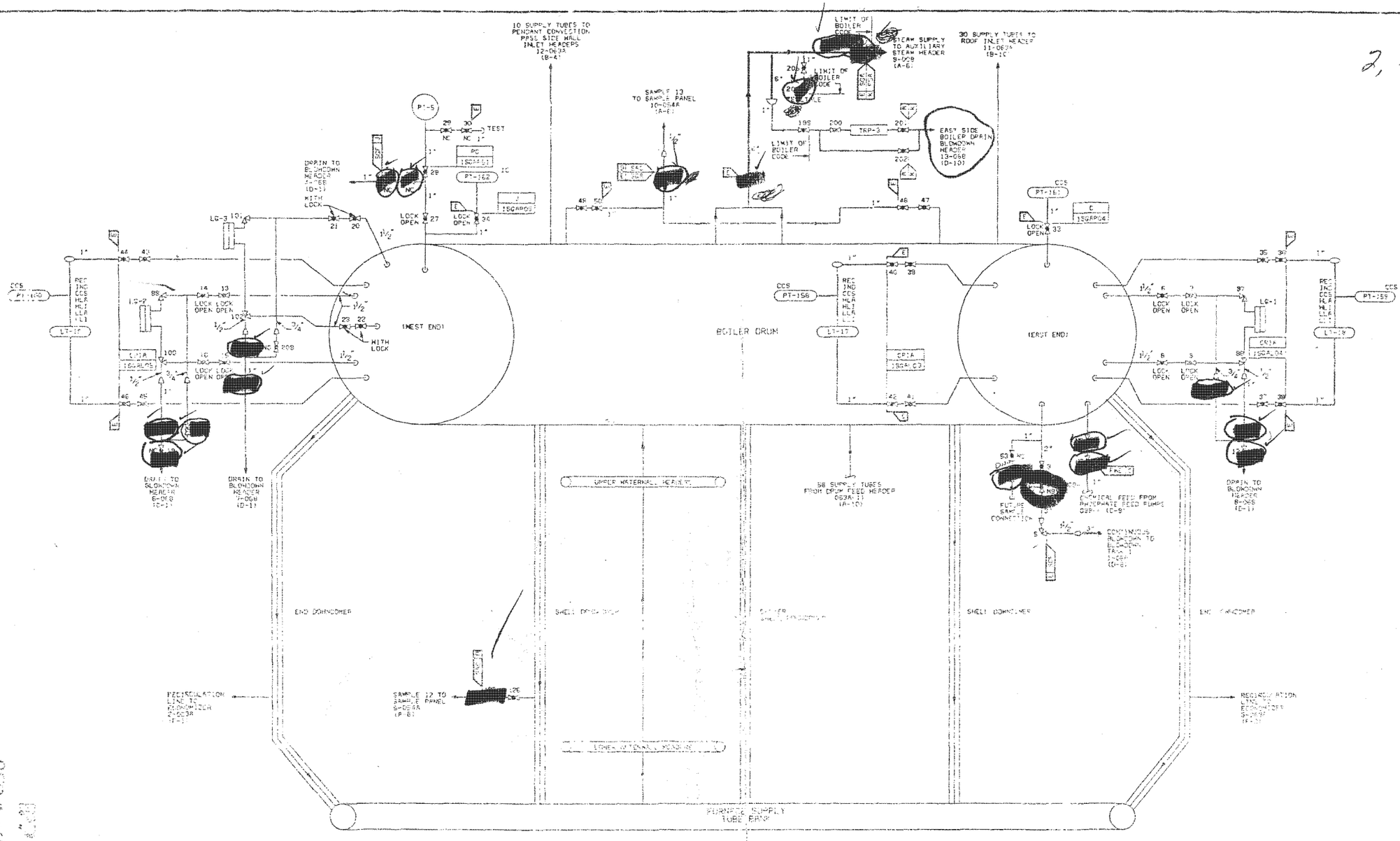

NOTES:

SYSTEM CODE IS SGA UNLESS NOTED

VALVES ARE SERIES 1SGA-XX-0000, 1SGA-XX-0100, AND 1SGA-XX-0200 UNLESS NOTED

LAST VALVE NUMBER: 1SGA-XX-58, 1SGA-XX-159, 1SGA-XX-0218

LAST CONNECTION NUMBER: 13

REGISTERED PROFESSIONAL ENGINEER No. 5746 HOBART LEE JACOBS STATE OF UTAH

7	05-12-86	ISSUED TO CONTRACTOR SPECS 74.0201, 72.0201, 72.0403	MJC
6	09-14-84	ISSUED TO CONTRACTOR SPEC. 74.0201	MJC
5	08-14-84	ISSUED TO CONTRACTOR SPEC. 72.0201	MJC
4	07-26-84	APPROVED FOR CONST. SPEC. 72.0403	MJC
3	07-09-84	ISSUED TO CONTRACTOR SPEC. 72.0201	MJC
2	05-11-84	ISSUED TO CONTRACTOR SPEC. 72.0201	MJC
1	03-09-84	ISSUED TO CONTRACTOR SPEC. 72.0201	MJC
0	02-17-84	ISSUED TO CONTRACTOR SPEC. 72.0201	MJC
2	01-19-84	ISSUED FOR BID SPEC. 74.0201	MJC
1A	10-21-83	ISSUED FOR CLIENT REVIEW-CONTROL PACKAGE	MJC
1	08-19-83	RELEASED FOR CONST. SPEC. 72.0201	TJB
0	03-18-83	ISSUED FOR BID SPEC 72.0201	SBF

5	05-12-86	GENERAL REVISIONS	
4	09-14-84	APPROVED FOR CONSTRUCTION SPEC. 72.0403	MJC
3	07-26-84	RELEASED FOR CONSTRUCTION SPEC. 74.0201	MJC
2	07-09-84	GENERAL REVISIONS	
1	05-11-84	GENERAL REVISIONS	

NO.	DATE	REVISIONS AND RECORD OF ISSUE	BY	CHK	APP
3	03-09-84	GENERAL REVISIONS	MJC		MHJ
2	01-19-84	GENERAL REVISIONS	MJC		MHJ
1	08-19-83	RELEASED FOR CONSTRUCTION SPEC. 72.0201	MJC		MHJ
0	03-18-83	INITIAL ISSUE	MJC		MHJ

I HEREBY CERTIFY THAT THIS DOCUMENT WAS PREPARED BY ME OR UNDER MY DIRECT SUPERVISION AND THAT I AM A DULY REGISTERED PROFESSIONAL ENGINEER UNDER THE LAWS OF THE STATE OF UTAH

SIGNED: [signature]
DATE: 3-18-83 REG. NO. P-5746

BLACK & VEATCH CONSULTING ENGINEERS

INTERMOUNTAIN POWER PROJECT

PROJECT: 9255 - 1SGA-M20635 | SHEET 7

DRAWN: MJC | APP.

PIPING AND INSTRUMENT DIAGRAM
STEAM GENERATOR

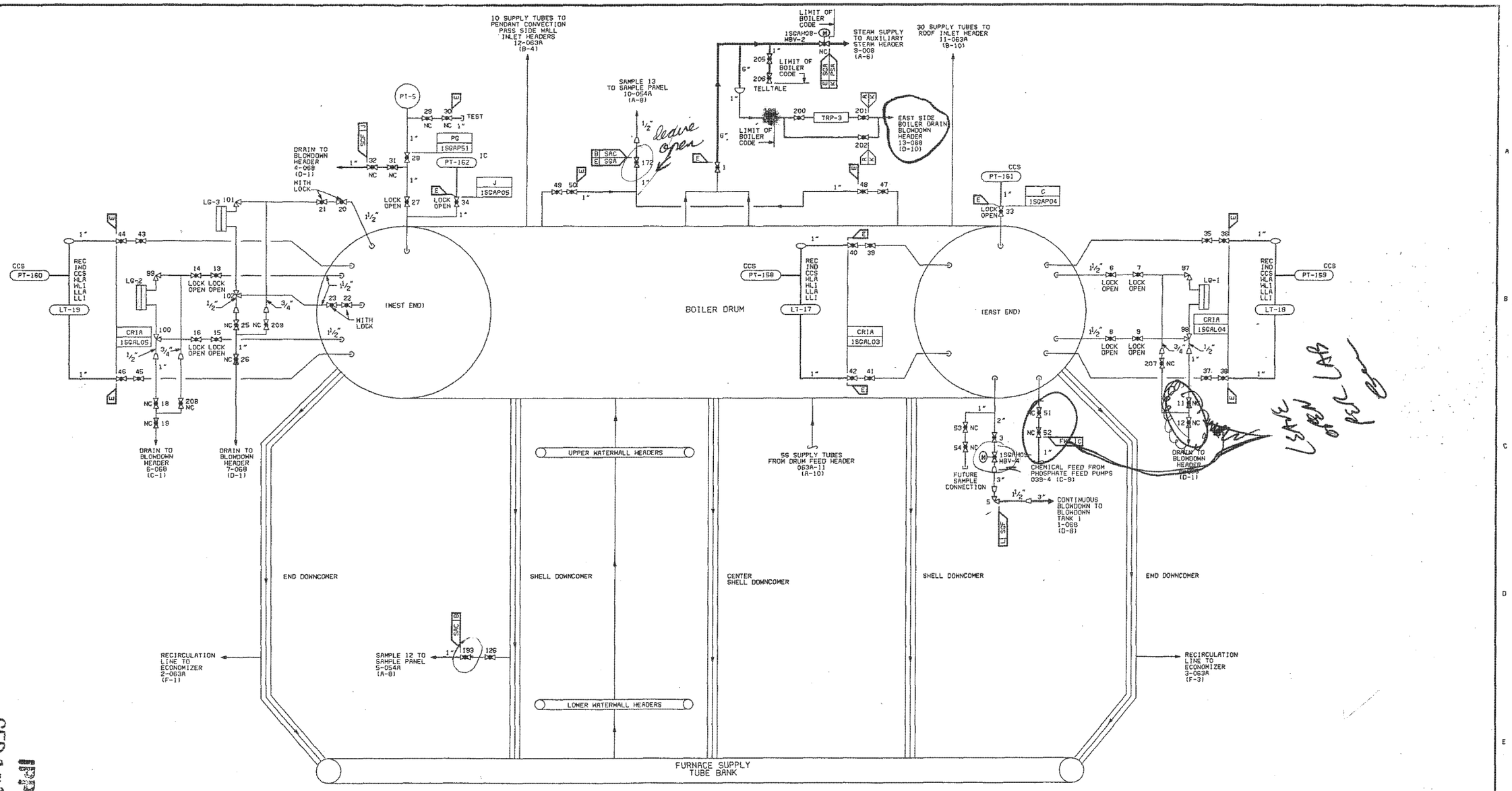

START - UP
SEP 17 1985
IPP

NOTES:

SYSTEM CODE IS SGA UNLESS NOTED

VALVES ARE SERIES 1SGA-XX-0000, 1SGA-XX-0100, AND 1SGA-XX-0200 UNLESS NOTED

LAST VALVE NUMBER: 1SGA-XX-99, 1SGA-XX-199, 1SGA-XX-0218

LAST CONNECTION NUMBER: 13

NO.	DATE	REVISIONS AND RECORD OF ISSUE	BY	CHK	APPR	FLM
7	08-21-85	GENERAL REVISIONS	MJC	CLK	HLJ	
5	09-14-84	APPROVED FOR CONSTRUCTION SPEC. 72.0403	MJC	CLK	HLJ	
5	07-05-84	APPROVED FOR CONSTRUCTION SPEC. 74.0201	MJC	CLK	HLJ	
4	05-11-84	GENERAL REVISIONS	MJC		HLJ	
3	03-09-84	GENERAL REVISIONS	MJC		HLJ	
2	01-13-84	GENERAL REVISIONS	MJC		HLJ	
1	08-18-83	RELEASED FOR CONSTRUCTION SPEC. 72.0201	MJC		HLJ	
0	03-18-83	INITIAL ISSUE	MJC		HLJ	

7	08-21-85	ISSUED TO CONTRACTOR SPECS 74.0201, 72.0201, 72.0403	DLS
6	09-14-84	ISSUED TO CONTRACTOR SPEC. 74.0201	MJC
6	09-14-84	ISSUED TO CONTRACTOR SPEC. 72.0201	MJC
6	09-14-84	APPROVED FOR CONST. SPEC. 72.0403	MJC
5	07-05-84	ISSUED TO CONTRACTOR SPEC. 72.0201	MJC
5	07-05-84	APPROVED FOR CONST. SPEC. 74.0201	MJC
4	05-11-84	ISSUED TO CONTRACTOR SPEC. 72.0201	MJC
3	03-09-84	ISSUED TO CONTRACTOR SPEC. 72.0201	MJC
3	03-09-84	ISSUED FOR BID SPEC. 72.0403	MJC
2	01-13-84	ISSUED TO CONTRACTOR SPEC. 72.0201	MJC
2	01-13-84	ISSUED FOR BID SPEC. 74.0201	MJC
1A	10-21-83	ISSUED FOR CLIENT REVIEW-CONTROL PACKAGE	MJC
1	08-18-83	RELEASED FOR CONST. SPEC. 72.0201	TJB
0	03-18-83	ISSUED FOR BID SPEC 72.0201	SBE

REGISTERED PROFESSIONAL ENGINEER No. 5746 HOBART LEE JACOBS STATE OF UTAH

I HEREBY CERTIFY THAT THIS DOCUMENT HAS PREPARED BY ME OR UNDER MY DIRECT SUPERVISION AND THAT I AM A DULY REGISTERED PROFESSIONAL ENGINEER UNDER THE LAWS OF THE STATE OF UTAH

SIGNED Hobart Lee Jacobs

DATE 3-18-83 REG NO. 5746

BLACK & VEATCH CONSULTING ENGINEERS

ENGINEER MJC | DRAWN AGG | CHECKED CL KLING | DATE 7-2-84

IPP INTERMOUNTAIN POWER PROJECT

PIPING AND INSTRUMENT DIAGRAM
STEAM GENERATOR

PROJECT 9255 | DRAWING NUMBER 1SGA-M2063B | REV 7

CODE SGA-52.5801 | AREA

N260 (08/09/85 13:45:24)

IP14_000060

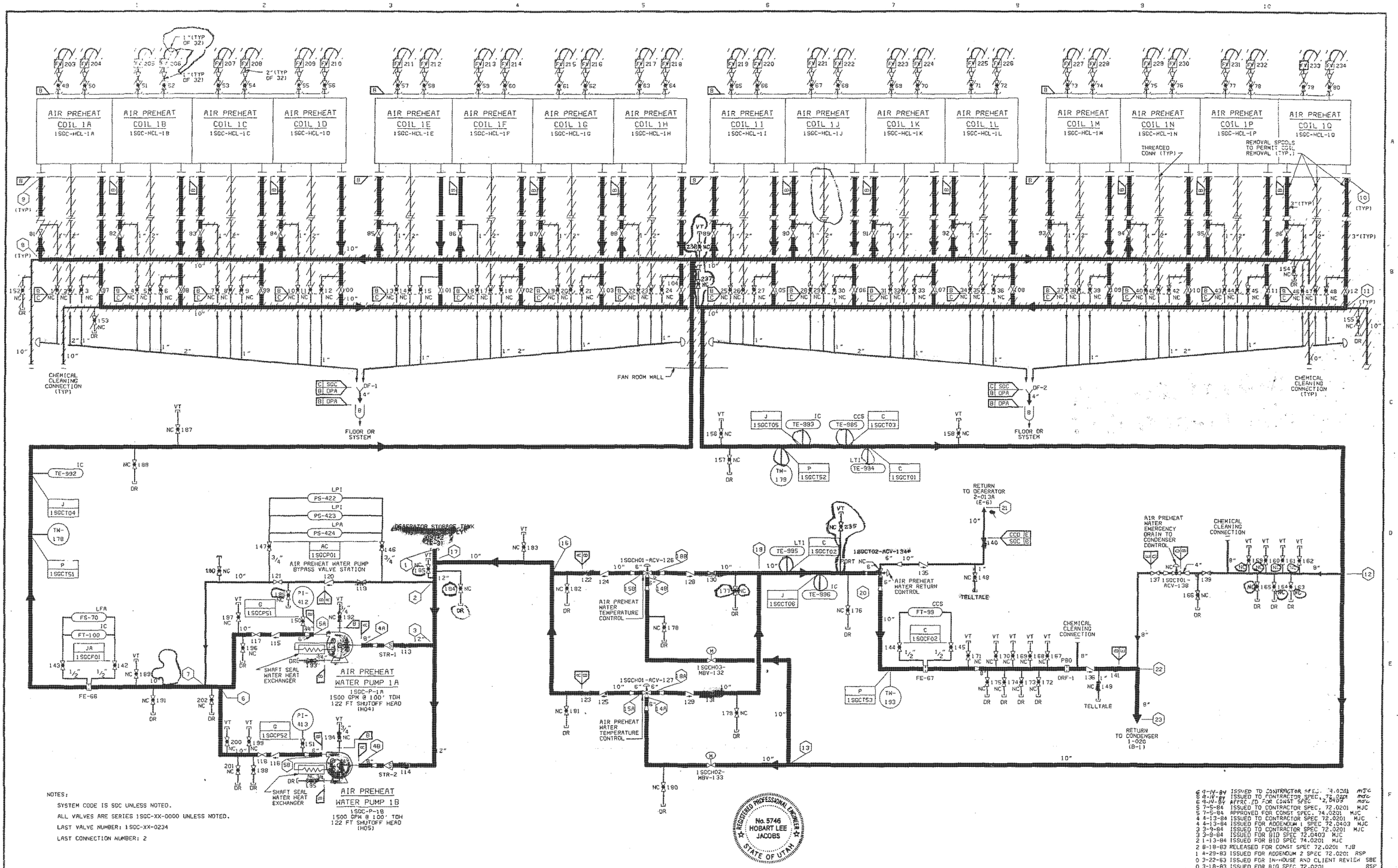
AIR PREHEAT COIL 1A 1SGC-HCL-1A
AIR PREHEAT COIL 1B 1SGC-HCL-1B
AIR PREHEAT COIL 1C 1SGC-HCL-1C
AIR PREHEAT COIL 1D 1SGC-HCL-1D
AIR PREHEAT COIL 1E 1SGC-HCL-1E
AIR PREHEAT COIL 1F 1SGC-HCL-1F
AIR PREHEAT COIL 1G 1SGC-HCL-1G
AIR PREHEAT COIL 1H 1SGC-HCL-1H
AIR PREHEAT COIL 1I 1SGC-HCL-1I
AIR PREHEAT COIL 1J 1SGC-HCL-1J
AIR PREHEAT COIL 1K 1SGC-HCL-1K
AIR PREHEAT COIL 1L 1SGC-HCL-1L
AIR PREHEAT COIL 1M 1SGC-HCL-1M
AIR PREHEAT COIL 1N 1SGC-HCL-1N
AIR PREHEAT COIL 1P 1SGC-HCL-1P
AIR PREHEAT COIL 1Q 1SGC-HCL-1Q
THREADED CONN (TYP)
REMOVAL SPOOLS TO PERMIT COIL REMOVAL (TYP.)
CHEMICAL CLEANING CONNECTION (TYP)
FAN ROOM WALL
FLOOR OR SYSTEM
DEAERATOR STORAGE TANK
AIR PREHEAT WATER PUMP BYPASS VALVE STATION
SHAFT SEAL WATER HEAT EXCHANGER
AIR PREHEAT WATER PUMP 1A
1SGC-P-1A
1500 GPM @ 100' TDH
122 FT SHUTOFF HEAD
(HO4)
AIR PREHEAT WATER PUMP 1B
1SGC-P-1B
1500 GPM @ 100' TDH
122 FT SHUTOFF HEAD
(HO5)
AIR PREHEAT WATER TEMPERATURE CONTROL
AIR PREHEAT WATER RETURN CONTROL
AIR PREHEAT WATER EMERGENCY DRAIN TO CONDENSER CONTROL
RETURN TO DEAERATOR 2-013A (E-6)
RETURN TO CONDENSER 1-020 (B-1)
TELTALE
NOTES:
SYSTEM CODE IS SGC UNLESS NOTED.
ALL VALVES ARE SERIES 1SGC-XX-0000 UNLESS NOTED.
LAST VALVE NUMBER: 1SGC-XX-0234
LAST CONNECTION NUMBER: 2
No. 5746 HOBART LEE JACOBS
REGISTERED PROFESSIONAL ENGINEER
STATE OF UTAH
6 9-14-84 ISSUED TO CONTRACTOR SPEC. 74.0201 MJC
5 8-14-84 ISSUED TO CONTRACTOR SPEC. 72.0201 MJC
4 8-14-84 APPROVED FOR CONST SPEC. 72.0403 MJC
5 7-5-84 APPROVED FOR CONST SPEC. 74.0201 MJC
4 4-13-84 ISSUED TO CONTRACTOR SPEC 72.0201 MJC
4 4-13-84 ISSUED FOR ADDENDUM 1 SPEC 72.0403 MJC
3 3-9-84 ISSUED TO CONTRACTOR SPEC 72.0201 MJC
3 3-9-84 ISSUED FOR BID SPEC 72.0403 MJC
2 1-13-84 ISSUED FOR BID SPEC 74.0201 MJC
2 8-18-83 RELEASED FOR CONST SPEC 72.0201 TJB
1 4-29-83 ISSUED FOR ADDENDUM 2 SPEC 72.0201 RSP
0 3-22-83 ISSUED FOR IN-HOUSE AND CLIENT REVIEW SBE
0 3-18-83 ISSUED FOR BID SPEC 72.0201 RSP
3 3-9-84 GENERAL REVISIONS MJC HLJ
2 8-18-83 RELEASED FOR CONSTRUCTION SPEC 72.0201 MJC HLJ
1 4-29-83 GENERAL REVISIONS MJC HLJ
0 3-18-83 INITIAL ISSUE MJC HLJ
REVISIONS AND RECORD OF ISSUE
I HEREBY CERTIFY THAT THIS DOCUMENT WAS PREPARED BY ME OR UNDER MY DIRECT SUPERVISION AND THAT I AM A DULY REGISTERED PROFESSIONAL ENGINEER UNDER THE LAWS OF THE STATE OF UTAH
SIGNED Hobart Lee Jacobs
DATE 9-18-83 REG NO. 5746
BLACK & VEATCH CONSULTING ENGINEERS
IPP INTERMOUNTAIN POWER PROJECT
PROJECT 9255
DRAWING NUMBER 1SGC-M2065
REV 6
ENGINEER MJC
DRAWN RGG
CHECKED CL KLING
DATE 7-2-84
PIPING AND INSTRUMENT DIAGRAM
AIR PREHEAT

IP14_000061

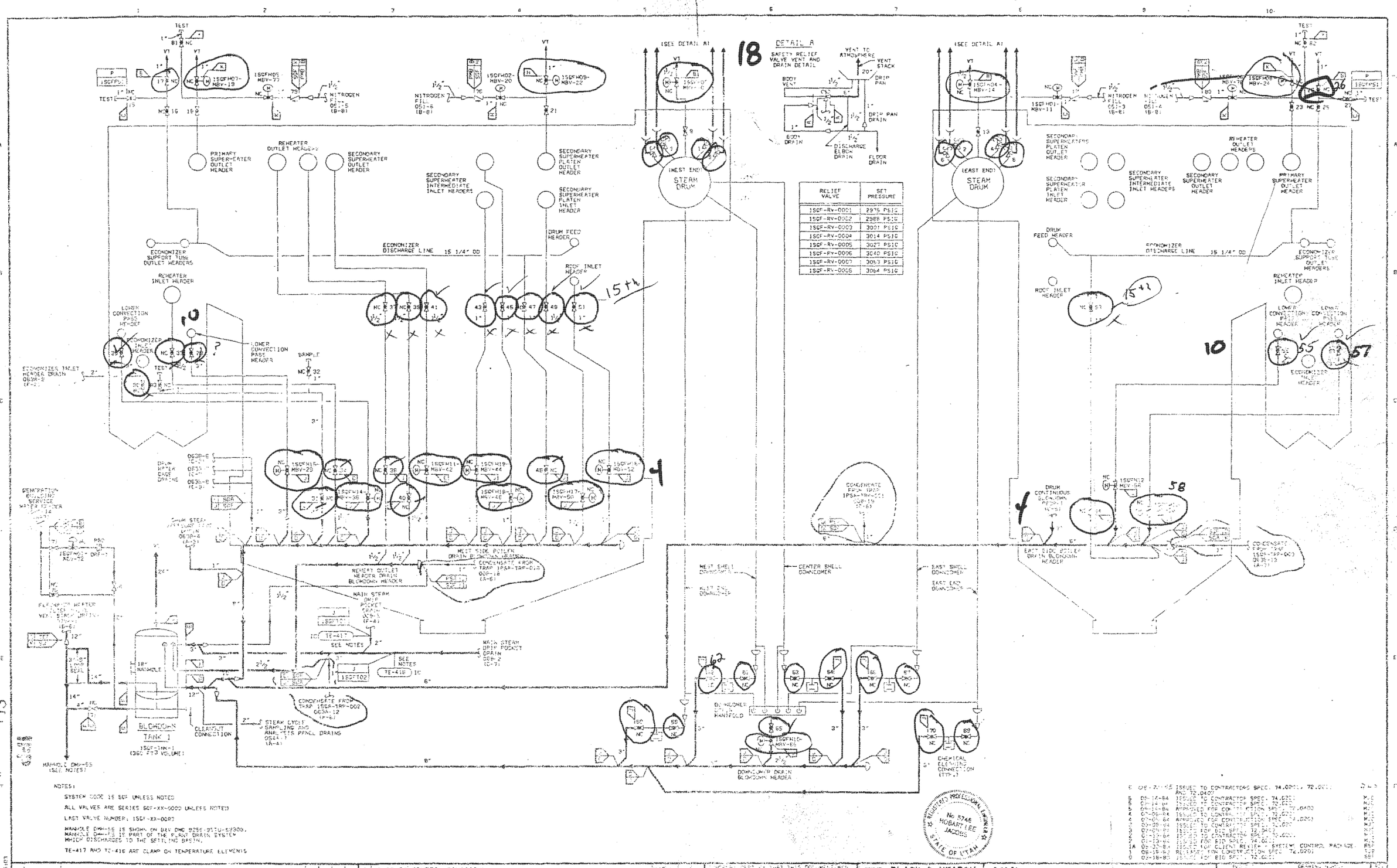

RELIEF VALVE	SET PRESSURE
1SGF-RV-0001	2975 PSIG
1SGF-RV-0002	2988 PSIG
1SGF-RV-0003	3001 PSIG
1SGF-RV-0004	3014 PSIG
1SGF-RV-0005	3027 PSIG
1SGF-RV-0006	3040 PSIG
1SGF-RV-0007	3053 PSIG
1SGF-RV-0008	3064 PSIG

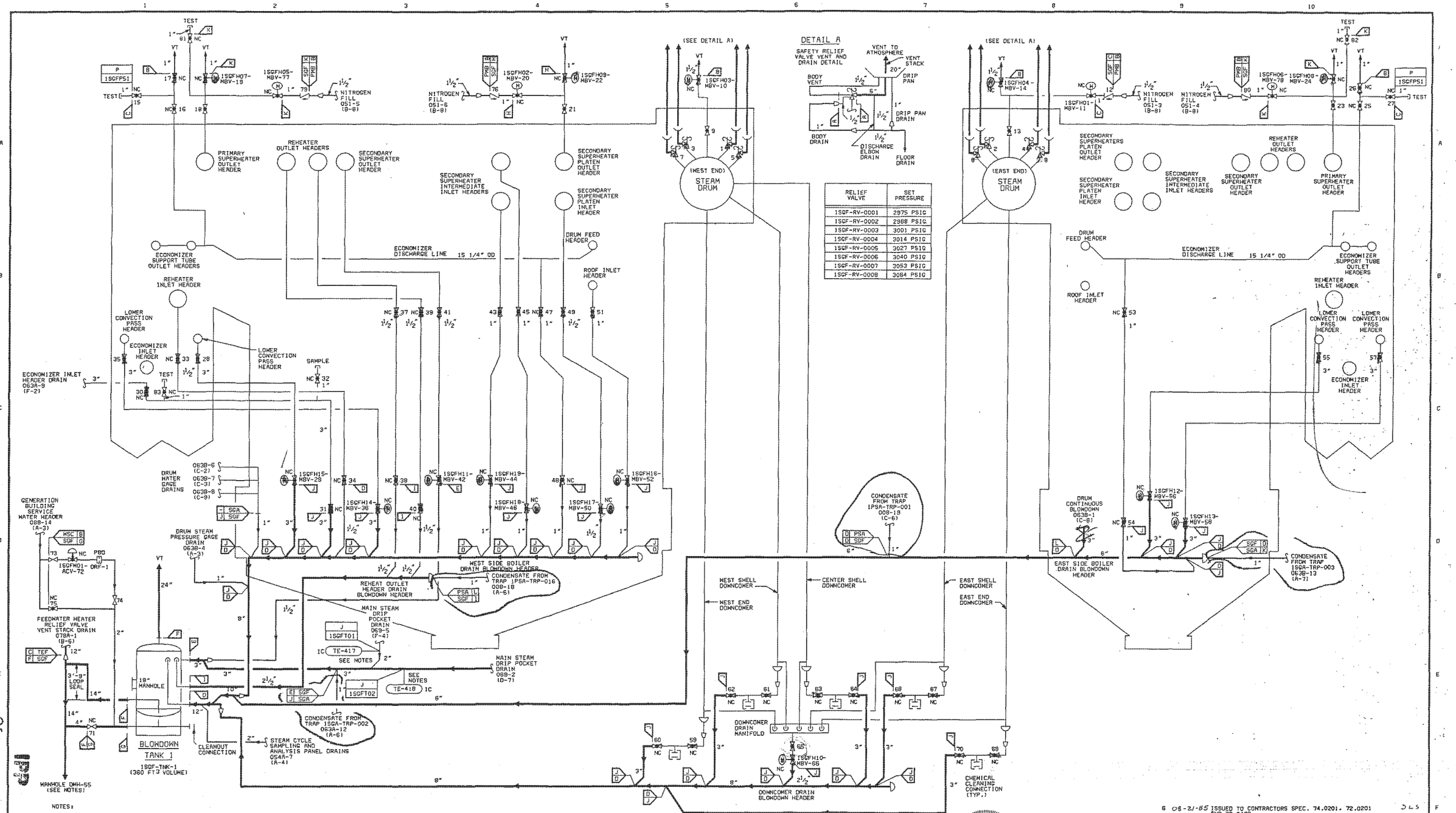

RELIEF VALVE	SET PRESSURE
1SGF-RV-0001	2975 PSIG
1SGF-RV-0002	2988 PSIG
1SGF-RV-0003	3001 PSIG
1SGF-RV-0004	3014 PSIG
1SGF-RV-0005	3027 PSIG
1SGF-RV-0006	3040 PSIG
1SGF-RV-0007	3053 PSIG
1SGF-RV-0008	3064 PSIG

NOTES:

SYSTEM CODE IS SGF UNLESS NOTED

ALL VALVES ARE SERIES SGF-XX-0000 UNLESS NOTED

LAST VALVE NUMBER: 1SGF-XX-0083

MANHOLE DMH-55 IS SHOWN ON B&V DWG 9255-9STU-S930B. MANHOLE DMH-55 IS PART OF THE PLANT DRAIN SYSTEM WHICH DISCHARGES TO THE SETTLING BASIN.

TE-417 AND TE-418 ARE CLAMP ON TEMPERATURE ELEMENTS

NO.	DATE	REVISIONS AND RECORD OF ISSUE	BY	CHK	APP	FLH
6	08-21-85	GENERAL REVISIONS				
5	09-14-84	APPROVED FOR CONSTRUCTION SPEC. 72.0403	MJC	CLK	HLJ	
4	07-05-84	APPROVED FOR CONSTRUCTION SPEC. 74.0201	MJC	CLK	HLJ	
3	03-09-84	GENERAL REVISIONS	MJC		HLJ	
2	01-13-84	GENERAL REVISIONS	MJC		HLJ	
1	08-18-83	RELEASED FOR CONSTRUCTION SPEC. 72.0201	MJC		HLJ	
0	03-18-83	INITIAL ISSUE	MJC		HLJ	

I HEREBY CERTIFY THAT THIS DOCUMENT HAS PREPARED BY ME OR UNDER MY DIRECT SUPERVISION AND THAT I AM A DULY REGISTERED PROFESSIONAL ENGINEER UNDER THE LAWS OF THE STATE OF UTAH

SIGNED Hobart Lee Jacobs

DATE 03-18-83 REG. NO. 5746

NO.	DATE	REVISIONS AND RECORD OF ISSUE	BY	CHK	APP	FLH
6	08-21-85	ISSUED TO CONTRACTORS SPEC. 74.0201, 72.0201 AND 72.0403	DLS			
5	09-14-84	ISSUED TO CONTRACTOR SPEC. 74.0201	MJC			
5	09-14-84	ISSUED TO CONTRACTOR SPEC. 72.0201	MJC			
5	09-14-84	APPROVED FOR CONSTRUCTION SPEC. 72.0403	MJC			
4	07-05-84	ISSUED TO CONTRACTOR SPEC. 72.0201	MJC			
4	07-05-84	APPROVED FOR CONSTRUCTION SPEC. 74.0201	MJC			
3	03-09-84	ISSUED TO CONTRACTOR SPEC. 72.0201	MJC			
3	03-09-84	ISSUED FOR BID SPEC. 72.0403	MJC			
2	01-13-84	ISSUED TO CONTRACTOR SPEC. 72.0201	MJC			
2	01-13-84	ISSUED FOR BID SPEC. 74.0201	MJC			
1A	08-30-83	ISSUED FOR CLIENT REVIEW - SYSTEMS CONTROL PACKAGE	RSP			
1	08-18-83	RELEASED FOR CONSTRUCTION SPEC. 72.0201	TJB			
0	03-18-83	ISSUED FOR BID SPEC. 72.0201	SBE			

BLACK & VEATCH CONSULTING ENGINEERS

ENGINEER MJC | DRAWN AGG | CHECKED CL KLING | DATE 7-2-84

IPP INTERMOUNTAIN POWER PROJECT

PIPING AND INSTRUMENT DIAGRAM
BOILER VENTS AND DRAINS

PROJECT 9255 | DRAWING NUMBER 1SGF-M2068 | REV 6

CODE SGF-52,5806 | AREA

HCPD 08/12/85 22:26:03

IP14_000063

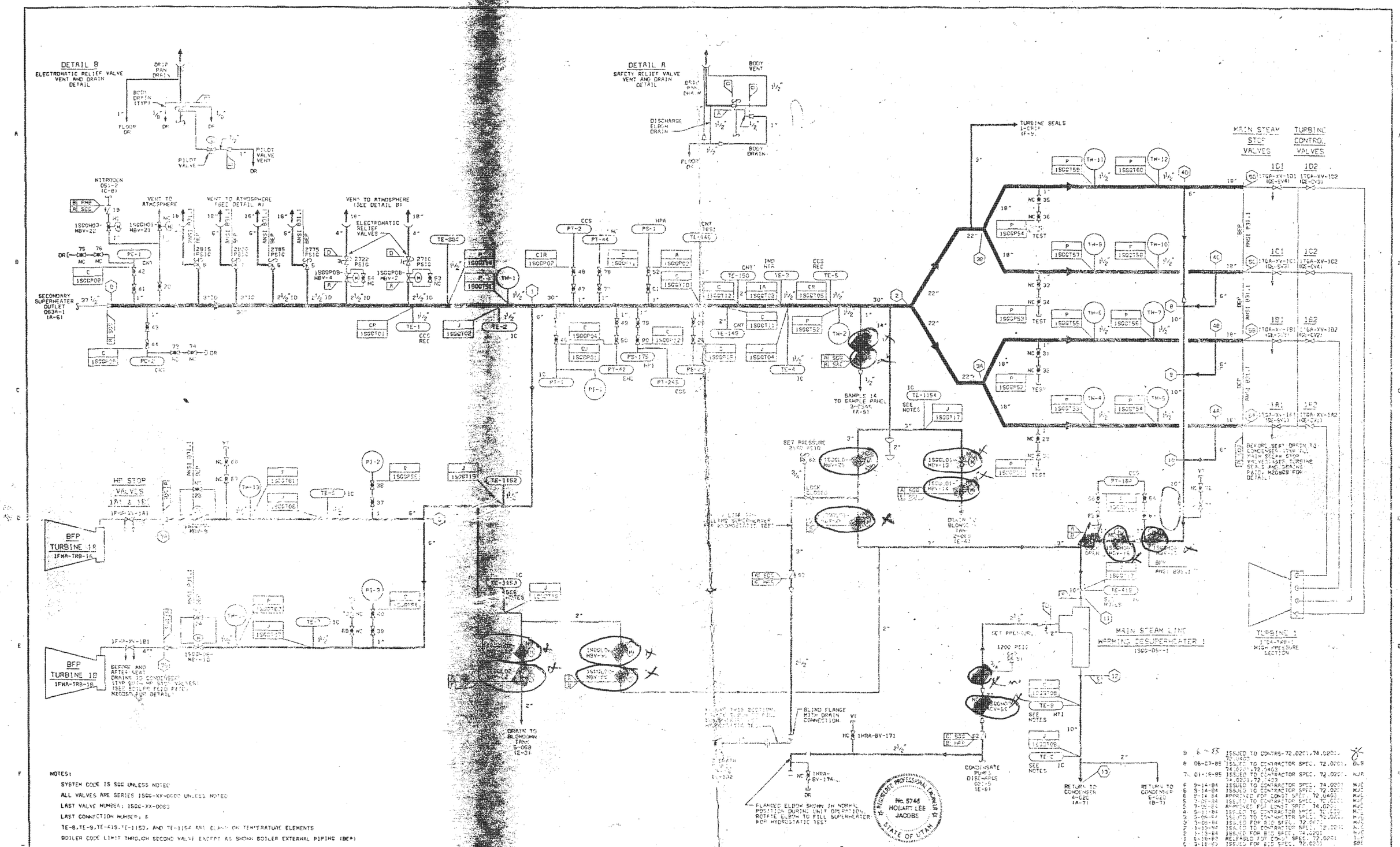
DETAIL B
ELECTROMATIC RELIEF VALVE VENT AND DRAIN DETAIL
DETAIL A
SAFETY RELIEF VALVE VENT AND DRAIN DETAIL
SECONDARY SUPERHEATER OUTLET 063A-1 (A-6)
HP STOP VALVES 1A & 1B
BFP TURBINE 1A
BFP TURBINE 1B
TURBINE SEALS
MAIN STEAM STOP VALVES
TURBINE CONTROL VALVES
MAIN STEAM LINE WARMING DESUPERHEATER 1
TURBINE 1
NOTES:
SYSTEM CODE IS SGC UNLESS NOTED
ALL VALVES ARE SERIES 1SGC-XX-0000 UNLESS NOTED
LAST VALVE NUMBER: 1SGC-XX-0063
LAST CONNECTION NUMBER: 6
TE-8,TE-9,TE-415,TE-1153, AND TE-1154 ARE CLASS 0A TEMPERATURE ELEMENTS
BOILER CODE LIMIT THROUGH SECOND VALVE EXCEPT AS SHOWN BOILER EXTERNAL PIPING (BEP)
BLACK & VEATCH CONSULTING ENGINEERS
INTERMOUNTAIN POWER PROJECT
PIPING AND INSTRUMENT DIAGRAM
MAIN STEAM
9255 - 1SGC-M2069

IP14_000064

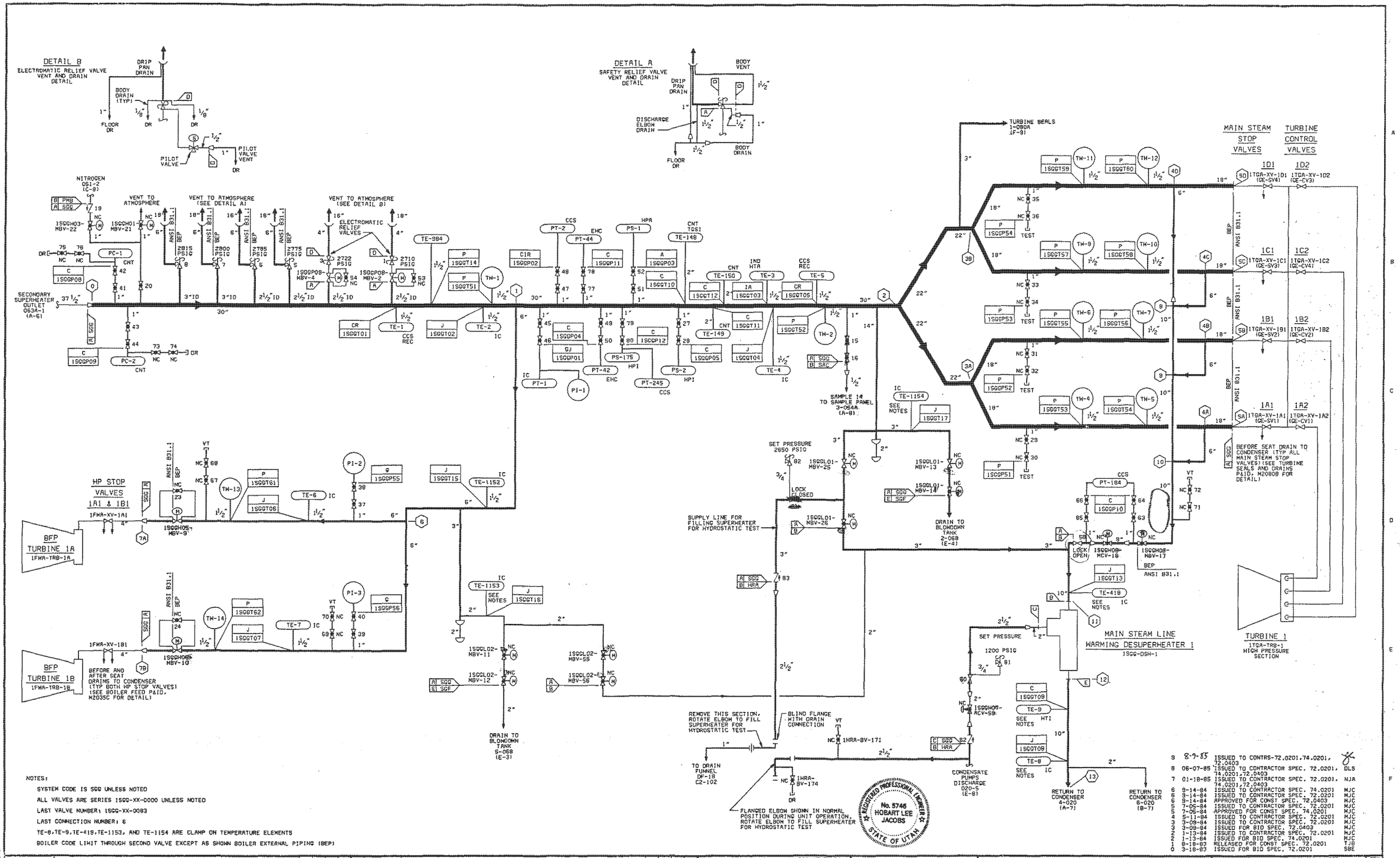

NOTES:

SYSTEM CODE IS SGG UNLESS NOTED

ALL VALVES ARE SERIES 1SGG-XX-0000 UNLESS NOTED

LAST VALVE NUMBER: 1SGG-XX-0083

LAST CONNECTION NUMBER: 6

TE-8, TE-9, TE-419, TE-1153, AND TE-1154 ARE CLAMP ON TEMPERATURE ELEMENTS

BOILER CODE LIMIT THROUGH SECOND VALVE EXCEPT AS SHOWN BOILER EXTERNAL PIPING (BEP)

NO.	DATE	REVISIONS AND RECORD OF ISSUE	BY	CHK	APP	FLM
9	8-9-85	ISSUED TO CONTRS-72.0201,74.0201, 72.0403				
8	06-07-85	ISSUED TO CONTRACTOR SPEC. 72.0201, 74.0201,72.0403	DLS			
7	01-18-85	ISSUED TO CONTRACTOR SPEC. 72.0201, 74.0201,72.0403	NJA			
6	9-14-84	ISSUED TO CONTRACTOR SPEC. 74.0201	MJC			
6	9-14-84	ISSUED TO CONTRACTOR SPEC. 72.0201	MJC			
6	9-14-84	APPROVED FOR CONST SPEC. 72.0403	MJC			
5	7-05-84	ISSUED TO CONTRACTOR SPEC. 72.0201	MJC			
5	7-05-84	APPROVED FOR CONST SPEC. 74.0201	MJC			
4	5-11-84	ISSUED TO CONTRACTOR SPEC. 72.0201	MJC			
3	3-09-84	ISSUED TO CONTRACTOR SPEC. 72.0201	MJC			
3	3-09-84	ISSUED FOR BID SPEC. 72.0403	MJC			
2	1-13-84	ISSUED TO CONTRACTOR SPEC. 72.0201	MJC			
2	1-13-84	ISSUED FOR BID SPEC. 74.0201	MJC			
1	8-18-83	RELEASED FOR CONST SPEC. 72.0201	TJB			
0	3-18-83	ISSUED FOR BID SPEC. 72.0201	SBE			

NO.	DATE	REVISIONS AND RECORD OF ISSUE	BY	CHK	APP	FLM
8	06-07-85	GENERAL REVISION	DLS	CLK	HLJ	
7	01-18-85	GENERAL REVISIONS	NJA	JSH	HLJ	
6	09-14-84	APPROVED FOR CONSTRUCTION SPEC. 72.0403	MJC	CLK	HLJ	
5	07-05-84	APPROVED FOR CONSTRUCTION SPEC. 74.0201	MJC	CLK	HLJ	
4	05-11-84	GENERAL REVISIONS	MJC		HLJ	
3	3-09-84	GENERAL REVISIONS	MJC		HLJ	
2	1-13-84	GENERAL REVISIONS	MJC		HLJ	
1	8-9-85	GENERAL REVISIONS				
0	3-18-83	INITIAL ISSUE	MJC		HLJ	

I HEREBY CERTIFY THAT THIS DOCUMENT WAS PREPARED BY ME OR UNDER MY DIRECT SUPERVISION AND THAT I AM A DULY REGISTERED PROFESSIONAL ENGINEER UNDER THE LAWS OF THE STATE OF UTAH

SIGNED Hobart Lee Jacobs

DATE 3-18-83 REG NO. 5746

BLACK & VEATCH CONSULTING ENGINEERS

ENGINEER MJC DRAWN AGG

CHECKED CLK DATE 07-02-84

IPP INTERMOUNTAIN POWER PROJECT

PIPING AND INSTRUMENT DIAGRAM MAIN STEAM

PROJECT 9255 - DRAWING NUMBER 1SGG-M2069 REV 9

CODE SGG-52.5807

AREA

IP14_000065

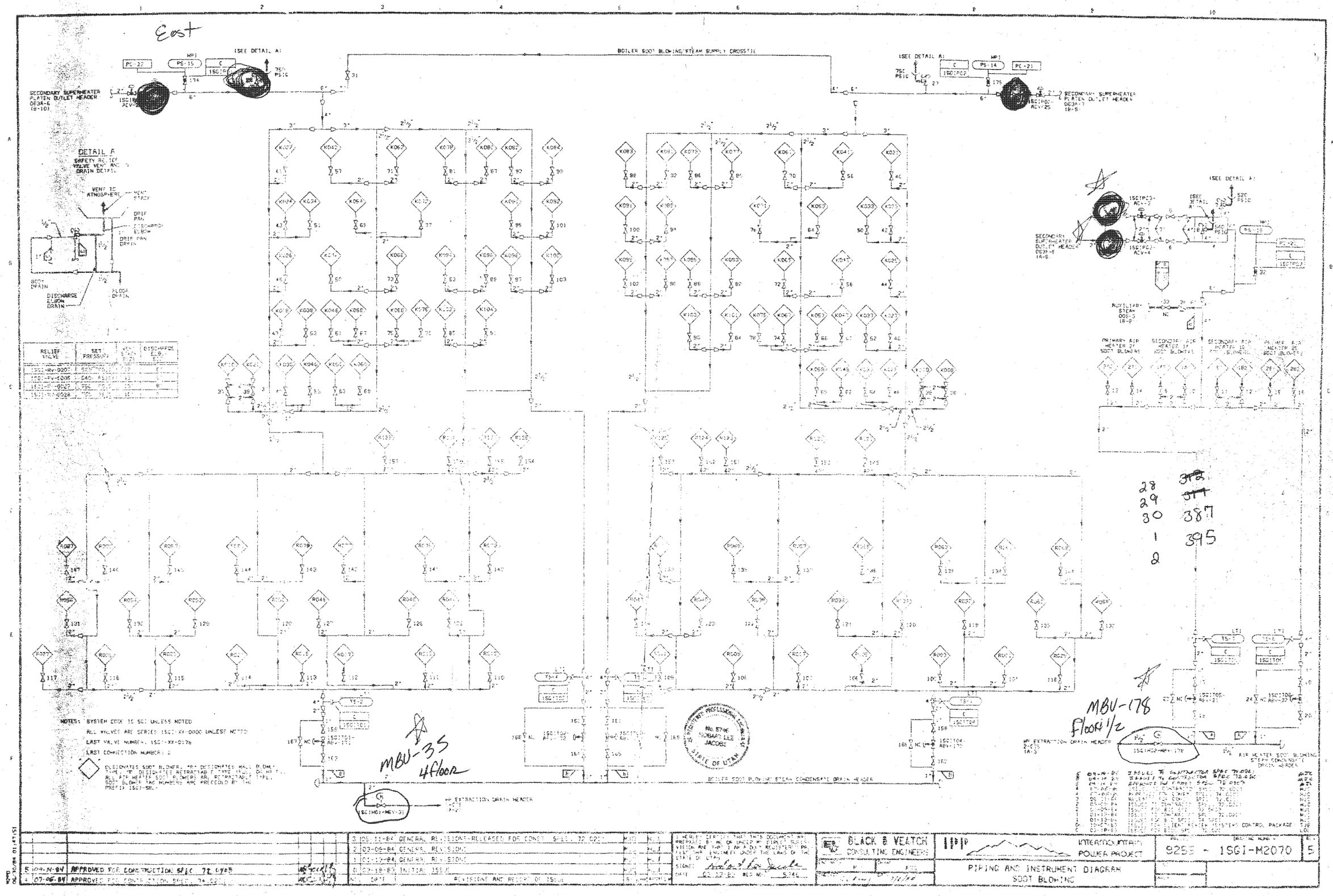
East
BOILER SOOT BLOWING/STEAM SUPPLY CROSSTIE
SECONDARY SUPERHEATER PLATEN OUTLET HEADER
DETAIL A
SAFETY RELIEF VALVE VENT AND DRAIN DETAIL
VENT TO ATMOSPHERE
DRIP PAN
DISCHARGE ELBOW
DRIP PAN DRAIN
BODY DRAIN
DISCHARGE ELBOW DRAIN
FLOOR DRAIN
RELIEF VALVE
SET PRESSURE
DISCHARGE ELBOW
AUXILIARY STEAM
PRIMARY AIR HEATER
SECONDARY AIR HEATER
PLENUM AIR HEATER
BOILER SOOT BLOWING STEAM CONDENSATE DRAIN HEADER
HP EXTRACTION DRAIN HEADER
AIR HEATER SOOT BLOWING STEAM CONDENSATE DRAIN HEADER
MBU-35
4floor
MBU-178
Floor 1/2
28 ~~312~~
29 ~~311~~
30 387
1 395
2
NOTES: SYSTEM CODE IS SGI UNLESS NOTED
ALL VALVES ARE SERIES 1SGI-XX-0000 UNLESS NOTED
LAST VALVE NUMBER: 1SGI-XX-0178
LAST CONNECTION NUMBER: 2
DESIGNATES SOOT BLOWER, "B" DESIGNATES WALL BLOWER TYPE, "R" DESIGNATES RETRACTABLE TYPE (SOOT BLOWER), ALL AIR HEATER SOOT BLOWERS ARE RETRACTABLE TYPE. SOOT BLOWER TAG NUMBERS ARE PRECEDED BY THE PREFIX 1SGI-SBL-
BLACK & VEATCH CONSULTING ENGINEERS
INTERMOUNTAIN POWER PROJECT
PIPING AND INSTRUMENT DIAGRAM SOOT BLOWING
9255 - 1SGI-M2070
5
5 09-11-84 APPROVED FOR CONSTRUCTION SPEC. 72.0405
4 07-06-84 APPROVED FOR CONSTRUCTION SPEC. 74.0201
3 05-11-84 GENERAL REVISIONS-RELEASED FOR CONST. SPEC. 72.0201
2 03-09-84 GENERAL REVISIONS
1 01-13-84 GENERAL REVISIONS
0 03-18-83 INITIAL ISSUE
REVISIONS AND RECORD OF ISSUE
STATE OF UTAH
No. 5746 HOBART LEE JACOBS

IP14_000066

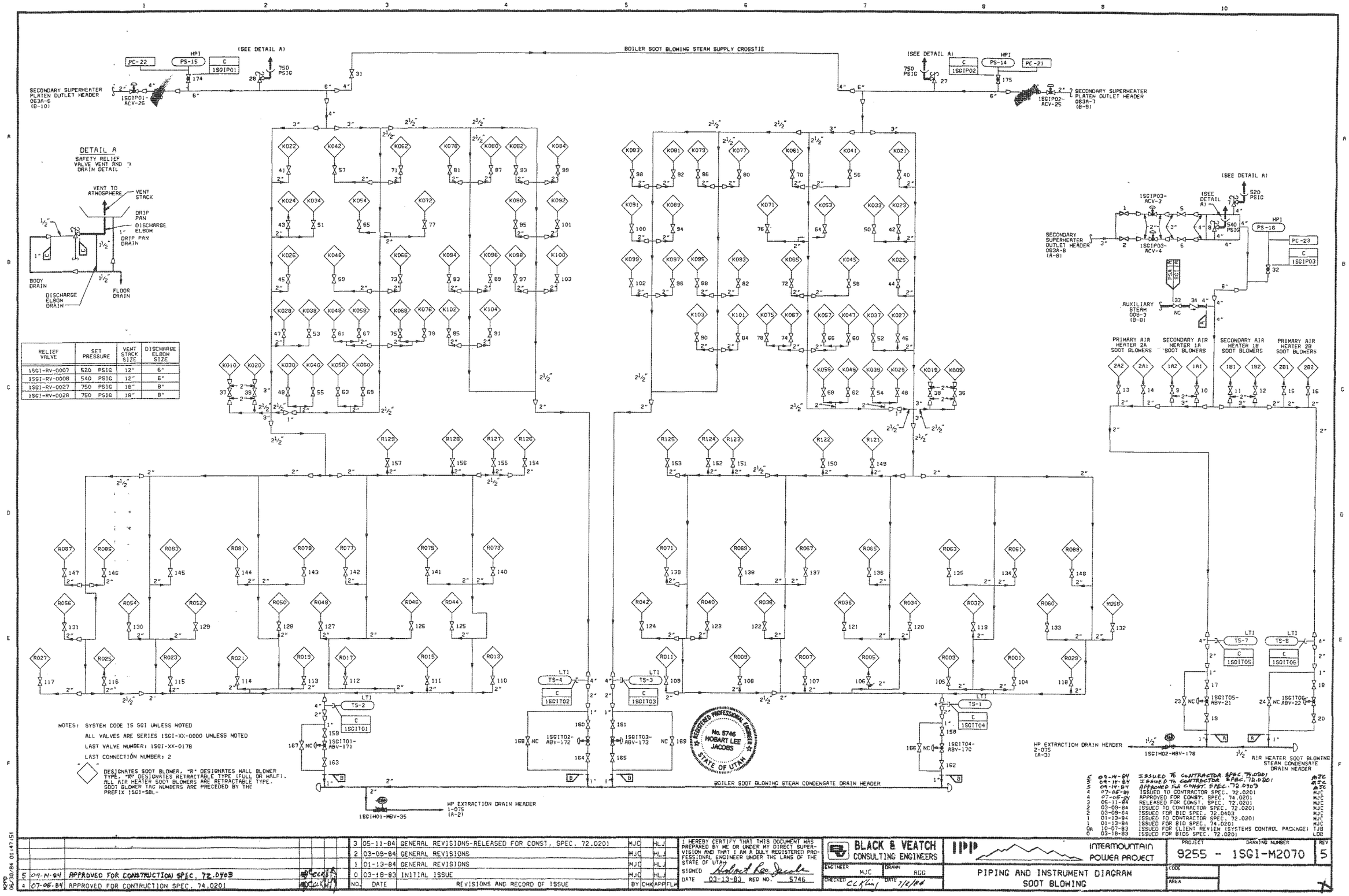

RELIEF VALVE	SET PRESSURE	VENT STACK SIZE	DISCHARGE ELBOW SIZE
1SGI-RV-0007	520 PSIG	12"	6"
1SGI-RV-0008	540 PSIG	12"	6"
1SGI-RV-0027	750 PSIG	18"	8"
1SGI-RV-0028	750 PSIG	18"	8"

NOTES: SYSTEM CODE IS SGI UNLESS NOTED

ALL VALVES ARE SERIES 1SGI-XX-0000 UNLESS NOTED

LAST VALVE NUMBER: 1SGI-XX-0178

LAST CONNECTION NUMBER: 2

◇ DESIGNATES SOOT BLOWER, "R" DESIGNATES WALL BLOWER TYPE. "X" DESIGNATES RETRACTABLE TYPE (FULL OR HALF). ALL AIR HEATER SOOT BLOWERS ARE RETRACTABLE TYPE. SOOT BLOWER TAG NUMBERS ARE PRECEDED BY THE PREFIX 1SGI-SBL-

NO.	DATE	REVISIONS AND RECORD OF ISSUE	BY	CHK	APP	FLM
5	09-14-84	APPROVED FOR CONSTRUCTION SPEC. 72.0403				
4	07-05-84	APPROVED FOR CONTRUCTION SPEC. 74.0201				
3	05-11-84	GENERAL REVISIONS-RELEASED FOR CONST. SPEC. 72.0201	MJC		HLJ	
2	03-09-84	GENERAL REVISIONS	MJC		HLJ	
1	01-13-84	GENERAL REVISIONS	MJC		HLJ	
0	03-18-83	INITIAL ISSUE	MJC		HLJ	

I HEREBY CERTIFY THAT THIS DOCUMENT WAS PREPARED BY ME OR UNDER MY DIRECT SUPERVISION AND THAT I AM A DULY REGISTERED PROFESSIONAL ENGINEER UNDER THE LAWS OF THE STATE OF UTAH

SIGNED Hobart Lee Jacobs

DATE 03-13-83 REG NO. 5746

BLACK & VEATCH CONSULTING ENGINEERS

ENGINEER MJC DRAWN RGG

CHECKED CLK DATE 7/2/84

IPP INTERMOUNTAIN POWER PROJECT

PIPING AND INSTRUMENT DIAGRAM
SOOT BLOWING

PROJECT 9255 - DRAWING NUMBER 1SGI-M2070 REV 5

CODE

AREA

REV	DATE	REVISIONS	BY
5	09-14-84	ISSUED TO CONTRACTOR SPEC. 74.0201	MJC
5	09-14-84	ISSUED TO CONTRACTOR SPEC. 72.0201	MJC
5	09-14-84	APPROVED FOR CONST. SPEC. 72.0403	MJC
4	07-05-84	ISSUED TO CONTRACTOR SPEC. 72.0201	MJC
4	07-05-84	APPROVED FOR CONST. SPEC. 74.0201	MJC
3	05-11-84	RELEASED FOR CONST. SPEC. 72.0201	MJC
2	03-09-84	ISSUED TO CONTRACTOR SPEC. 72.0201	MJC
2	03-09-84	ISSUED FOR BID SPEC. 72.0403	MJC
1	01-13-84	ISSUED TO CONTRACTOR SPEC. 72.0201	MJC
1	01-13-84	ISSUED FOR BID SPEC. 74.0201	MJC
0A	10-07-83	ISSUED FOR CLIENT REVIEW (SYSTEMS CONTROL PACKAGE)	TJB
0	03-18-83	ISSUED FOR BIDS SPEC. 72.0201	LDB

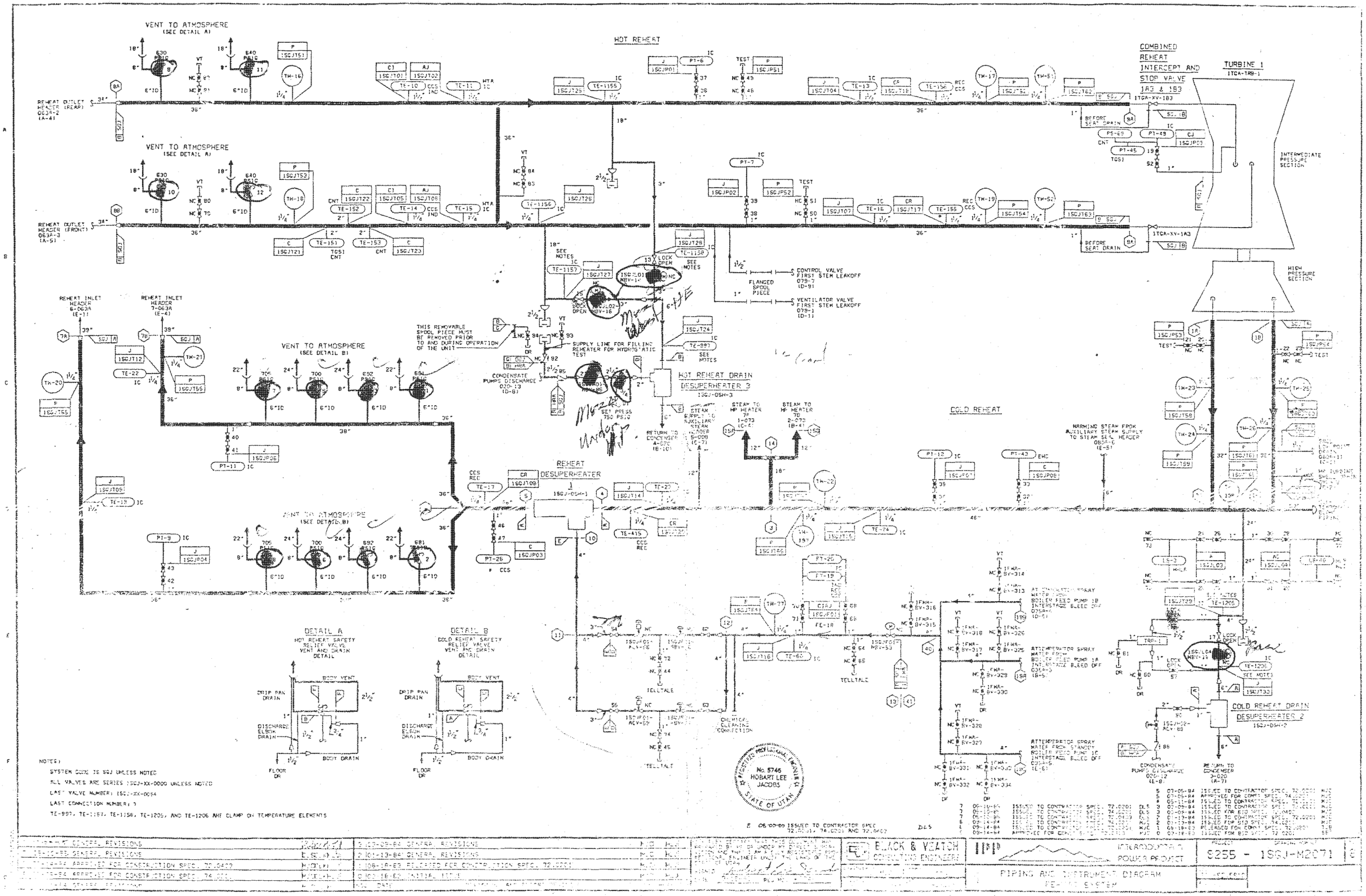
HOT REHEAT
COMBINED REHEAT INTERCEPT AND STOP VALVE 1AG & 1B3
TURBINE 1
VENT TO ATMOSPHERE (SEE DETAIL A)
VENT TO ATMOSPHERE (SEE DETAIL B)
REHEAT OUTLET HEADER (REAR) 063A-2 (A-4)
REHEAT OUTLET HEADER (FRONT) 063A-3 (A-5)
REHEAT INLET HEADER 6-063A (E-1)
REHEAT INLET HEADER 7-063A (E-4)
THIS REMOVABLE SPOOL PIECE MUST BE REMOVED PRIOR TO AND DURING OPERATION OF THE UNIT
SUPPLY LINE FOR FILLING REHEATER FOR HYDROSTATIC TEST
CONDENSATE PUMPS DISCHARGE 020-13 (D-8)
HOT REHEAT DRAIN DESUPERHEATER 3
1SGJ-DSH-3
CONTROL VALVE FIRST STEM LEAKOFF 079-7 (D-9)
FLANGED SPOOL PIECE
VENTILATOR VALVE FIRST STEM LEAKOFF 079-1 (D-1)
INTERMEDIATE PRESSURE SECTION
HIGH PRESSURE SECTION
COLD REHEAT
REHEAT DESUPERHEATER 1
1SGJ-DSH-1
DETAIL A
HOT REHEAT SAFETY RELIEF VALVE VENT AND DRAIN DETAIL
DETAIL B
COLD REHEAT SAFETY RELIEF VALVE VENT AND DRAIN DETAIL
DRIP PAN DRAIN
DISCHARGE ELBOW DRAIN
BODY VENT
BODY DRAIN
FLOOR DR
TELLTALE
CHEMICAL CLEANING CONNECTION
ATTEMPERATOR SPRAY WATER FROM BOILER FEED PUMP 1B INTERSTAGE BLEED OFF
ATTEMPERATOR SPRAY WATER FROM BOILER FEED PUMP 1A INTERSTAGE BLEED OFF
ATTEMPERATOR SPRAY WATER FROM BOILER FEED PUMP 1C INTERSTAGE BLEED OFF
COLD REHEAT DRAIN DESUPERHEATER 2
1SGJ-DSH-2
CONDENSATE PUMPS DISCHARGE 070-12 (E-8)
RETURN TO CONDENSER 3-020 (A-7)
NOTES:
SYSTEM CODE IS 6GJ UNLESS NOTED
ALL VALVES ARE SERIES 1SGJ-XX-0000 UNLESS NOTED
LAST VALVE NUMBER: 1SGJ-XX-0054
LAST CONNECTION NUMBER: 5
TE-997, TE-1157, TE-1158, TE-1205, AND TE-1206 ARE CLAMP ON TEMPERATURE ELEMENTS
BLACK & VEATCH CONSULTING ENGINEERS
INTERMOUNTAIN POWER PROJECT
PIPING AND INSTRUMENT DIAGRAM
RE-HEAT SYSTEM
9255 - 1SGJ-M2071
STATE OF UTAH
HOBART LEE JACOBS

IP14_000068

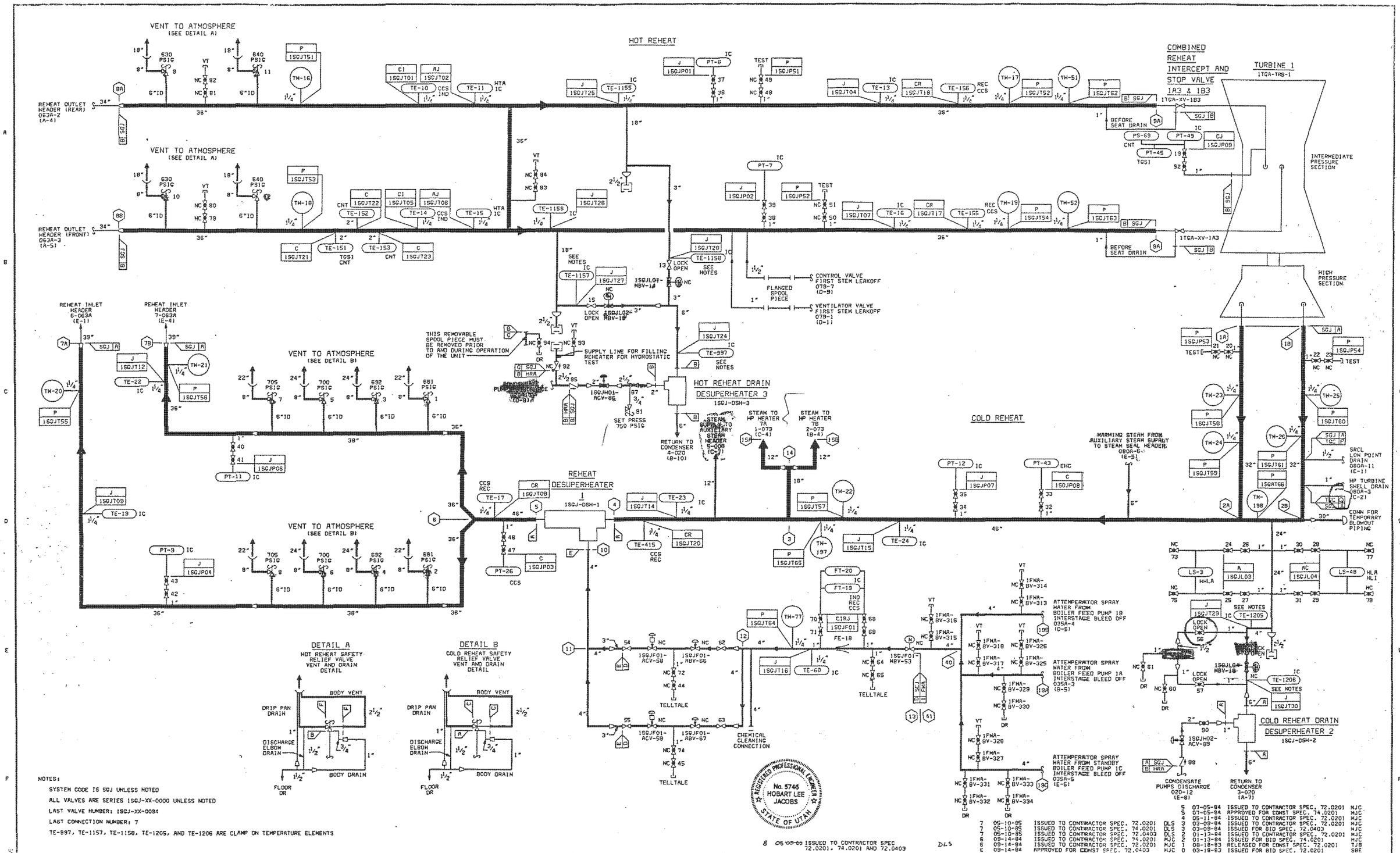

NOTES:

SYSTEM CODE IS SGJ UNLESS NOTED

ALL VALVES ARE SERIES 1SGJ-XX-0000 UNLESS NOTED

LAST VALVE NUMBER: 1SGJ-XX-0084

LAST CONNECTION NUMBER: 7

TE-897, TE-1157, TE-1158, TE-1205, AND TE-1206 ARE CLAMP ON TEMPERATURE ELEMENTS

REV	DATE	REVISIONS AND RECORD OF ISSUE	BY	CHK	APPR
8	08-05-85	GENERAL REVISIONS	DLS	CLK	HLJ
7	05-10-85	GENERAL REVISIONS	DLS	CLK	HLJ
6	09-14-84	APPROVED FOR CONSTRUCTION SPEC. 72.0403	MJC	CLK	HLJ
5	07-05-84	APPROVED FOR CONSTRUCTION SPEC. 74.0201	MJC	CLK	HLJ
4	05-11-84	GENERAL REVISIONS	MJC	CLK	HLJ
3	03-09-84	GENERAL REVISIONS	MJC	CLK	HLJ
2	01-13-84	GENERAL REVISIONS	MJC	CLK	HLJ
1	08-18-83	RELEASED FOR CONSTRUCTION SPEC. 72.0201	MJC	CLK	HLJ
0	03-18-83	INITIAL ISSUE	MJC	CLK	HLJ

I HEREBY CERTIFY THAT THIS DOCUMENT WAS PREPARED BY ME OR UNDER MY DIRECT SUPERVISION AND THAT I AM A DULY REGISTERED PROFESSIONAL ENGINEER UNDER THE LAWS OF THE STATE OF UTAH

SIGNED Hobart Lee Jacobs

DATE 3-18-83 REG NO. 5746

BLACK & VEATCH CONSULTING ENGINEERS

ENGINEER MJC DRAWN AGG

CHECKED CLK DATE 7-2-84

IPP INTERMOUNTAIN POWER PROJECT

PIPING AND INSTRUMENT DIAGRAM
REHEAT SYSTEM

PROJECT 9255 - DRAWING NUMBER 1SGJ-M2071 REV 8

CODE SGJ-S2.S810

AREA

IP14_000069

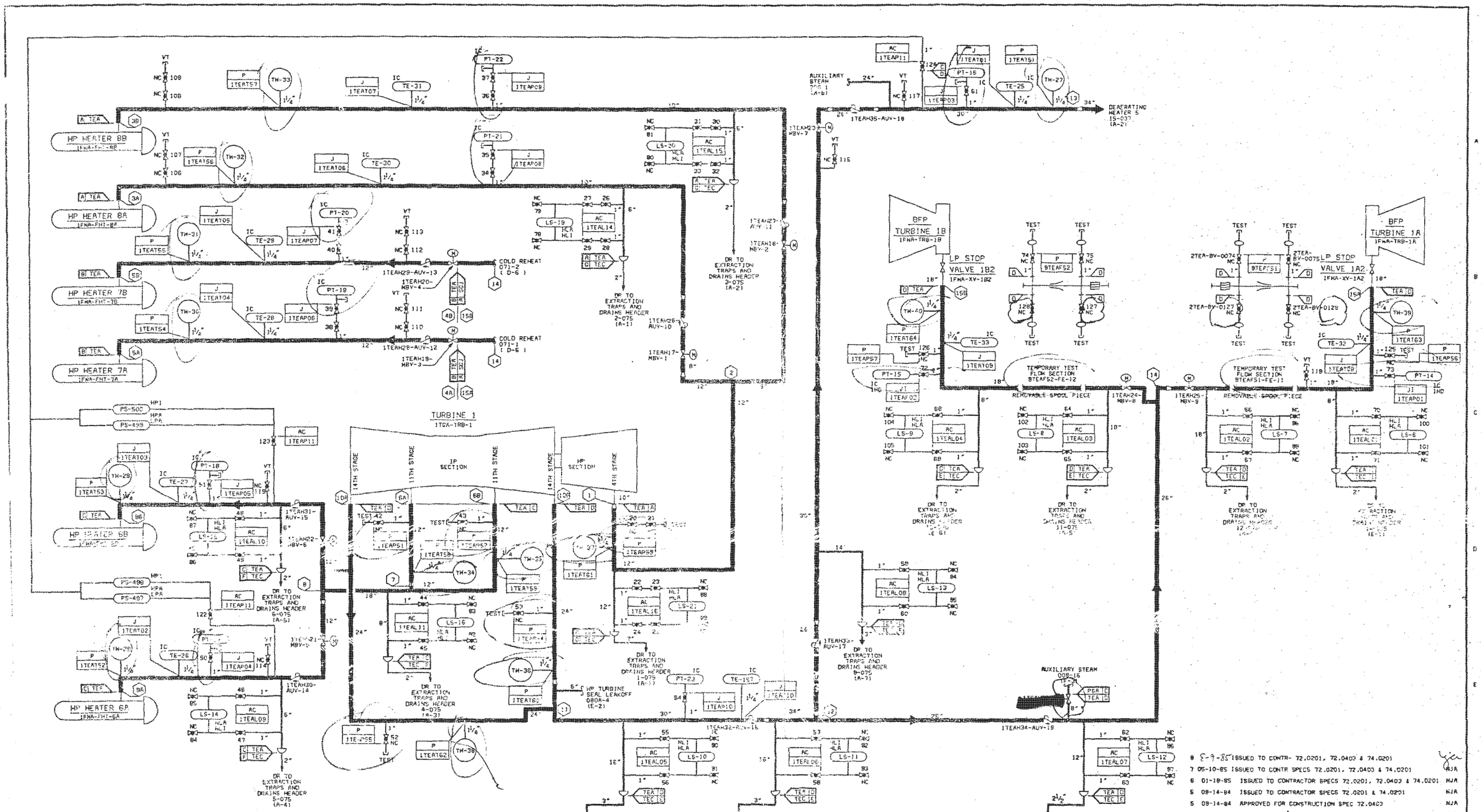

NOTES:
SYSTEM CODE IS TEA UNLESS NOTED
ALL VALVES ARE SERIES 1TEA-XX-0000 UNLESS NOTED
LAST VALVE NUMBER: 1TEA-XX-0126
LAST CONNECTION NUMBER: 15

8	8-9-85	ISSUED TO CONTR- 72.0201, 72.0403 & 74.0201	
7	05-10-85	ISSUED TO CONTR SPECS 72.0201, 72.0403 & 74.0201	NJA
6	01-18-85	ISSUED TO CONTRACTOR SPECS 72.0201, 72.0403 & 74.0201	NJA
5	08-14-84	ISSUED TO CONTRACTOR SPECS 72.0201 & 74.0201	NJA
5	09-14-84	APPROVED FOR CONSTRUCTION SPEC 72.0403	NJA
4	07-05-84	APPROVED FOR CONSTRUCTION SPEC 74.0201	NJA
4	07-05-84	ISSUED TO CONTRACTOR SPEC 72.0201	NJA
3	03-09-84	ISSUED TO CONTRACTOR SPEC 72.0201	RSP
3	03-09-84	ISSUED FOR BID SPEC 72.0403	RSP
2	01-13-84	ISSUED FOR BID SPEC 74.0201	NJA
2	08-18-83	RELEASED FOR CONST. SPEC 72.0201	TJB
1	04-29-83	ISSUED FOR ADDENDUM 2 SPEC 72.0201	NJA
0	03-18-83	ISSUED FOR BID SPEC 72.0201	LDB

REGISTERED PROFESSIONAL ENGINEER No. 5746 HOBART LEE JACOBS STATE OF UTAH

6-9-85	GENERAL REVISIONS		3	03-09-84	GENERAL REVISIONS	NJA	
05-10-85	GENERAL REVISIONS	NJA JSHLJ	2	08-18-83	RELEASED FOR CONSTRUCTION SPEC. 72.0201	NJA	
01-18-85	GENERAL REVISIONS	NJA JSHLJ	1	04-29-83	GENERAL REVISIONS	NJA	
08-14-84	APPROVED FOR CONSTRUCTION SPEC. 72.0403	NJA JSHLJ	0	03-18-83	INITIAL ISSUE	NJA	
07-05-84	APPROVED FOR CONSTRUCTION SPEC. 74.0201	NJA JSHLJ	NO.	DATE	REVISIONS AND RECORD OF ISSUE	BY	CHECKED

I HEREBY CERTIFY THAT THIS DOCUMENT WAS PREPARED BY ME OR UNDER MY DIRECT SUPERVISION AND THAT I AM A DULY REGISTERED PROFESSIONAL ENGINEER UNDER THE LAWS OF THE STATE OF UTAH
SIGNED: [signature]
DATE: 3-19-83 REG NO. 5746

BLACK & VEATCH CONSULTING ENGINEERS
ENGINEER NJA DRAWN RGG
CHECKED LJS DATE 07-02-84

IPP INTERMOUNTAIN POWER PROJECT

PIPING AND INSTRUMENT DIAGRAM
HIGH PRESSURE EXTRACTION

PROJECT 9255 - DRAWING NUMBER 1TEA-M2073 REV 8
CODE 1TEA-52.6001
AREA

IP14_000070

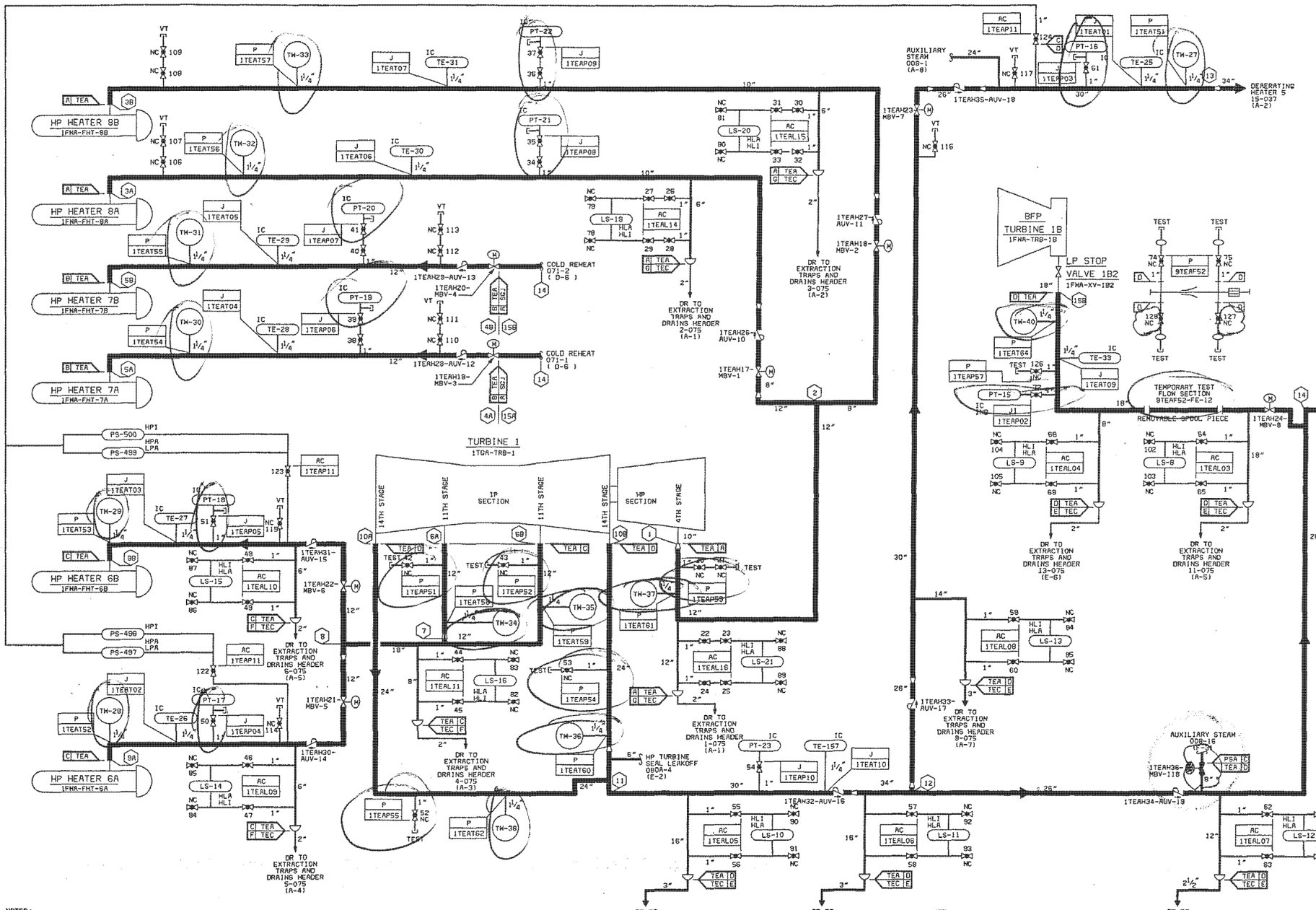

NOTES:

SYSTEM CODE IS TEA UNLESS NOTED

ALL VALVES ARE SERIES 1TEA-XX-0000 UNLESS NOTED

LAST VALVE NUMBER: 1TEA-XX-0128

LAST CONNECTION NUMBER: 15

NO.	DATE	REVISIONS AND RECORD OF ISSUE	BY	CHK	APPR	FLM
8	8-9-85	ISSUED TO CONTR- 72.0201, 72.0403 & 74.0201				
7	05-10-85	ISSUED TO CONTR SPECS 72.0201, 72.0403 & 74.0201	NJA			
6	01-18-85	ISSUED TO CONTRACTOR SPECS 72.0201, 72.0403 & 74.0201	NJA			
5	09-14-84	ISSUED TO CONTRACTOR SPECS 72.0201 & 74.0201	NJA			
5	09-14-84	APPROVED FOR CONSTRUCTION SPEC 72.0403	NJA			
4	07-05-84	APPROVED FOR CONSTRUCTION SPEC 74.0201	NJA			
4	07-05-84	ISSUED TO CONTRACTOR SPEC 72.0201	NJA			
3	03-09-84	ISSUED TO CONTRACTOR SPEC 72.0201	RSP			
3	03-09-84	ISSUED FOR BID SPEC 72.0403	RSP			
2	01-13-84	ISSUED FOR BID SPEC 74.0201	NJA			
2	08-18-83	RELEASED FOR CONST. SPEC 72.0201	TJB			
1	04-29-83	ISSUED FOR ADDENDUM 2 SPEC 72.0201	NJA			
0	03-18-83	ISSUED FOR BID SPEC 72.0201	LDB			

NO.	DATE	REVISIONS AND RECORD OF ISSUE	BY	CHK	APPR	FLM
8	8-9-85	GENERAL REVISIONS				
7	05-10-85	GENERAL REVISIONS	NJA	LJS	HLJ	
6	01-18-85	GENERAL REVISIONS	NJA	LJS	HLJ	
5	09-14-84	APPROVED FOR CONSTRUCTION SPEC. 72.0403	NJA	LJS	HLJ	
4	07-05-84	APPROVED FOR CONSTRUCTION SPEC. 74.0201	NJA	LJS	HLJ	
3	03-09-84	GENERAL REVISIONS	NJA		HLJ	
2	08-18-83	RELEASED FOR CONSTRUCTION SPEC. 72.0201	NJA		HLJ	
1	04-29-83	GENERAL REVISIONS	NJA		HLJ	
0	03-18-83	INITIAL ISSUE	NJA		HLJ	

I HEREBY CERTIFY THAT THIS DOCUMENT HAS PREPARED BY ME OR UNDER MY DIRECT SUPERVISION AND THAT I AM A DULY REGISTERED PROFESSIONAL ENGINEER UNDER THE LAWS OF THE STATE OF UTAH

SIGNED Hobart Lee Jacobs

DATE 3-18-83 REG NO. 5746

REGISTERED PROFESSIONAL ENGINEER No. 5746 HOBART LEE JACOBS STATE OF UTAH

BLACK & VEATCH CONSULTING ENGINEERS

ENGINEER NJA DRAWN AGG

CHECKED LJS DATE 07-02-84

IPP INTERMOUNTAIN POWER PROJECT

PIPING AND INSTRUMENT DIAGRAM
HIGH PRESSURE EXTRACTION

PROJECT 9255 DRAWING NUMBER 1TEA-M2073 REV 8

CODE TEA-52.6001

AREA

IP14_000071

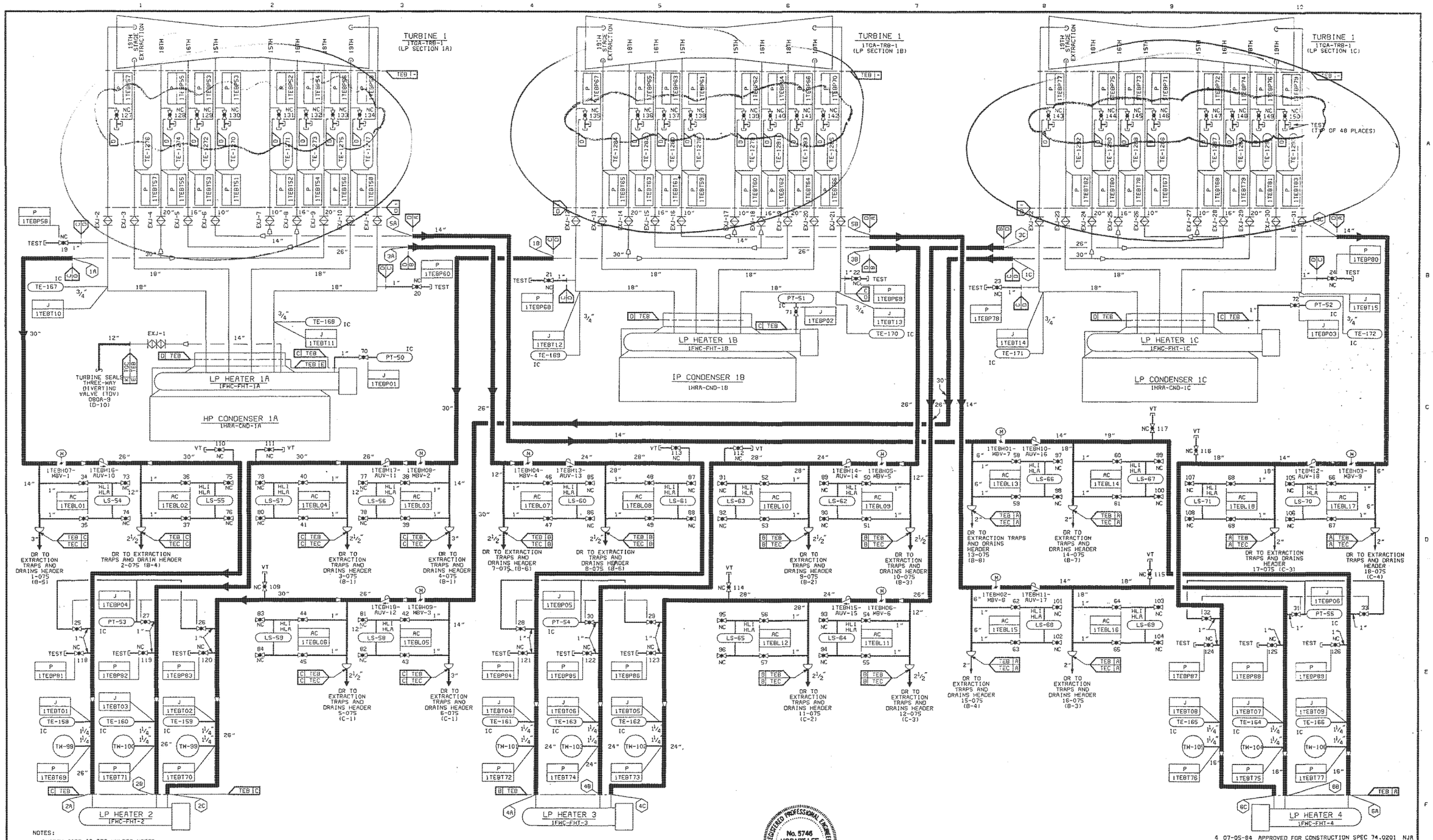

NOTES:

SYSTEM CODE IS TEB UNLESS NOTED

ALL VALVES ARE SERIES 1TEB-XX-0000 UNLESS NOTED

LAST VALVE NUMBER: 1TEB-XX-0150

LAST CONNECTION NUMBER: 18

REGISTERED PROFESSIONAL ENGINEER No. 5746 HOBART LEE JACOBS STATE OF UTAH

6	5/10/85	GENERAL REVISIONS	[illegible]
5	09-14-84	APPROVED FOR CONSTRUCTION SPEC 72.0403	NJA/LJS/MLJ
4	07-05-84	APPROVED FOR CONSTRUCTION SPEC 74.0201	NJA/LJS/MLJ

	DATE	REVISIONS AND RECORD OF ISSUE	BY	CHECKED
3	03-09-84	GENERAL REVISIONS	NJA	HLJ
2	08-18-83	RELEASED FOR CONSTRUCTION SPEC. 72.0201	NJA	HLJ
1	4-29-83	GENERAL REVISIONS	NJA	HLJ
0	3-18-83	INITIAL ISSUE	NJA	HLJ

I HEREBY CERTIFY THAT THIS DOCUMENT WAS PREPARED BY ME OR UNDER MY DIRECT SUPERVISION AND THAT I AM A DULY REGISTERED PROFESSIONAL ENGINEER UNDER THE LAWS OF THE STATE OF UTAH

SIGNED Hobart Lee Jacobs

DATE 3-18-83 REG NO. 5746

BLACK & VEATCH CONSULTING ENGINEERS

ENGINEER NJA DRAWN AGG

PREPARED LJS DATE 07-02-84

IPP INTERMOUNTAIN POWER PROJECT

PIPING AND INSTRUMENT DIAGRAM
LOW PRESSURE EXTRACTION

PROJECT 9255 - DRAWING NUMBER 1TEB-M2074 REV 6

CODE TEB-52.6002

AREA

IP14_000072

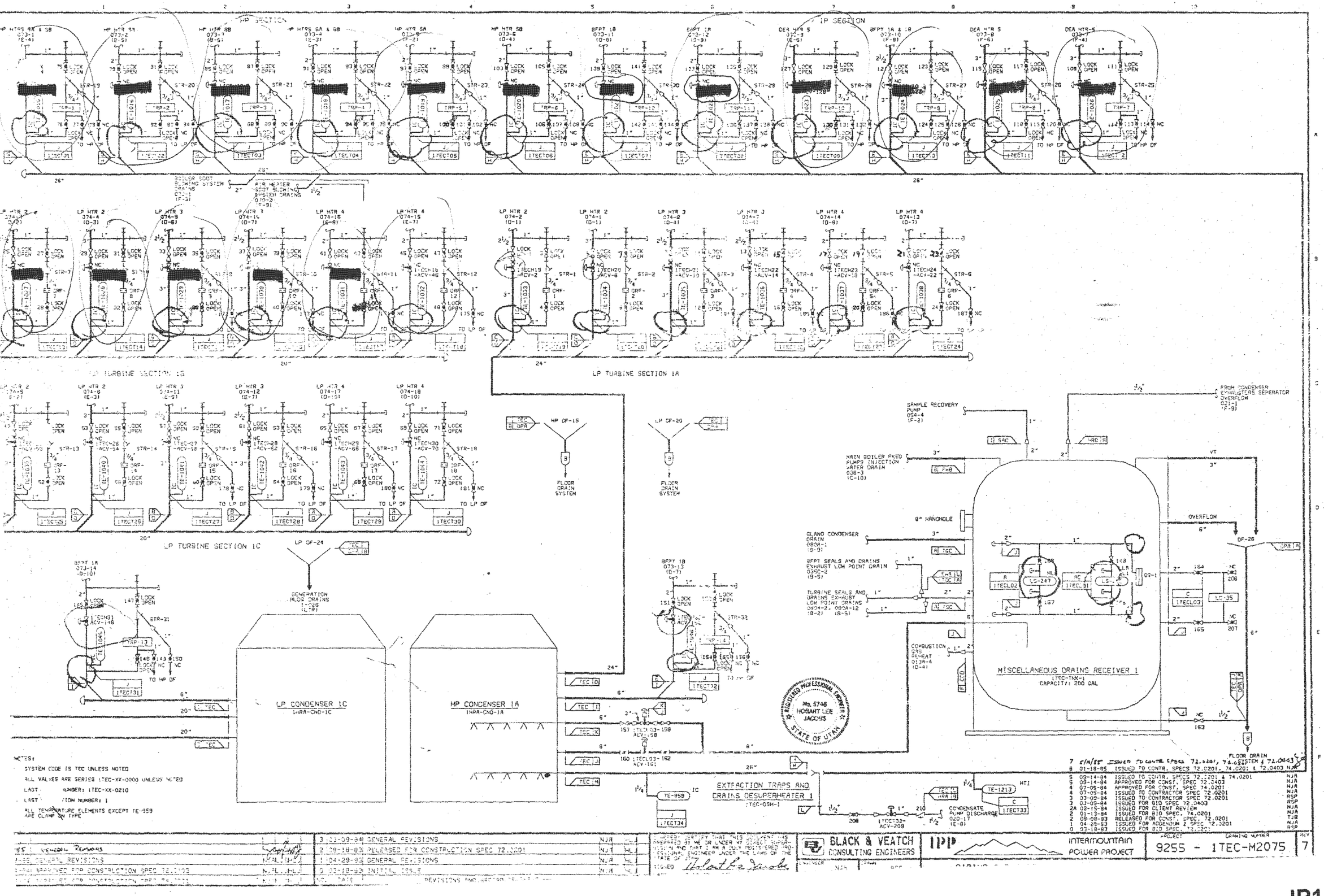
HP SECTION
IP SECTION
LP TURBINE SECTION 1B
LP TURBINE SECTION 1A
LP TURBINE SECTION 1C
LP CONDENSER 1C
HP CONDENSER 1A
MISCELLANEOUS DRAINS RECEIVER 1
EXTRACTION TRAPS AND DRAINS DESUPERHEATER 1
SAMPLE RECOVERY PUMP
MAIN BOILER FEED PUMPS INJECTION WATER DRAIN
GLAND CONDENSER DRAIN
BFPT SEALS AND DRAINS EXHAUST LOW POINT DRAIN
TURBINE SEALS AND DRAINS EXHAUST LOW POINT DRAINS
COMBUSTION GAS REHEAT
FROM CONDENSER EXHAUSTERS SEPERATOR OVERFLOW
8" MANHOLE
OVERFLOW
FLOOR DRAIN SYSTEM
CONDENSATE PUMP DISCHARGE
GENERATION FLOOR DRAINS
BOILER SOOT BLOWING SYSTEM DRAINS
AIR HEATER SOOT BLOWING SYSTEM DRAINS
NOTES:
SYSTEM CODE IS TEC UNLESS NOTED
ALL VALVES ARE SERIES 1TEC-XX-0000 UNLESS NOTED
LAST NUMBER: 1TEC-XX-0210
LAST ION NUMBER: 1
ALL TEMPERATURE ELEMENTS EXCEPT TE-959 ARE CLAMP ON TYPE
REGISTERED PROFESSIONAL ENGINEER
No. 5746
HOBART LEE JACOBS
STATE OF UTAH
7 5/8/85 ISSUED TO CONTR. SPECS 72.0201, 74.0201 & 72.0403 NJA
6 01-18-85 ISSUED TO CONTR. SPECS 72.0201, 74.0201 & 72.0403 NJA
5 09-14-84 ISSUED TO CONTR. SPECS 72.0201 & 74.0201 NJA
5 09-14-84 APPROVED FOR CONST. SPEC 72.0403 NJA
4 07-05-84 APPROVED FOR CONST. SPEC 74.0201 NJA
4 07-05-84 ISSUED TO CONTRACTOR SPEC 72.0201 NJA
3 03-09-84 ISSUED TO CONTRACTOR SPEC 72.0201 RSP
3 03-09-84 ISSUED FOR BID SPEC 72.0403 RSP
2A 02-15-84 ISSUED FOR CLIENT REVIEW NJA
2 01-13-84 ISSUED FOR BID SPEC. 74.0201 NJA
2 09-08-83 RELEASED FOR CONST. SPEC. 72.0201 TJB
1 04-29-83 ISSUED FOR ADDENDUM 2 SPEC 72.0201 NJA
0 03-18-83 ISSUED FOR BID SPEC. 72.0201 RSP
3 03-09-84 GENERAL REVISIONS NJA
2 08-18-83 RELEASED FOR CONSTRUCTION SPEC 72.0201 NJA HL
1 04-29-83 GENERAL REVISIONS NJA HL
0 03-18-83 INITIAL ISSUE NJA HL
BLACK & VEATCH CONSULTING ENGINEERS
IPP
INTERMOUNTAIN POWER PROJECT
PROJECT 9255
DRAWING NUMBER 1TEC-M2075
REV 7

IP14_000073

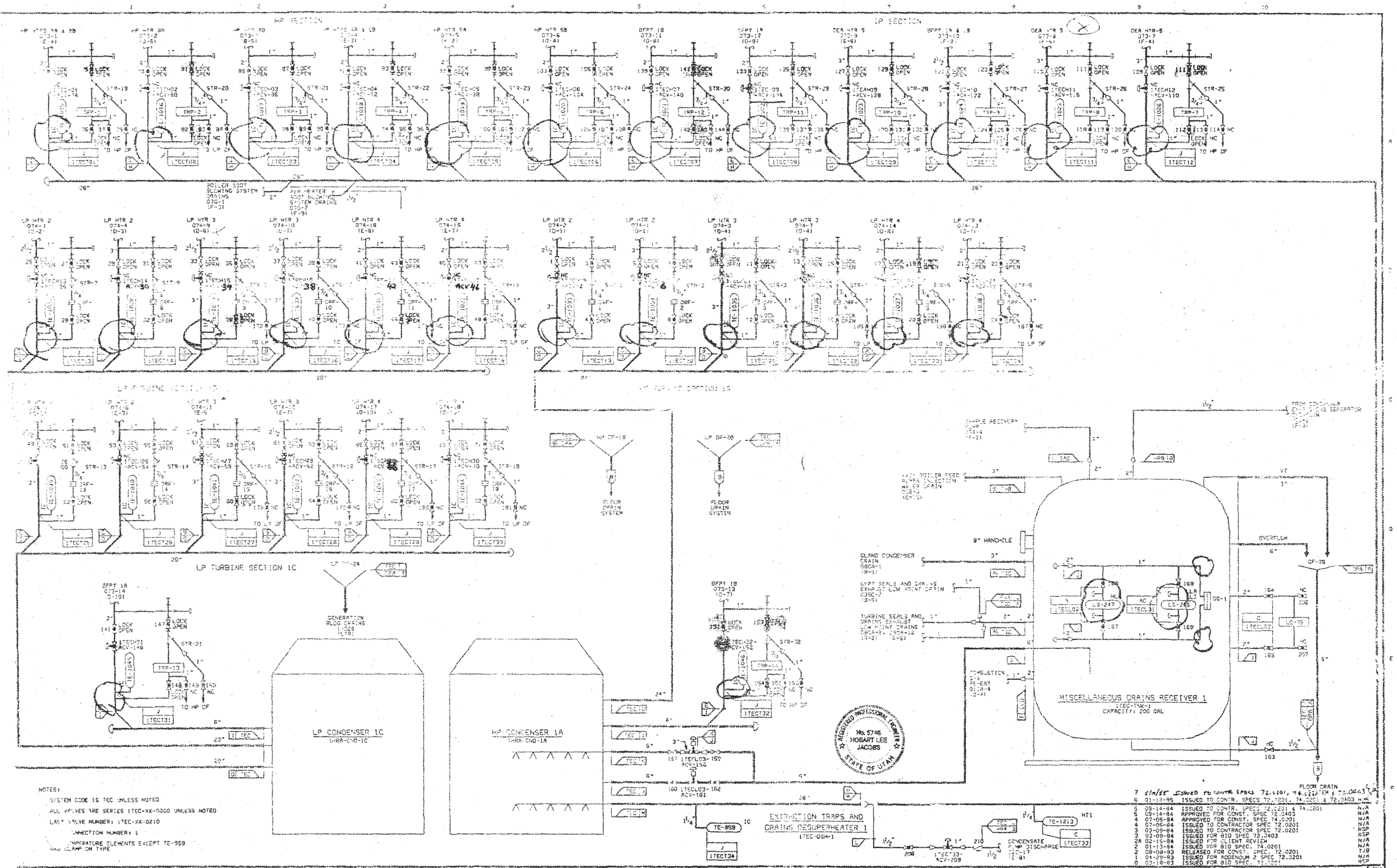

NOTES:
1. SYSTEM CODE IS TEC UNLESS NOTED
2. ALL VALVES ARE SERIES 1TEC-XX-0000 UNLESS NOTED
3. LAST VALVE NUMBER: 1TEC-XX-0210
4. CONNECTION NUMBER: 1
5. TEMPERATURE ELEMENTS EXCEPT TE-959 ARE CLAMP ON TYPE

REV	DATE	DESCRIPTION	BY
7	5/10/95	ISSUED TO CONTR. SPECS 72.0201, 74.0201 & 72.0403	NJA
6	01-19-95	ISSUED TO CONTR. SPECS 72.0201, 74.0201 & 72.0403	NJA
5	09-14-84	ISSUED TO CONTR. SPECS 72.0201 & 74.0201	NJA
4	07-05-84	APPROVED FOR CONST. SPEC 72.0403	NJA
4	07-05-84	APPROVED FOR CONST. SPEC 74.0201	NJA
3	03-09-84	ISSUED TO CONTRACTOR SPEC 72.0201	RSP
3	03-09-84	ISSUED TO CONTRACTOR SPEC 72.0403	RSP
2A	02-15-84	ISSUED FOR CLIENT REVIEW	NJA
2	01-13-84	ISSUED FOR BID SPEC. 74.0201	NJA
2	08-08-83	RELEASED FOR CONST. SPEC. 72.0201	TJB
1	04-29-83	ISSUED FOR ADDENDUM 2 SPEC 72.0201	NJA
0	03-18-83	ISSUED FOR BID SPEC. 72.0201	RSP

REV	DATE	DESCRIPTION	BY	CHK	APP
7	5/10/85	GENERAL REVISIONS	NJA		
6	01-19-85	GENERAL REVISIONS	NJA		
5A	09-14-84	APPROVED FOR CONSTRUCTION SPEC 72.0403	NJA		
5	09-14-84	ISSUED FOR CONSTRUCTION SPEC 74.0201	NJA		
4	07-05-84	ISSUED FOR CONSTRUCTION SPEC 72.0201	NJA		
3	03-09-84	GENERAL REVISIONS	NJA		
2	08-18-83	RELEASED FOR CONSTRUCTION SPEC 72.0201	NJA		
1	04-29-83	GENERAL REVISIONS	NJA		
0	03-18-83	INITIAL ISSUE	NJA		

REVISIONS AND RECORD OF ISSUE

I HEREBY CERTIFY THAT THIS DRAWING WAS PREPARED BY ME OR UNDER MY DIRECT SUPERVISION AND THAT I AM A DULY REGISTERED PROFESSIONAL ENGINEER UNDER THE LAWS OF THE STATE OF UTAH
SIGNED Hobart Lee Jacobs
DATE 3-19-93 REG NO. 5746

BLACK & VEATCH CONSULTING ENGINEERS

IPP INTERMOUNTAIN POWER PROJECT

PIPING AND INSTRUMENT DIAGRAM
EXTRACTION TRAPS AND DRAINS

PROJECT 9255 DRAWING NUMBER 1TEC-M2075 REV 7

CODE 1TEC-52.6.102

IP14_000074

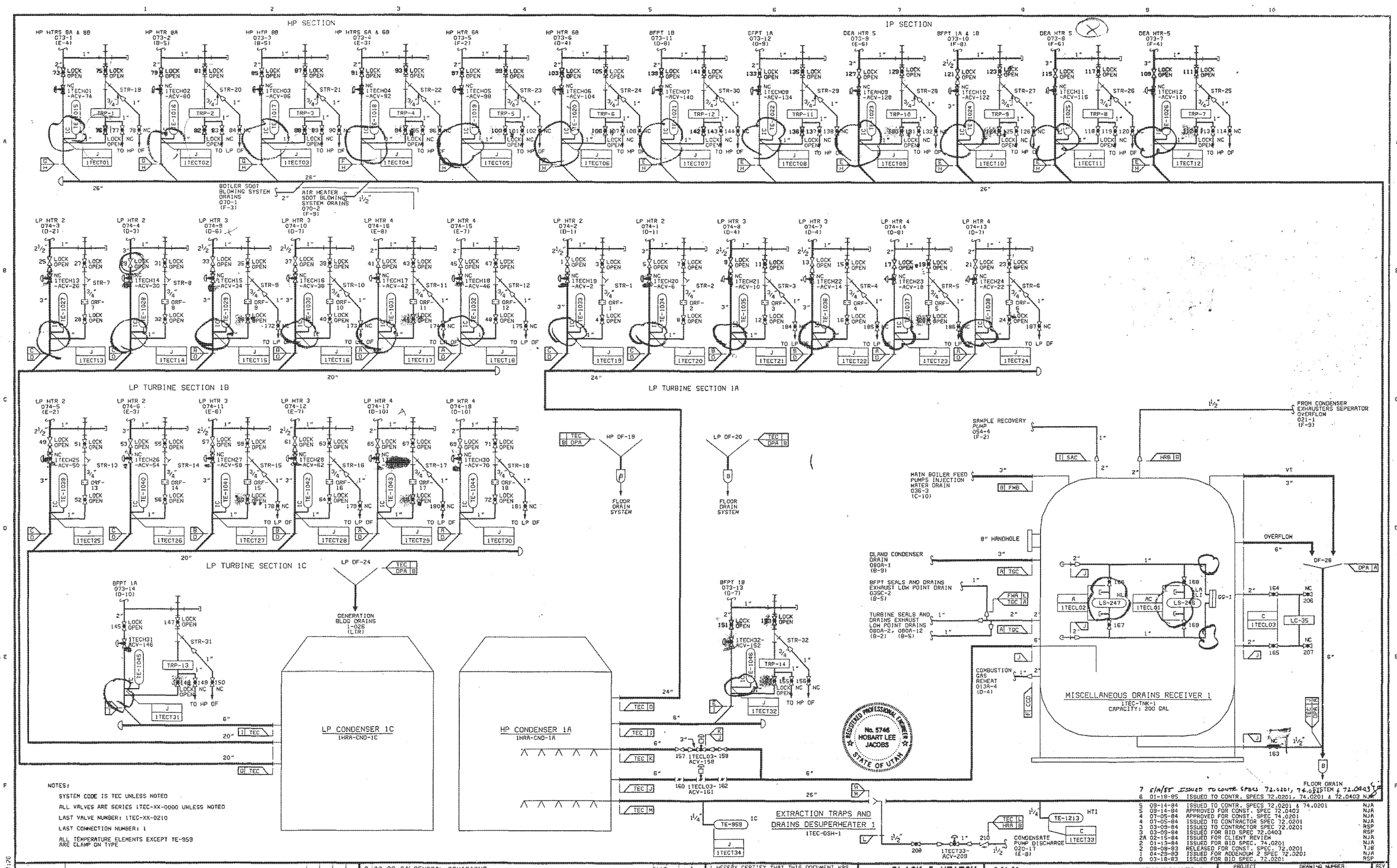

NOTES:

SYSTEM CODE IS TEC UNLESS NOTED

ALL VALVES ARE SERIES 1TEC-XX-0000 UNLESS NOTED

LAST VALVE NUMBER: 1TEC-XX-0210

LAST CONNECTION NUMBER: 1

ALL TEMPERATURE ELEMENTS EXCEPT TE-959 ARE CLAMP ON TYPE

NO.	DATE	REVISIONS AND RECORD OF ISSUE	BY	CHK	APPR
7	5/10/85	GENERAL REVISIONS			
6	01-18-85	GENERAL REVISIONS	NJA	LJS	HLJ
5	09-14-84	APPROVED FOR CONSTRUCTION SPEC 72.0403	NJA	LJS	HLJ
4	07-05-84	APPROVED FOR CONSTRUCTION SPEC 74.0201	NJA	LJS	HLJ
3	03-09-84	GENERAL REVISIONS	NJA		HLJ
2	08-18-83	RELEASED FOR CONSTRUCTION SPEC 72.0201	NJA		HLJ
1	04-29-83	GENERAL REVISIONS	NJA		HLJ
0	03-18-83	INITIAL ISSUE	NJA		HLJ

I HEREBY CERTIFY THAT THIS DOCUMENT WAS PREPARED BY ME OR UNDER MY DIRECT SUPERVISION AND THAT I AM A DULY REGISTERED PROFESSIONAL ENGINEER UNDER THE LAWS OF THE STATE OF UTAH

SIGNED Hobart Lee Jacobs

DATE 3-18-83 REG NO. 5746

BLACK & VEATCH CONSULTING ENGINEERS

ENGINEER NJA CHECKED LJS DRAWN AGG DATE 7-2-84

IPP INTERMOUNTAIN POWER PROJECT

PIPING AND INSTRUMENT DIAGRAM
EXTRACTION TRAPS AND DRAINS

PROJECT DRAWING NUMBER: 9255 - 1TEC-M2075 REV 7

CODE TEC-52.6003

AREA

NO.	DATE	REVISIONS	BY	CHK	APPR
7	5/10/85	ISSUED TO CONTR. SPECS 72.0201, 74.0201 & 72.0403			
6	01-18-85	ISSUED TO CONTR. SPECS 72.0201, 74.0201 & 72.0403	NJA		
5	09-14-84	ISSUED TO CONTR. SPECS 72.0201 & 74.0201	NJA		
5	09-14-84	APPROVED FOR CONST. SPEC 72.0403	NJA		
4	07-05-84	APPROVED FOR CONST. SPEC 74.0201	NJA		
4	07-05-84	ISSUED TO CONTRACTOR SPEC 72.0201	NJA		
3	03-09-84	ISSUED TO CONTRACTOR SPEC 72.0201	RSP		
3	03-09-84	ISSUED FOR BID SPEC 72.0403	RSP		
2A	02-15-84	ISSUED FOR CLIENT REVIEW	NJA		
2	01-13-84	ISSUED FOR BID SPEC. 74.0201	NJA		
2	08-08-83	RELEASED FOR CONST. SPEC. 72.0201	TJB		
1	04-29-83	ISSUED FOR ADDENDUM 2 SPEC 72.0201	NJA		
0	03-18-83	ISSUED FOR BID SPEC. 72.0201	RSP		

IP14_000075

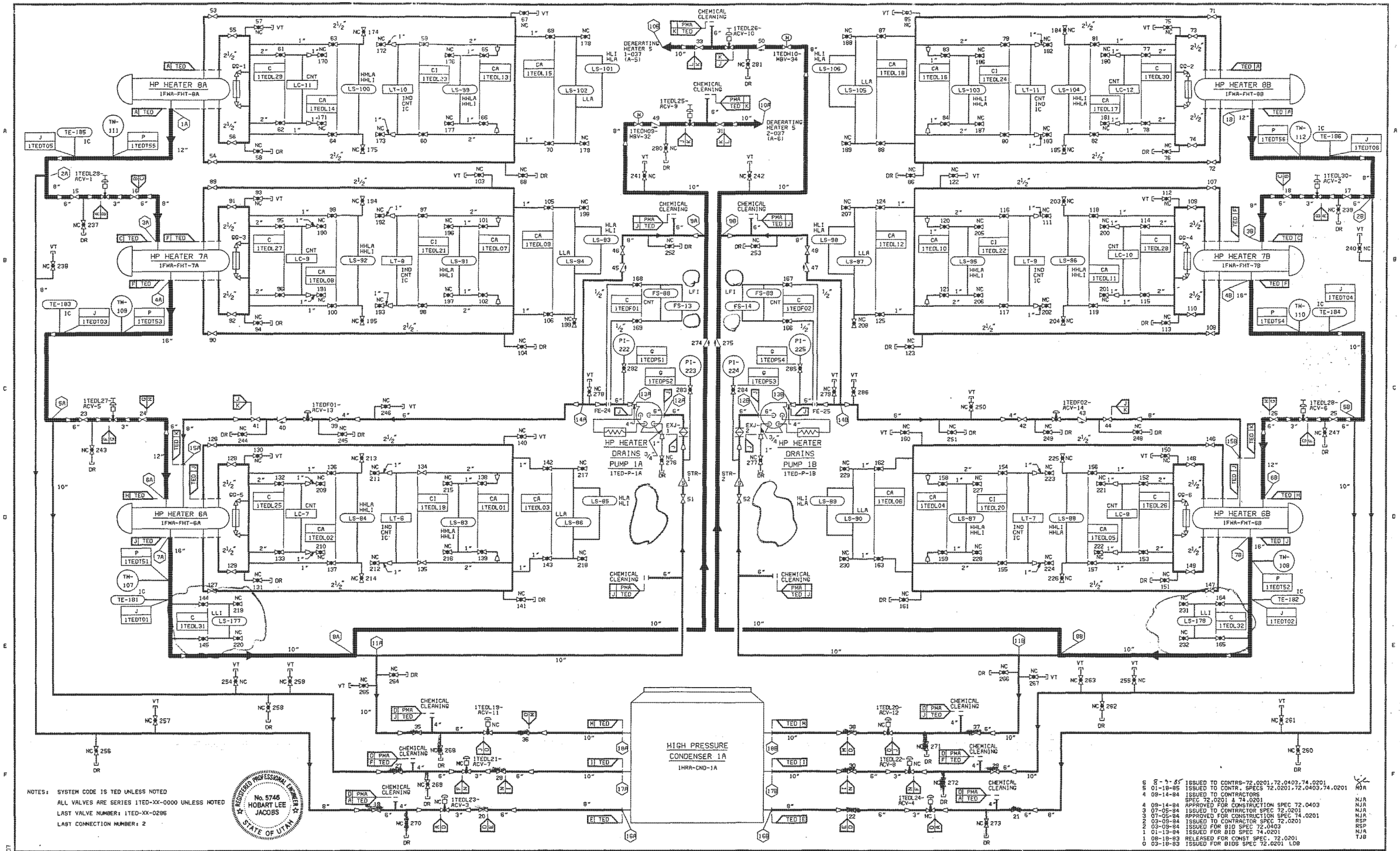
HP HEATER 8A
1FWA-FHT-8A
HP HEATER 8B
1FWA-FHT-8B
HP HEATER 7A
1FWA-FHT-7A
HP HEATER 7B
1FWA-FHT-7B
HP HEATER 6A
1FWA-FHT-6A
HP HEATER 6B
1FWA-FHT-6B
HP HEATER DRAINS PUMP 1A
1TED-P-1A
HP HEATER DRAINS PUMP 1B
1TED-P-1B
DEAERATING HEATER 5 1-037 (A-5)
DEAERATING HEATER 5 2-037 (A-6)
HIGH PRESSURE CONDENSER 1A
1HRA-CND-1A
CHEMICAL CLEANING
NOTES: SYSTEM CODE IS TED UNLESS NOTED
ALL VALVES ARE SERIES 1TED-XX-0000 UNLESS NOTED
LAST VALVE NUMBER: 1TED-XX-0286
LAST CONNECTION NUMBER: 2
REGISTERED PROFESSIONAL ENGINEER
No. 5746
HOBART LEE JACOBS
STATE OF UTAH
6 8-9-85 ISSUED TO CONTRS-72.0201,72.0403,74.0201 NJA
5 01-18-85 ISSUED TO CONTR. SPECS 72.0201,72.0403,74.0201 NJA
4 09-14-84 ISSUED TO CONTRACTORS SPEC 72.0201 & 74.0201 NJA
4 09-14-84 APPROVED FOR CONSTRUCTION SPEC 72.0403 NJA
3 07-05-84 ISSUED TO CONTRACTOR SPEC 72.0201 NJA
3 07-05-84 APPROVED FOR CONSTRUCTION SPEC 74.0201 NJA
2 03-09-84 ISSUED TO CONTRACTOR SPEC 72.0201 RSP
2 03-09-84 ISSUED FOR BID SPEC 72.0403 RSP
1 01-13-84 ISSUED FOR BID SPEC 74.0201 NJA
1 08-18-83 RELEASED FOR CONST SPEC. 72.0201 TJB
0 03-18-83 ISSUED FOR BIDS SPEC 72.0201 LDB
6 8-9-85 GENERAL REVISION
5 01-18-85 GENERAL REVISION NJA LJS HLJ
4 09-14-84 APPROVED FOR CONSTRUCTION SPEC 72.0403 NJA LJS HLJ
3 07-05-84 APPROVED FOR CONSTRUCTION SPEC 74.0201 NJA HLJ
2 03-09-84 GENERAL REVISIONS NJA HLJ
1 08-18-83 RELEASED FOR CONSTRUCTION SPEC. 72.0201 NJA HLJ
0 03-18-83 INITIAL ISSUE NJA HLJ
NO. DATE REVISIONS AND RECORD OF ISSUE BY CHK APP FLH
I HEREBY CERTIFY THAT THIS DOCUMENT WAS PREPARED BY ME OR UNDER MY DIRECT SUPERVISION AND THAT I AM A DULY REGISTERED PROFESSIONAL ENGINEER UNDER THE LAWS OF THE STATE OF UTAH
SIGNED Hobart Lee Jacobs
DATE 03-18-83 REG NO. 5746
BLACK & VEATCH CONSULTING ENGINEERS
ENGINEER NJA DRAWN AGG
CHECKED LJS DATE 07-02-84
IPP INTERMOUNTAIN POWER PROJECT
PROJECT 9255 - DRAWING NUMBER 1TED-M2076 R.V 6
PIPING AND INSTRUMENT DIAGRAM
HIGH PRESSURE HEATER DRAINS
CODE TED-52.6004
AREA

IP14_000076

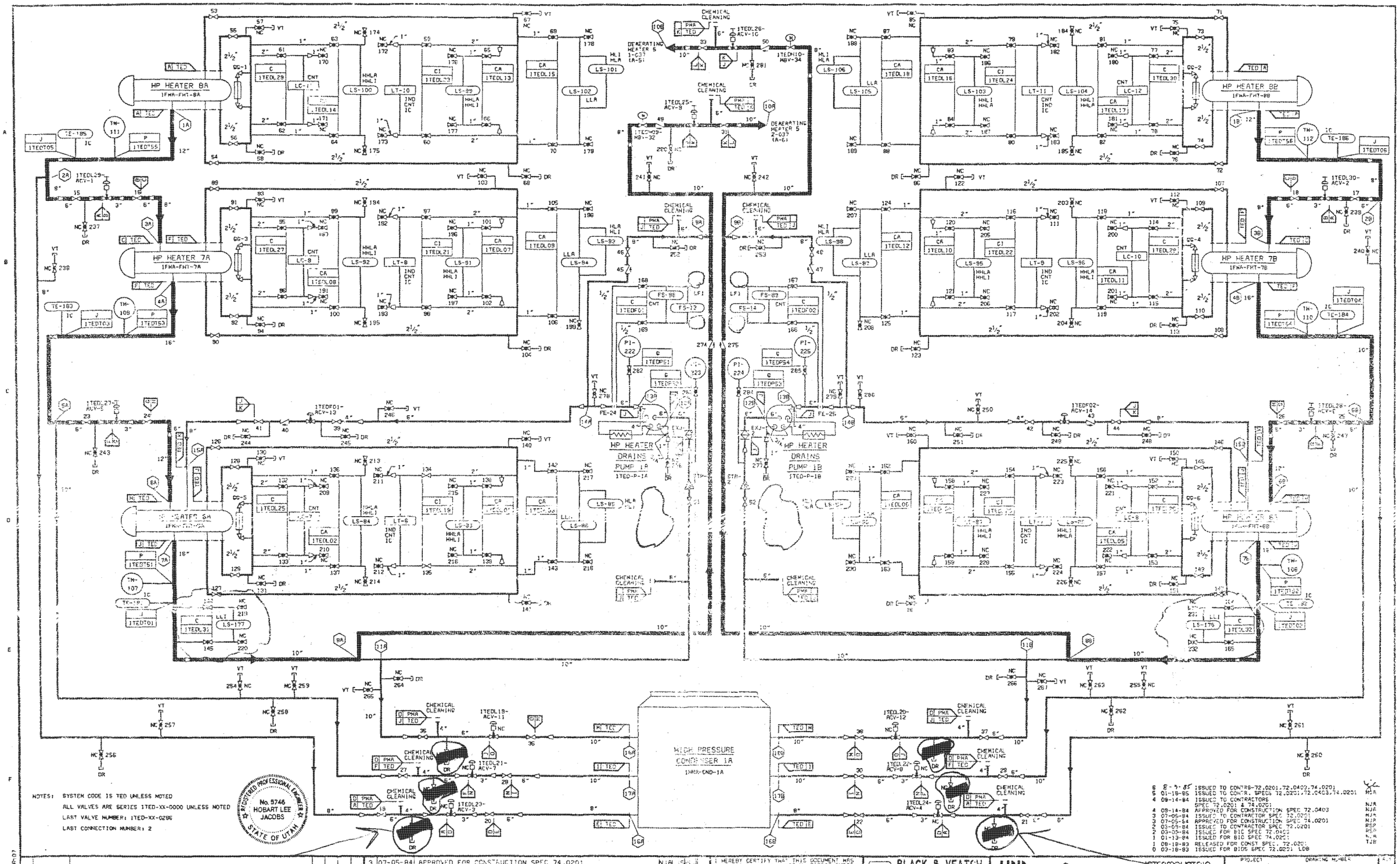

NOTES: SYSTEM CODE IS TED UNLESS NOTED
ALL VALVES ARE SERIES 1TED-XX-0000 UNLESS NOTED
LAST VALVE NUMBER: 1TED-XX-0286
LAST CONNECTION NUMBER: 2

REGISTERED PROFESSIONAL ENGINEER No. 5746 HOBART LEE JACOBS STATE OF UTAH

NO	DATE	REVISIONS AND RECORD OF ISSUE	BY	CHK	APPR
6	8-9-85	GENERAL REVISION			
5	01-18-85	GENERAL REVISION	NJA	LJS	HLJ
4	09-14-84	APPROVED FOR CONSTRUCTION SPEC 72.0403	NJA	LJS	HLJ
3	07-05-84	APPROVED FOR CONSTRUCTION SPEC 74.0201	NJA	LJS	HLJ
2	03-09-84	GENERAL REVISIONS	NJA		HLJ
1	08-18-83	RELEASED FOR CONSTRUCTION SPEC. 72.0201	NJA		HLJ
0	03-18-83	INITIAL ISSUE	NJA		HLJ

I HEREBY CERTIFY THAT THIS DOCUMENT WAS PREPARED BY ME OR UNDER MY DIRECT SUPERVISION AND THAT I AM A DULY REGISTERED PROFESSIONAL ENGINEER UNDER THE LAWS OF THE STATE OF UTAH
SIGNED [signature]
DATE 03-18-83 REG NO. 5746

BLACK & VEATCH CONSULTING ENGINEERS
ENGINEER NJA DRAWN ARG
CHECKED LJS DATE 07-02-84

IPP INTERMOUNTAIN POWER PROJECT

PIPING AND INSTRUMENT DIAGRAM
HIGH PRESSURE HEATER DRAINS

PROJECT 9255 - DRAWING NUMBER 1TED-M2076 REV 6
CODE 1TED-52-E024
AREF

NO	DATE	REVISIONS AND RECORD OF ISSUE	BY	CHK	APPR
6	8-9-85	ISSUED TO CONTRS-72.0201,72.0403,74.0201			
5	01-18-85	ISSUED TO CONTR. SPECS 72.0201,72.0403,74.0201	NJA		
4	09-14-84	ISSUED TO CONTRACTORS SPEC 72.0201 & 74.0201	NJA		
4	09-14-84	APPROVED FOR CONSTRUCTION SPEC 72.0403	NJA		
3	07-05-84	ISSUED TO CONTRACTOR SPEC 72.0201	NJA		
3	07-05-84	APPROVED FOR CONSTRUCTION SPEC 74.0201	NJA		
2	03-09-84	ISSUED TO CONTRACTOR SPEC 72.0201	RSP		
2	03-09-84	ISSUED FOR BID SPEC 72.0403	RSP		
1	01-13-84	ISSUED FOR BID SPEC 74.0201	NJA		
1	08-18-83	RELEASED FOR CONST SPEC. 72.0201	TJB		
0	03-18-83	ISSUED FOR BIDS SPEC 72.0201 LDB			

IP14_000077

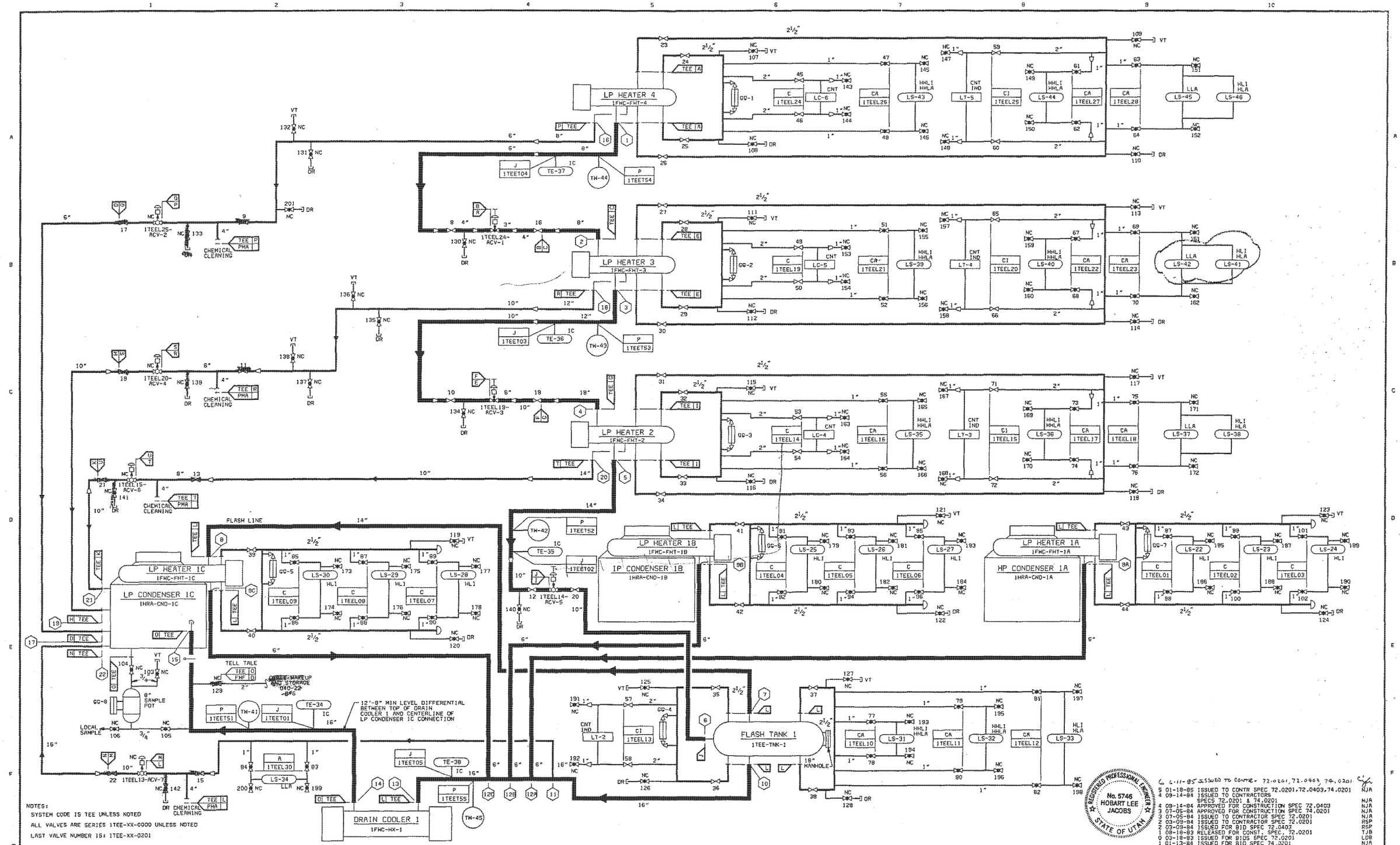

NOTES:
SYSTEM CODE IS TEE UNLESS NOTED
ALL VALVES ARE SERIES 1TEE-XX-0000 UNLESS NOTED
LAST VALVE NUMBER IS: 1TEE-XX-0201

NO.	DATE	REVISIONS AND RECORD OF ISSUE	BY	CHK	APPR
6	6-11-85	GENERAL REVISIONS			
5	01-18-85	GENERAL REVISIONS	NJA	LJS	HLJ
4	07-05-84	APPROVED FOR CONSTRUCTION SPEC 72.0403	NJA	LJS	HLJ
3	07-05-84	APPROVED FOR CONSTRUCTION SPEC 74.0201	NJA	LJS	HLJ
2	03-09-84	GENERAL REVISIONS	NJA		HLJ
1	08-18-83	RELEASED FOR CONSTRUCTION SPEC 72.0201	NJA		HLJ
0	03-18-83	INITIAL ISSUE	NJA		HLJ

I HEREBY CERTIFY THAT THIS DOCUMENT WAS PREPARED BY ME OR UNDER MY DIRECT SUPERVISION AND THAT I AM A DULY REGISTERED PROFESSIONAL ENGINEER UNDER THE LAWS OF THE STATE OF UTAH
SIGNED Hobart Lee Jacobs
DATE 3-18-83 REG. NO. 5746

REGISTERED PROFESSIONAL ENGINEER No. 5746 HOBART LEE JACOBS STATE OF UTAH

6 6-11-85 ISSUED TO CONTR. 72.0201, 72.0403, 74.0201 LJS
5 01-18-85 ISSUED TO CONTR SPEC 72.0201, 72.0403, 74.0201 NJA
4 09-14-84 ISSUED TO CONTRACTORS SPECS 72.0201 & 74.0201 NJA
4 08-14-84 APPROVED FOR CONSTRUCTION SPEC 72.0403 NJA
3 07-05-84 APPROVED FOR CONSTRUCTION SPEC 74.0201 NJA
3 07-05-84 ISSUED TO CONTRACTOR SPEC 72.0201 NJA
2 03-09-84 ISSUED TO CONTRACTOR SPEC 72.0201 RSP
2 03-09-84 ISSUED FOR BID SPEC 72.0403 RSP
1 08-18-83 RELEASED FOR CONST. SPEC. 72.0201 TJB
0 03-18-83 ISSUED FOR BIDS SPEC 72.0201 LDB
1 01-13-84 ISSUED FOR BID SPEC 74.0201 NJA

BLACK & VEATCH CONSULTING ENGINEERS

ENGINEER NJA | DRAWN AGG | CHECKED LJS | DATE 07-02-84

IPP INTERMOUNTAIN POWER PROJECT

PIPING AND INSTRUMENT DIAGRAM
LOW PRESSURE HEATER DRAINS

PROJECT 9255 | DRAWING NUMBER 1TEE-M2077 | REV 6
CODE TEE-S2.6005
AREA

IP14_000078

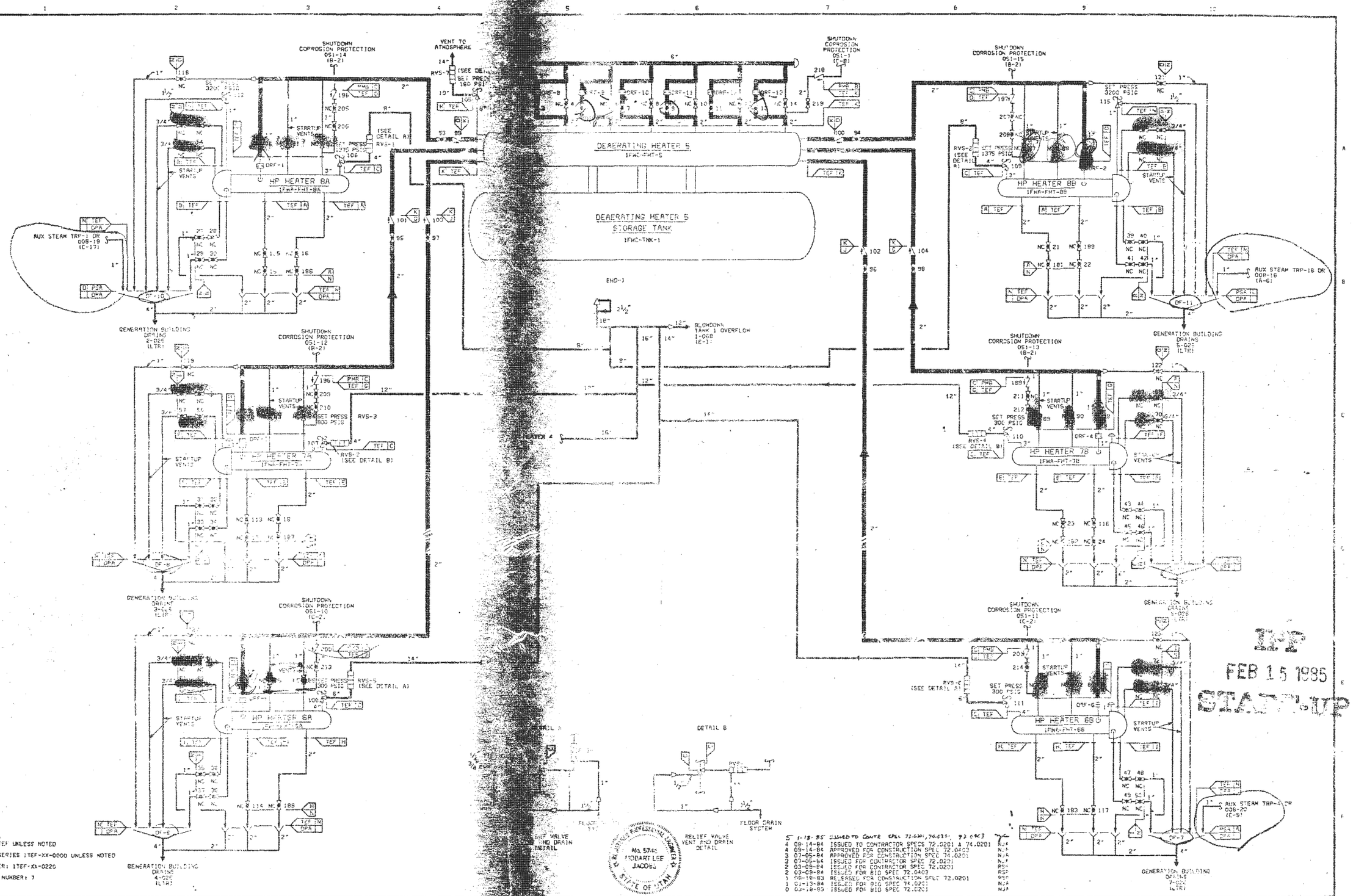

5	1-18-85	GENERAL REVISIONS
4	09-14-84	APPROVED FOR CONSTRUCTION SPEC 72.0403
3	07-05-84	APPROVED FOR CONSTRUCTION SPEC 74.0201
2	03-09-84	GENERAL REVISIONS
1	08-18-84	RELEASED FOR CONSTRUCTION SPEC 72.0201
0	03-18-83	INITIAL ISSUE
	DATE	REVISIONS AND RECORD OF ISSUE

I HEREBY CERTIFY THAT THIS DOCUMENT WAS PREPARED BY ME OR UNDER MY DIRECT SUPERVISION AND THAT I AM A DULY REGISTERED PROFESSIONAL ENGINEER UNDER THE LAWS OF THE STATE OF UTAH

SIGNED Hobart Le Jacobs

DATE 03-18-84 REG NO. 5746

BLACK & VEATCH CONSULTING ENGINEERS

ENGINEER NJA DRAWN RDD

CHECKED LJP DATE 03-22-84

IPP INTERMOUNTAIN POWER PROJECT

PIPING AND INSTRUMENT DIAGRAM
HEATER VENTS AND MISCELLANEOUS DRAINS

PROJECT 9255 - DRAWING NUMBER 1TEF-M2078A REV 5

IP14_000079

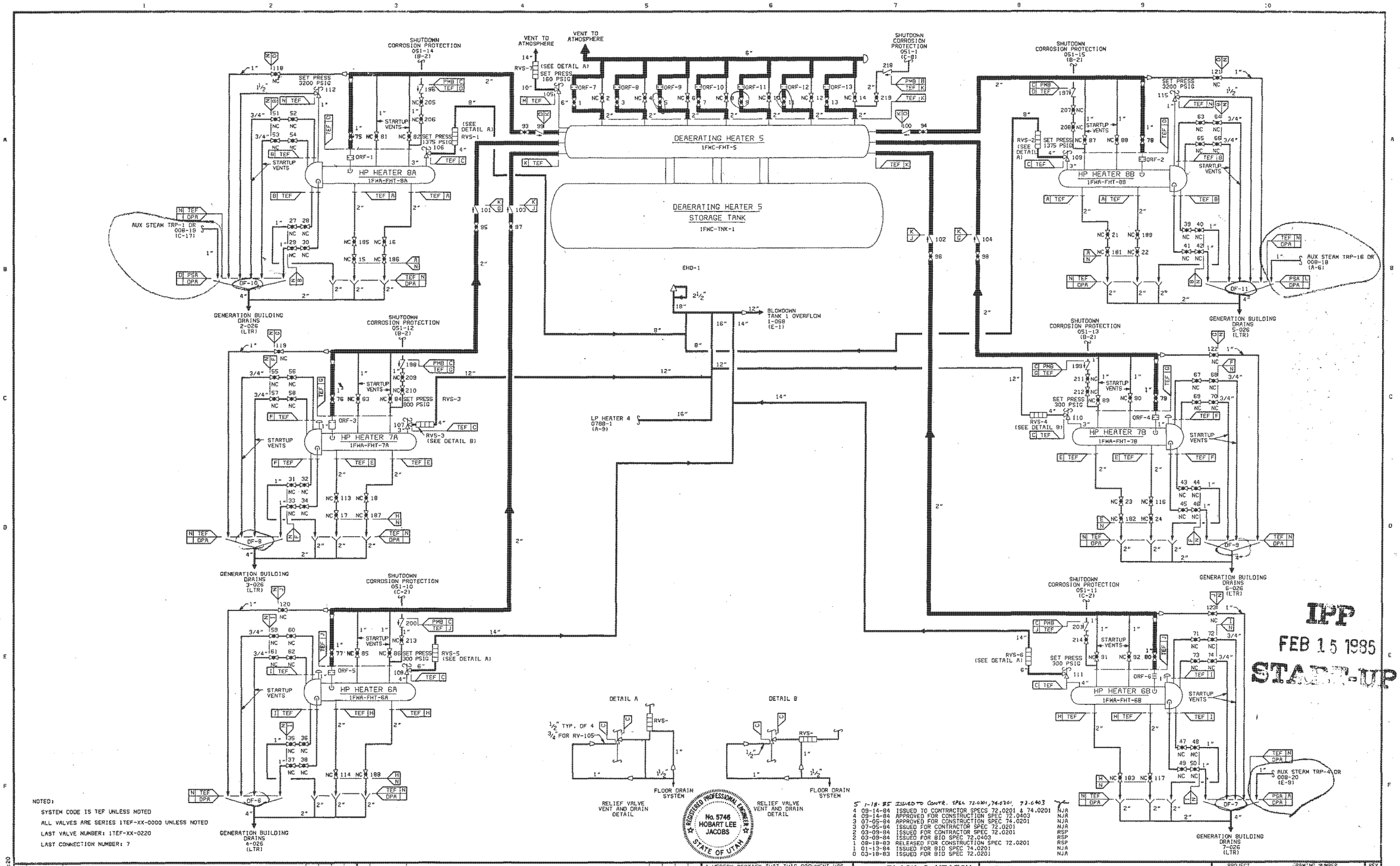

NOTES:

SYSTEM CODE IS TEF UNLESS NOTED

ALL VALVES ARE SERIES 1TEF-XX-0000 UNLESS NOTED

LAST VALVE NUMBER: 1TEF-XX-0220

LAST CONNECTION NUMBER: 7

NO	DATE	REVISIONS AND RECORD OF ISSUE	BY	CH	KAP	RFLM
5	1-18-85	GENERAL REVISIONS				
4	09-14-84	APPROVED FOR CONSTRUCTION SPEC 74.0403	NJA	LJS	HLJ	
3	07-05-84	APPROVED FOR CONSTRUCTION SPEC 74.0201	NJA	LJS	HLJ	
2	03-09-84	GENERAL REVISIONS	NJA		HLJ	
1	08-18-84	RELEASED FOR CONSTRUCTION SPEC 72.0201	RSP		HLJ	
0	03-18-83	INITIAL ISSUE	NJA		HLJ	

I HEREBY CERTIFY THAT THIS DOCUMENT WAS PREPARED BY ME OR UNDER MY DIRECT SUPERVISION AND THAT I AM A DULY REGISTERED PROFESSIONAL ENGINEER UNDER THE LAWS OF THE STATE OF UTAH

SIGNED Hubert Lee Jacobs

DATE 03-18-84 REG NO 5746

REGISTERED PROFESSIONAL ENGINEER No. 5746 HOBART LEE JACOBS STATE OF UTAH

5 1-18-85 ISSUED TO CONTR. SPEC 72.0201, 74.0201, 72.0403 YK
4 09-14-84 ISSUED TO CONTRACTOR SPECS 72.0201 & 74.0201 NJA
4 09-14-84 APPROVED FOR CONSTRUCTION SPEC 72.0403 NJA
3 07-05-84 APPROVED FOR CONSTRUCTION SPEC 74.0201 NJA
3 07-05-84 ISSUED FOR CONTRACTOR SPEC 72.0201 NJA
2 03-09-84 ISSUED FOR CONTRACTOR SPEC 72.0201 RSP
2 03-09-84 ISSUED FOR BID SPEC 72.0403 RSP
1 08-18-83 RELEASED FOR CONSTRUCTION SPEC 72.0201 RSP
1 01-13-84 ISSUED FOR BID SPEC 74.0201 NJA
0 03-18-83 ISSUED FOR BID SPEC 72.0201 NJA

BLACK & VEATCH CONSULTING ENGINEERS

ENGINEER NJA DRAWN AGG
CHECKED LJS DATE 07-02-84

IPP INTERMOUNTAIN POWER PROJECT

PIPING AND INSTRUMENT DIAGRAM
HEATER VENTS AND MISCELLANEOUS DRAINS

PROJECT 9255 DRAWING NUMBER 1TEF-M2078A REV 5

CODE TEF-52.6006 AREA

12/29/84 13:19:20

IP14_000080

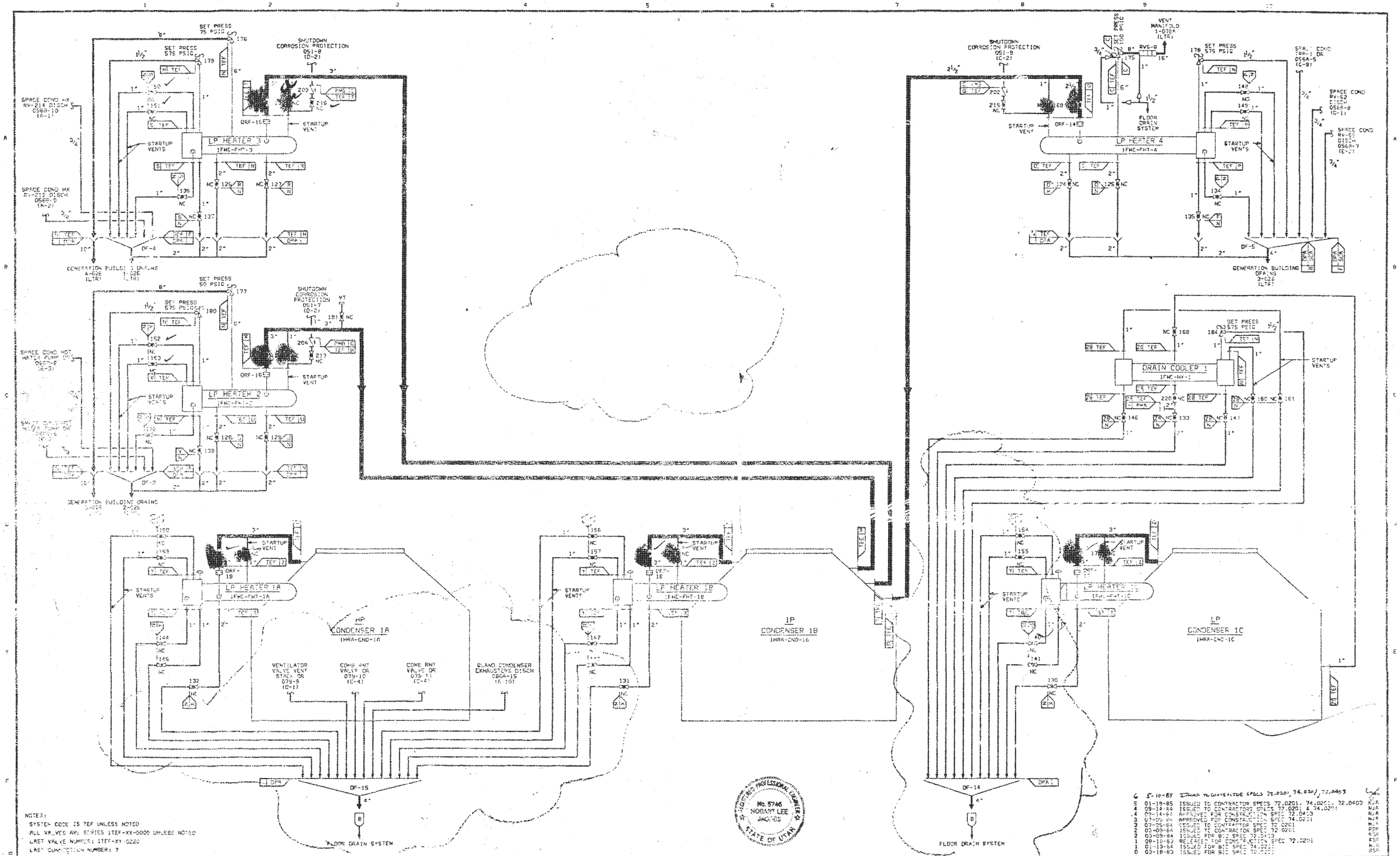

NOTES:
SYSTEM CODE IS TEF UNLESS NOTED
ALL VALVES ARE SERIES 1TEF-XX-0000 UNLESS NOTED
LAST VALVE NUMBER: 1TEF-XX-0220
LAST CONNECTION NUMBER: 7

NO.	DATE	REVISIONS AND RECORD OF ISSUE	BY	CHK
6	5-10-85	GENERAL REVISIONS		
5	01-18-85	GENERAL REVISIONS		
4	09-14-84	APPROVED FOR CONSTRUCTION SPEC 72.0403		
3	07-05-84	APPROVED FOR CONSTRUCTION SPEC 74.0201	NJA	HLJ
2	03-09-84	GENERAL REVISIONS	NJA	HLJ
1	08-18-83	RELEASED FOR CONSTRUCTION SPEC 72.0201	RSR	HLJ
0	03-18-83	INITIAL ISSUE	NJA	HLJ

I HEREBY CERTIFY THAT THIS DOCUMENT WAS PREPARED BY ME OR UNDER MY DIRECT SUPERVISION AND THAT I AM A DULY REGISTERED PROFESSIONAL ENGINEER UNDER THE LAWS OF THE STATE OF UTAH
SIGNED
DATE 03-18-83 REG. NO. 5746

BLACK & VEATCH
CONSULTING ENGINEERS

INTERMOUNTAIN POWER PROJECT

PIPING AND INSTRUMENT DIAGRAM
HEATER VENTS AND MISCELLANEOUS DRAINS

DRAWING NUMBER 9255 - 1TEF-M2078B REV 6

IP14_000081

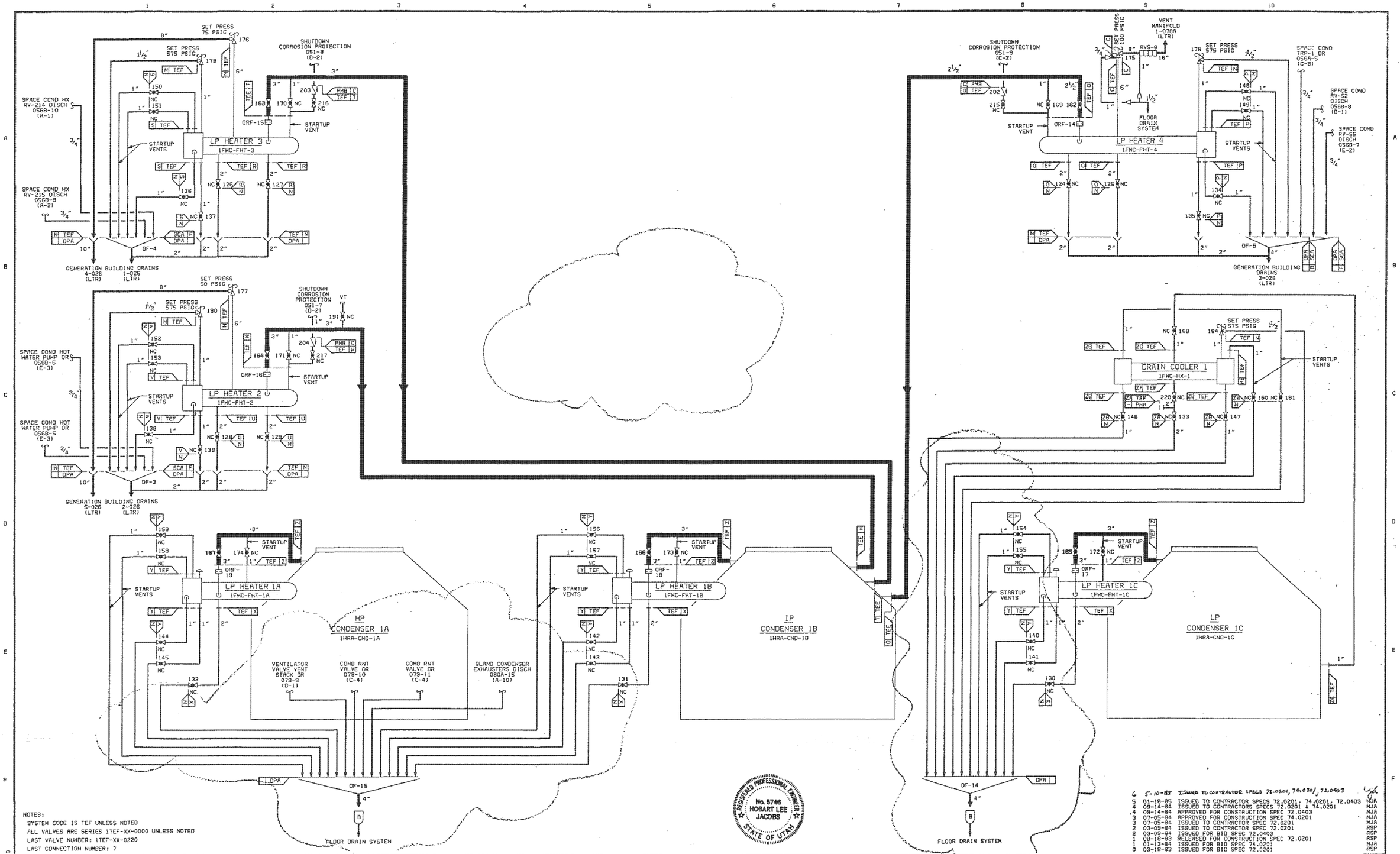

NOTES:
SYSTEM CODE IS TEF UNLESS NOTED
ALL VALVES ARE SERIES 1TEF-XX-0000 UNLESS NOTED
LAST VALVE NUMBER: 1TEF-XX-0220
LAST CONNECTION NUMBER: 7

NO.	DATE	REVISIONS AND RECORD OF ISSUE	BY	CHK	APPR	ELM
6	5-10-85	GENERAL REVISIONS				
5	01-18-85	GENERAL REVISIONS	NJA		LJS	HLJ
4	09-14-84	APPROVED FOR CONSTRUCTION SPEC 72.0403	NJA		LJS	HLJ
3	07-05-84	APPROVED FOR CONSTRUCTION SPEC 74.0201	NJA		LJS	HLJ
2	03-09-84	GENERAL REVISIONS	NJA			HLJ
1	08-18-83	RELEASED FOR CONSTRUCTION SPEC 72.0201	RSP			HLJ
0	03-18-83	INITIAL ISSUE	NJA			HLJ

I HEREBY CERTIFY THAT THIS DOCUMENT WAS PREPARED BY ME OR UNDER MY DIRECT SUPERVISION AND THAT I AM A DULY REGISTERED PROFESSIONAL ENGINEER UNDER THE LAWS OF THE STATE OF UTAH
SIGNED Hobart Lee Jacobs
DATE 03-18-83 REG NO. 5746

BLACK & VEATCH CONSULTING ENGINEERS

ENGINEER NJA | DRAWN AGC | CHECKED LJS | DATE 07-02-84

IPP INTERMOUNTAIN POWER PROJECT

PIPING AND INSTRUMENT DIAGRAM
HEATER VENTS AND MISCELLANEOUS DRAINS

PROJECT / DRAWING NUMBER: 9255 - 1TEF-M2078B | REV 6
CODE TEF-52.6006
AREA

IP14_000082

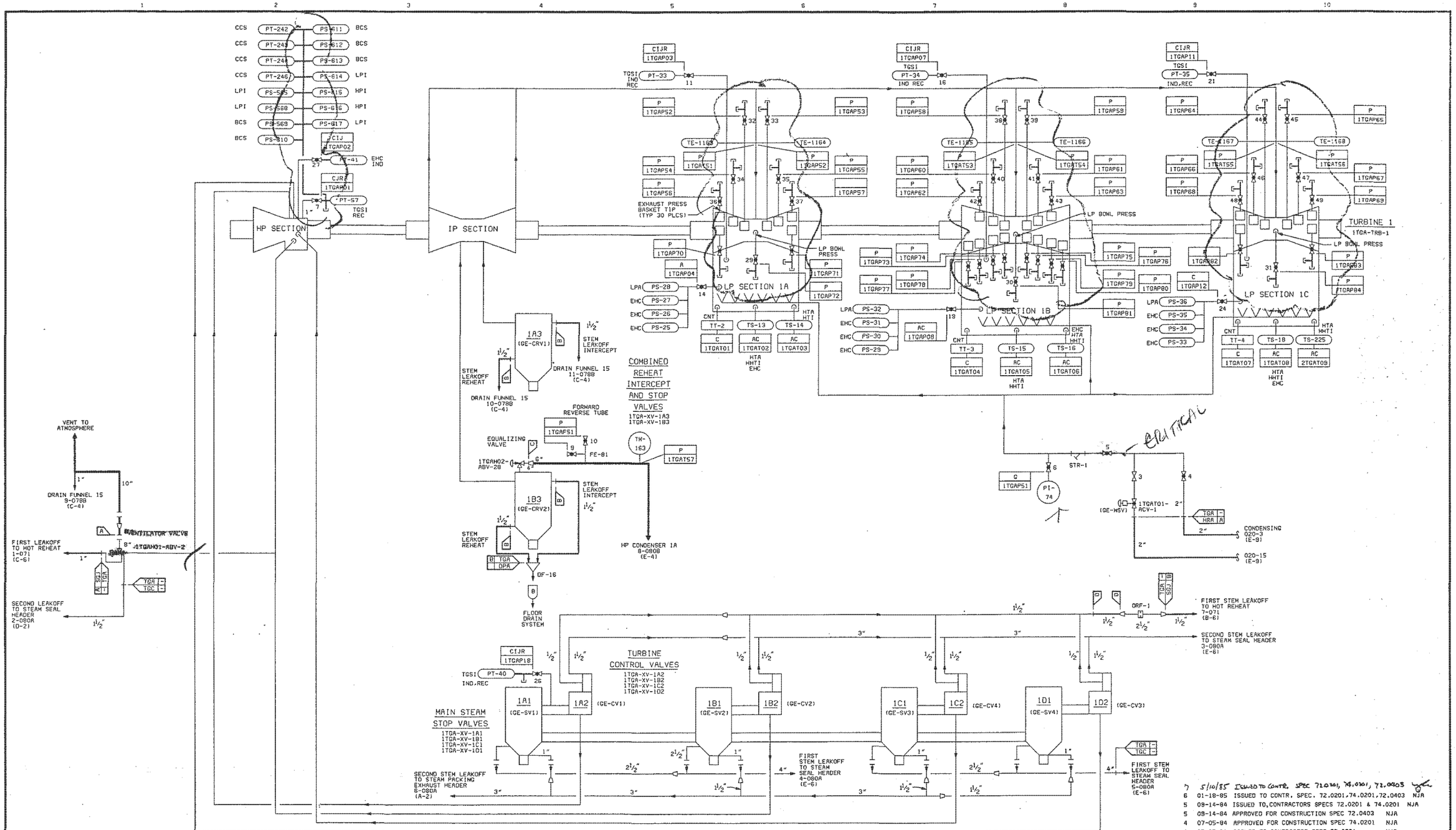

NOTES:

SYSTEM CODE IS TGA UNLESS NOTED

ALL VALVES ARE SERIES 1TGA-XX-0000 UNLESS NOTED

LAST VALVE NUMBER: 1TGA-XX-0061

LAST CONNECTION NUMBER: 11

TURBINE 1
1TGA-TRB-1

REGISTERED PROFESSIONAL ENGINEER No. 5746 HOBART LEE JACOBS STATE OF UTAH

NO.	DATE	REVISIONS AND RECORD OF ISSUE	BY	CHK	APP'L
7	5/10/85	ISSUED TO CONTR. SPEC 72.0201, 74.0201, 72.0403			
6	01-18-85	ISSUED TO CONTR. SPEC. 72.0201,74.0201,72.0403	NJA		
5	09-14-84	ISSUED TO,CONTRACTORS SPECS 72.0201 & 74.0201	NJA		
5	08-14-84	APPROVED FOR CONSTRUCTION SPEC 72.0403	NJA		
4	07-05-84	APPROVED FOR CONSTRUCTION SPEC 74.0201	NJA		
4	07-05-84	ISSUED TO CONTRACTOR SPEC 72.0201	NJA		
3	03-09-84	ISSUED TO CONTRACTOR SPEC 72.0201	RSP		
3	03-09-84	ISSUED FOR BID SPEC 72.0403	RSP		
2	01-13-84	ISSUED TO CONTRACTOR SPEC 72.0201	NJA		
2	01-13-84	ISSUED FOR BID SPEC 74.0201	NJA		
1	08-18-83	RELEASED FOR CONSTRUCTION SPEC 72.0201	NJA		
0	03-22-83	ISSUED FOR IN-HOUSE AND CLIENT REVIEW	SBE		
0	03-18-83	ISSUED FOR BID SPEC 72.0201	NJA		

NO.	DATE	REVISIONS AND RECORD OF ISSUE	BY	CHK	APP'L
7	5/10/85	GENERAL REVISIONS			
6	01-18-85	GENERAL REVISIONS	NJA	LJS	HLJ
5	09-14-84	APPROVED FOR CONSTRUCTION SPEC. 72.0403	NJA	LJS	HLJ
4	07-05-84	APPROVED FOR CONSTRUCTION SPEC 74.0201	NJA	LJS	HLJ
3	03-09-84	GENERAL REVISIONS	NJA		HLJ
2	01-13-83	GENERAL REVISIONS	NJA		HLJ
1	08-18-83	RELEASED FOR CONSTRUCTION SPEC 72.0201	NJA		HLJ
0	03-18-83	INITIAL ISSUE	NGA		HLJ

I HEREBY CERTIFY THAT THIS DOCUMENT WAS PREPARED BY ME OR UNDER MY DIRECT SUPERVISION AND THAT I AM A DULY REGISTERED PROFESSIONAL ENGINEER UNDER THE LAWS OF THE STATE OF UTAH

SIGNED Hobart Lee Jacobs

DATE 03-18-83 REG NO. 5746

BLACK & VEATCH CONSULTING ENGINEERS

ENGINEER NJA DRAWN AGG

CHECKED LJS DATE 07-02-84

IPP INTERMOUNTAIN POWER PROJECT

PIPING AND INSTRUMENT DIAGRAM TURBINE

PROJECT 9255 DRAWING NUMBER 1TGA-M2079 REV 7

CODE TGA-52.6201

AREA

IP14_000083

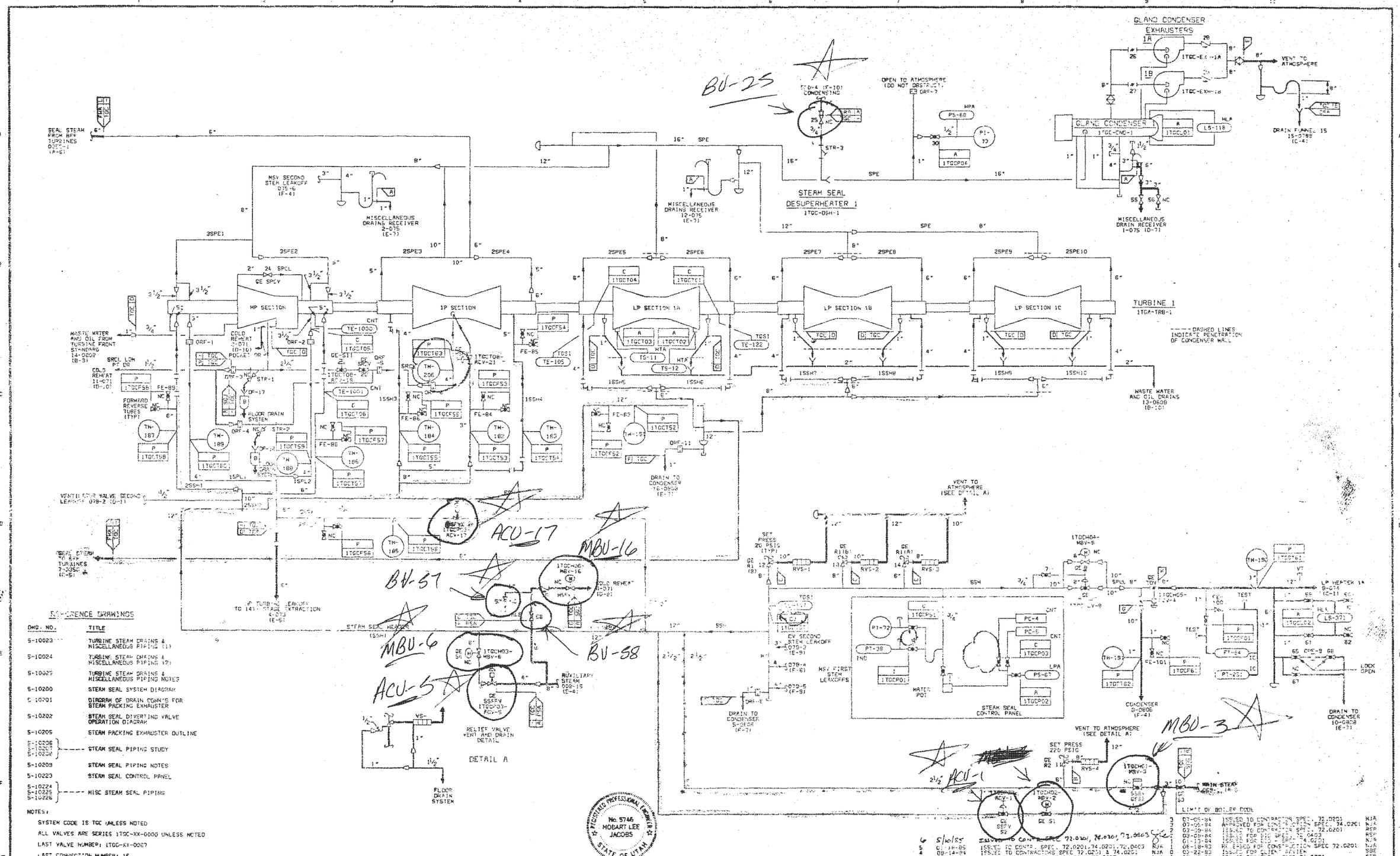

REFERENCE DRAWINGS

DWG. NO.	TITLE
5-10023	TURBINE STEAM DRAINS & MISCELLANEOUS PIPING (1)
5-10024	TURBINE STEAM DRAINS & MISCELLANEOUS PIPING (2)
5-10029	TURBINE STEAM DRAINS & MISCELLANEOUS PIPING NOTES
5-10200	STEAM SEAL SYSTEM DIAGRAM
5-10201	DIAGRAM OF DRAIN CONN'S FOR STEAM PACKING EXHAUSTER
5-10202	STEAM SEAL DIVERTING VALVE OPERATION DIAGRAM
5-10205	STEAM PACKING EXHAUSTER OUTLINE
5-10206, 5-10207, 5-10208	STEAM SEAL PIPING STUDY
5-10209	STEAM SEAL PIPING NOTES
5-10223	STEAM SEAL CONTROL PANEL
5-10224, 5-10225, 5-10226	MISC STEAM SEAL PIPING

NOTES:

SYSTEM CODE IS TGC UNLESS NOTED

ALL VALVES ARE SERIES 1TGC-XX-0000 UNLESS NOTED

LAST VALVE NUMBER: 1TGC-XX-0067

LAST CONNECTION NUMBER: 16

REGISTERED PROFESSIONAL ENGINEER No. 5746 HOBART LEE JACOBS STATE OF UTAH

LIMIT OF BOILER CODE

6	5/10/85	ISSUED TO CONTR. SPEC. 72.0201, 74.0201, 72.0403	NJA
5	01-18-85	ISSUED TO CONTR. SPEC. 72.0201, 74.0201, 72.0403	NJA
4	09-14-84	ISSUED TO CONTRACTORS SPEC 72.0201 & 74.0201	NJA
4	09-14-84	APPROVED FOR CONSTRUCTION SPEC 72.0403	NJA
3	07-05-84	ISSUED TO CONTRACTOR SPEC. 72.0201	NJA
3	07-05-84	APPROVED FOR CONSTRUCTION SPEC. 74.0201	NJA
2	03-09-84	ISSUED TO CONTRACTOR SPEC. 72.0201	RSP
2	03-09-84	ISSUED FOR BID SPEC. 72.0403	RSP
1	01-13-84	ISSUED FOR BID - SPEC 74.0201	NJA
1	06-18-83	RELEASED FOR CONSTRUCTION SPEC 72.0201	NJA
0	03-22-83	ISSUED FOR CLIENT REVIEW	SBE
0	03-16-83	ISSUED FOR BID - SPEC 72.0201	RSP

6	5/10/85	GENERAL REVISIONS	
5	01-18-85	GENERAL REVISIONS	NJA
4	09-14-84	APPROVED FOR CONSTRUCTION SPEC 72.0403	NJA
3	07-05-84	APPROVED FOR CONSTRUCTION	NJA
2	03-09-84	GENERAL REVISIONS	NJA
1	06-18-83	RELEASED FOR CONSTRUCTION SPEC. 72.0201	NJA
0	03-18-83	INITIAL ISSUE	NJA

REVISIONS AND RECORD OF ISSUE

BLACK & VEATCH CONSULTING ENGINEERS

IPP INTERMOUNTAIN POWER PROJECT

PIPING AND INSTRUMENT DIAGRAM
TURBINE SEALS AND DRAINS

9255 - 1TGC-M2080A 6

IP14_000084

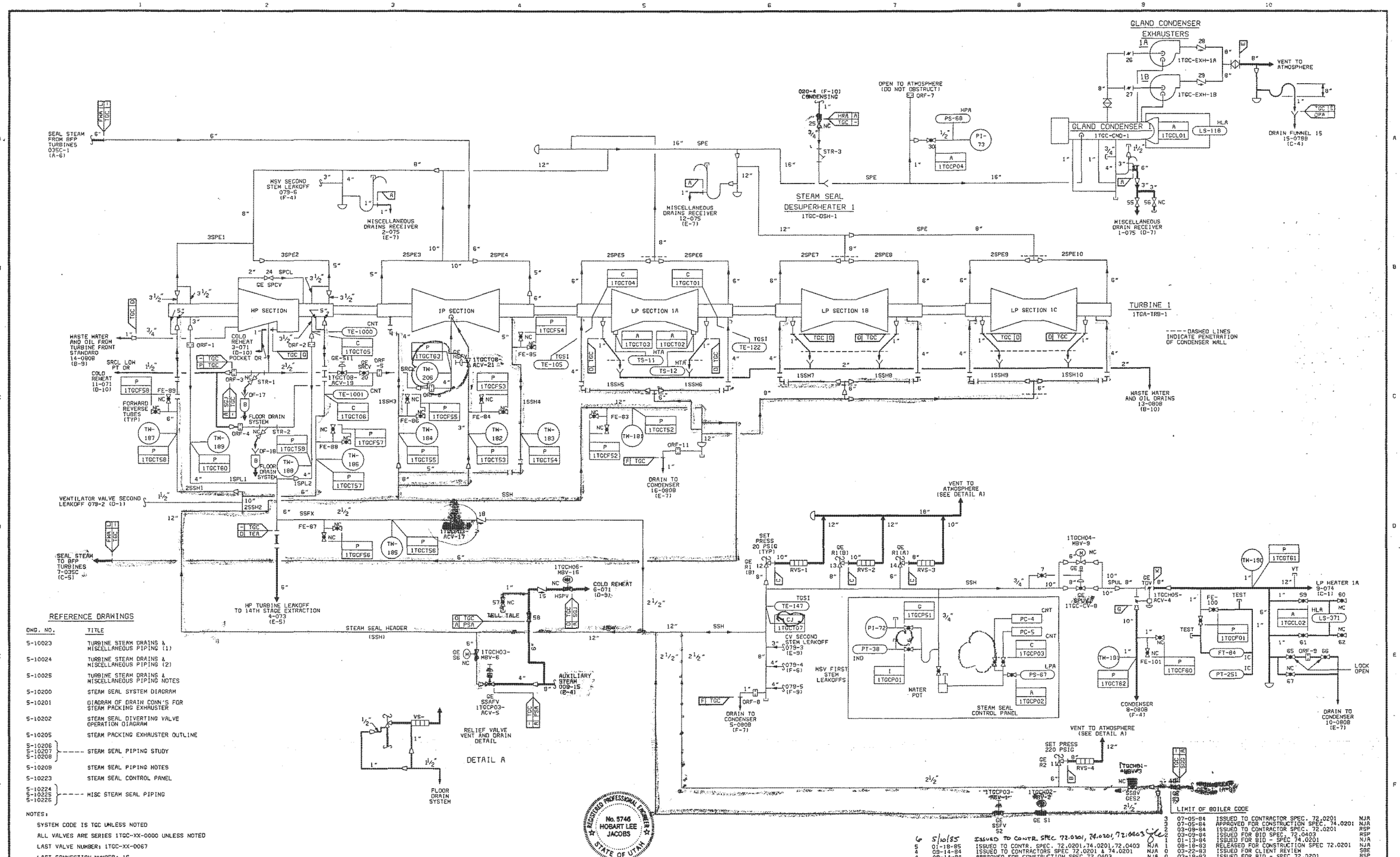
GLAND CONDENSER EXHAUSTERS
1A
1B
1TGC-EXH-1A
1TGC-EXH-1B
VENT TO ATMOSPHERE
DRAIN FUNNEL 15
15-0788
(C-4)
GLAND CONDENSER 1
1TGC-CND-1
1TGCL01
LS-118
HLA
WISCELLANEOUS DRAIN RECEIVER
1-075 (D-7)
OPEN TO ATMOSPHERE
(DO NOT OBSTRUCT)
ORF-7
HPA
PS-68
PI-73
1TGCP04
020-4 (F-10)
CONDENSING
STR-3
STEAM SEAL
DESUPERHEATER 1
1TGC-DSH-1
MISCELLANEOUS DRAINS RECEIVER
12-075
(E-7)
SEAL STEAM
FROM BFP
TURBINES
035C-1
(A-6)
MSV SECOND
STEM LEAKOFF
079-6
(F-4)
MISCELLANEOUS DRAINS RECEIVER
2-075
(E-7)
HP SECTION
IP SECTION
LP SECTION 1A
LP SECTION 1B
LP SECTION 1C
TURBINE 1
1TGA-TRB-1
DASHED LINES INDICATE PENETRATION OF CONDENSER WALL
WASTE WATER AND OIL FROM TURBINE FRONT STANDARD
14-0808
(B-9)
COLD REHEAT
3-071
(D-10)
POCKET DR
SRCL LOW PT DR
COLD REHEAT
11-071
(D-10)
FORWARD REVERSE TUBES (TYP)
FLOOR DRAIN SYSTEM
WASTE WATER AND OIL DRAINS
13-0808
(B-10)
DRAIN TO CONDENSER
16-0808
(E-7)
VENTILATOR VALVE SECOND LEAKOFF 078-2 (D-1)
SEAL STEAM TO BFP TURBINES
7-035C
(C-5)
HP TURBINE LEAKOFF TO 14TH STAGE EXTRACTION
4-073
(E-5)
STEAM SEAL HEADER
(SSH)
COLD REHEAT
6-071
(D-9)
AUXILIARY STEAM
009-15
(E-4)
RELIEF VALVE VENT AND DRAIN DETAIL
DETAIL A
FLOOR DRAIN SYSTEM
VENT TO ATMOSPHERE
(SEE DETAIL A)
SET PRESS
20 PSIG
(TYP)
RVS-1
RVS-2
RVS-3
SET PRESS
220 PSIG
RVS-4
CV SECOND STEM LEAKOFF
079-3
(E-9)
079-4
(F-6)
079-5
(F-9)
MSV FIRST STEM LEAKOFFS
DRAIN TO CONDENSER
5-0808
(F-7)
WATER POT
STEAM SEAL CONTROL PANEL
CONDENSER
8-0808
(F-4)
LP HEATER 1A
9-074
(C-1)
DRAIN TO CONDENSER
10-0808
(E-7)
LOCK OPEN
LIMIT OF BOILER CODE
REFERENCE DRAWINGS
DWG. NO. TITLE
5-10023 TURBINE STEAM DRAINS & MISCELLANEOUS PIPING (1)
5-10024 TURBINE STEAM DRAINS & MISCELLANEOUS PIPING (2)
5-10025 TURBINE STEAM DRAINS & MISCELLANEOUS PIPING NOTES
5-10200 STEAM SEAL SYSTEM DIAGRAM
5-10201 DIAGRAM OF DRAIN CONN'S FOR STEAM PACKING EXHAUSTER
5-10202 STEAM SEAL DIVERTING VALVE OPERATION DIAGRAM
5-10205 STEAM PACKING EXHAUSTER OUTLINE
5-10206 5-10207 5-10208 STEAM SEAL PIPING STUDY
5-10209 STEAM SEAL PIPING NOTES
5-10223 STEAM SEAL CONTROL PANEL
5-10224 5-10225 5-10226 MISC STEAM SEAL PIPING
NOTES:
SYSTEM CODE IS TGC UNLESS NOTED
ALL VALVES ARE SERIES 1TGC-XX-0000 UNLESS NOTED
LAST VALVE NUMBER: 1TGC-XX-0067
LAST CONNECTION NUMBER: 16
REGISTERED PROFESSIONAL ENGINEER
No. 5746
HOBART LEE JACOBS
STATE OF UTAH
6 5/10/85 ISSUED TO CONTR. SPEC. 72.0201, 74.0201, 72.0403 NJA 2
5 01-18-85 ISSUED TO CONTR. SPEC. 72.0201, 74.0201, 72.0403 NJA 1
4 09-14-84 ISSUED TO CONTRACTORS SPEC 72.0201 & 74.0201 NJA 0
4 09-14-84 APPROVED FOR CONSTRUCTION SPEC 72.0403 NJA 0
3 07-05-84 ISSUED TO CONTRACTOR SPEC. 72.0201 NJA
3 07-05-84 APPROVED FOR CONSTRUCTION SPEC. 74.0201 NJA
2 03-09-84 ISSUED TO CONTRACTOR SPEC. 72.0201 RSP
2 03-09-84 ISSUED FOR BID SPEC. 72.0403 RSP
1 01-13-84 ISSUED FOR BID - SPEC 74.0201 NJA
1 08-18-83 RELEASED FOR CONSTRUCTION SPEC 72.0201 NJA
0 03-22-83 ISSUED FOR CLIENT REVIEW SBE
0 03-18-83 ISSUED FOR BID - SPEC 72.0201 RSP
6 5/10/85 GENERAL REVISIONS
5 01-18-85 GENERAL REVISIONS NJA LJS HLJ
4 09-14-84 APPROVED FOR CONSTRUCTION SPEC 72.0403 NJA LJS HJA
3 07-05-84 APPROVED FOR CONSTRUCTION NJA LJS HLJ
2 03-09-84 GENERAL REVISIONS NJA HLJ
1 08-18-83 RELEASED FOR CONSTRUCTION SPEC. 72.0201 NJA HLJ
0 03-18-83 INITIAL ISSUE NJA HLJ
NO. DATE REVISIONS AND RECORD OF ISSUE BY
I HEREBY CERTIFY THAT THIS DOCUMENT WAS PREPARED BY ME OR UNDER MY DIRECT SUPERVISION AND THAT I AM A DULY REGISTERED PROFESSIONAL ENGINEER UNDER THE LAWS OF THE STATE OF UTAH
SIGNED Hobart Lee Jacobs
DATE 03-18-83 REG NO. 5746
BLACK & VEATCH CONSULTING ENGINEERS
ENGINEER NJA DRAWN AGG
CHECKED LJS DATE 07-02-84
IPP INTERMOUNTAIN POWER PROJECT
PIPING AND INSTRUMENT DIAGRAM
TURBINE SEALS AND DRAINS
PROJECT 9255
DRAWING NUMBER 1TGC-M2080A
REV 6
CODE TGC-52.6203
AREA

IP14_000085

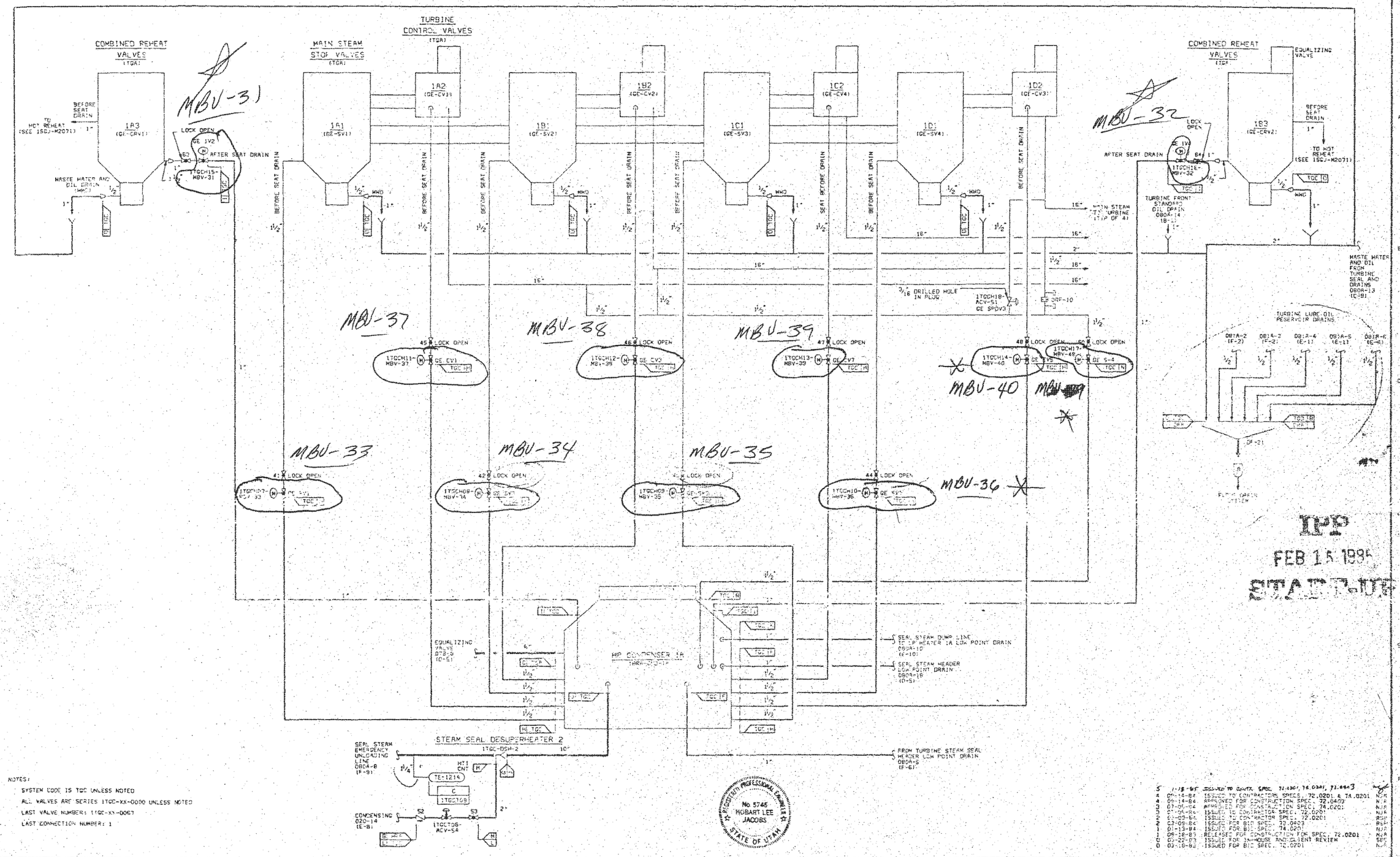

NOTES:

SYSTEM CODE IS TGC UNLESS NOTED

ALL VALVES ARE SERIES 1TGC-XX-0000 UNLESS NOTED

LAST VALVE NUMBER: 1TGC-XX-0067

LAST CONNECTION NUMBER: 1

5	1-18-85	ISSUED TO CONTR. SPEC. 72.0201, 74.0201, 72.0403	
4	09-14-84	ISSUED TO CONTRACTORS SPECS. 72.0201 & 74.0201	NJA
4	09-14-84	APPROVED FOR CONSTRUCTION SPEC. 72.0403	NJA
3	07-05-84	APPROVED FOR CONSTRUCTION SPEC. 74.0201	NJA
3	07-05-84	ISSUED TO CONTRACTOR SPEC. 72.0201	NJA
2	03-09-84	ISSUED TO CONTRACTOR SPEC. 72.0201	RSP
2	03-09-84	ISSUED FOR BIC SPEC. 72.0403	RSP
1	01-13-84	ISSUED FOR BIC SPEC. 74.0201	NJA
1	09-18-83	RELEASED FOR CONSTRUCTION FOR SPEC. 72.0201	NJA
0	03-22-83	ISSUED FOR IN-HOUSE AND CLIENT REVIEW	SPC
0	03-18-83	ISSUED FOR BIC SPEC. 72.0201	NJA

3	07-05-84	APPROVED FOR CONSTRUCTION SPEC. 74.0201	NJA
2	03-09-84	GENERAL REVISIONS	NJA
1	09-18-83	RELEASED FOR CONSTRUCTION SPEC. 72.0201	NJA
0	03-18-83	INITIAL ISSUE	NJA

5	1-18-85	GENERAL REVISIONS	
4	09-14-84	APPROVED FOR CONSTRUCTION SPEC. 72.0403	NJA

I HEREBY CERTIFY THAT THIS DOCUMENT WAS PREPARED BY ME OR UNDER MY DIRECT SUPERVISION AND THAT I AM A DULY REGISTERED PROFESSIONAL ENGINEER UNDER THE LAWS OF THE STATE OF UTAH.

SIGNED Hobart Lee Jacobs

DATE 3-18-83 REG. NO. 5745

BLACK & VEATCH CONSULTING ENGINEERS

IPP INTERMOUNTAIN POWER PROJECT

PIPING AND INSTRUMENT DIAGRAM
TURBINE SEALS AND DRAINS

PROJECT 9255 - DRAWING NUMBER 1TGC-M2080B REV 5

IPP
FEB 15 1985
STAFF-UP

IP14_000086

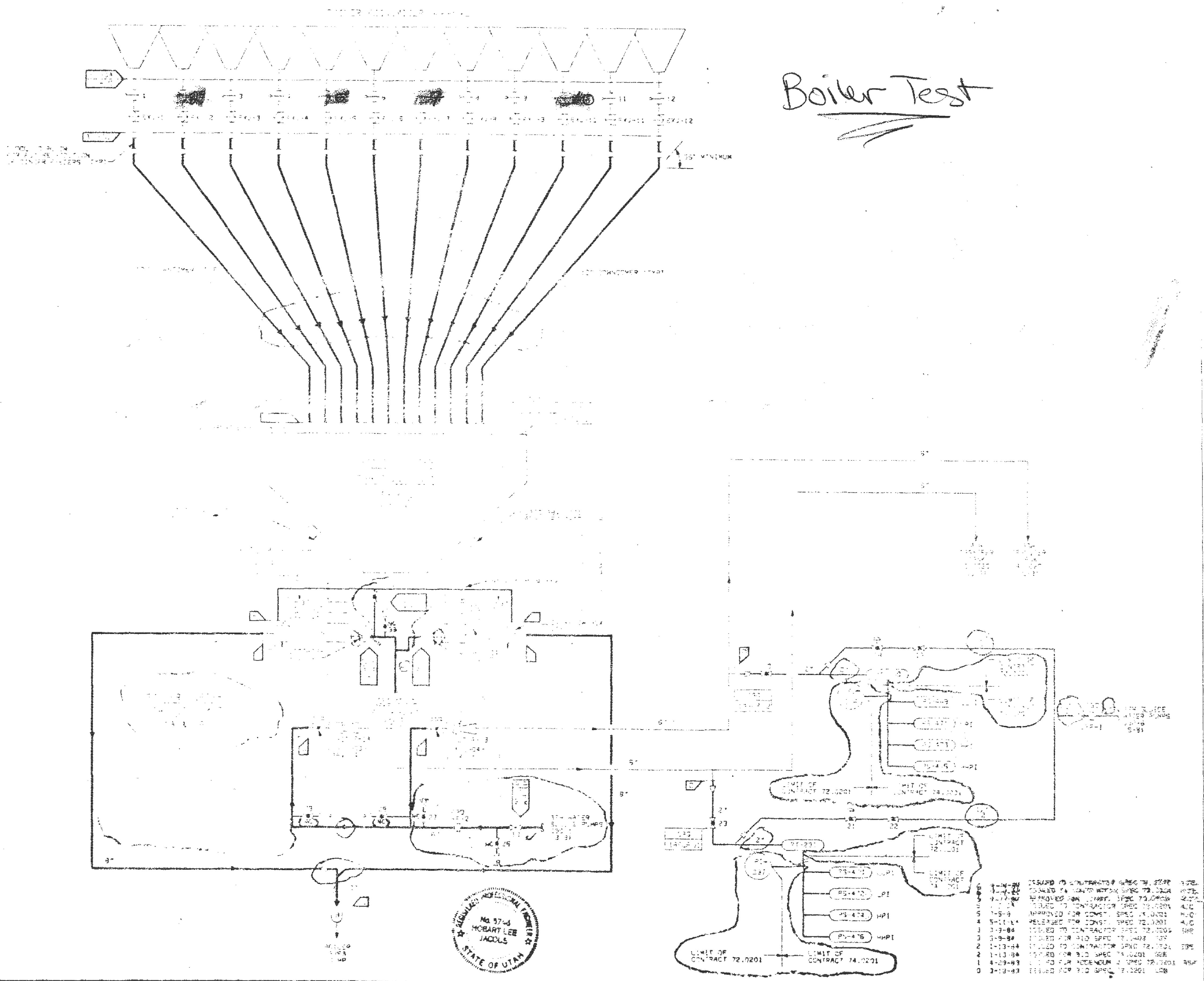

NOTES:

SYSTEM CODE IS ... UNLESS NOTED

ALL VALVES ARE TAGGED ... UNLESS NOTED

LAST VALVE NUMBER: ... (3)

LAST CONNECTION NUMBER: 4

6	9-19-84	ISSUED TO CONTRACTOR SPEC 72.0403	
6		ISSUED TO CONTRACTOR SPEC 72.0403	
6		APPROVED FOR CONST. SPEC 72.0403	
5		ISSUED TO CONTRACTOR SPEC 74.0201	AJC
5	7-5-84	APPROVED FOR CONST. SPEC 74.0201	AJC
4	5-11-84	RELEASED FOR CONST. SPEC 72.0201	AJC
3	3-9-84	ISSUED TO CONTRACTOR SPEC 72.0201	SHR
3	3-9-84	ISSUED FOR BID SPEC 72.0403	SGR
2	1-13-84	ISSUED TO CONTRACTOR SPEC 72.0201	SBS
2	1-13-84	ISSUED FOR BID SPEC 74.0201	SGR
1	4-29-83	ISSUED FOR ADDENDUM 2 SPEC 72.0201	RSA
0	3-18-83	ISSUED FOR BID SPEC 72.0201	LGB

NO.	DATE	REVISIONS AND RECORD OF ISSUE	BY	CHK
6	09-19-84	APPROVED FOR CONSTRUCTION SPEC. 72.0403		
5	07-05-84	APPROVED FOR CONSTRUCTION SPEC. 74.0201		
4	05-11-84	GENERAL REVISIONS RELEASED FOR CONSTRUCTION SPEC. 72.0201		
3	03-09-84	GENERAL REVISIONS	SER	HL
2	01-13-84	GENERAL REVISIONS	SER	HL
1	04-28-83	GENERAL REVISIONS	SER	HL
0	03-18-83	INITIAL ISSUE	SER	HL

I HEREBY CERTIFY THAT THIS DOCUMENT WAS PREPARED BY ME OR UNDER MY DIRECT SUPERVISION AND THAT I AM A DULY REGISTERED PROFESSIONAL ENGINEER UNDER THE LAWS OF THE STATE OF UTAH

SIGNED Hobart Lee Jacobs

BLACK & VEATCH CONSULTING ENGINEERS

ENGINEER SER DRAWN DG

IPP INTERMOUNTAIN POWER PROJECT

PROJECT 9255 - DRAWING NUMBER 1ASC-M2004

PIPING AND INSTRUMENT DIAGRAM

IP14_000087