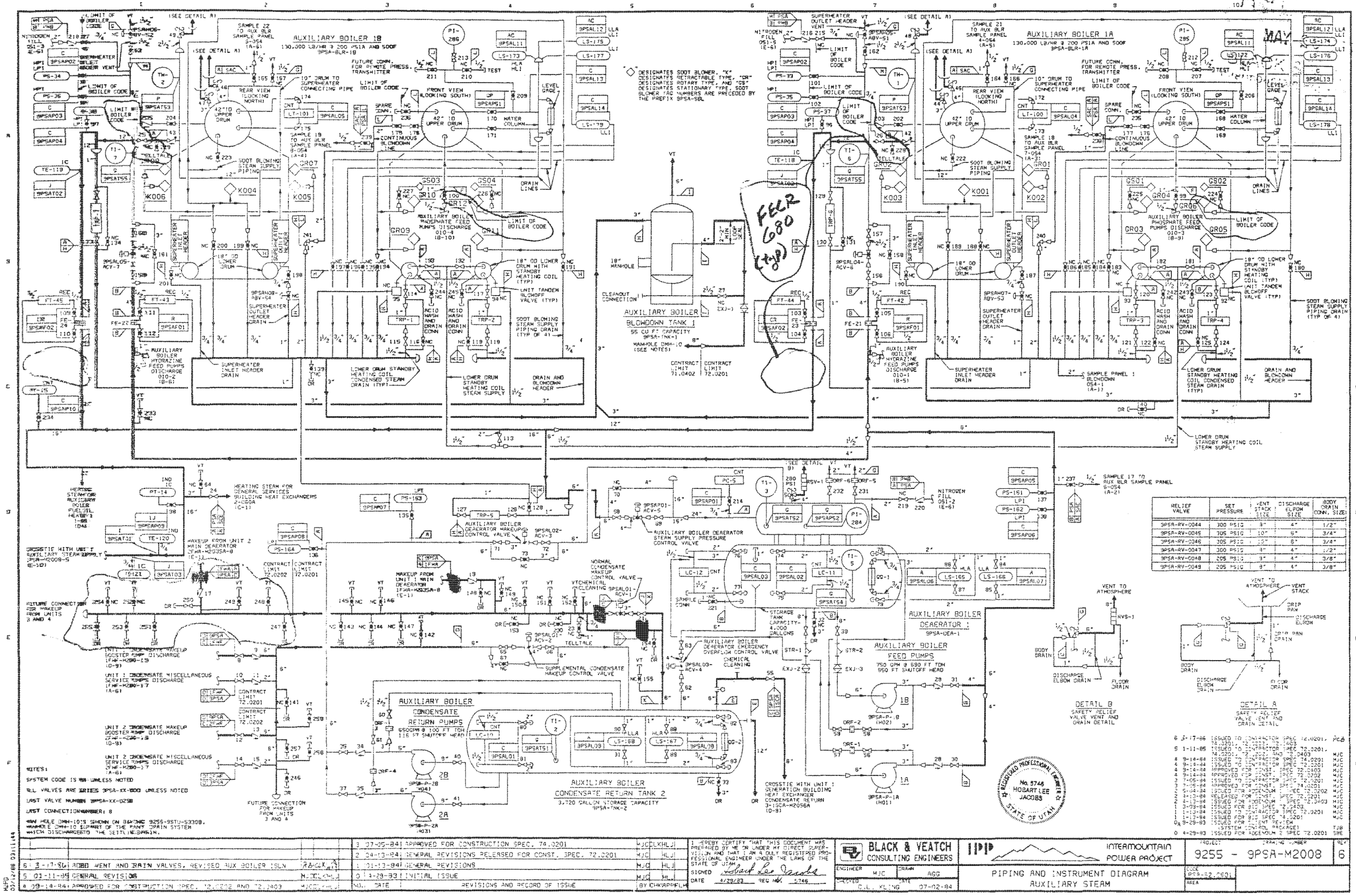

RELIEF VALVE	SET PRESSURE	VENT STACK SIZE	DISCHARGE ELBOW SIZE	BODY DRAIN CONN. SIZE
9PSA-RV-0044	300 PSIG	8"	4"	1/2"
9PSA-RV-0045	305 PSIG	10"	6"	3/4"
9PSA-RV-0046	305 PSIG	10"	6"	3/4"
9PSA-RV-0047	300 PSIG	8"	4"	1/2"
9PSA-RV-0048	205 PSIG	8"	4"	3/8"
9PSA-RV-0049	205 PSIG	8"	4"	3/8"

NOTES:

SYSTEM CODE IS [illegible] UNLESS NOTED

ALL VALVES ARE [illegible] 9PSA-XX-[illegible] UNLESS NOTED

LAST VALVE NUMBER [illegible]

LAST CONNECTION NUMBER: 8

[illegible] HOLE DMH-10 [illegible] SHOWN ON [illegible] 9255-9STU-S3308.
[illegible] DMH-10 [illegible] OF THE [illegible] DRAIN SYSTEM
[illegible] DISCHARGE TO THE SETTLING BASIN.

NO.	DATE	REVISIONS AND RECORD OF ISSUE	BY	CHK	APPR	FLM
6	3-17-86	ADDED VENT AND DRAIN VALVES, REVISED AUX BOILER ISLN	[illegible]	CLK	[illegible]	
5	01-11-85	GENERAL REVISIONS	MJC	CLK	HLJ	
4	09-14-84	APPROVED FOR CONSTRUCTION SPEC. 72.0202 AND 72.0403	MJC	CLK	HLJ	
3	07-05-84	APPROVED FOR CONSTRUCTION SPEC. 74.0201	MJC	CLK	HLJ	
2	04-13-84	GENERAL REVISIONS RELEASED FOR CONST. SPEC. 72.0201	MJC		HLJ	
1	01-13-84	GENERAL REVISIONS	MJC		HLJ	
0	4-29-83	INITIAL ISSUE	MJC		HLJ	

I HEREBY CERTIFY THAT THIS DOCUMENT WAS PREPARED BY ME OR UNDER MY DIRECT SUPERVISION AND THAT I AM A DULY REGISTERED PROFESSIONAL ENGINEER UNDER THE LAWS OF THE STATE OF UTAH

SIGNED Hobart Lee Jacobs

DATE 4/29/83 REG NO. 5746

BLACK & VEATCH CONSULTING ENGINEERS

ENGINEER MJC DRAWN AGG

CHECKED C.L. KLING DATE 07-02-84

IPP INTERMOUNTAIN POWER PROJECT

PIPING AND INSTRUMENT DIAGRAM
AUXILIARY STEAM

PROJECT 9255 - DRAWING NUMBER 9PSA-M2008 REV 6

CODE PSA-52.0501

AREA

IP14_000002

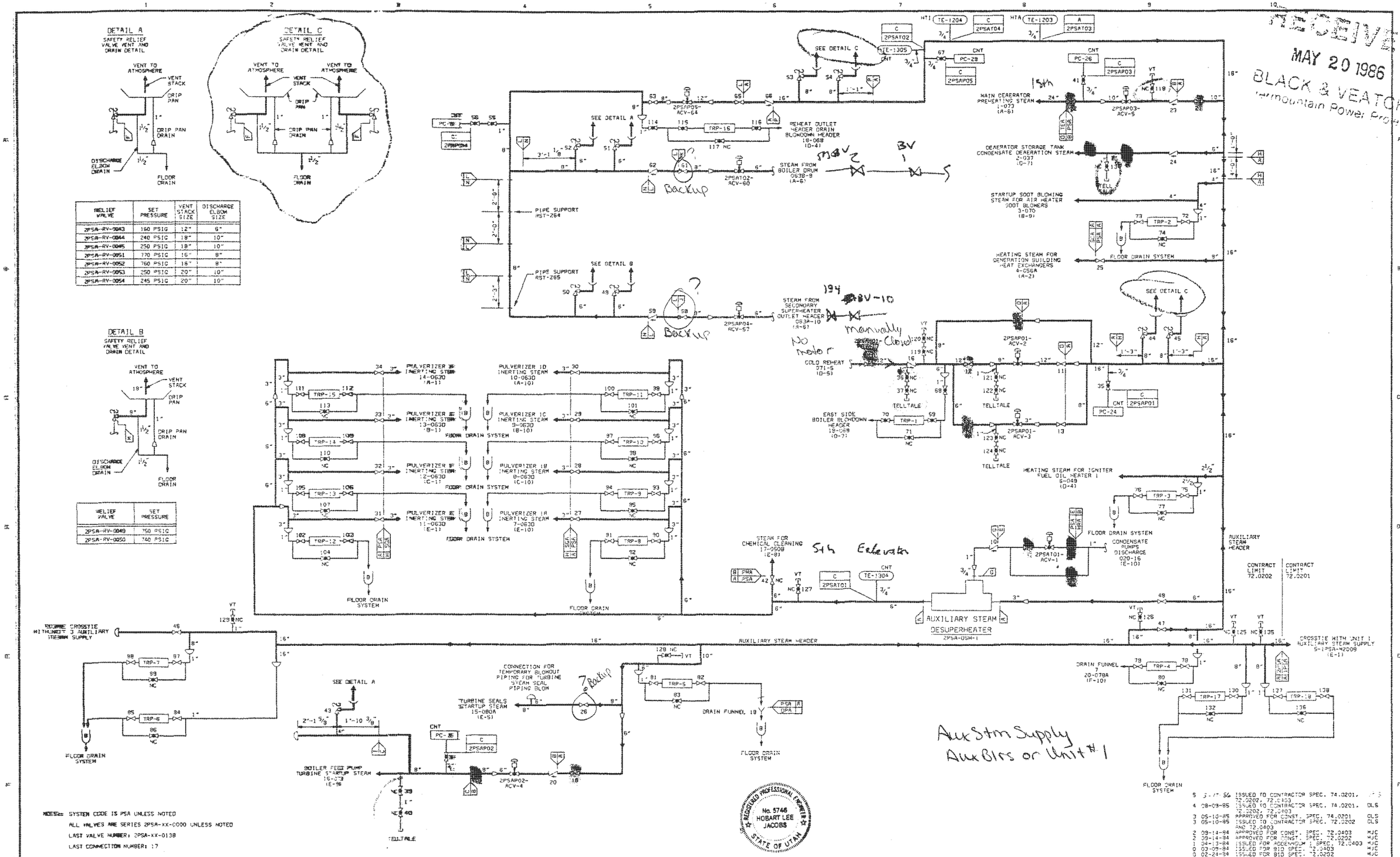

RELIEF VALVE	SET PRESSURE	VENT STACK SIZE	DISCHARGE ELBOW SIZE
2PSA-RV-0043	160 PSIG	12"	6"
2PSA-RV-0044	240 PSIG	18"	10"
2PSA-RV-0045	250 PSIG	18"	10"
2PSA-RV-0051	770 PSIG	16"	8"
2PSA-RV-0052	760 PSIG	16"	8"
2PSA-RV-0053	250 PSIG	20"	10"
2PSA-RV-0054	245 PSIG	20"	10"

RELIEF VALVE	SET PRESSURE
2PSA-RV-0049	750 PSIG
2PSA-RV-0050	740 PSIG

NOTES: SYSTEM CODE IS PSA UNLESS NOTED
ALL VALVES ARE SERIES 2PSA-XX-0000 UNLESS NOTED
LAST VALVE NUMBER: 2PSA-XX-0138
LAST CONNECTION NUMBER: 17

REV	DATE	REVISIONS AND RECORD OF ISSUE	BY	CHK	APPR	CL
5		ADDED DETAIL C				
4	08-09-85	GENERAL REVISIONS	DLS	CL	KL	HJ
3	05-10-85	APPROVED FOR CONSTRUCTION SPEC. 74.0201	DLS	CL	KL	HJ
2	09-14-84	APPROVED FOR CONSTRUCTION SPEC. 72.0202 AND 72.0403	MJC	CL	KL	HJ
1	04-13-84	GENERAL REVISIONS	MJC		HJ	
0	02-28-84	INITIAL ISSUE	MJC		HJ	

I HEREBY CERTIFY THAT THIS DOCUMENT WAS PREPARED BY ME OR UNDER MY DIRECT SUPERVISION AND THAT I AM A DULY REGISTERED PROFESSIONAL ENGINEER UNDER THE LAWS OF THE STATE OF UTAH.
SIGNED Hobart Lee Jacobs
DATE 2-28-84 REG NO. 5746

BLACK & VEATCH CONSULTING ENGINEERS
ENGINEER MJC DRAWN RGG
CHECKED CL KLING DATE 29-07-94

IPP INTERMOUNTAIN POWER PROJECT

PIPING AND INSTRUMENT DIAGRAM
AUXILIARY STEAM

PROJECT 9255 - DRAWING NUMBER 2PSA-M2008 REV 5
CODE PRA-EP-0201
AREA

IP14_000003

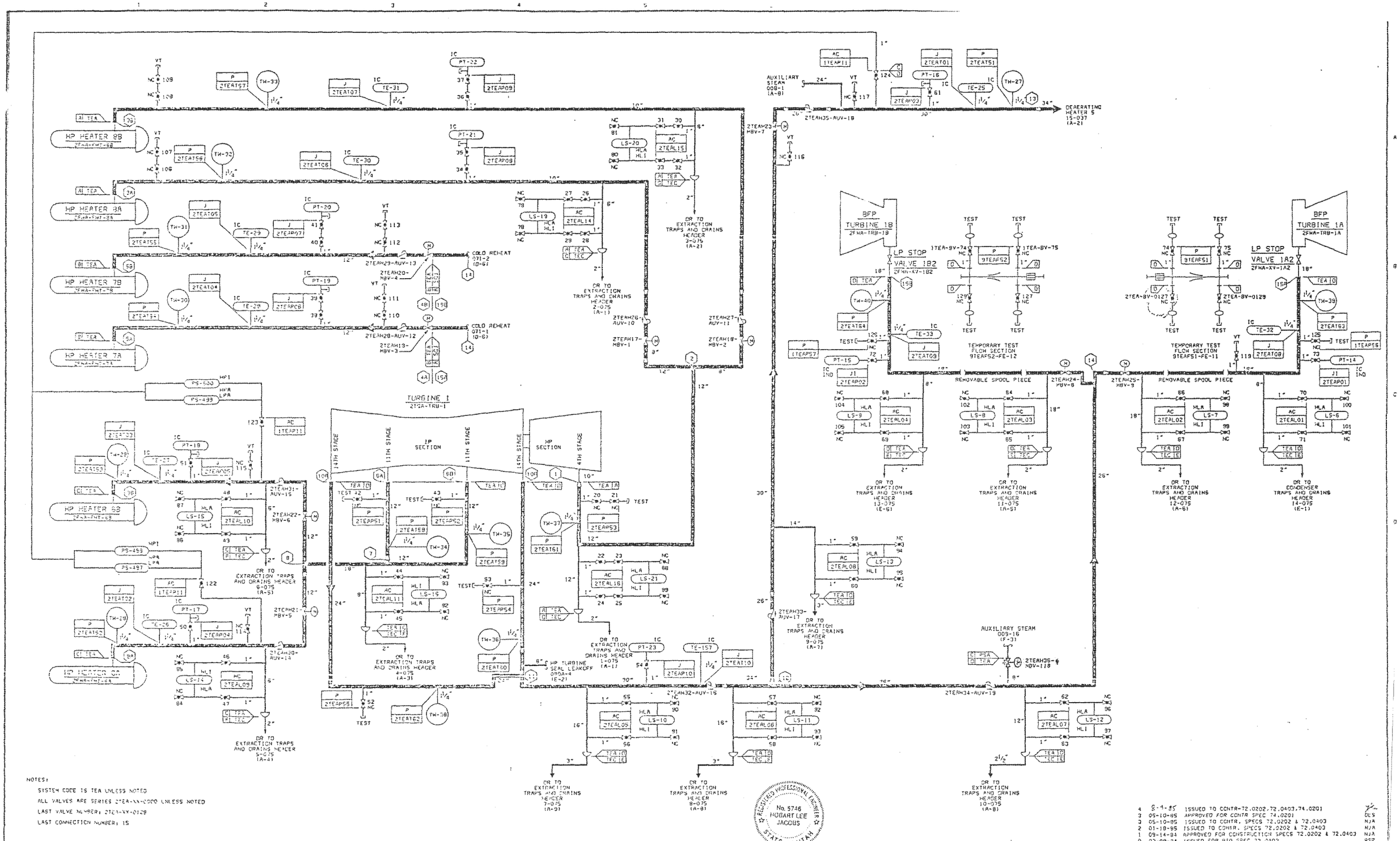

NOTES:

SYSTEM CODE IS TEA UNLESS NOTED

ALL VALVES ARE SERIES 2TEA-XX-0000 UNLESS NOTED

LAST VALVE NUMBER: 2TEA-XX-0129

LAST CONNECTION NUMBER: 15

REGISTERED PROFESSIONAL ENGINEER No. 5746 HOBART LEE JACOBS STATE OF UTAH

4	8-9-85	ISSUED TO CONTR-72.0202,72.0403,74.0201	
3	05-10-85	APPROVED FOR CONTR SPEC 74.0201	DLS
3	05-10-85	ISSUED TO CONTR. SPECS 72.0202 & 72.0403	NJA
2	01-18-85	ISSUED TO CONTR. SPECS 72.0202 & 72.0403	NJA
1	09-14-84	APPROVED FOR CONSTRUCTION SPECS 72.0202 & 72.0403	NJA
0	03-09-84	ISSUED FOR BID SPEC 72.0403	RSP
0	02-24-84	ISSUED FOR BID SPEC 72.0202	NJA

NO.	DATE	REVISIONS AND RECORD OF ISSUE	BY	CHK	APPR
3	05-10-85	APPROVED FOR CONSTRUCTION SPEC 74.0201	NJA	LJS	HLJ
2	01-18-85	GENERAL REVISIONS	NJA	LJS	HLJ
1	03-14-84	APPROVED FOR CONSTRUCTION SPECS 72.0202 & 72.0403	NJA	LJS	HLJ
0	02-24-84	INITIAL ISSUE	NJA	LJS	HLJ

I HEREBY CERTIFY THAT THIS DOCUMENT WAS PREPARED BY ME OR UNDER MY DIRECT SUPERVISION AND THAT I AM A DULY REGISTERED PROFESSIONAL ENGINEER UNDER THE LAWS OF THE STATE OF UTAH

SIGNED

DATE 2-24-84 REG NO. 5746

BLACK & VEATCH CONSULTING ENGINEERS

ENGINEER NJA DRAWN AGG

CHECKED LJS DATE 09-27-84

IPP INTERMOUNTAIN POWER PROJECT

PIPING AND INSTRUMENT DIAGRAM
HIGH PRESSURE EXTRACTION

PROJECT 9255 - DRAWING NUMBER 2TEA-M2073 REV 4

CODE TEA-82.0001

AREA

IP14_000004

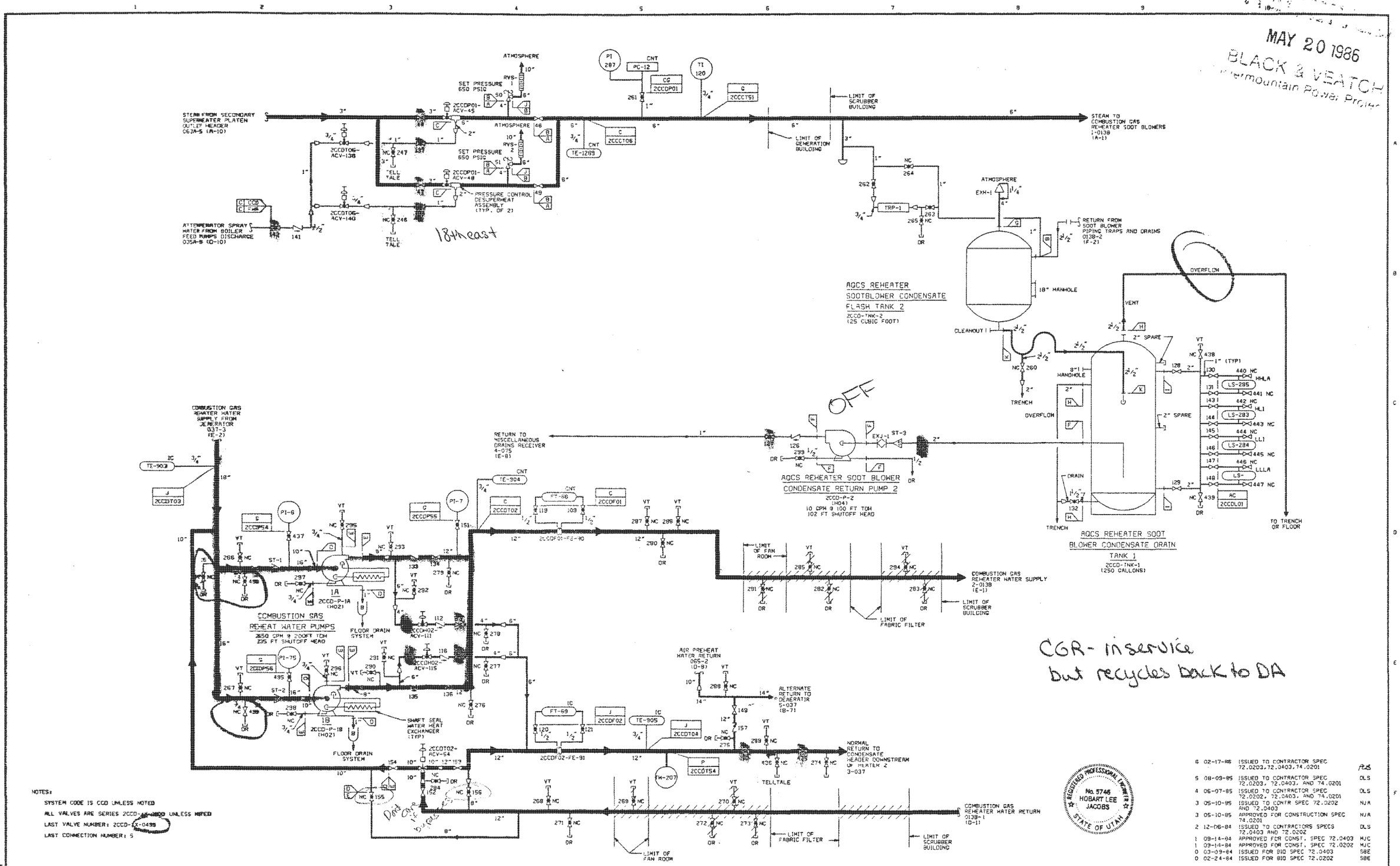

NOTES:

SYSTEM CODE IS CCD UNLESS NOTED

ALL VALVES ARE SERIES 2CCD-[illegible] UNLESS NOTED

LAST VALVE NUMBER: 2CCD-[illegible]-0499

LAST CONNECTION NUMBER: 5

NO.	DATE	REVISIONS AND RECORD OF ISSUE	BY	CHK	APP	FLM
6	02-17-86	ADDED DRAIN VALVES	[illegible]	CLK	HLJ	
5	08-09-85	GENERAL REVISIONS	DLS	CLK	HLJ	
4	06-07-85	GENERAL REVISIONS	DLS	CLK	HLJ	
3	05-10-85	APPROVED FOR CONSTRUCTION SPEC 74.0201	NJA	CLK	HLJ	
2	12-06-84	GENERAL REVISIONS	DLS	CLK	HLJ	
1	09-14-84	APPROVED FOR CONSTRUCTION SPEC 72.0202 AND 72.0403	MJC	CLK	HLJ	
0	02-24-84	INITIAL ISSUE	SER		HLJ	

I HEREBY CERTIFY THAT THIS DOCUMENT WAS PREPARED BY ME OR UNDER MY DIRECT SUPERVISION AND THAT I AM A DULY REGISTERED PROFESSIONAL ENGINEER UNDER THE LAWS OF THE STATE OF UTAH

SIGNED

DATE 2-24-84 REG NO. 5746

BLACK & VEATCH CONSULTING ENGINEERS

IPP INTERMOUNTAIN POWER PROJECT

ENGINEER SER | DRAWN AGG | CHECKED CLK | DATE 09-07-84

PIPING AND INSTRUMENT DIAGRAM
COMBUSTION GAS REHEAT

PROJECT 9255 - DRAWING NUMBER 2CCD-M2013A | REV. 6

CODE CCD-52.1404

AREA

NO.	DATE	REVISIONS AND RECORD OF ISSUE	BY	CHK	APP	FLM
6	02-17-86	ISSUED TO CONTRACTOR SPEC 72.0203, 72.0403, 74.0201				
5	08-09-85	ISSUED TO CONTRACTOR SPEC 72.0203, 72.0403, AND 74.0201			DLS	
4	06-07-85	ISSUED TO CONTRACTOR SPEC 72.0202, 72.0403, AND 74.0201			DLS	
3	05-10-85	ISSUED TO CONTR SPEC 72.0202 AND 72.0403			NJA	
3	05-10-85	APPROVED FOR CONSTRUCTION SPEC 74.0201			NJA	
2	12-06-84	ISSUED TO CONTRACTORS SPECS 72.0403 AND 72.0202			DLS	
1	09-14-84	APPROVED FOR CONST. SPEC 72.0403			MJC	
1	09-14-84	APPROVED FOR CONST. SPEC 72.0202			MJC	
0	03-09-84	ISSUED FOR BID SPEC 72.0403			SBE	
0	02-24-84	ISSUED FOR BID SPEC 72.0202			SBE	

IP14_000005

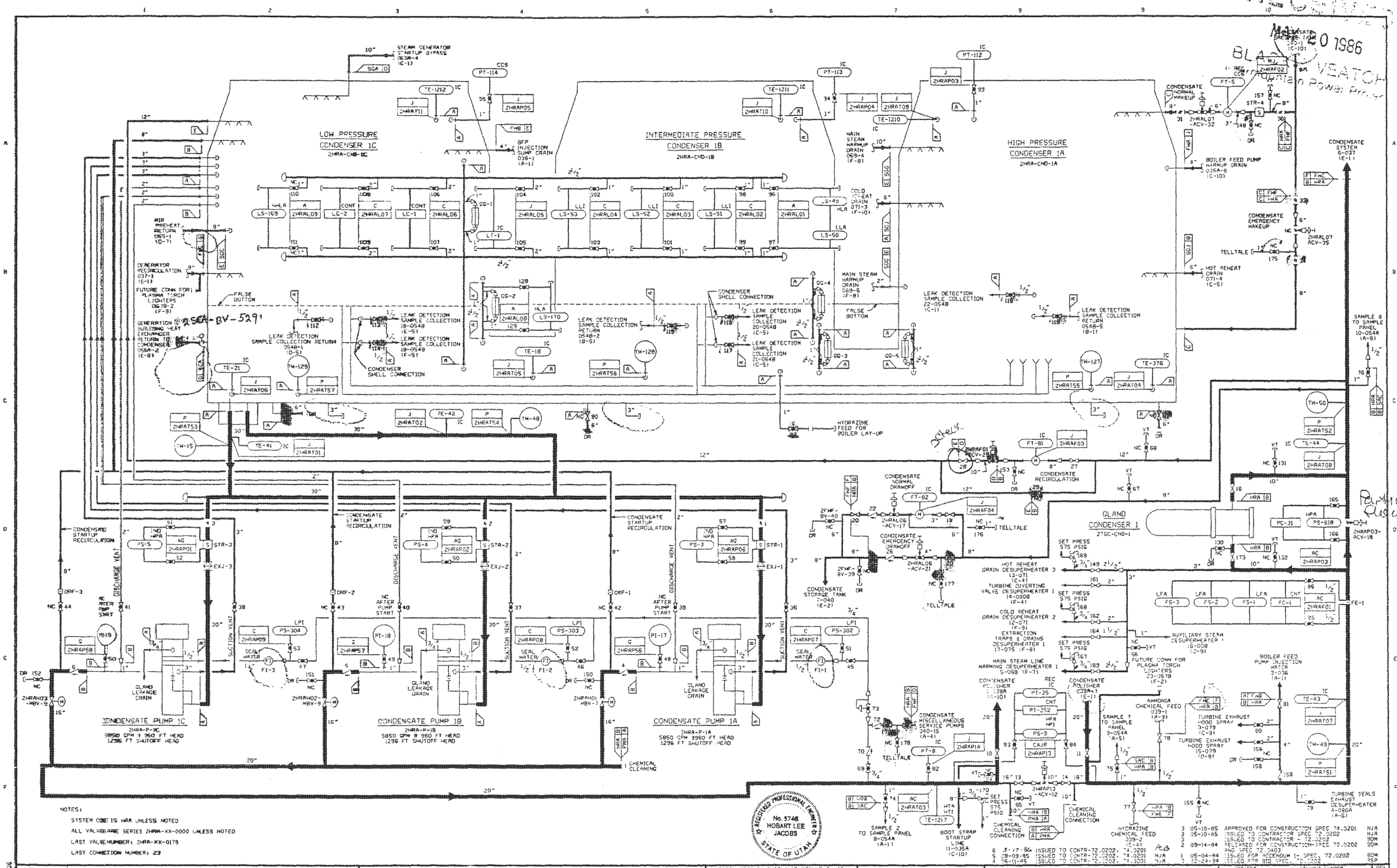

NOTES:

SYSTEM CODE IS HRA UNLESS NOTED

ALL VALVE/GAGE SERIES 2HRA-XX-0000 UNLESS NOTED

LAST VALVE NUMBER: 2HRA-XX-0179

LAST CONNECTION NUMBER: 23

REGISTERED PROFESSIONAL ENGINEER No. 5746 HOBART LEE JACOBS STATE OF UTAH

NO.	DATE	REVISIONS AND RECORD OF ISSUE	BY	CHK	APP	FLM
6	3-17-86	REVISED LINE CODES AND ADDED FLOW INDICATORS				
5	08-09-85	GENERAL REVISIONS	NJA	LJS	HLJ	
4	06-11-85	GENERAL REVISIONS	NJA	LJS	HLJ	
3	05-10-85	APPROVED FOR CONSTRUCTION SPEC 74.0201	NJA	LJS	HLJ	
2	09-14-84	RELEASED FOR CONSTRUCTION-SPEC 72.0202 & SPEC. 72.0403	BDM	LJS	HLJ	
1	05-04-84	GENERAL REVISIONS	BDM		HLJ	
0	02-24-84	INITIAL ISSUE	LJS		HLJ	

I HEREBY CERTIFY THAT THIS DOCUMENT WAS PREPARED BY ME OR UNDER MY DIRECT SUPERVISION AND THAT I AM A DULY REGISTERED PROFESSIONAL ENGINEER UNDER THE LAWS OF THE STATE OF UTAH

SIGNED Hobart Lee Jacobs

DATE 02-24-84 REG. NO. 5746

BLACK & VEATCH CONSULTING ENGINEERS

ENGINEER RSP | DRAWN AGG | CHECKED LJS | DATE 09-07-84

IPP INTERMOUNTAIN POWER PROJECT

PIPING AND INSTRUMENT DIAGRAM CONDENSING

PROJECT 9255 - DRAWING NUMBER 2HRA-M2020 | REV 6

CODE HRA-52.2501

AREA

IP14_000006

RECEIVED
MAY 20 1986
BLACK & VEATCH
Intermountain Power Project

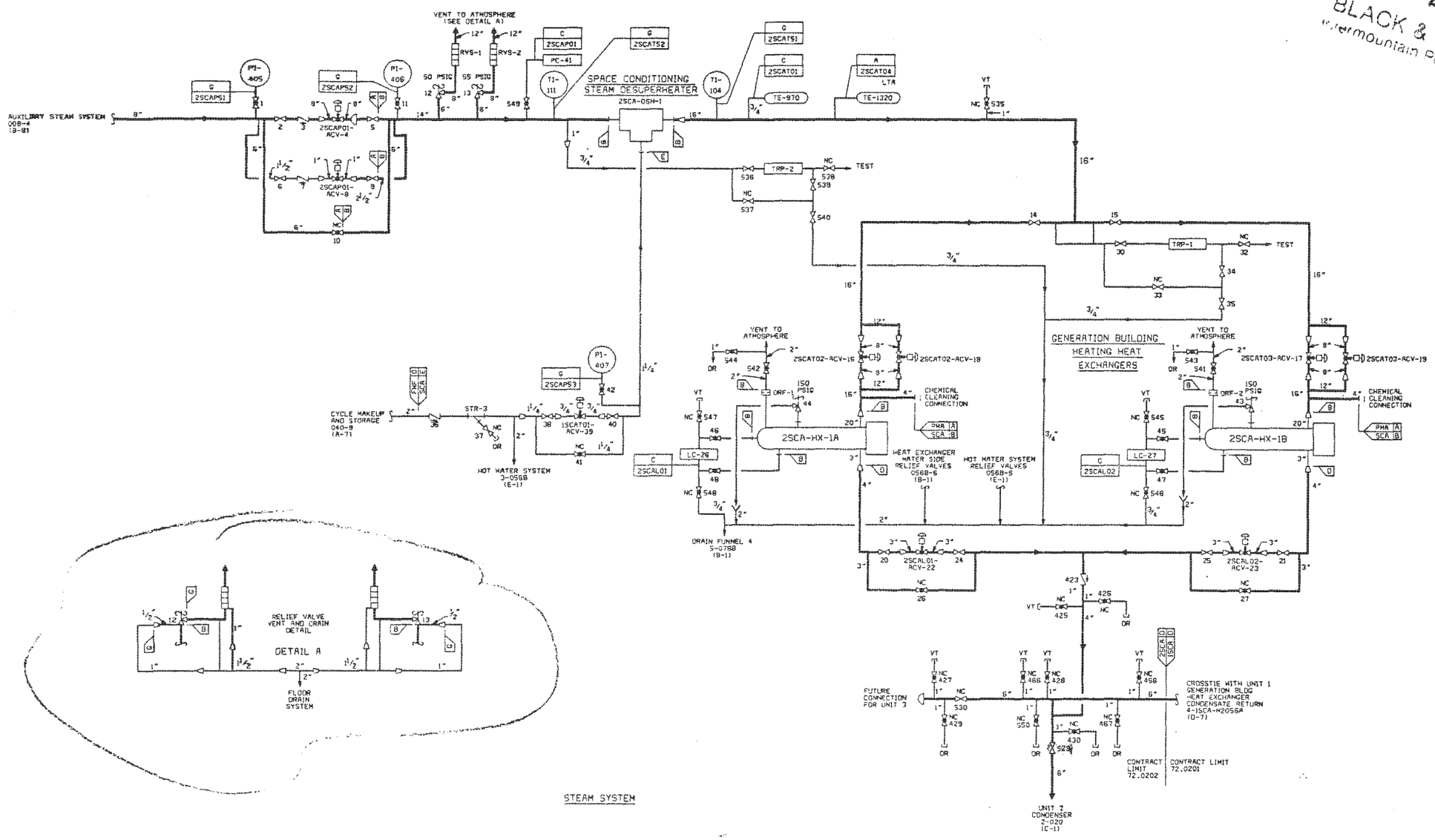

STEAM SYSTEM

NOTES:

1. SYSTEM CODE IS 2SCA UNLESS OTHERWISE NOTED.
2. ALL VALVES ON THIS DRAWING ARE SERIES 2SCA-XXX-0000.
3. HOT WATER SIDE OF HEAT EXCHANGES HX-1A AND HX-1B SHOWN ON P&ID M2056B.
4. INSTRUMENT, TRAP, TEST, AND DRAIN LINES SHALL BE 3/4 INCH UNLESS OTHERWISE NOTED.
5. LAST VALVE NUMBER: 2SCA-XXX-0530
6. LAST CONNECTION NUMBER: 5

NO.	DATE	REVISIONS AND RECORD OF ISSUE	BY	CHK	APPR
5	02-17-86	ISSUED TO CONSTRUCTOR SPEC. 72.0202,72.0403,74.0201			KB
4	08-21-85	ISSUED TO CONTRACTOR SPEC. 72.0202,72.0403,74.0201		DLS	
3	05-10-85	APPROVED FOR CONSTRUCTION SPEC. 74.0201		DLS	
3	05-10-85	ISSUED TO CONTRACTOR, 72.0202 AND 72.0403		DLS	
2	09-14-84	APPROVED FOR CONSTRUCTION 72.0202 AND 72.0403		RDR	
1	05-04-84	ISSUED FOR ADDENDUM 1 SPEC. 72.0202		RDR	
0	03-09-84	ISSUED FOR BID SPEC 72.0403		RDR	
0	02-24-84	ISSUED FOR BID SPEC 72.0202		RDR	

NO.	DATE	REVISIONS AND RECORD OF ISSUE	BY	CHK	APPR
5	02-17-86	REVISED RELIEF VALVE VENT & DRAIN ARRANGEMENT			
4	08-21-85	GENERAL REVISIONS	DLS	DLS	SHL
3	05-10-85	APPROVED FOR CONSTRUCTION, 74.0201		DLS	SHL
2	09-14-84	APPROVED FOR CONSTRUCTION, 72.0202,72.0403		RDR	RGJ
1	05-04-84	GENERAL REVISIONS		RDR	HLJ
0	02-24-84	INITIAL ISSUE		RDR	HLJ

I HEREBY CERTIFY THAT THIS DOCUMENT WAS PREPARED BY ME OR UNDER MY DIRECT SUPERVISION AND THAT I AM A DULY REGISTERED PROFESSIONAL ENGINEER UNDER THE LAWS OF THE STATE OF UTAH

SIGNED

DATE 02-24-84 REG NO. 5746

REGISTERED PROFESSIONAL ENGINEER No. 5746 HOBART LEE JACOBS STATE OF UTAH

BLACK & VEATCH CONSULTING ENGINEERS

ENGINEER RDR DRAWN AGG CHECKED RGJ DATE 09-07-84

IPP INTERMOUNTAIN POWER PROJECT

PIPING AND INSTRUMENT DIAGRAM
GENERATION BUILDING SPACE CONDITIONING

PROJECT 9255 DRAWING NUMBER 2SCA-M2056A REV 5

CODE 52.5601 AREA

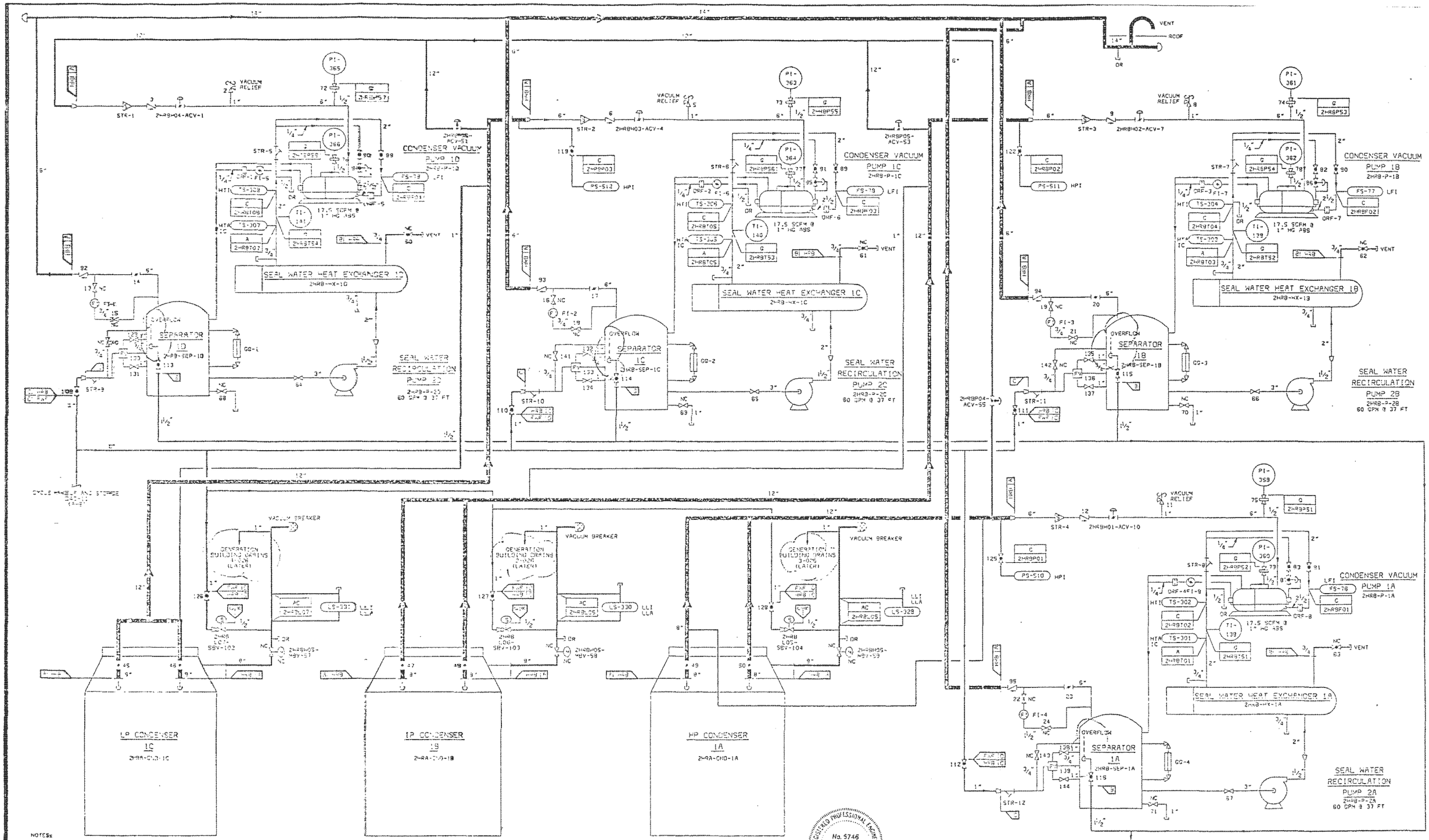
CONDENSER VACUUM PUMP 1D
2HRB-P-1D
CONDENSER VACUUM PUMP 1C
2HRB-P-1C
CONDENSER VACUUM PUMP 1B
2HRB-P-1B
CONDENSER VACUUM PUMP 1A
2HRB-P-1A
SEAL WATER HEAT EXCHANGER 1D
2HRB-HX-1D
SEAL WATER HEAT EXCHANGER 1C
2HRB-HX-1C
SEAL WATER HEAT EXCHANGER 1B
2HRB-HX-1B
SEAL WATER HEAT EXCHANGER 1A
2HRB-HX-1A
SEPARATOR 1D
2HRB-SEP-1D
SEPARATOR 1C
2HRB-SEP-1C
SEPARATOR 1B
2HRB-SEP-1B
SEPARATOR 1A
2HRB-SEP-1A
SEAL WATER RECIRCULATION PUMP 2D
2HRB-P-2D
60 GPM @ 37 FT
SEAL WATER RECIRCULATION PUMP 2C
2HRB-P-2C
60 GPM @ 37 FT
SEAL WATER RECIRCULATION PUMP 2B
2HRB-P-2B
60 GPM @ 37 FT
SEAL WATER RECIRCULATION PUMP 2A
2HRB-P-2A
60 GPM @ 37 FT
LP CONDENSER 1C
2HRA-CND-1C
IP CONDENSER 1B
2HRA-CND-1B
HP CONDENSER 1A
2HRA-CND-1A
VACUUM BREAKER
VACUUM RELIEF
VENT
ROOF
OVERFLOW
MISCELLANEOUS DRAINS RECEIVER
1-075
(C-10)
NOTES:
SYSTEM CODE IS HRB UNLESS NOTED
ALL VALVES ARE SERIES 2HRB-XX-0000 UNLESS NOTED
LAST VALVE NUMBER: 2HRB-XX-0144
LAST CONNECTION NUMBER: 4
No. 5746
HOBART LEE JACOBS
STATE OF UTAH
REGISTERED PROFESSIONAL ENGINEER
2 5/6/95 APPROVED FOR CONST. SPEC 74.0201.
1 09-14-94 APPROVED FOR CONSTRUCTION SPEC. 72.0202
0 02-24-94 ISSUED FOR BID SPEC. 72.0202
BLACK & VEATCH
CONSULTING ENGINEERS
IPP
INTERMOUNTAIN POWER PROJECT
9255 - 2HRB-M2021
2
PIPING AND INSTRUMENT DIAGRAM
CONDENSER AIR EXTRACTION

IP14_000008

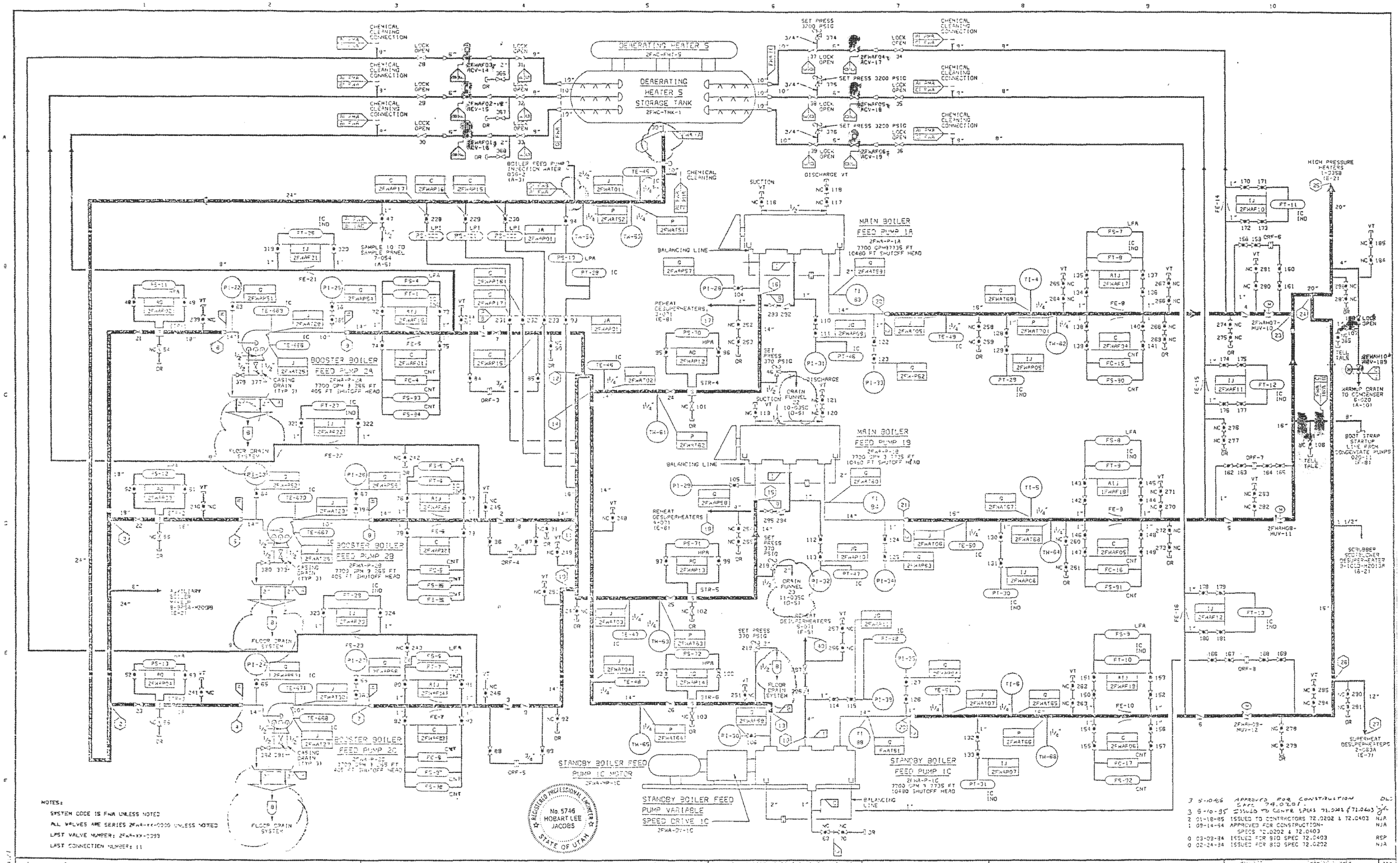

NOTES:

SYSTEM CODE IS FWA UNLESS NOTED

ALL VALVES ARE SERIES 2FWA-XX-0000 UNLESS NOTED

LAST VALVE NUMBER: 2FWA-XX-0399

LAST CONNECTION NUMBER: 11

REV	DESCRIPTION	BY
3	5-10-85 APPROVED FOR CONSTRUCTION SPEC 74.0201	DLC
2	01-18-85 ISSUED TO CONTRACTORS 72.0202 & 72.0403	NJA
1	09-14-84 APPROVED FOR CONSTRUCTION- SPECS 72.0202 & 72.0403	NJA
0	03-09-84 ISSUED FOR BID SPEC 72.0403	RSP
0	02-24-84 ISSUED FOR BID SPEC 72.0202	NJA

BLACK & VEATCH CONSULTING ENGINEERS

INTERMOUNTAIN POWER PROJECT

PIPING AND INSTRUMENT DIAGRAM BOILER FEED

PROJECT 9255 - DRAWING NUMBER 2FWA-M2035A REV 3

RECEIVED
MAY 20 1986
BLACK & VEATCH
Intermountain Power Project

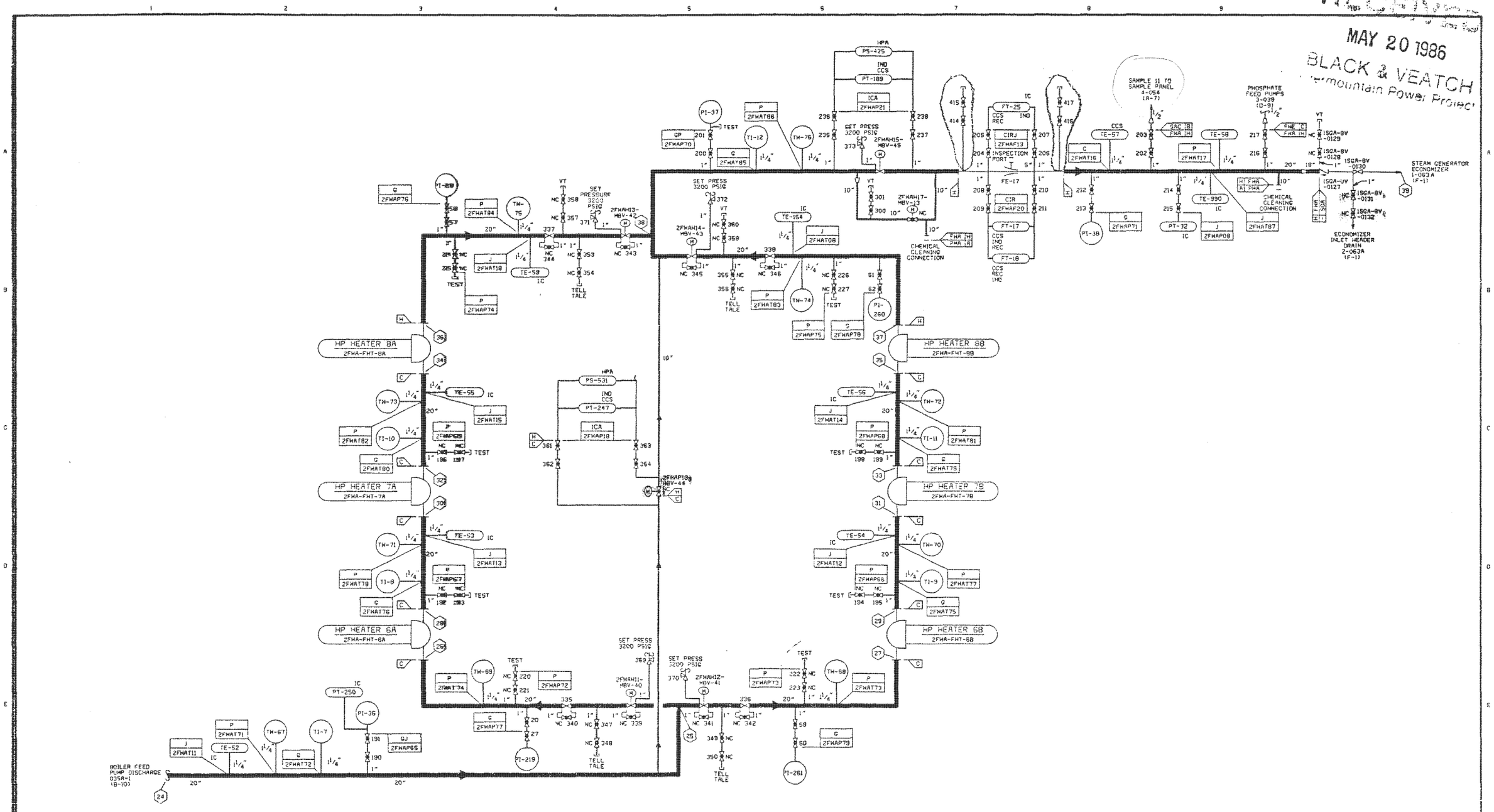

NOTES: SYSTEM CODE IS FWA UNLESS NOTED
ALL VALVES ARE SERIES 2FWA-XX-0000 UNLESS NOTED
LAST VALVE NUMBER: 2FWA-XX-0417
LAST CONNECTION NUMBER: 4

REGISTERED PROFESSIONAL ENGINEER No. 5746 HOBART LEE JACOBS STATE OF UTAH

REV	DATE	REVISIONS AND RECORD OF ISSUE	BY
4	3-17-86	ISSUED TO CONTR SPEC 72.0202, 72.0403, 74.0201	PCB
3	05-10-85	APPROVED FOR CONSTRUCTION SPEC 74.0201	DLS
3	05-10-85	ISSUED TO CONTR SPECS 72.0202, 72.0403	NJA
2	01-18-85	ISSUED TO CONTRACTORS SPECS 72.0202 & 72.0403	NJA
1	09-14-84	APPROVED FOR CONSTRUCTION SPECS 72.0202 & 72.0403	NJA
0	03-09-84	ISSUED FOR BID SPEC 72.0403	RSP
0	02-24-84	ISSUED FOR BID SPEC. 72.0201	NJA

REV	DATE	REVISIONS AND RECORD OF ISSUE	BY	CHK	APPR
4	3-17-86	ADDED FE-17 TEST CONNECTION SHUTOFF VALVES	PCB		
3	05-10-85	APPROVED FOR CONSTRUCTION SPEC 74.0201	NJA	LJS	HLJ
2	01-18-85	GENERAL REVISIONS	NJA	LJS	HLJ
1	09-14-84	APPROVED FOR CONSTRUCTION SPECS 72.0202 & 72.0403	NJA	LJS	HLJ
0	02-24-84	INITIAL ISSUE	NJA	LJS	HLJ

I HEREBY CERTIFY THAT THIS DOCUMENT WAS PREPARED BY ME OR UNDER MY DIRECT SUPERVISION AND THAT I AM A DULY REGISTERED PROFESSIONAL ENGINEER UNDER THE LAWS OF THE STATE OF UTAH
SIGNED Hobart Lee Jacobs
DATE 02-24-84 REG NO. 5746

BLACK & VEATCH CONSULTING ENGINEERS

ENGINEER NJA | DRAWN HGG | CHECKED LJS | DATE 09-07-84

IPP INTERMOUNTAIN POWER PROJECT

PIPING AND INSTRUMENT DIAGRAM
BOILER FEED

PROJECT 9255 | DRAWING NUMBER 2FWA-M20358 | REV 4

CODE FWA-E2.2401
AREA

RECEIVED
MAY 20 1986
BLACK & VEATCH
Intermountain Power Proj.

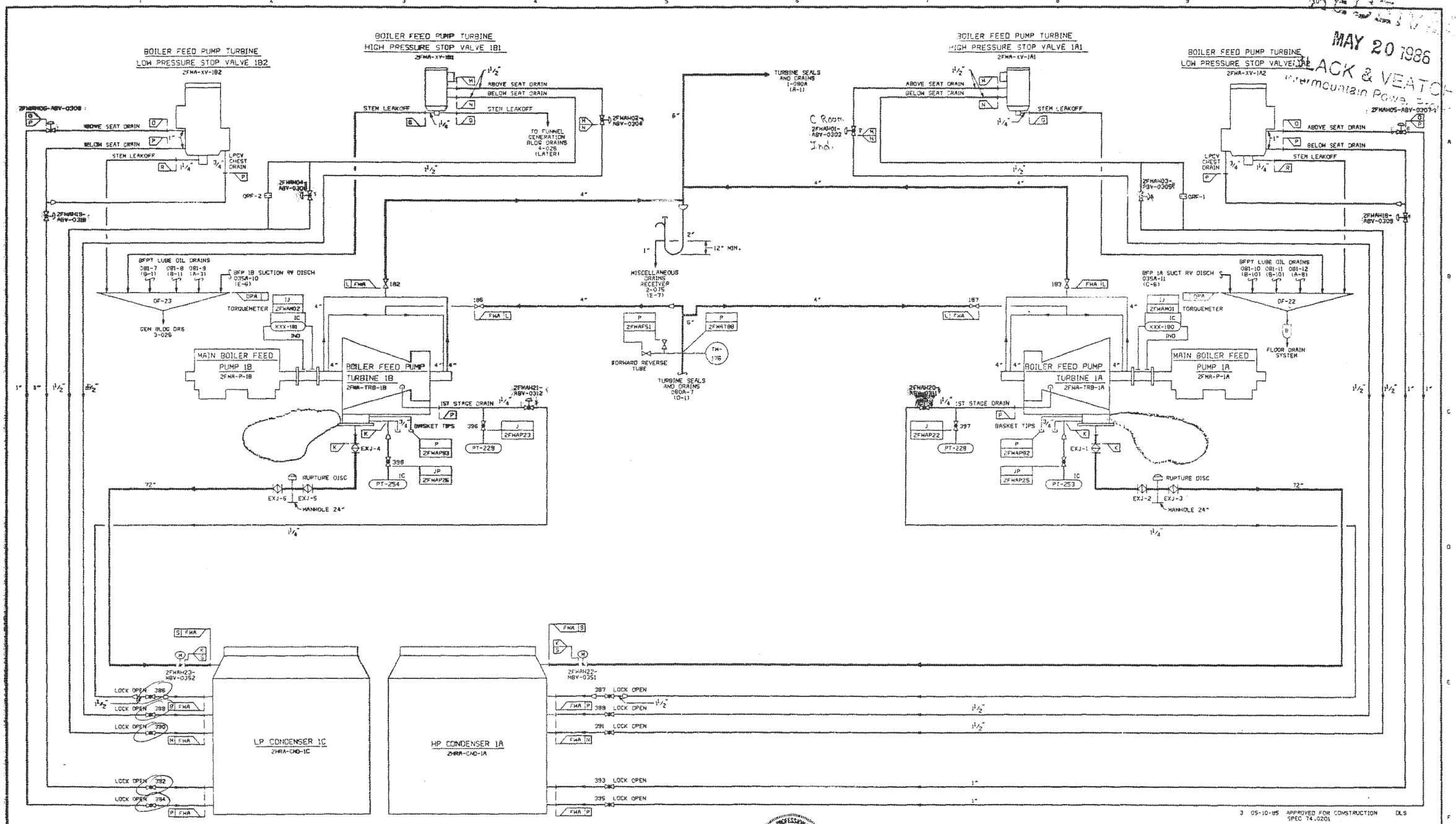

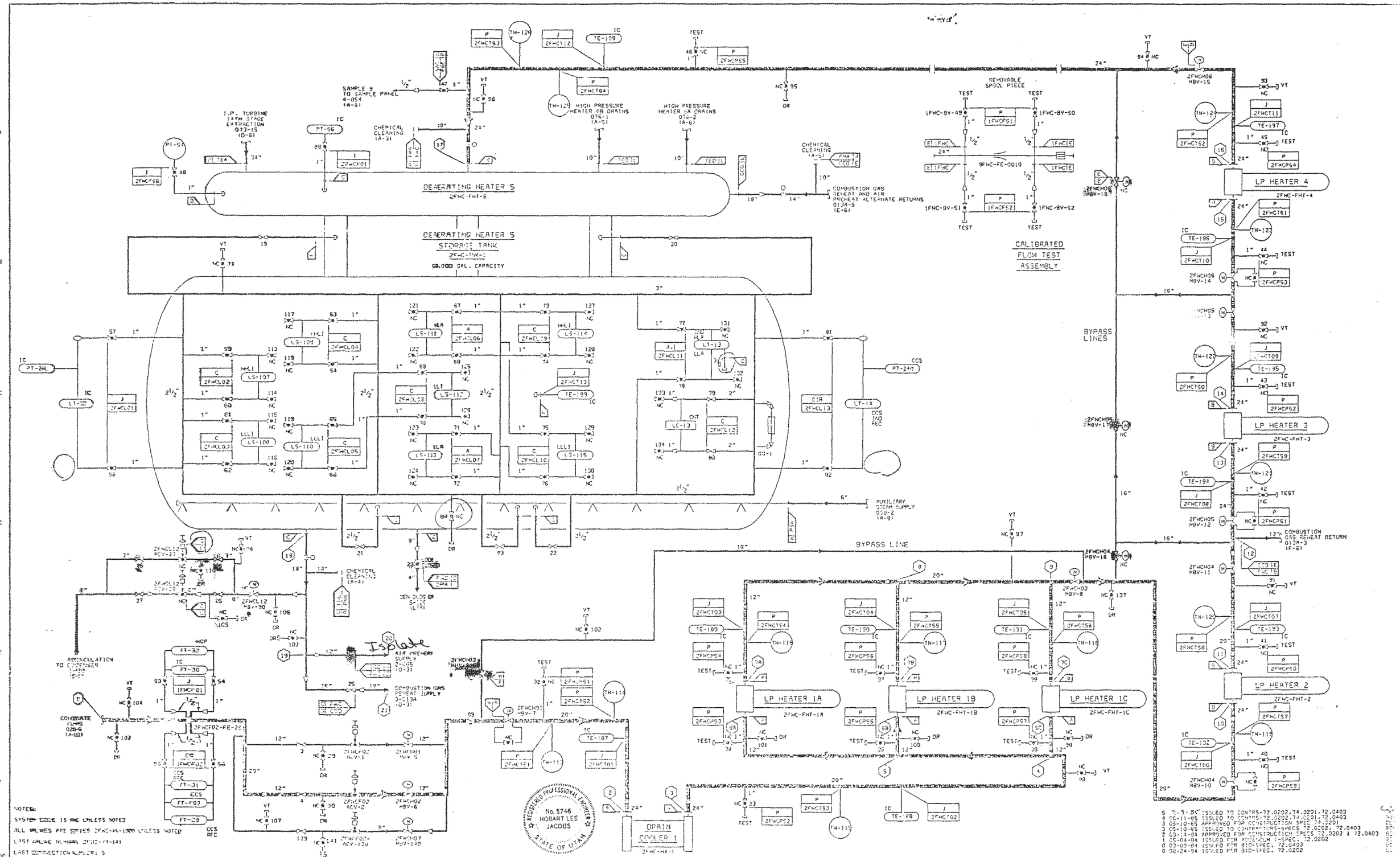
DEAERATING HEATER 5
DEAERATING HEATER 5 STORAGE TANK
CALIBRATED FLOW TEST ASSEMBLY
REMOVABLE SPOOL PIECE
BYPASS LINES
BYPASS LINE
LP HEATER 4
LP HEATER 3
LP HEATER 2
LP HEATER 1A
LP HEATER 1B
LP HEATER 1C
DRAIN COOLER 1
Isolate
REGISTERED PROFESSIONAL ENGINEER
No. 5746
HOBART LEE JACOBS
STATE OF UTAH
NOTES:
SYSTEM CODE IS NC UNLESS NOTED
ALL VALVES ARE SERIES 2FWC-HX-1000 UNLESS NOTED
LAST VALVE NUMBER: 2FWC-HX-141
LAST CONNECTION NUMBER: 5
5 2-9-85 ISSUED TO CONTRS-72.0202,74.0201,72.0403
4 06-11-85 ISSUED TO CONTRS-72.0202,74.0201,72.0403
3 05-10-85 APPROVED FOR CONSTRUCTION SPEC 72.0202
3 05-10-85 ISSUED TO CONTRACTORS-SPECS 72.0202, 72.0403
2 03-14-84 APPROVED FOR CONSTRUCTION SPECS 72.0202 & 72.0403
1 05-04-84 ISSUED FOR PROCEDURE 1-SPEC. 72.0202
0 03-03-84 ISSUED FOR BID-SPEC. 72.0403
0 02-24-84 ISSUED FOR BID-SPEC. 72.0202
GENERAL REVISIONS
APPROVED FOR CONSTRUCTION-SPECS 72.0202 & 72.0403
GENERAL REVISIONS
INITIAL ISSUE
BLACK & VEATCH CONSULTING ENGINEERS
IPP INTERMOUNTAIN POWER PROJECT
PIPING AND INSTRUMENT DIAGRAM CONDENSATE
9255 - 2FWC-M2037

IP14_000012

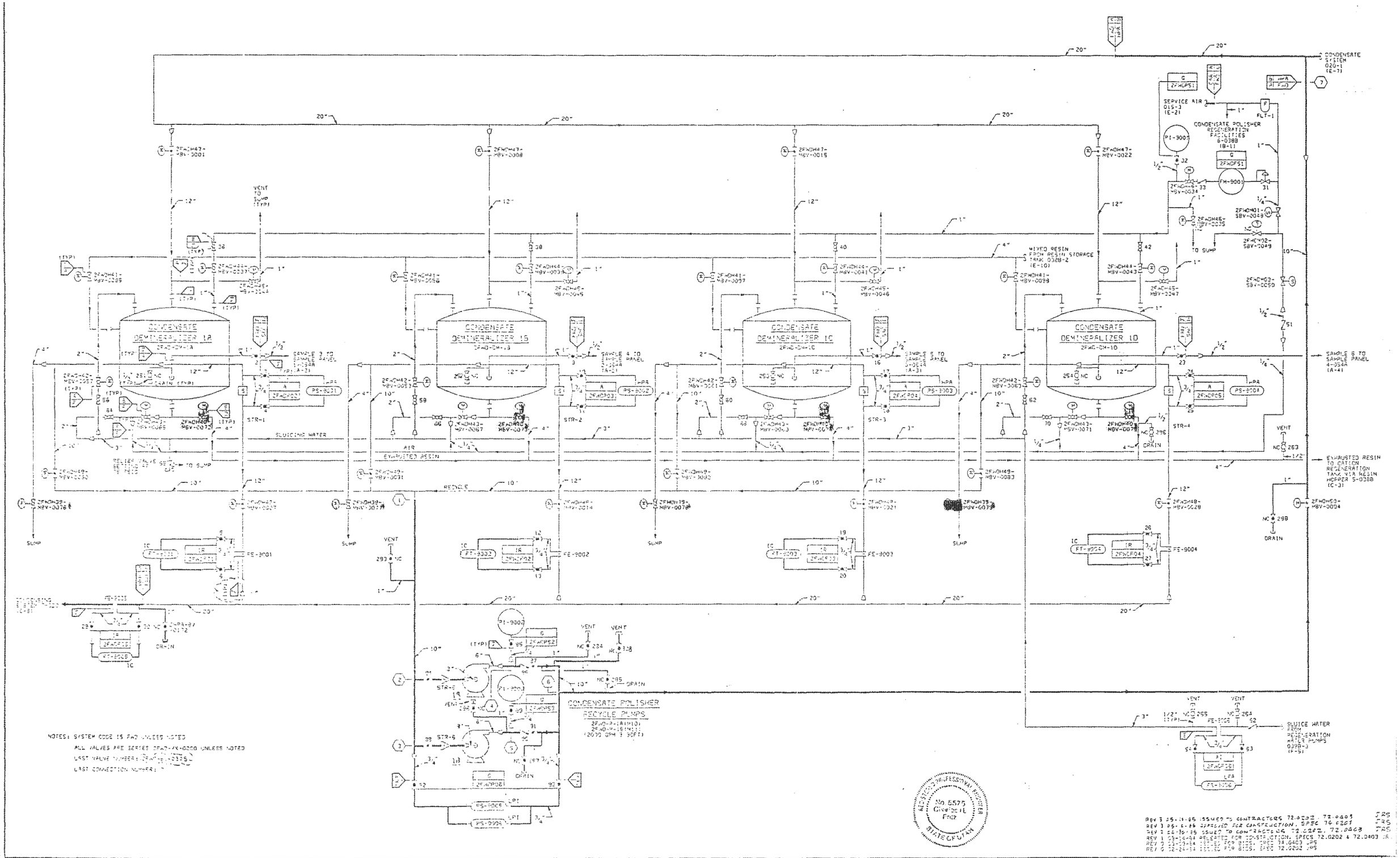
CONDENSATE DEMINERALIZER 1A
CONDENSATE DEMINERALIZER 1B
CONDENSATE DEMINERALIZER 1C
CONDENSATE DEMINERALIZER 1D
CONDENSATE POLISHER RECYCLE PUMPS
CONDENSATE POLISHER REGENERATION FACILITIES
SLUICING WATER
EXHAUSTED RESIN
RECYCLE
SAMPLE 6 TO SAMPLE PANEL
EXHAUSTED RESIN TO CATION REGENERATION TANK VIA RESIN HOPPER
SLUICE WATER FROM REGENERATION WATER PUMPS
NOTES: SYSTEM CODE IS FWD UNLESS NOTED
ALL VALVES ARE SERIES 2FWD-XX-0000 UNLESS NOTED
LAST VALVE NUMBER:
LAST CONNECTION NUMBER:
REGISTERED PROFESSIONAL ENGINEER
No. 5575
Gisele L. Fritz
STATE OF UTAH
BLACK & VEATCH
CONSULTING ENGINEERS
IPP
INTERMOUNTAIN POWER PROJECT
PIPING AND INSTRUMENT DIAGRAM
CONDENSATE POLISHING
9255 - 2FWD-M2038A
3

IP14_000013

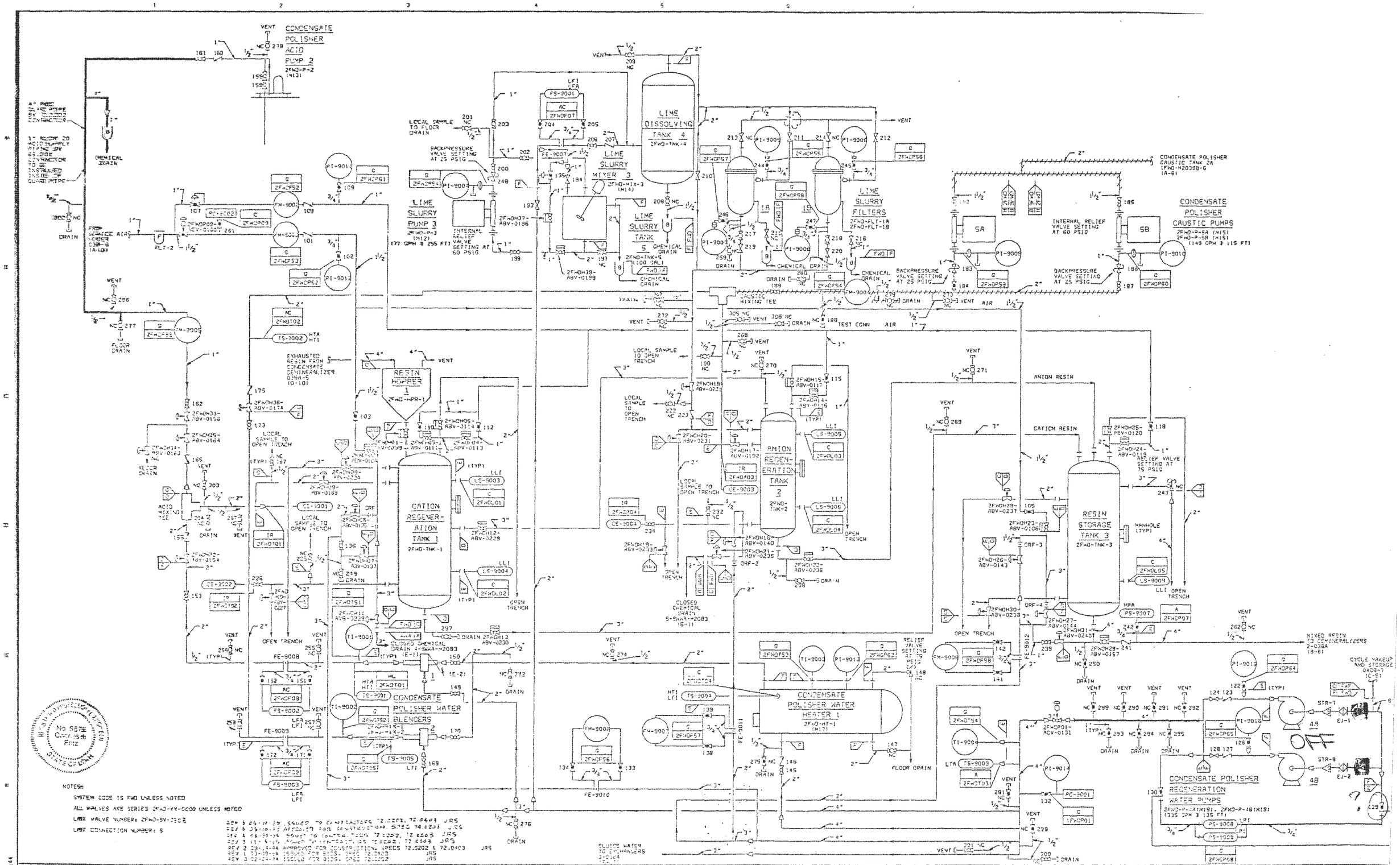
CONDENSATE POLISHER ACID PUMP 2
LIME DISSOLVING TANK 4
LIME SLURRY MIXER 3
LIME SLURRY PUMP 3
LIME SLURRY TANK 5
LIME SLURRY FILTERS
CONDENSATE POLISHER CAUSTIC PUMPS
CONDENSATE POLISHER CAUSTIC TANK 2A
RESIN HOPPER 1
CATION REGENERATION TANK 1
ANION REGENERATION TANK 2
RESIN STORAGE TANK 3
CONDENSATE POLISHER WATER HEATER 1
CONDENSATE POLISHER BLENDERS
CONDENSATE POLISHER REGENERATION WATER PUMPS
ANION RESIN
CATION RESIN
MIXED RESIN TO DEMINERALIZERS
BLACK & VEATCH CONSULTING ENGINEERS
INTERMOUNTAIN POWER PROJECT
PIPING AND INSTRUMENT DIAGRAM
CONDENSATE POLISHING
9255 - 2FWD-M2038B

IP14_000014

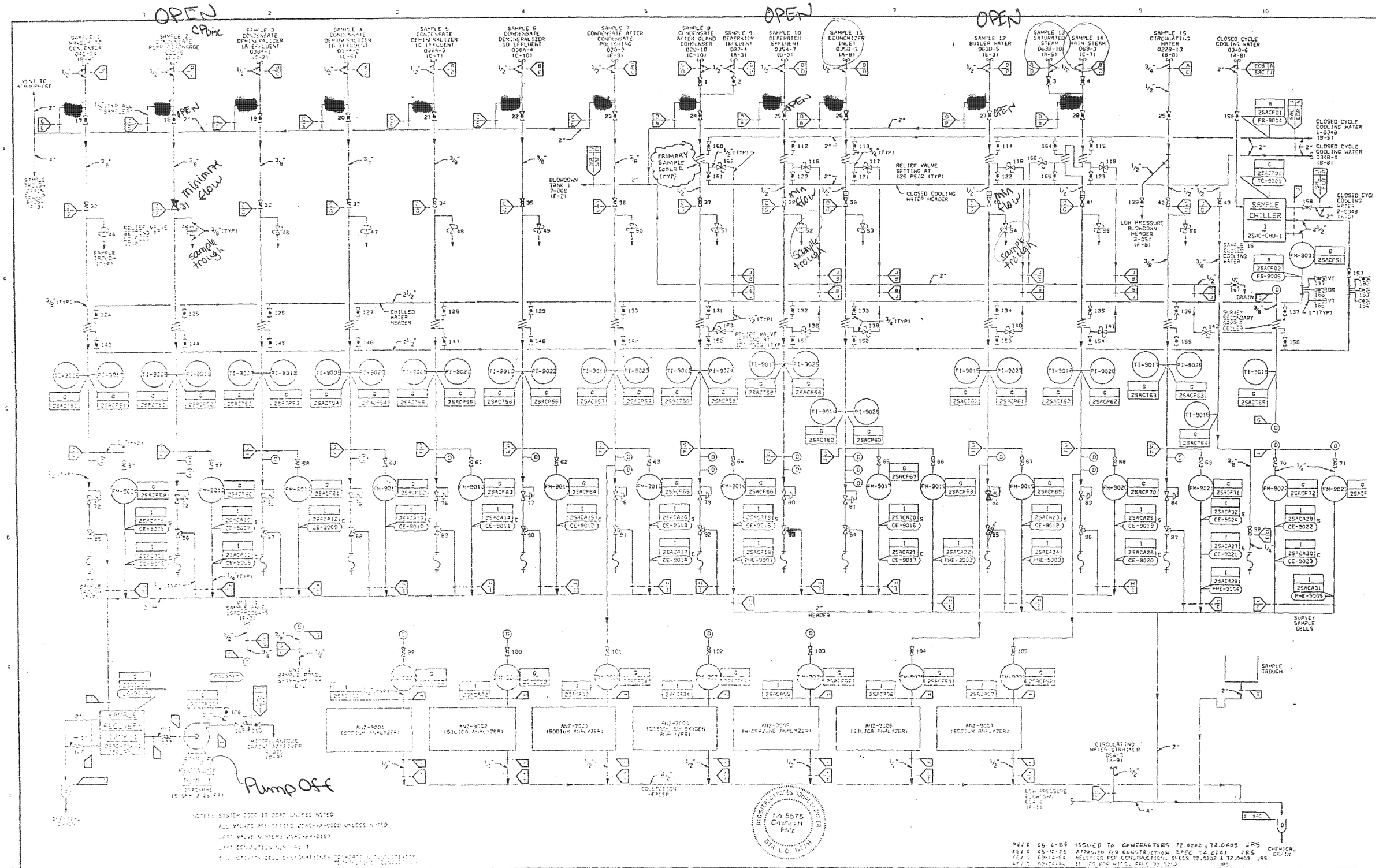
OPEN
OPEN
OPEN
SAMPLE 1 MAKE-UP CONDENSER
SAMPLE 2 CONDENSATE PUMP DISCHARGE
SAMPLE 3 CONDENSATE DEMINERALIZER 1A EFFLUENT
SAMPLE 4 CONDENSATE DEMINERALIZER 1B EFFLUENT
SAMPLE 5 CONDENSATE DEMINERALIZER 1C EFFLUENT
SAMPLE 6 CONDENSATE DEMINERALIZER 1D EFFLUENT
SAMPLE 7 CONDENSATE AFTER CONDENSATE POLISHING
SAMPLE 8 CONDENSATE AFTER GLAND CONDENSER
SAMPLE 9 DEAERATOR INFLUENT
SAMPLE 10 DEAERATOR EFFLUENT
SAMPLE 11 ECONOMIZER INLET
SAMPLE 12 BOILER WATER
SAMPLE 13 SATURATED STEAM
SAMPLE 14 MAIN STEAM
SAMPLE 15 CIRCULATING WATER
CLOSED CYCLE COOLING WATER
PRIMARY SAMPLE COOLER (TYP)
BLOWDOWN TANK 1
RELIEF VALVE SETTING AT 125 PSIG (TYP)
CLOSED COOLING WATER HEADER
LOW PRESSURE BLOWDOWN HEADER
SAMPLE CHILLER
SAMPLE TROUGH
CHILLED WATER HEADER
SURVEY SECONDARY SAMPLE COOLER
SURVEY SAMPLE CELLS
HEADER
CIRCULATING WATER STRAINER
COLLECTION HEADER
CHEMICAL DRAIN
Pump Off
NOTES: SYSTEM CODE IS 2SAC UNLESS NOTED
ALL VALVES ARE SERIES 2SAC-XX-0000 UNLESS NOTED
LAST VALVE NUMBER: 2SAC-BV-0197
LAST CONNECTION NUMBER: 7
REGISTERED PROFESSIONAL ENGINEER
No 5575
STATE OF UTAH
ISSUED TO CONTRACTORS 72.0202, 72.0403 JRS
APPROVED FOR CONSTRUCTION SPEC 74.0201 JRS
RELEASED FOR CONSTRUCTION SPECS 72.0202 & 72.0403 JRS
BLACK & VEATCH CONSULTING ENGINEERS
IPP INTERMOUNTAIN POWER PROJECT
9255 - 2SAC-M2054A
PIPING AND INSTRUMENT DIAGRAM
STEAM CYCLE SAMPLING AND ANALYSIS
5-7-85

IP14_000015

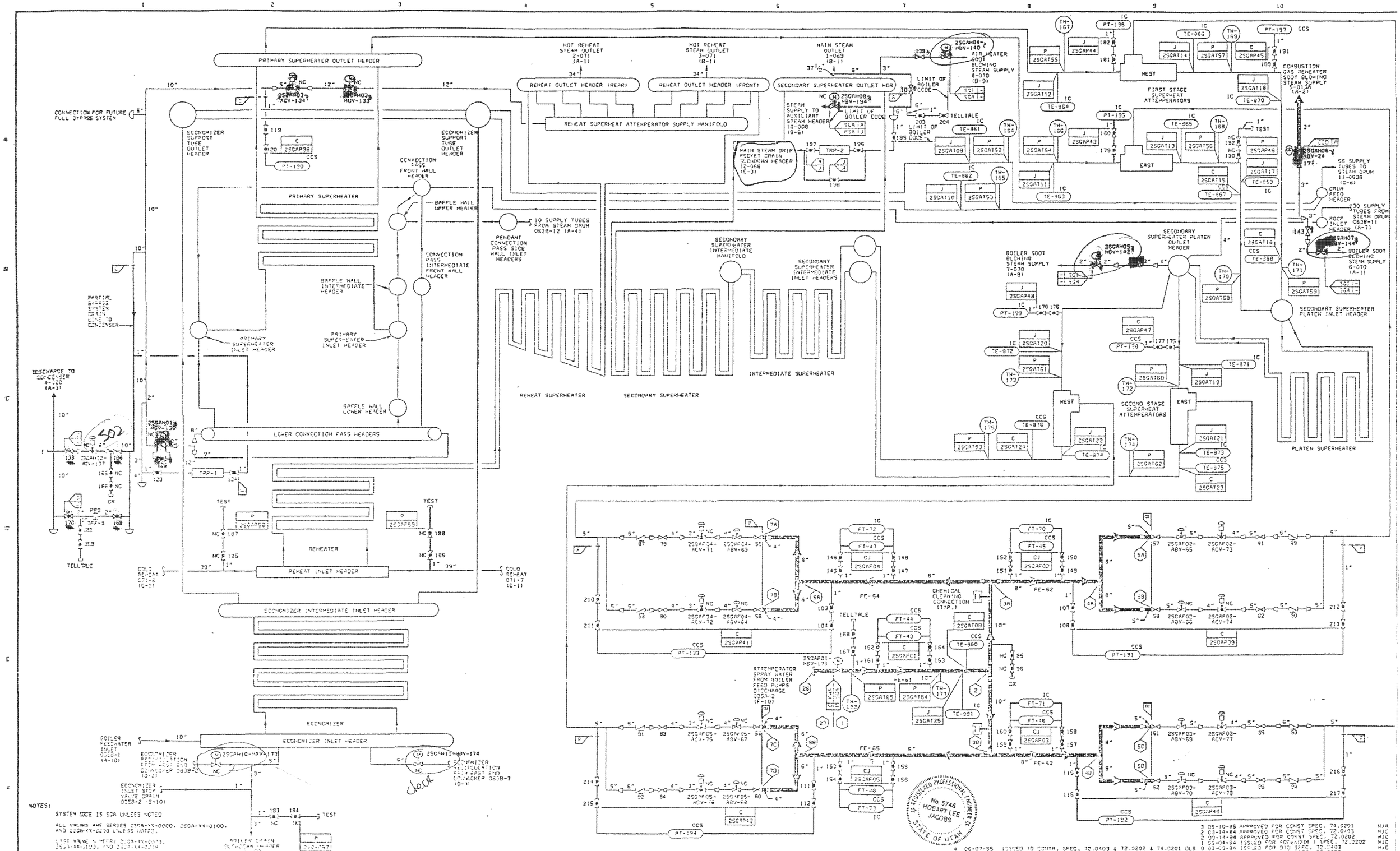
PRIMARY SUPERHEATER OUTLET HEADER
REHEAT OUTLET HEADER (REAR)
REHEAT OUTLET HEADER (FRONT)
SECONDARY SUPERHEATER OUTLET HDR
REHEAT SUPERHEAT ATTEMPERATOR SUPPLY MANIFOLD
HOT REHEAT STEAM OUTLET 2-071 (A-1)
HOT REHEAT STEAM OUTLET 3-071 (B-1)
MAIN STEAM OUTLET 1-069 (B-1)
CONNECTION FOR FUTURE FULL BYPASS SYSTEM
ECONOMIZER SUPPORT TUBE OUTLET HEADER
PRIMARY SUPERHEATER
CONVECTION PASS FRONT WALL HEADER
BAFFLE WALL UPPER HEADER
CONVECTION PASS INTERMEDIATE FRONT WALL HEADER
BAFFLE WALL INTERMEDIATE HEADER
PRIMARY SUPERHEATER INLET HEADER
BAFFLE WALL LOWER HEADER
LOWER CONVECTION PASS HEADERS
PENDANT CONNECTION PASS SIDE WALL INLET HEADERS
SECONDARY SUPERHEATER INTERMEDIATE MANIFOLD
SECONDARY SUPERHEATER INTERMEDIATE INLET HEADERS
INTERMEDIATE SUPERHEATER
REHEAT SUPERHEATER
SECONDARY SUPERHEATER
REHEATER
REHEAT INLET HEADER
ECONOMIZER INTERMEDIATE INLET HEADER
ECONOMIZER
ECONOMIZER INLET HEADER
FIRST STAGE SUPERHEAT ATTEMPERATORS
SECOND STAGE SUPERHEAT ATTEMPERATORS
SECONDARY SUPERHEATER PLATEN OUTLET HEADER
SECONDARY SUPERHEATER PLATEN INLET HEADER
PLATEN SUPERHEATER
HEST
EAST
DISCHARGE TO CONDENSER
COLD REHEAT
TELLTALE
LIMIT OF BOILER CODE
MAIN STEAM DRIP POCKET DRAIN SCHEDULE HEADER
ATTEMPERATOR SPRAY WATER FROM BOILER FEED PUMPS DISCHARGE
CHEMICAL CLEANING CONNECTION (TYP.)
BOILER SOOT BLOWING STEAM SUPPLY
COMBUSTION GAS REHEATER SOOT BLOWING STEAM SUPPLY
DRUM FEED HEADER
ROOF INLET HEADER
NOTES:
SYSTEM CODE IS SGA UNLESS NOTED
ALL VALVES ARE SERIES 2SGA-XX-0000, 2SGA-XX-0100, AND 2SGA-XX-0200 UNLESS NOTED.
LAST VALVE IN HEAT SURFACE SYSTEM
LAST CONNECTION NUMBER: 12
REGISTERED PROFESSIONAL ENGINEER
No. 5746
HOBART LEE JACOBS
STATE OF UTAH
BLACK & VEATCH
CONSULTING ENGINEERS
INTERMOUNTAIN POWER PROJECT
PIPING AND INSTRUMENT DIAGRAM
STEAM GENERATOR
9255 - 2SGA-M2063A
IP14_000016

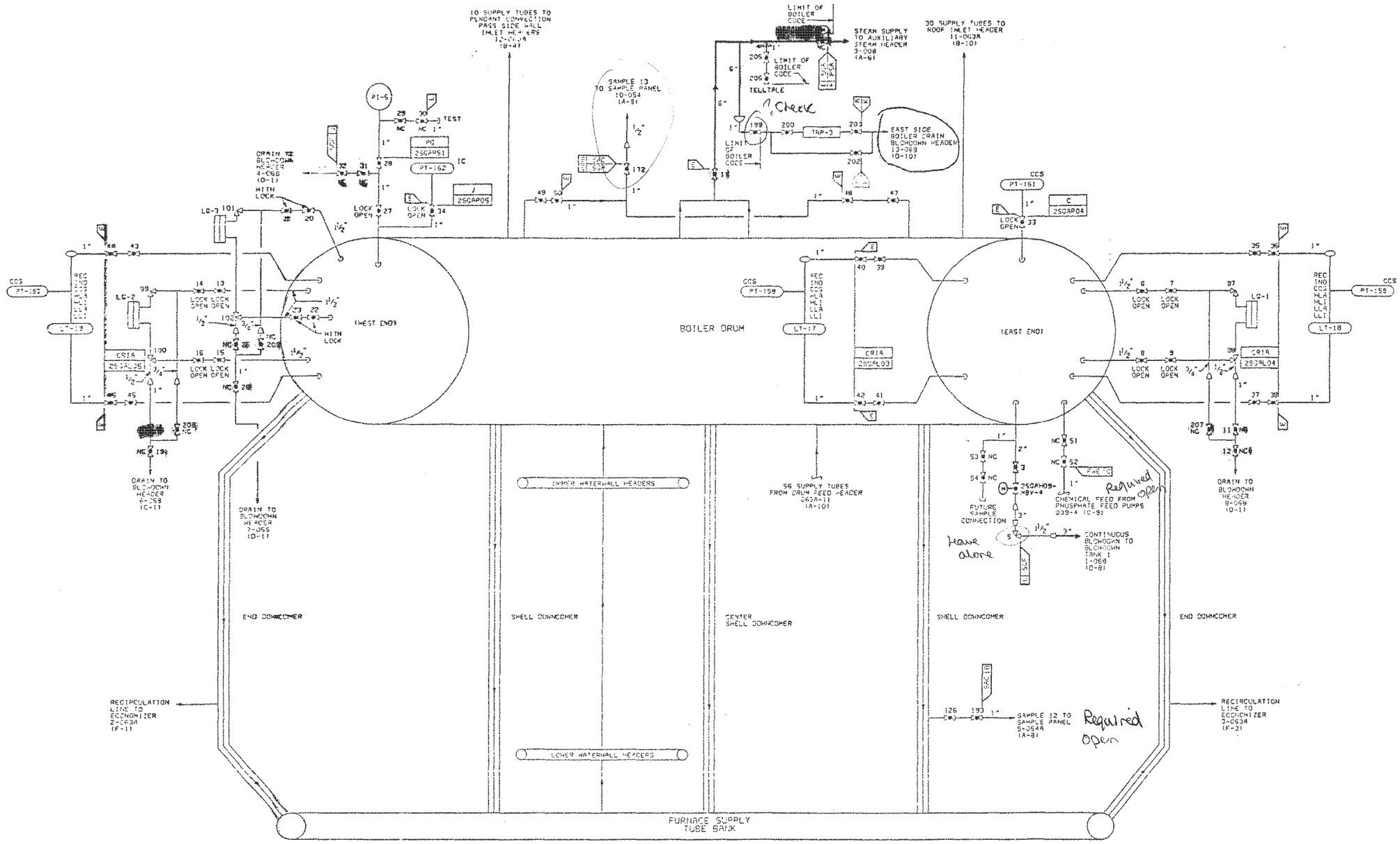

NOTES:

SYSTEM CODE IS SGA UNLESS NOTED

VALVES ARE SERIES 2SGA-XX-0000, 2SGA-XX-0100, AND 2SGA-XX-0200 UNLESS NOTED.

LAST VALVE NUMBER: 2SGA-XX-0099, 2SGA-XX-0199, 2SGA-XX-0218

LAST CONNECTION NUMBER: 13

REGISTERED PROFESSIONAL ENGINEER No. 5746 HOBART LEE JACOBS STATE OF UTAH

NO.	DATE	REVISIONS AND RECORD OF ISSUE	BY/CHK/APPR
4	09-21-85	ISSUED TO CONTRACTOR SPEC. 72.0202, 72.0403 & 74.0201	DLS
3	05-10-85	ISSUED TO CONTR SPEC. 72.0202 & 72.0403	NJA
3	05-10-85	APPROVED FOR CONST SPEC. 74.0201	NJA
2	09-14-84	APPROVED FOR CONST SPEC. 72.0403	MJC
2	09-14-84	APPROVED FOR CONST SPEC. 72.0202	MJC
1	05-04-84	ISSUED FOR ADDENDUM 1 SPEC. 72.0202	MJC
0	03-09-84	ISSUED FOR BID SPEC. 72.0403	MJC
0	02-24-84	ISSUED FOR BID SPEC. 72.0202	MJC

NO.	DATE	REVISIONS AND RECORD OF ISSUE	BY/CHK/APPR
3	05-10-85	APPROVED FOR CONSTRUCTION SPEC. 74.0201	NJA/CLK/HLJ
2	09-14-84	APPROVED FOR CONSTRUCTION SPEC. 72.0202 AND 72.0403	MJC/CLK/HLJ
1	05-04-84	GENERAL REVISIONS	MJC/HLJ
0	02-24-84	INITIAL ISSUE	MJC/HLJ

I HEREBY CERTIFY THAT THIS DOCUMENT WAS PREPARED BY ME OR UNDER MY DIRECT SUPERVISION AND THAT I AM A DULY REGISTERED PROFESSIONAL ENGINEER UNDER THE LAWS OF THE STATE OF UTAH

SIGNED

DATE 02-24-84 REG NO. 5746

BLACK & VEATCH CONSULTING ENGINEERS

IPP INTERMOUNTAIN POWER PROJECT

PIPING AND INSTRUMENT DIAGRAM STEAM GENERATOR

PROJECT 9255 - DRAWING NUMBER 2SGA-M2063B

IP14_000017

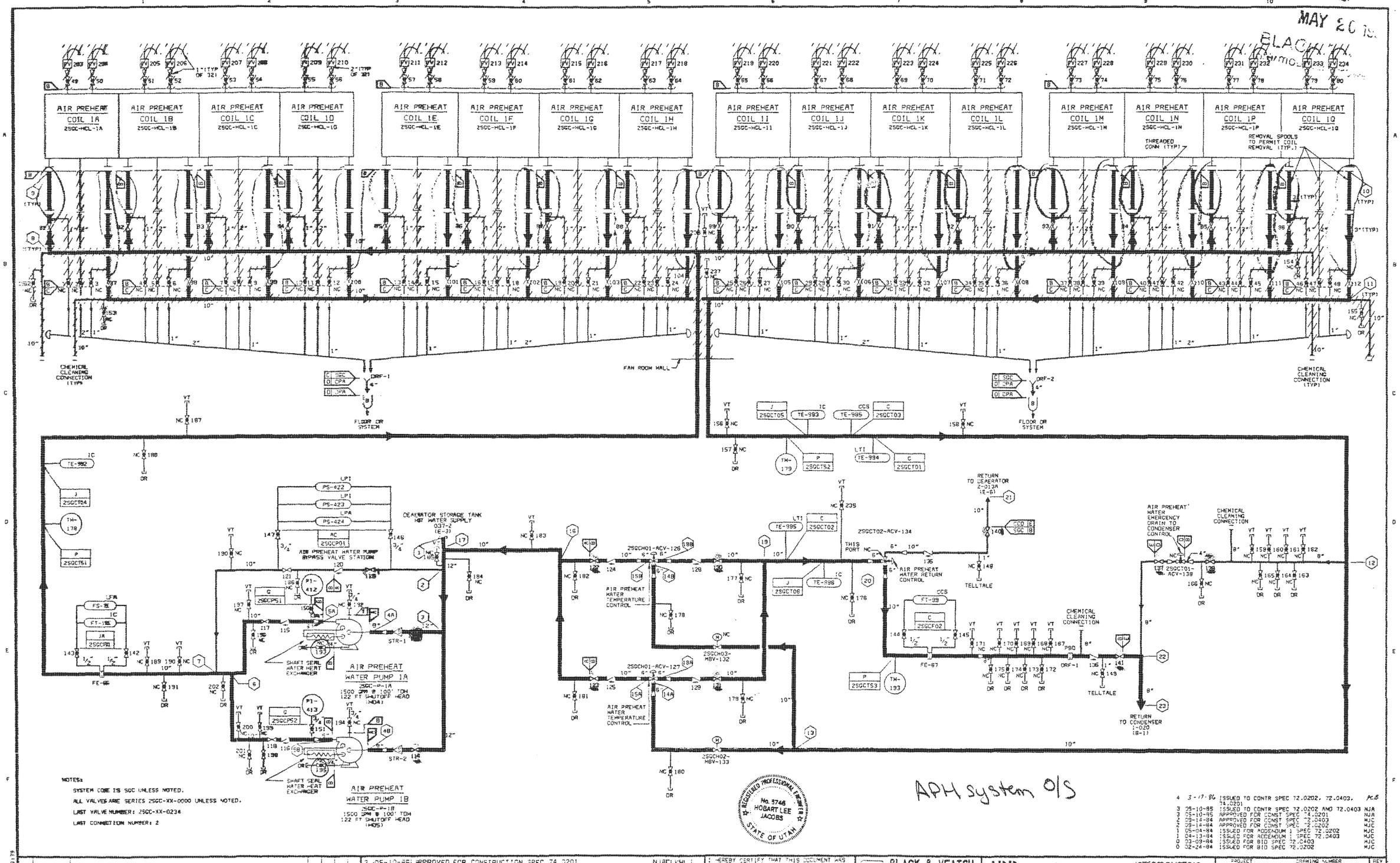

AIR PREHEAT COIL 1A 2SGC-HCL-1A
AIR PREHEAT COIL 1B 2SGC-HCL-1B
AIR PREHEAT COIL 1C 2SGC-HCL-1C
AIR PREHEAT COIL 1D 2SGC-HCL-1D
AIR PREHEAT COIL 1E 2SGC-HCL-1E
AIR PREHEAT COIL 1F 2SGC-HCL-1F
AIR PREHEAT COIL 1G 2SGC-HCL-1G
AIR PREHEAT COIL 1H 2SGC-HCL-1H
AIR PREHEAT COIL 1I 2SGC-HCL-1I
AIR PREHEAT COIL 1J 2SGC-HCL-1J
AIR PREHEAT COIL 1K 2SGC-HCL-1K
AIR PREHEAT COIL 1L 2SGC-HCL-1L
AIR PREHEAT COIL 1M 2SGC-HCL-1M
AIR PREHEAT COIL 1N 2SGC-HCL-1N
AIR PREHEAT COIL 1P 2SGC-HCL-1P
AIR PREHEAT COIL 1Q 2SGC-HCL-1Q
THREADED CONN (TYP)
REMOVAL SPOOLS TO PERMIT COIL REMOVAL (TYP.)
CHEMICAL CLEANING CONNECTION (TYP)
FAN ROOM WALL
FLOOR OR SYSTEM
DEAERATOR STORAGE TANK HOT WATER SUPPLY 037-2 (E-3)
AIR PREHEAT WATER PUMP BYPASS VALVE STATION
AIR PREHEAT WATER PUMP 1A 2SGC-P-1A 1500 GPM @ 100' TDH 122 FT SHUTOFF HEAD (HD4)
AIR PREHEAT WATER PUMP 1B 2SGC-P-1B 1500 GPM @ 100' TDH 122 FT SHUTOFF HEAD (HD5)
SHAFT SEAL WATER HEAT EXCHANGER
AIR PREHEAT WATER TEMPERATURE CONTROL
2SGCH01-ACV-126
2SGCH01-ACV-127
2SGCH02-MBV-132
2SGCH02-MBV-133
2SGCT02-ACV-134
2SGCT01-ACV-138
THIS PORT
AIR PREHEAT WATER RETURN CONTROL
RETURN TO DEAERATOR 2-013A (E-6)
AIR PREHEAT WATER EMERGENCY DRAIN TO CONDENSER CONTROL
RETURN TO CONDENSER 1-020 (B-1)
TELLTALE
NOTES:
SYSTEM CODE IS SGC UNLESS NOTED.
ALL VALVES ARE SERIES 2SGC-XX-0000 UNLESS NOTED.
LAST VALVE NUMBER: 2SGC-XX-0234
LAST CONNECTION NUMBER: 2
REGISTERED PROFESSIONAL ENGINEER No. 5746 HOBART LEE JACOBS STATE OF UTAH
APH system O/S
4 3-17-86 ISSUED TO CONTR SPEC 72.0202, 72.0403, 74.0201 KCB
3 05-10-85 ISSUED TO CONTR SPEC 72.0202 AND 72.0403 NJA
3 05-10-85 APPROVED FOR CONST SPEC 74.0201 NJA
2 09-14-84 APPROVED FOR CONST SPEC 72.0403 MJC
2 09-14-84 APPROVED FOR CONST SPEC 72.0202 MJC
1 05-04-84 ISSUED FOR ADDENDUM 1 SPEC 72.0202 MJC
1 04-13-84 ISSUED FOR ADDENDUM 1 SPEC 72.0403 MJC
0 03-09-84 ISSUED FOR BID SPEC 72.0403 MJC
0 02-24-84 ISSUED FOR BID SPEC 72.0202 MJC
3 05-10-85 APPROVED FOR CONSTRUCTION SPEC 74.0201 NJA CLK HLJ
2 09-14-84 APPROVED FOR CONSTRUCTION SPEC 72.0202 AND 72.0403 MJC CLK HLJ
1 04-13-84 GENERAL REVISIONS MJC HLJ
0 02-24-84 INITIAL ISSUE MJC HLJ
NO. DATE REVISIONS AND RECORD OF ISSUE BY CHK APPR
I HEREBY CERTIFY THAT THIS DOCUMENT WAS PREPARED BY ME OR UNDER MY DIRECT SUPERVISION AND THAT I AM A DULY REGISTERED PROFESSIONAL ENGINEER UNDER THE LAWS OF THE STATE OF UTAH.
SIGNED Hobart Lee Jacobs
DATE 02-24-84 REG NO. 5746
BLACK & VEATCH CONSULTING ENGINEERS
ENGINEER MJC DRAWN RGG
CHECKED C.L. KLING DATE 09-07-84
IPP INTERMOUNTAIN POWER PROJECT
PIPING AND INSTRUMENT DIAGRAM AIR PREHEAT
PROJECT 9255 - DRAWING NUMBER 2SGC-M2065 REV 4
CODE SGC-52.6803
AREA
REVISED FREEZE PROTECTION

IP14_000018

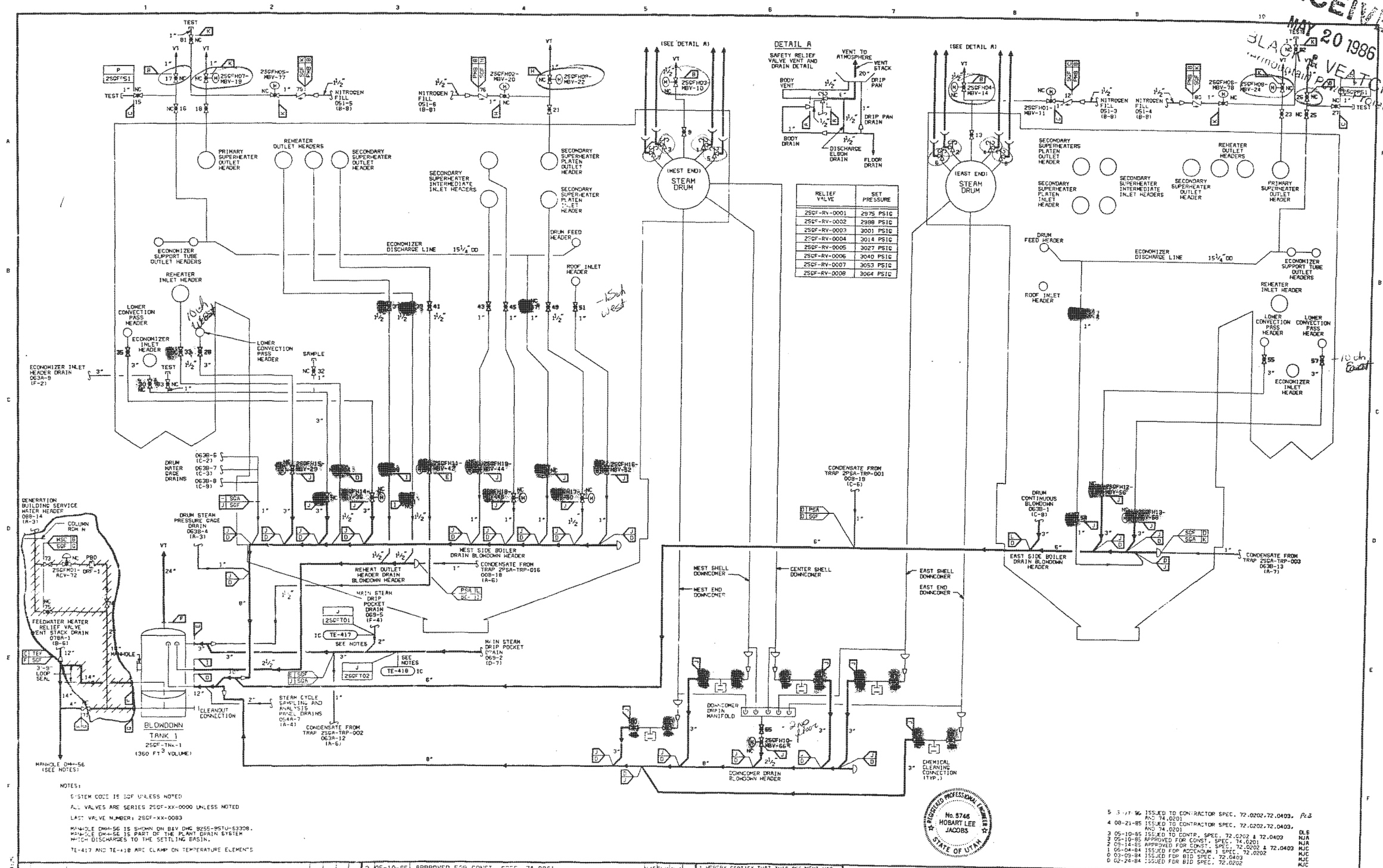

RELIEF VALVE	SET PRESSURE
2SGF-RV-0001	2975 PSIG
2SGF-RV-0002	2988 PSIG
2SGF-RV-0003	3001 PSIG
2SGF-RV-0004	3014 PSIG
2SGF-RV-0005	3027 PSIG
2SGF-RV-0006	3040 PSIG
2SGF-RV-0007	3053 PSIG
2SGF-RV-0008	3064 PSIG

NOTES:

SYSTEM CODE IS SGF UNLESS NOTED

ALL VALVES ARE SERIES 2SGF-XX-0000 UNLESS NOTED

LAST VALVE NUMBER: 2SGF-XX-0083

MANHOLE DH-56 IS SHOWN ON B&V DWG 9255-9STU-63308. MANHOLE DH-56 IS PART OF THE PLANT DRAIN SYSTEM WHICH DISCHARGES TO THE SETTLING BASIN.

TE-417 AND TE-418 ARE CLAMP ON TEMPERATURE ELEMENTS

NO.	DATE	REVISIONS AND RECORD OF ISSUE	BY	CHK	APPR	LM
5	3-17-86	ADDED HEAT TRACING				
4	08-21-85	GENERAL REVISIONS				
3	05-10-85	APPROVED FOR CONST. SPEC. 74.0201	NJR	CLK	HLJ	
2	09-14-84	APPROVED FOR CONSTRUCTION SPEC. 72.0202 AND 72.0403	MJC	CLK	HLJ	
1	03-04-84	GENERAL REVISION	MJC		HLJ	
0	02-24-84	INITIAL ISSUE	MJC		HLJ	

I HEREBY CERTIFY THAT THIS DOCUMENT HAS PREPARED BY ME OR UNDER MY DIRECT SUPERVISION AND THAT I AM A DULY REGISTERED PROFESSIONAL ENGINEER UNDER THE LAWS OF THE STATE OF UTAH.
SIGNED Robert Lee Jacobs
DATE 02-24-84 REG NO. 5746

REGISTERED PROFESSIONAL ENGINEER No. 5746 HOBART LEE JACOBS STATE OF UTAH

BLACK & VEATCH CONSULTING ENGINEERS

ENGINEER MJC | DRAWN ASG | CHECKED CLK | DATE 09-07-84

IPP INTERMOUNTAIN POWER PROJECT

PIPING AND INSTRUMENT DIAGRAM
BOILER VENTS AND DRAINS

PROJECT 9255 | DRAWING NUMBER 2SGF-M2068 | REV 5

CODE CDF-52.EBCS | AREA

REV	DATE	DESCRIPTION	BY
5	3-17-86	ISSUED TO CONTRACTOR SPEC. 72.0202,72.0403, AND 74.0201	PLB
4	08-21-85	ISSUED TO CONTRACTOR SPEC. 72.0202,72.0403, AND 74.0201	
3	05-10-85	ISSUED TO CONTR. SPEC. 72.0202 & 72.0403	DLE
2	09-14-85	APPROVED FOR CONST. SPEC. 74.0201	NJR
1	05-04-84	ISSUED FOR ADDENDUM 1 SPEC. 72.0202	MJC
0	03-09-84	ISSUED FOR BID SPEC. 72.0403	MJC
0	02-24-84	ISSUED FOR BID SPEC. 72.0202	MJC

RECEIVED MAY 20 1986 BLACK & VEATCH

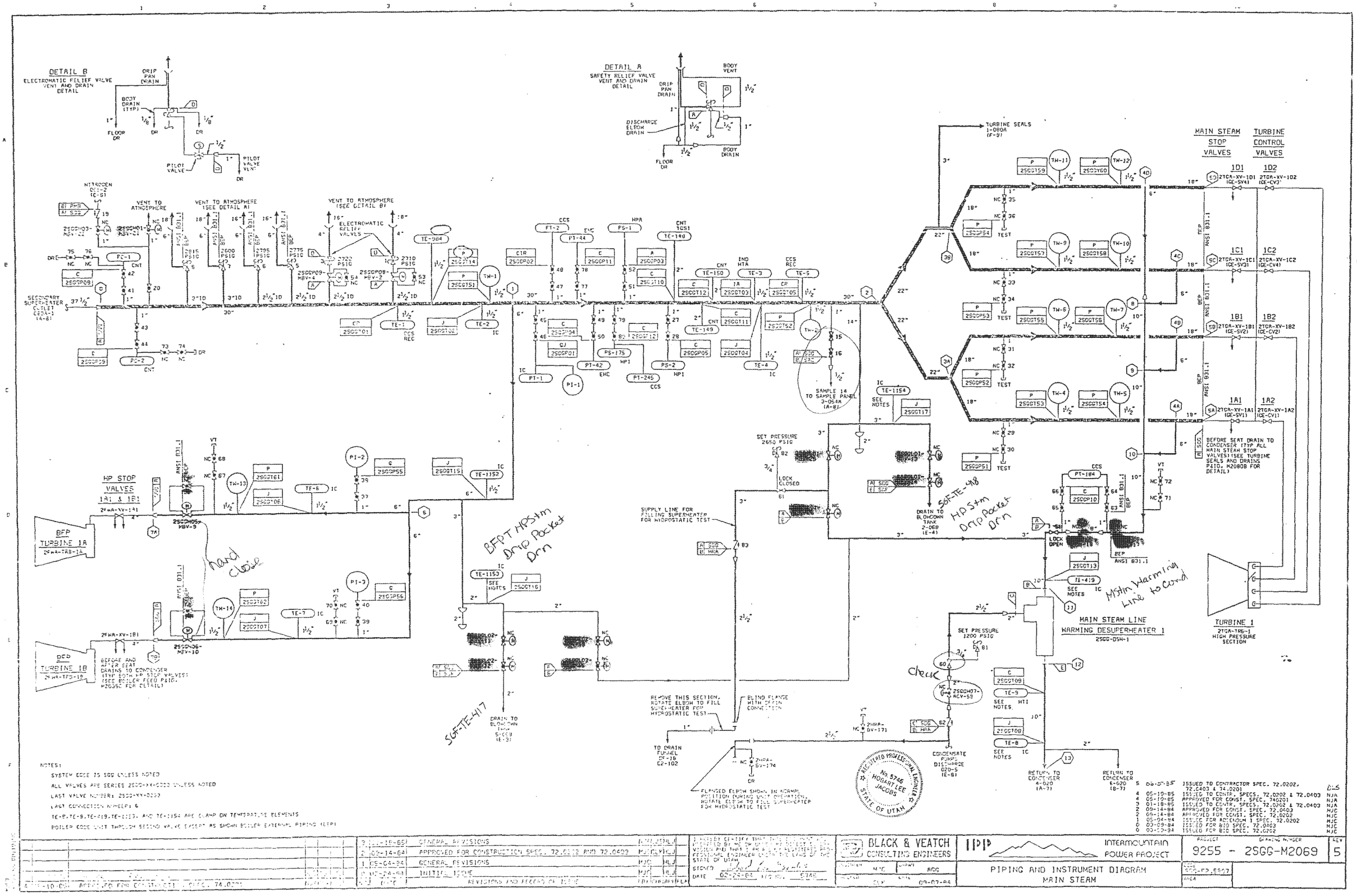

NOTES:

SYSTEM CODE IS SGG UNLESS NOTED

ALL VALVES ARE SERIES 2SGG-XX-0000 UNLESS NOTED

LAST VALVE NUMBER: 2SGG-XX-0000

LAST CONNECTION NUMBER: 6

TE-8, TE-9, TE-419, TE-1153, AND TE-1154 ARE CLAMP ON TEMPERATURE ELEMENTS

BOILER CODE UNIT THROUGH SECOND VALVE EXCEPT AS SHOWN BOILER EXTERNAL PIPING (BEP)

REV	DATE	REVISIONS AND RECORD OF ISSUE	DR	CHK	APP	ELA
3	01-18-85	GENERAL REVISIONS				
2	09-14-84	APPROVED FOR CONSTRUCTION SPEC. 72.0202 AND 72.0403	MJC	CLK	HLJ	
1	05-04-84	GENERAL REVISIONS	MJC		HLJ	
0	02-24-84	INITIAL ISSUE	MJC		HLJ	
4	05-10-85	APPROVED FOR CONSTRUCTION SPEC. 74.0201				

I HEREBY CERTIFY THAT THIS DOCUMENT WAS PREPARED BY ME OR UNDER MY DIRECT SUPERVISION AND THAT I AM A DULY REGISTERED PROFESSIONAL ENGINEER UNDER THE LAWS OF THE STATE OF UTAH.

SIGNED [signature]

DATE 02-24-84 REG NO. 5746

BLACK & VEATCH CONSULTING ENGINEERS

DESIGNED MJC DRAWN AGG

CHECKED CLK DATE 09-07-84

IPP INTERMOUNTAIN POWER PROJECT

PIPING AND INSTRUMENT DIAGRAM MAIN STEAM

PROJECT 9255 - DRAWING NUMBER 2SGG-M2069 REV 5

CODE SGG-F2.5907

AREA

IP14_000020

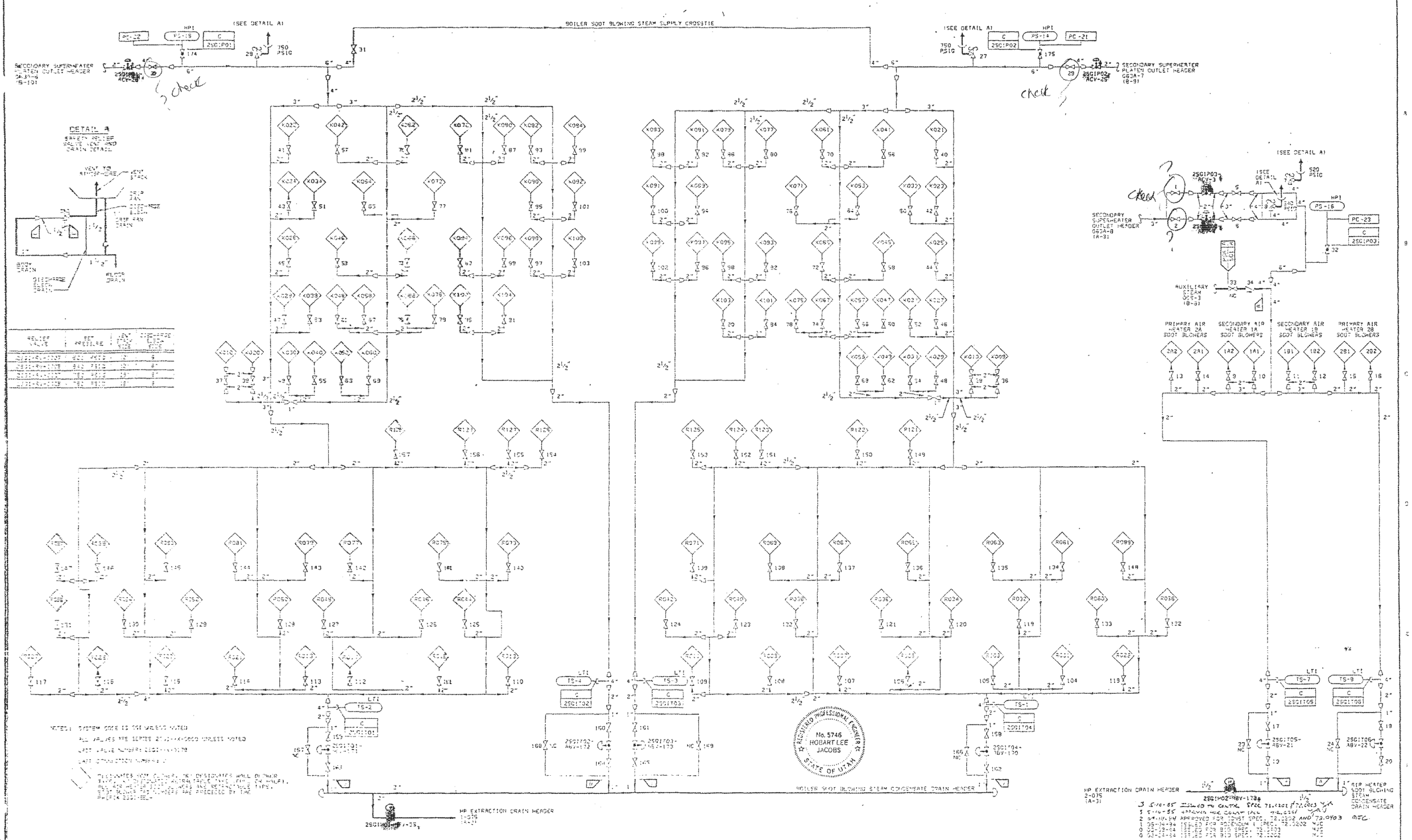
BOILER SOOT BLOWING STEAM SUPPLY CROSSTIE
(SEE DETAIL A)
750 PSIG
SECONDARY SUPERHEATER PLATEN OUTLET HEADER
SECONDARY SUPERHEATER OUTLET HEADER
AUXILIARY STEAM
PRIMARY AIR HEATER 2A SOOT BLOWERS
SECONDARY AIR HEATER 1A SOOT BLOWERS
SECONDARY AIR HEATER 1B SOOT BLOWERS
PRIMARY AIR HEATER 2B SOOT BLOWERS
DETAIL A
BOILER SOOT BLOWING STEAM CONDENSATE DRAIN HEADER
HP EXTRACTION DRAIN HEADER
No. 5746
HOBART LEE JACOBS
STATE OF UTAH
BLACK & VEATCH
CONSULTING ENGINEERS
INTERMOUNTAIN POWER PROJECT
PIPING AND INSTRUMENT DIAGRAM
SOOT BLOWING
9255 - 2SGI-M2070
3

IP14_000021

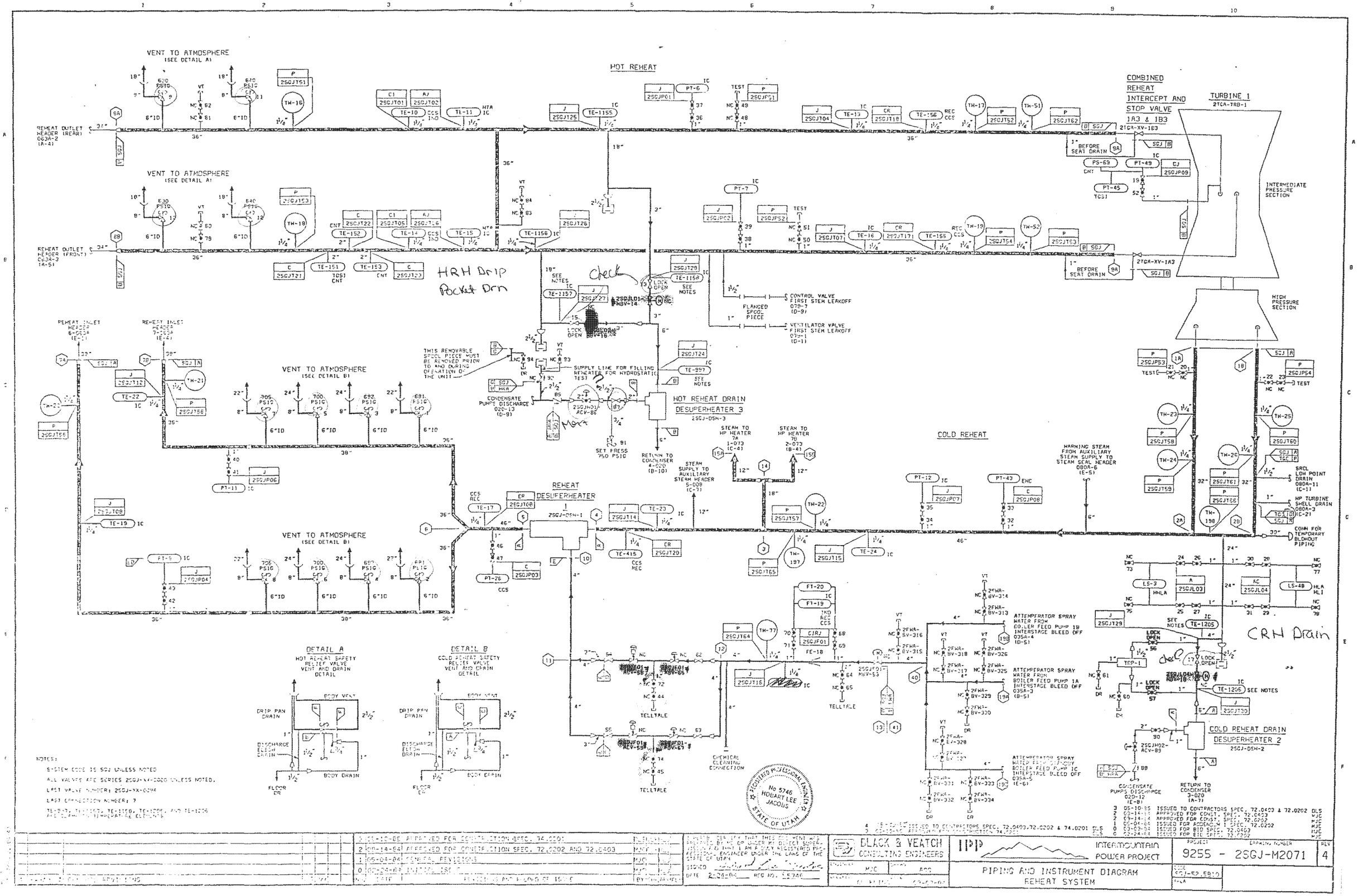

HOT REHEAT
COMBINED REHEAT INTERCEPT AND STOP VALVE 1A3 & 1B3
TURBINE 1
INTERMEDIATE PRESSURE SECTION
HIGH PRESSURE SECTION
VENT TO ATMOSPHERE (SEE DETAIL A)
VENT TO ATMOSPHERE (SEE DETAIL B)
HRH Drip Pocket Drn
Check
HOT REHEAT DRAIN DESUPERHEATER 3
COLD REHEAT
REHEAT DESUPERHEATER
CRH Drain
COLD REHEAT DRAIN DESUPERHEATER 2
DETAIL A
DETAIL B
NOTES:
BLACK & VEATCH CONSULTING ENGINEERS
IPP INTERMOUNTAIN POWER PROJECT
PIPING AND INSTRUMENT DIAGRAM REHEAT SYSTEM
9255 - 2SGJ-M2071
4

IP14_000022

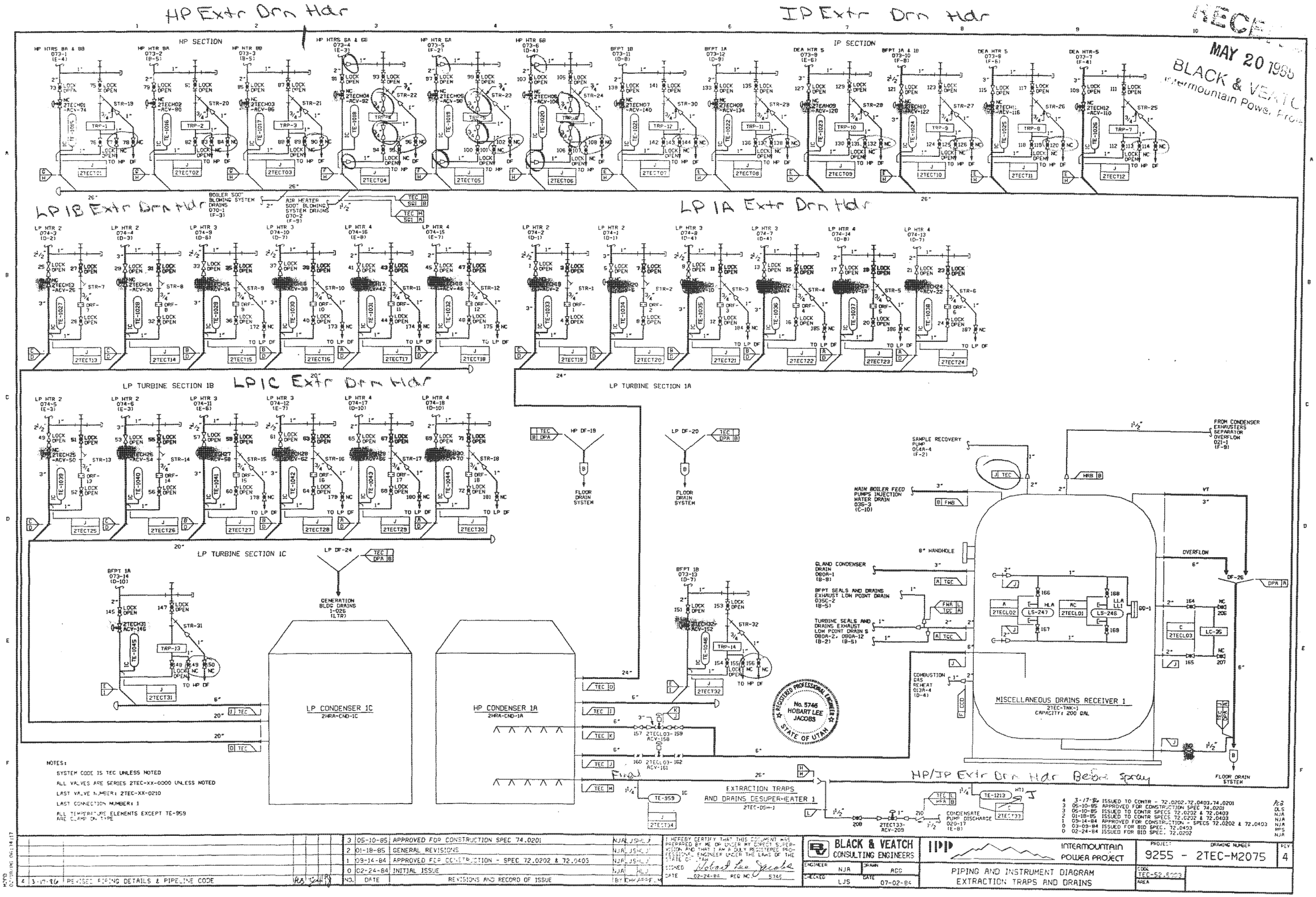

NO.	DATE	REVISIONS AND RECORD OF ISSUE	BY	CHK	APPR
4	3-17-96	REVISED PIPING DETAILS & PIPELINE CODE			
3	05-10-85	APPROVED FOR CONSTRUCTION SPEC 74.0201	NJA	JSHU	
2	01-18-85	GENERAL REVISIONS	NJA	JSHU	
1	09-14-84	APPROVED FOR CONSTRUCTION - SPEC 72.0202 & 72.0403	NJA	JSHU	
0	02-24-84	INITIAL ISSUE	NJA	HLJ	

I HEREBY CERTIFY THAT THIS DOCUMENT WAS PREPARED BY ME OR UNDER MY DIRECT SUPERVISION AND THAT I AM A DULY REGISTERED PROFESSIONAL ENGINEER UNDER THE LAWS OF THE STATE OF UTAH
SIGNED Hobart Lee Jacobs
DATE 02-24-84 REG NO. 5746

BLACK & VEATCH CONSULTING ENGINEERS

ENGINEER NJA | DRAWN AGG
CHECKED LJS | DATE 07-02-84

IPP INTERMOUNTAIN POWER PROJECT

PIPING AND INSTRUMENT DIAGRAM
EXTRACTION TRAPS AND DRAINS

PROJECT 9255 - DRAWING NUMBER 2TEC-M2075 REV 4
CODE TEC-52.5003
AREA

4	3-17-96	ISSUED TO CONTR - 72.0202.72.0403.74.0201	RCB	
3	05-10-85	APPROVED FOR CONSTRUCTION SPEC 74.0201	DLS	
3	05-10-85	ISSUED TO CONTR SPECS 72.0202 & 72.0403	NJA	
2	01-18-85	ISSUED TO CONTR SPECS 72.0202 & 72.0403	NJA	
1	09-14-84	APPROVED FOR CONSTRUCTION - SPECS 72.0202 & 72.0403	NJA	
0	03-03-84	ISSUED FOR BID SPEC. 72.0403	RPS	
0	02-24-84	ISSUED FOR BID SPEC. 72.0202	NJA	

RECEIVED MAY 20 1996 BLACK & VEATCH Intermountain Power Project

IP14_000023

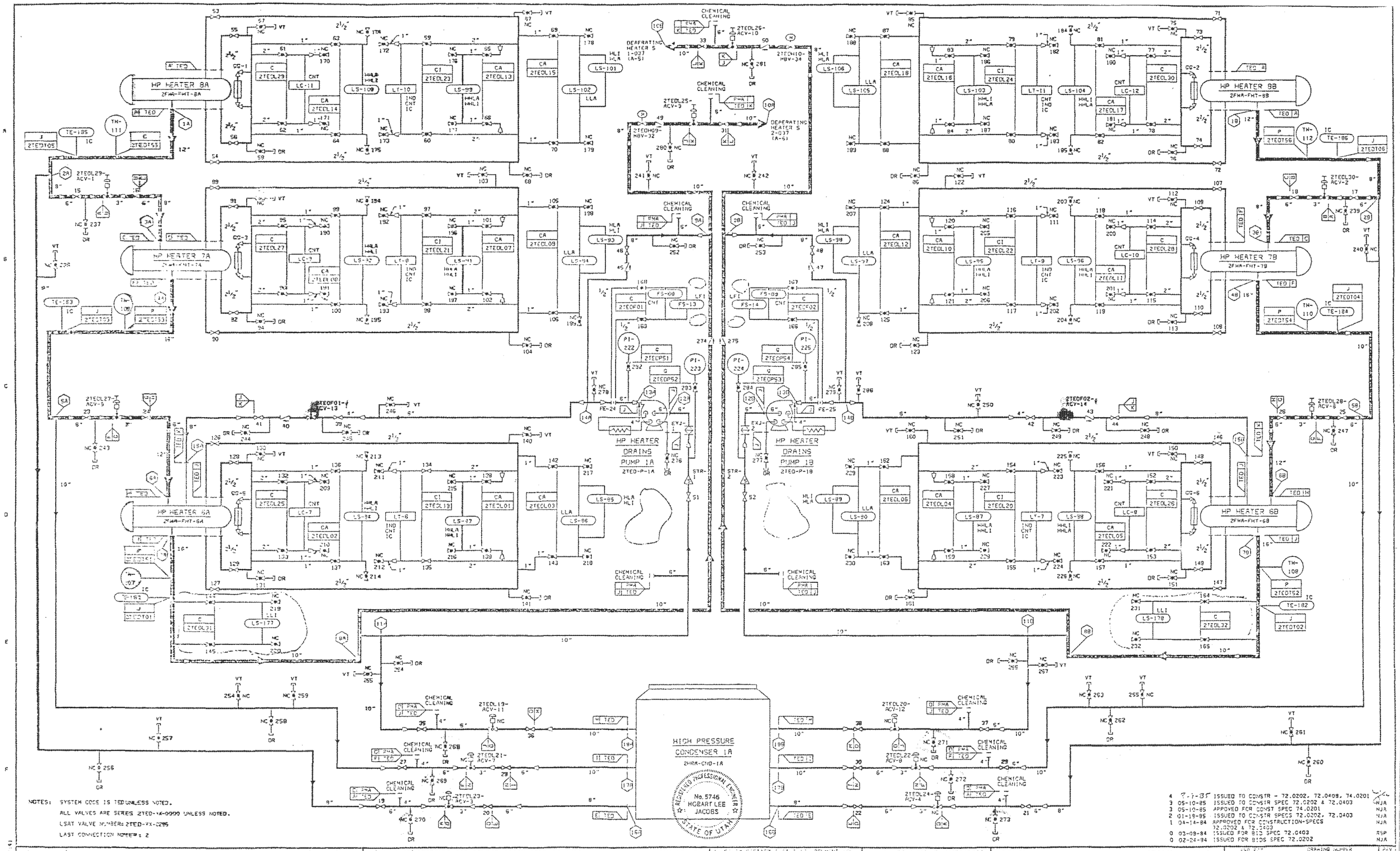

NOTES: SYSTEM CODE IS TED UNLESS NOTED.
ALL VALVES ARE SERIES 2TED-XX-0000 UNLESS NOTED.
LSAT VALVE NUMBER: 2TED-XX-0285
LAST CONNECTION NUMBER: 2

NO.	DATE	REVISIONS AND RECORD OF ISSUE	BY	CHK	APPR
4	7-1-85	ISSUED TO CONSTR - 72.0202, 72.0408, 74.0201			
3	05-10-85	ISSUED TO CONSTR SPEC 72.0202 & 72.0403	NJA		
3	05-10-85	APPROVED FOR CONST SPEC 74.0201	NJA		
2	01-19-85	ISSUED TO CONSTR SPECS 72.0202, 72.0403	NJA		
1	04-14-84	APPROVED FOR CONSTRUCTION-SPECS 72.0202 & 72.0403	NJA		
0	03-09-84	ISSUED FOR BID SPEC 72.0403	RSP		
0	02-24-84	ISSUED FOR BIDS SPEC 72.0202	NJA		

NO.	DATE	REVISIONS AND RECORD OF ISSUE	BY	CHK	APPR
3	05-10-85	APPROVED FOR CONSTRUCTION SPEC 74.0201	NJA	JSH	LJ
2	01-19-85	GENERAL REVISIONS	NJA	JSH	LJ
1	02-14-84	APPROVED FOR CONSTRUCTION-SPECS 72.0202 & 72.0403	NJA	JSH	LJ
0	02-24-84	INITIAL ISSUE	NJA		LJ

GENERAL REVISIONS

I HEREBY CERTIFY THAT THIS DOCUMENT WAS PREPARED BY ME OR UNDER MY DIRECT SUPERVISION AND THAT I AM A DULY REGISTERED PROFESSIONAL ENGINEER UNDER THE LAWS OF THE STATE OF UTAH

SIGNED

DATE 02-24-84 REG NO. 5746

BLACK & VEATCH CONSULTING ENGINEERS

ENGINEER NJA DRAWN AGG

CHECKED LJS DATE 07-02-84

IPP INTERMOUNTAIN POWER PROJECT

PIPING AND INSTRUMENT DIAGRAM
HIGH PRESSURE HEATER DRAINS

PROJECT 9255 - DRAWING NUMBER 2TED-M2076 REV 4

CODE

AREA TED-52.6004

IP14_000024

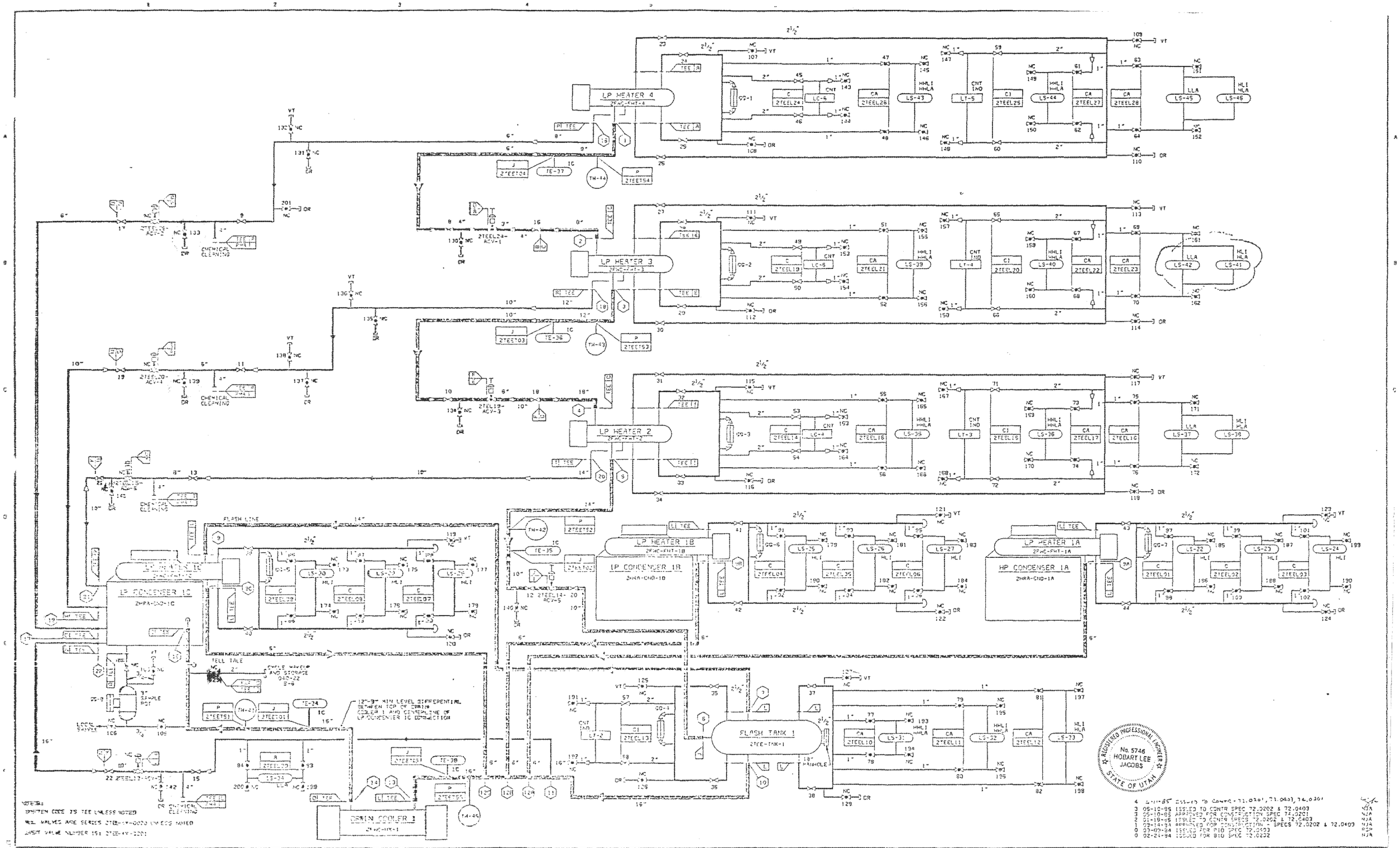

NOTES:
SYSTEM CODE IS TEE UNLESS NOTED
ALL VALVES ARE SERIES 2TEE-XY-0000 UNLESS NOTED
LAST VALVE NUMBER IS: 2TEE-XY-0201

4	4-11-85 ISSUED TO CONTR. 72.0201, 72.0403, 74.0201	
3	05-10-85 ISSUED TO CONTR SPEC 72.0202 & 72.0403	NJA
3	05-10-85 APPROVED FOR CONSTRUCTION SPEC 74.0201	NJA
2	01-18-85 ISSUED TO CONTR SPECS 72.0202 & 72.0403	NJA
1	09-14-84 APPROVED FOR CONSTRUCTION - SPECS 72.0202 & 72.0403	NJA
0	03-09-84 ISSUED FOR BID SPEC 72.0403	RGP
0	02-24-84 ISSUED FOR BID SPEC 72.0202	NJA

3	05-10-85 APPROVED FOR CONSTRUCTION SPEC 74.0201	NJA/JHLS
2	01-18-85 ISSUED TO CONTR SPECS 72.0202 & 72.0403	NJA/JHLS
1	09-14-84 APPROVED FOR CONSTRUCTION - SPECS 72.0202 & 72.0403	NJA/JHLS
0	02-24-84 INITIAL ISSUE	NJA
REV.	DATE	REVISION AND RECORD OF ISSUE

I HEREBY CERTIFY THAT THIS DOCUMENT WAS PREPARED BY ME OR UNDER MY DIRECT SUPERVISION AND THAT I AM A DULY REGISTERED PROFESSIONAL ENGINEER UNDER THE LAWS OF THE STATE OF UTAH
SIGNED
DATE 02-24-84 REG NO. 5746

BLACK & VEATCH
CONSULTING ENGINEERS

IPP INTERMOUNTAIN POWER PROJECT

PIPING AND INSTRUMENT DIAGRAM
LOW PRESSURE HEATER DRAINS

PROJECT 9255 - DRAWING NUMBER 2TEE-M2077 REV 4

IP14_000025

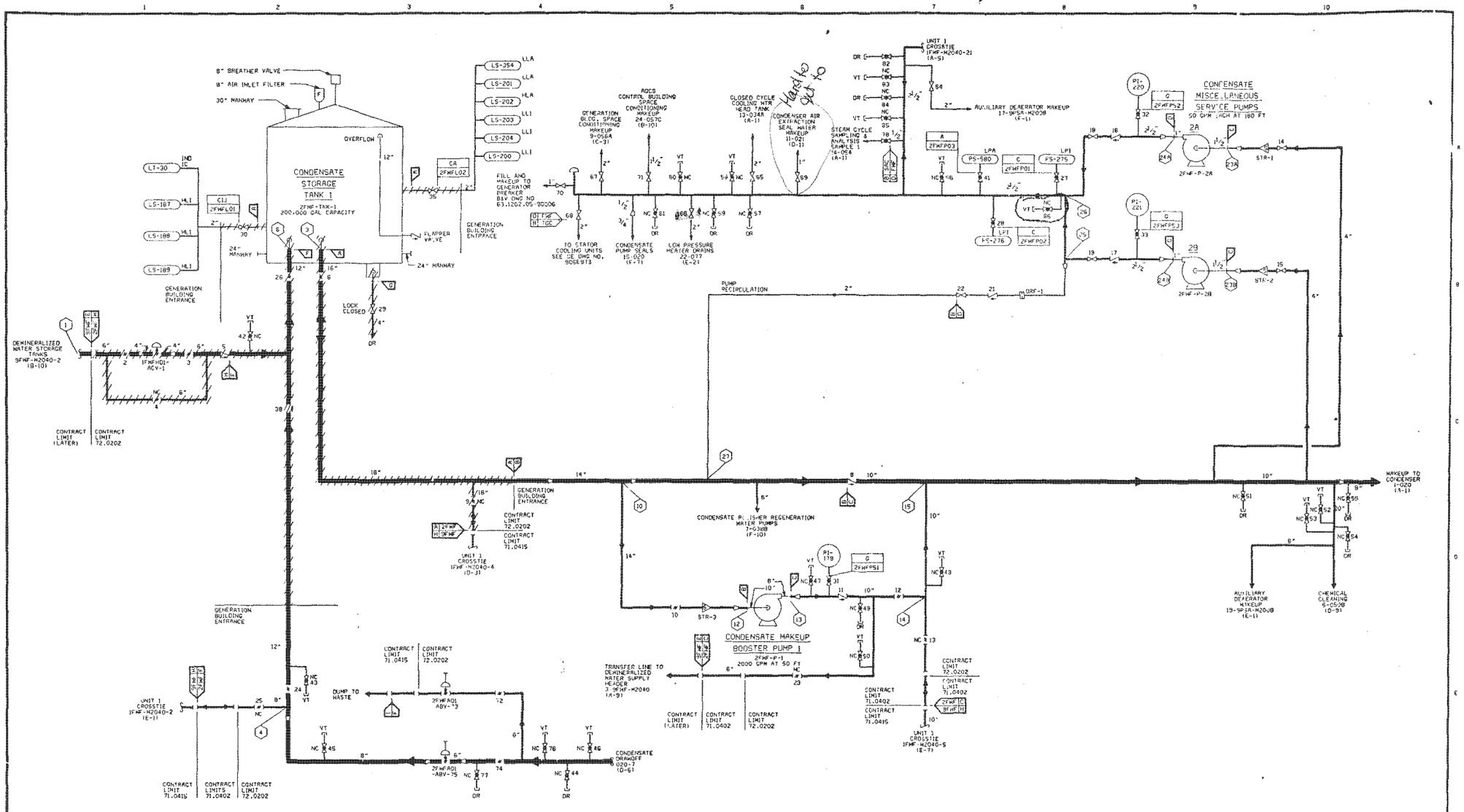

NOTES:

SYSTEM CODE IS 1FWF UNLESS NOTED

ALL VALVES ARE SERIES 1FWF-XX-0000

LAST VALVE NUMBER IS 2FWF-XX-0086

LAST CONNECTION NUMBER IS 24

REGISTERED PROFESSIONAL ENGINEER No. 5748 HOBART LEE JACOBS STATE OF UTAH

NO.	DATE	REVISIONS AND RECORD OF ISSUE	BY	CHK	APP	FLM
5	3-17-86	ADDED VENT				
4	08-09-85	GENERAL REVISIONS	NJA	JS	HLJ	
3	05-10-85	APPROVED FOR CONSTRUCTION SPEC 74.0201	DLS	LJS	HLJ	
2	09-14-84	APPROVED FOR CONSTRUCTION - SPECS 72.0202 & 72.0403	BDM	LJS	HLJ	
1	05-04-84	GENERAL REVISIONS	BDM		HLJ	
0	02-24-84	INITIAL ISSUE	BDM		HLJ	

I HEREBY CERTIFY THAT THIS DOCUMENT WAS PREPARED BY ME OR UNDER MY DIRECT SUPERVISION AND THAT I AM A DULY REGISTERED PROFESSIONAL ENGINEER UNDER THE LAWS OF THE STATE OF UTAH

SIGNED Hobart L. Jacobs

DATE 02-24-84 REG NO. 5748

BLACK & VEATCH CONSULTING ENGINEERS

ENGINEER BDM DRAWN AGG CHECKED LJS DATE 09-07-84

IPP INTERMOUNTAIN POWER PROJECT

PIPING AND INSTRUMENT DIAGRAM
CYCLE MAKEUP AND STORAGE

PROJECT 9255 - DRAWING NUMBER 2FWF-M2040 REV 5

CODE FWF-52.3406 AREA

5	3-17-86	ISSUED TO CONTRS - 72.0202,72.0403,74.0201	DLS
4	08-09-85	ISSUED TO CONTRS - 72.0202,72.0403,74.0201	NJA
3	05-10-85	APPROVED FOR CONSTRUCTION SPEC 74.0201	DLS
3	05-10-85	ISSUED TO CONTRACTORS - 72.0202,72.0403	BDM
2	09-14-84	APPROVED FOR CONSTRUCTION - SPECS 72.0202 & 72.0403	BDM
1	05-04-84	ISSUED FOR ADDENDUM 1 - SPEC 72.0202	BDM
0	03-09-84	ISSUED FOR BID - SPEC 72.0403	BDM
0	02-24-84	ISSUED FOR BID - SPEC 72.0201	LJS

NCPD 02/18/86 23:45:12

IP14_000026

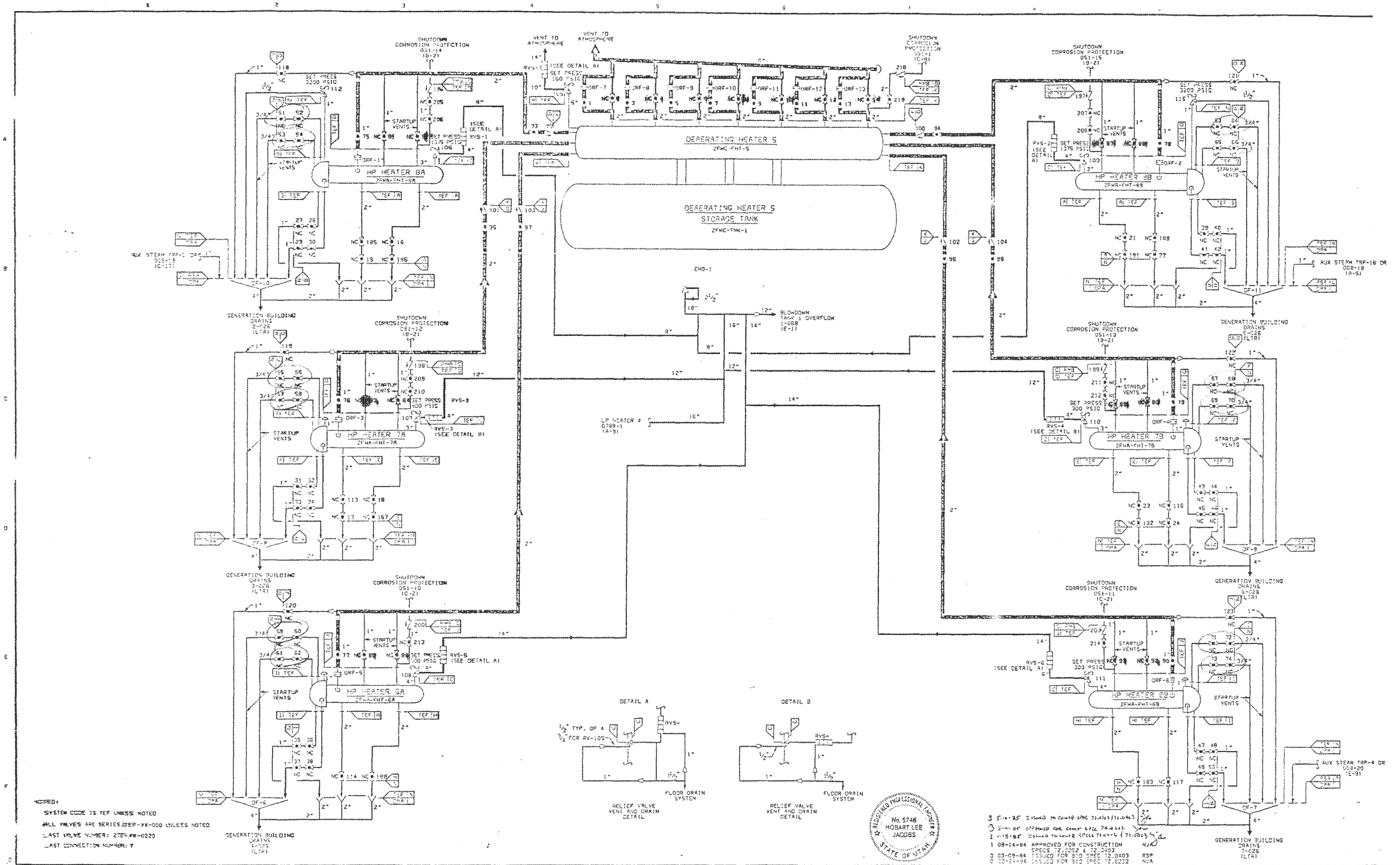

DEAERATING HEATER 5
2FHC-FHT-5
DEAERATING HEATER 5
STORAGE TANK
2FHC-TNK-1
HP HEATER 8A
2FWA-FHT-8A
HP HEATER 8B
2FWA-FHT-8B
HP HEATER 7A
2FWA-FHT-7A
HP HEATER 7B
2FWA-FHT-7B
HP HEATER 6A
2FWA-FHT-6A
HP HEATER 6B
2FWA-FHT-6B
SHUTDOWN CORROSION PROTECTION
VENT TO ATMOSPHERE
GENERATION BUILDING DRAINS
AUX STEAM TRP-16 DR
AUX STEAM TRP-4 DR
BLOWDOWN TANK 1 OVERFLOW
DETAIL A
DETAIL B
RELIEF VALVE VENT AND DRAIN DETAIL
FLOOR DRAIN SYSTEM
REGISTERED PROFESSIONAL ENGINEER
No. 5746
HOBART LEE JACOBS
STATE OF UTAH
NOTED:
SYSTEM CODE IS TEF UNLESS NOTED
ALL VALVES ARE SERIES 2TEF-XX-000 UNLESS NOTED
LAST VALVE NUMBER: 2TEF-XX-0220
LAST CONNECTION NUMBER: T
3 5-10-85 ISSUED TO CONTR SPEC 72.0202 (72.0403)
2 11-18-85 ISSUED TO CONTR SPECS 72.0202 (72.0403)
1 09-14-84 APPROVED FOR CONSTRUCTION SPECS 72.0202 & 72.0403 NJA
0 03-09-84 ISSUED FOR BID SPEC 72.0403 RSP
0 02-24-84 ISSUED FOR BID SPEC 72.0202 NJA
3 5-10-85 APPROVED FOR CONSTRUCTION SPEC 72.0202
2 01-18-85 REVISIONS
1 09-14-84 APPROVED FOR CONSTRUCTION SPECS 72.0202 & 72.0403 NJA
0 02-24-84 INITIAL ISSUE NJA
NO. DATE REVISIONS AND RECORD OF ISSUE
I HEREBY CERTIFY THAT THIS DOCUMENT WAS PREPARED BY ME OR UNDER MY DIRECT SUPERVISION AND THAT I AM A DULY REGISTERED PROFESSIONAL ENGINEER UNDER THE LAWS OF THE STATE OF UTAH
SIGNED
DATE 02-24-84 REG NO. 5746
BLACK & VEATCH
CONSULTING ENGINEERS
IPP
INTERMOUNTAIN POWER PROJECT
PIPING AND INSTRUMENT DIAGRAM
HEATER VENTS AND MISCELLANEOUS DRAINS
PROJECT
DRAWING NUMBER
9255 - 2TEF-M2078A

IP14_000027

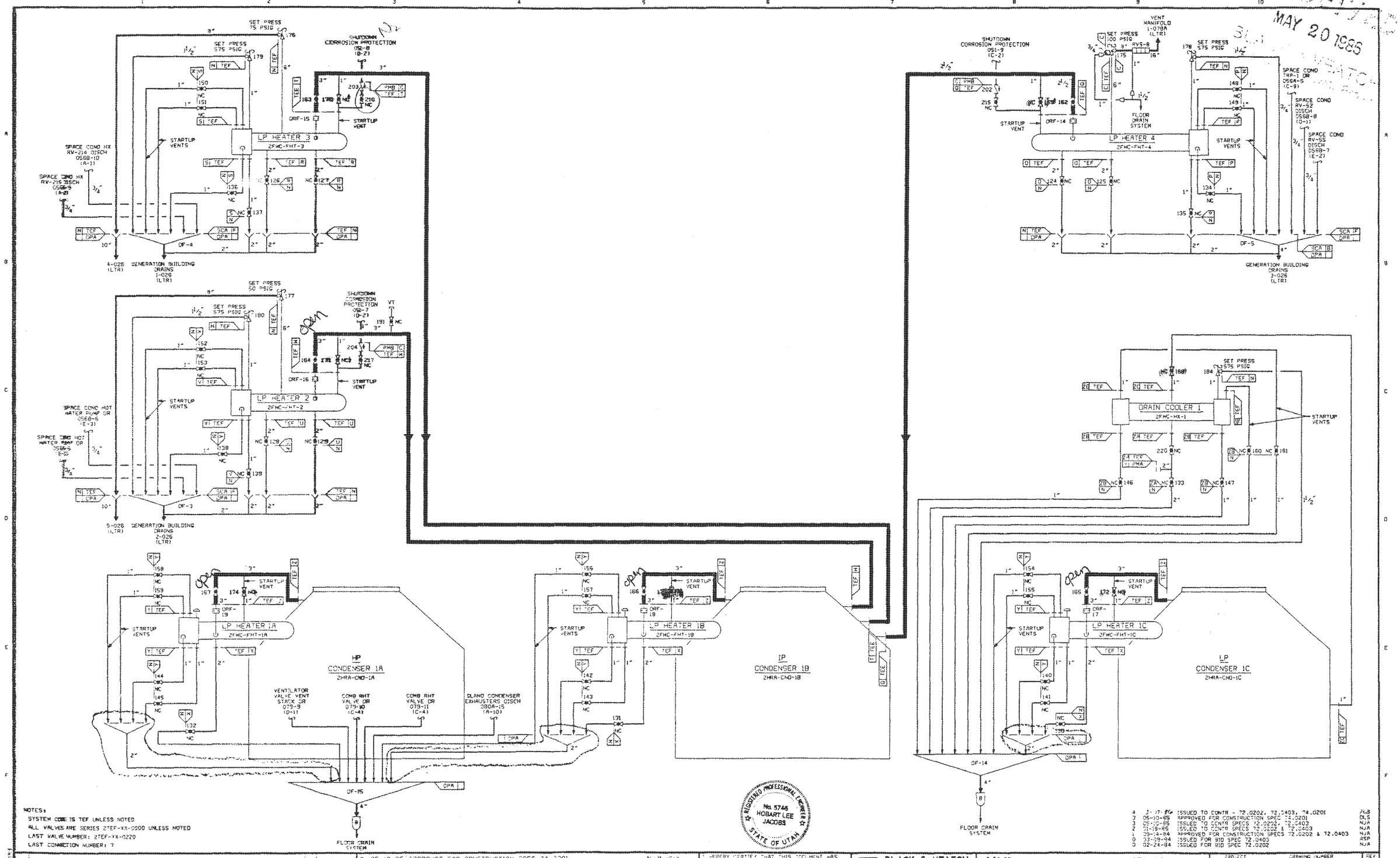

NOTES:
SYSTEM CODE IS TEF UNLESS NOTED
ALL VALVES ARE SERIES 2TEF-XX-0000 UNLESS NOTED
LAST VALVE NUMBER: 2TEF-XX-0220
LAST CONNECTION NUMBER: 7

REGISTERED PROFESSIONAL ENGINEER No. 5746 HOBART LEE JACOBS STATE OF UTAH

NO.	DATE	REVISIONS AND RECORD OF ISSUE	BY CHK APPLY
4	3-17-86	ISSUED TO CONTR - 72.0202, 72.0403, 74.0201	PCB
3	05-10-85	APPROVED FOR CONSTRUCTION SPEC 74.0201	DLS
3	05-10-85	ISSUED TO CONTR SPECS 72.0202, 72.0403	NJA
2	01-18-85	ISSUED TO CONTR SPECS 72.0202 & 72.0403	NJA
1	09-14-84	APPROVED FOR CONSTRUCTION SPECS 72.0202 & 72.0403	NJA
0	03-09-84	ISSUED FOR BID SPEC 72.0403	RSP
0	02-24-84	ISSUED FOR BID SPEC 72.0202	NJA

NO.	DATE	REVISIONS AND RECORD OF ISSUE	BY CHK APPLY
3	05-10-85	APPROVED FOR CONSTRUCTION SPEC 74.0201	NJA LJSHLJ
2	01-18-85	GENERAL REVISIONS	NJA LJSHLJ
1	09-14-84	APPROVED FOR CONSTRUCTION SPECS 72.0202 & 72.0403	NJA LJSHLJ
0	02-24-84	INITIAL ISSUE	NJA HLJ

4 3-17-86 REVISED LP HEATER 1 DRAIN CONNECTIONS

I HEREBY CERTIFY THAT THIS DOCUMENT WAS PREPARED BY ME OR UNDER MY DIRECT SUPERVISION AND THAT I AM A DULY REGISTERED PROFESSIONAL ENGINEER UNDER THE LAWS OF THE STATE OF UTAH.
SIGNED Hobart Lee Jacobs
DATE 02-24-84 REG NO. 5746

BLACK & VEATCH CONSULTING ENGINEERS
ENGINEER NJA DRAWN AGG
CHECKED LJS DATE 09-07-84

IPP INTERMOUNTAIN POWER PROJECT

PIPING AND INSTRUMENT DIAGRAM
HEATER VENTS AND MISCELLANEOUS DRAINS

PROJECT 9255 - DRAWING NUMBER 2TEF-M2078B REV 4
CODE TEF-52.0006
AREA

IP14_000028

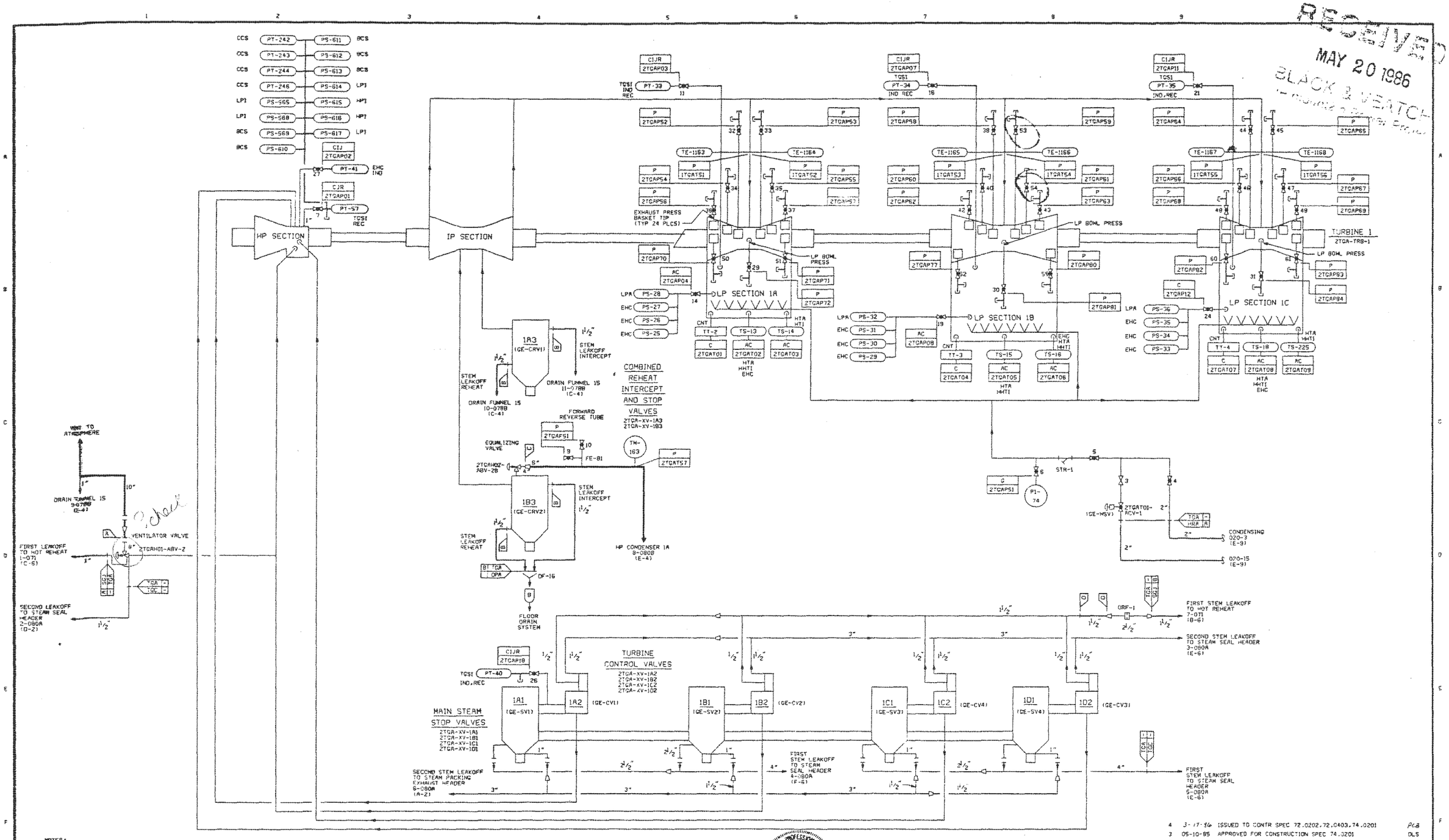

NOTES:

SYSTEM CODE IS TGA UNLESS NOTED

ALL VALVES ARE SERIES 2TGA-XX-0000 UNLESS NOTED

LAST VALVE NUMBER: 2TGA-XX-0081

LAST CONNECTION NUMBER: 11

TURBINE 1
2TGA-TRB-1

REGISTERED PROFESSIONAL ENGINEER No. 5746 HOBART LEE JACOBS STATE OF UTAH

NO.	DATE	REVISIONS AND RECORD OF ISSUE	BY
4	3-17-86	ISSUED TO CONTR SPEC 72.0202,72.0403,74.0201	PCB
3	05-10-85	APPROVED FOR CONSTRUCTION SPEC 74.0201	DLS
3	05-10-85	ISSUED TO CONTR SPECS 72.0202,72.0403	NJA
2	01-18-85	ISSUED TO CONTR. SPECS. 72.0202,72.0403	NJA
1	09-14-84	APPROVED FOR CONSTRUCTION SPECS 72.0202 & 72.0403	NJA
0	03-09-84	ISSUED FOR BID SPEC 72.0403	RSP
0	02-24-84	ISSUED FOR BID SPEC 72.0202	NJA

NO.	DATE	REVISIONS AND RECORD OF ISSUE	BY
3	05-10-85	APPROVED FOR CONSTRUCTION 74.0201	NJA LJS HLJ
2	01-18-85	GENERAL REVISIONS	NJA LJS HLJ
1	09-14-84	APPROVED FOR CONSTRUCTION SPECS 72.0202 & 72.0403	NJA LJS HLJ
0	2-24-84	INITIAL ISSUE	NJA HLJ

I HEREBY CERTIFY THAT THIS DOCUMENT WAS PREPARED BY ME OR UNDER MY DIRECT SUPERVISION AND THAT I AM A DULY REGISTERED PROFESSIONAL ENGINEER UNDER THE LAWS OF THE STATE OF UTAH.

SIGNED [signature]

DATE 2-24-84 REG NO. 5746

BLACK & VEATCH CONSULTING ENGINEERS

ENGINEER NJA DRAWN AGG

CHECKED LJS DATE 09-07-84

IPP INTERMOUNTAIN POWER PROJECT

PIPING AND INSTRUMENT DIAGRAM TURBINE

PROJECT 9255 - DRAWING NUMBER 2TGA-M2079 REV 4

CODE TGA-52.5201

AREA

IP14_000029

RECEIVED
MAY 20 1986
BLACK & VEATCH

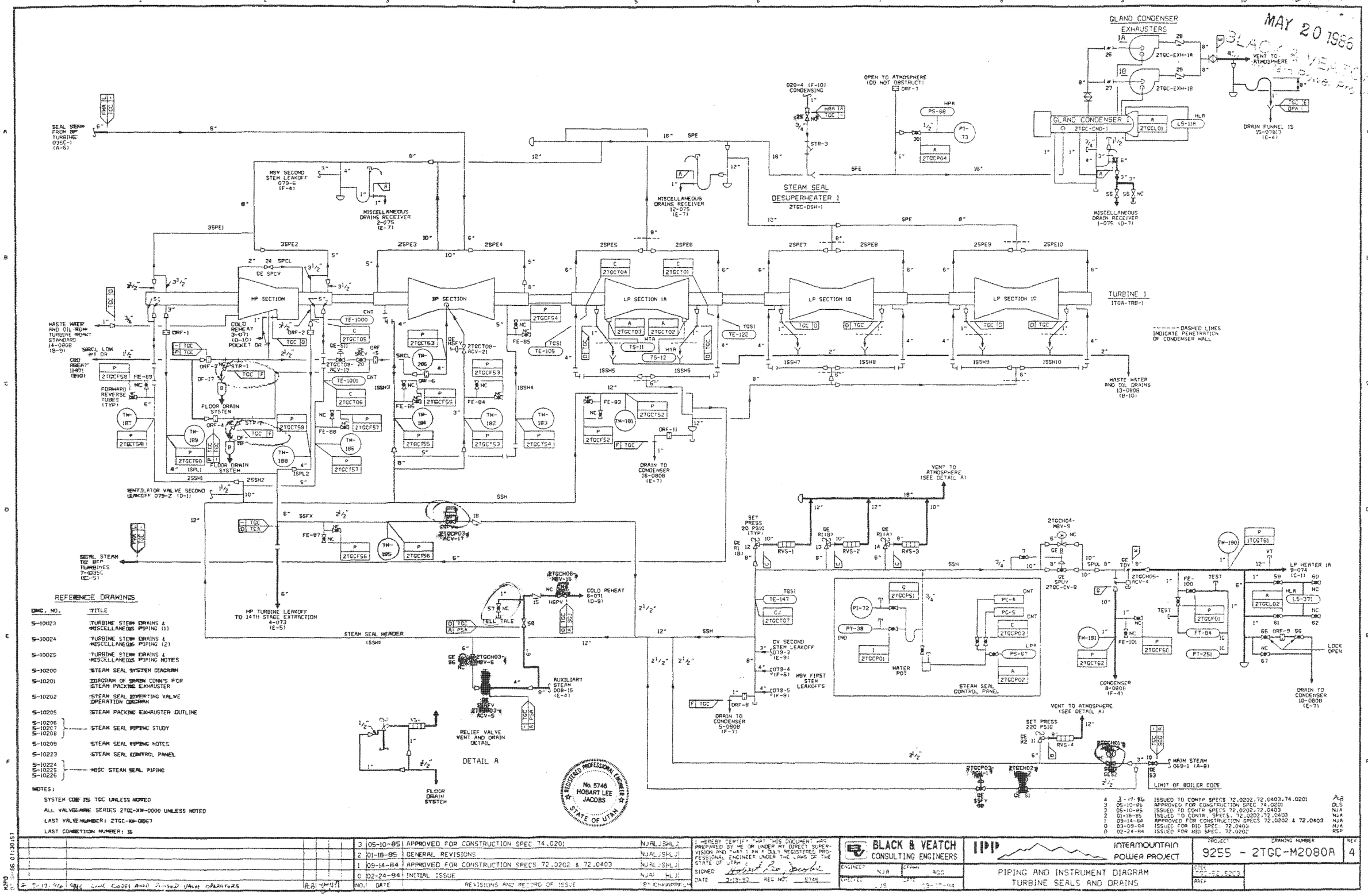

IP14_000030

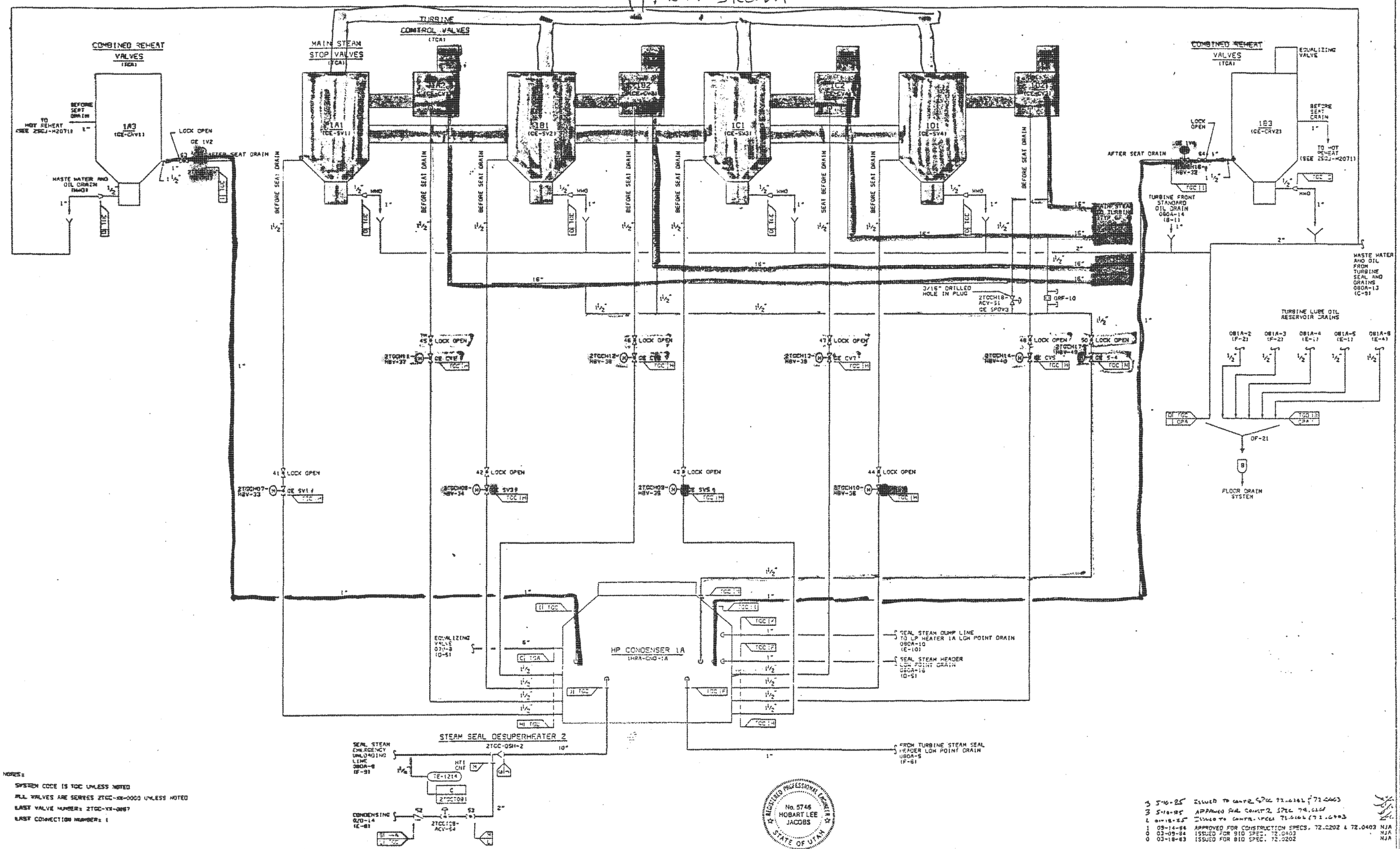
Main Steam
COMBINED REHEAT VALVES (TCA)
MAIN STEAM STOP VALVES (TCA)
TURBINE CONTROL VALVES (TCA)
1A3 (GE-CRV1)
1A1 (GE-SV1)
1B1 (GE-SV2)
1C1 (GE-SV3)
1D1 (GE-SV4)
1B3 (GE-CRV2)
BEFORE SEAT DRAIN
AFTER SEAT DRAIN
LOCK OPEN
WASTE WATER AND OIL DRAIN
TURBINE FRONT STANDARD OIL DRAIN
EQUALIZING VALVE
TURBINE LUBE OIL RESERVOIR DRAINS
FLOOR DRAIN SYSTEM
HP CONDENSER 1A
STEAM SEAL DESUPERHEATER 2
SEAL STEAM DUMP LINE TO LP HEATER 1A LOW POINT DRAIN
SEAL STEAM HEADER LOW POINT DRAIN
FROM TURBINE STEAM SEAL HEADER LOW POINT DRAIN
SEAL STEAM EMERGENCY UNLOADING LINE
CONDENSING
NOTES:
SYSTEM CODE IS TGC UNLESS NOTED
ALL VALVES ARE SERIES 2TGC-XX-0000 UNLESS NOTED
LAST VALVE NUMBER: 2TGC-XX-0067
LAST CONNECTION NUMBER: 1
REGISTERED PROFESSIONAL ENGINEER
No. 5746
HOBART LEE JACOBS
STATE OF UTAH
3 5-10-85 ISSUED TO CONTR SPEC 72.0202 & 72.0403
3 5-10-85 APPROVED FOR CONSTR SPEC 72.0202
2 01-18-85 ISSUED TO CONTR SPECS 72.0202 & 72.0403
1 09-14-84 APPROVED FOR CONSTRUCTION SPECS. 72.0202 & 72.0403 NJA
0 03-09-84 ISSUED FOR BID SPEC. 72.0403 NJA
0 03-18-83 ISSUED FOR BID SPEC. 72.0202 NJA
3 5-10-85 APPROVED FOR CONSTRUCTION SPEC 72.0202
1 09-14-84 APPROVED FOR CONSTRUCTION SPECS. 72.0202 & 72.0403
0 02-24-84 INITIAL ISSUE
NO. DATE REVISIONS AND RECORD OF ISSUE BY CHK APPR
I HEREBY CERTIFY THAT THIS DOCUMENT WAS PREPARED BY ME OR UNDER MY DIRECT SUPERVISION AND THAT I AM A DULY REGISTERED PROFESSIONAL ENGINEER UNDER THE LAWS OF THE STATE OF UTAH
SIGNED
DATE 3-19-83 REG NO. 5746
BLACK & VEATCH CONSULTING ENGINEERS
NJA AGG
IPP INTERMOUNTAIN POWER PROJECT
PIPING AND INSTRUMENT DIAGRAM
TURBINE SEALS AND DRAINS
PROJECT 9255 - DRAWING NUMBER 2TGC-M2080B REV 3
CODE TGC-52.5202
AREA

IP14_000031