S&L Repowering Study

- Coal to Gas Changeover
- Combined Cycle Units
- Peakers
  - Includes White Paper for Renewable Load Shaping
- Solar
- Cursory Review of Nuclear

B&V Biomass Co-Firing

- 5-6 % Biomass Supply Available for Co-firing for both units
- 3 % Total Plant Input
- Potential Biomass Resource
  - Sawmill Woodwaste
  - Forestry Residues
  - Torrefied Wood
- Separate Injection
- Co-Fire only one Unit

B&V Bio-Mass Project Viability

Is the Project Viable?

- Green Credits
- Carbon Tax
- Capital and O&M Costs
- Biomass Contracts

B&V Bio-Mass: Next Steps

- Possible Test Burn
- Continuing Research of Other Co-Firing Facilities
- Discuss with IPP Boiler Manufacturer
- Investigate Potential Biomass Contracts
- Permitting
- Participants Interest
- Financing
- Legal Issues

IPP REPOWERING RFP

IPP Coordinating Committee
Pasadena, CA
November 17, 2009
Saif Mogri

IP12_009468

Repowering Study

- Coal to Gas Changeover
- Combined Cycle Units
- Peakers
  - Includes White Paper for Renewable Load Shaping
- Solar
- Cursory Review of Nuclear

Vendors

- Babcock and Wilcox
- Bechtel
- **Black & Veatch**
- **Burns and Roe**
- Fluor
- MPR
- **Sargent and Lundy**
- **Shaw Group**
- **Worley Parsons**

Miscellaneous Information

- 5 Bids Received
- Reviewed by
  - Nick Kezman
  - Lance Lee
  - Jon Christensen
  - Saif Mogri
- Bid Range -$182,000 - $597,000
- Award Date: End of the Week

Biomass Co-Firing

- 5-6 % Biomass Supply Available for Co-firing for both units
- 3 % Total Plant Input
- Potential Biomass Resource
  - Sawmill Woodwaste
  - Forestry Residues
  - Torrefied Wood
- Separate Injection
- Co-Fire only one Unit

Project Viability

Is the Project Viable?

- Green Credits
- Carbon Tax
- Capital and O&M Costs
- Biomass Contracts

IP12_009473

B&V Presentation

- Date: December 2, 2009
- Time: 12:30 PM PST
- Location
  - Los Angeles
  - John Ferraro Building Room 1271
- Call In Number (213) 367-4801

Next Steps

- Possible Test Burn
- Continuing Research of Other Co-Firing Facilities
- Discuss with IPP Boiler Manufacturer
- Investigate Potential Biomass Contracts
- Permitting
- Participants Interest
- Financing
- Legal Issues

BIOMASS STUDY

IPP Coordinating Committee
November 20, 2008
Riverside, California

Saif Mogri

IP12_009476

BIOMASS STUDY

- One Option To Study
  - Co-Milling of Biomass With Coal
  - Upper Limit of 3% Biomass
- Two Phase Study
  - Biomass Resource Assessment
  - Detailed Analysis

BIOMASS RESOURCE ASSESSMENT

- Identify List of Suppliers
- Current Competing Uses and Prices
- Project Competing Uses and Prices
- Resource Supply Curves
- Site Preparation and Storage
- Type of Contracts and Specifications
- Transportation Issues

PHASE II TASKS

- Site Visit/Meeting
- Conceptual Design
- VISTA Modeling
- Budgetary Estimates – Capital and O&M
- Air Permitting Implications
- Economic Analysis
- Report Preparation
- Report Presentation and Review Meeting

CONCEPTUAL DESIGN

- Major Equipment Descriptions
- Schematic Flow Diagram
- Site Layout Drawings
- Storage of Biomass
- Impact on Existing Equipment and Day to Day Operations

VISTA MODELING

- Plant Efficiency Effects
- Auxiliary Power Requirements
- Steam Attemperation Requirements
- Propensity for Slagging and Fouling
- Maintenance and Operating Costs
- Fly Ash Marketability
- Emissions Reduction
- Impact on Boiler, Tube Leaks, etc.
- Model Range of Existing Coal Sources

CAPITAL/O&M COSTS ESTIMATE

- Capital and Non-Fuel O&M Estimates
- Reference Plants for Estimating
- Capital Cost on EPC Basis
- Capital Cost Exclusive of Owners Costs
- Fixed and Variable O&M Costs
- Assumptions Developed for Staffing, Labor Rates, Cost of Consumables, etc.

REMAINING TASKS

- Air Permitting Implications
- Economic Analysis
  - Capital, O&M Costs, Fuel Costs, etc
  - Emission Credits, Green Power Sales
  - Unit Availability
- Preparation and Presentation of Report
- Cost of Study – Approximately $125,000
- Study Completion – 3-4 Months After Award

Outlook for Federal Coal Ash Regulation

JOHN N. WARD
INTERMOUNTAIN POWER PROJECT
COORDINATING COMMITTEE
NOVEMBER 16, 2010

Coal Ash for Concrete

2

- Improving concrete performance
  - Mechanical and chemical properties of coal fly ash contribute to improved concrete durability
  - Also widely used to mitigate reactive aggregates, sulfate soils, and other common engineering problems
- Improving sustainability
  - Using coal fly ash reduces landfill utilization and conserves natural resources
  - Fly ash used in place of cement accounts for millions of tons of annual greenhouse gas emissions reductions
- Reducing costs
  - In many regions, fly ash is significantly less expensive than cement and alternative supplementary cementitious materials

More than 12.5 million tons of fly ash was used in concrete during 2008.

Coal Ash Regulatory History

- 1980 Bevill Amendment to Resource Conservation and Recovery Act
  - Instructed EPA to "conduct a detailed and comprehensive study and submit a report" to Congress on the "adverse effects on human health and the environment, if any, of the disposal and utilization" of coal ash
- 1988 and 1999 EPA Reports to Congress
  - Recommended coal ash should not be regulated as hazardous waste
- 1993 EPA Regulatory Determination
  - Found regulation as a hazardous waste "unwarranted"
- 2000 EPA Final Regulatory Determination
  - Concluded coal ash materials "do not warrant regulation [as hazardous waste]" and that "the regulatory infrastructure is generally in place at the state level to ensure adequate management of these wastes"

IP12_009486

Good News and Bad News Since 2000

- Good News
  - Beneficial use rate of coal ash increased from 30% to 43%
  - EPA cooperating in encouraging beneficial use through its C^2P^2 (Coal Combustion Products Partnership) program
- Bad News
  - CCP disposal issues attracting increased attention from regulators, news media and environmental activists
  - Several incidents fuel the attention – for example:
    - 2005 – Approx. 100 million gallons of water and ash spill from Martins Creek power plant impoundment into Delaware River. Resulted in a $1.5 million lawsuit settlement for PPL.
    - 2007 – A 12-year project using coal ash to fill a Gambrills, MD, quarry halted because of local groundwater contamination. Resulted in $1 million state fine to Constellation Energy, a class action lawsuit and revision of Maryland disposal regulations

Kingston Power Plant Impoundment Failure

- December 22, 2008, failure of containment dike released 5.4 million cubic yards (approx. 1 billion gallons) of ash slurry
- Approx. 300 acres, several homes, and portions of Emory River affected.
- Fortunately, no deaths or injuries.
- TVA clean-up costs publically estimated at over $1 billion

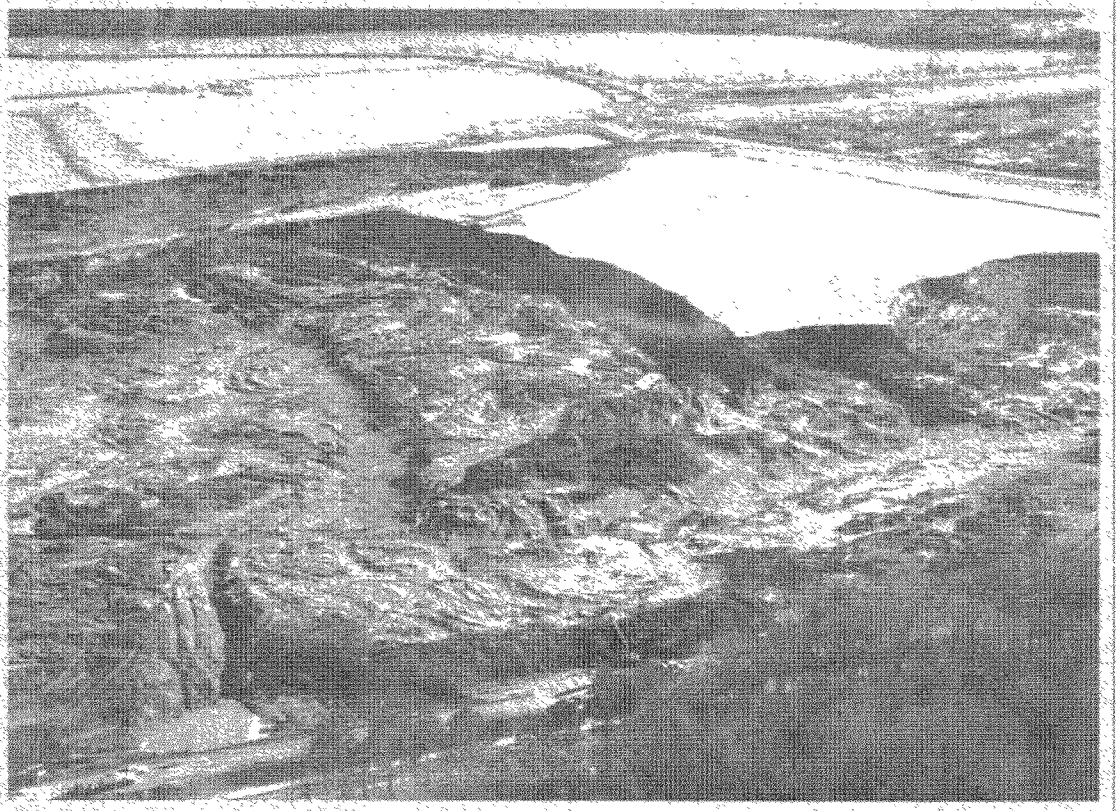

Alphabet Soup

- December 2008 failure of the Kingston power plant ash disposal impoundment prompted new EPA rulemaking activity
- Solid waste federal regulation is under the Resource Conservation and Recovery Act (RCRA)
- RCRA Subtitle C pertains to hazardous wastes
  - Rules enforced by federal EPA
- RCRA Subtitle D pertains to municipal and industrial wastes
  - Rules enforced by the states

EPA's Current Proposal

- The Environmental Protection Agency has proposed two options for future regulation:
  - Subtitle C **when disposed**
  - Subtitle D
- *Proposed landfill construction standards are essentially the same under both proposals*
  - Primary justification for Subtitle C proposal is to enable federal enforcement authority
- Beneficial use of coal ash exempt from regulation under both scenarios
  - However, EPA is seeking comments on beneficial uses that imply further rulemaking activity may be forthcoming
  - Uses such as structural fills and embankments more likely to see increased regulatory scrutiny

The Trouble with "C"

- Truck turns left to go to landfill it's hazardous waste; Truck turns right to go to your home, school or road project it's not
  - Will utilities still supply it?
  - Will specifiers still allow it?
  - Will it require special handling, transportation placarding, employee training, etc.?
  - What happens if you spill some?
  - What happens at the end of the concrete's service life?
  - Will end users object to having it in their concrete?
  - Will class action attorneys find a new source of income?

IP12_009491

Where the Science Stands

- Coal ash does not qualify as hazardous waste based on its toxicity characteristics
- Kingston damage case related to engineering failure, not the material involved
- No damage cases related to beneficial use of coal ash
- Significant demonstrated beneficial use benefits
  - Environmental
  - Performance
  - Economic

Where the Political Science Stands

Favor Subtitle C	Oppose Subtitle C
• Anti-Coal Environmental Groups ○ EarthJustice ○ Environmental Integrity Project ○ Sierra Club ○ Public Employees for Environmental Responsibility ○ Others • Handful of product manufacturers that compete with recycled coal ash	• Everybody Else ○ Over 1/3 of Congress ○ Federal Agencies ○ State Elected Officials ○ State Agencies ○ Utilities ○ Ash Marketers and Users ○ Materials Specifiers and Standards Writers ○ Labor Unions

Should Be An Easy Decision, Right?

- Wrong!
  - Carol Browner, Environmental Czar
  - Barbara Boxer, Senate Committee Chair
  - Henry Waxman, House Committee Chair
  - Senior political levels of EPA clearly favor the Subtitle C proposal

It's Really About Coal

- Since Kingston, coal ash has become third leg of the anti-coal lobby stool
  - Climate Change
  - Mountaintop Mining
  - "Toxic Ash"

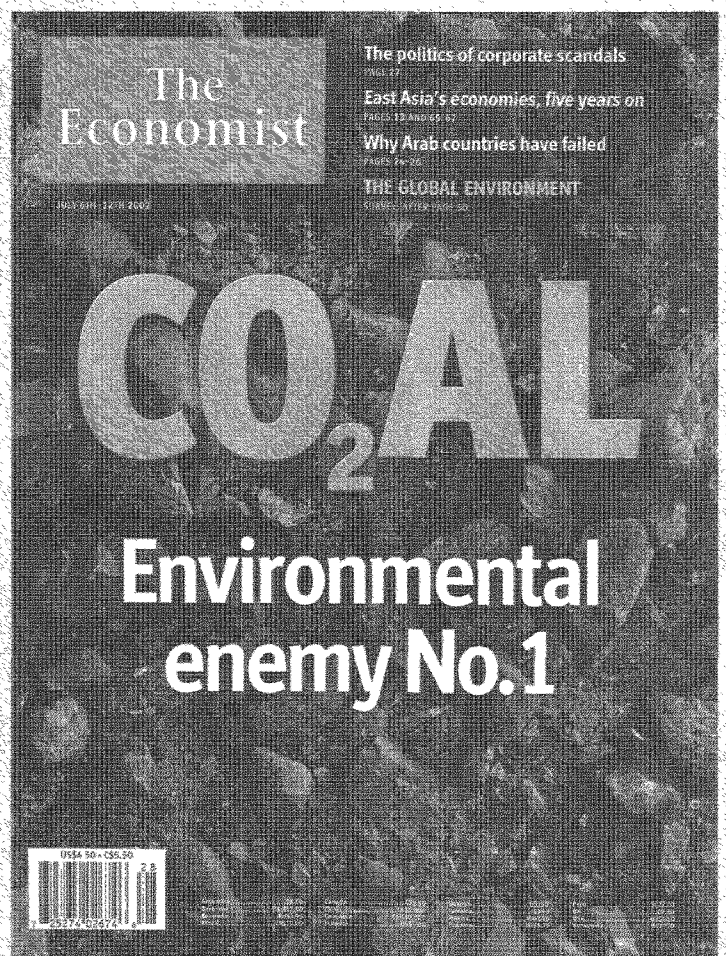

IP12_009495

Where from Here

- Public Comment Period Ends November 19
  - More than 250,000 comments in docket
  - Potentially long process to produce Proposed Final Rule for further inter-agency review
  - Judicial review certain
- Mid-Term Elections Changed Congressional Landscape
  - Significant EPA oversight expected from Republican House
  - Several coal ash legislative approaches under consideration
- Other EPA Actions Continuing
  - Steam Electric Power Generating Effluent Guidelines
  - CERCLA Financial Assurance Requirements
  - Arsenic cancer slope revisions
  - "Transport Rule" and Clean Air Mercury Rule replacement
  - Greenhouse gas tailoring rule

What the EPA says...

14

POSITIONS OF OUTSIDE GROUPS

- **States** – Prefer no federal regulation, but favor subtitle D to subtitle C regulation (which they believe is not justified); express strong concern about hazardous waste regulations stifling beneficial use
- **Citizen Groups** - Support regulation of CCRs under full subtitle C regulation, based on damage cases, risk assessment, gaps in state regulation
- **Federal Agencies** - Among other federal agencies, Department of Energy, Federal Highway Administration, Department of Agriculture, and Office of Surface Mining do not believe hazardous waste regulations are warranted
- **Industry** - Utilities now appear willing to accept a subtitle D approach

IP12_009497

Now for Some Shameless Self Promotion...

15

Coal Ash | Home | Citizens for Recycli...

Citizens for Recycling First

Home | Why Coal Ash | Why Citizens | Support Us | Follow Us | More Info | Contact

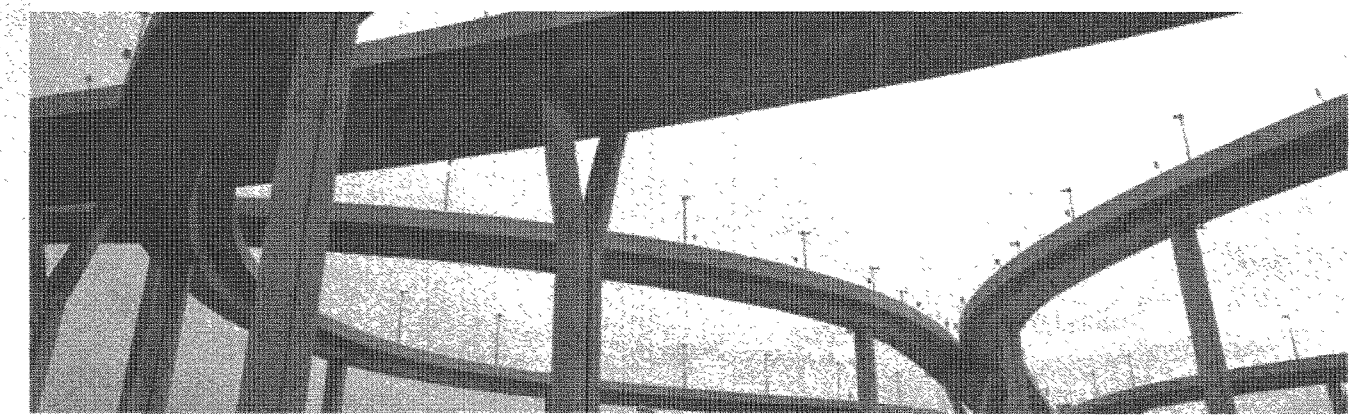

Ash Blog

Comparing Citizen Groups at Final Coal Ash Public Hearing

Citizens for Recycling First participated in the final EPA coal ash public hearing, urging the agency to support actions that encourage recycling as a safe, environmentally preferable alternative to disposal. At the hearing in...

posted by: on: Oct 28, 2010 @ 05:15 READ MORE

Fighting Toxic Journalism Emerges as Major Challenge for Recyclers

Citizens for Recycling First routinely contacts journalists who misuse the word "toxic" in their reporting on coal ash. This effort has emerged as a significant second front in the battle to defend

Action Alert

Citizens for Recycling First

Supporting recycling coal ash as a safe, environmentally preferable alternative to disposal.

CO_2 Emissions Reduction Counter

Done

www.recyclingfirst.org

About John Ward

- More than 20 years energy industry experience
  - Former Vice President, Marketing & Government Affairs, Headwaters Inc.
  - Former Senior Vice President, Communications & Marketing, EnergySolutions Inc.
  - Former Director and Past President, American Coal Council
  - Former Member, National Coal Council (as appointed by U.S. Secretary of Energy)
  - Director and Committee Chairman, American Coal Ash Association

John N. Ward
John Ward Inc.
801-560-9801
wardo@wardo.com

Economic Assessment of Post-Combustion CO2 Capture for Intermountain Subcritical PC Power Plant Applications

Saif Mogri

November 16, 2010

IPP Coordinating Committee

IP12_009500

IGS PC Power Plant Pre-PCC Simplified Flow Configuratio (One of Two Units)

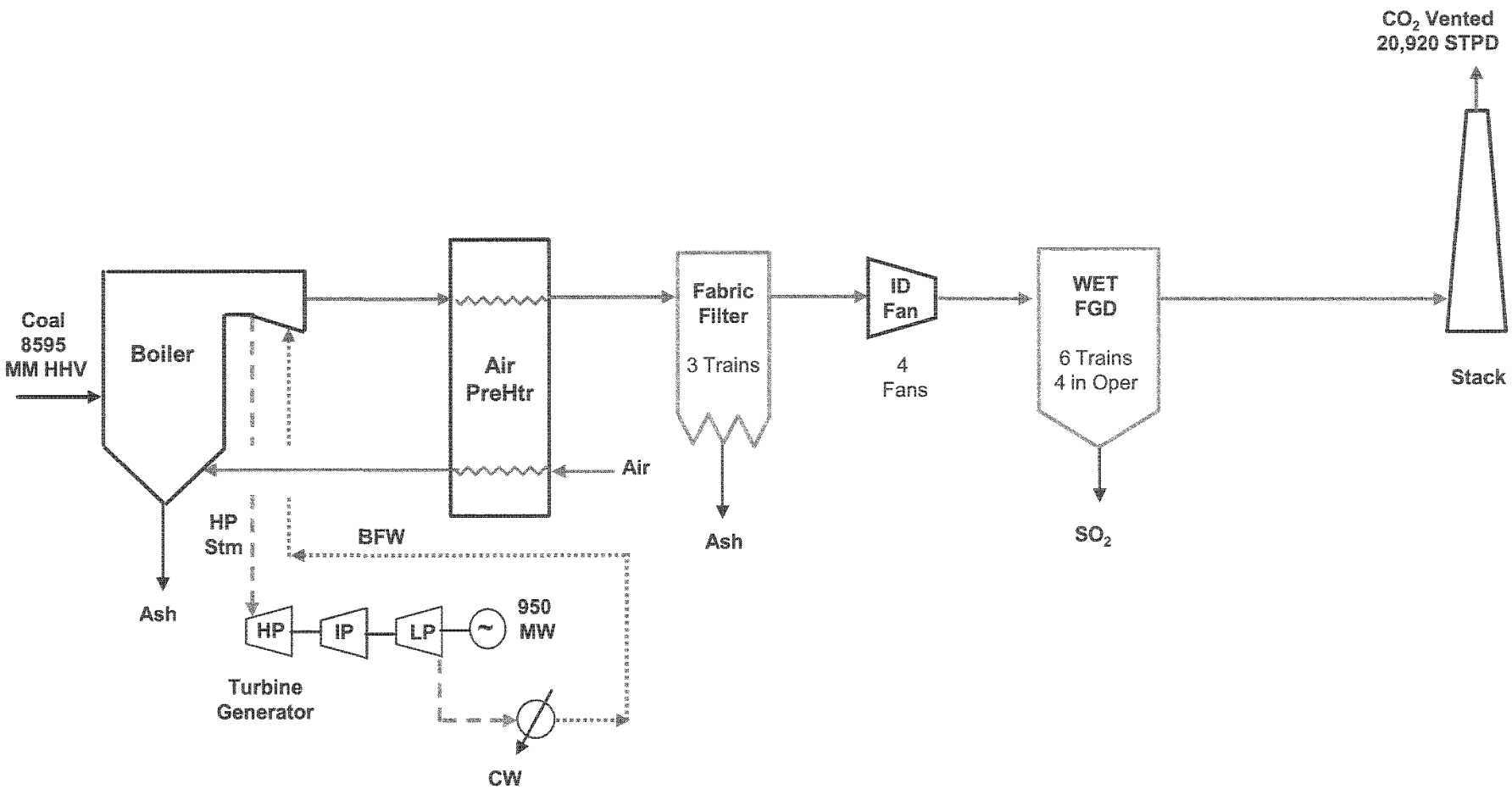

IP12_009501

IGS PC Power Plant Post-PCC Simplified Flow Configuration (One of Two Units)

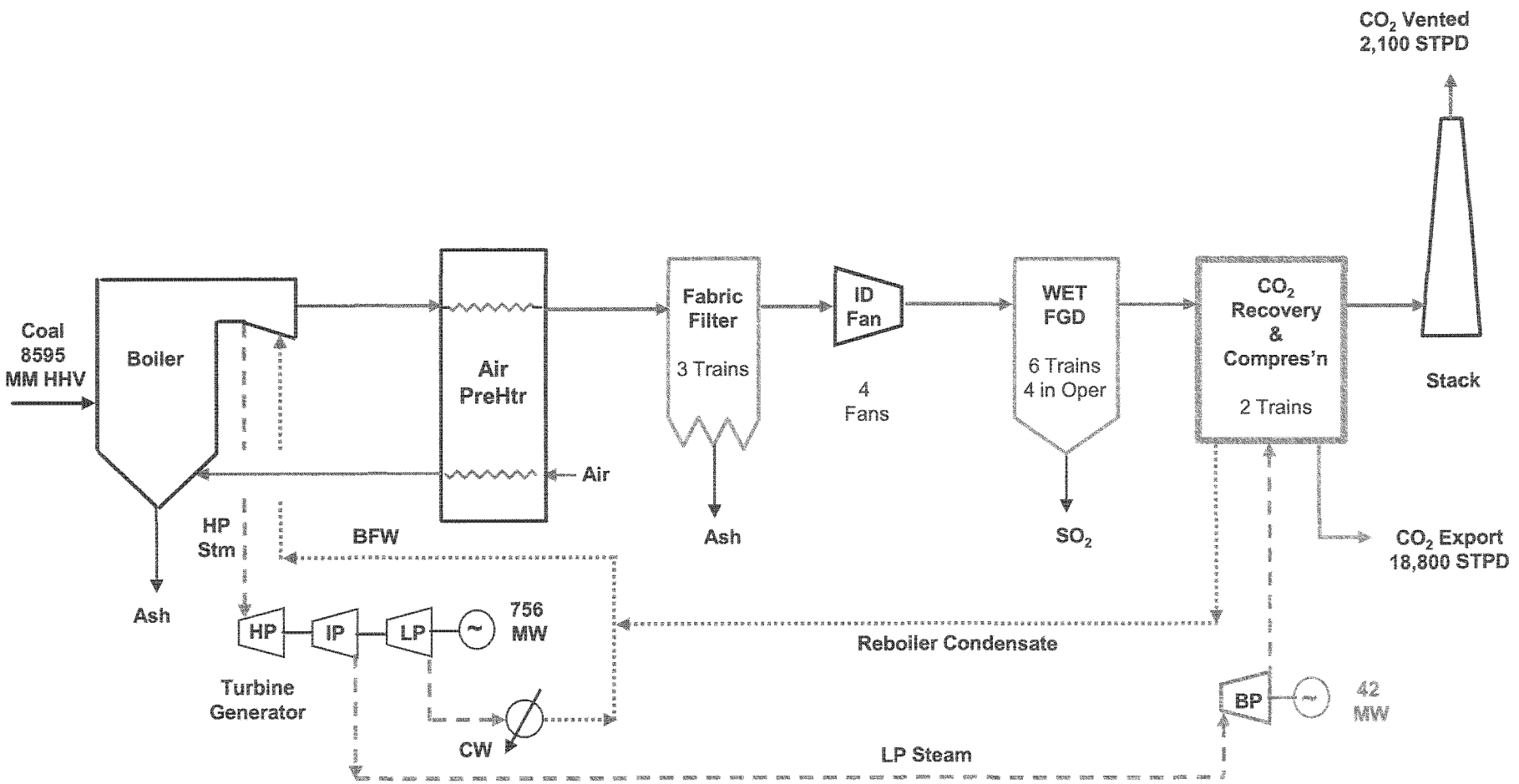

IP12_009502

MEA-Based PCC Simplified Flow Configuration

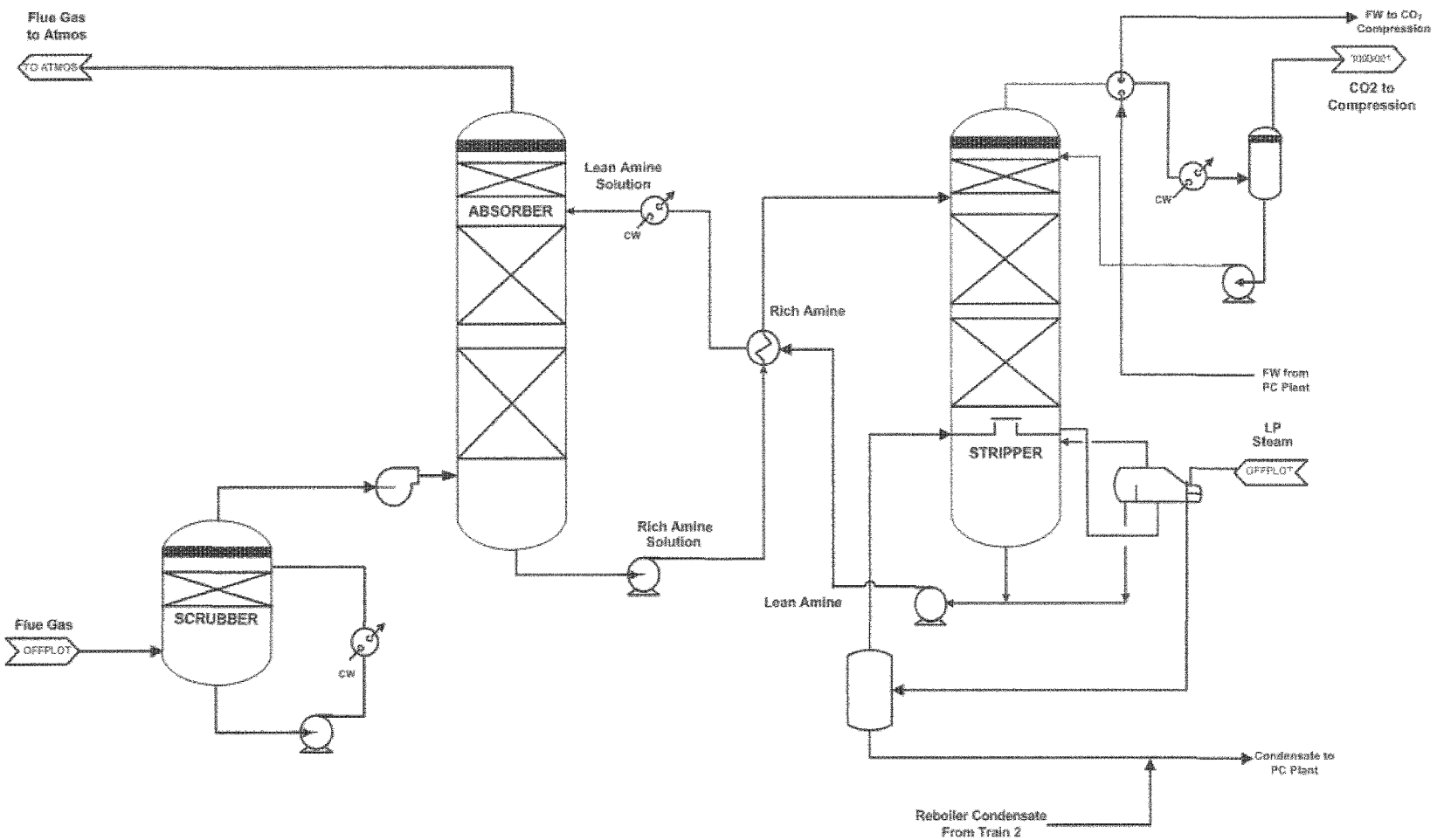

IP12_009503

Overall Post-PCC Plant Performance Per Unit

Performance Summary	No PCC	With MEA PCC
Utah/Wyoming Mixed Coal Feed, STPD (AR)	9,368	9,368
Coal HHV, MMBtu/hr	8,595	8,595
CO_2 Vented, STPD (100% Basis)	20,920	2,090
CO_2 Recovered, STPD (100% Basis)	0	18,830
Power Balance, MW:		
Steam Turbine Generator Gross Output	947	756
Back Pressure Turbine Generator Output	0	42
Total Gross Output	947	798
PC Aux Loads	50	50
PCC MEA Plt Load (Excl CW/CT Loads)	0	32
PCC CO2 Comp Loads (Excl CW/CT Loads)	0	82
PCC CW/CT System Load	0	13
Total Consumption	50	178
Net Export, MW	897	620
Net Heat Rate, Btu(HHV)/kWHr	9,584	13,868
Overall Plant Efficiency	35.6%	24.6%

IP12_0009504

IGS PCC-Retrofit Overall Capital Cost

Preliminary

IP12_009505

IGS PCC Capital Cost – Total PCC + PC Mod (Preliminary for Review Discussion)

Item	Mid-2009 U.S. Cost, $ Million		
	Material	Installation	Total
Powerton Plant Mods Field Cost	98	92	190
MEA-Based PCC Plants Field Cost	427	385	813
Total Field Cost	**526**	**477**	**1,003**
Engineering & Home Office, including Fee:			
for Powerton Plant Mods	---	---	158
for New MEA-Based PCC Plants	---	---	67
Insurance & Warranty			
for Powerton Plant Modifications	---	---	4
for New MEA-Based PCC Plants	---	---	0
Contingency			
Allowance for Powerton Plant Mods	---	---	35
Allowance for New MEA PCC Plants	---	---	0
Escalation	---	---	---
Total Plant Cost (TPC)	**---**	**---**	**1,267**
Preproduction (Start-Up)			
Allowance for Powerton Plant Mod	---	---	3
Allowance for New MEA PCC Plants	---	---	11
Total Capital Cost (TCC)	**---**	**---**	**1,280**

IP12_009506

IGS PCC Capital Cost – PC Modification (Preliminary for Review Discussion)

Item	Material	Installation	Total
Plant Mods Equipment Cost			
Turbine Generators	17.6	1.4	19.0
Cooling Towers		9.9	9.9
Stack			-
Ductwork	22.3	14.3	36.6
Pumps	9.7	0.6	10.2
Transformers, Switchgear, & Other Electrical Equipment	14.1	4.8	18.8
Other Equipment	1.4	0.1	1.5
Freight	3.0		3.0
Total Major Equipment Cost	68.0	31.0	99.0
Bulk Material Cost	30.3	29.0	59.2
Total Direct Cost	98.3	59.9	158.3
Construction Indirect Cost	15.5	16.4	31.9
Total Field Cost	113.8	76.4	190.1
Engineering & Home Office Cost Incl Fee	4.8	153.1	157.8
Insurance, Warrenty, & Sales Tax	3.6		3.6
Contingency	35.2		35.2
Escalation	---	---	---
Total Plant Cost (TPC)	157.2	229.4	386.7
Preproduction (Startup)	0.9	2.3	3.2
Total Capital Cost (including Preproduction Cost)	158.1	231.7	389.8

IP12_009507

IGS PCC Capital Cost – Total PCC

Unit No.	Plant No.	PCC Plant Capital Cost Breakdown	Mid 2009 U.S. Cost, $1,000,000		
			Material	Installation	Total
		PROCESS EQUIPMENT			
1	1100	MEA CO_2 Recovery Plant Train 1	31.5	16.4	47.9
1	1200	MEA CO_2 Recovery Plant Train 2	31.5	16.4	47.9
1	1300	CO_2 Compression Plant Train 1	20.2	1.9	22.1
1	1400	CO_2 Compression Plant Train 2	20.2	1.9	22.1
		Freight	4.8		4.8
1		Unit 1 PCC Total Equipment Cost	108.2	36.7	144.9
		Unit 1 Total Bulk Material Cost	71.2	100.1	171.3
1		Unit 1 PCC Total Direct Cost	179.5	136.7	316.2
2		Unit 2 PCC Total Direct Cost	179.5	136.7	316.2
1 & 2		Unit 1 & 2 PCC Total Direct Cost	358.9	273.4	632.3
		Total PCC Plant Construction Indirect Cost			180.3
1 & 2		Unit 1 & 2 PCC Total Field Cost			812.6
		Startup Vendor Repre			10.6
		Home Office Costs			67.4
1 & 2		Total PCC Plant Cost w/o Insurance & Contingency			890.6
		Insurance/Warranty/License/Royalty/Fees			-
		Contingency			-
1 & 2		Total PCC Plant Cost			890.6

IP12_009508

IGS PCC-Retrofit Incremental Overall Operating Cost
(Preliminary for Review Meeting Discussion)

- 7450 Operating Hours per Year

IP12_009509

IGS PCC-Retrofit Incremental Overall Operating Cost

(Preliminary for Review Meeting Discussion)

ITEM DESCRIPTIONS	Unit of Measure	Incremental Consumption Units/Yr	Price $/Unit	Incremental Annual Cost $MM/Yr
VARIABLE COSTS - PROCESS CONSUMABLES:				
Coal Feed	Tons	0	30.00	-
Raw Sevier Water	1000 gal	1,525,164	0.38	0.58
Well Water	1000 gal	258,366	3.80	0.98
Process Waste Water	1000 gal	0	0.038	-
TOTAL PROCESS CONSUMABLES				**1.56**
VARIABLE COSTS - CAT & CHEMICALS: ***				
Sodium Hydroxide	Tons	1,865	408	0.76
Sulfuric Acid	Tons	849	136	0.12
Anion Resins *	Ft^3	452	300	0.14
Cation Resins *	Ft^3	339	120	0.04
Mixed-Ion Resins *	Ft^3	-68	210	(0.01)
BFW O_2 Scavenger	Lbs	59,064	0.54	0.03
BFW Scale Inhibitor	Lbs	295,318	0.69	0.20
BFW Sludge conditioner	Lbs	358,073	1.35	0.48
BFW Corrosion Inhibitor	Lbs	376,530	1.55	0.58
Chlorine Gas (CW+WWT treating)	Lbs	412,596	0.20	0.08
CW Corrosion Inhibitor	Lbs	1,031,490	1.00	1.03
CW Scale Inhibitor	Lbs	412,596	2.00	0.83
CW Biocide	Lbs	412,596	3.00	1.24
PCC MEA *	Tons	45,009	2,500	112.52
PCC Corrosion Inhibitor	Tons	2,244	6,958	15.61
PCC MEA Reclaim Chemcals *	Tons	44,878	227	10.18
PCC Activated Carbon *	Tons	608	3,100	1.88
PCC MEA Pre- & Post-Filter Cartridges *	Counts	48	13,115	0.63
CO_2 Drier Dessicant (3 Yr Life) *	Lbs	44,058	1.00	0.04
CO_2 Drier Pre- & Post-Filter Cartridges *	Counts	8	13,115	0.10
TOTAL CAT & CHEMICALS				**146.49**
FIXED COSTS:				
Operating Labor **	# of Operator	37	85,500	3.18
Maintenance Labor	% TPC	1.50	1,267	19.00
Maintenance Material	% TPC	1.00	1,267	12.67
Overhead Charges	# of Staff	4	94,500	0.38
Insurance	% TPC	1.00	1,267	12.67
Property Tax	% TPC	1.00	1,267	12.67
TOTAL FIXED COSTS				**60.56**
TOTAL O & M COST				**208.62**

* Cost includes disposal allowance.
** Based on 8 additional operating positions at 4.65 shifts per position.
*** Chemical usages are typical from past projects and do not necessary represent actual Powerton Station usages.

IP12_009510

EPRI CO_2 CAPTURE STUDY

IP12_009511

EPRI CO_2 CAPTURE STUDY

- 5 electric utilities in US & Canada (includes LADWP/ IPA)
- 15 other companies & organizations
- to host studies of the impacts of retrofitting advanced amine-based post-combustion carbon dioxide (CO2) capture technology to existing coal-fired power plants.

EPRI CO_2 CAPTURE STUDY

Five studies will be conducted & report for each site will:

- Assess the most practical CO2 capture efficiency configuration based on site constraints
- Determine the space required for the CO2 capture technology and the interfaces with existing systems
- Estimate performance and costs for the PCC plant
- Assess the features of each plant that materially affect the cost and feasibility of the retrofit

Green House Gas Activities Update

IPP Coordinating Committee
August 18, 2008
Heber, Utah

Saif Mogri

CALIFORNIA DREAMING

Will Sentiment Lead to an Undesirable Reality?

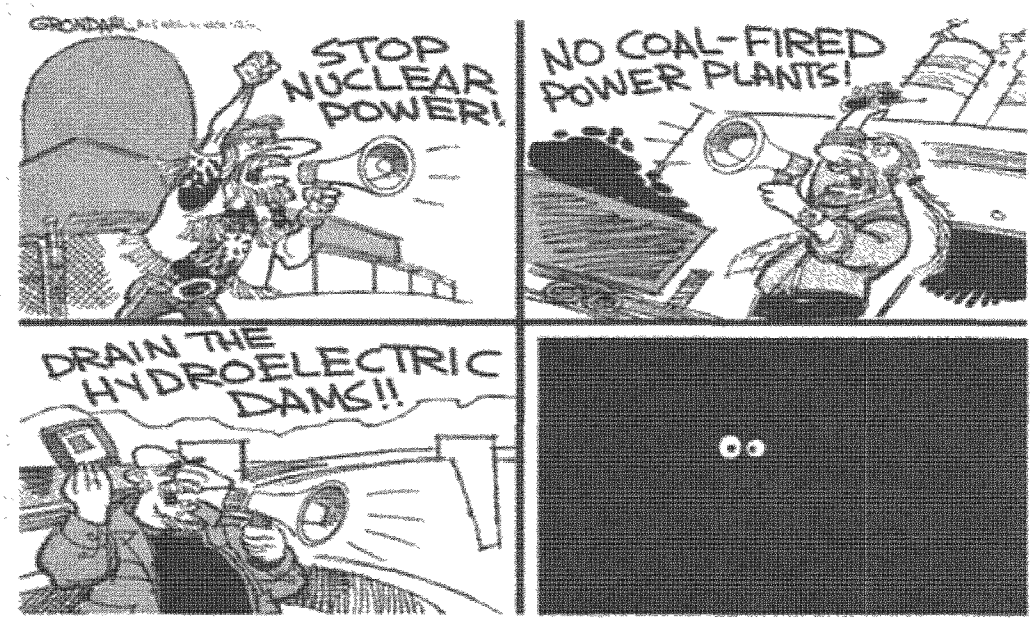

CALIFORNIA DREAMING

CHILLED AMMONIA UPDATE

- Field Pilot in Wisconsin – On Going
  - No Updates Since Last March
  - Non Disclosure Agreement Issue
  - Assign IPSC Agreement to IPA
- Site Visit in September 2008

WISCONSIN ENERGY TEST PROJECT

- Demonstrate Full System Operation on Actual Flue Gas
- Evaluate Energy Consumption Relative to Calculated Values and Other Technologies
- Identify O&M Issues and System Reliability
- Conduct Field Tests
  - Gather Operating Data
  - Refine Estimates
  - Estimate Costs of Commercial System

IP12_009517

Post Combustion CO_2 Capture Retrofit Study

- **Objective**
  - Investigate thermal and economic impacts of retrofitting Amine Based CO_2 capture process to an existing PC plant
  - Also, to guide the design of plants currently under development
- **Details**
  - Builds on knowledge from an ongoing EPRI PCC study
  - EPRI team will evaluate nominated site(s) and determine size and cost of CO_2 capture plant that can be retrofitted and integrated with a PC plant

IP12_009518

HOST SITES

- 5 different sites
  - Powerton, Illinois
  - Coal Creek, North Dakota
  - Lingan, Nova Scotia
  - IPP, Utah
  - Bayshore, Ohio
- 5 separate owners
- Focus on establishing several different data points
- $100,000 Participation cost

Stakeholder Value

- Economic evaluations of several specific plants retrofitted with post-combustion CO_2 capture (PCC) technology
  - Cost Breakdown
  - Power Consumption by PCC Plant
- Information on the technical barriers to, and limitations of, the retrofit to specific plants
  - Space Barriers
  - Interface
- Information about the designs and costs of retrofitting CO_2 capture to the different plants included in the study
  - Process Flow Diagrams
  - Equipment Lists
  - Manning Levels and O&M Costs

IP12_009520

BIOMASS STUDY

- Scope of Work Being Developed with Black and Veatch
- Feasibility Study Indicated 1 % Biomass Co-Burn Possible Without Major Capital Expenditures
- Evaluate for Higher Percentage Biomass

IP12_009521

SCOPE OF WORK

- Resource Availability and Cost
- Transportation Logistics and Cost
- Emission Impacts
- Co-Firing Options
  - Major Equipment Descriptions
  - Flow Diagrams
  - Site Layout Drawings
- Vista Modeling of Co-Firing Options
- Power Plant Operations
  - Fuel Supply and Handling
    - Blend or Separate Injection
    - Storage
  - Boiler Operations
    - Increased Soot Blowing
    - Corrosion Risk
    - Increased Auxiliary Power Supply
  - Efficiency
- Develop Capital and O&M Costs
- Air Permitting Applications

IP12_009522

INFO FOR NEXT MEETING

- Chilled Ammonia Results Update
- Post-Combustion Capture Project Update
- Biomass Study Scope Review
  - LADWP Review
  - IPP GHG Subcommittee Review
  - Negotiate with B&V
  - Finalize Study Scope and Cost

Intermountain Power Project (IPP) Greenhouse Gas (GHG) Reduction Feasibility Study

Presentation of Results to IPP Coordinating Committee
Intermountain Power Plant
May 19, 2008
Saif Mogri

IP12_009524

Project Scope

- Request from Intermountain Power Agency (IPA) and Southern California Public Power Authority (SCPPA)
- IPP GHG Reduction Feasibility Study
- Pre-Feasibility Level Study
- Work began in October 2007
- Final in May 2008

Purpose

Evaluate ways to reduce and/or capture CO_2 emissions from IPP coal fired Units 1 and 2. The ultimate goal, if achievable, is to reduce CO_2 emissions from Units 1 and 2 to meet California Energy Commission's (CEC) GHG Emission Performance Standard.

Tasks as Defined in the Contract

- Task 1. Improve Efficiencies
- Task 2. Alternative Fuels
- Task 3. Developing Technologies
- Task 4. CO_2 Capture and Sequestration
- Task 5. Carbon Trading
- Task 6. Renewable Resources

IP12_009527

General Approach to Study

- Maintain Existing Net Output from IPP
  - Efficiency Improvements Only
  - Renewable Resources Displace Coal
  - Purchase Power for CO_2 Capture/Compression
- Estimate Levelized Cost of CO_2
- Provide Screening Level Only

Efficiency Improvements

- Design and Operating Data Collection
- 2 Day Site Visit; 32 Projects Identified
- 32 Projects Screened and Categorized
  - Capital Improvements
  - Maintenance Repair/Replace Strategies
  - Operations Support Systems
  - Operations Practices (not considered)
- Net Benefit Analysis of 18 Projects (@ $20 and $40 per ton)
- Project Report and Presentation

Six Planned Projects

- 32,000 ton/yr from Currently Planned Projects

	B	N
1	[illegible]	2
2	Closed Loop Combustion Optimization System	18,719
3	Cooling Tower Modifications (Further study required)	0
4	Replace Primary AH Baskets (Benefit incl in #21 PA Seals)	0
5	Generator Rewind	3,704
6	Compressed Air Audit & Repair/Replacement	5,141
7	Modify Pulverizers w/ Rotating throat and Static Classifiers	4,445
8	Total	32,008

Eight New Projects Viable @ $40/ton CO_2 Cost

- 142,000 ton/yr with a Capital Cost of $45.5M

Project Description	Est Capital Cost	CO_2 Reduction (ton/yr)	CO_2 Benefit ($/yr)	Heat Rate Reduction (Btu/kWh)	Heat Rate Benefit ($/yr)	Aux load benefit (MW)	Net Benefit ($/yr)	Breakeven Cost ($/ton$CO_2$)
Modification of PA Air Heater Sector Plates and Installation of Duplex Sealing System	$418,000	26,501	$1,060,036	6	$423,495	2.40	$1,457,575	$0
Upgrade IPT Steam Path	$13,333,000	41,597	$1,663,874	29	$664,735	0.00	$1,273,714	$0
Sliding Pressure Operation	$0	14,798	$591,922	10	$236,479	0.00	$832,580	$10
VFD Motor for Condensate Pumps	$1,312,000	7,734	$309,341	0	$123,585	1.04	$330,149	$0
Cycle Isolation Audit & Valve Repair/Replacement	$120,000	4,160	$166,387	3	$66,473	0.00	$224,435	$0
LP Turbine Upgrade One Hood	$27,000,000	40,706	$1,628,237	28	$650,497	0.00	$130,229	$29
Upgrade BFPT (Blades and Seals)	$2,000,000	4,245	$169,802	3	$67,838	0.00	$78,838	$22
High Efficiency Motor for Coal Pulverizers	$1,360,000	2,422	$96,891	0	$38,709	0.33	$27,484	$37
Summary Total *(Net Benefit >0 Only)*	$45,543,000	142,162	$5,686,491	79	$2,271,811	3.8	$4,355,006	

Renewable Energy Options

- Geothermal feedwater heating
- Geothermal power
- Solar thermal feedwater heating
- Solar thermal power
- Wind
- Hydro
- Co-firing – both biomass and natural gas

Summary

Renewable Energy Options Comparison.					
Option	Near-Term Lev. Cost of CO_2 Reduction ($/ton)	Near-Term Potential CO_2 Reduction (ton/yr)	First Year Available	Near-Term Percent IPP CO_2 Reduction	Long-Term Percent IPP CO_2 Reduction
Geothermal Power	136	102,000 *(Capacity = 15 MW)*	2012	0.7%	0.7%
Solar Power	230	186,000 *(Capacity = 100 MW)*	2012	1.3%	13.0%
Solar Feedwater Heating	135	104,000 *(Capacity = 50 MW)*	2010	0.7%	1.5 to 3.0%
Wind	91	988,000 *(Capacity = 400 MW)*	2011	7.0%	21.2%
Hydro	111	64,000 *(Capacity = 15 MW)*	2013	0.5%	0.8%

Alternative Fuels

- Looked at four different co-firing options:
  - 1% (direct blend)
  - 10% (separate injection)
  - 20% (new burners installed)
  - 10% natural gas (new igniters installed)

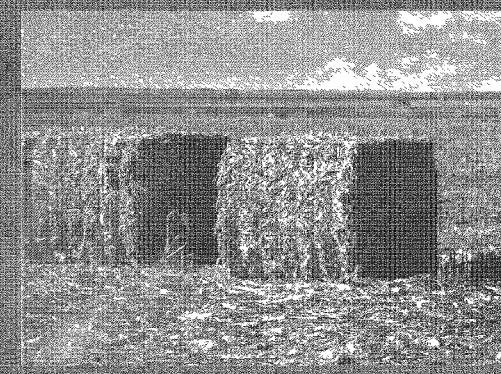

Alternative Fuels

Co-Firing Options Comparison (With CO_2 Penalty).						
	Levelized Cost of CO_2 Reduction ($/ton)		Potential CO_2 Reduction (ton/yr)		Percent IPP CO_2 Reduction	
	With CO_2 Penalty	Without CO_2 Penalty	With CO_2 Penalty	Without CO_2 Penalty	With CO_2 Penalty	Without CO_2 Penalty
1% Biomass	41	35	124,000	146,000	0.9%	1.0%
10% Biomass	69	48	1,020,000	1,460,000	7.5%	10.0%
20% Biomass	80	48	1,750,000	2,900,000	12.0%	20.0%
10% Natural Gas	75	75	496,000	496,000	3.5%	3.5%

Note: Penalty accounts for the CO_2 emitted during the harvesting, processing, and transportation of biomass fuels, as required under CA Senate Bill 1368, section 8341.

Carbon Dioxide Capture and Storage Project Life Cycle Stages

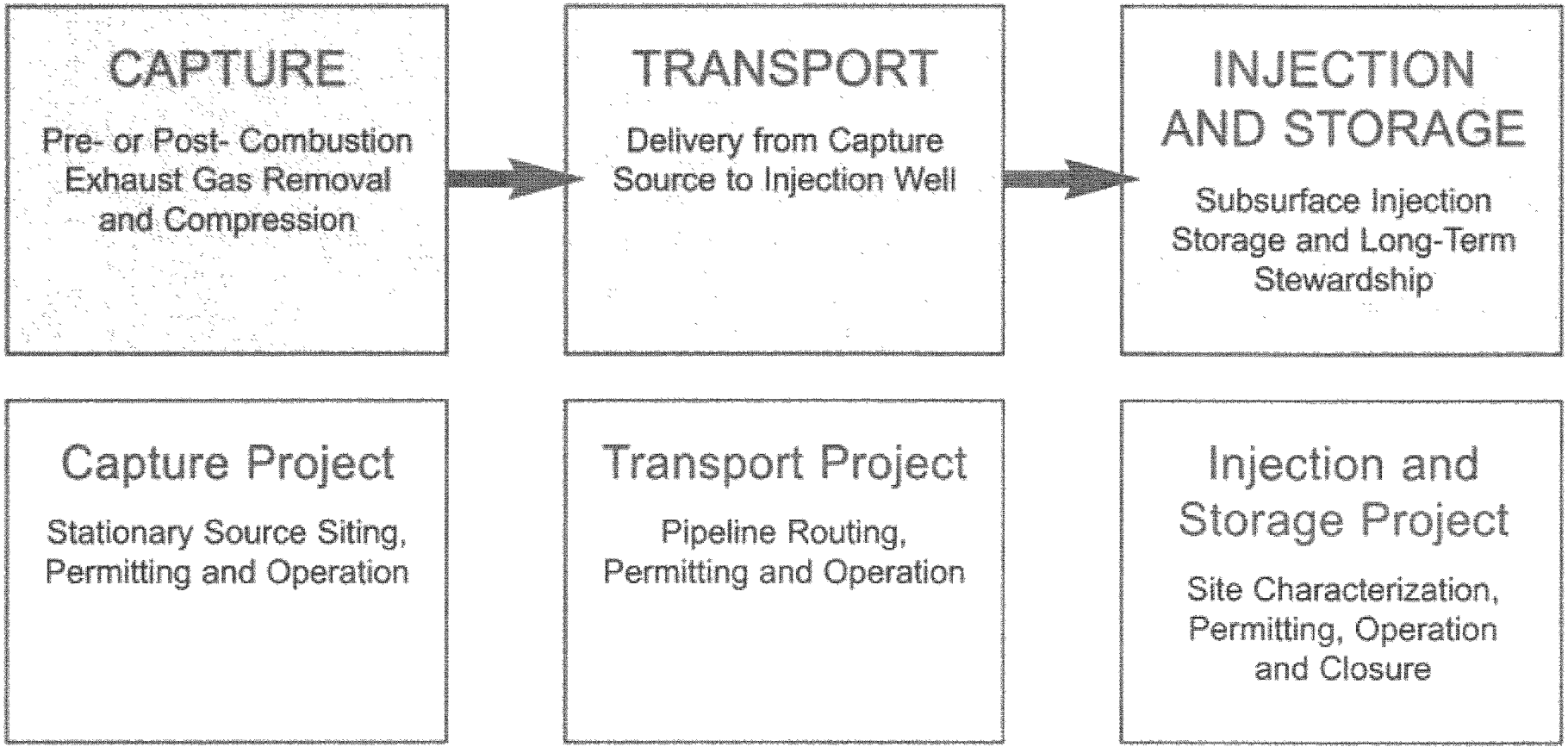

IP12_009536

Three Categories of Capture Processes

- Post-Combustion Capture
  - Large volumes of flue gas and CO_2
  - Processes not proven at scale
- Pre-Combustion Capture
  - IGCC
- Oxy-Fuel Combustion
  - Not Considered Further

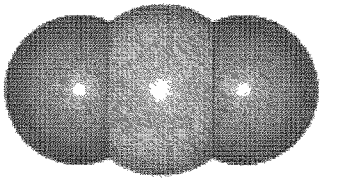

Amine and Ammonia Performance Comparison

IPP Performance Estimate for CO_2 Capture.		
	Amine	Ammonia
Flue Gas to CO_2 Capture, percent	68	70
CO_2 in Flue Gas from Power Plant, tons per hour (tph)	1,755	1,755
CO_2 Captured, tph	958	996
CO_2 Captured, percent	54.6	56.8
CO_2 to Atmosphere, tph	797	759
Net Power without CO_2 Capture, MW	1,800	1,800
Net Power from PC Units with CO_2 Capture, MW	1,460	1,387
CO_2 emitted, pounds per megawatt-hour (lb/MWh)	1,092	1,094
Additional Cooling Water Makeup from River, gallons per minute (gpm)	4,260	2,252

Amine and Ammonia Cost Comparison

Capital and Operating Costs (2008 US$).		
	Amine	Ammonia
CCC Direct Capital Cost ($million)	1,400	1,300
CO_2 Transport Direct Cost ($million)	470	470
Total Direct Cost ($million)	1,870	1,770
Owner's Cost at 40% of Direct ($million)	748	708
Total Capital Cost ($million)	2,618	2,478
O&M Cost		
Fixed ($million/year)	2	2
Variable ($million/year)	29.2	37.5

Key issues and challenges of CCS regulation

- Ecological and health safety risks
- Regulatory agencies' jurisdiction
- Classification of CO_2
- Ownership and property rights
- Long-term post-closure assurance
- Public acceptance

IP12_009540

Summary

Comparison of Levelized Cost of CO_2

	Scenario	Capital Cost ($1000)	Operating Cost ($1000/yr)	CO2 Reduction (tons/year)	Levelized Cost of CO2 ($/ton CO2)
1	Modification of PA Air Heater and Seals	418	-	26,501	0
1	Sliding Pressure Operation	0	-	14,798	0
1	VFD Motor for Condensate Pumps	1,312	-	7,734	0
1	Cycle Isolation Audit and Valve Repair/Replacement	120	-	4,160	0
1	Upgrade IPT Steam Path	13,333	-	41,597	10
1	Upgrade BFPT (Blades and Seals)	2,000	-	4,245	22
1	"High Efficiency Motor for Coal Pulverizers"	1,360	-	2,422	29
1	LP Turbine Upgrade One Hood	27,000	-	40,706	37
2	1 Percent Biomass	1,206	1,100	124,000	41
4	Amine CO2 Scrubbing	2,619,000	31,200	7,972,000	59
4	Ammonia CO2 Scrubbing	2,479,000	37,500	8,289,000	63
2	10 Percent Biomass	314,280	1,300	1,020,000	69
2	10 Percent Natural Gas	17,640	1,100	496,000	75
2	20 Percent Biomass	549,720	1,610	1,750,000	80
6	Wind	800,000	20,700	988,000	91
6	Hydro	42,520	550	64,000	111
6	Solar Feedwater Heating	135,000	2,900	104,000	135
6	Geothermal Power	76,500	6,100	102,000	136
6	Solar Power	420,000	5,800	186,000	230

Conclusions

- Some efficiency improvements appear to be viable regardless of CO_2 reduction requirements
- Efficiency improvements do not have a significant impact on CO_2 emissions
- Only CCS and/or carbon trading have the capability to reach the target of 1,100 lb/MWh
- Carbon trading programs with CO_2 costs at <~$60/ton will provide a better option than CCS

Key Results and Conclusions

- IPP is a Best-in-Class Facility
- GHG ETS Not Fully Defined
- Significant Reductions of CO_2 from IPP Require CCS
  - Large Scale Capture Ready 2012-2015
  - Large Scale Sequestration Ready 2015-2020
- Viable Projects Available Today to Lower GHG Footprint

Green House Gas RFP
And
Chilled Ammonia Update

IPP Coordinating Committee
August 20, 2007
Heber, Utah

Saif Mogri

GHG RFP TASKS

- Improve Efficiencies
- Alternative Fuels
- Evaluate CO2 Reduction Technologies
- CO2 Capture and Sequestration
- Carbon Trading
- Renewable Resources

IP12_009546

VENDORS

- Bids Sent to Six Vendors
  - Black and Veatch
  - CH2MHill
  - Fluor
  - Navigant Consulting
  - Sergeant and Lundy
  - Worley Parsons

BIDS RECIEVED

- Three Vendors Responded
  - Black and Veatch
  - Navigant Consulting
  - Worley Parsons

EVALUATION CRITERIA

- Addressing Concepts - 30%
- Cost of Study - 25%
- Bidders Experience - 15%
- Personnel Qualifications - 15%
- Experience with PC Plants - 5%
- Experience With Emissions - 5%
- Schedule - 5%

RFP SCHEDULE

- Issued RFP – June 12, 2007
- Conference Call – July 10, 2007
- Bids Received – July 20, 2007
- Bids Evaluated – August 2, 2007
- GHG Subcommittee Meeting – August 28, 2007
- Anticipated Award Date -2nd Week Of September

CHILLED AMMONIA UPDATE

- Test Project at SRI – On Going
- Field Pilot in Wisconsin – April 2008
- Commercial Operation at AEP – 2011
- Alstom will Provide Guarantees - 2012

TEST PROJECT

- Bench Scale Testing
  - Demonstrate 90% CO_2 Removal Efficiency
  - Measure CO_2 Mass Transfer for Various Operating Conditions
  - Evaluate Key Components for Future Phases
    - Cooling Stages
    - CO_2 Absorber
    - Wash
    - Regenerator

MAIN COMPONENTS

Schematic of commercial Ammonia-based CO2 capture system retrofitted downstream of the FGD

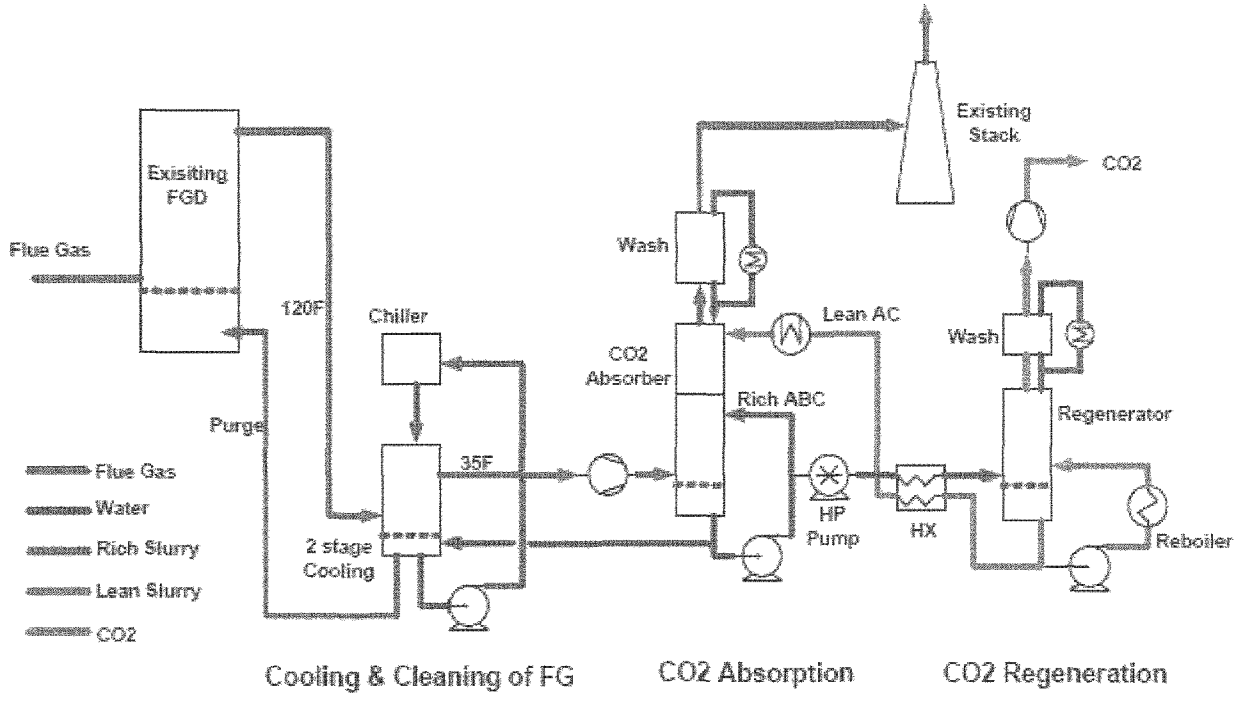

Figure 1

The CO_2 capture system has the following main subsystems:

1. Flue Gas Cooling.
2. CO_2 absorption.
3. High-Pressure Regeneration.

IP12_009553

WISCONSIN ENERGY TEST PROJECT

- Demonstrate Full System Operation on Actual Flue Gas
- Evaluate Energy Consumption Relative to Calculated Values and Other Technologies
- Identify O&M Issues and System Reliability
- Conduct Field Tests
  - Gather Operating Data
  - Refine Estimates
  - Estimate Costs of Commercial System

IPP Repowering Study Progress Report

IPP Coordinating Committee
May 17, 2010
Delta, Utah
Saif Mogri

IP12_009555

Two Items For Discussion

- Coal to Gas Conversion
- Heat Recovery Steam Generator

IP12_009556

Coal to Gas Conversion

Power Output Unit 1 Gross MW	CO2 Emissions Unit 1 Lbs/MWHr	Power Output Unit 2 Gross MW	CO2 Emissions Unit 2 Lbs/MWHr
977	1051.5	973	1068.0
947	1052.3	895	1095.0
868	1054.9	820	1130.0
784	1083.9	750	1138.0
699	1106.0	670	1158.0
603	1124.5	587	1166.0

IP12_009557

Gross vs Net Comparison Unit 1

Power Output Gross MW	Net MW 3.5 % Aux Load	CO2 Emissions 3.5% Aux Load	Net MW 4.0 % Aux Load	CO2 Emissions 4.0% Aux Load
977	943.0	1089.6	937.9	1095.3
947	913.9	1090.5	909.1	1096.1
868	837.6	1093.2	833.3	1098.9
784	756.6	1123.2	752.6	1129.1

Coal to Gas Conversion Cost Estimate

Item	Dollars $
SSH/Burner Modifications	14,000,000
Brine Concentrator	15,000,000
New Chimney	20,000,000
CO Catalyst	50,000,000
BOP	5,000,000
Sub-Total	104,000,000
SCR If Required	430,000,000
Total with SCR	534,000,000
$/kW	106/548

IP12_009559

Questions to Follow-Up For Coal to Gas Conversion

- Will EPA, UDAQ or external environmental groups push for SCR's to be installed?
- Are CO2 Emissions calculated on Gross or Net MW? Will CARB allow leeway on the $1100 lbs/MWHr requirement?
- Follow-Up with Alstom for Improvement in Turbine Efficiency

HRSG Evaluation

- Generate Heat Balances for 100% Load for Three Cases:
  - 3 - 7FA.05 CT & 400 MW on the existing turbine ~ 900 MW
  - 5 - 7FA.05 CT and 900 MW on the existing turbine ~ 1500-1800 MW
  - 3 or 4 – 7FA.05 CT with duct firing and 900 MW on the existing turbine ~ 1800 MW
  - Will Develop Levelized Bus Bar cost using Capital, non-fuel, O&M and fuel cost

IP12_009561

Next Steps

- Presentation By Sargent and Lundy on June 4, 2010 in Las Vegas.
- Continue Recommended Follow-up on Coal to Gas Conversion
- Work with Generation Sub-Committee

Planning Process For Intermountain Power Project

May 17, 2010

Participants in the Intermountain Power Project (IPP) are cooperating in a broad review of options to support the Project's commitment to remain an important provider of "energy for today and tomorrow."

Emerging climate initiatives and changing needs of IPP's power purchasers present significant challenges and opportunities for the project. Participants in the scoping process are seeking win-win solutions for all purchasers by optimizing the use of IPP's existing and potential resources and by assisting all purchasers in complying with applicable environmental laws and meeting their individual future energy goals.

Project participants have agreed that IPP needs to formulate future resource plans before 2015. Five planning committees have been formed to explore options that may be implemented as soon as the next two years or up to a decade in the future. Committees include:

- **Hub Options** – focused on optimizing the Project's energy, ancillary services, and generation and transmission resources.
- **Generation Options** – focused on development of a Future Generation Plan that will consider a wide range of options for fuel sources, generating technologies, operations optimization, and carbon reduction strategies.
- **Asset Optimization Options** – focused on development of assets and business arrangements to support implementation of the Future Generation Plan.
- **Transmission Options** – focused on development of upgraded or new transmission capacity to support implementation of the Future Generation Plan.
- **Communication Options** – focused on advising stakeholders of Project activities and communicating with the wide variety of entities with an interest in IPP.

About the Intermountain Power Project: *Intermountain Power Agency is a political subdivision of the State of Utah formed in 1977 by 23 Utah municipalities. IPA owns, operates and maintains the Intermountain Power Project, which consists of two 900 MW coal-fueled generating units and switchyard located in Millard County, Utah, and transmission systems through portions of Utah, Nevada and California. Participants in IPP include six Southern California municipalities, 23 Utah municipalities, six Utah Cooperatives, and PacifiCorp. These participants are contractually committed to IPP until 2027.*

TIMETABLE FOR POSSIBLE IPP OPTIONS

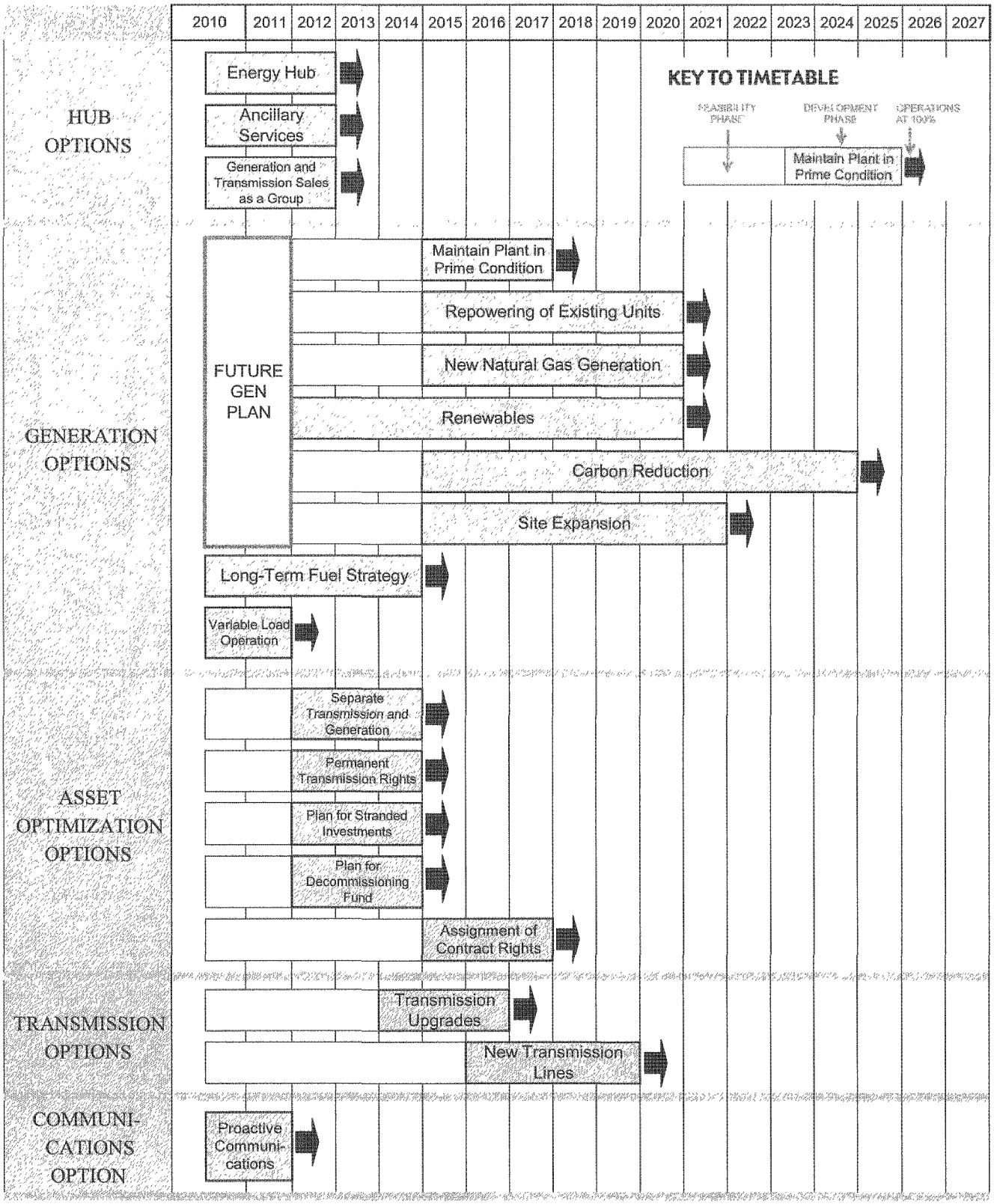

REPRESENTATIVES ON IPP OPTIONS SUB-COMMITTEES

	CO-CHAIR	ORGANIZATION	ROLE	NAME	EMAIL	PHONE
HUB SUBCOMMITTEE		Anaheim	Primary	Graham Bowen	gbowen@anaheim.net	714-765-5261
			Back-up	Charles Guss	cguss@anaheim.net	714-765-4242
		Burbank		Fred LeBlanc	fleblanc@ci.burbank.ca.us	818-238-3760
		Pasadena		Anthony D'Aquila	tdaquila@cityofpasadena.net	626-744-7916
	Co-chair	Los Angeles		Eric Tharp	eric.tharp@ladwp.com	213-367-0286
		Riverside		Gary Nolff	gnolff@riversideca.gov	951-826-5113
		Glendale		Steve Lins	slins@ci.glendale.ca.us	818-548-2136
		PacifiCorp		Ian Andrews	Ian.Andrews@PacifiCorp.com	801-220-4286
		Logan		Russell Fjeldsted	rfjeldsted@msn.com	435-752-0211
		Coops		Curt Winterfeld	cwinterfeld@deseretpower.com	801-619-6500
	Co-chair	Heber		Ray Farrell	farrellelectric@msn.com	435-671-2613
GENERATION SUBCOMMITTEE		Anaheim	Primary	Steve Sciortino	ssciortino@anaheim.net	714-765-5177
			Back-up	Elden Krause	ekrause@anaheim.net	714-765-4923
		Burbank	Primary	Bruno Jeider	bjeider@ci.burbank.ca.us	818-238-3651
			Back-up	James Huffman	rhuffman@ci.burbank.ca.us	818-238-3678
		Pasadena	Primary	Eric Klinkner	eklinkner@cityofpasadena.net	626-744-4478
			Back-up	Gurcharan Bawa	gbawa@cityofpasadena.net	626-744-7598
	Co-chair	Los Angeles		Eric Tharp	eric.tharp@ladwp.com	213-367-0286
		Riverside		Gary Nolff	gnolff@riversideca.gov	951-826-5113
		Glendale		Steve Lins	slins@ci.glendale.ca.us	818-548-2136
	Co-chair	PacifiCorp		Jim Lacey	Jim.Lacey@PacifiCorp.com	801-220-4808
		Logan		Russell Fjeldsted	rfjeldsted@msn.com	435-752-0211
		Coops		Curt Winterfeld	cwinterfeld@deseretpower.com	801-619-6500
		Enterprise		Leon Bowler	melanies76@hotmail.com	435-231-3785
		Murray		Blaine Haacke	bhaacke@murray.utah.gov	801-264-2715
		Ephraim & Fairwiew		Ted Olson	ted.olson@snow.edu	435-283-7533
ASSET OPTIMIZATION SUBCOMMITTEE		Anaheim	Primary	Mark Frazee	mfrazee@anaheim.net	714-765-4131
			Back-up	Graham Bowen	gbowen@anaheim.net	714-765-5251
		Burbank		Bruno Jeider	bjeider@ci.burbank.ca.us	818-238-3651
		Pasadena		Gurcharan Bawa	gbawa@cityofpasadena.net	626-744-7598
	Co-chair	Los Angeles		Eric Tharp	eric.tharp@ladwp.com	213-367-0286
		Riverside		Gary Nolff	gnolff@riversideca.gov	951-826-5113
		Glendale		Steve Lins	slins@ci.glendale.ca.us	818-548-2136
	Co-chair	Coops		Curt Winterfeld	cwinterfeld@deseretpower.com	801-619-6500
		Kaysville		Walt Meacham	waltmeacham@yahoo.com	801-544-4113
		PacifiCorp		Ian Andrews	Ian.Andrews@PacifiCorp.com	801-220-4286
TRANSMISSION SUBCOMMITTEE		Anaheim	Primary	Kelly Nguyen	knguyen@anaheim.net	714-765-4145
			Back-up	Mark Frazee	mfrazee@anaheim.net	714-765-4131
		Burbank		Bruno Jeider	bjeider@ci.burbank.ca.us	818-238-3651
		Pasadena		Gurcharan Bawa	gbawa@cityofpasadena.net	626-744-7598
		Los Angeles		Eric Tharp	eric.tharp@ladwp.com	213-367-0286
	Co-chair	Riverside		Gary Nolff	gnolff@riversideca.gov	951-826-5113
		Glendale		Steve Lins	slins@ci.glendale.ca.us	818-548-2136
		PacifiCorp		Ian Andrews	Ian.Andrews@PacifiCorp.com	801-220-4286
		Coops		Randy Ewell	mwprandy@mwpower.net	775-289-8981
		Enterprise		Leon Bowler	melanies76@hotmail.com	435-231-3785
		Murray		Blaine Haacke	bhaacke@murray.utah.gov	801-264-2715
		Ephraim & Fairwiew		Ted Olson	ted.olson@snow.edu	435-283-7533
	Co-chair	IPA		TBA		
COMMUNICATIONS SUBCOMMITTEE		Anaheim	Primary	Steve Sciortino	ssciortino@anaheim.net	714-765-5177
			Back-up	Elden Krause	ekrause@anaheim.net	714-765-4923
		Burbank	Primary	Lianne McGinley	lmcginley@ci.burbank.ca.us	818-238-3661
			Back-up	Bruno Jeider	bjeider@ci.burbank.ca.us	818-238-3651
		Pasadena		Fred Lyn	flyn@cityofpasadena.net	626-744-7582
		Los Angeles		Eric Tharp	eric.tharp@ladwp.com	213-367-0286
	Co-chair	Riverside		David Wright/Gary Nolff	dwright@riversideca.gov	951-826-5784
		Glendale		Steve Lins	slins@ci.glendale.ca.us	818-548-2136
	Co-chair	Logan		Russell Fjeldsted	rfjeldsted@msn.com	435-752-0211
		Coops		Carl Albrecht	calbrecht@garkaneenergy.com	435-836-2795

NEXT STEPS & MILESTONES

	MAY			JUN		JUL	AUG	
PURCHASERS	LADWP releases IRP							
			Ad-hoc use of approved planning info					
IPPCC / IPA BOARD		Quarterly Meeting May 17						Quarterly Meeting Aug 24
STAFF SUPPORT	IPA establishes URL for committees	OA reports on status of planning May 17	IPA establishes central calendar			IPA conducts critical path analysis		
HUB SUBCOMMITTEE	First meeting due before May 10							
GENERATION SUBCOMMITTEE								
ASSET OPTIMIZATION SUBCOMMITTEE				First meetings due before Jun 9	Draft work plans due before Jun 25		Final work plans and budgets due before Aug 10	Quarterly reports by Co-chairs to IPPCC and IPA Board on Aug 24
TRANSMISSION SUBCOMMITTEE								
COMMUNICATIONS SUBCOMMITTEE	First meeting due before May 16							

IPP Repowering Study Progress Report

IPP Coordinating Committee
March 23, 2010
Las Vegas
Saif Mogri

IP12_009567

Study Schedule

- Presentation by Sargent & Lundy – Mid April time frame
- Coal to Gas Conversion, Combined Cycle and Peakers – Task Completion by March 31, 2010
- Solar and Nuclear Tasks Draft Report Completed

Options Comparison

Analysis	Coal to Gas Conversion	Peakers	Combined Cycle	Solar	Nuclear
Fatal Flaw	Possibly	Possibly	No	No	YES
CO2 Emissions lbs/MWHr	1068	1260	860	0	0
Power Output	915 MW Net	440 MW Net Summer	1018 MW Net Summer	165 MW Net	1000 MW Net
Cost	$14.4 Million/Unit	$ 488 Million $1,100/kW	$1.1 Billion $1,080/kW	$766 Million $4,600/kW	$10 Billion $10,000/kW
Schedule	2 Years	2 Years	4.5 Years	4 Years	10-11 Years
Technology Description	Nozzles, SSH Tubes, etc	Ten LM 6000	Two 2x2x1 GE 7 FA.05	Parabolic Trough	GE ESBWR or Westinghouse AP-1000

IP12_009569

Follow-Up From Findings of Repower Study

- Heat Recovery Steam Generator
- Options to Improve Margin in Coal to Gas Conversion
- Compressed Air Energy Storage
- System Studies with less Coal Generation at Site.