NOTE CO# 3 9/10/82
NOTE CO# 4 10/13/82

SPECIFICATIONS
AND
DOCUMENTS

INTERMOUNTAIN GENERATING STATION
UNITS 1, 2, 3 and 4

INTERMOUNTAIN POWER PROJECT

FLUE GAS WET SCRUBBER
VOLUME I

SPECIFICATION 9255.62.0202

CONTRACT ISSUE

GENERAL ELECTRIC ENVIRONMENTAL SERVICES, INC.
200 North Seventh Street
P. O. Box 360
Lebanon, Pennsylvania 17042-0360

I hereby certify that these specifications were prepared by me or under my direct supervision and that I am a duly Registered Professional Engineer under the laws of the State of Utah.

Donnell R. Wilson

Date 4/27/82 Reg. No. 5540

RECEIVED JUN 18 1982 BECHTEL POWER CORP. I.P.P.

REGISTERED PROFESSIONAL ENGINEER No. 5540 Donnell R. Wilson STATE OF UTAH

BLACK & VEATCH
Consulting Engineers
Kansas City, Missouri

1981

*EPA Request dated Oct 12, 2010, for Information Pursuant to Section 114 . Response #10 of 17 of Appendix B.

INTERMOUNTAIN GENERATING STATION
UNITS 1, 2, 3 AND 4

INTERMOUNTAIN POWER PROJECT

SPECIFICATIONS AND DOCUMENTS
FOR
FLUE GAS WET SCRUBBER

SPECIFICATION 9255.62.0202

TABLE OF CONTENTS

	Page	thru Page
CONTRACT FORMS		
Contract Agreement	CA-1	CA-2
Basis of Contract	BC-1	BC-4
Table 1 - Flue Gas Scrubber Contract Price	1 page	
Table 2 - Flue Gas Scrubber Option Prices	1 page	
Table 3 - Flue Gas Scrubber Optional Adjustment to Contract Price to Delete One Module from Units 3 and 4	1 page	
Table 4 - Flue Gas Scrubber Adjustments to Option Prices to Delete One Module from Units 3 and 4	1 page	
Performance Bond	PFB-1	PFB-2
Labor and Materials Payment Bond	PYB-1	PYB-2
Guarantee Bond	GB-1	GB-2
CONTRACT REGULATIONS		
General Conditions	GC-1	GC-27b
Special Conditions	SC-1	SC-13
SPECIFICATIONS		
Part 1 - GENERAL REQUIREMENTS		
Section		
1A - General Description and Scope of the Work	1A-1	1A-10
1B - General Equipment Specifications	1B-1	1B-23
1C - Engineering Data and Documentation	1C-1	1C-31
Typical Equipment Instruction Book Cover	1 page	
1D - Quality Assurance	1D-1	1D-3a
1E - Electric Motors	1E-1	1E-2

*EPA Request dated Oct 12, 2010, for Information Pursuant to Section 114 . Response #10 of 17 of Appendix B.

	Page	thru Page
Subsections		
1E1 - 460 Volt Integral Horsepower Motors	1E1-1	1E1-11
1E2 - Fractional Horsepower Motors	1E2-1	1E2-3
1F - Valve and Damper Motor Operators	1F-1	1F-5
1G - Shop Structural Welding	1G-1	1G-6
1H - Coatings	1H-1	1H-14
1S - Seismic Design	1S-1	1S-3
Subsections		
1S1 - Seismic Design of Classification E-I Equipment	1S1-1	1S1-2
1S2 - (Not Used)		
1S3 - Seismic Design of Piping Systems	1S3-1	1S3-10
1S4 - Seismic Design of Structures	1S4-1	1S4-6
1S5 - Seismic Design of Architectural Components	1S5-1	1S5-5

Part 2 - EQUIPMENT REQUIREMENTS

Section		
2A - Design Criteria	2A-1	2A-28
2B - Guarantees, Reliability Demonstration and Tests	2B-1	2B-6a
2C - Scrubber Modules	2C-1	2C-4
2D - Limestone Slurry Preparation Equipment	2D-1	2D-6
2E - Tanks	2E-1	2E-2
Subsections		
2E1 - Shop Fabricated Tanks	2E1-1	2E1-4
2E2 - Field Erected Tanks	2E2-1	2E2-4
2F - Mixers	2F-1	2F-3
2G - Pumps	2G-1	2G-3
Subsections		
2G1 - General Service Pumps	2G1-1	
2G2 - Slurry Pumps	2G2-1	2G2-2
2H - Piping	2H-1	2H-6
Subsections		
2H1 - Piping Materials	2H1-1	2H1-8
2H2 - Piping Fabrication	2H2-1	2H2-8
Butt Weld End Preparation Detail	3 pages	
2H3 - Piping Supports	2H3-1	2H3-10
Pipe Support Selection Guide	6 pages	
Hanger Details	5 pages	
2I - Valves	2I-1	2I-7
2J - Mist Eliminators	2J-1	
2K - Ductwork and Expansion Joints	2K-1	2K-8
2L - Dampers	2L-1	2L-5

*EPA Request dated Oct 12, 2010, for Information Pursuant to Section 114 . Response #10 of 17 of Appendix B.

	Page	thru Page
2M - Forced Oxidation System	2M-1	2M-5
2N - Controls and Instrumentation	2N-1	2N-30
2P - Access Provisions	2P-1	2P-6
2Q - Flue Gas Reheaters	2Q-1	2Q-10
Part 3 - ERECTION REQUIREMENTS		
Section		
3A - Scope of Onsite Work	3A-1	3A-9
3B - Construction Schedule	3B-1	3B-5
3C - General Equipment Erection	3C-1	3C-7
3D - Field Structural Welding	3D-1	3D-6
3E - Tank Erection	3E-1	3E-3
3F - Piping Erection	3F-1	3F-15
3G - Ductwork Erection	3G-1	3G-3
3H - Controls and Instrumentation Installation	3H-1	3H-4
3I - Grouting	3I-1	3I-4
3J - Insulation and Lagging	3J-1	3J-9
3K - Gunite	3K-1	3K-3
3L - Start-up	3L-1	3L-4
3M - Linings for Scrubber Modules and Reaction Tanks	3M-1	3M-10
APPENDIX A - PERFORMANCE CURVES	AA-1	
Guarantee Performance Curves:		
Superficial Gas Velocity Versus Flue Gas Flow Rate		
Water Droplet Carryover Versus Flue Gas Flow		
Steam Pressure Loss Versus Flue Gas Flow Rate		
Limestone Consumption Versus Inlet SO_2		
SO_2 Removal Versus Inlet SO_2		
SO_2 Removal Efficiency Versus Flue Gas Flow Rate		
System Operation Versus Boiler Load		
Power Guarantee User's List	4 pages	
BIDDING DOCUMENTS		
Instructions to Bidders	B-1	B-14
Proposal	C-1	C-25
Bid Bond and Power of Attorney	3 pages	
Spare Parts List	5 pages	
Seven Year Replacement Parts List	1 page	
Proposal Data	D-1	D-89

*EPA Request dated Oct 12, 2010, for Information Pursuant to Section 114 . Response #10 of 17 of Appendix B.

	Page thru Page
DRAWINGS (in envelope)	
Arrangement Fabric Filter and Wet Scrubber	DM-0002
Floors and Platforms - Typical Sections and Details	9255-DS-0009

[IPP 9255 WET SCRUBBER 62.0202]
[120481]
TC-4

*EPA Request dated Oct 12, 2010, for Information Pursuant to Section 114 . Response #10 of 17 of Appendix B.

CONTRACT AGREEMENT

THIS CONTRACT AGREEMENT, made and entered into this ~~13~~th day of ~~July~~, 1981, by and between the INTERMOUNTAIN POWER AGENCY, a political subdivision of the State of Utah organized and existing under the Interlocal Co-operation Act, Title 11, Chapter 13, Utah Code Annotated 1953, as amended, hereinafter called the "Owner," and GENERAL ELECTRIC ENVIRONMENTAL SERVICES, INC., a ~~Pennsylvania~~ corporation with its principal office in Lebanon, Pennsylvania, hereinafter called the "Contractor,"

RESOLVES:

The Owner has caused to be prepared, specifications, drawings and other contract documents for the work as herein specified; and

The said Contractor has submitted to the Owner a proposal in accordance with the terms of this Contract Agreement; and

The Owner has determined and declared the aforesaid Contractor to be the best responsible bidder for the said work and has duly awarded to the said Contractor a contract therefor;

AGREEMENTS:

In consideration of the compensation to be paid to the Contractor and of the mutual agreements herein contained, the parties to these presents have agreed and hereby agree, the Owner for itself and its successors, and the Contractor for itself, himself, or themselves, or its, his, or their successors and assigns, or its, his, or their executors and administrators, as follows.

ARTICLE I. That the Contractor shall furnish material, equipment, and erection for the Wet Scrubber including providing miscellaneous services complete as specified and required in accordance with the provisions of the contract documents as defined in Article GC.1 of the GENERAL CONDITIONS, and shall execute and complete all work included in and covered by the Owner's award of this Contract to the said Contractor.

ARTICLE II. That the Owner shall pay to the Contractor for the work and materials embraced in this Contract, and the Contractor will accept as full compensation therefor, the sum (subject to adjustments as provided by this Contract) of ONE HUNDRED THIRTY-FIVE MILLION EIGHT HUNDRED FIFTY THOUSAND SEVEN HUNDRED DOLLARS ($135,850,700.00) for all work covered by and included in this Contract, designated in the foregoing Article I; payment to be made in cash or its equivalent in the manner provided in the specifications attached hereto.

*EPA Request dated Oct 12, 2010, for Information Pursuant to Section 114 . Response #10 of 17 of Appendix B.

ARTICLE III. The Contractor acknowledges that the delivery schedule and completion of erection are of significant importance to the Owner and shall proceed with the specified work and shall conform to the specified schedule. The Contractor shall take any action required to achieve the specified milestones within the approved schedule whether in the Contractor's factory, at the project site, subcontractor's facilities, or equipment supplier's facilities, all at no additional cost to the Owner. The Owner will make no claim for schedule deficiency if such deficiency does not impact the overall project schedule.

IN WITNESS WHEREOF, the parties hereto have executed this Contract Agreement as of the day and year first above written.

INTERMOUNTAIN POWER AGENCY

(SEAL)

Approved

Executive Officer

Secretary

GENERAL ELECTRIC ENVIRONMENTAL SERVICES, INC.

(SEAL)

By PRESIDENT

Attest T F McINERNEY, JR SECRETARY

[IPP 9255 WET SCRUBBER 62.0202]
[120481]
CA-2

*EPA Request dated Oct 12, 2010, for Information Pursuant to Section 114 . Response #10 of 17 of Appendix B.

GENERAL ELECTRIC

EXECUTION OF CONTRACTS AND OTHER INSTRUMENTS

I, Stephen P. Henderson, Attesting Secretary of General Electric Company, do hereby certify that H.R. Hill is Executive Vice President and Sector Executive of General Electric Company, and as such is authorized and empowered by resolution duly adopted on April 23, 1981 by the Board of Directors of General Electric Company to execute on behalf of this Company the attached Guaranty of performance by General Electric Environmental Services, Inc.,

I further certify that this authority of H.R. Hill has not been rescinded or otherwise amended.

WITNESS, my hand and seal of General Electric Company, this 1st day of April, 1982.

Stephen P. Henderson

Attesting Secretary

(SEAL)

*EPA Request dated Oct 12, 2010, for Information Pursuant to Section 114 . Response #10 of 17 of Appendix B.

GUARANTY

General Electric Company, a New York corporation, in consideration of the award by Intermountain Power Agency of Contract 9255.62.0202, Flue Gas Wet Scrubber, to General Electric Environmental Services, Inc., does hereby guaranty unconditionally the full and complete performance of the contract by General Electric Environmental Services, Inc.

GENERAL ELECTRIC COMPANY

By: H. R. Hill
H.R. Hill
Executive Vice President
and Sector Executive

ATTEST:

Stephen P. Henderson
Attesting Secretary

*EPA Request dated Oct 12, 2010, for Information Pursuant to Section 114 . Response #10 of 17 of Appendix B.

PERFORMANCE BOND

KNOW ALL MEN BY THESE PRESENTS that we, GENERAL ELECTRIC ENVIRONMENTAL SERVICES, INC., of Lebanon, Pennsylvania, hereinafter referred to as the "Contractor," and _____, a corporation organized under the laws of the State of _____, and authorized to transact business in the State of Utah, as "Surety," are held and firmly bound unto the INTERMOUNTAIN POWER AGENCY, hereinafter referred to as "Owner," in the penal sum of ONE HUNDRED THIRTY-FIVE MILLION EIGHT HUNDRED FIFTY THOUSAND SEVEN HUNDRED ($135,850,700.00) Dollars, for the payment of which sum, well and truly to be made to the Owner, we bind ourselves and our heirs, executors, administrators, personal representatives, successors and assigns, jointly and severally, by these presents:

WHEREAS, on the 13th day of July, 1981, the Contractor entered into a written contract with the Owner for furnishing materials, supplies, and equipment not furnished by the Owner, construction tools, equipment, and plant, and the performance of all necessary labor, for and in connection with the construction of certain improvements described in the attached contract documents; and

WHEREAS, it was a condition of the contract award by the Owner that these presents be executed by the Contractor and Surety;

NOW THEREFORE, if the Contractor shall, in all particulars, well, truly and faithfully perform its duties, all the undertakings, covenants, terms, guarantees, conditions and agreements of said Contract during the original term thereof, and any extensions thereof which may be granted by the Project Manager, with or without notice to the Surety, and during any guarantee period, and if the Contractor shall satisfy all claims and demands incurred under such Contract, and shall fully indemnify and save harmless the Owner from all costs and damages which it may suffer by reason of failure to do so, and shall reimburse and repay the Owner all outlay and expense which the Owner may incur in making good any default, then this obligation shall be void, otherwise to remain in full force and effect.

THE UNDERSIGNED SURETY, for value received, hereby agrees that no extension of time, change in, addition to, or other modification of the terms of the contract documents or the work to be performed thereunder, shall in any way affect its obligation on this bond, and it does hereby waive notice of such extensions, changes, additions to the contract documents or to the work to be performed thereunder.

*EPA Request dated Oct 12, 2010, for Information Pursuant to Section 114 . Response #10 of 17 of Appendix B.

IP10_002120

IN TESTIMONY WHEREOF, the Contractor has hereunto set his hand and the Surety has caused these presents to be executed in its name and its corporate seal to be affixed by its attorney-in-fact at _____, on this _____ day of _____, 19___.

GENERAL ELECTRIC ENVIRONMENTAL SERVICES, INC. (SEAL)

By _____

_____ (SEAL)
(SURETY COMPANY)

By _____
(Attorney-in-fact)

By _____
(State Representative)

Date of Bond must not be prior to the date of the contract.

Power of attorney must be certified to the same date as the Bond.

Surety's designated mailing address

_____

_____

_____

SPECIMEN ONLY. ORIGINAL BOND CONTAINED IN BOND DOCUMENTS ATTACHMENT.

[IPP 9255 WET SCRUBBER 62.0202]
[120481]
PFB-2

*EPA Request dated Oct 12, 2010, for Information Pursuant to Section 114 . Response #10 of 17 of Appendix B.

LABOR AND MATERIALS

PAYMENT BOND

KNOW ALL MEN BY THESE PRESENTS that we, GENERAL ELECTRIC ENVIRONMENTAL SERVICES, INC. of Lebanon, Pennsylvania, hereinafter referred to as

the "Contractor," and _____,

a corporation organized under the laws of the State of _____, and authorized to transact business in the State of Utah, as "Surety," are held and firmly bound unto the INTERMOUNTAIN POWER AGENCY, hereinafter referred to as "Owner," in the penal sum of FORTY EIGHT MILLION ONE HUNDRED FIFTEEN THOUSAND EIGHT HUNDRED ($48,115,800.00) Dollars, for the payment of which sum, well and truly to be made to the Owner, we bind ourselves and our heirs, executors, administrators, personal representatives, successors and assigns, jointly and severally, by these presents:

WHEREAS, on the 13th day of July, 1981, the Contractor entered into a written contract with the Owner for furnishing materials, supplies, and equipment not furnished by the Owner, construction tools, equipment, and plant, and the performance of all necessary labor, for and in connection with the construction of certain improvements described in the attached contract documents; and

WHEREAS, it was a condition of the contract award by the Owner that these presents be executed by the Contractor and Surety;

NOW THEREFORE, if the Contractor shall promptly make payment to all persons, firms, subcontractors, and corporations furnishing materials for or performing labor in the prosecution of the work provided for in such Contract, and any authorized extension or modification thereof, including all amounts due for materials, lubricants, oil, gasoline, coal and coke, repairs on machinery, equipment and tools, consumed or used in connection with the construction of such work, and all insurance premiums on said work, and for all labor performed in such work, whether by subcontractors or otherwise, then this obligation shall be void, otherwise to remain in full force and effect.

THE UNDERSIGNED SURETY, for value received, hereby agrees that no extension of time, change in, addition to, or other modification of the terms of the contract documents or the work to be performed thereunder, shall in any way affect its obligation on this bond, and it does hereby waive notice of such extensions, changes, or additions to the contract documents or to the work to be performed thereunder.

*EPA Request dated Oct 12, 2010, for Information Pursuant to Section 114 . Response #10 of 17 of Appendix B.

IP10_002122

IN TESTIMONY WHEREOF, the Contractor has hereunto set his hand and the Surety has caused these presents to be executed in its name and its corporate seal to be affixed by its attorney-in-fact at _____, on this _____ day of _____, 19___.

GENERAL ELECTRIC ENVIRONMENTAL SERVICES, INC. (SEAL)

By _____

_____ (SEAL)
(SURETY COMPANY)

By _____
(Attorney-in-fact)

By _____
(State Representative)

Date of Bond must not be prior to the date of the contract.

Power of attorney must be certified to the same date as the Bond.

Surety's designated mailing address

_____

_____

_____

SPECIMEN ONLY. ORIGINAL BOND CONTAINED BOND DOCUMENTS ATTACHMENT.

[IPP 9255 WET SCRUBBER 62.0202]
[120481]
PYB-2

*EPA Request dated Oct 12, 2010, for Information Pursuant to Section 114 . Response #10 of 17 of Appendix B.

GUARANTEE BOND

KNOW ALL MEN BY THESE PRESENTS that we, GENERAL ELECTRIC ENVIRONMENTAL SERVICES, INC., of Lebanon, Pennsylvania, hereinafter referred to as

the "Contractor," and _____,

a corporation organized under the laws of the State of _____, and authorized to transact business in the State of Utah, as "Surety," are held and firmly bound unto the INTERMOUNTAIN POWER AGENCY, hereinafter referred to as "Owner," in the penal sum of FORTY-THREE MILLION EIGHT HUNDRED SIXTY-SEVEN THOUSAND FOUR HUNDRED FIFTY ($43,867,450.00) Dollars, for the payment of which sum, well and truly to be made to the Owner, we bind ourselves and our heirs, executors, administrators, personal representatives, successors and assigns, jointly and severally, by these presents:

WHEREAS, on the 13th day of July, 1981, the Contractor entered into a written contract with the Owner for furnishing materials, supplies, and equipment not furnished by the Owner, construction tools, equipment, and plant, and the performance of all necessary labor, for and in connection with the construction of certain improvements described in the attached contract documents; and

WHEREAS, said Contract includes specific equipment performance guarantees and equipment performance testing requirements; and

WHEREAS, it was a condition of the contract award by the Owner that these presents be executed by the Contractor and Surety;

NOW THEREFORE, if the Contractor shall, in all particulars, well, truly and faithfully demonstrate by objective test results in accordance with the specified testing requirements that the actual equipment performance is in accordance with the equipment performance guarantees specified in said Contract, and if the Contractor shall satisfy all claims and demands incurred by failure of the equipment to fulfill said performance guarantees, and shall fully indemnify and save harmless the Owner from all costs and damages which it may suffer by reason of failure to do so, and shall reimburse and repay the Owner all outlay and expense which the Owner may incur in making good any default, then this obligation shall be void, otherwise to remain in full force and effect.

THE UNDERSIGNED SURETY, for value received, hereby agrees that no extension of time, change in, addition to, or other modification of the terms of the contract documents or the work to be performed thereunder, shall in any way affect its obligation on this bond, and it does hereby

*EPA Request dated Oct 12, 2010, for Information Pursuant to Section 114 . Response #10 of 17 of Appendix B.

IP10_002124

waive notice of such extensions, changes, additions to the contract documents or to the work to be performed thereunder.

IN TESTIMONY WHEREOF, the Contractor has hereunto set his hand and the Surety has caused these presents to be executed in its name and its corporate seal to be affixed by its attorney-in-fact at _____, on this _____ day of _____, 19___.

GENERAL ELECTRIC ENVIRONMENTAL SERVICES, INC. (SEAL)

By _____

_____ (SEAL)
(SURETY COMPANY)

By _____
(Attorney-in-fact)

By _____
(State Representative)

Date of Bond must not be prior to the date of the contract.

Power of attorney must be certified to the same date as the Bond.

Surety's designated mailing address

_____

_____

_____

SPECIMEN ONLY. ORIGINAL BOND CONTAINED IN BOND DOCUMENTS ATTACHMENT.

[IPP 9255 WET SCRUBBER 62.0202]
[120481]
GB-2

*EPA Request dated Oct 12, 2010, for Information Pursuant to Section 114 . Response #10 of 17 of Appendix B.

CONTRACT REGULATIONS

TABLE OF CONTENTS

		Page
GENERAL CONDITIONS		GC-1 thru GC-27b
GC.1	Contract Documents	GC-1
GC.2	Definitions	GC-1
GC.3	Execution of Contract	GC-4
GC.4	Legal Addresses	GC-4
GC.5	Scope and Intent of Contract Documents	GC-5
GC.6	Independent Contractor	GC-5
GC.7	Oral Statements	GC-5
GC.8	Referenced Standards	GC-5
GC.9	Assignment	GC-6
GC.10	No Waiver of Rights	GC-6
GC.11	Authority of the Engineer and the Construction Manager	GC-6
GC.12	Engineering Inspection	GC-7
GC.13	Contractor Default	GC-7
GC.14	Hindrances and Delays	GC-8
GC.15	Suspension of Work	GC-8
GC.16	Delayed Shipment	GC-8
GC.17	Cancellation of Work	GC-9
GC.18	Modifications	GC-9
GC.19	Changes to the Contract	GC-9
	GC.19.1 Contract Price Changes	GC-10
	GC.19.1.1 Increased Price	GC-10
	GC.19.1.2 Decreased Price	GC-12
	GC.19.2 Contract Time Changes	GC-12
GC.20	Laws and Regulations	GC-12
GC.21	Taxes, Permits, and Licenses	GC-12
GC.22	Patents	GC-13
GC.23	Materials and Equipment	GC-13a
GC.24	Guarantee	GC-14
	GC.24.1 Technical Direction and Instructions	GC-14a
GC.25	Owner-furnished Insurance	GC-15
	GC.25.1 Workers' Compensation and Employer's Liability	GC-15
	GC.25.2 Comprehensive General Liability	GC-15
	GC.25.3 Excess Liability	GC-15
	GC.25.4 Certificates and Policies	GC-15
	GC.25.5 Premiums	GC-16
	GC.25.6 Builder's Risk	GC-16
	GC.25.7 Subcontracts	GC-16
	GC.25.8 Inspection of Policies and Exclusion of Costs	GC-16a
	GC.25.9 Termination of Owner-furnished Insurance	GC-17

*EPA Request dated Oct 12, 2010, for Information Pursuant to Section 114 . Response #10 of 17 of Appendix B.

		Page
	GC.25.10 Liabilities and Obligations	GC-17
	GC.25.11 Cooperation with Insurers	GC-17
GC.26	Contractor-furnished Insurance	GC-17
	GC.26.1 Deleted for Contract	
	GC.26.2 Comprehensive Automobile Liability Insurance	GC-18
	GC.26.3 Aircraft Liability	GC-18
	GC.26.4 Equipment Floater	GC-18
	GC.26.5 Liabilities and Obligations	GC-18
	GC.26.6 Deleted for Contract	
GC.27	Indemnity	GC-19
GC.28	Release of Liability	GC-19
GC.29	Claims for Labor and Materials	GC-19
GC.30	Liability of Project Manager	GC-19
GC.31	Estimated Cash Flow	GC-19a
GC.32	Payments	GC-20
	GC.32.1 Engineering and Design	GC-20
	GC.32.2 Equipment and Materials	GC-20a
	GC.32.3 Erection	GC-21
	GC.32.4 Cost Breakdown	GC-21
	GC.32.5 Final Payment	GC-22
	GC.32.6 Equipment and Construction Material Price Adjustment	GC-22
	GC.32.7 Erection Wage Rate Adjustment	GC-23
GC.33	Governing Law	GC-24
GC.34	Equal Employment Opportunity	GC-24
	GC.34.1 Nondiscrimination	GC-24
	GC.34.2 Affirmative Action	GC-26
GC.35	Additional Surety	GC-26
GC.36	Consequential Damages and Limitation of Liability	GC-27
GC.37	Failure to Meet Guaranteed Performance Parameters	GC-27a
GC.38	Contractor-furnished Information	GC-27a
GC.39	Contractor Review of Drawings	GC-27a
GC.40	Owner/Engineer Review of Drawings	GC-27b
SPECIAL CONDITIONS		SC-1 thru SC-13
SC.1	General	SC-1
SC.2	Construction Management	SC-1
SC.3	Contractor's Office at Site of Work	SC-1a
SC.4	Field Records	SC-2
SC.5	Contractor's Supervision at the Site	SC-2
SC.6	Subcontracts	SC-3
SC.7	Relations with Other Contractors	SC-3
SC.8	Methods of Field Operation	SC-3
SC.9	Lines and Grades	SC-4
SC.10	Preservation of Monuments and Stakes	SC-4

*EPA Request dated Oct 12, 2010, for Information Pursuant to Section 114 . Response #10 of 17 of Appendix B.

		Page
SC.11	Protection of Property and Public Liability	SC-4
SC.12	Emergency Protection	SC-5
SC.13	Losses from Natural Causes	SC-5
SC.14	Character of Workmen	SC-5
SC.15	Sunday, Holiday, and Night Work	SC-5
SC.16	Unfavorable Construction Conditions	SC-6
SC.17	Rejected Work and Materials	SC-6
SC.18	Placing Work in Service	SC-6
SC.19	Cleanliness	SC-6
SC.20	Fire Protection	SC-7
SC.21	Security	SC-8
SC.22	Construction Area Limits	SC-9
SC.23	Food Services	SC-9
SC.24	Protection of Work	SC-9
SC.25	Protection of Concrete and Other Finished Surfaces	SC-10
SC.26	Protection of Grating and Stair Treads	SC-10
SC.27	Protection of Electrical Raceway, Cable and Lighting Fixtures	SC-10
SC.28	Repair of Damages	SC-10
SC.29	Independent Testing Laboratory	SC-10
SC.30	Use of Elevators	SC-10
SC.31	Cooperation with Project Manager	SC-11
SC.32	Minor Defects	SC-11
SC.33	Checkout and Initial Operation	SC-11
SC.34	Construction Plant and Temporary Facilities	SC-12
SC.35	Receiving, Handling, and Storage	SC-12
SC.36	Equivalent Materials and Equipment	SC-13
SC.37	Oil Spill Prevention and Control	SC-13

*EPA Request dated Oct 12, 2010, for Information Pursuant to Section 114 . Response #10 of 17 of Appendix B.

GENERAL CONDITIONS

GC.1 CONTRACT DOCUMENTS. It is understood and agreed that the Notice Inviting Proposals, Instructions to Bidders, Proposal, Proposal Data, Contract Agreement, Performance Bond, Labor and Materials Payment Bond, Guarantee Bond, General Conditions, Special Conditions, Specifications, Drawings, Addenda, and Change Orders issued by the Project Manager or the Engineer, and specifications and engineering data furnished by the Contractor and accepted by the Project Manager, are each included in this Contract and the work shall be done in accordance therewith.

GC.2 DEFINITIONS. Words, phrases, or other expressions used in these contract documents shall have meanings as follows.

1. "Contract" or "contract documents" shall include the items enumerated above under CONTRACT DOCUMENTS.

2. "Owner" shall mean the Intermountain Power Agency, a political subdivision of the State of Utah organized and existing under the Interlocal Co-operation Act, Title 11, Chapter 13, Utah Code Annotated 1953, as amended; acting through its Project Manager and its duly authorized agents. All notices, letters, and other communication directed to the Owner shall be addressed and delivered to the Project Manager with the exception that proposals shall be submitted to the Owner when so directed by the submittal article of the Instructions to Bidders.

3. "Project Manager" shall mean the Department of Water and Power of the City of Los Angeles, California, acting as agent for the Owner in the administration of this Contract, and its duly authorized representatives, such representatives acting within the scope of the particular duties entrusted to them in each case. All notices, letters, and other communication directed to the Project Manager shall be addressed and delivered to:

   Project Manager
   Intermountain Power Project
   111 North Hope Street, Room 931
   Los Angeles, California 90051

   Attention: Generating Station Project Engineer

*EPA Request dated Oct 12, 2010, for Information Pursuant to Section 114 . Response #10 of 17 of Appendix B.

IP10_002129

4. "Contractor" shall mean the corporation, company, partnership, firm, or individual who has entered into this Contract, for the performance of the work covered thereby, and its, his, or their duly authorized representatives.

5. "Subcontractor" shall mean and refer only to a corporation, partnership, or individual having a direct contract with the Contractor for performing work covered by these contract documents.

6. "Engineer" shall mean the firm of Black & Veatch, Consulting Engineers, Kansas City, Missouri, or its duly authorized agents, such agents acting within the scope of the particular duties entrusted to them in each case. All notices, letters, and other communication directed to the Engineer shall be addressed and delivered to:

   Black & Veatch, Consulting Engineers
   P. O. Box 8405
   Kansas City, Missouri 64114

   Attention: Intermountain Power Project
   Mr. R. W. Dutton

7. "Construction Manager" shall mean the organization or individual and their duly authorized agents, such agents acting within the scope of the particular duties entrusted to them in each case, designated, appointed, delegated, or otherwise employed to coordinate and otherwise manage the construction work performed by independent contractors at the construction site.

8. "Date of contract," or equivalent words, shall mean the date written in the first paragraph of the Contract Agreement. The date of contract shall be the same date as the date of contract award by the Owner.

9. "Day" or "days," unless herein otherwise expressly defined, shall mean a calendar day or days of 24 hours each.

10. "The work" shall mean the equipment, supplies, materials, labor, and services to be furnished under the contract and the carrying out of all obligations imposed by the contract documents.

*EPA Request dated Oct 12, 2010, for Information Pursuant to Section 114 . Response #10 of 17 of Appendix B.

11. "Drawings" or "plans" shall mean all (a) drawings furnished by the Project Manager as a basis for proposals, (b) supplementary drawings furnished by the Project Manager to clarify and to define in greater detail the intent of the contract drawings and specifications, (c) drawings submitted by the successful bidder with his proposal, provided such drawings are acceptable to the Project Manager, (d) drawings furnished by the Project Manager to the Contractor during the progress of the work, and (e) engineering data and drawings submitted by the Contractor during the progress of the work, provided such drawings are acceptable to the Project Manager.

12. Whenever in these contract documents the words "as ordered," "as directed," "as required," "as permitted," "as allowed," or words or phrases of like import are used, it shall be understood that the order, direction, requirement, permission, or allowance of the Owner, Project Manager, Engineer, or Construction Manager is intended only to the extent of judging compliance with the terms of the contract; none of these terms shall imply the Owner, Project Manager, Engineer, or Construction Manager has any authority or responsibility for supervision of the Contractor's forces or construction operations, such supervision and the sole responsibility therefor being strictly reserved for the Contractor.

13. Similarly the words "approved," "reasonable," "suitable," "acceptable," "proper," "satisfactory," or words of like effect and import, unless otherwise particularly specified herein, shall mean approved, reasonable, suitable, acceptable, proper, or satisfactory in the judgment of the Owner, Project Manager, Engineer, or Construction Manager to the extent provided in (12) above.

14. Whenever in these contract documents the expression "it is understood and agreed" or an expression of like import is used, such expression means the mutual understanding and agreement of the parties executing the Contract Agreement.

15. Whenever in these contract documents the words "furnished by the Owner," "supplied by the Owner," "Owner-furnished," or an expression of similar wording is used, such expression refers to an item or service that

*EPA Request dated Oct 12, 2010, for Information Pursuant to Section 114 . Response #10 of 17 of Appendix B.

IP10_002131

will be supplied or performed under a separate contract which will also be administered by and under the control of the Project Manager. All questions regarding items or services designated as Owner-furnished shall be directed to the Project Manager.

16. "Official acceptance" shall mean the Project Manager's written acceptance of all work performed under this Contract.

17. "Start-up" shall mean the time period required to bring the steam-electric generating unit from an inactive condition, when construction is essentially complete, to the state ready for commercial operation. The start-up period shall include preliminary inspection and checkout of equipment and supporting subsystems; trial operation of supporting equipment and subsystems; initial operation of the complete steam-electric generating unit; operation of the complete unit to obtain data, perform calibration and corrective work; and shutdown, inspection and adjustment prior to obtaining commercial operating status.

18. "Initial operation" shall mean the first integral operation of the complete steam-electric generating unit with subsystems and supporting equipment in service or available for service.

19. "Commercial operation" shall mean the condition of operation in which the complete steam-electric generating unit is officially declared by the Project Manager to be available for continuous operation at variable loads up to and including rated capacity.

GC.3 EXECUTION OF CONTRACT. Counterpart copies of the contract documents will be prepared by the Engineer. All copies shall be dated as of the date of the award of the contract by the Owner and shall then be submitted to the Contractor, and the Contractor shall execute the Contract Agreement, insert executed copies of the required bonds and power of attorney, and submit all copies to the Project Manager who will, as appropriate, transmit the documents to the Owner for execution.

The Owner, upon approval of the execution of the contract documents, will execute all copies, retain one copy, and distribute copies to the Project Manager, Contractor, Surety, Engineer, and Construction Manager.

GC.4 LEGAL ADDRESSES. The business address of the Contractor listed in the Proposal is hereby designated as the place to which all notices, letters, and other communication to the Contractor will be mailed or delivered. As stated in Article GC.2, DEFINITIONS, all notices, letters, and

*EPA Request dated Oct 12, 2010, for Information Pursuant to Section 114 . Response #10 of 17 of Appendix B.

IP10_002132

other communication to the Owner shall be addressed or delivered to the Project Manager. The addresses of the Project Manager and Engineer appearing in Article GC.2, DEFINITIONS, are hereby designated as the places to which all notices, letters, and other communication to the Project Manager and Engineer shall be mailed or delivered. Any party may change his address at any time by an instrument in writing delivered to the other parties.

GC.5 SCOPE AND INTENT OF CONTRACT DOCUMENTS. The various parts of the contract documents are intended to supplement but not necessarily duplicate each other. Any work exhibited in one part and not in another shall be executed as if it had been set forth in all parts, so that the work will be performed according to the Engineer's complete design.

Prior to the time the Contractor begins onsite work, interpretation of the contract documents shall be provided by the Engineer. After the Contractor begins onsite work, interpretation of the contract documents shall be provided by the Construction Manager.

Should anything necessary for a clear understanding of the work be omitted from the contract documents, or should the requirements appear to be in conflict, the Contractor shall secure written instructions from the Engineer or the Construction Manager, as appropriate, before proceeding with the work affected thereby. It is understood and agreed that the work shall be performed according to the true intent of the contract documents.

GC.6 INDEPENDENT CONTRACTOR. The relationship of the Contractor to the Owner shall be that of an independent contractor.

GC.7 ORAL STATEMENTS. It is understood and agreed that the written terms and provisions of this agreement shall supersede all oral statements of representatives or agents of the Owner. Oral statements shall not be effective or be construed as being a part of this Contract.

GC.8 REFERENCED STANDARDS. Reference to the standards or codes of any technical society, organization, or association, or to the laws, ordinances, or codes of governmental authorities, shall mean the latest standard, code, specification, or tentative standard adopted, published, and effective at the date of taking bids, unless specifically stated otherwise in the contract documents.

The specifications, codes, and standards referenced in these contract documents (including addenda, amendments, and errata) shall govern in all cases where references thereto are made. In case of conflict between the referenced specifications, codes, or standards and these contract documents, the latter shall govern to the extent of such difference.

*EPA Request dated Oct 12, 2010, for Information Pursuant to Section 114 . Response #10 of 17 of Appendix B.

IP10_002133

GC.9 ASSIGNMENT. The Contractor shall not assign the work, or any part thereof, without the previous written consent of the Owner, nor shall he assign, by power of attorney or otherwise, any of the money payable under this Contract unless written consent of the Owner has been obtained. No right under this Contract, nor claim for any money due or to become due hereunder shall be asserted against the Owner, or persons acting for the Owner, by reason of any so-called assignment of this Contract or any part thereof, unless such assignment has been authorized by the written consent of the Owner. In case the Contractor is permitted to assign moneys due or to become due under this Contract, the instrument of assignment shall contain a clause subordinating the claim of the assignee to all prior liens for services rendered or materials supplied for the performance of the work.

GC.10 NO WAIVER OF RIGHTS. Neither the inspection by the Owner, Project Manager, Engineer, or Construction Manager or any of their officials, employees, or agents, nor any order by the Owner, Project Manager, Engineer or Construction Manager for payment of money, or any payment for, or acceptance of, the whole or any part of the work by the Owner, Project Manager, Engineer, or Construction Manager nor any extension of time, nor any possession taken by the Owner or Project Manager or their employees, shall operate as a waiver of any provision of this Contract, or of any power herein reserved to the Owner or Project Manager, or any right to damages herein provided, nor shall any waiver of any breach in this Contract be held to be a waiver of any other or subsequent breach.

GC.11 AUTHORITY OF THE ENGINEER AND THE CONSTRUCTION MANAGER. As authorized by the Project Manager, to prevent delays and disputes and to discourage litigation, it is agreed by the parties to this Contract that prior to the time the Contractor begins onsite work the Engineer shall administer the contract and decide all questions in relation to the work. After the Contractor begins onsite work, the Construction Manager shall administer the contract and decide, in consultation with the Engineer where required, all questions in relation to the work. The Engineer, either directly or acting through the Construction Manager, shall make interpretations of the technical and design requirements of the contract documents.

If in the opinion of the Contractor a decision rendered by the Engineer or the Construction Manager is not in accordance with the meaning and intent of the contract, the Contractor may file with the Project Manager, within 30 days after receipt of the decision, a written objection to the decision. Failure to file an objection within the allotted time will be considered acceptance of the Engineer's or Construction Manager's decision and the decision shall become final and conclusive.

The Engineer's or Construction Manager's decision and the filing of the written objection thereto shall be a condition precedent to the right to start action in court.

*EPA Request dated Oct 12, 2010, for Information Pursuant to Section 114 . Response #10 of 17 of Appendix B.

IP10_002134

It is the intent of this agreement that there shall be no delay in the execution of the work, and the decision of the Engineer or Construction Manager as rendered shall be promptly observed.

GC.12 ENGINEERING INSPECTION. The Project Manager may appoint (either directly or through the Engineer or Construction Manager) such inspectors as the Project Manager deems proper to inspect the work for compliance with the contract documents. The Contractor shall furnish all reasonable assistance required by the inspectors for the proper inspection of the work. Should the Contractor object to any interpretation of the contract by an inspector, the Contractor may make written appeal to the Project Manager for a decision.

Inspectors shall have the authority to reject work which is unsatisfactory, faulty, or defective or does not conform to the requirements of the contract documents. Inspection shall not relieve the Contractor from any obligation to construct the work strictly in accordance with the contract documents.

Inspectors shall have the right of access to the Contractor's and his *subcontractors' facilities~~, with arrangements convenient to the Contractor or subcontractor,~~ for the purposes of inspecting the fabrication of the materials and equipment, reviewing quality assurance records, and observing the status of completion of the work. Inspectors shall be provided with fabrication drawings, unpriced purchase orders, specifications issued to subcontractors, and other data as necessary for proper inspection of the work.

GC.13 CONTRACTOR DEFAULT. If the work to be done under this Contract is abandoned by the Contractor; or if this Contract is assigned by him without the written consent of the Owner; or if the Contractor is adjudged bankrupt; or if a general assignment of his assets is made for the benefit of his creditors; or if a receiver is appointed for the Contractor or any of his property; or if at any time the Engineer or Construction Manager certifies in writing to the Project Manager that the performance of the work under this Contract is being unnecessarily delayed, that the **Contractor is materially violating any of the conditions of this Contract, or that he is executing the same in bad faith or otherwise not in accordance with the terms of said contract; or if the work is not substantially completed within the time named for its completion or within the time to which such completion date may be extended; then the Owner may serve written notice upon the Contractor, and his surety if a performance bond has been executed, of said Owner's intention to terminate this Contract/ or any portion of the work. Unless within 15 days after the serving of such notice a satisfactory arrangement is made for continuance, this Con-
***tract or the designated portion thereof shall terminate. ~~Completion of the work by the Owner will not affect or void the guarantee provisions of the contract provided that the work is (a) performed under the technical direction of the Contractor at Owner's expense, (b) erected in accordance~~

*Addendum No. 3
**Negotiated Revision
***Negotiated Revision 120481

*EPA Request dated Oct 12, 2010, for Information Pursuant to Section 114 . Response #10 of 17 of Appendix B.

/*~~with Contractor's reasonable instructions, and (c) that any nonconformances identified by Contractor are corrected by the Owner prior to start-up and testing.~~

In the event of such termination, the Owner shall have the right to take over and complete the work by contract or otherwise, and the Contractor shall be liable to the Owner for all excess cost sustained by the Owner by reason of such prosecution and completion.

**Negotiated Revision
***Negotiated Revision 120481

*EPA Request dated Oct 12, 2010, for Information Pursuant to Section 114 . Response #10 of 17 of Appendix B.

In the event of such termination, if a performance bond has been executed, the surety shall have the right to take over and complete the work, provided that if the surety does not commence performance within *30 days after the written notice to the Contractor and the surety, the Owner may take over the work, as specified in the preceding paragraph, and the Contractor and his surety shall be liable to the Owner for the excess costs sustained by the Owner.

GC.14 HINDRANCES AND DELAYS. The Contractor expressly agrees that in undertaking to complete the work within the time specified, he has made allowances for all hindrances and delays which might usually be expected to occur in performing the work. No claims shall be made by the Contractor for such hindrances and delays.

If the Contractor experiences hindrances and delays which, in his opinion, are not usually to be expected in the performance of the work and which affect the performance of the work, he may request a change in the contract. Such hindrances and delays may include, but not be limited to, acts or failure to act by the Owner, Project Manager, Engineer, Construction Manager, or other contractors employed by the Owner, fires, floods, **labor disputes, epidemics, abnormal weather conditions, or acts of God/ or any other cause beyond the control of the Contractor. Claims by the Contractor for any change in the contract due to such hindrances and delays shall be made in accordance with the requirements of Article GC.19, CHANGES TO THE CONTRACT. The Contractor shall use all reasonable means to minimize the extent of the delay.

GC.15 SUSPENSION OF WORK. The Owner reserves the right to suspend and reinstate execution of the whole or any part of the work without invalidating the provisions of the contract.

Suspension or reinstatement of the work will be by written notice to the Contractor from the Owner or Project Manager.

Suspension of work shall not automatically entitle the Contractor to additional compensation or a change in the contract time; however, the Contractor will be reimbursed for real and unavoidable direct costs incurred by him as a result of such suspension and/or the contract will be extended as required to compensate for any delay due to such suspension. Claims by the Contractor for change of contract time or an adjustment of the contract price, due to work suspensions ordered by the Project Manager shall be made in accordance with the requirements of Article GC.19, CHANGES TO THE CONTRACT. The Contractor shall use all reasonable means to minimize the consequences of such suspension.

GC.16 DELAYED SHIPMENT. The Owner reserves the right to order the Contractor to delay shipment of equipment and materials herein contracted. In the event such a delay is ordered by the Owner or the Project Manager in writing, the Owner will pay the Contractor reasonable and proper extra charges incurred by the Contractor as a result of the delay. Such extra charges shall include storage charges, handling charges, insurance, interest on investment, and transportation charges to the storage facility.

*Addendum No. 3
**Negotiated Revision

*EPA Request dated Oct 12, 2010, for Information Pursuant to Section 114 . Response #10 of 17 of Appendix B.

*GC.17 CANCELLATION OF WORK. The Owner reserves the right for each unit to cancel the unshipped portion of equipment and materials and/or the unfinished portion of the erection work by giving written notice to the Contractor. In the event of cancellation, the Owner will pay the Con-
**tractor reasonable and proper cancellation costs/ including a proportionate share of the contract price for work completed, less any payment made pursuant to the General Conditions article entitled PAYMENTS but not to exceed the applicable cancellation charge set forth in the Contractor's Proposal.

Cancellation of the work shall not constitute the basis for a claim for damages or loss of anticipated profits.

The Contractor shall, after consultation with the Project Manager, take all reasonable steps to minimize the costs related to cancellation. The Contractor shall provide the Project Manager with an accounting of costs claimed, including adequate supporting information, and the Project Manager may, at its expense, audit the claimed costs and supporting information.

***If the Owner elects to cancel pursuant to Article GC.17 because of labor difficulties, the Owner reserves the right and the option at the Owner's convenience to take over the remaining erection of any or all units without invalidating the material portion of the contract or any guarantee under, or referenced in, Article GC.24 provided that the work is (a) erected in accordance with the drawings, specifications and reasonable instructions furnished by the Contractor (b) that any non-conformities identified by the Contractor are corrected by the Owner prior to startup and testing. In the event that Owner exercises this option, the Contractor shall provide all technical advisory services necessary to complete the work, and any additional advisory services requested by the Owner, each at the per diem rates specified in the contract, as adjusted for escalation.

GC.18 MODIFICATIONS. The Contractor shall modify the work whenever so ordered by the Project Manager and such modifications shall not affect the validity of the contract. Modifications may involve changes in the amount of the work to be performed or changes in the contract time for which appropriate changes to the contract will be made.

Contract changes due to modifications shall be made in accordance with the requirements of Article GC.19, CHANGES TO THE CONTRACT.

GC.19 CHANGES TO THE CONTRACT. The contract may be changed only by duly executed change orders issued by the Project Manager.

*Addendum No. 3
**Negotiated Revision
***Negotiated Revision 120481

*EPA Request dated Oct 12, 2010, for Information Pursuant to Section 114 . Response #10 of 17 of Appendix B.

If, in the opinion of the Project Manager or the Contractor, any ~~event~~ proposed improvement or action justifies a change in the contract, either **/party shall initiate with the other party, within 5 days after ~~the party has or should have had knowledge of~~ such ~~event~~ proposed improvement or action, a request for a change to the contract. All documentation required to substantiate the proposed change shall be submitted within a minimum reasonable time after initiating the request for change. Upon the parties reaching agreement regarding the proposed change, the Project Manager will issue a written change order therefor.

Notwithstanding the foregoing provisions requiring duly authorized change orders, in the event agreement has been reached between authorized representatives of the parties regarding the change in the contract pending processing of such change order, the Contractor shall proceed with the work on the basis of written interim authorization from the Project Manager.

If the Contractor claims that any instruction, request, drawing, specifications or other directive or action of the Owner, the Project Manager, the Engineer, or the Construction Manager constitutes a change in the contract, but has not been authorized as such by a change order in writing by the Project Manager, the Contractor shall immediately request a written interim authorization and proceed without delay to perform the

**Negotiated Revision
***Negotiated Revision 120481

*EPA Request dated Oct 12, 2010, for Information Pursuant to Section 114 . Response #10 of 17 of Appendix B.

work in accordance with such authorization. The Contractor shall provide written notice of the claim or dispute to the Construction Manager, Engineer, and the Project Manager within 15 days of the request for interim authorization. The Contractor's failure to give said written notice within the 15 day period shall constitute a waiver and relinquishment of any such claim or dispute. The Project Manager's written interim authorization shall not constitute approval of the claim for increased or decreased work, but shall be a condition precedent to the Contractor's right to receive payment for such work and to the Contractor's right to prosecute or maintain any proceeding to recover for such work.

GC.19.1 Contract Price Changes. The contract price may be changed due to modifications which involve extra work or decreased work; or due to work suspensions, hindrances, and delays over which the Contractor has no control. Claims for changes in the contract price shall conform to the requirements specified herein.

GC.19.1.1 Increased Price. If a change in the contract is required due to work suspensions or hindrances and delays, the contract price will be increased according to agreed lump sums, agreed acceleration costs, or other demonstrable costs submitted by the Contractor and substantiated to the satisfaction of the Project Manager.

If a change in the contract price is required due to a modification which increases the amount of the work, and the added work or any part thereof is of a type and character which can properly and fairly be classified under one or more unit price items of the contract, then the contract price will be increased according to the amount actually done and at the applicable unit price. Otherwise, such work shall be paid for as hereinafter provided.

Contract price changes for modifications involving extra work will be based on agreed lump sums or on agreed unit prices whenever the Project Manager and the Contractor agree upon such prices before the extra work is started; otherwise, payments for extra work will be based on actual direct cost plus the specified percentage allowance.

For the purpose of determining whether proposed extra work will be authorized, or for determining the payment method for extra work, the Contractor shall submit to the Construction Manager, upon request, a detailed cost estimate for proposed extra work. The estimate shall indicate itemized quantities and charges for all elements of direct cost. Charges for the Contractor's and subcontractor's extra profit, extra general superintendence, extra field office expense, and extra overheads shall be indicated as a percentage addition to the total estimated direct cost. Unless otherwise agreed upon by the Contractor and the Project
*Manager, such percentage additions shall be ~~15~~ 20 per cent for the extra work performed by the Contractor's own forces or ~~20~~ 25 per cent for extra work performed by a field subcontractor.

*Negotiated Revision

*EPA Request dated Oct 12, 2010, for Information Pursuant to Section 114 . Response #10 of 17 of Appendix B.

When payment for extra work is based on actual direct cost, the Contrac-
*tor will be paid the actual direct cost plus an allowance of ~~15~~ 20 per cent if the extra work is performed by the Contractor's own forces or ~~20~~ 25 per cent if the extra work is performed by a field subcontractor. The allowance will be paid as full compensation for the Contractor's and field subcontractor's extra profit, extra general superintendence, extra field office expense, extra overheads, and all other elements of extra cost not defined herein as actual direct cost.

The actual direct cost shall include only those extra costs for labor and material expended in direct performance of the extra work and may include the following.

a. The actual payroll costs of all workmen such as laborers, mechanics, craftsmen, and foremen

b. The Contractor's or subcontractor's net cost for materials and supplies

c. The rental charge for vehicles and construction equipment

d. The transportation charges for equipment

e. The charges for extra power, fuel, lubricants, water, and special services

* f. The charges for extra payroll taxes, bond premiums, applicable State Sales and Use Taxes and insurance premiums

* g. Engineering/Design costs

The form in which actual direct cost records are kept, the construction methods, and the type and quantity of equipment used shall be acceptable to the Construction Manager.

Construction equipment which the Contractor has on the jobsite and which is of a type and size suitable for use in performing the extra work shall be used. The hourly rental charges for equipment shall not exceed one-half of one per cent of the latest applicable Associated Equipment Distributors published monthly rental rates and shall apply to only the actual time the equipment is used in performing the extra work.

When extra work requires the use of equipment which the Contractor does not have on the jobsite, the Contractor shall obtain the concurrence of the Construction Manager before renting or otherwise acquiring additional equipment. The rental charges for the additional equipment shall not exceed the latest applicable Associated Equipment Distributors published rental rates.

*Negotiated Revision

*EPA Request dated Oct 12, 2010, for Information Pursuant to Section 114 . Response #10 of 17 of Appendix B.

GC.19.1.2 Decreased Price. If a change in the contract price is required due to a modification which decreases the amount of work, such decrease shall not constitute the basis for a claim for damages or anticipated profits on work affected by such decrease. Where the value of omitted work is not covered by applicable unit prices, the Engineer or the Construction Manager shall determine on an equitable basis the amount of (a) credit due the Owner for contract work not done as a result of an authorized change, (b) allowance to the Contractor for any actual loss incurred in connection with the purchase, delivery, and subsequent disposal of materials or equipment required for use on the work as planned and which could not be used in any part of the work as actually built, and (c) any other adjustment of the contract amount where the method to be used in making such adjustment is not clearly defined in the contract documents.

GC.19.2 Contract Time Changes. The contract time may be changed due to work modifications, hindrances and delays, and work suspensions over which the Contractor has no control.

Contract time will not be changed for delays caused by unfavorable weather or unsuitable ground conditions normally incident to the erection work, inadequate construction force, failure to place timely orders for equipment and materials, or other causes within the control of the Contractor.

GC.20 LAWS AND REGULATIONS. The Contractor shall observe and comply with all Federal, state, and local ordinances, laws, codes, and regulations and all other applicable requirements of authorities having jurisdiction over the work, including the Federal "Safety and Health Regulations for Construction," and shall protect and indemnify the Owner and the Owner's officers and agents, including the Project Manager, the Engineer, and the Construction Manager, against any claim or liability arising from or based upon any failure or alleged failure of the Contractor *to comply with the same. However, if the applicable laws and regulations change after July 13, 1981, any additional expenses incurred by the Contractor for implementation of such laws and regulations will be to the account of the Owner.

GC.21 TAXES, PERMITS, AND LICENSES. Except as specified hereinafter, the Contractor shall pay all taxes that are lawfully assessed in connection with the work and shall obtain and pay for all required licenses, permits, and inspections.

The Owner is exempt from excise taxes on materials and equipment to be incorporated into the completed work under this Contract and such taxes shall not be included in the contract prices. On request, the Project Manager will furnish the Contractor a copy of the Owner's excise tax exemption certificate. Contract prices for equipment and materials to be incorporated into the completed work shall also exclude state sales and use taxes. The Contractor's payment requests shall separately state the amount of applicable sales and use taxes paid by the Contractor on the materials and equipment to be incorporated into the completed work. The Owner will reimburse the Contractor for such taxes.

*Negotiated Revision

*EPA Request dated Oct 12, 2010, for Information Pursuant to Section 114 . Response #10 of 17 of Appendix B.

The contract price for erection shall include all applicable manufacturing, sales, use, and excise taxes and all other taxes assessed against the Contractor's construction plant and equipment used in connection with the erection portion of the work.

The Project Manager will obtain the construction permit if such is required. It shall be the responsibility of the Contractor to obtain and pay for all other licenses, permits, and inspections required for the work.

The Contractor will be compensated for any increase in tax rates, license fees and permit fees and for any new taxes, licenses or permits imposed *after ~~the date of the Proposal~~ July 13, 1981; provided however that this provision shall be limited to sales, use, and excise taxes assessed against the completed work and to licenses and permits required specifically for the proposed work.

GC.22 PATENTS. Royalties and fees for patents covering materials, articles, apparatus, devices, equipment, or processes used in the work, shall be included in the contract amount. The Contractor shall satisfy all demands that may be made at any time for such royalties or fees and he shall be liable for any damages or claims for patent infringements. *The Contractor shall, at his own cost and expense, defend or settle all suits or proceedings that may be instituted against the Owner or the Project Manager for alleged infringement of any patents involved in ~~the~~ Contractor's work and, in case of an award of damages, the Contractor shall pay such award. Such defense or settlement shall be consistent with the requirements of the Charter of the City of Los Angeles ~~and other legal responsibilities of the Owner and Project Manager, prior to the settlement of any patent claim related to this Contract, the terms of such settlement shall be acceptable to the Owner and Project Manager~~ provided, however, that the Contractor shall have no liability to the Owner and the Project Manager under any provision of this article with respect to any claim of patent infringement which is based upon the combination or utilization of the Contractor's equipment with machines or devices not furnished by the Contractor unless such combination is directed by the Contractor.

The Contractor shall have the sole control of the defense and all negotiations for settlement or compromise of any action or claim of any alleged infringement of any patent or any article, process, method, or application used by the Contractor in the designing, fabrication, and delivery of the equipment to the extent that such control is not inconsistent with applicable statutory law, but in any event the Contractor shall have the right to participate fully in such defense. The Owner, the Project Manager, and the Contractor shall mutually agree to any settlement or compromise of such action.

Final payment to the Contractor by the Owner will not be made while any such suit or claim remains unsettled.

*Negotiated Revision

*EPA Request dated Oct 12, 2010, for Information Pursuant to Section 114 . Response #10 of 17 of Appendix B.

GC.23 MATERIALS AND EQUIPMENT. Unless specifically provided otherwise in each case, all materials and equipment furnished for permanent installation in the work shall conform to applicable standard specifica-
*tions in effect as of July 13, 1981 and shall be new, unused, and undamaged when installed or otherwise incorporated in the work. No such material or equipment shall be used by the Contractor for any purpose other than that intended or specified, unless such use is specifically authorized by the Project Manager in each case.

Individual parts shall be manufactured to standard sizes and gages so that repair parts, furnished at any time, can be installed in the field. Like parts of duplicate units shall be interchangeable.

**It is intended that the equipment vendors listed in the technical data section be the primary candidates for furnishing the equipment not manufactured by the Contractor. In the event the Contractor wishes to add to, delete from, and/or substitute vendors as candidates for furnishing such equipment, Contractor will make a written request to the Owner stating the reasons for such modification and the date by which Owner's approval is requested.

The identical procedure shall be implemented for subcontractors and fabricators except that the parties jointly recognize the desirability of maintaining a greater number of qualified candidates for this work than in the case of equipment vendors.

*Negotiated Revision
**Negotiated Revision 120481

*EPA Request dated Oct 12, 2010, for Information Pursuant to Section 114 . Response #10 of 17 of Appendix B.

GC.24 GUARANTEE. The Contractor guarantees that the work herein contracted will be as specified and will be free from defects in design, workmanship, and materials. If within the guarantee period the work fails to meet the provisions of this guarantee, the Contractor shall promptly correct any defects, including nonconformance with the contract documents by adjustment, repair, or replacement of all defective parts or materials.

The guarantee period shall begin on the date of initial operation as defined in the GENERAL CONDITIONS and shall end 18 months thereafter or upon successful completion of the final formal performance guarantee test **whichever is later. The extended guarantee on rubber lining durability is specifically defined in Article 2B.2.12.

Specific performance guarantees and testing requirements are specified in the Equipment Requirements or Erection Requirements parts of the specifications.

The cost of all materials, parts, labor, transportation, supervision, special tools, and supplies required for replacement or repair of parts and for correction of defects shall be paid by the Contractor or by the surety if a performance bond has been executed.

This guarantee shall be extended to cover all repairs and replacements furnished under the guarantee and the period of the guarantee for each such repair or replacement shall be 18 months after installation or com-
*/**pletion~~//except that the extended guarantee for replacement bags shall be 36 months~~

The Contractor will be given an opportunity to confirm the existence of the defect but he shall not delay the correction while making such determination.

If within 10 days after the Project Manager has notified the Contractor of a defect, failure, or abnormality in the work, the Contractor has not started to make the necessary repairs or adjustments, the Project Manager is hereby authorized to make the repairs or adjustments or to order the
*work to be done by a third party, the reasonable cost, under the circumstances, of the work to be paid by the Contractor.

In the event of an emergency where, in the judgment of the Project Manager, delay would cause serious loss or damage, repairs or adjustments may be made by the Project Manager or a third party chosen by the Project Manager without advance notice to the Contractor and the cost of the work shall be paid by the Contractor, or by the surety if a performance bond has been executed.

*The above guarantee shall be subject to the following conditions.

1. Owner will operate and maintain the equipment in accordance with the accepted operation and maintenance instructions furnished by Contractor.

*Negotiated Revision
**Negotiated Revision 120481

*EPA Request dated Oct 12, 2010, for Information Pursuant to Section 114 . Response #10 of 17 of Appendix B.

* 2. Owner will provide notice to Contractor of any defect within the warranty period, and for thirty (30) days thereafter, or any extensions thereof.

3. Owner will obtain Contractor's consent to any significant modification to the equipment, and such consent will not be unreasonably withheld.

The above obligation to repair and/or replace shall be the sole and exclusive remedy for breach of guarantees.

*/**THE FOREGOING ARE CONTRACTOR'S SOLE WARRANTIES EXCLUSIVE OF WARRANTY OF TITLE WITH RESPECT TO THE EQUIPMENT. CONTRACTOR MAKES NO OTHER WARRANTIES OF ANY KIND WHATSOEVER, EXPRESS, IMPLIED OR STATUTORY AND ALL IMPLIED WARRANTIES OF MERCHANTABILITY AND FITNESS FOR A PARTICULAR PURPOSE, WRITTEN OR ORAL ARE HEREBY DISCLAIMED BY THE CONTRACTOR AND EXCLUDED AS A BASIS OF ANY CONTRACT.

In the event operation is delayed prior to final acceptance through no fault of Contractor, Owner shall comply with Contractor's accepted maintenance instructions for extended outage and recommissioning.

GC.24.1 Technical Direction and Instructions. For a period of 18 months after Commercial Operation, instruction manuals, operating manuals and maintenance manuals provided under this Contract shall be free from defects which may impair operation or which could result in damage to the equipment and work furnished by the Contractor or to other equipment or property of the Owner. If the Contractor becomes aware of a defect in

*Negotiated Revision
**Negotiated Revision 120481

*EPA Request dated Oct 12, 2010, for Information Pursuant to Section 114 . Response #10 of 17 of Appendix B.

instructions, the Contractor shall immediately inform the Project Manager of the defect and shall correct the defective instruction as soon as possible.

GC.25 OWNER-FURNISHED INSURANCE. The Owner will furnish certain insurance coverages by providing an Owner Controlled Insurance Program (hereinafter referred to as OCP), for the benefit of all onsite contractors and subcontractors of all tiers who have jobsite employees. The OCP will consist of the following types of insurance with limits as described in this Article GC.25.

GC.25.1 Workers' Compensation and Employer's Liability. The Workers' Compensation insurance will conform to the laws of the State of Utah. The Workers' Compensation insurance will include a U.S. Longshoremen and Harbor Workers Act Endorsement, an All States Endorsement, and the Voluntary Compensation Endorsement. Employer's Liability insurance will have a limit of $1,000,000. The Workers' Compensation policy will be primary insurance and noncontributing with respect to persons directly engaged in performance of work on the jobsite.

GC.25.2 Comprehensive General Liability. The Comprehensive General Liability insurance (excluding Automobile Liability) will provide bodily injury, personal injury and property damage liability coverage, subject to a combined single limit of $1,000,000 per named insured. The coverage will include Blanket Contractual, Contractors' Protective, Products and Completed Operations including Broad Form Property Damage and will have no XCU exclusions. The Completed Operations coverage will remain in force for a period of 2 years, following final acceptance of the work under this Contract.

Annual aggregate limits of $1,000,000 will apply where applicable to each contractor and subcontractor.

The Comprehensive General Liability policy will be primary insurance and noncontributing with any other insurance carried by the Contractor or any of his subcontractors.

GC.25.3 Excess Liability. The Excess Liability insurance (excluding Automobile Liability) will provide bodily injury, personal injury and property damage liability, subject to a combined single limit of $50,000,000 per occurrence and annual aggregate for all contractors and *subcontractors. This excess liability policy shall also be primary insurance and noncontributing with any other insurance carried by the Contractor and his subcontractors.

GC.25.4 Certificates and Policies. The Contractor and his subcontractors will be named insureds on the insurance described in Articles GC.25.1, GC.25.2, and GC.25.3. Prior to the time that work is performed at the jobsite, the insurer will issue certificates of Comprehensive General

*Negotiated Revision

*EPA Request dated Oct 12, 2010, for Information Pursuant to Section 114 . Response #10 of 17 of Appendix B.

Liability and Excess Liability (excluding Automobile Liability) insurance to the Contractor and his subcontractors covering the liabilities of the Contractor or subcontractors, except as otherwise provided in this policy, arising out of injury, loss or damage suffered or incurred at the jobsite

*EPA Request dated Oct 12, 2010, for Information Pursuant to Section 114 . Response #10 of 17 of Appendix B.

and injury, loss or damage occurring elsewhere resulting from operations, activities, incidents or occurrences at the jobsite. The insurer will also issue a Workers' Compensation policy in the name of each contractor and subcontractor.

Inclusion of more than one insured under such insurance shall not operate to impair the rights of one insured against another insured, and the coverages and limits afforded by such insurance shall apply as though a separate policy had been issued to each insured. It shall also be a provision of this Contract that the Insurers shall have no rights of subrogation to any of the named insureds or their associated and/or affiliated companies and/or their subcontractors.

GC.25.5 Premiums. The Contractor or his subcontractors shall not by reason of their inclusion under the insurance provided for by the OCP incur any liability for payment of premium for the OCP insurance. In consideration of the Owner's payment of premium for such insurance, the Contractor and his subcontractors shall assign to the Owner all return premiums, premium refunds, dividends, refunds, discounts or other credits and any other monies due or to become due to it in connection with such insurance. The Contractor and his subcontractors shall execute such other agreements and documents, if any, which may be necessary to give effect to this assignment.

GC.25.6 Builder's Risk. The Owner will provide "All Risk" Builder's *Risk insurance with a limit sufficient to cover values at the then current repair or replacement values, at risk in transit and/or at the jobsite and subject to deductibles to be determined by the Owner. Any loss in excess of the Owner-provided "All Risk" Builder's Risk insurance shall be for the account of the Owner. The first $5,000 of any loss under this insurance shall be for the account of the Contractor or his subcontractor.

Coverage will be provided for property in transit and at the jobsite intended for building, erection, assembly and/or installation. THE POLICY WILL NOT COVER EITHER LEASED PROPERTY OR CONSTRUCTION TYPE TOOLS, EQUIPMENT AND MACHINERY USED FOR CONSTRUCTION AND NOT INTENDED TO FORM A PERMANENT PART OF THE WORK. This "All Risk" Builder's Risk insurance is primary insurance for Contractor's and his subcontractor's onsite operations. The Owner hereby waives his rights of recourse against Contractor and his subcontractors for any loss or damage covered by said insurance.

GC.25.7 Subcontracts. The Contractor shall notify the Owner of the execution of any subcontract with each subcontractor and upon such notice, the subcontractor will be notified by the Owner of the subcontractor's inclusion in the insurance set forth in Articles GC.25.1, GC.25.2, GC.25.3, and GC.25.6. At the time of execution of each subcontract and **as a condition precedent to the ~~subcontractor's and of the Owner's duty to perform~~ commencement of work at the site, the subcontractor shall furnish the Owner a completed application for insurance.

*Negotiated Revision
**Negotiated Revision 120481

*EPA Request dated Oct 12, 2010, for Information Pursuant to Section 114 . Response #10 of 17 of Appendix B.

GC.25.8 Inspection of Policies and Exclusion of Costs. Copies of the policies affording the coverages described in Articles GC.25.1, GC.25.2, GC.25.3, and GC.25.6 will be available for review at the Owner's offices *at the jobsite and at the Project Manager's Office. The policies shall be deemed to be as represented in the aforementioned articles unless written exception is given by the Contractor prior to commencing work at the site. Pending resolution of such exceptions, the Contractor shall proceed with the work.

*Negotiated Revision 120481

*EPA Request dated Oct 12, 2010, for Information Pursuant to Section 114 . Response #10 of 17 of Appendix B.

The Contractor and his subcontractor's contract prices shall exclude all costs of insurances related to the coverages described and provided by the Owner. Should the Contractor or any subcontractor maintain his own insurance, the cost shall not be reimbursed by the Contractor and will not be reimbursed by the Owner.

GC.25.9 Termination of Owner-furnished Insurance. The Owner reserves the option to terminate the OCP or any part thereof. The Owner will give the Contractor and each insured subcontractor 30 days advance notice prior to exercising this option to terminate such insurance and thereafter the Contractor and each subcontractor shall obtain during the duration of his work replacement insurance comparable to that which was terminated. The reasonable cost of such replacement insurance will be reimbursed by the Owner. The Contractor and subcontractors shall provide *the Owner with evidence of such insurance. If the Owner decides this cost to be excessive, the Owner reserves the right to place such insurance on behalf of the Contractor and its subcontractors at the Owner's expense.

GC.25.10 Liabilities and Obligations. The insurance coverages provided by the Owner at its election for the Contractor and his subcontractors are not intended to and shall not in any manner limit or qualify the liabilities and obligations assumed by the Contractor and his subcontractors under this Contract.

GC.25.11 Cooperation with Insurers. The Contractor and his subcontractors shall cooperate with the OCP insurers. An insurance manual outlining the OCP will be furnished in connection with this Contract. The Contractor and his subcontractors shall complete application forms and payroll audit forms and shall follow procedures as outlined in the insurance manual. Insurers of the OCP will provide the services of a safety staff to the Owner and the Contractor and his subcontractors. The Contractor and his subcontractors shall give full cooperation to the safety and/or loss control staff assigned by the Owner or Project Manager and the insurance company.

GC.26 CONTRACTOR-FURNISHED INSURANCE. Except as otherwise specified in this Contract, the Contractor and his subcontractors of any tier will be required at their own expense to maintain in effect at all times during the performance of the work insurance coverages with limits not less than those set forth below with insurers and under forms of policies satisfactory to the Owner. At the time of execution of this Contract and each subcontract, but in any event prior to commencing work at the jobsite, **~~and/as/a/condition/precedent/to/the/Contractor's/or/subcontractor's/duty to/perform/~~ the Contractor or subcontractor shall furnish the Owner with Certificates of Insurance as evidence that policies providing the required coverages and limits of insurance are in full force and effect. The Certificates shall provide not less than 30 days advance notice to be given in writing to the Owner prior to cancellation, termination or alteration of said policies of insurance. All Certificates of Insurance must clearly state that all applicable requirements have been satisfied. Certificates of Insurance for Contractor or subcontractor-furnished

*Negotiated Revision
**Negotiated Revision 120481

*EPA Request dated Oct 12, 2010, for Information Pursuant to Section 114 . Response #10 of 17 of Appendix B.

insurance and notices of any cancellations, terminations and alterations of such policies shall be mailed to the Owner and Project Manager at the addresses listed in Article GC.2.

*EPA Request dated Oct 12, 2010, for Information Pursuant to Section 114 . Response #10 of 17 of Appendix B.

Except as specifically provided for under OWNER-FURNISHED INSURANCE, any other insurance carried by the Owner or Project Manager which may be applicable shall be deemed to be excess insurance and the Contractor's insurance primary for all purposes despite any conflicting provision in the Contractor's policies to the contrary.

*GC.26.1 ~~Contractor's Excess Liability. The Contractor's Excess Liability insurance shall provide bodily injury, personal injury, and property damage liability coverages, subject to a combined single limit of $10,000,000 per occurrence and annual aggregate for the Contractor and his subcontractors.~~

GC.26.2 Comprehensive Automobile Liability Insurance. The Comprehensive Automobile Liability and/or Contractor's Excess Liability policy(ies) shall include coverages for liability arising out of the use of owned, nonowned or hired automobiles for performance of the work. As used herein, the term "automobile" means vehicles licensed or required to be licensed under the Utah vehicle code. Such insurance shall be endorsed to affirm that it is primary. The Project Manager, the Owner, and their agents, directors, officers and employees shall be named as additional insureds with respect to the Contractor's and his subcontractors' use of automobiles in performance of the work.

The liability limits shall not be less than:

*	Bodily injury and property damage	Combined single limit of ~~$3,000,000~~ $15,000,000 each occurrence

GC.26.3 Aircraft Liability. If the Contractor or his subcontractors use owned, chartered, leased or hired aircraft in their operations, the Contractor and his subcontractors shall maintain aircraft bodily injury and property damage liability insurance with a combined single limit of at least $10,000,000.

GC.26.4 Equipment Floater. Equipment Floater insurance shall be of the "All Risk" type and shall have a limit of $500,000 per occurrence covering owned, hired, or furnished equipment used by the Contractor and his sub-
*/**contractors. In the event Contractor elects to self-insure for loss or damage to such owned, hired or furnished equipment, then the Contractor shall have all risk of loss and waives all rights of recourse, including right of recourse for negligence, against Owner, Project Manager, Construction Manager, and Engineer and other contractors and their subcontractors for any loss or damage to said equipment.

GC.26.5 Liabilities and Obligations. The foregoing requirements as to types, limits and Contractor's or Owner's approval of insurance coverage to be maintained by the Contractor and his subcontractors are not intended to and shall not in any manner limit or qualify the liabilities and obligations assumed by the Contractor and his subcontractors under this Contract.

*Negotiated Revision
**Negotiated Revision 120481

*EPA Request dated Oct 12, 2010, for Information Pursuant to Section 114 . Response #10 of 17 of Appendix B.

*GC.26.6 Waiver of Subrogation. The Contractor and his subcontractors shall require their insurance carriers to waive all rights of subrogation against the Project Manager, the Owner, their directors, officers, agents and employees and against other contractors and subcontractors.

*Negotiated Revision

*EPA Request dated Oct 12, 2010, for Information Pursuant to Section 114 . Response #10 of 17 of Appendix B.

GC.27 INDEMNITY. The Contractor undertakes and agrees to defend, indemnify and hold harmless the Owner, Project Manager, Construction Manager, and Engineer and any and all of their officers, agents, employees, assigns, and successors in interest from and against all suits and causes of action, claims, loss, demands, expense, including, but not limited to, attorney's fees and costs of litigation, damage or liability of any nature whatsoever, for death or injury to any person, including Contractor's employees and agents, or damage or destruction to any property of either party hereto or third persons in any manner arising by reason of or incident to the performance of this Contract on the part of the Contractor, whether or not contributed to by any act or omission, active or passive, negligent or otherwise, except for sole negligence of the Owner, Project Manager, Construction Manager, or Engineer, or any of their officers, agents, or employees.

*GC.28 RELEASE OF LIABILITY. ~~Acceptance by the Contractor of the final payment shall be a release to the Owner and every officer and agent thereof, from all claims and liability hereunder for any further payment for the work, and for any liens or claims for liens by Contractor or his vendors, materialmen, or subcontractors.~~ Acceptance by the Contractor of the final payment shall be a release to the Owner and every officer and agent thereof, from all claims and liability hereunder for any further payment for the work, and for any liens or claims for liens by Contractor or his vendors, materialmen, or subcontractors.

GC.29 CLAIMS FOR LABOR AND MATERIALS. The Contractor shall indemnify and save harmless the Owner and every officer and agent thereof, from all claims for labor and materials furnished under this Contract. When requested by the Project Manager, the Contractor shall submit satisfactory evidence that all persons, firms, or corporations who have done work or furnished materials under this Contract, for which the Owner may become legally liable, have been fully paid or satisfactorily secured. In case such evidence is not furnished or is not satisfactory, an amount will be retained from money due the Contractor which in addition to any other sums that may be retained will be sufficient, in the opinion of the Project Manager, to liquidate all such claims. Such sum will be retained until the claims as aforesaid are fully settled or satisfactorily secured.

GC.30 LIABILITY OF PROJECT MANAGER. It is understood and agreed that the Owner shall be the party solely liable to the Contractor for payments under this Contract and for any breaches, defaults, or for any torts in the performance of this Contract by the Owner or the Project Manager or any officers, employees, or agents thereof, and the Contractor hereby expressly covenants and agrees that no suit shall be brought by the Contractor against the Project Manager or its officers, employees, or agents or any of the purchasers of power from the Owner but that all rights or remedies that the Contractor may have or that may arise shall be asserted by the Contractor solely against the Owner.

*Negotiated Revision

*EPA Request dated Oct 12, 2010, for Information Pursuant to Section 114 . Response #10 of 17 of Appendix B.

GC.31 ESTIMATED CASH FLOW. Within 30 days after award of the contract, the Contractor shall submit to the Project Manager and Engineer estimated cash flow requirements. This estimate shall be updated whenever the Contractor anticipates any significant changes in cash flow requirements.

*EPA Request dated Oct 12, 2010, for Information Pursuant to Section 114 . Response #10 of 17 of Appendix B.

The Contractor's cash flow projection shall be prepared to the same level of detail as his cost breakdown as specified in Article GC.32.4.

In addition to the cash flow projection, the Contractor will be required to prepare "S" curves which plot his anticipated earned labor dollars on a monthly basis during the life of the erection portion of the contract.

Forms for preparing both the cash flow projection and earned dollar "S" curves will be provided to the Contractor.

GC.32 PAYMENTS. Prior to the time the Contractor begins onsite work, the Engineer will determine the quantities of work to be paid for under the contract and prepare any required payment certificates. After the Contractor begins onsite work, the Construction Manager will determine the quantities of work to be paid for under the contract and prepare any required payment certificates. Payment will be based on the Contractor's monthly progress payment request and accompanied by the Construction Manager's or the Engineer's payment certificate which the Construction Manager or the Engineer will prepare and submit to the Owner in accordance with the following schedules. The payment certificate shall not
***constitute approval or acceptance of any part of the work~~, except as a basis for the Owner's official acceptance~~ and shall not relieve the Contractor from any responsibility or liability essential or related to the fulfillment of this Contract.

The Engineer or Construction Manager may refuse to approve the whole or any part of any Contractor's monthly progress payment request, which, in his opinion, is incorrect.

**GC.32.1 Engineering and Design. ~~When applicable, and submitted on the monthly progress payment request form, the contract amount for engineering and design will be paid within 30 days after receipt of all certified engineering data specified to be submitted in Sections 1A and 1C, except Instruction Manals, based upon Contractor certification that all required engineering data has been submitted and Engineer certification that all such data has been received.~~ Payments for engineering and design will be made periodically as certified data is submitted in four (4) phases during the first twelve (12) months of the contract. Completion of the work under each phase shall release a payment to the Contractor equal to the percentages of C.1.1.1 listed below. This payment plan shall be in accordance with Article GC.40.

***Notwithstanding the following schedule, any Contractor drawing or tech-
nical submittal which is dependent upon the type or vendor of the analog
control system and/or programmable controller, as defined in the Options
****section of the Contract, shall be due 120 days (analog dependent data)
and 180 days (programmable controller dependent data) after the Owner's
official exercise of the appropriate option(s). In order to maintain the
contract equipment delivery and completion dates, the options for the

**Negotiated Revision
***Negotiated Revision 120481
****Negotiated Revision 011382

*EPA Request dated Oct 12, 2010, for Information Pursuant to Section 114 . Response #10 of 17 of Appendix B.

***analog control system and programmable controller shall be exercised by the Owner on or before October 1, 1982 and May 1, 1982, respectively. For payment purposes, such drawings and technical data affected shall be excluded from the appropriate phase for payment and Owner shall pay the applicable payment provided all non-affected information within the phase is submitted.

** CERTIFIED DRAWING PHASES

	PHASE	COMPLETION (Month After Contract Award)	PAYMENT (% of C.1.1.1)
I.	Process Flow Diagram Material Balances	3	20%
***	~~FF/General/Arrangements~~ ~~FF/Interface/Details~~ ~~FF/Loading/Diagrams~~		
**II.	~~FGD~~ Interface Details ~~FGD~~ General Arrangements ~~FGD~~ Loading Diagrams	6	40%
***	~~FF/Auxiliary/Equipment~~ ~~FGD~~ Mechanical Equipment		
**III.	Piping Drawings Ductwork Drawings P & I Diagrams Insulation & Lagging Drawings Elementary Schematics Electrical One Lines Electrical/Control Arrangements	10	20%
***	Structural Steel Drawings		
**IV.	Control Logics Data Sheets/Instrumentation Cabinet and Panel Layouts	12	20%

GC.32.2 Equipment and Materials. Payment for equipment and materials delivered will be made in accordance with the following schedule.

***100% ~~80%~~ of the price of complete, integral units or assemblies of equipment or material delivered at the jobsite each
* month will be paid to the Contractor by the Owner ~~by~~ on or before the 25th day of the following month based on the Contractor's monthly progress payment request and the Engineer's payment certificate.

*Addendum No. 3
**Negotiated Revision
***Negotiated Revision 120481

*EPA Request dated Oct 12, 2010, for Information Pursuant to Section 114 . Response #10 of 17 of Appendix B.

*** 3% will be paid upon satisfactory completion of the initial formal performance guarantee test;

3% will be retained and paid according to the provisions of Article GC.32.5 entitled Final Payment;

***/A letter of credit in a form acceptable to the Project Manager shall be
****furnished by the Contractor prior to the time the first payment is due in the amount of 10 per cent of the adjusted contract price payments by the Owner to serve as Owner's retention. The letter of credit will be reduced in value by 30 per cent upon satisfactory completion of the initial Formal Performance Guarantee Test; and cancelled upon satisfactory completion of the Formal Performance Guarantee Test for each unit;

The letter of credit shall be reduced and cancelled in accordance with the provisions of Article GC.32.5 entitled Final Payment.

***Negotiated Revision 120481
****Negotiated Revision 011382

*EPA Request dated Oct 12, 2010, for Information Pursuant to Section 114 . Response #10 of 17 of Appendix B.

GC.32.3 Erection. Payment for erection work will be made in accordance with the following schedule.

On or about the first day of each month, the Contractor shall submit an estimate of the value of the erection work done during the previous calendar month. Based upon agreement with the Construction Manager on the estimated value of work completed, the Contractor shall prepare and submit his monthly progress payment request. As determined by the Construction Manager, the estimated cost of repairing, replacing, or rebuilding any part of the work or replacing materials which do not conform to the contract documents will be deducted from the estimated value.

All monthly progress payment requests for erection work shall separately identify all sales and use taxes paid on goods and services required for the erection work.

The Contractor shall furnish to the Construction Manager such detailed information as the Construction Manager may request to aid in the verification of monthly estimates for erection work. The Owner will pay to the Contractor, based on the monthly progress payment request and the Construction Manager's payment certificate, by the 25th day of the month, *~~90~~ 100 per cent of the estimated value of the erection work performed to *date of invoice, less any previous payments. ~~/Ten per cent of the estimated value will be retained and paid according to the provisions of~~ */**~~Article GC.32.5 entitled Final Payment/~~ A letter of credit in a form **acceptable to the Project Manager shall be furnished prior to the time payment is due by the Contractor in the amount of 10 per cent of the **~~adjusted contract price~~ payments by the Owner to serve as Owner's retention. ~~The letter of credit will be reduced in value by 50 per cent upon the satisfactory completion of the Initial Formal Performance Guarantee Test/ and cancelled upon satisfactory completion of the Formal Performance Guarantee Test for each unit.~~ The letter of credit shall be reduced and cancelled in accordance with the provisions of Article GC.32.5 entitled Final Payment.

GC.32.4 Cost Breakdown. The Contractor shall prepare and submit a detailed schedule of work items and associated dollar values, aggregating to the contract price. These prices shall be used for calculation of progress payments only and shall not be used in calculations of contract amendments. The schedule shall subdivide the work into component parts in sufficient detail to serve as a basis for computing progress payments during construction. The value of equipment and materials delivered to the site shall be listed separately from the cost of their installation. If such values are not separately listed, no payment will be made for equipment or materials until they are installed, or payment will be made only in the amount of actual vendor invoice, in which case the Contractor shall keep a running record of the invoice value of material in storage. Insurance and mobilization expenses may be listed separately. The cost breakdown shall be revised, if required, and must be acceptable to the Engineer prior to preparing and processing the progress payment request. Contractor shall submit data as required by the Engineer to substantiate the amounts shown in the cost breakdown.

*Negotiated Revision 120481
**Negotiated Revision 011382

*EPA Request dated Oct 12, 2010, for Information Pursuant to Section 114 . Response #10 of 17 of Appendix B.

The cost breakdown shall be in accordance with the Owner's system of accounts which has been designed in accordance with the uniform system of accounts prescribed by the Federal Energy Regulatory Commission (formerly Federal Power Commission).

[IPP 9255 WET SCRUBBER 62.0202]
[120481]
GC-21a

*EPA Request dated Oct 12, 2010, for Information Pursuant to Section 114 . Response #10 of 17 of Appendix B.

The sum of the items listed in the Contractor's price breakdown shall equal the contract lump sum price or prices. Overhead and profit shall not be listed as separate items.

***GC.32.5 Final Payment. ~~One-half of the unpaid balance of payment for erection work will be paid upon satisfactory completion of the initial formal performance guarantee test.~~

***~~The remaining unpaid balance of the total equipment and materials and erection contract price adjusted according to any provision of the contract will be due and payable after successful completion of the final formal performance guarantee test and will be paid within 30 days after receipt of the Contractor's final monthly progress payment request, the Construction Manager's final payment certificate and the Project Manager's official acceptance of the work.~~

***Cancellation of the balance of the letter of credit applicable to a unit shall constitute final payment for such unit.

The letter of credit will be reduced in value by 50 per cent of the balance applicable to a unit upon satisfactory completion of the initial formal performance guarantee test for such unit. Upon satisfactory completion of the final formal performance guarantee test and the Project Manager's official acceptance of the work for a unit, the balance of the letter of credit applicable to such unit shall be cancelled. Within 10 days after receipt of Contractor's request, the Owner will notify the issuer of the letter of credit that the letter of credit shall be reduced as described above.

Except as otherwise limited by the requirements for performance testing, final payment for equipment and materials will not be later than 365 days after complete delivery, providing the equipment and materials are in accordance with the contract documents as far as can be determined.

*/***~~In the event that the Initial Formal Performance Guarantee Tests and/or the Formal Performance Guarantee tests for any unit are delayed through no fault of the Contractor beyond 60 days and 14 months respectively from commercial operation, then upon establishing an irrevocable letter of credit in a form acceptable to the Owner and in an amount equal to the applicable retention for the unit affected, the retention shall be released to the Contractor. The letter of credit shall be cancelled upon successful completion of the applicable performance tests.~~

***GC.32.6 Equipment And Construction Material Price Adjustment. If the equipment portion of the contract price or the construction material portion of the erection price is subject to adjustment, the Contractor shall submit a separate invoice for the amount of the adjustments, to the equipment price and the construction material price. ~~on which the complete equipment price adjustment calculation is shown.~~ Such invoices shall show the complete price adjustment calculations.

*Negotiated Revision
**Negotiated Revision 120481
***Negotiated Revision 011382

*EPA Request dated Oct 12, 2010, for Information Pursuant to Section 114 . Response #10 of 17 of Appendix B.

If an index is revalued or superseded by the issuing agency during the period of application under this Contract, such as may occur with a change in basis of the index, the method used to account for the revaluation or the use of a successor or alternate index shall be subject to approval by the Project Manager.

Payment for the net amount of adjustment will be made on the same basis
**as stipulated above for other equipment and materials payments. ~~provided the indices used have been officially published and the adjustment approved by the Project Manager. Otherwise, payment will be delayed until the indices have been officially published.~~

For the material portion of the equipment price, the value of the end ~~index~~ indexes used for adjustment shall be ~~that value~~ those values first published for the date of beginning of fabrication or manufacture or the
*/**receipt of the materials ~~by the Contractor~~ in the field, whichever is later.

For the shop labor portion of the equipment price, the value of the end index used for adjustment shall be the average of all index values applicable to the period of manufacture beginning with the start of manufacture and ending with the completion of manufacture. If the work under this Contract involves manufacture over an extended period of time with partial shipments to the Owner during this period, the end index for work shipped shall be calculated using the actual date of shipment or speci
*fied date of shipment, whichever is ~~later~~ earlier, not the date of com pletion of all shipments under this Contract.

**Prior to the time that an end index is officially published, an estimated index value shall be used for the calculation of price adjustments. The estimated index value shall be determined on the basis of the average increase or decrease in the last three officially published monthly values for such index that are available at the time the price adjustment calculation is performed. In March of each year, all price adjustments based upon estimated index values shall be reviewed by the Contractor and the Project Manager and the price adjustment calculations based upon estimated index values during the previous year shall be performed using the officially published index values. Any increase or decrease in the total price adjustment resulting from a comparison of the calculations based upon estimated and official index values shall be submitted on a separate adjustment invoice.

*Negotiated Revision
**Negotiated Revision 011382

*EPA Request dated Oct 12, 2010, for Information Pursuant to Section 114 . Response #10 of 17 of Appendix B.

The equipment price adjustment shall be determined by multiplying the applicable portion of the contract price by the ratio of the change in the index (end index value - base index value) to the base index value.

*The construction material or lining material price adjustment shall be determined by multiplying the amount of the construction material or lining material portion of the erection price invoiced for a particular month by the ratio of the change in the index (end index value for such month minus the base index value) to the base index value. The agreed construction material or lining material portion of the erection price is ~~43/3/per/cent/~~ 30 per cent and 12 per cent respectively.

The application of the PPI-07 and Code 112 indexes to determine price adjustment shall recognize the construction material or lining material actually installed each month.

GC.32.7 Erection Wage Rate Adjustment. The provisions of this article shall apply only if this Contract is subject to craft wage rate adjustment; this article is not applicable to a firm price erection contract.

Adjustment shall be applied to the contract price only to compensate the Contractor for those changes in his direct labor costs occurring as a result of new craft labor contracts coming into effect upon the expiration of current craft labor contracts. The erection portion of the base contract price shall be based on craft labor wage rates required under current craft labor contracts. Adjustment shall apply only to craft labor rates and only to that portion of the craft's work remaining to be accomplished after the expiration of the current contract.

After erection work begins, as each new craft labor contract becomes effective, the Contractor shall submit a schedule of the new labor rates, calculations of the proposed adjustment, and a separate form which will be used for invoicing related to the adjustment. If the expiration date for any new labor contract is prior to the scheduled completion date for the work to be performed by that craft, the Contractor shall also submit a new "Percentage After Expiration" which will apply when future contract revisions are made to cover changes in the wage rates. Progress payments for adjustment costs will not be made until the data submitted is approved by the Project Manager and a change order issued therefor. Progress payments for adjustment amounts will be made on the same basis as payments for the base contract.

The contract price adjustment for each craft classification requiring adjustment shall be calculated in accordance with the following equation.

$$NCC = BCEP \times \frac{\%\ C}{100} \times \frac{\%\ AE}{100} \times \frac{NWR}{BWR} - BCEP \times \frac{\%\ C}{100} \times \frac{\%\ AE}{100}$$

*Negotiated Revision 011382

*EPA Request dated Oct 12, 2010, for Information Pursuant to Section 114 . Response #10 of 17 of Appendix B.

The terms used in the above equation shall have the following meanings.

"NCC" = Net Contract Change. The difference between the Base Contract Erection Price and the erection portion of the contract price adjusted for craft wage rate changes

"BCEP" = Base Contract Erection Price. The erection portion of the contract price stated in the Contract Agreement

"% C" = Percentage of Contract. The percentage of the base contract erection price which accounts for the direct labor costs of the particular craft for which adjustment is being calculated, as stated in the Proposal Data section of the Contractor's proposal or as otherwise agreed to by the Project Manager

*EPA Request dated Oct 12, 2010, for Information Pursuant to Section 114 . Response #10 of 17 of Appendix B.

"% AE" = Percentage After Expiration. The portion of the particnlar craft's work remaining to be performed after the current contract expires, as stated in the Proposal Data section of the Contractor's proposal or as otherwise agreed to by the Project Manager

"NWR" = New Wage Rate. The labor wage rate required under the new labor contract

"BWR" = Base Wage Rate. The labor wage rate for the particular craft at the time of expiration of the current labor contract, as stated in the Proposal Data section of the Contractor's proposal

Other terms used in this article are defined as follows.

"Current Contract" shall mean the craft labor contract in effect at the time established by the Project Manager for submittal of proposals for the work under this Contract.

"Labor Wage Rate" or "Direct Labor Cost" shall include the base labor wage rate plus fringe benefits for a journeyman as required under the craft labor contract.

If craft labor erection wage rate adjustment is applicable to any change order to this Contract, the adjustment shall be computed by the above formula using the values appropriate to that change order.

GC.33 GOVERNING LAW. This Contract shall be governed by the laws of the State of Utah. The venue of any action, legal or equitable, having as its basis the enforcement and/or interpretations of this Contract shall be the State of Utah.

GC.34 EQUAL EMPLOYMENT OPPORTUNITY.

GC.34.1 Nondiscrimination. During the performance of this Contract, the Contractor shall conform to the following nondiscrimination regulations.

The Contractor shall not discriminate against any employee or applicant for employment because of race, religion, color, national origin, ancestry, sex, age, or physical handicap. The Contractor shall take affirmative action to ensure that applicants are employed, and that employees are treated during employment, without regard to their race, religion, color, national origin, ancestry, sex, age, or physical handicap. Such action shall include, but not be limited to, the following: employment, upgrading, demotion, or transfer; recruitment or recruitment advertising; layoff or termination; rates of pay or other forms of compensatiou; and selection for training, including apprenticeship. The Contractor shall post in conspicuous places, available to employees and applicants for employment, notices to be provided by the Project Manager setting forth the provisions of this nondiscrimination article.

*EPA Request dated Oct 12, 2010, for Information Pursuant to Section 114 . Response #10 of 17 of Appendix B.

The Contractor shall, in all solicitations or advertisements for employees placed by or on behalf of the Contractor, state that all qualified applicants will receive consideration for employment without regard to race, religion, color, national origin, ancestry, sex, age, or physical handicap.

The Contractor shall send to each labor union or each representative of workers with which the Contractor has a collective bargaining agreement or other contract or understanding a notice, to be provided by the Project Manager, advising the said labor union or worker's representative of the Contractor's commitments under this article and shall post copies of the notice in conspicuous places available to employees and applicants for employment.

The Contractor shall comply with all provisions of Executive Order No. 11246 of September 24, 1965, and of the rules, regulations, and relevant orders of the Secretary of Labor.

The Contractor shall furnish all information and reports required by Executive Order No. 11246 of September 24, 1965, as amended, and by the rules, regulations, and orders of the Secretary of Labor, or pursuant thereto, and shall permit access to its books, records, and accounts by the Project Manager and the Secretary of Labor for purposes of investigation to ascertain compliance with such rules, regulations, and orders.

In the event of the Contractor's noncompliance with the nondiscrimination articles of this Contract, or with any of the said rules, regulations, or orders, this Contract may be canceled, terminated or suspended in whole or in part and the Contractor may be declared ineligible for further Government contracts in accordance with procedures authorized in Executive Order No. 11246 of September 24, 1965, as amended, and such other sanctions may be imposed and remedies invoked as provided in the said Executive Order or by rule, regulation, or order of the Secretary of Labor, or as otherwise provided by law.

The Contractor shall include the provisions of this nondiscrimination Article GC.34.1 in every subcontract or purchase order unless exempted by rules, regulations, or orders of the Secretary of Labor issued pursuant to Section 204 of Executive Order No. 11246 of September 24, 1965, so that such provisions will be binding upon each subcontractor or supplier. The Contractor shall take such action with respect to any subcontract or purchase order as the Project Manager may direct as a means of enforcing such provisions, including sanctions for noncompliance; provided, however, that in the event the Contractor becomes involved in, or is threatened with, litigation with a subcontractor or supplier as a result of such direction by the Project Manager, the Contractor may request the United States and the Owner to enter into such litigation to protect the interests of the United States and of the Owner.

*EPA Request dated Oct 12, 2010, for Information Pursuant to Section 114 . Response #10 of 17 of Appendix B.

GC.34.2 Affirmative Action. The Owner has received a right-of-way grant for the plant site and transmission line from the United States Bureau of Land Management. As a condition of that grant, all contractors and subcontractors for the Intermountain Power Project are required to abide by the following affirmative action regulations.

The Contractor shall not exclude, on the grounds of race, creed, color, national origin, religion, age or sex, any person from participating in employment and procurement activity connected with this Contract, and to ensure against such exclusion, the Contractor shall develop and submit to the Authorized Officer of the Bureau of Land Management specific goals and timetables with respect to minority and female participation in employment and procurement activity connected with this Contract as may be required by the Authorized Officer. The Contractor and each of his contractors and subcontractors shall take affirmative action to utilize business enterprises owned and controlled by minorities or women in his procurement connected with this Contract. The Contractor shall post in conspicuous places on his premises which are available to his contractors, subcontractors, employees, or other interested individuals notices which set forth affirmative action terms, and shall notify interested individuals such as bidders, contractors, purchasers, and labor unions or representatives of workers with whom he has collective bargaining agreements, of the Contractor's affirmative action obligations. The Contractor and each of his contractors and subcontractors shall furnish all information and reports required by the Authorized Officer under the terms of this affirmative action Article GC.34.2 and shall permit access to his facilities, books, records, and accounts by the Authorized Officer or his representative for purposes of ascertaining compliance. In the event of the Contractor's or any of his contractors' and subcontractors' noncompliance with these affirmative action responsibilities, compliance may be effected through all procedures authorized by law.

GC.35 ADDITIONAL SURETY. After award of contract, should any surety upon this Contract be deemed unsatisfactory at any time by the Project Manager, notice will be given to the Contractor and the Contractor shall forthwith substitute a new surety or sureties satisfactory to the Project Manager. No further payment to the Contractor will be made after said notice until the new surety or sureties have been accepted by the Project Manager.

*EPA Request dated Oct 12, 2010, for Information Pursuant to Section 114 . Response #10 of 17 of Appendix B.

*GC.36 CONSEQUENTIAL DAMAGES AND LIMITATION OF LIABILITY. Except for failure to deliver or failure to complete the erection work, the Contractor shall not be liable to the Owner, whether in contract, indemnity, tort (including negligence), strict liability, or otherwise, for special, incidental, exemplary or consequential damages including, but not limited to, loss of revenue, loss of use of revenue, loss of anticipated profits, cost of replacement power, cost of capital, and claims by the Owner's customers resulting from the Contractor's performance or nonperformance of the Contractor's obligations under this Contract.

If the Contractor either fails to deliver the equipment necessary for normal operation or fails to complete the erection work for each unit in accordance with the contract schedule for such unit, including any extension thereto, then the Contractor shall be liable for special, incidental or consequential damages actually incurred by Owner except for loss of profits or revenues, loss of use of power system, cost of purchased or replacement power, claims of the Owner's customers, or claims of other contractors who are not impacted by such failures, but the Contractor's liability for such failures shall not exceed 25 per cent of the contract price, including all price adjustments, for the generating unit with which such failures are associated. In addition to the foregoing liability for special, incidental or consequential damages, for cost of capital

*Negotiated Revision

*EPA Request dated Oct 12, 2010, for Information Pursuant to Section 114 . Response #10 of 17 of Appendix B.

*incurred by the Owner as a result of Contractor's failure to complete the erection work for each unit in accordance with the Contract Schedule for such unit, Contractor shall pay the Owner $50,000 per day for the first 7 days of delay after the scheduled completion date or extensions thereof, $75,000 per day for the eighth through fourteenth day of delay, $100,000 per day for the fifteenth through twenty-first day of delay, $125,000 per day for the twenty-second through twenty-eighth day of delay, and $150,000 per day for each day beyond twenty-eight days of delay, to mitigate the Owner's cost of capital incurred as a result of delay. The Contractor's liability for such cost of capital mitigation shall not exceed 25 per cent of the contract price, including all price adjustments, for the generating unit with which such delay is associated.

The Contractor's total liability to the Owner for all claims of any kind by the Owner for any loss or damage arising out of, connected with, or resulting from, the performance or breach of this Contract shall not exceed the aggregate adjusted contract price for all units furnished under this Contract.

The foregoing limitations of liability shall not apply to claims under Article GC.22 PATENTS, Article GC.24 GUARANTEE for Contractor manufactured equipment, and the performance guarantees defined in Articles 2B.2.1 Emission Limits, 2B.2.2 Suitability for Continuous Operation, 2B.2.3 Rated Capacity and, 2B.2.4 Minimum Load Operation.

*GC.37 FAILURE TO MEET GUARANTEED PERFORMANCE PARAMETERS. In the event Contractor's performance values for limestone consumption, pressure loss, power consumption, water consumption or other guaranteed utilities measured in the formal performance Guarantee test exceed the values guaranteed in the contract, and Contractor can demonstrate to Owner that the actual economic impact is significantly less than the cost to repair or replace, then, subject to mutual agreement, the parties may agree to liquidate the damages to Owner based upon the actual cost impact to the Owner.

*GC.38 CONTRACTOR-FURNISHED INFORMATION. All information designated proprietary which is furnished by the Contractor is submitted solely for the Owner's consideration and shall not be used by the Owner nor disclosed to any third party, except as may be necessary to complete the work or to operate and maintain the system furnished, without Contractor's prior written consent.

*GC.39 CONTRACTOR REVIEW OF DRAWINGS. Owner shall furnish Air Quality Control System structural support steel, access, and building design drawings for Contractor's review and comment.

*Negotiated Revision

*EPA Request dated Oct 12, 2010, for Information Pursuant to Section 114 . Response #10 of 17 of Appendix B.

*GC.40 OWNER/ENGINEER REVIEW OF DRAWINGS. All drawings submitted by Contractor which are subject to review and approval by the Owner and/or his Engineer shall be returned to the Contractor, appropriately reviewed, within 10 working days of receipt for preliminary drawings and 15 working days of receipt for certified drawings. Once reviewed by the Owner and/or Engineer, the Contractor shall incorporate the appropriate comments and issue a certified drawing, the submittal of which will release that portion of the work for billing purposes under GC.32.1.

*Negotiated Revision

*EPA Request dated Oct 12, 2010, for Information Pursuant to Section 114 . Response #10 of 17 of Appendix B.

Section 1G - SHOP STRUCTURAL WELDING

1G.1 GENERAL. This section covers all shop welding except welding of API Code tanks constructed of carbon steel and piping components.

Unless otherwise specified, all welds, welding, and related operations for structural steel, ductwork and equipment shop fabricated from steel plate and structural shapes shall conform with the Structural Welding Code by the American Welding Society, AWS D1.1-80 and the following requirements.

Welding of materials or combinations of materials not provided for in the referenced AWS code such as austenitic stainless steels, nickel base alloys or other similar corrosion resistant materials, shall be as specified herein. Welds in such non-AWS code materials shall nonetheless conform to the quality requirements specified in Section 8.15 of AWS D1.1.

Shop welding of shop fabricated tanks and components for field erected tanks shall be in accordance with the requirements of Section 2E.

Shop welding of piping components shall be in accordance with the requirements of Section 2H.

Welding of ASTM A606 sheet metal shall be in accordance with AWS D9.1-80. Welding procedure qualifications and qualifications of welders shall be in accordance with AWS D9.1-80.

Field welding requirements are specified in Part 3 of these specifications.

Except as otherwise accepted, welding shall be performed using only those procedures and joint details which have prequalified status when performed in accordance with the AWS code.

The provisions of Table 4.1.4 of the referenced AWS code concerning filler metal requirements for ASTM A588 steels shall apply. The corrosion characteristics of the weld metal shall be similar to the corrosion characteristics of the base metal. The welding processes, filler metals and fluxes specified in the referenced AWS code shall be used for these types of steels.

Welding procedures proposed for use on corrosion resistant materials, such as austenitic stainless steels, nickel base alloys or other similar corrosion resistant materials, shall be prepared and qualified in accordance with the requirements of ASME Boiler and Pressure Vessel Code, Section IX, Welding and Brazing Qualifications. Welders who apply those procedures shall also be qualified in accordance with ASME Section IX.

All welding procedures, including AWS prequalified procedures and ASME qualified procedures with qualification test records, shall be submitted

*EPA Request dated Oct 12, 2010, for Information Pursuant to Section 114 . Response #10 of 17 of Appendix B.

to the Engineer for review prior to beginning the work. No welding shall be done until the Engineer's review is complete.

All welders, welding operators and tackers shall be qualified by an independent testing laboratory in accordance with the provisions of the applicable code. Accurate records of welder, welding operator and tacker qualifications shall be maintained by the Contractor and shall be made available to the Project Manager and the Engineer upon request.

All welds shall be properly identified on detailed shop drawings and subject to review by the Engineer.

Components to be welded shall be accurately positioned and shall be rigidly secured during welding.

All welded joints exposed in exterior locations or subject to submergence in any location shall be provided with continuous welds along the contact edges except as prohibited in Article 8.8.5 of the referenced AWS code.

All butt welded joints shall be full penetration welds, except as mutually agreed by the Project Manager and the Engineer in writing.

Seal welds shall have full contour weld beads, or in the case of corner welds, a full throat and legs.

All interior seams and joints of the ductwork exposed to flue gases shall be seal welded.

Groove welds shall be terminated at the ends of the joint by use of extension bars or runoff plates. Extension bars and runoff plates shall be removed upon completion and cooling of the weld, and the ends of the weld shall be made smooth and flush with the edges of the abutting parts.

All welds shall be chipped and sandblasted or wire brushed to remove all flux, scale, and spatter.

The application of heat to correct weld distortion and dimensional deviation in austenitic stainless steels or other corrosion resistant materials is prohibited.

Block sequence welding on austenitic stainless steel or other corrosion resistant materials is prohibited. Block sequence welding on carbon steel may be permitted for specific applications after block sequence welding procedure review and acceptance by the Engineer.

For wire brushing of stainless steel or other corrosion resistant materials, brushes shall have stainless steel bristles and shall be identified and controlled for use on corrosion resistant materials only.

*EPA Request dated Oct 12, 2010, for Information Pursuant to Section 114 . Response #10 of 17 of Appendix B.

Grinding of stainless steel or other corrosion resistant materials shall be performed with resin or rubber bonded aluminum oxide or silicon carbide grinding wheels identified and controlled for use on stainless steel only.

Antispatter compounds used on stainless steel surfaces shall not cause corrosive or other harmful effects and shall not contain more than 200 ppm total halogens. Total halogens shall be determined by analysis, and the Contractor shall obtain certified test reports for each batch used.

1G.2 WELDING METHODS. Only the following welding processes will be permitted subject to proper code qualification and/or the concurrence of the Engineer.

Shielded metal arc

Gas metal arc

Flux cored arc

Submerged arc

The short circuiting transfer mode of the gas metal arc welding process shall not be used with materials or connections that involve a member over 3/16 inch in thickness. The use of the self-shielded electrodes in the flux cored arc welding processes will be permitted only in certain cases with the specific acceptance of the Engineer. Supplemental shielding of self-shielding electrodes, in the flux cored arc welding process, will be acceptable.

Welding between carbon and austenitic stainless steels, if required, shall utilize either AWS Class 309 filler metal or nickel base filler metal recommended for dissimilar metal welding.

Filler metal for joining austenitic stainless steels, nickel base alloys or other similar corrosion resistant materials shall be as recommended by the material manufacturer and shall have the concurrence of the Engineer. Welding procedures and qualification test data shall clearly identify all filler metals.

Low hydrogen electrodes shall be stored and handled during use in a manner that will maintain their low hydrogen characteristics. The methods used for storage and handling shall be fully explained in the welding procedures submitted or in a separate electrode storage and handling procedure submitted to the Engineer for review prior to beginning the work.

The Contractor shall provide for the care and maintenance of all filler metals to prevent damage from the atmosphere or the misapplication of filler metals.

*EPA Request dated Oct 12, 2010, for Information Pursuant to Section 114 . Response #10 of 17 of Appendix B.

IP10_002175

Austenitic stainless steel filler metal, including Type 317LM, shall have a delta ferrite content of 5 to 20 FN (Ferrite Number) for as-deposited weld metal. The Contractor shall verify ferrite content by material manufacturer's certified material test report (MTR) or by laboratory test report prior to use on project work. The delta ferrite requirement does not apply to 904L or Type 310 alloys.

1G.2.1 Heat Input. Heat input shall be controlled during welding of austenitic stainless steels, nickel base alloys and other similar corrosion resistant materials as indicated in this section.

For the shielded metal arc welding process, the maximum covered electrode size shall be 5/32 inch diameter. The maximum weld bead width shall be the lesser of four times the electrode core wire diameter or 5/8 inch.

Heat input control for semiautomatic gas metal arc and flux cored arc welding processes and for the submerged arc welding process shall be controlled according to the formula below. Heat input for any welding pass shall not exceed 50,000 joules per inch.

$$\text{Heat Input} = \frac{\text{Voltage}^{(1)} \text{ (volts) X Current (Amps) X 60}}{\text{Travel speed (inches per minute)}^{(2)}}$$

Note (1): The heat input is based on the voltage at the arc. Voltage may, however, be measured at the welding power supply. If the heat input limit is exceeded when voltage is measured at the welding power supply, the measured voltage may be reduced by an amount equal to the voltage drop between the power supply and the arc.

Note (2): Travel speed for semiautomatic processes may be determined from test welds using the applicable welding procedure parameters to be applied prior to actual pipe or component welding.

Heat input instructions for all of the welding processes described above shall be included in the Contractor's welding procedure submitted to the Engineer.

The Contractor shall establish a procedure for periodic in-process inspection to verify implementation of limited heat input criteria. In-process inspections shall be documented and subject to audit by the Engineer and Project Manager.

Preheat and interpass temperatures for austenitic stainless steels or nickel base alloys shall not exceed 350 F. Temperature indicating crayons used on austenitic stainless steels shall not cause corrosive or

*EPA Request dated Oct 12, 2010, for Information Pursuant to Section 114 . Response #10 of 17 of Appendix B.

IP10_002176

other harmful effects and shall not contain more than 200 ppm total halogens. Total halogens shall be determined by analysis. The Contractor shall obtain certification of these tests for each different crayon batch used.

1G.3 TESTING AND INSPECTION. This article covers inspection and nondestructive tests of welding.

The Project Manager will make periodic visits to the Contractor's facilities for the purpose of inspecting welding and welding records.

The Contractor shall provide visual inspection of all welds and shall correct all defective welds in accordance with the referenced AWS code and supplementary requirements specified herein. Personnel performing visual inspection of welds shall be qualified and certified in accordance with AWS QC1, Standard for Qualification and Certification of Welding Inspectors.

Nondestructive tests shall be conducted by the Contractor as specified herein on the welded portions of equipment, ductwork and devices fabricated from plate and structural shapes. Nondestructive testing shall be in accordance with the requirements of Article 6.7 of the referenced AWS *code. When magnetic particle inspection is performed, half wave or full wave direct current shall be the only types of magnetizing current used.

The Project Manager may require additional welding tests in addition to those specified below. The additional tests will be paid for by the Owner if no weld defects are found. The additional tests shall be at the Contractor's expense if weld defects are found.

The Contractor shall perform a leak test upon the equipment after installation in the field, as specified in Part 3 of these specifications. Shop welds which leak shall be repaired by the Contractor.

1G.3.1 Fillet Welds - General. Fillet welds shall be inspected in accordance with the following criteria. Fillet welds shall be inspected by one foot samples of magnetic particle inspection or dye penetrant inspection. Without regard to the number of welders or welding operators working thereon, one spot in the first 10 feet of weld shall be examined. If no defects are found, one additional spot per 100 feet of weld shall be examined. If defects are found in the tests, the tests shall be conducted at the rate of one spot per 10 feet until no defects are found. Thereafter tests shall be conducted at the rate of one spot per 100 feet of weld. The testing shall meet the inspection and qualification requirements of the referenced AWS code. All unacceptable defects shall be removed, rewelded, and reinspected by the same method which located the defects.

1G.3.2 Butt Welded Joints. Butt welded joints, without regard to the number of welders or welding operators working thereon, shall be examined by radiographic inspection. One spot in the first 10 feet of weld shall

*Addendum No. 3

*EPA Request dated Oct 12, 2010, for Information Pursuant to Section 114 . Response #10 of 17 of Appendix B.

be examined. If no defects are found, one additional spot per 100 feet of weld shall be examined. If defects are found in the tests, the tests shall be conducted at the rate of one spot per 10 feet until no defects are found. Thereafter tests shall be conducted at the rate of one spot per 100 feet of weld. Unless otherwise specified, the testing shall meet the inspection and qualification requirements of the referenced AWS code. All unacceptable defects found by radiography shall be removed, rewelded, and reinspected by radiography.

1G.3.3 Sealing, Corner and Lap Joints. All sealing, corner and lap joints shall be randomly inspected by one foot samples of magnetic particle or dye penetrant inspection. The total length of the random inspection shall as a minimum be one per cent of the total length of welding, but at least one inspection per subassembly shall be performed. Defects shall be repaired and adjustments made to welding technique and methods in order to prevent further occurrence of the defects.

*EPA Request dated Oct 12, 2010, for Information Pursuant to Section 114 . Response #10 of 17 of Appendix B.

Section 1H - COATINGS

1H.1 GENERAL. This section covers preparation of surfaces to be coated, coating materials, and application of shop applied and field touch-up coatings.

*All metallic surfaces subject to corrosion excluding ASTM A588, ASTM A242 and ASTM A606 shall be cleaned, prepared, and protected by shop applied and field touch-up coatings specified herein. Surfaces which will be inaccessible after assembly shall be protected for the life of the equipment. ASTM A588, ASTM A242 and ASTM A606 shall receive one shop coat of linseed oil.

Internal areas which will be exposed to steam or treated feedwater shall be shot or grit blasted using a nonsiliceous blasting material. Use of sand or silica bearing materials on these surfaces is not acceptable.

1H.2 DATA AND SAMPLES. Paint manufacturer's specification data sheets covering paint composition, temperature and chemical resistance, solids by volume content, recommended dry film thickness per coat, theoretical coverage per gallon, and application and surface preparation requirements shall be submitted in accordance with the requirements of Section 1C of these specifications. Specification data sheets shall be submitted only for paint manufacturers not listed on the Coating System Data Sheets included with these specifications.

Where finish paint colors are specified, the Contractor shall submit 4 inch by 6 inch samples of each finish paint color for examination and acceptance. The samples shall be on properly prepared paint-out cards, hardboard, or metal with identification of each sample included.

1H.3 PAINTING. Shop paint and field touch-up paint coating systems for steel surfaces of equipment and materials shall be as follows.

1H.3.1 Paint Materials. The paint materials to be used on each item of equipment shall be as indicated on the Coating System Data Sheets included at the end of this section. Except as otherwise acceptable to the Engineer, paints shall be by manufacturers listed in the Coating System Data Sheets. After acceptance of paints there shall be no substitutions.

Field touch-up paint systems shall be by the same manufacturer as the shop paint system wherever possible.

1H.3.2 Paint Systems. Paint systems shall be in accordance with the following.

Material/Equipment Designation	Paint System Designation
Structural steel, including miscellaneous metals, hangers, supports, and similar steel assemblies	System A1 or A2

*Negotiated Revision

*EPA Request dated Oct 12, 2010, for Information Pursuant to Section 114 . Response #10 of 17 of Appendix B.

Material/Equipment Designation	Paint System Designation
Handrail	System A1 or A2
Ungalvanized bolts (except weathering steel bolts)	System A8
Damaged galvanized surfaces	System A7
* Carbon steel ~~or ASTM A588 steel/ductwork~~ and weathering steel bolts for expansion joints	System A9
Ferrous metal surfaces having a service temperature above 250 F and which will not be insulated and lagged	System A10 or other acceptable primer designed for the required temperature range
Exterior surfaces of shop fabricated or field erected tanks (except tank bottoms)	System A1 or A2
Tank bottoms of shop fabricated or field erected tanks which sit directly on a tank foundation	System A5
* ~~ASTM A588 steel portions of dampers~~	~~System E3~~
Scrubber control panel and subpanels, and scrubber additive preparation control panel and subpanels	System E2
Monitoring and control subpanels (for main control panel)	System E2
Electrical equipment, including panels, transformers, motors, and similar equipment	System E1

*Negotiated Revision

*EPA Request dated Oct 12, 2010, for Information Pursuant to Section 114 . Response #10 of 17 of Appendix B.

Material/Equipment Designation	Paint System Designation
Mechanical equipment, including pumps, compressors, valves, valve operators, dampers, damper drives, mills, grinding apparatus, external piping surfaces, conveying machinery, and similar equipment	System E3

Any questions concerning the paint system to be used for equipment or materials not specifically mentioned in the listing shall be referred to the Engineer for resolution. The Contractor shall be responsible for providing an adequate coating system for items not specified.

1H.3.3 Preparation of Surfaces for Painting. Surface preparation for each paint system shall be in accordance with the Coating System Data Sheets included with these specifications. All surfaces to be painted shall be dry and free of dirt, dust, sand, grit, mud, oil, grease, rust, loose mill scale, or other objectionable substance before painting work is started.

If grease or oils are present, SSPC-SP1 Solvent Cleaning shall precede any other surface preparation specified.

Weld flux, slag, weld spatter, burrs, sharp edges, or other objectionable surface irregularities shall be removed prior to the specified surface preparation.

Cleaned surfaces shall be kept dry and clean and shall be prime painted within 8 hours after cleaning.

1H.3.4 Paint Application. Surfaces to be painted shall be at a temperature not less than the minimum surface temperature recommended by the paint manufacturer. In no case shall paint be applied under any of the following conditions.

When the temperature of the surface to be coated is below 40 F, or when air temperature is below 50 F or above 100 F

When atmospheric conditions are causing condensation on the surface

When the temperature of the surface to be coated is less than 5 F above the dew point

*EPA Request dated Oct 12, 2010, for Information Pursuant to Section 114 . Response #10 of 17 of Appendix B.

*~~All shop applied~~ Paint shall be free of sags, blisters, or runs. No paint shall be applied to surfaces within 3 inches of any ~~field welded~~ connections which are to be field welded.

1H.3.5 Touch-up Paint. For surfaces specified to be finish painted, the equipment manufacturer shall furnish sufficient touch-up paint for repair of 25 per cent of the finish painted surface. The touch-up paint shall be of the same type and color as the shop applied paint and shall be carefully packed to avoid damage during shipment. The touch-up paint shall be labeled with the name of the equipment for which it is intended and complete painting instructions shall be included.

The manufacturer of the Scrubber Control Panel and Scrubber Additive Preparation Control Panel shall include four 16 ounce containers of touch-up paint for each color specified. Touch-up paint shall be supplied in aerosol cans or other systems which will result in a smooth finish, free of brush marks (i.e., "Preval paint sprayer," etc.).

1H.4 PRESERVATIVE COATINGS. Ferrous surfaces which should not be painted and are subject to corrosion shall be coated with rust preventive compound, Houghton "Rust Veto 344," Rust-Oleum "R-9," or acceptable equal.

Machined surfaces of weld-end preparations shall be coated with consumable rust preventive coating such as "Deoxaluminite" manufactured by Special Chemicals Corp. or acceptable equal.

All preservative coatings which are used to protect equipment surfaces that are exposed to the feedwater or steam shall be completely water soluble.

1H.5 GALVANIZING. Galvanizing shall be in accordance with the following requirements.

Structural steel members, steel assemblies, and assembling connectors shall be "pickled" after all cutting, punching, reaming, drilling, tapping, and other fabrication processes which would damage galvanizing have been completed. The pickling shall be done in accordance with the latest accepted practice and shall continue until all scale, rust, grease, and other impurities have been completely removed. The steel shall then be hot-dip galvanized in accordance with the applicable requirements of ASTM A123, A153, and A385.

*Addendum No. 3

*EPA Request dated Oct 12, 2010, for Information Pursuant to Section 114 . Response #10 of 17 of Appendix B.

DESCRIPTION:	SYSTEM NO.
Steel - Normal exposure Primer only	A1

SURFACE PREPARATION	SSPC-SP6 Commercial Blast Cleaning Profile depth shall be 1 to 3 mils as recommended by paint manufacturer

COATING	DRY FILM THICKNESS	SPECIAL NOTES
FIRST COAT	3 mils	Two component, inorganic zinc primer with a minimum 75 per cent zinc by weight in the dry film
TOUCH-UP	3 mils	Power tool clean damaged surfaces only.
SECOND COAT		
THIRD COAT		
TOTAL SYSTEM		

COATING MANUFACTURER	PRODUCT IDENTIFICATION			
	FIRST COAT	TOUCH-UP	SECOND COAT	THIRD COAT
Ameron	Dimetcote 9FT	Amercoat 62		
Carboline	Carbo Zinc 12	658		
Mobil	Mobilzinc 11	Uni-Pak 13-G-14		
Porter	Zinc-Lock 312	Zinc-Lock 308		

BLACK & VEATCH CONSULTING ENGINEERS	COATING SYSTEM DATA SHEET	DATE 021381 REV 1	PREPARED BY RAS

P-SP-013B

*EPA Request dated Oct 12, 2010, for Information Pursuant to Section 114 . Response #10 of 17 of Appendix B.

DESCRIPTION:	SYSTEM NO.
Steel - Normal exposure Primer only	A2

SURFACE PREPARATION	SSPC-SP6 Commercial Blast Cleaning Profile depth shall be 1 to 3 mils as recommended by paint manufacturer

COATING	DRY FILM THICKNESS	SPECIAL NOTES
FIRST COAT	3 mils	One component, inorganic zinc primer with a minimum 82 per cent zinc by weight in the dry film
TOUCH-UP	3 mils	Power tool clean damaged surfaces only.
SECOND COAT		
THIRD COAT		
TOTAL SYSTEM		

COATING MANUFACTURER	PRODUCT IDENTIFICATION			
	FIRST COAT	TOUCH-UP	SECOND COAT	THIRD COAT
Ameron	E-Z IIA	Amercoat 62		
Carboline	Carbo Zinc SP-82	658		
Mobil	Uni-Pak 13-G-10W	Uni-Pak 13-G-14		

P-SP-013B

BLACK & VEATCH CONSULTING ENGINEERS	COATING SYSTEM DATA SHEET	DATE 021381 REV 1	PREPARED BY RAS

*EPA Request dated Oct 12, 2010, for Information Pursuant to Section 114 . Response #10 of 17 of Appendix B.

DESCRIPTION:	SYSTEM NO.
Steel - Underground or tank bottoms	A5

SURFACE PREPARATION	SSPC-SP6 Commercial Blast Cleaning Profile depth shall be 1 to 2 mils as recommended by the paint manufacturer.

COATING	DRY FILM THICKNESS	SPECIAL NOTES
FIRST COAT	12 mils	
TOUCH-UP	N/A	
SECOND COAT	12 mils	
THIRD COAT		
TOTAL SYSTEM	24 mils	

COATING MANUFACTURER	PRODUCT IDENTIFICATION			
	FIRST COAT	TOUCH-UP	SECOND COAT	THIRD COAT
Koppers	Bitumastic No. 50	N/A	Bitumastic No. 50	

BLACK & VEATCH CONSULTING ENGINEERS	COATING SYSTEM DATA SHEET	DATE 021381 REV 1	PREPARED BY RAS

P-SP-013B

*EPA Request dated Oct 12, 2010, for Information Pursuant to Section 114 . Response #10 of 17 of Appendix B.

DESCRIPTION:	SYSTEM NO.
Steel - Normal exposure Touch-up of galvanizing	A7

SURFACE PREPARATION	SSPC-SP3 Power Tool Cleaning	
COATING	DRY FILM THICKNESS	SPECIAL NOTES
FIRST COAT		
TOUCH-UP	3 mils	
SECOND COAT		
THIRD COAT		
TOTAL SYSTEM	3 mils	Color for galvanizing touch-up shall be gray

COATING MANUFACTURER	PRODUCT IDENTIFICATION			
	FIRST COAT	TOUCH-UP	SECOND COAT	THIRD COAT
Ameron		Amercoat 62		
Carboline		Carbo Zinc SP-76		
Mobil		Uni-Pak 13-G-14		
Subox Division Carboline		Galvanox Type I		

BLACK & VEATCH CONSULTING ENGINEERS	COATING SYSTEM DATA SHEET	DATE 042881 REV 1	PREPARED BY RAS

P-SP-0138

042881 ADDENDUM 1
1H-8

*EPA Request dated Oct 12, 2010, for Information Pursuant to Section 114 . Response #10 of 17 of Appendix B.

DESCRIPTION:	SYSTEM NO.
Steel - Normal exposure	A8

SURFACE PREPARATION	SSPC-SP3 Power Tool Cleaning

COATING	DRY FILM THICKNESS	SPECIAL NOTES
FIRST COAT	3 mils	
TOUCH-UP		
SECOND COAT		
THIRD COAT		
TOTAL SYSTEM	3 mils	

COATING MANUFACTURER	PRODUCT IDENTIFICATION			
	FIRST COAT	TOUCH-UP	SECOND COAT	THIRD COAT
Ameron	Amercoat 62			
Carboline	658			
Mobil	Uni-Pak 13-G-14			
Porter	Zinc-Lock 308			

BLACK & VEATCH CONSULTING ENGINEERS	COATING SYSTEM DATA SHEET	DATE 021381 REV 0	PREPARED BY RAS

P-SP-0138

*EPA Request dated Oct 12, 2010, for Information Pursuant to Section 114 . Response #10 of 17 of Appendix B.

DESCRIPTION: Steel - Normal exposure	SYSTEM NO. A9

SURFACE PREPARATION	SSPC-SP1 Solvent Cleaning plus SSPC-SP3 Power Tool Cleaning or SSPC-SP7 Brush-off Blast Cleaning.	
COATING	DRY FILM THICKNESS	SPECIAL NOTES
FIRST COAT	2 mils	Rust inhibitive alkyd primer with a minimum 40 per cent solids by volume
TOUCH-UP		
SECOND COAT		
THIRD COAT		
TOTAL SYSTEM	2 mils	

COATING MANUFACTURER	PRODUCT IDENTIFICATION			
	FIRST COAT	TOUCH-UP	SECOND COAT	THIRD COAT

BLACK & VEATCH CONSULTING ENGINEERS	COATING SYSTEM DATA SHEET	DATE 021381 REV 0	PREPARED BY RAS

P-SP-0138

*EPA Request dated Oct 12, 2010, for Information Pursuant to Section 114 . Response #10 of 17 of Appendix B.

DESCRIPTION:	SYSTEM NO.
Steel - Service temperature above 200 F	A10

SURFACE PREPARATION	SSPC-SP6 Commercial Blast Cleaning Profile depth shall be 1 to 3 mils as recommended by paint manufacturer.

COATING	DRY FILM THICKNESS	SPECIAL NOTES
FIRST COAT	3 mils	Two component, inorganic zinc primer with a minimum 83 per cent zinc in the dry film
TOUCH-UP		
SECOND COAT		
THIRD COAT		
TOTAL SYSTEM	3 mils	

COATING MANUFACTURER	PRODUCT IDENTIFICATION			
	FIRST COAT	TOUCH-UP	SECOND COAT	THIRD COAT
Ameron	Dimetcote 9			
Carboline	Carbo Zinc 11			
Mobil	Mobilzinc 7 13-F-1Z			

BLACK & VEATCH CONSULTING ENGINEERS	COATING SYSTEM DATA SHEET	DATE 042881 REV 1	PREPARED BY RAS

P-SP-0138

042881 ADDENDUM 1
1H-11

*EPA Request dated Oct 12, 2010, for Information Pursuant to Section 114 . Response #10 of 17 of Appendix B.

DESCRIPTION:	SYSTEM NO.
Electrical Equipment - Normal exposure Shop painting system	E1

SURFACE PREPARATION	SSPC-SP1 Solvent Cleaning plus SSPC-SP3 Power Tool Cleaning or SSPC-SP7 Brush-off Blast Cleaning

COATING	DRY FILM THICKNESS	SPECIAL NOTES
FIRST COAT	2 mils	Rust inhibitive alkyd primer with a minimum 40 per cent solids by volume
TOUCH-UP	N/A	
SECOND COAT	1.5 mils	Gloss alkyd enamel with a minimum 40 per cent solids by volume. Indoor ANSI 61; Outdoor ANSI 70
THIRD COAT	1.5 mils	Gloss alkyd enamel with a minimum 40 per cent solids by volume. Indoor ANSI 61; Outdoor ANSI 70
TOTAL SYSTEM	5 mils	Interior surfaces of panels, switchgear, and motor control centers shall be gloss white enamel

COATING MANUFACTURER	PRODUCT IDENTIFICATION			
	FIRST COAT	TOUCH-UP	SECOND COAT	THIRD COAT
Ameron	Amercoat 5105	N/A	Amercoat 5401	Amercoat 5401
Carboline	GP18	N/A	AD51	AD51
Mobil	13-R-31 Chromox Primer	N/A	12 Series Panorama Coating	12 Series Panorama Coating

P-SP-0138

BLACK & VEATCH CONSULTING ENGINEERS	COATING SYSTEM DATA SHEET	DATE 042881 REV 1	PREPARED BY RAS

042881 ADDENDUM 1
1H-12

*EPA Request dated Oct 12, 2010, for Information Pursuant to Section 114 . Response #10 of 17 of Appendix B.

DESCRIPTION:	SYSTEM NO.
Control Equipment - Normal exposure Shop painting system	E2

SURFACE PREPARATION	SSPC-SP1 Solvent Cleaning

COATING	DRY FILM THICKNESS	SPECIAL NOTES
FIRST COAT	N/A	Lacquer primer surfacer
TOUCH-UP	N/A	
SECOND COAT	1 mil	Low sheen lacquer
THIRD COAT	1 mil	Low sheen lacquer. Finish paint shall have 4 to 10 gloss reading at a 60 degree angle (photo type glass meter)
TOTAL SYSTEM	2 mils	Interior surfaces of walk-in panels shall be finished with gloss white lacquer

COATING MANUFACTURER	PRODUCT IDENTIFICATION			
	FIRST COAT	TOUCH-UP	SECOND COAT	THIRD COAT
Cook	Lacquer Primer Surfacer	N/A	*No. 590 Industrial Lacquer. Panel Beige No. 1	No. 590 Industrial Lacquer. Panel Beige No. 1
Sherwin-Williams	P-61 Series Lacquer Primer Surfacer	N/A	**L61W40 Lacquer. BVL61 No. 1 Beige	L61W40 Lacquer. BVL61 No. 1 Beige

*Contact Cook Paint and Varnish Company
P.O. Box 389
Kansas City, Missouri 64141
Attention: Mr. Duane Pruitt

**Contact Sherwin-Williams Company
2377 Riverfront Drive
Kansas City, Missouri 64120
Attention: Mr. Les Senevey

P-SP-0138

BLACK & VEATCH CONSULTING ENGINEERS	COATING SYSTEM DATA SHEET	DATE 021381 REV 1	PREPARED BY RAS

*EPA Request dated Oct 12, 2010, for Information Pursuant to Section 114 . Response #10 of 17 of Appendix B.

DESCRIPTION:	SYSTEM NO.
Mechanical Equipment - Normal exposure Shop primer only	E3

SURFACE PREPARATION	SSPC-SP1 Solvent Cleaning plus SSPC-SP3 Power Tool Cleaning or SSPC-SP7 Brush-off Blast Cleaning

COATING	DRY FILM THICKNESS	SPECIAL NOTES
FIRST COAT	2 mils	Rust inhibitive alkyd primer with a minimum 40 per cent solids by volume
SECOND COAT		
THIRD COAT		
FOURTH COAT		
TOTAL SYSTEM	2 mils	Primer shall be capable of withstanding a continuous surface temperature of 200 F and noncontinuous 250 F

COATING MANUFACTURER	FIRST COAT	SECOND COAT	THIRD COAT	FOURTH COAT

BLACK & VEATCH CONSULTING ENGINEERS	COATING SYSTEM DATA SHEET	DATE 012381 REV 0	PREPARED BY RAS

P-SP-013A

*EPA Request dated Oct 12, 2010, for Information Pursuant to Section 114 . Response #10 of 17 of Appendix B.

Section 1S - SEISMIC DESIGN

1S.1 GENERAL. This section specifies the general criteria and procedures which shall be used to ensure that structures, systems, and components will meet their performance objectives during and following a seismic event. Seismic classifications, which are applicable only for Subsections 1S1, 1S2, and 1S4, and performance levels, which are applicable only for Subsection 1S1, are given in Part 2 of these specifications. Performance Levels S, G, L, and N define the design objectives as a measure of resistance to seismic forces and displacements, as indicated in Table 1S-1.

In the detailed design of components, and within his scope of work, the Contractor shall consider (1) safety concerns for operating personnel, (2) importance of the component to operation of the plant, (3) potential cost of repair or replacement and associated outage duration, (4) availability of replacement parts, (5) availability of alternate systems, (6) anticipated seismic behavior, and (7) the interrelationships of components and their effect on each other. Components shall be attached so that seismic forces are ultimately transferred to the building structure. Friction due to gravity shall not be considered in evaluating the required resistance to seismic forces.

1S.2 SUBSECTIONS. The following subsections contain specific requirements for seismic design.

Subsection 1S1	SEISMIC DESIGN OF CLASSIFICATION E-I EQUIPMENT
Subsection 1S2	(NOT USED)
Subsection 1S3	SEISMIC DESIGN OF PIPING SYSTEMS
Subsection 1S4	SEISMIC DESIGN OF STRUCTURES
Subsection 1S5	SEISMIC DESIGN OF ARCHITECTURAL COMPONENTS

TABLE 1S-1 SEISMIC PERFORMANCE CRITERIA

Performance Level	Performance Factor	Design Objective for Design Earthquake
Superior (S)	1.5	Superior resistance to seismic forces and displacements

*EPA Request dated Oct 12, 2010, for Information Pursuant to Section 114 . Response #10 of 17 of Appendix B.

TABLE 1S-1 SEISMIC PERFORMANCE CRITERIA (continued)

Performance Level	Performance Factor	Design Objective for Design Earthquake
		Retain complete structural integrity
		Remain operable and functional during and following a seismic event
		No broken piping regardless of size
		No loss of fire protection or rating
		Architectural components limited to cosmetic damages, minimal glass breakage (safety glass may crack)
Good (G)	1.0	Good resistance to seismic forces and displacements
		Retain complete structural integrity
		Return to service following visual inspection and/or minor repairs
		No shorted or broken electrical circuits
		No broken main piping or vessels
		Fire ratings 75 per cent intact (e.g., 4 hour rating may reduce to 3 hour rating)
		No major falling of wall or ceiling components
		No glass fallout except tempered glass fragments
Low (L)	0.5	Low to moderate resistance to seismic forces and displacements
		Sustain moderate damage but remain in place
		Return to service following repairs which may require up to 30 days

*EPA Request dated Oct 12, 2010, for Information Pursuant to Section 114 . Response #10 of 17 of Appendix B.

TABLE 1S-1 SEISMIC PERFORMANCE CRITERIA (continued)

Performance Level	Performance Factor	Design Objective for Design Earthquake
		Broken distribution piping and vessels tolerated
		Falling glass, ceilings, and lighting fixtures tolerated
		Fire ratings impaired
None (N)	0.0	Low resistance to seismic forces and displacements
		Anchored to remain in place

*EPA Request dated Oct 12, 2010, for Information Pursuant to Section 114 . Response #10 of 17 of Appendix B.

Subsection 1S1 - SEISMIC DESIGN OF CLASSIFICATION E-I EQUIPMENT

1S1.1 DEFINITIONS. The following definitions establish the meaning of terms in the context of their use in this subsection.

1. "Absolute Sum Method" shall mean the sum of values where all signs are taken to be positive.

2. "Classification" is a means to define the seismic design procedure to be used by the Contractor.

3. "Natural Frequency" shall mean the frequency or frequencies at which an elastic system vibrates under the action of forces inherent in the system itself, and in the absence of external impressed forces. Natural frequencies of a system are defined by its physical characteristics such as geometric configuration, mass distribution, and stiffness. Measured in cycles per second or hertz (Hz).

4. "Performance Level" is a means to define the seismic design objectives as a measure of resistance to seismic forces and displacements.

5. "Rigid Equipment" shall mean, at all points, the equipment follows the motion of its support structure without amplification or attenuation. That is, there are no natural frequencies below 33 Hz.

1S1.2 REFERENCES.

1. American Institute of Steel Construction (AISC), "Specification for the Design, Fabrication and Erection of Structural Steel for Buildings," as last revised

2. American Iron and Steel Institute (AISI), "Specification for the Design of Cold-Formed Steel Structural Members," as last revised

3. International Conference of Building Officials "Uniform Building Code," as last revised

1S1.3 GENERAL. Classification E-I equipment refers to equipment which may be considered dynamically rigid or which does not warrant comprehensive analyses or testing.

The seismic force on each component of the equipment shall be statically computed by concentrating the weight of the component at its center of gravity and multiplying the weight by the performance factor times ±0.30

*EPA Request dated Oct 12, 2010, for Information Pursuant to Section 114 . Response #10 of 17 of Appendix B.

for any horizontal seismic force and by the performance factor times ±0.20 for the vertical seismic force. The performance factor is given in Table 1S-1 of Section 1S for the performance level specified in Part 2 of these specifications. The distribution of the seismic force shall be in accordance with the distribution of weight throughout the component.

The resultant seismic internal stresses in each component shall be computed by combining the stresses due to the vertical seismic force with the stresses due to the most critical horizontal seismic force using the absolute sum method. Due to the reversibility of the seismic forces, the stresses thus computed shall be considered either positive or negative, i.e., tension or compression. The resulting seismic stresses shall then be combined with the stresses due to normal operating loads. The combined stresses thus obtained shall not exceed the allowable stress provisions of the applicable codes. Where there is no directly applicable code, a minimum factor of safety of 2.0 against buckling is required for all members subject to compression, and a minimum factor of safety of 1.25 against yield is required for all members subject to tension or compression.

Support frames, anchor bolts, and associated anchorage material shall be designed more conservatively than the equipment itself. All equipment shall be anchored to the structure or foundation to prevent sliding or overturning during an earthquake. For design of the support frames (if any) and anchorage assemblies the horizontal and vertical seismic forces shall be taken equal to the performance factor times ±0.50 times the weight of the equipment, applied at the center of gravity of the equipment. Only one horizontal seismic force need be assumed to act simultaneously with the vertical seismic force. Steel support components shall be designed and fabricated in accordance with the AISC Specification (Reference 1), or the AISI Specification (Reference 2) if applicable, but no increase in the allowable stresses for load combinations involving seismic forces shall be used. Aluminum support components shall be designed and fabricated in accordance with Chapter 28 of the Uniform Building Code (Reference 3). Anchor bolt material shall comply with the requirements of ASTM A36.

The effects of contained fluids (e.g., oil, water, slurry, etc.) shall be considered in the seismic design.

The resulting internal stresses in a ceramic component shall not exceed 50 per cent of the ultimate mechanical strength of that component.

Conduit and piping connected to equipment shall be designed to accommodate anticipated relative displacements between attachment points.

1S1.4 DOCUMENTATION. If requested by the Engineer, the Contractor shall submit the seismic design calculations for review in accordance with the Document Submittal Schedule in Section 1C. These calculations shall indicate all assumptions and references used, and shall be subject to audit to verify that the design is in compliance with the specifications.

*EPA Request dated Oct 12, 2010, for Information Pursuant to Section 114 . Response #10 of 17 of Appendix B.

Subsection 1S3 - SEISMIC DESIGN OF PIPING SYSTEMS

1S3.1 DEFINITIONS. The following definition establishes the meaning of this term in the context of its use in this subsection.

1. "Absolute Sum Method" shall mean the sum of values where all signs are taken to be positive.

1S3.2 REFERENCES.

1. American National Standards Institute (ANSI) B31.1-1980 "Power Piping"

1S3.3 GENERAL.

1S3.3.1 Piping Systems and Supports. Article 1S3.4 defines the seismic design requirements applicable to the design of piping systems and piping supports. All piping systems shall conform to the reqnirements in this subsection as well as any design requirements provided in Part 2 of this specification. Seismic classifications and performance levels are not assigned to the design of piping systems. Instead, a service factor is used to reflect the seismic importance of the piping system.

The method contained in Articles 1S3.4.1 and 1S3.4.2 is a suggested approach to the seismic analysis and support of piping. Alternate methods which provide a more conservative design may be acceptable. If an alternate method is proposed, the Contractor shall notify the Engineer and, if requested, the Contractor shall submit the procedure for review prior to completion of the design.

Seismic design will not be required for piping 2 inches or smaller diameter operating below 125 F and judged to be noncritical for plant operation following an earthquake. This noncritical piping shall be selected by the Contractor with the selection subject to audit.

Seismic design will not be required for piping systems designated as "Seismic Design Not Required" in the remarks column of the Pipeline Listing when provided.

1S3.3.2 Piping Supplied Integral with an Equipment Component. The seismic design requirements provided in Article 1S3.4 are not mandatory for piping that is supplied with and supported from an equipment component, such as lube oil piping on a pump. However, equipment piping shall be analyzed and supported to ensure that the equipment component will meet the other design requirements of the equipment specification contained in Part 2.

1S3.4 SEISMIC DESIGN PROCEDURES. The piping system may be analyzed using either a hand calculation method or a computer method. Requirements for both types of analyses are specified in this article.

*EPA Request dated Oct 12, 2010, for Information Pursuant to Section 114 . Response #10 of 17 of Appendix B.

IP10_002198

The analysis of the piping system for seismic loads should be performed after the systems have been analyzed and supported for thermal and dead weight loads.

1S3.4.1 Hand Seismic Analysis. Piping systems shall be designed using the Static g Method. The procedure shall be as follows.

1. An isometric sketch of the piping system to be supported shall be developed.

2. The horizontal acceleration, A_H, shall be obtained from Article 1S3.5 and must be multiplied by the appropriate service factor, K, defined for the type of piping system in Article 1S3.5. This will become the Design Acceleration, KA_H.

3. The allowable horizontal seismic span shall be determined from the design acceleration, allowable seismic stress, and pipe properties as follows.

   For a simple beam under uniform load, W, subjected to an earthquake of magnitude A_H:

   Total design load $W' = W(KA_H)$

   From elementary beam theory

   $$\sigma_{allow} = \frac{Mc}{I} = \frac{W' L^2 r}{8I}$$

   Solve for L $$L = \left[\frac{8I\ \sigma_{allow}}{W' r}\right]^{1/2}$$

   Let σ_{allow} = seismic allowable stress $(0.8S_h)$ reduced by (0.75i) to account for stress intensification

   $= 0.8S_h/0.75i$

   Therefore $L = [8I\ (0.8\ S_h)/W' r\ (0.75i)]^{1/2}$

   The allowable horizontal seismic span is then as follows.

   $$L_{Hs} = [8I\ (0.8\ S_h)/(KA_H)\ Wr\ (0.75i)]^{1/2} \qquad (1)$$

*EPA Request dated Oct 12, 2010, for Information Pursuant to Section 114 . Response #10 of 17 of Appendix B.

IP10_002199

where: L_{Hs} = Allowable horizontal seismic span, in.

I = Moment of inertia, in.^{4}

S_h = ANSI B31.1 allowable stress at design temperature, psi

E = Modulus of Elasticity at design temperature, psi

W = Distributed weight of pipe, lb/in.

r = Outside radius of pipe, in.

i = ANSI B31.1 stress intensification factor, $0.75i \geq 1.0$

K = Service factor (see Article 1S3.5)

A_H = Seismic acceleration (see Article 1S3.5)

Solve Equation 1 for the maximum allowable horizontal seismic span. This seismic span can be used to locate horizontal restraints in the piping system.

Supports that do not provide any restraint against piping movement in a given direction shall not be assumed to be seismic supports for that direction. For example, supports that provide only vertical restraint such as a standard trapeze type hanger should not be considered to be a horizontal restraint when checking spans.

4. Seismic deflections in the horizontal direction, δ_H, can be found using elementary beam theory:

$$\delta = \frac{5\,W\,L^4}{384\,EI}$$

$$\delta_H = \frac{5(KA_H)\,WL_H^4}{384\,EI} \qquad (2)$$

where: L_H is the longest actual horizontal span used, in.

Solve Equation 2 for the deflection due to the horizontal earthquake component for the longest actual horizontal span, L_H, used in supporting the piping system. If

*EPA Request dated Oct 12, 2010, for Information Pursuant to Section 114 . Response #10 of 17 of Appendix B.

IP10_002200

the seismic deflection is less than or equal to 3 inches and the span is less than or equal to the seismic span, L_{Hs}, then the support spacing is acceptable. If the deflection of the longest actual span, L_H, is greater than 3 inches, then the span must be reduced and the deflection recomputed. The other spans must also be checked to verify that the deflection criterion is met.

5. Steps 2 and 3 shall be repeated for the vertical direction using the vertical acceleration value from Article 1S3.5. The vertical design acceleration value, used in Equation 3, is equal to $(1 \pm KA_V)$. The larger value $(1 + KA_V)$ is then used for design and the smaller value $(1 - KA_V)$ is used to verify that the supports do not unload.

$$L_{Vs} = [8I\ (0.8\ S_h)/(1 \pm KA_V)\ Wr\ (0.75i)]^{1/2} \qquad (3)$$

Solve Equation 3 for the maximum allowable vertical seismic span. This seismic span will indicate locations of supports required in addition to those shown by previous analyses to be required for dead weight.

6. Step 4 shall be repeated for the vertical direction using the longest actual vertical span, L_V, in Equation 4, and the corresponding deflection criteria.

$$\delta_V = \frac{5(1 \pm KA_V)\ WL_V^4}{384\ EI} \qquad (4)$$

7. The stress induced by the seismic moment, M_S, shall be computed for each direction of load using the longest actual span used in the support system for that direction. The larger horizontal earthquake stress value shall be combined with the vertical earthquake stress value using the absolute sum method. The total seismic stress shall be less than or equal to $0.8\ S_h$.

$$\sigma_{Seismic} = \left| \left[\frac{(0.75i)\ M_S}{Z}\right]_{\text{Larger Horizontal}} \right| + \left| \left[\frac{(0.75i)\ M_S}{Z}\right]_{\text{Vertical}} \right| \leq 0.8S_h$$

or

*EPA Request dated Oct 12, 2010, for Information Pursuant to Section 114 . Response #10 of 17 of Appendix B.

$$\sigma_{Seismic} = \left| \left[\frac{(0.75i)\ (KA_H)\ WL_H^2\ r}{8I} \right] \right| + \left| \left[\frac{(0.75i)\ (1 + KA_V)\ WL_V^2\ r}{8I} \right] \right| \leq 0.8S_h$$

8. The stress induced by dead weight moment, M_A, must also be computed for use in the ANSI B31.1 Code Equations. The largest dead weight induced stress can be found using the longest actual dead weight span, L_D, in the following equation.

$$\sigma_{Dead\ weight} = \frac{(0.75i)\ M_A}{Z} = \frac{(0.75i)\ WL_D^2\ r}{8I}$$

9. The full stress verification shall be computed by summing the stresses due to pressure, dead weight, seismic and other occasional loads in the ANSI B31.1 Code Equation 12.

$$\sigma = \frac{PD}{4t} + \left| \frac{(0.75i)\ M_A}{Z} \right| + \left| \frac{(0.75i)\ M_B}{Z} \right| \leq 1.2\ S_h$$

or

$$\sigma = \frac{PD}{4t} + \left| \frac{(0.75i)\ WL_D^2 r}{8I} \right| + \left| \frac{(0.75i)(KA_H)\ WL_H^2 r}{8I} \right| + \left| \frac{(0.75i)(1 + KA_V)\ WL_V^2 r}{8I} \right|$$

$$+ \left| \frac{(0.75i)\ M_B'}{Z} \right|_{\substack{\text{Other} \\ \text{Occasional Loads}}} \leq 1.2\ S_h$$

where:

P = Largest design pressure, psi

D = Diameter, in.

t = Wall thickness, in.

L_D = Longest actual dead weight span, in.

Z = Section modulus, in.^{3}

$\frac{(0.75i)\ M_B'}{Z}$ = That stress induced by other occasional loads such as turbine trip.

[IPP 9255 EQUIPMENT & MATERIAL]
[042881 (P)2]
1S3-5
[042881 ADDENDUM 1]

*EPA Request dated Oct 12, 2010, for Information Pursuant to Section 114 . Response #10 of 17 of Appendix B.

If the total stress exceeds 1.2 S_h, then the stress summary shall be recomputed on a span-by-span basis using actual spans and design parameters for each span.

10. Piping loads (reactions R, thrust T, and moments M) on equipment connections shall be computed in accordance with the equations given below. These loads shall meet the allowable equipment connection load criteria.

For uniform dead weight load:

$$R = \frac{WL_V}{2}$$

$$M = \frac{WL_V^2}{8}$$

For seismic loads:

Horizontal $R = \frac{KA_H WL_H}{2}$

$$T = \frac{KA_H WL_H^*}{2}$$

$$M = \frac{KA_H WL_H^2}{8}$$

Vertical $R = \frac{(1 \pm KA_V)WL_V}{2}$

$$M = \frac{(1 \pm KA_V)WL_V^2}{8}$$

where: L_H and L_V refer to the horizontal and vertical spans of the piping connecting to the equipment.

[IPP 9255 EQUIPMENT & MATERIAL]
[042881 (P)2]
1S3-6
[042881 ADDENDUM 1]

*EPA Request dated Oct 12, 2010, for Information Pursuant to Section 114 . Response #10 of 17 of Appendix B.

L_H^* refers to the horizontal span of piping connecting to the equipment which can produce axial thrust loads into the connection. In many cases, L_H^* may not be equal to L_H.

$(1 + KA_V)$ is used for design.

$(1 - KA_V)$ is used to check for support unloading.

11. The dead weight and thermal analyses must be reexamined to verify that the presence of any additional seismic restraints has not produced an unacceptable condition when subjected to the thermal and dead weight loads.

1S3.4.2 Computerized Seismic Analysis. Computer analysis of the piping system is an acceptable alternative to the hand method presented in Article 1S3.4.1. Piping analysis programs such as ADLPIPE, NUPIPE, and TRIFLEX are all capable of using the Static g Method. The following procedure shall be followed.

1. Complete Steps 1 and 2 of Article 1S3.4.1 following dead weight and thermal analysis of the system.

2. Using the equations presented in Article 1S3.4.1, Steps 3 and 5, determine the allowable horizontal and vertical seismic spans for the system. Using these spans, locate supports within the piping system. Dead weight supports that provide rigid restraints for the piping in the direction of the seismic event can be assumed to be seismic supports in meeting the allowable seismic span.

   Supports that do not provide any restraint against piping movement in a given direction should not be assumed to be seismic supports for that direction. For example, supports that provide only vertical restraint such as a standard trapeze type hanger should not be considered to be a horizontal restraint when checking spans.

3. Run the computer analysis with any seismic supports modeled at or below the spacing found in Step 2 above to obtain displacements, forces, and moments. Midspan seismic deflection shall be less than or equal to 3 inches.

*EPA Request dated Oct 12, 2010, for Information Pursuant to Section 114 . Response #10 of 17 of Appendix B.

4. Seismic induced stresses shall be checked. The largest horizontal earthquake stress value shall be combined with the maximum vertical earthquake stress value using the absolute sum method. The total seismic stress shall be less than or equal to 0.8 S_h.

5. The ANSI B31.1 Code equation shall be solved as indicated in Article 1S3.4.1, Step 9, using the largest design pressure, and the largest seismic stress values for horizontal and vertical earthquake components together with the largest dead weight stress. If the absolute sum of these stresses is greater than 1.2 S_h, then the code stress equation must be checked on a span-by-span basis.

6. Reactions and moments at equipment connections shall meet the allowable equipment connection load criteria.

7. The dead weight and thermal analyses must be reexamined to verify that the presence of any additional seismic restraints has not produced an unacceptable stress or deflection condition when subjected to these combined loadings.

1S3.5 SEISMIC PARAMETERS. The following parameters are design requirements for the design of the piping system.

1. Seismic Accelerations

A_H = ±0.5g Horizontal

A_V = ±0.4g Vertical

2. Service Factor, K

Main steam, hot and cold reheat, boiler feed pump discharge, HP Extractions	1.5
Lines above 125 F or 2-1/2 inches or larger	1.2
Lines below 125 F or 2 inches or smaller	1.0

3. Allowables

Seismic deflection shall not exceed 3 inches in any direction.

*EPA Request dated Oct 12, 2010, for Information Pursuant to Section 114 . Response #10 of 17 of Appendix B.

Seismic stress shall not exceed 0.8 S_h.

Total ANSI B31.1 stress including seismic, pressure, and dead weight loads shall not exceed 1.2 S_h.

1S3.6 SEISMIC SUPPORT DESIGN. In addition to the piping support provisions of Part 2, the following seismic design considerations are required for piping supports.

1. Care shall be exercised in designing supports to ensure that the support can withstand all possible loads. Local and overall buckling and instability of supports shall be prevented. Under no circumstances shall hanger rods be put in compression; struts or other members shall be used where compressive loads may be imposed on supports.

2. Consideration shall be given to providing additional bracing for variable and constant support hangers where analysis shows that side movement may be excessive or that the hanger itself may become overloaded or unstable if loaded in certain directions.

3. The support design shall limit piping sway under seismic load to less than or equal to 3 inches. This limit is also required where long runs of pipe may have substantial axial movement during an earthquake. In this case, the use of rigid sway struts or anchors to limit axial movement should be considered.

4. Snubbers shall not be provided in any systems operating under 250 F unless additional analysis shows that other considerations require that snubbers be used.

5. Variable and constant support hangers shall be carefully located within piping systems. Analysis shall be performed to ensure that these types of hangers will be loaded during the postulated design seismic events. Under no circumstances shall variable and constant support hangers be unloaded during a seismic event.

6. The seismic events shall be applied within an orthogonal coordinate system with one axis coinciding with the axis of the piping and the other axis perpendicular to it. In a multidirectional system, one constant axis orientation shall be used for the system analysis. Care shall be exercised to ensure that the weakest axis of any system or support is always examined.

*EPA Request dated Oct 12, 2010, for Information Pursuant to Section 114 . Response #10 of 17 of Appendix B.

7. In piping systems where there are elbows, tees, and other items present, the flexibility and stress intensification factors presented in ANSI B31.1 Appendix D shall apply.

1S3.7 DOCUMENTATION. If requested by the Engineer, the Contractor shall submit the piping design calculations for review in accordance with the Document Submittal Schedule in Section 1C.

*EPA Request dated Oct 12, 2010, for Information Pursuant to Section 114 . Response #10 of 17 of Appendix B.

Subsection 1S4 - SEISMIC DESIGN OF STRUCTURES

1S4.1 DEFINITIONS. The following definitions establish the meaning of terms in the context of their use in this subsection.

1. "Absolute Sum Method" shall mean the sum of values where all signs are taken to be positive.

2. "Classification" is a means to define the seismic design procedure to be used by the Contractor.

1S4.2 REFERENCES.

1. American Institute of Steel Construction (AISC), "Specification for the Design, Fabrication and Erection of Structural Steel for Buildings," as last revised

2. International Conference of Building Officials, "Uniform Building Code," as last revised

3. American Water Works Association (AWWA), "Standard for Welded Steel Tanks for Water Storage," ANSI/AWWA D100, as last revised

4. American Petroleum Institute (API), "Welded Steel Tanks for Oil Storage," ANSI/API Standard 650, as last revised

5. "Earthquake Engineering for Nuclear Reactor Facilities," John A. Blume & Associates, San Francisco, 1971

6. Technical Information Document 7024, "Nuclear Reactors and Earthquakes," Chapter 6 and Appendix F, published by Lockheed Aircraft Corporation under a grant from the US Atomic Energy Commission, 1963

7. American Iron and Steel Institute (AISI), "Specification for the Design of Cold-Formed Steel Structural Members," as last revised

1S4.3 GENERAL. All structures are assigned a seismic classificatiou which defines the seismic design procedure to be used by the Coutractor. The seismic design objectives for structures correspond to Performance Level G as defined in Section 1S.

This subsection covers the seismic dasign of the structural members and connections. Access provisions (walkways, ladders, etc.), nonbearing prefabricated wall panels, and miscellaneous architectural components are covered in Subsection 1S5.

*EPA Request dated Oct 12, 2010, for Information Pursuant to Section 114 . Response #10 of 17 of Appendix B.

Seismic forces shall be considered in both horizontal directions, but not concurrently. Vertical seismic forces shall be considered in combination with the horizontal seismic forces, as specified by the classification. Seismic forces and wind forces shall not be assumed to act concurrently.

1S4.4 SEISMIC DESIGN OF CLASSIFICATION S-I STRUCTURES. Classification S-I structures refers to buildings and like structures which shall be designed in accordance with the Uniform Building Code (Reference 2). The base shear, V, shall be computed from

$$V = ZIKCSW, \text{ but not less than } 0.15W \text{ unless otherwise specified in Part 2}$$

where

$Z = 0.75$ (Zone Factor)

$I = 1.5$ (Importance Factor), unless otherwise specified in Part 2 of these specifications

$K = 1.0$ (Force Factor for braced steel structures where the vertical loads are carried by steel columns and the lateral loads are carried by a steel bracing system in the vertical plane and by horizontal bracing or a diaphragm in the horizontal plane. For other structures the force factor shall be as defined in Part 2 of these specifications.)

$C \leq 0.12$ (A factor to be determined from the fundamental period of vibration of the structure)

$S = 1.2$ (Site - Structure Interaction Factor, the product $CS \leq 0.14$)

$W =$ Total dead load of the structure, including equipment and loadings which are likely to be present during an earthquake (water, coal, ash, etc.)

This base shear shall be distributed to the floors in accordance with the requirements of the Uniform Building Code. The vertical earthquake force need not be considered, unless otherwise specified in Part 2. At each floor, the horizontal seismic force shall be distributed over the floor in proportion to the weight distribution. The floor beams and horizontal bracing shall be designed to transmit the greater of the seismic forces computed from this distribution or from the seismic forces for equipment (for which the equipment seismic specifications apply) to the bracing system in the vertical plane. The bracing system in the vertical plane shall be designed to carry the distributed base shear forces.

*EPA Request dated Oct 12, 2010, for Information Pursuant to Section 114 . Response #10 of 17 of Appendix B.

In steel braced frame structures, members which are part of the lateral load resisting system shall be designed for dead and live load plus 1.25 times the computed seismic force with one-third increase in allowable stress, and tension members shall have a compressive strength equal to at least 50 per cent of the required tensile strength. Connections for such members shall be designed for either the full capacity of the member (in both tension and compression) or dead and live load plus 1.25 times the seismic force in the member without a one-third increase in allowable stress. Reinforced concrete members and connections shall be designed by the strength method for which the load factors of the Uniform Building Code (Reference 2) shall be used.

Anchor bolt material shall comply with the requirements of ASTM A36. Allowable stresses for anchor bolts shall be those from the AISC Specifications (Reference 1), but no increase in the allowable stresses for load combinations involving seismic forces shall be used.

1S4.5 SEISMIC DESIGN OF CLASSIFICATION S-II STRUCTURES. Classification S-II structures refers to conveyor galleries, coal silos, ductwork, hoppers, and similar structural components which are generally supported by a structural framework. Generally such structures carry gas or solids.

The horizontal seismic forces shall be computed by multiplying the weights by ±0.30, and the concurrent vertical seismic forces shall be computed by multiplying the weights by ±0.20. The weight shall include the dead load and any loadings which are likely to be present during an earthquake (coal, water, ash, etc.). The seismic force shall be distributed over the component in proportion to the weight distribution. For example, the lateral pressure on a vertical ductwork plate shall be considered as a uniform load equal to the weight of the plate per unit area times ±0.30. The seismic forces in a truss shall be applied at the truss joints.

The resultant seismic internal stresses in each component shall be computed by combining the stresses due to the vertical seismic force with the stresses due to the horizontal seismic force using the absolute sum method. Due to the reversibility of the seismic forces, the stresses thus computed shall be considered either positive or negative, i.e., tension or compression. The resulting seismic stresses shall then be combined with the stresses due to normal operating loads. The combined stresses thus obtained shall not exceed the allowable stress provisions of the applicable codes. Where there is no directly applicable code, a minimum factor of safety of 2.0 against buckling is required for all members subject to compression, and a minimum factor of safety of 1.25 against yield is required for all members subject to tension or compression.

In steel trusses and braced frames, members which are part of the seismic load resisting system shall be designed for dead and live load plus 1.25 times the seismic force with one-third increase in allowable stress, and tension members shall have a compressive strength equal to at least

*EPA Request dated Oct 12, 2010, for Information Pursuant to Section 114 . Response #10 of 17 of Appendix B.

50 per cent of the required tensile strength. Connections for such members shall be designed for either the full capacity of the member (in both tension and compression) or dead and live load plus 1.25 times the seismic force in the member without a one-third increase in allowable stress.

Anchor bolts and associated anchorage material shall be designed more conservatively than the component itself. All components shall be anchored to the structure or foundation to prevent sliding or overturning during an earthquake. For design of the anchorage assemblies the horizontal seismic force shall be taken equal to ±0.50 times the weight of the component, applied at the center of gravity of the component and the concurrent vertical seismic force shall be taken equal to ±0.35 times the weight of the component, also applied at the center of gravity of the component. Only one horizontal seismic force need be assumed to act simultaneously with the vertical seismic force. Steel support components shall be designed and fabricated in accordance with the AISC Specification (Reference 1), or the AISI Specification (Reference 7) if applicable, but no increase in the allowable stresses for load combinations involving seismic forces shall be used. Anchor bolt material shall comply with the requirements of ASTM A36.

1S4.6 SEISMIC DESIGN OF CLASSIFICATION S-III STRUCTURES. Classification S-III structures refers to conveyor bents, supports for elevated tanks, and similar structures which are relatively lightweight with respect to the components they support, and generally have two or four legs to carry vertical loads and bracing to carry the wind and seismic forces to grade. For such structures the horizontal base shear, V, shall be taken as V = ±0.35W; the vertical seismic force shall be taken as ±0.25W. The weight, W, shall include the dead load and contents (e.g., coal, water, ash) of the component supported by the tower plus half the tower weight. These seismic forces shall be concurrently applied at the center of gravity of the component atop the tower. The effects of sloshing of liquid in an elevated tank shall be considered; refer to Reference 5 or 6 for an acceptable procedure.

The resultant seismic internal stresses in each component shall be computed by combining the stresses due to the vertical seismic force with the stresses due to the horizontal seismic force using the absolute sum method. Due to the reversibility of the seismic forces, the stresses thus computed shall be considered either positive or negative, i.e., tension or compression. The resulting seismic stresses shall then be combined with the stresses due to normal operating loads. The combined stresses thus obtained shall not exceed the allowable stress provisions of the applicable codes except as follows. In steel braced frame structures, members which are part of the seismic load resisting system shall be designed for dead and live load plus 1.25 times the seismic force with one-third increase in allowable stress, and tension members shall have a compressive strength equal to at least 50 per cent of the required tensile strength. Connections for such members shall be designed for either

*EPA Request dated Oct 12, 2010, for Information Pursuant to Section 114 . Response #10 of 17 of Appendix B.

the full capacity of the member (in both tension and compression) or dead and live load plus 1.25 times the seismic force in the member without a one-third increase in allowable stress. Threaded rods shall not be used as bracing members. Reinforced concrete members and connections shall be designed by the strength method for which the load factors of the Uniform Building Code (Reference 2) shall be used.

Anchor bolts and associated anchorage material shall be designed more conservatively than the structure itself. The structure shall be anchored to the foundation to prevent sliding or overturning during an earthquake. For design of the anchorage assemblies the horizontal seismic force shall be taken equal to ±0.50W, applied at the center of gravity of the component atop the tower, and the concurrent vertical seismic force shall be taken equal to ±0.35W, also applied at the center of gravity of the component atop the tower. Only one horizontal seismic force need be assumed to act simultaneously with the vertical seismic force. Steel support components shall be designed and fabricated in accordance with the AISC Specification (Reference 1), or the AISI Specification (Reference 7) if applicable, but no increase in the allowable stresses for load combinations involving seismic forces shall be used. Anchor bolt material shall comply with the requirements of ASTM A36.

1S4.7 SEISMIC DESIGN OF CLASSIFICATION S-IV STRUCTURES. Classification S-IV structures refers to ground-supported, flat-bottom tanks such as oil tanks, condensate storage tanks, ground-supported fire protection water tanks, etc., where hydrodynamic effects are significant.

Cylindrical, flat-bottom, ground-supported tanks for oil storage shall be seismically designed in accordance with API Standard 650 (Reference 4), Appendix E, using zone coefficient Z equal to 0.75, essential facilities factor I equal to 1.5, and soil profile coefficient S equal to 1.2, unless otherwise specified in Part 2 of these specifications.

Cylindrical, flat-bottom, ground-supported or floor-supported tanks for water storage and unspecified liquids shall be seismically designed in accordance with AWWA D100 (Reference 3), Appendix A using a zone coefficient Z equal to 0.75, a soil profile coefficient S equal to 1.2, and a structure coefficient K equal to 2.00, unless otherwise specified in Part 2 of these specifications.

The tank shall be anchored to the foundation or support structure. The anchorage assembly shall be designed to preclude tearing of the shell during an earthquake. Furthermore, the anchor bolt attachments shall be stronger than the anchor bolts themselves. Anchor bolt material shall comply with the requirements of ASTM A36, unless otherwise specified in Part 2.

Suitable flexibility shall be provided all piping attached to the shell or bottom of the tank.

*EPA Request dated Oct 12, 2010, for Information Pursuant to Section 114 . Response #10 of 17 of Appendix B.

Columns within the tank and supporting the roof of the tank or other structures or components shall be restrained to prevent damage due to lateral movement during earthquakes and shall be designed to resist lateral forces caused by the sloshing of the contents.

The hydrodynamic stresses shall be added directly to the hydrostatic stresses. Vertical acceleration shall not be considered.

Allowable stresses shall be in accordance with the applicable codes (References 3 or 4). The effect of internal liquid pressure on increasing the buckling allowable stresses shall not be considered for tanks designed to AWWA D100 (Reference 3). For the design of components for which there is no directly applicable code, a factor of safety against buckling of at least 2.0 shall be used for all members subject to compression, and a factor of safety of at least 1.25 against yield shall be used for all members subject to tension or compression.

1S4.8 DOCUMENTATION. If requested by the Engineer, the Contractor shall submit the design calculations for review in accordance with the Document Submittal Schedule in Section 1C. These calculations shall indicate all assumptions and references used and shall be subject to audit to verify that the design is in compliance with the specifications.

*EPA Request dated Oct 12, 2010, for Information Pursuant to Section 114 . Response #10 of 17 of Appendix B.

Subsection 1S5 - SEISMIC DESIGN OF ARCHITECTURAL COMPONENTS

1S5.1 DEFINITIONS. The following definitions establish the meaning of terms in the context of their use in this subsection.

1. "Absolute Sum Method" shall mean the sum of values where all signs are taken to be positive.

1S5.2 REFERENCES.

1. American Institute of Steel Construction (AISC), "Specification for the Design, Fabrication and Erection of Structural Steel for Buildings," as last revised

2. International Conference of Building Officials, "Uniform Building Code," as last revised

3. American Iron and Steel Institute (AISI), "Specification for the Design of Cold-Formed Steel Structural Members," as last revised

1S5.3 GENERAL. Seismic design requirements for architectural components are defined in this subsection. Seismic classifications are not assigned. The seismic design objectives for architectural components correspond to Performance Level G as defined in Section 1S, except as noted in Article 1S5.5. Article 1S5.5 shall be applied except where the component is accurately described in subsequent articles.

Seismic forces shall be considered in both horizontal directions, but not concurrently. Vertical seismic forces shall be considered only where specified in the articles of this subsection. Seismic forces and wind forces shall not be assumed to act concurrently.

The distribution of the seismic force shall be in accordance with the distribution of weight throughout the component. Where vertical seismic forces are specified, the resultant seismic internal stresses in each element shall be computed by combining the stresses due to the vertical seismic force with the stresses due to the governing horizontal seismic force using the absolute sum method. Due to the reversibility of the seismic forces, the stresses thus computed shall be considered either positive or negative, i.e., tension or compression. The resulting seismic stresses shall then be combined with the stresses due to other loads.

All architectural components shall be designed to accommodate differential movements of their supports; walls, partitions, glazing, etc., which are attached to two or more floors must be capable of accommodating the story drift without causing a life safety hazard. Rigid components shall be given special consideration since not only are they subject to damage and loss of function from structural deformations, but their stiffness may significantly affect the behavior of the structure to which they are connected.

*EPA Request dated Oct 12, 2010, for Information Pursuant to Section 114 . Response #10 of 17 of Appendix B.

Friction shall not be considered to resist seismic forces; positive restraint must be provided for each component. Anchorage assemblies and anchor bolts shall be designed more conservatively than the component itself, and shall have sufficient ductility and rotational capacity to accommodate any anticipated differential movements of the support points. For design of the anchorage assemblies, only one horizontal seismic force (i.e., the most severe component) need be assumed to act concurrently with the vertical seismic force. Steel support components shall be designed and fabricated in accordance with the AISC Specification (Reference 1), or the AISI Specification (Reference 3) if applicable, but no increase in the allowable stresses for load combinations involving seismic forces shall be used. Aluminum support components shall be designed and fabricated in accordance with Chapter 28 of the Uniform Building Code (Reference 2). Anchor bolt material shall comply with the requirements of ASTM A36.

1S5.4 DOCUMENTATION. Documentation covering seismic design of architectural components included under this Contract shall be provided in accordance with the Document Submittal Schedule in Section 1C if requested by the Engineer. Such documentation may include the following, as applicable.

1. Design calculations for miscellaneous architectural components

2. Design calculations for prefabricated wall panels

3. Design calculations, test data, and installation procedures and drawings for suspended ceiling systems. Drawings shall identify all suspended ceiling components and show all support details, light fixture and air diffuser attachments, partition supports, lateral bracing, etc. If requested by the Engineer, the Contractor shall provide data from the ceiling manufacturer indicating loading capacity and displacement characteristics, including the tension and compression force capabilities of main runner splices, cross runner connections, and expansion devices. Design calculations and test data shall be subject to audit to verify that the design is in compliance with these specifications.

1S5.5 SEISMIC DESIGN OF MISCELLANEOUS ARCHITECTURAL COMPONENTS. Except where otherwise specified in this subsection, architectural components and their attachments shall be designed to resist a horizontal seismic force equal to ±0.24 times the seismic coefficient times the performance factor times the weight of the component, and a vertical seismic force equal to ±0.18 times the seismic coefficient times the performance factor times the weight of the component. The seismic coefficients are given in Table 1S5-1. The performance factor shall be taken equal to 1.5 unless otherwise specified in Part 2.

*EPA Request dated Oct 12, 2010, for Information Pursuant to Section 114 . Response #10 of 17 of Appendix B.

The combined normal and seismic stresses shall not exceed the allowable stress provisions of the applicable codes. Where there is no directly applicable code, a minimum factor of safety of 2.0 against buckling is required for all members subject to compression, and a minimum factor of safety of 1.25 against yield is required for all members subject to tension or compression.

1S5.6 SEISMIC DESIGN OF SUSPENDED CEILING SYSTEMS. This article defines the seismic design requirements for suspended ceiling systems which are designed and constructed to support ceiling panels, with or without lighting fixtures, ceiling mounted air diffusers, and other ceiling mounted services. The requirements herein are in addition to those specified in Part 2.

1S5.6.1 Design Forces. Vertical loads are specified in Part 2. All suspended ceiling systems shall also be designed to resist a force acting in any horizontal direction equal to 30 per cent of the weight of the ceiling assembly and any loads tributary to the system, but not less than a minimum lateral force of 1.20 psf. However, ceiling areas of 144 square feet or less surrounded by walls which connect directly to the structure above are exempt from the lateral load requirements.

1S5.6.2 Partitions Support. Where the suspended ceiling system is required to provide lateral support for permanent or relocatable partitions, the connection of the partition to the ceiling system, the ceiling system members and their connections, and the lateral force bracing shall be designed to support the reaction force of the partition from loads specified in Part 2 which are applied perpendicular to the face of the partition. These partition reaction forces shall be in addition to the seismic load described above. Partition connectors, the suspended ceiling system, and the lateral force bracing shall all be designed to suit the individual partition application.

1S5.6.3 Attachment of Lighting Fixtures and Air Diffusers. Lighting fixtures not over 56 pounds in weight may be supported by and attached directly to the ceiling system runners by a positive attachment such as screws or bolts or other special devices acceptable to the Engineer. Number 12 gage hangers shall be attached to the grid members within 3 inches of each corner of each fixture. Lighting fixtures weighing more than 20 pounds but less than 56 pounds, in addition to the above requirements, shall have two No. 12 gage hangers connected from the fixture housing to the structure above; these wires may be slack. Lighting fixtures weighing 56 pounds or more shall be supported directly from the structure above by hangers acceptable to the Engineer.

Pendent hung lighting fixtures shall be supported directly from the structure above using No. 9 gage hangers without using the ceiling suspension system for direct support.

*EPA Request dated Oct 12, 2010, for Information Pursuant to Section 114 . Response #10 of 17 of Appendix B.

Ceiling mounted air diffusers or services weighing less than 20 pounds and which receive no tributary loading from ductwork may be positively attached to the main runners or to cross runners with the same carrying capacity as the main runners. Number 12 gage hangers shall be attached to the grid members within 3 inches of each corner of the air diffuser or service. Diffusers or services weighing 20 pounds but not more than 56 pounds, in addition to the above requirements, shall have two No. 12 gage hangers connected from the diffuser or service to the structure above; these wires may be slack. Diffusers or services weighing more than 56 pounds shall be supported directly from the structure above by hangers acceptable to the Engineer.

The connections for light fixtures and air diffusers or services shall be designed to support a minimum vertical force of 300 per cent of the fixture weight and a minimum lateral force acting in any horizontal direction of 100 per cent of the weight.

1S5.7 SEISMIC DESIGN OF STORAGE RACKS. Storage racks shall be seismically designed in accordance with Section 2312(g) of the Uniform Building Code (Reference 2), for which in Formula (12-8) the Zone Factor Z shall be taken as 0.75 and Importance Factor I shall be taken as 1.5 unless otherwise specified in Part 2. In lieu of the tabulated values for C_p given in Table No. 23-J, steel storage racks may be designed in accordance with UBC Standard No. 27-11.

1S5.8 SEISMIC DESIGN OF PREFABRICATED WALL PANELS. Precast or prefabricated nonbearing, nonshear wall panels or similar components which are attached to or enclose the exterior of a structure, and their connections, shall be seismically designed in accordance with Section 2312(j)3C of the Uniform Building Code (Reference 2). In Formula (12-8) of the Uniform Building Code, the Zone Factor Z shall be taken as 0.75, Importance Factor I shall be taken as 1.5 unless otherwise specified in Part 2, and Horizontal Force Factor C_p shall be taken as 0.30.

*EPA Request dated Oct 12, 2010, for Information Pursuant to Section 114 . Response #10 of 17 of Appendix B.

TABLE 1S5-1

SEISMIC COEFFICIENTS FOR MISCELLANEOUS ARCHITECTURAL COMPONENTS(1)

	Seismic Coefficient
Appendages	
Exterior Nonbearing Walls (2)	0.9
Wall Attachments	3.0
Veneers	3.0
Roofing Materials	0.6
Free-standing Miscellaneous Components	1.5
Ladders, Platforms, Walkways, Handrailing	0.9
Parapets	2.5
Partitions	
Stairs	1.5
Elevators	1.5
Full-height Partitions(3)	0.9
Partial-height Partitions	0.6
Structural Fireproofing	0.9
Ceilings(4)	
Fire-rated Membrane (not suspended)	0.9
Nonfire-rated Membrane (not suspended)	0.6
Architectural Equipment - Ceiling, Wall, or Floor Mounted	0.9
Storage Racks(5)	

(1) See Article 1S5.5 for use of values in this table.

(2) Except see Article 1S5.8 for prefabricated wall panels.

(3) When UBC Code (Reference 2, Section 2309) horizontal loads exceed the computed seismic force, the code loads shall govern the design.

(4) For suspended ceilings, see Article 1S5.6.

(5) See Article 1S5.7.

*EPA Request dated Oct 12, 2010, for Information Pursuant to Section 114 . Response #10 of 17 of Appendix B.

IP10_002218

Section 1C - ENGINEERING DATA AND DOCUMENTATION

1C.1 GENERAL. This section stipulates the requirements for engineering data and documentation which the Contractor shall submit for design in-
*formation and review. ~~Compliance with the specified schedule for engineering data submittal is essential to the scheduled progress and completion of the project and is of the essence of this Contract.~~ The Contractor acknowledges that the specified schedule for engineering data submittal is of significant importance to the Owner and shall proceed with the specified work and shall conform to the specified schedule of data submittal. The Contractor shall take any action required to achieve the milestones within the approved schedule whether in Contractor's factory at the project site, subcontractor's facilities, or equipment suppliers' facilities, all at no additional cost to the Owner. The Owner will make no claim for schedule deficiency if such deficiency does not impact the overall project schedule.

The Document Submittal Schedule included herein lists certain required documentation. The Contractor shall provide such documentation complete in accordance with the requirements of this section and the referenced specification article.

*Notwithstanding the following schedule, any Contractor drawing or tech-
nical submittal which is dependent upon the type or vendor of the analog control system and/or programmable controller, as defined in the Options
**section of the Contract, shall be due 120 days (analog dependent data) and 180 days (programmable controller dependent data) after the Owner's official exercise of the appropriate option(s). In order to maintain the contract equipment delivery and completion dates, the options for the analog control system and programmable controller shall be exercised by the Owner on or before October 1, 1982, and May 1, 1982, respectively. For payment purposes, such drawings and technical data affected shall be excluded from the appropriate phase for payment and Owner shall pay the applicable payment provided all nonaffected information within the phase is submitted.

Additional documentation submitted by the Contractor, but not required by the Document Submittal Schedule, shall be submitted in accordance with the requirements of this Section 1C.

Documentation requiring review by the Engineer or Project Manager shall be submitted on a schedule which will allow reasonable time for review by the Engineer or Project Manager and correction by the Contractor, and which will permit performance of the work as scheduled in Section 1A.

*Negotiated Revision
**Negotiated Revision 011382

*EPA Request dated Oct 12, 2010, for Information Pursuant to Section 114 . Response #10 of 17 of Appendix B.

Document review by the Engineer or the Project Manager will cover only general conformity to the requirements of the specifications and documents. Review shall not be construed as modifying these requirements, nor relieving the Contractor from any responsibility for errors or deviations from the requirements of the contract documents.

Except as otherwise specified, all documentation shall be submitted separately for each of the Units 1, 2, 3, and 4. The Document Submittal Schedule has been established for Unit 1 only. The Contractor's documentation and drawings for Units 2, 3, and 4 shall not be submitted until the Contractor's documentation and certified drawings for Unit 1 have been accepted by the Engineer. The document submittal schedule for Units 2, 3, and 4 will be established after execution of contract or purchase order in a timely manner to permit orderly submittal and review of required documentation.

1C.2 CORRESPONDENCE. All correspondence forwarding documents shall be accompanied by a letter of transmittal listing the exact contents of the transmittal. The correspondence shall be identified by the project name, the unit number, the specification number, the Engineer's project number, and the Engineer's identification designation, if applicable. Letters of

*EPA Request dated Oct 12, 2010, for Information Pursuant to Section 114 . Response #10 of 17 of Appendix B.

transmittal shall be addressed as specified in writing by the Project Manager or, in the absence of written instruction, as follows.

To the Engineer

Original to:

Black & Veatch, Consulting Engineers
P.O. Box 8405
Kansas City, Missouri 64114

Attention: Mr. R. W. Dutton

To the Project Manager

One copy to:

Project Manager
Intermountain Power Project
111 North Hope Street, Room 931
Los Angeles, California 90051

Attention: Generating Station Project Engineer

To the Construction Manager

One copy to:

(Later)

1C.3 PROCESSING.

1C.3.1 Document Status. Certified documents only shall be submitted unless a requirement for preliminary documents is specified in the Document Submittal Schedule. A requirement for preliminary documents shall not preclude the Contractor from submitting certified documents in lieu of preliminary documents.

"Preliminary" documents shall mean documents not fully completed, checked, or approved by the Contractor; however, they shall be reasonably complete and suitable for the Engineer's or Project Manager's use in establishing basic plant arrangement and design requirements. Preliminary documents will not be reviewed by the Engineer or Project Manager; however, the Engineer or Project Manager will advise the Contractor of any discrepancies or conflicts which may be discovered in reference to the documents.

"Certified" documents shall mean documents fully completed and certified by the Contractor as to the compliance of the information contained thereon with the requirements of the contract documents. Certified documents will be reviewed by the Engineer or Project Manager and processed as specified herein.

*EPA Request dated Oct 12, 2010, for Information Pursuant to Section 114 . Response #10 of 17 of Appendix B.

IP10_002222

1C.3.2 Submittal. The number of copies specified in the Document Submittal Schedule shall be submitted by first-class mail.

A drawing index listing all drawings to be submitted for each item of equipment covered by the contract documents shall be included with the initial submittal of drawings. The drawing index shall be resubmitted as required to indicate revisions to the list.

Each drawing submitted shall be clearly marked with the name of the project, the unit designation, the contract title, the contract number, and the Contractor's name. If catalog pages are submitted the applicable items shall be indicated.

Drawing prints shall be black line on white background (preferred) or blue line on white background. Print size shall not exceed 36 inches by 48 inches unless due to the size of the equipment larger drawings are necessary. Drawings shall be folded to 8-1/2 inches by 11 inches. Drawing and lettering practices shall be in general accordance with the requirements of Department of Defense Military Standard Engineering Drawing Practices, DOD-STD-100C. Drawings submitted which are not suitable for microfilming will not be accepted.

1C.3.3 Review and Correction. Documents designated on the Document Submittal Schedule to be submitted for review will be returned to the Contractor as stipulated in this article. Copies of documents returned to the Contractor will be in the form of marked copies or copies made from microform reproduction of marked copies.

Documents designated on the Document Submittal Schedule to be submitted for record or information will not normally be returned to the Contractor; however, such documents may be returned if the Project Manager or Engineer discovers discrepancies or errors in the documents.

Documentation reviewed by the Engineer or the Project Manager will be returned to the Contractor marked RETURNED FOR CORRECTION, EXCEPTIONS NOTED, or NO EXCEPTIONS NOTED.

When documentation is returned marked RETURNED FOR CORRECTION or EXCEPTIONS NOTED, corrections shall be made as noted thereon or as instructed by the Engineer or Project Manager and six copies of each corrected document shall be resubmitted.

When the documents are returned marked NO EXCEPTIONS NOTED or RECEIVED FOR DISTRIBUTION, the Contractor shall submit documents for final distribution as specified hereinafter under Final Documentation.

No work shall be performed in connection with the fabrication or manufacture of equipment and materials until the documents and data therefor have been reviewed by the Engineer except at the Contractor's own risk and responsibility. Work may proceed on equipment and materials when the

*EPA Request dated Oct 12, 2010, for Information Pursuant to Section 114 . Response #10 of 17 of Appendix B.

documents and data therefor have been returned marked NO EXCEPTIONS NOTED or RECEIVED FOR DISTRIBUTION and when documents have been returned marked EXCEPTIONS NOTED, provided the work is performed in accordance with the Engineer's notations.

If changes to the equipment are made following "final documentation" and including changes made at the project site to correct for manufacturing errors, or due to design changes or wiring revisions, revised drawings indicating the changes made shall be prepared and submitted on reproducible mylars as specified hereinafter under Final Documentation.

1C.3.4 Final Documentation. Upon receipt of drawings marked NO EXCEPTIONS NOTED or RECEIVED FOR DISTRIBUTION, the Contractor shall transmit two mylar reproducibles of each final drawing to the Engineer. Reproducible mylars shall be mailed in rolls and not folded. All documents other than drawings shall be submitted in hard copy and in accordance with the Document Submittal Schedule.

1C.4 DOCUMENTATION TO BE FURNISHED. The articles which follow define selected documentation requirements. Other document submittal requirements are defined in the Document Submittal Schedule.

1C.4.1 Production Schedule and Status Reports. The Contractor shall submit a detailed schedule for engineering, procurement, manufacture, and delivery of the equipment and materials furnished under the contract documents. The schedule shall identify major hold points where the Contractor's quality control plan will be implemented. The Contractor shall also submit monthly status reports indicating the status of all scheduled activities.

1C.4.2 Outline Drawings. Outline drawings shall indicate the outline of the equipment, overall dimensions, locations of supports, attachments, and shipping and operating weights. Drawings included with these specifications and documents shall not be reproduced and used as general outline drawings.

1C.4.3 Assembly Drawings. Assembly drawings shall indicate the arrangement of the functional parts, parts list, and material designation.

1C.4.4 Detail Drawings for Fabrication. Fabrication drawings shall be in sufficient detail to indicate the kind, size, arrangement, weights of each component, breakdown for shipment, and operation of component materials and devices; the external connections, anchorages, and supports required; the dimensions needed for installation and correlation with other equipment and materials; and the information specifically requested in the Document Submittal Schedule included herein.

1C.4.5 Erection Drawings. Erection drawings shall indicate all locational dimensions and tolerances and sizes of members or parts as well as piece marks or erection marks referenced to the detail drawings, erection

*EPA Request dated Oct 12, 2010, for Information Pursuant to Section 114 . Response #10 of 17 of Appendix B.

sequences as appropriate, weld symbols, and NDE symbols. For parts of standard manufacture, prints of the manufacturer's drawings properly identified will be acceptable.

1C.4.6 Performance Curves and Design Data. The following performance curves and design data shall be submitted.

Performance Curves

Scrubber performance curves specified in Section 2A

Pump characteristic curves specified in Section 2A

Superimposed motor driven equipment speed-torque curves at rated voltage and minimum specified starting voltage

Speed-torque curves and any additional equipment drive requirements for equipment which will be driven by Owner-furnished motors

Forced oxidation system blower performance curves

Materials Balance Diagrams

Complete and detailed materials balance diagrams for operation at 25, 50, 75 and 100 per cent of steam generator maximum continuous rating

Structural design data

Data to permit preliminary layout of foundations, structural steel for support of equipment and ductwork, equipment enclosures, and access provisions

Access and maintenance requirements for equipment furnished under these specifications

All dead, live and seismic load and moment diagrams required for design of structural support steel and foundations

Water volumes of components

Mechanical design data

Data to enable purchase of major auxiliary equipment dependent on equipment design variables

*EPA Request dated Oct 12, 2010, for Information Pursuant to Section 114 . Response #10 of 17 of Appendix B.

Data to permit preliminary sizing of the major piping systems

Complete listing of cooling water requirements including flow rate, heat rate and pressure drop

Complete listing of cooling tower blowdown and river water requirements including flow rate and required pressure

Complete listing of compressed air (service and instrument) requirements including flow rate (scfm), pressure (psi) and duration (minutes)

Reheater soot blowing system data consisting of location drawing and list of blower type, location and duty cycle as specified in Section 2A

Electrical design data

Data to permit preliminary design of electrical power systems

Power requirements of all devices requiring power

Specifications and data for equipment and components

Control design data

Control system description complete with logic diagrams both digital and analog, electrical schematic diagrams, ladder diagrams, electrical connection diagrams and pneumatic connection diagrams, supplemented with written description of sufficient detail to completely describe the modulating control loops and sequential actions required to perform the control functions

Bill of materials of control items

Completed ISA-S20 standard specification forms for process measurement and control instruments, primary elements and control valves as follows:

Item	Form
Receiver Instruments	S20.1a
Receiver Instruments	S20.1b
Annunciators	S20.2a
Annunciators Nameplate Schedule	S20.2b

*EPA Request dated Oct 12, 2010, for Information Pursuant to Section 114 . Response #10 of 17 of Appendix B.

Item	Form
Miscellaneous (Blank Form)	S20.3a
Miscellaneous (Blank Form)	S20.3b
Miscellaneous (Blank Form)	S20.3c
Potentiometer Instruments	S20.10a
Potentiometer Instruments	S20.10b
Temperature Instruments (Filled System)	S20.11a
Temperature Instruments (Filled System)	S20.11b
Thermocouples and Thermowells	S20.12a
Thermocouples and Thermowells	S20.12b
Resistance Temperature Sensors	S20.13a
Resistance Temperature Sensors	S20.13b
Industrial Bimetal and Glass Thermometers	S20.14a
Industrial Bimetal and Glass Thermometers	S20.14b
Differential Pressure Instruments	S20.20a
Differential Pressure Instruments	S20.20b
Orifice Plates and Flanges	S20.21
Rotameters (Variable Area Flowmeters)	S20.22
Magnetic Flowmeters	S20.23
Turbine Flowmeters	S20.24
Positive Displacement Meters	S20.25
Level Instruments (Displacer or Float)	S20.26
Level Instruments (Capacitance Type)	S20.27
Gage Glasses and Cocks	S20.28
Traps and Drainers	S20.29
Pressure Instruments	S20.40a
Pressure Instruments	S20.40b
Pressure Gages	S20.41a
Pressure Gages	S20.41b
Pressure Switches	S20.42a
Pressure Switches	S20.42b
Control Valves	S20.50
Pressure Control Valves Pilots and Regulators	S20.51
Self-actuated Temperature Regulator	S20.52
Pressure Relief Valves	S20.53
Rupture Discs	S20.54
Solenoid Valves	S20.55

*EPA Request dated Oct 12, 2010, for Information Pursuant to Section 114 . Response #10 of 17 of Appendix B.

1C.4.7 Wiring Diagrams. Connection and interconnection wiring diagrams furnished by the Contractor shall be as indicated in ANSI Y14.15a-1971, Section 15-11, Article 15-11.3.2.1, and Figure 11-4 except that function information and wire run code are not required. Each device connection shall have near each termination, indicated in breaks, conductor identification consisting of the opposite end destination. The wiring diagrams shall be drawn with all devices indicated in their relative physical locations and shall represent the equipment and terminals arranged as they would appear to a person wiring the equipment.

Wiring diagrams shall be prepared on sheets approximately 30 inches by 42 inches. Where interconnecting wiring from different items of equipment or sectional wiring diagrams of the same item of equipment appear on different wiring diagram sheets, all interconnections shall be clearly identified. Where sectional wiring diagrams are required for a single item of equipment, such as a relay panel or control panel, that section of the panel which is represented by each individual wiring diagram sheet shall be keyed on that sheet in a manner acceptable to the Engineer.

Information indicated on the Contractor's drawings shall include wiring of the individual panel items as they actually will appear in the panel, contact arrangements of switches, and internal wiring of relays and instruments.

Elementary diagrams shall be cross-referenced to terminal markings on the connection and interconnection diagrams, but need not indicate complete details of circuits external to the panels. Each item of panel mounted equipment indicated on the diagrams shall be identified by item number and name.

Sufficient space shall be left on the Owner's side of outgoing terminal blocks for adding cable color codes and circuit numbers. The Contractor shall be responsible for adding the color codes and circuit numbers to his drawings after they are assigned by the Engineer.

1C.4.8 Motor Information. Sample Motor Information Sheets are bound at the end of this section. The successful bidder shall submit copies of these forms as applicable for each motor furnished under these specifications and documents. These sheets shall be completed and copies submitted as scheduled in the Document Submittal Schedule. The number of copies and processing requirements shall be the same as specified in this section under Submittal. Motor identification shall be listed on each Motor Information Sheet submitted and shall conform to the Engineer's identification system.

1C.4.9 Instruction Manuals. The Contractor shall furnish instruction manuals for the equipment as scheduled in the Document Submittal Schedule.

Each copy of the manuals shall be assembled and bound in a binder imprinted on the backbone and cover in accordance with the layout indicated on Drawing P-9255-070180-1 included at the end of this section. The

*EPA Request dated Oct 12, 2010, for Information Pursuant to Section 114 . Response #10 of 17 of Appendix B.

IP10_002228

binders shall be McBee Loose Leaf Binder Products (424 North Cedarbrook Avenue, Springfield, Missouri 65802) in accordance with the following.

Binder type: Swing Hinge C78
Construction: Stiff binder board
Covering: Supported vinyl crush pattern, skiver liner
Color: Dark Gray 11-S Crush

Binder imprinting shall be stamping color Aluminum-1822. Binders shall not exceed 3 inches in thickness.

A complete proofed copy of the proposed manual, including cover lettering, shall be submitted to the Engineer for acceptance. After acceptance, the remaining copies shall be submitted as specified in the Document Submittal Schedule.

The manuals shall include the following.

Table of Contents and index tabs

Specifications, test data, and curves

Description of the equipment

Operating instructions

Instructions in the methods of receiving, inspection, storage, and handling

Complete installation and maintenance instructions

Assembly drawings

Parts lists

Schedule of required lubricants

Nameplate information and shop order numbers for each item of equipment and component part thereof

List of recommended spare parts and prices

List of maintenance tools furnished with the equipment

Instruction manuals shall be guaranteed in accordance with the requirements of the article entitled GUARANTEE in the General Conditions.

*EPA Request dated Oct 12, 2010, for Information Pursuant to Section 114 . Response #10 of 17 of Appendix B.

DOCUMENT SUBMITTAL SCHEDULE

	TYPE OF DOCUMENT	SPECIFICATION ARTICLE	NO. OF COPIES SUBMITTED TO	SUBMITTED FOR	TIME OF SUBMITTAL
1.	Detailed Cost Estimate and Written Notice of Claim or Dispute Concerning Contract Change	GC.19	6 - Project Mgr. 6 - Engineer 1 - Const. Mgr.	Review	Within 15 days of request for interim authorization to proceed with the work
2.	Detailed Cost Estimate for Proposed Extra Work	GC.19.1.1	6 - Project Mgr. 1 - Project Mgr.-Site 6 - Engineer 1 - Const. Mgr.	Review	With modification proposal
3.	Certificates of Insurance	GC.26	2 - Project Mgr. 1 - Engineer 1 - Const. Mgr.	Record	
	a. Physical loss or damage				30 days before first shipment
	b. All other policies				30 days before field service or erection personnel arrive at site
4.	Estimated Cash Flow Requirements	GC.31	2 - Project Mgr. 1 - Engineer 1 - Const. Mgr.	Record	As specified in Article GC.31

*EPA Request dated Oct 12, 2010, for Information Pursuant to Section 114 . Response #10 of 17 of Appendix B.

IP10_002230

DOCUMENT SUBMITTAL SCHEDULE

	TYPE OF DOCUMENT	SPECIFICATION ARTICLE	NO. OF COPIES SUBMITTED TO	SUBMITTED FOR	TIME OF SUBMITTAL
5.	Anticipated Earned Labor Dollars	GC.31	2 - Engineer 2 - Const. Mgr.	Record	30 days after contract award and every 30 days during erection work
6.	Progress Payment Request	GC.32	1 - Engineer 1 - Const. Mgr.	Information	Each month
7.	Detailed Cost Breakdown	GC.32.4	1 - Engineer 1 - Const. Mgr.	Record	15 days prior to first progress payment request
8.	Equipment Price Adjustment Invoice	GC.32.6	1 - Engineer 1 - Const. Mgr.	Information	With progress payment request
9.	Erection Wage Rate Adjustment	GC.32.7	1 - Engineer 1 - Const. Mgr.	Information	After erection begins
10.	Affirmative Action Plan	GC.34.2	4 - Bureau of Land Management 2 - Project Mgr. 1 - Engineer 1 - Const. Mgr.	Information	As directed by authorized officer
11.	Contractor/Subcontractor Personnel Summary Report	SC.2	1 - Const. Mgr.	Record	Daily
12.	Field Records	SC.4	2 - Project Mgr. 1 - Const. Mgr. 1 - Engineer	Record	30 days after conclusion of the work

*EPA Request dated Oct 12, 2010, for Information Pursuant to Section 114 . Response #10 of 17 of Appendix B.

[IPP 9255 WET SCRUBBER 62.0202]
032081
1C-11

IP10_002231

DOCUMENT SUBMITTAL SCHEDULE

	TYPE OF DOCUMENT	SPECIFICATION ARTICLE	NO. OF COPIES SUBMITTED TO	SUBMITTED FOR	TIME OF SUBMITTAL
13.	Damage, Loss, or Injury Report	SC.11	1 - Const. Mgr. 1 - Project Mgr.-Site	Record	Within 3 days of notification
14.	Equivalency Review Request	SC.36	6 - Engineer	Review	30 days prior to ordering nonspecified material
15.	Equipment Inspection Certification	1A.5.3	2 - Project Mgr. 2 - Engineer 2 - Const. Mgr.	Record	3 working days prior to initial operation of individual equipment
16.	Construction Management System Information	1A.6	2 - Const. Mgr.	Information	By the first of each month
17.	Request for Modification from Identical Equipment	1B.4	2 - Project Mgr. 6 - Engineer	Review	30 days prior to ordering or fabricating
18.	Preshipment Inspection Notice	1B.6 1D.8	2 - Project Mgr.	Information	10 working days prior to equipment shipment
19.	Shipping Notice	1B.8	2 - Project Mgr. 2 - Project Mgr.-Site 2 - Const. Mgr.	Record	3 days prior to shipment arrival
20.	Materials List	1B.9	2 - Project Mgr. 2 - Project Mgr.-Site 2 - Const. Mgr.	Record	With first shipping notice
21.	Itemized List of Equipment Maintenance Tools	1B.15	2 - Project Mgr. 2 - Project Mgr.-Site 1 - Const. Mgr. 1 - Attached to each shipping box	Record	With maintenance tools

*EPA Request dated Oct 12, 2010, for Information Pursuant to Section 114 . Response #10 of 17 of Appendix B.

DOCUMENT SUBMITTAL SCHEDULE

	TYPE OF DOCUMENT	SPECIFICATION ARTICLE	NO. OF COPIES SUBMITTED TO	SUBMITTED FOR	TIME OF SUBMITTAL
22.	Pressure Switch Acceptability	1B.22.2	6 - Project Mgr. 6 - Engineer	Review	90 days after contract award
23.	Temperature Switch Acceptability	1B.22.3	6 - Project Mgr. 6 - Engineer	Review	90 days after contract award
24.	Thermowell Acceptability	1B.22.9	6 - Project Mgr. 6 - Engineer	Review	90 days after contract award
25.	Drawings to Allow Location of Vibration Transducers	1B.22.11	6 - Engineer	Review	With certified equipment drawings
26.	Alternate Pin and Socket Manufacturer's Specification Data, if applicable	1B.30	6 - Engineer	Review	As required to permit 30 days review of the data
27.	Solid-state Logic Systems Test Reports	1B.39	2 - Project Mgr. 6 - Engineer	Review	5 days prior to shipment
28.	Impact Recorder Charts	1B.42	1 (original) - Const. Mgr.	Record	When equipment arrives at site
29.	Drawing Index of All Drawings to be Submitted	1C.3.2	2- Project Mgr. 1 - Engineer	Information	With initial drawing submittal and with revisions as necessary

*EPA Request dated Oct 12, 2010, for Information Pursuant to Section 114 . Response #10 of 17 of Appendix B.

IP10_002233

DOCUMENT SUBMITTAL SCHEDULE

	TYPE OF DOCUMENT	SPECIFICATION ARTICLE	NO. OF COPIES SUBMITTED TO	SUBMITTED FOR	TIME OF SUBMITTAL
30.	Manufacturer's Production Schedule	1C.4.1	2 - Project Mgr. 1 - Project Mgr.-Site 1 - Engineer 1 - Const. Mgr.	Record	60 days after contract award
31.	Production Status Reports	1C.4.1	2 - Project Mgr. 1 - Project Mgr.-Site 1 - Const. Mgr. 1 - Engineer	Review Review Review Information	Monthly, beginning 60 days after contract award
32.	Performance Curves and Design Data	1C.4.6	6 - Engineer 2 - Project Mgr.	Review Information	Days after contract award
	Performance Curves				60
	Materials Balance Diagrams				60
	Structural Design Data				120
	Mechanical Design Data				90
	Electrical Design Data				120
	Control Design Data				300

*EPA Request dated Oct 12, 2010, for Information Pursuant to Section 114 . Response #10 of 17 of Appendix B.

IP10_002234

DOCUMENT SUBMITTAL SCHEDULE

	TYPE OF DOCUMENT	SPECIFICATION ARTICLE	NO. OF COPIES SUBMITTED TO	SUBMITTED FOR	TIME OF SUBMITTAL
33.	Preliminary Drawings	1C.4.2 thru 1C.4.5, 1C.4.7	6 - Engineer	Review	Days after contract award
	General arrangement and outline drawings required for plant layout. The drawings shall indicate locations and dimensions of major equipment and ductwork, location and size of connections for Owner-furnished ductwork and piping, access requirements, clearance dimensions, thermal expansion movements, etc.				90
	Foundation and loading drawings including load locations				120
	Drawings of all auxiliary equipment indicating all information required for supporting and piping the items. This shall include outline drawings of modules, tanks, pumps, mixers, blowers, etc., as well as all motors.				120

*EPA Request dated Oct 12, 2010, for Information Pursuant to Section 114 . Response #10 of 17 of Appendix B.

IP10_002235

DOCUMENT SUBMITTAL SCHEDULE

TYPE OF DOCUMENT	SPECIFICATION ARTICLE	NO. OF COPIES SUBMITTED TO	SUBMITTED FOR	TIME OF SUBMITTAL
Preliminary Drawings (cont)				Days after contract award
Drawings of all piping furnished as required to show routing, pipe supports, locations of valves, drains, instruments, accessories, and connections for Owner-furnished piping. Spool sheet and isometric assembly drawings shall be part of the submittal				210
Drawings indicating details of ductwork, hoppers, expansion joints, supports, etc.				180
Insulation and lagging drawings				240
Auxiliary equipment drawings indicating electrical connections				120
Elementary (schematic) diagrams and wiring diagrams				240
Electrical one-line diagrams				240

*EPA Request dated Oct 12, 2010, for Information Pursuant to Section 114 . Response #10 of 17 of Appendix B.

*Negotiated Revision

[IPP 9255 WET SCRUBBER 62.0202]
[ ]
112081
1C-17

DOCUMENT SUBMITTAL SCHEDULE

	TYPE OF DOCUMENT	SPECIFICATION ARTICLE	NO. OF COPIES SUBMITTED TO	SUBMITTED FOR	TIME OF SUBMITTAL
	Preliminary Drawings (cont)				Days after contract award
	Arrangement drawings for electrical equipment and control devices				240
	Control logic and detailed control and instrument drawings				300
	Data sheets for all panel and field mounted instrumentation				300
	Cabinet and panel outline and layout drawings				300
34.	Certified Drawings	1C.4.2 thru 1C.4.5, 1C.4.7	6 - Engineer	Review	
*	General arrangement and outline drawings required for plant layout. The drawings shall indicate locations and dimensions of major				~~150~~155

*EPA Request dated Oct 12, 2010, for Information Pursuant to Section 114 . Response #10 of 17 of Appendix B.

*Negotiated Revision

[IPP 9255 WET SCRUBBER 62.0202]
[112081]
IC-18

DOCUMENT SUBMITTAL SCHEDULE

	TYPE OF DOCUMENT	SPECIFICATION ARTICLE	NO. OF COPIES SUBMITTED TO	SUBMITTED FOR	TIME OF SUBMITTAL
	Certified Drawings (cont)				Days after contract award
	equipment and ductwork, location and size of connections for Owner-furnished ductwork and piping, access requirements, clearance dimensions, thermal expansion movements, etc.				
*	Foundation and loading drawings including load locations				180185
*	Drawings of all auxiliary equipment indicating all information required for supporting and piping the items. This shall include outline drawings of modules, tanks, pumps, mixers, blowers, etc., as well as all motors.				180185
*	Drawings of all piping furnished as required to show routing, pipe supports, locations of valves, drains, instruments, accessories				270275

*EPA Request dated Oct 12, 2010, for Information Pursuant to Section 114 . Response #10 of 17 of Appendix B.

*Negotiated Revision

[IPP 9255 WET SCRUBBER 62.0202]
[112081]
IC-19

DOCUMENT SUBMITTAL SCHEDULE

	TYPE OF DOCUMENT	SPECIFICATION ARTICLE	NO. OF COPIES SUBMITTED TO	SUBMITTED FOR	TIME OF SUBMITTAL
	Certified Drawings (cont)				Days after contract award
	and connections for Owner-furnished piping. Spool sheet and isometric assembly drawings shall be part of the submittal.				
*	Drawings indicating details of ductwork, hoppers, expansion joints, supports, etc.				240245
*	Insulation and lagging drawings				300305
*	Auxiliary equipment drawings indicating electrical connections				180185
*	Elementary (schematic) diagrams				300305
*	Electrical one-line diagram				300305
*	Arrangement drawings for electrical equipment and control devices				300305

*EPA Request dated Oct 12, 2010, for Information Pursuant to Section 114 . Response #10 of 17 of Appendix B.

*Negotiated Revision

[IPP 9255 WET SCRUBBER 62.0202]
[112081 ADDENDUM 3]
1C-20

DOCUMENT SUBMITTAL SCHEDULE

	TYPE OF DOCUMENT	SPECIFICATION ARTICLE	NO. OF COPIES SUBMITTED TO	SUBMITTED FOR	TIME OF SUBMITTAL
	Certified Drawings (cont)				Days after contract award
*	Control logic and detailed control and instrument drawings				160365
*	Data sheets for all panel and field mounted instrumentation				160365
*	Cabinet and panel outline and layout drawings				160365
*35.	Motor Information Sheets	1C.4.8	6 - Engineer	Review	170125*
36.	Instruction Manuals	1C.4.9			
	a. Proofed Copy		1 - Engineer	Review	90 days prior to equipment shipment
	b. Final Copies		25 - As directed by Project Mgr.	Record	30 days prior to equipment shipment
37.	Certified Factory Test Results	1D.4.3	2 - Project Mgr.	Record	5 days prior to shipment

*EPA Request dated Oct 12, 2010, for Information Pursuant to Section 114 . Response #10 of 17 of Appendix B.

DOCUMENT SUBMITTAL SCHEDULE

	TYPE OF DOCUMENT	SPECIFICATION ARTICLE	NO. OF COPIES SUBMITTED TO	SUBMITTED FOR	TIME OF SUBMITTAL
38.	Quality Assurance Manual	1D.6.1	6 - Project Mgr. 6 - Engineer	Review	30 days after contract award
39.	Inspection and Test Outline	1D.6.2	6 - Project Mgr. 6 - Engineer	Review	30 days prior to start of fabrication
40.	Equipment Inspection and Testing Notice	1D.6.2	2 - Project Mgr.	Information	Prior to start of manufacture and at least 10 working days prior to inspection or test
41.	Electric Motor Tests and Inspection Reports	1E1.2.1	2 - Engineer	Information	5 days prior to shipment
42.	Welding Procedures and Qualifications	1G.1, 2H2.4.1, 3D.1, 3F.7	2 - Project Mgr. 1 - Project Mgr.-Site for field welding 6 - Engineer for shop welding 1 - Const. Mgr. for field welding	Review Review Review Information	30 days prior to beginning work
43.	Names of Welders Who Make Each Weld	2H2.4.1, 3D.1, 3E.2, 3F.7	2 - Project Mgr. for shop welding 2 - Const. Mgr. for field welding	Information	Upon request

*EPA Request dated Oct 12, 2010, for Information Pursuant to Section 114 . Response #10 of 17 of Appendix B.

IP10_002241

DOCUMENT SUBMITTAL SCHEDULE

	TYPE OF DOCUMENT	SPECIFICATION ARTICLE	NO. OF COPIES SUBMITTED TO	SUBMITTED FOR	TIME OF SUBMITTAL
44.	Welder, Welding Operator, and Tacker Qualification	1G.1, 2H2.4.1, 3D.1, 3F.7	6 - Project Mgr. 2 - Project Mgr.-Site 6 - Engineer 1 - Const. Mgr. for field welding	Review Review Review Information	Upon request
45.	Welding Electrode Storage and Handling Procedure	1G.2, 2H2.4.4	2 - Project Mgr. for shop and field welding 1 - Project Mgr.-Site for field welding 6 - Engineer for shop and field welding 1 - Const. Mgr. for field welding	Review Review Review Information	30 days prior to beginning work
46.	Paint Manufacturer's Specification Data Sheets	1H.2	6 - Engineer	Review	30 days prior to painting
47.	Paint Color Samples	1H.2	2 - Engineer	Information	30 days prior to painting
48.	Touch-up Painting Instructions	1H.3.5	2 - Const. Mgr.	Information	With shipment of touch-up paint
49.	Seismic Design Calculations for Classification E-I Equipment	1S1.4	6 - Project Mgr. 6 - Engineer	Review	With the certified drawings. Submit only if requested.
50.	Seismic Design Calculations for Piping	1S3.7	6 - Project Mgr. 6 - Engineer	Review	With the certified drawings. Submit only if requested.

*EPA Request dated Oct 12, 2010, for Information Pursuant to Section 114 . Response #10 of 17 of Appendix B.

IP10_002242

DOCUMENT SUBMITTAL SCHEDULE

	TYPE OF DOCUMENT	SPECIFICATION ARTICLE	NO. OF COPIES SUBMITTED TO	SUBMITTED FOR	TIME OF SUBMITTAL
51.	Seismic Design Calculations for Structures	1S4.8	6 - Project Mgr. 6 - Engineer	Review	With the certified drawings. Submit only if requested.
52.	Seismic Design Calculations and Data for Architectural Components	1S5.4	6 - Project Mgr. 6 - Engineer	Review	With the certified drawings. Submit only if requested.
53.	Recommendations for Gas Distribution Devices in Owner-furnished Ductwork	2A.4	2 - Engineer	Information	As part of model test report
54.	Model Test Reports	2A.11			
	First Interim Report		2 - Project Mgr. 2 - Engineer	Information	When model fabrication is approximately 50 per cent complete
	Second Interim Report		2 - Project Mgr. 2 - Engineer	Information	When model flow testing is approximately 50 per cent complete
	Final Report		2 - Project Mgr. 6 - Engineer	Information Review	At the time of model flow demonstration at completion of model test as scheduled in Section 1A

*EPA Request dated Oct 12, 2010, for Information Pursuant to Section 114 . Response #10 of 17 of Appendix B.

IP10_002243

DOCUMENT SUBMITTAL SCHEDULE

	TYPE OF DOCUMENT	SPECIFICATION ARTICLE	NO. OF COPIES SUBMITTED TO	SUBMITTED FOR	TIME OF SUBMITTAL
55.	Certified Mill Test Reports Covering All Plates and Structural Plates	2E1.4, 2E2.5.4	2 - Engineer	Record	5 days prior to fabrication
56.	Shop Fabrication Tank Test Reports	2E1.6	2 - Engineer	Record	Precede or accompany shipment
57.	Tank Interior Coating Certification	2E1.7	2 - Engineer	Record	5 days after coating application
58.	Mixer Model Study Reports	2F.4	2 - Project Mgr. 2 - Engineer	Information	90 days after mixer drawings submitted
59.	Pump Data Sheets	2G.4	2 - Project Mgr. 2 - Engineer	Information	With mechanical design data
60.	Local Stress Relieving Temperature Record	2H2.4.7	2 - Engineer 2 - Project Mgr. 2 - Const. Mgr.	Information	Upon request
61.	Post-weld Heat Treatment Procedures	2H2.4.7	6 - Engineer	Review	30 days prior to beginning work
62.	FRP Pipe Joiner Certification Procedures	2H2.10	6 - Engineer	Review	30 days prior to beginning work
63.	FRP Pipe Joiner Certificates	2H2.10	2 - Project Mgr. for shop joints 1 - Const. Mgr. for field joints	Record	Prior to beginning work by any particulate joiner

*EPA Request dated Oct 12, 2010, for Information Pursuant to Section 114 . Response #10 of 17 of Appendix B.

IP10_002244

DOCUMENT SUBMITTAL SCHEDULE

	TYPE OF DOCUMENT	SPECIFICATION ARTICLE	NO. OF COPIES SUBMITTED TO	SUBMITTED FOR	TIME OF SUBMITTAL
64.	Piping Support Details	2H3.4	1 - Engineer	Information	21 days prior to fabrication of supports
65.	Alternate Methods for Sizing Riser Lugs, if applicable	2H3.7.3.4	6 - Engineer	Review	30 days prior to beginning work

*EPA Request dated Oct 12, 2010, for Information Pursuant to Section 114 . Response #10 of 17 of Appendix B.

DOCUMENT SUBMITTAL SCHEDULE

	TYPE OF DOCUMENT	SPECIFICATION ARTICLE	NO. OF COPIES SUBMITTED TO	SUBMITTED FOR	TIME OF SUBMITTAL
66.	Eye Rod Dimensions and Fabrication Procedures	2H3.7.4	6 - Engineer	Review	30 days prior to beginning work
67.	Ductwork Design Calculations	2K.3	6 - Engineer	Review	With certified ductwork drawings
68.	Expansion Joint Certificate of Conformance	2K.8	2 - Project Mgr.	Record	With shipment
69.	Damper Calculations	2L.2	1 - Engineer	Information	With certified damper drawings
70.	Damper Functional Test Report	2L.4	2 - Engineer 2 - Project Mgr.	Record	5 working days prior to shipment
71.	Programmable Controller Test Reports	2N.18.11	2 - Project Mgr. 2 - (each test) - Engineer	Record	5 working days prior to shipment and immediately following onsite tests
72.	Control Cable Shielding Recommendations	2N.23	1 - Engineer	Information	With control design data
73.	Control Equipment Factory Testing Notification	2N.26	2 - Project Mgr.	Information	10 working days prior to test

*EPA Request dated Oct 12, 2010, for Information Pursuant to Section 114 . Response #10 of 17 of Appendix B.

IP10_002246

DOCUMENT SUBMITTAL SCHEDULE

	TYPE OF DOCUMENT	SPECIFICATION ARTICLE	NO. OF COPIES SUBMITTED TO	SUBMITTED FOR	TIME OF SUBMITTAL
74.	Control Equipment Factory Tests Reports	2N.26	2 - Engineer	Record	30 days after completion of test
75.	Equipment Receiving Report	3A.6.1	2 - Const. Mgr. 2 - Project Mgr.-Site	Information	After equipment arrives at site
76.	Field Inspection and Test Notice	3A.8	1 - Const. Mgr. 1 - Project Mgr.-Site	Information	7 days notice in advance of inspection or test
77.	Contractor's Construction Schedule Diagrams	3B.3	6 - Engineer 1 - Const. Mgr. 1 - Project Mgr.-Site	Review Information Information	30 days after contract award
78.	Contractor's Construction Schedule	3B.3	6 - Engineer 1 - Const. Mgr. 1 - Project Mgr.-Site	Review Information Information	30 days after contract award
79.	Approved Construction Control Schedule Diagrams	3B.3	6 - Engineer 1 - Const. Mgr. 1 - Project Mgr.-Site	Review Information Information	Updated monthly
80.	Update Report	3B.3.1	6 - Engineer 1 - Const. Mgr. 1 - Project Mgr.-Site	Review Information Information	Monthly

*EPA Request dated Oct 12, 2010, for Information Pursuant to Section 114 . Response #10 of 17 of Appendix B.

IP10_002247

DOCUMENT SUBMITTAL SCHEDULE

	TYPE OF DOCUMENT	SPECIFICATION ARTICLE	NO. OF COPIES SUBMITTED TO	SUBMITTED FOR	TIME OF SUBMITTAL
81.	Commodity "S" Curves for Erection Work	3B.4.1	6 - Engineer 1 - Const. Mgr.	Review Information	30 days prior to start of erection work and at monthly intervals during erection work
	a. Conductor Terminations				
	b. Control Cable Installation				
	c. Pipe Welding				
	d. Pipe Erection				
82.	Alignment Measurement Records	3C.9	2 - Const. Mgr. 2 - Project Mgr.-Site	Information	3 working days prior to starting equipment
83.	Winding Insulation Resistance Report	3C.15	2 - Const. Mgr. 2 - Project Mgr.-Site	Record	Within 5 days after each test
84.	Gas Envelope Leak Test Plan	3C.19	2 - Const. Mgr. 2 - Project Mgr.-Site	Information	Prior to tests
85.	Bearing Test Report	3C.20	2 - Const. Mgr. 2 - Project Mgr.-Site	Record	Within 5 days after each test
86.	Radiographic Weld Examination Test Results	3E.3.1	1 - Const. Mgr.	Information	As soon as practicable after each test

*EPA Request dated Oct 12, 2010, for Information Pursuant to Section 114 . Response #10 of 17 of Appendix B.

IP10_002248

*Addendum No. 3
**Negotiated Revision

[IPP 9255 WET SCRUBBER 62.0202]
[112081 SUPPLEMENTAL PROPOSAL]
IC-28

DOCUMENT SUBMITTAL SCHEDULE

	TYPE OF DOCUMENT	SPECIFICATION ARTICLE	NO. OF COPIES SUBMITTED TO	SUBMITTED FOR	TIME OF SUBMITTAL
87.	Tank Coating Application and Testing Procedures	3E.4	6 - Engineer	Review	With certified tank drawings
88.	Sketches of Field Routed Piping (Not Located on the Drawings)	3F.4	2 - Engineer 2 - Const. Mgr.	Review	30 days prior to installation of piping
89.	Tubing Tray Drawings and Data	3F.17.2	6 - Engineer 2 - Const. Mgr.	Review Information	With certified piping drawings
90.	Details of Rainhoods and Flashing	3F.18	6 - Engineer	Review	With certified piping drawings
91.	List of Control Set Points and Instrument Calibration Data Sheets	3H.6	2 - Const. Mgr.	Record	Prior to trial operation (with verification of readiness for trial operation)
92.	Manufacturer's Technical Data for Insulation and Lagging	3J.12	6 - Engineer	Review	With certified insulation and lagging drawings
*93.	Verification of Readiness for Trial Operation	3L.2	1 - Const. Mgr. 1 - Project Mgr.-Site	Information	3 working days prior to trial operation
*94.	Trial Operation Reports	3L.3	2 - Const. Mgr. 1 - Project Mgr.-Site	Record	10 working days following test
**95.	Scrubber Module and Reaction Tank Lining Subcontractor Application and Quality Control Procedures	3M.5.1	6 - Engineer	Review	With certified scrubber module and reaction tank drawings

*EPA Request dated Oct 12, 2010, for Information Pursuant to Section 114 . Response #10 of 17 of Appendix B.

MOTOR _____

SPEC 62.0202
PROJECT 9255

MOTOR DATA TO BE SUBMITTED

MANUFACTURER _____ MODEL _____

HP _____, VOLTS _____, PHASE _____, HERTZ _____

SERVICE FACTOR _____, NEMA DESIGN LETTER _____, FULL LOAD SPEED _____ RPM

ENCLOSURE: TYPE _____ FRAME SIZE _____

INSULATION SYSTEM: CLASS ____ STANDARD ____ SEALED ____, AMB TEMP _____ C

TEMP. RISE _____ C BY RESISTANCE AT SERVICE FACTOR OF 1.0 _____, 1.15 _____.

FULL LOAD CURRENT _____ AMPS, LOCKED-ROTOR CURRENT _____ AMPS

SPACE HEATER (IF FURNISHED): NUMBER OF UNITS _____, UNIT RATING, WATTS _____

VOLTS _____, PHASE _____

BEARINGS: TYPE _____ AFBMA L-10 RATING LIFE, NOT LESS THAN _____ HRS

LUBRICATION: TYPE _____ SYSTEM _____

SOUND LEVELS:

SOUND POWER LEVEL
RE 10^{-12} WATTS _____ dBA
FREE FIELD

OVERALL MEAN NO-LOAD SOUND PRESSURE LEVEL
RE 20 MICROPASCALS (0.0002 MICROBAR) REFERENCE DISTANCE
OF 1 METER _____ 2 METERS _____; _____ dBA FREE FIELD

TOTAL MOTOR WT _____ LBS

FOR MULTISPEED MOTORS:
VARIABLE TORQUE _____, CONSTANT TORQUE _____, CONSTANT HORSEPOWER _____
MOTOR TERMINAL CONNECTION DIAGRAM NO. _____ (ATTACH COPY OF DIAGRAM)

FOR WOUND ROTOR MOTORS:
SEC. VOLTS _____, SEC. AMPS _____, SEC.RES., OHMS M-M AT 25 C _____

FOR MOTORS IN HAZARDOUS LOCATIONS:
MOTOR ENCLOSURE SURFACE TEMPERATURE, _____ C AT SERVICE FACTOR OF 1.0 _____, 1.15 _____.
WILL MOTOR CONTAIN A SURFACE TEMPERATURE CONTROL THERMOSTAT REQUIRING CONNECTION INTO THE MOTOR STARTER CONTROL CIRCUIT: YES _____, NO _____

FOR DUST IGNITION-PROOF MOTORS: MOTOR ENCLOSURE SURFACE TEMPERATURE RISE UNDER ANY ABNORMAL OPERATING CONDITION INCLUDING OVERLOAD, SINGLE-PHASING, ETC., ASSUMING ENCLOSURE SURFACE TEMPERATURE OF 120 C WHEN ABNORMAL CONDITION DEVELOPS:

MINIMUM TIME TO REACH 165 C _____ SECS

MAXIMUM RATE OF RISE _____ C IN 5 SECS

ADDITIONAL MOTOR DATA FOR MOTORS LARGER THAN 200 HP AND FOR ALL MOTORS RATED ABOVE 600 VOLTS SHALL BE SUBMITTED ON SHEETS 2 AND 3.

P-EL-1191

BLACK & VEATCH CONSULTING ENGINEERS		SHEET 1 OF 3
	MOTOR INFORMATION SHEET	

*EPA Request dated Oct 12, 2010, for Information Pursuant to Section 114 . Response #10 of 17 of Appendix B.

MOTOR _____

SPEC 62.0202
PROJECT 9255

ADDITIONAL MOTOR DATA TO BE SUBMITTED FOR MOTORS LARGER THAN 200 HP AND FOR ALL MOTORS RATED ABOVE 600 VOLTS

EFFICIENCY, PER CENT GUARANTEED
LOAD: 1/2 _____ 3/4 _____ 4/4 _____
POWER FACTOR, PER CENT GUARANTEED
LOAD: 1/2 _____ 3/4 _____ 4/4 _____

MINIMUM STARTING VOLTAGE IN PER CENT OF RATED VOLTAGE:
CALCULATED: _____
SPECIFIED: _____

OCTAVE BAND MEAN NO-LOAD SOUND PRESSURE LEVEL
RE 20 MICROPASCALS (0.0002 MICROBAR) REFERENCE
DISTANCE OF 1 METER _____; 2 METERS _____

OUTLINE DWG. NO. _____
ACCELERATING TIME:
AT RATED VOLTAGE _____ SEC.
AT MINIMUM SPECIFIED STARTING VOLTAGE _____ SEC.
LOCKED-ROTOR PF _____ PER CENT
LOCKED-ROTOR TORQUE _____ LB-FT
PULL-UP TORQUE _____ LB-FT
BREAKDOWN TORQUE _____ LB-FT
TOTAL ROTOR WT _____ LBS
ROTOR INERTIA _____ LB-FT^2
OPEN CIR. TIME CONSTANT _____ SEC.
FOR VERTICAL MOTORS:
REED FREQUENCY _____ HZ

CENTER FREQUENCY, HZ	LEVEL, dBC
31.5	_____
63	_____
125	_____
250	_____
500	_____
1000	_____
2000	_____
4000	_____
8000	_____

THERMAL LIMIT CURVE UNDER LOCKED-ROTOR, ACCELERATION, AND RUNNING OVERLOAD CONDITIONS; AND TIME-CURRENT CURVES DURING ACCELERATION AT RATED VOLTAGE AND AT MINIMUM SPECIFIED STARTING VOLTAGE CURVE NO. _____ (ATTACH CURVE)

LOCKED-ROTOR SAFE STALLED TIME, SECS

	RATED VOLTAGE	MINIMUM SPECIFIED STARTING VOLTAGE
MOTOR INITIALLY AT MAXIMUM SPECIFIED AMBIENT TEMPERATURE	_____	_____
MOTOR INITIALLY AT SERVICE FACTOR LOAD OPERATING TEMPERATURE	_____	_____

P-EL-154F

BLACK & VEATCH
CONSULTING ENGINEERS

SHEET 2 OF 3

MOTOR
INFORMATION SHEET

*EPA Request dated Oct 12, 2010, for Information Pursuant to Section 114 . Response #10 of 17 of Appendix B.

MOTOR _____

SPEC 62.0202
PROJECT 9255

ADDITIONAL MOTOR DATA TO BE SUBMITTED FOR MOTORS LARGER THAN 200 HP AND FOR ALL MOTORS RATED ABOVE 600 VOLTS.

SPEED-TORQUE-CURRENT CURVES AT RATED VOLTAGE AND AT MINIMUM SPECIFIED STARTING VOLTAGE, IN PER CENT OF FULL LOAD OR CURVE NUMBERS _____ (ATTACH CURVES)

	RATED VOLTAGE		MINIMUM SPECIFIED STARTING VOLTAGE	
	TORQUE LB-FT	CURRENT AMPS	TORQUE LB-FT	CURRENT AMPS
AT SPEED CORRESPONDING TO MAXIMUM TORQUE				
AT 80% SPEED				
AT 60% SPEED				
AT LOCKED ROTOR				

NUMBER OF SUCCESSIVE STARTS

	AT RATED VOLTAGE	AT MINIMUM SPECIFIED STARTING VOLTAGE
MOTOR INITIALLY AT MAXIMUM SPECIFIED AMBIENT TEMPERATURE (COLD)		
MOTOR INITIALLY AT SERVICE FACTOR LOAD OPERATING TEMPERATURE (HOT)		

COOLING PERIOD REQUIRED AFTER COMPLETION OF THE PRECEDING MAXIMUM NUMBER OF SUCCESSIVE STARTS BEFORE MAKING ADDITIONAL STARTS BASED ON THE FOLLOWING COOLING CONDITIONS, MINUTES

MOTOR RUNNING AT SERVICE FACTOR LOAD		
MOTOR RUNNING WITH DRIVEN EQUIPMENT UNLOADED		
MOTOR DE-ENERGIZED, COASTED TO STOP, AND LEFT IDLE		

FOR MOTORS FOR WHICH DIFFERENTIAL PROTECTION IS SPECIFIED, STATOR CONN: WYE _____ ,DELTA _____

FOR MOTORS REQUIRING INTEGRAL WATER COOLING OF BEARING OIL:
FLOW OF COOLING WATER REQUIRED _____ GPM
MAXIMUM COOLING WATER INLET TEMPERATURE _____ C

FOR MOTORS CONNECTED TO EXTERNAL LUBRICANT RECIRCULATING SYSTEM:
FLOW OF OIL REQUIRED TO MOTOR BEARINGS: _____ GPM AT _____ C MAXIMUM AT _____ PSI
BEARING HEAT REJECTION TO OIL _____ BTU/HR
OUTLET TEMPERATURE OF OIL FROM MOTOR BEARINGS: _____ C MAXIMUM

FOR HORIZONTAL MOTORS RATED 1000 HP AND LARGER AT 3600 RPM AND FOR ALL MOTORS RATED 3500 HP AND LARGER AT ALL SPEEDS:

CRITICAL SPEEDS: FIRST CRITICAL _____ RPM
SECOND CRITICAL _____ RPM

P-EL-139D

BLACK & VEATCH
CONSULTING ENGINEERS

SHEET 3 OF 3

MOTOR
INFORMATION SHEET

*EPA Request dated Oct 12, 2010, for Information Pursuant to Section 114 . Response #10 of 17 of Appendix B.

NAME
OF
EQUIPMENT

INTERMOUNTAIN
POWER
PROJECT

INTERMOUNTAIN
GENERATING
STATION

VOLUME
NUMBER**

(Backbone)

INTERMOUNTAIN POWER PROJECT

INTERMOUNTAIN GENERATING STATION

INSTRUCTION BOOK
FOR
NAME OF EQUIPMENT
VOLUME NUMBER**

MANUFACTURER'S NAME
MANUFACTURER'S ADDRESS

BLACK & VEATCH
CONSULTING ENGINEERS
KANSAS CITY, MISSOURI

(Cover)

NOTE:

Cover Type:	Large	– 36 point News Gothic Bold
	Medium	– 30 point News Gothic Bold
	Small	– 24 point News Gothic Condensed
	Smallest	– 14 point News Gothic Condensed
Backbone Type:	14 point News Gothic Condensed	

**Stamp cover with volume number if instructions are contained in more than one volume

P-1-86A

TYPICAL EQUIPMENT INSTRUCTION BOOK COVER

BLACK & VEATCH consulting engineers 1500 MEADOW LAKE PARKWAY KANSAS CITY, MISSOURI 64114	INTERMOUNTAIN POWER PROJECT INTERMOUNTAIN GENERATING STATION	P-9255-070180-1

*EPA Request dated Oct 12, 2010, for Information Pursuant to Section 114 . Response #10 of 17 of Appendix B.

Section 1D - QUALITY ASSURANCE

1D.1 GENERAL. As a means of assuring that the performance of the work fulfills the requirements of the contract documents, the Contractor shall establish and implement a quality assurance program.

1D.2 INSPECTIONS AND AUDITS. The Contractor's work and related records shall be subject to inspection and audit by the Project Manager and the Engineer to assure compliance with applicable requirements. Upon detection of a noncompliance with the requirements of the contract documents or the accepted quality assurance manual when a manual is required, corrective action may be requested by the Project Manager. The Contractor shall correct in a timely manner all such deficiencies so identified.

1D.3 INSPECTION AND REJECTION. All materials or equipment furnished and delivered under this Contract shall be subject to inspection. If any items or articles are found not to meet the requirements of the specifications, the lot, or any faulty portion thereof, may be rejected. Before offering a lot for inspection, the manufacturer shall, by his own inspection, eliminate any items which, in his opinion, are defective or do not meet the requirements of the contract documents. The fact that the materials or equipment have been successfully inspected, tested and accepted shall not relieve the Contractor of responsibility in the case of later discovery of flaws or defects.

1D.4 INSPECTION PRIOR TO DELIVERY. For inspection at the Contractor's or subcontractor's mill, factory, yard, or warehouse, the conditions shall be as follows.

1D.4.1 Access. The Project Manager and Engineer shall have the right to inspect the Contractor's and subcontractor's work in the course of manufacture and require such tests from time to time as he may deem advisable, providing no delay in production of acceptable materials or equipment is caused thereby. The Contractor shall furnish, at his own expense, reasonable facilities including tools and instruments for so doing and for obtaining such information as the Project Manager or Engineer desires respecting the progress and manner of the work and the character of the materials used.

1D.4.2 Witness Tests. Mill or factory witness tests, if called for in the contract documents, shall be made in the presence of the Project Manager. The Contractor shall bear all expense of such tests except the compensation and expense of the Project Manager and Engineer.

1D.4.3 Test Reports. If required in the contract documents, or at the option of the Project Manager in lieu of witness tests, the Contractor shall furnish certified factory test reports. The quantities of test reports and their submittal shall be as directed by the Project Manager. In addition, all other test reports requested by the Project Manager shall be furnished.

*EPA Request dated Oct 12, 2010, for Information Pursuant to Section 114 . Response #10 of 17 of Appendix B.

1D.5 RECEIPT INSPECTION. Materials or equipment purchased under this Contract may be inspected at the specified receiving points and there accepted or rejected. Inspection will include the necessary testing for determining compliance with the specifications. All expense of initial acceptance tests will be borne by the Owner. The expense of subsequent tests due to failure of materials or equipment first offered will be charged against the Contractor.

1D.6 QUALITY ASSURANCE PROGRAM. As a means of assuring that the performance of the work fulfills the requirements of the contract documents, the Contractor and his subcontractors shall implement a quality assurance program for all the work. The program shall be capable of providing assurance that design, purchasing, manufacturing, shipping, storage, testing, and examination of all equipment, materials, and services will comply with the requirements of these contract documents.

1D.6.1 Quality Assurance Manuals. The quality assurance program shall be documented in a quality assurance manual. The form and format of the quality assurance manuals are at the discretion of the Contractor and his subcontractors. The content of the quality assurance manual may be in the form of written descriptions of quality assurance policies, procedures, methods, instructions, exhibits, or other quality assurance method descriptions. Controlled copies of the manual shall be submitted in accordance with Section 1C. The quality assurance manual shall be kept current by submittal of revisions as applicable throughout the life of this Contract.

The Contractor's quality assurance manual shall describe the authority and responsibility of the persons in charge of the quality assurance program and inspection activities. The manual shall also include, as a minimum, control procedures or methods:

1. To assure design documents, drawings, specifications, quality assurance procedures, records, inspection procedures, and purchase documents are maintained current, accurate, and under control.

2. To assure that the purchased materials, equipment, and services conform to the requirements of these documents.

3. To assure receipt inspection, in-process inspection, examination, testing, and checkout.

4. To assure adequate inspection of subcontracted work.

5. To assure the quality of special processes such as welding, heat treating, hot forming, and nondestructive testing.

*EPA Request dated Oct 12, 2010, for Information Pursuant to Section 114 . Response #10 of 17 of Appendix B.

6. To assure that proper methods are employed for the qualification of personnel who are performing welding and nondestructive examinations.

7. To assure the proper documentation, control, and disposition of nonconforming materials.

8. To assure calibration of equipment, instruments and recording controls *

1D.6.2 Inspection and Test Outline. Prior to starting any fabrication, the Contractor shall submit a detailed inspection and test outline for the work. Inspection and test outlines shall be submitted in accordance with Section 1C.

The inspection and testing outline shall list the major components of the work, subassemblies, final assemblies, and each inspection and testing point for each of the items identified. The outline shall include the Contractor's plan for inspecting subcontractor's work, including inspection by the Contractor at his subcontractor's facilities. The Contractor shall inspect the work of subcontractors to the extent necessary to assure that proper materials and equipment are furnished and that fabrication and erection are accomplished in accordance with the contract documents.

The Contractor shall keep the Project Manager informed of the progress of the work and shall notify the Project Manager prior to the start of manufacture and at least 10 working days in advance of the appropriate times for inspections and testing, when such inspection and test points have been designated by the Project Manager for witnessing. The work shall not progress ~~pass~~ past the Project Manager's designated witness ** point until the Project Manager has inspected the work or witnessed the designated test, or the Project Manager has waived his right to perform an inspection or to witness a test.

1D.7 FIELD PROJECT QUALITY ASSURANCE ENGINEER. The Contractor's organization shall be staffed in the field with an engineer experienced in quality assurance work who shall be designated as the Field Project Quality Assurance Engineer. It shall be his responsibility to assure that the tests, examinations, qualifications, and record keeping requirements of this Contract are being implemented by the Contractor's organization. His position in the Contractor's organization shall be free of the influences of project cost and project schedule. He shall have the authority to reject defective work performed by the Contractor and his subcontractors and to require the Contractor to take corrective action.

1D.8 RELEASE FOR SHIPMENT. The Contractor shall not ship materials or equipment until they are released by the Project Manager. The Contractor shall notify the Project Manager in advance of shipment as specified in

* Addendum No. 3
** Addendum No. 1

*EPA Request dated Oct 12, 2010, for Information Pursuant to Section 114 . Response #10 of 17 of Appendix B.

the article entitled PRESHIPMENT INSPECTION in the General Equipment Specifications section. Failure to comply with these shipment release and inspection requirements may be cause for rejection of materials or equipment.

1D.9 NONCONFORMANCE REPORTS. The Project Manager or his duly authorized agents shall have access to all nonconformance reports and the Contractor shall provide a copy of those nonconformance reports requested. Disposition of nonconformance in which the acceptance and use of an item can contribute to less than desired appearance, required performance, long term reliability or interchangeability shall be subject to approval by the Project Manager. *

* Addendum No. 3

*EPA Request dated Oct 12, 2010, for Information Pursuant to Section 114 . Response #10 of 17 of Appendix B.

Section 1E - ELECTRIC MOTORS

1E.1 GENERAL. Except for valve and damper motor operators (specified in Section 1F), these motor specifications are applicable to all electric motors furnished under these specifications. Motor Specification and Data Sheets have been inclnded in this section as required. Any motors for which Motor Specification and Data Sheets have not been included, but which are required for operation of the equipment, shall be furnished. The bidder shall list in his proposal all motors being furnished.

In case of conflict between the requirements of the various parts of these specifications, the requirements of the different parts shall govern to the extent of such conflict in the following sequence: mandatory governmental regulations, codes, and standards; Motor Specification and Data Sheets (when included); individual equipment technical sections; this motor section; the referenced industry codes and standards.

1E.2 CODES AND STANDARDS. All motors shall conform to applicable standards of ANSI, IEEE, NEMA, and AFBMA, except where modified or supplemented by these specifications. In case of conflict between any of the industry standards relative to manufacturing requirements covered in these specifications only by reference to the standards, the requirements of NEMA shall govern. All equipment and materials shall be in accordance with the applicable requirements of the Federal "Occupational Safety and Health Standards."

1E.3 SUBSECTIONS. The following subsections contain technical requirements applicable to motors furnished under these specifications.

Subsection 1E1	460 VOLT INTEGRAL HORSEPOWER MOTORS
Subsection 1E2	FRACTIONAL HORSEPOWER MOTORS

Special requirements for individual motors and specifications for special application motors are included in the individual specification technical sections as required.

1E.4 RATING. Except as specified otherwise herein, the maximum horsepower required to drive the furnished equipment under specified design load conditions shall not exceed the values tabulated below.

Motor Service Factor	Maximum Design Load Hp Divided by Motor Nameplate Hp
1.0	0.87
1.15	1.0

*EPA Request dated Oct 12, 2010, for Information Pursuant to Section 114 . Response #10 of 17 of Appendix B.

Except as specified otherwise herein, ac motor voltage ratings with relation to horsepower shall be in accordance with the following.

Horsepower	Volts	Phase
Below 3/4	115	1
3/4 thru 349	460	3

Motors rated 350 horsepower and above will be furnished under separate specifications.

Variations from motor design voltages specified must be acceptable to the Engineer.

Motors shall be designed for full voltage starting and frequent starting where required, and shall be suitable for continuous duty in the specified ambient. Intermittent duty motors may be furnished where recognized and defined as standard by the equipment codes and standards and acceptable to the Engineer. Motors shall be sized for an altitude of 4700 feet above mean sea level.

1E.5 TORQUE CHARACTERISTICS. Except as specified otherwise in the individual subsections or technical sections, the torque characteristics of all induction motors at any voltage from 85 per cent rated voltage to 110 per cent rated voltage or the starting conditions indicated on the Motor Specification and Data Sheets shall be as required to accelerate the inertia loads of the motor and driven equipment to full speed without damage to the motor or the equipment.

1E.6 SPECIFICATION TRANSMITTAL. The Contractor shall be responsible for transmitting copies of this section (including the appropriate motor subsections), Motor Specification and Data Sheets, and motor related data from Section 1B and the specification technical sections to each motor manufacturer furnishing motors for the driven equipment.

*EPA Request dated Oct 12, 2010, for Information Pursuant to Section 114 . Response #10 of 17 of Appendix B.

Subsection 1E1 - 460 VOLT INTEGRAL HORSEPOWER MOTORS

1E1.1 DESIGN AND CONSTRUCTION. Design and construction of each 460 volt integral horsepower motor shall be coordinated with the driven equipment requirements and shall be as specified herein and on the Motor Specification and Data Sheets.

1E1.1.1 Nameplates. All motor nameplate data shall conform to NEMA MG 1 requirements. The following additional nameplate data shall be included.

Starting limitations, if any
Direction of rotation and voltage sequence as specified later
AFBMA bearing identification number for motors furnished with rolling element bearings

All motor nameplates and attachment pins shall be corrosion resistant metal.

1E1.1.2 Service Factor. For all motors 200 horsepower or less furnished with a service factor greater than 1.0, the service factor shall be in accordance with NEMA MG 1-12.47.

For all motors rated above 200 horsepower furnished with a service factor greater than 1.0, the motor nameplate shall indicate the horsepower rating at 1.0 service factor, and the service factor. The motor shall be designed to provide a continuous horsepower capacity equal to the rated horsepower at 1.0 service factor multiplied by the specified motor service factor without exceeding the total limiting temperature rise stated in these specifications for the insulation system and enclosure specified.

1E1.1.3 Enclosures. All motors shall be self-ventilated unless specified otherwise.

Aluminum enclosure parts are not acceptable.

The fan covers of totally enclosed fan cooled and totally enclosed tube cooled motors shall meet NEMA MG 1 requirements for a fully guarded machine.

1E1.1.3.1 Totally Enclosed Motors. Totally enclosed motors shall be furnished with drain holes and rotating shaft seals. Drain holes shall be provided with Crouse-Hinds Type ECD "Universal" combination water drain-breather plugs or acceptable equal.

Totally enclosed fan cooled motors shall have cast iron frames, bearing brackets, and terminal housings. Totally enclosed tube cooled motors may be furnished with pressed steel frames if cast iron frames are unavailable.

*EPA Request dated Oct 12, 2010, for Information Pursuant to Section 114 . Response #10 of 17 of Appendix B.

IP10_002260

External cooling fans for fan cooled motors shall be fabricated of brass, bronze, aluminum alloy containing not more than 0.2 per cent copper, malleable iron, or plastic. All plastic fans shall be fabricated of a reinforced thermosetting plastic and shall be approved by Underwriters' Laboratories, Inc.

1E1.1.4 Insulation and Windings. All insulated windings shall have Class B nonhygroscopic insulation systems rated for temperature rise and ambient temperature in accordance with NEMA MG 1 standards for the insulation class specified.

Where motors with Class B insulation are not available, motors may be furnished with Class F insulation provided the temperature rise is in accordance with NEMA MG 1 values for Class B insulation and provided all other requirements are as specified, including bearing life and sealed insulation.

All insulated winding conductors shall be copper.

Where a sealed insulation system is specified, two additional dips and bakes of epoxy varnish or vacuum-pressure impregnation shall be included to provide a premium insulation for random windings. Sealed insulation for formed coil windings shall be in accordance with the requirements of NEMA MG 1 standards.

The insulation resistance corrected to 40 C shall be not less than motor rated kV+1 megohms for all windings.

1E1.1.5 Temperature Rise. The observable temperature rise measured by resistance for all motors having a service factor greater than 1.0, when operating at the service factor load, shall not exceed that rise which applies for motors having a service factor of 1.0.

When ambient temperatures greater than 40 C are specified, the observable temperature rise shall be reduced in accordance with NEMA MG 1 standards.

1E1.1.6 Space Heaters. All motors furnished in NEMA 180 Frame Series or larger shall have space heaters.

Space heaters shall be rated 120 volts, single-phase 60 hertz.

The heaters shall be provided inside the motor enclosure in a location suitable for easy removal and replacement. Heaters shall be located and insulated so they do not damage motor components or finish.

Space heaters shall be sized as required to maintain the motor internal temperature above the dew point when the motor is idle. The space heaters shall not cause winding temperatures to exceed rated limiting values nor cause thermal protective device "over temperature" indication when the motor is not energized.

*EPA Request dated Oct 12, 2010, for Information Pursuant to Section 114 . Response #10 of 17 of Appendix B.

IP10_002261

Space heater leads shall be stranded copper cable with 600 volt insulation and shall include terminal connectors.

Space heater sheaths shall be of a corrosion resistant, nonoxidizing material and shall have a thickness not less than 0.025 inch.

1E1.1.7 Terminal Housings. ~~A single~~ Separate terminal housings for motor power leads and accessory leads shall be furnished on all motors. *

All terminal housings shall be externally mounted on the motor frame enclosure.

Terminal housings for totally enclosed motors shall be cast iron. Housings shall be diagonally or longitudinally split with a gasket between the split halves of the housing. Each housing shall have a threaded opening to provide a watertight rigid connection with the conduit, and shall be designed for rotation in 90 degree increments, or have provisions included otherwise, to receive conduit from any of four directions. Nonconducting motor lead positioners and gaskets shall be furnished between the housing and the motor frame. All motor leads located in the housing shall have terminals and shall be permanently numbered for ease of identification.

Motors furnished in NEMA 320 Frame Series and larger shall have terminal housings designed and constructed to permit motor removal after installation without disconnecting raceways from the terminal housings.

All motor power lead terminal housings shall be at least one size larger than normally furnished as standard. In addition, terminal housing minimum volume, minimum cover opening dimension, and minimum size of conduit entrance opening shall be in accordance with the following table.

Maximum Rated Motor Full Load Current, amperes	Terminal Housing Minimum Requirements		
	Useable Volume, cubic inches	Cover Dimension, inches	Nominal Conduit Opening, inches
3.4	12	1-3/4	3/4
7.6	16	2	3/4
14.0	33	2-7/8	1
21.0	44	3	1-1/4
40.0	72	3-5/8	1-1/2
65.0	100	3-5/8	2
96.0	130	4-1/2	2
120	216	6	2-1/2
200	500	7	3
272	900	8-1/5	4
395	900	8-1/5	4

* Addendum No. 3

*EPA Request dated Oct 12, 2010, for Information Pursuant to Section 114 . Response #10 of 17 of Appendix B.

1E1.1.8 Leads. Motor power leads and space heater leads shall be wired into the motor terminal housing. All motor leads and their terminals shall be permanently marked in accordance with the requirements of NEMA MG 1, Part 2. Each lead marking shall be visible after taping of the terminals.

All motors rated 100 horsepower and larger, all motors furnished with unidirectional blowers, and all vertical motors shall have the direction of rotation marked by an arrow mounted visibly on the stator frame near the terminal housing or on the nameplate and the leads marked for phase sequence T1, T2, T3, to correspond to the direction of rotation and supply voltage sequence.

Leads for dual voltage rated or for multispeed motors shall be easily connected or reconnected in the terminal housing for the operating voltage or for the specified speeds. Permanent instructions for making these connections shall be furnished inside the terminal housing or on the motor frame or nameplate.

1E1.1.9 Terminals. Cable type leads shall be provided with compression type terminal connectors. Connector type shall be coordinated with incoming power supply cable size and material as listed in the table following. Incoming power supply cable size and material will be furnished later. Terminal connectors shall be as follows or acceptable equal.

Power Supply Cable Size	Burndy Terminal Connector	
	Copper	Aluminum
8 AWG and smaller	YAV	
6 AWG thru 4/0 AWG	YA	YA-A-TN
250 Mcm and larger	YA-2N	YA-A-2NTN

1E1.1.10 Ground Connectors. Each motor shall be furnished with a grounding connector attached to the motor frame inside the motor power lead terminal housing. The grounding connector may be a lug or terminal or other acceptable grounding connector. Grounding connector size shall be coordinated with motor full load amperes as follows.

Full Load Motor Amperes	Ground Connector Range - AWG
0 thru 21	12 thru 10
22 thru 40	10 thru 8
41 thru 65	8 thru 6
66 thru 156	6 thru 4
157 thru 240	4 thru 2
241 thru 400	2 thru 1/0

*EPA Request dated Oct 12, 2010, for Information Pursuant to Section 114 . Response #10 of 17 of Appendix B.

1E1.1.11 Bearings. The type of bearing furnished shall be as specified on the Motor Specification and Data Sheet.

Thrust bearings for vertical motors shall be capable of operating for extended periods of time at any of the thrust loadings imposed by the specific piece of driven equipment during starting and normal operation without damage to the bearing, the motor frame, or other motor parts.

1E1.1.11.1 Sliding Type Bearings. Sleeve bearings for horizontal motors shall be oil ring lubricated type. The oil ring shall be one-piece construction; split type construction will not be acceptable. The bearings, end bells, and bearing housings shall be split type when available for the frame and enclosure specified. Air gap measurement holes or other acceptable means shall be provided in each motor end enclosure for checking air gap of sleeve bearing motors.

Sleeve bearings on horizontal motors shall be designed and located centrally, with respect to running magnetic center, to prevent the rotor axial thrust from being continuously applied against either end of the bearing. The motors shall be capable of withstanding without damage the axial thrusts that are developed when the motor is energized.

1E1.1.11.2 Antifriction Bearings. Grease or oil lubricated antifriction radial and thrust bearings shall be designed and fabricated in accordance with AFBMA standards to have a minimum L-10 rating life of not less than 130,000 hours under the load, speed, and thrust requirements for direct coupled service and not less than 42,500 hours for belt or chain connected service. Grease lubricated radial bearings shall be double-shielded.

Motors furnished with spherical roller thrust bearings shall also be furnished with deep groove radial guide bearings. The guide bearings shall be locked to the shaft so that the guide bearing will take upward thrust and to assure that the thrust bearing is always loaded. If spring-loading is furnished, the guide bearing shall not be preloaded during normal operation. Bearings shall be grease lubricated unless the specified speed and thrust require oil lubrication for the specified rating life.

Stacked antifriction bearings will not be acceptable, except as vertical thrust bearings in frame sizes up through NEMA 680 Series totally enclosed type enclosures. Where stacked bearings are furnished, matched pair precision tolerance bearings with flush ground sides shall be provided. Bearing seats on the shaft and in the bearing housing shall have accuracy equal to that of the bearing.

Motors furnished with rolling element bearings shall have the AFBMA bearing identification number indicated on a nameplate attached to the motor frame.

*EPA Request dated Oct 12, 2010, for Information Pursuant to Section 114 . Response #10 of 17 of Appendix B.

1E1.1.11.3 Bearing Lubrication System. Lubrication for oil lubricated bearings shall be furnished by an internal lubricant recirculation system. Oil reservoir capacity and ventilation of the bearing housing and oil reservoir shall be as required to adequately maintain proper cooling of the oil and bearings.

1E1.1.11.4 Miscellaneous Bearing Requirements. All bearing mountings shall be designed to prevent the entrance of lubricant into the motor enclosure or dirt into the bearings, and shall be provided with pipes and drain plugs.

Fittings for grease lubricated bearings shall be arranged for safe, easy relubrication from the outside of the motor while the motor is in service. Filler caps for oil lubricated bearings shall be arranged for safe, easy addition of lubricant from the outside of the motor while the motor is in service.

All oil lubricated bearings shall be provided with oil level sight glasses marked for required oil level at motor running and standstill. Plastic sight windows or bottles shall be of a material not adversely affected by continuous exposure to sunlight. Sight glasses shall be Gits Style FG, 380 Series, Style BW-20, Tedeco P/NS, or acceptable equal. Stationary labyrinth seals shall be bronze material.

Insulation shall be provided when required to prevent circulation of shaft current on bearings.

Bearings and bearing housings shall be designed to permit disassembly in the field for inspection of the bearings or removal of the rotor.

Bearing lubricants shall contain a corrosion inhibitor. The type and grade of lubricant shall be indicated on a nameplate attached to the motor frame or end shield adjacent to the lubricant filling device. The Contractor shall furnish all lubrication information required to assure proper equipment start-up and subsequent bearing maintenance.

1E1.1.12 Rotors. All induction motors shall have squirrel-cage rotors. Rotors shall be adequately sized to avoid overheating during acceleration of the motor and driven equipment. Rotors not of integral die-cast construction shall be furnished with copper or copper alloy cage material.

All motor rotating components shall be dynamically balanced after mounting on the shaft. Motor vibration shall not exceed the peak-to-peak amplitude values given in NEMA MG 1 standards when measured in accordance with those standards. In addition, the magnitude of vibration values for twice-the-line frequency vibrations shall not exceed 0.5 mil.

*EPA Request dated Oct 12, 2010, for Information Pursuant to Section 114 . Response #10 of 17 of Appendix B.

IP10_002265

1E1.1.13 Shafts. Where shipment permits, motor output shafts shall be complete with motor half coupling mounted, connected to the driven equipment, and adjusted ready for operation. Where motor size prevents shipment with motor connected to driven equipment, the motor half coupling shall be factory mounted for field connection to the driven equipment.

The output shafts of motors furnished with sleeve bearings shall be circumscribed with permanent marks indicating the motor magnetic center and end float limits when level and running at rated speed. A permanent, identified reference point shall be indicated or attached to the bearing housing or shaft seal. The markings shall be easily identifiable for use during motor installation.

For horizontal sleeve bearing motors, the rotor end float and coupling end play shall be in accordance with NEMA MG 1-14.37. The minimum rotor end float in fractions of an inch and the maximum diameter in inches of the lathe center in the shaft extension shall be indicated on the motor dimensional outline drawing.

1E1.1.14 Torque Characteristics. Unless specified otherwise, motors rated 200 horsepower and less shall have torques and locked-rotor current in accordance with NEMA MG 1, Part 12 for the specified design classification. For motors rated above 200 horsepower, the torques in per cent full load torque at rated voltage and frequency shall be not less than 200 breakdown, 85 pull-up, and 100 starting. Locked-rotor kVA/hp at rated voltage and frequency shall not exceed 5.77 for motors rated above 200 horsepower.

1E1.1.15 Critical Speeds. Motors shall be designed to keep torsional and rotational natural frequencies of vibration at least 25 per cent above the motor rated speed ranges to avoid resonant vibration over the operating speed range of the equipment-motor unit.

1E1.1.16 Temperature Detectors. Where specified on the Motor Specification and Data Sheets, bearing temperature detectors, complete with detector head and holder assemblies as required, shall be furnished in accordance with the applicable requirements of ANSI C96.1 and IEEE 119 standards.

All temperature detectors shall be ungrounded with detector leads wired to terminals furnished in the bearing detector heads or condulets. A grounding terminal for each temperature detector shall be included with the detector lead terminals. The grounding terminals shall be provided with internal wiring to a common ground connection in each head or condulet. The internal wiring shall be removable.

Thermocouple type temperature detectors shall be single element ungrounded, of the ISA type specified in Section 1B. Thermocouple extension wire shall be solid 18 AWG or larger.

*EPA Request dated Oct 12, 2010, for Information Pursuant to Section 114 . Response #10 of 17 of Appendix B.

The detector temperature-sensitive tip shall be hermetically sealed and held in intimate contact with the outside diameter of the bearing babbitt not over 1/8 inch from shaft surface of bearing babbitt for sleeve bearings, and on the outer race or in close proximity to the bearing metal for antifriction bearings. The Contractor shall submit drawings to the Engineer indicating the detector location and mounting.

Thermocouple type detectors for bearings shall be insulated with magnesium oxide packed in a stainless steel protective sheath.

1E1.1.17 Sound Level. The motor sound level shall be selected by the Contractor to conform with the overall motor-driven equipment assembly sound level requirements which are included elsewhere in these specifications, but in no case shall the average no-load sound pressure level, re 0.0002 dyne/cm^2, produced by the motor exceed 90 dBA free field at 3 feet for motors rated 200 horsepower and less and at 5 feet for motors rated above 200 horsepower.

In addition to conformance with the specified overall sound pressure level, single frequency noise, regardless of cause or source, shall not exceed levels which are irritating or which can produce damage to the human ear.

Sound reduction baffles, mufflers, and materials shall be contained within the motor enclosure except external fan mufflers may be furnished on totally enclosed fan cooled motors.

1E1.2 QUALITY CONTROL TESTS AND INSPECTIONS. Each motor shall be tested and inspected at the manufacturer's factory to determine that it is free from electrical or mechanical defects and to provide assurance that it meets the requirements of these specifications. Test procedures shall be in accordance with IEEE No. 112A Test Procedure for Polyphase Induction Motors and Generators.

1E1.2.1 Tests and Inspections. Routine tests as listed in NEMA MG 1-12.51 shall be performed on each motor. The following additional tests and inspections shall be performed on motors 50 horsepower and larger.

Measurement of winding resistance
Inspection of bearings and bearing lubrication system

Five copies of reports of the tests and inspections for each motor 50 horsepower and larger shall be submitted to the Engineer prior to shipment of the motor from the manufacturer's factory.

*EPA Request dated Oct 12, 2010, for Information Pursuant to Section 114 . Response #10 of 17 of Appendix B.

IP10_002267

1E1.3 DRAWINGS AND ENGINEERING DATA. Motor dimensional drawings shall include the following information in addition to the requirements listed hereinbefore and in Section 1C.

For all motors:

Rotor weight and motor total weight

For horizontal sleeve bearing motors:

The limits of travel for rotor end play from the bearing end float center position

For vertical motors:

Center of gravity location, and motor deflection at center of gravity, if motor is supported on base as cantilever beam in horizontal position

Reed frequency, cycles per second

1E1.4 MANUFACTURERS. Motors which are not located in hosedown or high humidity areas shall be as manufactured by one or more of the following or acceptable equal.

Brown Boveri
Century
General Electric, Model "PSA" - Cast Iron
Louis Allis
Reliance
Siemens-Allis (Allis-Chalmers)
U.S. Motors
Westinghouse

Manufacturer and model of motors located in hosedown or high humidity areas and all pump and mixer drive motors shall be as follows or an acceptable equal.

Baldor Electric, Model "Dirty Duty"
General Electric, Model "Severe Duty" - Cast Iron
Louis Allis, Model "Chemical"
Reliance, Model "SXT" or "XT"
Siemens-Allis (Allis-Chalmers), Model "Chemical Duty/Severe Duty"
U.S. Motors, Model "Corro-Duty"
Westinghouse, Model "Mill and Chemical (MAC) Life-Line T"

All motors shall be furnished in complete accordance with the requirements of these specifications.

*EPA Request dated Oct 12, 2010, for Information Pursuant to Section 114 . Response #10 of 17 of Appendix B.

Each motor shall be designed and constructed in accordance with Section 1E and the following requirements.

Type: Squirrel-cage induction

Voltage: 460 volts, 3 phase, 60 hertz

NEMA design letter: Design B

Service: Indoor

Mounting: Horizontal

Ambient temperature range: 0 C minimum, 50 C maximum (Pump drive motors, mixer motors, and drive motors for blowers located on the scrubber ground floor may be rated for 40 C maximum.)

Enclosure type: Totally enclosed fan cooled. All motors with NEMA 449 T frame size or larger which are not available with totally-enclosed fan cooled enclosures shall have totally-enclosed tube cooled enclosures.

Insulation: Sealed

Bearing type and bearing lubrication system: Grease lubricated antifriction bearings in NEMA 440 Series frame sizes and smaller; oil ring lubricated self-cooled split sleeve bearings in frame sizes larger than NEMA 440 Series

Shaft: Solid

The shaft shall be furnished with corrosion resistant treatment or shall be of a corrosion resistant material.

Motors 300 horsepower and above shall be furnished with the following temperature detectors.

Bearings: Thermocouples

P-SP-002-A

BLACK & VEATCH CONSULTING ENGINEERS	ALL HORIZONTAL ~~100~~ 460 V INTEGRAL HP MOTORS	PROJECT 9255 SPEC 62.0202
	MOTOR SPECIFICATION AND DATA SHEET	

* Addendum No. 3

*EPA Request dated Oct 12, 2010, for Information Pursuant to Section 114 . Response #10 of 17 of Appendix B.

IP10_002269

Each motor shall be designed and constructed in accordance with Section 1E and the following requirements.

Type: Squirrel-cage induction

Voltage: 460 volts, 3 phase, 60 hertz

NEMA design letter: Design B

Service: Indoor

Mounting: Vertical

Ambient temperature range: 0 C minimum, 50 C maximum (Pump drive motors, mixer motors, and drive motors for blowers located on the scrubber ground floor may be rated for 40 C maximum.)

Enclosure type: Totally enclosed nonventilated or totally enclosed fan cooled

Insulation: Sealed

Bearing types: Angular contact thrust bearings and deep groove radial guide bearings

Bearing lubrication system: Grease

Shaft: Solid

The shaft shall be furnished with corrosion resistant treatment or shall be of a corrosion resistant material.

P-SP-002-A

BLACK & VEATCH CONSULTING ENGINEERS	ALL VERTICAL 460 V INTEGRAL HP MOTORS	PROJECT 9255 SPEC 62.0202
	MOTOR SPECIFICATION AND DATA SHEET	

*EPA Request dated Oct 12, 2010, for Information Pursuant to Section 114 . Response #10 of 17 of Appendix B.

IP10_002270

Subsection 1E2 - FRACTIONAL HORSEPOWER MOTORS

1E2.1 MOTOR RATING, SERVICE FACTOR, AND NAMEPLATE DATA. Motor rating, service factor, and nameplate data shall conform to the requirements of NEMA MG 1 standards.

Motor nameplate horsepower ratings shall not be exceeded when the equipment is operating within the limits of the design conditions specified. The motor loading shall not exceed the motor service factor rating on startup conditions or at the equipment maximum load point.

1E2.2 DESIGN AND CONSTRUCTION. The type, design, and construction of each motor shall be coordinated with the driven equipment requirements as specified in the individual technical sections.

1E2.2.1 Enclosures. All motors shall be self-ventilated. Fully guarded enclosures shall be furnished on all motor enclosure types having accessible moving parts other than shafts.

Motors shall be totally enclosed unless specified otherwise. Frames, brackets, external terminal housings, where furnished, and fan covers for fan cooled motors shall be cast iron.

All exposed metal surfaces shall be protected, where practical, with a corrosion resistant polyester paint or coating. Exposed unpainted and uncoated surfaces shall be of a corrosion resistant metal. Enclosure exterior and interior surfaces, air gap surfaces, and windings shall be protected with a corrosion resistant epoxy paint or coating.

1E2.2.2 Insulation and Windings. Motors shall have sealed Class B non-hygroscopic insulation. The sealed insulation specified shall include two additional dips and bakes of epoxy varnish or vacuum impregnation. Sealed Class A insulation is acceptable only where Class B is unavailable. Unless specified otherwise, all motors shall be for operation in 50 C ambient.

Where motors with Class B insulation are not available, motors may be furnished with Class F insulation provided the temperature rise is in accordance with NEMA MG 1 values for Class B insulation and provided all other requirements are as specified, including bearing life and sealed insulation.

All insulated winding conductors shall be copper.

The insulation resistance corrected to 40 C shall not be less than motor rated kV+1 megohms for all windings.

*EPA Request dated Oct 12, 2010, for Information Pursuant to Section 114 . Response #10 of 17 of Appendix B.

1E2.2.3 Terminal Housings. Externally mounted terminal housings shall be diagonally split for easy access to the motor leads, and designed for rotation in 90 degree increments. A gasket shall be furnished between the halves of the housing. Motor leads shall be completely wired into the externally mounted terminal housing.

1E2.2.4 Leads. Terminal and lead details including identification, dimensions and locations of terminal housings, terminal boards, combination spade, screw, or stud terminals, and terminal spacing shall be in accordance with NEMA MG 1 and MG 2 standards. Where supplied, terminal boards shall be fabricated on nonhygroscopic material.

The leads of dual voltage rated or multispeed motors shall be easily connected or reconnected in the terminal housing for the operating voltage or for the speed specified. Permanent instructions for making these connections shall be furnished inside the terminal housing or on the motor frame or nameplate.

1E2.2.5 Terminals. Cable type leads shall be provided with Burndy Type YA or acceptable equal compression type connectors.

1E2.2.6 Ground Connectors. All motors, including those with resilient mountings, shall be furnished with a ground connection in accordance with NEMA MG 2-2.09. A ground connector shall be provided inside the motor terminal housing for 12 AWG grounding cable.

1E2.2.7 Bearings. All bearings shall be self-lubricating, shall have provisions for relubrication, and shall be designed to operate in any position or at any angle. One-piece sleeve bearings with wick lubrication shall be furnished where available. Double-shielded grease lubricated ball bearings shall be furnished where sleeve bearings are not available or where axial thrust load exceeds 20 pounds.

All bearing mountings shall be designed to prevent the entrance of lubricant into the motor enclosure or dirt into the bearings, and when required, shall be fitted with pipes, drain plugs, and fittings arranged for safe, easy relubrication from the outside of the motor while the motor is in service.

1E2.2.8 Rotors. All induction motors shall have squirrel-cage rotors adequately sized to avoid overheating during acceleration of the motor and driven equipment. Rotors shall be dynamically balanced.

1E2.2.9 Shafts. Shafts of motors shall be furnished with corrosion resistant treatment or shall be of corrosion resistant metal.

1E2.2.10 Starting Switches. Starting switches, where required for single phase motors, shall provide quiet, positive action at the proper opening and closing speed.

*EPA Request dated Oct 12, 2010, for Information Pursuant to Section 114 . Response #10 of 17 of Appendix B.

1E2.2.11 Capacitors. Capacitors, as required, shall be furnished in removable metal enclosures mounted on the motor frame. Lock washers shall be provided under the heads of the enclosure holddown bolts.

1E2.2.12 Thermal Protection. Manual reset thermal protection, for both stalled rotor and overload protection, shall be furnished on all motors where available unless specified otherwise in the individual technical sections.

1E2.3 ASSEMBLY. All motors shall be completely assembled with the driven equipment, lubricated, and ready for operation.

1E2.4 QUALITY CONTROL TESTS AND INSPECTIONS. Each motor shall be tested and inspected at the manufacturer's factory to determine that it is free from electrical or mechanical defects and to provide assurance that it meets the requirements of these specifications. Test procedures for single phase fractional horsepower motors shall be in accordance with IEEE No. 114 Test Procedure for Single-phase Induction Motors.

1E2.5 MANUFACTURERS. Manufacturer and model of motors shall be as follows or an acceptable equal:

General Electric, Model "Severe Duty"
Reliance, Model "SXT" or "XT"
U.S. Motors, Model "Corro-Duty"
Westinghouse, Model "Mill and Chemical (MAC) Life-Line T"

These motors shall be furnished in complete accordance with the requirements of these specifications.

*EPA Request dated Oct 12, 2010, for Information Pursuant to Section 114 . Response #10 of 17 of Appendix B.

Section 1F - VALVE AND DAMPER MOTOR OPERATORS

1F.1 GENERAL. Except as indicated otherwise, these specifications are applicable to all valve and damper motor operators furnished.

The electric motor operators shall be designed especially for heavy-duty power plant valve and damper service and shall be "Rotork" as manufactured by Rotork, Inc. or "Limitorque" as manufactured by Philadelphia Gear Corporation. Valve and damper motor operators shall have all metal gear trains. Fiber gears are not acceptable for the transmission components developing output effort.

Valve and damper operating speeds and differential and static pressures, when specified by the Engineer, are included in the technical sections of these specifications. Where the valve and damper operating speeds and differential and static pressures are not specified by the Engineer, the operating speeds and torques shall be coordinated by the Contractor with the equipment requirements and shall be acceptable to the Engineer.

1F.2 CODES AND STANDARDS. Operator motors shall be designed and fabricated to conform to the applicable requirements of NEMA, ANSI, AFBMA, and IEEE standards, and shall be selected and applied for the equipment duty service in accordance with the requirements of NEMA MG 1 and MG 2 standards and NEC. All equipment furnished under these specifications shall conform to the applicable requirements of the Federal "Occupational Safety and Health Standards".

1F.3 RATING, DESIGN, AND CONSTRUCTION. Motors shall be designed for high torque, reversing service in a 50 C ambient temperature. Motors shall have Class B nonhygroscopic insulation sealed with two additional dips and bakes of epoxy varnish. Temperature rise shall not exceed 70 C rise by resistance in 50 C ambient for the time rating furnished.

Motors shall be rated 460 volts, 3 phase, 60 hertz, unless otherwise indicated in the technical sections of these specifications.

Motor starting torque shall not be less than 500 per cent of rated full load torque. The motor time rating for normal opening and closing service shall be not less than whichever of the following is greatest:

As required for three successive open-close operations
As specified elsewhere
As required for the service
Not less than 15 minutes

Where specified or necessary for the service, valves and dampers designed for modulating service shall have motors rated for continuous duty and for frequent starting and stopping service.

*EPA Request dated Oct 12, 2010, for Information Pursuant to Section 114 . Response #10 of 17 of Appendix B.

IP10_002274

Sufficient torque shall be provided to open or close the valve or damper against maximum differential pressure and static pressure at 90 per cent nominal voltage for ac motors.

Motors shall be furnished with cast iron or steel, totally enclosed, nonventilated, weatherproof, dusttight enclosures suitable for outdoor service. Double-shielded, grease prelubricated, regreaseable, anti-friction bearings having AFBMA minimum L-10 rating life of not less than 15,000 hours shall be furnished. Motor leads shall be terminated in the limit switch compartment.

All motor operators shall be supplied with 120 volt ac, single phase, space heaters located in the limit switch compartment. Motor operators provided with a motor 7-1/2 horsepower or larger shall also be supplied with 120 volt ac, single phase, space heaters located in the motor. Motor space heater leads shall be terminated in the limit switch compartment. Motor operator enclosures shall be equipped with drain plugs. Drain plugs shall be Crouse-Hinds Type ECD "Universal" combination water drain-breather type or acceptable equal.

Control circuits shall operate on nominal 120 volts ac, single phase. Push-button stations or reversing starters shall not be furnished with motor operator units. The motor operators shall be designed for remote maintained type open or closed control.

A handwheel and position indicator shall be provided for manual operation of each valve or damper. Provisions shall be made for manual engagement of the handwheel at any time except when the motor is energized, during which time the handwheel shall be automatically disengaged.

Motor operators shall be designed for installation in any position without lubricant leakage or other operating difficulties.

1F.4 REQUIREMENTS APPLICABLE ONLY TO "ROTORK" MOTOR OPERATORS. Each motor operator shall provide the following switch functions in each direction of travel:

Position limit switch

Two auxiliary switches at end of travel

Three auxiliary switches adjustable to trip at any point at and between the fully open and fully closed positions

*EPA Request dated Oct 12, 2010, for Information Pursuant to Section 114 . Response #10 of 17 of Appendix B.

Torque and thrust loads in both closing and opening directions shall be limited by torque limit switches. Each torque switch shall be independently adjustable and shall permit settings between rated full load torque and 40 per cent or less of that value. The means shall be provided to prevent nuisance tripping of the opening torque switch caused by transient high loads during the initial unseating period. A similar device shall be provided for the closing torque switch on those valves and dampers where backseating of the valve or damper is recommended by the valve or damper manufacturer.

The motor operator limit switches and torque switches shall be wired in accordance with the Rotork Motor Operator Limit Switch Development drawing included as part of this section, or the manufacturer's alternate system acceptable to the Engineer.

1F.5 REQUIREMENTS APPLICABLE ONLY TO "LIMITORQUE" MOTOR OPERATORS. Each motor operator shall have four rotary drum limit switches, each capable of being set to trip at any point between fully open and fully closed positions. Each rotary drum limit switch shall have two normally open and two normally closed contacts. Double torque limit switches for the motor operator shall be provided to limit opening and closing thrust.

Self-locking gearing or spring-loaded operators shall be furnished to compensate for excessive thrusts and to prevent repeated reverse operation of the motor.

Operation of limit switches and torque switches, contact development, and internal wiring of all Limitorque operators shall be in accordance with the Limitorque Operator Wiring Diagram, which is part of these specifications.

1F.6 CONTRACTOR'S RESPONSIBILITY FOR SPECIFICATION TRANSMITTAL. The Contractor shall submit a copy of this entire section, VALVE AND DAMPER MOTOR OPERATORS, along with related data from Section 1B and the specification technical sections to the motor operator supplier with the purchase order for motor operators.

*EPA Request dated Oct 12, 2010, for Information Pursuant to Section 114 . Response #10 of 17 of Appendix B.

IP10_002276

LIMIT SWITCHES			
CONTACT	FULL OPEN	INTERMED	FULL CLOSE
15-16	X		
6-7			X
17-18		X	X
8-9	X	X	
10-11	X		
12-13	X		
19-20		X	X
21-22			X
28-29			X
30-31	X	X	
24-25	OPEN TORQUE SW.		
26-27	CLOSE TORQUE SW.		

P-EL-136-A

BLACK & VEATCH
CONSULTING ENGINEERS

ROTORK MOTOR OPERATOR LIMIT SWITCH CONTACT DEVELOPMENT

*EPA Request dated Oct 12, 2010, for Information Pursuant to Section 114 . Response #10 of 17 of Appendix B.

IP10_002277

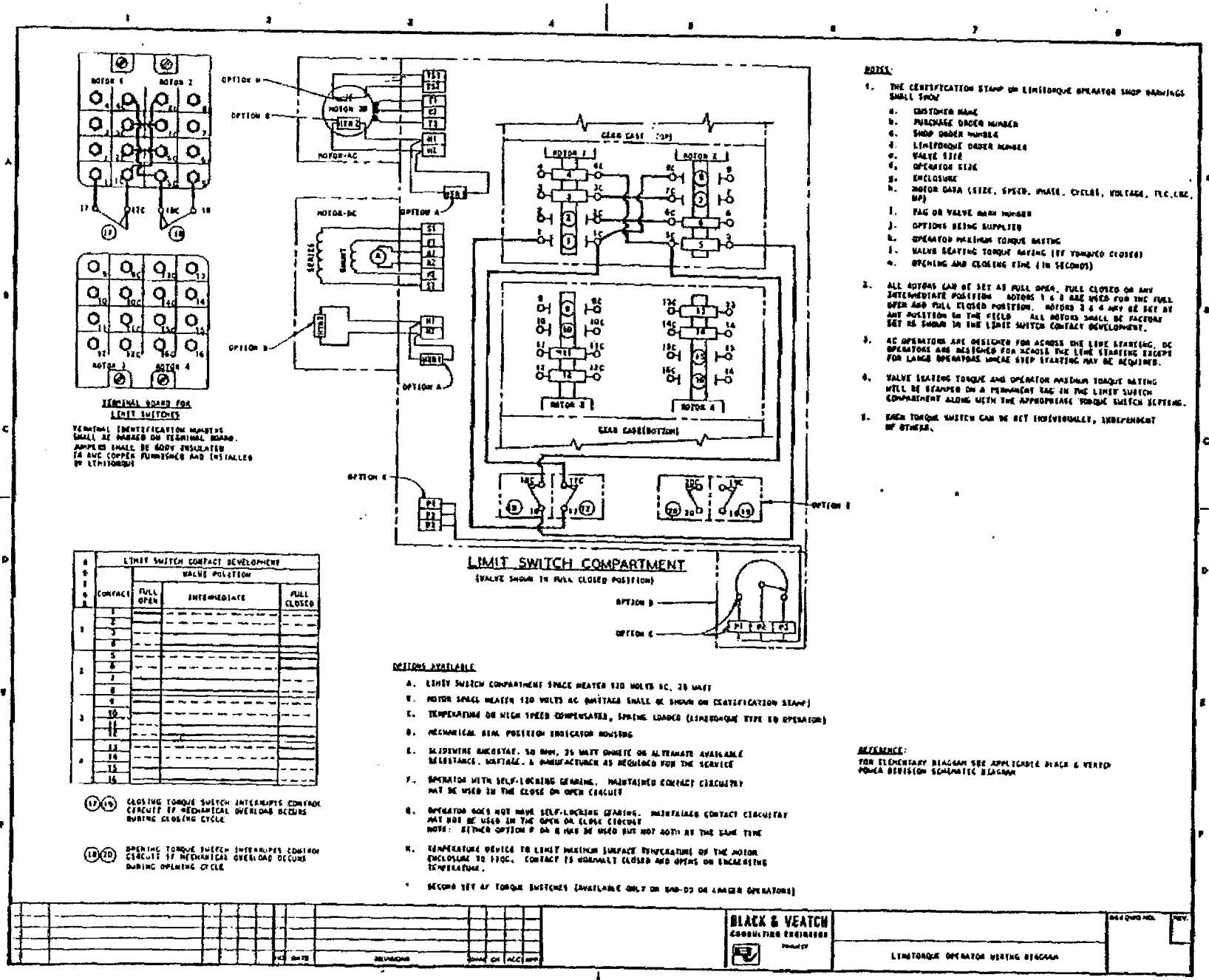

*EPA Request dated Oct 12, 2010, for Information Pursuant to Section 114 . Response #10 of 17 of Appendix B.

SPECIAL CONDITIONS

SC.1 GENERAL. These Special Conditions are nontechnical in nature and shall supplement the General Conditions in the administration and regulation of field erection work performed under these specifications.

SC.2 CONSTRUCTION MANAGEMENT. The coordination of all field construction will be under the direction of the Construction Manager, who will be responsible for coordinating work between various contractors and for resolving any conflicts between contractors regarding scheduling or coordination.

*A meeting of the Construction Manager, the Project Manager and all contractors at the site will be held each week at the time and place designated by the Construction Manager. The purpose of the weekly meeting will be for the scheduling and coordination of each contractor's work within the requirements of the overall project. In the event conflicts arise between contractors concerning scheduling or coordination, the Construction Manager will make the final decision resolving the conflict. The Contractor's superintendent shall attend each weekly meeting as required by the Construction Manager.

**~~The time of completion is of the essence of this Contract~~ Contractor acknowledges that the delivery schedule and completion of erection are of significant importance to the Owner and the Contractor shall be responsible for performing his work in accordance with the specified construction schedule. If at any time the Contractor's work is behind schedule, the Contractor shall increase his forces, work overtime, or otherwise accelerate his operations to comply with the schedule, and shall put into ***effect definite procedures for getting the work back on schedule at Contractor's cost. The proposed procedures shall be subject to the Construction Manager's approval or modification. The procedures adopted shall be put into effect immediately.

The Construction Manager will not be responsible for the assignment of personnel, or obtaining materials or supplies, or for any other services to the Contractor except the coordination of work between contractors and as specifically set forth in the contract documents.

The Contractor shall prepare and submit to the Construction Manager a daily Contractor/Subcontractor Personnel Summary Report. This report shall be broken down into supervision and individual craft classifications. The report shall indicate the total number of personnel, by classification, on the payroll of the Contractor and each subcontractor and also the total number of man-hours, by classification, actually expended for the day. The daily Contractor/Subcontractor Personnel Summary Report form will be provided to the Contractor by the Construction Manager.

*Addendum No. 3
**Negotiated Revision
***Negotiated Revision 120481

*EPA Request dated Oct 12, 2010, for Information Pursuant to Section 114 . Response #10 of 17 of Appendix B.

IP10_002280

SC.3 CONTRACTOR'S OFFICE AT SITE OF WORK. During the performance of this Contract, the Contractor shall maintain a suitable office at the site of the work which shall be the headquarters of a representative

*EPA Request dated Oct 12, 2010, for Information Pursuant to Section 114 . Response #10 of 17 of Appendix B.

authorized to receive drawings, instructions, or other communication or articles. Any communication given to the said representative, or delivered at the Contractor's office at the site of the work in his absence, shall be deemed to have been delivered to the Contractor.

Copies of items listed under FIELD RECORDS shall be kept at the Contractor's office at the site of the work, available for use at all times.

SC.4 FIELD RECORDS. The Contractor shall maintain at his office at the site up-to-date copies of all drawings, specifications, and other contract documents and supplementary data, complete with latest revisions thereto. In addition, the Contractor shall maintain a continuous record of all field changes and, at the conclusion of the work, shall incorporate all such changes on the drawings and other engineering data and shall submit the required number of copies thereof to the Project Manager and Construction Manager.

Throughout the erection work under this Contract, the Construction Manager shall have the right to audit the status of the record of field changes. The Owner, the Project Manager, or the Construction Manager *shall have the right to inspect unpriced material invoices and all other records of the Contractor or any subcontractor related to the erection work.

SC.5 CONTRACTOR'S SUPERVISION AT THE SITE. The Contractor shall furnish adequate management, supervisory, and technical personnel on the site to ensure expeditious and competent handling of the work.

A superintendent experienced in major construction of the type specified, and who is a permanent member of the Contractor's organization, shall be a resident at the project throughout the construction. The superintendent shall be fully authorized to act for the Contractor and to receive whatever orders or notices may be given for the proper prosecution of the work.

The Contractor's field organization shall include an experienced staff of qualified technical personnel to handle onsite engineering, planning, and direction of all field work. The field organization shall also include a staff to handle timekeeping, employment, accounting, purchasing and expediting, stores and warehouses, stock and tool rooms, and security.

The Contractor shall be responsible for complete supervision and control of his subcontractors as though they were his own forces. Notice to the Contractor shall be considered notice to any affected subcontractor.

The Owner, the Project Manager, or the Construction Manager shall have the right to require removal from the Project of any of the Contractor's employees if, in the judgment of the Owner, the Project Manager, or the Construction Manager, such removal shall be necessary to protect the Owner's interests.

*Negotiated Revision

*EPA Request dated Oct 12, 2010, for Information Pursuant to Section 114 . Response #10 of 17 of Appendix B.

SC.6 SUBCONTRACTS. It is the intent of these specifications that the Contractor shall perform the majority of the field work with his own forces and under the management of his own organization. Specific portions of the work may be subcontracted only by subcontractors who have been listed in the Proposal Data section and who are accepted in writing by the Project Manager. All subcontractors shall be directly responsible to the Contractor and shall be under his general supervision. All work performed under subcontracts shall be subject to the same contract provisions as the work performed by the Contractor's own forces.

SC.7 RELATIONS WITH OTHER CONTRACTORS. The Contractor shall cooperate with all other contractors who may be performing work in behalf of the Owner, and workmen who may be employed by the Owner or the Project Manager in the vicinity of the work under this Contract, and he shall conduct his operations to minimize interference with the work of such contractors or workmen. The Contractor shall promptly make good, at his own expense, any injury or damage that may be sustained by other contractors or employees of the Owner or Project Manager at his hands. Any difference or conflict which may arise between the Contractor and other con-
**tractors~~/ or between the Contractor and workmen of the Owner or Project Manager/~~ in regard to their work shall be resolved as determined by the
*Construction Manager/ subject to Article GC.11.

If any part of the Contractor's work is dependent upon the quality and completeness of work performed under another contract, the Contractor shall inspect the other contractor's work and promptly report defects therein which render such work unsuitable for the proper execution of the work under this Contract. Failure to report such defects to the Project Manager shall constitute the Contractor's acceptance of such work as suitable to receive the Contractor's work; provided however, that the Contractor shall not be responsible for defects which develop after his inspection and which could not have been reasonably detected or foreseen.

SC.8 METHODS OF FIELD OPERATION. The Contractor shall inform the Construction Manager in advance as to the Contractor's plans for carrying out each part of the field work. Review by the Project Manager, Engineer, or Construction Manager of any plan or method of work proposed by the Contractor shall not relieve the Contractor of any responsibility therefor, and such review shall not be considered as an assumption of any risk or liability by the Construction Manager, Engineer, Project Manager, or Owner or any officer, agent or employee thereof. The Contractor shall have no claim because of the failure or inefficiency of any plan or method so reviewed.

Any method of work suggested by the Project Manager, the Engineer, or the Construction Manager, but not specified, shall be used at the risk and responsibility of the Contractor, and the Project Manager, the Engineer, or the Construction Manager shall have no responsibility therefor. The Contractor alone shall be responsible for the safety, adequacy, and efficiency of his plant, equipment, and methods.

*Negotiated Revision
**Negotiated Revision 120481

*EPA Request dated Oct 12, 2010, for Information Pursuant to Section 114 . Response #10 of 17 of Appendix B.

The Contractor shall comply with all applicable requirements of federal, state, and local codes and of all other authorities having jurisdiction over this work, including the requirements of the Federal "Safety and Health Regulations for Construction."

The Contractor shall be solely and completely responsible for conditions related to his work including safety of all persons and property during performance of the work. This requirement will apply continuously and not be limited to normal working hours. Neither the Project Manager nor the Engineer nor the Construction Manager shall be responsible to review the adequacy of the Contractor's safety measures in, on, or near the construction site and the Contractor shall be solely responsible for the adequacy of such measures.

SC.9 LINES AND GRADES. All work shall be done to the lines, grades, and elevations indicated on the drawings. The Contractor shall provide suitable equipment and competent workmen who shall locate and lay out the work.

Basic horizontal and vertical control points will be established or designated by the Project Manager. These points shall be used as datum for work under this Contract.

The Contractor shall keep the Construction Manager informed, a reasonable time in advance, of the times and places at which he wishes to do work, so any checking deemed necessary by the Construction Manager may be done with minimum inconvenience to the Construction Manager and minimum delay to the Contractor.

Any work done without being properly located may be ordered removed and replaced at the Contractor's expense.

SC.10 PRESERVATION OF MONUMENTS AND STAKES. The Contractor shall carefully preserve all monuments, bench marks, reference points, and stakes. The Contractor will be charged with the expense of replacement of any such items destroyed, and shall be responsible for any mistake or loss of time that may be caused. Permanent monuments or bench marks which must be removed or disturbed shall be protected until they can be properly referenced for relocation. The Contractor shall furnish materials and assistance for the proper replacement of such monuments or bench marks.

SC.11 PROTECTION OF PROPERTY AND PUBLIC LIABILITY. The Contractor shall be accountable for any damages resulting from his operations. He shall be fully responsible for the protection of all persons including members of the public, employees of the Owner or Project Manager, and employees of other contractors or subcontractors, and all public and private property including structures, sewers and utilities, above and below ground.

*EPA Request dated Oct 12, 2010, for Information Pursuant to Section 114 . Response #10 of 17 of Appendix B.

IP10_002284

Within 3 days after being notified of any damage, loss, or injury resulting from his operations, the Contractor shall make a full and complete report thereof in writing to the Construction Manager.

The Contractor shall furnish and maintain all necessary safety equipment, such as barriers, signs, warning lights and guards, to provide adequate protection of persons and property.

The Contractor shall give reasonable notice to the owners of public or private property and utilities when such property and utilities are liable to injury or damage through the performance of the work, and shall make all necessary arrangements with such owners relative to the removal and replacement or protection of such property or utilities.

SC.12 EMERGENCY PROTECTION. Whenever, in the opinion of the Project Manager or the Construction Manager, the Contractor has not taken sufficient precaution for the safety of the public or the protection of the work to be constructed under this Contract or of adjacent structures or property, and whenever, in the opinion of the Project Manager or the Construction Manager, an emergency has arisen and immediate action is considered necessary, then the Project Manager or the Construction Manager, with or without notice to the Contractor, may provide suitable protection by causing work to be done and material to be furnished and placed. The cost of such work and material shall be borne by the Contractor, and if the same is not paid on presentation of the bills therefor, such costs may be deducted from any amounts due or to become due the Contractor. The performance of such emergency work shall not relieve the *Contractor of responsibility for any damage which may occur/ as a result of the Contractor's failure to take sufficient precaution for the safety of the public or the protection of the work.

SC.13 LOSSES FROM NATURAL CAUSES. All loss or damage arising out of the nature of the work, or from the action of the elements, or from floods or overflows, or from ground water, or from any unusual obstruction or difficulty, or any other natural or existing circumstance either known or unforeseen which may be encountered in the prosecution of the work, shall *be sustained and borne by the Contractor at his own cost and expense/ provided that excepted risks from Contractor's liability hereunder are war, nuclear hazards, civil commotion, and other perils which are insurable but are excluded from Owner's All Risk Builder's Risk insurance.

SC.14 CHARACTER OF WORKMEN. The Contractor shall employ only workmen who are competent to perform the work assigned to them and, in the case of skilled labor, who are adequately trained and experienced in their respective trades and who do satisfactory work.

SC.15 SUNDAY, HOLIDAY, AND NIGHT WORK. No work shall be done between 6:00 p.m. and 7:00 a.m. or on Sundays or legal holidays without the written consent of the Construction Manager. However, emergency work, as determined by the Construction Manager, may be done without prior consent.

*Negotiated Revision

*EPA Request dated Oct 12, 2010, for Information Pursuant to Section 114 . Response #10 of 17 of Appendix B.

Night work may be established by the Contractor as a regular procedure with the written permission of the Construction Manager. Such permission, however, may be revoked at any time if the Contractor fails to maintain adequate equipment and supervision for the proper prosecution and control of the work at night.

SC.16 UNFAVORABLE CONSTRUCTION CONDITIONS. No portion of the work shall be constructed under conditions which would affect adversely the quality or efficiency thereof, unless special means or precautions acceptable to the Construction Manager are taken by the Contractor to perform the work in a proper and satisfactory manner.

SC.17 REJECTED WORK AND MATERIALS. The Contractor, upon written notice from the Construction Manager, shall remove from the premises all work and materials rejected as defective, unsound, improper, or in any way failing to conform to the requirements of the contract documents. The Contractor shall at his sole expense make good all work damaged by such removal and shall promptly replace materials damaged or improperly worked by him and re-execute his own work in accordance with the contract. This includes re-executing or replacing the work of any other contractor that is in any way affected by the removal of the defective work. The obligations of the Contractor under this section shall not extend to defective materials or equipment supplied by the Owner.

If the Contractor does not remove his rejected work and materials within 10 days after written notice, the Construction Manager may remove and replace such work and materials at the expense of the Contractor.

SC.18 PLACING WORK IN SERVICE. If desired by the Project Manager, portions of the work may be placed in service when completed and the Contractor shall provide proper access for this purpose. Such use and operation shall not constitute an acceptance of the work, and the Contractor shall be liable for defects due to faulty construction throughout the duration of this Contract and thereafter as provided under the "Guarantee."

SC.19 CLEANLINESS. Special attention shall be given to keeping the inside of the structures and surrounding grounds clean and free from trash and debris. The Contractor shall employ sufficient and special personnel to thoroughly clean his work areas continuously each working day and shall cooperate with the other contractors to keep the entire construction site clean. This shall include sweeping the floors, collecting and depositing waste and trash in the collection containers designated by the Construction Manager, and providing all other functions required to keep the site clean, except for the Owner-furnished services specified in Section 3A. Materials and supplies shall be stored in locations which will not block accessways, and arranged to permit easy cleaning of the area. In areas where equipment might drip oil or cause

*EPA Request dated Oct 12, 2010, for Information Pursuant to Section 114 . Response #10 of 17 of Appendix B.

other damage to the floor surface, a protective cover of heavy gage, flame resistant, oilproof sheeting shall be provided between the equipment and the floor surface so that no oil or grease contacts the concrete. This requirement is applicable to both finished and unfinished floors.

All hoses, cables, extension cords, and similar materials shall be located, arranged, and grouped so that they will not block any accessway and will permit easy cleaning and maintenance. At the close of each workweek and at the close of each day preceding a holiday, all such items shall be removed from the construction area and placed in storage areas.

Promptly upon the completion of the construction work, all scrap, trash, waste materials, and debris resulting from work under this Contract shall be removed to the collection areas designated by the Construction Manager. All Contractor-owned facilities, materials, and construction plant shall be removed from the site. The Contractor shall thoroughly clean the work, removing all accumulations of dust, scraps, waste, oil, grease, weld spatter, insulation, paint, and other foreign substances. Surfaces damaged by deposits of insulation, concrete, paint, weld metal, or other adhering materials shall be restored by the Contractor.

Remaining Owner-furnished materials shall be stored on the site or removed from the site as directed by the Construction Manager.

In the event of conflict between contractors concerning cleaning responsibilities, the Construction Manager will determine the responsibility and assign the work. The Construction Manager's decision will be final and binding and the responsible contractor shall promptly perform the disputed work. In the event that the Contractor fails to comply with the cleanliness requirements specified herein or to perform the cleanup work assigned to him, by the Construction Manager, the Project Manager reserves the right to hire another contractor (not necessarily one of the construction contractors) to perform the necessary cleaning work and the Contractor shall reimburse the Owner for the cost of all such cleanup work.

SC.20 FIRE PROTECTION. Only work procedures which minimize fire hazards to the extent practicable shall be used. Combustible debris and waste materials shall be collected each day and deposited in the collection containers designated by the Construction Manager. Fuels, solvents, and other volatile or flammable materials shall be stored away from the construction and storage areas in well marked, safe containers. Good housekeeping is essential to fire prevention and shall be practiced by the Contractor throughout the construction period. The Contractor shall follow the recommendations of the AGC "Manual of Accident Prevention in Construction" regarding fire hazards and prevention.

Unless specified herein for a particular application, untreated canvas, paper, plastic, and other flammable flexible materials shall not be used on the site for any purpose. If such materials are on equipment or

*EPA Request dated Oct 12, 2010, for Information Pursuant to Section 114 . Response #10 of 17 of Appendix B.

materials which arrive at the site, they shall be removed and replaced with an acceptable covering before storing or moving into the construction area.

Likewise, corrugated paper and fiberboard cartons will not be permitted in the construction area for the storage or handling of materials. If such cartons do arrive in the construction area, they shall be immediately unpacked and removed from the site. Acceptable flexible materials for covering shall be waterproof and flame resistant.

Formwork, scaffolding, planking, and similar materials which are combustible but which are essential to execution of the work shall be treated for fire resistance or otherwise protected against combustion resulting from welding sparks, cutting flames, and similar fire sources.

Temporary heating facilities shall not be left unattended.

The Contractor's supervisory personnel and a sufficient number of workmen shall be instructed in proper methods for extinguishing fires and shall be assigned specific fire protection duties. When trained personnel leave the job, new personnel shall be trained in their duties. All workmen shall be instructed in the selection and the operation of each type of fire extinguisher for each type of fire which might be encountered.

The Contractor shall provide adequate fire protection equipment in each warehouse, office, and other temporary structures, and in each work area he is occupying as specified herein. Access to sources of fire water shall be identified and kept open at all times. Suitable fire extinguishers shall be provided in enclosed areas, in areas which are not accessible to fire water, or in areas which may be exposed to fire that cannot be safely extinguished with water. Each fire extinguisher shall be of a type suitable for extinguishing fires which might occur in the area in which it is located. In areas where more than one type of fire might occur, the type of fire extinguisher required in each case shall be provided. Each extinguisher shall be placed in a convenient, clearly identified location which will most likely be accessible in the event of fire.

The Contractor alone shall be responsible for providing adequate fire protection. Failure of the Contractor to comply with, or the Construction Manager to enforce, the above requirements shall not relieve the Contractor from any other responsibility or obligation under this Contract. Except as specifically set forth in the Supplemental Fire Protection Equipment article in Section 3A, the Contractor alone shall be responsible for furnishing all fire protection equipment and personnel.

SC.21 SECURITY. The Contractor shall be responsible for all materials and equipment in his custody or placed in construction by him. Security

*EPA Request dated Oct 12, 2010, for Information Pursuant to Section 114 . Response #10 of 17 of Appendix B.

methods shall be employed as required to ensure the protection of all materials, equipment, and construction work from theft, vandalism, fire, and all other damage and loss.

The Contractor shall comply with any security requirements instituted by the Owner regarding guard service, construction site entry, personnel identification systems, and registration of personnel and vehicles.

SC.22 CONSTRUCTION AREA LIMITS. The Construction Manager will designate the boundary limits of access roads, parking areas, storage areas, and construction areas, and the Contractor shall not trespass in or on areas not so designated. The Contractor shall be responsible for keeping all of his personnel out of areas not designated for the Contractor's use; except, in the case of isolated work located within such areas, the Construction Manager will issue permits to specific Contractor personnel to enter and do the work.

The Contractor's employees shall park their automobiles, trucks, and other vehicles in the assigned construction personnel parking area.

SC.23 FOOD SERVICES. No food services will be permitted on the construction site.

SC.24 PROTECTION OF WORK. The Contractor shall be solely responsible *for the protection of his work until ~~its final acceptance by the Project Manager~~ the commencement of initial operation by Owner. Responsibility for the protection of the work shall pass to Owner upon such initial operation. In the event Owner takes over any part of the work prior to completion of Contractor's work, responsibility for the protection of such part shall pass to Owner upon such takeover. However, if Contractor takes over the work or a portion thereof after initial operation, Contractor shall be responsible for protection during the period of Contractor's control until Owner resumes operation.

The Contractor shall have no claim against the Owner, the Project Manager, the Engineer, or the Construction Manager because of any damage or *loss to the Contractor's work for Contractor's failure to protect the work, and shall be responsible for the complete restoration of damaged work to its original condition complying with the specifications and drawings.

In the event the Contractor's work is damaged by another party not under his supervision or control, the Contractor shall make his claim directly with the party involved. If a conflict or disagreement develops between the Contractor and one of the other contractors concerning the responsibility for damage or loss to the Contractor's work, the conflict shall be resolved as provided under RELATIONS WITH OTHER CONTRACTORS. Such conflict shall not be cause for delay in the restoration of the damaged work. The Contractor shall restore the work immediately and the cost thereof will be assigned pending the resolution of the conflict.

*Negotiated Revision

*EPA Request dated Oct 12, 2010, for Information Pursuant to Section 114 . Response #10 of 17 of Appendix B.

The obligation to deliver finished work in strict accordance with the contract documents prior to final acceptance of the work by the Project Manager shall be absolute and shall not be affected by the Project Manager's, the Engineer's, or the Construction Manager's acceptance of or failure to prohibit means and methods of construction used by the Contractor.

*EPA Request dated Oct 12, 2010, for Information Pursuant to Section 114 . Response #10 of 17 of Appendix B.

SC.25 PROTECTION OF CONCRETE AND OTHER FINISHED SURFACES. Finished surfaces including concrete floors and other concrete surfaces shall be protected from chipping, gouging, scratching, staining, and other damage. Damaged sections shall be repaired or removed and replaced subject to the Construction Manager's discretion and acceptance.

Heavy planks and mats shall be placed under equipment and materials being stored, moved, assembled, or installed on or above concrete floor surfaces. Nonflammable, oil resistant coverings shall be used to protect concrete surfaces from staining.

SC.26 PROTECTION OF GRATING AND STAIR TREADS. Floor gratings and stair treads shall be protected against damage from heavy loads, movement of equipment, materials, flame cutting, welding, and other such construction damage. Where heavy equipment or material loads are to be stored or moved over gratings, such loads shall be supported directly from the structural steel and shall not be allowed to bear on the gratings. Damaged sections shall be repaired or replaced subject to the Construction Manager's discretion and acceptance.

SC.27 PROTECTION OF ELECTRICAL RACEWAY, CABLE AND LIGHTING FIXTURES. The Contractor shall protect electrical raceway, cable, lighting fixtures, and associated support systems against damage from movement of equipment and materials, welding, flame cutting, and other construction damage. Raceway and supporting structures for raceway and lighting fixtures shall not be used as access scaffolding at any time. Whenever welding or flame cutting operations occur above or near raceways, cables or lighting fixtures not shielded from such operations by concrete floors or other protective covers, the Contractor shall protect the raceways, cables, and lighting fixtures from damage by means of fireproof boards or blankets.

SC.28 REPAIR OF DAMAGES. The Contractor shall immediately repair any damage which results from this construction or abnormal use, including damage done to the existing facilities. All such repair work shall be *acceptable to the Construction Manager and the Project Manager.

SC.29 INDEPENDENT TESTING LABORATORY. Laboratory testing specified in the technical requirements shall be done by an independent testing laboratory acceptable to the Project Manager. The laboratory shall be retained by the Contractor and all costs for laboratory services shall be paid by the Contractor.

SC.30 USE OF ELEVATORS. Permanent elevators will be erected early for use during construction. The Construction Manager will coordinate and control the use of permanent elevators used during construction. Construction use of permanent elevators for each unit will terminate upon commencement of steam generator boilout of the respective unit, except for elevator located in the control area. All other elevators and equipment including temporary construction elevators, if required, shall be furnished by the Contractor.

* Addendum No. 3

*EPA Request dated Oct 12, 2010, for Information Pursuant to Section 114 . Response #10 of 17 of Appendix B.

**SC.31 COOPERATION WITH ~~OWNER/~~ PROJECT MANAGER. The performance of erection work which affects the operation of the Owner's system facilities shall be scheduled to be performed only at times acceptable to the *~~Owner~~ Project Manager.

In the event that it is necessary to either interrupt the power supply or to impose abnormal operating conditions on the Owner's utility system, *such procedure must be acceptable to the ~~Owner~~ Project Manager and a complete understanding and agreement must be reached by all parties concerned well in advance of the time scheduled for such operation, and such understanding shall be definite as to date, time of day, and length of time *required. All work shall be scheduled to suit the ~~Owner's~~ Project Manager's convenience, taking into consideration the facilities and requirements at all times during construction.

The Owner will pay all premium time labor costs arising from the neces-**sity to perform work ordered by the Project Manager which affects the Owner's system facilities at times other than regular working hours. The straight time portion of overtime labor costs shall be to the Contractor's account.

SC.32 MINOR DEFECTS. The Contractor shall readjust, straighten, and repair minor defects and fabrication errors which are normally encountered in the Owner-furnished equipment and materials. No claims for extra compensation in connection with such work will be considered unless the claim is made in accordance with the applicable provisions in the General Conditions.

**When field labor is needed to correct significant ~~errors~~ defects in Owner-furnished equipment and materials, the Contractor shall furnish *such labor when so requested ~~by the manufacturer or~~ by the Project Manager or Construction Manager with the consent of the manufacturer. Such labor shall not be included in this Contract and the Contractor shall obtain payment for the labor from the manufacturer.

Defects in Owner-furnished equipment and materials shall be brought to the attention of the Construction Manager and all repair methods for such defects shall be subject to review and acceptance by the Construction *Manager and the Project Manager.

SC.33 CHECKOUT AND INITIAL OPERATION. The Contractor shall render all services and do all work required to place each item of equipment installed by him, including all auxiliaries, piping, and wiring, in operating condition to the satisfaction of the Construction Manager. Individual systems and items of equipment shall be completed in a sequence that will permit systematic checkout and trial operation of each such component before it is incorporated in the initial operation.

The Owner will furnish operating personnel during checkout and initial operation. The Contractor shall provide all other workmen required, in the opinion of the Construction Manager, to make adjustments and correct deficiencies during the initial equipment checking.

*Addendum No. 3
**Negotiated Revision 120481

*EPA Request dated Oct 12, 2010, for Information Pursuant to Section 114 . Response #10 of 17 of Appendix B.

It is anticipated that the start-up testing and initial operation will be in progress over extended periods of time. The workmen required of the Contractor shall be on the site at all times.

All regular and overtime payrolls and all other contingencies in connection with the checkout and initial operation of equipment shall be included as a part of the lump sum contract price.

The Contractor shall provide all temporary instrumentation and other devices required during checkout and operation of equipment and systems which he has installed.

The Owner will furnish, and the Contractor shall apply, all oils, greases, and other lubricants required to place equipment in condition ready for operation.

All rotating machinery shafts shall be in as nearly perfect alignment as practicable. Rotating machinery shall be free from excessive vibration, overheating bearings, and other conditions which would tend to shorten the life of the machinery. Bearings, shafts, and other moving parts shall be checked for proper alignment, cleaned, and lubricated before the equipment is initially started. The Contractor shall comply with each equipment manufacturer's specifications and instructions.

SC.34 CONSTRUCTION PLANT AND TEMPORARY FACILITIES. The Contractor shall furnish all construction plant, utilities and temporary facilities and all materials, equipment and supplies which are required for prosecution of the work but which will not be incorporated in the completed work.

Detailed instructions covering construction services to be provided by the Contractor and/or the Owner are included in Section 3A of these specifications.

SC.35 RECEIVING, HANDLING, AND STORAGE. The Contractor shall receive from carriers at the plant site, check, unload, handle and store all materials and equipment which are to be incorporated in the construction under these specifications.

The Contractor shall be responsible for the prompt unloading of materials and equipment and shall pay any demurrage.

Except as otherwise specified in Section 3A, the Contractor shall provide all storage facilities. Storage areas on the site shall be limited to those areas so designated by the Construction Manager.

Detailed instructions covering receiving, handling and storage of Owner-furnished and Contractor-furnished equipment and materials are included in Section 3A of these specifications.

*EPA Request dated Oct 12, 2010, for Information Pursuant to Section 114 . Response #10 of 17 of Appendix B.

SC.36 EQUIVALENT MATERIALS AND EQUIPMENT. Whenever a material or article is specified or described by using the name of a proprietary product or the name of a particular manufacturer or vendor, the specific item mentioned shall be understood as establishing the type, function, and quality desired. Other manufacturers' products will be accepted provided sufficient information is submitted to allow the Engineer to determine that the products proposed are equivalent to those named. Such items shall be submitted for review by the procedure set forth in the ENGINEERING DATA AND DOCUMENTATION section.

Requests for review of equivalency will not be accepted from anyone except the Contractor and such requests will not be considered until after the contract has been awarded.

Requests for review of equivalency shall be submitted in a timely manner with sufficient time allotted for the review before the materials or equipment are ordered by the Contractor. The request shall be accompanied by sufficient product data for evaluation of the product.

SC.37 OIL SPILL PREVENTION AND CONTROL. The Contractor shall be solely responsible for his operations involving unloading, storing, handling, and using oil and oil by-products onsite and shall be solely responsible for strict compliance with the requirements of the Environmental Protection Agency (EPA) as published in the Code of Federal Regulations Title 40, specifically Articles 110 and 112.

The Contractor shall unload and store oil and oil by-products at the location designated by the Construction Manager. The Contractor shall comply with all requirements of the Oil Spill Prevention, Control, and Countermeasure Plan developed by the Construction Manager.

In the event of an oil spill, the Contractor shall furnish all material, labor, and equipment required to expedite the cleanup work in compliance with the Construction Manager's Oil Spill Prevention, Control, and Countermeasure Plan and the requirements of CFR 40.

*EPA Request dated Oct 12, 2010, for Information Pursuant to Section 114 . Response #10 of 17 of Appendix B.

PART 1 - GENERAL REQUIREMENTS

TABLE OF CONTENTS

		Page
Section 1A - GENERAL DESCRIPTION AND SCOPE OF THE WORK		1A-1 thru 1A-10
1A.1	General	1A-1
1A.2	Work Included Under These Specifications	1A-1
1A.3	Miscellaneous Materials and Services	1A-3
1A.4	Work Not Included Under These Specifications	1A-4
1A.5	Contractor's Services	1A-5
1A.6	Construction Management System	1A-7
1A.7	Construction Management Requirements	1A-7
1A.8	Schedule	1A-7
Site Location Drawing		1A-10
Section 1B - GENERAL EQUIPMENT SPECIFICATIONS		1B-1 thru 1B-23
1B.1	General	1B-1
1B.2	Referenced Standards	1B-1
1B.3	Materials and Equipment	1B-1
1B.4	Identical Equipment	1B-1
1B.5	Identification	1B-2
1B.6	Preshipment Inspection	1B-2
1B.7	Shipments	1B-2
1B.8	Shipping Notice	1B-2
1B.9	Materials List	1B-2
1B.10	Quality Assurance	1B-3
1B.11	Correction of Errors	1B-3
1B.12	Numbering System	1B-3
1B.13	Welding	1B-3
1B.14	Protection	1B-3
1B.15	Tools	1B-4
1B.16	Alignment and Balance	1B-4
1B.17	Design Coordination	1B-4
1B.18	Lubrication	1B-5
1B.19	Enclosed Gear Drive Units	1B-5
1B.20	Safety Guards	1B-5
1B.21	Shaft Couplings	1B-5
1B.22	Instrumentation	1B-6
1B.23	Equipment Bases	1B-9
1B.24	Compressed Air	1B-9
1B.25	Control Power	1B-9
1B.26	Auxiliary Power	1B-10
1B.27	Raceway	1B-10
1B.28	Electrical Enclosures	1B-11
1B.29	Wiring	1B-12
1B.30	Pin and Socket Connectors	1B-15

*EPA Request dated Oct 12, 2010, for Information Pursuant to Section 114 . Response #10 of 17 of Appendix B.

		Page
1B.31	Termination of 600 Volt Power Cable	1B-15
1B.32	Terminal Blocks	1B-16
1B.33	Fuse Blocks	1B-16
1B.34	Fuses	1B-16
1B.35	Electrical Accessory Devices	1B-17
1B.36	Molded Case Circuit Breakers	1B-18
1B.37	Nameplates	1B-19
1B.38	Factory Prewired Electronic Systems Cabinets	1B-19
1B.39	Solid-state Logic Systems	1B-19
1B.40	Motor Control	1B-20
1B.41	Special Shipping Requirements	1B-21
1B.42	Noise Level	1B-21
Typical Schematics for Combination Starters		1B-22
Typical Schematic for 480V Circuit Breakers		1B-23
Section 1C - ENGINEERING DATA AND DOCUMENTATION		1C-1 thru 1C-31
1C.1	General	1C-1
1C.2	Correspondence	1C-1a
1C.3	Processing	1C-2
1C.4	Documentation to be Furnished	1C-4
Document Submittal Schedule		1C-10 thru 1C-28
Motor Information Sheets		1C-29 thru 1C-31
Typical Equipment Instruction Book Cover		P-9255-070180-1
Section 1D - QUALITY ASSURANCE		1D-1 thru 1D-3a
1D.1	General	1D-1
1D.2	Inspections and Audits	1D-1
1D.3	Inspection and Rejection	1D-1
1D.4	Inspection Prior to Delivery	1D-1
1D.5	Receipt Inspection	1D-2
1D.6	Quality Assurance Program	1D-2
1D.7	Field Project Quality Assurance Engineer	1D-3
1D.8	Release for Shipment	1D-3
1D.9	Nonconformance Reports	1D-3a
Section 1E - ELECTRIC MOTORS		1E-1 thru 1E-2
1E.1	General	1E-1
1E.2	Codes and Standards	1E-1
1E.3	Subsections	1E-1
1E.4	Rating	1E-1
1E.5	Torque Characteristics	1E-2
1E.6	Specification Transmittal	1E-2

*EPA Request dated Oct 12, 2010, for Information Pursuant to Section 114 . Response #10 of 17 of Appendix B.

	Page
Subsection 1E1 - 460 VOLT INTEGRAL HORSEPOWER MOTORS	1E1-1 thru 1E1-11
1E1.1 Design and Construction	1E1-1
1E1.2 Quality Control Tests and Inspections	1E1-8
1E1.3 Drawings and Engineering Data	1E1-9
1E1.4 Manufacturers	1E1-9
Motor Specification and Data Sheets	1E1-10 and 1E1-11
Subsection 1E2 - FRACTIONAL HORSEPOWER MOTORS	1E2-1 thru 1E2-3
1E2.1 Motor Rating, Service Factor, and Nameplate Data	1E2-1
1E2.2 Design and Construction	1E2-1
1E2.3 Assembly	1E2-3
1E2.4 Quality Control Tests and Inspections	1E2-3
1E2.5 Manufacturers	1E2-3
Section 1F - VALVE AND DAMPER MOTOR OPERATORS	1F-1 thru 1F-5
1F.1 General	1F-1
1F.2 Codes and Standards	1F-1
1F.3 Rating, Design, and Construction	1F-1
1F.4 Requirements Applicable Only to "Rotork" Motor Operators	1F-2
1F.5 Requirements Applicable Only to "Limitorque" Motor Operators	1F-3
1F.6 Contractor's Responsibility for Specification Transmittal	1F-3
Rotork Motor Operator Limit Switch Contact Development	1F-4
Limitorque Operator Wiring Diagram	1F-5
Section 1G - SHOP STRUCTURAL WELDING	1G-1 thru 1G-6
1G.1 General	1G-1
1G.2 Welding Methods	1G-3
1G.3 Testing and Inspection	1G-5
Section 1H - COATINGS	1H-1 thru 1H-14
1H.1 General	1H-1
1H.2 Data and Samples	1H-1
1H.3 Painting	1H-1
1H.4 Preservative Coatings	1H-4
1H.5 Galvanizing	1H-4
Coating System Data Sheets	1H-5 thru 1H-14

*EPA Request dated Oct 12, 2010, for Information Pursuant to Section 114 . Response #10 of 17 of Appendix B.

	Page
Section 1S - SEISMIC DESIGN	1S-1 thru 1S-3
1S.1 General	1S-1
1S.2 Subsections	1S-1
Table 1S-1	1S-1
Subsection 1S1 - SEISMIC DESIGN OF CLASSIFICATION E-I EQUIPMENT	1S1-1 thru 1S1-2
1S1.1 Definitions	1S1-1
1S1.2 References	1S1-1
1S1.3 General	1S1-1
1S1.4 Documentation	1S1-2
Subsection 1S2 - (NOT USED)	
Subsection 1S3 - SEISMIC DESIGN OF PIPING SYSTEMS	1S3-1 thru 1S3-10
1S3.1 Definitions	1S3-1
1S3.2 References	1S3-1
1S3.3 General	1S3-1
1S3.4 Seismic Design Procedures	1S3-1
1S3.5 Seismic Parameters	1S3-8
1S3.6 Seismic Support Design	1S3-9
1S3.7 Documentation	1S3-10
Subsection 1S4 - SEISMIC DESIGN OF STRUCTURES	1S4-1 thru 1S4-6
1S4.1 Definitions	1S4-1
1S4.2 References	1S4-1
1S4.3 General	1S4-1
1S4.4 Seismic Design of Classification S-I Structures	1S4-2
1S4.5 Seismic Design of Classification S-II Structures	1S4-3
1S4.6 Seismic Design of Classification S-III Structures	1S4-4
1S4.7 Seismic Design of Classification S-IV Structures	1S4-5
1S4.8 Documentation	1S4-6

*EPA Request dated Oct 12, 2010, for Information Pursuant to Section 114 . Response #10 of 17 of Appendix B.

		Page
Subsection 1S5 - SEISMIC DESIGN OF ARCHITECTURAL COMPONENTS		1S5-1 thru 1S5-5
1S5.1	Definitions	1S5-1
1S5.2	References	1S5-1
1S5.3	General	1S5-1
1S5.4	Documentation	1S5-2
1S5.5	Seismic Design of Miscellaneous Architectural Components	1S5-2
1S5.6	Seismic Design of Suspended Ceiling Systems	1S5-3
1S5.7	Seismic Design of Storage Racks	1S5-4
1S5.8	Seismic Design of Prefabricated Wall Panels	1S5-4
Seismic Coefficients for Miscellaneous Architectural Components		1S5-5

*EPA Request dated Oct 12, 2010, for Information Pursuant to Section 114 . Response #10 of 17 of Appendix B.

IP10_002299

Section 1A - GENERAL DESCRIPTION AND SCOPE OF THE WORK

1A.1 GENERAL. This section covers the general description, scope of the work, and supplementary requirements for equipment, materials, and services included under these specifications.

The equipment and materials covered by these specifications will be incorporated in Units 1, 2, 3 and 4 of the Intermountain Generating Station which will include the construction of four complete generating units and related facilities. Unit 1 is scheduled for initial operation by April 1, 1986 and commercial operation by July 1, 1986. Subsequent units are scheduled for initial operation and commercial operation at one year intervals thereafter.

The Intermountain Generating Station is located approximately 11 miles north of Delta, Utah. A railroad siding will be available at the site for delivery of equipment and materials.

A site location map indicating the location of the Intermountain Generating Station site is included at the end of this section.

1A.2 WORK INCLUDED UNDER THESE SPECIFICATIONS. The work under these specifications shall include furnishing and erecting in place at the Intermountain Generating Station site the specified equipment and materials and providing miscellaneous materials and services complete as specified herein and in accordance with the contract documents defined in Article GC.1 of the General Conditions.

All equipment and materials required for a complete flue gas wet scrubber for each of Units 1 through 4 shall be furnished, except as otherwise specified. The equipment and materials to be furnished for each generating unit shall include, but not necessarily be limited to, the following major items.

Scrubber modules

Limestone slurry preparation equipment

Tanks

Mixers

Pumps

Piping

Valves

*EPA Request dated Oct 12, 2010, for Information Pursuant to Section 114 . Response #10 of 17 of Appendix B.

Mist eliminators

Reheaters

Ductwork and expansion joints

Control dampers, if required by Contractor's design

Forced oxidation system (optional)

Controls and instrumentation

Primary measurement devices

Insulation and lagging of ductwork, reheaters and portions of the scrubber modules

Purge system

All motors for motor driven equipment except as otherwise specified

The requirements of the contract documents shall apply to the equipment for Unit 1 and to the equipment for each of Units 2, 3, and 4 also. The equipment for identical units shall be furnished regardless of whether singular or plural terms are used in the various parts of the contract documents. The equipment for each unit shall be capable of independent operation except for the following shared equipment.

Limestone slurry preparation equipment for Units 1 and 2

Limestone slurry preparation equipment for Units 3 and 4

The following model testing shall be performed as part of the work for Unit 1.

Model test of gas handling system as specified in Section 2A

Model test to determine effectiveness of mixers as specified in Section 2F

The model test costs shall be included as part of the lump sum price for equipment and materials for Unit 1 and equipment and materials common to Units 1 and 2.

The equipment will be tested as specified in Section 2B to demonstrate its ability to operate under the conditions and fulfill the warranties and guarantees as set forth herein.

The Contractor shall provide drawings and other engineering data, manufacturer's technical services, tools, instruction manuals, miscellaneous materials and services, and shall participate in any required design conferences, all as specified herein.

*EPA Request dated Oct 12, 2010, for Information Pursuant to Section 114 . Response #10 of 17 of Appendix B.

IP10_002301

The onsite erection work shall be in accordance with the requirements specified in Part 3 of these specifications. The Contractor shall furnish all construction plant, labor, supervision, tools, equipment, and supplies required to perform the erection work from unloading off cars to placing the equipment in operation.

1A.2.1 Owner-furnished Equipment. The Owner will furnish the following equipment for Units 1, 2, 3, and 4 which shall be received, unloaded, stored, and erected under these specifications. *

Inlet and outlet isolation dampers and damper operators for each module

Bypass duct isolation damper and damper operator

The lump sum erection prices stated in the Proposal shall include all costs for receiving, unloading, storing, erecting in place, and checking out the dampers. The lump sum deduction prices stated in the Proposal for deletion of one spare module shall take into account deletion of erection of the isolation dampers associated with the module.

1A.3 MISCELLANEOUS MATERIALS AND SERVICES. Miscellaneous materials and services not otherwise specifically called for shall be furnished by the Contractor at his expense in accordance with the following.

All nuts, bolts, gaskets, special fasteners, backing rings, etc., between components and equipment furnished under these specifications

All piping integral to or required between any equipment furnished under these specifications, except as otherwise specified

All necessary connections for the Owner's piping and instruments

All necessary instrument and power and control wiring and raceways integral to any equipment furnished under these specifications. This shall include terminal blocks and internal wiring to these terminal blocks for equipment requiring external connection.

Guards for all exposed shafts, couplings, sheaves and belts

Leveling blocks, soleplates, thrust blocks, matching blocks, and shims

* Addendum No. 3

*EPA Request dated Oct 12, 2010, for Information Pursuant to Section 114 . Response #10 of 17 of Appendix B.

Bolting between equipment furnished under these specifications and Owner-furnished structural steel

Bolting between equipment or ductwork furnished under these specifications and Owner-furnished isolation dampers

Ties and hangers as required to fasten equipment, piping, and ductwork furnished under these specifications to Owner-furnished supports

All temporary closures required for pressure testing of equipment, ductwork, and piping

Three complete sets of gaskets for all flanged valves, manholes, handholes, cleanouts, and access holes

~~Lubricants required for initial operations~~

Touch-up paint

*EPA Request dated Oct 12, 2010, for Information Pursuant to Section 114 . Response #10 of 17 of Appendix B.

Field office furnishings, supplies, telephone service, and equipment for the manufacturer's field supervisors, technical services representatives and consulting services representatives

Construction equipment, materials and services specified in Section 3A of these specifications

1A.4 WORK NOT INCLUDED UNDER THESE SPECIFICATIONS. The following items of work will be furnished by the Owner.

Construction services and materials specified as furnished by the Owner in Section 3A of these specifications

Foundations, foundation bolts, sleeves and concrete equipment bases, including ball mill pedestals

Finish painting of all equipment except as specified herein

Main structural support steel and access provisions not otherwise specified to be furnished under these specifications

Collection sump for scrubber blowdown slurry and pumps, piping, valves and controls for transfer of the blowdown slurry to the sludge treatment area

Sludge treatment equipment

Buildings for enclosing the scrubber modules, additive feed bins, slurry preparation equipment, slurry tanks, pumps, and instrumentation and control panels

Limestone storage, conveying and handling equipment complete from the receiving point through and including the feed bins in the slurry preparation area

Piping and valves specified as Owner-furnished in Section 2H

Isolation dampers specified as Owner-furnished in Section 2L (dampers shall be installed under these specifications as specified in Articles 1A.2 and 3A.2.1). *

Interconnecting electric wiring, raceway, and conduit between Contractor-furnished equipment terminal boxes and the plant electrical and control system

* Addendum No. 3

*EPA Request dated Oct 12, 2010, for Information Pursuant to Section 114 . Response #10 of 17 of Appendix B.

Interconnecting wiring and raceways between scrubber system components (wiring and raceways not integral to equipment, panels, etc.)

Electrical switchgear, secondary unit substations, motor control centers, and starters not otherwise specified to be furnished under these specifications

*EPA Request dated Oct 12, 2010, for Information Pursuant to Section 114 . Response #10 of 17 of Appendix B.

Motors rated 350 horsepower and above

Permanent grounding system to connect equipment to the plant ground grid

Communication systems

Fuel and scrubber additives for start-up and tests

Lubricants and gases required for operation

Solvents and cleaning materials

Personnel to operate the equipment after installation

1A.5 CONTRACTOR'S SERVICES. The services called for in WORK INCLUDED UNDER THESE SPECIFICATIONS shall be in accordance with the following.

1A.5.1 Submittal of Engineering Data. Drawings and other engineering data for the specified equipment and materials are essential to the *design and subsequent construction of the entire generating unit. ~~Time is of the essence in completing each phase of the work so that each unit of the Interdominion Generating Station can be in commercial operation on the specified date.~~ The Contractor acknowledges that the delivery schedule and completion of erection is of significant importance to the Owner and shall proceed with the specified work and shall conform to the specified schedule. The Contractor shall take any action required to achieve the specified milestones within the approved schedule whether in Contractor's factory, at the project site, subcontractor's facilities, or equipment suppliers facilities, all at no additional cost to the Owner. The Owner will make no claim for schedule deficiency if such deficiency does not impact the overall project schedule.

The Contractor will be required to submit drawings and other engineering data in accordance with the schedule and requirements specified herein to assure compliance with the overall construction and operating schedule.

1A.5.2 Manufacturer's Field Supervision and Services. The Contractor shall furnish the services of one or more manufacturer's erection supervisors for resident supervision of all erection work. The erection supervisor shall be present during and shall supervise the unloading of equipment and materials from cars. In addition, he shall be present and supervise all hauling, storing, cleaning, and erection.

1A.5.3 Manufacturer's Technical Services. In addition to the resident field supervision specified in Article 1A.5.2, the Contractor shall furnish the services of one or more manufacturer's technical service representatives. The service representatives shall be technically competent; factory trained; experienced in the installation and operation of the

*Negotiated Revision

*EPA Request dated Oct 12, 2010, for Information Pursuant to Section 114 . Response #10 of 17 of Appendix B.

equipment; and authorized by the manufacturer to perform the work stipulated.

The manufacturer's technical service representatives shall inspect the equipment after installation and make any needed changes or adjustments to assure proper operation. They shall furnish written certification to

*EPA Request dated Oct 12, 2010, for Information Pursuant to Section 114 . Response #10 of 17 of Appendix B.

the Construction Manager that the equipment has been inspected and adjusted by them or under their direction and that it is ready for service, all of which shall be done before initial operation of the equipment. The service representatives shall be present during initial operation of the equipment, plant start-up, and testing, and shall instruct the operating personnel in the proper operation of the equipment.

The Contractor shall also furnish the field services of direct representatives of the manufacturers of auxiliary equipment which has rotating parts, or which may require field inspection and adjustment to assure proper operation.

1A.5.4 Manufacturer's Consulting Services. In addition to the manufacturer's technical services specified in Article 1A.5.3, the Contractor shall furnish the services of a qualified experienced scrubber system operations consultant on a resident basis for the time period beginning 30 days prior to initial operation through successful completion of the final formal performance guarantee test for Unit 1. The Owner shall have the option of retaining these services for the full time period specified or terminating the services at any time upon notification of the Contractor. The representative shall be knowledgeable of scrubber operation and maintenance procedures and shall assist the Owner in diagnosis and solution of operational problems. He shall provide liaison with the Contractor's organization in resolution of scrubber system problems. A firm lump sum option price for providing the operations consultant services on a monthly basis shall be stated in the Proposal. The Owner may exercise the option for these services at any time prior to 60 days before initial operation.

The Contractor shall also provide process chemistry consulting services as required. A qualified experienced consultant shall be assigned to the project to analyze and interpret testing results and operational data. The consultant shall be available to conduct testing programs, to diagnose operational problems and to perform system optimization studies. Firm lump sum option prices shall be stated in the Proposal for performing the data analysis and interpretation services on a monthly basis throughout the time period beginning with initial operation of Unit 1 and ending upon successful completion of the final formal performance guarantee test and for providing 60 days of onsite consultation services. The Owner shall have the option of retaining the data analysis and interpretation services for the full time period specified or terminating the services at any time upon notification of the Contractor. A per diem rate shall be stated in the Proposal for adjusting the lump sum price based on the actual number of days of onsite service used.

1A.5.5 Design Conference. When necessary, as determined by the Engineer, the Contractor's design engineer shall attend a design conference at a time and place designated by the Engineer to discuss matters relative to the execution of this Contract. Additional design conferences shall be held as required thereafter to expedite the work.

*EPA Request dated Oct 12, 2010, for Information Pursuant to Section 114 . Response #10 of 17 of Appendix B.

IP10_002308

1A.5.6 Instruction Manuals. Instruction manuals shall be furnished in accordance with the requirements stated in Section 1C of these specifications.

1A.6 CONSTRUCTION MANAGEMENT SYSTEM. The Contractor and his subcontractors shall participate in the Construction Management System established by the Construction Manager. Under this program, the Contractor and his subcontractors shall provide to the Construction Manager, production, scheduling, and shipping information for the equipment portion of the contract; and specific and accurate man-hours, quantity and schedule information, and other information as required by the Construction Manager for the erection portion of the contract. Such information shall be in the detail and format and with the frequency as required by the Construction Manager. The information shall be submitted by the first of each month or more frequently as determined by the Construction Manager. The information will be used by the Construction Manager for schedule monitoring purposes, to ensure that schedule interfaces with other contractors are met and to monitor overall project performance. Copies of progress reports issued periodically by the Construction Manager based upon this information will be provided to the Contractor.

1A.7 CONSTRUCTION MANAGEMENT REQUIREMENTS. While on the jobsite, the Contractor and his subcontractors shall actively participate in and adhere to the Construction Manager's project management requirements, job rules and conduct, fire protection and safety procedures, and all other procedures initiated by the Construction Manager for the purpose of maintaining jobsite administrative control. The Contractor and his subcontractors shall attend weekly project management meetings or other meetings that are deemed necessary by the Construction Manager.

1A.8 SCHEDULE. The Contractor shall schedule delivery and erection of equipment and materials in accordance with the following listed dates. Each activity shall be completed not later than the date specified. Delivery of equipment or materials significantly earlier than required to meet the scheduled erection dates may be made only with the Project Manager's permission.

Activity	Date				
	Unit 1	Unit 2	Unit 3	Unit 4	
Contractor complete model test	6-82	—	—	—	
Owner-furnished structures complete to extent necessary for Contractor to begin erection of equipment in Scrubber Building	~~1-16-84~~ 3-1-84	1-16-85	~~1-16-86~~ 3-1-86	1-16-87	*

* Addendum No. 3

*EPA Request dated Oct 12, 2010, for Information Pursuant to Section 114 . Response #10 of 17 of Appendix B.

Activity	Date			
	Unit 1	Unit 2	Unit 3	Unit 4
Beginning of construction of coal conveyors (located on east side of Unit 1 and on east side of Unit 3)	4-1-84	-	4-1-86	-
Owner-furnished structures complete to extent necessary for Contractor to begin erection of equipment in the additive preparation area	8-1-84	-	8-1-86	-
Contractor complete erection of equipment to permit enclosure of flue gas desulfurization building	8-15-84	8-15-85	8-15-86	8-15-87
Contractor complete erection of equipment to permit connection of Owner-furnished ductwork	11-12-84	11-12-85	11-12-86	11-12-87
Completion of construction of coal conveyors (located on east side of Unit 1 and on east side of Unit 3)	4-1-85	-	4-1-87	-
Contractor complete erection of equipment to permit enclosure of additive preparation building	6-10-85	6-10-86	6-10-87	6-10-88
Contractor complete erection of equipment to permit initial operation by	3-1-86	3-1-87	3-1-88	3-1-89

*EPA Request dated Oct 12, 2010, for Information Pursuant to Section 114 . Response #10 of 17 of Appendix B.

Activity	Date			
	Unit 1	Unit 2	Unit 3	Unit 4
Date of Initial Operation of Unit, as defined in General Conditions	4-1-86	4-1-87	4-1-88	4-1-89
Date of Commercial Operation of Unit, as defined in General Conditions	7-1-86	7-1-87	7-1-88	7-1-89

*EPA Request dated Oct 12, 2010, for Information Pursuant to Section 114 . Response #10 of 17 of Appendix B.

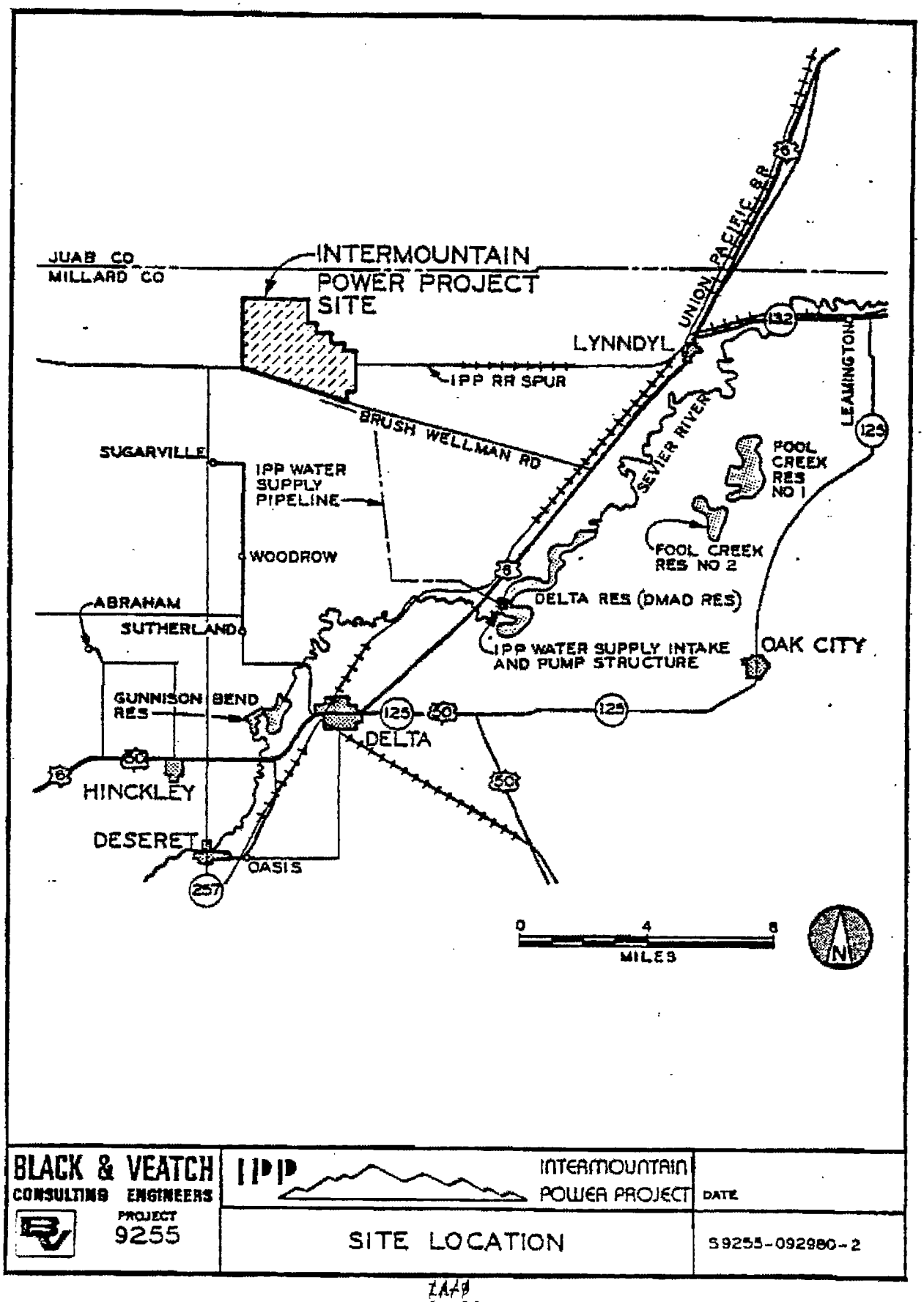

IA-10

*EPA Request dated Oct 12, 2010, for Information Pursuant to Section 114 . Response #10 of 17 of Appendix B.

P-GN-009-B

Section 1B - GENERAL EQUIPMENT SPECIFICATIONS

1B.1 GENERAL. These General Equipment Specifications apply in general to all equipment and materials and are supplementary to the detailed specifications. If requirements specified herein are in conflict with requirements specified in the detailed specifications, the detailed specifications shall govern to the extent of such conflict.

The Proposal shall be based upon the use of equipment and materials complying fully with the requirements specified in this Section 1B. It is recognized that the Contractor may have standardized on the use of certain components, materials, processes, or procedures different than those specified herein. Alternates in addition to the base proposal on the basis of supplying the Contractor's standard components, materials, processes, or procedures will be considered. The alternate proposal shall clearly stipulate the alternate proposed, the specific exceptions to the specifications, and the price change applicable for supplying such alternate.

1B.2 REFERENCED STANDARDS. Reference to the standards or codes of any technical society, organization, or association, or to the laws, ordinances, or codes of governmental authorities shall mean the latest standard, code, specification, or tentative standard adopted, published, and effective at the date of taking bids, unless specifically stated otherwise in these specifications.

The specifications, codes, and standards referenced in these specifications (including addenda, amendments, and errata) shall govern in all cases where references thereto are made. In case of conflict between the referenced specifications, codes, or standards and these specifications, the latter shall govern to the extent of such difference.

1B.3 MATERIALS AND EQUIPMENT. Unless specifically provided otherwise in each case, all materials and equipment furnished for permanent installation in the work shall conform to applicable standard specifications and shall be new, unused, and undamaged.

Individual parts shall be manufactured to standard sizes and gages so that repair parts, furnished at any time, can be installed in the field. Like parts of duplicate units shall be interchangeable.

1B.4 IDENTICAL EQUIPMENT. Like equipment for all generating units shall be identical with respect to the following.

Internal wiring, including connections for external wiring

Details and locations of connections to Owner-furnished support steel and foundations

*EPA Request dated Oct 12, 2010, for Information Pursuant to Section 114 . Response #10 of 17 of Appendix B.

Details and locations of connections for Owner-furnished piping and raceway

Overall dimensions

Weights and forces transmitted to the Owner-furnished support steel and foundations

Modifications to the requirements for identical equipment shall be made only with the written authorization of the Engineer. All such proposed modifications, including documentation supporting the necessity for modification, shall be clearly inidicated in a request submitted in accordance with the requirements of Section 1C.

1B.5 IDENTIFICATION. All correspondence, shipping notices, specifications, engineering data and other documents pertaining to the equipment and materials furnished under these specifications shall be identified by the project name, the unit number, the specification number, the specification title and the Engineer's project number.

1B.6 PRESHIPMENT INSPECTION. The Project Manager reserves the right to inspect the equipment prior to shipment.

The Contractor shall notify the Project Manager of all shipments not less than 10 working days prior to the date of shipment to allow the Project Manager to provide for inspection of the equipment if so desired.

1B.7 SHIPMENTS. Shipments to the plant site shall be consigned to the following locations.

Rail shipments shall be delivered to the railhead on the Intermountain Generating Station site via the plant site rail spur connecting to the Union Pacific Railroad at a point approximately one mile southwest of Lynndyl, Utah.

Truck shipments shall be delivered via U.S. Highway 6 approximately 10 miles northeast of Delta, Utah to Brush Wellman Road and thence approximately 8 miles west to the Intermountain Generating Station site.

1B.8 SHIPPING NOTICE. The Contractor shall submit to the Project Manager and Construction Manager duplicate copies of shipping notices describing each shipment of material or equipment. The shipping notices shall be mailed to arrive approximately 3 days ahead of the estimated shipment arrival. The addressee for each shipping notice will be determined later.

1B.9 MATERIALS LIST. The Contractor shall prepare and submit with the first shipping notice duplicate copies of an itemized materials list covering all material and equipment furnished under these specifications. The materials list shall be in sufficient detail to permit an accurate determination of the completion of shipment.

*EPA Request dated Oct 12, 2010, for Information Pursuant to Section 114 . Response #10 of 17 of Appendix B.

1B.10 QUALITY ASSURANCE. The Contractor shall maintain a quality assurance program in accordance with Section 1D.

1B.11 CORRECTION OF ERRORS. Equipment and materials shall be complete in all respects within the limits herein outlined. All errors or omissions required to be corrected in the field shall be done by the manufacturer or his duly authorized representative at the Contractor's expense.

1B.12 NUMBERING SYSTEM. The Engineer will establish an identification numbering system to provide consistent numbering throughout the generating unit. All electrical devices, control and instrumentation equipment, valves, and other items of similar nature shall be permanently identified with the identification number supplied by the Engineer. Except as specified otherwise in these specifications, the identification shall be engraved on stainless steel or laminated phenolic tags or nameplates at the option of, and as acceptable to, the Engineer and permanently affixed to the device. The Engineer's identification numbers shall be included on the manufacturer's drawings.

1B.13 WELDING. If the manufacturer has special requirements relating to welding procedures for welds at the terminals of the equipment and if such welding is to be performed under a separate contract, the requirements shall be stated on the manufacturer's drawing of the affected part.

1B.14 PROTECTION. All equipment shall be boxed, crated, or otherwise suitably protected during shipment, handling, and storage. Equipment having antifriction or sleeve bearings shall be protected by weathertight enclosures.

Coated surfaces shall be protected against impact, abrasion, discoloration, and other damages. Surfaces which are damaged shall be repaired.

Electrical equipment, controls, and insulations shall be protected against moisture and water damage. All external gasket surfaces and flange faces, couplings, rotating equipment shafts, bearings and like items shall be thoroughly cleaned, and coated with rust preventive compound as specified above, and protected with suitable wood, metal, or other substantial covering to ensure their full protection. All exposed threaded parts shall be greased and protected with metallic or other substantial protectors.

All piping, tubing, and conduit connections on equipment and other equipment openings shall be closed with rough usage covers or plugs. Female threaded openings shall be closed with forged steel plugs. The closures shall be taped to seal the interior of the equipment. Open ends of piping, tubing, and conduit shall be sealed and taped.

*EPA Request dated Oct 12, 2010, for Information Pursuant to Section 114 . Response #10 of 17 of Appendix B.

IP10_002315

1B.15 TOOLS. The Contractor shall furnish and ship with each piece of Unit 1 equipment one set of all special tools required for the dismantling and maintenance of the equipment. The tools shall be shipped in separate heavily constructed wooden boxes provided with hinged covers and padlock hasps.

Maintenance tools for each piece of equipment shall be boxed separately and the boxes shall be marked with the large painted legend as follows.

INTERMOUNTAIN POWER PROJECT
INTERMOUNTAIN GENERATING STATION UNIT 1
MAINTENANCE TOOLS FOR _____ (Name of Equipment)
ERECTION CONTRACTOR DO NOT OPEN EXCEPT WITH CONSTRUCTION MANAGER'S PERMISSION

A weatherproofed itemized list of the contents shall be attached to the outside of each box.

The maintenance tools shall include all special handling rigs, bars, slings, and cable. All maintenance tools shall be in new and unused condition and shall become the property of the Owner. The Proposal shall include a list of recommended maintenance tools which shall be furnished with the Unit 1 equipment.

1B.16 ALIGNMENT AND BALANCE. All rotating parts shall be true and dynamically balanced. Excessive noise or vibration, in the opinion of the Construction Manager, will be sufficient cause for rejection of the equipment. All rotating equipment shall be balanced at the factory.

All rotating equipment, except electric motors, shall be factory balanced to a level such that vibration displacement in mils peak-to-peak is not more than indicated as "GOOD" on the "General Machinery Vibration Chart" published in Baxter, R.L., and Bernhard, D.L., "Vibration Tolerances for Industry," ASME Publication 67-PEM-14, presented at the ASME Plant Engineering and Maintenance Conference, Detroit, Michigan, April 10-12, 1967 (also published as Curve 305D by IRD Mechanalysis, Inc., 6150 Huntley Road, Columbus, Ohio 43229) or as required for reliability and longevity, whichever requirement, as determined by the Engineer, is the more stringent. Electric motors shall be balanced by the manufacturer in accordance with NEMA standards.

1B.17 DESIGN COORDINATION. The Contractor shall be responsible for the selection and design of all equipment and materials which will provide the best coordinated performance of the entire system. Components of rotating equipment shall be selected so that the natural frequency of the complete unit is not at or critically near the operating range of the unit. Where actual design characteristics of proposed components vary from those quoted in the Proposal or specified, the Contractor shall take these into account in the establishment of design criteria for related components.

*EPA Request dated Oct 12, 2010, for Information Pursuant to Section 114 . Response #10 of 17 of Appendix B.

IP10_002316

1B.18 LUBRICATION. Equipment shall be lubricated by systems designed for continuous operation. Lubrication systems shall not waste lubricants and shall not require attention during start-up and shutdown, or routine inspection more frequently than once weekly.

Oil lubricant level indicators shall be furnished and permanently marked to indicate proper levels under both standstill and operating conditions.

1B.19 ENCLOSED GEAR DRIVE UNITS. Enclosed gear drive units furnished as a part of the equipment specified shall be designed for continuous service and shall be in accordance with the latest AGMA standards for the type of gear drive being furnished.

Each gear drive unit shall be capable of withstanding the motor torques developed during start, acceleration, and deceleration if stalled.

1B.20 SAFETY GUARDS. Guards shall be provided for protection of personnel from all exposed moving and/or rotating machine elements.

Each guard shall be fabricated from ASTM A36 steel plate having a minimum thickness of 10 BWG and designed for easy installation and removal. Necessary supports and accessories shall be furnished with each guard.

Guards for outdoor installation shall be galvanized.

1B.20.1 Horizontal Shaft Equipment. Safety guards for horizontal shafts, shaft couplings, belt sheaves, etc., shall be of the inverted "U" design with sides extending to the equipment base or baseplate.

1B.20.2 Vertical Shaft Equipment. Safety guards for vertical shafts, shaft couplings, etc., shall be of 360 degree construction with bolted vertical joints. Hinged sections shall be provided for inspection of couplings and glands.

1B.21 SHAFT COUPLINGS. Shaft couplings shall be used between all drives and driven equipment. Couplings shall be attached to driver and driven shafts by press fits and keys. Couplings shall be of the all metal lubricated gear flexible type, Koppers "Fast" or acceptable equal.

Shaft couplings shall be sized to transmit the maximum brake horsepower requirements of the driven equipment with a service factor of not less than 2.

On applications where the motor is furnished under separate specifications, the motor half coupling shall be machined to the motor shaft dimensions on the motor drawing reviewed by the Engineer, and shipped to the motor supplier for shop mounting. The responsibility for proper fit of the coupling halves shall rest with the Contractor.

*EPA Request dated Oct 12, 2010, for Information Pursuant to Section 114 . Response #10 of 17 of Appendix B.

1B.22 INSTRUMENTATION. Instrumentation components furnished with the equipment shall be in accordance with the following articles, and shall be constructed to withstand the temperatures encountered in the actual service. Pressure gages, thermometers, and indicating switch devices shall indicate the measured value within plus or minus one per cent of maximum scale value. Switch actuation repeatability of switch devices shall be the manufacturer's standard, but repeated actuations shall in no case produce deviations from set value greater than plus or minus one per cent of full scale range.

1B.22.1 Limit Switches. Limit switches, except those integrally mounted on motor operated valves, shall be selected from the following alternates unless specified otherwise in Part 2, EQUIPMENT REQUIREMENTS.

National Acme Company "Snaplock" Series EA-170-14100 (D2400X-ST). Switches shall have not less than two normally open and two normally closed contacts.

Honeywell "Micro Switch" Type LS with two normally open and two normally closed contacts and with 3/4 inch conduit hub

All limit switches shall have a contact rating of at least 10 amperes continuous and 6 amperes break at 120 volts ac.

1B.22.2 Pressure Switches. Pressure switches shall be selected as follows.

General static pressure switches or differential pressure switches for normal static pressure shall be Automatic Switch Company heavy-duty Tri-Point, or equivalent.

Low differential pressure switches for low static pressure ranges shall be manufactured by Dwyer Instruments, Inc.

Low differential pressure switches for high static pressure and applications requiring both indication and pressure switch contacts shall be implemented with equipment manufactured by ITT Barton, Process Instruments, Inc. regardless of the range.

The acceptability of each pressure switch with respect to range, overpressure capability, repeatability, and deadband shall be demonstrated to the Engineer.

1B.22.3 Temperature Switches. Temperature switches shall be Allen-Bradley Bulletin 837 with NEMA 4 enclosures. Special length armored capillary tubes shall be furnished where required. Thermowells shall be furnished as required, and shall be as specified in this Section 1B under the article entitled Thermowells. The acceptability of each temperature switch with respect to range, repeatability, and deadband shall be demonstrated to the Engineer.

*EPA Request dated Oct 12, 2010, for Information Pursuant to Section 114 . Response #10 of 17 of Appendix B.

*1B.22.4 Level Switches. Level switches in clearwater service shall be Magnetrol having float and body construction appropriate to the service conditions of the systems to which they are connected. Switch elements shall be of the vibration resistant mercury bottle type magnetically coupled to the float. Two switch elements shall be available at each level point monitored. Each switch element shall be reversible for NC or NO operation or shall be double throw construction. Switch element leads shall be of high temperature construction and terminated on terminal blocks within the switch housing. Switch housings shall be splashproof construction, unless otherwise specified. Capacitance or conductance type switches shall be used for slurry service.

1B.22.5 Solenoid Valves. Solenoid valves shall be manufactured by Automatic Switch Company. Valves shall be selected to incorporate body construction, trim materials, and internal arrangements suitable to the application and shall be acceptable to the Engineer. Solenoid enclosures shall be NEMA 4 unless otherwise specified. Solenoid coils shall be Class H high temperature construction and shall be suitable for continnous duty.

1B.22.6 Pressure Gages. Gages for control air supply and signal pressures integral to the instrument shall be in accordance with the control manufacturer's standards. All other gages shall be as specified herein. Gages shall be 4-1/2 inch Ashcroft "Duragauge." Dials shall be engraved with service legends, or separate nameplates of engraved laminated phenolic shall be attached to the gage faces to identify the service. Legends shall be as directed by the Engineer. All gages, except on control air service, shall have stainless steel movements and nylon bearings. Gages for panel mounting shall be Type 1377. Gages for separate mountings shall be Type 1379 with 1/2 inch NPT bottom connections. Each gage except control air gages shall be furnished with an Ashcroft Type 1106S pulsation dampening valve of the same material as the bourdon tube.

1B.22.7 Thermometers. Thermometers for local mounting shall be Ashcroft "Duratemp" 600B 4-1/2 inch dial "Every Angle" gas actuated thermometers. Thermometers for panel mounting shall be Ashcroft 4-1/2 inch dial 600A gas actuated with Type 1377 case and stainless steel armored capillary tubing of length required for the installation. The dials shall be engraved with service legends, or separate nameplates of engraved laminated phenolic shall be furnished attached to the dial faces to identify the service. Legends shall be as directed by the Engineer. Thermowells shall be furnished for all thermometers and shall be as specified in this Section 1B under the article entitled Thermowells.

1B.22.8 Temperature Detectors. Temperature detectors shall be thermocouples or RTD's as required by the following paragraphs and the detailed specifications.

*Negotiated Revision

*EPA Request dated Oct 12, 2010, for Information Pursuant to Section 114 . Response #10 of 17 of Appendix B.

Temperature detectors equipped with thermowells shall be spring-loaded and shall be furnished as complete assemblies, each including a well, nipple, and weatherproof connection head. Thermowells shall be as specified in this Section 1B under the article entitled Thermowells.

Thermocouples shall be single element, stainless steel sheathed, compacted magnesium oxide insulated type, with ungrounded measuring junctions. Thermocouples and extension wire shall meet the standard limits of error specified in ANSI MC96.1.

Temperature detectors for bearing metal temperatures and fluid system temperatures shall be ISA Type E (chromel-constantan) thermocouples with Type EX extension wire.

Temperature detectors for motor winding temperatures shall be as specified in Section 1E.

1B.22.9 Thermowells. Fluid system temperature sensors shall be equipped with thermowells. Thermowells shall be one-piece solid bored Type 316 stainless steel of stepless tapered design. Maximum bored internal diameter shall be 0.387 inch. The design of thermowells shall be certified acceptable for the maximum conditions of temperature, pressure, and fluid velocity by methods described in ASME Performance Test Code 19.3-1974, Chapter 1, Paragraphs 8 through 19. The acceptability of each well shall be demonstrated to the Engineer.

Thermowells shall be threaded and constructed to allow seal welding after installation. Thread sizes shall be as follows.

Gas and air duct wells	1 inch NPT
All others	3/4 inch NPT

Thermowell outside diameter at the beginning of the taper shall be approximately the same as the root diameter of the threads. Each thermowell shall be furnished with a stainless steel extension nipple.

1B.22.10 Test Wells. Test wells shall meet all the criteria for material, design, construction, and certification specified for thermowells. Each test well shall be furnished with a stainless steel extension nipple and brass screwed cap. Extension nipple length shall be as specified in the Technical Requirements.

1B.22.11 Mountings for Vibration Transducers. Vibration transducer mountings shall be provided for all major rotating equipment, excluding motors. The vibration transducers and monitoring equipment will be furnished and installed under separate specifications. The vibration transducers provided will be the velocity coil type, piezoelectric accelerometer type, or noncontact proximity type. The specific selection of a transducer type for each piece of equipment will be dependent upon the application.

*EPA Request dated Oct 12, 2010, for Information Pursuant to Section 114 . Response #10 of 17 of Appendix B.

Vibration transducer mounting design and location shall be acceptable to the Engineer and to the vibration transducer manufacturer. The Contractor shall provide drawings to indicate the arrangement and dimensions of bearing housings, shaft supports, reinforcing struts, ribs, and adjacent structures. These drawings shall be in sufficient detail to allow the Engineer or the vibration transducer manufacturer to select and locate the vibration transducers. Drawings and other data will then be provided to the Contractor indicating the selected transducer types, locations, and mounting details.

Mounting provisions for velocity and accelerometer type transducers shall include a mounting hole or pad as required by the vibration transducer manufacturer. The transducer mounting hole, when required, shall be drilled on the exterior of the equipment bearing housing and tapped to accept the transducer mounting stud. Transducer mounting pads, when required, shall be securely attached to the exterior of the equipment bearing housing. Pad configuration, dimensions, surface smoothness, and drilled and tapped mounting holes in the pad shall be provided as required by the vibration transducer manufacturer.

Mounting provisions for noncontact type transducers shall include a drilled, tapped, and chamfered hole in a bearing housing for radial insertion of a transducer, or a transducer mounting bracket as required by the transducer manufacturer.

1B.23 EQUIPMENT BASES. A cast iron or welded steel baseplate shall be provided for all rotating equipment which is to be installed on a concrete base. Adequate grout openings and vent openings shall be provided in each baseplate. Each baseplate shall support the unit and its drive assembly and shall be of a neat design with pads for anchoring the units. Baseplates for equipment subject to water or oil leakage shall be provided with a raised lip all around, and shall have a threaded drain connection.

1B.24 COMPRESSED AIR. Filtered, dried, oil free compressed air will be supplied for operation of pneumatic instruments and control valves. Normal house service air will be supplied for operation of other pneumatic devices. The compressed air will be supplied at receiver pressure varying from 60 to 125 psi. The dew point of the compressed air will be -45 F at 125 psi. Particulate material in the compressed air will be smaller than 3 micrometers.

Pressure regulators shall be provided for pneumatic devices which operate at pressure levels other than receiver pressure. Pressure regulators shall be Fisher Controls Co. Model 67 FR with pressure gage.

1B.25 CONTROL POWER. Electrical power for control and instrumentation will be a nominal 120 volt, single-phase, 60 hertz, alternating current, or a nominal 125 volt direct current. The Contractor shall provide any

*EPA Request dated Oct 12, 2010, for Information Pursuant to Section 114 . Response #10 of 17 of Appendix B.

devices required for proper operation and protection of the equipment during electrical power supply and ambient temperature fluctuations described in the following paragraphs.

All dc electrical control devices shall be designed for continuous operation on an ungrounded station battery at any voltage from 100 to 140 volts dc. Electrical devices served from this supply shall not impose any ground connections on it. Direct current electrical control device operation shall not be affected by an undervoltage transient of 1/2 second duration at 50 volts dc.

All ac electrical control devices shall, unless otherwise specified, be designed for continuous operation at any voltage from 102 to 132 volts alternating current. The drop-out voltage shall be less than 75 volts for relays and 90 volts for contactors and starters. Alternating current electrical control devices operating at nominal voltages other than 120 volts shall be designed for continuous operation over proportional voltage variations. Alternating current electrical control device operation shall not be affected by a complete loss of voltage for 3 cycles.

All devices shall be guaranteed to operate satisfactorily under voltage conditions specified in the above paragraphs and at a range of ambient temperatures from 50 C to -10 C.

1B.26 AUXILIARY POWER. Auxiliary equipment, such as motors, transformers, and rectifiers, requiring electrical power shall be designed to operate from one of the nominal electrical power sources as follows.

Volts	Phase	Hertz
480	3	60
120	1	60
125	dc	(Emergency)

1B.27 RACEWAY. Unless specified otherwise, all raceway interconnections between devices, panels, boxes, and fittings shall conform to ANSI C80.1 and UL 6. All conduit connections shall be of the threaded type. Unless specified otherwise, all conduit 1-1/4 inch trade size or less shall be hot-dip galvanized rigid steel, and conduit 1-1/2 inch trade size or larger shall be hot-dipped galvanized rigid steel or rigid aluminum at the Contractor's option.

One exterior locknut and one interior locknut and one bushing shall be provided at the termination of each conduit not terminated in a hub. Locknuts shall be designed to securely bond the conduit to the box or cabinet when tightened. Locknuts shall be so constructed that they will not be loosened by vibration.

Insulated bushings with insulating inserts in metal housings shall be provided on conduit 1-1/4 inches and larger. Insulated bushings shall be grounding type. Standard bushings shall be galvanized.

*EPA Request dated Oct 12, 2010, for Information Pursuant to Section 114 . Response #10 of 17 of Appendix B.

All conduit shall be installed in exposed runs parallel or perpendicular to dominant surfaces with right angle turns made of symmetrical bends or fittings. A run of conduit shall not contain more than the equivalent of four quarter bends, including those immediately at outlets and fittings. Bends in conduit shall be made without reducing the internal diameter of the conduit.

All conduit runs shall be rigidly supported. Each conduit shall be supported within one foot of junction boxes and fittings. Support spacing along conduit runs shall be as follows.

Conduit Size	Maximum Distance Between Supports
1/2 inch through 1-1/4 inch	5 feet
1-1/2 inch and larger	10 feet

Conduit shall be supported by means of conduit clamps and clamp-backs.

Conduit shall be securely fastened to all boxes and cabinets. Threads on metallic conduit shall project through the wall of the box to allow the bushing to butt against the end of the conduit. The locknuts both inside and outside shall then be tightened sufficiently to bond the conduit securely to the box.

The raceway system provided for all interconnecting wiring shall be acceptable to the Engineer.

1B.28 ELECTRICAL ENCLOSURES. Unless indicated otherwise in these specifications, electrical enclosures, except junction boxes and pull boxes 4 inch trade size and smaller, shall be as follows.

Location	Enclosure Type
Indoor	
* Dry areas (control room)	NEMA 12
Areas where moisture conditions are more severe than those for which NEMA 12 enclosures are intended (all other areas)	NEMA 4

Electrical enclosures, except those of cast metal, shall be constructed from steel plate reinforced as required to provide true surface and adequate support for devices mounted thereon. Thickness of the steel plate shall conform to the requirements of UL 50. Each enclosure shall be of adequate strength to support mounted components during shipment and to support a concentrated load of 200 pounds on its top after erection.

*Addendum No. 3

*EPA Request dated Oct 12, 2010, for Information Pursuant to Section 114 . Response #10 of 17 of Appendix B.

Free-standing enclosures shall be 90 inches high, not more than 20 feet wide, and not more than 36 inches deep.

All junction boxes or pull boxes 4 inch trade size or smaller in any dimension shall be galvanized malleable iron or acceptable equal cast ferrous metal.

Junction boxes and pull boxes shall be in accordance with the requirements of NEC, Article 370, Paragraphs 18, 19, 20 and 21 and shall be without knockouts.

Except as indicated otherwise in these specifications or on the drawings, all junction boxes and pull boxes, larger than 4 inch trade size in all dimensions for use in indoor locations shall be sheet steel hot-dip galvanized after fabrication.

1B.29 WIRING. In general, all devices furnished under these specifications and requiring electrical connections shall be designed for wiring into electrical enclosures with terminal blocks. Terminal blocks shall be furnished for conductors requiring connection to circuits external to the specified equipment, for internal circuits crossing shipping splits, and where equipment parts replacement and maintenance will be facilitated.

Splices will not be permitted in control wiring or instrument leads.

All spare contacts on auxiliary relays, lockout relays, limit switches, and similar devices shall be wired out to accessible terminal blocks for future external connections.

All wiring leaving an enclosure shall leave from terminal blocks and not from other devices in the enclosure.

Auxiliary equipment such as terminal blocks, auxiliary relays, or contactors shall be readily accessible. Auxiliary equipment shall be located in compartments, enclosures, or junction boxes in such arrangement that a serviceman will have direct access to the equipment without removal of barriers, cover plates, or wiring. Relays, timers, terminal blocks, and instruments for subsystems shall be mounted together in a systematic manner in cabinets in order that checkout and maintenance can be performed from one side of each equipment cabinet.

Terminal blocks for external connections shall be grouped in the instrument and control compartment for easy accessibility unrestricted by interference from structural members and instruments. Sufficient space shall be provided on each side of each terminal block to allow an orderly arrangement of all leads to be terminated on the block. Arrangement of circuits on terminal blocks shall be such that all connections for one circuit plus any spare conductors shall be on adjacent terminals.

*EPA Request dated Oct 12, 2010, for Information Pursuant to Section 114 . Response #10 of 17 of Appendix B.

IP10_002324

A shorting type terminal block shall be installed at an accessible location for each set of current transformers supplied with the equipment furnished under these specifications. The shorting terminal block shall be the one nearest the current transformers. No other shorting type terminal blocks are required unless specified otherwise.

All electrical cables shall be conservatively selected for the electrical and environmental conditions of the installations and shall be of the best construction for the service where unusual service conditions are encountered. Oil resistant and proper temperature application cable shall be used throughout. Except where required to be otherwise to perform satisfactorily in the service, all electrical conductor shall be Class B, stranded copper, 14 AWG or larger. MI cable is not acceptable.

Prefabricated cables shall be rated 600 volts and shall be of identical manufacture to cables which have passed the IEEE 383 flame test.

Control panel and cabinet wiring shall be stranded copper conductor with Type SIS cross-linked polyethylene insulation rated at 600 volts; shall be designed for a maximum conductor temperature of 90 C; shall meet the insulation requirements of ICEA S-66-524, Part 3; shall meet the vertical flame test requirements of ICEA S-19-81, Paragraph 6.19.6; and shall be Rockbestos Firewall Type SIS, General Electric Vulkene Supreme Type SIS VW-1, or acceptable equal.

General service power and control cables, integral to the equipment furnished but not internal wiring of control cabinets or panels, and prefabricated cables, shall be rated for the maximum service voltage but not less than 600 volts. Power conductors and single conductor control cables shall have ethylene propylene rubber insulation with a neoprene conductor jacket and multiconductor control cables shall have flame resistant cross-linked polyethylene conductor insulation and an overall flame resistant neoprene jacket or acceptable equal insulation system, except, NEC Type SF-2 silicone rubber insulated cable with braided glass jacket shall be used where ambient conditions cause conductor operating temperatures to exceed the temperature ratings of the general service cable insulation furnished.

All thermocouple wire shall be solid conductor with twisted and shielded conductor pairs. Insulation shall be color coded in accordance with the requirements of ANSI MC96.1. These requirements also apply to thermocouple extension wire which is furnished internal to Contractor-furnished equipment. The shield wire for each thermocouple furnished for external connections shall be terminated on an ungrounded terminal.

Control conductor terminal connectors shall be compression type connectors properly sized for the conductor and the terminal. The connectors shall be constructed of copper and shall be tin plated. The interior surface of the connector wire barrel shall be serrated, and the exterior surface of the connector wire barrel shall be furnished with crimp guides.

*EPA Request dated Oct 12, 2010, for Information Pursuant to Section 114 . Response #10 of 17 of Appendix B.

Noninsulated ring type terminal connectors are acceptable for conductors terminated on devices equipped with individual fitted covers, such as General Electric Type SB-1 control switches and General Electric Type HEA lockout relays. Preinsulated ring type terminal connectors shall be used on all other connections, except thermocouple connections, for conductors 8 AWG and smaller.

Preinsulated terminal connectors shall include a nylon or vinyl sleeve, color coded to indicate conductor size. Preinsulated terminal connectors for 10 AWG and smaller conductors shall include a metallic support sleeve bonded to the insulating sleeve and designed to grip the conductor insulation.

Ring type connectors shall be rated 600 volts ac and shall be manufactured by Panduit, 3M, or acceptable equal.

Each terminal block, terminal, conductor, relay, breaker, fuse block, and other auxiliary device, shall be permanently labeled to coincide with the identification indicated on the drawings. All terminals provided for termination of external circuits shall be identified by inscribing circuit designations acceptable to the Engineer on the terminal block marking strips with black paint. All other wiring terminations shall be identified by printing on conductor identification sleeves. A conductor identification sleeve shall be provided on each end of each internal conductor. Each sleeve shall be marked with the opposite end destination identification described in Section 1C under WIRING DIAGRAMS. Conductor identification sleeves shall be not less than 1/2 inch long and shall be as manufactured by the Dura Mark Company, Port Washington, New York or acceptable equal. Conductor identification shall be printed on the sleeve with a Thomas & Betts Company Catalog No. WT163M-1 marking pen, Panduit Corp. Part No. PX marking pen, or acceptable equal. After inscription of the conductor identification, the marking sleeve shall be coated with clear acrylic spray coating, Krylon No. 1303 as manufactured by Borden, Inc., or acceptable equal. Conductor identification shall be permanent, unaffected by heat, solvents, or steam, and not easily dislodged. Adhesive labels are not acceptable.

The arrangement of connections on terminal blocks shall be acceptable to the Engineer.

All connections requiring disconnect plug and receptacle type devices shall be provided with factory terminated conductors on each plug and receptacle. Plugs and receptacles shall be factory wired into junction boxes containing terminal blocks for external connections. All conductors on the disconnect portion of plug-receptacle assemblies shall be in a common jacket.

All temporary wiring installed in the factory for equipment testing shall be removed prior to shipment of the equipment.

*EPA Request dated Oct 12, 2010, for Information Pursuant to Section 114 . Response #10 of 17 of Appendix B.

IP10_002326

1B.30 PIN AND SOCKET CONNECTORS. Pin and socket connectors shall have threaded couplings and crimp type contacts and shall meet Military Specification MIL-C-5015 except for pin and socket plating. Pin and socket plating shall be a minimum of 0.000050 inch of gold over 0.000050 inch of nickel. Connectors shall be manufactured by Amphenol, Cannon, Pyle-National, or acceptable equal. If the Contractor is unable to furnish connectors as specified, he shall submit a sample of the connector he proposes to furnish accompanied by complete manufacturer's specification data with the request for the Engineer's acceptance.

1B.31 TERMINATION OF 600 VOLT POWER CABLE. The capacities of conduit entrances, terminal enclosures, and conductor terminals for 600 volt power cable terminations in equipment furnished under these specifications shall be as required to accommodate copper or aluminum phase conductors and copper ground conductors which are sized in accordance with the requirements of this article.

1B.31.1 Conduit Entrances and Terminal Enclosures. Capacities of conduit entrances and terminal enclosures for phase conductors shall be as required for conductors sized in accordance with the requirements of the ICEA-NEMA standard for ampacities of cables in open-top cable trays, ICEA Pub. No. P-54-440 (Second Edition) and NEMA Pub. No. WC51-1975, and shall be based on installation in open-top cable tray to a 3.0 inch calculated depth of cables. The following tables in the previously referenced standard shall be used for the phase conductor materials and sizes, and cable constructions listed.

Table 3	Copper conductor sizes 12 AWG through 2 AWG in three conductor cable
Table 4	Copper conductor sizes 1/0 AWG through 2/0 Mcm in single conductor cable
Table 20	Aluminum conductor sizes 4/0 AWG through 1000 Mcm in single conductor cable

Each power circuit will include a copper ground conductor or conductors having a total size coordinated with the full load current requirement of the equipment as follows.

Equipment Full Load Current-Amperes	Ground Conductor Range - AWG
0 thru 21	12 thru 10
22 thru 40	10 thru 8
41 thru 65	8 thru 6
66 thru 156	6 thru 4

*EPA Request dated Oct 12, 2010, for Information Pursuant to Section 114 . Response #10 of 17 of Appendix B.

1B.31.2 Conductor Terminals. Terminals for conductors 10 AWG and smaller shall be Marathon 1500 Series or acceptable equal. Terminals for conductors 8 AWG through 4/0 AWG shall be Curtis Industries, Inc. Type L, O, or S, or acceptable equal. Terminals for conductors larger than 4/0 AWG shall be tinned copper bar bus drilled and tapped with NEMA sized and spaced holes.

The sizes and types of conductor terminals for 600 volt power cable terminations in equipment shall be coordinated with the conductor and terminal connector data which will be furnished by the Engineer. The Contractor shall obtain terminal connector and conductor data from the Engineer before installing the conductor terminals.

1B.32 TERMINAL BLOCKS. Terminal blocks shall be furnished with white marking strips and, where permitted by the safety codes and standards, shall be without covers. Not less than 25 per cent spare unused terminals shall be furnished on each terminal block for circuit modifications and for termination of all conductors in a multiconductor control cable.

Fuses shall not be mounted on terminal blocks. Neither step type terminal blocks nor angle mounting of terminal blocks will be acceptable.

All terminal blocks, except internal terminal blocks in factory prewired electronic systems cabinets, shall be rated 600 volts minimum and shall have strap screw terminals. Terminal blocks for connection of external 10 AWG and smaller control wiring, except terminal blocks for current transformer wiring, shall be States Company, Type ZWM, sliding link terminal blocks. Terminal blocks for all other 10 AWG and smaller wiring, except thermocouple lead wiring, shall be Marathon 1500 Series or acceptable equal. Where terminal blocks are furnished for thermocouple leads, they shall be compatible with thermocouple wire material. Terminal blocks shall be appropriately sized for larger wire size or higher voltage insulated incoming conductors as necessary.

1B.33 FUSE BLOCKS. Where fuse blocks rated 30 amperes, 250 volts are required, they shall be modular type with bakelite frame and reinforced retaining clips. Blocks shall be Class H, 2 pole, Model No. 11530-2SR screw terminal fuse blocks as manufactured by Underwriters Safety Device Co., 7300 West Wilson Avenue, Chicago, Illinois 60656 or acceptable equal. Blocks for other current and voltage ratings shall be similar in construction and by the same manufacturer.

1B.34 FUSES. Where slow blow fuses are required for protection of equipment they shall be Bussmann Type MDL, or acceptable equal, with ampere ratings of 1/4, 1/2, 1, or 2. Where fast acting fuses are required for protection of equipment they shall be Bussmann Type NON, or acceptable equal, with ampere ratings of 1, 3, 6, 10, 15, 20, or 30. Wherever possible, molded case circuit breakers shall be used instead of fuses.

*EPA Request dated Oct 12, 2010, for Information Pursuant to Section 114 . Response #10 of 17 of Appendix B.

IP10_002328

1B.35 ELECTRICAL ACCESSORY DEVICES. Electrical accessory devices shall be furnished in accordance with the requirements stated herein unless otherwise specified in the detailed specification sections.

1B.35.1 Electrical Instruments. All indicating instruments for electrical quantities shall be of the switchboard type with one per cent accuracy classification, shall be designed for flush mounting, and shall be approximately 4 inches square. All instrument scales shall consist of black markings on a white background. Any instrument which is checked in the field and found to be inaccurate in excess of 2 per cent will be returned to the Contractor for calibration or replacement without cost to the Owner. All ac instruments shall be designed for operation through 5 ampere current transformer secondaries and 120 volt potential transformer secondaries. Instruments shall be General Electric Type AB-40, Westinghouse Type 241, or acceptable equal.

1B.35.2 Control Relays. General service auxiliary relays shall be Struthers Dunn Type 219, except where the contact requirements for the relay cannot be accommodated by the Type 219 relay. In such cases, the Allen-Bradley Type 700P relay shall be used. Where current carrying requirements exceed the capacity of the general service auxiliary relays, auxiliary relays shall be General Electric Type HFA or HGA, Westinghouse Type MG-6, or acceptable equal. Agastat Type GPD control relays shall be used for dc applications where switching of inductive loads is required.

Timing relays shall be Agastat Series 7000 or acceptable equal.

1B.35.3 Control Switches. Control switches shall be 600 volt, 20 ampere, multistage, rotary type with a minimum of 10 contacts. Switches shall have black, fixed, modern, pistol grip type handles and engraved black plastic escutcheon plates with targets. Switches shall be General Electric Type SB-1, General Electric Type SB-M, General Electric Type SB-10, or acceptable equal.

1B.35.4 Push Buttons and Selector Switches. Push buttons and selector switches shall be heavy-duty oiltight, Honeywell Micro Switch Type PT, Square D Class 9001 Type K, or acceptable equal. Toggle switches shall be Honeywell Micro Switch Type TL "Pull to unlock" or acceptable equal.

1B.35.5 Indicating Lights. Status indicating lights shall be Honeywell Micro Switch Type PTW, Series 2340 for 120 volt ac or 125 volt dc service or Series 2150 for 24 volt service, with Type 387 lamps, plastic lenses, and appropriately sized resistors.

Engraved indicating lights shall be Honeywell 2C200 or 2F200 series with Type 387 lamps.

*EPA Request dated Oct 12, 2010, for Information Pursuant to Section 114 . Response #10 of 17 of Appendix B.

Indicating light lens colors shall be coordinated with indicated conditions as specified in the following table. Indicating lights shall be energized when the condition exists and shall be de-energized when the condition does not exist.

Lens Color	Condition
Red	Equipment energized, such as motor running, valve open, or breaker closed
Green	Equipment de-energized, such as motor stopped, valve closed, or breaker open

Lens Color	Condition
White	Equipment abnormality, such as motor trip or breaker trip
Amber or Yellow	Equipment start permissive
Blue	Equipment abnormality, operator initiated (no alarm condition)

1B.35.6 Alarm Contacts. Alarm contacts for remote annunciation shall be suitable for operation at 125 volts dc. Alarm contacts shall be normally open contacts which close on alarm condition. All alarm contacts shall be rated at least 0.5 ampere make or break, at 125 volts dc.

1B.36 MOLDED CASE CIRCUIT BREAKERS. Molded case circuit breakers used in equipment furnished under these specifications shall be as listed in the following tables.

AC SERVICE

				Interrupting Capacity (NEMA)			
				AC		DC	
Poles	Service Volts ac	Frame Rating amperes	Trip Range amperes	Symmetrical Amperes	Volts	Amperes	Volts
1	120	100	15 - 100	10,000	120	5,000	125
3	480	100	15 - 100	22,000	480	*	*
3	480	225		22,000	480	*	*

* The construction of all 3 pole circuit breakers furnished under these specifications shall be equivalent to the single-pole and 2 pole circuit breakers specified. This shall

*EPA Request dated Oct 12, 2010, for Information Pursuant to Section 114 . Response #10 of 17 of Appendix B.

include heavy-duty construction and spacing between poles as required for dc rated circuit breakers.

DC SERVICE

Poles	Service Volts dc	Frame Rating amperes	Trip Range amperes	Interrupting Capacity (NEMA) AC Symmetrical Amperes	AC Volts	DC Amperes	DC Volts
2	125	100	15 - 100	10,000	120	5,000	125
2	250	100	15 - 100	10,000	240	10,000	250

1B.37 NAMEPLATES. Nameplates shall be furnished when specified in the detailed specification sections. Nameplates for mounting in the control room shall be made of laminated black phenolic engraving stock with white core. Nameplates to be mounted in locations outside of the control room shall be made of laminated white phenolic engraving stock with black core. The lettering shall be not less than 3/16 inch square, bold engraved through the outside layer so that the letters are the color of the core. Nameplates shall be attached to the equipment with stainless steel panhead screws.

1B.38 FACTORY PREWIRED ELECTRONIC SYSTEMS CABINETS. Internal wiring in factory prewired electronic systems cabinets may be installed according to the Contractor's standard as to wire size, insulation, and method of termination on internal equipment except that insulation for all wiring (including circuit board wiring, back plane wiring, power supply wiring, and interconnecting cables between devices) shall pass the vertical flame test per ICEA S-19-81. Identification of conductors may be done by insulation color coding identified on drawings or by printed wiring lists. Terminal blocks for connection of external circuits into factory prewired electronic systems cabinets shall meet all the requirements of the article TERMINAL BLOCKS in this section.

1B.39 SOLID-STATE LOGIC SYSTEMS. All electrical equipment containing solid-state logic systems shall be tested for a minimum of 120 hours under power prior to shipment from the factory. The components to be tested shall include the electronic devices, power supplies, input-output devices, operator interface devices, and interconnecting cables provided with the system. The system shall be tested as a complete assembly. Testing of individual components or modules will not be acceptable as system tests.

The system test shall include a means of confirming the logic or mathematical design response of the system by simulating changes in system input. The test shall repeatedly cycle the system through all operations it will be expected to perform in service with loads on the various components equivalent to those which will be experienced in actual service.

*EPA Request dated Oct 12, 2010, for Information Pursuant to Section 114 . Response #10 of 17 of Appendix B.

IP10_002331

The test shall include adjustment of power source voltages to the high and low limits specified in the article titled CONTROL POWER in this section. The test shall verify correct operation of the system at both high and low power source voltage limits. The system shall be tested and verified capable of providing surge withstand capability in accordance with the requirements of ANSI C37.90a.

The test shall be performed with the solid-state logic system exposed to ambient temperature appropriate to the service for which the associated electrical equipment is designed.

1B.40 MOTOR CONTROL. The Typical Schematics for Combination Starters following this section indicate the wiring of the ac motor starters which will be furnished by the Owner for 460 volt, 3 phase motors rated 100 horsepower and smaller.

The Typical Schematic for 480 V Circuit Breakers following this section indicates the wiring of the 480 volt circuit breakers which will be furnished by the Owner for 460 volt, 3 phase motors rated larger than 100 horsepower.

The Contractor shall assure that the control devices and the control wiring, including terminal designations, are compatible with the appropriate starter and breaker control voltages and wiring as indicated.

1B.40.1 Contractor-furnished AC Motor Starters. The ac motor starters furnished with the equipment shall provide wiring in accordance with the Typical Schematics for Combination Starters following this section and in addition shall conform to the requirements which follow.

Motor starters for 480 volt ac service shall include 480 volt, 3 phase, 60 hertz contactors with manual reset thermal overload relays, 120 volt ac operating coils, and 480 to 120 volt dry type control transformers complete with one secondary lead fused and the other secondary lead grounded.

Single-speed starters shall be furnished with three overload relays. Two-speed starters shall be furnished with six overload relays.

Large size starters which require line voltage to energize the operating coils shall be equipped with auxiliary contactors for use in the operating coil circuit. These contactors shall be operated from the 120 volt circuit of the control transformers.

Two-speed starters and reversing starters, where required, shall be mechanically and electrically interlocked so that only one set of contacts can be closed at any one time.

*EPA Request dated Oct 12, 2010, for Information Pursuant to Section 114 . Response #10 of 17 of Appendix B.

IP10_002332

Auxiliary contacts shall be mechanically operated by the starter contactor. The quantity of contacts shall be as required, but not less than the quantity indicated on the Typical Schematics for Combination Starters. Terminal blocks shall be furnished as indicated on the Typical Schematics for Combination Starters.

Control transformers shall have 60 hertz ac ratings permitting operation at a primary voltage from 440 to 480 volts at a voltage ratio of 4:1. Assuming 440 volts on the primary terminals, each control transformer shall maintain a potential of not less than 105 volts at its secondary terminals during starter coil inrush, while simultaneously serving an additional load of 100 volt-amperes at 50 per cent power factor.

The breaker-contactor combination for motor starters shall have the same interrupting ratings as specified in the article in this section entitled MOLDED CASE CIRCUIT BREAKERS.

Starters for 120 volt or 208 volt ac service shall be similar to 480 volt starters except control transformers will not be required.

1B.41 SPECIAL SHIPPING REQUIREMENTS. Where specified, the manufacturer shall mount and ship impact recorders on each rail car transporting the specified equipment. The impact recorders shall be mounted at the factory to provide a permanent record of the magnitude of axial, transverse, and vertical forces to which the equipment will be subjected while in transit. The custody of the impact recorders upon arrival at the plant site shall be the responsibility of the manufacturer's field representative. The recorder impact charts shall be delivered to the Construction Manager and shall be one of the specified items to be furnished.

1B.42 NOISE LEVEL. The equivalent "A" weighted sound level, measured at 5 feet elevation above floor level and 3 feet horizontally from the base of any of the equipment furnished under these specifications, expressed in decibels to a reference of 0.0002 microbar, shall not exceed 85 dBA. For indoor equipment, the Contractor shall assume the environment is hardwall construction.

*EPA Request dated Oct 12, 2010, for Information Pursuant to Section 114 . Response #10 of 17 of Appendix B.

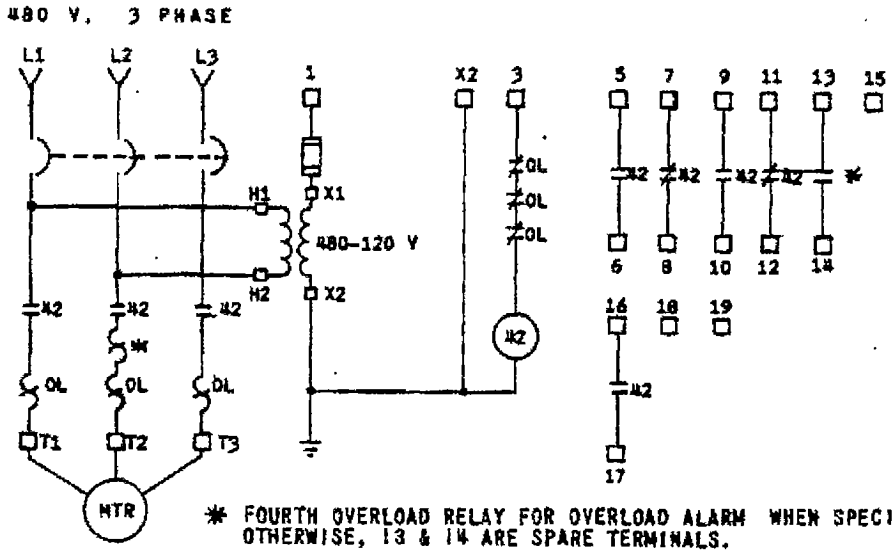

WIRING DIAGRAM COMBINATION FULL VOLTAGE NON-REVERSING STARTER
NOTE: THIS DOES NOT APPLY TO SIZE 5 AND LARGER

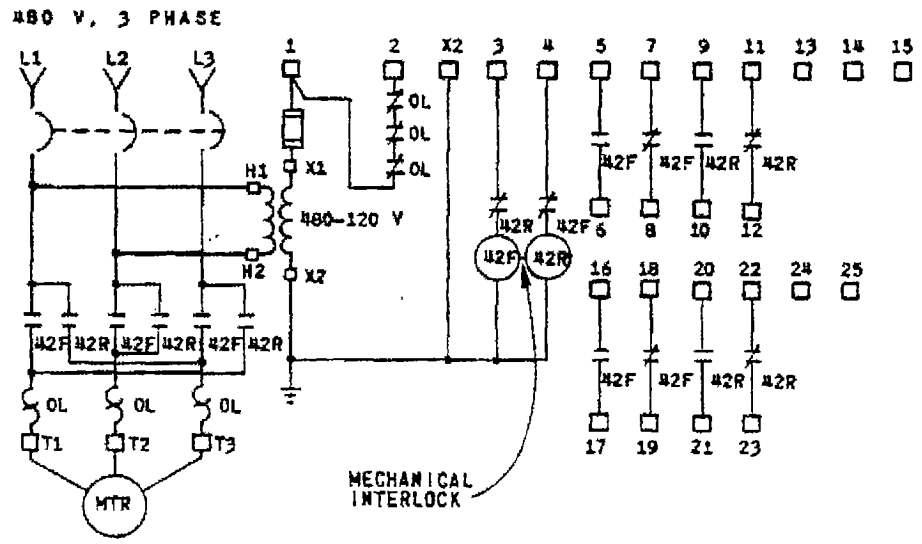

WIRING DIAGRAM COMBINATION FULL VOLTAGE REVERSING STARTER
NOTE: THIS DOES NOT APPLY TO SIZE 5 AND LARGER

BLACK & VEATCH CONSULTING ENGINEERS		PROJECT 9255 SPEC 62.0202
	TYPICAL SCHEMATICS FOR COMBINATION STARTERS	

1-950-13-4

*EPA Request dated Oct 12, 2010, for Information Pursuant to Section 114 . Response #10 of 17 of Appendix B.

IP10_002334

P-EL-094D

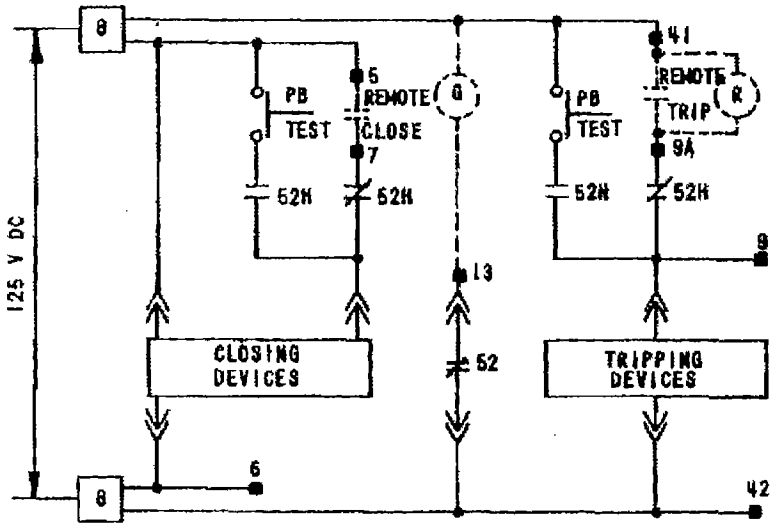

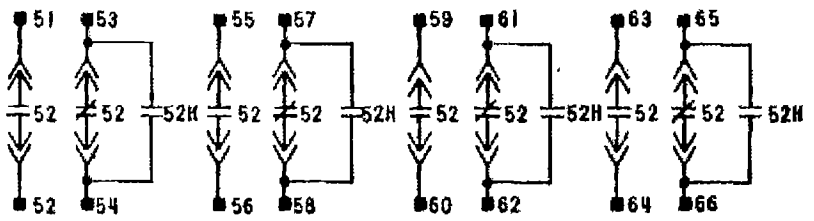

ELECTRICALLY OPERATED BREAKERS

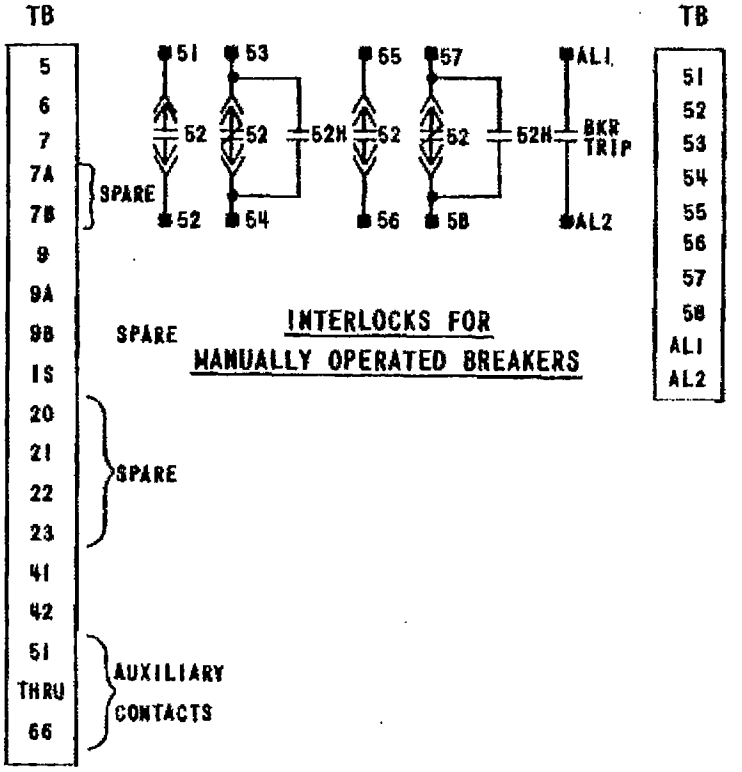

INTERLOCKS FOR MANUALLY OPERATED BREAKERS

52H -BREAKER POSITION SWITCH-CONTACTS SHOWN WITH BREAKER IN CONNECTED POSITION.

B -DISCONNECTING AND PROTECTIVE DEVICE-ENCLOSED FUSE PULLOUT

--- REMOTE

NO.	DATE	REVISION	DWN	CK	ACC	APP

BLACK & VEATCH
CONSULTING ENGINEERS

TYPICAL SCHEMATIC
FOR 480V CIRCUIT BREAKERS

PROJECT 9255
SPEC 62.0202

*EPA Request dated Oct 12, 2010, for Information Pursuant to Section 114 . Response #10 of 17 of Appendix B.

PART 2 - EQUIPMENT REQUIREMENTS

TABLE OF CONTENTS

		Page
Section 2A - DESIGN CRITERIA		2A-1 thru 2A-28
2A.1	General	2A-1
2A.2	Definitions	2A-1a
2A.3	Code Requirements	2A-2
2A.4	Arrangement	2A-2
2A.5	Type	2A-4
2A.6	Operating Conditions	2A-4
2A.7	Equipment Sizing	2A-22
2A.8	Construction Criteria	2A-22
2A.9	Plant Services	2A-23
2A.10	Performance Data and Curves	2A-24
2A.11	Model Test	2A-26
2A.12	Materials	2A-28
Section 2B - GUARANTEES, RELIABILITY DEMONSTRATION AND TESTS		2B-1 thru 2B-6a
2B.1	General	2B-1
2B.2	Performance Guarantees	2B-2
2B.3	Reliability Demonstration	2B-5
2B.4	Formal Performance Guarantee Tests	2B-5a
Section 2C - SCRUBBER MODULES		2C-1 thru 2C-4
2C.1	General	2C-1
2C.2	Type	2C-1
2C.3	Materials	2C-1
2C.4	Construction	2C-1
2C.5	Structural Steel and Access Provisions	2C-4
2C.6	Purge System	2C-4
2C.7	Penetration Seal Air System	2C-4
2C.8	Welding	2C-4
2C.9	Pressure Ports	2C-4
Section 2D - LIMESTONE SLURRY PREPARATION EQUIPMENT		2D-1 thru 2D-6
2D.1	General	2D-1
2D.2	Contractor-furnished Equipment	2D-2
2D.3	Control	2D-6
2D.4	Tanks	2D-6
2D.5	Mixers	2D-6
2D.6	Pumps, Piping, and Valves	2D-6

*EPA Request dated Oct 12, 2010, for Information Pursuant to Section 114 . Response #10 of 17 of Appendix B.

		Page
Section 2E - TANKS		2E-1 thru 2E-2
2E.1	General	2E-1
2E.2	Sizing Criteria	2E-1
2E.3	Materials	2E-2
2E.4	Configuration	2E-2
Subsection 2E1 - SHOP FABRICATED TANKS		2E1-1 thru 2E1-4
2E1.1	General	2E1-1
2E1.2	Type	2E1-1
2E1.3	Code Requirements	2E1-1
2E1.4	Design Criteria	2E1-1
2E1.5	Construction	2E1-1
2E1.6	Testing	2E1-3
2E1.7	Cleaning, Painting, and Coating	2E1-3
2E1.8	Protection During Shipment	2E1-4
Subsection 2E2 - FIELD ERECTED TANKS		2E2-1 thru 2E2-4
2E2.1	General	2E2-1
2E2.2	Type	2E2-1
2E2.3	Code Requirements	2E2-1
2E2.4	Design Criteria	2E2-1
2E2.5	Construction	2E2-1
2E2.6	Tank Appurtenances	2E2-2
2E2.7	Shop Surface Preparation and Coating	2E2-4
Section 2F - MIXERS		2F-1 thru 2F-3
2F.1	General	2F-1
2F.2	Turbine Type Mixers	2F-1
2F.3	Air Jet Agitation Mixers	2F-2
2F.4	Model Study	2F-3
2F.5	Motors	2F-3
Section 2G - PUMPS		2G-1 thru 2G-3
2G.1	General	2G-1
2G.2	Materials	2G-2
2G.3	Pump Accessories	2G-2
2G.4	Pump Data Sheets	2G-3
2G.5	Characteristic Curves	2G-3
2G.6	Motors	2G-3
2G.7	Seal Water Filtration System	2G-3

*EPA Request dated Oct 12, 2010, for Information Pursuant to Section 114 . Response #10 of 17 of Appendix B.

		Page
Subsection 2G1 - GENERAL SERVICE PUMPS		2G1-1
2G1.1	General	2G1-1
2G1.2	Sizing Criteria	2G1-1
2G1.3	Shaft Seals	2G1-1
2G1.4	Connections	2G1-1
2G1.5	Bearings	2G1-1
Subsection 2G2 - SLURRY PUMPS		2G2-1 thru 2G2-2
2G2.1	General	2G2-1
2G2.2	Sizing Criteria	2G2-1
2G2.3	Casing Liners	2G2-1
2G2.4	Impellers	2G2-1
2G2.5	Shaft Seals	2G2-1
2G2.6	Connections	2G2-1
2G2.7	Bearings	2G2-2
2G2.8	Deleted for Contract	
Section 2H - PIPING		2H-1 thru 2H-6
2H.1	General	2H-1
2H.2	Contractor-furnished Piping	2H-1
2H.3	Owner-furnished Piping	2H-2
2H.4	Code Requirements	2H-3
2H.5	Design Criteria	2H-3
2H.6	Drawings	2H-5
Subsection 2H1 - PIPING MATERIALS		2H1-1 thru 2H1-8
2H1.1	General	2H1-1
2H1.2	Pipe	2H1-1
2H1.3	Tubing	2H1-3
2H1.4	Tubing Cable	2H1-3
2H1.5	Fittings	2H1-4
2H1.6	Flanges, Gaskets, and Bolting	2H1-6
2H1.7	Unions	2H1-8
Subsection 2H2 - PIPING FABRICATION		2H2-1 thru 2H2-8
2H2.1	General	2H2-1
2H2.2	Fittings	2H2-1
2H2.3	Fabricated Sections	2H2-1
2H2.4	Welding	2H2-1
2H2.5	Bends	2H2-5
2H2.6	Attachments	2H2-5
2H2.7	Thermowells	2H2-5
2H2.8	Threaded Connections	2H2-5
2H2.9	Brazed Joints	2H2-6

*EPA Request dated Oct 12, 2010, for Information Pursuant to Section 114 . Response #10 of 17 of Appendix B.

	Page
2H2.10 Fiberglass Reinforced Plastic Pipe Joints	2H2-6
2H2.11 PVC Pipe Joints	2H2-6
2H2.12 Inspection and Testing	2H2-7
2H2.13 Cleaning and Painting	2H2-8
2H2.14 Protection During Shipment	2H2-8
Butt Weld End Preparation Details	3 pages
Subsection 2H3 - PIPING SUPPORTS	2H3-1 thru 2H3-10
2H3.1 General	2H3-1
2H3.2 Code Requirements	2H3-1
2H3.3 Shop Fabrication	2H3-1
2H3.4 Submittal of Details	2H3-1
2H3.5 Design Requirements	2H3-2
2H3.6 Appearance	2H3-3
2H3.7 Materials	2H3-3
2H3.8 Grinding	2H3-10
2H3.9 Snubbers and Sway Bracing	2H3-10
2H3.10 Painting	2H3-10
2H3.11 Identification	2H3-10
2H3.12 Installation	2H3-10
Pipe Support Selection Guide	6 pages
Hanger Details	5 pages
Section 2I - VALVES	2I-1 thru 2I-7
2I.1 General	2I-1
2I.2 Control Valves	2I-2
2I.3 General Service Valves	2I-2
2I.4 Butterfly Valves	2I-5
2I.5 Plug Valves	2I-6
2I.6 Slide Gate Valves	2I-6
2I.7 Diaphragm Valves	2I-6
2I.8 Pinch Valves	2I-7
2I.9 Motor Operators	2I-7
2I.10 Valve Identification	2I-7
2I.11 Painting	2I-7
Section 2J - MIST ELIMINATORS	2J-1
2J.1 General	2J-1
2J.2 Type	2J-1
2J.3 Materials	2J-1
2J.4 Wash System	2J-1

*EPA Request dated Oct 12, 2010, for Information Pursuant to Section 114 . Response #10 of 17 of Appendix B.

		Page
Section 2K - DUCTWORK AND EXPANSION JOINTS		2K-1 thru 2K-8
2K.1	General	2K-1
2K.2	Arrangement	2K-1
2K.3	Design Criteria	2K-2
2K.4	Materials	2K-2
2K.5	Construction Requirements	2K-3
2K.6	Welding	2K-4
2K.7	Hoppers	2K-5
2K.8	Expansion Joints	2K-5
2K.9	Ductwork Support	2K-7
2K.10	Access Provisions	2K-7
2K.11	Test Ports	2K-8
2K.12	Instrument Connections	2K-8
2K.13	Painting	2K-8
Section 2L - DAMPERS		2L-1 thru 2L-5
2L.1	General	2L-1
2L.2	Design Criteria	2L-1
2L.3	Multileaf Dampers	2L-2
2L.4	Shop Testing	2L-5
2L.5	Painting	2L-5
Section 2M - FORCED OXIDATION SYSTEM		2M-1 thru 2M-5
2M.1	General	2M-1
2M.2	Blowers	2M-1
2M.3	Piping and Valves	2M-4
2M.4	Controls	2M-4
2M.5	Motors	2M-5
Section 2N - CONTROLS AND INSTRUMENTATION		2N-1 thru 2N-30
2N.1	General	2N-1
2N.2	Contractor's Scope of Supply	2N-1
2N.3	Owner-furnished Equipment	2N-3
2N.4	Functional Requirements	2N-4
2N.5	Control Panels	2N-7
2N.6	Control Valves	2N-13
2N.7	Control Drives and Connecting Linkage	2N-13
2N.8	Transmitters	2N-14
2N.9	Local Controllers	2N-14
2N.10	Signal Converters	2N-16
2N.11	Flow Measurement Devices	2N-16
2N.12	Density Measurement Devices	2N-16
2N.13	pH Measurement	2N-17

*EPA Request dated Oct 12, 2010, for Information Pursuant to Section 114 . Response #10 of 17 of Appendix B.

		Page
2N.14	Recorders	2N-17
2N.15	Vertical Indicators	2N-18
2N.16	Accessory Items	2N-18
2N.17	Miscellaneous Items	2N-18
2N.18	Programmable Controller	2N-18
2N.19	Electronic Control Components	2N-24
2N.20	Panel Mounted Selector Stations and Manual Stations	2N-25
2N.21	Control System Logic Cabinets	2N-25
2N.22	Control System Power Supplies	2N-26
2N.23	Control System Cable and Wiring	2N-27
2N.24	Control System Grounding	2N-28
2N.25	Instrument Accuracy	2N-29
2N.26	Factory Tests	2N-29
2N.27	Shipping Requirements for Electrical Control Equipment	2N-30
Section 2P - ACCESS PROVISIONS		2P-1 thru 2P-6
2P.1	General	2P-1
2P.2	Scope of Supply	2P-1
2P.3	Design Criteria	2P-1
2P.4	Materials	2P-2
2P.5	Fabrication	2P-3
2P.6	Shop Painting	2P-6
2P.7	Galvanizing	2P-6
Section 2Q - FLUE GAS REHEATERS		2Q-1 thru 2Q-10
2Q.1	General	2Q-1
2Q.2	Type	2Q-1
2Q.3	Arrangement	2Q-1
2Q.4	Design Criteria	2Q-1
2Q.5	Construction	2Q-3
2Q.6	Soot Blowers	2Q-5

*EPA Request dated Oct 12, 2010, for Information Pursuant to Section 114 . Response #10 of 17 of Appendix B.

Section 2A - DESIGN CRITERIA

2A.1 GENERAL. This section specifies the operating conditions and design and performance criteria for the flue gas scrubber and associated auxiliary equipment.

The flue gas scrubber shall be designed for utility power plant operation. The system shall be designed for high reliability, high availability and ease of maintenance. The system shall be designed to operate without inordinate or excessive maintenance. The flue gas scrubber shall be designed and arranged to treat the flue gas from a coal fired steam generator after it emerges from air preheater and particulate collector.

Induced draft fans will be provided by the Owner to draw the flue gas from the furnace through the air preheater and particulate collector and discharge it to the flue gas scrubber system. The flue gas scrubber shall be designed for pressurized operation.

The scrubber shall be designed for continuous operation at the specified conditions while treating 100 per cent of the flue gas generated by operation of the steam generator at any condition up to its maximum continuous rating.

After treatment, the flue gas shall be reheated by an in-line reheater for each scrubber module.

The specifications are based on a six module scrubber with each module designed to treat 25 per cent of the flue gas flow. More than six modules may be provided if required by the Contractor's design to comply *with any of the requirements of the contract documents. ~~Regardless of the quantity of modules provided, two modules shall be spares.~~ For the base proposal, regardless of the quantity of modules provided, two modules shall be spares. Alternate prices shall be provided for deletion of one of the spare modules.

Each scrubber module shall be capable of independent operation.

**Although the equipment is to be installed indoors, hose washdown capability shall be provided for equipment not located within a control room. Equipment shall be of waterproof or outdoor type construction. Items for which this capability is to be provided shall include, but not be limited to, the following.

Motors

Motor control centers

*Addendum No. 1
**Addendum No. 3

*EPA Request dated Oct 12, 2010, for Information Pursuant to Section 114 . Response #10 of 17 of Appendix B.

* Electrical switches

Limit and indicating switches

Equipment and structures shall be designed to drain well after washdown. Items for which this capability is to be provided shall include, but not be limited to, the following.

Ductwork

Tanks

Equipment baseplates

Access doors

Structural members

A single chimney will be provided with separate liners for Units 1 and 2. An identical chimney will be provided for Units 3 and 4. The liner diameter for each unit will be 30 feet. Chimney height will be 710 feet.

2A.2 DEFINITIONS. Terminology used in these specifications related to stoichiometric ratio and limestone utilization shall be defined as follows.

**Stoichiometric ratio shall be defined as specified in Article 2B.2.7.

	~~Limestone/Additive/Feed/Rate/ lb/hr/x/Per/Cent/$CaCO_3$/in/Limestone~~
	~~100~~
~~Stoichiometric/ Ratio~~	~~SO_2/Removed/by/Wet/Scrubber/System/lb/hr~~
	~~88~~

*Addendum No. 3
**Negotiated Revision

[IPP 9255 WET SCRUBBER 62.0202]
[112081]
2A-1a

*EPA Request dated Oct 12, 2010, for Information Pursuant to Section 114 . Response #10 of 17 of Appendix B.

The Proposal Data and material balance diagrams shall be based on limestone with a calcium carbonate content of 90 per cent.

The additive feed rate shall not include credit for reactivity of the fly ash with SO_2.

$$\text{Utilization} = \frac{1}{\text{Stoichiometric Ratio}}$$

If correction is required for excess air in the flue gas stream, the following equation shall be used.

$$\text{Oxygen Correction} = \frac{20.9}{[20.9 - \text{Per Cent } O_2]}$$

2A.3 CODE REQUIREMENTS. All equipment and materials furnished under these specifications shall be designed and constructed in accordance with the latest applicable requirements of the standard specifications and codes of the Industrial Gas Cleaning Institute, AFBMA, AGMA, ANSI, ASTM, ASME, AWS, API, AISC, NFPA, NEMA, HEI, IEEE, EEI, National Electrical Code, National Electrical Safety Code, UL, UBC and other such regular published and accepted standards except where modified or supplemented by these specifications; and in accordance with the applicable requirements of the Federal "Occupational Safety and Health Standards." Any conflict between standards shall be referred to the Engineer who will determine which standard shall govern.

Vessels which are to be lined or coated for corrosion protection shall be designed and fabricated as a minimum in accordance with the applicable requirements of NACE Standard RP-01-78. Recommendations of the coating or lining system manufacturer shall take precedence over the NACE standard when more stringent.

2A.4 ARRANGEMENT. The space available for location of the flue gas scrubber and a tentative general arrangement of the equipment are indi-
*cated on the following drawing~~s~~ included as a part of these specifications.

DM-0002	ARRANGEMENT FABRIC FILTER AND ~~VERTICAL~~ WET SCRUBBER
~~DM-0004~~	~~ARRANGEMENT~~ ~~FABRIC FILTER AND HORIZONTAL WET SCRUBBER~~

Some of the limits of Owner-furnished equipment, ductwork and piping are indicated on the drawing~~s~~. Contract limits not indicated on the drawing~~s~~ shall be as defined in the text of the specifications.

*Addendum No. 1

*EPA Request dated Oct 12, 2010, for Information Pursuant to Section 114 . Response #10 of 17 of Appendix B.

Alternate arrangements or modifications of the arrangement indicated on *the drawings will be considered. Complete information, as requested in the Proposal Data section of these specifications, shall be submitted for each proposed alternate arrangement or proposed modification to the arrangement indicated on the drawings, included with these specifications. Drawings which clearly indicate any modifications of the arrangement of Owner-furnished ductwork required to adapt to the proposed arrangement of system components shall be submitted as part of the Proposal Data.

The final equipment arrangement shall provide adequate space for access, cleaning, maintenance, stairwells, walkways, elevators, laydown area, access hoistways, monorails, electrical cable tray of 36 inches nominal width and space for Owner-furnished equipment. The final arrangement shall be acceptable to the Engineer.

Special consideration shall be given to minimizing the extent of scrubber outlet ductwork.

It shall be the responsibility of the Contractor to approve in principle the Engineer's ductwork arrangement or to propose an acceptable alternate ductwork configuration prior to initiating model testing.

Based on the results of the model study, the Contractor shall submit sketches of all gas distribution devices and of the ductwork arrangement showing the location of sampling connections to be used for testing which are required in Owner-furnished ductwork. The Contractor shall review all final drawings submitted to him by the Engineer to ensure that the design of Owner-furnished ductwork conforms in all respects to the final results of the model study.

Design of Contractor-furnished ductwork shall be based on results of the model study. The Contractor shall furnish all gas distribution devices and sampling connections which are required in the Contractor-furnished ductwork.

The Owner will provide buildings to enclose the following equipment.

Scrubber modules and dampers

Contractor-furnished ductwork

Pumps

Additive storage silos

Slurry preparation equipment

Slurry tanks

Control panels and other control equipment located remote from the process which requires indoor location

*Addendum No. 1

*EPA Request dated Oct 12, 2010, for Information Pursuant to Section 114 . Response #10 of 17 of Appendix B.

Control panels and control system components, except primary sensing devices and local instruments, will be located in the scrubber local control room. Monitoring devices and certain overall control devices will be located in the main control room. The control rooms will be space conditioned for personnel comfort.

The equipment shall be supported above grade on foundations and structural steel supports furnished by the Owner. Drawings submitted as part of the Proposal Data shall indicate the elevations of the required supports.

2A.5 TYPE. The flue gas scrubber shall be countercurrent spray tower or crosscurrent spray chamber, limestone slurry, tail end sulfur dioxide removal type specifically designed for operation with a pulverized coal type steam generator. Packed bed or tray type scrubbers will not be accepted.

Each scrubber module shall have a minimum overall liquid-to-gas ratio of 60 gallons per 1000 acfm based on saturated gas volume. Crosscurrent spray chambers shall have a minimum liquid-to-gas ratio of 20 gallons per 1000 acfm per stage.

The scrubber shall be designed to provide adequate liquid holdup, a high degree of liquid turbulence and means for thoroughly mixing the additive slurry with the flue gas.

Each module shall be capable of operating independently and shall include prequench (if required), absorber, reaction tank, mist eliminator and dampers, pumps, piping, purge system, and controls. Each module shall be capable of being isolated for maintenance during operation of the system. Each module shall have its own independent reaction tank.

Slurry blowdown from the system shall be transferred to an Owner-furnished collection sump in the flue gas desulfurization building.

The scrubber shall be designed to limit emissions as specified in Section 2B.

The scrubber system shall be completely protected from erosion, corrosion, cementation, or plugging. The Contractor shall provide all special coatings, washers, soot blowers, strainers, screens, grinders, comminutors, or other devices as required to provide this protection.

2A.6 OPERATING CONDITIONS. The flue gas scrubber and auxiliary equipment shall be designed for operation under the following conditions.

2A.6.1 Steam Generator. Each steam generator will be designed to burn pulverized coal and will have a maximum continuous rating (MCR) of 6,600,000 pounds per hour of steam at 2640 psi. The steam generator manufacturer has not yet been selected.

2A.6.2 Particulate Collection System. The particulate collection system will consist of a fabric filter designed to limit the particulate content in the flue gas stream to the scrubber to the amount specified in the article entitled Flue Gas Conditions.

*EPA Request dated Oct 12, 2010, for Information Pursuant to Section 114 . Response #10 of 17 of Appendix B.

The contingency that the particulate collection system may operate at reduced efficiency for short periods of time shall be considered in design of the scrubber.

Particulate content at the scrubber inlet will exceed the maximum specified in the event of abnormal operation of the particulate collection system. The Proposal Data shall include the capability of the scrubber system to collect particulate and recommendations regarding scrubber operation during failure of the particulate collection system. If available, operating data pertaining to particulate removal capability shall be submitted. The maximum allowable inlet particulate grain loading and duration shall be stated as part of the Proposal Data.

The scrubber shall be guaranteed to be capable of continuous operation during periods of reduced particulate collector efficiency without undue problems caused by erosion, corrosion, or chemical unbalance within the scrubber system.

2A.6.3 Load Range and Operating Requirements. The flue gas scrubber and auxiliary equipment shall be suitable for automatic operation at all loads from start-up to the maximum continuous rating of the steam generating unit.

The scrubber shall be designed for safe and reliable operation under the following steam generator operating conditions in any combination.

Daily start-up following an overnight shutdown of approximately 8 hours duration

Weekly start-up following weekend shutdown of approximately 48 hours duration

Continuous load following from 25 to 100 per cent of maximum continuous rating

Operation at 25 per cent of maximum continuous rating over extended periods of time

Continuous operation at maximum continuous rating

With all except the two spare modules in service, the scrubber system shall be capable of automatic operation in the range from 25 per cent of design capacity to 100 per cent of design capacity as required by the generating unit load. The Contractor shall state as part of the Proposal Data, the limitations, if any, to fully automatic operation during start-up and partial load conditions at loads below 25 per cent of scrubber design capacity.

The Contractor shall describe in the Proposal Data the recommended scrubber start-up and shutdown procedure.

*EPA Request dated Oct 12, 2010, for Information Pursuant to Section 114 . Response #10 of 17 of Appendix B.

Limitations, if any, on removal of sulfur dioxide during start-up and at loads below 25 per cent of the steam generator maximum continuous rating shall be stated in the Proposal Data. The approximate sulfur dioxide removal at various start-up and partial load conditions shall be stated in the Proposal Data.

The sulfur trioxide (or H_2SO_4) removal capability shall be stated in the Proposal Data.

2A.6.4 Fuel Data. Primary fuel for the steam generator will be raw, unwashed coal delivered direct from the mine. A final selection of the coal source has not yet been made. Coal properties of potential coal supplies are tabulated herein.

The flue gas scrubber shall be designed and guaranteed to operate as specified with any coal whose properties are defined by the ranges stated in the tabulated data. However, if coal from Coal Reserve "F" is burned, it will be blended to not exceed 50 per cent by weight in a coal mixture with the other listed coals.

The values listed as "Typical" are included only for general information and are not to be used as a basis for design or guarantee.

Coal properties are as follows.

COAL RESERVE "A"

Proximate Analysis, As Received, per cent by weight	Typical	Range
Moisture	8.6	6.5 - 11.0
Ash	15.6	10.0 - 21.5
Volatile matter	36.0	33.2 - 38.2
Fixed carbon	39.8	36.1 - 43.5
Total	100.00	
Sulfur	0.75	0.59 - 0.91

	Typical	Range
Heating Value, Btu per lb	10,930	9,980 - 11,885

Ultimate Analysis, As Received, per cent by weight	Typical	Range
H_2O	8.60	6.50 - 11.00
Ash	15.60	10.00 - 21.50
Sulfur	0.75	0.59 - 0.91
Nitrogen	0.93	0.73 - 1.13

*EPA Request dated Oct 12, 2010, for Information Pursuant to Section 114 . Response #10 of 17 of Appendix B.

Ultimate Analysis, As Received, per cent by weight	Typical	Range
Carbon	59.90	56.90 - 62.90
Hydrogen	4.50	4.10 - 4.90
Oxygen	9.70	7.70 - 11.70
Chlorine	0.02	0.00 - 0.04
Total	100.00	

Sulfur Forms, As Received, per cent by weight	Typical	Range
Pyritic	0.19	0.04 - 0.25
Sulfate	0.00	0.00 - 0.01
Organic	0.56	0.45 - 0.68

Equilibrium Moisture, per cent by weight	6.8	2.7 - 9.0
Hardgrove Grindability Index	46	41 - 52

Ash Fusion Temperatures Reducing, F	Typical	Range
Initial	2420	2270 - 2570
Softening	2560	2420 - 2700+
Hemispherical	2580	2450 - 2700+
Fluid	2670	2600 - 2700+

Ash Fusion Temperatures Oxidizing, F	Typical	Range
Initial	2300	2110 - 2505
Softening	2470	2270 - 2700+
Hemispherical	2515	2335 - 2700+
Fluid	2615	2470 - 2700+

Ash Analysis, per cent by weight	Typical	Range
Phosphorous pentoxide, P_2O_5	0.4	0.2 - 1.1
Silica, SiO_2	61.1	57.1 - 65.1
Ferric oxide, Fe_2O_3	4.6	3.0 - 8.0
Alumina, Al_2O_3	21.6	18.6 - 24.6
Titania, TiO_2	1.1	0.8 - 1.4
Lime, CaO	4.6	2.5 - 6.8
Magnesia, MgO	1.0	0.7 - 1.3

*EPA Request dated Oct 12, 2010, for Information Pursuant to Section 114 . Response #10 of 17 of Appendix B.

Ash Analysis, per cent by weight	Typical	Range
Potassium oxide, K_2O	1.2	0.6 - 1.6
Sodium oxide, Na_2O	1.0	0.5 - 1.5
Sulfur trioxide, SO_3	2.9	1.4 - 4.7
Undetermined	0.5	0.1 - 1.0
Total	100.00	

COAL RESERVE "B"

Proximate Analysis, As Received, per cent by weight	Typical	Range
Moisture	8.3	7.4 - 9.4
Ash	14.0	8.0 - 16.0
Volatile matter	37.1	35.0 - 40.0
Fixed carbon	40.6	38.0 - 44.0
Total	100.00	
Sulfur	0.55	0.40 - 0.70

	Typical	Range
Heating Value, Btu per lb	11,010	10,500 - 12,100

Ultimate Analysis, As Received, per cent by weight	Typical	Range
H_2O	8.30	7.40 - 9.30
Ash	14.00	8.00 - 16.00
Sulfur	0.55	0.40 - 0.70
Nitrogen	1.20	0.95 - 1.45
Carbon	61.45	58.50 - 64.50
Hydrogen	4.56	4.26 - 4.86
Oxygen	9.92	9.32 - 10.52
Chlorine	0.02	0.00 - 0.04
Total	100.00	

Sulfur Forms, As Received, per cent by weight	Typical	Range
Pyritic	0.18	0.11 - 0.25
Sulfate	0.00	0.00 - 0.00
Organic	0.37	0.29 - 0.45

*EPA Request dated Oct 12, 2010, for Information Pursuant to Section 114 . Response #10 of 17 of Appendix B.

Equilibrium Moisture, per cent by weight	—	—
Hardgrove Grindability Index	—	—

Ash Fusion Temperatures Reducing, F	Typical	Range
Initial	2180	2075 - 2300
Softening	2215	2095 - 2340
Hemispherical	2245	2115 - 2380
Fluid	2330	2190 - 2470

Ash Fusion Temperatures Oxidizing, F	Typical	Range
Initial	2240	2130 - 2355
Softening	2300	2135 - 2455
Hemispherical	2325	2200 - 2450
Fluid	2410	2255 - 2570

Ash Analysis, per cent by weight	Typical	Range
Phosphorous pentoxide, P_2O_5	0.3	0.1 - 1.0
Silica, SiO_2	58.8	49.3 - 62.0
Ferric oxide, Fe_2O_3	5.9	3.9 - 7.9
Alumina, Al_2O_3	13.5	10.7 - 16.8
Titania, TiO_2	0.7	0.5 - 0.9
Lime, CaO	9.3	3.9 - 14.6
Magnesia, MgO	2.0	0.8 - 3.0
Potassium oxide, K_2O	0.9	0.6 - 1.3
Sodium oxide, Na_2O	1.6	0.6 - 3.0
Sulfur trioxide, SO_3	5.9	2.9 - 8.9
Undetermined	1.1	0.3 - 3.0
Total	100.00	

COAL RESERVE "C"

Proximate Analysis, As Received, per cent by weight	Typical	Range
Moisture	10.5	9.5 - 11.4
Ash	7.2	6.4 - 8.0
Volatile matter	39.4	38.2 - 40.7

*EPA Request dated Oct 12, 2010, for Information Pursuant to Section 114 . Response #10 of 17 of Appendix B.

Proximate Analysis, As Received, per cent by weight	Typical	Range
Fixed carbon	42.9	41.8 - 44.0
Total	100.00	
Sulfur	0.48	0.37 - 0.59

	Typical	Range
Heating Value, Btu per lb	11,577	11,427 - 11,727

Ultimate Analysis, As Received, per cent by weight	Typical	Range
H_2O	10.50	9.50 - 11.40
Ash	7.20	6.40 - 8.00
Sulfur	0.48	0.37 - 0.59
Nitrogen	1.26	1.07 - 1.45
Carbon	65.43	63.16 - 67.70
Hydrogen	4.88	4.70 - 5.06
Oxygen	10.24	9.56 - 10.82
Chlorine	0.01	0.00 - 0.02
Total	100.00	

Sulfur Forms, As Received, per cent by weight	Typical	Range
Pyritic	—	—
Sulfate	—	—
Organic	—	—

Equilibrium Moisture, per cent by weight	—	—
Hardgrove Grindability Index	49	47 - 51

Ash Fusion Temperatures Reducing, F	Typical	Range
Initial	2140	2095 - 2190
Softening	2170	2110 - 2220
Hemispherical	2195	2130 - 2260
Fluid	2245	2150 - 2335

*EPA Request dated Oct 12, 2010, for Information Pursuant to Section 114 . Response #10 of 17 of Appendix B.

Ash Fusion Temperatures Oxidizing, F	Typical	Range
Initial	2205	2145 - 2265
Softening	2230	2165 - 2295
Hemispherical	2260	2190 - 2330
Fluid	2310	2220 - 2400

Ash Analysis, per cent by weight	Typical	Range
Phosphorous pentoxide, P_2O_5	0.2	0.0 - 0.3
Silica, SiO_2	53.6	47.4 - 59.8
Ferric oxide, Fe_2O_3	7.1	5.5 - 8.7
Alumina, Al_2O_3	13.2	10.5 - 15.9
Titania, TiO_2	0.7	0.6 - 0.8
Lime, CaO	12.3	6.7 - 17.9
Magnesia, MgO	2.5	1.0 - 4.0
Potassium oxide, K_2O	1.0	0.6 - 1.8
Sodium oxide, Na_2O	0.5	0.4 - 0.6
Sulfur trioxide, SO_3	8.4	5.7 - 11.1
Undetermined	0.5	0.1 - 0.9
Total	100.00	

COAL RESERVE "D"

Proximate Analysis, As Received, per cent by weight	Typical	Range
Moisture	9.8	8.4 - 11.2
Ash	8.8	6.5 - 11.0
Volatile matter	38.2	34.5 - 40.0
Fixed carbon	43.2	39.5 - 45.5
Total	100.00	
Sulfur	0.59	0.49 - 0.69

	Typical	Range
Heating Value, Btu per lb	11,690	10,590 - 12,300

*EPA Request dated Oct 12, 2010, for Information Pursuant to Section 114 . Response #10 of 17 of Appendix B.

Ultimate Analysis, As Received, per cent by weight	Typical	Range
H_2O	9.80	8.40 - 11.20
Ash	8.80	6.50 - 11.00
Sulfur	0.59	0.49 - 0.69
Nitrogen	1.31	1.05 - 1.57
Carbon	66.20	56.07 - 76.33
Hydrogen	4.91	4.12 - 5.70
Oxygen	8.37	7.14 - 9.60
Chlorine	0.02	0.01 - 0.03
Total	100.00	

Sulfur Forms, As Received, per cent by weight	Typical	Range
Pyritic	0.09	0.07 - 0.12
Sulfate	0.01	0.00 - 0.03
Organic	0.49	0.39 - 0.59

Equilibrium Moisture, per cent by weight	5.8	5.0 - 6.6
Hardgrove Grindability Index	47	45 - 49

Ash Fusion Temperatures Reducing, F	Typical	Range
Initial	2335	2145 - 2520
Softening	2355	2170 - 2540
Hemispherical	2380	2200 - 2560
Fluid	2415	2235 - 2600

Ash Fusion Temperatures Oxidizing, F	Typical	Range
Initial	2395	2200 - 2590
Softening	2415	2230 - 2600
Hemispherical	2435	2250 - 2620
Fluid	2470	2290 - 2630

Ash Analysis, per cent by weight	Typical	Range
Phosphorous pentoxide, P_2O_5	0.6	0.2 - 1.0
Silica, SiO_2	52.6	45.1 - 60.0
Ferric oxide, Fe_2O_3	4.4	2.9 - 6.0
Alumina, Al_2O_3	22.8	15.7 - 29.9

*EPA Request dated Oct 12, 2010, for Information Pursuant to Section 114 . Response #10 of 17 of Appendix B.

Ash Analysis, per cent by weight	Typical	Range
Titania, TiO_2	1.0	0.7 - 1.3
Lime, CaO	7.8	6.8 - 9.8
Magnesia, MgO	1.1	0.7 - 1.5
Potassium oxide, K_2O	0.6	0.4 - 0.8
Sodium oxide, Na_2O	2.6	1.3 - 3.9
Sulfur trioxide, SO_3	5.5	3.5 - 7.5
Undetermined	1.0	0.6 - 1.4
Total	100.00	

COAL RESERVE "E"

Proximate Analysis, As Received, per cent by weight	Typical	Range
Moisture	10.6	11.4 - 11.8
Ash	9.3	6.0 - 12.6
Volatile matter	35.8	33.0 - 38.0
Fixed carbon	44.3	41.7 - 46.2
Total	100.00	
Sulfur	0.44	0.29 - 0.69

	Typical	Range
Heating Value, Btu per lb	11,060	10,540 - 11,440

Ultimate Analysis, As Received, per cent by weight	Typical	Range
H_2O	10.6	9.4 - 11.8
Ash	9.30	6.0 - 12.60
Sulfur	0.44	0.29 - 0.69
Nitrogen	1.05	0.87 - 1.17
Carbon	63.66	60.67 - 66.67
Hydrogen	4.37	4.07 - 4.67
Oxygen	10.56	10.06 - 11.06
Chlorine	0.02	0.00 - 0.03
Total	100.00	

*EPA Request dated Oct 12, 2010, for Information Pursuant to Section 114 . Response #10 of 17 of Appendix B.

Sulfur Forms, As Received, per cent by weight	Typical	Range
Pyritic	0.09	0.02 - 0.40
Sulfate	0.00	0.00 - 0.00
Organic	0.36	0.28 - 0.60

Equilibrium Moisture, per cent by weight	—	—

Hardgrove Grindability Index	—	—

Ash Fusion Temperatures Reducing, F	Typical	Range
Initial	2160	2060 - 2270
Softening	2180	2070 - 2290
Hemispherical	2195	2080 - 2310
Fluid	2220	2100 - 2340

Ash Fusion Temperatures Oxidizing, F	Typical	Range
Initial	2190	2095 - 2285
Softening	2210	2110 - 2305
Hemispherical	2225	2120 - 2325
Fluid	2255	2150 - 2360

Ash Analysis, per cent by weight	Typical	Range
Phosphorous pentoxide, P_2O_5	0.20	0.10 - 0.30
Silica, SiO_2	51.00	44.00 - 58.00
Ferric oxide, Fe_2O_3	5.20	3.20 - 6.60
Alumina, Al_2O_3	13.00	11.00 - 15.00
Titania, TiO_2	0.70	0.60 - 0.80
Lime, CaO	14.60	9.40 - 16.00
Magnesia, MgO	3.00	1.30 - 4.50
Potassium oxide, K_2O	0.60	0.35 - 1.00
Sodium oxide, Na_2O	3.10	0.20 - 4.70
Sulfur trioxide, SO_3	7.80	6.00 - 9.60
Undetermined	0.80	0.00 - 2.00
Total	100.00	

*EPA Request dated Oct 12, 2010, for Information Pursuant to Section 114 . Response #10 of 17 of Appendix B.

COAL RESERVE "F"

Proximate Analysis, As Received, per cent by weight	Typical	Range
Moisture	18.8	13.00 - 21.00
Ash	7.8	5.0 - 12.0
Volatile matter	35.5	33.3 - 37.5
Fixed carbon	37.9	35.9 - 39.9
Total	100.00	
Sulfur	0.93	0.80 - 1.10

	Typical	Range
Heating Value, Btu per lb	9,662	9,400 - 10,000

Ultimate Analysis, As Received, per cent by weight	Typical	Range
H_2O	18.80	13.00 - 21.00
Ash	7.81	5.00 - 12.00
Sulfur	0.93	0.80 - 1.10
Nitrogen	0.86	0.70 - 1.00
Carbon	55.60	52.00 - 58.00
Hydrogen	4.13	3.80 - 4.40
Oxygen	11.83	11.30 - 12.30
Chlorine	0.04	0.00 - 0.05
Total	100.00	

Sulfur Forms, As Received, per cent by weight	Typical	Range
Pyritic	—	—
Sulfate	—	—
Organic	—	—

Equilibrium Moisture, per cent by weight	—	—
Hardgrove Grindability Index	55	53 - 57

Ash Fusion Temperatures Reducing, F	Typical	Range
Initial	2250	2045 - 2300
Softening	2350	2155 - 2400
Hemispherical	2380	2210 - 2430
Fluid	2400	2315 - 2525

*EPA Request dated Oct 12, 2010, for Information Pursuant to Section 114 . Response #10 of 17 of Appendix B.

Ash Fusion Temperatures Oxidizing, F	Typical	Range
Initial	—	—
Softening	—	—
Hemispherical	—	—
Fluid	—	—

Ash Analysis, per cent by weight	Typical	Range
Phosphorous pentoxide, P_2O_5	0.2	0.1 - 0.4
Silica, SiO_2	41.7	38.0 - 45.0
Ferric oxide, Fe_2O_3	7.0	5.5 - 8.5
Alumina, Al_2O_3	26.4	23.0 - 29.0
Titania, TiO_2	1.7	1.5 - 1.9
Lime, CaO	6.8	6.3 - 7.3
Magnesia, MgO	1.4	1.2 - 1.6
Potassium oxide, K_2O	0.2	0.1 - 0.3
Sodium oxide, Na_2O	3.0	1.0 - 3.5
Sulfur trioxide, SO_3	10.6	8.6 - 12.6
Undetermined	1.0	0.5 - 2.0
Total	100.00	

COAL RESERVE "G"

Proximate Analysis, As Received, per cent by weight	Typical	Range
Moisture	6.5	5.7 - 7.1
Ash	15.8	10.7 - 20.8
Volatile matter	33.2	29.8 - 36.6
Fixed carbon	44.5	41.1 - 48.1
Total	100.00	
Sulfur	0.61	0.46 - 0.76

	Typical	Range
Heating Value, Btu per lb	11,205	10,375 - 12,055

*EPA Request dated Oct 12, 2010, for Information Pursuant to Section 114 . Response #10 of 17 of Appendix B.

Ultimate Analysis, As Received, per cent by weight	Typical	Range
H_2O	6.50	5.7 - 7.1
Ash	15.80	10.7 - 20.80
Sulfur	0.61	0.46 - 0.76
Nitrogen	1.17	1.02 - 1.32
Carbon	63.40	59.4 - 67.4
Hydrogen	4.32	4.12 - 4.52
Oxygen	8.17	7.57 - 8.77
Chlorine	0.03	0.00 - 0.06
Total	100.00	

Sulfur Forms, As Received, per cent by weight	Typical	Range
Pyritic	—	—
Sulfate	—	—
Organic	—	—

Equilibrium Moisture, per cent by weight	4.2	3.5 - 5.0
Hardgrove Grindability Index	44	41 - 46

Ash Fusion Temperatures Reducing, F	Typical	Range
Initial	2330	2200 - 2460
Softening	2400	2265 - 2540
Hemispherical	2475	2335 - 2620
Fluid	2560	2430 - 2690

Ash Fusion Temperatures Oxidizing, F	Typical	Range
Initial	2395	2265 - 2530
Softening	2465	2330 - 2600
Hemispherical	2525	2400 - 2650
Fluid	2595	2480 - 2715

Ash Analysis, per cent by weight	Typical	Range
Phosphorous pentoxide, P_2O_5	0.6	0.2 - 1.0
Silica, SiO_2	58.7	53.7 - 63.7
Ferric oxide, Fe_2O_3	3.4	2.6 - 4.2

*EPA Request dated Oct 12, 2010, for Information Pursuant to Section 114 . Response #10 of 17 of Appendix B.

IP10_002360

Ash Analysis, per cent by weight	Typical	Range
Alumina, Al_2O_3	20.7	17.0 - 25.0
Titania, TiO_2	0.8	0.7 - 0.9
Lime, CaO	6.6	4.6 - 8.6
Magnesia, MgO	1.6	0.9 - 2.3
Potassium oxide, K_2O	0.7	0.3 - 1.1
Sodium oxide, Na_2O	0.7	0.1 - 1.3
Sulfur trioxide, SO_3	5.3	3.3 - 7.3
Undetermined	0.9	0.1 - 1.3
Total	100.00	

Trace analyses of the ash component of the coal indicates that fluoride content in the ash may be as high as 400 mg/1. A discussion of the effects of fluorides on the scrubber system equipment shall be included as part of the Proposal Data.

It is recognized that the coal pulverizers will remove a portion of the pyritic sulfur and this has been considered in establishing the specified influent flow rate of sulfur dioxide to the scrubber. Sulfur dioxide removal guarantees shall be based on the influent flow rate of sulfur dioxide specified under Flue Gas Conditions.

2A.6.5 Flue Gas Conditions. The flue gas scrubber shall be designed to operate under the following conditions.

	Steam Generator Operating Conditions			
	25 Per Cent of MCR	50 Per Cent of MCR	75 Per Cent of MCR	MCR
Fuel heat input to steam generator, million Btu/hour	2,190	4,248	6,142	8,352
Total flue gas flow, lb per hour	2,916,000	5,192,000	7,508,000	10,453,000
Flue gas temperature at scrubber system inlet, F				
Nominal	200	220	255	285

[IPP 9255 WET SCRUBBER 62.0202]
[031881]

*EPA Request dated Oct 12, 2010, for Information Pursuant to Section 114 . Response #10 of 17 of Appendix B.

	Steam Generator Operating Conditions			
	25 Per Cent of MCR	50 Per Cent of MCR	75 Per Cent of MCR	MCR
Minimum	170	190	225	255
Maximum	225	250	285	305
Flue gas density at specified nominal temperature, lb per cu ft	0.0525	0.0510	0.0485	0.0465
Maximum particulate content in flue gas stream with normal expected particulate collector efficiency, lb per million Btu	0.020	0.020	0.020	0.020
Sulfur dioxide content of influent flue gas stream, lb per hour				
Maximum	4,600	8,800	12,800	17,400
Minimum	1,100	2,200	3,100	4,200
* Minimum flue gas temperature at scrubber system outlet, F	145	145	145	145

2A.6.6 Emergency Operation. Should an unscheduled outage of a regenerative air heater occur, the flue gas scrubber system will experience a rapid flue gas temperature increase to approximately 700 F. This temperature excursion would persist for approximately 30 minutes.

The flue gas scrubber system shall be designed to withstand a temperature excursion of the above magnitude without damage or increased maintenance.

*Negotiated Revision

*EPA Request dated Oct 12, 2010, for Information Pursuant to Section 114 . Response #10 of 17 of Appendix B.

2A.6.7 Additives. Additives will be furnished by the Owner and will be as described herein.

2A.6.7.1 Limestone. Limestone is expected to have a calcium carbonate content of 85 to 95 per cent. For calculation of material mass balances, limestone with 90 per cent calcium carbonate shall be assumed.

*EPA Request dated Oct 12, 2010, for Information Pursuant to Section 114 . Response #10 of 17 of Appendix B.

The maximum or minimum allowable percentages of the various constituents of the limestone shall be stated in the Proposal Data.

The scrubber shall be guaranteed for operation with any limestone defined by the ranges stated in the Proposal Data and the calcium carbonate range stated herein.

Limestone slurry preparation equipment shall be provided as specified in Section 2D.

*2A.6.7.2 Water Pretreatment Sludge. Lime-soda softening sludge from the Owner's makeup water pretreatment system solids contact units will be furnished as a supplemental additive. The water pretreatment sludge will be predominately calcium carbonate - magnesium hydroxide sludge with lesser quantities of iron or alum coagulants, organic polymers, and settled impurities. The sludge will have the following approximate analysis.

		Total for Four Units
	Calcium carbonate, lb per day	150,000 - 200,000
	Magnesium hydroxide, lb per day	10,000 - 50,000
***	Solids content, per cent	~~Ø/5/+/5/Ø~~ 10.0 - 15.0

The water pretreatment sludge shall not be considered in sizing the capacity of the limestone slurry grinding equipment nor in the preparation of the specified material mass balances.

2A.6.8 Water Supply. Normal makeup water supply will be cooling tower blowdown.

Supplemental makeup water will be raw river water.

River water will also be available for slurry preparation.

Cooling tower blowdown water shall be the normal source of mist eliminator wash water. A discussion of potential advantages of using river water for this application shall be submitted as part of the proposal data.

Cooling tower blowdown shall be used for flushing of slurry pumps and piping systems.

**Water will be provided at a discharge connection on an Owner-furnished storage tank. Separate tanks will be provided for normal and supplemental makeup water. For purposes of proposal preparation, the supply locations shall be as indicated on the arrangement drawing included as part of the specifications.

*Addendum No. 3
**Addendum No. 1
***Negotiated Revision 120481

*EPA Request dated Oct 12, 2010, for Information Pursuant to Section 114 . Response #10 of 17 of Appendix B.

Recovered water from the thickener and dewatering equipment will be returned to the scrubber system as specified in this section in the article entitled MATERIALS.

2A.6.8.1 Cooling Tower Blowdown. Analyses of the cooling tower blowdown are expected to be variable. The following analysis is considered to be typical (all constituents expressed in mg/l as such unless otherwise specified).

Constituent	Cooling Tower Blowdown mg/l
Calcium as Ca	322
Magnesium as Mg	847
Sodium as Na	3,439
Potassium as K	81
M-alkalinity (as $CaCO_3$)	100
Sulfate as SO_4	5,308
Chloride as Cl	4,451
Nitrate as NO_3	4
Silica as SiO_2	163
Total dissolved solids	14,600
* Total suspended solids	150
pH	8.0

2A.6.8.2 River Water. Analyses of the raw river water are expected to be variable. The following analysis is considered to be typical (all constituents expressed in mg/l as such unless otherwise specified).

Constituent	Raw River Water mg/l
Calcium as Ca	71
Magnesium as Mg	82
Sodium as Na	299
Potassium as K	7
Bicarbonate as HCO_3	309

*Negotiated Revision

*EPA Request dated Oct 12, 2010, for Information Pursuant to Section 114 . Response #10 of 17 of Appendix B.

Constituent	Raw River Water mg/l
Sulfate as SO_4	360
Chloride as Cl	387
Nitrate as NO_3	0.26
Silica as SiO_2	17
Total dissolved solids	1,377
pH	8.2

2A.7 EQUIPMENT SIZING. All equipment shall be sized for overload conditions and, where specified herein, standby equipment shall be provided to ensure reliability.

*With ~~one module~~ the spare module(s) out of service, the scrubber system shall be capable of safe and reliable operation and maintaining the guaranteed sulfur dioxide removal efficiency with the steam generator operating at its maximum continuous rating while burning the maximum sulfur coal. All module auxiliaries shall be sized with design margins adequate to ensure this requirement can be met.

2A.8 CONSTRUCTION CRITERIA. The flue gas scrubber and auxiliary equipment shall be designed for the following conditions.

2A.8.1 General Site Conditions. The following general site conditions are applicable.

Grade elevation, feet above msl	4,700
Barometric pressure, psia	12.4
Ambient temperature, F	
Minimum	-30
Maximum	110
Indoor temperature, F	
Minimum	55
Maximum	110

*Addendum No. 1

*EPA Request dated Oct 12, 2010, for Information Pursuant to Section 114 . Response #10 of 17 of Appendix B.

2A.8.2 Design Pressures and Temperatures. Design pressures and temperatures shall be as follows.

Minimum design pressure	
At allowable design stress at continuous operating temperature or maximum transient temperature if applicable	25 in. H_2O
At yield stress at continuous operating temperature	47 in. H_2O
Minimum design vacuum	
At allowable design stress at continuous operating temperature or maximum transient temperature if applicable	-4 in. H_2O
At yield stress at continuous operating temperature	-6 in. H_2O

Design temperature	Continuous Operating	Maximum Transient
* Scrubber modules (Gas inlet)	300 F	700 F
Ductwork	As specified in Section 2K	

The maximum transient temperature excursion shall be assumed to have a duration of 30 minutes.

2A.8.3 Seismic Loads. Effects of seismic loads on the design of the flue gas scrubber equipment shall be given full consideration. The design shall be in accordance with the requirements of the sections pertaining to particular items of equipment and materials and of Section 1S.

2A.8.4 Ductwork. Additional design criteria for ductwork are included in Section 2K.

2A.9 PLANT SERVICES. The following plant services will be available for connection to equipment furnished under these specifications.

*Negotiated Revision 011382

*EPA Request dated Oct 12, 2010, for Information Pursuant to Section 114 . Response #10 of 17 of Appendix B.

2A.9.1 Compressed Air. House service air will be available at a pressure range of 60 to 125 psi.

Clean control and instrument air at a pressure range of 60 to 125 psi will be available for actuation of instrument devices and control drives.

2A.9.2 Cooling Water. Condensate quality cooling water will be available from a closed system at 125 psi maximum and 105 F for cooling bearings, drives, and other equipment as required. A complete listing of all equipment requiring cooling water shall be included as part of the Proposal Data. The list shall include flow rates, pressure drops, and heat loads. Cooling water pressure drop from the Owner's supply connection to the Owner's return connection shall not exceed 5 psi.

Equipment coolers shall be designed for a maximum pressure of 125 psi.

2A.9.3 Steam. Steam for soot blowing will be available at a line pressure of approximately 2,640 psig and 750 F.

A pressure reducing station will be provided by the Owner to reduce the pressure to condition required at the soot blower piping terminal point specified in Section 2H.

2A.9.4 Electrical Power. Electrical power will be available at the voltages specified in Section 1B.

2A.10 PERFORMANCE DATA AND CURVES. Data and curves specified herein shall be submitted.

2A.10.1 Materials Balance Diagrams. Materials balance diagrams shall be submitted showing flow rates, pressures and temperatures of flue gas, water, additive, slurry, sludge, reaction products, chemicals, etc., for the complete system furnished under these specifications. For purposes
*of preparation of materials balance diagrams, the ~~two~~ spare module(s) shall be assumed to be out of service.

The materials balance diagrams shall be based on a minimum sulfur dioxide removal rate of 90 per cent, a maximum outlet sulfur dioxide emission rate of 0.150 pounds per million Btu, and on the gas constituents and material flow rates for the loads and coals specified in the following tabulation.

	Flow Rate at Steam Generator Operating Conditions, lb/hr			
	25 Per Cent of MCR	50 Per Cent of MCR	75 Per Cent of MCR	MCR
Fuel heat input to steam generator, million Btu/hour	2,190	4,248	6,142	8,352

*Addendum No. 1

[IPP 9255 WET SCRUBBER 62.0202]
[051581]

*EPA Request dated Oct 12, 2010, for Information Pursuant to Section 114 . Response #10 of 17 of Appendix B.

*	Flow Rate at Steam Generator Operating Conditions, lb/hr			
	25 Per Cent of MCR ~~Low/Sulfur Coal~~	50 Per Cent of MCR ~~Typical/Sulfur Coal~~	75 Per Cent of MCR ~~High/Sulfur Coal~~	MCR ~~Coal~~
Oxygen	241,200	375,300	542,600	756,000
Nitrogen	2,077,000	3,691,000	5,338,000	7,440,000
Chlorine	40	75	112	143
Carbon dioxide	462,000	868,700	1,256,000	1,733,000
Sulfur dioxide	1,716	4,240	6,165	12,530
Moisture	134,000	252,600	365,000	511,160
Ash	44	85	123	167
Total flue gas	2,916,000	5,192,000	7,508,000	10,453,000

These flue gas constituents and flow rates are included only for the purpose of obtaining material balances and are not to be utilized as a basis of design or guarantee.

As part of the Proposal Data, elementary material balance diagrams shall be submitted for scrubbing the flue gas produced by the steam generator at 25, 50, 75, and 100 per cent of the maximum continuous rating utilizing the flue gas analyses contained herein.

The Contractor shall submit, as part of the Engineering Data, complete and detailed material balance diagrams for scrubbing the flue gas produced by the steam generator at 25, 50, 75, and 100 per cent of the maximum continuous rating utilizing the flue gas analyses contained herein.

2A.10.2 Scrubber Performance Curves. The following scrubber performance curves shall be submitted.

Sulfur dioxide removal efficiency versus steam generator load and flue gas flow rate

Sulfur dioxide removal efficiency versus inlet flue gas sulfur dioxide content

Limestone consumption versus inlet flue gas sulfur dioxide content

*Addendum No. 1

*EPA Request dated Oct 12, 2010, for Information Pursuant to Section 114 . Response #10 of 17 of Appendix B.

Power consumption versus steam generator load and inlet gas flow rate

Pressure loss through scrubber system including all Contractor-furnished ductwork and accessories versus inlet gas flow in pounds per hour

Total water droplet content in flue gas leaving mist eliminators for all modules in operation in pounds per hour versus steam generator load

Superficial gas velocity through scrubbing section and mist eliminators versus steam generator load. Curves shall indicate recommended points of changeover to increase or decrease the number of modules in operation.

The curves submitted shall be of the same format as the example curves included in the Appendix.

Performance indicated on the curves submitted by the Contractor shall be guaranteed. The curves will be used during performance guarantee testing to determine compliance with the contract requirements.

2A.10.3 Pump Characteristic Curves. Characteristic curves shall be submitted for each pump furnished under these specifications. The curves shall show head, horsepower, efficiency, and net positive suction head required as ordinates and capacity as the abscissa.

Characteristic curves for water pumps shall also be submitted for the maximum and minimum diameter impellers which may be fitted to the pump casing.

Characteristic curves for slurry pumps shall be submitted for the nominal operating speed and for the recommended maximum and minimum operating speeds.

2A.10.4 Reheater Soot Blowing System Data. A drawing shall be submitted indicating the type and location of the proposed reheater soot blowers. A complete list shall be submitted indicating blower type, speed, travel, blowing time, anticipated cycles per day, quantity of steam (lb/hr) per blower (per cycle), and total quantity (lb) of steam per day.

2A.11 MODEL TEST. A three-dimensional model, of not less than 1/16 scale, shall be constructed and tested by the Contractor.

A detailed description of the proposed model test and model test procedure shall be submitted as part of the Proposal Data.

*EPA Request dated Oct 12, 2010, for Information Pursuant to Section 114 . Response #10 of 17 of Appendix B.

Test objectives shall include the following.

Determine the optimum ductwork configuration required to obtain proper gas distribution, to minimize system pressure drop, and to allow convenient, accurate performance testing to be accomplished.

Determine the optimum arrangement of gas distribution devices within Owner-furnished and Contractor-furnished ductwork to ensure proper distribution and to maintain a minimum system pressure drop.

* ~~Evaluation of configuration to minimize vibration and noise generation~~

The model shall be geometrically similar to the full-size flue gas scrubber system. The model shall include ductwork, fan exit geometry, gas distribution and mixing devices, scrubber modules, reheaters, and 200 feet of the chimney. The model shall include the following ductwork.

All ductwork from the induced draft fan outlets to the scrubber module inlets

All ductwork from the scrubber module outlets to the chimney

The model shall be constructed entirely of clear plexiglass to permit observation during flow studies. The model shall incorporate all internal structures of the equipment and ductwork including such items as beams, cross struts, and other incidental obstructions to gas flow. The model shall be tested in fully developed turbulent flow regime.

The Project Manager shall have the option of witnessing the model test. The Contractor shall notify the Project Manager not less than 10 working days before the test.

The Contractor shall be responsible for recommending all gas flow vaning, straightening, or distribution devices required in the Owner-furnished ductwork. These recommendations shall be based on the model tests described herein and the latest gas flow technology of the Contractor. The recommendations shall be included in the model test report.

The Contractor shall furnish all gas distribution devices in Contractor-furnished ductwork.

A model test report shall be produced and submitted to the Engineer in accordance with the Document Submittal Schedule. A minimum of two interim progress reports shall be submitted. These reports shall note the progress made to date, information which is still required to complete the model study, and work which is yet to be accomplished.

*Negotiated Revision

*EPA Request dated Oct 12, 2010, for Information Pursuant to Section 114 . Response #10 of 17 of Appendix B.

The Owner shall have the option of obtaining the model once the tests are completed. All shipping costs from the point of testing to the destination designated by the Project Manager will be paid by the Owner.

2A.12 MATERIALS. Special attention shall be given to the fact that the scrubber system will operate in a closed water loop mode and to the resultant buildup of chlorides in the system. The scrubber solids from the thickener will be dewatered and recovered water from the thickener and dewatering equipment will be returned to the scrubber system for reuse. For design purposes it is assumed that all of the solids from the scrubber system will be dewatered and mixed with all of the fly ash for landfill disposal. The mixed material shall have a solids content of at least 70 per cent by weight regardless of the relative amounts of ash and scrubber solids being produced. Return water to the scrubber system will be controlled so that the chloride content of the water in the scrubber does not exceed 20,000 mg/l. Excess water will be disposed of in evaporation ponds. The mass balances submitted shall indicate the amount of recovered water which must be discharged to maintain the chlorides content in the reaction tank at 20,000 mg/l or less.

Wherever, in these specifications, particular materials are specified, it is understood that such designation is intended in a generic sense as being suitable for the severity of service anticipated; such designation is not intended to limit proposal of other similar materials deemed more suitable. Materials shall be commensurate with the operating conditions anticipated.

A base proposal and alternate proposals shall be submitted for the scrubber module, reaction tank, and reheater casing materials specified in Sections 2C, 2E, and 2Q respectively.

With regard to substitution of materials, the requirements of the article entitled Equivalent Materials and Equipment in the SPECIAL CONDITIONS shall apply to materials specified by use of a proprietory product name or the name of a particular manufacturer.

*EPA Request dated Oct 12, 2010, for Information Pursuant to Section 114 . Response #10 of 17 of Appendix B.

Section 2B - GUARANTEES, RELIABILITY DEMONSTRATION AND TESTS

2B.1 GENERAL. This section covers performance guarantees, reliability demonstration and testing of system performance.

Additional requirements concerning guarantees, warranties, bonding of performance and payments contingent upon system performance are specified in the General Conditions.

Testing and reliability demonstration will be conducted in accordance with the following schedule.

Initial formal performance guarantee test to be conducted within approximately 60 days after start of commercial operation

Reliability demonstration run of 90 days duration to be conducted within approximately 6 months after successful completion of the initial formal performance guarantee test

* Formal performance guarantee test to be conducted approximately one year but not later than 18 months after successful completion of the initial formal performance guarantee test but not before successful completion of the reliability demonstration run

In the event a delay occurs in conducting the performance tests through no fault of the Contractor, then, after implementing the procedures defined in Article GC.32.5 and Article GC.24, the Owner will use best efforts to conduct the performance tests as soon as possible.

The performance guarantee shall be subject to the guarantee conditions, limitations and disclaimers specified in Article GC.24 of the GENERAL CONDITIONS.

These tests to determine compliance with the performance guarantees shall be binding on the parties of this Contract.

All performance guarantee tests will be conducted by a qualified independent testing laboratory mutually acceptable to the Contractor and the Project Manager.

The cost of two formal tests and the reliability demonstration run will be borne by the Owner whether successful demonstration of compliance with the performance guarantees is achieved or not. The costs of the tests

*Negotiated Revision

*EPA Request dated Oct 12, 2010, for Information Pursuant to Section 114 . Response #10 of 17 of Appendix B.

paid for by the Owner will be limited to the costs for the independent testing laboratory and shall not include the costs for any of the Contractor's personnel, materials or equipment involved in the testing.

The Owner's operating and maintenance personnel will operate the flue gas scrubber during the reliability demonstration and formal performance guarantee test periods. They will perform only those operation and maintenance duties which are normally assigned to operation and maintenance personnel. Operating and maintenance personnel will not be responsible for modifications to equipment, disassembly to replace defective components or inordinate maintenance to permit continued operation of equipment which is experiencing unacceptable wear rates.

*EPA Request dated Oct 12, 2010, for Information Pursuant to Section 114 . Response #10 of 17 of Appendix B.

The Contractor shall provide personnel to observe the tests and to provide technical assistance and advice to the Owner's operating and maintenance personnel.

A copy of the test results will be provided to the Contractor.

Should either of the formal performance guarantee tests or the reliability demonstration run show that the system has failed to meet its guarantees, the Contractor shall immediately proceed with modifications to the system until it meets the required level of performance. All costs for the modifications including labor and materials and the cost of performing additional tests to prove that the system will meet the guarantees shall be borne by the Contractor. Unavailability of the unit for testing will in no way relieve the Contractor of the responsibility for the tests.

2B.2 PERFORMANCE GUARANTEES. The following aspects of system performance shall be guaranteed.

Emission limits

Suitability for continuous operation

Rated capacity of major components

Minimum load operation

Water droplet carry-over

Pressure losses

Limestone consumption

Water consumption

Consumption of utility services

Limestone slurry preparation equipment performance

Sulfite oxidation for the forced oxidation system option

Liner durability for the lined scrubber modules and reaction tanks option

The following articles specify the guarantee requirements for each aspect of performance listed above.

*EPA Request dated Oct 12, 2010, for Information Pursuant to Section 114 . Response #10 of 17 of Appendix B.

IP10_002375

Guarantees shall be considered to be continuous over the entire operating range from 25 per cent to 100 per cent of steam generator MCR even though some statements of the guarantees may be based on data submitted for specific operating points such as 25, 50, 75 and 100 per cent of MCR. Methods of interpolation or extrapolation of the data to establish whether measured performance is in compliance with guarantees will be established per mutual agreement of the parties involved prior to the start of testing.

2B.2.1 Emission Limits. At any flue gas flow produced by operation of the steam generator at any condition from 25 per cent to 100 per cent of maximum continuous rating as specified in Section 2A under Flue Gas Conditions; with any flue gas temperature, inlet particulate or sulfur dioxide loading within the ranges listed in Flue Gas Conditions; and with any coal whose characteristics fall within the ranges indicated in Section 2A under Fuel Data, or any combination of these coals and fuel oil firing; the flue gas wet scrubber shall be guaranteed to limit the sulfur dioxide emission rate to not more than 0.150 pound per million Btu of heat input to the steam generator and to achieve a minimum of 90 per cent removal of sulfur dioxide; to limit total particulate emission rate to
*not more than ~~the particulate effluent rate to the scrubber~~ 0.020 pound per million Btu heat input; and to limit opacity of the flue gas ~~at the chimney exit~~ to not more than 20 per cent equivalent opacity based on a 6 minute average.

The applicability of the emission guarantees shall not be restricted because of variations in the mineral analysis or particle size of the particulate matter.

2B.2.2 Suitability for Continuous Operation. The flue gas scrubber system shall operate safely, reliably and without scaling, plugging, undue maintenance or operator attention on a continuous basis under all operating conditions. Compliance with this requirement shall be demonstrated as specified in this section under RELIABILITY DEMONSTRATION.

2B.2.3 Rated Capacity. The capacity of each scrubber module and associated auxiliary equipment to treat 25 per cent of the flue gas flow when the steam generator is operating at its maximum continuous rating shall be demonstrated by continuous operation at this condition for 48 hours when the steam generator is firing coal having a composition within the specified range.

The rated capacity of the overall flue gas scrubber system shall be demonstrated by an 8 hour run treating 100 per cent of the flue gas flow. This demonstration shall be performed with the spare modules out of serv-
*ice. The rated capacity of an individual module shall be tested by passing up to 2,613,000 pounds per hour of flue gas through a single module. Flue gas temperatures and densities are within ranges specified in Article 2A.6. Gas flow will be determined as specified in Article 2B.4.

*Negotiated Revision

*EPA Request dated Oct 12, 2010, for Information Pursuant to Section 114 . Response #10 of 17 of Appendix B.

*During the rated capacity test, determination of emissions shall be performed in accordance with Article 2B.4. Emission guarantees shall be stated in Article 2B.2.1.

Pressure loss from module inlet to reheater outlet shall not exceed guarantee values stated in the Proposal Data sheets. Pressure loss shall be defined as the difference in static pressure between the module inlet and **reheater outlet. The pressure measurements ~~at each measuring point will be the average of at least three (3) measurements taken equally spaced about the module inlet duct and module outlet duct~~ shall be conducted utilizing traverse probes.

2B.2.4 Minimum Load Operation. The flue gas scrubber system shall be guaranteed to operate satisfactorily and reliably for extended periods at 25 per cent of steam generator maximum continuous rating.

*Negotiated Revision
**Negotiated Revision 120481

*EPA Request dated Oct 12, 2010, for Information Pursuant to Section 114 . Response #10 of 17 of Appendix B.

2B.2.5 Water Droplet Carry-over. Water droplet carry-over from the mist eliminators with steam generator operation at 25, 50, 75 and 100 per cent of steam generator maximum continuous rating shall be guaranteed not to
***exceed the amounts stated in the Proposal Data. ~~Water droplet carry-
****over shall be determined by sampling the absorber module outlet flue gas using EPA Method 5 and analyzing the sample for tracer components, e.g., chlorides, and comparing the value to the tracer concentration in the absorber recycle slurry. Artificial tracers such as lithium may also be used for this test.~~ Testing procedures shall be by mutually acceptable wet chemical test methods.

2B.2.6 Pressure Losses. Pressure losses through the flue gas scrubber system for operation at flow rates specified in Section 2A under Flue Gas Conditions for operation at 25, 50, 75 and 100 per cent of steam generator maximum continuous rating shall not exceed the amounts stated in the
***Proposal Data. Pressure loss shall be defined as the difference in static pressure between the inlet and outlet flanges of the system. The pres-
****sure measurements ~~at each measuring point will be the average of at least three (3) measurements taken equally spaced about the duct circumference. Test procedures shall be as described in TCCI Test Method TP-2.~~ shall be conducted utilizing traverse probes.

*2B.2.7 Limestone Consumption and Stoichiometric Ratio. The consumption of limestone and the stoichiometric ratio with steam generator operation at 25, 50, 75 and 100 per cent of the steam generator maximum continuous rating shall be guaranteed not to exceed the amounts stated in the Pro-
***posal Data. The stoichiometric ratio will be determined from the chemical analysis performed on the solids in the waste slurry for the following species:

1. Calcium as calcium carbonate

2. Calcium as calcium sulfite

3. Calcium as calcium sulfate

The stoichiometric ratio shall be the sum of the moles of calcium as calcium carbonate, calcium sulfite and calcium sulfate, divided by the sum of the moles of calcium as calcium sulfite and calcium sulfate.

Testing procedures shall be by mutually acceptable wet chemical test methods.

2B.2.8 Water Consumption. The consumption of water from the various supply sources specified in Section 2A with steam generator operation at 25, 50, 75 and 100 per cent of steam generator maximum continuous rating shall be guaranteed not to exceed the amounts stated in the Proposal Data.

*Addendum No. 3
***Negotiated Revision
****Negotiated Revision 120481

*EPA Request dated Oct 12, 2010, for Information Pursuant to Section 114 . Response #10 of 17 of Appendix B.

2B.2.9 Consumption of Utility Services. The consumption rate of utility services such as but not limited to electric power, cooling water, compressed air, steam, etc., for steam generator operation at 25, 50, 75 and 100 per cent of steam generator maximum continuous rating shall be guaran-
***teed not to exceed the amounts stated in the Proposal Data. Total guarantee operating requirements for 6900 volt and 480 volt, 3 phase equipment are based upon motors and efficiencies as tabulated on the "User's List" included herein. If actual efficiencies of motors purchased by the Owner vary from those listed, the guarantee will be revised by mutual agreement to reflect the new efficiencies. Power consumption will be measured
****at the switchgear inlet bus to the Owner's motor control center(s) and will be adjusted for motor control center(s) losses.

2B.2.10 Limestone Slurry Preparation Equipment. The limestone slurry preparation equipment shall perform as specified in Section 2D and as stated in the Proposal Data. The following shall be guaranteed.

Maximum capacity of each feeder, ball mill and classifier

Maximum horsepower required at the specified operating conditions

Vibration levels of the ball mill and drive motor assembly at no-load and full load

2B.2.11 Sulfite Oxidation. For the forced oxidation system option, the sulfite oxidation of the waste products in the scrubber blowdown stream shall be guaranteed to equal or exceed 90 per cent with the steam generator operation at 25, 50, 75 and 100 per cent of the steam generator maximum continuous rating.

/**2B.2.12 Rubber Lining Durability. For the option using rubber-lined scrubber modules and reaction tanks, the rubber linings shall be guaranteed for 5 years. The linings shall be jointly inspected semiannually by the contractor and the Owner. For the first year, all necessary repairs to the rubber linings will be made at the Contractor's expense. For the remaining 4 years, if the required repair to any module or tank determined by the semiannual inspection is less than 5 per cent of the total lined surface area of that module or tank, repairs will be made at the Owner's expense. If the liner repair required is determined to be greater than 5 per cent of the total lined surface area of any module or tank, the repairs in excess of 5 per cent shall be made at the Contractor's expense. The surface area requiring repair shall include any lining which, in addition to the damaged or failed lining, must be removed to assure adequate adhesion of the repair patch.

The expense of the lining repair shall include all labor and materials required to make the repairs including scaffolding, stripping, base metal repair, surface preparation, curing, and fire protection.

**Supplemental Proposal dated 101681
***Negotiated Revision
****Negotiated Revision 120481

*EPA Request dated Oct 12, 2010, for Information Pursuant to Section 114 . Response #10 of 17 of Appendix B.

****For the option using rubber-lined scrubber modules and reaction tanks, the rubber linings shall be guaranteed for 7 years from initial operation. The linings shall be jointly inspected semiannually for the first 18 months, and annually thereafter, by the Contractor and the Owner. For the first 18 months, all necessary repairs to the rubber linings will be made at the Contractor's expense. For the remaining 66 months, if the required repair to any module or tank determined by the annual inspection is equal to or less than one per cent per annum of the total lined surface area of that module or tank, repairs will be made at the Owner's expense. If the liner repair required is determined to be greater than one per cent per annum of the total lined surface area of that module or tank, the repairs in excess of one per cent shall be made at the Contractor's expense. The surface area requiring repair shall include any lining which, in addition to the damaged or failed lining, must be removed to assure adequate adhesion of the repair patch.

The expense of the lining repair shall include all labor and materials required to make the repairs including scaffolding, stripping, base metal repair, surface preparation, curing, and fire protection.

****Negotiated Revision 120481

*EPA Request dated Oct 12, 2010, for Information Pursuant to Section 114 . Response #10 of 17 of Appendix B.

2B.3 RELIABILITY DEMONSTRATION. The adequacy of the flue gas scrubber system for continuous operation shall be demonstrated by a reliability demonstration run for an uninterrupted period of 90 days.

The rated capacity of the flue gas scrubber system and the minimum load operating capability shall be demonstrated as specified herein under PERFORMANCE GUARANTEES as part of the reliability demonstration run.

*Limestone consumption, water consumption and consumption of utility services will be monitored during the reliability demonstration run to determine whether the system is in compliance with the performance guarantees.

The steam generator load may vary between 25 and 100 per cent of its maximum continuous rating. There will be extended periods of operation at the maximum continuous rating. The flue gas scrubber system shall be guaranteed to not limit the required unit load during the run. The required unit load is defined as the load requested by the Owner's dispatch center. Standard industry definitions (EEI Prime Movers) of load reduction will be used.

If the reliability demonstration run is interrupted as a result of malfunction of the scrubber or other plant equipment, the run shall be stopped. If the run is interrupted within 7 days of its commencement, the run shall be terminated and another reliability demonstration run shall commence. After 7 days, the running time shall be cumulative unless the flue gas scrubber system is the cause for the unit outage, in which case the run shall be terminated and a new run started. The Contractor shall provide all replacement parts and perform all repair work on the system necessary to permit the reliability demonstration run to be completed.

Entry into a scrubber module will be permitted for minor maintenance, provided the remaining modules are capable of operating at maximum output, when such entry does not affect scrubber performance or increase emissions above the limits specified or reduce the sulfur dioxide removal efficiency below the specified value. Normal maintenance will be performed on auxiliaries located outside the modules at any time provided it does not affect system performance or increase emissions above the limits specified or reduce the sulfur dioxide removal efficiency below the **specified value. ~~Emissions will be monitored continuously during the reliability demonstration run and shall at no time exceed the guaranteed emissions except as provided by the Contractor's statement of Limitations for start-up and low load operation in accordance with the requirements of Section 2A in the article entitled Load Range and Operating Requirements~~ SO_2 emissions and opacity will be monitored continuously during

*Addendum No. 3
**Negotiated Revision

*EPA Request dated Oct 12, 2010, for Information Pursuant to Section 114 . Response #10 of 17 of Appendix B.

*the reliability demonstration run. SO_2 emissions based upon a 24 hour average and opacity based upon a six (6) minute average shall not exceed the guaranteed emissions except as provided by the Contractor's statement of limitations for start-up and low load operation in accordance with the requirements of Section 2A in the article entitled Load Range and Operating Requirements.

Continuous emissions monitoring will be accomplished by the Owner's in-stack SO_2 and opacity monitors. Particulate emissions will be based on measurement of particulate concentration in the flue gas scrubber system outlet duct. The arithmetic mean of the first three (3) acceptable tests will constitute true measurement of performance of the system.

2B.4 FORMAL PERFORMANCE GUARANTEE TESTS. The tests will be conducted at approximately the operating conditions specified at 25, 50, 75 and 100 per cent of the maximum continuous rating of the steam generator. Tests will be conducted for continuous periods of 4 hours at each condition following periods to allow stabilization.

*Negotiated Revision

*EPA Request dated Oct 12, 2010, for Information Pursuant to Section 114 . Response #10 of 17 of Appendix B.

Test objectives shall include determination of the following.

Sulfur dioxide removal efficiency and emission rate for each module and entire system

Particulate emission rate for each module and entire system

Opacity of reheated flue gases

Water droplet carry-over

Total pressure loss through entire system and through major system components

Limestone consumption

Water consumption

Consumption of utility services

Limestone slurry preparation equipment performance

Sulfite oxidation for the forced oxidation system, if applicable

*~~The tests for determination of emissions will be performed in accordance with the test procedures, where applicable, established by the Environmental Protection Agency for determination of compliance with New Source Performance Standards in effect on the date of the contract.// Opacity of the flue gas will be determined by use of the generator unit air emissions transmissometer system for continuous measurement of opacity in accordance with 40 CFR Part 60, Appendix B, Performance Specification 1. Other test methods shall be mutually acceptable to the contractor and the Project Manager.~~ The tests for determination of emission rates and removal efficiencies will be performed in accordance with 40 CFR Part 60, Subpart A, Subpart Da, Appendix A, and Appendix B as specified in the IPP permit issued by the Environmental Protection Agency (EPA) on June 8, 1980 and procedures established by the State of Utah Department of Health for determination of compliance with Utah Air Conservation Regulations (UACR) as specified in the IPP permit issued by the State of Utah on **October 29, 1980. ~~Opacity of the flue gas will be determined by use of the generator unit air emissions transmissometer system for continuous measurement of opacity in accordance with 40 CFR Part 60, Appendix B, Performance Specification 1.~~ All testing shall be conducted in accordance with amendments to 40 CFR Part 60 as specified in the IPP permit issued by the EPA and the UACR as specified in the IPP permit issued by

*Negotiated Revision
**Negotiated Revision 120481

*EPA Request dated Oct 12, 2010, for Information Pursuant to Section 114 . Response #10 of 17 of Appendix B.

*the State of Utah Department of Health in effect at time of testing.

**Test methods used for determination of emission rates/ and removal ef-
*/**ficiencies/ ~~and opacity~~ shall be EPA and the State of Utah Department of Health approved reference methods, equivalent methods or alternate methods. All changes in the methodology of the reference methods and any equivalent or alternate method used shall be approved by the EPA and Utah Department of Health prior to testing.

**Opacity of the flue gas will be determined by use of the generator unit air emissions transmissometer system for continuous measurement of opacity in accordance with 40 CFR Part 60, Appendix B, Performance Specification 1.

*Continuous emission monitoring for opacity and sulfur dioxide will be installed and be operational prior to conducting performance tests and will be in accordance with UACR and 40 CFR Part 60 during the Initial and Final Performance Guarantee Test and the Reliability Demonstration.

All performance data shall be reported in accordance with 40 CFR Part 60 and UACR and in a format appropriate for submittal to EPA and to the Executive Secretary of the State of Utah Department of Health.

Gas flow, for purposes of determining performance, shall be taken as the arithmetic average of the experimentally measured flow and the calculated stoichiometric flow adjusted for excess combustion air.

Each trial shall consist of concurrent measurements of sulfur dioxide and particulate concentrations in the flue gas scrubber system inlet and outlet ductwork. Each trial will include soot blowing up to 100 per cent of the time.

If a trial meets all necessary criteria, the calculated sulfur dioxide removal efficiency and outlet particulate loading will constitute acceptable data.

The arithmetic mean of the first three acceptable sets of data will be accepted by both the Project Manager and the Contractor as the true measure of performance of the system.

*Negotiated Revision
**Negotiated Revision 120481

*EPA Request dated Oct 12, 2010, for Information Pursuant to Section 114 . Response #10 of 17 of Appendix B.

Section 2C - SCRUBBER MODULES

2C.1 GENERAL. This section covers the specific design requirements for the scrubber modules and internals.

Seismic design criteria for the scrubber modules shall be in accordance with Classification E-I, Performance Level G as defined in Section 1S.

2C.2 TYPE. Module type shall be as specified in Section 2A.

2C.3 MATERIALS. Scrubber modules shall be constructed entirely of corrosion resistant materials suitable for long life (30 years) in the specified environment under all conditions of operation with flue gas, additive, and makeup water as specified. Closed water loop operation is expected to produce a chloride level of 20,000 mg/l.

A complete list of scrubber components in contact with the scrubber liquid or wet flue gas and the material used for each shall be included as part of the Proposal Data. Materials shall be identified by the trade name, ASTM or other specification number, or by chemical composition and physical properties. The flame spread rating of each combustible material shall be listed.

2C.4 CONSTRUCTION. Scrubber modules shall be constructed in accordance with the following.

2C.4.1 Module Shell. The scrubber modules shall be arranged to permit the use of top entry mixers in the scrubber reaction tanks. Module shells shall be constructed to form a pressuretight envelope from the flue gas inlet to the flue gas outlet.

Minimum design shell pressure and temperature shall be as specified in Section 2A.

For the base proposal, the module shell material shall be stainless steel ASTM A167 Type 317L plate having a molybdenum content of not less *than ~~4/0~~ 4.5 per cent.

Alternate proposals shall be submitted for module shell construction of nickel-iron-chromium-molybdenum-copper-low-carbon alloy ASTM B625 Alloy UNS N08904 (Alloy 904L) and for nickel-chromium-iron-molybdenum-copper alloy ASTM B581 and B582 Alloy UNS N06007 (Alloy G).

An alternate proposal shall also be submitted for providing module shells constructed of ASTM A36 steel and rubber and gunite linings as specified in Sections 3M and 3K, respectively. The alternate proposal shall include a description of steps taken to minimize complex contours inside

*Addendum No. 1.

*EPA Request dated Oct 12, 2010, for Information Pursuant to Section 114 . Response #10 of 17 of Appendix B.

the module. The alternate proposal shall also include providing a liner *fire suppression system and an option for an emergency flue gas quenching system to protect the modules and linings from fire and excessive heat. Descriptions of the fire suppression and optional flue gas quenching systems shall be included.

Scrubber tankage and accessories to be rubber lined shall be designed in accordance with the applicable requirements of the Rubber Manufacturers Association Bulletin 1, Specifications for Welded Steel Tanks, Stacks, Ducts, or Other Welded Parts for Protective Lining and/or Covering.

The minimum metal shell thickness shall be 3/16 inch for the base proposal and for all alternate material proposals.

For vertical absorbers, the distance between the uppermost spray bank and the bottom of the primary mist eliminator of each module shall be not less than 12 feet.

For horizontal absorbers, the distance between the final spray bank and the first stage mist eliminator shall be not less than 16 feet.

Welded joints shall be used wherever possible. Flanged and bolted joints shall be used where necessary for maintenance.

Any penetrations of the shell required for headers, piping connections, or accessories shall be sealed to retain the pressuretight integrity of the shell. Penetrations for major pipe headers shall be designed for removal of the header from the shell.

A complete system of structural reinforcement shall be provided to brace the walls of the shell against pressure and vacuum loads, piping forces and moments and all other loads imposed on the shell. The bracing and reinforcement shall be adequate to prevent excessive deflection or vibration resulting from any condition which may occur within the scrubber. Bracing of shells shall be accomplished using materials that will preserve the integrity of the shell material.

All interior baffles, braces, and supports shall be designed so they will not trap dirt, sludge, or scale. Convenient access shall be provided to permit easy cleaning of all surfaces.

The modules will be supported on foundations and structural steel supports, where required, which will be furnished by the Owner. The Contractor shall state in the Proposal Data whether the modules are bottom, intermediate or top supported and shall include a drawing showing the recommended method of support.

*Negotiated Revision 120481

*EPA Request dated Oct 12, 2010, for Information Pursuant to Section 114 . Response #10 of 17 of Appendix B.

IP10_002386

The bottom of each module shall be sloped to prevent accumulation of sludge and for ease of cleanout. Requirements for periodic cleanout and the provisions made for this shall be completely described in the Proposal Data.

Each module shall have one reaction tank. A downcomer or baffle shall be provided extending below the low water level of the reaction tank to prevent flue gas from leaking.

2C.4.2 Expansion Provisions. Provisions shall be made in the design of the modules to absorb differential expansions which may occur under extremes of ambient temperature and during start-up. The Proposal Data shall describe expansion provisions in detail and shall state any special requirements for connections of the Owner's ductwork and piping.

2C.4.3 Spray Headers, Nozzles and Other Internals. All spray headers, nozzles, drains, and other internals shall be constructed of special corrosion-erosion resistant materials.

*EPA Request dated Oct 12, 2010, for Information Pursuant to Section 114 . Response #10 of 17 of Appendix B.

IP10_002387

Spray headers and nozzles shall be designed for resistance to thermal shock and for long life. Nozzles shall be of the open flow type without internal devices which could cause plugging. Nozzles shall be constructed of silicon carbide.

A statement concerning the expected maintenance and replacement frequency of parts, including spray headers and nozzles, shall be included as part of the Proposal Data.

A discussion of the provisions to prevent spray header and nozzle plugging shall be submitted as part of the Proposal Data.

Spray nozzles shall be connected to the spray nozzle headers by a flanged connection or special quick disconnect clamp. Threaded connections or nozzles bonded to the headers will not be permitted.

Drains shall be designed to prevent accumulation of sludge and fly ash leading to plugging. Drain construction which requires periodic cleaning will not be acceptable.

2C.4.4 Access Doors, Observation Ports and Observation Openings. Hinged, quick opening access doors shall be provided for maintenance of the scrubbers. Doors shall be large enough for entry of personnel and equipment including scaffolds if required. Personnel access doors shall be a minimum of 18 by 24 inches. Scaffold access doors shall be a minimum of 24 by 52 inches.

Observation ports complete with high temperature quartz viewing windows and cleaning systems shall be provided as required to permit inspection of the mist eliminator area during scrubber operation.

Hinged quick opening observation openings shall be provided at locations as required to facilitate inspection of scrubber internals without entering the scrubber module. Each observation opening shall be provided with a water jet for cleaning.

Lights of vaportight and watertight construction shall be provided at all locations where observation openings or ports are provided for inspection of internals.

Pressuretight seals shall be provided and doors and frames shall be structurally reinforced to prevent deflection which could result in leakage past the seals. Impregnated braided seals will not be acceptable if the impregnating material will become fluid at normal operating temperatures.

A safety device shall be provided on each access or observation opening to prevent the door from springing open during use as a result of internal pressure in the module.

*EPA Request dated Oct 12, 2010, for Information Pursuant to Section 114 . Response #10 of 17 of Appendix B.

2C.4.5 Overflow. Each scrubber module shall be provided with an overflow pipe properly sealed and designed for slurry service to protect the scrubber and ductwork from flooding in the event of drain plugging, failure of makeup controls, etc.

The drain pipe and seal box shall be constructed of suitable corrosion resistant materials. The seal box shall be designed for ease of cleanout and shall be arranged for connection to the Owner's plant drainage system.

A conductance type water detector shall be furnished in the overflow for annunciation of high water level.

2C.5 STRUCTURAL STEEL AND ACCESS PROVISIONS. All structural support steel and exterior access provisions for the scrubber modules will be furnished under separate specifications. The Contractor shall furnish any access provisions required inside the scrubber.

Where practical, piping, ductwork and accessories furnished by the Contractor may be supported by the Owner's structural support steel or platforms. Where supporting in this manner is not practical, the Contractor shall provide support from the scrubber module.

The Owner will furnish a system of stairs and platforms to provide access to the scrubber modules as required for operation and maintenance. The Proposal Data shall include a drawing showing the location of all doors, inspection points and accessories requiring access and showing suggested platform elevations and space requirements.

2C.6 PURGE SYSTEM. An exhaust type purge system shall be provided complete with fans, ductwork dampers and controls. Purge connections shall be located on the scrubber modules or ductwork as required to achieve adequate purging. It is preferred that the system operate by allowing ambient air to enter through the access doors and exhaust through the *purge system connections. The system shall be capable of ventilating any two scrubber modules ~~sufficiently to permit safe entry in a time period of~~ at a rate of 3 air changes per 10 minutes. Purge air dampers shall be constructed of ASTM A167 Type 317L plate having a molybdenum content of not less than 4.5 per cent. A complete description of the system shall be included as part of the Proposal Data.

2C.7 PENETRATION SEAL AIR SYSTEM. If any penetrations require seal air, the Contractor shall provide the system complete with all equipment, piping, valves and controls.

2C.8 WELDING. All welding of shop fabricated components shall be performed in accordance with the requirements of Section 1G. All interior weld surfaces shall be ground smooth.

2C.9 PRESSURE PORTS. Ports shall be provided on each module for monitoring the pressure drop across the module internals, the mist eliminators, and reheater.

*Negotiated Revision

*EPA Request dated Oct 12, 2010, for Information Pursuant to Section 114 . Response #10 of 17 of Appendix B.

Section 2D - LIMESTONE SLURRY PREPARATION EQUIPMENT

2D.1 GENERAL. This section covers the design and construction requirements for the limestone slurry preparation equipment. Except as otherwise specified, the Contractor shall provide a complete slurry preparation, transport, and storage system common to the scrubbers for Units 1 and 2 and an identical system for Units 3 and 4.

The equipment shall be located in the additive preparation building located north of the chimney.

Limestone will be in accordance with the description included in Section 2A.

The Owner will provide the following equipment for each of the two systems.

Additive preparation building

Limestone bulk materials handling and storage equipment complete to the outlet flanges of the limestone feed bins located in the additive preparation building

Drive motor for each ball mill

Slurry transfer and return recirculation loop piping from connection points in the additive preparation building and in the flue gas desulfurization building

Equipment foundations and bases including ball mill pedestals

Water pretreatment sludge transfer equipment to the limestone slurry tanks or other point as required by the Contractor

The system shall have redundancy for all major components. Crosstie piping and valves shall be provided between components to permit continued system operation with both generating units associated with the common system in the event of failure of an individual component.

The equipment shall be designed to operate safely and reliably at 100 per cent of the flow rate required when both steam generator units being served by a slurry preparation system are operating at maximum continuous rating when burning the highest sulfur content coal.

The system will be designed to utilize water pretreatment lime-soda softening sludge as a supplemental additive.

*EPA Request dated Oct 12, 2010, for Information Pursuant to Section 114 . Response #10 of 17 of Appendix B.

Seismic design criteria for the limestone slurry preparation equipment shall be in accordance with Classification E-I, Performance Level N as defined in Section 1S.

2D.2 CONTRACTOR-FURNISHED EQUIPMENT. The limestone slurry preparation equipment shall include, but not necessarily be limited to, the following.

One limestone feed bin cutoff gate per ball mill manufactured by same manufacturer as ball mill, or acceptable equal

One flexible connection per ball mill located between the cutoff gate and the gravimetric feeder

One belt type gravimetric feeder per ball mill manufactured by Wallace & Tiernan, or acceptable equal

Three wet ball mills. Ball mills shall be as manufactured by Allis-Chalmers, Kennedy Van Sauen Corp., Fuller Company, Mine and Smelter Corp., or acceptable equal. Each ball mill shall be capable of processing 30 tons per hour of limestone.

One limestone milled product slurry collection tank per ball mill

Two classifier feed pumps per ball mill

One classifier per ball mill

A distribution device or system to transfer the classified slurry to the high solids content limestone slurry storage tanks. Capability shall be provided to evenly distribute slurry from each classifier to any selected high solids content storage tank or combination of tanks.

Limestone slurry storage tanks as required to provide collectively a minimum of 24 hours storage capacity of high solids content slurry for the maximum slurry usage rate when both associated steam generators are operating at the maximum continuous rating. A minimum of two tanks shall be provided.

A mixing system for the high solids content slurry storage tanks

* ~~High solids content slurry transfer pumps to transfer slurry from any selected High solids content slurry storage tank to any selected limestone slurry feed tanks~~

*Negotiated Revision

*EPA Request dated Oct 12, 2010, for Information Pursuant to Section 114 . Response #10 of 17 of Appendix B.

* ~~One limestone slurry dilution and feed tank for each generating unit. Each tank shall provide a minimum of one hour storage capacity of diluted slurry for the maximum slurry usage rate when the associated steam generator is operating at the maximum continuous rating.~~

~~One top entry turbine mixer per limestone slurry dilution and feed tank plus one spare~~

Piping and valves

Slurry feed pumps to feed slurry from the limestone slurry storage ~~feed~~ tanks to the scrubber modules.

2D.2.1 Limestone Ball Mills. Ball mills shall be specifically designed for wet application and abrasive conditions. It is anticipated that the ball mills will be operated on a schedule requiring up to approximately 360 starts per year. Each ball mill shall accept limestone from the limestone feeder plus water flow at a predetermined ratio of the limestone rate plus the oversized fraction from the classifier.

Each ball mill shall have ball type crushing media. The bulkhead separating the grinding compartments, if provided, shall consist of a welded steel wall, bolted in place within the mill shell. Each mill shall have an inlet spout for limestone and water feed. Each mill shall have an outlet spout at the end of the mill opposite the inlet for discharge of the slurry. Each mill shall have rugged heavy-duty watertight frame of welded or cast steel construction. Liners or any other parts subject to wear shall be replaceable. The main shaft shall be forged alloy steel and shall be equipped with heavy-duty precision type roller antifriction bearings. Each ball mill shall have an automatic lubrication system for all bearings and gears as specified herein under Lubrication. The design shall ensure that thrust is not transmitted through the gear reducer, shaft and coupling to the drive motor.

The mill housing shall include large inspection and maintenance doors. These openings shall be hinged where possible and shall be equipped with watertight seals and bolted closures.

Each ball mill shall be furnished with a gear drive. Gears shall be of forged or cast steel material and shall conform to the latest standards of the AGMA. The ball mill drive motors will be furnished under separate specifications.

2D.2.1.1 Lubrication. Each ball mill shall be furnished with an individual lubricating package for each trunnion bearing and for the gear drive. The trunnion bearings shall be oil lubricated and the gear drives shall be oil or grease lubricated.

*Negotiated Revision

*EPA Request dated Oct 12, 2010, for Information Pursuant to Section 114 . Response #10 of 17 of Appendix B.

Each trunnion bearing lubrication package shall be complete with low pressure pump, high pressure pump, motors, immersion type oil heater, heater contactor, full capacity oil filter, oil level sight gage, stainless steel piping and valves. Each complete package shall be factory wired, assembled, and mounted on one common base. Each trunnion bearing lubrication package shall be furnished complete with instrumentation and control devices required for monitoring and control. All devices shall be mounted, piped, and wired as part of the package to comprise a complete system.

Each trunnion bearing lubrication package shall have a low and high pressure system. The low pressure system shall provide a continuous flow of conditioned oil over the trunnion bearing for ample lubrication during mill operation. The low pressure pump shall circulate oil through a cleanable filter, a check valve, and a flow switch before being deposited over the trunnion of the mill. The flow switch shall annunciate and trip the mill on low oil pressure. The high pressure system shall furnish high pressure oil to lift the trunnion off the bearing during periods of start-up, shutdown, and contraction to ambient length after shutdown. The high pressure pump discharge shall have a check valve, relief valve, and a pressure gage.

Each gear drive shall have a lubrication package complete with all necessary pumps, motors, timers, piping, flexible hoses, and valves for a complete system. The gear drive lube package shall be furnished complete with instrumentation and control devices required for monitoring and control. All devices shall be mounted, piped, and wired as part of the package to comprise a complete system.

Each lubrication package shall incorporate a 480 volt, 3 phase, 60 hertz electric heater. Each heater shall be complete with an in-line full voltage adjustable thermostat or combination thermostat and contactor control capable of interrupting the heater circuit. Heaters for oil reservoirs shall be immersion type. Heaters for drum grease reservoirs shall be drum heaters with spring-loaded toggle clamps for quick installation and removal. Heaters for the trunnion bearing lubrication package shall maintain the oil in the system at the selected temperature for any of the following conditions.

Mill idle

High pressure pump in operation

Ambient temperature 32 F or lower

Heaters for the gear drive lubrication package shall maintain a 60 to 80 F oil or grease temperature in the reservoir when the mill is idle or the ambient temperature is as low as 32 F.

*EPA Request dated Oct 12, 2010, for Information Pursuant to Section 114 . Response #10 of 17 of Appendix B.

All lubricating package electrical devices requiring external connection shall be wired to terminal blocks in a single NEMA 4 junction box. All enclosures for electrical devices and all raceway and wiring interconnecting devices integral to a lubricating package shall be in accordance with Section 1B of these specifications.

Stainless steel internal piping and valving, flexible connections to the mill bearings, and interconnecting piping between the package and the mill bearings shall be furnished. Piping shall be shop fabricated stainless steel, sealed for shipment. All piping shall be provided with sufficient flanges to simplify installation and maintenance. All piping shall be arranged for a neat compact appearance. The arrangement of all piping shall be subject to the acceptance of the Engineer.

All hoses and piping required for the gear drive lube package shall be furnished.

Air requirements for the lube systems shall be listed in the Proposal Data. Filter regulators, if required, shall be furnished in accordance with Section 1B.

Control and instrumentation devices such as pressure switches, pressure gages, air regulator and solenoid valves shall meet the requirements of Section 1B. Motor starters will be furnished under separate specifications.

Motors for the lubricating packages shall be supplied in accordance with the requirements of Section 1E. Control and alarm circuit voltages shall be as specified in Section 1B.

*2D.2.1.2 Ball Mill Transmitted Vibration Limits - Both static and dynamic balancing shall be performed in the shop prior to shipment of the Ball mills. Dynamic balancing of each Ball mill motor in the shop and subsequently in the field after installation shall be to the extent required to decrease vibration imposed upon the drive motor to a value less than the allowable by NEMA standards for electric drive motors.

Unless mutually agreed upon by the equipment manufacturer and the motor manufacturer, vibration shall not be transmitted through the coupling from the equipment to the motor, for any normal load condition. The equipment manufacturer shall be responsible for any damage to the motor caused by transmitted vibration in excess of that specified or mutually acceptable.

2D.2.1.3 Ball Mill Accessories. Each ball mill shall be furnished with the accessories specified herein.

Safety guards shall be furnished as specified in Section 1B.

*Negotiated Revision

*EPA Request dated Oct 12, 2010, for Information Pursuant to Section 114 . Response #10 of 17 of Appendix B.

Bearing temperature detectors shall be provided on the ball mill bearings as specified in Section 1B.

A Robertshaw Model 365-A-7 Vibraswitch and one Model 561E Control Unit, or acceptable equal, shall be provided on each mill radial bearing. These excess vibration detection devices shall be in NEMA 4 housings. They will be connected to the Owner's alarm and interlock system under separate specifications.

2D.2.1.4 Speed-torque Curves. The Contractor shall furnish speed-torque curves for the ball mills. The curves shall indicate the torque which the ball mill drive motors will be required to furnish during the most severe starting, accelerating, and operating conditions including the brake horsepower required to start and accelerate the ball mills when fully loaded.

2D.2.2 Classifier. A classifier shall be furnished for each ball mill to remove the oversized material from the limestone slurry. The classifier may be of the screen, wet cyclone, or spiral type. The oversized fraction of the slurry removed by the classifier shall be collected, diluted, and returned to the ball mill for reprocessing.

The classifier equipment shall be constructed of abrasion resistant material. The classifier shall be designed and sized so as to be capable of continuously handling the maximum output slurry from the ball mill.

2D.3 CONTROL. All equipment in the limestone slurry preparation system shall be remotely monitored and controlled from the scrubber additive preparation control panel. Controls shall be in accordance with the requirements of Sections 2N and 3H.

A complete description of the controls shall be included as part of the Proposal Data.

2D.4 TANKS. Tanks shall be furnished in accordance with the requirements of Section 2E.

2D.5 MIXERS. Mixers shall be furnished in accordance with the requirements of Section 2F.

2D.6 PUMPS, PIPING, AND VALVES. Pumps, piping, and valves shall be in accordance with the requirements of Sections 2G, 2H, and 2I, respectively.

*EPA Request dated Oct 12, 2010, for Information Pursuant to Section 114 . Response #10 of 17 of Appendix B.

Section 2E - TANKS

2E.1 GENERAL. This section covers the design and construction criteria for the flue gas scrubber tanks.

The Owner will provide the recycle water storage tank for water returned from the solids dewatering equipment.

*The Owner will provide tanks for normal and supplemental makeup water.

The Contractor shall provide the following tanks.

Limestone milled product slurry collection tanks

Limestone slurry storage tanks

** ~~Limestone/slurry/dilution/and/feed/tanks~~

Reaction tanks

All other tanks associated with flue gas scrubber equipment furnished under these specifications, as required by the Contractor's design

Reaction tank shall be defined as a tank used for collecting slurry or solution from a module outlet and returning it by means of the scrubber recirculation pumps to the spray absorption section.

Tanks shall be shop fabricated unless prohibited by shipping restrictions.

The following subsections apply to shop fabricated and field erected tanks respectively.

Subsection 2E1	SHOP FABRICATED TANKS
Subsection 2E2	FIELD ERECTED TANKS

2E.2 SIZING CRITERIA. Tanks shall be sized in accordance with the following criteria.

Reaction tanks	Volume adequate for the required reaction of the sulfur dioxide with the scrubber slurry but in no case less than necessary to provide a retention time of 10 minutes
Limestone slurry tanks	As specified in Section 2D

*Addendum No. 1
**Negotiated Revision 120481

*EPA Request dated Oct 12, 2010, for Information Pursuant to Section 114 . Response #10 of 17 of Appendix B.

2E.3 MATERIALS. Tank materials shall be as follows.

	Tank	Shell and Heads	Nozzles and Flanges	Structural Shapes
	Limestone Slurry Collecting Tank	ASTM A283 Gr C or D	Carbon steel	ASTM A36
	Limestone slurry Storage Tank	ASTM A283 Gr C or D	Carbon steel	ASTM A36
**	~~Limestone/Slurry Feed/Tank~~	~~ASTM/A283 Gr/C/or/D~~	~~Carbon/steel~~	~~ASTM/A36~~

Reaction tank materials shall be the same as the scrubber module materials specified in Section 2C. Alloy construction shall be maintained through */**and including the connection flanges. For the rubber lining ~~alternative~~ option, the rubber lining shall be maintained through and including the connection flanges. Exterior bracing shall be accomplished using materials that will preserve the integrity of the shell material.

**For the rubber lining ~~alternative~~ option, rubber lining materials and application requirements shall be as specified in Section 3M.

2E.4 CONFIGURATION. All tanks shall be of the closed top type.

The reaction tanks shall be arranged to permit the use of top entry turbine type mixers. Configurations utilizing support tunnels through the tank or through the scrubber module for support of mixers will not be permitted.

*Negotiated Revision
**Negotiated Revision 120481

*EPA Request dated Oct 12, 2010, for Information Pursuant to Section 114 . Response #10 of 17 of Appendix B.

Subsection 2E1 - SHOP FABRICATED TANKS

2E1.1 GENERAL. This subsection covers the design and construction criteria and fabrication for the flue gas wet scrubber shop fabricated tanks.

Tanks shall be furnished complete including all supports, platforms, walkways, covers, manholes, handholes, gaskets, bolts, vents, standpipes, interior and exterior piping, overflows, skirts, wear plates, nozzles, hanger lugs, piping connections, level gages, and other appurtenances as required for the application.

The general arrangement of the tanks, including the locations of piping, accessories, and other appurtenances shall be as required by the Contractor's design and shall be acceptable to the Engineer.

2E1.2 TYPE. Vertical cylindrical tanks shall be provided for applications requiring agitation or mixing of slurries.

Other tanks shall be of a type as required by the Contractor's design.

2E1.3 CODE REQUIREMENTS. Tanks shall be designed and constructed in accordance with the requirements of API Standard 650 Appendix J or shall be noncoded tanks constructed in accordance with ASME requirements. Other code requirements are specified in Section 2A.

2E1.4 DESIGN CRITERIA. Each tank shall be an atmospheric tank. Ambient temperature and other external loading design criteria are specified in Section 2A.

Seismic design criteria for the shop fabricated tanks shall be in accordance with Classification E-I, Performance Level G as defined in Section 1S. Support structures for elevated tanks shall be designed in accordance with Classification S-III as defined in Section 1S.

Certified mill test reports covering all plates and structural shapes to be used in the work shall be furnished as evideuce that such materials are new and in compliance with the governing specifications. Copies of each such mill test report shall be submitted to the Engineer prior to the fabrication of the material covered thereby.

Shell thicknesses for the tanks shall be as required for the application but not less than 1/4 inch.

*All tank drains shall be located as close to the tank bottom as practical.

2E1.5 CONSTRUCTION. Each tank shall be of all welded construction and shall be in accordance with the following requirements.

*Negotiated Revision

*EPA Request dated Oct 12, 2010, for Information Pursuant to Section 114 . Response #10 of 17 of Appendix B.

2E1.5.1 Welding. Welding procedures, welders, and welding operators shall be qualified in accordance with Section IX of the ASME Boiler and Pressure Vessel Code.

*EPA Request dated Oct 12, 2010, for Information Pursuant to Section 114 . Response #10 of 17 of Appendix B.

Records of operator and procedure qualifications shall be maintained by the Contractor and shall be made available to the Project Manager or Engineer upon request.

Shell joints shall be welded butt joints with complete penetration for the full length of the weld and shall be free from undercuts, overlaps, or abrupt ridges.

Flame cut edges, including edges of handholes in tank skirts, shall be ground smooth.

Tank components shall be carefully fitted to form joints which are free of voids. Voids filled with weld metal will not be acceptable.

2E1.5.2 Flange Bolting. Alloy steel bolting shall be used for joining all steel flanges and shall conform to the following.

Bolting shall conform to the requirements of ANSI B16.5.

Bolting shall consist of threaded studs and two nuts for each stud.

Material for studs shall be ASTM A193, Grade B7.

Nuts shall be heavy hexagonal type conforming to ANSI B18.2 and shall be of material conforming to ASTM A194 Grade 2H.

2E1.5.3 Connections. The ends of butt welding nozzles shall be prepared by machining in accordance with the requirements of Section 2H. The ends of butt welding nozzles shall be internally trimmed by machining where required to match connecting pipe.

All flanges shall be raised face weld neck type.

Tank connections 2 inches and smaller shall be 3000 pound Bonney Thredolets or Sockolets.

Internal and external tank piping 2 inches and smaller shall be not less than Schedule 80.

2E1.5.4 Dished Heads. Tanks requiring dished heads shall be supplied with standard flanged and dished heads.

The metal thickness of tank heads shall be not less than the shell thickness.

2E1.5.5 Flat Heads and Flat Shells. Flat heads, flat shell, and flat portions of any tank shall be stiffened. Stiffeners shall be internal to

*EPA Request dated Oct 12, 2010, for Information Pursuant to Section 114 . Response #10 of 17 of Appendix B.

the tank and shall be of the smooth, formed, structural shape type, continuously welded to the flat surfaces. Stiffening shall be sufficient to prevent waves and bellying of flat surfaces when the tank is full to its capacity. Stiffeners shall be of the same material as the tank.

2E1.5.6 Lifting Lugs. All tanks shall be provided with lifting lugs.

2E1.5.7 Skirts. Skirt supported tanks shall have all skirt access openings reinforced and pipe penetrations sleeved.

2E1.5.8 Manholes. Manholes shall be Varec 220, having cast steel bases and cast iron covers. Eyebolts, wing nuts, cover stops, and all other parts of the manhole cover assembly shall be carbon steel.

2E1.5.9 Gaskets. Three sets of permanent gaskets for all manholes, handholes, and blind flanges shall be furnished and shipped separately. All manhole covers, handhole covers, and blind flanges shall be fitted with temporary gaskets for use during shipment and erection. The permanent gaskets shall be shipped in wooden boxes identified by tank name.

Except as otherwise specified, gaskets shall be Flexitallic as manufactured by the Flexitallic Gasket Company.

2E1.5.10 Walkways and Platforms. Walkways and platforms shall be provided where required and shall be in accordance with the requirements of Section 2P.

Ladders are acceptable only where stairs are not practicable.

2E1.6 TESTING. Tanks shall be tested by filling with water.

Leak test reports shall precede or accompany the tank shipment. The reports shall state test requirements and the observed results. These reports shall contain the signature and title of the Contractor or authorized contract representative of the agency performing the tests.

2E1.7 CLEANING, PAINTING, AND COATING. The exterior and interior of the tanks shall be cleaned and painted or coated in accordance with the requirements specified herein.

Except as otherwise specified herein, exposed iron and steel surfaces shall be protected by suitable paint or coatings applied in the shop. Surfaces shall be cleaned and prepared in the shop. All mill scale, oxides, and other coatings shall be removed. Exposed surfaces shall be finished smooth, thoroughly cleaned, and filled as necessary to provide a smooth uniform base for painting. Surfaces to be painted after installation shall be shop painted with one or more coats of a primer which will protect the equipment until finish coats are applied. Ferrous surfaces, which should not be painted, shall be coated with a preservative coating, as specified in Section 1H.

*EPA Request dated Oct 12, 2010, for Information Pursuant to Section 114 . Response #10 of 17 of Appendix B.

Surfaces prepared for field welding shall be left unpainted for a distance of 3 inches from the weld. These surfaces shall be coated with rust preventive compound.

Unless otherwise recommended by the coating manufacturer, tank surfaces shall be blasted to a commercially clean surface finish in accordance with Steel Structures Painting Council Standard SSPC-SP6 "Commercial Blast Cleaning."

Surface cleaning with power tools shall be done in accordance with SSPC-SP3 "Power Tool Cleaning."

Tank surfaces shall be painted or coated immediately after surface preparation and cleaning, and application shall be in strict conformance with the paint or coating manufacturer's recommendations.

Paint shall be applied by skilled and experienced painters. Paint films which show sags, checks, blisters, teardrops, or fat edges will not be accepted and any painted surface which contains any of these defects shall be repaired or, if necessary, entirely removed from the member or unit involved and the surface repainted.

All exterior surfaces of tanks, except reaction tanks, shall be shop prime painted as specified in Section 1H.

Tank interiors shall be given a protective lining or coating which is acceptable to the Engineer. The Contractor shall submit a letter of certification from a representative of the lining or coating manufacturer verifying that the overall coating meets the standards of the coating manufacturer. The entire lining or coating system shall be checked for pinholes and holidays using a suitable saline solution and a nondestructive holiday detector at a voltage as specified by the lining or coating manufacturer. Defective areas shall be recoated and retested until the entire lining or coating is free from defects. All interior tank cleaning, sandblasting and application of the interior protective linings or coatings shall be done in accordance with the manufacturer's recommendations by an applicator who is authorized and approved by the lining or coating manufacturer and who is thoroughly experienced in the application of the materials.

2E1.8 PROTECTION DURING SHIPMENT. All tanks shall be thoroughly cleaned before shipment. All weld connections, flanged connections, and other openings shall be covered with tightfitting heavy sheet metal closures, securely attached, to prevent entry of dirt and moisture and to protect the interior of the tank. Sheet metal closures at tank openings shall be carefully sealed with an adhesive backed waterproof cloth tape. All exposed threads shall be greased and protected with metallic or other substantial type protectors. Female threaded openings shall be plugged.

*EPA Request dated Oct 12, 2010, for Information Pursuant to Section 114 . Response #10 of 17 of Appendix B.

Subsection 2E2 - FIELD ERECTED TANKS

2E2.1 GENERAL. This subsection covers the design and construction criteria and shop fabrication for the flue gas wet scrubber field erected tanks.

Each field erected tank shall be erected on a concrete slab foundation provided under separate specifications.

Field erection work for the tanks is covered in Section 3E.

2E2.2 TYPE. Each tank shall be of the aboveground vertical cylindrical type.

2E2.3 CODE REQUIREMENTS. Each tank and appurtenances shall be designed and constructed in accordance with the requirements of API Standard 650 or 620 as applicable and the code requirements of Section 2A.

2E2.4 DESIGN CRITERIA. Except as otherwise specified or required by the Contractor's design, each tank shall be an atmospheric tank designed in accordance with the following criteria.

Design pressure, maximum pressure, and ambient temperature	As specified in Section 2A
Metal thicknesses	
Roof and shell courses	As required by design conditions, but not less than 1/4 inch
Bottom	As required by design conditions, but not less than 3/8 inch

Reaction tanks which are subject to pressurization by the flue gas stream shall be designed for internal pressure and vacuum conditions as specified in Section 2A.

Seismic design criteria for the field erected tanks other than the reaction tanks shall be in accordance with Classification S-IV as defined in Section 1S. The reaction tanks shall be in accordance with Classification E-I, Performance Level G.

2E2.5 CONSTRUCTION. Each tank shall be of the metal arc welded construction and shall be constructed in accordance with the applicable requirements of API Standard 650 or API Standard 620.

Welding of the reaction tanks shall be in accordance with the requirements of Section 1G.

*EPA Request dated Oct 12, 2010, for Information Pursuant to Section 114 . Response #10 of 17 of Appendix B.

2E2.5.1 Roofs. Each tank roof, if applicable, shall be of the self-supporting type.

2E2.5.2 Bottoms. Except as otherwise specified, each tank bottom shall have a center crown of one inch per 10 feet of tank radius.

The reaction tank bottoms shall be sloped as required to prevent accumulation of sludge or fly ash and for ease of cleanout.

Requirements for periodic cleanout and the provisions made for this shall be stated in the Proposal Data.

2E2.5.3 Joint Design. Each shell plate joint shall be of the double welded butt joint type with complete penetration.

Joints in the roof and bottom plates of the reaction tanks shall be double welded butt joint type with complete penetration.

Joints in the roof and bottom plates of tanks other than the reaction tanks shall be of the lap welded type.

Interior weld surfaces of the reaction tanks shall be ground smooth. Exterior weld surfaces of the reaction tanks shall be ground to remove sharp edges and weld spatter.

2E2.5.4 Materials. Certified mill test reports covering all steel plates and structural shapes to be used in the work shall be furnished as evidence that such materials are new and in compliance with the governing specifications. Copies of each such mill test report shall be submitted to the Engineer prior to the fabrication of the material covered thereby.

2E2.6 TANK APPURTENANCES. All tank appurtenances specified herein shall be furnished and completely installed.

2E2.6.1 Roof Manholes. Each tank shall be provided with a Varec No. 220 hinged hatch not less than 30 inch outside diameter in size and shall be provided with a locking device.

2E2.6.2 Shell Manholes. Each tank shall be provided with a shell manhole of the flanged circular type with an inside diameter of 24 inches. Shell manholes shall be designed and constructed in accordance with the requirements of API Standard 650.

2E2.6.3 Platforms and Walkways. The Contractor shall provide all platforms on the tanks as required for inspection and maintenance.

The Contractor shall provide walkways from the edge of the tank to the platforms, manholes and all roof mounted appurtenances and connections.

*EPA Request dated Oct 12, 2010, for Information Pursuant to Section 114 . Response #10 of 17 of Appendix B.

The Owner will provide access stairs and ladders from the ground or from adjacent platforms to interface with the Contractor-furnished access provisions.

Closed top tanks with mixers shall be provided with platforms for mixer inspection and maintenance.

Walkways on closed top tanks shall be of the abrasive nonslip floor coating type.

Walkways and platforms shall be completely enclosed with handrails and kickplates.

Platforms, grating type walkways, ladders, stairs, handrails, and kick-plates shall be in accordance with the requirements of Section 2P.

2E2.6.4 Piping Connections. Piping connections shall be provided as required.

All flanges shall be of the 150 pound weld neck type.

Tank connections shall be flanged unless otherwise specified.

Tank connections 2 inches and smaller shall be Bonney 3000 pound Thred-olets or Sockolets.

Connections to the reaction tank shall include, but not necessarily be limited to, the following.

Inlet connection(s) for scrubber module slurry discharge to the tank

Inlet connection for limestone slurry

Inlet connection for reclaimed water from the sludge de-watering equipment

Inlet connection for makeup water

* Connections for future oxidation system

Outlet connections for slurry recirculation to the pump suction

Outlet connection for gravity drain of blowdown stream to collection sump

Outlet connection for draining the entire reaction tank for maintenance

2E2.6.5 Vacuum Breaker. Each closed top tank shall be designed for the maximum vacuum or shall be provided with the vacuum breaker sized for the maximum flow rate encountered when draining or pumping out of the tank.

*Negotiated Revision

*EPA Request dated Oct 12, 2010, for Information Pursuant to Section 114 . Response #10 of 17 of Appendix B.

2E2.6.6 Mixers. Mixers shall be provided in accordance with the requirements of Section 2F. All tanks requiring turbine type mixers shall be arranged to permit the use of top entry mixers.

2E2.6.7 Cleanout Fittings. Each reaction tank shall be provided with at least one flush type cleanout fitting. The flush type cleanout fitting shall be at least 24 inches by 52 inches and shall be designed in accord-
*ance with the requirements of API 650. All cleanout fittings shall be located as close to the tank bottom plate as practical.

The collection sump provided in the flue gas desulfurization system building will be used for draining the reaction tanks. Each reaction tank shall be provided with piping and valves to drain the tank to the sump.

2E2.7 SHOP SURFACE PREPARATION AND COATING. No shop surface preparation of tank materials is required. The tanks shall be field sandblasted and coated as specified in Section 3E.

The Contractor shall propose, furnish, and apply tank interior coatings which are suitable for the service conditions. The coatings shall be acceptable to the Engineer.

*Negotiated Revision

*EPA Request dated Oct 12, 2010, for Information Pursuant to Section 114 . Response #10 of 17 of Appendix B.

Section 2F - MIXERS

2F.1 GENERAL. Mixers shall be provided to agitate the slurry in the tanks provided with the flue gas scrubber system.

Tanks provided with mixers shall include, but not necessarily be limited to, the following.

Scrubber reaction tanks
Limestone slurry storage tanks
* ~~Limestone/slurry/dilution/and/feed/tanks~~

Turbine type mixers shall be provided for the following tanks.

Scrubber reaction tanks
~~Limestone/slurry/dilution/and/feed/tanks~~

Turbine type mixers or air jet agitation mixers shall be provided for the following tanks.

Limestone slurry storage tanks

Seismic design criteria for the mixers shall be in accordance with Classification E-I, Performance Level N as defined in Section IS.

2F.2 TURBINE TYPE MIXERS. Turbine type mixers for all tanks shall be of the top entry type.

Mixers shall be as manufactured by Chemineer, Mixing Equipment Company, Eastern Industries, Philadelphia Gear, or acceptable equal.

Mixers shall be designed for continuous operation 24 hours a day. Mixers shall operate without overloading, jamming or excessive vibration. Satisfactory operation shall be demonstrated during equipment start-up. The mixers shall be capable of resuspending material after a 24 hour period of settling. The mixers shall produce flow patterns capable of providing complete motion on the tank bottom such that all particles are either off the bottom or in continuous motion on the tank bottom. The mixers shall be capable of operation over the anticipated range of liquid level variation within the tank while maintaining dynamic and hydraulic stability.

For the forced oxidation option, the turbine type mixers provided in the reaction tank shall be capable of achieving the specified mixing performance both with or without operation of the forced oxidation system.

The baseplate, motor, drive and all other components located external to the tank shall be provided with corrosion resistant coatings.

*Negotiated Revision 120481

*EPA Request dated Oct 12, 2010, for Information Pursuant to Section 114 . Response #10 of 17 of Appendix B.

Each mixer shall be furnished as a complete unit with gear reducer and motor on a common baseplate.

The drive shall have antifriction bearings throughout and shall be designed to absorb the maximum possible loads from fluid mixing including torque, thrust, and unbalanced hydraulic load. All bearings within the drive, including output shaft bearings shall have an AFBMA L-10 rating of 250,000 hours minimum for operation at full motor nameplate horsepower at design speed.

The minimum AGMA service factor of the drive shall be 2.0 based on the nameplate rating of the drive motor. The AGMA horsepower rating of the drive shall be shown on the drive nameplate.

The gears shall be accessible without disassembling the inner parts of the drive. Lubrication of the mixer speed reducer shall be by means of oil bath or oil spray to ensure constant flow of oil to all gear surfaces. A positive seal shall be provided to prevent oil leakage down the output shaft. The speed reducer shall be equipped with a change gear feature which permits easy replacement or speed change.

The shaft and impeller shall be constructed of corrosion-erosion resistant metal alloys specifically suited for long life in the intended service. Rubber coatings may be provided in lieu of metal alloy construction. If a rubber coating is provided on the shaft or impeller, it shall have a minimum overall thickness of 1/8 inch with an additional 1/8 inch buildup on any edge. The operating speed of the shaft and impeller assembly shall not exceed 70 per cent of the first critical speed of the assembly. Stress in the impeller shaft shall not exceed 8,000 psi under maximum operating load. Stress in any other impeller component shall not exceed 11,000 psi under maximum operating load.

If requested, calculations pertaining to sizing of components including impeller and shaft stresses and critical speed shall be submitted to the Engineer.

2F.3 AIR JET AGITATION MIXERS. Each mixer shall be furnished complete with blowers, motor drives, piping, valves, nozzles, controls and accessories required for a complete system. A central blower facility shall be furnished with a minimum of two blowers, one of which shall be a standby.

Mixers shall operate without overloading or excessive vibration. Satisfactory operation shall be demonstrated during equipment start-up.

Air from the blowers shall be discharged below the water level of the tanks and shall induce complete mixing.

Blowers shall be designed and constructed with adequate pressure and flow capability to ensure complete motion on the tank bottom such that all

*EPA Request dated Oct 12, 2010, for Information Pursuant to Section 114 . Response #10 of 17 of Appendix B.

particles are either off the bottom or in continuous motion on the tank bottom. The mixer shall be capable of operation over the anticipated range of liquid level variation within the tank while maintaining dynamic and hydraulic stability.

Except as otherwise specified, blowers shall be in accordance with the applicable requirements of Section 2M. The blower shaft stress shall not exceed 8,000 psi under maximum operating load. The minimum AGMA service factor of the drive shall be 2.0 based on the nameplate rating of the drive motor. The AGMA horsepower rating of the drive shall be shown on the drive nameplate. All bearings within the drive including output shaft bearings shall have an AFBMA L-10 rating of 250,000 hours minimum for operation at full motor nameplate horsepower at design speed.

2F.4 MODEL STUDY. A model study of the effectiveness of the mixers shall be performed. The model study shall be made of the tanks including baffles and other tank internals. A copy of the model study shall be submitted.

A description of the model study shall be submitted as part of the Proposal Data.

2F.5 MOTORS. Mixer and blower motors shall be in accordance with the requirements of Section 1E.

*EPA Request dated Oct 12, 2010, for Information Pursuant to Section 114 . Response #10 of 17 of Appendix B.

Section 2G - PUMPS

2G.1 GENERAL. This section covers generic design, construction and performance requirements for pumps furnished under these specifications.

All pumps required for operation of the slurry preparation and feed system and the scrubber system shall be furnished under these specifications. Pumps to be furnished shall include but not be limited to the following.

Classifier feed pumps

Limestone slurry (milled product) transfer pumps

Limestone slurry feed pumps

Scrubber recirculation pumps

Mist eliminator wash pumps

Recycle water pumps

* Makeup water booster pumps

All other pumps associated with flue gas scrubber equipment furnished by the Contractor

With the exception of the case where a scrubber recirculation pump is dedicated to an individual spray level or stage, each pumping system shall be provided with a standby pump completely piped to the system and provided with controls for both automatic and manual start and stop. Each pumping system other than the scrubber recirculation pumping system shall include two "full capacity" pumps, except for larger systems where full capacity pumps would not be economical. For these larger capacity systems, a standby pump equal in size to the required pumps shall be provided.

In-place standby pumps are not required for scrubber recirculation pumps for designs where one pump is dedicated to each spray level or stage on ~~each module. However, one spare scrubber recirculation pump, without motor, shall be furnished,~~ each module. However, for designs utilizing dedicated scrubber recirculation pumps, one spare pump of each size and type proposed shall be furnished for each generating unit. The spare pump(s) shall be furnished without motor(s). The spare pump(s) shall be stored as directed by the Construction Manager.

The scrubber recirculation pumps shall be manufactured by Warman Inter-
**national Inc. or A-S-H Pump Division of Envirotech Corporation. Owner shall have the option of selecting the manufacturer of the recirculation
***pumps. Recycle pumps shall have a horizontal bottom discharge.

*Addendum No. 1
**Negotiated Revision
***Negotiated Revision 120481

*EPA Request dated Oct 12, 2010, for Information Pursuant to Section 114 . Response #10 of 17 of Appendix B.

All other pumps handling slurries shall be manufactured by Warman International Inc., A-S-H Pump Division of Envirotech Corporation, Morris Pumps Inc. or Galigher Company.

*EPA Request dated Oct 12, 2010, for Information Pursuant to Section 114 . Response #10 of 17 of Appendix B.

General service pumps shall be manufactured by Ingersoll-Rand Company, Byron Jackson Pump Division of Borg-Warner, Goulds Pumps Incorporated, Allis-Chalmers Industrial Pump Division or Worthington Pump Corporation.

*~~The Owner will provide any makeup water booster pumps required.~~

Horizontal centrifugal pumps are preferred for all applications; however, other types of pumps will be considered where best suited for a specific application.

All pumps shall be designed for ease of dismantling for inspection and maintenance.

Pump sizing and construction requirements are specified in the following subsections.

Subsection 2G1	GENERAL SERVICE PUMPS
Subsection 2G2	SLURRY PUMPS

2G.2 MATERIALS. All pumps shall be constructed of corrosion-erosion resistant materials specially suited for long life in the intended service.

2G.3 PUMP ACCESSORIES. The pumps shall be furnished with the following accessory equipment.

2G.3.1 Couplings and Guards. Each pump shall be furnished with a shaft coupling and guard. The couplings shall be spacer type if required to permit replacement of the pump shaft seals without disturbing the motor drive. Shaft couplings and guards shall also be provided at the input and output shafts of variable speed drives, if applicable.

Couplings and coupling guards shall be in accordance with the requirements of Section 1B.

2G.3.2 Baseplates. Each pump shall be provided with a baseplate. The baseplate shall be common to the pump, motor and variable speed drive if applicable. Baseplates shall be in accordance with the requirements of Section 1B. Motor mounting provisions shall be subject to approval of the motor manufacturer. No components shall be required to be dismantled for grout placement.

2G.3.3 Miscellaneous Trim. All piping, valves, strainers, pressure regulators and filters required for seal or stuffing box injection water, air vent valves, oil level indicators, grease lubricators, and other miscellaneous accessories shall be furnished.

2G.3.4 Temperature Detectors. Bearings for the pumps listed below shall be furnished with temperature detectors as specified in Section 1B. The

*Addendum No. 1

*EPA Request dated Oct 12, 2010, for Information Pursuant to Section 114 . Response #10 of 17 of Appendix B.

bearings and bearing housings shall be drilled and tapped as required. Thermocouples shall have magnesium oxide packed stainless steel sheaths. Cast iron weatherproof connection heads and nipples shall be provided, and the temperature detectors shall be completely installed and wired to terminal boxes.

Scrubber recirculation pumps

Mist eliminator wash pumps

2G.4 PUMP DATA SHEETS. Pump data sheets will be submitted to the Contractor for completion. The Contractor shall fill out a form for each pump furnished under these specifications and forward copies to the Engineer in accordance with the requirements of Section 1C.

2G.5 CHARACTERISTIC CURVES. Characteristic curves for each pump shall be submitted in accordance with the requirements of Sections 1C and 2A.

Speed-torque curves for the pumps shall be submitted.

2G.6 MOTORS. Each pump requiring a drive motor rated 349 horsepower or less shall be furnished with a motor. Motors shall be in accordance with the requirements of Section 1E.

*2G.7 SEAL WATER FILTRATION SYSTEM. The Contractor shall provide a seal water filtration system for each unit to filter the cooling tower blowdown used for pump seals.

Each filtration system shall be sized for the seal water requirements for the scrubber area and the limestone preparation area. Solids retention shall be 40 microns, and the system shall be sized based on the suspended solids concentration specified in Section 2A. The equipment for each unit shall consist of redundant booster pumps of stainless steel construction, multiplex filter unit valved to operate and backwash in parallel on a common inlet, filter system controls, and all required piping as specified in Section 2H. The filtration unit shall be the automatic multiplex type. The manufacturer shall be acceptable to the Engineer.

*Negotiated Revision

*EPA Request dated Oct 12, 2010, for Information Pursuant to Section 114 . Response #10 of 17 of Appendix B.

Subsection 2G1 - GENERAL SERVICE PUMPS

2G1.1 GENERAL. This subsection covers the sizing and construction requirements for the general service pumps.

Seismic design criteria for the general service pumps shall be in accordance with Classification E-I, Performance Level N as defined in Section 1S.

2G1.2 SIZING CRITERIA. General service pumps shall be sized with a margin of at least 10 per cent on head and 5 per cent on flow capacity to ensure that the scrubber can achieve its specified rating.

Centrifugal pumps shall not utilize the largest impeller available for the selected model and size.

2G1.3 SHAFT SEALS. Mechanical shaft seals are preferred for water service.

2G1.4 CONNECTIONS. Suction and discharge connections 2-1/2 inches nominal size and larger shall be flanged. Connections 2 inches nominal size and smaller shall be screwed.

2G1.5 BEARINGS. Pump bearings shall be of the oil-lubricated sleeve or antifriction type.

Antifriction bearings shall be designed for AFBMA L-10 life rating of not less than 30,000 hours.

*EPA Request dated Oct 12, 2010, for Information Pursuant to Section 114 . Response #10 of 17 of Appendix B.

Subsection 2G2 - SLURRY PUMPS

2G2.1 GENERAL. This subsection covers the sizing and construction requirements for the slurry pumps furnished under these specifications.

Seismic design criteria for slurry pumps other than scrubber recirculation pumps shall be in accordance with Classification E-I, Performance Level N as defined in Section 1S. Scrubber recirculation pumps shall be in accordance with Classification E-I, Performance Level G.

Flow rate regulation, where required, shall be accomplished by means of variable speed drives on the pumps. Throttle valves shall not be used for automatic control of flow rate.

2G2.2 SIZING CRITERIA. Slurry pumps shall be sized such that margins of at least 20 per cent on head and 10 per cent on flow capacity can be achieved beyond design ratings.

Slurry pumps shall incorporate the optimum impeller diameter for a selected model and size. Provisions shall be made to accommodate changes in head or flow by a change in pump speed.

Impeller tip speed shall not exceed 5,000 feet per minute.

2G2.3 CASING LINERS. Casing liners shall be of pressure molded rubber and of one-piece construction. The liners shall have heavy metal inserts and bolts through the casing to positively hold them in place in critical areas without the use of adhesives. Liners shall be at least one inch
*thick. If required by discharge head considerations, liners of hardened iron will be considered.

2G2.4 IMPELLERS. Impellers shall have precision cast-in shaft threads as opposed to an impeller nut or insert.

**~~Where~~ Rubber lined impellers ~~are used, they shall be~~ of one-piece pressure injection molded construction shall be provided. Two-piece impellers
*which are bolted together are not acceptable. If required by discharge head considerations, impellers of hardened iron will be considered.

The impeller design shall include provisions to reposition the impeller to rednce clearances due to wear.

2G2.5 SHAFT SEALS. Packed stuffing boxes with lantern ring seals utilizing water injection to the seals shall be provided. Water will be available from the sources described in Section 2A. Any treatment or filtration equipment required shall be provided.

2G2.6 CONNECTIONS. All pumps shall be provided with flanged suction and discharge connections designed for through bolting.

*Negotiated Revision
**Addendum No. 1

*EPA Request dated Oct 12, 2010, for Information Pursuant to Section 114 . Response #10 of 17 of Appendix B.

A listing shall be provided, as part of the Proposal Data, of the pumps which require seal injection water. The quality and quantity of seal water required shall be stated in the listing.

2G2.7 BEARINGS. Pump bearings shall be oil lubricated sleeve or grease lubricated antifriction type.

Antifriction type bearings for slurry service shall have a minimum AFBMA L-10 rating of 50,000 hours.

Pumps shall be provided with thrust bearings where required for the ap-
*plication. Thrust bearings shall be of the Kingsbury type.

Seals shall be provided on both ends of each bearing assembly.

**2G2.8 VARIABLE SPEED DRIVES. Pump variable speed drives shall be fluid drives as manufactured by American Standard or Blue Chip couplings as manufactured by Borg-Warner or Philadelphia Gear Corporation. The control system for the variable speed coupling shall provide for remote modulation of the pump flow.

Drives shall be furnished complete with all required accessories including but not limited to oil pumps, coolers, heaters, controls, piping and trim. Oil systems shall be designed to serve all components including drive motors.

Cooling water supply will be as specified in Section 2A.

*Addendum No. 1
**Negotiated Revision

*EPA Request dated Oct 12, 2010, for Information Pursuant to Section 114 . Response #10 of 17 of Appendix B.

Section 2H - PIPING

2H.1 GENERAL. This section covers the scope of the piping to be furnished by the Contractor, the extent of Owner-furnished piping, and general requirements applicable to the piping work.

Requirements for piping materials, fabrication and piping supports are covered in the following subsections.

Subsection 2H1 - PIPING MATERIALS
Subsection 2H2 - PIPING FABRICATION
Subsection 2H3 - PIPING SUPPORTS

Piping erection is covered in Section 3F - PIPING ERECTION.

2H.2 CONTRACTOR-FURNISHED PIPING. Except as specified otherwise herein, the Contractor shall furnish all piping, tubing, fittings, valves, specialties, and supports required for or incidental to the operation of the flue gas scrubber system. This shall include the following.

All piping required for a complete flue gas scrubber system except as otherwise specified to be furnished by the Owner

Scrubber blowdown and drain piping from reaction tanks to Owner-furnished collection sump

All miscellaneous piping required for operation including but not limited to pilot lines, vents, drains, and connecting lines to and from control valves, regulators, float chambers, gages, mercury columns, gas analyzers, flowmeters, transmitters, pump bearings, pump glands, and gage panels

Drain piping to the floor drains and bell-ups provided by the Owner

All tubing and tubing cable, supports and junction boxes, chemical feeders and similar items as specified and as required for a complete installation

The major portion of holes required in floors, platforms, walls, and roofs for piping 2-1/2 inches and larger will be located by the Engineer and provided under separate specifications. Any additional holes required shall be provided by the Contractor as specified under Section 3F - PIPING ERECTION.

The Contractor shall furnish all piping supports required for piping furnished under these specifications.

*EPA Request dated Oct 12, 2010, for Information Pursuant to Section 114 . Response #10 of 17 of Appendix B.

All necessary connections for testing the equipment such as pressure taps and temperature measurement connections shall be provided.

All carbon steel and stainless steel piping 2-1/2 inches and larger shall be shop fabricated and shipped to the plant site in prefabricated assemblies. Piping 2 inches and smaller may be either shop or field fabricated.

2H.3 OWNER-FURNISHED PIPING. The Owner will furnish and install the following piping under separate specifications.

Reheat water supply and return piping to connections on each coil section as specified in Section 2Q

Soot blowing steam piping to a single valved connection point at the Flue Gas Desulfurization Building at the location indicated on the arrangement drawings

Service air piping to a single valved connection point at each of the following locations as indicated on the arrangement drawings

Flue Gas Desulfurization Building

Slurry Preparation Building

Control and instrument air piping to a single valved connection point on an Owner-furnished supply line or air receiver at grade elevation at each of the following locations as indicated on the arrangement drawings

Flue Gas Desulfurization Building

Slurry Preparation Building

Closed cooling water system supply and return piping, as required, each to a single valved connection at each of the following locations as indicated on the arrangement drawings

Flue Gas Desulfurization Building

Slurry Preparation Building

Normal makeup water piping from the source described in Section 2A to a single valved connection at each of the following locations as indicated on the arrangement drawings

Flue Gas Desulfurization Building

Slurry Preparation Building

*EPA Request dated Oct 12, 2010, for Information Pursuant to Section 114 . Response #10 of 17 of Appendix B.

Supplemental makeup water piping from the source described in Section 2A to a single valved connection at each of the following locations as indicated on the arrangement drawings

Flue Gas Desulfurization Building

Slurry Preparation Building

Additive slurry piping from connections with the Contractor-furnished supply and return recirculation piping at the Slurry Preparation Building to connections with the Contractor-furnished piping at the Flue Gas Desulfurization Building. The locations of the connection points shall be as indicated on the arrangement drawings. The Owner will provide parallel piping systems if required by the Contractor's design.

Floor drains and bell-ups at locations as required by the Contractor

Roof drain piping

Except as otherwise specified, the Owner will provide the piping to the terminal points only and the Contractor shall provide all valves, instruments and controls required for the scrubber system operation.

2H.4 CODE REQUIREMENTS. Except as specified otherwise herein, all materials and fabrication shall be in accordance with the requirements of the American National Standard Code for Pressure Piping, ANSI B31.1-1980, Power Piping and all addenda thereto; and all federal, state, and local regulations, when applicable.

2H.5 DESIGN CRITERIA. Piping shall be properly sized for the design flow rates and for the liquid to be transported. Slurry piping shall be sized to maintain a minimum velocity of 4 feet per second at the minimum flow rate to prevent solids from settling in the line and a maximum velocity of 12 feet per second to minimize erosion. Parallel piping systems shall be provided if required to comply with this requirement. All piping shall be 3/4 inch or larger.

Seismic design criteria for piping shall be in accordance with Section 1S and Subsection 1S3.

Piping systems for slurry service shall be designed to minimize the number of valves and flanged connections.

Scrubber blowdown piping from the reaction tanks to the collection sump shall be by means of gravity drain piping from overflow connections on the reaction tanks. Valves shall not be used in the scrubber blowdown piping system.

*EPA Request dated Oct 12, 2010, for Information Pursuant to Section 114 . Response #10 of 17 of Appendix B.

IP10_002419

Piping systems for transfer of limestone slurry shall be designed to provide continuous circulation of flow in the line. Control of flow from the circulation loop to process equipment shall be by means of on-off shut-off valves in the supply line from the loop to the equipment item.

All piping, valves, and pumps in slurry service whether Contractor or Owner-furnished shall include provisions for automatic and manual water flushing complete with flush water piping provided by the Contractor. All control and isolating valves and all controls, except motor starters, required for flushing operations shall be provided. Manual control for each flushing system shall be from the remote panel of the associated scrubber system. Sufficient storage shall be provided at each end of each pipeline to allow the time needed for flushing of the pipeline with continuous operation of the flue gas scrubber system at rated capacity. A description of provisions for flushing the piping systems shall be included as part of the Proposal Data.

All piping shall be provided with drains of sizes and at locations which are acceptable to the Engineer.

Control and instrument air supply headers shall be one inch or larger copper tubing. Branch air supply headers shall be 1/2 inch or larger copper tubing. Air supply tubing shall be 1/4 inch or larger copper tubing. Tubing materials and fittings shall be in accordance with the requirements of Subsection 2H1.

All piping shall be routed in a manner compatible with the station piping. All slurry piping shall be routed in a manner to eliminate "dead legs" to the maximum extent practicable. Drawings shall be submitted to the Engineer for review showing the routing of all piping. Piping shall not be routed over equipment where a monorail may be installed for maintenance.

Copies of the structural, mechanical, and electrical drawings prepared by the Engineer will be transmitted to the Contractor. It shall be the responsibility of the Contractor to lay out and fabricate the piping to avoid interferences with the structure, crane runways, hoist lift areas, and other equipment.

All valves shall be located to be conveniently accessible from normal operating platforms. A minimum of 7'-6" headroom as measured to the underside of piping, insulation, or pipe hanging devices, whichever is lower, shall be maintained over all walkways. All piping shall be run parallel or perpendicular to equipment and building structure. Piping shall be level unless required otherwise for drainage.

Joints shall be provided as required to facilitate the assembly and disassembly of the equipment. Joints shall be of the flanged type wherever practicable.

The use of screwed connections will be permitted only where all other methods are impractical and shall be subject to the Engineer's concurrence. When connecting to equipment with screwed connections, unions

*EPA Request dated Oct 12, 2010, for Information Pursuant to Section 114 . Response #10 of 17 of Appendix B.

shall be provided to permit removal of the equipment. Threaded end pipe and/or piping 2 inches and smaller shall be Schedule 80 minimum. Any threaded fittings required shall be forged steel of the alloy required for the service.

Cooling water piping at each item served shall be complete with supply and return pressure test connections, return thermowells and thermometers, sight flow indicators and thermal relief valves.

Seal water piping shall be complete with sight flow indicators as specified in Section 2N at each equipment connection.

All necessary provisions for expansion shall be made.

Piping layout shall allow space for insulation and lagging.

All pressure test connections shall be extended to accessible locations. The test connections shall be furnished with valves and shall be capped.

All connection points for instrumentation of the flue gas stream shall terminate 3 inches outside the lagging and shall be constructed of Carpenter Steel Company Alloy 20 Cb-3 steel. Flexible seals shall be provided around the pipe to seal it to the casing and permit expansion movement.

2H.6 DRAWINGS. Shop drawings for shop fabricated piping 2-1/2 inches and larger shall be submitted, including spool sheets and assembly drawings.

The assembly drawings shall indicate the location of and shall identify each fabricated section; shall indicate center-to-center dimensions of piping connections and runs; and shall tie in the location of piping runs to column rows, floor elevations, and other reference points. The assembly drawings shall also list the piping schedule and material in each piping system.

Spool sheets and isometric assembly drawings of each individual piping system shall be submitted.

Spool sheet drawings will not be checked by the Engineer. The Contractor shall be totally responsible for the correct fabrication of the piping in accordance with the drawings and specifications.

Assembly drawings shall be submitted for review as specified in Section 1C. Fabrication of the piping shall not begin until the Engineer has reviewed the assembly drawings.

The Engineer's review of assembly drawings will be for general conformity with the specifications and will guarantee neither accuracy of dimensions on the assembly drawings nor accuracy of dimensions marked on the drawings reviewed by the Engineer.

*EPA Request dated Oct 12, 2010, for Information Pursuant to Section 114 . Response #10 of 17 of Appendix B.

IP10_002421

Sketches of the proposed routing of all piping 2 inches and smaller shall be submitted to the Engineer. The Engineer's acceptance of all routings shall be obtained before the piping is erected.

[IPP 9255 WET SCRUBBER 62.0202]
[022581]
2H-6

*EPA Request dated Oct 12, 2010, for Information Pursuant to Section 114 . Response #10 of 17 of Appendix B.

Subsection 2H1 - PIPING MATERIALS

2H1.1 GENERAL. This subsection covers the requirements for the piping materials to be furnished under these specifications.

All materials to be incorporated in permanent piping systems shall be new, unused, and undamaged.

All limestone slurry piping shall be rubber lined carbon steel.

All scrubber recirculation slurry piping 2-1/2 inches and larger shall be rubber lined carbon steel or fiberglass reinforced plastic. All scrubber recirculation slurry piping 2 inches and smaller shall be fiberglass reinforced plastic.

All piping, excluding slurry piping, in corrosive service shall be stainless steel or other suitable material acceptable to the Engineer.

All piping in noncorrosive, nonerosive service shall be carbon steel.

Control and instrument air supply headers shall be drawn temper copper tubing, ASTM B88 Type K. Branch air supply headers and air supply tubing shall be light drawn temper tubing, ASTM B75.

Primary piping from the process line to the primary shut-off valve shall be of the same material as the process piping except for flue gas connections.

Primary instrument piping shall be in accordance with the following.

> Gas or water filled systems to 600 psig, 750 F shall be 3/4 inch ASTM A106 Grade A or B Schedule 80 pipe.
>
> Sealed systems shall be provided with Type 316 stainless steel armored capillary tubing of not less than 1/8 inch outside diameter.

All piping selections shall be in accordance with the recommendations of the pipe manufacturer for the specific service conditions.

A piping materials list shall be submitted as part of the Proposal Data describing materials application and listing materials by common name and ASTM or other standard specification. Piping wall thickness, operating and design conditions shall be indicated in the list.

2H1.2 PIPE. Pipe materials shall be in accordance with the requirements stated herein. All pipe shall be in accordance with ASTM and ANSI standards designated herein.

2H1.2.1 Ferrous Pipe. Schedule numbers, sizes, and dimensions of all carbon steel pipe shall conform to ANSI B36.10. Schedule numbers, sizes, and dimensions of stainless steel pipe shall conform to ANSI B36.19

*EPA Request dated Oct 12, 2010, for Information Pursuant to Section 114 . Response #10 of 17 of Appendix B.

IP10_002423

except where standard weight, Schedule 40, Schedule 80, extra strong, or double extra strong pipe is used in which case the wall thicknesses shall conform to ANSI B36.10.

Carbon steel pipe shall be ungalvanized seamless type. All carbon steel piping shall be ASTM A53 Grade B. Stainless steel pipe shall be ASTM A312 Grade TP 316L seamless type.

All piping 2 inches and smaller shall be Schedule 80 minimum and all piping 2-1/2 inches and larger shall be standard weight minimum.

Where standard weight pipe is used, 10 inch and smaller pipe shall be Schedule 40 and 12 inch and larger pipe shall have 0.375 inch wall thickness.

Miscellaneous pipe 2 inches and smaller shipped to the jobsite shall be color coded the full length of each pipe to indicate different types and grades.

2H1.2.1.1 Rubber Lined Pipe. Lining materials for rubber lined carbon steel pipe, method of application, and lining manufacturer shall be acceptable to the Engineer. A complete description of the lining materials, method of application, and manufacture shall be submitted as a part of the Proposal Data.

2H1.2.2 Copper Alloy Pipe. Copper alloy pipe shall conform to ASTM B43 - Seamless Red Brass Pipe.

2H1.2.3 Polypropylene Lined Pipe. Polypropylene lined pipe shall be ASTM A53 steel pipe with an applied liner of polypropylene and shall be as manufactured by Dow Chemical Company, Resistoflex Corporation, or Peabody Doré.

2H1.2.4 Fiberglass Reinforced Plastic Pipe. Fiberglass reinforced plastic pipe used in slurry service shall have an abrasion resistant liner and shall be ABCO A150 as manufactured by Atlantic Bridge Company Limited.

ABCO A150 pipe shall have taper type adhesive joints for sizes 12 inch and smaller and taper type butt and strap joints for sizes 14 inch and larger.

Fiberglass reinforced plastic pipe for applications other than slurry service shall be Bondstrand 4000 or acceptable equal.

Fiberglass reinforced plastic pipe shall be ultraviolet ray resistant (pigments are acceptable).

2H1.2.5 Polyvinyl Chloride Pipe. Polyvinyl chloride (PVC) or chlorinated polyvinyl chloride (CPVC) pipe shall conform to ASTM D1785.

*EPA Request dated Oct 12, 2010, for Information Pursuant to Section 114 . Response #10 of 17 of Appendix B.

2H1.2.6 Carpenter Steel Pipe. Carpenter steel pipe shall be Carpenter Steel Company Alloy 20Cb-3 pipe.

2H1.3 TUBING. Copper and stainless steel tubing shall be furnished in accordance with the requirements stated herein.

Copper tubing 3/4 inch and smaller for use with flareless bite type tubing fittings shall be light drawn temper tubing conforming to ASTM B75 except copper tubing in tubing cables shall be fully annealed soft temper tubing conforming to ASTM B68 or B75. All light drawn copper tubing smaller than 3/4 inch for use in instrument air service shall be shipped to the jobsite in coils of at least 50 foot length and shall be dehydrated and sealed.

Copper tubing one inch and larger, and short instrument drop runs of 3/4 inch and 1/2 inch tubing, for use with braze joint fittings shall be ASTM B88 Type K drawn temper. The tubing shall be in lengths of at least 10 feet and shall be capped at both ends.

Copper tubing shall be oxygen free or phosphorus deoxidized copper. Oxygen bearing tough pitch copper tubing shall not be substituted.

Stainless steel tubing shall conform to ASTM A213 and shall be fully annealed seamless TP 316 H. Stainless steel tubing for use with tubing fittings shall not exceed Rockwell B80 hardness.

Wall thickness for tubing 3/4 inch and smaller shall not be less than the following. The thicknesses indicated are the minimum acceptable and heavier wall tubing shall be used where required by pressure and temperature conditions or as specified otherwise.

Outside Diameter of Tubing, in.	Wall Thickness, in.	
	Copper, ASTM B68, B75	Stainless Steel
1/4	0.030	0.065
3/8	0.049	0.065
1/2	0.065	0.083
5/8	0.083	0.095
3/4	0.109	0.109

Wall thickness of Type K drawn temper copper tubing shall be in accordance with ASTM B88.

2H1.4 TUBING CABLE. Tubing cable shall consist of the required number of 1/4 inch OD copper tubes cabled together. The tubes shall conform to the requirements stated under TUBING.

*EPA Request dated Oct 12, 2010, for Information Pursuant to Section 114 . Response #10 of 17 of Appendix B.

Tubing cable for out-of-door exposed runs and indoor runs subject to a corrosive environment shall have a PVC or chlorosulfonated polyethylene outer sheath over galvanized steel interlocking armor, and an inner sheath of PVC or chlorosulfonated polyethylene. The tubing cable shall be Crescent Type CTAT, Okoflex Type COLO, or Dekoron Type VAV.

Tubing cable for other indoor runs shall have a PVC or chlorosulfonated polyethylene sheath and shall be Crescent Type CT, Okoflex Type CO, or Dekoron Metl-Cor.

Tubing cable with chlorosulfonated polyethylene sheaths shall meet the vertical flame test requirements covered in IPCEA S-19-81, Paragraph 6.19.6.

Special bushings shall be used where tubing cable passes through bulkheads or panels. Bushings for this purpose shall be Crescent Type CWT, equivalent Okoflex or Dekoron, or acceptable equal.

2H1.5 FITTINGS. All fittings shall be constructed of materials equivalent to the pipe with which they are used except polypropylene lined cast iron fittings shall be used with polypropylene lined steel pipe.

2H1.5.1 Steel Fittings. Unless otherwise required by the service, all steel fittings 2-1/2 inches and larger shall be of the butt welding type and all steel fittings 2 inches and smaller shall be of the socket welding type.

2H1.5.1.1 Butt Welding Fittings. The wall thicknesses of butt welding fittings shall be equal to the pipe wall thickness with which they are used. The fittings shall be manufactured in accordance with ANSI B16.9, ANSI B16.28, and ASTM A234 or ASTM A403.

Elbows shall be of the long radius type.

2H1.5.1.2 Forged Steel Fittings. Forged steel fittings shall be used for all socket weld and steel threaded connections. Socket weld and threaded fittings shall conform to ANSI B16.11. The metal thicknesses in the fittings shall be adequate to provide actual bursting strengths equal to or greater than those of the pipe with which they are to be used.

The minimum pressure classes of socket weld and threaded fittings to be used with various pipe schedules shall be as follows.

Pipe Schedule No.	Minimum Fitting Pressure Class	
	Threaded	Socket Welding
40 or less	2,000	3,000
80	2,000	3,000
160	3,000	6,000
Double extra strong	6,000	9,000

*EPA Request dated Oct 12, 2010, for Information Pursuant to Section 114 . Response #10 of 17 of Appendix B.

2H1.5.1.3 Cast Steel Flanged Fittings. Cast carbon steel flanged fittings shall conform to ANSI B16.5 and shall be of materials conforming to ASTM A216 WCB.

2H1.5.1.4 Rubber Lined Pipe Fittings. Fittings for use with rubber lined pipe shall be constructed of materials equivalent to the pipe with which they are used. Fitting lining requirements shall be as specified herein for lined pipe.

2H1.5.1.5 Adapters. Specially designed adapters, Bonney Weldolets or Sweepolets as manufactured by Bonney Forge and Tool Works or acceptable equal, may be used in lieu of reducing outlet tees when the main run pipe wall thickness does not exceed 3/4 inch.

Unless otherwise specified, all branch connections 2 inches and smaller shall be made with special reinforced welding adapters, Bonney Forge and Tool Works Thredolets or Sockolets or acceptable equal, or shall be special welded and drilled pads.

2H1.5.2 Brass and Bronze Fittings. Screwed brass and bronze pipe fittings shall conform to ANSI B16.15.

Flanged brass and bronze pipe fittings shall conform to ANSI B16.24.

2H1.5.3 Polypropylene Lined Cast Iron Fittings. Fittings for use with polypropylene lined steel pipe other than rubber lined pipe shall be 125 pound flanged cast iron fittings conforming to ANSI B16.1. Fitting material shall conform to ASTM A126 Class A. The polypropylene lining material shall be the same as that specified for the pipe.

2H1.5.4 Fiberglass Reinforced Plastic Fittings. Fittings for use with fiberglass reinforced plastic pipe shall be manufactured from material of the same type as the pipe. Joints shall be cementing type. All fittings shall be filament wound or contain a minimum of 50 per cent glass fiber. No fiber shall be less than 1/2 inch long.

Joints for ABCO pipe fittings shall be taper type adhesive joints for sizes 12 inch and smaller and taper type butt and strap joints for sizes 14 inch and larger.

Fittings for Bondstrand pipe shall be "Quick-Lock" tapered socket.

2H1.5.5 Polyvinyl Chloride Fittings. Polyvinyl chloride or chlorinated polyvinyl chloride pipe fittings shall be manufactured of PVC material of the same type as the pipe with which they are used. The fittings shall have socket ends with internal shoulders designed for solvent cementing.

2H1.5.6 Tubing Fittings. Tubing fittings in sizes 3/4 inch and smaller shall be of the flareless "bite" type. Brass fittings shall be used with copper tubing and stainless steel fittings with stainless steel tubing.

*EPA Request dated Oct 12, 2010, for Information Pursuant to Section 114 . Response #10 of 17 of Appendix B.

Flareless tubing fittings shall be the following or an acceptable equal.

Manufacturer	Type: Copper Tubing	Type: Stainless Steel Tubing
Crawford	"Swagelok"	"Swagelok"
Parker	"CPI"	"CPI"
Imperial	"Hi-Seal"	"Hi-Seal"
Hoke	"Gyrolok"	"Gyrolok"
Tylok International	"Tylok"	"Tylok"

Braze joint fittings shall be used in sizes one inch and larger and shall be wrought copper, bronze, or brass, conforming to ANSI B16.22.

2H1.6 FLANGES, GASKETS, AND BOLTING. Flanged joints shall be in accordance with the requirements stated herein.

2H1.6.1 Flanges. Unless otherwise specified herein or indicated otherwise on the drawings, all flanges shall be as follows.

Flanges mating with flanges on piping, valves, and equipment shall be of sizes, drillings, and facings which match the connecting flanges of the piping, valves, and equipment.

Flange pressure classes shall be adequate to meet the design pressure and temperature ratings specified for the piping with which they are used.

Flanges shall be constructed of materials equivalent to the pipe with which they are used.

2H1.6.1.1 Steel Flanges. All steel flanges 2-1/2 inches and larger shall be of the weld neck type and all steel flanges 2 inches and smaller shall be of the socket type. All steel flanges shall have raised face flange preparation except as specified otherwise herein. Flat face flanges shall be used to mate with cast iron, bronze, or fiberglass *reinforced plastic flanges. For slurry service, flanges shall be weld neck, flat faced.

All steel flanges shall conform to ANSI B16.5 and the following requirements.

Carbon steel flanges shall be of ASTM A181 or ASTM A105 material for Class 150 and Class 300 flanges and of ASTM A105 material for higher pressure classes.

Stainless steel flanges shall conform to ASTM A182.

2H1.6.1.2 Brass and Bronze Flanges. Brass and bronze screwed companion flanges shall be plain faced and shall conform to the 150 pound or 300 pound classifications of ANSI B16.24. Drilling shall be in accordance with ANSI 125 pound or 250 pound standards.

*Negotiated Revision

*EPA Request dated Oct 12, 2010, for Information Pursuant to Section 114 . Response #10 of 17 of Appendix B.

2H1.6.1.3 Cast Iron Flanges. Cast iron threaded flanges shall conform to the 125 pound or 250 pound classifications of ANSI B16.1.

2H1.6.2 Gaskets. Except as otherwise required for the service, asbestos gaskets shall be used with flat face flanges. Spiral wound gaskets shall be used with all raised face flanges.

All gaskets shall be suitable for the design pressures and temperatures.

2H1.6.2.1 Asbestos Gaskets. Asbestos gaskets shall be in accordance with ANSI B16.21 and materials shall be suitable for a maximum working pressure of 600 psi and a maximum working temperature of 750 F. Gaskets shall be dimensioned to suit the contact facing. They shall be full faced for flat face flanges and shall extend to the inside edge of the bolt holes on raised face flanges. Gaskets for plain finished surfaces shall be not less than 1/16 inch thick and for serrated surfaces shall be not less than 3/32 inch thick.

2H1.6.2.2 Spiral Wound Gaskets. Spiral wound gaskets shall be constructed of a continuous stainless steel ribbon wound into a spiral with asbestos filler between adjacent coils. The gasket shall be inserted into a carbon steel gage ring whose outside diameter shall fit inside the flange bolts properly positioning the gasket. The gage ring shall serve to limit the compression of the gasket to the proper value. Compressed gasket thickness shall be 0.130 inch ±0.005 inch.

2H1.6.2.3 Neoprene Impregnated Asbestos Gaskets. Neoprene impregnated asbestos gaskets for oil service shall be as specified for asbestos gaskets except the material shall be a synthetic rubber bonded asbestos type, Johns-Manville Style 76 or acceptable equal.

2H1.6.2.4 Rubber Gaskets. Rubber gasket materials shall be cloth inserted sheet rubber, Johns-Manville Style 109 or acceptable equal. Rubber gaskets shall conform to ANSI B16.21. They shall be full face and 1/16 inch thick.

2H1.6.3 Bolting. All flange bolting shall conform to the requirements stated herein, unless otherwise specified.

Alloy steel bolting shall be used for joining all steel flanges having a design pressure class 150 psi or greater and shall conform to the following.

Bolting shall conform to the requirements of ANSI B16.5.

Bolting shall consist of threaded studs and two nuts for each stud.

Material for studs shall be ASTM A193 Grade B7.

Material for nuts shall be ASTM A194 Grade 2H.

*EPA Request dated Oct 12, 2010, for Information Pursuant to Section 114 . Response #10 of 17 of Appendix B.

IP10_002429

Carbon steel bolting shall be used for joining all other flanges and shall conform to the following.

Bolting shall conform to the requirements of ANSI B16.1 and ANSI B16.24.

Bolting for bolt sizes 1-3/4 inches and larger shall consist of threaded studs and two nuts. Bolting for bolt sizes less than 1-3/4 inches may be threaded studs and nuts or bolts and nuts.

Bolts and nuts shall be heavy hexagonal head conforming to ANSI B18.2.1 and B18.2.2.

Materials shall be ASTM A307 Grade B.

2H1.7 UNIONS. All piping unions shall be of the ground joint type constructed of materials equivalent in alloy composition and strength to other fittings in the piping systems in which they are installed. Union pressure classes and end connections shall be the same as the fittings in the piping systems in which they are installed.

Steel unions shall have hardened stainless steel seating surfaces on both faces.

*EPA Request dated Oct 12, 2010, for Information Pursuant to Section 114 . Response #10 of 17 of Appendix B.

Subsection 2H2 - PIPING FABRICATION

2H2.1 GENERAL. The fabrication of all piping shall be in accordance with the requirements stated herein.

2H2.2 FITTINGS. Fittings such as tees, crosses, elbows, caps, and reducers shall be used for all changes in direction, intersections, size changes, and end closures of piping.

Couplings shall be used for joining straight lengths of 2 inch and smaller piping.

Branch welds shall not be used. Mitered fittings shall be used only where acceptable to the Engineer. The radius for mitered fittings shall be equal to the diameter of the pipe, and mitered segment angles shall not exceed 15 degrees.

Welding adapters and drilled and welded pads shall be reinforced to meet the requirements of Paragraph 104.3 of ANSI B31.1.

2H2.3 FABRICATED SECTIONS. The length of shop fabricated sections shall be the maximum allowable within the limitations of handling and shipping. The choice of field weld locations and configuration of the sections shall be selected with consideration of the problems of field erection. Wherever possible, field welds shall be placed in convenient locations. Location of field welds shall be subject to the Engineer's concurrence.

2H2.4 WELDING. All welding shall be in accordance with the following requirements.

2H2.4.1 Qualification and Procedures. All welding procedures, welders, and welding operators shall be qualified in accordance with code requirements before work is begun by the individual welders and welding operators. All welding procedures shall be submitted to the Engineer for review prior to beginning the work. The welding procedures shall be written in conformance with the code requirements specified in Section 2H - PIPING. The submittals shall clearly state the piping materials and wall thicknesses on which each procedure submitted will be used. The welding procedures shall include the joint design details and welding current and voltage values to be used. Records of the names of the welders who make each weld shall be maintained. Certified copies of any or all of the above records shall be furnished in accordance with the Document Submittal Schedule.

2H2.4.2 Methods. All welding shall be performed using an electric arc welding process which has been qualified in accordance with the rules of the code and has the concurrence of the Engineer.

*EPA Request dated Oct 12, 2010, for Information Pursuant to Section 114 . Response #10 of 17 of Appendix B.

IP10_002431

Only the following welding processes will be permitted.

Shielded metal arc
Gas tungsten arc
Flux cored arc
Gas metal arc (short circuiting transfer mode not acceptable)
Submerged arc

The use of self-shielded electrodes in the flux cored arc welding process will be permitted only in certain cases with the specific permission of the Engineer.

All welds shall be made with the addition of filler metal.

Backing rings shall not be used.

Single welded butt joints in piping fabricated of materials with a P Number of 5 or greater shall have the interior of the pipe beneath the welding zone purged with an inert gas. Butt joints in all other P Number materials using consumable inserts shall be purged during fusing of the insert. The inert gas shall be held at a pressure slightly above atmospheric during the deposition of the first three layers of weld metal. P Numbers are defined in Section IX of the ASME Boiler and Pressure Vessel Code.

The application of heat to correct weld distortion and dimensional deviations in austenitic stainless steels is prohibited.

2H2.4.3 End Preparation and Fit-up. Preparation of weld ends and fit-up shall be in accordance with the butt weld end preparation details included at the end of this subsection.

Base metals for butt weld joints shall be prepared by machining or automatic machine flame cutting. In specific instances where the use of the above equipment is impractical, permission shall be secured for hand flame cutting. All slag and irregularities shall be removed from flame cut ends and hand cut ends shall be ground smooth.

If shop welding of the root pass by the tungsten arc process is required, the ends shall be prepared in accordance with the referenced butt weld end preparation details. The butt weld end preparation for other shop welded joints shall be prepared as required by the welding procedure used.

The butt weld end preparation for all field weld joints in Contractor-furnished shop fabricated piping shall be prepared in the fabricator's shop in accordance with the butt weld end preparation details.

Radial misalignment of inside surfaces of butt weld joints shall not exceed 1/32 inch.

*EPA Request dated Oct 12, 2010, for Information Pursuant to Section 114 . Response #10 of 17 of Appendix B.

Pipe ends for socket weld connections shall be reamed to full inside diameter to remove all burrs and obstructions.

Terminals of Owner-furnished equipment, valves, piping, and piping accessories have been specified to be prepared for welding in accordance with the referenced butt weld end preparation detail drawings. The weld end preparation used by the Contractor for the mating end shall be designed for compatibility with those end preparations.

Control of inside diameters of weld ends of Contractor-furnished piping shall be by means of selection of piping components, addition of weld metal and machining, or machining as required. Machining shall be in accordance with the butt weld end preparation details.

2H2.4.4 Filler Metal. When low hydrogen type electrodes are used in welding procedures the method used for storing, handling, baking, drying, and reconditioning shall be explained in the submitted welding procedures or in a separate electrode control procedure submitted in accordance with the Document Submittal Schedule.

Submerged arc multipass welds in carbon steels and corrosion resistant steels shall use essentially a neutral flux.

Electrodes E6012, E6013, and E7014 for strength welds in piping systems shall not be used.

The maximum diameter electrode used for shielded metal arc welding of austenitic stainless steels shall be 5/32 inch.

The maximum diameter filler rod used for gas tungsten arc welding of austenitic stainless steel shall be 1/8 inch.

Filler metal, including consumable inserts, for joining austenitic stainless steels to austenitic stainless steels shall be selected and controlled to produce undiluted weld deposits containing 5 to 20 FN (ferrite number). The quantity of delta ferrite shall be determined by the use of either the Schaeffler or modified diagram or a recognized magnetic ferrite indicator. The requirement does not apply to Type E310 or E16-8-2. Ferrite content for bare filler metal, including consumable inserts, may be determined from the chemical analysis of the bare material. Covered electrodes and other material utilizing flux during welding shall have ferrite determined from undiluted weld deposits performed as described in applicable AWS or SFA filler metal specifications.

2H2.4.5 Reinforcement Limits. The exterior surfaces of single welded butt joints shall be sufficiently free from coarse ripples, grooves, abrupt ridges, and valleys to be within the maximum reinforcement limits permitted by ANSI B31.1.

*EPA Request dated Oct 12, 2010, for Information Pursuant to Section 114 . Response #10 of 17 of Appendix B.

The interior reinforcement of single welded butt joints shall not exceed the limits stated below. The reinforcement shall be determined from the higher of the abutting surfaces involved.

Material Nominal Thickness, inches	Maximum Internal Reinforcement Thickness, inches
Up to 3/16, inclusive	3/32
Over 3/16 to 1/2, inclusive	1/8
Over 1/2	5/32

The internal reinforcement of welds not accessible for visual examination may be evaluated by suitable nondestructive examination methods. Upon request by the Construction Manager, Project Manager, or the Engineer, such examinations shall be performed by the Contractor to determine the extent of internal reinforcement. This shall not be construed as precluding the Contractor from performing these examinations as a part of his regular quality control. All defective welds shall be repaired, regardless of the examination method by which discovered.

Welding concavity, grinding, "suck-back," or other conditions shall not result in a weld thickness less than the minimum wall thickness of the base metal.

Arc strikes in P Number 5 Group Number 2 material shall be confined to the area to be covered by the weld. Arc strikes outside the weld area shall be removed by grinding to a smooth contour. The ground area shall be visually examined for cracks, porosity, and blemishes. All indications shall be removed and repaired. Ground areas may be left unrepaired if minimum base metal thickness requirements have not been violated.

2H2.4.6 Preheat and Interpass Temperature. Preheat and interpass temperatures shall be maintained in accordance with the requirements of the applicable code. Electric or gas heat sources which provide a uniform application of heat over the weld area shall be used.

Preheat and interpass temperature shall be checked by the use of temperature indicating crayons, thermocouples, or surface contact type pyrometers.

The maximum preheat and interpass temperatures for austenitic stainless steels shall be 350 F.

2H2.4.7 Postweld Heat Treatment. Stress relief of all welds shall be performed in accordance with the requirements of the applicable code. All welding zones, bends, and hot formed sections shall be fully stress relieved as required by the code.

*EPA Request dated Oct 12, 2010, for Information Pursuant to Section 114 . Response #10 of 17 of Appendix B.

Detailed instructions for postweld heat treatment shall be given in the applicable welding procedure specification or in a separate heat treatment procedure submitted in accordance with the Document Submittal Schedule.

Wherever possible, stress relieving shall be performed by slowly heating the entire assembly to the specified temperature, holding the temperature for the required length of time, then allowing the assembly to cool. Where this procedure is impractical, local stress relieving may be employed.

Heating may be by means of electric induction coils, electric resistance coils, or suitable gas burners. Oxyacetylene flame heating or exothermic chemical heating methods will not be permitted. In addition, where local stress relieving is employed, a complete record of the pipe temperatures throughout the stress relieving cycle shall be made by means of a recording potentiometer. The record shall be made available for review in accordance with the Document Submittal Schedule.

No stress relieving for seal welds will be required.

2H2.5 BENDS. Pipe bending will not be permitted. Tubing bends shall be made without reducing the internal diameter of the tubing.

2H2.6 ATTACHMENTS. All lugs, ears, and other attachments for support of Contractor-furnished piping systems which must be stress relieved shall be shop welded on fabricated pipe prior to stress relieving.

Piping in vertical runs which are greater than 10 feet long, and which will be insulated, shall be provided with lugs and collars for support of the insulation. Three lugs on 120 degree radial spacing shall be used at each support level. Lugs on piping which must be stress relieved shall be shop welded to shop fabricated pipe. All vertical runs shall have a minimum of two sets of lugs, one of which must be within one foot of the top of the pipe run.

All attachments shall be of the same material as the piping on which they are installed.

2H2.7 THERMOWELLS. Thermowells shall be furnished and installed in the piping where required and shall be in accordance with the requirements of Section 1B.

2H2.8 THREADED CONNECTIONS. Threaded adapters for 2 inch and smaller branch connections shall be installed in accordance with the fitting manufacturer's recommendations. The diameter of the hole in the main run pipe shall not be less than the inside diameter of the fitting at the weld end preparation.

*EPA Request dated Oct 12, 2010, for Information Pursuant to Section 114 . Response #10 of 17 of Appendix B.

A drill or reamer shall be run through each branch connection attachment and the hole in the main pipe after the attachment has been welded to the pipe. The drill or reamer size shall be the same as the bore diameter of the attachment.

Threads of all branch connections shall be trued by use of a thread tap after the coupling, pad, adapter, or other threaded attachment has been welded to the main piping.

2H2.9 BRAZED JOINTS. Brazing shall be accomplished in accordance with the requirements specified in ANSI B31.1. Brazing shall be performed in accordance with written procedures and by brazers who have been previously qualified in accordance with ASME Section IX, Welding and Brazing Qualifications.

Brazing filler metals shall be either silver or copper-phosphorus alloys.

2H2.10 FIBERGLASS REINFORCED PLASTIC PIPE JOINTS. Joints in fiberglass reinforced plastic piping shall be carefully made in accordance with the recommendations of the pipe manufacturer.

Selection and use of adhesives shall be in accordance with the manufacturer's recommendations.

After assembly, the joint shall be quick cured by slowly heating the entire joint in accordance with the manufacturer's recommendations. Heat guns which heat only a section of the joint shall not be used.

All joints in fiberglass reinforced pipe shall be made by certified joiners. Individual joiners shall be trained and certified by an independent testing organization for the specific pipe brand, joint type, and pipe sizes to be used.

The certification procedure shall be submitted to the Engineer for review prior to beginning the work. The certification program shall provide for training and examination of persons who will assemble the pipe joints and shall include as a minimum equipment training, joint preparation, fitting, bonding, curing, repair and testing by written examination and by testing of a joined pipe.

A copy of the current certificate for each joiner shall be submitted in accordance with the Document Submittal Schedule prior to commencement of the work by any particular joiner.

2H2.11 PVC PIPE JOINTS. Joints in polyvinyl chloride (PVC) and chlorinated polyvinyl chloride (CPVC) piping shall be of the solvent cemented type and shall be carefully made using methods recommended by the pipe manufacturer.

*EPA Request dated Oct 12, 2010, for Information Pursuant to Section 114 . Response #10 of 17 of Appendix B.

PVC pipe and fitting sockets shall be thoroughly cleaned and trial fitted prior to joining. Solvent shall be applied to both the fitting and the pipe and joints assembled with one uninterrupted twisting motion. Excess solvent shall be wiped off.

In hot weather, pipe and fittings shall be shaded and cooled as much as practicable by wiping with a water dampened rag.

Pipe shall not be moved for at least 20 minutes or tested for at least 5 hours after joining. Longer minimum waiting periods shall apply as recommended by the manufacturer for sizes larger than 1-1/4 inch and temperatures below 50 F.

Solvent containers shall not be discarded where leakage might damage the work.

2H2.12 INSPECTION AND TESTING. Inspection and testing of the fabricated piping assemblies shall be as stated herein.

Documentation of these inspections and tests shall be maintained by the Contractor. Any defects found by these inspections and tests shall be reinspected following repair by the same method and technique which originally identified the defect. Acceptance shall be based on identical acceptance criteria.

2H2.12.1 Hydrostatic Tests. All shop fabricated plastic pipe such as FRP or PVC shall be shop hydrostatically tested. Other hydrostatic testing shall be done as a part of the piping erection as stipulated in Section 3F.

2H2.12.2 Weld Tests. The quality of welding may be checked and tested by removal of a pipe section containing a weld. Such section of pipe shall be removed if requested by the Construction Manager, Project Manager, or Engineer.

2H2.12.3 Nondestructive Examinations. All piping shall be inspected as required by the applicable code.

2H2.12.3.1 Visual Examination. Personnel performing visual inspection of welds shall be qualified and certified in accordance with AWS QC1 Standard for Qualification and Certification of Welding Inspectors.

2H2.12.4 Marking. Upon completion of each welded joint, the welding operator shall mark his regularly assigned identification number and the last two numbers of the year in which the work was completed.

Inspection stamps and code symbol stamps, where required, and all other necessary information shall be applied to the piping in accordance with the governing codes.

*EPA Request dated Oct 12, 2010, for Information Pursuant to Section 114 . Response #10 of 17 of Appendix B.

IP10_002437

For alloy steel piping, information shall be stamped on steel bands at least one inch wide which shall be mechanically fastened to the piping. Steel stamping directly on alloy piping will not be permitted unless "low stress" die stamps such as interrupted dot or round nose types are used.

2H2.13 CLEANING AND PAINTING. The exterior and interior surfaces of all piping shall be thoroughly cleaned of all sand, mill scale, greases, oils, dirt, and other foreign materials.

The interior surfaces of all shop fabricated unlined metallic piping shall be cleaned with a power driven mechanical cleaner.

The external surface of shop fabricated carbon steel piping shall be given one shop coat of primer. The primer paint shall be as specified in Section 1H.

Flange faces shall not be painted but shall be given an application of an easily removable preservative coating as specified in Section 1H.

All machined surfaces of butt weld ends shall be coated with preservative coating as specified in Section 1H.

The identifying piece marks indicated on the shop sketches shall be clearly marked on each end and on opposite sides of each fabricated section.

2H2.14 PROTECTION DURING SHIPMENT. Open ends of all shop fabricated piping shall be closed with suitable metal caps securely attached to the piping to prevent dislodgment during loading and unloading. The caps shall be lined in the end with 3/4 inch plywood or other soft wood.

All flange bolting, gaskets, and other miscellaneous loose items shall be suitably packed in heavy wooden boxes having waterproof linings to prevent entry of dirt and moisture.

*EPA Request dated Oct 12, 2010, for Information Pursuant to Section 114 . Response #10 of 17 of Appendix B.

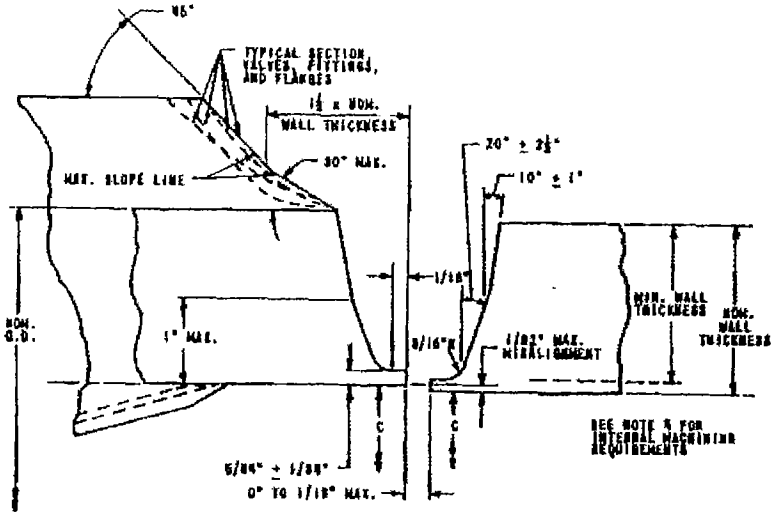

J BEVEL - NOMINAL WALL THICKNESS GREATER THAN 3/8"

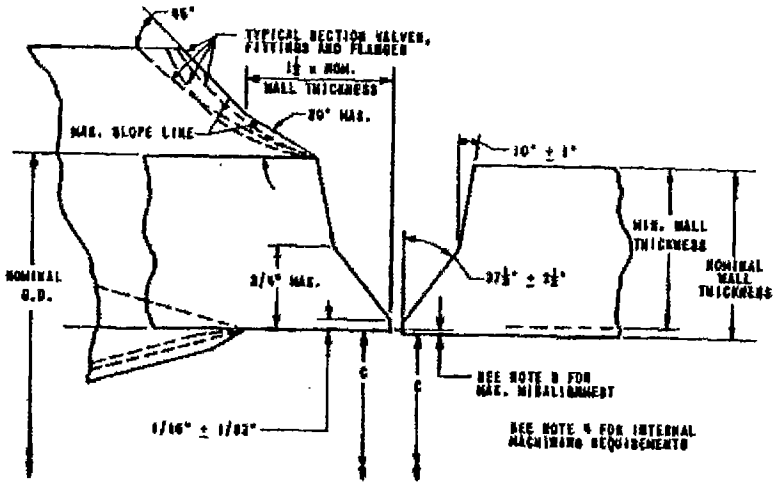

V BEVEL - NOMINAL WALL THICKNESS GREATER THAN 1/8"

NOTES:

1. ALL FIELD WELDS FOR PIPING, VALVES, FITTINGS, ETC. MUST HAVE WELD-ENDS MACHINED TO MEET THE REQUIREMENTS DESCRIBED BY THIS DETAIL. THE EXCEPTION IS PIPE TO PIPE FIELD WELDS WHEN BOTH WELD-ENDS ARE PREPARED BY THE SAME FABRICATOR. SUCH WELD-ENDS MUST MEET ALL CONDITIONS DESCRIBED EXCEPT ADHERENCE TO I.D. REQUIREMENT IS NOT REQUIRED IF 1/16" MAXIMUM I.D. DIFFERENCE IN WELD-ENDS IS MAINTAINED.
2. IF METAL MUST BE REMOVED TO MEET I.D. REQUIREMENT THE PIPE WALL THICKNESS MUST BE CHECKED TO ASSURE NO ENCROACHMENT ON MINIMUM WALL.
3. MAXIMUM MISALIGNMENT FOR V BEVEL JOINTS SHALL BE AS FOLLOWS:
   1/32" FOR WALL THICKNESS GREATER THAN 3/8"
   1/16" FOR WALL THICKNESS GREATER THAN 1/8" TO 3/8" INCLUSIVE
4. IF INTERNAL MACHINING IS REQUIRED TO MEET I.D. REQUIREMENTS TABULATED ON STANDARD DETAIL DRAWING M-525.39, THE DEPTH AND CONTOURS ASSOCIATED WITH SUCH MACHINING MUST MEET THE REQUIREMENTS OF PFI ES-21 FOR THE J BEVEL JOINT AND ANSI B16.25 FOR THE V BEVEL JOINT.
5. "C" DIMENSIONS FOR VARIOUS PIPE SIZES AND SCHEDULES ARE SHOWN ON STANDARD DETAIL DRAWING M-525.38.

BLACK & VEATCH CONSULTING ENGINEERS KANSAS CITY MISSOURI	BUTT WELD END PREPARATION FOR FIELD WELDS "J" AND "V" BEVEL END PREPARATION	M-525.38	
		DATE 5-14-80	REV B

*EPA Request dated Oct 12, 2010, for Information Pursuant to Section 114 . Response #10 of 17 of Appendix B.

PIPE SIZE	SCH	COUNTER BORE DIAMETER C	
		MINIMUM	MAXIMUM
2½	40	2.439	2.489
	80	2.311	2.361
	160	2.135	2.185
	XXS	1.826	1.876
3	40	3.041	3.091
	80	2.894	2.944
	160	2.653	2.703
	XXS	2.369	2.419
4	40	4.004	4.054
	80	3.829	3.879
	120	3.653	3.703
	160	3.490	3.540
	XXS	3.240	3.290
5	40	5.031	5.081
	80	4.826	4.876
	120	4.607	4.657
	160	4.388	4.438
	XXS	4.170	4.220
6	40	6.054	6.104
	80	5.786	5.836
	120	5.561	5.611
	160	5.286	5.336
	XXS	5.032	5.082
8	20	8.107	8.157
	30	8.059	8.109
	40	7.981	8.031
	60	7.834	7.884
	80	7.669	7.719
	100	7.505	7.555
	120	7.286	7.336
	140	7.123	7.173
	XXS	7.013	7.063
	160	6.959	7.009

PIPE SIZE	SCH	COUNTER BORE DIAMETER C	
		MINIMUM	MAXIMUM
10	20	10.232	10.282
	30	10.132	10.182
	40	10.030	10.080
	60	9.794	9.844
	80	9.630	9.680
	100	9.411	9.461
	120	9.192	9.242
	140	8.919	8.969
	160	8.700	8.750
12	20	12.232	12.282
	30	12.092	12.142
	STD	12.013	12.063
	40	11.959	12.009
	XS	11.794	11.844
	60	11.686	11.736
	80	11.466	11.516
	100	11.192	11.242
	120	10.919	10.969
	140	10.700	10.750
	160	10.373	10.423
14	10	13.482	13.532
	20	13.373	13.423
	30	13.263	13.313
	40	13.153	13.203
	XS	13.044	13.094
	60	12.880	12.930
	80	12.607	12.657
	100	12.278	12.328
	120	12.005	12.055
	140	11.732	11.782
	160	11.459	11.509

PIPE SIZE	SCH	COUNTER BORE DIAMETER C	
		MINIMUM	MAXIMUM
16	10	15.482	15.532
	20	15.373	15.423
	30	15.263	15.313
	40	15.044	15.094
	60	14.771	14.821
	80	14.442	14.492
	100	14.115	14.165
	120	13.786	13.836
	140	13.403	13.453
	160	13.130	13.180
18	10	17.482	17.532
	20	17.373	17.423
	STD	17.263	17.313
	30	17.153	17.203
	XS	17.044	17.094
	40	16.935	16.985
	60	16.607	16.657
	80	16.278	16.328
	100	15.896	15.946
	120	15.513	15.563
	140	15.186	15.236
	160	14.802	14.852
20	10	19.482	19.532
	20	19.263	19.313
	30	19.044	19.094
	40	18.880	18.930
	60	18.498	18.548
	80	18.115	18.165
	100	17.677	17.727
	120	17.294	17.344
	140	16.857	16.907
	160	16.473	16.523

PIPE SIZE	SCH	COUNTER BORE DIAMETER C	
		MINIMUM	MAXIMUM
22	10	21.482	21.532
	20	21.263	21.313
	30	21.044	21.094
	60	20.388	20.438
	80	19.950	20.000
	100	19.513	19.563
	120	19.075	19.125
	140	18.638	18.688
	160	18.200	18.250
24	10	23.482	23.532
	20	23.263	23.313
	XS	23.044	23.094
	30	22.938	22.988
	40	22.715	22.765
	60	22.223	22.273
	80	21.768	21.836
	100	21.240	21.290
	120	20.748	20.798
	140	20.311	20.361
	160	19.817	19.867
26	10	25.373	25.423
	STD	25.263	25.313
	20	25.044	25.094
28	10	27.373	27.423
	STD	27.263	27.313
	20	27.044	27.094
	30	26.825	26.875
30	10	29.373	29.423
	STD	29.263	29.313
	20	29.044	29.094
	30	28.826	28.876

PIPE SIZE	SCH	COUNTER BORE DIAMETER C	
		MINIMUM	MAXIMUM
32	10	31.373	31.423
	STD	31.263	31.313
	20	31.044	31.094
	30	30.825	30.875
	40	30.715	30.765
34	10	33.373	33.423
	STD	33.263	33.313
	20	33.044	33.094
	30	32.825	32.875
	40	32.715	32.765
36	10	35.373	35.423
	STD	35.263	35.313
	20	35.044	35.094
	30	34.825	34.875
	40	34.607	34.657
38	STD	37.263	37.313
	XS	37.044	37.094
40	STD	39.263	39.313
	XS	39.044	39.094
42	STD	41.263	41.313
	XS	41.044	41.094
44	STD	43.263	43.313
	XS	43.044	43.094
46	STD	45.263	45.313
	XS	45.044	45.094
48	STD	47.263	47.313
	XS	47.044	47.094

BLACK & VEATCH
CONSULTING ENGINEERS
KANSAS CITY
MISSOURI

BUTT WELD END PREPARATION
FOR FIELD WELDS
"J" AND "V" BEVEL COUNTERBORE DIAMETERS

M-526.39

DATE 5-14-80

REV A

*EPA Request dated Oct 12, 2010, for Information Pursuant to Section 114 . Response #10 of 17 of Appendix B.

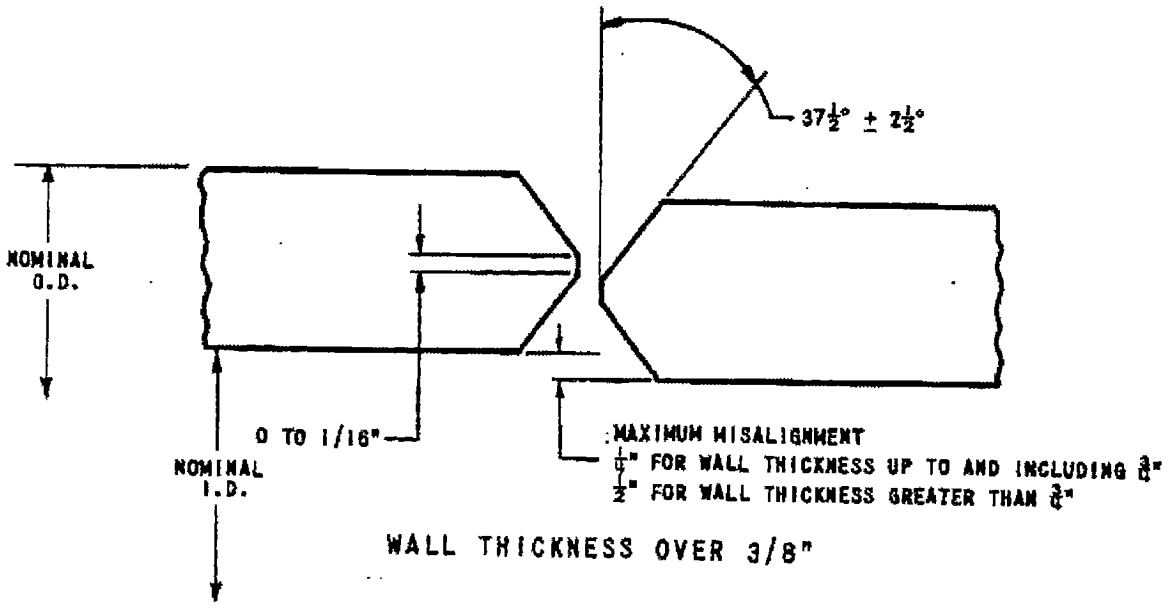

WALL THICKNESS OVER 3/8"

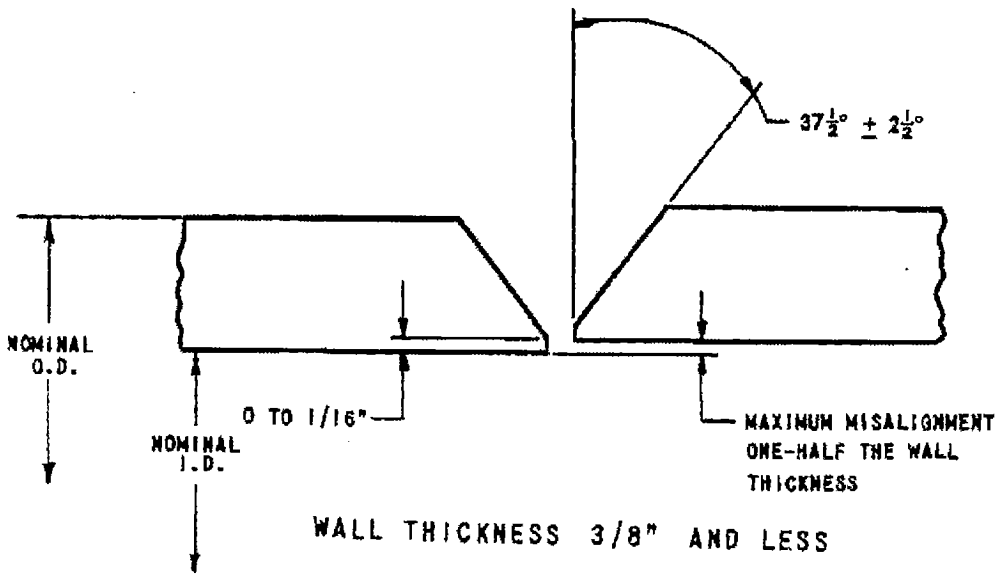

WALL THICKNESS 3/8" AND LESS

BLACK & VEATCH CONSULTING ENGINEERS KANSAS CITY MISSOURI	BUTT WELD END PREPARATION FOR FIELD WELDS LOW PRESSURE PIPING SYSTEMS 26" O.D. AND LARGER	M-526.40
		DATE 5-14-80 / REV. A

*EPA Request dated Oct 12, 2010, for Information Pursuant to Section 114 . Response #10 of 17 of Appendix B.

Subsection 2H3 - PIPING SUPPORTS

2H3.1 GENERAL. This subsection covers the design and fabrication requirements for all piping supports to be furnished under these specifications. The term "piping supports" includes all assemblies such as hangers, floorstands, anchors, guides, brackets, sway braces, vibration dampers, positioners, and any supplementary steel required to attach pipe supports to the Owner-furnished structures.

All piping supports required for proper support of piping provided under these specifications shall be furnished.

Support components shall be manufactured by Grinnell Company, Power Piping, Basic Engineers or acceptable equal.

All piping supports shall be in accordance with the Pipe Support-Support Selection Guide bound at the end of this subsection and the requirements specified herein.

Typical hanger details for 2 inch and smaller pipe are bound at the end of this subsection. The Contractor shall provide pipe supports for 2 inch and smaller pipe in accordance with these typical hanger details.

The Contractor shall be responsible for all piping support design and shall prepare and submit details for review by the Engineer as specified.

2H3.2 CODE REQUIREMENTS. All support materials, design, and fabrication shall be in accordance with the latest applicable provisions of ANSI B31.1, Code for Pressure Piping, unless otherwise specified herein; and in accordance with the applicable requirements of the Federal "Occupational Safety and Health Standards."

2H3.3 SHOP FABRICATION. All piping supports for piping 2-1/2 inches and larger, or 2 inches and smaller that is Schedule 160 or heavier, and all supports utilizing springs shall be completely shop fabricated. Other piping supports may be shop or field fabricated. Hanger rod 3/4 inch in diameter or smaller may be field cut and threaded.

2H3.4 SUBMITTAL OF DETAILS. Details shall be prepared for all piping support assemblies for piping 2-1/2 inches and larger, for 2 inch and smaller piping that is Schedule 160 or heavier, and for all supports utilizing springs. Details shall be segregated and identified according to piping system. Detail sheet numbers shall be the same as the pipe support number. Details for each piping system shall be in a loose-leaf type binder in which sheets may be easily removed and replaced yet firmly held.

Details of piping supports shall be submitted to the Engineer for reference only, but shall be sent to allow 21 days from receipt to start of fabrication for corrective comment, if required.

*EPA Request dated Oct 12, 2010, for Information Pursuant to Section 114 . Response #10 of 17 of Appendix B.

Details submitted for review by the Engineer shall consist of a bill of material and assembly sketch of each piping support. The assembly sketch of typical piping supports need be shown only once with each piping system, or it may be shown for each piping support. A particular assembly sketch shall be made for nontypical piping supports. The part number in the assembly sketch shall agree with the part number in the bill of material. The bill of material shall include end-to-end length of straight rod, or center-of-eye to end dimension for eye rod, and threading data. All field welds shall be shown and sized.

Individual details of piping supports for piping 2 inches and smaller that is less than Schedule 160 wall shall not be submitted to the Engineer for review, but the criteria for selection of these pipe support assemblies shall be generally described for the Engineer's review. The description shall consist of catalog data covering type of pipe attachment, structure attachment, rods, turnbuckles, clevises, eye nuts, and other materials which the Contractor proposes to use in selection of components for these supports, and typical assembly sketches or reference to the appropriate typical small pipe detail for 2 inch and smaller pipe included as a part of these specifications.

2H3.5 DESIGN REQUIREMENTS. Pipe supports shall be designed in accordance with the requirements specified herein. All supports shall properly fit and function in place.

Seismic design criteria for the piping supports shall be in accordance with Section 1S and Subsection 1S3.

Consideration shall be given to all factors such as thermal expansion, weight, support reactions, and expansion joint reactions. Supports shall not induce excessive strain in the piping, connected equipment, or scrubber support structure.

Pipe deflection between supports shall be limited to 1/8 inch maximum with normal operating contents in the piping, or 3/8 inch with maximum loading. The stress resulting from weight shall be 3000 psi maximum. Horizontal piping support spacing shall not exceed that indicated in the Pipe Support-Support Selection Guide included at the end of this subsection.

Supports shall be located, where possible, on scrubber support structure beams or columns of 8 inch size or larger, near concentrated piping loads (such as valves, strainers, traps, and expansion joints), and near changes in direction of piping. Supports shall not be attached to scrubber support structure structural angles, diagonal bracing, or truss members. Supports shall be located and arranged so as not to interfere with or obstruct other piping, raceways, lighting, walkways, stairways, headroom, equipment operation and maintenance spaces.

*EPA Request dated Oct 12, 2010, for Information Pursuant to Section 114 . Response #10 of 17 of Appendix B.

IP10_002443

Any supplementary structural steel members required for support attachment shall be furnished by the Contractor. Any reinforcing of scrubber support structure required for supports will be furnished by the Owner.

The net supporting effect at operating condition shall not induce forces or moments on the piping system terminals. Under conditions other than operating, the supporting effect shall not induce excessive forces or moments on the piping, equipment, or supports.

The support assemblies shall not be used for the attachment of rigging to hoist the pipe into place. The piping shall be securely held in place by other means until the pipe support is completely assembled and attached to the pipe and building structures and the spring support set to take care of pipe sway. All rigging shall be removed in such a manner as to not impose a sudden load on the pipe support.

2H3.6 APPEARANCE. Piping supports shall be constructed to provide a neat and attractive appearance. Hangers and stands shall be attached to piping and scrubber supporting structure so that they are vertical in the normal operating position. Adjacent supports shall be of the same type and component assembly insofar as practicable. Corresponding parts of adjacent hangers shall be set at the same elevation. The use of trapeze type supports shall be avoided where possible. Two or more supports attached to the same part of the supporting structure shall be lined up rather than staggered.

Insofar as possible, pipe supports shall be installed so as to be vertical in the hot positions of the piping. This shall be accomplished by offsetting the structural attachment from the pipe attachment when the piping is in the cold position.

2H3.7 MATERIALS. Material requirements for support components shall be as specified herein. Components shall be suitable for service at their operating temperature.

Component materials shall be carbon steel of an ASTM type having a minimum yield strength of 35,000 psi and a minimum ultimate strength of 60,000 psi.

Malleable iron materials shall not be used.

Supplementary support beams required for attaching supports to the supporting structure shall conform to ASTM A36.

Supports shall be of fireproof construction; no combustible material shall be used. The temperature in a support shall not exceed 200 F where it attaches to the building structure. Suitable protection shall be provided where personnel might normally come into contact with support temperatures exceeding 130 F.

*EPA Request dated Oct 12, 2010, for Information Pursuant to Section 114 . Response #10 of 17 of Appendix B.

Support materials shall be sized to meet or exceed the minimum requirements as follows.

Pipe Size, Inches, Nominal	Strength, Pounds, Minimum Service	Rod Size, Inches, Minimum	Floorstands, Inches, Minimum Pipe
2-1/2	1000	1/2	1-1/2
3	1000	1/2	2
4	1000	5/8	2-1/2
6	1600	3/4	3-1/2
8	1600	3/4	5
10	2400	7/8	6
12	2400	7/8	6
14 and larger	2400	1	8

The minimum thickness of steel plate against concrete shall be as follows.

Piping Size, Nominal	Plate Thickness, Inches
4 inches and smaller	1/4
6 inches	3/8
8 inches	1/2
10 inches	3/4
20 inches and larger	1

The support assembly shall have a minimum yield strength of two and a minimum ultimate breaking strength of four relative to the minimum service strength listed above.

2H3.7.1 Structure Attachments. Structure attachment components shall be fastened by welding or bolting.

Special attention shall be given to rigid floorstands, such as base elbows, so that excessive forces and stresses are not induced in piping, equipment, or supporting structure.

Welding of pipe supports to structural steel forming a part of the supporting structure shall be accomplished by means of the electric metal arc method only, and the quality of welding shall be at least equivalent to that required by the specifications of the American Institute of Steel Construction. The structural beams shall not be heated more than necessary to attach the support. All welds shall run parallel to the axis of the span and all welding shall be staggered with cooling allowed between subsequent deposits. Welding across beam flanges will not be permitted. Loaded beams shall be unloaded or properly shored prior to field welding if 10 per cent or more of the flange or web cross-sectional area should be heated to over 500 F at any one time.

*EPA Request dated Oct 12, 2010, for Information Pursuant to Section 114 . Response #10 of 17 of Appendix B.

The use of structural attachments that apply torsional loads to structural steel is to be avoided if possible. If torsional loading cannot be avoided, only one such attachment per structural beam will be permitted and the following restrictions on eccentricity and loading shall apply for the structural beam sizes indicated.

Structural Beam Size	Eccentricity, Inches, Maximum	Load, Pounds, Maximum
W8	4	210
W10	6	145
W12	6	150
W14	8	100
W16	8	140
W18	10	180
W21	10	200
W24	12	175
W27	14	265
W30	16	230
W36	18	215

2H3.7.2 Structural Steel Shapes. All supplementary structural steel beams required for attachment of piping supports to the supporting structure shall conform to ASTM A36.

Unless otherwise indicated, steel beams shall be attached to supporting steel by means of clip angles welded to the web of the beams or columns. These clip angles shall conform to "Framed Beam Connections" as indicated in the latest AISC Manual of Steel Construction. Clip angles shall be securely attached to the support beam by bolting for shipping and installation purposes. Permanent attachment shall be by field welding.

2H3.7.3 Pipe Attachments. Pipe attachments shall extend sufficiently outside the insulation, if any, to permit free installation and operation of other support components. Pipe attachments shall be rigid relative to the piping and insulation.

On piping other than steel, the piping manufacturer's recommendations shall be followed, subject to the acceptance of the Engineer. On copper

*EPA Request dated Oct 12, 2010, for Information Pursuant to Section 114 . Response #10 of 17 of Appendix B.

piping or tubing, the pipe clamp shall be of copper or copper-plated steel.

Clevis type pipe attachment will not be permitted on any piping or tubing.

On noninsulated piping, 1-1/4 inches and smaller diameter and where no horizontal movement occurs, the pipe attachment may be a clevis type such as Grinnell Figure 260.

Piping supports for freeze protected piping shall be thermally insulated from the piping.

Insulation saddles, securely attached by welding or bolted clamps, shall be used where required to prevent damage to insulation.

2H3.7.3.1 Attachments for Metallic Piping. Material for clamps, lugs, bolts, studs, and nuts shall be carbon steel. Pipe clamps shall be types similar to Grinnell Company Figures 212, 216, 224, and 295; no other types will be permitted.

2H3.7.3.2 Attachments for Nonmetallic Piping. Piping attachments for nonmetallic piping such as polyvinyl chloride (PVC) or fiberglass reinforced plastic such as ABCO, Bondstrand, or Fibercast shall meet the following minimum requirements.

The minimum recommendations of the piping manufacturer shall be met or exceeded.

Piping attachments shall not bear load by a point; their width shall equal or exceed the square root of the outside diameter of the piping (thus, 4 inch OD piping minimum clamp width equals 2 inches), and shall bear around 120 degrees or more of the circumference.

In general, clamps shall not be clamped tight and hard on the piping. Where piping attachment must grip the piping by clamping, a soft, Shore 50-60 rubber pad shall be provided between the clamp and the piping, and the clamp shall be formed to fit the padding.

2H3.7.3.3 Riser Clamps. Riser clamps shall be sized to meet the following minimum requirements unless specified otherwise.

S shall be equal to, or greater than, $\frac{3VAR}{(TH)^2}$ where,

S = design stress for clamp material (for instance, S = 12,000 psi for carbon steel)

*EPA Request dated Oct 12, 2010, for Information Pursuant to Section 114 . Response #10 of 17 of Appendix B.

V = load on one side of riser clamp, pounds

A = arm length from pipe outside surface to load line, inches

R = radius factor, inches (outside pipe radius plus one inch)

T = thickness of clamp stock, inches

H = height of clamp stock, inches

The top surface of the clamp shall be flat and normal to the pipe.

2H3.7.3.4 Riser Lugs. Riser lugs shall be sized in accordance with Welding Research Council Bulletin No. 198 and the requirements of ANSI B31.1-1980. Other analysis methods may be submitted for WRC-198; however, any alternate methods for sizing of riser lugs shall be submitted to the Engineer for review.

2H3.7.4 Rods. Hanger rods shall be constructed of solid round steel bars not less than 1/2 inch in diameter for support of piping 1-1/2 inches and larger, or not less than 3/8 inch for support of smaller piping. Maximum allowable stress in a rod shall be 9000 psi average at the thread root cross-sectional area, or 12,000 psi in nonthreaded rods. Pipe, strap, chain, or other similar materials shall not be used in place of rods. Eye rods shall have fully and neatly welded eyes. Cross-sectional area and strength of the eye weld must be equal to, or greater than, the cross-sectional area and strength of the rod.

Screw threads shall be in conformance with ANSI B1.1. Stress areas for threaded rods shall be equal to, or larger than, the following American National Standard Unified Inch Screw Thread Series.

Nominal Rod Diameter, Inches	Thread Series
3/8 through 4	UNC
4-1/4 and larger	4 UN

When an eye rod with a rod diameter in excess of 2-1/2 inches is required, a forged eye or welded plate eye may be substituted for a welded eye. The forged or welded plate eye, and the weld attaching the plate eye, shall be equal to, or greater than, the cross-sectional area and strength of the rod. Dimensions and fabrication procedures for such eyes shall be submitted to the Engineer for review.

Where piping moves significantly, or operates at 300 F or more, swivel connections shall be provided at both ends of rods. Swivel connections shall minimize rod bending and shall allow, without binding, at least 5 degrees sway in all directions from the vertical position. Special

*EPA Request dated Oct 12, 2010, for Information Pursuant to Section 114 . Response #10 of 17 of Appendix B.

IP10_002448

arrangements, such as rockers, shall be provided as required to keep total combined stress in the rod from exceeding 18,000 psi when swinging.

Forged steel turnbuckles or welded steel turnbuckles similar to Grinnell Standard 80 shall be provided near the center of rod assemblies unless the arrangement provides other means of vertical adjustment under load. Steel turnbuckles shall be used to couple long rods. Turnbuckles and other threaded adjustment components shall be provided with locknuts.

2H3.7.5 Support Springs. Spring assemblies shall be enclosed and shall have a load and position indicator scale, such as Grinnell Figure B-268. Counterweight supports shall not be used. All spring assemblies shall be stamped with "H" at hot (operating) position, and "C" at cold (ambient) position, on the load and position indicator. Spring assemblies which support the pipe by use of an intermediate rod shall incorporate an adjustable rod coupling or turnbuckle with locknut. Spring assemblies shall be suitable for inside or outside installation.

A field adjustment feature for varying support effort shall be provided on spring assemblies. Field adjustment range shall be at least plus or minus 10 per cent of design operating load.

When the weight of support components carried by the spring exceeds one per cent of the pipe load, or when the pipe load exceeds 2000 pounds, the weight of those support components shall be added to the pipe load to size the spring.

Spring assemblies shall be provided with a means to lock the springs. When so locked, the assemblies shall be capable of carrying any hydrostatic test load.

Spring housings shall have metal nameplates with permanently stamped markings indicating their corresponding hanger number. Nameplates shall be attached by tack welding or stainless steel panhead screws.

2H3.7.5.1 Variable Support Springs. Supporting effort at cold position shall be within 15 per cent of design operating pipe load. Where vertical movement is 1/4 inch or less, the spring may be a short length model, such as Grinnell Figure 82. Where vertical movement is 1/2 inch or less, a medium length spring such as Grinnell Figure B-268, may be used. Where vertical movement is 3/4 inch or less, a long length spring, such as Grinnell Figure 98 may be used.

2H3.7.5.2 Constant Support Springs. Constant support springs shall have a total travel range at least 20 per cent greater than design travel, but in no case shall the travel be less than one inch greater than the design travel. Supporting effort shall not vary more than plus or minus 6 per cent throughout the travel range. This tolerance shall also apply after any field adjustment of supporting effort. Constancy of supporting effort shall not deteriorate with age or weather conditions.

*EPA Request dated Oct 12, 2010, for Information Pursuant to Section 114 . Response #10 of 17 of Appendix B.

2H3.7.6 Sliding Bearing Surfaces. Bearing surfaces of this specification are grouped by two general categories: (1) high friction bearing surfaces and (2) low friction bearing surfaces.

High friction bearing surfaces shall have a maximum dry coefficient of friction of 0.333. These surfaces may be hard, smooth steel or cast iron. They shall be free of burrs or any other projections. A shop coat of lubricating grease shall be applied to both surfaces and shall be protected from contamination or removal by wrapping with plastic sheeting. Three layers of sheeting secured with plastic tape shall be used.

The lubricating grease for the high friction class surfaces shall be a water insoluble type suitable for the pressure and temperatures involved, such as synthetic silicone, barium or lithium base with fillers, or additives like natural graphite or molybdenum-disulfide such as "Lubriplate Mo-Lith No. 2" made by the Fiske Brothers Refining Company, 129 Lockwood Street, Newark, New Jersey 07105.

Low friction bearing surfaces shall have a maximum coefficient of friction of 0.100. These surfaces may be roller bearings, ball bearings, lubricating metals such as "Oilite," or graphite or plastics such as "Teflon." These bearings shall also be protected from contamination or removal.

2H3.7.7 Bolting. Bolting larger than 3/4 inch in diameter shall consist of studs and nuts. Bolting 3/4 inch in diameter and smaller shall consist of either studs and nuts or bolts and nuts. Threaded ends of studs or bolts shall not extend more than one diameter beyond the nut. Nuts for each stud shall be installed equidistant from the ends of the stud. Middle portions of studs and shank portions of bolts shall not be threaded.

Bolt heads and nuts shall be hexagonal type conforming to ANSI B18.2. Square bolt heads or nuts will not be acceptable.

Pins with washers and cotter pin retainers may be used in lieu of bolts where no axial load is to be carried.

2H3.7.8 Restraints, Struts, and Anchors. Restraints, struts, and anchors shall have the following features.

(1) Restraints fabricated of structural steel shall have a clearance of 1/8 inch, with respect to the restrained component, in the directions of the restrained movement.

(2) All restraints shall be designed to withstand the static and kinematic friction due to relative movement of the pipe with respect to the restraints.

(3) All restraints and anchors shall withstand the design loading without buckling.

*EPA Request dated Oct 12, 2010, for Information Pursuant to Section 114 . Response #10 of 17 of Appendix B.

(4) The strut design shall provide for easy field adjustment of at least ±2-1/2 inches after erection, and while supporting the load.

(5) Spherical ball joints, permitting a minimum of 10 degrees of angular rotation in any plane, shall be provided at the ends of struts unless specified otherwise. Ball joints shall be shop adjusted to provide smooth movement with a maximum resisting moment of 200 lb-ft at ambient temperature.

(6) All struts shall be provided with means for locking the length adjustment. The length adjustment lock shall be on the right-hand thread end, if both right and left hand threads are used.

2H3.7.9 Shock and Sway Suppressors. Shock and sway suppressors used in absorbing thrust loads associated with relief valve discharge, water hammer, turbine trip, or other causes shall be as specified herein.

Hydraulic shock and sway suppressors shall be as manufactured by Basic Engineers, Models BE 410, or BE 411, or acceptable equal.

Mechanical shock and sway suppressors shall be as manufactured by Pacific Scientific Company, or acceptable equal.

2H3.8 GRINDING. All flame cut edges of support components shall be ground smooth.

2H3.9 SNUBBERS AND SWAY BRACING. All necessary corrective snubbers, sway bracing, or anchors shall be furnished and installed for piping systems in which pulsating deflections occur after start-up.

2H3.10 PAINTING. Exposed components of shop fabricated pipe supports shall be shop painted before shipment to the jobsite. Painting shall consist of one coat of metal primer, suitable for the maximum temperature of that component. Primer shall be in accordance with the requirements of Section 1H. Before painting, surfaces shall be suitably cleaned and prepared in accordance with the paint manufacturer's instructions. Surfaces to be field welded shall be left unpainted for a distance of 3 inches from the weld.

Bearing surfaces and nameplates shall not be painted. These surfaces shall be coated with preservative coating as specified in Section 1H.

2H3.11 IDENTIFICATION. Each pipe support assembly shall be individually bundled so that parts remain together and undamaged through handling, shipment, and covered storage. Each bundle shall be durably and clearly tagged with its identifying number.

2H3.12 INSTALLATION. Pipe supports shall be installed in accordance with the requirements stated under Pipe Supports in Section 3F - PIPING ERECTION.

*EPA Request dated Oct 12, 2010, for Information Pursuant to Section 114 . Response #10 of 17 of Appendix B.

GUIDE TO PIPE SUPPORT:

LOCATION: PIPING SUPPORTS SHALL BE LOCATED TO SATISFY THE FOLLOWING CONDITIONS:

1. To suit nominal pipe span (see Table 1-1)
2. Near concentrated loads such as valves, branches, etc.
3. Near corners (within 1/4 the nominal span)
4. To suit building steel (supplementary steel may be added, if required.)
5. To clear other items such as electrical and instrument trays, other piping, stairs, equipment including maintenance space.
6. To line-up with (and match, if possible), adjacent supports.
7. Anchor and Guides:
   a. Provide guides for wind and/or water hammer
   b. Anchor or guide high energy-density lines and regulating valves.
   c. On warm or hot piping, do not place two anchors adjacent, allow for pipe movement due to expansion.

LOADS:

1. For ordinary spans and solid supports the "typical load" may be used. (See Table 1-1)
2. For cases including vertical runs, vertically deflecting spans and spans with concentrated loads, (valves, branches, etc) maximum load shall be calculated.
   a. In determining maximum load, pipe weight, cold spring and/or expansion loads and hydrostatic loads must be considered.
3. The design load for solid supports at vertically deflecting pipe sections shall be the greater of the following conditions.

*EPA Request dated Oct 12, 2010, for Information Pursuant to Section 114 . Response #10 of 17 of Appendix B.

IP10_002452

a. The operating weight load plus the calculated flex load.

b. The hydrostatic test load plus the cold spring load, if any.

4. For supports utilizing springs the "actual" operating weight must be calculated.

LENGTH: THE MINIMUM HANGER LENGTH WHICH MAY BE USED FOR THE SUPPORT OF A PIPING SYSTEM WILL BE GOVERNED BY THE FOLLOWING:

1. Space required for installation of all components. (this includes vertical movement when spring hanger is used, means for adjustment and locking devices - ie. lock-nuts.) (See Table 1-1)

2. Adequate length to accomodate horizontal movement of piping. (A minimum of 1'-0" of hanger rod for 1" of horizontal pipe movement.)

EXPANSION MOVEMENT: THE MOVEMENT OF PIPING SYSTEMS, DUE TO THERMAL EXPANSION, MUST BE DETERMINED TO PROPERLY LOCATE, SELECT, AND DESIGN SUPPORTS AND THEIR COMPONENTS.

*EPA Request dated Oct 12, 2010, for Information Pursuant to Section 114 . Response #10 of 17 of Appendix B.

TABLE 1-1

PIPE SIZE IN.	NOMINAL SPAN FT. (1)	MAXIMUM SPAN FT. (1)	TYPICAL LOAD LBS. (2)	MINIMUM HANGER LENGTH (HL) - INSULATED PIPE (3)			
				RIGID HANGER ASSEMBLY	VARIABLE SUPPORT SPRING (VS)		
					NORMAL SPRING (4)	SHORT SPRING (4)	LOAD RANGE (5)
1/2	5	8	100	1'-3"	-	-	-
3/4	6	9	100	1'-3"	-	-	-
1	7	10	100	1'-3"	-	-	-
1-1/2	9	12	100	1'-3"	1'-10"	1'-7"	58 - 80
2	10	13	100	1'-5"	2'-1"	1'-9"	108 - 149
2-1/2	11	14	100	1'-5"	2'-1"	1'-9"	140 - 193
3	12	16	200	1'-5"	2'-5"	2'-0"	252 - 347
4	14	18	400	1'-9"	2'-6"	2'-0"	448 - 616
5	16	19	500	1'-9"	2'-6"	2'-2"	600 - 825
6	17	20	600	1'-11"	2'-9"	2'-4"	800 - 1100
8	19	23	1100	2'-0"	2'-11"	2'-6"	1360 - 1870
10	22	25	1900	2'-2"	3'-3"	2'-10"	1800 - 2475
12	23	28	2800	2'-3"	3'-8"	3'-2"	3100 - 4400
14	25	30	3500	2'-5"	4'-0"	3'-6"	4320 - 5940
16	26	32	5000	3'-0"	4'-9"	4'-2"	6000 - 8250
18	28	34	6500	3'-4"	5'-4"	4'-8"	8000 - 11000
20	30	36	9000	3'-5"	5'-8"	5'-0"	10650 - 14640
24	32	38	13000	3'-7"	6'-2"	5'-6"	14150 - 19460
30	32	38	18000	4'-1"	6'-10"	6'-2"	18800 - 25850

(1) Ordinarily use "nominal span." Up to "maximum span" may be used where it is impractical to place supports at closer spacing. Spans are without concentrated loads.

(2) "Typical Loads" are for schedule 40 pipe with water.

(3) Minimum Hanger length for uninsulated pipe is approximately 3" less than values shown.

(4) For vertical movement from 0" to 1/4" assume short spring. For vertical movement from 1/4" to 1/2" assume normal spring.

(5) "Load range" is based on schedule 40 pipe, water and 2" of 85% magnesia insulation at maximum span without concentrated loads.

BLACK & VEATCH CONSULTING ENGINEERS PROJECT	PIPE SUPPORT SUPPORT SELECTION GUIDE	
		3 of 6

*EPA Request dated Oct 12, 2010, for Information Pursuant to Section 114 . Response #10 of 17 of Appendix B.

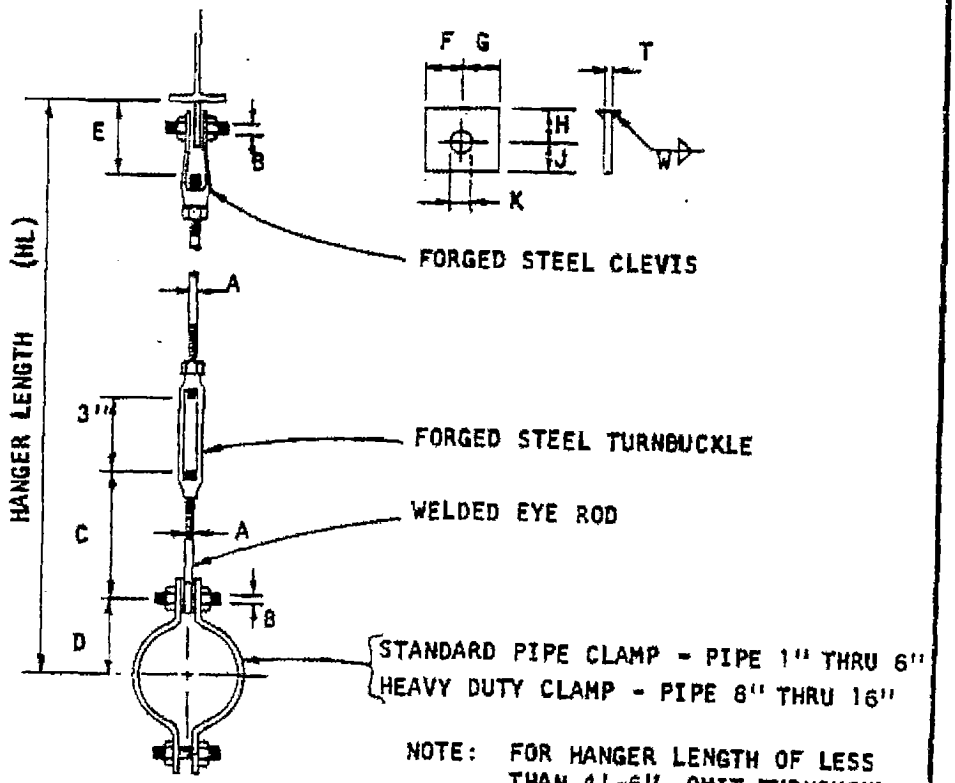

NOTE: FOR HANGER LENGTH OF LESS THAN 4'-6", OMIT TURNBUCKLE AND REPLACE WELDED EYE ROD WITH WELDLESS EYENUT.

NOM. PIPE	MAX LOAD	A	B	C	D	E	F	G	H	J	K	T	W
1	500	1/2	1/2	12	1-1/4	5-1/2	1-1/2	1-1/2	3	1-1/4	9/16	1/4	1/4
1-1/2	800	5/8	1/2	12	1-5/8	5-1/2	1-1/2	1-1/2	3	1-1/4	9/16	1/4	1/4
2	1040	5/8	1/2	12	2	5-1/2	1-1/2	1-1/2	3	1-1/4	9/16	1/4	1/4
2-1/2	1040	5/8	1/2	12	2-1/2	5-1/2	1-1/2	1-1/2	3	1-1/4	9/16	1/4	1/4
3	1040	5/8	1/2	12	3	5-1/2	1-1/2	1-1/2	3	1-1/4	9/16	1/4	1/4
3-1/2	1040	5/8	1/2	12	3-1/4	5-1/2	1-1/2	1-1/2	3	1-1/4	9/16	1/4	1/4
4	1040	3/4	5/8	12	3-1/2	7	2	2	3	1-1/2	11/16	3/8	1/4
6	1600	7/8	3/4	12	5"	7	2	2	3	1-3/4	13/16	1/2	5/16
8	2800	7/8	1	12	6-1/4	7	2	2	3	1-3/4	1-1/8	1/2	5/16
10	3200	1	1	12	7-3/4	7	2	2	3	1-3/4	1-1/8	1/2	5/16
12	3200	1	1	12	9-1/4	7	2	2	3	1-3/4	1-1/8	1/2	5/16
14	4300	1-1/4	1-1/4	12	10	7	2	2	3	2-1/4	1-3/8	3/4	3/8
16	8000	1-3/4	1-1/2	12	11	8	2-1/2	2-1/2	4	3	1-5/8	1	3/8
18	SEE RIGID HANGER ASSEMBLY - INSULATED PIPE												
20	SEE RIGID HANGER ASSEMBLY - INSULATED PIPE												
24	SEE RIGID HANGER ASSEMBLY - INSULATED PIPE												
30	SEE RIGID HANGER ASSEMBLY - INSULATED PIPE												

BLACK & VEATCH CONSULTING ENGINEERS PROJECT	PIPE SUPPORT RIGID HANGER ASSEMBLY - UNINSULATED PIPE	RHA TYPE I
		4 of 6

*EPA Request dated Oct 12, 2010, for Information Pursuant to Section 114 . Response #10 of 17 of Appendix B.

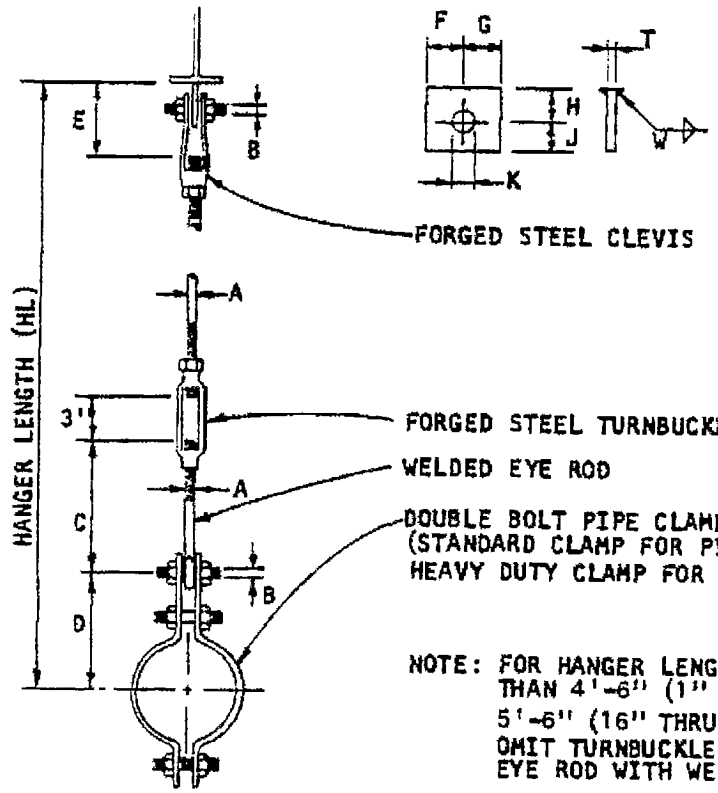

NOM. PIPE	MAX LOAD	A	B	C	D	E	F	G	H	J	K	T	W
1	950	1/2	1/2	12	2-1/2	5-1/2	1-1/2	1-1/2	3	1-1/4	9/16	1/4	1/4
1-1/2	1500	5/8	5/8	12	4	5-1/2	1-1/2	1-1/2	3	1-1/4	11/16	3/8	1/4
2	1500	5/8	5/8	12	5	5-1/2	1-1/2	1-1/2	3	1-1/4	11/16	3/8	1/4
2-1/2	1500	5/8	5/8	12	5-1/2	5-1/2	1-1/2	1-1/2	3	1-1/4	11/16	3/8	1/4
3	1500	5/8	5/8	12	6	5-1/2	1-1/2	1-1/2	3	1-1/4	11/16	3/8	1/4
3-1/2	1500	5/8	5/8	12	6	5-1/2	1-1/2	1-1/2	3	1-1/4	11/16	3/8	1/4
4	2500	3/4	3/4	12	6-1/2	7	2	2	3	1-1/2	13/16	1/2	1/4
6	2800	7/8	1	12	8-1/2	7	2	2	3	1-3/4	1-1/8	1/2	5/16
8	2800	7/8	1	12	9-1/2	7	2	2	3	1-3/4	1-1/8	1/2	5/16
10	3200	1	1	12	10-1/2	7	2	2	3	1-3/4	1-1/8	1/2	5/16
12	3200	1	1	12	11-1/2	7	2	2	3	1-3/4	1-1/8	1/2	5/16
14	4300	1-1/4	1-1/4	12	12-3/4	7	2	2	3	2-1/4	1-3/8	3/4	3/8
16	8000	1-3/4	1-3/4	12	15	8	2-1/2	2-1/2	4	3	1-7/8	1	3/8
18	10000	2	2	12	16-1/4	9	3	3	4	3-1/2	2-1/8	1	3/8
20	11500	2	2	12	17-1/4	9	3	3	4	3-1/2	2-1/8	1	3/8
24	11500	2	2	12	19-1/4	9	3	3	4	3-1/2	2-1/8	1	3/8
30	15000	2	2	12	25	9	3	3	4	3-1/2	2-1/8	1	1/2

BLACK & VEATCH CONSULTING ENGINEERS PROJECT	PIPE SUPPORT RIGID HANGER ASSEMBLY - INSULATED PIPE	RHA TYPE II
		5 of 6

*EPA Request dated Oct 12, 2010, for Information Pursuant to Section 114 . Response #10 of 17 of Appendix B.

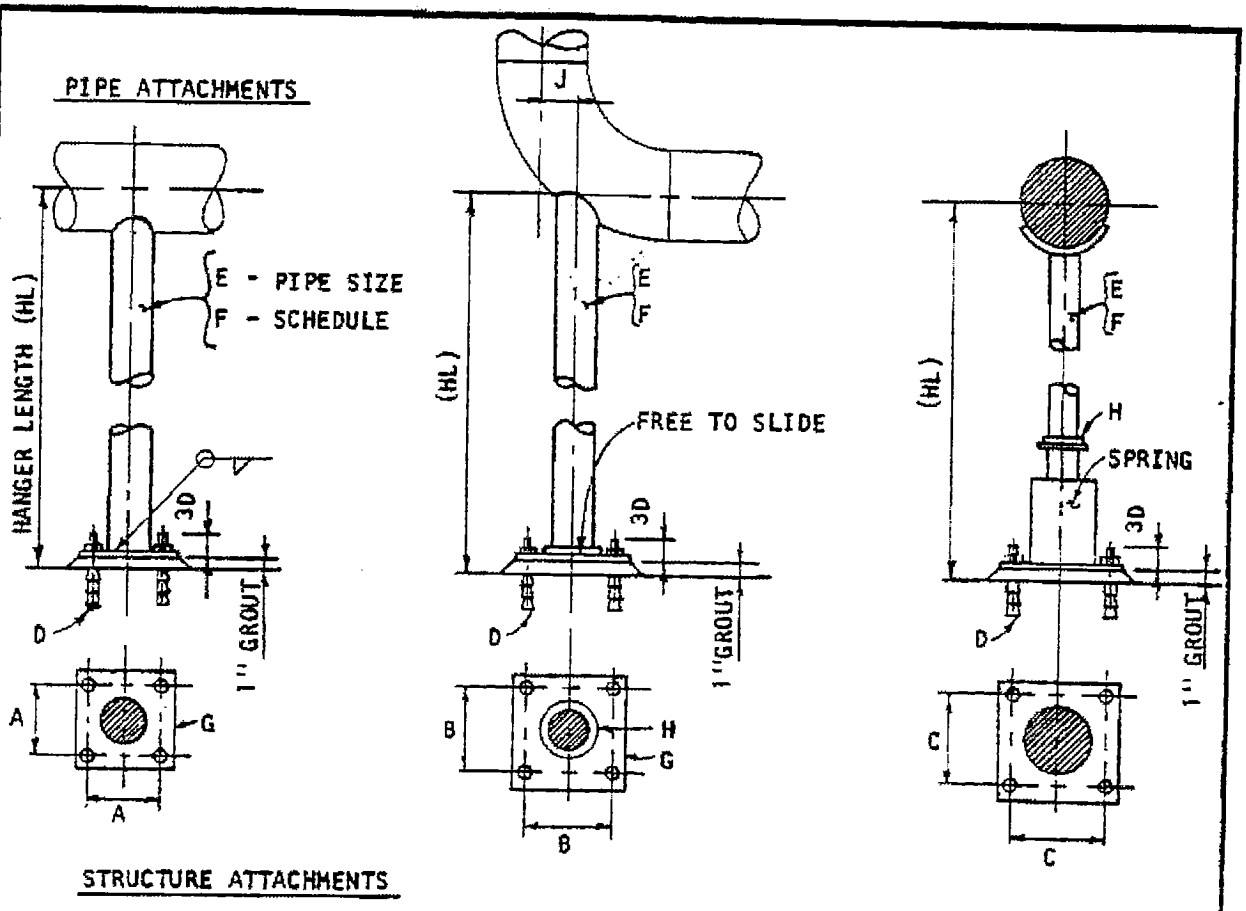

NOM PIPE	A	B	C	D	E	F	G	H	J
1-1/2	5	5		1/2	1	40	8 x 1/4 x 0'-8"	2" Ø x 1/4	
2	5	5		1/2	1	40	8 x 1/4 x 0'-8"	2" Ø x 1/4	
2-1/2	5	5		1/2	1-1/2	40	8 x 1/4 x 0'-8"	3" Ø x 1/4	
3	5	5		3/4	2	40	8 x 1/4 x 0'-8"	3" Ø x 1/4	
4	5	5		3/4	2-1/2	40	8 x 1/4 x 0'-8"	3-1/2 Ø x 1/4	
6	6	6		3/4	3-1/2	40	9 x 3/8 x 0'-9"	5" Ø x 1/4	
8	7	7		3/4	5	40	10 x 1/2 0'-10"	6-1/2 Ø x 1/4	
10	7-1/2	7-1/2		3/4	6	40	10 x 3/4 x 0'-10"	7-1/2 Ø x 1/4	
12	7-1/2	7-1/2		3/4	6	40	10 x 3/4 x 0'-10"	7-1/2 Ø x 1/4	
14	9	9		3/4	8	40	12x 3/4 x 1'-0"	9-1/2 Ø x 3/8	
16	9	9		3/4	8	60	12 x 3/4 x 1'-0"	9-1/2 Ø x 3/8	
18	10	10		7/8	10	40	13 x 3/4 x 1'-1"	11-1/2 Ø x 3/8	
20	12	12		7/8	12	40	15 x 1 x 1'-3"	13-1/2 Ø x 3/8	
24	12	12		7/8	12	60	15 x 1 x 1'-3"	13-1/2 Ø x 3/8	

VARIES TO SUIT SPRING

MAY VARY + E TO - E/2

NOTE: 1. ANY COMBINATION OF PIPE ATTACHMENT AND STRUCTURE ATTACHMENT MAY BE USED FOR PIPE SUPPORT.

2. 3-UNIT EXPANSION ANCHOR BOLTS SHALL BE USED UNLESS NOTED OTHERWISE

BLACK & VEATCH CONSULTING ENGINEERS PROJECT	PIPE SUPPORT PIPE STAND ASSEMBLIES	
		6 of 6

*EPA Request dated Oct 12, 2010, for Information Pursuant to Section 114 . Response #10 of 17 of Appendix B.

W-1-03A

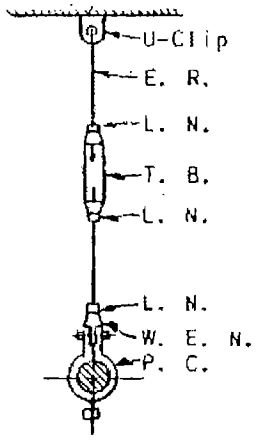

LONG HANGER
(Use if space permits)

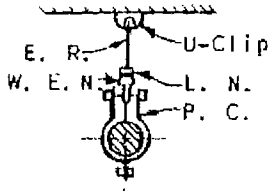

SHORT HANGER
(Use only if space requires)

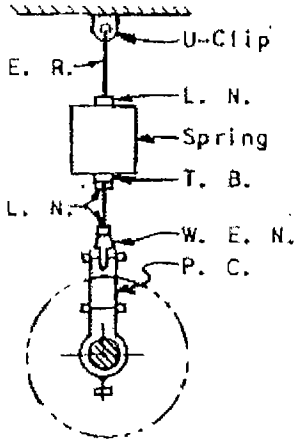

LONG SPRING HANGER

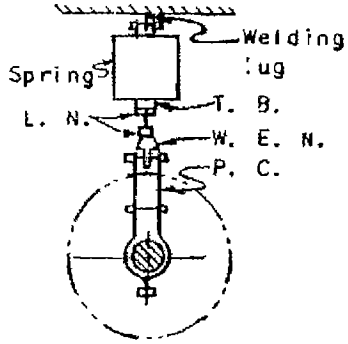

SHORT SPRING HANGER

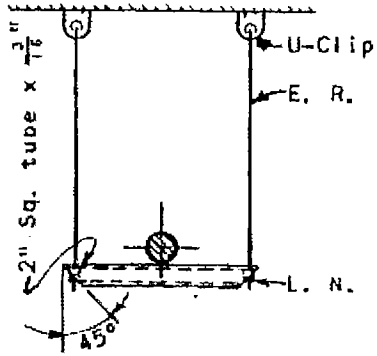

Uninsulated Pipe

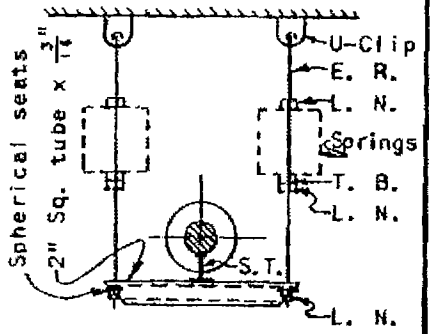

Insulated Pipe

TRAPEZE HANGERS

ABBREVIATIONS:

L. N. — Locknut
W. E. N. — Weldless eye nut
P. C. — Pipe clamp
T. B. — Turnbuckle
E. R. — Eye rod
S. T. — Structural tee

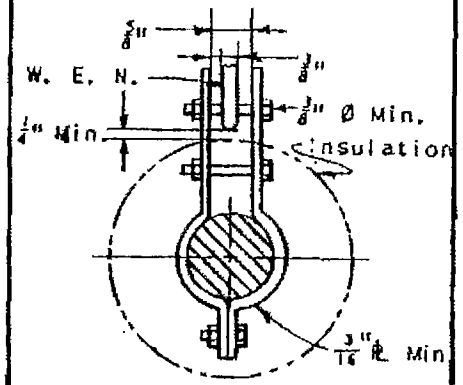

TYPICAL PIPE CLAMP

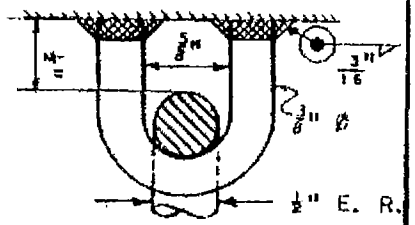

TYPICAL U-CLIP

General Notes: Minimum rod diameter = 3/8". Weld rod eyes closed. Minimum plate thickness = 3/16". Bolts & nuts are 3/8" Ø minimum hex shape. Uninsulated pipe use two bolt pipe clamp. Insulated pipe use three bolt pipe clamp.

DATE	REVISION OR ISSUE	NO.	BY	BLACK & VEATCH, CONSULTING ENGINEERS - KANSAS CITY, MISSOURI	PROJECT
				HANGER DETAIL TYPICAL SMALL PIPE HANGERS (For 2" pipe and smaller)	SHEET 1 of 5

*EPA Request dated Oct 12, 2010, for Information Pursuant to Section 114 . Response #10 of 17 of Appendix B.

IP10_002458

4-.-03A

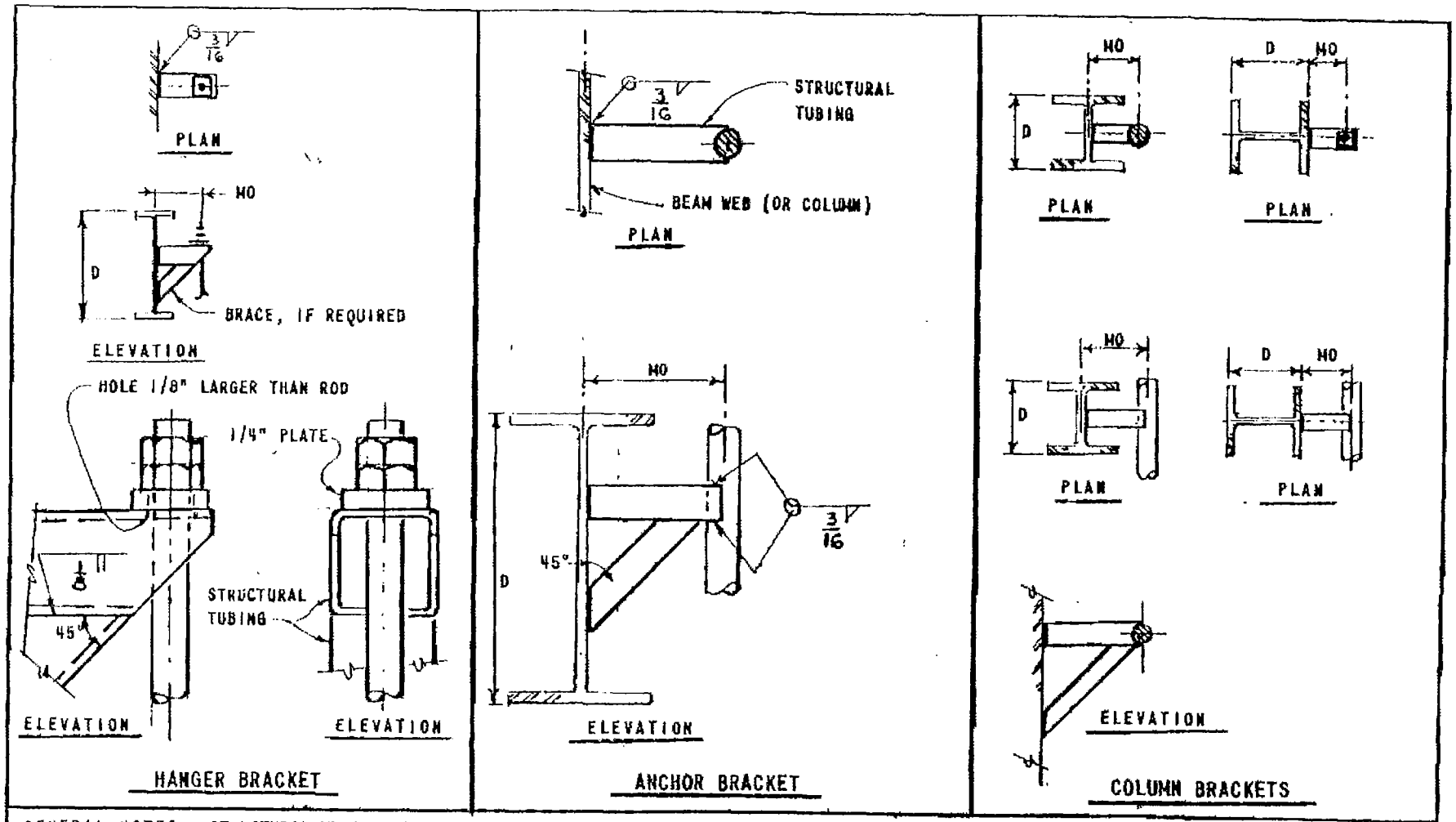

GENERAL NOTES: STRUCTURAL TUBING IS 2" x 2" x 0.110" WALL TYPICALLY, OR STRONGER AS REQUIRED FOR LOAD. MAXIMUM OFFSET (MO) = 2/3 x BEAM DEPTH (D) OR 18", WHICHEVER IS SMALLER.

DATE	REVISION OR ISSUE	NO.	BY	BLACK & VEATCH, CONSULTING ENGINEERS - KANSAS CITY, MISSOURI	PROJECT
				HANGER DETAIL TYPICAL SMALL PIPE SUPPORTS (FOR 2" PIPE AND SMALLER)	SHEET 2 of 5

*EPA Request dated Oct 12, 2010, for Information Pursuant to Section 114 . Response #10 of 17 of Appendix B.

IP10_002459

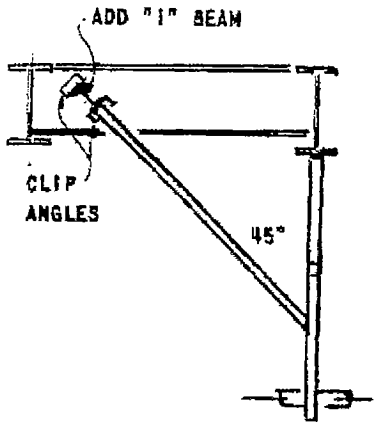

ELEVATION

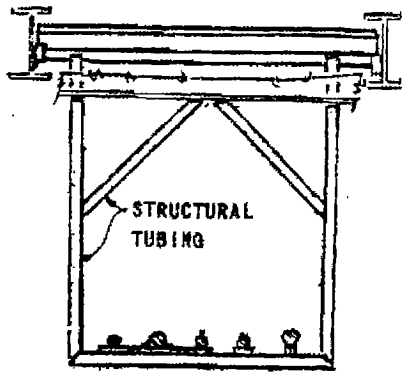

ELEVATION

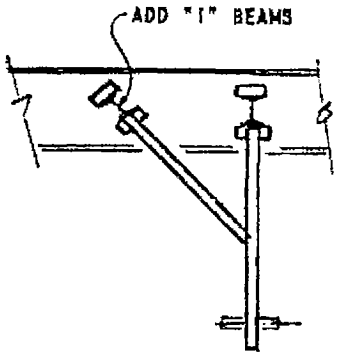

ELEVATION

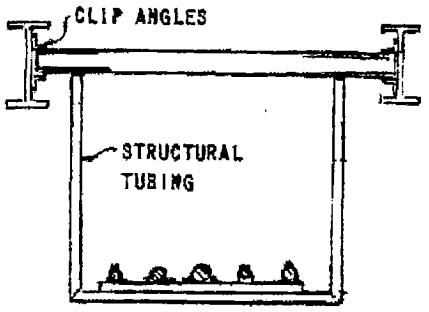

ELEVATION

PIPE RACK VARIATIONS

GENERAL NOTES: ADD "I" BEAMS: 315.7 UP TO 7 FT. MAX. LONG; 417.7 UP TO 10 FT. MAX. LONG. CLIP ANGLES: 3" x 2" x 3/16". STRUCTURAL TUBING: 2" x 2" x 0.110" WALL.

DATE	REVISION OR ISSUE	NO.	BY

BLACK & VEATCH, CONSULTING ENGINEERS - KANSAS CITY, MISSOURI

PROJECT

SHEET 3 of 5

HANGER DETAIL
TYPICAL SMALL PIPE SUPPORTS
(FOR 2" PIPE AND SMALLER)

*EPA Request dated Oct 12, 2010, for Information Pursuant to Section 114 . Response #10 of 17 of Appendix B.

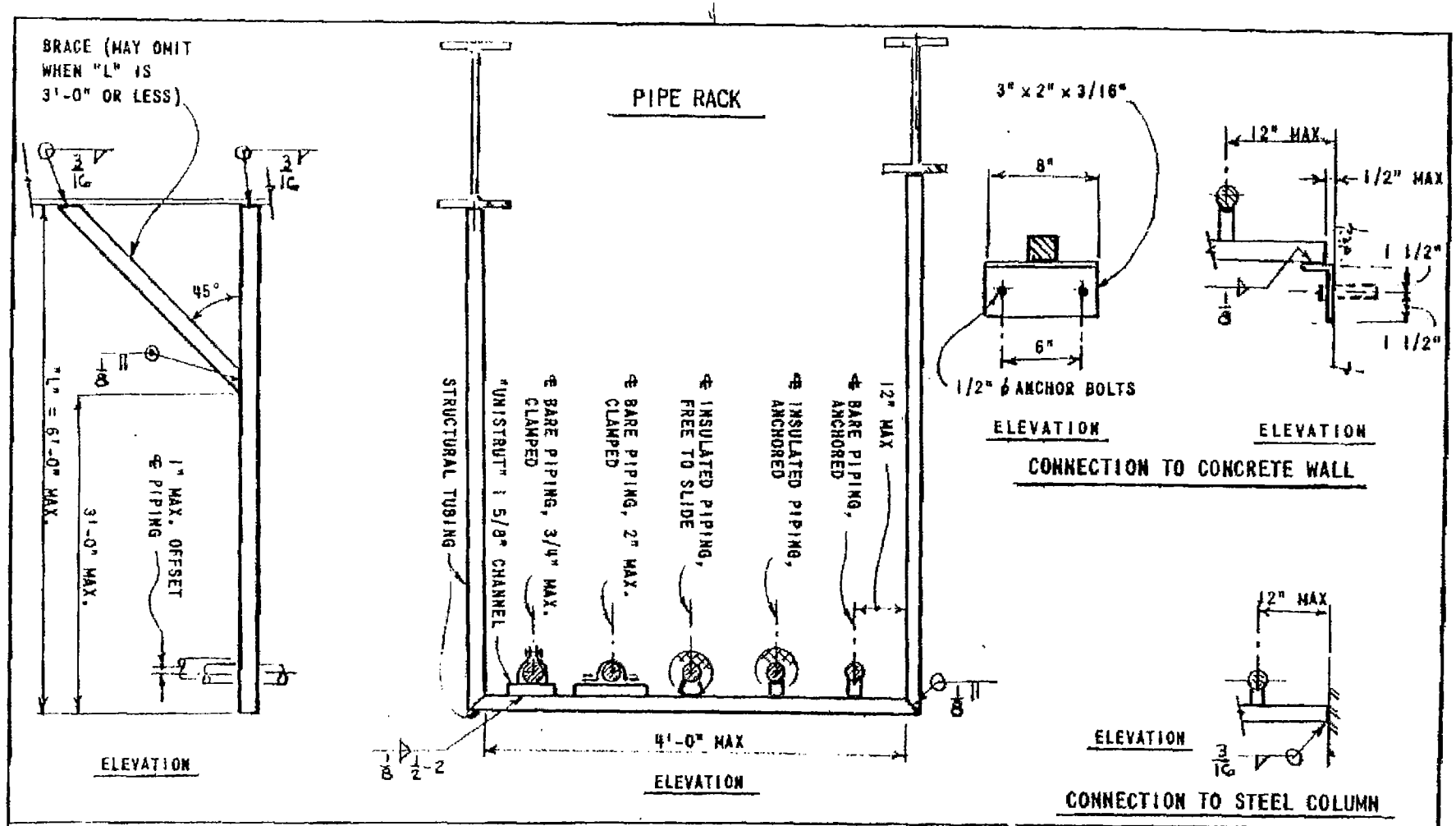

GENERAL NOTES: "UNISTRUT" OR EQUAL: FOR 3/4" AND SMALLER PIPING CLAMPS = P-1109, P-1111, OR P-1112 AND CHANNEL = P-4000 TYPE. FOR 1" AND LARGER PIPING, CLAMPS = P-2558 SERIES WITH BOLTING, AND CHANNEL = P-3000 TYPE. STRUCTURAL TUBING IS 2" x 2" x 0.110" WALL, OR STRONGER.

DATE	REVISION OR ISSUE	NO.	BY	BLACK & VEATCH, CONSULTING ENGINEERS - KANSAS CITY, MISSOURI	PROJECT
				HANGER DETAIL TYPICAL SMALL PIPE SUPPORTS (FOR 2" PIPE AND SMALLER)	SHEET 4 of 5

*EPA Request dated Oct 12, 2010, for Information Pursuant to Section 114 . Response #10 of 17 of Appendix B.

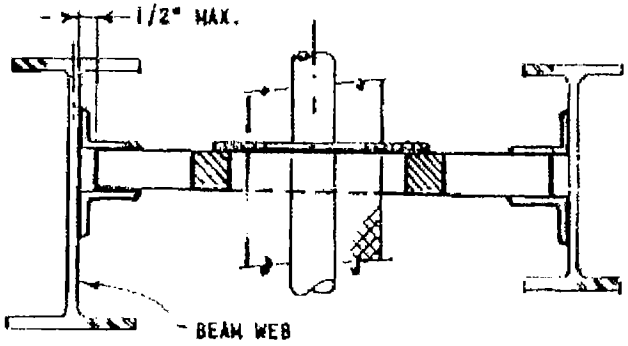

ELEVATION

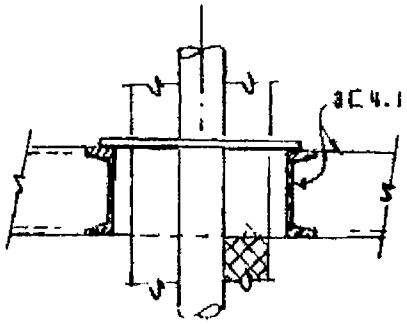

ELEVATION

ALTERNATE WITH STRUCTURAL CHANNEL FOR HEAVIER LOADS OR LONGER SPANS.

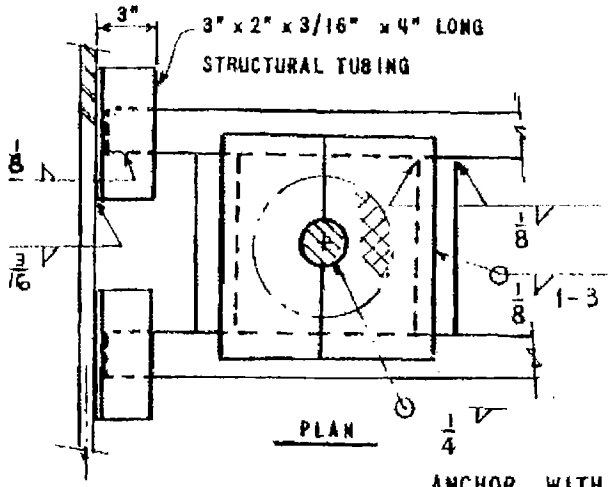

PLAN

ANCHOR, WITH ADDED BEAMS

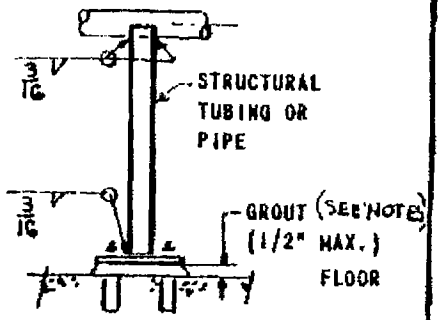

ELEVATION

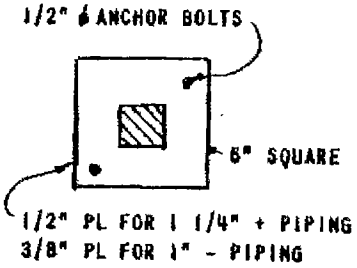

PLAN

FLOOR STAND, ANCHOR

GENERAL NOTES: STRUCTURAL TUBING IS 2" x 2" x 0.110" WALL TYPICALLY, OR STRONGER AS REQUIRED FOR LOAD. GROUT MAY BE EPOXY TYPE "COLMA DUR", SIKA CHEMICAL CORP.

DATE	REVISION OR ISSUE	NO.	BY	BLACK & VEATCH, CONSULTING ENGINEERS-KANSAS CITY, MISSOURI	PROJECT
				HANGER DETAIL TYPICAL SMALL PIPE SUPPORTS (FOR 2" PIPE AND SMALLER)	SHEET 5 of 5

*EPA Request dated Oct 12, 2010, for Information Pursuant to Section 114 . Response #10 of 17 of Appendix B.

IP10_002462

Section 2I - VALVES

2I.1 GENERAL. All valves required for a complete operating flue gas scrubber system shall be furnished.

Isolation valves shall be provided to permit any piece of equipment to be removed from service for maintenance without affecting operation of the remainder of the system.

All water supply connections to each module shall be equipped with shut-off valves, manual bypass valves capable of throttling, and with control valves where pressure control is required.

Except as specified otherwise, each valve that requires operation during start-up or shutdown of a scrubber module shall be equipped with both a mechanical manual operator and an electric motor or pneumatic diaphragm operator.

Where required by the service, valves shall be rubber lined or of suitable corrosion-erosion resistant materials acceptable to the Engineer.

The system shall be designed to minimize the number of valves in slurry service.

Throttling valves shall not be used for control of slurry flow rate.

Valves for slurry service shall be plug valves, slide gate valves, diaphragm valves, or pinch valves.

Flanged and butt welding end steel body valves shall be constructed in accordance with ANSI B16.34 unless otherwise specified herein. Socket weld and threaded end steel body valves shall be constructed in accordance with MSS SP-84 unless otherwise specified.

Valves with flanged, socket welded, or screwed connections shall have ends prepared in accordance with the applicable ANSI standards. Steel flanges shall be raised face type. Bronze flanges shall be flat faced type.

Butt welding ends shall be prepared in accordance with the butt weld end preparation details included in Subsection 2H2 - PIPING FABRICATION.

All valves furnished for connection to piping furnished under separate specifications shall be provided with flanged ends.

Seismic design criteria for valves other than scrubber recirculation piping system valves shall be in accordance with Classification E-I, Performance Level L as defined in Section 1S. Scrubber recirculation piping system valves shall be in accordance with Classification E-I, Performance Level G.

*Each valve shall be provided with an easily visible mechanical position indicator.

*Addendum No. 3

*EPA Request dated Oct 12, 2010, for Information Pursuant to Section 114 . Response #10 of 17 of Appendix B.

IP10_002463

A list of valve types and materials of construction shall be submitted as part of the Proposal Data.

All materials of construction shall be in accordance with the specific recommendations of the valve manufacturer for the expected service conditions.

*2I.2 CONTROL VALVES. Except in slurry service control valves shall be Fisher Controls Company and may be pneumatically or electrohydraulically operated. Positioners shall be provided on all control valves. Limit switches shall be provided as required for interlocking and indication.

Each control valve station shall include inlet and outlet shut-off valves and a bypass valve capable of throttling. Shut-off and bypass valves shall be manually operated unless they must be automatically operated to satisfy control system requirements specified in Section 2N.

2I.2.1 Pneumatically Operated Control Valves. Pneumatically operated control valves shall be of the pneumatic diaphragm or piston operated type. Positioners, controllers, solenoid valves, limit switches, and other accessory equipment shall be furnished as required by the system design and as acceptable to the Engineer. Handjacks shall be provided on all valves.

*Valve positioners shall be manufactured by Fisher Bailey Controls Company, AP-2 or AP-5. Valve positioners shall be equipped with bypasses except where the diaphragm operating pressure range differs from the controller loading pressure range. Pressure gages shall be provided for indicating the air supply and diaphragm pressures, and a pressure gage or electric indicator provided to indicate the value of the control signal. Positioners shall be equipped with filter regulator air supply sets mounted on the valve yokes. Limit switches shall be provided as required for interlocking and indication and shall be in accordance with the requirements of Section 1B.

Each device requiring an air supply shall be equipped with a combination filter regulator, Fisher 67 FR or an acceptable equal. Devices mounted together on a valve yoke may be served by a single regulator, providing the single supply pressure is satisfactory and the regulator capacity is not exceeded. Filter regulators shall be mounted on the device served. Filter regulators shall be suitable for a 150 psi maximum inlet pressure.

Tubing shall be in accordance with the requirements of Subsection 2H1.

2I.3 GENERAL SERVICE VALVES. General service valves shall be as manufactured by Crane, Dresser-Hancock, Jenkins, Lunkenheimer, Pacific, William Powell Co., Rockwell-Edward, Walworth or Yarway.

*Negotiated Revision

*EPA Request dated Oct 12, 2010, for Information Pursuant to Section 114 . Response #10 of 17 of Appendix B.

Valve body and trim materials shall be as follows.

Material Name	Description
Bronze	ASTM B62 for Class 125 and 150 valves
	ASTM B61 for Class 200 and 300 valves
Carbon steel	Forged - ASTM A105 or ASTM A181 Grade 2
	Cast - ASTM A216 Grade WCB
Stainless steel	
Body	AISI Type 316
Stems, discs, and seat facings	AISI Type 410, 420, or ASTM A182 Grade F-6, except that trim for stainless steel body valves may be the same material as the body
Nickel alloy (for seat facings)	Monel metal or other alloy having not less than 60 per cent nickel content

2I.3.1 Steel Body Gate, Globe, and Check Valves. Check valves shall be the guided piston type or swing disc type. Swing check valves shall be designed for installation in either horizontal piping or vertical piping with upward flow.

2I.3.1.1 Valves 2 Inches and Smaller. Steel body valves 2 inches and smaller shall have forged carbon or stainless steel bodies as required for the service. Valves shall be Class 600 minimum.

Valves shall have socket weld ends and bolted bonnet joints.

Gate and globe valves shall have outside screw and yoke construction. Gate valves shall have solid wedges. Split wedges are not acceptable.

Gate valves shall have renewable seats. All other valves shall have integral type seats.

Gate and globe valves shall be of integral back seat design.

*EPA Request dated Oct 12, 2010, for Information Pursuant to Section 114 . Response #10 of 17 of Appendix B.

IP10_002465

Trim materials shall be as follows.

Stem	Stainless steel
Disc	Equivalent to or better than body material
Seating surfaces	Stellite faced

2I.3.1.2 Valves 2-1/2 Inches and Larger. Steel body valves 2-1/2 inches and larger shall have carbon steel or stainless steel bodies as required for the service. Valves shall be Class 150 or greater. Face-to-face and end-to-end dimensions shall conform to the latest requirements of ANSI B16.10.

Gate and globe valves shall be provided with back seating construction. Gate and globe valves shall be of outside screw and yoke construction.

Valve bodies and bonnets shall be designed to support the valve operators with the valve in any position and without external support.

Gate valves 4 inches and larger shall have flexible wedges. Split wedges will not be acceptable.

Bonnet joints shall be of the bolted flanged type having flat face flange facings. Bolting for flanged bonnets and yokes shall be bolt studs conforming to ASTM A193 Grade B7, with nuts conforming to ASTM A194 Grade 2H.

Trim materials shall be as follows.

Stem	11-14 per cent chromium stainless steel
Disc	Equivalent to or better than body material
Seating surfaces	Stainless steel on nickel alloy, or hardened stainless steel on stainless steel

2I.3.2 Bronze Gate, Globe, and Check Valves. These valves shall have union type bonnet joints. All gate and globe valves shall be of the inside screw, rising stem construction.

Class 150 gate valves shall have either integral or renewable seats. All other valves shall have renewable seats.

Swing check valves shall be designed for installation in either horizontal piping or vertical piping with upward flow.

*EPA Request dated Oct 12, 2010, for Information Pursuant to Section 114 . Response #10 of 17 of Appendix B.

Trim materials shall be as follows.

Discs	Stainless steel, except nickel alloy may be used for gate valves
Stem	Brass
Seats	Stainless steel, except nickel alloy may be used for gate valves

2I.4 BUTTERFLY VALVES. Butterfly valves for cooling tower blowdown water and river water service shall be Mosites as manufactured by Media Valve Company Inc., Fort Worth, Texas or acceptable equal. Butterfly valves for other water applications shall be constructed in accordance with AWWA C504, AWWA Standard for Rubber-Seated Butterfly Valves and shall be DeZurik, Henry Pratt, Allis-Chalmers, or Crane.

Valve materials shall be equivalent to or shall exceed the strength and corrosion-erosion resistance of the following listed materials.

Valve body	Cast iron - ASTM A48 Class 40 or ASTM A126 Class B
	Cast steel - ASTM A216 Grade WCB
	Stainless steel - ASTM A296 Grade CF-8M
Disc	Austenitic cast iron - ASTM A436, Type 1
	Stainless steel - ASTM A296 Grade CF-8M
Shaft	Stainless steel - ASTM A276, Type 304
	Stainless steel - ASTM A276, Type 316
Soft seat	Synthetic rubber which does not contain polyisoprene
Hard seat	Stainless steel - ASTM A276, Type 304
Valve sleeve bearings	Self-lubricated bronze or other acceptable nonlubricated material

*EPA Request dated Oct 12, 2010, for Information Pursuant to Section 114 . Response #10 of 17 of Appendix B.

The valve body shall be of the wafer type designed for installation between two ANSI B16.1 Class 125 or ANSI B16.5 Class 150 flanges.

The valve disc shall rotate approximately 90 degrees from full open to tight shut-off position.

The rubber seat shall be a spool type rubber ring vulcanized or bonded to the valve body and extending over the flange contact faces to serve as a piping gasket or a metal reinforced rubber ring retained by the mating pipe flange.

The seating surfaces on the disc shall be ground and polished.

The valve shaft or shafts shall be designed for the torques and forces encountered in opening and closing the valve in service. The shaft design torque shall be determined in accordance with Appendix A of AWWA C504. All disc-to-shaft securing fasteners shall be 18-8 stainless steel.

Shaft seals shall be of the self-adjusting split "V" type accessible for replacement without dismantling the valves.

Manual operators shall be of the worm gear reducer type. The operators shall be suitable for operation in any position without loss of lubricant. Each operator shall be provided with a locking device. The locking device shall be arranged to lock the valve with the disc in any position from fully closed to fully open. Each operator shall be furnished with a handwheel and dial position indicator. Levers or cranks will not be acceptable. In addition, each operator shall be provided with a 1-1/2 inch hexagon nut for a portable air wrench drive.

2I.5 PLUG VALVES. Plug valves shall be DeZurik eccentric plug type, *~~Tulfine~~ Tufline tapered plug valve, or acceptable equal.

All valve bodies shall conform to the requirements of ANSI for dimensions, material thickness and material specifications, and their respective pressure classes. Valve body ends shall be flanged in accordance with ANSI standards.

Plug valves used in low pH or abrasive applications shall have a neoprene lined body and plug with stainless steel bearings. Manually operated plug valves 3 inches and larger shall have gear operators and handwheels.

2I.6 SLIDE GATE VALVES. Slide gate valves shall be DeZurik C knife gate valves, Hilton H-Z wafer valves or acceptable equal. All wetted parts shall be of Type 316 stainless steel. Flax packing and neoprene resilient seat shall be provided for each valve.

2I.7 DIAPHRAGM VALVES. Diaphragm valves shall be Grinnell-Saunders weir type or acceptable equal. The valves shall have handwheel operators and

*Addendum No. 3

*EPA Request dated Oct 12, 2010, for Information Pursuant to Section 114 . Response #10 of 17 of Appendix B.

travel stop position indicating stems. Diaphragm valves used in slurry service shall have a soft resilient lining and diaphragm.

2I.8 PINCH VALVES. Pinch valves shall be manufactured by RKL Controls, Inc. Each valve shall be provided with pure natural gum rubber body material with a Shore Durometer reading not to exceed 40 and shall be totally enclosed in a cast iron housing.

2I.9 MOTOR OPERATORS. All motor operators for valves furnished under these specifications shall be designed especially for utility power plant valve service and shall be as specified in Section 1F.

2I.10 VALVE IDENTIFICATION. All valves larger than 2 inches, or that require electrical power or control air, or that are located in a primary flow line shall have a permanently attached stamped corrosion resistant metal tag bearing the valve number and type of service secured to the valve with 20 gage stainless steel wire. Each accessory item furnished with the valve, but not securely attached to the valve, shall be provided with an identification tag that is identical to that of the associated valve. The Engineer will assign the valve numbers to the valves. All shop drawings and correspondence concerning valves shall be identified by the valve number.

2I.11 PAINTING. The exterior surfaces of valve bodies and handwheels shall be shop painted in accordance with the requirements of Section 1H.

*EPA Request dated Oct 12, 2010, for Information Pursuant to Section 114 . Response #10 of 17 of Appendix B.

IP10_002469

Section 2J - MIST ELIMINATORS

2J.1 GENERAL. This section covers the design, construction, and performance requirements for the mist eliminators.

The mist eliminators shall be located in the scrubber module and shall be designed to remove entrained water and acid mist to the extent required to enable the scrubber system to meet its emission guarantees. Each mist eliminator shall have two stages.

The Contractor shall state as part of the Proposal Data the guaranteed maximum entrained water and acid mist carry-over from each mist eliminator.

Flue gas velocity through mist eliminators with vertical gas flow shall be limited to 10 feet per second.

Seismic design criteria for the mist eliminators shall be in accordance with Classification E-I, Performance Level N as defined in Section 1S.

2J.2 TYPE. The Contractor shall describe as part of the Proposal Data the mist eliminator and mist eliminator spray system. Prevention of pluggage shall be a major consideration in selection of mist eliminator type.

2J.3 MATERIALS. Mist eliminator components shall be constructed of suitable corrosion-erosion resistant materials designed for long service life.

Selection of mist eliminator materials shall be made on the basis of maintenance of the reheaters in a hot condition when the scrubber module is out of service.

Housings shall be constructed of materials comparable to those used for the scrubber modules.

2J.4 WASH SYSTEM. A wash system, including the wash pumps, shall be provided for each mist eliminator to maintain a wet condition on all surfaces of the mist eliminator at all times. The Contractor shall describe as part of the Proposal Data the wash systems proposed and the water pressure, flow rate, duration, and frequency required for the intermittent wash.

Water supply to the mist eliminator wash system will be cooling tower blowdown water of the quality described in Section 2A.

*EPA Request dated Oct 12, 2010, for Information Pursuant to Section 114 . Response #10 of 17 of Appendix B.

Section 2K - DUCTWORK AND EXPANSION JOINTS

2K.1 GENERAL. Flue gas ductwork, hoppers, expansion joints, supports and hangers, gas distribution and mixing devices, test ports, and instrument connections required for the flue gas scrubber system shall be furnished as specified herein and as indicated on the arrangement drawings.

Ductwork to be furnished includes the following.

Ductwork from contract limits indicated on the arrangement drawings to the scrubber module inlets

Ductwork from the scrubber module outlets to the contract limits indicated on the arrangement drawings

Bypass ductwork capable of bypassing 100 per cent of the flue gas generated when the steam generator is operating at its maximum continuous rating

Dampers shall be furnished as specified in Section 2L.

A model test of the ductwork shall be conducted as specified in Section 2A.

2K.2 ARRANGEMENT. The ductwork shall be arranged as required by the flue gas scrubber design, model tests, accessibility for monitoring and testing, space utilization, and appearance considerations.

Ductwork shall be arranged to permit installation of the Owner-furnished guillotine type isolation dampers in vertical positions.

Ductwork shall be arranged to minimize the use of expansion joints in horizontal runs.

Ductwork shall have a sloped bottom to ensure drainage. The slope shall *be a minimum of ~~one~~ 3/8 inch per foot so that drainage will be to the modules or to collection hoppers where required.

Hoppers shall be provided as required for washdown of the ductwork and removal of condensation or liquid carryover.

Final ductwork arrangement shall be based on the model test results.

*Negotiated Revision

*EPA Request dated Oct 12, 2010, for Information Pursuant to Section 114 . Response #10 of 17 of Appendix B.

2K.3 DESIGN CRITERIA. Ductwork shall be designed in accordance with the following criteria.

Maximum gas velocity for design flow commensurate with operation at maximum continuous rating of the steam generator as specified in Section 2A	3600 fpm
Dust load, floor surface	240 psf
Live load, where applicable	30 psf

Design temperature	Continuous Operating	Maximum Transient
Upstream of scrubber modules and bypass	300 F	700 F
* Downstream of scrubber modules	~~130/F~~ 155 F	~~150/F~~ 200 F

The maximum transient temperature excursion shall be assumed to have a duration of 30 minutes.

Seismic design criteria for the ductwork shall be in accordance with Classification S-II as defined in Section 1S.

Maximum allowable stresses in the materials shall be in accordance with Section 1.5.1 of the AISC "Specification for the Design, Fabrication and Erection of Structural Steel for Buildings" (effective November 1, 1978) and its commentary. The value of F_y for material for the design of the ductwork and internal bracing and trusses shall be the 0.2 per cent offset yield strength at the design temperature.

The Contractor's ductwork design calculations shall be submitted for the Engineer's review in accordance with Section 1C of these specifications.

2K.4 MATERIALS. All materials shall be new and undamaged and shall conform to pertinent AISC and ASTM standard specifications.

Ductwork upstream of the scrubber modules (except for the wet-dry interface), the bypass ductwork, and the ductwork downstream of the reheaters shall be constructed in accordance with the following requirements.

Ductwork shapes and plates	ASTM A588
Exterual stiffeners not exposed to flue gas	ASTM A36

*Negotiated Revision 120481

*EPA Request dated Oct 12, 2010, for Information Pursuant to Section 114 . Response #10 of 17 of Appendix B.

Ductwork internal bracing	ASTM A335 Grade P11, Sch 80 minimum
Shop and field bolts for structural connections	ASTM A325, Type 1 bolts, nuts, washers and load indicator washers; or ASTM A325 Type 1 hex head load indicator bolts with nuts and washers, one inch diameter, install in accordance with manufacturer's written instructions
Expansion joint bolts	Weathering steel, Bethlehem "Mayari R Bolts," heavy hexagonal with nuts and washers, 1/2 inch diameter

Inlet ductwork in the area of the wet-dry interface and any ductwork between the scrubber module outlet and the reheater shall be constructed of alloy materials suitable for the service and acceptable to the Engineer. The material used shall be equivalent to or shall exceed the requirements specified for the module shells.

Outlet ductwork from the reheater outlet to the terminal point of the contract shall be gunite lined in accordance with the requirements of Section 3K. The gunite lining shall be applied on the bottom and on the sides to a height of one foot above the floor of the duct.

Expansion joint materials shall be as specified in this section in the article entitled EXPANSION JOINTS.

2K.5 CONSTRUCTION REQUIREMENTS. Ductwork shall be of rectangular cross-section. All ductwork and gas distribution devices shall be constructed of steel plate not less than 1/4 inch thick.

Internal duct bracing and trusses shall be provided at intervals of approximately 20 feet and shall be constructed of steel pipe with wall thickness sized for the design stresses but not less than Schedule 80.

Ductwork shall be designed to prevent pulsations and noise generation.

Gas distribution and mixing devices shall be provided with stiffeners and supports and shall be designed to preclude vibration or flutter in the gas stream under all specified flow conditions. The devices shall be bolted to the ductwork such that they are removable.

External duct stiffeners shall utilize shapes of the same depth to facilitate installation of insulation and lagging. Fabricated shapes made from plates may be substituted for rolled shapes if the properties of the fabricated shapes are equivalent to or better than the rolled shapes.

*EPA Request dated Oct 12, 2010, for Information Pursuant to Section 114 . Response #10 of 17 of Appendix B.

Access doors shall be provided to permit access to all ductwork sections and between all major items of equipment. The doors shall be not less than 18 inches by 24 inches in size, gastight, with bolted closure.

Ductwork shall be of all welded construction except as specified otherwise herein.

All ductwork materials and accessories shall be shop seal welded with field bolting fit-up and seal welding construction except where bolted connections are indicated on the Contractor's drawings and accepted by the Engineer, and shall be shop fabricated subject to shipping limitations.

Where field fit-up and seal welding are required, joints shall be constructed such that the overlap shall be in the direction of the gas flow and the seal weld shall be done on the gas side.

The ductwork shall be fabricated in shipping units. Shipping units shall be designed to require a minimum of field welding within the limits of shipping requirements. Temporary braces and stiffeners shall be installed as required to maintain the true shape of all components during shipping.

Permanent internal bracing and trusses shall be installed in the shop and provisions shall be made for field connection of the bracing and trusses between ductwork sections, where required, by welding.

Ductwork shall be designed to utilize elastomeric belt type expansion joints as specified herein. Ductwork shall be provided with radius-corner flanges as indicated on the drawing following this section.

Ductwork flanged joints used to join expansion joints, dampers, scrubber module inlets and outlets, and Owner-furnished ductwork and equipment to the Contractor-furnished ductwork shall utilize templates for drilling holes to match the holes in the various pieces of equipment. All required ductwork templates shall be prepared in the field by the Contractor based on the hole patterns in the items of interfacing equipment as fabricated. The flanges shall be provided with fit-up and assembly bolts and shall be seal welded. Seal welding at the expansion joints will be required only if a steel flange is provided with the expansion joint.

Fabrication tolerances shall be controlled to permit the ductwork to be erected within the specified erection tolerances. At joints, each edge shall match the adjoining edge in all dimensions within a tolerance of 1/8 inch. Edges and corners which do not fit up within this tolerance shall be reworked or replaced.

2K.6 WELDING. Except as otherwise specified, all shop welding and related operations for the ductwork shall be in accordance with the requirements of Section 1G.

*EPA Request dated Oct 12, 2010, for Information Pursuant to Section 114 . Response #10 of 17 of Appendix B.

All welded joints exposed in exterior locations or subject to submergence in any location shall be provided with seal welds along all contact edges.

All interior seams and joints of the ductwork shall be seal welded.

2K.7 HOPPERS. The ductwork system shall include all hoppers necessary for collection and removal of particulate matter and water as required. The scrubber module outlet ductwork shall be provided with suitable wash hoppers for collection of water used in washing.

Hoppers shall be of the same material as the adjoining ductwork. Hoppers shall be provided with flanged outlets for drains. The slope of hopper sides shall be not less than 60 degrees referred to a horizontal plane.

2K.8 EXPANSION JOINTS. Leakproof expansion joints shall be provided as required to prevent deformation or failure of structures or equipment as a result of thermal expansion. All expansion joints for ductwork provided under these specifications shall be provided. The expansion joints at the interface of Owner-furnished ductwork with Contractor-furnished ductwork will be provided by the Owner.

Expansion joints shall be of the flexible belt type designed for the conditions specified in this section and Section 2A.

The expansion joint belt shall be designed to provide completely sealed sides and shall have no stitching exposed outside the area clamped under the backup bars.

Holes for bolting expansion joints to equipment or ductwork furnished by the Contractor may be either shop or field drilled and punched. Holes for bolting the expansion joints to ductwork or equipment furnished by the Owner shall be field drilled or punched to match the hole pattern of the ductwork or equipment as fabricated.

The manufacturer shall provide a certificate of conformance to these specifications for materials and fabrication. Acceptable manufacturers for the expansion joints are as follows.

Flow-Flex Engineering Company
Garlock Incorporated
Holz Rubber Company
Pathway Bellows, Inc.
Raybestos-Manhattan, Inc.

*Rounded corners shall be provided in the expansion joints ~~in accordance with the drawing following this section~~. Splices will not be acceptable in the rounded corners.

*Negotiated Revision 120481

*EPA Request dated Oct 12, 2010, for Information Pursuant to Section 114 . Response #10 of 17 of Appendix B.

*Expansion joints located upstream of the scrubber module in locations where exposure to liquid is unlikely to occur shall be high temperature type as specified herein.

Expansion joints located at the scrubber module inlets shall be low temperature type as specified herein.

Expansion joints located downstream of the scrubber module and in the bypass ductwork shall be low temperature type as specified herein.

2K/8.1 High Temperature Expansion Joints High temperature expansion joints shall be constructed in accordance with the following requirements as a minimum.

One inner layer of fiberglass plain woven cloth approximately 33 ounces per square yard

One layer of half-inch thick fiberglass blanket insulation

One sheet of Teflon impregnated fiberglass cloth gas seal

One layer of half-inch thick fiberglass blanket insulation

One layer of fiberglass plain woven cloth approximately 33 ounces per square yard

One outer sheet of fiberglass reinforced fluoroelastomer. This outer sheet shall have a minimum total thickness of 90 mils, comprising the fluoroelastomer and 33 ounces per square yard plain woven fiberglass reinforcement. The outer sheet shall be frequently stamped with the manufacturer's mark for positive identification of the material.

The fluoroelastomer shall conform to ASTM D 2000 2HK 715 Z1 containing not less than 70 per cent Du Pont Viton B Polymer. Reclaimed elastomers shall not be used.

High temperature joints shall be provided with a steel baffle plate for erosion protection. Joints shall be provided with a fiberglass filler tube at duct floor locations and in walls of vertical duct runs to resist particle deposition.

2K/8.2 Low Temperature Expansion Joints Low temperature Expansion joints shall be constructed of a single sheet not less than 1/4 inch thick consisting of fluoroelastomer and two plies of 35 ounces per square yard plain woven fiberglass cloth.

The fluoroelastomer shall conform to ASTM D 2000 2HK 715 Z1 containing not less than 70 per cent Du Pont Viton B Polymer. Reclaimed elastomers shall not be used.

*Addendum No. 3

*EPA Request dated Oct 12, 2010, for Information Pursuant to Section 114 . Response #10 of 17 of Appendix B.

2K.9 DUCTWORK SUPPORT. Ductwork may be top supported or bottom supported as required by the Contractor's design. Ductwork support shall be in accordance with the following criteria.

2K.9.1 Top Supported Ductwork. All necessary hanger assemblies and miscellaneous hanger steel including suitable welding brackets for attachment to the structural support framework shall be furnished. Special attention shall be given to hangers around transition sections, openings, and access doors. Hanger assemblies shall be designed for clean appearance. Structural steel angle hangers and brackets shall not be used.

Hanger rods shall be ASTM A36 steel. The allowable working stress in the hanger rods shall not exceed 9000 psi. Loads to the hanger rods shall take into consideration all ductwork loads including dead load, dust load, live load, and seismic loads and any bending stresses introduced during expansion, contraction, or offset movements of the ductwork.

The safety factors allowed for the design of hanger clevises and turnbuckles shall be at least those specified for the hanger rods. Turnbuckles and clevises shall be of forged steel with safe working loads and minimum dimensions as described in the AISC Manual, Eighth Edition, Pages 4-142 and 4-143.

Constant or variable spring load hangers may be utilized by the Contractor; however, variable spring hangers will be allowed only with the specific acceptance of the Engineer. Spring hangers shall be VS or CS type as manufactured by Grinnell or Basic Engineering or shall be an acceptable equal hanger.

2K.9.2 Bottom Supported Ductwork. The ductwork shall be provided with column extensions or stubs to project from the ductwork to the structural support framework.

The Contractor shall provide Merriman "Lubrite" or acceptable equal expansion bearing assemblies for installation between the ductwork free support points and the support structure. Flat expansion plates, radius plates, or spherical plates shall be provided as required for the application. All necessary bearing plates and anchorages shall be provided by the Contractor such that the interface between the ductwork stub columns and the tops of the structural support framework columns is a steel plate to steel plate connection requiring only a field weld. The field welding shall be performed by the Contractor.

2K.10 ACCESS PROVISIONS. Interior steps or ladders shall be provided where location of inspection doors will not permit access to all areas of the ductwork interior for inspection or maintenance except by ascending or descending inclined ductwork surfaces.

Access provisions shall be adequate for all operation, inspection, testing, and maintenance activities.

*EPA Request dated Oct 12, 2010, for Information Pursuant to Section 114 . Response #10 of 17 of Appendix B.

IP10_002478

The Contractor shall design and fabricate the access provisions as specified in Section 2P and herein.

2K.11 TEST PORTS. Test ports to obtain samples required to conduct the performance tests specified in Section 2B shall be provided at locations acceptable to the Engineer and in accordance with the recommendations derived from the model tests.

2K.12 INSTRUMENT CONNECTIONS. Instrument connections shall be provided as required to permit installation of instrumentation sensing devices required to monitor and control the operation of the flue gas scrubber system in accordance with the requirements of Section 2N.

Instrument connections shall also be provided for instrumentation sensing devices furnished under separate specifications which are required to monitor the operation of the induced draft fans. Details on the number, size, and locations of the instrument connections will be provided later.

2K.13 PAINTING. Auxiliary items such as hangers and miscellaneous steel *which will be visible after installation, and carbon steel ~~or/ASSS/steel ductwork~~ which is to be covered by insulation and lagging, shall be shop prime painted in accordance with the requirements of Section 1H.

Weathering steel bolts for expansion joints shall be field painted after installation in accordance with the requirements of Section 1H.

*Negotiated Revision

*EPA Request dated Oct 12, 2010, for Information Pursuant to Section 114 . Response #10 of 17 of Appendix B.

Section 2L - DAMPERS

2L.1 GENERAL. The Contractor shall furnish any multileaf type control dampers required for operation of the system.

Isolation dampers for the inlet and outlet of each module will be furnished by the Owner.

A bypass duct isolation damper will be furnished by the Owner.

2L.2 DESIGN CRITERIA. Dampers shall be constructed to operate under the conditions specified in Section 2A.

A description of the design and construction of each damper shall be included as part of the Proposal Data.

Each damper shall be provided with a mechanical lockout for use when personnel access to equipment or ductwork interior is necessary.

Dampers shall be considered as structural members and as such shall be in accordance with the structural design criteria specified. Allowable bending stress shall not exceed 60 per cent of yield at design conditions.

Damper frame section and thickness shall be determined on the basis of stresses resulting from transit and handling abuse; any combination of pressure, temperature, and seismic loading; effects of corrosion and erosion; and the physical size and weight of the damper. Stress at the weakest section of the frame shall not exceed the levels specified in the AISC manual for complete structural members. Minimum thickness shall be 1/2 inch.

All parts shall be serviceable without removing the damper frame from the ductwork.

Seismic design criteria for the dampers shall be in accordance with Classification E-I, Performance Level L as defined in Section 1S.

The Contractor shall submit the following calculations to the Engineer as an indication of the precautions taken to ensure stability and proper function of the dampers.

Stress levels of major damper components (frames, blades, axles, linkage, bearing mounts, damper drive mounts, etc.)

Blade deflection at design differential pressure and temperature

*EPA Request dated Oct 12, 2010, for Information Pursuant to Section 114 . Response #10 of 17 of Appendix B.

IP10_002480

Effects of seismic loading on each component of the assembly

Derivation of drive torque requirements and related safety factors

Pressure drop

Leakage

2L.3 MULTILEAF DAMPERS. Multileaf dampers shall be heavy-duty type constructed to withstand the differential pressures encountered.

Dampers shall be of the opposed blade type.

Multileaf dampers shall be manufactured by Air Clean Damper Company, Andco Inc., Mosser Industries, Inc., Damper Design Inc., Forney Engineering Company or acceptable equal.

2L.3.1 Materials. Dampers shall be constructed of corrosion and erosion resistant materials which are equivalent to the following.

Frame	ASTM A588
Blade skin	ASTM A588
Axles	Carbon steel (ASTM A106) if pipe shaft axle, stainless steel (Carpenter Custom 450 or other acceptable stainless steel in accordance with ASTM A564) if solid axle
Stub ends for pipe shaft axles	Stainless steel (Carpenter Custom 450 or other acceptable stainless steel in accordance with ASTM A564)
Seals	Inconel 625

2L.3.2 Frames. Damper frames shall be channel type, either heavy rolled structural steel shapes or heavy formed plates.

Damper frames shall be self-supporting structural members not requiring additional exterior bracing.

Frames shall be completely welded assemblies. Welding shall be in accordance with the requirements of Section 1G.

Frames shall be rigid and shall be capable of operating under the design conditions without distortion which could affect the operating or leakage characteristics. If required on larger dampers, adjustable alignment bars shall be provided to remove misalignment occurring during shipment and installation.

*EPA Request dated Oct 12, 2010, for Information Pursuant to Section 114 . Response #10 of 17 of Appendix B.

Bearing mounting brackets, shaft packing glands, alignment bars and actuator mounting brackets shall be welded to the channels by continuous welds.

Damper frames shall not have any internal obstructions such as angles or seal stops which could promote accumulation of deposits.

Frames shall be flanged for fit-up bolting and seal welding to the ductwork. All bolting required for attachment of the dampers to the ductwork shall be in accordance with the requirements of Section 2K.

Integral lifting lugs shall be provided.

2L.3.3 Blades and Shafts. Damper blades shall be of the airfoil type except that flow through blades are acceptable as part of biplane type dampers manufactured by Damper Design Inc. Airfoil blades shall be of wraparound construction. Skin thickness shall be not less than 3/16 inch. The blade skin shall be attached to an axle which extends the full length of the blade. If blade skins which are welded to the axles are proposed, a complete discussion of the methods used to prevent thermal distortion from residual stresses shall be submitted as part of the Proposal Data. Blades shall be suitably reinforced to prevent flutter or vibration. The blade skin and axle shall have compatible coefficients of thermal expansion. Provisions shall be made to accommodate differential thermal expansion without warping or buckling. The blade ends shall be closed to prevent accumulation of dust or moisture.

Damper blades shall not exceed approximately 24 inches in width. The number of blades provided in each damper shall be as follows.

A minimum of two blades for dampers with less than 40 square feet open area

A minimum of three blades for dampers with more than 40 but less than 80 square feet open area

A minimum of four blades for dampers with more than 80 square feet open area

Blade shaft stub ends of pipe shaft axles shall be pinned or through bolted to the axle to permit blades to be removed for replacement or repair without removal of the damper frame from the ductwork. Pins or bolting shall be stainless steel as a minimum.

Blade shafts shall be horizontal. Collars shall be provided on the shafts to fix the blade position relative to the frame on one end and permit controlled expansion of the blade toward the opposite end of the frame. The design shall not be dependent upon maintenance of thermal equilibrium between the blades and frame to maintain the proper clearances.

*EPA Request dated Oct 12, 2010, for Information Pursuant to Section 114 . Response #10 of 17 of Appendix B.

IP10_002482

Blades shall be slightly overlapped to provide sealing or shall be swing-through blades with stops to control the leakage path gap between blades. Blades shall not be provided with blade to blade seals. Blade stops shall be provided as part of the blade linkage assembly in both the open and closed positions.

Blade deflection shall be limited as required by the bearing and stuffing box design but in no case shall deflection of any portion of the blade at the center of the span exceed 1/360 of the blade span with the blades in a closed or open position at any operating condition commensurate with the conditions specified in Section 2A.

Shafts shall be capable of transmitting full operating torque without exceeding 33-1/3 per cent of the shear yield stress and damper drive stall torque without exceeding 45 per cent of the shear yield stress.

Damper internals shall block no more than 25 per cent of the duct area when in the fully open position.

2L.3.4 Sealing System. Packing glands suitable for the operating conditions specified in Section 2A shall be provided on each end of each shaft. Packing material shall be suitable for the gas stream composition and temperature and ambient exposure conditions. Packing shall contain no corrosive materials. The packing glands shall be designed so that packing may be easily replaced without removing bearings or linkage. Threaded type packing followers shall not be used.

The dampers shall be provided with flexible metal jamb type expansion seals on the blade ends and seal strips between blade edges and the frame. Top and bottom blade seal strips shall be mounted on the blades, not on the frame.

2L.3.5 Bearings. Damper shaft bearings shall be of the grease lubricated antifriction type or of the self-lubricated sleeve type. Bearings shall be suitable for operation at the emergency operation conditions specified in Section 2A.

Grease lubricated antifriction bearings shall be mounted externally on extensions, to clear the ductwork insulation and lagging and to aid in cooling the bearings. Grease lubrication fittings shall be provided, and where the bearings are not conveniently accessible, tubing shall be run from the bearings to an accessible location for hand pressure gun lubrication.

Self-lubricated sleeve type bearings shall be mounted externally. Bearings shall be mounted on extensions or on the frame subject to temperature limits for the bearing. Bearings shall be self-aligning. Bearing material shall be metalized carbon or acceptable equal.

*EPA Request dated Oct 12, 2010, for Information Pursuant to Section 114 . Response #10 of 17 of Appendix B.

2L.3.6 Linkages. Damper interconnecting linkages and operating levers shall be of heavy-duty construction and shall be fitted with heavy pin connections using closefitting hardened pins in reamed holes. A complete linkage assembly shall be provided on each side of the damper to distribute operating torque to both ends of the blade axles. The linkage shall not permit blade flutter. Single shear type connections shall not be used. All linkage bolts and pins shall be stainless steel. Linkage shall permit individual adjustment of blades to provide good shut-off characteristics at operating conditions.

The linkage shall be capable of transmitting 200 per cent of the stall torque of the damper drive.

Each damper shall be provided with an extended operating lever and linkage for attachment of the control drive.

Each damper shall be provided with a position indicator and position lock.

2L.3.7 Damper Drive. A power operated damper drive shall be provided for each multileaf damper. Each damper drive shall be in accordance with the requirements of Sections 1F and 2N and shall be acceptable to the Project Manager and the Engineer. Each damper drive shall be mounted on the damper frame. Each damper drive shall be located so as to be accessible from a major platform level to the greatest extent practicable. Damper drive installation shall be acceptable to the Engineer.

Damper drives shall be shop mounted on the damper by the damper manufacturer prior to shipment.

The damper drives shall be capable of producing a torque input to the dampers of 300 per cent of the nominal anticipated torque required for operation.

2L.4 SHOP TESTING. Each damper shall be functionally tested in the shop *prior to shipment. A description of test capabilities at the manufacturer's shop together with a description of the functional testing proposal for the dampers provided under these specifications shall be included as part of the proposal data.

The Project Manager shall be notified 10 working days in advance of the test.

A functional test report shall be submitted to the Project Manager and Engineer.

2L.5 PAINTING. Portions of the dampers fabricated from ASTM A588 steel shall be shop prime painted.

Shop prime painting shall be in accordance with the requirements of Section 1H.

*Addendum No. 3

*EPA Request dated Oct 12, 2010, for Information Pursuant to Section 114 . Response #10 of 17 of Appendix B.

Section 2M - FORCED OXIDATION SYSTEM

2M.1 GENERAL. Lump sum prices shall be included in the proposal for furnishing and erecting an optional forced oxidation system. The option shall include all additional costs for adding forced oxidation to the process. A discussion shall be provided, as part of the proposal data, of the effects of forced oxidation on utilization of limestone, system operation, performance, and maintenance.

The forced oxidation system shall include all oxidizing air blowers, piping, tanks, mixers, valves and controls and accessories required for a complete system. One of the blowers furnished shall be a spare. The blowers shall be arranged in parallel, discharging to a common piping system.

Air from the blowers shall be discharged below the water level of the flue gas scrubber system module reaction tanks and shall induce forced oxidation within the scrubber system.

Blowers shall be designed and constructed with adequate pressure and flow capability to ensure that the scrubber modules can achieve the sulfite oxidation value specified in Section 2B. The oxidizing air blower system shall include means of maintaining constant airflow to each module with variations in tank level and with modules being placed into and taken out of service.

2M.2 BLOWERS. Blowers shall be double rotor type with timing gears. Blowers shall be designed for direct connection to electric motors, V-belt driven, or for connection to the motors through speed reduction gears.

Seismic design criteria for the oxidation system blowers shall be in accordance with Classification E-I, Performance Level G as defined in Section 1S.

Constant speed performance curves based on the minimum, normal, and maximum operating conditions shall be submitted. Curves shall indicate outlet pressure in psia as abscissa, and input horsepower and capacity in acfm (at 14.7 psia, 68 F, 36 per cent relative humidity) as ordinates.

Predicted sound pressure levels for the blower-drive assemblies shall be submitted as part of the Proposal Data.

2M.2.1 Materials. All materials shall be suitable for the service and shall be equivalent to, or shall exceed, the strength and corrosion-erosion resistance of the following materials.

Casing	Cast iron
Rotors	Cast iron or forged steel
Shafts	Alloy steel

*EPA Request dated Oct 12, 2010, for Information Pursuant to Section 114 . Response #10 of 17 of Appendix B.

IP10_002485

2M.2.2 Casings. Inlet and outlet connections shall be flanged. Flange diameter and drilling shall conform to ANSI 125 pound.

2M.2.3 Rotors. Rotors shall be machined and fitted to matching parts.

Shafts shall be conservatively designed to transmit maximum power required and to assure rigidity. Shafts shall be machined and ground to close tolerances and shall be tapered to permit easy removal of the seals and bearings.

Rotor assemblies shall be dynamically balanced.

2M.2.4 Seals. Shafts shall be provided with labyrinth seals.

2M.2.5 Gears. Timing and power transmission gears shall be of the wide faced spur or helical type, designed for pressurized oil lubrication. Nonpower driven rotors will not be acceptable.

2M.2.6 Bearings and Lubrication. Pressure lubricated bearings with a 15 year minimum life rated in accordance with AFBMA shall be furnished.

2M.2.7 Accessories. Each blower shall be furnished with the following accessories.

2M.2.7.1 Lube Oil Unit. Each blower shall be furnished with an integral lubricating oil package. Each package shall be complete with a single water-to-oil heat exchanger, full flow oil filter, and oil pump. Owner-furnished cooling water piping will be provided as specified in Section 2H. Cooling water will be as specified in Section 2A. The oil pump shall be direct driven from the blower shaft. The complete package shall be factory wired, assembled, and mounted on the baseplate.

2M.2.7.2 Shaft Couplings. Shaft couplings, where used, shall be in accordance with Section 1B.

2M.2.7.3 Coupling Guards. Shaft couplings shall be provided with safety guards in accordance with Section 1B.

2M.2.7.4 Belts and Sheaves. All V-belts, including blower sheaves and motor sheaves, shall be furnished and mounted with provisions for adjusting belt tension. Belts and sheaves shall be of the heavy-duty "V" type.

2M.2.7.5 Belt Guards. All exposed rotating shafts, flywheels, sheaves, and belts shall be provided with guards. Guards shall be in accordance with OSHA requirements and shall totally enclose rotating parts to assure personnel protection.

2M.2.7.6 Geared Speed Reducers. Geared speed reducers, if used, shall be of the double helical gear precision type designed for high speed operation, low noise level, and minimum power transmission losses. It shall conform to the latest standards of the AGMA. It shall be of the

*EPA Request dated Oct 12, 2010, for Information Pursuant to Section 114 . Response #10 of 17 of Appendix B.

IP10_002486

highest attainable reliability and shall not materially reduce the overall reliability of the equipment.

Speed reduction gears shall be of the herringbone (opposed helical) type.

Gears and pinions shall be dynamically balanced after all machining operations are completed. During tests, case vibration in the vicinity of the bearings shall not exceed one mil peak-to-peak at gear or pinion rotational frequency.

Bearings shall be of the antifriction type.

The speed reducer housing shall be of cast iron or fabricated steel construction and shall be horizontally split to provide access to all bearings, shafts, and gearing.

The speed reducer shall be lubricated by a pressure spray system. Shaft seals shall be of the labyrinth type, of nonsparking material, and shall be horizontally split to facilitate maintenance.

2M.2.7.7 Intake Air Filter-Silencers. Each blower shall be provided with an inlet filter-silencer of the dry type and a conical shaped screen ahead of the filter. Filters shall be capable of removing 95 per cent of all particles 10 microns and larger. Filter-silencers shall be Burgess-Manning.

Interconnecting piping between intake filter-silencers and blowers shall be Type 304 stainless steel pipe.

2M.2.7.8 Discharge Silencers. Each blower shall be provided with a discharge silencer.

Discharge silencers shall be Burgess-Manning or acceptable equal.

2M.2.7.9 Expansion Joints. Expansion joints shall be provided for each blower inlet and discharge connection.

2M.2.7.10 Pressure Gages. Pressure gages shall be furnished for measuring the discharge pressure of each blower. Gages shall be in accordance with Section 1B.

2M.2.7.11 Flow Measurement and Control. The system shall contain airflow measuring devices and control valves to maintain a constant airflow to each module regardless of reaction tank level or operating status of the module.

2M.2.7.12 Safety Valves. Each blower shall be provided with a safety relief valve on the blower discharge. The valve, valve operator and controller shall be remotely mounted to prevent vibration damage. The valve shall be mounted in an accessible location.

2M.2.7.13 Baseplate. Each blower unit shall be furnished with a baseplate. Baseplates shall be in accordance with Section 1B.

*EPA Request dated Oct 12, 2010, for Information Pursuant to Section 114 . Response #10 of 17 of Appendix B.

IP10_002487

2M.3 PIPING AND VALVES. The Owner will provide utility connections as specified in Section 2H.

The Contractor shall provide all piping and valves required in accordance with the requirements of Sections 2H and 2I respectively.

All interconnecting and control piping which is necessary for operation of each unit shall be provided complete with shut-off valves, control valves, check valves, strainers, and fittings.

All control air and seal water lines shall be 1/4 inch minimum ASTM B88 drawn temper Type K copper tubing. All pressure sensing lines shall be ASTM A213 Type 304 stainless steel.

2M.4 CONTROLS. A complete control system shall be furnished for the forced oxidation system as specified herein and in Section 2N. All panels, control indicators, indicating lights, relays, and other devices required for a complete and functioning control system shall be furnished, except as specified herein. All forced oxidation equipment shall be remotely monitored and controlled from the scrubber control panel. Metal-clad or metal-enclosed switchgear will be furnished under separate specifications.

2M.4.1 Blower Control. Each blower shall be furnished with instrumentation and electrical accessory devices mounted and connected in a NEMA 12 cabinet with drip shield. All devices required locally for control of the blower shall be interconnected within the control cabinet or connected to terminal blocks in the control cabinet for external connections.

All interconnecting wiring between the control cabinet and the equipment furnished as a part of the blower unit shall be routed through galvanized rigid steel conduit or liquidtight flexible conduit. The length of flexible conduit runs shall not exceed 18 inches. Additional requirements for raceway and wiring shall be as specified in Section 1B.

All interconnecting tubing shall be run in a neat manner to bulkhead fittings for attachment of external lines. All capillary tubing shall be neatly run and suitably protected.

2M.4.1.1 Blower Shutdown. Instrumentation and control devices shall be provided as required to initiate shutdown of the blower and to identify the abnormal condition initiating shutdown. Instrumentation and control devices for initiating shutdown shall be provided separate from devices identifying the cause for shutdown.

Form "C" device contacts shall be provided to initiate shutdown and shall each be wired to terminal blocks in the control cabinet for external connection to the Owner's switchgear trip circuit.

*EPA Request dated Oct 12, 2010, for Information Pursuant to Section 114 . Response #10 of 17 of Appendix B.

IP10_002488

Following is a typical list of abnormal conditions which might require blower shutdown. The Contractor shall determine the exact conditions which require shutdown.

Lube oil pressure low

Lube oil temperature high

Suction pressure high or low

Discharge air temperature high

In addition to the instrumentation and control devices sensing conditions which require shutdown, an emergency stop push button shall be provided. The push button shall be wired to terminal blocks in the control cabinet for external connection to the Owner's switchgear.

White indicating lights with identifying nameplates shall be provided on the front of the control cabinet to identify the device or the abnormal condition which initiated blower shutdown. A reset push button shall be provided to extinguish the indicating lights.

If the blower must remain shut down for some period of time prior to restarting, time delay relays shall be mounted in the control cabinet and connected to other devices or to terminal blocks as required.

Instrumentation and electrical accessory devices shall be as specified in Section 1B.

Speed reducers, if furnished, shall be provided with instrumentation devices wired to terminal blocks in the local blower control cabinet. The instrumentation devices shall initiate blower shutdown and provide identification for the following abnormal conditions.

Lube oil level low

Lube oil pressure low

Lube oil temperature high

Suction pressure trip

2M.5 MOTORS. Motors shall be in accordance with the requirements of Section 1E.

*EPA Request dated Oct 12, 2010, for Information Pursuant to Section 114 . Response #10 of 17 of Appendix B.

Section 2N - CONTROLS AND INSTRUMENTATION

2N.1 GENERAL. This section covers control and instrumentation equipment requirements to be furnished by the Contractor for control of the scrubber modules, the limestone slurry preparation system, and all associated control and instrumentation equipment for each system.

Unless specified otherwise, the control and instrumentation equipment, materials, and accessories shall be in accordance with Sections 1B and 1H.

Seismic design criteria for controls and instrumentation equipment shall *be in accordance with Classification E-~~J~~I, Performance Level L as defined in Section 1S.

2N.2 CONTRACTOR'S SCOPE OF SUPPLY. The Contractor shall furnish all control and instrumentation devices required to monitor and control the aforementioned systems and coordinate the operation of the systems with the operation of the steam generator and the Owner's coordinated control system. Equipment to be furnished shall include, but not be limited to, the following.

Scrubber control panel

Scrubber additive preparation control panel

Control system logic

Control system panel stations

Main control panel insert (subpanel)

Control valves

Control drives and connecting linkage

Transmitters

Controllers

Signal converters

Flow measurement devices

Density measurement devices

pH measurement

*Addendum No. 1

*EPA Request dated Oct 12, 2010, for Information Pursuant to Section 114 . Response #10 of 17 of Appendix B.

Recorders

Indicators

Annunciators

Control system power supplies, logic cabinets, prefabricated cable, and grounding provisions

* System outputs to operate Owner-furnished isolation damper drives

Accessory items

Limit switches

Pressure switches

Temperature switches

Level switches

Solenoid valves

Pressure gages

Thermometers

Temperature detectors

Thermowells and test wells

Vibration transducer mounting provisions

Flow indicators

Flow switches

Valve positioners

Miscellaneous items

Support hardware for installation of control and instrumentation equipment

Primary instrument piping including process connection shut-off valves, instrument shut-off valves, and blowdown valves

Control and instrument air supply headers, branch air supply headers, air supply tubing for pneumatic devices, air supply shut-off valves, and air supply regulators as required

*Addendum No. 1

*EPA Request dated Oct 12, 2010, for Information Pursuant to Section 114 . Response #10 of 17 of Appendix B.

Pneumatic signal and interconnection tubing

Piping and tubing between equipment and panels

Local motor starters and associated control equipment, where specified

For the base proposal, modulating control equipment of the analog computing, solid-state electronic type using modular construction shall be provided. The base proposal shall be for furnishing Bailey 7000 Series equipment, as manufactured by Bailey Controls Company. Alternate proposals shall be provided for control system equipment manufactured by The Foxboro Company, Spec 200 Series; Westinghouse Electric Corporation, 7300 Series; and Leeds & Northrup Company, DEB 300 Series. The Owner shall have the option of selecting any of the four modulating control systems based upon compatibility with the main unit controls, which will be selected at a later date.

An alternate proposal may be submitted for modulating control systems of the digital computing type. Digital systems shall conform to all the functional and equipment specifications herein stated for control systems. The proposal shall include complete information describing the proposed systems. A proposal may be submitted for providing the Contractor's standard digital computing type system but alternate proposals shall also be submitted for equipment manufactured by the suppliers specified for analog computing type equipment and for Forney Engineering Company ECS 1200 equipment.

The proposal shall state the latest date at which the selection may be made.

The Contractor shall provide control logic for all interlocking functions and all motor control functions required for any equipment in the Con-
*tractor's scope of supply and for the Owner-furnished isolation dampers specified in Section 2L. Logic systems may be electromechanical or solid-state. Solid-state logic shall be modular, and shall be as described herein. Electro-mechanical logic accessory items shall be as specified in Section 1B. Solid-state programmable controllers shall be as specified in this section. Logic cabinets and connecting material shall be as specified in this section.

2N.3 OWNER-FURNISHED EQUIPMENT. The Owner will furnish the followiug.

Enclosures, as required, for mounting equipment which can function properly when installed remote from the process. Installation procedures shall be as specified in Section 3H. Owner-furnished enclosures shall include, but not be limited to, enclosures for the following equipment.

Pressure transmitters
Flow transmitters
Pressure switches

*Addendum No. 1

*EPA Request dated Oct 12, 2010, for Information Pursuant to Section 114 . Response #10 of 17 of Appendix B.

Pressure gages
Signal converters
Pressure controllers
Flow controllers

Flue gas sulfur dioxide analyzers for input to the Contractor's slurry feed control loop. The output signal from the analyzers will be 4-20 mA dc. A discussion of the method recommended for measuring these parameters for input to the control system shall be included as part of the Proposal Data.

* Isolation dampers and drives

2N.4 FUNCTIONAL REQUIREMENTS. Complete automatic electronic control of the systems listed below, with automatic/manual control, supervision, annunciation, monitoring and verification of performance from the corresponding control panels, shall be furnished in accordance with the following articles.

System	Control Panel
Limestone slurry preparation	Scrubber additive preparation control panel
Scrubber modules and associated scrubber process equipment	Scrubber control panel

A scrubber module monitoring and control subpanel for overall scrubber module control shall be furnished for insertion under separate specifications into the Owner's main control panel. Subpanels on the scrubber control panel shall be furnished for monitoring and overall control of the scrubber additive preparation system. The subpanels shall be in accordance with the article entitled CONTROL PANELS.

*Control system outputs to operate the Owner-furnished isolation damper drives shall be contact closure outputs for jogging or on-off drives. Drives provided by the Owner will be in accordance with the requirements of Article 2N.7 of these specifications.

Manual controls shall be independent of automatic controls such that, upon loss of the central control system, each system can be operated manually. In addition, the loss of any single item of control equipment shall not disable more than one scrubber module or system. The control system shall incorporate predetermined failure modes to the maximum extent practical, which shall result in fail-in-place or in safe shutdown of associated process equipment in the event of control system failure.

*Addendum No. 1

*EPA Request dated Oct 12, 2010, for Information Pursuant to Section 114 . Response #10 of 17 of Appendix B.

IP10_002493

2N.4.1 Scrubber Modules and Associated Equipment. Control of the scrubber modules, forced oxidation system, and other associated scrubber process equipment shall be as follows.

2N.4.1.1 Scrubber Module Start-up and Shutdown. The control system for placing a module and its associated equipment in service shall operate in one of two modes: manual or semiautomatic. In the manual mode, the module inlet and outlet dampers, motor operated valves, pumps and any other associated equipment shall be opened or closed, or started or

*EPA Request dated Oct 12, 2010, for Information Pursuant to Section 114 . Response #10 of 17 of Appendix B.

stopped from individual switches or push buttons located on the scrubber control panel. In the semiautomatic mode, a module and all associated equipment shall be automatically placed in or taken out of service when the module start or stop control switch or push button is actuated either at the main control panel or the scrubber control panel. In both the manual and semiautomatic modes of operation, proper interlocks shall be provided to assure that the proper sequence of start-up or shutdown actions is followed.

2N.4.1.2 Slurry Feed Control. A control system shall be furnished to control the rate of slurry feed to each module to maintain its sulfur dioxide removal rate and pH at preset constant values. The controlling elements shall be slurry pH and unit load signal.

*2N.4.1.3 Slurry ~~Blowdown~~ Density Control. ~~The rate of slurry blowdown flow~~ Return water to each individual module shall be ~~controlled~~ used to maintain per cent solids at preset constant values.

2N.4.1.4 Mist Eliminator Spray Control. A control system shall be furnished to control mist eliminator header pressure and flow, and to sequence mist eliminator sprays automatically as required to prevent accumulation of scale deposits.

2N.4.1.5 Forced Oxidation Control. Manual and semiautomatic control of the forced oxidation equipment shall be furnished. Blowers, control valves, and other associated equipment shall be individually controlled in the manual mode. Forced oxidation system start-stop push buttons and all required interlocks for semiautomatic control shall be furnished.

2N.4.1.6 Soot Blower Control. A control system shall be furnished to sequence the reheat system soot blowers automatically to prevent the accumulation of deposits on the reheat coils. Local soot blower equipment shall be as specified in Section 2Q. A soot blower insert panel shall be furnished on the scrubber control panel.

2N.4.1.7 Purge System Control. A manual control system shall be furnished to purge each scrubber module with ambient air. All dampers, blowers and associated purge system equipment shall be individually controlled from the scrubber control panel. Additional controls shall be provided for penetration seal air system, if such system is required.

2N.4.1.8 Monitoring and Recording. Monitoring and recording devices shall be furnished, as required by the system design, to monitor and record system parameters. Parameters to be monitored and recorded shall include but not be limited to the following.

	Monitor	Record
Flue gas temperatures		
Inlet to modules	X	
Outlet of modules	X	X
After reheaters	X	X

*Negotiated Revision

*EPA Request dated Oct 12, 2010, for Information Pursuant to Section 114 . Response #10 of 17 of Appendix B.

		Monitor	Record	Totalize
	Flue gas pressure			
	Inlet to modules	X		
	Outlet of modules	X		
	After reheaters	X		
*	Mist eliminator differential pressure	X	X	
	Sulfur dioxide concentration			
	Total system inlet	X	X	
	Total system outlet	X	X	
	Individual module outlet	X	X	
**	Reaction tanks pH	X	X	
	Slurry density			
	Scrubber slurry	X		
	Limestone slurry	X		
	Flow			
**	Makeup water	X	X	X
**	Seal water	X	X	X
**	Mist eliminator spray	X		X
	Limestone feed	X		
**	Reclaimed water	X	X	X
**	Limestone slurry tank levels	X	X	

2N.4.1.9 Miscellaneous Functional Requirements. All pumps, motor operated valves, and other devices required to be placed in service or taken out of service individually during start-up, shutdown or operation of the scrubber modules and associated equipment shall be controlled from the scrubber control panel furnished under these specifications.

All instrumentation required for monitoring, alarming, and verification of performance in order to assure reliable operation of the scrubber modules and associated equipment shall be located on the scrubber control panel.

The control philosophy shall be that of a modular system in that the complete individual scrubber modules shall be placed in and out of service from either the scrubber control panel or the Owner's main control panel when permitted by the mode selection of the appropriate control subsystem. Monitoring and control devices and/or insert panels, as applicable, shall be acceptable to the Engineer. These items shall be fully described in the Proposal.

*Addendum No. 3
**Negotiated Revision

*EPA Request dated Oct 12, 2010, for Information Pursuant to Section 114 . Response #10 of 17 of Appendix B.

The system provided to control flue gas flow through the scrubber modules will be furnished by the Owner. This system will be controlled by the main control room operator. The control damper drives provided by the Contractor shall be coordinated with the Owner's main unit modulating control system.

*The Owner will incorporate logic within the flue gas flow control system to preclude operations which would block the gas flow path to the chimney. The Contractor shall provide all equipment necessary to interface the Contractor-furnished scrubber control system with the gas flow control system.

Local instrumentation shall be furnished where required for maintenance and periodic inspection. As a minimum, the Contractor shall provide local instrumentation and test taps at all locations where a pressure or temperature process tap has been made with the exception of the draft connections.

A description of the local instrumentation and test taps shall be included as part of the Proposal Data.

2N.4.2 Limestone Slurry Preparation System. Manual and semiautomatic control of the limestone slurry preparation system shall be furnished. In the manual mode, the individual feeders, ball mills, mixers, pumps, control valves, and other associated preparation system equipment shall be operated from the scrubber additive preparation control panel. In the semiautomatic mode, the slurry preparation system shall be automatically placed in or taken out of service when the start or stop control switch or push button is actuated at the scrubber control panel or at the scrubber additive preparation control panel. All interlocks required for proper manual and semiautomatic operation shall be furnished.

2N.4.3 Slurry Flushing Subsystems. Piping, valves, classifiers, and pumps used in slurry service shall be automatically flushed with water when taken out of service. Flushing system requirements are specified in the section entitled PIPING. Manual controls of flushing subsystems from the associated system control panel shall be furnished in addition to automatic controls.

2N.5 CONTROL PANELS. A scrubber control panel shall be furnished for the scrubber equipment for each generating unit. A scrubber additive preparation control panel shall be furnished for each set of additive preparation equipment common to two generating units. The control panels will be installed in control rooms situated remote from the equipment.

Each control panel shall be a free-standing, walk-through type including all required logic devices, control devices, indicating lights, recorders, indicators, and annunciators for a complete control system. Each panel shall be of the semigraphic type providing display of applicable processes on the upper sections of the panel sections. The layout, extent of graphics and human engineering attributes of the control panels shall be determined in design conferences after the award of contract. All signals to instrumentation located on each control panel and on the main control panel shall be electronic.

*Addendum No. 1

*EPA Request dated Oct 12, 2010, for Information Pursuant to Section 114 . Response #10 of 17 of Appendix B.

Each control panel will be installed in a room conditioned for personnel comfort. However, panel mounted items shall be designed to operate satisfactorily in the event of cooling equipment failure with ambient conditions of 125 F.

Each panel shall be of one-piece construction. Panel height shall be 90 inches, and width shall be sufficient to permit installation of all instruments and controls not less than 30 inches above the panel base. Panel depth shall not be less than 6 feet. Panel ends shall be formed by bending the panel front face. The panel and access doors shall be constructed of steel plate not less than 1/8 inch thickness and reinforced as required to assure true surfaces and adequate support for equipment mounted on the panel. All instrument cutouts, mounting studs, and support brackets shall be located accurately. All welds on the exposed panel surfaces shall be ground smooth. Finished panel surfaces shall be free from waves, bellies, or other imperfections.

The control panels shall be shop painted and field touch-up painted as specified in Section 1H. Finish colors for the control panels will be selected later by the Engineer.

Access to the interior of each panel shall be provided by hinged doors mounted on the ends of the control panel. Panel doors shall be hinged and shall have turned-back edges and additional bracing where required to assure rigidity. Hinges shall be of the piano or concealed type. Door latches shall be of the three-point type with key locks. Neoprene door gaskets shall be furnished and attached with oil resistant adhesive. All bulkhead connections to the panel shall be watertight.

Instruments and devices shall be located on each panel so that an unobstructed walkway with a minimum clearance of 24 inches is provided inside the panel structure. The arrangement and spacing of devices mounted on the panel and inside the panel shall be acceptable to the Engineer.

Each panel shall be provided with shipping skids constructed to furnish attachment points for lifting slings at or beneath the panel base structure. Each shipping skid shall include two beams or timbers running lengthwise beneath the panel base, extending beyond the panel on both ends. The beams shall be sufficiently strong to support the panel while it is being lifted by slings attached to the ends of the beams. The panel shall be bolted, not lagged, to the shipping skid.

2N.5.1 Wiring. All alarm contacts located within each panel shall be wired to terminal blocks. Thermocouple and other special circuits will be field wired directly to instrument terminals without the use of terminal blocks and panel wiring.

Sufficient clearance shall be provided for all control and instrument leads, and all incoming and outgoing leads shall be connected to terminal

*EPA Request dated Oct 12, 2010, for Information Pursuant to Section 114 . Response #10 of 17 of Appendix B.

IP10_002498

blocks suitably located for connecting external circuits. External circuit entry into the panels, shall be from the top. The arrangement of circuits on the terminal blocks shall be such that all connections for one circuit, plus any spare conductors, shall be on adjacent terminals. An adequate raceway system shall be provided for all wiring including external circuits. Wiring to each control switch shall be individually bundled and shall be installed with a loop of sufficient length to allow the switch to be removed from the panels without disconnecting the wiring.

High impedance circuits and low signal level circuits shall be connected using shielded or coaxial cable suitable for the service.

Any errors in electrical connections or of terminal markings shall be corrected in the field at the expense of the Contractor.

2N.5.2 Nameplates. Nameplates shall be furnished on all panel faces for all instruments and devices mounted on the panel faces, except where the instruments or devices are themselves provided with a service engraving. Plastic nameplates shall be furnished for all devices located inside each panel and for all devices projecting through the panel. Nameplates shall be engraved with legends as directed by the Engineer.

2N.5.3 Power Supply. Power supply to each control panel will be 120 volts, single-phase, 60 hertz. Circuits will be designated for controls and instrumentation. Each ac control bus in the panel shall be provided with an alarm relay to monitor control power. The relay shall have a minimum of two normally open and two normally closed contacts wired to a terminal block for remote use. Additional circuits will be provided for panel interior lighting, a system of convenience outlets, and, if required, a panel pressurizing blower. The panel interior shall be illuminated with two-lamp, 430 mA, rapid start, fluorescent strip fixtures installed in a continuous row along the top of the panel. All required light switches shall be provided inside the panel. A third circuit will be provided for annunciator equipment.

Power circuits to each transmitter, recorder, controller, and to the annunciator shall be separately fused. Fusing integral to the equipment will be considered adequate.

2N.5.4 Annunciators. Each annunciator shall have a station for each alarm input plus a minimum of 25 per cent spare stations. Sufficient stations shall be furnished for annunciation such that the items of equipment that fail can be easily identified. Each station shall have a backlighted window approximately 2 inches high by 3 inches wide with an engraved legend acceptable to the Engineer. Each unit shall be complete with acknowledge, reset, and test push buttons, and audible device.

An adjustable time delay relay shall be incorporated in the annunciator audible device circuit to cause automatic silencing of the device after a

*EPA Request dated Oct 12, 2010, for Information Pursuant to Section 114 . Response #10 of 17 of Appendix B.

manually selected time period. The annunciator stations shall, however, remain lighted until the trouble is cleared. The annunciator shall be solid-state type, suitable for 125 volt dc power supply with not less than 125 volts dc applied to the trouble contacts. The annunciator alarm contacts shall be designed to accept either normally open or normally closed trouble contacts by a simple field adjustment. The annunciator shall include one electrically isolated contact per window for remote annunciation. These auxiliary contacts shall be wired to terminal blocks for external connection and a common alarm contact shall be provided for connection to a single annunciator point of the Owner's remote annunciation system. The auxiliary contact action shall follow that of the field contact. The auxiliary contacts shall be reset by the acknowledge push button.

The annunciator shall be a Model AN-3100 as manufactured by Rochester Instrument Systems, Incorporated, based upon consistency with other plant annunciators. The annunciator shall have the following features.

Sequence

ISA Sequence R-12 (single input)
ISA Sequence F3A (multiple input)

Positive oriented logic

Rochester suffix FOD auxiliary contact per window

125 volt dc power supply for trouble contacts

Two lamps per indicating window

The annunciator alarm contacts shall be designed to accept field contacts that close on alarm condition. Contacts which open on alarm condition shall not be used.

*The power supplies of each subsystem shall provide isolation from the 125 volt dc power source and shall be fused separately to permit isolation of a subsystem for maintenance or trouble-shooting. An alarm contact shall be provided to close upon loss of power to the annunciation system for use in the Owner's remote annunciation system.

The annunciator shall include a ground detection system which covers both logic and the trouble contacts. Any ground sensed shall be alarmed on the window of the last row and last column.

The annunciator, acknowledge, reset, and test push buttons shall be cover mounted on its associated control panel. The following devices shall be mounted and wired inside the enclosure.

Annunciator audible device

Fuses and fuse holders for annunciator power supply system

*Addendum No. 1

*EPA Request dated Oct 12, 2010, for Information Pursuant to Section 114 . Response #10 of 17 of Appendix B.

Fuse and fuse holder for the audible device

Terminal blocks for connections to all external circuits

All necessary actuating devices and relays shall be furnished to provide annunciation, as determined by the Engineer after consideration of the Contractor's design.

Separate lamp matrices shall be provided on the scrubber control panel for each module or module subsystem. The final arrangement of lamp matrices shall be acceptable to the Engineer.

2N.5.5 Control Switches. Control switches shall be furnished and installed for all motor control other than motor operated valves and dampers. Control switches shall be momentary contact, spring return to normal (vertical) position.

Each control switch shall be installed so that the handle is turned clockwise to the START position and counterclockwise to the STOP position. The handle shall be vertical where AUTO or STANDBY positions are required. A pull to lock feature shall be furnished on all AUTO start or STANDBY start type control switches.

Red targets shall be furnished for the START positions on the escutcheons and green targets shall be furnished for the STOP positions.

Red lights shall be installed above and on the right of the switches and shall indicate that equipment is running. Green lights shall be installed above and on the left of the switches and shall indicate that equipment is not running. White lights shall be installed directly above the switch and shall indicate that equipment is not operating properly or that a motor has tripped.

Valve and damper control shall be by either toggle switches or selector switches. Each switch shall be installed so that the handle is turned clockwise to the OPEN position and counterclockwise to the CLOSE position. The handle shall be vertical where AUTO positions are required. Red lights shall be installed above and on the right of the switches and shall indicate when the valve or damper is in the intermediate or open position. Green lights shall be installed above and on the left of the switches and shall indicate when the valve or damper is in the intermediate or closed position. Valve and damper position indicating light circuits shall be provided with flashers to indicate direction of valve or damper travel by flashing the appropriate indicating light.

All escutcheon engravings and location of all switches and indicating lights on the scrubber control panel shall be subject to acceptance by the Engineer.

*EPA Request dated Oct 12, 2010, for Information Pursuant to Section 114 . Response #10 of 17 of Appendix B.

IP10_002501

2N.5.6 Subpanels. Subpanels (insert panels) shall be furnished for the scrubber control panel as required and for insertion into the remote main control panel in accordance with the following requirements. The subpanels will be located in an air-conditioned environment. The subpanels shall be provided with a semigraphic display for status indication.

Each graphic display shall consist of a subpanel section using 3/8 inch colored Lynnply, Formica, Kydex, or other acceptable engraving stock in the display and having status indicating lights adjacent to each display function which shall be lighted as each function is performed. The color coding of the base panel, symbols, and lines will be furnished later by the Engineer.

The subpanels shall be constructed of a minimum of 1/8 inch thick steel plate. The edges of the plate shall be machined with a 45 degree chamfer to one-half the thickness of the plate. All cutouts and devices shall be accurately located. All attachments to the plates shall be made by welding to the backside of the plate.

Scrubber control panel subpanels shall be fastened to the control panel by means of threaded studs spot welded to the rear side of the plate. Welding flashing shall be removed so that the subpanels lie flat and snugly upon the control panel surface.

The front surfaces of the subpanels shall be shop painted as specified in Section 1H. Finish colors will be selected later by the Engineer.

All electrical devices mounted on subpanels shall be wired to terminal strips mounted on brackets on the rear of the subpanels. Indicating lights shall be wired using 16 AWG wire size. All other devices shall be wired using 16 AWG wire size. Wiring shall be installed using stranded switchboard wire, UL Type SIS, 600 volts. Wiring to each subpanel on the scrubber control panel shall be individually bundled and shall be installed with a loop of sufficient length to allow the subpanel to be removed from the control panel for maintenance without disconnecting the wiring.

The monitoring and control subpanel for insertion on the Owner's main control panel shall be furnished prewired to a multi-pin connector for connection to a prefabricated cable. The mating plug shall be provided as a part of the cable and shall have a clamp which grips the cable jacket, not the conductors.

The prefabricated cable shall be prefabricated on one end only and shall be provided with shielding as required. The proposal shall be based on providing 500 feet of prefabricated cable and shall include a unit adjustment price for addition or deduction to the 500 foot length.

2N.5.7 Equipment Power Receptacle. Duplex receptacles with box and cover plate shall be furnished within each control panel as required to provide power conveniently for maintenance. The receptacle shall be Hubbell Model 5362.

*EPA Request dated Oct 12, 2010, for Information Pursuant to Section 114 . Response #10 of 17 of Appendix B.

2N.6 CONTROL VALVES. Control valves shall be furnished in accordance with the requirements of Section 2I - VALVES.

2N.7 CONTROL DRIVES AND CONNECTING LINKAGE. Electric control drives complete with all required accessory equipment shall be furnished as *required for any control dampers or other Contractor-furnished equipment requiring actuation drives. Operating torques and speeds shall be not less at the driven shaft than 150 per cent of the maximum full load torque of the driven equipment. Drives shall be suitable for operation over the range of ambient temperatures specified in Section 2A.

Drive gearing shall be enclosed in oiltight housings, and drive belts and ball screws shall be enclosed in protective guards or dusttight enclosures. Control drive installations shall be such that the appearance is acceptable to the Construction Manager and satisfactory access to equipment is maintained.

Control drive units shall be designed for direct manual control independent of the automatic control system. Manual control shall be by means of increase-decrease push buttons or switches on the panel selector stations. Manual operators shall consist of handwheels or cranks operating on a speed reduction mechanism with provisions for manual release of brake mechanisms.

Linkage for control drives shall consist of driving and driven levers and ball-and-socket type connecting links.

All control drive units shall be designed to lock into position upon loss of control signal so that no process upset occurs.

2N.7.1 Modulating Drives. Drives for dampers and other devices which must be modulated during operation shall be of the modulating electric type. All drives shall be electronically position controlled. The control systems shall produce electric drive position demand signals. Control drives shall be compatible with these signals, and shall provide position feedback signals as required by the control systems. Each drive shall be furnished with four limit switches, adjustable over the full travel of the drive. These limit switches shall be wired to terminal blocks and shall be available for use by the Owner. All power switching equipment and electronic equipment required for operation of the drives shall be provided installed in separate NEMA 12 cabinets for installation in appropriate scrubber areas separate from the actuators themselves.

Drives shall be furnished complete with all required mounting bases, connecting linkage, and accessories required for operation. Drives shall be equipped with housings suitable for the operating environment. All damper drives shall be equipped with space heaters, complete with thermostatic control.

The bidder's proposal shall be based on Bailey Controls Company control drives as specified in Article 2N.2.

*Addendum No. 1

*EPA Request dated Oct 12, 2010, for Information Pursuant to Section 114 . Response #10 of 17 of Appendix B.

Control drives shall utilize the Owner's 480 volt or 208 volt, 3 phase auxiliary power source described in Section 1B.

2N.7.2 On-off or Jogging Drives. Drives for isolating dampers or other driven devices not requiring modulation shall be of the on-off or jogging type.

Each electric motor drive shall be equipped with a 460 volt, 60 hertz, 3 phase motor. Each drive shall be equipped with four limit switches, adjustable over the full travel of the drive. Position feedback transmitters shall be furnished where required by the drive control system. Limit switches and position transmitters shall be wired to terminal blocks, and shall be available for use by the Owner.

Drives shall be furnished complete with all required connecting linkage and accessories required for operation.

The drives shall be in accordance with the applicable requirements of Section 1F.

Control drives shall utilize the Owner's 480 volt, 3 phase auxiliary power source described in Section 1B.

2N.8 TRANSMITTERS. Transmitters shall be of the electronic type and furnished as required by the design of the control and instrument systems furnished. Transmitters shall be as manufactured by Rosemount Inc., or acceptable equal. Transmitters shall be equipped with mounting brackets suitable for attachment to a mounting rack structure by bolting or welding.

The transmitter system pressure ratings and a description of all transmitter temperature characteristics shall be provided as part of the Proposal Data.

All transmitters shall be connected to their systems by use of piping, and any flexible connectors required by the transmitter design shall be furnished. All connections for primary piping shall be provided with NPT female threaded connections not smaller than 1/4 inch. All connections for electric wiring shall be provided with holes or knockouts for electrical conduit connections not smaller than 1/2 inch nominal size. Electrical connections to locally mounted transmitters will normally use a short length of flexible conduit.

The signal output for electronic transmitters shall be 4-20 mA dc.

2N.9 LOCAL CONTROLLERS. Local controllers shall be furnished as required by the Contractor's design. Controllers shall be mounted in dust-tight and weatherproof cases having windows for observation of pressure gages. Pneumatic controllers shall be equipped with gages to indicate the values of the supply and control pressures. Controllers shall have

*EPA Request dated Oct 12, 2010, for Information Pursuant to Section 114 . Response #10 of 17 of Appendix B.

adjustable set point and proportional band. Reset action shall be provided and all required equipment shall be mounted inside the controller case. Reset action shall be adjustable. Ranges of controller adjustments shall be not less than the following.

Set point	0-100 per cent of range
Gain	0.01 - 10
Reset	1-60 repeats per minute

In special circumstances other ranges of adjustment may be required.

All pneumatic controllers shall be equipped with booster relays, mounted within the controller cases. All pneumatic controllers shall be equipped with reducing valves and filter regulators for their air supplies. If the controller is yoke mounted on the valve, the air supply reducing valve and filter shall also be mounted on the valve and may be used to supply all of the control air requirements of the controller and valve positioner.

2N.9.1 Liquid Level Controllers. Each nonslurry liquid level controller shall consist of a pneumatic controller mechanism integrally mounted with an external type float cage. The float shall be of the displacement type approximately 14 inches long and shall be constructed of stainless steel. The float movement shall be transmitted to the pilot mechanism by a torque device incorporating a positive seal between the float cage interior and the controller mechanism without the use of stuffing boxes.

All float cages shall be of fabricated steel construction with 150 psi design pressure. Orifices to prevent surging shall be provided in the lower float cage or for the lower float cage connection.

A gage glass and gage shut-off valve shall be furnished installed directly on the float cage of each level controller. Gage glasses and gage valves shall be as follows.

Float Cage Design Pressure	Gage Glasses	Gage Valves
150 psi	3/4 inch OD red backed pyrex tubular type	600 pound forged carbon steel ball check type
300 or 600 psi	Flat glass reflex type with union end connections	600 pound forged carbon steel ball check type

For slurry level control, the manufacturer shall propose his standard slurry level controller.

*EPA Request dated Oct 12, 2010, for Information Pursuant to Section 114 . Response #10 of 17 of Appendix B.

2N.9.2 Pressure Controllers. Each pressure controller shall consist of a pneumatic mechanism containing a bellows or bourdon tube type pressure sensing element built as an integral part of the assembly. Unless otherwise specified, pressure sensing elements shall be as follows.

Maximum Controlled Pressure	Pressure Element Construction
30 inches Hg vac to 15 psi	Ni-Span C bellows
16 psi to 500 psi	Bronze bourdon tube
501 psi and greater	Chromium alloy steel bourdon tube

2N.9.3 Temperature Controllers. Each temperature controller shall consist of a pneumatic controller mechanism containing a temperature sensing element built as an integral part of the assembly. The temperature element shall be of either the mercury actuated or gas filled type and provided with a temperature bulb and a Type 304 stainless steel separable socket for installation in the controlled temperature pipeline. A length of temperature compensated armored capillary tubing shall be furnished interconnecting the temperature bulb and the pilot. Twenty feet of capillary tubing shall be furnished unless otherwise specified.

All temperature controllers shall include proportional and reset action and a temperature indicator unless otherwise specified. Temperature indicators shall have pointers indicating set point and controlled temperature.

2N.10 SIGNAL CONVERTERS. Electric-to-pneumatic signal converters shall be furnished as required. These shall be of a design suitable for operation in the conditions described in Section 2A. Converter output signal shall be 3-15 psi. An air supply filter regulator equipped with a pressure gage shall be supplied with each converter.

Electronic trip devices, voltage to current, current to voltage or any other electronic signal converter of this type shall be as manufactured by Rochester Instrument Systems, Inc. or acceptable equal.

2N.11 FLOW MEASUREMENT DEVICES. Flow measurements of clear fluids shall be made using orifice plates, venturi tubes, or rotameters as required by the Contractor's design.

Slurry flow measurements shall be made using magnetic flowmeters as manufactured by The Foxboro Company, or acceptable equal.

2N.12 DENSITY MEASUREMENT DEVICES. Density measurement devices shall be furnished as required by the scrubber manufacturer's design. The density measurement devices shall be gamma source and detection units complete

*EPA Request dated Oct 12, 2010, for Information Pursuant to Section 114 . Response #10 of 17 of Appendix B.

with separately mounted electronic units. The electronic units shall include local indicating lights and relays for use with the Owner's remote alarm system.

The equipment shall be as manufactured by Texas Nuclear, Kay-Ray Inc., or acceptable equal.

2N.13 pH MEASUREMENT. Recorders, monitors, and pH cells shall be furnished complete in number and location as required by the scrubber manufacturer's design. Adequate redundancy for reliable operation and sufficient retransmission capability for control and monitoring shall be provided. The pH cell assemblies shall be designed for operation with a minimum of operator attention and cleaning. The pH equipment manufacturer and model numbers shall be subject to acceptance by the Engineer. The pH cells shall be located in auxiliary measuring vessels which can be isolated. Each cell shall be equipped with ultrasonic cleaning devices. The pH sensors shall be dip type.

2N.14 RECORDERS. Strip chart recorders as required for monitoring the systems shall be furnished by the Contractor. Recorders shall have 4 inch wide charts and one inch per hour chart speeds, unless otherwise specified, and shall be designed to accept the range of control signals used. Recorders shall be Taylor Series 1330J 6 by 6 recorders. An indicating scale, graduated in terms of the measured variable, shall be provided for each pen mechanism and shall be provided with a pointer permitting convenient viewing at distances up to 10 feet. The charts shall be driven by ac synchronous clock motors. Each recorder shall be provided with a phenolic nameplate mounted in the window which states the quantities measured, color of records, ranges of measured values, and chart miltipliers. Recorders shall be provided with connectors and prefabricated cables, Taylor Part No. 1030FXIII100, for all power and signal wiring between the panel mounted recorder and the analog control logic cabinet for signal cables, and a panel power strip for power cables. Cables shall meet the flame test requirements in Section 1B.

Chart and scale ranges for all recorders shall be as selected by the Engineer, and any extra charges for special chart and scale ranges shall be included in the lump sum price. All recorder charts shall indicate time of day and shall have graduations which are essentially linear. The use of square root charts for flow measurements will not be accepted. Each recorder shall be provided with a one year supply of charts and ink. Each chart recorder shall be equipped with a rubber stamp and stamp pad giving the essential data described for each recorder nameplate.

Recorder cases shall be equipped with die-cast doors. Doors shall be gasketed to prevent entry of dust. Internal parts shall be made accessible for maintenance. Mounting subassemblies on hinges within the cases is preferred.

*EPA Request dated Oct 12, 2010, for Information Pursuant to Section 114 . Response #10 of 17 of Appendix B.

Printing recorders, if required, shall be Leeds & Northrup Speedomax W, or acceptable equal. Chart speed shall be one inch per hour. The recorders shall have internal illumination, a chart motor switch, a chart tear-off device, identification labels at the front and rear of the case and on the recorder, and legend plates behind the glass on the door.

2N.15 VERTICAL INDICATORS. Vertical indicators shall be Hays Republic Type V 5A, or acceptable equal, furnished with internal illumination and an internal or rear zero adjustment.

2N.16 ACCESSORY ITEMS. Limit switches, pressure switches, temperature switches, level switches, solenoid valves, pressure gages, thermometers, temperature detectors, thermowells, test wells, and vibration transducer mountings shall be provided as required and shall conform to the requirements of Section 1B.

Other accessory items shall be provided as specified herein.

2N.16.1 Flow Indicators. Local flow indicators shall be provided as required by the scrubber manufacturer's design. Flow indicators shall be as manufactured by Fischer and Porter, Schutte and Koerting, Wallace & Tiernan or acceptable equal.

2N.16.2 Flow Switches. Flow switches shall be provided as required by the Contractor's design. Flow switches for clear fluids shall be of the indicating type as manufactured by Universal Filters, Inc. or acceptable equal.

Flow switches for slurry flows shall incorporate magnetic flowmeters and electronic trips as specified herein in the articles entitled SIGNAL CONVERTERS and FLOW MEASUREMENT DEVICES.

2N.16.3 Valve Positioners. All valve positioners shall be as manufac-
*tured by ~~Fisher~~ Bailey Controls Company or acceptable equal.

2N.17 MISCELLANEOUS ITEMS. Miscellaneous items shall be provided in accordance with the following requirements.

2N.17.1 Support Hardware. All brackets, stands, supports, and other miscellaneous hardware required for mounting devices shall be provided.

2N.17.2 Control and Instrument Piping. Control and instrument piping shall be in accordance with the requirements of Sections 2H and 3F.

2N.18 PROGRAMMABLE CONTROLLER. If the Contractor's standard design includes a programmable controller (PC), it shall be in accordance with the requirements of this article. The programmable controller shall receive status intelligence, perform logic functions, issue control commands, and provide alarms and status information for the system described in these specifications.

*Negotiated Revision

*EPA Request dated Oct 12, 2010, for Information Pursuant to Section 114 . Response #10 of 17 of Appendix B.

The programmable controller equipment shall consist of a solid-state control system which has a user programmable memory for storage of instructions to implement specific functions such as input/output control, boolian logic, timing, counting, arithmetic, and data manipulation. The PC equipment shall be purposely designed as an industrial control system which can perform functions equivalent to a relay panel or a wired solid-state logic system. The PC equipment may also perform additional functions such as modulating control of valves and dampers. The PC equipment shall consist of central processors, input/output interfaces, memory, power supplier, a programming device, and a tape cassette unit for storing and rapidly loading programs. All PC equipment shall be capable of operation in ambient temperatures of 0 C to 55 C and 5 per cent to 95 per cent relative humidity (noncondensing) without fans or other cooling equipment.

The PC shall have the following basic features.

Memory retention without external power

Programmable by the use of ladder diagrams

Continuous monitoring of program execution

Predetermined failure mode

Ease of maintenance

The base proposal shall be for providing the Contractor's standard system. The controller manufacturer and model shall be stated in the proposal. Alternate proposals shall be provided for control systems based on Square D Company, Class 8881; Allen-Bradley Company, Model PLC; Struthers Dunn Co., Director 4001; and Forney Engineering Company, AFS-1000 controllers.

The Owner shall have the option of selecting any of the five programmable controller systems based on compatibility with other plant control systems which will be selected at a later date. The proposal shall state the latest date at which the selection may be made.

The programmable controller equipment shall be fully compatible with other Contractor-furnished equipment, and the Contractor shall be fully responsible for assuring that overall control system operation meets the intent of these specifications. The Contractor shall be responsible for any changes in programmable controller equipment which are required because of defective equipment, incorrect internal connections, or incorrect selections of equipment.

*EPA Request dated Oct 12, 2010, for Information Pursuant to Section 114 . Response #10 of 17 of Appendix B.

IP10_002509

Unless specifically stated otherwise, codes and standards shall conform to the latest applicable standards of NEMA, ASME, ISA, ANSI, IEEE, EEI, and SAMA as to ratings, construction, and operation. Any conflict between standards shall be referred to the Engineer, who will determine which standard shall govern.

2N.18.1 Central Processing Unit (CPU). The central processing unit shall be of solid-state design on modular printed circuit boards. The CPU shall contain an access port used for entering instructions and data or monitoring previously entered information. The CPU shall be capable of interfacing with another programmable controller, computer, or printer in accordance with E.I.A. Specification RS-232C or a 20 milliampere current loop interface using an ASCII serial code. The CPU shall provide internal fault analysis with a predetermined failure mode in the event of a fault. An external contact output shall indicate a processor fault.

2N.18.2 Memory. The programmable controller memory shall be user programmable and changeable. Memory shall be easily field expandable and field replaceable, in standard increments, without rewiring or use of special tools. The PC shall be initially provided with sufficient memory to fulfill all the system requirements plus a reserve of 20 per cent. The memory shall be capable of being expanded to at least 50 per cent greater than the amount initially furnished. The programs in memory shall be retained upon complete system power loss. If batteries are required to support the memory upon loss of power, they shall be capable of supporting the memory for a minimum of 2 months without application of ac power. Batteries may be either rechargeable or nonrechargeable and their usable life shall exceed 5 years. A loss of battery indication on the front of the processor shall indicate that batteries must be replaced within one week.

2N.18.3 Inputs and Outputs. Inputs and outputs shall be electrically isolated from the processor and shall meet the requirements of ANSI Standard C37.90a-1974 for surge withstand capability. Remote input/output racks shall be used to reduce field wiring where economically feasible.

All required peripheral equipment for signal conditioning, impedance matching, balancing, etc., shall be provided by the Contractor.

The PC shall be capable of accepting 120 volt ac or 125 volt dc inputs. The Contractor shall supply all interrogation voltage sources for contact inputs. Input cards for contact inputs shall have visible indications of the status of each input. Each input shall be separately fused.

Contact outputs shall be capable of switching 10 amperes at 120 volts ac or 1 ampere at 125 volts dc. Should external relay buffering of control outputs be necessary, these relays shall be located adjacent to the output terminal blocks. Status lights shall be provided for each output.

*EPA Request dated Oct 12, 2010, for Information Pursuant to Section 114 . Response #10 of 17 of Appendix B.

IP10_002510

The programmable controller shall be capable of accepting and outputting analog signal ranges of 4 to 20 mA, 1 to 5 volts dc, and 0 to 10 volts dc. The input analog to digital converters and the output digital to analog converters shall have an absolute accuracy of 0.1 per cent of full scale of signal.

All input and output wiring to the process equipment shall be field terminated on terminal strips. These terminal strips, sized for 12 AWG wire, shall be located in separate termination cabinets. A separate common terminal shall be provided for each input and output. Wiring external to these terminal strips will be performed under separate specifications. The signals shall be connected to the input/output cards through Contractor-furnished prefabricated cables that shall have pin and socket connectors on both ends. All inputs and outputs to the control panel equipment shall be interconnected through Contractor-furnished prefabricated cables that shall have pin and socket connectors on both ends. The base bid shall include 100 feet of prefabricated cable between each termination cabinet and its associated CPU. The proposal shall include a unit adjustment price for addition to and deduction from the 100 foot lengths.

At least 20 per cent spare input/output card slots, terminal blocks, and prefabricated cable conductors shall be provided.

2N.18.4 Power Supplies. The programmable controller equipment shall operate from 120 volt ac, 60 hertz, single-phase power provided by the Owner. All power supply equipment required to rectify, transform, or otherwise condition the Owner's 120 volt ac grounded power sources for use by the control system shall be furnished by the Contractor. The Contractor's power distribution shall be such that any single circuit will require no more than 20 amperes. All dc power supplies used in the Contractor's system, including any supplies for contact interrogation and display, shall be furnished as duplicate pairs of supplies. Each supply in each pair of supplies shall be sized to carry 100 per cent load. Each pair of supplies shall be diode auctioneered and fused to a common bus. The power supply systems shall be designed so that the system will maintain its normal operation during a temporary loss and subsequent restoration of ac power during a period of 20 milliseconds or less. Power losses in excess of 20 milliseconds shall be detected and the controller program brought to an orderly halt with control signal outputs left in a predetermined status. The failure of any power supply or any common bus within the system shall cause an alarm output contact to close.

Terminal blocks sized for 10 AWG wire shall be provided for input power termination. The Contractor's system shall be equipped with fuses to protect power sources and equipment from damage caused by failed components.

*EPA Request dated Oct 12, 2010, for Information Pursuant to Section 114 . Response #10 of 17 of Appendix B.

IP10_002511

2N.18.5 System Grounding. The programmable controller shall be designed for grounding to the power station ground grid at various connection points. Insulated ground conductors from the ground grid will be furnished to each Contractor-furnished cabinet. Each cabinet shall be provided with a suitable termination point to provide the required cabinet ground.

Suitable terminals and supports for grounding shields on input/output signal cables shall be provided as required. These terminal block connections shall be located with the other terminals and shall be integrally wired to the cabinet ground bus.

Terminations for power grounds shall be separate and isolated from termi-
*nations for cabinet grounds. Neither inputs nor outputs shall be inherently grounded, nor shall they require grounding for proper system operation.

At least 600 volt isolation shall be provided between each power ground and cabinet ground.

2N.18.6 Cabinet Fabrication. All programmable controller cabinets shall be constructed using a minimum of 10 gage steel plate. The cabinets shall be reinforced as required to ensure true surfaces and adequate support for equipment mounted therein. The cabinets shall be of adequate strength to support mounted equipment during shipping and to support the weight of personnel standing on top of the panels.

All mounting studs and support brackets shall be accurately located. All welds on exposed surfaces shall be ground smooth. Finished cabinet surfaces shall be free from waves, bellies, or other imperfections. Unless specified otherwise, cabinet doors shall be hinged and shall have turned-back edges and additional bracing where required to ensure rigidity. Hinges shall be of the concealed type, pinned for quick removal.

Door latches shall be of the three-point type with integral key locks.

The key locks shall accept both an individual key for the specific lock and a master key which fits all locks.

For each lock on each cabinet four individual keys shall be furnished and for each cabinet two master keys shall be furnished.

The equipment enclosures shall be consistent with standard electronic equipment industry packaging criteria. No fans or other ventilation devices shall be permitted.

Each cabinet shall be supplied with removable eyebolts suitably located in each corner of the cabinet top to facilitate field handling.

*Addendum No. 1

*EPA Request dated Oct 12, 2010, for Information Pursuant to Section 114 . Response #10 of 17 of Appendix B.

*All cabinets located remote from the control room shall be furnished in NEMA 4 enclosures.

2N.18.7 Programming Equipment. A programmer's panel shall be furnished. This panel shall use a cathode ray tube (CRT) display with an integral keyboard to enter, modify, and verify programs in the programmable controller. The CRT shall also be capable of being utilized as a diagnostic

*Addendum No. 3

*EPA Request dated Oct 12, 2010, for Information Pursuant to Section 114 . Response #10 of 17 of Appendix B.

device. It shall show the status of all inputs, outputs, internal relay equivalents, timers, and counters. The panel shall provide the capability of forcing inputs, outputs, and internal relay equivalents to either an on or off state. The system shall provide capability of program modifications without shutting down the programmable controller.

A cassette tape program loader, or equivalent device, shall be furnished for generating off-line program storage and for rapid reinsertion of programs. The Contractor shall provide two sets of cassette tapes which contain the final user programs.

2N.18.8 Programming. Software for the programmable controller shall be derived from a relay logic format. The Contractor shall develop tested software for the system, according to the requirements of these specifications and to meet the requirements for proper equipment control. Counter and timer functions shall be implemented in software. The programmable controller shall be capable of recompiling the existing software when changes are required in the programs to prevent gaps in memory usage and allow insertion of instructions.

The Contractor shall provide programming training for two of the Owner's engineers. The bidder's proposal shall describe the type and duration of training to be provided.

2N.18.9 Fail-safe Protection. In the event of power failure or malfunction of components in the controller, control signal outputs shall be commanded to a defined status, to be defined by the Engineer, via safe-
*guard circuitry, thereby ~~tripping~~ rejecting operating equipment to a predetermined status. Operator initiation shall be required to restart the system.

2N.18.10 Maintainability. All PC equipment shall be designed for ease of maintenance. There shall be visual indicators provided at major diagnostic points to facilitate trouble-shooting. Software diagnostic programs shall be provided. There shall be no requirements to shut down the system to replace noncritical components such as input/output modules. The Contractor shall provide a description of all maintenance services which are included with the equipment. The Contractor shall provide maintenance training for two of the Owner's instrument technicians. The bidder's proposal shall describe the type and duration of training to be provided.

2N.18.11 Testing. All programmable controller equipment shall undergo testing by the Contractor. These tests shall include individual component tests prior to system assembly, system tests prior to shipment, and system tests at the jobsite. Testing shall be performed as described in Section 1B and herein. Reports shall be submitted to the Engineer.

All system components shall be tested prior to integration into the system. During these tests, the equipment shall be powered and the system voltage shall be cycled between rated device limits a minimum of

*Addendum No. 1

*EPA Request dated Oct 12, 2010, for Information Pursuant to Section 114 . Response #10 of 17 of Appendix B.

once every 24 hours. The tests shall terminate when the equipment has accumulated 120 consecutive hours of malfunction free operation.

The complete programmable controller system shall be assembled in the Contractor's factory and functionally tested for circuit continuity, correct program function, and correct system response to power supply failure and equipment malfunctions. This test shall include the following.

A demonstration of the proper functioning of all hardware

A demonstration of the proper functioning of all Contractor supplied software

A point-by-point exercising of each input and output

A demonstration of all man/machine functions

All input simulation equipment and output monitoring equipment shall be furnished by the Contractor. The Project Manager shall be given an opportunity to witness this test, which shall be performed on a date mutually agreeable to all parties.

The system shall be tested at the jobsite after complete system installation. All system factory tests shall be repeated subject to any limitations imposed by the controlled equipment.

2N.18.12 Documentation. The Contractor shall furnish complete final documentation containing information necessary for efficient installation, operation, maintenance, and trouble-shooting of equipment furnished under these specifications. Electrical schematics of all cards and units within the equipment furnished shall be furnished along with point-to-point wiring diagrams. All software programs shall be described using flow charts or ladder diagrams accompanied by a written description. The Contractor shall provide completed input/output lists giving internal usage information.

2N.18.13 Spare Parts. Each bidder shall submit a list of recommended spare parts along with the pricing of these parts in his proposal.

2N.18.14 Nameplates. Nameplates shall be provided on each enclosure. Nameplate legends will be determined later by the Engineer.

2N.19 ELECTRONIC CONTROL COMPONENTS. All electronic control components shall be manufactured using solid-state semiconductor techniques exclusively. Components shall be modular in construction and shall be standard interchangeable assemblies. Use of electrolytic capacitors in systems components shall be minimized as much as is practical. Control system constants such as gain, integral, and derivative shall be adjustable without removing modules from service and shall have calibrated

*EPA Request dated Oct 12, 2010, for Information Pursuant to Section 114 . Response #10 of 17 of Appendix B.

IP10_002515

scales. Logic cards shall have an external and easily observed indication of the logic status.

2N.20 PANEL MOUNTED SELECTOR STATIONS AND MANUAL STATIONS. For bidding purposes, a selector station shall be furnished for each final drive element. In addition, higher level selector stations shall be furnished as required by the detailed description of the control systems and as required to complete the functional control systems. Proprietary higher level stations incorporating multiple system functions on a common station, such as a scrubber master, are acceptable. Selector stations shall be the automatic balance type which permits bidirectional bumpless transfer between automatic and manual without manual null adjustment. A transfer knob, lever, or push buttons shall be provided to shift between manual and automatic control. Selector stations and systems shall be designed to permit removal of a station for maintenance with no system upset or disturbance. Removal of a station which is on automatic shall reject affected control loops to manual control.

Manual control from selector stations controlling final drives shall provide a signal which is independent of the operation of controllers, amplifiers, and control system power supply availability. Power supplies furnished for manual control shall conform to the requirements of Section 1B.

Indicator scales shall be graduated to read directly in the measured units unless otherwise noted. The equipment for each selector station shall be assembled on a common mounting plate or housing for single hole mounting in the associated control panel. Modular type selector stations will be acceptable. Control knobs, levers, and indicating scales shall have descriptive legends, and the mounting plate or housing shall carry a service engraving acceptable to the Engineer.

Selector stations for control of multiple process equipment shall be equipped with bias adjustments. Stations requiring set points shall be supplied with set point adjustment knobs.

Manual stations shall be similar in size, operation, appearance, and mounting characteristics to the selector stations already described, but shall not include the transfer provisions.

Selector stations and manual stations shall be connected to the system logic cabinets by means of prefabricated cables, equipped with plugs on both ends.

2N.21 CONTROL SYSTEM LOGIC CABINETS. All electronic control system logic, electromechanical logic, power supplies, and other system components shall be rack mounted and wired in logic cabinets. Preferred height of the cabinets is 90 inches and the preferred depth is 24 inches. Cabinets shall be equipped with front and rear access doors. Doors shall be full height, not more than 24 inches wide. Ventilation blowers shall

*EPA Request dated Oct 12, 2010, for Information Pursuant to Section 114 . Response #10 of 17 of Appendix B.

IP10_002516

be furnished as required by equipment design and shall be soundproofed to the maximum feasible extent. Cabinets shall be designed for a grounded installation on the building structure. Any isolation from the building ground which is required by equipment design shall be provided internal to the cabinets.

Terminal blocks shall be plainly marked with circuit designations furnished by the Engineer. Provision for shield termination shall also be provided. Terminals shall be confined to one cabinet, preferably at one end of the cabinet assembly. Field cable entry location will be determined later by the Engineer. A minimum of 25 per cent spare terminals shall be provided, and a minimum of 20 per cent spare logic and component space shall be provided.

2N.22 CONTROL SYSTEM POWER SUPPLIES. Equipment required to transform, rectify, and regulate the Owner-furnished power supply for use by control system components shall be furnished. All power supplies to system logic shall be furnished in duplicate, with duplicate supplies connected through diodes to a common bus for each voltage employed. The dc power supplies shall not be backed up by batteries. All required constant voltage power supply transformers shall be furnished.

Components of power supply systems shall be of the highest available quality for reliability and long service life. Capacitors shall be of the tantalum type. Semiconductor devices shall use silicon and not germanium.

All items of control equipment requiring power shall be supplied from the logic cabinets.

All power circuits from a logic cabinet to a remotely mounted item shall be individually fused. Fuses shall be located in the logic cabinet. Fuses shall, insofar as possible, be mounted in a central location providing convenient access for replacement. Fuse rating selections shall be based more upon continuity of service and desirable mechanical properties than on minimization of overcurrent damage to the equipment served by the fuse.

Circuit breakers and fuses shall be coordinated and otherwise arranged to remove a minimum amount of equipment from service. Ammeters shall be provided for each power supply. Each voltage level on each power supply shall be provided with a voltmeter and an alarm device. The alarm device shall close a contact upon the failure of the power supply at any of the voltage levels. Contacts will be used to operate the associated control panel annunciator.

*EPA Request dated Oct 12, 2010, for Information Pursuant to Section 114 . Response #10 of 17 of Appendix B.

IP10_002517

Control system power shall be designed for the following sources.

Description	Power Source
Logic power for programmable controller, if furnished	Owner's continuous ac 120 volt system (20 amperes maximum per bus)
Solid-state logic, if furnished	Owner's continuous ac 120 volt system (20 amperes maximum per bus)
Multiplexing equipment, if furnished	Owner's continuous ac 120 volt system (20 amperes maximum per bus)
Control for 460 volt motors 100 horsepower or less	From starter 120 volt ac control power transformer
Control for motors greater than 100 horsepower	From Owner's separate 125 volt dc control buses. Control contacts shall be rated 10 amperes, momentary; 1 ampere continuous.
Annunciator power supply sources	From Owner's 125 volt dc battery
DC power supply sources	From Owner's redundant 120 volt ac supplies (20 amperes per bus maximum)
Control panel instrument service power supply buses	From Owner's 120 volt ac supplies (20 amperes per bus maximum)
Programmable controller CRT, disc drive, and tape drive, if furnished	From Owner's continuous ac 120 volt system (20 amperes per bus maximum)

2N.23 CONTROL SYSTEM CABLE AND WIRING. Prefabricated interconnecting cables shall be furnished for all circuits between equipment in the control system logic cabinets and equipment in the associated control panel. Cables shall provide any shielding required for these circuits. Insulation and jacket thickness shall be as required by the application. Minimum conductor size shall be 16 AWG. Multiconductor cables shall be

*EPA Request dated Oct 12, 2010, for Information Pursuant to Section 114 . Response #10 of 17 of Appendix B.

IP10_002518

color coded, using different colored insulation for each wire. Cables shall conform to the requirements of Section 1B.

Cable lengths shall be as directed by the Engineer. The base bid shall include sufficient cable to span 100 lineal feet between the logic cabinets and the associated control panel. The bidder's proposal shall include a unit adjustment price for addition to and deduction from the 100 foot lengths. Cables shall be provided with plug-in connectors. All plug-in connectors shall have a positive clamp to assure continnous contact. Connectors shall be designed to grip the cable jacket, not the conductors.

The Contractor shall design the control system to be noise tolerant and shall assume responsibility for provision of a noise tolerant system. The control system design shall allow field routing of all wiring in cable trays with power and control wiring up to 20 amperes, 120 volts, 60 hertz, or 125 volts dc. Such routing shall have no degrading influence on any system functions. Cables will be installed under separate specifications in aluminum and steel tray.

The Contractor shall be responsible for the effective elimination of all static and/or inductive pickup that may affect the usefulness of the system. Any expense involved in correcting system malfunctions due to static or inductive pickup shall be borne by the Contractor. A minimum amount of shielding, consistent with accurate operation, is desired in order to keep installation and wiring costs to a minimum. Information regarding any recommended shielding outside of the Contractor's packaged system shall be submitted. These recommendations will be carefully evaluated.

2N.24 CONTROL SYSTEM GROUNDING. The analog control equipment shall be designed for grounding to the station ground grid at a single connection point. An insulated ground bus shall be furnished in the logic cabinets.

Shields on electronic cables shall be grounded in the logic cabinets as required. Suitable terminals and supports shall be furnished.

Logic cabinets shall be equipped to accept the single point system ground, which at this point will be isolated from the building ground. Any internal component grounds or commons shall be the system ground, which shall be kept isolated from the building ground.

Any electrical ground or common from components not mounted in the logic cabinets shall be brought to a terminal block connection within the component. This terminal block connection shall be located with the other terminals and shall be available for connection to the system ground bus specified. Isolation from building ground and case ground shall be in-
*herent in component design. Neither system inputs nor system outputs shall be inherently grounded, nor shall any grounds be required for proper operation of the system.

*Addendum No. 1

*EPA Request dated Oct 12, 2010, for Information Pursuant to Section 114 . Response #10 of 17 of Appendix B.

At least 600 volt isolation shall be provided between electrical ground and case, or building ground, for all system components.

2N.25 INSTRUMENT ACCURACY. All instruments shall be constructed to perform normally and meet all guarantees when subjected to vibration and the range of ambient temperatures listed in Section 2A.

Flowmeter secondary devices shall produce signals which are linear with respect to flow within plus or minus one per cent of the full scale flow value when operating between 25 and 100 per cent of full scale value. The accuracy guarantee shall include the effect of errors in the differential head measuring device, square root converter, and signal generator, but not the primary device.

Pressure transmitters shall transmit a signal which is linear with respect to the measured pressure within plus or minus one-half of one per cent of the measured range span.

Level transmitters shall transmit a signal which is linear with respect to the measured level within plus or minus one per cent of the metered level range span based on a specific gravity of 1.00.

Resistance temperature detector elements shall have a resistance characteristic which is linear with respect to temperature within plus or minus one-half of one per cent of the top range value.

2N.26 FACTORY TESTS. All control panel equipment shall be shop tested. These tests may be observed by the Project Manager. There shall be at least 10 working days notice given to the Project Manager prior to conducting the tests. Test reports shall be submitted to the Engineer.

After each control panel has been fabricated and all parts assembled, the complete panel, including instruments and devices, shall be factory tested. Factory tests shall include the following.

Tests required to verify correctness of assembly and operation

High potential tests

Applicable NEMA and IEEE standard tests

Energized functional test to demonstrate that the control system is wired in accordance with the project schematic wiring diagrams. The control voltage used for this testing shall be 110 per cent of the relay coil voltage rating.

Factory testing of programmable controller equipment shall be as specified in Article 2N.18.11.

*EPA Request dated Oct 12, 2010, for Information Pursuant to Section 114 . Response #10 of 17 of Appendix B.

IP10_002520

2N.26.1 Timing Relays. In addition to the test previously listed, the Contractor shall set and check the operating times of all timing relays furnished by him before shipping the control panel from the factory. The following repeat accuracy is acceptable.

Type of Timing Relay	Acceptable Variation in Operating Time from the Set Point
Range 200 seconds and under	±5 per cent
Range longer than 200 seconds	±10 per cent

After final setting, the operating time of each relay shall be within the acceptable limits for at least five operations before its performance is considered to be satisfactory. The Contractor shall replace those relays whose operating time, when tested, is not within the specified limits with relays whose performance is within the specified limits.

2N.26.2 In Factory Inspection. The Contractor shall keep the Project Manager informed as to the status of construction so the Project Manager may exercise the option of inspecting the work during any phase of construction.

Prior to shipment, the Project Manager shall have the option of observing the final checking and testing of the control panel. The final checkout shall consist of electrical operation of all components and wiring.

The Project Manager shall be notified 10 working days prior to final checking and testing.

2N.27 SHIPPING REQUIREMENTS FOR ELECTRICAL CONTROL EQUIPMENT. All control equipment containing electronic components shall be shipped by air cushion van. Equipment shall be shipped as complete assemblies. Equipment shall not be transferred from van to van at any intermediate point.

*EPA Request dated Oct 12, 2010, for Information Pursuant to Section 114 . Response #10 of 17 of Appendix B.

Section 2P - ACCESS PROVISIONS

2P.1 GENERAL. This section covers the design and fabrication of access provisions for the flue gas wet scrubber.

Typical details of access provisions shall be in accordance with the requirements indicated on Drawing 9255 - DS-0009.

2P.2 SCOPE OF SUPPLY. A suggested arrangement of access stairs, platforms, walkways, handrails and ladders necessary to provide complete and convenient access for operation, inspection, testing, and maintenance shall be provided as part of the Proposal Data. Access provisions included with the equipment shall be indicated on the arrangement drawings.

Except as otherwise specified, the Owner will provide access stairs, platforms, walkways, handrails and ladders under separate specifications.

The Contractor shall furnish access provisions required in the interior of any equipment or ductwork, and as specified for tanks in Section 2E.

2P.3 DESIGN CRITERIA. Platform, stairway, and walkway supporting steel shall be designed for 100 pounds per square foot live load. Platforms and walkways shall be a minimum of 3'-0" wide. Vertical deflection of steel framing members shall not exceed 1/240 of the span length in inches or a maximum of 3/4 inch. Platforms shall have lateral bracing as required for rigidity and stability.

Seismic design criteria for the access stairs, platforms, walkways, handrails, and ladders shall be in accordance with Section 1S and Subsection 1S5.

All platforms and walkways shall be provided with handrails. The handrails shall consist of a lower rail with the top surface 21 inches above the floor, an upper rail with the top surface 42 inches above the floor, and vertical posts uniformly spaced at intervals not exceeding 6'-0" on center.

The assembled handrail shall provide continuous unbroken runs, with field connections as required between platform rails and stair rails and at corners of platforms. Handrails for adjacent stairs shall be connected by return bends. Continuity of handrails shall be interrupted only where the railings intersect columns, bracing, or other structural supports.

Stairs shall have a minimum tread width of 3'-0". The riser-to-tread ratio shall not exceed 1:1. Risers shall not exceed 8 inches. Stair stringers shall be not less than 10 inch, 15.3 pound channels.

*EPA Request dated Oct 12, 2010, for Information Pursuant to Section 114 . Response #10 of 17 of Appendix B.

IP10_002522

All stairs shall be provided with stair railing. Stair rails shall consist of a lower rail with the top surface 17 inches above the nose of the stair treads, an upper rail with the top surface 34 inches above the nose of the stair treads, and vertical posts uniformly spaced at intervals not exceeding 6'-0" measured parallel to the slope of the stairs.

Kickplates shall be provided for all platforms on tank roofs as required, and as otherwise necessary for personnel protection and safety. Kickplates shall project 4 inches above the top surface of the grating, roof, or other walking surface. Any kickplates on roofs shall be notched to permit drainage of water.

Walkways, stairs, and platforms shall be fabricated from galvanized rectangular bar grating.

Ladders shall be used in lieu of stairways only in locations specified or where stairways would not be practicable and then only with the specific acceptance by the Engineer after consideration of other alternatives.

2P.4 MATERIALS. The materials used shall be equivalent to or shall exceed the requirements of the following specifications.

Structural plates and shapes	ASTM A36 steel, shop prime painted. Minimum yield point of 36,000 psi including appurtenant materials
Shop and field bolts	ASTM A325, Type 1 bolts, nuts, washers and load indicator washers, or ASTM A325 Type 1 hex head load indicator bolts with nuts and washers, one inch diameter, install in accordance with manufacturer's written instructions
Rectangular floor grating	Fed Spec RR-G-661, steel, welded rectangular type, epoxy coated
Stair tread grating	Same as specified for floor grating, except galvanized
Nosings	Wooster Type 120 Alumogrit or acceptable equal

*EPA Request dated Oct 12, 2010, for Information Pursuant to Section 114 . Response #10 of 17 of Appendix B.

Handrailings

Posts and rails	Square steel tubing, ASTM A500 Grade A or B or ASTM A501, 1-1/2 inch outside dimension, 0.148 inch minimum wall thickness. Square tube rolled from round pipe will not be acceptable. Shop prime painted
Slip joints	R&B Wagner single lock expansion splice locks, galvanized
Bolts	ASTM A307 Grade A hexagon with lock washers and nuts, all galvanized
Ladder with safety cage	Ladder and cage shall meet OSHA requirements and be acceptable to the Engineer.

2P.5 FABRICATION. Access provisions shall be fabricated as specified herein.

2P.5.1 Steel Framing. Steel framing for platforms, walkways, and stairs shall be designed and detailed in accordance with the Eighth edition of the American Institute of Steel Construction (AISC) "Specification for the Design, Fabrication and Erection of Structural Steel for Buildings." Details of field connections to steel furnished under separate specifications shall be coordinated with the Engineer to ensure matching.

Steel framing shall be fabricated to tolerances that will permit field erection within AISC tolerances.

Shop connections shall be all welded. Field connections shall be bolted with high strength bolts. All field connection bolts, including bolts for connecting to steel furnished under other specifications, shall be furnished under these specifications. Bolts shall be one inch diameter. Both shop and field beam connections shall conform to AISC recommendations unless otherwise required by the design conditions. Connection angles or plates shall have a minimum thickness of 3/8 inch. Contact surfaces at field connections shall be clean, smooth, and free of foreign materials that would prevent solid seating of the parts.

Shop paint may be applied to contact surfaces of friction type high strength bolted connections.

All welding of stair stringer miters, closure plates, extension pieces, and similar welding applications shall be continuous welds and shall be ground smooth.

*EPA Request dated Oct 12, 2010, for Information Pursuant to Section 114 . Response #10 of 17 of Appendix B.

IP10_002524

2P.5.1.1 Bolting. High strength bolts and their installation and bolting tools and equipment shall conform to all requirements for A325 bolts of the "Specifications for Structural Joints Using ASTM A325 or A490 Bolts" including the commentary given therewith, as approved by the Research Council on Riveted and Bolted Structural Joints of the Engineering Foundation, and endorsed by AISC, except as otherwise modified and supplemented herein. The Research Council specification is dated April 26, 1978.

High strength bolted connections shall be friction type connections.

All bolted connections shall be designed for a maximum shear value of 21.0 ksi.

Typical shop connections shall be all welded. All structural bolts shall be one inch diameter unless otherwise required by the design.

2P.5.2 Rectangular Grating and Stair Treads. All rectangular floor grating and stair treads shall be in accordance with the "Metal Bar Grating Manual" published by the National Association of Architectural Metal Manufacturers (NAAMM), except as modified herein. Maximum span of grating shall be 7'-0".

Rectangular grating bearing bars (main load carrying) shall be 3/16 inch wide by 1-1/2 inches deep. Spacing for bearing bars shall be 1-3/16 inches center-to-center. Spacer bars shall be 9/32 inch hexagonal sections or 1/4 inch twisted square sections and shall be spaced on 4 inch centers. Tops of spacer bars shall be flush with the tops of bearing bars. Unless otherwise accepted, ends of spacer bars shall be cut off and ground flush with the outside face of the bearing bars which form the sides of grating panels.

Grating for stair treads shall be as specified for floor grating, except that bearing (main load carrying) bars shall be not less than 3/16 inch by 1 inch for tread lengths up to and including 3 feet. End carrier plates shall be provided and shall be welded to each bearing bar. Both ends of each bearing bar shall be attached to the carrier plates with a 1/8 inch continuous fillet weld on one side of the bar.

Where openings are required in gratings, such as for the passage of pipes, grating sections shall be laid out so that each opening will be centered on a joint between sections. All openings shall be provided with a kickplate of formed 1/4 inch steel plate or standard weight steel pipe welded to the bearing bars. Kickplates shall extend the full depth of the grating and project 4 inches above the top of the grating. Kickplates shall be welded to each intersecting bearing bar. Bands shall be 3/16 inch thick and the same depth as the bearing bars. Bands shall be welded to the first, last, and every fourth bearing bar of each panel.

*EPA Request dated Oct 12, 2010, for Information Pursuant to Section 114 . Response #10 of 17 of Appendix B.

IP10_002525

"Every fourth bearing bar" shall mean there shall be no more than three bars without welds between bars that are welded. Welds between kick-plates, bands, and bearing bars shall be 1/8 inch fillet welds at least 3/4 inch in length applied on one side of each welded joint.

Both ends of all sections of grating shall be banded except ends which have kickplate.

All cuts in grating shall be saw cut, except that re-entrant, circular, or angular cuts may be flame cut and ground smooth. Grinding may be omitted on flame cut ends if a smooth and straight cut appearance is accomplished without grinding.

Two galvanized steel saddle-clip fasteners shall be provided for each section of grating at each supporting member. Galvanized 3/8 inch diameter bolts, nuts, and lock washers shall be provided for attaching treads to stair stringers.

Cast aluminum abrasive nosings shall be provided on grating at stair heads and for each stair tread. Nosings shall be securely attached.

Grating panels shall be fabricated in sizes that can be easily handled. Warped, bent, or twisted panels or treads will not be acceptable.

All stair treads shall be galvanized after fabrication.

Grating panels shall be shop painted after fabrication.

2P.5.2.1 Grating Shop Coating. Grating shall be protected by a shop applied baked on epoxy coating.

The coating shall be Blaw-Knox "PON BAKE" or acceptable equal.

Prior to appplication of the epoxy coating, all grating surfaces shall be cleaned by means of a power spray washer. After washing, the grating shall be treated in an iron phosphate chemical solution.

*After preparation, all grating surfaces shall be flow coated with a black synthetic epoxy material, then oven baked at a temperature of 450 F. Color shall be ANSI 61 light gray. After the initial coating has dried, a second coating shall be applied and the baking process repeated. The coating shall have a minimum hard dry film thickness of 2 mils.

An air dry touch-up kit shall be used for field repair of all damaged grating surfaces. The air dry touch-up kit shall be in accordance with the recommendations of the coating manufacturer.

2P.5.3 Handrailings. Handrailings shall be smooth, with all projecting joints and sharp corners ground smooth. Welded joints shall be of the flush type. Members shall be neatly fitted and continuously welded at

*Addendum No. 3

*EPA Request dated Oct 12, 2010, for Information Pursuant to Section 114 . Response #10 of 17 of Appendix B.

all junctions of posts and rails. Posts shall be provided at all corners. Flattening of the rail or post ends at junctions of posts and rails will not be permitted. Fittings or other connectors shall not be used at junctions of posts and rails.

All angles, offsets, and other changes in alignment of railings shall be made with accurately mitered joints.

When assembled, all posts shall be vertical. Longitudinal members shall be parallel with each other and with the floor surface or slope of stairs, or other supporting members. In any section or run of railing, the center line of all members shall be in true alignment, lying in the same vertical plane. Top rails shall run continuously over the posts and the posts shall be continuous through the lower rail.

All welding shall be done neatly and substantially, with all fillets dressed to uniform radius, all excess metal removed, and with all welds ground smooth and flush.

Slip joints for expansion and contraction shall be provided in all straight runs exceeding 50 feet. Set screw holes shall be provided on the underside of the rails. Slip joints shall be shipped loose for field installation.

2P.5.4 Ladders. Ladders, if required, shall not be less than 16 inches wide, with 3/4 inch diameter solid steel rungs spaced 12 inches center-to-center. Ladder side rails shall be steel bars not smaller than 2-1/2 inches by 1/2 inch. Ladder side rails shall be punched for the rungs.

Rungs shall extend to within 1/8 inch of the outside rail surface, and the remaining 1/8 inch recess shall be filled with plug welds. Ladder supports shall be steel brackets, not less than 2-1/2 inches by 3/8 inch, spaced not more than 5'-0" vertically center-to-center. The center of the rung shall be no more than 9 inches (horizontal measure) from the surfaces supporting the brackets. Ladders more than 20 feet high shall be provided with safety cages.

2P.6 SHOP PAINTING. All ungalvanized structural steel materials furnished under these specifications, unless specifically exempted, shall be painted in accordance with the requirements of Section 1H.

2P.7 GALVANIZING. Steel materials which are to be galvanized shall be hot-dip galvanized in accordance with Section 1H.

*EPA Request dated Oct 12, 2010, for Information Pursuant to Section 114 . Response #10 of 17 of Appendix B.

Section 2Q - FLUE GAS REHEATERS

2Q.1 GENERAL. This section covers the design, performance, and construction requirements for the flue gas reheaters.

Reheat water supply and return piping, valves, pumps, sensing elements, temperature controls and accessories will be furnished by the Owner.

Soot blowing steam piping to a single connection point will be provided by the Owner as indicated on the arrangement drawings.

A description of the flue gas reheat coil assemblies including manufacturer's data sheets; description of manufacturing, testing, and inspection procedures; construction details; provisions for removing individual coil sections; and drainage provisions shall be included as part of the Proposal Data.

2Q.2 TYPE. The flue gas reheat coils shall be of the single or multi-
*pass hot water bare tube or finned tube type. The first two (2) rows of reheater tubes shall be of the bare tube type.

Deaerated boiler feedwater will be the heating medium.

The reheaters shall be provided with soot blowers which shall utilize steam as the soot blowing medium.

The reheaters shall be manufactured by Perfex, Yuba, MRM, American Standard or acceptable equal.

2Q.3 ARRANGEMENT. A reheater shall be provided for each module at a location downstream of the mist eliminator. Multiple stages of coils, if required, shall be physically separated such that no more than two rows of tubes are between soot blowers.

The reheater for each scrubber module shall be made up of multiple sections. Sufficient sections shall be furnished to completely cover the cross-sectional flow area without the use of blanking plates. Each section shall be removable from the assembly by sliding it horizontally from the casing.

2Q.4 DESIGN CRITERIA. Reheaters shall be designed to raise the tem-
*perature of the flue gas to ~~170/F~~ 155 F during steam generator operation within the range from 25 per cent to 100 per cent of the maximum continu-
**ous rating~~/~~, with provisions to raise the flue gas to 170 F.

The reheaters shall be designed and constructed for operation under the conditions specified herein and in Section 2A. The reheaters shall be designed to provide the specified reheat during all modes of operation including on-line mist eliminator washing.

*Negotiated Revision
**Negotiated Revision 120481

*EPA Request dated Oct 12, 2010, for Information Pursuant to Section 114 . Response #10 of 17 of Appendix B.

Seismic design criteria for the reheaters shall be in accordance with Classification E-I, Performance Level L as defined in Section 1S.

Hot water will be supplied to the reheat coils at a constant flow rate from the deaerator, through circulating water pumps. The reheat coils will be maintained in a hot condition at all times including time periods when the scrubber module is out of service. Control of gas temperature leaving the coils will be accomplished by varying inlet water temperature. Inlet water temperature will be varied by bypassing a portion of the cooled water from the coils directly to the suction of the circulating water pumps.

The following design conditions supplement those of Section 2A. Performance indicated shall be guaranteed.

	Steam Generator Operating Conditions			
	25 Per Cent of MCR	50 Per Cent of MCR	75 Per Cent of MCR	MCR
Water flow rate available to reheat coils, maximum, gpm	2,650	2,650	2,650	2,650
Maximum water velocity in reheater tubes, fps	8	8	8	8
Water temperature available to reheater coils, maximum, F	265	297	319	339
Maximum flue gas pressure drop, in. H_2O	—	—	2.0	—
Fouling factor				
Inside tube	—	—	0.0005	—
Outside tube	Safety factor of 1.15 on surface area			

*EPA Request dated Oct 12, 2010, for Information Pursuant to Section 114 . Response #10 of 17 of Appendix B.

The water side of the reheater assemblies shall be designed to withstand a maximum temperature of 350 F, a maximum pressure of 325 psig, and full vacuum. Test pressure of the assemblies shall be 487 psig.

2Q.5 CONSTRUCTION. Coil construction shall be in accordance with the codes and standards cited in Section 2A and the requirements specified herein.

The reheaters shall be constructed to permit inspection, maintenance and replacement of sections of reheater tubes when the scrubber module is not in service. Tube coil sections shall be interchangeable and shall be removable without entry into the module or ductwork.

Special consideration shall be given to the design and construction to prevent physical damage as a result of transmitted vibrations.

2Q.5.1 Headers. Coil headers shall not be installed in the flue gas stream. The coil headers shall be constructed of carbon steel pipe (ASTM A106, Grade B) or welded carbon steel plate. It is preferred that the supply and return headers be on the same end of each coil unit. Supply header inlet connections shall enter the top of the header and shall not extend below the inside top surface of the header. Return header outlet connections shall be from the bottom of the header and shall not extend into the header further than the inside bottom surface of the header. If the inside bottom surfaces of the headers are sloped in their normal operating position, inlet or outlet connections shall be at the low points.

Each coil unit element shall have a vent connection in the supply header and a drain connection in the return header. Vent connections shall be 3/4 inch minimum. Drain connections shall be 2 inch minimum.

2Q.5.2 Tubes. Tube material shall be carbon steel with a minimum of 1.25 per cent chromium. The Contractor shall advise and recommend an optional material if the material indicated is not suitable for the anticipated service.

Tubes shall be straight or "U" tube type. If "U" tube type construction is used, it is preferred that each "U" tube be of continuous construction. Return bend fittings welded to the tubes may be used as an acceptable alternate.

If return bend fittings are used, they shall be of the same material as the tubes with a wall thickness, after forming, equal to or greater than the tube wall thickness.

Tube joints shall be of the welded type. Brazing or flare and bite type tube fittings will not be acceptable.

*EPA Request dated Oct 12, 2010, for Information Pursuant to Section 114 . Response #10 of 17 of Appendix B.

2Q.5.3 Fins. Fins, if applicable, shall be constructed of carbon steel with a minimum of 1.25 per cent chromium. The method of assembly shall provide for mechanical attachment. The fin design shall provide for a maximum of three fins per inch. The maximum fin height shall be 1/2 inch. If serrated fins are utilized, the maximum fin height shall be 5/8 inch.

2Q.5.4 Connections. Flanged supply and return connections shall be provided for each coil section. The maximum header dimension serviced by one connection shall not exceed 6 feet to ensure proper flow distribution within the header. The connections shall be ANSI 300 pound. Vent and drain connections shall be threaded and furnished with steel plugs or caps.

2Q.5.5 Casing. The reheater for each scrubber module shall be provided with a gastight welded drawer frame type casing to house and rigidly support the coil sections. The casing shall extend from the scrubber module shell exit flange to the outlet ductwork. The casing shall provide a minimum distance of 6 feet from the final stage of the mist eliminator to the initial tube bank and a minimum distance of 6 feet from the final tube bank to the exit flange. The casing shall be constructed of the same material as the scrubber module shell and shall have a minimum thickness of 1/4 inch. The casing shall be flanged for bolted connection to the module shell and to the outlet ductwork. The casing shall be constructed with the bottom sloped as required to ensure drainage.

*/**The casing shall be lined with ~~PENNGUARD/BLOCK~~ SAUEREISEN 54.

The casing construction shall be in accordance with applicable portions of Section 2K - DUCTWORK AND EXPANSION JOINTS.

Welding shall be in accordance with the requirements of Section 1G.

Each individual coil section within the casing shall be bolted into the casing and be individually removable without disturbing the remaining coil sections or the casing.

The casing shall be designed for the pressure and vacuum conditions as specified in Section 2A. The casing shall be capable of transferring all loading to the supports.

2Q.5.6 Lifting Lugs. Lifting lugs, arranged for easy access during removal and installation of the coil section from the casing, shall be provided.

2Q.5.7 Shop Testing. Coil sections shall be hydrostatically tested in accordance with Section VIII of the ASME code.

An air test at a pressure of 400 psig shall be performed with each coil element submerged in water. No air leakage shall occur during a period of submergence of at least 90 seconds.

*Negotiated Revision
**Negotiated Revision 120481

*EPA Request dated Oct 12, 2010, for Information Pursuant to Section 114 . Response #10 of 17 of Appendix B.

Coil sections shall be ASME code stamped.

2Q.5.8 Field Test for Leaks. A method for readily detecting leakage of individual coil sections during operation shall be described in the Proposal Data. The method proposed shall include isolation of individual coil sections and a test procedure that does not require the removal of coil sections from the casing.

A complete description and schematic diagram of the proposed testing method shall be included as part of the Proposal Data.

2Q.5.9 Nameplates. Each individual coil section shall be furnished with the manufacturer's standard stainless steel nameplate. If nameplates attached to the individual coil sections are not visible from the outside of the duct casing assembly, a separate stainless steel nameplate shall be attached to the exterior of the assembly. Nameplates shall include the serial number and complete coil description.

2Q.5.10 Drainage. All water side components shall be oriented to provide complete gravity drainage when the assembly is installed in its operating position and shall be free of pockets or low points.

2Q.6 SOOT BLOWERS. Soot blowers shall be manufactured by Copes-Vulcan Division or Diamond Power Specialty Corporation. The Owner shall have the option of selecting the manufacturer of the soot blower equipment at no change in contract price.

A complete soot blowing system except for steam supply shall be furnished to effectively remove all deposits, in their various forms, from the heat transfer surfaces of the flue gas reheat coils. Design of the system shall be in accordance with the recommendations of the Contractor and soot blower manufacturer, and shall be subject to the concurrence of the Engineer.

Soot blowers shall be electrically driven units utilizing steam as the blowing medium.

A complete description of the soot blowing system shall be included as part of the Proposal Data.

If, after operation of the unit, it is determined that additional soot blowing equipment is required to maintain proper surface conditions, such additional equipment shall be furnished and installed complete, with all piping and wiring, without addition to the contract price.

2Q.6.1 Control. The control system shall be microprocessor based and shall be designed to provide individual or automatic sequential operation of the soot blower units. The control system shall consist of three sections; one power control cabinet per scrubber module located remote from the scrubber control room; an insert panel to be located in the

*EPA Request dated Oct 12, 2010, for Information Pursuant to Section 114 . Response #10 of 17 of Appendix B.

scrubber control panel; and a free-standing logic cabinet located remote from the scrubber control room. The insert panel and logic cabinet shall be as specified in Section 2N. The power control cabinet shall include an individual NEMA Size 1 reversing starter for each soot blower, overcurrent protective devices, motor current transducers for the blower motors and a 480/120 volt control power transformer to supply the control circuits. An overload and stall overcurrent device shall be furnished to monitor each motor. Each power control cabinet shall be equipped with a circuit breaker to allow isolation for maintenance. Each power control cabinet shall have not less than two spare starters and sufficient space for all future soot blowers.

The insert panel shall include mimic diagrams having individual unit indicating lights representing the soot blower locations, operator controls, and the system status and alarm indicators. The soot blower control system shall be arranged with one subsystem per scrubber module. These components shall be logically grouped by function or subsystem, or both, so as to provide maximum ease of operation. The master program shall be preprogrammed by the manufacturer and contain all of the permissives, interlocks, and standard sequential routine for the particular scrubber. The master program shall be stored in a nonvolatile memory. The soot blower control system shall be capable of storing separate blowing sequences for each subsystem. The Contractor shall program at least one of these sequences. The various sequences for each soot blower subsystem, whether preprogrammed or Owner generated, shall be switch selectable by the operator. The control system shall have the ability to be programmed at the plant site without removal from the control panel. The control for soot blowing for each scrubber module shall be interlocked with the manual and semiautomatic control systems specified in Section 2N. Provisions shall also be made for verifying the blowing sequences and the soot blowers out of service. Means shall be provided to permit the operator to test all microprocessor controlled indicator lights. The control system shall incorporate self-testing to the maximum extent.

The control system shall have the capability of monitoring the operating performance of each soot blower. A printer shall be furnished that will record soot blower operation during the shift.

The insert panel shall be equipped with, but not limited to, the following.

Scrubber diagram with individual unit lights representing the soot blower locations

Master stop-start push button

Sequence stop push button

*EPA Request dated Oct 12, 2010, for Information Pursuant to Section 114 . Response #10 of 17 of Appendix B.

Retract push button for retractable blowers

Lights with colored lens to indicate the following

Power on - white

Loss of blowing steam pressure or flow - red

Sequence complete - white

Sequence in hold - amber

Forward travel of a retractable soot blower - red

Reverse travel of a retractable soot blower - green

Motor overload - red

Elapsed time alarm for retractables - red

Control voltage failure

Means to indicate which soot blowers are operating

Means to indicate which soot blowers have completed operation

Means to indicate which soot blowers are operating when alarm occurs

Switches and lights shall be furnished and wired for all planned future soot blowers if recommended by the reheater manufacturer.

The control system shall automatically retract any blower in operation, suspend blowing the affected subsystem sequence, and actuate the scrubber annunciator system for each of the following.

A module trip condition has occurred

Electric power is restored after a failure

Steam supply pressure or flow is low

A retractable soot blower motor has overloaded

A retractable soot blower motor has stalled

*EPA Request dated Oct 12, 2010, for Information Pursuant to Section 114 . Response #10 of 17 of Appendix B.

A soot blower fails to start when initiated by the panel

Soot blower operating time exceeds normal operating time

Lance tube blowing medium pressure or flow is low on the retractable soot blowers

Means shall be provided to manually reset the control system after an alarm condition has been corrected.

The insert panel shall be furnished completely shop wired with connection to the remote logic cabinet by means of plug-connected, prefabricated cables.

Interconnecting cable length shall be not less than 100 feet. The bidder's proposal shall include a unit adjustment price for addition to and deduction from the 100 foot length. The remote logic cabinet and power control cabinets shall be wired to States Company Type ZWM terminal blocks for field connections. Terminals shall be provided in the power control cabinet for termination of Owner-furnished wiring to the manual push-button stations. The control system shall be equipped with electrically isolated contacts rated for operation at 125 volts dc for the annunciator system.

2Q.6.1.1 Disconnects and Wiring. A set of control and power circuit disconnects shall be furnished at each soot blower. The disconnects shall be States Type ZWM.

Plug-in cables shall be used to interconnect internal soot blower equipment if the equipment thus interconnected must be disconnected as a part of normal routine maintenance. Plug-in cables, including plugs and receptacles, shall be completely factory wired. Components must be acceptable to the Engineer. All plugs and receptacles furnished shall be rated for outdoor service at 600 volts ac.

*A NEMA ~~12~~ 4 external circuit electrical enclosure in accordance with the requirements of Section 1B shall be provided on each soot blower for termination of external circuits. This enclosure shall contain the following.

Terminal blocks or switch blocks for connection of external control circuits

Receptacles, as required, where plug type circuit disconnecting devices are furnished for power and control circuits to the soot blower local limit switch and motor connection box

Devices, as required, to maintain system operation while the soot blower is being serviced and the local power and control disconnecting switches are open

*Addendum No. 3

*EPA Request dated Oct 12, 2010, for Information Pursuant to Section 114 . Response #10 of 17 of Appendix B.

All electrical devices on each soot blower shall be completely factory wired into the external circuit electrical enclosure. Connection of field wiring to the power control cabinet shall be all that is necessary to place any soot blower in operation.

2Q.6.1.2 Local Control. Local NEMA Type 12 push-button stations shall be provided for each soot blower. Push-button stations shall be factory mounted on the soot blower external circuit enclosure except where this enclosure is located more than 5 feet above an access platform. In this case push-button stations shall be installed by the Contractor in a location acceptable to the Construction Manager.

2Q.6.2 Elements. All elements shall be designed for the particular flue gas reheaters furnished. Location of elements, travel arc, and nozzle angles shall be such that maximum cleaning is obtained with a minimum of blowing medium. Nozzle design and location shall be such as to preclude jet impingement on the tubes.

Materials used shall be suitable for the service conditions. All elements shall be constructed of seamless tubing with one end closed. The spun, forged, or welded end closure method shall be used. Hangers and bearings shall be arranged to prevent element contact with flue gas reheat coils. Connections between elements and soot blower heads shall preclude warping or binding of the element.

2Q.6.3 Heads. Heads shall be designed for sharp and positive cutoff without critical adjustment, and for ease of blowing pressure adjustment and arc adjustment after installation.

2Q.6.4 Wall Sleeves. Each element shall be equipped with a suitable wall sleeve. Provision shall be made to eliminate deposition in the wall box to prevent element binding.

Provisions shall be made to prevent gas leakage from the ductwork through the wall sleeves.

2Q.6.5 Steam Supply. The steam supply shall be from the Owner-furnished piping located as indicated on the arrangement drawings.

Steam will be provided at the conditions specified in Section 2A.

2Q.6.6 Piping. All piping, valves, control valves, motor operated block valves, safety valves, and other accessories required for a complete operating soot blower system shall be furnished.

Piping shall be provided from the Owner-furnished steam supply connection to the soot blowers. All drain piping shall also be furnished.

A manually operated isolation valve shall be provided in the steam supply piping to each soot blower.

*EPA Request dated Oct 12, 2010, for Information Pursuant to Section 114 . Response #10 of 17 of Appendix B.

The Contractor-furnished piping shall be routed to assure drainage of condensate and to assure correct steam temperature to each blower. The piping shall be routed in a downward arrangement. The length of the stagnant branch lines to the blowers shall be minimized.

A thermal drain valve and temperature controller shall be furnished at the low points of all supply piping to assure complete drainage of condensate. A thermal drain valve shall be sized to assure drainage of any condensate while the soot blower system is not in service and to maintain the correct blower-steam temperature when the system is in service.

All piping shall be in accordance with Section 2H. Routing and arrangement of all piping, and the manufacturer and model number of all valves and accessories, shall be acceptable to the Construction Manager.

2Q.6.7 Electric Motors and Wiring. All motors required shall be furnished. Motors shall be designed for 460 volt, 3 phase, 60 hertz power. Motors shall have totally enclosed frames, cast iron brackets, and a corrosion preventive finish on inside and outside surfaces, including the shaft. All other motor requirements shall be the manufacturer's standard for operation in a 65 C maximum ambient, with Class B insulation, 55 C maximum temperature rise, and grease lubricated ball bearings. Motor information sheets shall be submitted in accordance with Section 1C.

Heads for retractable elements shall include the manufacturer's standard support system, wiring, etc.

*EPA Request dated Oct 12, 2010, for Information Pursuant to Section 114 . Response #10 of 17 of Appendix B.

PART 3 - ERECTION REQUIREMENTS

TABLE OF CONTENTS

		Page
Section 3A - SCOPE OF ONSITE WORK		3A-1 thru 3A-9
3A.1	General	3A-1
3A.2	Scope	3A-1
3A.3	Miscellaneous Materials and Services	3A-1
3A.4	Construction Plant and Temporary Facilities	3A-2
3A.5	Construction Utilities	3A-3
3A.6	Receiving, Handling, and Storage	3A-6
3A.7	Scaffolding	3A-8
3A.8	Inspection of Field Work	3A-8
3A.9	Onsite Work Under Separate Contracts	3A-8
Section 3B - CONSTRUCTION SCHEDULE		3B-1 thru 3B-5
3B.1	General	3B-1
3B.2	Milestone Dates	3B-2
3B.3	Schedule Development and Implementation	3B-2
3B.4	Supplemental Scheduling Information	3B-4
3B.5	Schedule Objectives Meeting	3B-4
3B.6	Coordination	3B-5
Section 3C - GENERAL EQUIPMENT ERECTION		3C-1 thru 3C-7
3C.1	General	3C-1
3C.2	Code Requirements	3C-1
3C.3	Equipment Protection	3C-1
3C.4	Maintenance Tools	3C-1
3C.5	Defects	3C-2
3C.6	Location Tolerances	3C-2
3C.7	Concrete Equipment Bases and Anchor Bolts	3C-2
3C.8	Access Provisions	3C-2
3C.9	Alignment	3C-4
3C.10	Doweling	3C-4
3C.11	Piping Connections	3C-4
3C.12	Equipment Piping	3C-4
3C.13	Pump Suction Strainers	3C-5
3C.14	Electrical Equipment	3C-5
3C.15	Motors	3C-5
3C.16	Control and Instrumentation Equipment	3C-6
3C.17	Miscellaneous Equipment	3C-6
3C.18	Cleaning and Painting	3C-6
3C.19	Gas Envelope Leak Tests	3C-7
3C.20	Checkout and Trial Operation	3C-7

*EPA Request dated Oct 12, 2010, for Information Pursuant to Section 114 . Response #10 of 17 of Appendix B.

		Page
Section 3D - FIELD STRUCTURAL WELDING		3D-1 thru 3D-6
3D.1	General	3D-1
3D.2	Welding Methods	3D-3
3D.3	Testing and Inspection	3D-5
Section 3E - TANK ERECTION		3E-1 thru 3E-3
3E.1	General	3E-1
3E.2	Welding	3E-1
3E.3	Tests	3E-1
3E.4	Surface Preparation and Coatings	3E-2
Section 3F - PIPING ERECTION		3F-1 thru 3F-15
3F.1	General	3F-1
3F.2	Code Requirements	3F-1
3F.3	Field Check	3F-1
3F.4	Miscellaneous Piping	3F-1
3F.5	Temporary Piping and Equipment	3F-2
3F.6	Thermal Expansion	3F-2
3F.7	Welding	3F-2
3F.8	Pipe Supports	3F-3
3F.9	Cutting and Drilling Structures	3F-4
3F.10	Equipment Connections	3F-4
3F.11	Valve Installation	3F-5
3F.12	Installation of Joint Unions	3F-6
3F.13	Making Flanged Connections	3F-6
3F.14	Miscellaneous Small Connections	3F-6
3F.15	Damage to Machined Surfaces	3F-6
3F.16	Instrument and Control Piping and Tubing	3F-7
3F.17	Tubing Trays	3F-11
3F.18	Rainhoods and Flashing	3F-13
3F.19	Drain Lines	3F-13
3F.20	Testing	3F-13
3F.21	Cleaning of Pipe	3F-15
3F.22	Final Adjustment	3F-15
3F.23	Identification	3F-15
3F.24	Field Touch-Up Painting	3F-15
Section 3G - DUCTWORK ERECTION		3G-1 thru 3G-3
3G.1	General	3G-1
3G.2	Tolerances	3G-1
3G.3	Erection	3G-1
3G.4	Bolting	3G-2
3G.5	Welding	3G-3
3G.6	Field Painting	3G-3

*EPA Request dated Oct 12, 2010, for Information Pursuant to Section 114 . Response #10 of 17 of Appendix B.

		Page
Section 3H - CONTROLS AND INSTRUMENTATION INSTALLATION		3H-1 thru 3H-4
3H.1	General	3H-1
3H.2	Instrument Enclosures	3H-1
3H.3	Installation of Locally Mounted Equipment	3H-1
3H.4	Installation of Joint Unions	3H-2
3H.5	Connection of Equipment and Devices	3H-2
3H.6	Control Equipment Preoperational Adjustments and Tests	3H-2
Section 3I - GROUTING		3I-1 thru 3I-4
3I.1	General	3I-1
3I.2	Materials	3I-1
3I.3	Grouting of Bases for Equipment	3I-1
3I.4	Nonshrinking Grout	3I-4
3I.5	Curing	3I-4
Section 3J - INSULATION AND LAGGING		3J-1 thru 3J-9
3J.1	General	3J-1
3J.2	Design Criteria	3J-1
3J.3	Field Applied Insulation System	3J-2
3J.4	Panel Insulation System	3J-4
3J.5	Convection Stops	3J-6
3J.6	Flashing and Water Damage Protection	3J-7
3J.7	Access Doors and Other Penetrations	3J-7
3J.8	Galvanic Corrosion	3J-7
3J.9	Expansion Provisions	3J-7
3J.10	Protection from Insulation Materials	3J-8
3J.11	Guarantee	3J-8
3J.12	Drawings and Supplementary Information	3J-8
	Standard Panel Sidelap - Compression Joint	3J-9
Section 3K - GUNITE		3K-1 thru 3K-3
3K.1	General	3K-1
3K.2	Materials	3K-1
3K.3	Surface Preparation	3K-1
3K.4	Reinforcing Material Installation	3K-1
3K.5	Mixing and Application	3K-2
3K.6	Construction Joints	3K-2
3K.7	Rebound	3K-2
3K.8	Hardening and Conditioning	3K-2
3K.9	Curing	3K-3
3K.10	Gunite Stops	3K-3

*EPA Request dated Oct 12, 2010, for Information Pursuant to Section 114 . Response #10 of 17 of Appendix B.

		Page
Section 3L - START-UP		3L-1 thru 3L-4
3L.1	General	3L-1
3L.2	Equipment Checks	3L-1
3L.3	Trial Operation of Equipment	3L-3
3L.4	Main Systems Checkout	3L-3
3L.5	On-line Operational Checks	3L-3
3L.6	Operation Control	3L-4
Section 3M - LININGS FOR SCRUBBER MODULES AND REACTION TANKS		3M-1 thru 3M-10
3M.1	General	3M-1
3M.2	Codes and Standards	3M-1
3M.3	Materials	3M-1
3M.4	Storage and Handling	3M-1
3M.5	Lining Application	3M-1

*EPA Request dated Oct 12, 2010, for Information Pursuant to Section 114 . Response #10 of 17 of Appendix B.

Section 3A - SCOPE OF ONSITE WORK

3A.1 GENERAL. This section covers the scope of the onsite field work to be performed and the construction facilities and services to be provided by the Contractor and the Owner.

3A.2 SCOPE. The Contractor shall furnish all necessary supervision, labor, materials, tools, equipment, vehicles, supplies, services, or other similar items as required to perform the complete erection, testing *and start-up of the equipment and materials specified to be furnished in Part 2 of these specifications and the Owner-furnished equipment specified herein under Contractor-erected Owner-furnished Equipment, all in accordance with the contract documents.

The work shall include unloading off transport, hauling, receiving, storing, protecting from damage, erecting, installing, cleaning, adjusting, and all other work, except as specified otherwise herein, required to bring the equipment to a state of readiness for commercial operation.

The only materials, services, labor, or equipment which will be supplied by the Owner are those designated as such in this Section 3A or in Section 1A of these specifications. Owner-furnished materials, services, labor, and equipment will be supplied under separate contracts administered by the Project Manager.

3A.2.1 Contractor-erected Owner-furnished Equipment. The Contractor shall erect the following Owner-furnished equipment and materials.

Inlet and outlet isolation dampers for each module

Bypass duct isolation damper

3A.3 MISCELLANEOUS MATERIALS AND SERVICES. Miscellaneous materials and services not otherwise specifically called for shall be furnished by the Contractor or the Owner as specified herein.

3A.3.1 Furnished by the Contractor. Except as otherwise specified, the Contractor shall provide all miscellaneous materials and services necessary for execution and completion of the erection work, including but not limited to:

Field office furnishings for Owner-furnished office, supplies, communication services whatsoever, clerical/administrative support, office equipment, designated sanitary facilities, site transportation, or other as may be required, all at Contractor's expense

Wedges, leveling blocks for soleplates, and shims for leveling

*Addendum No. 3

*EPA Request dated Oct 12, 2010, for Information Pursuant to Section 114 . Response #10 of 17 of Appendix B.

Grout and grouting materials

All erection tools, special tools and test equipment required for erection, testing, start-up and operation of the equipment that are not included with the maintenance tools, including shipping costs to and from jobsite

[IPP 9255 WET SCRUBBER 62.0202]
[061881]
3A-1a

*EPA Request dated Oct 12, 2010, for Information Pursuant to Section 114 . Response #10 of 17 of Appendix B.

Structural steel bolting between equipment furnished under these specifications and Owner-furnished structural steel

* Bolting between equipment or ductwork furnished under these specifications and Owner-furnished isolation dampers

Application of all lubricants

Field painting of ungalvanized bolts

Field painting of field erected tanks, except reaction tanks

3A.3.2 Furnished by the Owner.

Lubricants and fuels for operation of all machinery furnished under these specifications

Solvents and cleaning materials except as otherwise specified

Finish painting of the equipment except as otherwise specified

Operating personnel for start-up and tests

3A.4 CONSTRUCTION PLANT AND TEMPORARY FACILITIES. The Contractor shall furnish all construction plant, utilities, temporary facilities, equipment, materials and supplies required for prosecution of the erection work but which will not be incorporated in the completed work, unless otherwise specified herein.

All temporary structures and facilities furnished by the Contractor shall remain the property of the Contractor and shall be maintained throughout the erection work. When the erection work is completed, all such temporary structures and facilities shall be removed from the site and the area shall be restored to its original condition.

All construction plant and facilities shall be in sound condition and shall be of the proper type and size to perform the work. The plant and facilities shall be regularly and systematically maintained throughout the work to ensure proper, efficient operation. Plant and facilities which are inadequate or improperly maintained shall be promptly modified, repaired, or removed from the site and replaced.

The Owner will provide heated office space in the construction office building for the Contractor's supervisors and office personnel. A separate heated and lighted building for lunch and changing purposes with toilet facilities will be furnished by the Owner for the use of all construction personnel at the site. The Construction Manager will establish regulations on the use of these facilities as necessary to maintain the proper standards of sanitation and fire prevention.

*Addendum No. 3

*EPA Request dated Oct 12, 2010, for Information Pursuant to Section 114 . Response #10 of 17 of Appendix B.

IP10_002544

The Owner will provide a structure at the construction area access gate for time checking personnel.

Temporary structures for warehousing of materials requiring indoor storage will be provided by the Owner. The Construction Manager will regulate the usage of these structures.

Temporary structures for offices, change houses, and other uses for the Contractor or his subcontractors shall be provided by the Contractor using materials, design and construction acceptable to the Construction Manager. Suitable construction trailers may be used in lieu of temporary structures. Such structures or trailers shall be placed only in locations assigned by the Construction Manager.

3A.5 CONSTRUCTION UTILITIES. Construction utilities required for the prosecution of the work shall be provided by the Contractor or the Owner as herein specified.

3A.5.1 Telephone. The Contractor shall provide his own telephone service and other site communication facilities required to meet his needs. *Requirements for tie-in to the offsite phone system shall be coordinated with the Construction Manager.

3A.5.2 Compressed Air. The Contractor shall provide all air compressors, fuels, lubricants, hoses, piping, and other apparatus required for supplying compressed air required for prosecution of his work.

3A.5.3 Construction Power. The Owner will furnish all energy for construction power and temporary lighting at no charge.

The construction power supply system will be provided under separate specifications. This system will consist of several power supply centers located throughout the plant site. Power will be available for contractor use at 480Y/277 volts, 3 phase. This system shall be for the use of all contractors performing work on the site and its use will be coordinated by the Construction Manager.

A limited amount of power will be available at 120/240 volts, single-phase. Use of this power will also be coordinated by the Construction Manager. If the Contractor requires more power at this voltage than he is designated to receive, he shall provide his own 480 to 208Y/120 or 120/240 volt transformation equipment.

The Contractor shall connect his power supply circuits to fused disconnect switches and provide fuses at the power supply centers. These circuits shall be direct buried, with a minimum of 2 feet of earth cover from the power supply centers to the Contractor's distribution facilities. Direct buried cable shall be installed in galvanized steel conduit from the equipment in which it is terminated to 2 feet below grade. The routing of all such cable shall be approved by the Construction Manager.

*Addendum No. 3

*EPA Request dated Oct 12, 2010, for Information Pursuant to Section 114 . Response #10 of 17 of Appendix B.

Cable marking tape shall be located 12 inches above all direct buried cable. Cable marking tape shall be yellow plastic strip 6 inches wide with the words "Caution Buried Electric" printed in black and shall be as manufactured by Allen Systems, Inc., or acceptable equal.

The Contractor shall furnish and install all transformers, distribution panels, disconnect switches, breakers, wiring, and other devices required to distribute power for the prosecution of his work. The Contractor's distribution facilities shall conform with applicable safety and code requirements, shall be constructed to provide proper clearances and minimum interference with construction, and shall be acceptable to the Construction Manager. All temporary wiring shall be in conformance with Article 305 of the National Electrical Code, Temporary Wiring. All temporary wiring in the yard area shall be direct buried.

The Contractor-furnished conductor shall be stranded or solid copper for 12 AWG and 10 AWG and stranded aluminum or copper for 8 AWG and larger. All aboveground 480 volt circuits shall be 600 volt insulated multiconductor with neoprene or metal sheaths or shall be installed in conduit. The single conductor cable shall have 600 volt insulation. All direct buried cable shall be NEC Type USE.

3A.5.4 Temporary Lighting. The Owner will furnish certain temporary or permanent lighting during the course of construction. To the extent that the Owner-furnished lighting is not yet installed or insufficient for specific needs, the Contractor shall furnish and install all temporary lighting required for the safe efficient execution of his work and for the security of his work and property. Temporary construction lighting shall conform with the Occupational Health and Safety Act, Title 29, Chapter XVII, Part 1926, Subparts D and K until the permanent lighting system is placed in service. Temporary lighting shall be supplied by 600 volt insulated conductors installed in conduit, aluminum sheathed cable (ALS) with suitably insulated conductors, or molded rubber cordsets with integral fixtures. Minimum conductor size shall be 12 AWG.

3A.5.5 Water. Water for construction use will be furnished by the Owner at no charge at a hydrant or hydrants designated by the Construction Manager.

The Contractor shall provide piping, valves, and hoses as required to distribute the water for his and his subcontractor's use. The routing of the Contractor's water lines shall be approved by the Construction Manager.

The Owner will provide a source of supply for sanitary drinking water. The Contractor shall provide sanitary drinking water facilities for his employees including coolers, ice, disposable cups and a trash barrel for each water container or cooler. Each disposer shall be emptied, cleaned and refilled at the start of each day. Personnel shall be assigned to assure maintenance of the water supply.

*EPA Request dated Oct 12, 2010, for Information Pursuant to Section 114 . Response #10 of 17 of Appendix B.

IP10_002546

3A.5.6 Sanitary Facilities. The Owner will furnish and maintain a system of toilets for the use of all construction employees. The toilets will be furnished in numbers and locations as required to adequately and conveniently serve the needs of all construction employees and as required by state and local regulations.

Construction personnel will not be permitted to use the permanent plant toilet and washroom facilities.

3A.5.7 Heat. The Contractor shall provide all heating facilities required for the efficient prosecution of his work, and as required to prevent freeze damage to equipment under his custody. The method of heating shall be acceptable to the Construction Manager.

Salamanders, open fires, or other methods which constitute a hazard to personnel or property shall not be used. All heating equipment shall be provided with adequate safeguards.

The Owner will provide heat in the enclosed portions of the unit after the building enclosure is completed.

3A.5.8 Cleanup and Fire Protection. The Contractor shall be responsible for cleanliness and fire protection as specified in the SPECIAL CONDITIONS.

3A.5.9 Trash Collection and Disposal. The Owner's site services contractor will furnish trash collection and disposal services as described in this article for the benefit of all contractors at the site.

Trash containers will be provided at collection points designated by the Construction Manager. These trash collection containers will be clearly marked and separate containers will be provided for combustible, noncombustible, and rubble (broken masonry and concrete) materials. The Contractor shall provide the specified cleanup of his construction area and deposit all trash materials in the designated containers.

The site services contractor will empty all trash collection containers, haul the trash to the onsite landfill area for disposal, and operate the onsite landfill.

The site services contractor will periodically pick up all scrap, trash, waste, and other construction debris in the general plant area as determined by the Construction Manager. However, the Contractor is responsible for the cleanliness of his work areas as specified.

3A.5.10 Welding Facilities. The Owner will provide a centralized welding power system in the scrubber building. The system will consist of constant potential dc buses of both straight and reverse polarity and outlets. The Contractor shall furnish all leads and control units required for his use. Individual welding machines shall be provided by the

*EPA Request dated Oct 12, 2010, for Information Pursuant to Section 114 . Response #10 of 17 of Appendix B.

IP10_002547

Contractor for welding operations conducted in the slurry preparation area or other areas remote from the scrubber building area.

Specialized welding which cannot be performed using the central welding facilities shall be performed by the Contractor using his own equipment.

3A.5.11 Snow Removal. The Owner will provide snow removal service. Snow will be removed from the permanent onsite access roads, parking areas, storage areas and around all temporary and permanent construction facilities to permit construction to proceed in an orderly and efficient manner.

3A.5.12 Site Fence Maintenance. The Owner will provide and maintain site perimeter fencing and relocate temporary fencing and barriers as required.

3A.5.13 First Aid Services. The Owner will operate and maintain a first aid station and provide ambulance services.

3A.5.14 Road and Parking Area Maintenance. The Owner will provide for the maintenance of all onsite access roads and parking areas.

3A.5.15 Railroad Facilities. Railroad facilities will be available on the site. The Owner will furnish a railroad car spotter and operator during normal working hours.

3A.5.16 Supplemental Fire Protection Equipment. The Owner will furnish a construction fire protection system consisting of fire water storage, fire pumps, piping, hydrants, accessories, fire station, and a fire pumper truck. Personnel to operate the fire pumper truck during normal working hours will be furnished by the Owner under separate contract. The Contractor shall furnish all other personnel and equipment including fire extinguishers and the Contractor alone shall be responsible for providing adequate fire protection.

3A.6 RECEIVING, HANDLING, AND STORAGE. The Contractor shall promptly receive, unload, and place into storage or construction all equipment, materials, and supplies furnished under these specifications as they arrive at the plant site.

3A.6.1 Receiving. Upon arrival at the plant site, the Contractor shall examine all shipments for shortages, discrepancies, or damage. He shall prepare a receiving report itemizing the material received and submit it to the Construction Manager. The receiving report shall be on a form supplied by the Construction Manager.

*3A.6.1.1 Receipt of Owner-furnished Equipment and Materials. The Contractor shall furnish labor and equipment to unload and place into storage Owner-furnished equipment and materials specified to be erected under this Contract. Such equipment and materials shall remain in the custody of the Contractor.

*Addendum No. 3

*EPA Request dated Oct 12, 2010, for Information Pursuant to Section 114 . Response #10 of 17 of Appendix B.

When taking custody of Owner-furnished equipment and materials for erection purposes, the Contractor shall examine such equipment and materials and shall immediately notify the Construction Manager of any shortages, discrepancies, or damage.

After taking custody of Owner-furnished equipment and materials, the Contractor shall maintain a current accurate inventory and record of location thereof, and shall take all necessary precautions to protect such equipment and materials from damage or loss. In the event of damage or loss, the Contractor shall promptly notify the Construction Manager in writing giving full details of the extent of damage or loss and the circumstances surrounding the event.

3A.6.2 Handling. The Contractor shall be responsible for any damage to equipment and materials while in his custody until final acceptance of the work.

*EPA Request dated Oct 12, 2010, for Information Pursuant to Section 114 . Response #10 of 17 of Appendix B.

The Contractor shall unload all carriers promptly and shall pay any demurrage incurred.

Materials shall be handled with due care to prevent damage or loss.

3A.6.3 Storage. All equipment, materials, and supplies not immediately incorporated in the work shall be placed in storage. Storage areas will be allocated and assigned by the Construction Manager. The storage areas shall be kept neat and orderly at all times.

The following listed items shall be stored indoors in temporary warehouses.

Motors

Motor operated valves and dampers

Expansion joints

Insulation

Instruments

Control panels

All other equipment which would be subject to damage by outdoor exposure, has finish painted surfaces, and small items subject to loss shall be stored indoors.

The following listed items shall be stored outdoors on shoring to provide at least 8 inches clearance above grade and covered with a weatherproof flame resistant cover. The cover shall cover the tops and sides of the equipment, shall be lapped to shed water, and fastened securely around the base of the equipment. Sheet widths shall be not less than 84 inches.

Dampers

Ball mills

Mixers

Pumps

Bolts

Hangers

Other equipment and materials not subject to weather deterioration shall be stored outdoors on shores or blocking to provide at least 8 inches clearance above grade.

*EPA Request dated Oct 12, 2010, for Information Pursuant to Section 114 . Response #10 of 17 of Appendix B.

3A.7 SCAFFOLDING. The Contractor shall furnish all scaffolding, staging, ladders, flooring, runways, and any other temporary construction required for the execution of his work.

All scaffolding, runways, and other temporary construction shall be self-supporting throughout, and shall be rigidly built so as to support safely the weight of all materials, apparatus, equipment and construction personnel to be placed thereon as required by federal, state, and local laws.

3A.8 INSPECTION OF FIELD WORK. All material delivered and field erection work performed shall be subject to inspection by the Construction Manager and Project Manager. Such inspection shall not relieve the Contractor of the responsibility of furnishing high quality labor and materials in strict accordance with the contract documents. Any materials or field work accepted and later found to be defective shall be replaced without cost to the Owner. The Contractor shall perform his own thorough inspection and after he is satisfied he has met all requirements of the contract documents, he shall request the Construction Manager's acceptance.

The Contractor shall keep the Construction Manager informed of the progress of the work, and shall allow the Construction Manager not less than 10 working days notice in advance of appropriate times for inspections and tests, and shall furnish the Construction Manager reasonable facilities, samples, and proper authority for access for inspection and tests, and for obtaining such information as the Construction Manager may require.

When specific inspections are required hereunder, the Contractor shall not proceed beyond that point until the Construction Manager has made or waived inspection. No field inspection shall be waived except by written permission of the Construction Manager.

3A.9 ONSITE WORK UNDER SEPARATE CONTRACTS. In addition to the work under this Contract, the Owner has awarded or will award separate contracts for other onsite work which will be associated with and/or will interface with the work under this Contract. These other contracts may include, but are not limited to, the following.

61.0403	Coal Handling Equipment
61.0404	Scrubber Additive Conveying System
61.1001	Concrete Chimney
61.1802	Precast Concrete Walls
61.1803	Metal Wall Panels
61.3801	Breeching and Ducts
61.4002	Structural Steel - Phase II
61.4003	Structural Steel - Phase III
61.4201	Handrail
62.0203	Fabric Filters
71.0412	General Construction - Substructures for Outlying Buildings and AQCS

*EPA Request dated Oct 12, 2010, for Information Pursuant to Section 114 . Response #10 of 17 of Appendix B.

71.0413	General Construction - Superstructures for Units 1 thru 4 AQCS
71.0422	General Construction - Substructures for Units 2, 3, & 4
71.0423	General Construction - Superstructures for Units 2, 3, & 4
72.0201	Mechanical Construction - Phase I
72.0211	Mechanical Construction - Phase II
73.0201	Electrical Construction - Phase I
73.0211	Electrical Construction - Phase II
73.0221	Electrical Construction - Phase III
74.0201	Control and Instrument Construction - Phase I
74.0211	Control and Instrument Construction - Phase II

Part of the work listed hereinbefore will be in progress concurrently with the work under this Contract. The Contractor shall coordinate his actions and cooperate with other contractors and the Project Manager, in the best interest of the project.

*EPA Request dated Oct 12, 2010, for Information Pursuant to Section 114 . Response #10 of 17 of Appendix B.

Section 3B - CONSTRUCTION SCHEDULE

3B.1 GENERAL. This section covers the requirements for scheduling the erection portion of the work under this Contract.

To enable the work on the project site to be planned and prosecuted in an orderly and expeditious manner, to assist the contractors in coordinating work, to determine completion status, evaluate progress, and to detect adverse trends for purposes of initiating and implementing timely recovery action, the Critical Path Method (CPM) of planning and scheduling will be utilized in addition to manual scheduling methodology to produce Project Schedules.

The Project Construction Logic Diagrams (PCLD) for the overall construction of the Intermountain Generating Station are included under separate cover. As an aid to the Contractor, designated activities on the PCLD to be performed under this Contract have been graphically highlighted. However, no warranty is made that all activities affecting the Contractor's work have been so highlighted. PCLD are not intended to indicate the scope of the Contractor's work. They are intended as a reference tool for the Contractor in developing input for the schedule documents defined in this Section 3B.

The Contractor shall actively participate in the Engineer's schedule development and implementation program, and shall provide the information in the format and at the frequencies specified herein.

3B.1.1 Definitions. Terms used in this section shall have meanings defined herein. The term "construction" as applied to this Contract shall mean the erection portion of the work under this Contract.

1. "Project Construction Logic Diagrams" (PCLD) shall mean the activity sequence diagrams developed by the Engineer for the entire Intermountain Generating Station project to illustrate major construction activities and key interfaces between various onsite contractors.

2. "Project Construction Control Schedule Diagrams" (PCCSD) shall mean the time sequence diagrams developed by the Engineer from the Project Construction Logic Diagrams, including appropriate approved input from the Contractor and other contractors, and other appropriate input as determined by the Engineer.

3. "Project Construction Control Schedule" (PCCS) shall mean the overall construction schedule developed by the Engineer for the entire Intermountain Generating Station project, based on input by other contractors, input in the various forms specified herein and other appropriate input as determined by the Engineer. *

*EPA Request dated Oct 12, 2010, for Information Pursuant to Section 114 . Response #10 of 17 of Appendix B.

4. "Contractor's Construction Schedule Diagrams" (CCSD) shall mean the time sequence network diagrams developed by the Contractor.

5. "Contractor's Construction Schedule" (CCS) shall mean the construction schedule developed by the Contractor.

6. "Approved Construction Control Schedule Diagrams" (ACCSD) shall mean the CCSD approved by the Engineer.

7. "Approved Construction Control Schedule" (ACCS) shall mean the construction control schedule developed by the Engineer from Engineer-approved data submitted by the Contractor with the Contractor's Construction Schedule.

3B.2 MILESTONE DATES. The milestone dates listed in Section 1A of these specifications are associated only with the major items of the erection portion of the work under this Contract or indicate key interface dates with the work of other contractors. The completion dates indicated are essential to the work under this Contract and to the coordination and continuity of all work at the site.

The listing of activities and dates is not intended to be a complete or detailed listing of all erection work under this Contract or of all interfaces with the work of other contractors.

It is understood and agreed that the completion dates listed are the latest feasible completion dates for the activity, and that earlier dates may be achieved as agreed by the Contractor, Project Manager, and Engineer.

3B.3 SCHEDULE DEVELOPMENT AND IMPLEMENTATION. Construction schedules shall be prepared, submitted and implemented as specified herein.

The Project Construction Control Diagrams and the Project Construction Control Schedule will be used to monitor overall project status; the Approved Construction Control Schedule Diagrams and the Approved Construction Control Schedule will be used to monitor the Contractor's progress under this Contract.

The Engineer will develop and maintain the Project Construction Logic Diagrams, the Project Construction Control Schedule, and the Approved Construction Control Schedule utilizing a computer. The Contractor shall develop the Contractor's Construction Schedule Diagrams, the Contractor's Construction Schedule, and the Approved Construction Control Schedule Diagrams. In addition, the Contractor shall provide the services of his personnel as required to assist the Project Manager and the Engineer in the preparation and maintenance of the documents and the submittal of supplementary information as specified herein or as required by the Project Manager or the Engineer.

*EPA Request dated Oct 12, 2010, for Information Pursuant to Section 114 . Response #10 of 17 of Appendix B.

IP10_002554

If requested by the Contractor, the Engineer will arrange meetings with the Contractor prior to schedule development to discuss the fundamentals of CPM scheduling and the role of the Contractor in the development of overall project scheduling documents.

The Contractor shall develop and submit to the Engineer for review, the Contractor's Construction Schedule Diagrams (CCSD) and Contractor's Construction Schedule (CCS), such documents to include, as a minimum, the information specified herein. The time of submittal of the CCSD and CCS shall be as specified in Section 1C.

The CCSD shall be in precedence network form and shall indicate as a minimum all Contractor activities highlighted in the PCLD. All activities shall be coded to the work item numbers indicated on the Project Construction Logic Diagrams (PCLD) issued to the Contractor. Each activity shall include the proper interfaces including restraints from other contractors, a description of the activity, duration, and the manpower requirements by craft. Erection activities of more than 20 days or less than 3 days duration shall be minimized.

The Contractor's Construction Schedule (CCS) shall be comprised of complete detailed information on all Contractor activities, including dates for "early start - early finish," "late start - late finish," and total float of each activity corresponding to the Contractor's Construction Schedule Diagrams. The CCS shall be computer generated, except as otherwise permitted by the Engineer.

The Engineer will review the CCSD and CCS. Following review, the Engineer will return these documents with review comments to the Contractor or may arrange a meeting with the Contractor to discuss the effectiveness of the CCSD and CCS in meeting the schedule and interface requirements of the overall project.

Following return of Engineer comments, or meetings with the Engineer, the Contractor shall incorporate the required revisions and resubmit the CCSD and CCS to the Engineer within 14 days.

Upon Engineer approval of the Contractor's Construction Schedule Diagrams, this document shall be used by the Contractor to generate the Approved Construction Control Schedule Diagrams and the information thereon will be incorporated in the Project Construction Control Schedule Diagrams by the Engineer.

3B.3.1 Reporting and Updating. Not less than 10 working days prior to each Schedule Objectives Meeting (specified hereinafter), the Contractor shall complete and submit to the Engineer a monthly action update report and any proposed revisions to the Approved Construction Control Schedule Diagrams. The report shall indicate the actual start and finish dates and remaining duration of all Contractor activities performed during the

*EPA Request dated Oct 12, 2010, for Information Pursuant to Section 114 . Response #10 of 17 of Appendix B.

IP10_002555

reporting period. The report shall also provide an analysis of progress and shall identify problem areas with corresponding proposed corrective action.

The Contractor shall also notify the Engineer and the Project Manager, in writing, of the effects of contract changes or conditions causing delays or which may cause delays in the performance of the Contractor's erection work.

The Project Construction Control Schedule Diagrams, Project Construction Control Schedule, and Approved Construction Control Schedule will all be updated by the Engineer based on data submitted as specified in the previous paragraphs, and in accordance with decisions rendered at the Schedule Objectives Meeting. The Approved Construction Control Schedule Diagrams shall be revised by the Contractor based on Engineer approval of any proposed revisions.

3B.4 SUPPLEMENTAL SCHEDULING INFORMATION. In addition to the principal scheduling information specified to be prepared and submitted, the Contractor may be required to submit other supplemental scheduling information; to participate in the development of bar chart schedules to reflect the current status of his work on designated functional systems during the current reporting periods; and to reflect anticipated status for subsequent reporting periods.

3B.4.1 Commodity "S" Curves. Not later than 30 days prior to commencing work at the jobsite, the Contractor shall submit to the Engineer Commodity "S" Curves plotting anticipated units of production on a monthly basis during the life of the erection portion of the contract. Forms for this submittal will be provided by the Engineer. After the initial submittal, the Contractor shall submit monthly markups of the commodity curves plotting actual production for the month.

The Contractor commodity curves shall include, but not necessarily be limited to, the curves listed in Section 1C.

3B.5 SCHEDULE OBJECTIVES MEETING. Periodically, usually monthly, the Engineer will conduct a Schedule Objectives Meeting for the purpose of reviewing overall project status.

When required by the Engineer, the Contractor shall be represented at such meetings by personnel intimately familiar with the project, project schedules, and current status of the Contractor's work, and who have decision making authority.

When so requested, the Contractor shall report on the status of his work at such meetings as such work impacts the overall project and as otherwise required by the Engineer to evaluate actual project status.

*EPA Request dated Oct 12, 2010, for Information Pursuant to Section 114 . Response #10 of 17 of Appendix B.

IP10_002556

3B.6 COORDINATION. The Contractor shall coordinate his work with that of other contractors and shall cooperate fully with the Construction Manager in maintaining orderly progress towards completion of the work as scheduled. The Construction Manager's decision regarding priority between the Contractor's work and the work of other contractors at the site shall be final and shall not be cause for extra compensation or extension of time, except where extension of time is granted because of actual and unavoidable delay.

The dates shown in the schedule included herein for delivery of Owner-furnished equipment and materials and interface activities of other contractors on the site are based on dates set forth in separate contracts with the Owner and represent the best information available at this time. It should be recognized that these dates may vary due to causes beyond the Owner's control and appropriate allowance should be made in the Contractor's planning of the work.

Failure of Owner-furnished equipment and materials to arrive as scheduled, or failure of other construction contractors to meet their schedule, shall not be justification for extra compensation or an extension of time, except where such failure causes, in the opinion of the Construction Manager, an unreasonable delay in the Contractor's work, in which case the provisions of the General Conditions regarding extensions of time and extra work shall apply.

The Contractor shall keep himself, and his subcontractors, advised at all times during the course of the erection work regarding delivery status of Owner-furnished equipment and materials and of the progress of construction work being performed under separate contracts.

The Construction Manager will, upon written request by the Contractor, furnish information which may be available to the Construction Manager regarding the status of the Owner-furnished equipment and materials or construction work being performed under separate contracts.

*EPA Request dated Oct 12, 2010, for Information Pursuant to Section 114 . Response #10 of 17 of Appendix B.

IP10_002557

Section 3C - GENERAL EQUIPMENT ERECTION

3C.1 GENERAL. This section covers the general requirements for erection of the equipment.

Details of erection work not covered herein shall conform to accepted good engineering and construction practice, the requirements of AISC, the Engineer's drawings, the erection drawings, applicable nationally recognized codes, and all applicable state and local codes.

All equipment shall be installed in accordance with the manufacturer's instructions, especially valves which require special body cooling procedures or removal of internals during welding.

Motors and other equipment having electrical connections shall be installed under these specifications but will be electrically connected under separate specifications. All other erection work on this equipment shall be performed under these specifications.

3C.2 CODE REQUIREMENTS. All erection procedures shall conform with accepted good engineering practice and the latest applicable requirements of the ANSI Code for Pressure Piping, the ASME Boiler and Pressure Vessel Code, and the National Board of Fire Underwriters, the National Electrical Manufacturers Association, and all state laws and local regulations.

3C.3 EQUIPMENT PROTECTION. All equipment to be erected under these specifications shall be protected from damage of any kind from the time it is unloaded until it is ready for initial operation.

The equipment shall be protected during storage as described in Section 3A.

Equipment shall be protected from weld spatter during erection.

Equipment having glass components such as gages or equipment having other easily broken components shall be protected during the construction period with plywood enclosures or other suitable means.

Machine finished surfaces, polished surfaces, or other bare metal surfaces which are not to be painted, such as machinery shafts and couplings, shall be provided temporary protection during storage and erection by a coating of suitable nondrying, oily type, rust preventive compound.

3C.4 MAINTENANCE TOOLS. Except as otherwise specified, all tools supplied with equipment for maintenance purposes shall not be used for erection purposes. All such tools shall be stored as directed by the Construction Manager.

*EPA Request dated Oct 12, 2010, for Information Pursuant to Section 114 . Response #10 of 17 of Appendix B.

IP10_002558

3C.5 DEFECTS. All defects in erection shall be corrected to the satis-
*faction of the Construction Manager and Project Manager. The dismantling and reassembly of Contractor-furnished equipment to remove defective parts, replace parts, or make adjustments shall be included as a part of the work under these specifications.

3C.6 LOCATION TOLERANCES. All equipment shall be located within 1/8 inch of the dimensioned locations.

Any structural steel shall be erected to AISC tolerances. All parts shall be assembled accurately. Light drifting will be permitted to draw the parts together, but drifting to match unfair holes will not be permitted.

3C.7 CONCRETE EQUIPMENT BASES AND ANCHOR BOLTS. The Owner will furnish all concrete equipment bases under separate specifications.

Anchor bolts 5/8 inch in diameter and larger will be furnished cast into the concrete equipment bases. Anchor bolts smaller than 5/8 inch shall be furnished by the Contractor and shall be self-drilling cone type expansion anchors conforming to Federal Specification FF-S-325, Group III, Type I.

3C.8 ACCESS PROVISIONS. All Contractor-furnished walkways, platforms, and stairs shall be erected in accordance with these requirements.

Grating, stair treads, and handrailings shall be erected as soon as practicable after steel framing is erected.

After grating and stair treads have been installed, they shall be protected from damage. Grating and treads damaged prior to final acceptance of the work shall be replaced.

3C.8.1 Steel Framing. Steel framing shall be erected in accordance with AISC standards, the erection drawings, and these specifications. Unless specified otherwise, erection tolerances shall be in accordance with the Eighth edition of the AISC Code of Standard Practice.

All joints shall be assembled and abutting surfaces drawn tightly together, and the framing checked for alignment, plumbness, and level.

3C.8.1.1 Bolting. The installation of high strength bolts and bolting tools and equipment shall conform to all requirements for A325 bolts of the "Specifications for Structural Joints Using ASTM A325 or A490 Bolts" including the commentary given therewith, as approved by the Research Council on Riveted and Bolted Structural Joints of the Engineering Foundation, and endorsed by AISC, except as otherwise modified and supplemented herein. The Research Council specification is dated April 26, 1978.

*Addendum No. 3

*EPA Request dated Oct 12, 2010, for Information Pursuant to Section 114 . Response #10 of 17 of Appendix B.

High strength bolted connections shall be friction type connections.

Contact surfaces of friction type connections shall be free of loose scale, dirt, burrs, oil, lacquer, galvanizing, and other foreign materials that would prevent solid seating of the parts. Contact surfaces of friction type connections may be shop prime painted.

Except as otherwise specified or indicated on the drawings, field connections shall be bolted with one inch high strength bolts.

The installation of load indicator washers or load indicator bolts shall be done in accordance with the manufacturer's written instructions.

3C.8.2 Rectangular Grating. Grating sections shall be installed such that bearing bars and spacer bars in adjacent sections are in alignment. Grating shall lie flat with no tendency to rock when installed. Each grating section shall be secured at least twice at each support.

All grating panels shall be fastened to the support steel with two saddle-clips and welded stud type bolts at each support.

Stud type bolts shall be furnished and installed under these specifications. Stud type bolts shall be Size 1/4-20 with pitch diameter base and shall be attached by the arc-stud welding process. The finished length after welding shall be approximately 1/8 inch less than the grating depth. Nuts shall conform to ANSI B18.2.2. Studs, washers and nuts shall be zinc plated in accordance with ASTM A164, Type RS.

Normal refitting work shall be performed as required to install the grating and stair treads. Any field cuts on grating shall be saw cut; flame cutting will not be allowed.

3C.8.2.1 Stair Treads. Stair treads shall be bolted to the stair stringers with galvanized unfinished bolts, nuts, and lock washers. Four 3/8 inch bolts shall be used for each tread.

3C.8.3 Handrailings. All welding shall be done neatly and substantially. Rail splices shall be welded and ground smooth except where expansion splice locks are required. Expansion splice locks shall be installed with the set screws snugtightened only so that the joint may open and close with temperature changes.

After installation, handrailings shall have vertical posts and the rails shall be parallel to the horizontal or sloping surface which supports the posts.

After completion of all other work under these specifications, handrailings shall be checked for final alignment using a tightly drawn steel wire for reference. A tolerance of not to exceed 1/4 inch will be allowed for posts and rails. Handrailings that do not meet these requirements shall be straightened or replaced.

*EPA Request dated Oct 12, 2010, for Information Pursuant to Section 114 . Response #10 of 17 of Appendix B.

IP10_002560

3C.8.4 Field Painting. Damaged or inadequate paint films of shop primed structural steel materials, grating, handrailings, all accessible surfaces of field welds, and damaged galvanized surfaces shall be cleaned and touch-up painted.

Touch-up paint for shop coated materials shall be in accordance with the requirements of Section 1H.

Ungalvanized field connection bolts shall be field painted in accordance with the requirements of Section 1H.

All damaged coatings on epoxy coated grating surfaces shall be field touch-up painted with the Contractor-furnished air dry touch-up kit. Damaged surfaces shall be repaired in accordance with the written instructions supplied with the touch-up kit.

3C.9 ALIGNMENT. The alignment of rotating machinery shafts shall be as nearly perfect as practicable. Parallel offset between coupling halves shall not exceed 0.001 inch with proper allowance for expansion of the driver or driven unit when operating. The faces of coupling halves, with the halves square on their shafts shall be parallel within 0.001 inch. Parallel offset measurements shall be made with a dial indicator. Angular offset measurements shall be made with a dial indicator preferably, or feeler gages if space limitations prevent the use of a dial indicator. Written records of all measurements shall be submitted to the Construction Manager.

3C.10 DOWELING. All mechanical equipment including motor drives shall be doweled using tapered dowels after shafts have been aligned as directed by the Construction Manager.

3C.11 PIPING CONNECTIONS. All equipment having piping connections shall be leveled, lined, and wedged in place but shall not be grouted or bolted prior to the initial fitting and alignment of connecting piping. All equipment shall, however, be grouted or bolted to its foundation prior to final bolting or welding of the connecting piping.

All flanged joints shall be checked and retightened after approximately 10 days of operation at normal operating temperatures.

3C.12 EQUIPMENT PIPING. All piping, valves, and fittings furnished with the equipment shall be installed in accordance with the requirements of Section 3F of these specifications.

All equipment drains shall be piped to bell-ups or floor drains. Connections to bell-ups shall be calked unless otherwise directed by the Construction Manager. Equipment oil drain points shall be provided with a bronze plug cock of the same size as the connection and a screwed cap or plug.

*EPA Request dated Oct 12, 2010, for Information Pursuant to Section 114 . Response #10 of 17 of Appendix B.

IP10_002561

3C.13 PUMP SUCTION STRAINERS. All pump suction strainers shall be installed before starting the associated equipment. Temporary strainers for all general service pumps shall be furnished and installed.

3C.14 ELECTRICAL EQUIPMENT. All electrical equipment furnished with the equipment shall be installed under these specifications, except as specified otherwise herein. All wiring, conduit, conductors, and raceways furnished with the equipment shall be installed under these specifications except as specified otherwise. All other Owner-furnished motors, wiring, conduit, conductors, and raceways will be furnished and installed under separate specifications.

All electrical equipment, including electric motors, shall be continuously heated during the time it is in storage and until it is placed in initial operation. The heat shall be applied by energizing the built-in space heaters where supplied. Where built-in space heaters are not supplied, electrical equipment shall have heat applied in a manner acceptable to the Construction Manager.

3C.15 MOTORS. Motor bearings, control components, and other exposed parts shall be protected against corrosion and periodically inspected. Bearing oil reservoirs shall be filled to the indicated level with the proper lubricating oil. At the end of every 3 months in storage, the rotors of equipment with oil lubricated bearings shall be rotated until the journals are covered with oil. Where bearings are grease lubricated, the rotors shall be rotated not less than five revolutions at the end of every 3 months to cover the bearing parts with new grease. Where moisture condensation or flooding does occur, sleeve bearings shall be removed from housings to prevent corrosion of the journal. Shoes of vertically pivoted shoe type bearings shall be removed and the rotor supported on jacks to prevent galvanic corrosion of the inner runner. Each electric motor shall be examined for damage and the insulation meggered when the motor is received and during storage as requested by the Construction Manager. If the motor insulation megger values are below acceptable values established by the manufacturer or Construction Manager, the motor windings shall be dried by application of a metered dc current to the windings in a manner acceptable to the Construction Manager.

Electric motors shall have the insulation resistance of the windings checked immediately after erection is complete and immediately prior to start-up to determine if the winding requires drying out.

If the insulation resistance corrected to 40 C of the windings of any motor measures less than rated kV +1 megohm, the Contractor shall dry the windings until the insulation resistance does measure rated kV +1 megohm or greater. Drying of windings under these conditions shall be at the Contractor's expense.

*EPA Request dated Oct 12, 2010, for Information Pursuant to Section 114 . Response #10 of 17 of Appendix B.

The Contractor shall maintain a Winding Insulation Resistance Report for all electric motors installed under his responsibility. The report shall indicate the measured insulation resistances. This report shall be updated after each winding insulation check. A copy of the updated Winding Insulation Resistance Report shall be submitted to the Construction Manager.

Stainless steel shims cut to the same size as the motor foot shall be installed beneath each motor wherever practicable when aligning shafts so that future realignment may be performed without grinding the motor baseplate.

All motors shall be checked for proper rotation before connection to the driven equipment. A record shall be kept of all motor rotation checks.

3C.16 CONTROL AND INSTRUMENTATION EQUIPMENT. Control and instrumentation equipment shall be installed in accordance with this section, Section 3H - CONTROLS AND INSTRUMENTATION INSTALLATION and Section 3F - PIPING ERECTION.

3C.17 MISCELLANEOUS EQUIPMENT. Items of miscellaneous equipment such as locally mounted pressure and flow transmitters, pilot controls for control valves, etc., shall be installed in easily accessible locations and subject to the acceptance of the Construction Manager. All such items shall be rigidly supported from the building or support structure by means of suitable brackets.

3C.18 CLEANING AND PAINTING. All equipment shall be cleaned of all sand, dirt, and other foreign materials immediately after removal from storage and before the equipment is brought to the installation site. All piping and tubes shall be air blown.

After erection of the equipment, all exposed shop prime and finish painted surfaces which have been damaged shall be repaired by repainting. Previously unprimed exposed surfaces requiring corrosion protection shall be prime painted in accordance with the requirements of Section 1H.

Before application of paint, all surfaces to be painted shall be thoroughly cleaned of all dirt, rust, scale, greases, oils, and other foreign materials by solvent cleaning and by wire brushing, scraping or sandblasting.

Damaged finish painted surfaces shall be repaired with paint provided by the equipment supplier.

All surfaces of aluminum jackets which will be in contact with steel or cast iron shall be thoroughly prime painted with an alkyd resin zinc chromate primer.

*EPA Request dated Oct 12, 2010, for Information Pursuant to Section 114 . Response #10 of 17 of Appendix B.

IP10_002564

Areas, tanks, or equipment that will be inaccessible after complete erection of the equipment shall be finish painted. The paint manufacturer and color will be as determined by and acceptable to the Engineer.

3C.19 GAS ENVELOPE LEAK TESTS. After erection of the equipment, leak tests shall be performed to prove the gas tightness of the equipment and ductwork.

The tests shall include all ductwork and equipment from the inlet terminal point, through the scrubber modules to the outlet terminal point including bypass.

All labor and equipment required for the tests shall be furnished by the Contractor.

Testing shall be by one or more of the following methods.

Smoke bomb test

Vacuum box test

Air pressure sound test

Liquid penetrant through wall test

A plan shall be submitted to the Construction Manager outlining the test method to be used for each item of equipment and for the ductwork. Test methods shall be acceptable to the Construction Manager.

All defects in the work discovered during the leak tests shall be corrected and the tests shall be repeated to demonstrate adequacy of the corrective measures.

3C.20 CHECKOUT AND TRIAL OPERATION. After erection, all equipment shall be checked out and trial operated in accordance with the requirements of Section 3L - START-UP and as specified herein.

All equipment shall be cleaned. Rotating machinery shall be lubricated, checked for freedom of movement by hand if possible, and all prerequisite operating conditions established before the application of motive power. All bearings shall be inspected by the Contractor prior to final alignment and again prior to initial rotation checks of the equipment to ensure bearings contain no foreign material and to ensure that no abnormal conditions exist. A copy of the bearing check report shall be given to the Construction Manager. Equipment subject to pressure shall be checked for leakage.

*EPA Request dated Oct 12, 2010, for Information Pursuant to Section 114 . Response #10 of 17 of Appendix B.

IP10_002565

Section 3D - FIELD STRUCTURAL WELDING

3D.1 GENERAL. This section covers all field welding except field welding of API Code tanks constructed of carbon steel and piping components.

Unless otherwise specified, all welds, welding, and related operations for structural steel, ductwork and equipment shop fabricated from steel plate and structural shapes shall conform with the Structural Welding Code by the American Welding Society, AWS D1.1-80 and the following requirements.

Welding of materials or combinations of materials not provided for in the referenced AWS code, such as austenitic stainless steels, nickel base alloys or other similar corrosion resistant materials, shall be as specified herein. Welds in such non-AWS code materials shall nonetheless conform to the quality requirements specified in Section 8.15 of AWS D1.1.

Field welding of field erected tanks shall be in accordance with the requirements of Section 3E.

Field welding of piping components shall be in accordance with the requirements of Section 3F.

Welding of ASTM A606 sheet metal shall be in accordance with AWS D9.1-80. Welding procedure qualifications and qualifications of welders shall be in accordance with AWS D9.1-80.

Shop welding requirements are specified in Parts 1 and 2 of these specifications.

Except as otherwise accepted, welding shall be performed using only those procedures and joint details which have prequalified status when performed in accordance with AWS code.

The provisions of Table 4.1.4 of the referenced AWS code concerning filler metal requirements for ASTM A588 steels shall apply. The corrosion characteristics of the weld metal shall be similar to the corrosion characteristics of the base metal. The welding processes, filler metals and fluxes specified in the referenced AWS code shall be used for these types of steels.

Welding procedures proposed for use on corrosion resistant materials, such as austenitic stainless steels, nickel base alloys or other similar corrosion resistant materials, shall be prepared and qualified in accordance with the requirements of ASME Boiler and Pressure Vessel Code, Section IX, Welding and Brazing Qualifications. Welders who apply those procedures shall also be qualified in accordance with ASME Section IX.

*EPA Request dated Oct 12, 2010, for Information Pursuant to Section 114 . Response #10 of 17 of Appendix B.

IP10_002566

All welding procedures, including AWS prequalified procedures and ASME qualified procedures with qualification test records, shall be submitted in accordance with the Document Submittal Schedule. No welding shall be done until the Construction Manager's review is complete.

All welders, welding operators and tackers shall be qualified by an independent testing laboratory or shall be qualified at the Owner's site testing facility in accordance with the provisions of the applicable code. Accurate records of welder, welding operator and tacker qualifications shall be maintained by the Contractor and shall be made available to the Construction Manager and the Engineer upon request.

All welds shall be properly identified on detailed shop drawings and subject to review by the Engineer.

Components to be welded shall be accurately positioned and shall be rigidly secured during welding.

All welded joints exposed in exterior locations or subject to submergence in any location shall be provided with continuous welds along the contact edges except as prohibited in Article 8.8.5 of the referenced AWS code.

All butt welded joints shall be full penetration welds, except as mutually agreed by the Construction Manager and the Engineer in writing.

Seal welds shall have full contour weld beads, or in the case of corner welds, a full throat and legs.

All interior seams and joints of the ductwork exposed to flue gases shall be seal welded.

Groove welds shall be terminated at the ends of the joint by use of extension bars or runoff plates. Extension bars and runoff plates shall be removed upon completion and cooling of the weld, and the ends of the weld shall be made smooth and flush with the edges of the abutting parts.

All welds shall be chipped and sandblasted or wire brushed to remove all flux, scale, and spatter.

Welds that are not dimensioned on the equipment drawings shall be sized to develop the full strength of the least strength component involved in the connection.

Each welding operator shall be qualified for all welding procedures and positions required in a joint that he welds.

*EPA Request dated Oct 12, 2010, for Information Pursuant to Section 114 . Response #10 of 17 of Appendix B.

The application of heat to correct weld distortion and dimensional deviation in austenitic stainless steels or other corrosion resistant materials is prohibited.

Block sequence welding on austenitic stainless steel or other corrosion resistant materials is prohibited. Block sequence welding on carbon steel may be permitted for specific applications after block sequence welding procedure review and acceptance by the Engineer.

For wire brushing of stainless steel or other corrosion resistant materials, brushes shall have stainless steel bristles and shall be identified and controlled for use on corrosion resistant materials only.

Grinding of stainless steel or other corrosion resistant materials shall be performed with resin or rubber bonded aluminum oxide or silicon carbide grinding wheels identified and controlled for use on stainless steel only.

Antispatter compounds used on stainless steel surfaces shall not cause corrosive or other harmful effects and shall not contain more than 200 ppm total halogens. Total halogens shall be determined by analysis, and the Contractor shall obtain certified test reports for each batch used.

3D.2 WELDING METHODS. Only the following welding processes will be permitted subject to proper code qualification and/or the concurrence of the Engineer.

Shielded metal arc

Gas metal arc

Flux cored arc

The short circuiting transfer mode of the gas metal arc welding process shall not be used with materials or connections that involve a member over 3/16 inch in thickness. The use of the self-shielded electrodes in the flux cored arc welding processes will be permitted only in certain cases with the specific acceptance of the Engineer. Supplemental shielding of self-shielding electrodes, in the flux cored arc welding process, will be acceptable.

Welding between carbon and austenitic stainless steels, if required, shall utilize either AWS Class 309 filler metal or nickel base filler metal recommended for dissimilar metal welding.

Filler metal for joining austenitic stainless steels, nickel base alloys or other similar corrosion resistant materials shall be as recommended by the material manufacturer and shall have the concurrence of the Engineer. Welding procedures and qualification test data shall clearly identify all filler metals.

*EPA Request dated Oct 12, 2010, for Information Pursuant to Section 114 . Response #10 of 17 of Appendix B.

IP10_002568

Low hydrogen electrodes shall be stored and handled during use in a manner that will maintain their low hydrogen characteristics. The methods used for storage and handling shall be fully explained in the welding procedures submitted or in a separate electrode storage and handling procedure submitted to the Construction Manager for review prior to beginning the work.

The Contractor shall provide for the care and maintenance of all filler metals to prevent damage from the atmosphere or the misapplication of filler metals.

Austenitic stainless steel filler metal, including Type 317LM, shall have a delta ferrite content of 5 to 20 FN (Ferrite Number) for as-deposited weld metal. The Contractor shall verify ferrite content by material manufacturer's certified material test report (MTR) or by laboratory test report prior to use on project work. The delta ferrite requirement does not apply to 904L or Type 310 alloys.

3D.2.1 Heat Input. Heat input shall be controlled during welding of austenitic stainless steels, nickel base alloys and other similar corrosion resistant materials as indicated in this section.

For the shielded metal arc welding process, the maximum covered electrode size shall be 5/32 inch diameter. The maximum weld bead width shall be the lesser of four times the electrode core wire diameter or 5/8 inch.

Heat input control for semiautomatic gas metal arc and flux cored arc welding processes shall be controlled according to the formula below. Heat input for any welding pass shall not exceed 50,000 joules per inch.

$$\text{Heat Input} = \frac{\overset{(1)}{\text{Voltage}}\ \text{(volts)} \times \text{Current (Amps)} \times 60}{\text{Travel speed (inches per minute)}}\ (2)$$

Note (1): The heat input is based on the voltage at the arc. Voltage may, however, be measured at the welding power supply. If the heat input limit is exceeded when voltage is measured at the welding power supply, the measured voltage may be reduced by an amount equal to the voltage drop between the power supply and the arc.

Note (2): Travel speed for semiautomatic processes may be determined from test welds using the applicable welding procedure parameters to be applied prior to actual pipe or component welding.

Heat input instructions for all of the welding processes described above shall be included in the Contractor's welding procedure submitted to the Engineer.

*EPA Request dated Oct 12, 2010, for Information Pursuant to Section 114 . Response #10 of 17 of Appendix B.

The Contractor shall establish a procedure for periodic in-process inspection to verify implementation of limited heat input criteria. In-process inspections shall be documented and subject to audit by the Engineer and Construction Manager.

Preheat and interpass temperatures for austenitic stainless steels or nickel base alloys shall not exceed 350 F. Temperature indicating crayons used on austenitic stainless steels shall not cause corrosive or other harmful effects and shall not contain more than 200 ppm total halogens. Total halogens shall be determined by analysis. The Contractor shall obtain certification of these tests for each different crayon batch used.

3D.3 TESTING AND INSPECTION. This article covers inspection and nondestructive tests of welding.

*The Construction Manager and Project Manager will make periodic inspections of welding and welding records.

The Contractor shall provide visual inspection of all welds and shall correct all defective welds in accordance with the referenced AWS code and supplementary requirements specified herein. Personnel performing visual inspection of welds shall be qualified and certified in accordance with AWS QC1, Standard for Qualification and Certification of Welding Inspectors.

Nondestructive tests shall be conducted by the Contractor as specified herein on the welded portions of equipment, ductwork and devices fabricated from plate and structural shapes. Nondestructive testing shall be in accordance with the requirements of Article 6.7 of the referenced AWS code.

The Construction Manager or Project Manager may require additional welding tests in addition to those specified below. The additional tests will be paid for by the Owner if no weld defects are found. The additional tests shall be at the Contractor's expense if weld defects are found.

3D.3.1 Fillet Welds. Fillet welds shall be inspected in accordance with the following criteria. Fillet welds shall be inspected by one foot samples of magnetic particle inspection or dye penetrant inspection. Without regard to the number of welders or welding operators working thereon, one spot in the first 10 feet of weld shall be examined. If no defects are found, one additional spot per 100 feet of weld shall be examined. If defects are found in the tests, the tests shall be conducted at the rate of one spot per 10 feet until no defects are found. Thereafter tests shall be conducted at the rate of one spot per 100 feet of weld. The testing shall meet the inspection and qualification requirements of the referenced AWS code. All unacceptable defects shall be removed, rewelded, and reinspected by the same method which located the defects.

*Addendum No. 3

*EPA Request dated Oct 12, 2010, for Information Pursuant to Section 114 . Response #10 of 17 of Appendix B.

3D.3.2 Butt Welded Joints. Field butt welded joints, without regard to the number of welders or welding operators working thereon, shall be examined by radiographic inspection. One spot in the first 10 feet of weld shall be examined. If no defects are found, one additional spot per 100 feet of weld shall be examined. If defects are found in the tests, the tests shall be conducted at the rate of one spot per 10 feet until no defects are found. Thereafter tests shall be conducted at the rate of one spot per 100 feet of weld. Unless otherwise specified herein, testing shall meet the inspection and qualification requirements of the referenced AWS code. All unacceptable defects found by radiography shall be removed, rewelded, and reinspected by radiography.

3D.3.3 Sealing, Corner and Lap Joints. All sealing, corner and lap field welded joints shall be randomly inspected by one foot samples of magnetic particle or dye penetrant inspection. The total length of the random inspection shall as a minimum be one per cent of the total length of welding. Defects shall be repaired and adjustments made to welding techniques and methods in order to prevent further occurrence of the defects.

*EPA Request dated Oct 12, 2010, for Information Pursuant to Section 114 . Response #10 of 17 of Appendix B.

IP10_002571

Section 3E - TANK ERECTION

3E.1 GENERAL. Tanks shall be erected on foundations furnished by the Owner. The foundations will be constructed in accordance with standard construction practices. Any shimming required for leveling the tank bottoms shall be the Contractor's responsibility.

The tanks shall be erected, tested, repaired, and painted using procedures meeting the requirements and recommendations of API Standard 650 or API Standard 620 as applicable and in accordance with the requirements specified herein.

3E.2 WELDING. All welds, welding, and related operations for steel shall be in conformity with the requirements of API Standard 650, Appendix D, or API Standard 620 as applicable.

Welding of the reaction tanks shall be in accordance with the requirements of Section 3D.

Joints in the roof and bottom plates of the reaction tanks shall be double welded butt joint type with complete penetration.

Inside roof joints for tanks other than the reaction tanks shall be seal welded with a continuous fillet weld.

All inside butt welded joints shall be ground smooth and flush.

Roof seal welds and bottom fillet welds shall be ground smooth.

All field joints shall be properly identified on the erection drawings and shall be subject to the acceptance of the Construction Manager.

Components to be welded shall be accurately positioned and shall be rigidly secured during welding.

Each welding operator shall be qualified for all welding procedures and positions required in a joint that he welds. The entire weld of any structural joint shall be made by one operator.

Each welding operator shall be assigned an identification mark or symbol, and upon completion of a weld, the operator shall apply his assigned mark in the parent metal adjacent to the weld.

In addition to operator and procedure qualifications, the Contractor shall maintain accurate records of each welding operator's identification mark and of the welded joints each operator makes. All such records shall be available to the Construction Manager upon request.

3E.3 TESTS. Welded joints shall be tested in accordance with the requirements stated in API Standard 650, Appendix D, or API 620 as applicable and as specified herein.

*EPA Request dated Oct 12, 2010, for Information Pursuant to Section 114 . Response #10 of 17 of Appendix B.

All costs for testing, examination, equipment required for making the tests, test reports, and repairs shall be borne by the Contractor.

The Construction Manager will use API Standard 650, Appendix D, or API 620 as applicable as a guide and will be the sole judge of acceptability of welds and welding repairs.

All testing and repair work shall be accepted by the Construction Manager before blasting or painting is started.

3E.3.1 Radiographic Examinations. The welded joints in the shells of the tanks shall be radiographically inspected. The location of the required spot radiographs shall be as determined by the Construction Manager and shall be, insofar as practical, uniformly distributed. The number of spot radiographs required shall be in accordance with the API Standard. Radiographs shall be submitted to the Construction Manager for acceptance and defective welds shall be repaired as directed.

3E.3.2 Testing Tank Bottom. After completion of all welding of the bottom of the tank and before any field painting, a vacuum shall be applied to the joints and the joints shall be tested for leaks using soapsuds, linseed oil, or other suitable material acceptable to the Construction Manager. Any leaking joints shall be repaired and the test repeated until all joints are tight.

3E.3.3 Testing Tank Shell. After completion of the tank, before any external piping has been connected, and prior to applying any interior or exterior coatings the tank shall be filled with water and all submerged joints inspected. Any leaking joints shall be rewelded after dropping the water level to at least one foot below the point being repaired. The test shall be repeated until all joints are tight.

3E.3.4 Testing Tank Roof. Prior to application of any interior or exterior coatings, the tank roof shall be tested by applying an external vacuum to the seams and by using soapsuds, linseed oil, or other suitable material acceptable to the Construction Manager for detection of leaks.

3E.4 SURFACE PREPARATION AND COATINGS. The interior and exterior surfaces of all field erected tanks, except the reaction tanks, shall be coated in the field in accordance with the requirements of Section 1H.

The interior and exterior surfaces of the reaction tanks shall not be coated.

A detailed description of tank interior lining or coating application and testing procedures to be furnished and applied by the Contractor shall be submitted to the Engineer. Application and test procedures shall be acceptable to the Engineer.

*EPA Request dated Oct 12, 2010, for Information Pursuant to Section 114 . Response #10 of 17 of Appendix B.

3E.4.1 Surface Preparation and Cleaning. All rough or irregular welds and plate edges shall be ground as required to eliminate sharp edges. All weld spatter shall be removed. Lubricants shall be removed from all surfaces with a suitable solvent.

All exterior surfaces shall be prepared and coated in the field, after completion of tank erection, in accordance with the requirements of Section 1H. All interior surfaces shall be blast cleaned in accordance with SSPC-SP 5 "Blast Cleaning to White Metal" using silica sand of 16 to 30 mesh size. Blasted surfaces shall be thoroughly cleaned and coated the same day they are blasted.

3E.4.2 Tank Bottom Coating. After the tank bottom and first shell course have been completed and tested, the underside of the bottom plates of each tank shall be prepared and coated in the field as specified in Section 1H.

*EPA Request dated Oct 12, 2010, for Information Pursuant to Section 114 . Response #10 of 17 of Appendix B.

Section 3F - PIPING ERECTION

3F.1 GENERAL. All piping, valves, fittings, and piping specialties shall be erected in accordance with the requirements of this section. Any piping installation not specified herein shall be done in accordance with good engineering practice.

Rubber lined pipe, fiberglass reinforced plastic pipe and PVC pipe shall be installed in accordance with the recommendations of the manufacturer, this section, and Section 2H.

3F.2 CODE REQUIREMENTS. Field fabrication, erection, and testing shall be in accordance with the requirements specified in Section 2H in the article entitled CODE REQUIREMENTS.

3F.3 FIELD CHECK. A field check of all connections to equipment and piping installed under separate specifications shall be made. The field check shall confirm location, size, flange facing, flange drilling, and other data pertinent to the connections.

3F.4 MISCELLANEOUS PIPING. All miscellaneous piping shall be installed in a neat, rectangular form. Special attention shall be given to securing a neat appearance. All piping shall be installed perpendicular or parallel to the major equipment, building structure, and floor levels except in special cases consented to by the Construction Manager.

All piping, including tubing, shall be installed in accordance with the following requirements.

Piping shall not be installed above, or within a horizontal distance of 3 feet from, electrical equipment such as switchgear, switchboards, control panels, motor controls, contactors, communication equipment, batteries, battery chargers, and motor generators unless written consent of the Construction Manager is obtained. Improperly located piping shall be removed and relocated.

Shut-off valves shall be provided at the main headers.

Valves shall be installed in such a manner that they can be operated from the main operating floors or platforms without the use of ladders or special operating devices.

Piping shall be installed with a minimum of 7'-6" headroom over passageways and walkways.

Pipe runs which require drainage shall be installed so that they pitch toward the point of drainage.

*EPA Request dated Oct 12, 2010, for Information Pursuant to Section 114 . Response #10 of 17 of Appendix B.

Indoor piping subject to freezing shall not be routed in the vicinity of large doors which could be open for moving of mobile equipment or maintenance.

Routings shall be selected to avoid interference with planned and dimensioned locations for lighting fixtures, electrical trays, raceways, or conduit. The Contractor shall review the Engineer's drawings for electrical construction to avoid such interferences before routing the piping. The electrical drawings will be available at the site.

Sketches of the proposed routing of all piping not located on the drawings shall be submitted to the Construction Manager and acceptance of all routings shall be obtained before the piping is erected.

3F.5 TEMPORARY PIPING AND EQUIPMENT. All temporary piping, valves, fittings and equipment required for construction cleaning, testing, and start-up shall be provided. All equipment, piping, and valves of a temporary nature shall be installed in a safe and workmanlike manner. This shall include such lines as hydrostatic test lines, blanking fixtures required to seal off piping terminals for hydrostatic tests, and all other temporary lines required to successfully complete the work. When the temporary piping is no longer required, the Contractor-furnished temporary piping shall be dismantled and removed from the site.

3F.6 THERMAL EXPANSION. All piping shall be installed so that excessive or destructive expansion forces will not exist either in the cold condition or under conditions of maximum temperature. All bends, expansion joints, and special fittings necessary to provide proper expansion shall be provided.

Where expansion joints are used, anchors shall be installed as required to prevent damage from the forces generated by the fluid pressure of the line. Care must be taken in installing expansion joint anchors to make certain that full play is allowed at all times from maximum to minimum temperatures.

Expansion loops shall be provided in all small hot lines if required.

3F.7 WELDING. In addition to the pipe welding requirements specified in Section 2H, the following requirements shall apply to field welded joints.

Prior to starting work, all welding procedures shall be submitted in accordance with the Document Submittal Schedule.

All welding procedures, welders, and welding operators shall be qualified in accordance with applicable code requirements before the work is started.

*EPA Request dated Oct 12, 2010, for Information Pursuant to Section 114 . Response #10 of 17 of Appendix B.

IP10_002576

Records shall be maintained of the welding procedures and welder performance qualification tests for work done under these specifications. Certified copies of any of the records shall be furnished in accordance with the Document Submittal Schedule.

The quality of welding may be tested by removal of a section of material containing a weld. Such section shall be removed if requested by the Construction Manager.

3F.7.1 End Preparation. Butt weld joints shall be prepared in accordance with details included in Section 2H. Backing rings shall not be used except as permitted by the requirements of Section 2H. Machining or automatic flame cutting shall be used wherever possible. Hand flame cutting will be permitted only where machine cutting is impractical. All slag shall be removed from cuts and hand cut ends shall be ground smooth.

Pipe ends for socket welding or screwed connections shall be reamed to the full inside diameter to remove all burrs and obstructions.

3F.8 PIPE SUPPORTS. Insofar as possible, pipe supports shall be installed so as to be vertical in the hot position of the piping. This shall be accomplished by offsetting the structural attachment from the pipe attachment when the piping is in the cold position.

The support assemblies shall not be used for the attachment of rigging to hoist the pipe into place. The piping shall be securely held in place by other means until the pipe support is completely assembled and attached to the pipe and building structures and the spring support set to take care of pipe sway. All rigging shall be removed in such a manner as not to impose a sudden load on the pipe support.

Spring supports shall not be used during hydrostatic testing of piping systems unless they are pinned or blocked to act as rigid supports. All piping having such supports which are not pinned or blocked shall be held securely in place by other temporary means throughout the testing. After successfully passing the hydrostatic test, the pin or blocking device shall be removed.

After the piping has been completely installed, insulated, and filled with its normal operating medium, the springs shall be adjusted to the cold position. If necessary, the spring support shall be readjusted to the hot position after the line has been placed in service at its normal maximum operating temperature condition.

Welding of pipe supports to structural steel forming a part of the supporting structure shall be accomplished by means of the electric metal arc method only, and the quality of welding shall be at least equivalent to that provided by the specifications of the American Institute of Steel Construction. The structural beams shall not be heated more than necessary to attach the support. All welds shall run parallel to the axis of

*EPA Request dated Oct 12, 2010, for Information Pursuant to Section 114 . Response #10 of 17 of Appendix B.

IP10_002577

the span and all welding shall be staggered with cooling allowed between subsequent deposits. No welding across beam flanges will be permitted. Loaded beams shall be unloaded or properly shored prior to field welding if 10 per cent or more of the flange or web cross-sectional area should be heated to over 500 F at any one time.

3F.9 CUTTING AND DRILLING STRUCTURES. All necessary drilling, cutting, and patching of structures required for proper installation of piping or bolts shall be done, but only with the consent of the Construction Manager.

Holes shall not be cut in structural steel. Wherever possible, clamps shall be used for attaching erection rigging. Lugs may be welded to structural steel only with the consent of the Construction Manager. Upon completion of the work, the lugs shall be removed and the surfaces ground smooth.

All holes cut in grating or floor plate shall be banded and reinforced in accordance with the details which will be provided by the Engineer. Holes in floor plate shall be machine cut. Aluminum shall be used for banding aluminum plate and steel for steel grating or floor plate. After bands and reinforcements have been installed, all welds shall be ground smooth and weld areas, bands, and reinforcements shall be painted to match adjacent surfaces. Damaged paint and areas of galvanized metals shall be repaired in accordance with Section 1H requirements.

If normal grating support is removed by the cutting of holes, the Contractor shall add miscellaneous angles or other steel as required to properly support the grating.

Holes in concrete floors shall be provided with machine cut steel pipe sleeves in accordance with the details which will be provided by the Engineer.

All openings in concrete shall be made by core drilling, saws, or similar clean cutting equipment.

Where boxouts are left in concrete walls for the passage of pipes, the Contractor shall provide seal rings on the pipes and concrete fill the wall openings. Surfaces of hardened concrete shall be coated with epoxy bonding compound before the concrete fill is placed. Epoxy bonding compound shall be Sika Chemical "Sikadur Hi-Mod" or acceptable equal.

Holes cut in walls and roofs shall be complete with sleeves, collars, panel edge closures, reinforcing, flashing, and other accessories in accordance with the details which will be provided by the Engineer.

3F.10 EQUIPMENT CONNECTIONS. When attaching piping to equipment connections, special care shall be taken that excessive stresses are not transmitted to, and imposed upon, such connections.

*EPA Request dated Oct 12, 2010, for Information Pursuant to Section 114 . Response #10 of 17 of Appendix B.

In the case of flanged connections, the piping shall be installed and supported so that accurate matching of bolt holes and uniform contact over the entire flange area are obtained prior to the installation of any flange bolts. Bolts shall be uniformly and carefully tightened to uniformly compress the gaskets and minimize flange stress.

Special precaution shall be taken in allowing for shrinkage during welding of nozzle connections so as not to impose excessive stresses on the equipment.

Fit-up of the flanges to equipment connections may be checked by the Construction Manager after the bolting has been installed. Such bolting shall be removed and replaced and new gaskets installed if requested by the Construction Manager.

When welding to coated tanks, the Contractor shall wrap all tank connections and the immediate tank area. The wrappings shall be kept wetted. The Contractor shall be responsible for protecting the tank coating during the welding operation and for replacement of the coating if damaged by his actions.

After start-up, if the connecting piping is exerting excessive strains on the equipment, the piping shall be altered by adjusting the piping supports, cutting and rewelding joints, and removing sections of piping, all as necessary to eliminate the excessive strains. Piping which vibrates excessively shall be anchored or snubbed as necessary.

3F.11 VALVE INSTALLATION. All valves shall be installed in accordance with the requirements stated herein.

Excessive piping strains and bending moments on valves, especially Class 150 large steel gate valves and butterfly valves, shall be avoided. Excessive strains and moments will result in distorted valve seats.

All steel globe valves shall be installed, wherever possible, in such a manner that closing of the valve will relieve the pressure from the packing and permit repacking of the valve with the plant in normal operation. This shall be accomplished by installing the valves on all branch lines from a pressure source, with the pressure under the seat of the valve. In the case of a bypass line, or a line containing two or more globe valves connecting two pressure sources that cannot be taken out of service after the plant is in normal operation, the valve at each end of the line shall be installed in such a manner that the connecting line between the valves may be taken out of service for repacking of both valves when they are closed. Exceptions to the above requirements are those valves for which the manufacturer indicates the required direction of flow through the valve.

Valve discs and plugs shall be off the valve seats when welding valves into the lines.

*EPA Request dated Oct 12, 2010, for Information Pursuant to Section 114 . Response #10 of 17 of Appendix B.

IP10_002579

Check valves shall not be installed in vertical runs of piping unless they are specifically designed for vertical operation.

3F.12 INSTALLATION OF JOINT UNIONS. Unions shall be installed in all piping as required at equipment connections, as directed by the Construction Manager and in piping that contains instruments and special items such as meters, level controllers, float switches, traps, and gage glasses, in order that these items may be easily removed from the line. Every precaution shall be taken in installing unions in order that the adjoining seating surfaces fit up squarely without forcing.

3F.13 MAKING FLANGED CONNECTIONS. The faces of all flanges and gaskets shall be wiped clean when making up flanged joints. The contact faces of all flanges shall meet squarely, and particular care shall be exercised in pulling up flanged joints to prevent overstressing of flanges or flange bolting.

The threads of all bolting shall be painted with a suitable thread lubricant before the joint is made. The lubricant shall be suitable for the operating temperatures involved.

3F.14 MISCELLANEOUS SMALL CONNECTIONS. All openings for vents, drains, instruments, and other similar connections made after erection of the piping systems shall be drilled. No burning of such openings will be permitted. Any burrs remaining on the inside wall of the pipe after drilling shall be removed.

Low point drains and high point vents of all water piping systems and other systems to be hydrostatically tested shall be provided with 3/4 inch minimum screwed plugged openings as required to permit drainage of the systems.

The lubricating oil drains on all machinery shall be provided with a brass plug cock of the same size as the equipment connection and a screwed pipe plug before the installation of the oil.

3F.15 DAMAGE TO MACHINED SURFACES. Special measures shall be taken to avoid damage to machined surfaces such as flange facings or pipe ends which have been prepared for welding. Any damage to welding ends shall be repaired prior to butting up for welding. If a flange facing is marred, scratched, or damaged to such an extent that, in the opinion of the Construction Manager, the flange will be a cause for leakage, such flange shall be repaired or replaced.

When welding to equipment which is in the assembled condition, separate ground leads shall be attached to the equipment, pipes, or components to prevent stray welding currents from arcing the internals of the equipment. Wherever possible, the ground lead shall be 2/0 cable or larger directly and mechanically connected adjacent to the welding area and returned directly to the welding power source.

*EPA Request dated Oct 12, 2010, for Information Pursuant to Section 114 . Response #10 of 17 of Appendix B.

IP10_002580

3F.16 INSTRUMENT AND CONTROL PIPING AND TUBING. All instrument and control installation, piping, and tubing shall be done by workmen experienced in this type of work and in accordance with the recommendations of the equipment manufacturer.

All field mounted instruments furnished by the Contractor shall be installed by the Contractor. Instruments shall be mounted and piped so that they function under the conditions of the process.

Water and air purging of instrument connection piping shall be provided as required.

Taps on process piping and vessels for measuring process variables which will be used to cause the scrubber or portions thereof to trip shall be provided in pairs. These taps shall be connected through a three-way valve to the instruments. This valve will allow isolation of one of the taps for cleaning while the instrument obtains measurements through the other. All taps in horizontal slurry piping shall be located on top of the pipe. All taps on vertical slurry pipes shall be located on a 45 degree angle upward from horizontal.

3F.16.1 Pressure Connection Piping. Except as otherwise specified, pressure connections between instruments and/or instrument enclosure bulkhead fittings as applicable, and primary shut-off valve(s) on the process piping or equipment shall be made with the materials specified in Section 2H subject to the following conditions.

All stainless steel tubing shall be continuously supported.

One-half inch outside diameter stainless steel tubing shall be fully protected as well as continuously supported in trays where it is subject to mechanical damage.

Capillary tubing shall be fully protected as well as fully supported for the full length of its run.

Pressure connecting piping shall preferably slope continuously from the process connection to the instrument, and all horizontal runs shall have a minimum slope of 1/2 inch per foot. The preferred direction of slope is downward from process to instrument for liquid piping, and upward for flue gas and compressed air piping. The direction of slope may be reversed by use of appropriate vents or drain connections.

Drain pots shall be furnished at any low point in a flue gas or compressed air instrument line. A vent valve shall be provided at the high point in a liquid instrument line.

*Each instrument line shall be provided with a blowdown valve at the location of the instrument, and shall be provided with a secondary shut-off valve unless the primary shut-off valve can be reached by an operator standing at the location of the instrument.

*Addendum No. 1

*EPA Request dated Oct 12, 2010, for Information Pursuant to Section 114 . Response #10 of 17 of Appendix B.

Enclosure mounted instruments shall be provided with blowdown and shut-off valves if field installed by the Contractor. Instruments installed by the Owner in enclosures will be furnished with shut-off and blowdown valves already installed.

[IPP 9255 WET SCRUBBER 62.0202]
[051581]
3F-7a

*EPA Request dated Oct 12, 2010, for Information Pursuant to Section 114 . Response #10 of 17 of Appendix B.

Flue gas connections shall be purged with compressed air and all required purge meters, pressure regulators, and shut-off valves shall be provided. Provisions shall be made for periodic cleaning of flue gas connections by reverse flow blowing with 125 psi compressed air. Required four-way cocks, quick disconnect fittings, air hoses, and shut-off valves shall be provided.

3F.16.2 Flowmeter Piping. Flowmeter connecting piping or tubing shall slope continuously from the pressure taps or reservoirs to the meter or flow transmitter, and all horizontal runs shall have a minimum slope of 1/2 inch per foot. Connecting piping shall be adequately supported so that no pockets are formed in either the hot or cold positions. If piping runs are subject to freezing, the high and low pressure runs shall be installed so that both runs can be insulated and freeze protected as a single unit. The preferred direction of slope is downward from process to instrument for liquid piping, and upward for flue gas and compressed air piping. The direction of slope of liquid piping may be reversed by use of a vent valve and riser in each line at the system high point, if the static pressure at the high point is positive under all conditions of operation. The direction of slope of flue gas and compressed air piping may be reversed by use of drain pots and drain valves at the system low point.

3F.16.3 Level Instrument Piping. Piping for level instruments of the manometric type shall be installed in accordance with the requirements specified above for flowmeters. Reservoirs or constant head chambers shall be installed at the required elevation, and connecting piping from the vessel to the reservoir or constant head chamber shall slope continuously without pockets to the vessel.

3F.16.4 Tubing Installation. The requirements stated herein apply to all instrument and control pneumatic signal tubing, instrument air supply tubing, and capillary tubing.

Special tools shall be used for all bending and forming operations. Tubing shall be carefully handled to avoid flat spots, kinks, and short bends. Any tubing so damaged shall be replaced. All tubing shall be air blown after erection and before attachment to equipment at either end.

Care shall be exercised in the installation of tubing to assure a neat job and ease of maintenance and trouble-shooting. Tubing runs shall be absolutely straight. Both horizontal and vertical runs of light drawn temper copper tubing, stainless steel tubing, and all capillary tubing

*EPA Request dated Oct 12, 2010, for Information Pursuant to Section 114 . Response #10 of 17 of Appendix B.

IP10_002583

shall be continuously supported in solid aluminum tubing supports. Lashing or taping to the building structure will not be permitted. Parallel runs of individual tubes shall be run in one plane and uniformly spaced.

Tubing runs 3/4 inch outside diameter and smaller shall be continuous from panel to panel or junction box. All connections in tubing 3/4 inch outside diameter and smaller shall be made only by use of bite type tubing fittings. Annealed soft temper and light drawn tubing runs longer than 50 feet may use bite type couplings to splice the tubing at intermediate points; however, such tubing runs shall contain not more than one section of less than 50 feet length. Splice couplings shall be located to facilitate checking and correction of leaks. Solder or braze joints will not be permitted under any circumstances.

Type K drawn type tubing one inch outside diameter and larger shall be connected by means of braze joint fittings. Brazing shall be accomplished in accordance with the requirements specified in ANSI B31.1. Brazing shall be performed in accordance with written procedures and by brazers who have been previously qualified in accordance with ASME Section IX, Welding and Brazing Qualifications. Brazing filler metals shall be either silver or copper-phosphorous alloys.

Continuous tubing supports shall be complete with fittings all as manufactured by James C. White Company, Greenville, South Carolina, or acceptable equal. The tubes shall be attached to the supports using stainless steel yoke clamps and bolts or plastic sleeved J-bolts. The supports shall be rigidly attached to the building structure using screws, bolts, clips, or hangers.

Type K drawn temper copper tubing shall be supported using pipe clamps of copper or copper plated steel at intervals not exceeding 6 feet.

3F.16.5 Tubing Cable Installation. Tubing cable runs shall be continuous from termination to termination.

Tubing cable shall be installed with both horizontal and vertical runs continuously supported. Except as otherwise specified, tubing cable supports shall be aluminum with long radius fittings all as manufactured by James C. White Company, Greenville, South Carolina, or acceptable equal.

Tubing cable shall be laid or pulled into supports so that neither the supports nor the cables are damaged. Tubing cable shall lie parallel and shall be secured to the larger trays by tying with heavy waxed cord. Tubing cable shall be attached to the other supports by stainless steel yoke clamps and bolts or plastic sleeved J-bolts. Provisions shall be made for temperature changes in accordance with the tubing cable manufacturer's recommendations.

*EPA Request dated Oct 12, 2010, for Information Pursuant to Section 114 . Response #10 of 17 of Appendix B.

Equipment and procedures used in pulling tubing cable shall be similar to those used in pulling electrical cable. Care shall be exercised to prevent excessive strain on the cable and damage to the cable jacket. The cable manufacturer's recommended minimum bending radius of the cable shall not be exceeded. Cable grips shall have a swivel connector to prevent twisting under strain and upon completion of pulling, the grip area plus an additional 6 inches of cable shall be discarded. The cable shall be examined after installation and any damage to the sheath of the cable will be cause for rejection.

3F.16.6 Panel Openings. Openings for piping, tubing, and tubing cable in the floor under control panels shall be sealed by one of the following methods.

> Phenolic plastic plates not less than 1/2 inch thick, split lengthwise and drilled to fit closely around the pipe and tubing after all tubes are in place. The plates shall be calked and lagged to the floor surface.
>
> After all tubing is in place, the access holes in the floor shall be filled with Dow Corning 3-6548 silicone RTV foam or acceptable equal. The foam shall be finished to provide a neat appearance.

3F.16.7 Air Supplies. An instrument air supply header shall be run from a shut-off valve on an Owner-furnished valved connection or air receiver located in the scrubber area to each scrubber module. Branch air supply headers and miscellaneous connecting tubing for air supplies to transmitters, controllers, control loop accessories, control valves, control drives, electric-to-pneumatic converters, instrument enclosures, and panel mounted pneumatic devices shall be furnished and installed. This shall include installing a shut-off valve for each branch header and each individual instrument air supply, installation of the branch air supply lines, and installation of a Fisher 67 FR pressure regulator for each device requiring air that is not located in an instrument enclosure. Instrument enclosures shall be provided with air supply systems acceptable to the Engineer.

3F.16.8 Signal Tubing. All pneumatic signal tubing shall be furnished and installed. Junction boxes and tubing cable may be furnished and installed in lieu of individual runs where advantageous to do so.

3F.16.9 Flexible Hoses. Flexible hoses shall be furnished and installed on all air supply and signal lines for control valves and all pneumatic control and instrumentation devices which are not mounted on the building structure. This shall include, but not be limited to, controllers installed on tanks or pressure vessel instrumentation columns, and controllers installed on valve yokes. The flexible hose shall be Parker Type 221, 1/4 inch rubber hose with Buna N liner, steel wire braid reinforcement and rubber outer covering, complete with Parker Series 22

*EPA Request dated Oct 12, 2010, for Information Pursuant to Section 114 . Response #10 of 17 of Appendix B.

brass fittings. One end shall have 1/4 inch male pipe threads. The opposite end shall have a JIC 37 degree swivel fitting and a brass JIC 37 degree flare to 1/4 inch male pipe connector. The length of each hose shall be sufficient to compensate for movement of the control device with respect to the connecting tubing and/or as required to provide vibration isolation as necessary for protection of the control device.

End connections of flexible hoses shall be supported and affixed such that any relative movement between the pneumatic device and the building structure is absorbed by the flexible hose itself, and not by the tubing to which it is connected.

3F.17 TUBING TRAYS. Trays for support of tubing cable runs shall be furnished and installed as specified herein.

3F.17.1 Material. Trays and all tray fittings required for the complete system shall be manufactured by one manufacturer as specified herein. The trays are indicated on the drawings. The trays shall be trough type, manufactured by one of the following.

B-Line, Inc.
Chalfant Products Company, Inc.
Globe Metal Products Division, U.S. Gypsum
Husky Products, Inc.
Metal Products Corporation
P-W Industries, Inc.
T. J. Cope

All trays shall be steel galvanized after fabrication. Hanger clamps, fastening hardware, and pins shall be of corrosion resistant metals. Steel accessories shall be hot-dip galvanized after fabrication. The trays shall have bottom slots not in excess of 4 inches in width.

3F.17.2 Drawings. The Contractor shall submit drawings to the Engineer, indicating the complete tray system which he proposes to supply with additional data giving construction and design features.

The Contractor shall provide additional data as required to show that all elevations and dimensions indicated on the drawings will be maintained.

3F.17.3 Construction. Continuous rigid trays shall be formed of one piece or shall have bottom members formed of one piece and welded or upset swaged to channel type side rails. The trays shall have the depths indicated on the drawings.

*EPA Request dated Oct 12, 2010, for Information Pursuant to Section 114 . Response #10 of 17 of Appendix B.

IP10_002586

The entire tray system shall be designed and constructed so that no part of the completed tray installation will exceed the following deflection limits.

DEFLECTION OF TRANSVERSE STRUT

Tray Width (inches)	Maximum Deflection Based on 150 Pounds/Lineal Foot, Uniformly Distributed (inch)
6	0.006
12	0.020
18	0.070
24	0.160

DEFLECTION OF LONGITUDINAL MEMBER

Unsupported Span (feet)	Weight of Tubing Cable/Foot of Tray (pounds/lineal foot)	Maximum Deflection* (inch)
5	150	0.35

* Tested as free or simple beam

3F.17.4 Covers. All vertical trays shall be furnished with ventilated covers. The top tray of horizontal runs located under grating floor or insulated pipe shall be furnished with solid covers.

All covers shall be of the same metal as the tray with which they are used. They shall be of the formed type with the edges turned to provide rigidity. Cover straps shall be furnished as required.

3F.17.5 Hanger Clamps. Hanger clamps, fabricated especially for the trays with which they are associated, shall be furnished as part of the tray system. The clamps shall be designed for use with 1/2 inch hanger rods and fasteners. Clamps shall be of a design that does not utilize cross members under the supports and shall be constructed so that hanger rods do not extend below the tray bottom.

3F.17.6 Tray Installation. Tubing cable trays shall be installed in accordance with the tray manufacturer's instructions and the following articles.

3F.17.6.1 Tray Surfaces. The Contractor shall cut the trays to length as required. The trays shall be cut with saws and all surfaces over which the conductors and cables will be laid shall be ground or filed to remove any sharp edges which could cause damage to the tubing cable jacket either during installation or in normal service.

*EPA Request dated Oct 12, 2010, for Information Pursuant to Section 114 . Response #10 of 17 of Appendix B.

3F.17.6.2 Cross Members. Where layers of trays are staggered, or are of different widths, and where they cannot be supported on wall brackets, they shall be supported with hanger rods and cross members assembled from Unistrut or Kindorf materials.

3F.17.6.3 Tray Covers. Tray covers shall be notched to provide clearance around supports as required for proper fit. Notches shall be cut by sawing and the edges smoothed by grinding or filing.

3F.17.6.4 Tray Support. Trays shall be supported at intervals not exceeding 8 feet, measured along tray center lines between supports.

The design and details of the tray supports shall comply with the seismic requirements outlined in Section 1S. Locations and details of all supports shall be shown on the erection drawings.

3F.18 RAINHOODS AND FLASHING. Pipes passing through roof sleeves or through building walls shall be provided with rainhoods and weatherproof flashing.

Details of rainhoods and flashing design shall be submitted to the Engineer for acceptance.

3F.19 DRAIN LINES. Unless otherwise directed by the Construction Manager, all steel drain lines shall be calked into the bell end of cast iron floor or wall sleeves by means of packing with square braided long fiber packing and leading with the best quality soft pig lead.

The joints shall be packed, leaded, and calked in a manner acceptable to the Construction Manager.

The ends of all steel lines to be calked shall be built up with a continuous bead of weld metal.

All drain funnels, bell-ups, and floor drains shall be kept unplugged and free flowing.

3F.20 TESTING. Materials and equipment tests shall be made by the Contractor as specified herein and as required by code requirements and local and state regulations.

All materials, equipment, tools, instruments, blocking, bracing, bulkheads, blanking plates, and all labor required to complete the tests shall be furnished.

*EPA Request dated Oct 12, 2010, for Information Pursuant to Section 114 . Response #10 of 17 of Appendix B.

IP10_002588

Personnel performing the tests shall be qualified and experienced. Tests shall be performed as many times as necessary to assure proper quality of materials and workmanship. If any tests reveal unsatisfactory materials or workmanship, such materials or installation shall be repaired or replaced to the satisfaction of the Construction Manager.

3F.20.1 Pressure Testing of Piping. All piping shall be pressure tested upon completion of erection.

The valves shall be tested along with the piping. Any blind flanges or removable plugs required for openings not closed by the valves and piping provided shall be furnished.

The pressurization equipment, including water piping from the supply, shall be furnished by the Contractor.

The water remaining in the piping after testing shall be protected from freezing until commercial operation of the unit.

All defects discovered as a result of testing are to be corrected and the piping retested.

All hydrostatic and pneumatic testing shall conform to ANSI B31.1 - Code for Pressure Piping, Paragraph 137.

Except as otherwise specified herein for "air test," all pressure testing shall be done hydrostatically with cold water. The test pressure shall be 1-1/2 times the design pressure rating of the piping and shall be applied for at least one hour. Leaks shall be repaired and the system retested until accepted by the Construction Manager as satisfactory.

All lubricating oil piping, air piping and air tubing shall be given an air test.

The test pressure shall not be applied until the components being hydrostatically tested and the pressurizing medium are approximately at the same temperature. All expansion joint control rods and attachments shall be properly adjusted before application of test pressure.

Before applying the test pressure, all air shall be expelled from the piping being hydrostatically tested. The Contractor, at the direction of the Construction Manager, shall make the required taps at the high points of the piping systems and shall plug the taps upon completion of the testing.

Lines to be air tested shall be given an application of a leak detection fluid which shall reveal the presence of leaks by easily visible means, such as bubble formation.

*EPA Request dated Oct 12, 2010, for Information Pursuant to Section 114 . Response #10 of 17 of Appendix B.

All end closures shall be left in place to prevent foreign materials from entering the piping during other work.

3F.21 CLEANING OF PIPE. The inside and outside surfaces of all pipe, tubing, valves, and fittings shall be cleaned of all dirt, sand, loose mill scale, and other foreign materials immediately after removal from storage and before erection. All lines shall be thoroughly flushed or blown before being placed in service. All compressed air lines shall be air blown.

3F.22 FINAL ADJUSTMENT. After a period of initial operation, all flange bolting shall be checked for tightness, and all hangers readjusted.

3F.23 IDENTIFICATION. Pipeline identification markers indicating the pipeline contents and direction-of-flow arrows shall be furnished and installed on all uninsulated piping 2 inches and larger and on all insulated piping having a finish insulation outside diameter of 2 inches and larger. Marking shall be done after the completion of final painting or finish insulation.

The markers shall be located at strategic points as directed by the Construction Manager. One marker for each pipeline shall be visible at each floor or access platform level, on each side of walls where piping passes through, at each branch takeoff, at each valve, and at each termination. Each horizontal run of piping greater than 25 feet long shall have at least one marker and, if necessary, additional markers shall be provided so that the distance between markers does not exceed 50 feet. A direction-of-flow arrow shall be provided at each marker. The point of the arrowhead shall be away from the marker.

Markers shall have 2 inch high legends for pipes and insulation 3 inches or over in diameter and shall have 3/4 inch high legends for pipes and insulation under 3 inches in diameter. The specific background colors, legend colors, and the names for the pipe contents shall be as indicated by the Engineer.

Markers and arrows shall be Brady pressure sensitive vinyl cloth Type B-500 as manufactured by W. H. Brady Company or acceptable equal.

3F.24 FIELD TOUCH-UP PAINTING. Damaged areas of shop primed carbon steel piping shall be cleaned and touch-up painted. Touch-up paint shall be the same as the shop prime paint as specified in Section 1H.

*EPA Request dated Oct 12, 2010, for Information Pursuant to Section 114 . Response #10 of 17 of Appendix B.

IP10_002590

Section 3G - DUCTWORK ERECTION

3G.1 GENERAL. This section covers the requirements for field erection of the ductwork, expansion joints, and dampers.

All defects in erection shall be corrected to the satisfaction of the Construction Manager.

Details of the erection work not covered herein shall conform to accepted good engineering practice, the requirements of AISC, the equipment design and erection drawings, applicable nationally recognized codes, and all applicable state and local codes.

3G.2 TOLERANCES. Except as otherwise specified, erection tolerances shall be as specified in the AISC "Manual of Steel Construction, Eighth Edition."

3G.3 ERECTION. All materials erected under this section shall be erected in accordance with AISC standards, the equipment detail and erection drawings, and these specifications.

Particular care shall be exercised to provide maximum stability of the ductwork sections and expansion joints during erection.

3G.3.1 Ductwork. The ductwork shall be erected to the lines and elevations indicated on the erection drawings. Edges and corners shall match adjoining sections in all dimensions within a tolerance of 1/8 inch. Sections which do not match within the specified tolerances shall be brought to the Construction Manager's immediate attention. Rework or replacement of nonconforming ductwork sections shall be accomplished as required and as acceptable to the Construction Manager.

All parts shall be assembled accurately as indicated on the drawings and matchmarks shall be carefully followed. Light drifting to draw the parts together will be acceptable, but drifting to match unfair holes will not be acceptable. Any enlargements of holes necessary to make connections in the field shall be done by reaming with twist drills, care being taken not to weaken the adjoining metal. Enlarging of holes by burning is prohibited.

All field joints shall be assembled and abutting surfaces drawn tightly together and the assembled sections shall be checked for alignment, plumbness and level in accordance with the specified tolerances before welding.

*Except as otherwise specified or indicated on the Contractor's drawings, field joints shall be bolted with high strength bolts and seal welded.

*Negotiated Revision

*EPA Request dated Oct 12, 2010, for Information Pursuant to Section 114 . Response #10 of 17 of Appendix B.

All welds inside the ductwork shall be seal welds and shall provide a gastight structure upon completion.

Ductwork sections will be furnished in whole units to the maximum extent practicable. Temporary stiffeners, braces, or lifting lugs installed for shipping and erection purposes shall be removed after final assembly of the ductwork by the Contractor. All weld metal remaining after removal of temporary pieces shall be ground flush with the ductwork surfaces.

Where required, bolt holes shall be field drilled using Contractor-furnished templates as specified in Section 2K.

3G.3.2 Expansion Joints. Expansion joints shall be erected at the locations indicated on the erection drawings. The expansion joints, when bolted in place, shall provide a gastight structure. The Contractor shall use care in installation of the expansion joints throughout the system to prevent damaging the joint material. The joint shall be protected from weld spatter during erection and after installation until such time as the completed installation is accepted by the Construction Manager. Where joints are provided with a backup bar and flange angle, the expansion joint angle shall be seal welded to the ductwork flange angle.

After the expansion joints are completely installed, the Contractor shall remove all shipping bars, if provided, and shall grind all excess weld flush with parent metal.

3G.3.3 Dampers. Dampers shall be installed at the locations indicated on the erection drawings. Edges and corners of the dampers shall match those of the ductwork within a tolerance of 1/8 inch. Drifting to match unfair erection holes will not be permitted.

After the dampers are bolted into position and checked for damage, warpage, excessive deflection, or improper alignment due to erection, the damper frame shall be seal welded to the ductwork flanges.

After the dampers are completely installed, the Contractor shall remove all shipping bars, if provided, and shall grind all excess weld flush with the parent metal.

3G.4 BOLTING. All high strength bolts shall be one inch diameter unless otherwise indicated on the equipment drawings.

Installation of high strength bolts and bolting tools and equipment shall conform to all requirements of the article entitled Bolting in Section 3C.

High strength bolted connections shall be friction type connections except where other type connections are required by the drawings or specifications.

*EPA Request dated Oct 12, 2010, for Information Pursuant to Section 114 . Response #10 of 17 of Appendix B.

IP10_002592

Expansion joint bolts shall conform to the requirements specified in Section 2K.

3G.5 WELDING. Welding shall be in accordance with the requirements of Section 3D.

3G.6 FIELD PAINTING. After erection, touch-up primer shall be furnished and applied to all abraded or otherwise damaged areas on shop primed surfaces of all materials erected under these specifications. Surfaces shall be free of all rust, scale, lubricants, moisture, and other substances before application of primer. The touch-up primer shall be the same type and color as the shop applied primer as specified in Section 1H.

*EPA Request dated Oct 12, 2010, for Information Pursuant to Section 114 . Response #10 of 17 of Appendix B.

Section 3H - CONTROLS AND INSTRUMENTATION INSTALLATION

3H.1 GENERAL. All controls and instrumentation furnished under these specifications shall be installed in accordance with the requirements of this section. Any installation procedures not specified herein shall be done in accordance with the manufacturer's recommendations and good engineering practice.

All controls and instrument installation, tubing, and piping shall be done by workmen experienced in this type of work.

3H.2 INSTRUMENT ENCLOSURES. Equipment specified in Section 2N will be installed in Owner-furnished enclosures under separate specifications. The Contractor shall ship the equipment to the Owner's enclosure manufacturer in accordance with a schedule to be mutually decided at a later date, and which shall allow the enclosure manufacturer sufficient lead time to complete manufacture in accordance with his shipping schedule. The scope of installation within enclosures will include instrument shut-off valves and blowdown valves where required. The enclosures will be shipped to the Contractor at the jobsite after installation of the equipment. The Contractor shall install the enclosures and shall provide piping to enclosure terminals.

The Contractor shall install any equipment in enclosures at the jobsite which his schedule has prevented from being installed in enclosures prior to their shipment.

3H.3 INSTALLATION OF LOCALLY MOUNTED EQUIPMENT. Solenoid valves and control loop accessories not located in enclosures or mounted on valves shall be mounted in easily accessible protected locations near the components with which they are associated.

Thermal elements which are to be installed in gas or air ducts shall be provided with structural supports as recommended by the manufacturer and as required to prevent excessive deflection of the elements resulting from their own weight, from vibration of the duct or to the flow of the gas or air within the ducts.

Equipment not mounted in enclosures shall be installed on racks, walls, or columns near the piping or duct to which they are connected to permit best access and ease of calibration and maintenance.

The scrubber control panel, scrubber additive preparation control panel, and all other remote control panels and cabinets will be installed under separate specifications. All locally mounted panels and enclosures for control and instrumentation shall be installed as specified herein. Panels shall be shimmed for proper alignment and bolted to their foundations or building structure as required. The panels shall be protected from damage during the construction period. Shipping crates modified to permit necessary access may be used for panel protection.

*EPA Request dated Oct 12, 2010, for Information Pursuant to Section 114 . Response #10 of 17 of Appendix B.

IP10_002594

All brackets, stands, supports, and other miscellaneous hardware required for mounting devices shall be furnished and installed.

All thermometers shall be installed in the process line and adjusted for ease of reading.

Pressure switches not mounted in enclosures shall be installed on a wall or column near the piping or duct to which they are connected and mounted to permit ease of adjustment.

Temperature switch thermowells and bulbs shall be installed in the process connection. The switches shall be located on a wall or building column and mounted to permit ease of adjustment. The connecting capillary tubing shall be continuously supported in tubing raceway as specified in Section 3F to protect it from damage.

Control drives, levers and linkages shall be installed in accordance with drawings and other instructions provided by the manufacturer. Pipe for linkage rods shall be furnished as required.

3H.4 INSTALLATION OF JOINT UNIONS. Unions shall be installed as specified in Section 3F.

3H.5 CONNECTION OF EQUIPMENT AND DEVICES. All primary instrument piping, pneumatic signal tubing, and air supply tubing shall be furnished and installed in accordance with the requirements of Section 3F in the article entitled INSTRUMENT AND CONTROL PIPING AND TUBING.

Except as specified otherwise, all control and instrument piping and tubing shall be installed and tested in accordance with the latest requirements of ANSI B31.1 - Code for Pressure Piping. This shall include all addenda to ANSI B31.1 issued prior to the date of contract award.

3H.6 CONTROL EQUIPMENT PREOPERATIONAL ADJUSTMENTS AND TESTS. Piping and tubing shall be tested as required by code requirements and local and state regulations, and as specified herein.

Primary piping shall be tested in accordance with the requirements of Section 3F - PIPING ERECTION.

All instrument air headers and instrument supply takeoffs shall be blown out with clean dry air using full receiver air pressure. Larger headers shall be blown first, using full size valves. Smaller headers and takeoffs shall be blown last. All supply headers shall be blown before any instrument connected to the header system is turned on.

*EPA Request dated Oct 12, 2010, for Information Pursuant to Section 114 . Response #10 of 17 of Appendix B.

IP10_002595

All control and instrument pneumatic tubing, including that installed in all panels, shall be pressure tested for leaks. Instruments shall be carefully protected against overpressure during pressure testing. Instrument air lines shall not be opened to instruments by anyone except the Construction Manager. Air used to blow out or pressurize instrument air lines or headers shall be clean, dry, and oil free.

The leak test may be conducted in accordance with ISA Recommended Practice RP-7.1 or by charging the line through a bubbler sight glass and pressure regulator. Short runs between adjacent components shall be pressurized to 30 psi and visually inspected for leaks, using "Leaktec" or other commercial leak detection fluid. The pressures applied shall not exceed the allowable pressure rating of any connected device which cannot be isolated.

Control drives shall be checked prior to operation by running the drives through their full operating ranges and checking for linkage binding, interference, or failure to stroke over the proper range. After linkage has been adjusted and limit stops set, the drive levers shall be pinned or welded as recommended by the equipment manufacturer.

The Contractor shall provide the services of craftsmen and any required supervision, as requested by the Construction Manager, to assist in valve adjustment, drive linkage adjustment, and other control and instrument work required during start-up.

3H.6.1 Calibration of Devices. Under separate specifications, the Owner will provide the services of qualified technicians and direct supervision to perform checkout and calibration of devices and subloops. The Contractor shall provide technical services from qualified manufacturers' representatives to advise, assist, and guide the work. The Owner-furnished services will include checkout and calibration of the following categories of devices.

All field instrument devices whether enclosure mounted or field installed

All control valves and drives

All control panel recorders and indicators

All logic systems, whether electromechanical or solid-state, dedicated or programmable

Annunciators

All local subloop controls

Chemical or constituents analyzers

*EPA Request dated Oct 12, 2010, for Information Pursuant to Section 114 . Response #10 of 17 of Appendix B.

IP10_002596

The Owner will provide standard calibration and test equipment for use during calibration. This will include:

Test gages and manometers

Small hand tools

Deadweight testers

Thermocouple potentiometers

Test multimeters

Pneumatic test kits

Current loop test kits

Special test equipment required by Owner-furnished instruments

The Contractor shall provide any special test equipment required for proper calibration and checkout of control and instrument systems and devices furnished by the Contractor. Special test equipment shall include but not be limited to the following.

Circuit card testers

PROM burners

Programming kits or consoles

Test kits for analyzers

The Contractor shall promptly repair any defects of devices or of installation upon notification of such defects by the Construction Manager.

3H.6.2 Performance Responsibility. The Contractor shall retain responsibility for system performance of instruments and control systems provided and installed under these specifications. System start-up operations shall be the responsibility of the Contractor as described in Section 3L. The Contractor shall promptly notify the Construction Manager if any previously calibrated device or system required further calibration or checkout.

*EPA Request dated Oct 12, 2010, for Information Pursuant to Section 114 . Response #10 of 17 of Appendix B.

Section 3I - GROUTING

3I.1 GENERAL. This section covers materials and procedures for grouting equipment baseplates furnished under these specifications.

All grouting shall be done with portland cement grout unless otherwise specified.

Nonshrinking grout shall be provided if recommended by the manufacturer of a particular item of equipment.

3I.2 MATERIALS. Where the use of the following materials is specified herein, such materials shall be in accordance with these requirements.

Cement	ASTM C150, Type I
Sand	ASTM C33 fine aggregate. Clean well graded natural sand
Pea gravel	ASTM C33 coarse aggregate, with 100 per cent passing a 3/8 inch sieve and 90 per cent retained on a No. 4 sieve
Water	Clean and free from mud, oil, organic matter, and other deleterious substances
Plasticizer	Grace "WRDA," Master Builders "Pozzolith Normal," Protex "PDA 25XL Normal Set," or Sika Chemical "Plastocrete 161"
Nonshrinking grout	Minimum 5,000 psi, 28 day compressive strength; Master Builders "Masterflow 713 Grout," Sauereisen Cements "F-200 Level Fill Grout," U.S. Grout "Five Star Grout," Gifford Hill "Supreme Grout," USM "Upcon Hiflow," or L&M "Crystex"

3I.3 GROUTING OF BASES FOR EQUIPMENT. All equipment baseplates shall be firmly and solidly grouted in place by methods that will ensure complete, uniform, and permanent filling of all space beneath the base without disturbing or displacing the alignment or level of the base in its correct position. Should the installation of any equipment be done under

*EPA Request dated Oct 12, 2010, for Information Pursuant to Section 114 . Response #10 of 17 of Appendix B.

IP10_002598

the supervision and direction of a manufacturer's erection superintendent, or other accredited supervisor provided by the manufacturer of the equipment, then the grouting procedure shall follow his direction. Otherwise, these specifications shall govern.

3I.3.1 Surface Preparation. The surfaces of hardened concrete upon which grout will be placed shall be chipped to remove laitance and surface mortar and to expose the aggregate. The surface of the hardened concrete shall be cleaned of all loose materials and shall be saturated with water for not less than 2 hours, for portland cement grout, and 24 hours, for nonshrinking grout immediately before the grout is placed. All excess water shall be removed.

3I.3.2 Alignment and Leveling. Each base shall be set in place over its anchor bolts and shall be carefully aligned in proper position and then brought to accurate level preferably by means of leveling screws having nuts above and below temporary lugs attached to the edges of the base. If permission is given by the Construction Manager in the case of small bases, steel wedges may be used for leveling, but such wedges shall be of a type that cannot be easily or accidentally dislodged. Unless otherwise accepted, leveling shall have three-point control. The use of wood blocking or wood wedges to hold the base in position will not be permitted.

3I.3.3 Proportions and Mixing. Unless otherwise accepted, grout for use in grouting bases shall be composed of a mixture of portland cement, sand, and water. The proportions of cement to sand for flat bases where the grouting space does not exceed 1-1/2 inches shall be one sack of cement to 150 pounds of sand. For thicker mortar or grout beds up to 2-1/2 inches the amount of sand shall be increased to 225 pounds per sack of cement. Bases which are hollow and are to be filled full of grout shall be filled to an elevation one inch above the outside rim with a mortar mixed in the proportions of one part by volume of cement, 1-1/2 parts sand, and 1-1/2 parts of 1/4 inch pea gravel. To all such mixes, if desired, an acceptable plasticizer may be mixed in the proportion recommended by the manufacturer.

All grout or mortar mixtures, whatever the proportion, shall be thoroughly mixed for not less than 5 minutes in a mechanical mixer of acceptable type. After mixing, the grout shall be used immediately and before any stiffening sets in.

3I.3.4 Cold Weather Grouting. Except as modified herein, cold weather grouting shall comply with ACI 306. The temperature of grout at the time of mixing shall be not less than that indicated in the following table for corresponding outdoor temperature (in shade) existing at the time of placement.

Outdoor Temperature	Grout Temperature
Below 30 F	70 F

*EPA Request dated Oct 12, 2010, for Information Pursuant to Section 114 . Response #10 of 17 of Appendix B.

IP10_002599

Outdoor Temperature	Grout Temperature
Between 30 F and 45 F	60 F
Above 45 F	45 F

When deposited, the temperature of heated grout shall be not over 80 F.

When freezing temperatures may be expected during the curing periods, suitable means shall be provided for maintaining the grout at temperatures of not less than 50 F for 5 days or 70 F for 3 days after the grout is placed. Concrete and adjacent form surfaces shall be kept moist at all times. Sudden cooling of grout shall not be permitted.

3I.3.5 Placing of Grout. After the base has been set, its alignment and level shall be checked and accepted before placing any grout.

Grout shall be placed by the "flow" method. This type of grout shall contain only enough water to produce a grout which is flowable, but which will not show excess water on top when it is being puddled in place.

For flowable grout, a low dam or frame shall be set around the base at such a distance all around that it will permit pouring and manipulation of the grout, with the top of the dam higher than the bottom of the base. One or more small chains shall be introduced under the base, projecting beyond opposite edges sufficiently to allow them to be drawn back and forth to propel the grout into every part of the space beneath the base.

Pouring of flowable grout shall take place through grout holes if such are provided. Otherwise the grout shall be poured at one side or at two adjacent sides, giving it a head to cause it to move in a solid mass under the base and out the opposite side. The flow if necessary shall be facilitated by passing the chains back and forth, and by pulsing or puddling the grout where it is being poured. The pouring shall be continued until the entire space below the base is filled, and the grout stands at least one inch higher all around than the bottom of the base. Care shall be taken to eliminate any and all air or water pockets beneath the base.

3I.3.6 Finishing of Edges. When the placing of the grout has been completed, it shall be allowed to stand undisturbed until set stiff. Then immediately the form or dam, if any, shall be taken off, and the portions of the grout which extend beyond the edges of the base shall be cut off flush and removed. The edges of the grout shall then be pointed with fresh one-to-two cement mortar pressed firmly to bond with the body of the grout, and smoothed with a tool to present a smooth vertical surface except where a sloping surface is required as directed by the Construction Manager. Sloping surfaces shall be finished to a one-to-one slope.

*EPA Request dated Oct 12, 2010, for Information Pursuant to Section 114 . Response #10 of 17 of Appendix B.

All grouting shall be completed in a proper and workmanlike manner with the exposed edges of the foundation and the surfaces adjacent thereto left clean and free from cement and grout.

3I.4 NONSHRINKING GROUT. Nonshrinking grout shall be furnished factory premixed so only water is added at the jobsite. Grout shall be mixed in a mechanical mixer for a minimum of 3 minutes. No more water shall be used than is recommended by the manufacturer.

3I.4.1 Placement. Nonshrinking grout shall be placed immediately after mixing and before stiffening sets in. Grout shall be placed in strict accordance with the directions of the manufacturer so that all grout space is completely filled without voids. Forms shall be provided where structural components of baseplates will not confine the grout.

3I.4.2 Edge Finishing. Nonshrinking grout shall be finished smooth in all locations where the edge of the grout will be exposed to view after it has reached its initial set. The edges of grout shall be cut off flush at the base, except where a sloping surface is required as directed by the Construction Manager.

3I.5 CURING. All grout shall be protected against rapid loss of water by covering with wet rags and polyethylene. After edge finishing is completed, the grout shall be wet cured for at least 7 days.

*EPA Request dated Oct 12, 2010, for Information Pursuant to Section 114 . Response #10 of 17 of Appendix B.

Section 3J - INSULATION AND LAGGING

3J.1 GENERAL. The following equipment shall be insulated and lagged.

Ductwork

Scrubber modules (portion above 150 F)

Reheater

All miscellaneous equipment having an actual operating temperature greater than 150 F

Insulation and jacketing of piping and auxiliary equipment will be performed under separate specifications.

A field applied and separately lagged insulation system is specified herein in the article entitled FIELD APPLIED INSULATION SYSTEM. A pre-engineered, factory assembled, panel system of insulation and lagging is specified herein in the article entitled PANEL INSULATION SYSTEM. Combinations of the two systems may be desirable to achieve the best overall installation. The method proposed for specific areas shall be clearly stated in the Proposal Data. Complete details of the proposed materials and installation methods shall be furnished. This shall include complete description, drawings, and typical details of critical parts of the installation. All proposed materials and insulation joint details shall be completely described.

The Contractor shall furnish all materials and services required to perform the insulation work complete in accordance with these specifications. This shall include such items as insulating and finishing cements, sealers, plastic insulation materials, moisture barrier materials, wire, straps, bands, insulation lugs and special supports, pins, clips, meshes, attachment screws, and washers.

3J.2 DESIGN CRITERIA. The insulation system shall be designed to provide a continuous insulation barrier to prevent cold spots and condensation within the interior of equipment and ductwork.

Penetration of the insulation barrier by support steel for walkways, ladders or other appurtenances shall not be permitted.

Special attention shall be given to design of the insulation barrier around access doors to prevent conduction paths to ambient conditions.

Proposed methods of preventing breaches of the insulation barrier shall be acceptable to the Construction Manager.

Insulation and lagging on top surfaces of ductwork and equipment roofs shall be designed to accommodate a 250 pound concentrated load imposed by personnel walking on the surface. The insulation system design shall be such as to transmit the external walking load from the aluminum lagging

*EPA Request dated Oct 12, 2010, for Information Pursuant to Section 114 . Response #10 of 17 of Appendix B.

IP10_002602

to the structural support grid without permanent deformation or crushing of the insulation material. Surfaces shall be sloped to provide adequate drainage.

All insulation materials shall be suitable for the maximum surface temperature to be eucountered.

Insulation materials shall be asbestos free.

Insulation materials shall be inhibited and of low halogen content so that the insulation meets the requirements of MIL-I-24244 Amendment 3 regarding stress corrosion cracking of austenitic stainless steel.

*Insulation shall be provided in ~~double~~ single layer~~s~~ with ~~overlaps/at~~ lapped joints/ as indicated on Page 3J-9. Total insulation thickness shall be a minimum of ~~2-1/2~~ 3 inches.

Lagging thickness shall be 0.040 inch minimum for vertical and bottom surfaces, and 0.050 inch minimum thickness for top horizontal surfaces, unless otherwise specified.

Flashing shall be ASTM B209 Alclad 3004-H36, 0.040 inch thick flat aluminum sheet by the same manufacturer as the lagging. Flashing shall be mill finish.

3J.3 FIELD APPLIED INSULATION SYSTEM. The following requirements shall apply to a field applied insulation system.

3J.3.1 Insulation. Insulation shall be in accordance with the following requirements.

3J.3.1.1 Insulation Materials. Mineral fiber blanket for use on equip-
*ment shall conform to ASTM C592, Class II, having ~~an average~~ a maximum density of 12 pounds per cubic foot with a woven wire mesh or expanded metal lath facing on both sides.

Mineral fiber block and board insulation for use on equipment shall conform to ASTM C612, Class 2.

Wire for securing insulation shall be Type 302, dead soft, 18 gage stainless steel wire.

Straps or bands for securing insulation shall be 3/4 inch by 0.020 inch stainless steel.

Studs used for attachment of insulation shall be Nelson stainless steel studs in lengths suitable for the insulation thickness.

3J.3.1.2 Insulation Installation. Mineral wool blanket insulation shall be provided with expanded metal or wire mesh surface reinforcement on both sides.

*Negotiated Revision 120481

*EPA Request dated Oct 12, 2010, for Information Pursuant to Section 114 . Response #10 of 17 of Appendix B.

All insulation shall be securely wired and laced in place using stainless steel wire. Blocks shall be reinforced on the exterior face with expanded metal if necessary to prevent sagging or cutting of the insulation by the lacing wire.

Impaling pins shall be spaced on centers not exceeding 12 inches. Washers for attachment of lacing wire shall be spaced on centers not exceeding 18 inches. All block insulation shall have the joints broken and pointed up with plastic insulation.

*Ducts with external stiffeners shall have insulation ~~installed between the stiffeners and a second layer of insulation~~ installed over the stiffeners.

3J.3.2 Lagging. All insulated surfaces shall be lagged in accordance with the requirements herein. All lagging materials and installation procedures shall be acceptable to the Construction Manager.

3J.3.2.1 Lagging Materials. All aluminum lagging shall be ASTM B209 Alclad 3004 or acceptable equal. All aluminum lagging shall be stucco pattern embossed.

Lagging shall be ribbed aluminum.

All fasteners shall be noncorrosive and designed to maintain waterproof construction. They shall be stainless steel with neoprene sealing washers.

3J.3.2.2 Lagging Installation. All lagging shall be installed to secure a waterproof installation. The lagging shall be carefully fabricated and fitted to ensure a neat appearance. All closures, flashings, and seals required shall be furnished. The open ends of all fluted sections shall be provided with tightfitting closure pieces.

Calking compound not exposed to sunlight and precipitation shall be polybutene Presstite 412.9 or Tremco RP545 seam sealer. Calking compound exposed to sunlight and precipitation shall be Tremco "RP-488" acrylic terpolymer.

All areas of contact between dissimilar metals shall be protected against galvanic corrosion by a suitable insulating coating.

The ductwork lagging shall be applied against the insulation.

The lagging shall be fastened in accordance with the manufacturer's recommendations.

All lagging on curved surfaces shall be machine rolled and formed to fit the insulation curvatures. All joints shall be lapped a minimum of 2 inches and placed to shed water.

*Negotiated Revision 120481

*EPA Request dated Oct 12, 2010, for Information Pursuant to Section 114 . Response #10 of 17 of Appendix B.

Lagging on the top surfaces of the ductwork shall be fabricated from 0.050 inch thick aluminum or smaller gage reinforced to prevent damage by personnel walking thereon.

Removable insulated covers shall be provided over all manholes, nameplates and code stampings. Access doors through the lagging shall be provided as required and their design shall be acceptable to the Construction Manager.

The Contractor shall be responsible for all lagging after installation until accepted by the Construction Manager.

3J.4 PANEL INSULATION SYSTEM. The preengineered, factory assembled panel insulation and lagging system shall be manufactured by one of the following or an acceptable equal.

Transco, Inc.
55 East Jackson Boulevard
Chicago, Illinois 60604

Owens-Corning Fiberglas Corporation
Power & Process Contracting Services
P.O. Box 2198
Shawnee Mission, Kansas 66201

Brand Insulations, Inc.
2350 West Fulton Street
Chicago, Illinois 60612

Romet Division of Childers Products Company
29601 Hall Street
Solon, Ohio 44139

API, Inc.
2366 Rose Place
St. Paul, Minnesota 55113

The panel systems specified are box rib lagging type. However, flat panel systems such as Romet SRJ or acceptable equal may be used.

3J.4.1 Panel Materials. Materials used in construction of the panels shall be as follows.

Panel System Component	Description
Insulation	Mineral fiber, ASTM C612 Class 2

*EPA Request dated Oct 12, 2010, for Information Pursuant to Section 114 . Response #10 of 17 of Appendix B.

IP10_002605

Panel System Component	Description
Aluminum lagging	ASTM B209 Alclad 3004-H36, 4 inch by 1 inch box rib lagging as manufactured by Alcoa or acceptable equal. Lagging shall be stucco embossed and factory finished.
Reflective backing	0.0025 inch thick aluminum foil on inner surface of insulation
Mesh backing	As appropriate to provide necessary support for insulation material provided, but in any case shall be equivalent to or better than a 16 gage welded, galvanized steel wire mesh with a 2 inch by 2 inch grid

3J.4.2 Panel Fabrication. Each panel shall consist of aluminum lagging, double layers of insulation, reflective backing and wire mesh backing. The insulation, reflective backing and wire mesh backing shall be fastened to the exterior aluminum lagging by means of aluminum pins or prongs welded to the interior surface of the lagging and spaced at intervals as required for proper support but in no case exceeding 18 inches in both directions. The insulation shall be impaled over the pins or prongs, reflective and wire mesh backing applied over the insulation and the entire assembly securely held together with aluminum insulation pin speed clips or aluminum washers. Clips or washers shall be 1/2 inch larger in each dimension than the grid of the mesh backing but shall not be smaller than 2-1/2 by 2-1/2 inch. The pins or prongs shall be bent over after placement of the clips or washers to lock the assembly together.

Insulation layers shall be arranged to provide overlap at the insulation joints between panels.

Lagging shall project beyond insulation as required to provide overlap both on sides and ends of panels.

Panels for all top horizontal surfaces shall be provided with spacers and transverse stiffeners to prevent compression of the insulation.

3J.4.3 Panel Support System. A structural support grid consisting of all necessary subgirts required for support of the insulation panels shall be designed, furnished and installed by the Contractor. The subgirts shall be of sufficient size, gage and depth to provide adequate support. Subgirts shall be standard AISC structural steel shapes or

*EPA Request dated Oct 12, 2010, for Information Pursuant to Section 114 . Response #10 of 17 of Appendix B.

IP10_002606

special sections as required. If required, standoffs shall be provided to space the support grid away from the equipment or ductwork. The subgirt system shall be designed to provide a smooth uninterrupted exterior surface. Subgirts shall be of sufficient depth to provide for application of the full thickness of insulation over the stiffeners, access doors, flanges, ribs, and other surfaces having uneven contours. The subgirts and standoffs if required shall be welded directly to the equipment or ductwork using welding electrodes and procedures which will not impair the corrosion resistance of the equipment or ductwork. Subgirts on vertical and bottom surfaces shall be at a maximum spacing of 4'-0" on centers. Suhgirts on equipment and ductwork top or roof surfaces shall be as required to provide adequate support to protect the panels from deformation damage but shall not exceed a maximum spacing of 2'-6" on centers. The slope of the completed panel system on roof or top surfaces shall be not less than 1/2 inch per foot. This slope shall be achieved by providing additional support steel as required.

The panel support system shall be capable of supporting walkways where required.

3J.4.4 Fasteners. Panels shall be attached to the support grid by means of austenitic stainless steel self-tapping screws. Size shall be as required but not smaller than No. 12. Screws shall be located on 12 inch centers.

Panel overlap stitching and flashing attachment shall be by means of austenitic stainless steel self-drilling screws. Size shall be as required but not less than No. 12. Screws shall be located on 12 inch centers.

Fasteners shall have neoprene faced stainless steel or aluminum washers. Washers shall be preassembled to the screws.

3J.4.5 Panel Installation. Panels shall be installed in accordance with the panel manufacturer's detailed drawings.

Panels shall be installed with proper overlap to assure watertightness. All laps shall have the lagging corrugations nested closely to form a smooth surface.

No voids or gaps in the insulation under the lagging will be permitted. All voids shall be packed with loose fill insulation of the same type as the panel insulation.

Fasteners shall be placed in straight lines and in a uniform pattern to create a neat appearance.

3J.5 CONVECTION STOPS. Convection stops shall be provided between the equipment or ductwork wall and the insulation for all vertical surfaces over 12 feet in height. The maximum interval between convection stops

*EPA Request dated Oct 12, 2010, for Information Pursuant to Section 114 . Response #10 of 17 of Appendix B.

IP10_002607

shall be 12 feet. The convection stops shall consist of steel channel or Z-girt fastened to the wall and insulation and shall be covered with a 2-1/2 inch thickness of insulation.

3J.6 FLASHING AND WATER DAMAGE PROTECTION. Top finished surfaces on ductwork shall be designed to provide proper drainage and shall have a 6 inch eave or overhang with a turned under edge.

Flashings shall be installed on all exposed edges of panels, on all corners, and around penetrations. Preformed rubber closure strips shall be used to close the bottom edges of vertical panels and the ends of horizontal panels in conjunction with aluminum flashing.

Flashing shall be suitably formed and installed so that water cannot enter and wet the insulation. The flashing shall be designed and installed to readily drain any water that might enter.

Joints or openings in lagging which cannot be effectively sealed from entry of moisture by flashings or laps shall be waterproofed by application of an aluminum pigmented sealer.

3J.7 ACCESS DOORS AND OTHER PENETRATIONS. Hinged doors designed for convenient opening shall be provided at all nameplates, nonprojecting connections, and access openings.

Insulation shall be applied with interruptions to permit access doors, inspection doors, flanges, and other special features to be opened or removed for inspection or maintenance without disturbing the insulation. Boxouts around nameplates shall be provided.

All access doors and other penetrations through the insulation shall have insulation fitted closely to the fittings and shall be neatly framed and flashed to make them watertight and to create a pleasing appearance.

3J.8 GALVANIC CORROSION. To prevent galvanic corrosion, care shall be used to prevent permanent contact of aluminum lagging with copper, copper alloys, tin, lead, nickel, or nickel alloys including Monel metal. Where it is necessary to attach the lagging to carbon steel or low alloy steels, the steel shall first be prime painted with zinc chromate, and then painted with aluminum paint. Lead base paints shall not be used.

3J.9 EXPANSION PROVISIONS. Provisions shall be made for expansion and contraction so that the insulation and lagging will lie smooth whether the insulated surfaces are hot or cold. The entire insulation and lagging system including support grid, panels, flashing and all appurtenances shall be designed to accommodate the movements of the ductwork and equipment without damage to the system components and without breaching the thermal barrier.

*EPA Request dated Oct 12, 2010, for Information Pursuant to Section 114 . Response #10 of 17 of Appendix B.

The Contractor is specifically advised not to insulate and lag over exterior surfaces of nonmetallic expansion joints.

3J.10 PROTECTION FROM INSULATION MATERIALS. All equipment and structures shall be adequately protected from damage from insulation materials.

After completion of the work, all equipment and structures shall be cleaned, repaired, and restored to their original state. Any aluminum lagging which becomes corroded, discolored, or otherwise damaged shall be repaired by replacement of lagging or other means acceptable to the Construction Manager.

3J.11 GUARANTEE. It is the intent of these specifications to obtain a complete and serviceable installation. When the equipment and ductwork have reached operating temperature, and inspection of the completed insulation, by infrared photography or other means, discloses any "hot spots," i.e., lagging installed over uninsulated areas, the Contractor shall, at his expense, remove the lagging from these areas, apply insulation correctly in accordance with these specifications, and reinstall the lagging.

3J.12 DRAWINGS AND SUPPLEMENTARY INFORMATION. The Contractor shall submit complete detailed drawings of all insulated areas for review before proceeding with the work. Drawings shall include details of the entire structural support system and insulation and lagging details for each expansion joint and other special areas. Typical details and sections shall be included to more fully describe the insulation system.

The Contractor shall submit for review manufacturer's technical data for all materials to be used before proceeding with the work.

*EPA Request dated Oct 12, 2010, for Information Pursuant to Section 114 . Response #10 of 17 of Appendix B.

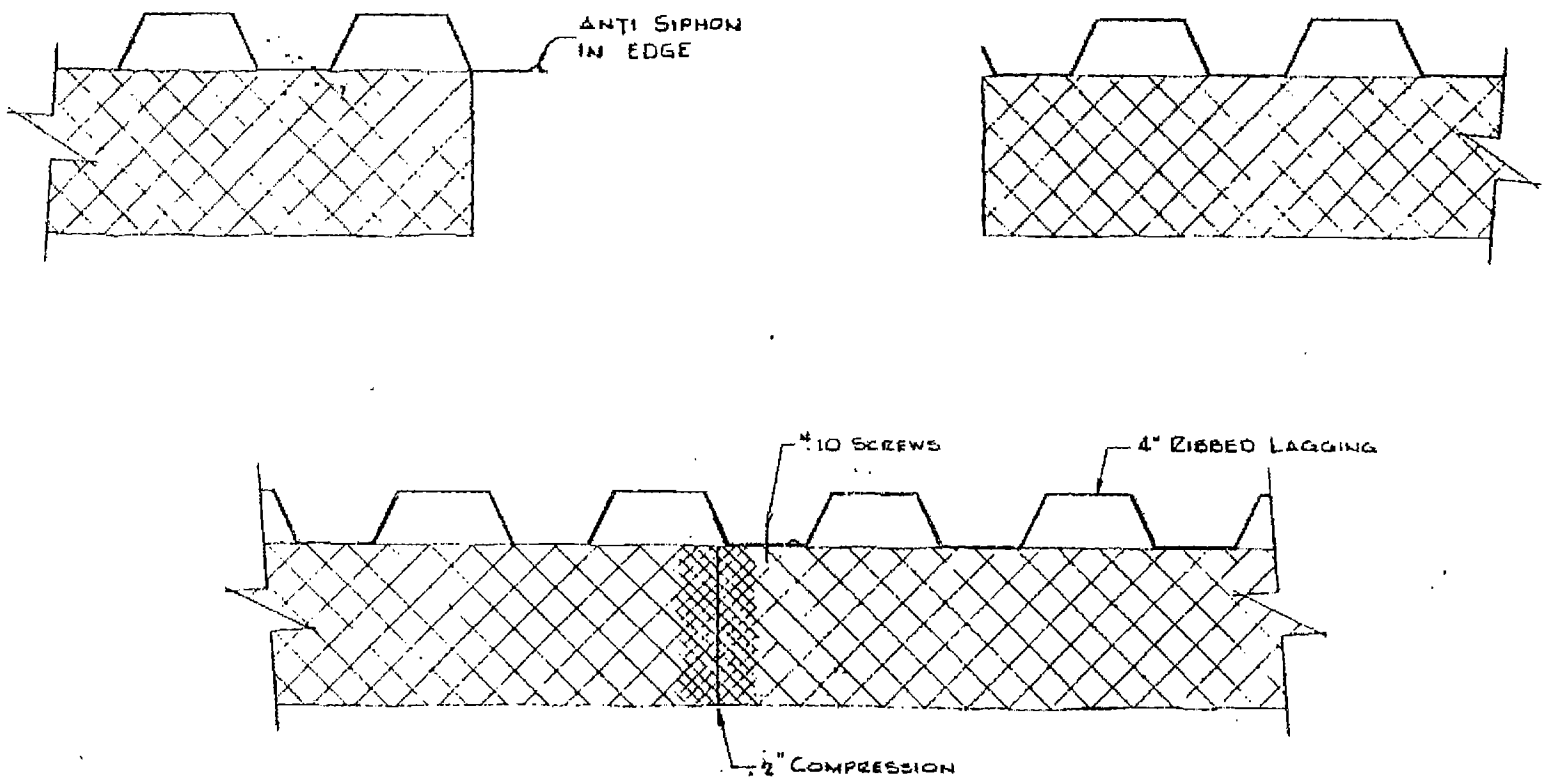

STANDARD PANEL SIDELAP

* SAME METHOD for Conventional except Lagging would be applied after insulation is installed.

REV.	DESCRIPTION	DATE

DWENS-CORNING FIBERGLAS

This print or drawing is proprietary to Owens-Corning Fiberglas Corporation and is of any nature thereof shall be returned upon request, it is not to be copied, reproduced, or published in outside parties, but is to be used only with reference to contracts or proposals of this corporation. Interim disclosed herein not publicly available may be used without written permission.

DATE 3-1-79
SCALE NONE
DRAWN [illegible]
APPROVED [illegible]
JOB NO. STANDARDS

"INSUL-CHANNEL PANEL" SYSTEM

STANDARD DETAIL
STANDARD PANEL SIDELAP - COMPRESSION JOINT

DWENS-CORNING FIBERGLAS CORP.
POWER & PROCESS CONSTRUCTION
14451 WEST 98TH STREET
LENEXA, KANSAS 66215
(913) 888-9500
MAILING ADDRESS:
P.O. BOX 2198
SHAWNEE MISSION, KANSAS 66201

SHT 9 OF
DWG. NO.

*Negotiated Revision 120481

*EPA Request dated Oct 12, 2010, for Information Pursuant to Section 114 . Response #10 of 17 of Appendix B.

Section 3K - GUNITE

3K.1 GENERAL. This section covers the furnishing of materials and installation of Sauereisen No. 54 acidproof concrete gunite. This material shall be applied to the inside surfaces of the ASTM A588 outlet ductwork downstream of the flue gas reheaters. The stainless steel or nickel alloy reheater casing shall not be gunited. The gunite shall be applied to the floor of the ductwork and shall extend at least 3'-0" up both sides. The gunite thickness shall be 1-1/2 inches, minimum.

3K.2 MATERIALS. Except as otherwise specified herein, materials shall comply with the following.

Cement	Sauereisen No. 54
Water	Clean and free from mud, oil, organic matter, or other deleterious substances
Reinforcing material	2" x 2" - 12 gage welded wire fabric, stainless steel, Type 317L
Reinforcing material studs	Nelson R6P Type, stainless steel
Gunite stops	Inconel 625
Sealer	No. 54 Binder Liquid (250 to 300 sq ft per gallon)
Curing	By heat only (use of curing compound not permitted)

3K.3 SURFACE PREPARATION. After reinforcing material is installed, the ductwork shall be blast cleaned in accordance with Steel Structures Painting Council Surface Preparation Specification SSPC SP6, Commercial Blast Cleaning.

3K.4 REINFORCING MATERIAL INSTALLATION. Adjacent sheets of reinforcing material shall be lapped at least one and one-half meshes, and all laps shall be firmly tied together at intervals not exceeding 12 inches. The reinforcing material studs shall be placed at uniform spacing of 12 inches each way throughout the ductwork. Studs shall be of such length that the reinforcing material shall have 3/4 inch of cover.

*EPA Request dated Oct 12, 2010, for Information Pursuant to Section 114 . Response #10 of 17 of Appendix B.

3K.5 MIXING AND APPLICATION. The gunite mixture shall consist of six parts No. 54 filler powder to one part No. 54 binder liquid by weight. Place the dry filler powder in the mixer which has been thoroughly cleaned and is not contaminated with other cement. Add 1-1/4 to 1-1/2 quarts of water for each 100 pounds of powder. Mix thoroughly to distribute moisture uniformly throughout the powder. Do not overdampen by adding water over the recommended amount as excess water dilutes the binder and weakens the finished product. The mixture shall be placed in the gun and the necessary liquid binder added at the nozzle as the gunite is applied. Hoses of adequate size and length and air compressors and other equipment of proper size shall be utilized to produce gunite with compressive strength per ASTM C109 of approximately 2500 psi. All equipment shall be operated and maintained in accordance with Sauereisen Cements Company's written recommendations. The nozzle shall be held at such distance and position that the stream of flowing material impinges as nearly as possible at right angles to the ductwork, so that any rebound does not fall on surfaces yet to be gunited. No material shall be placed over rebound and the full thickness of the lining shall be placed in one continuous operation to avoid lamination which occurs if thickness is built up in layers. The gunite shall be deposited so that there are no pockets of loose aggregate in any part of the work. Should a deposit of loose aggregate be covered with gunite, it shall be cut out and replaced with proper gunite. Suggested pressures are: for powder, 42-44 psi; for liquid, 50-52 psi. If the gunned pattern has a dry center and wet outside edges, increase the pressure on the liquid. If the gunned pattern is wet throughout and sags, reduce the amount of liquid at the nozzle. If the gunned pattern is dry throughout, increase the amount of liquid at the nozzle. The gunite shall be applied in as wet a consistency as possible as long as it does not sag.

3K.6 CONSTRUCTION JOINTS. Whenever the gunite application is interrupted for a period of time anticipated to be longer than that required for initial set, the gunite joint shall be cut off at approximately 45 degrees. Remove all spatter from the reinforcement and thoroughly clean and wet the 45 degree edge with water or with No. 54 binder when guniting is continued. All dry spots shall be removed and reshot.

3K.7 REBOUND. Gunite shall not be placed over rebound. All rebound and other loose material on surfaces already gunited shall be carefully removed without damage to the previously placed gunite. The use of rebound material is prohibited.

3K.8 HARDENING AND CONDITIONING. Gunite shall not be placed when the surface temperature of the reinforcing material or ductwork is below 50 F or above 90 F. The gunite should harden within 24 hours at 70 F. (Heat accelerates the set and cold slows it.)

*EPA Request dated Oct 12, 2010, for Information Pursuant to Section 114 . Response #10 of 17 of Appendix B.

IP10_002612

3K.9 CURING. The gunite shall be maintained at a temperature of 50 F to 80 F for 24 hours after application. Immediately thereafter, the temperature shall be raised slowly in a time period of one hour or more to 150 F and held for 24 hours. The temperature shall then be raised slowly to 200 F and held for 12 hours. The temperature shall then be raised slowly to 250 F and held for 12 hours to complete the cure.

The ductwork shall be sealed and suitable heating provided throughout the guniting operation to maintain the specified curing temperature.

3K.10 GUNITE STOPS. Gunite stops shall be welded to the insides of ductwork at the ends of the ductwork. The stops shall be 1/2 inch by 1-1/2 inches in size with the 1-1/2 inch dimension outstanding. The stops shall be continuously welded on both sides.

*EPA Request dated Oct 12, 2010, for Information Pursuant to Section 114 . Response #10 of 17 of Appendix B.

Section 3L - START-UP

3L.1 GENERAL. The Contractor shall perform all work required to place all component systems and equipment into operation.

The Contractor shall render all services and do all work required to place each item of equipment installed by him, including all auxiliaries and piping, in operating condition to the satisfaction of the Construction *Manager and Project Manager. All equipment shall be prepared for operation as recommended by the equipment manufacturer and shall be operated in accordance with the recommendations of the equipment manufacturer.

Individual systems and items of equipment shall be completed in a sequence that will permit systematic checkout and trial operation of each such component.

The Owner will furnish operating personnel during the start-up. The Contractor shall provide all other workmen required to make adjustments and correct deficiencies during the equipment and plant checkout and operation. It is anticipated that checkout and trial operation will be in progress continuously over extended periods of time. The workmen required of the Contractor shall be on the site as required by the Construction Manager. All regular and overtime payrolls and all other contingencies in connection with the plant start-up shall be included as a part of the contract price.

The Contractor shall provide all temporary instrumentation and gaging devices required during start-up and trial operation of the equipment and systems. Calibration of such test instruments shall be the responsibility of the Contractor.

The Owner will furnish and the Contractor shall apply all oils, greases, and other lubricants required to place permanent plant equipment in condition ready for operation.

Control and instrumentation equipment furnished or installed under these specifications shall be tested and placed in operation by the Contractor **as specified herein and in Sections 2N and 3H of these specifications in coordination with the checkout and calibration contractor.

Electrical power supply equipment and systems will be tested and placed in operation under separate specifications.

3L.2 EQUIPMENT CHECKS. Preoperational checks and inspections shall be performed on all equipment as specified herein and in accordance with the equipment manufacturer's recommendations.

*Addendum No. 3
**Addendum No. 1

*EPA Request dated Oct 12, 2010, for Information Pursuant to Section 114 . Response #10 of 17 of Appendix B.

Preoperational checks shall include, but not necessarily be limited to, the following.

Shaft Alignment. Before starting, all bearings, shafts, and other moving parts shall be checked for proper alignment. Alignments shall be in accordance with Section 3C under ALIGNMENT.

Protective Accessories. All protective accessories, such as temperature indicators and detectors, shall be calibrated and installed as described in Sections 2N and 3H.

Safety Equipment. All coupling guards, belt guards, and other personnel safety items shall be installed.

Piping. All spring type pipe hangers shall be checked for proper cold settings.

All safety valves shall be checked for correct settings.

All control valves shall be checked for correct valve action and seating and the controllers and positioners shall be given initial adjustment.

All temporary shipping braces, blocks or tie rods shall be removed from expansion joints.

* Blowdown. All instrument lines shall be blown down from the primary connection through the blowdown valve or instrument valve prior to placing process instrumentation in service.

Lubrication. Each lubricating oil system shall be flushed and the filters inspected. All oil tanks, reservoirs, gear cases and constant level type oilers shall be checked for proper oil levels. All points requiring manual lubrication shall be greased or oiled as required.

Belts, Pulleys and Sheaves. All belts, pulleys and sheaves shall be checked for correct alignment and belt tension.

Cooling and Sealing Water. All cooling and sealing water supplies shall be flushed and checked for proper operation.

Pump Suction Strainers. All pump suction strainers shall be installed.

Stuffing Boxes and Packing. All stuffing boxes shall be checked for correct takeup on the packing.

*Addendum No. 1

*EPA Request dated Oct 12, 2010, for Information Pursuant to Section 114 . Response #10 of 17 of Appendix B.

The Contractor shall verify in writing that all work and checkouts have been completed, and when the services of equipment manufacturers' field service representatives are utilized, the Contractor shall include verification by such representatives that the equipment is ready for trial operation.

*EPA Request dated Oct 12, 2010, for Information Pursuant to Section 114 . Response #10 of 17 of Appendix B.

3L.3 TRIAL OPERATION OF EQUIPMENT. After all preoperational checks and inspections have been completed, each piece of equipment shall be given a trial operation. Trial operation of equipment shall be conducted under the direct supervision of the equipment manufacturer's field service representative, or if such service is not provided, in strict accordance with the equipment manufacturer's recommendations.

Trial operation of all equipment and subloop systems shall extend over a period of time as required to reveal any equipment weaknesses in bearings, cooling systems, heat exchangers and other such components, or any performance deficiencies which may later handicap the operation of main systems and the complete plant. All rotating equipment shall be checked for overheating, noise, vibration and any other conditions which would tend to shorten the life of the machinery. Unless specified otherwise such as for electric motors in accordance with NEMA MG 1 standards specifically designated or in the equipment manufacturer's recommendations, all equipment shall operate such that the level of vibration displacement in mils peak-to-peak is not more than indicated under "FAIR" on IRD Mechanalysis, Inc. Curve 305D, "General Machinery Vibration Severity Chart." Where conflicts exist between standards, specified levels, or manufacturer's recommendations, the more stringent requirement shall govern.

Cooling water systems shall be adjusted to provide the proper flow of coolant to each item of equipment.

Each trial operation shall be summarized in a written report describing the observations and results of the operation and the specific deficiencies discovered which require additional work. The report shall indicate whether or not a retest is required and shall include reference operating data for subsequent use by the Owner in evaluating performance of equipment and systems. Decisions for retests will be made by the Construction Manager.

3L.4 MAIN SYSTEMS CHECKOUT. Main systems will be checked, operated, and tested after each individual piece of equipment and its accessories have been operated and declared ready for on-line operation.

All functional and operational testing of protective interlocking, automatic controls, instrumentation, alarm systems and all other field testing of the main systems shall be completed before the systems are started.

3L.5 ON-LINE OPERATIONAL CHECKS. During on-line operation of the integrated systems, all equipment shall be checked for overheating, noise, vibration, and any other checks recommended or required by the manufacturer of the specific piece of equipment.

All piping systems shall be visually checked for leaks, plugged pressure gages, interferences, excessive vibration, and other abnormal conditions.

*EPA Request dated Oct 12, 2010, for Information Pursuant to Section 114 . Response #10 of 17 of Appendix B.

IP10_002617

Pump suction strainers shall be checked periodically for clogging. These strainers shall be kept in service during initial operation and shall be cleaned as required to minimize pressure drop resulting from clogging. Whenever equipment is shut down as a result of strainer clogging, the strainer shall be cleaned immediately, regardless of the time of day, to assure availability of the equipment. New gaskets shall be furnished and installed after each cleaning operation. After initial operation, when strainer loading no longer occurs, temporary strainers shall be removed from the piping. Spacers shall be furnished and installed when temporary cone type strainers are removed.

3L.6 OPERATION CONTROL. The Construction Manager will establish a system of control to protect personnel and equipment as the permanent plant equipment and systems are completed and capable of energization.

The system will consist of placing appropriate tags on all equipment and system components to indicate its status and requiring mandatory clearances from designated personnel to operate, energize, or remove from service the equipment or systems. The controls established will encompass the following phases.

1. Equipment or systems completed to the point where they may be energized, pressurized, or operated but not yet checked out will be tagged and the sources of power or pressure will be turned off and tagged. The affected components shall not be operated without clearance.

2. Following initial operation of the equipment or system, tagging will be performed as in (1) above and the affected components shall be operated only by the personnel designated by the Construction Manager.

3. Equipment and systems released for service will be so tagged. Only the personnel so designated by the Construction Manager shall operate or remove from service such systems or equipment. When a request to remove from service is made, all controls and sources of power or pressure will be tagged out and shall not be operated under any circumstances. Only the personnel originally tagging the system shall clear the system for service.

The Construction Manager will establish the procedures and details of the control system. All notifications of status and requests for clearances or operation shall be made to the Construction Manager. In order to protect the equipment or systems from damage, and to ensure the safety of all personnel, the procedures established shall be followed strictly.

*EPA Request dated Oct 12, 2010, for Information Pursuant to Section 114 . Response #10 of 17 of Appendix B.

IP10_002618

Section 3M - LININGS FOR SCRUBBER MODULES AND REACTION TANKS

3M.1 GENERAL. This section covers the furnishing of materials and installation of linings on scrubber module shell interior surfaces and interior components and on reaction tank interior surfaces. Rubber linings shall be applied to the scrubber module shell from the inlet duct through the mist eliminator, to all scrubber module internal piping supports and to the scrubber reaction tanks. A gunite lining or other suitable lining materials shall be provided at duct inlets and reheater casings where operating temperatures are to be in excess of the temperature limitation of the rubber. The rubber lining thickness shall be 1/4 inch nominal thickness.

3M.2 CODES AND STANDARDS. All work associated with the installation of rubber linings shall be performed in accordance with the applicable portions of ASTM D3486, except as modified herein.

3M.3 MATERIALS. Materials for scrubber linings shall be as follows.

Chlorobutyl rubber	Goodyear LS-582
Metal primer	Goodyear M-757-C
Metal adhesive	Goodyear M-758-C
Tack cement	Goodyear M-724-C
Stops and rubber/gunite interface barriers	Inconel 625
Gunite materials	As specified in Section 3K

A complete description of any other lining material proposed for use in high temperature locations shall be submitted as part of the Proposal Data.

3M.4 STORAGE AND HANDLING. Rubber lining materials shall be stored in areas where they are not exposed to direct sunlight and where the temperature does not exceed 60 F. The materials shall be stored and handled in a manner such that at no time is there any possibility of the material being exposed to heat, flame, or sparks which could damage or ignite the material.

3M.5 LINING APPLICATION. Scrubber module linings shall be applied in accordance with the requirements specified herein.

*EPA Request dated Oct 12, 2010, for Information Pursuant to Section 114 . Response #10 of 17 of Appendix B.

IP10_002619

3M.5.1 Lining Application Subcontractor. The scrubber lining materials shall be applied by a qualified, experienced subcontractor who specializes in such work. The lining application subcontractor shall be Richmond Engineering Company, Inc., Smith Industries, Akron Rubber Company, or acceptable equal.

Six copies of the subcontractor's application procedures and quality control procedures shall be submitted to the Engineer for review. The procedures shall be submitted with the certified scrubber module and reaction tank drawings.

3M.5.2 Weld Preparation. All welds within areas to be lined shall conform to the procedures outlined below.

All welds shall be continuous. No intermittent welds shall be allowed. All internal attachments that form a permanent part of the vessel or equipment shall be completely seal welded. All weld spatter shall be removed. Chipping may be utilized if followed by grinding to a relatively smooth finish.

Welds on interior surfaces of the scrubber modules which are to be rubber lined shall be ground relatively smooth if required; ripple finish welds are acceptable. It shall not be necessary to grind butt or seam welds flush to the parent metal. All welds shall be ground to remove all sharp edges, laps, undercuts, and other surface irregularities and projections. No pinholes, pits, blind holes or sharp depressions shall exist in the finished surface of the weld.

All sharp edges and fillets, and similar abrupt contours shall be rounded off by grinding or machining to a 3/16 inch minimum radius.

All external reinforcement, lugs, braces and clips shall be welded to the vessel or equipment prior to lining. Temporary clips and lifting lugs shall be removed prior to lining.

A sample coupon of ripple finish weld will be manufactured by the Contractor acceptable to rubber lining applicator and the Owner and such coupon will be used to monitor, by the Contractor and the Owner, quality of the welds of surfaces to be rubber lined.

3M.5.3 Stops and Interface Barriers. Gunite stops shall be 3/16 inch thick and other requirements shall be in accordance with the requirements of Section 3K. Interface barriers shall be a minimum of 3/16 inch thick and barrier height shall be as appropriate to the service. The barriers shall be welded at an angle such that they will not collect scrubber solids. Interface barriers shall be continuously welded on both sides.

*EPA Request dated Oct 12, 2010, for Information Pursuant to Section 114 . Response #10 of 17 of Appendix B.

IP10_002620

3M.5.4 Surface Inspection. Prior to the commencement of the lining operation the surfaces shall be inspected for any visual defects or deviations from the requirements of this specification that will preclude producing a satisfactory lining.

Surface inspection of shop fabricated equipment shall take place in the shop, prior to shipment, and in the field for field fabrication.

Any defects discovered as a result of visual surface inspection shall be repaired prior to the commencement of the lining operation.

The repaired surfaces shall be reinspected after the repairs of the defects are performed.

3M.5.5 Organic Contamination Removal. Organic surface contaminants such as grease, oil, crayon markings, etc., shall be removed by solvent prior to sandblasting. Solvents shall be toluene (Class I), rubber solvent *naphtha (Class I), or 1.1.1-trichloroethane (Class III) or equal.

Organic surface contaminants deposited on any steel adhesion surface after blasting and before applying the first primer coat, shall also be removed with solvent, and reblasted if necessary.

3M.5.6 Sandblasting. After the completion of module erection and the grinding of welds and prior to the inspection of the inside of the vessel, surfaces to be rubber lined shall be blast cleaned in accordance with Steel Structures Painting Council Surface Preparation Specification SSPC SP5, White Metal Blast Cleaning. The blast shall produce a surface profile of 2 mils minimum and shall be measured at random and recorded with a Keane-Tator comparator type instrument or equal. Surfaces to be gunite lined shall be blast cleaned in accordance with SSPC SP6, Commercial Blast Cleaning.

Sandblasting shall not proceed if the surface temperature is less than 5 F above the dew point of the air in the work area or below 50 F or relative humidity is above 80 per cent.

The compressed air supply shall be free of oil, dirt and entrained water. Prior to using compressed air, the quality of the air shall be tested to check for oil or moisture. This test shall be performed at the beginning of each shift and at 4 hour intervals thereafter during blasting. If contaminants are found, the equipment shall be reblasted with clean air and abrasives.

The sand or grit shall be clean and dry. The sand or grit shall not be reused.

*Negotiated Revision 120481

*EPA Request dated Oct 12, 2010, for Information Pursuant to Section 114 . Response #10 of 17 of Appendix B.

IP10_002621

All sand, dust or grit from the sandblasted surface shall be removed by brushing with clean soft bristle brushes or air blasting with clean oil free and moisture free compressed air or vacuuming prior to priming.

The sandblasted surface shall be compared with the test panels as described in Article 3M.6.3 or the photograph of SSPC Visual Standard SSPC-VIS-1-67-No. 1 for cleanliness.

All excess sand or grit shall be removed by the Contractor.

3M.5.7 Priming. The sandblasted surface will be primed within a work shift (8 hours) and/or prior to any visible surface rusting. In the event of surface rusting the area must be reblasted. The primer shall only be applied to a clean, uncontaminated and corrosion free surface.

The primer shall not be applied if the surface temperature or work area temperature is less than 5 F above the dew point or below 50 F or above 120 F, or relative humidity is more than 80 per cent.

The primer coat shall be tack free but shall not have set any longer than recommended by manufacturer, before intermediate priming. Intermediate coat shall be applied after priming has developed maximum bond strength with substrate and shall not trap any unevaporated solvent of the preceding coat.

Primers shall be applied by rolling or brushing. Primers shall be applied at a thickness recommended by the manufacturer in one coat.

Random wet film thickness readings shall be taken and recorded during installation.

Adequate ventilation shall be provided for proper solvent evaporation and safe working conditions.

Primer and cement containers and application utensils shall be kept isolated and well identified to prevent cross contamination of one material with another.

Primers shall be kept stirred or agitated to keep adhesive solids in suspension.

3M.5.8 Application of the Rubber Sheet. The cement and rubber sheet shall not be applied if the surface temperature or the work area temperature is less than 5 F above dew point or steel temperature is below 50 F or above 120 F or relative humidity is more than 80 per cent.

*EPA Request dated Oct 12, 2010, for Information Pursuant to Section 114 . Response #10 of 17 of Appendix B.

The intermediate primer shall be tack free but shall not have set any longer than 48 hours, or as recommended by manufacturer, before cement coat shall be applied after intermediate coat has developed maximum bond strength with substrate and shall not trap any unevaporated solvent.

One coat of tack cement shall be applied to the surface to be rubber lined and one coat shall be applied to the uncured rubber sheet. Rubber sheets shall be applied by hand and rolled in place with special tools.

The cement shall be applied at a thickness as recommended by manufacturer and shall be allowed to dry to develop maximum bond strength with substrate.

All adhesive system components shall be used as shipped in shipping containers. Adhesives shall be used within the manufacturer's recommended shelf life.

Rubber sheets shall be heated to a suitable temperature on a heat table for easy handling. No rubber sheet which has already started to air cure on surface should be used. Stocks older than twelve (12) weeks of shelf life shall be tested for acceptability.

Rubber sheet surfaces shall not be washed with any freshening solvent to make more tacky.

The layout of the rubber lining shall minimize the number of seams. The rubber sheets shall be lapped a minimum of 2 inches except where physically restricted. In no event shall a lap be less than 1-1/2 inches wide. In areas where laps of 1-1/2 inches wide are not possible, a cap will be provided with a minimum of 2 inch lap for such caps. Installation of the rubber liner shall start at the bottom of each module. Each succeeding layer shall overlap the previous layer so that the upper overlapping edge will not resist liquid flow.

During application, sheets shall be rolled and all seams and corners carefully stitched to eliminate all trapped air between lining and cemented surfaces so there is full contact with all cemented areas. Lining shall be installed in a static position free from undue tension in any direction.

Edges of all sheets shall be skived at a 30 degree minimum angle from the top surface to the bottom of the sheet. A closed skive construction commonly known as a down skive shall be used wherever possible.

3M.5.9 Lining of Nozzles, Manholes and Connections. The entire inside of the nozzles shall be rubber lined. If possible, there shall not be any internal peripheral laps. If any internal peripheral lap is required, the lap shall be in the direction of flow.

*EPA Request dated Oct 12, 2010, for Information Pursuant to Section 114 . Response #10 of 17 of Appendix B.

IP10_002623

Nozzles welded inside the vessel or tank shall be lined internally and externally with a one inch overlap on the shell wall.

Flange faces shall be covered with a separate piece of rubber stock that overlaps the nozzle lining by one inch.

Bolt holes of flanges on the inside of the vessel or tank shall be rubber lined with 1/8 inch thick rubber lining material. The final thickness of the rubber lining shall not be less than 1/8 inch.

Bolt holes of flanges on the outside of the vessel and tank shell shall not be rubber lined.

3M.5.10 Inspection and Repairs Before Vulcanization. Prior to vulcanization all lined surfaces shall be inspected for blisters (trapped air), pulls or lifted edges at seams, pinholes, wrinkles, bubbles, physical change, damage and surface defects. Any special dimensional tolerances required, after lining, shall also be checked.

All splices shall be inspected for looseness and uniformity.

Trapped air forming bubbles shall be detected by holding a light near the surface of the rubber and looking for shadow area caused by the bubble of trapped air forming high spots. All air shall be removed from between the sheet and the metal surface. Any air not removed by rolling shall be removed with a hypodermic needle, and the needle puncture shall be patched.

Spark tests for pinholes shall be made with a high potential spark tester adjusted to 10,000 volts. Defective areas shall be repaired and the lining shall be retested and inspected after curing. Durometer hardness shall be checked to assure that it meets the manufacturer's specifications. All pinholes and other lining defects shall be repaired in accordance with the approved procedures. No vulcanization shall be done until the rubber lining of entire module or tank has been inspected and repaired and those repairs inspected.

3M.5.11 Steam Vulcanization. Rubber lining materials shall be cured by steam vulcanization. The Owner will provide all equipment required to produce the vulcanization steam. Steam will be available at a valved connection at the Auxiliary Steam Generator in the General Services Building. The Contractor shall provide all temporary equipment required to transport steam required for curing to the points of use.

All openings in the vessel shall be blocked and made leakproof to prevent escape of steam. A drain shall be provided at the bottom for release and drain of condensate.

*EPA Request dated Oct 12, 2010, for Information Pursuant to Section 114 . Response #10 of 17 of Appendix B.

IP10_002624

Time, temperature and pressure of vulcanization shall be in accordance with lining manufacturer's specifications and procedures. Vulcanization with steam under pressure is preferred; however, atmospheric pressure exhaust steam is acceptable on large vessels and ducts.

Care shall be taken to heat the whole vessel uniformly. Thermostats or thermometers shall be placed at several locations and heights to monitor the temperature of the steam inside the vessel.

The Contractor shall submit the following test results of the cured compound for each lot of rubber lining. The test samples shall meet the minimum requirement as measured by the following tests: physical properties, including tensile strength, and elongation in per cent in accordance with ASTM D412; Shore A hardness in accordance with ASTM D2240; Angle tear, Die "C" per ASTM D624; per cent volume change per ASTM D471; and SP Gravity per ASTM D297, hydrostatic method.

Two 6 inch by 12 inch by 1/4 inch carbon steel plates shall be lined and cured simultaneously with each scrubber module and reaction tank. These samples shall be tested in accordance with ASTM D413, Type B machine method for both rubber-to-metal and rubber-to-rubber adhesion. If these tests indicate an adhesion of less than 25 pounds per inch, the vessel lining shall be considered to be unsatisfactory.

A 12 inch by 12 inch by 1/4 inch thick carbon steel plate shall be lined and cured simultaneously with each scrubber module and reaction tank. These samples shall be submitted to the Owner as a record of the completed and cured system.

3M.5.12 Inspection After Vulcanization. The installed and vulcanized lining shall present a smooth workmanship like appearance and shall be free of voids, blisters, pinholes, cracks, pits, bubbles, soft spots, disbonding, open seams, lifted edges, or any other defects which would impair its integrity. Evidence of poor workmanship shall also be cause for rejection. All cured rubber lining after vulcanizing shall be inspected with the same procedure as stated in Article 3M.5.10.

The cured rubber lining shall be tested for shore "A" Durometer. One reading per 60 square feet on flat surfaces and one reading for every 6 linear feet of beams shall be taken to assure the curing of the rubber lining. No destructive test such as peel tests shall be performed on the cured rubber lining within the module or tank unless approved by the Owner.

*EPA Request dated Oct 12, 2010, for Information Pursuant to Section 114 . Response #10 of 17 of Appendix B.

IP10_002625

Maximum allowable number of repair patches made after the rubber has cured excluding the rubber defect and/or pinholes shall be as follows.

For flat surfaces - 10 patches per 100 square feet

For beams and nozzles - 20 patches per 100 square feet

The rubber lining shall be removed from those areas that exceed the allowable number of patches. These areas shall be relined, recured and retested per the accepted procedures.

All fisheyes 1/8 of an inch or larger that do not penetrate more than 0.032 inch and which will withstand a 15 second spark test at the minimum voltage specified in Article 3M.5.10 are acceptable. If an area fails the spark test, the lining in the area of the failure shall be removed and the area shall be relined and retested.

No patches shall be permitted on flange facings, except outside the bolt circle and then they shall be ground smooth. All branch connections shall be located 180 degrees away from longitudinal seams, except where two longitudinal seams are used, then the branch shall be located at 90 degrees from seams.

All overlapped joints shall be ground smooth.

Extruded tubes that are creased, wrinkled, or have bubbles due to entrapped air between rubber tube and pipe shall be cause for rejection.

No patches or repairs on nozzles or flanges will be accepted when in contact with the flowing medium. There shall be "0" defects in the rubber liner in nozzles and flanges.

Lining thickness shall be spot tested in the presence of the Owner's representative prior to final acceptance.

Linings that do not meet minimum nominal thickness as specified shall be replaced or repaired and retested to the satisfaction of the Owner's representative.

All defects noted in the lining shall be repaired and retested by the Contractor. Complete surface area of all units lined shall be tested in the presence of the Owner's representative prior to final acceptance.

3M.5.13 Lining Repairs. Repairs of defects found before cure shall be done by use of uncured rubber. Tack cement shall be applied on the rubber surface and the back side of the rubber patch and when dried for a period of about 30 minutes, shall be rolled applied to the surface. The

*EPA Request dated Oct 12, 2010, for Information Pursuant to Section 114 . Response #10 of 17 of Appendix B.

IP10_002626

repair patch shall extend at least 2 inches beyond the periphery of the defective area. Pinholes (before and after cure) may be repaired by use of button patches.

For defects in cured rubber lining, the rubber lining from the affected area plus 2 inches on the periphery of the area shall be cut away and the exposed metal shall be ground until white metal is exposed. Then the repair shall be made per the lining manufacturer's recommendation.

All repaired lining shall be tested as called for in Articles 3M.5.10 or 3M.5.12, as applicable.

If the area to be repaired is more than 12 inches square, the defective rubber will be cut away and surface ground or sandblasted to white metal. The rubber patch shall then be applied over defective area with suitable cement and with 2 inch laps all around. This patch shall be cured with localized steam by use of a box to steam the patch.

3M.5.14 Protection of Lined Equipment. Lined equipment shall be suitably protected against adverse weather conditions and direct sunlight during curing and prior to start-up of system.

3M.5.15 Safety. Safety precautions shall conform to OSHA and lining manufacturer's recommendation. The area or areas where rubber lining activities shall be carried on will be roped off. Signs showing "DANGER - NO SMOKING" shall be displayed at prominent and obvious points.

A continuous supply of fresh air shall be maintained in the vessel or tank during priming, cementing and rubber lining operation.

Fire extinguishers shall be placed within easy reach and access inside the vessel when work is being carried on and at each platform level in the work area.

3M.5.16 Certificates and Tests. Certificates and test results on lining and all inspection reports shall be submitted to the Owner. (Durometer hardness, adhesive bond strength and water absorption). Adhesive bond strength test shall be performed on a sample covered with the same rubber lining material and adhesive to be used.

Facilities, equipment and labor for spark testing, dry film thickness and durometer hardness testing shall be provided by the Contractor.

3M.5.17 Quality Control Documentation. Surface profile of the sandblasted surface shall be checked by random readings and the profile recorded.

*EPA Request dated Oct 12, 2010, for Information Pursuant to Section 114 . Response #10 of 17 of Appendix B.

IP10_002627

The approximate size and location of areas which require reblasting shall be recorded. The thickness readings and their location shall be recorded.

The number of pinholes and surface imperfections and fisheyes repaired shall be recorded for each area or item of equipment. Copies of the records shall be submitted to Owner.

The amount of area and location of underthickness requiring repair shall be recorded. Copies of the records shall be submitted to Owner.

The amount of area and location of overthickness requiring repair shall be recorded. Copies of these records shall be submitted to Owner.

The foreman or his delegate shall measure and record the wet bulb temperature, dry bulb temperature, substrate temperature, relative humidity, and dew point each morning and at the beginning of the second half of the shift. This record shall be dated and signed and the location specified.

3M.5.18 Gunite Lining Application. Gunite materials shall be applied as specified in Section 3K.

*EPA Request dated Oct 12, 2010, for Information Pursuant to Section 114 . Response #10 of 17 of Appendix B.

Appendix A

Performance Curves

*EPA Request dated Oct 12, 2010, for Information Pursuant to Section 114 . Response #10 of 17 of Appendix B.

GENERAL ELECTRIC

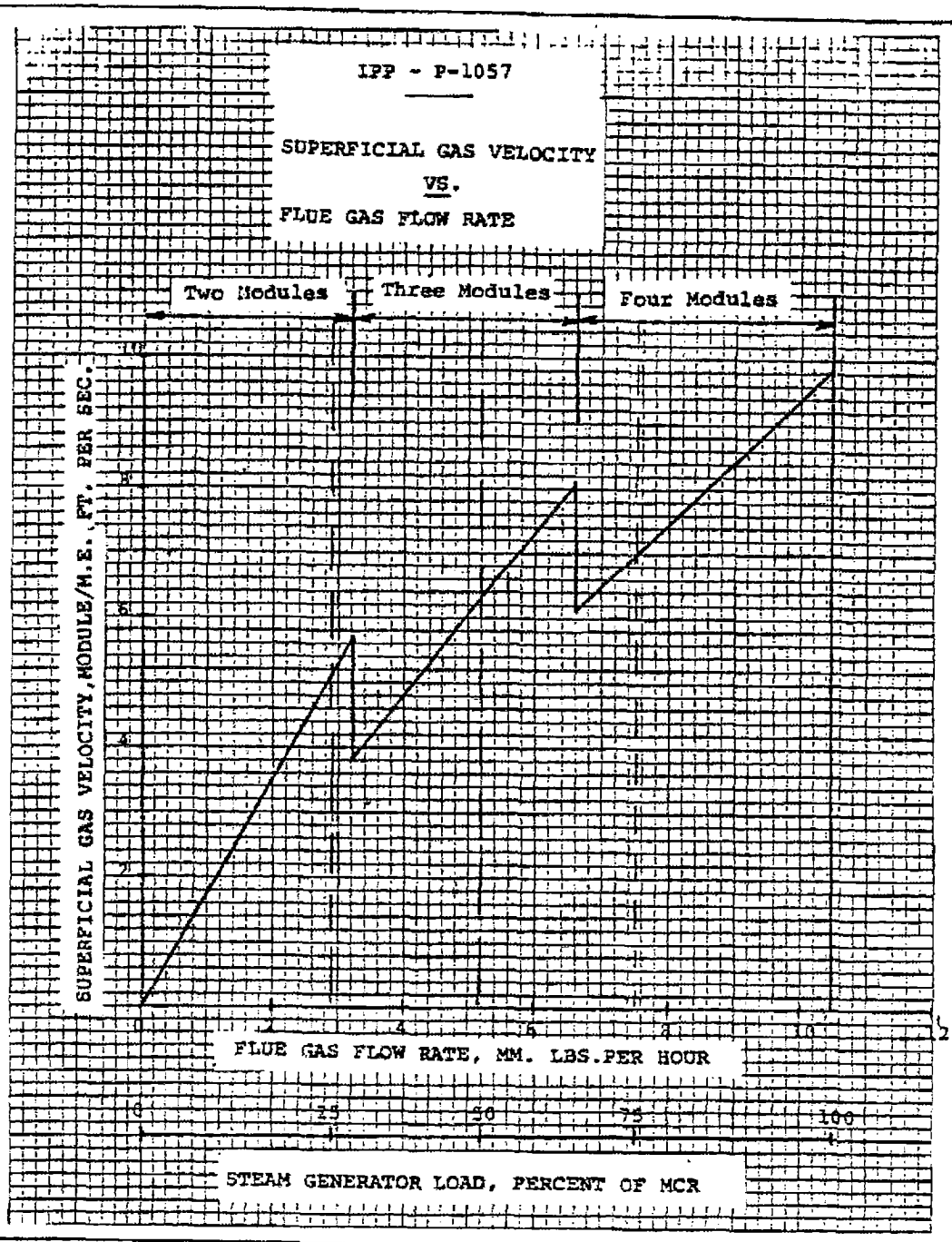

46 0060

General Electric Environmental Services, Inc.

*EPA Request dated Oct 12, 2010, for Information Pursuant to Section 114 . Response #10 of 17 of Appendix B.

IPP P 1057

WATER DROPLET CARRYOVER VS. FLUE GAS FLOW

BASIS: Flue Gas Per B. & V.'s specifications. Tables 2A.6.5, 2A.10.1

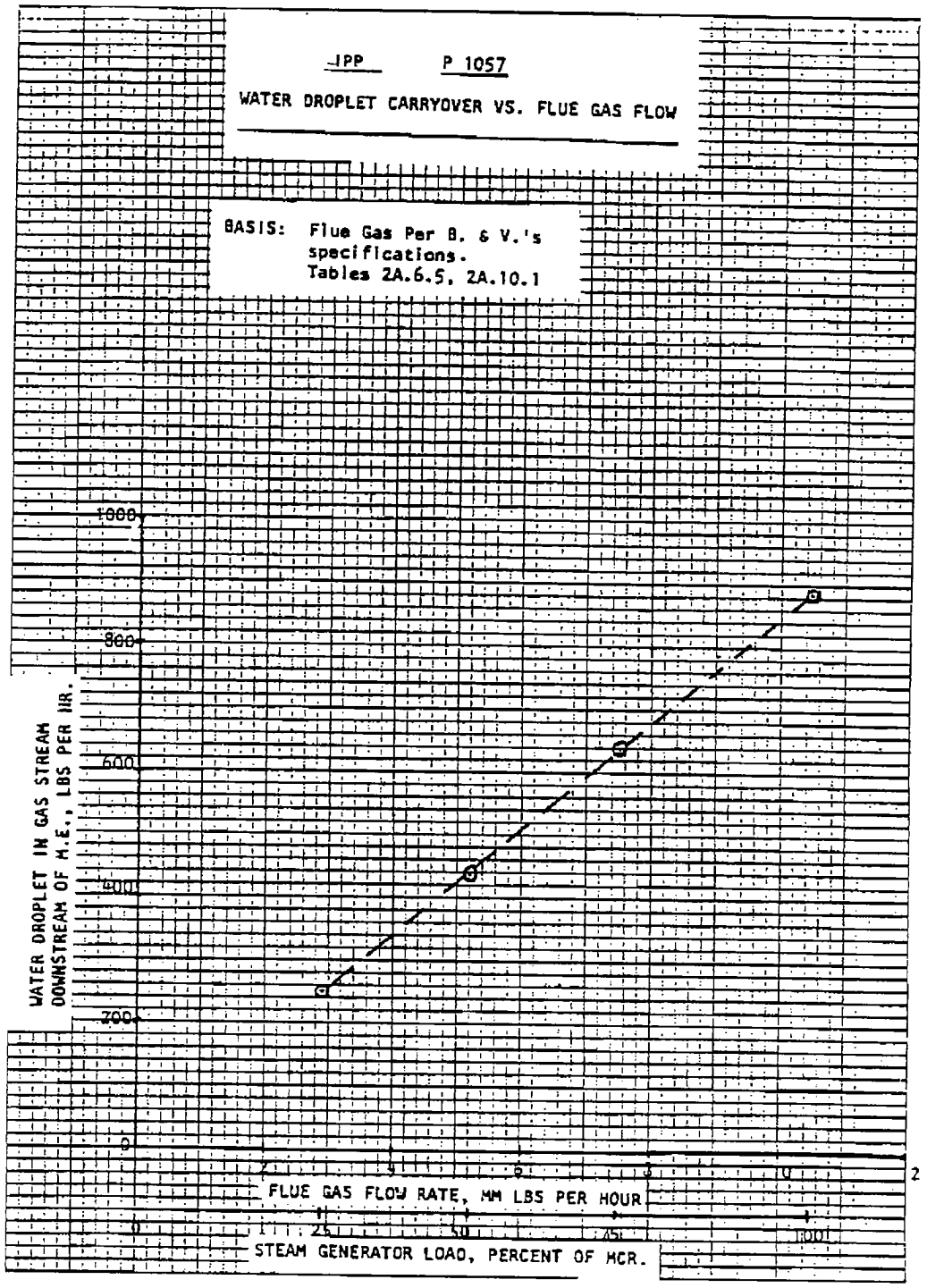

46 0863

*EPA Request dated Oct 12, 2010, for Information Pursuant to Section 114 . Response #10 of 17 of Appendix B.

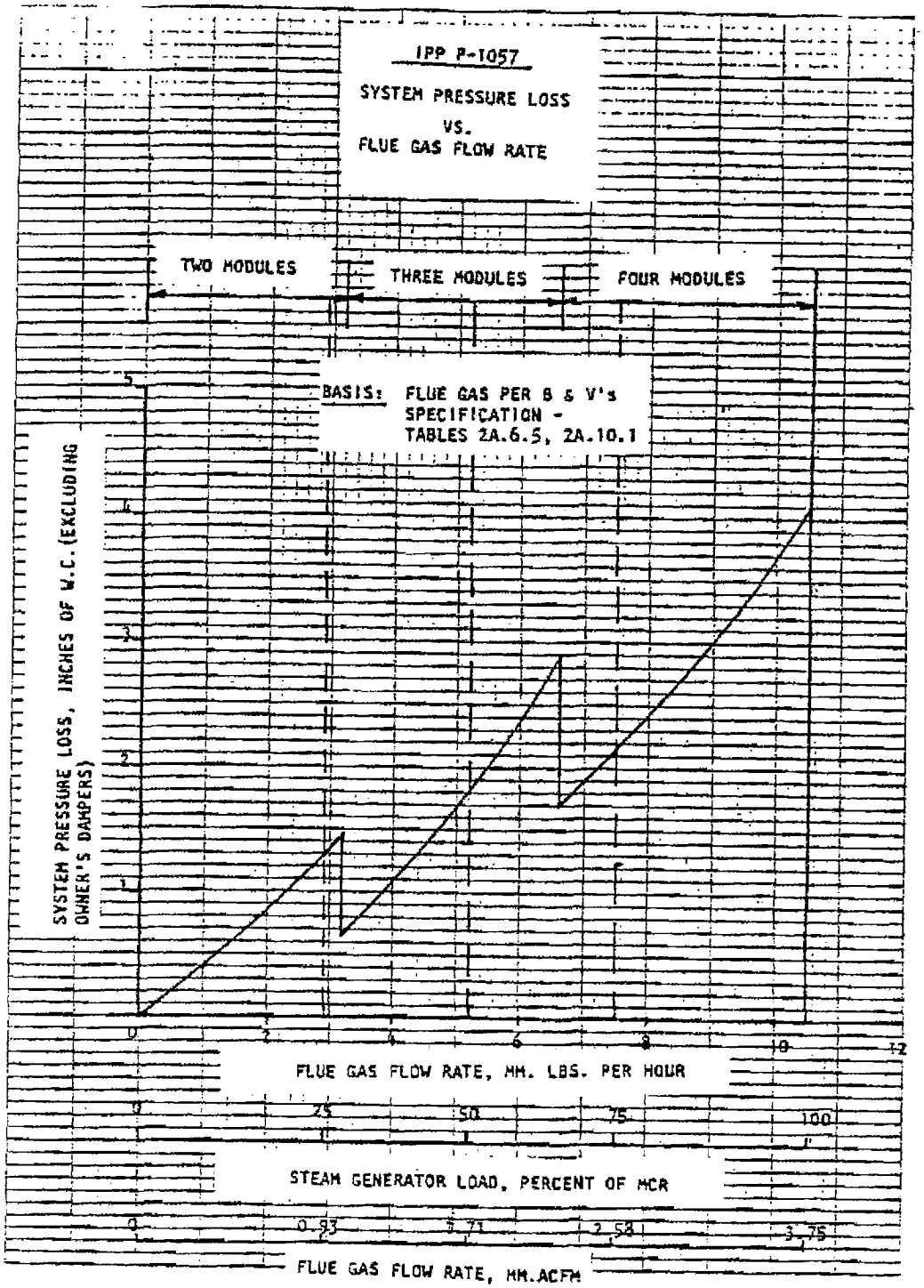

*EPA Request dated Oct 12, 2010, for Information Pursuant to Section 114 . Response #10 of 17 of Appendix B.

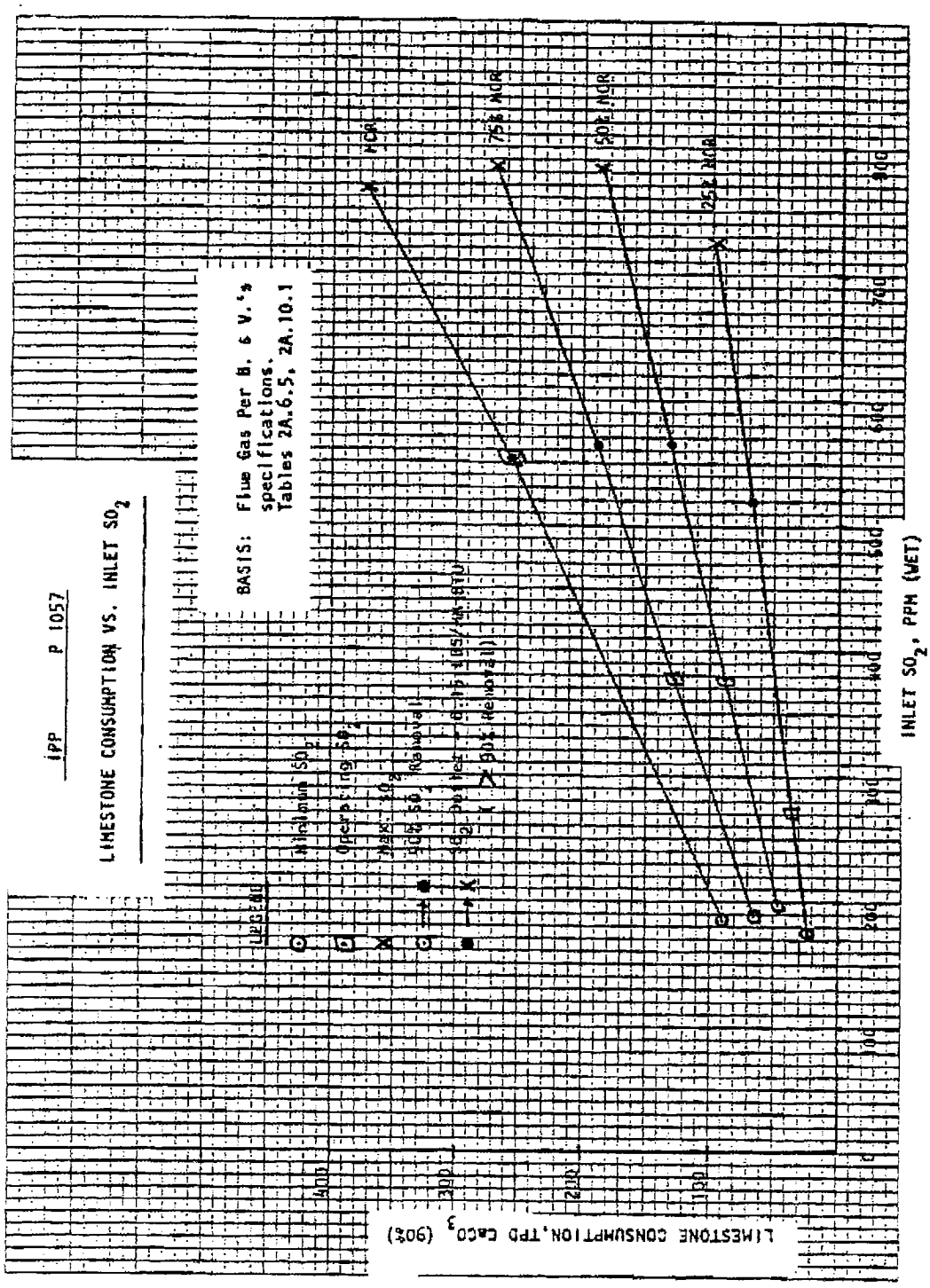

*EPA Request dated Oct 12, 2010, for Information Pursuant to Section 114 . Response #10 of 17 of Appendix B.

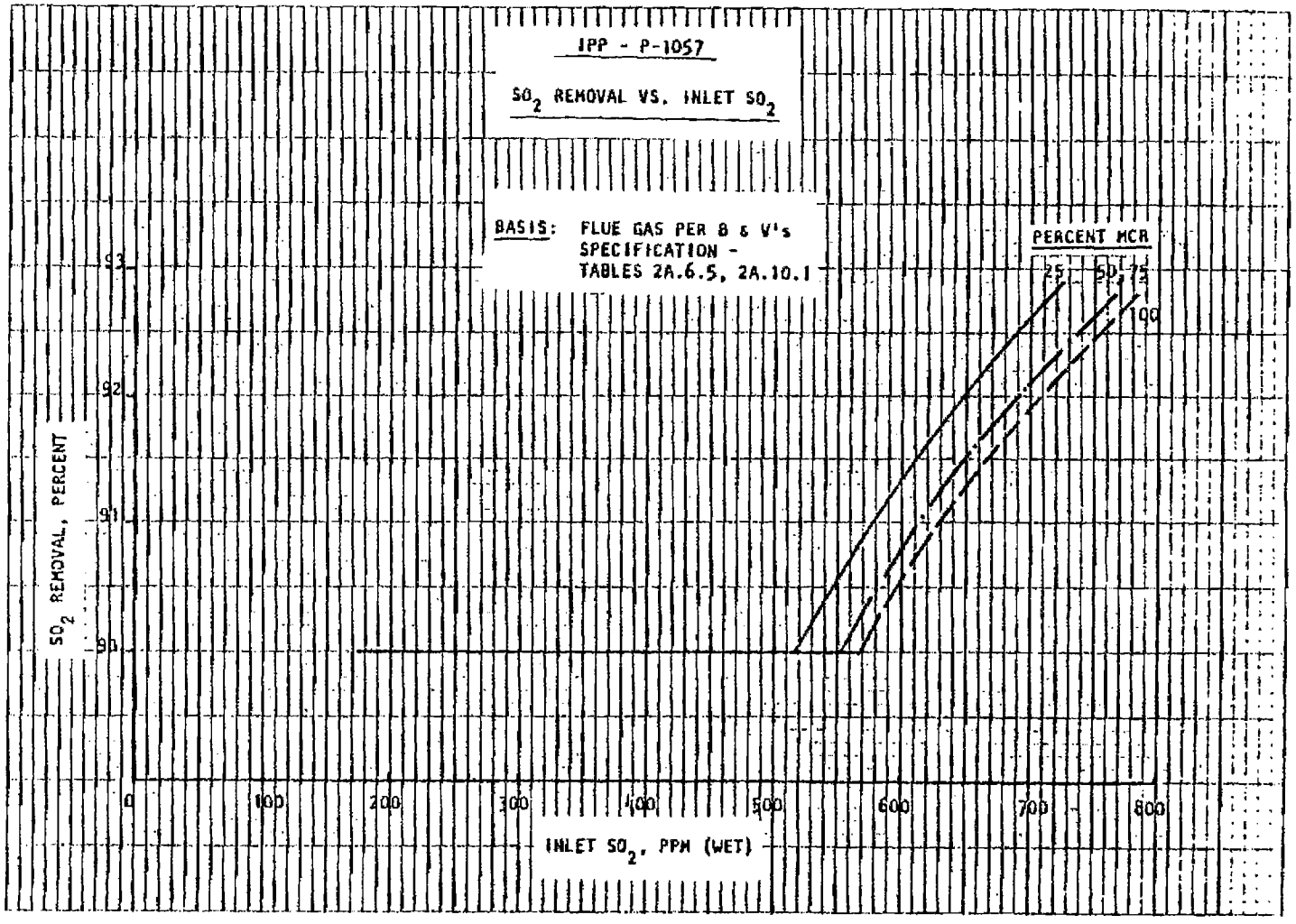

*EPA Request dated Oct 12, 2010, for Information Pursuant to Section 114 . Response #10 of 17 of Appendix B.

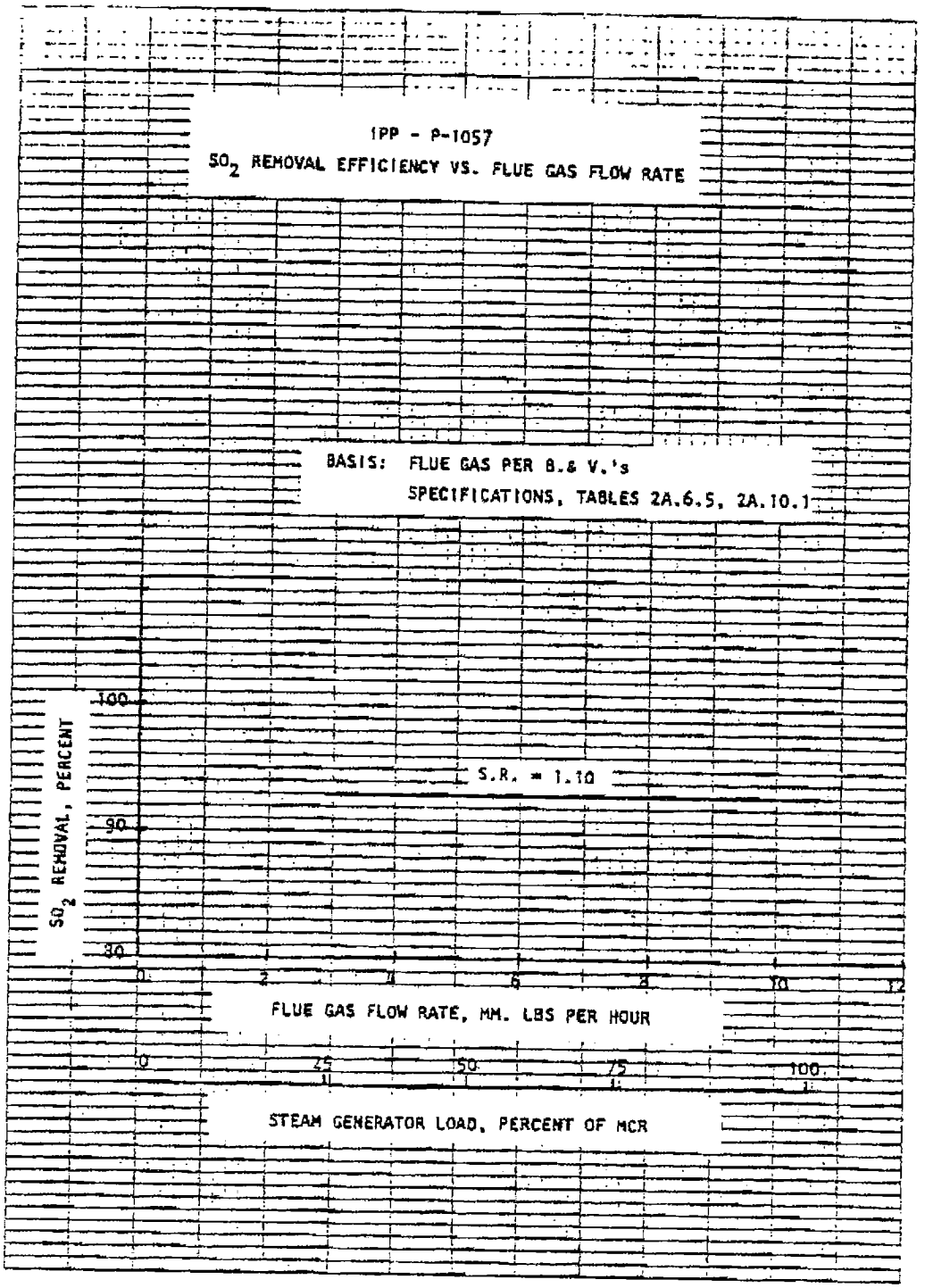

46 0860

*EPA Request dated Oct 12, 2010, for Information Pursuant to Section 114 . Response #10 of 17 of Appendix B.

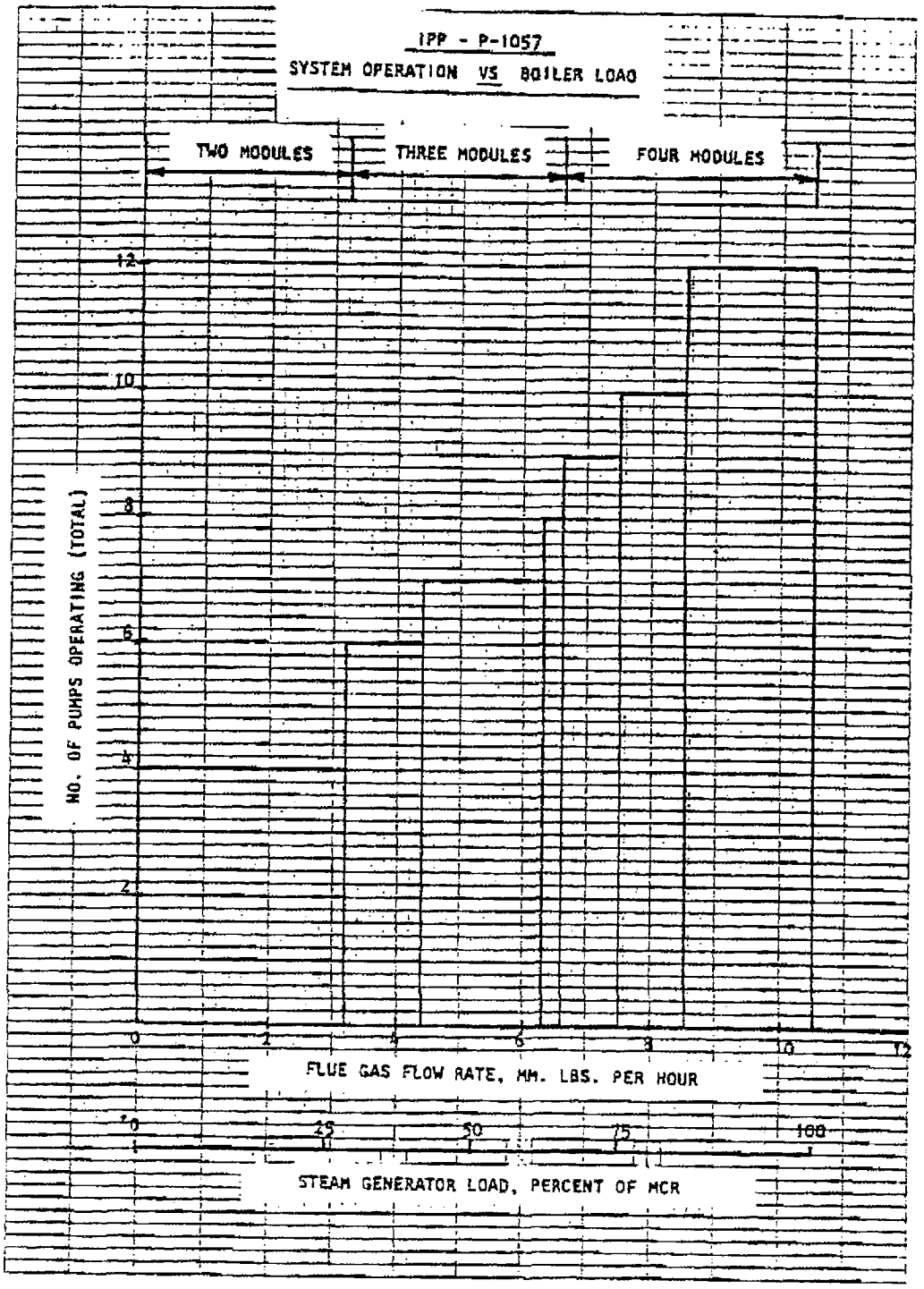

*EPA Request dated Oct 12, 2010, for Information Pursuant to Section 114 . Response #10 of 17 of Appendix B.

CHEMICO AIR POLLUTION CONTROL CORPORATION

INTERMOUNTAIN POWER PROJECT	POWER GUARANTEE
FGD, UNITS 1 THRU 4	USER'S LIST
DELTA, UTAH	6600 VOLTS & 480 VOLTS EQUIPMENT

Equip. No.	EQUIPMENT	QUANTITY * No. Inst. (NIN)	QUANTITY * No. Oper. (NOP)	AT MCR MOTOR DATA BHP	Motor HP (HP)	RPM	Motor Encl.	Oper. Hrs/Day (HPD)	Eff. High/Norm.
J-101A to J-106A	RECYCLE PUMPS	6	4	344.8	400	1800	TEFC	24	94.1
J-101B to J-106B	RECYCLE PUMPS	6	4	372.0	400	1800	TEFC	24	94.3
J-101C to J-105C	RECYCLE PUMPS	6	4	399.2	450	1800	TEFC	24	94.3
J-011 A,B	LIMESTONE SLURRY PUMP	2	1	49	60	1800	TEFC	24	High
J-012 A,B	M.E. WASH PUMP	2	1	56.8	75	1800	TEFC	24	"
L-011	LIMESTONE SLURRY TANK AGITATOR	1	1	52	60	1200	TEFC	24	"
L-101 to L-106	ABSORBER AGITATOR	6	4	53	60	1200	TEFC	24	"
L-107 to L-112	SOOT BLOWER DRIVE	72	1	0.5	0.6	1200	TEFC	24	"
L-107 to L-112	SOOT BLOWER ROTATION	72	1	0.5	0.6	1800	TEFC	24	"
M-001	BALL MILL DRIVE	3**	1	535	600	1200	TEFC	8.4	94.7
	BALL MILL LOW PRESS. LUBE PUMP	6**	2	1.8	2	1800	TEFC	8.4	High
	MILL SLURRY SUMP TANK PUMP	6**	1	40	60	1800	TEFC	8.4	"
	MILL SLURRY SUMP TANK AGITATOR	3**	1	2.3	3	1800	TEFC	24	"
N-012	LIMESTONE WEIGH FEEDER	3**	1	0.8	1	1800	TEFC	8.4	Norm.

PREPARED BY: R. Johansen	Checked by:	REFERENCE NUMBER: P-1057
I.P.P., Delta, Utah		SHEET 1 OF

*Quantities shown are for one unit except as noted below.
**Installed quantities are common for two units.

*EPA Request dated Oct 12, 2010, for Information Pursuant to Section 114 . Response #10 of 17 of Appendix B.

CHEMICO AIR POLLUTION CONTROL CORPORATION

INTERMOUNTAIN POWER PROJECT	POWER GUARANTEE
FGD, UNITS 1 THRU 4	USER'S LIST
DELTA, UTAH	6600 VOLTS & 480 VOLTS EQUIPMENT

Equip. No.	EQUIPMENT	QUANTITY *		75% OF MCR MOTOR DATA					
		No. Inst. (NIN)	No. Oper. (NOP)	BHP	Motor HP (HP)	RPM	Motor Encl.	Oper. Hrs/Day (HPD)	Eff. High/Norm
J-101A to J-106A	RECYCLE PUMPS	6	4	344.8	400	1800	TEFC	24	94.1
J-101B to J-106B	RECYCLE PUMPS	6	4	372.0	400	1800	TEFC	24	94.3
J-101C to J-106C	RECYCLE PUMPS	6	1	399.2	450	1800	TEFC	24	94.3
J-011 A,B	LIMESTONE SLURRY PUMP	2	1	49	60	1800	TEFC	24	High
J-012 A,B	M.E. WASH PUMP	2	1	56.8	75	1800	TEFC	24	"
L-011	LIMESTONE SLURRY TANK AGITATOR	1	1	52	60	1200	TEFC	24	"
L-101 to L-106	ABSORBER AGITATOR	6	4	53	60	1200	TEFC	24	"
L-107 to L-112	SOOT BLOWER DRIVE	72	1	0.5	0.6	1200	TEFC	24	"
L-107 to L-112	SOOT BLOWER ROTATION	72	1	0.5	0.6	1800	TEFC	24	"
M-001	BALL MILL DRIVE	3**	1	535	600	1200	TEFC	4.2	94.7
	BALL MILL LOW PRESS. LUBE PUMP	6**	2	1.8	2	1800	TEFC	4.2	High
	MILL SLURRY SUMP TANK PUMP	6**	1	40	60	1800	TEFC	4.2	"
	MILL SLURRY SUMP TANK AGITATOR	3**	1	2.5	3	1800	TEFC	24	"
N-012	LIMESTONE WEIGH FEEDER	3**	1	0.8	1	1800	TEFC	4.2	Norm.

PREPARED BY: R. Johansen	Checked by:	REFERENCE NUMBER: P-1057
I.P.P., Delta, Utah		SHEET OF

*Quantities shown are for one unit except as noted below.
**Installed quantities are common for two units.

*EPA Request dated Oct 12, 2010, for Information Pursuant to Section 114 . Response #10 of 17 of Appendix B.

CHEMICAL AIR POLLUTION CONTROL CORPORATION

INTERMOUNTAIN POWER PROJECT

FGD, UNITS 1 THRU 4

POWER GUARANTEE

USER'S LIST

DELTA, UTAH

6600 VOLTS & 480 VOLTS EQUIPMENT

Equip. No.	EQUIPMENT	QUANTITY * No. Inst. (NIN)	QUANTITY * No. Oper. (NOP)	AT 50% OF MCR MOTOR DATA BHP	Motor HP (HP)	RPM	Motor Encl.	Oper. Hrs/Day (HPD)	Eff. High/Norm.
J-101A to J-106A	RECYCLE PUMPS	6	3	344.8	400	1800	TEFC	24	94.1
J-101B to J-106B	RECYCLE PUMPS	6	3	372.0	400	1800	TEFC	24	94.3
J-101C to J-106C	RECYCLE PUMPS	6	0	399.2	450	1800	TEFC	24	94.3
J-011 A,B	LIMESTONE SLURRY PUMP	2	1	49	60	1800	TEFC	24	High
J-012 A,B	M.E. WASH PUMP	2	1	56.8	75	1800	TEFC	24	"
L-011	LIMESTONE SLURRY TANK AGITATOR	1	1	52	60	1200	TEFC	24	"
L-101 to L-106	ABSORBER AGITATOR	6	3	53	60	1200	TEFC	24	"
L-107 to L-112	SOOT BLOWER DRIVE	72	1	0.5	0.6	1200	TEFC	24	"
L-107 to L-112	SOOT BLOWER ROTATION	72	1	0.5	0.6	1800	TEFC	24	"
M-001	BALL MILL DRIVE	3**	1	535	600	1200	TEFC	2.9	94.7
	BALL MILL LOW PRESS. LUBE PUMP	6**	2	1.8	2	1800	TEFC	2.9	High
	MILL SLURRY SUMP TANK PUMP	6**	1	40	60	1800	TEFC	2.9	"
	MILL SLURRY SUMP TANK AGITATOR	3**	1	2.5	3	1800	TEFC	24	"
N-012	LIMESTONE WEIGH FEEDER	3**	1	0.8	1	1800	TEFC	2.9	Norm.

PREPARED BY R. Johansen

I.P.P., Delta, Utah

Checked by:

REFERENCE NUMBER P-1057

*Quantities shown are for one unit except as noted below.

**Installed quantities are common for two units.

*EPA Request dated Oct 12, 2010, for Information Pursuant to Section 114 . Response #10 of 17 of Appendix B.

CHEMICO AIR POLLUTION CONTROL CORPORATION

INTERMOUNTAIN POWER PROJECT	POWER GUARANTEE
FGD, UNITS 1 THRU 4	USER'S LIST
DELTA, UTAH	6600 VOLTS & 480 VOLTS EQUIPMENT

Equip. No.	EQUIPMENT	QUANTITY * No. Inst. (NIN)	QUANTITY * No. Oper. (NOP)	25% OF MCR MOTOR DATA BHP	Motor HP (HP)	RPM	Motor Encl.	Oper. Hrs/Day (HPD)	Eff. High/Norm
J-101A to J-106A	RECYCLE PUMPS	6	2	344.8	400	1800	TEFC	24	94.1
J-101B to J-106B	RECYCLE PUMPS	6	2	372.0	400	1800	TEFC	24	94.3
J-101C to J-106C	RECYCLE PUMPS	6	0	399.2	450	1800	TEFC	24	94.3
J-011 A,B	LIMESTONE SLURRY PUMP	2	1	49	60	1800	TEFC	24	High
J-012 A,B	M.E. WASH PUMP	2	1	56.8	75	1800	TEFC	24	"
L-011	LIMESTONE SLURRY TANK AGITATOR	1	1	52	60	1200	TEFC	24	"
L-101 to L-106	ABSORBER AGITATOR	6	2	53	60	1200	TEFC	24	"
L-107 to L-112	SOOT BLOWER DRIVE	72	1	0.5	0.6	1200	TEFC	24	"
L-107 to L-112	SOOT BLOWER ROTATION	72	1	0.5	0.6	1800	TEFC	24	"
M-001	BALL MILL DRIVE	3**	1	535	600	1200	TEFC	1.2	94.7
	BALL MILL LOW PRESS. LUBE PUMP	6**	2	1.8	2	1800	TEFC	1.2	High
	MILL SLURRY SUMP TANK PUMP	6**	1	40	60	1800	TEFC	1.2	"
	MILL SLURRY SUMP TANK AGITATOR	3**	1	2.5	3	1800	TEFC	24	"
N-012	LIMESTONE WEIGH FEEDER	3**	1	0.8	1	1200	TEFC	1.2	Norm.

PREPARED BY: R. Johansen	Checked by:	REFERENCE NUMBER: P-1057
I.P.P., Delta, Utah		SHEET 1 OF 1

*Quantities shown are for one unit except as noted below.
**Installed quantities are common for two units.

*EPA Request dated Oct 12, 2010, for Information Pursuant to Section 114 . Response #10 of 17 of Appendix B.

BIDDING DOCUMENTS

	Page thru Page	
INSTRUCTIONS TO BIDDERS	B-1	B-14
PROPOSAL	C-1	C-25
BID BOND AND POWER OF ATTORNEY	3 pages	
SPARE PARTS LIST	5 pages	
SEVEN YEAR REPLACEMENT PARTS LIST	One page	
PROPOSAL DATA	D-1	D-89

[IPP 9255 WET SCRUBBER 62.0202]
[021782]
TCBD-1

*EPA Request dated Oct 12, 2010, for Information Pursuant to Section 114 . Response #10 of 17 of Appendix B.

INSTRUCTIONS TO BIDDERS

B.1 GENERAL. These instructions apply to the preparation of proposals for equipment, materials, and related work for the Intermountain Power Agency, hereinafter referred to as the "Owner," acting through its agent, the Los Angeles Department of Water and Power, hereinafter referred to as the "Project Manager."

All proposals shall be prepared and submitted in accordance with these instructions and the letter transmitting the specifications and documents.

B.2 GENERAL PROJECT DESCRIPTION. The specified equipment and materials will be incorporated into the Intermountain Generating Station, a new coal fueled steam electric generating station and related facilities located near Delta, Utah.

Section 1A, General Description and Scope of the Work, of these specifications and documents describes the scope of work to be included in the proposal.

B.3 BIDDER QUALIFICATIONS. In order for their proposals to be considered, bidders may be required to demonstrate that they are qualified to satisfactorily perform the specified work. Upon request, the prospective bidder shall submit written evidence of his qualifications to the Project Manager and the Engineer, in duplicate. Such evidence shall include all information necessary to certify that the bidder:

Is regularly engaged in the manufacture of materials and equipment of the type specified;

Does not anticipate change in ownership or major policy during the period of the proposed work. If such change is anticipated the scope and effect thereof shall be defined;

Has adequate plant and manufacturing capacity available to do the work properly and expeditiously within the time period specified;

Has adequate financial status to meet the financial obligations incident to the work;

Has no just or proper claims pending against him regarding the quality of performance of his work; and

Has designed and manufactured units having similar design requirements. The evidence shall consist of a selected listing of the units, indicating for each unit the owner's

*EPA Request dated Oct 12, 2010, for Information Pursuant to Section 114 . Response #10 of 17 of Appendix B.

name, location, actual or projected date of initial operation, and rating. The listing shall be specially prepared for this particular bidding and shall list only those units falling under the above requirements. Specific discussions of the bidder's experience with major equipment of the size proposed shall be included.

B.4 SPECIFICATIONS AND DOCUMENTS. Prospective bidders who intend to make a direct bid to the Owner will be loaned without charge eight complete bound copies of the specifications and documents, including the bidding documents, and 10 separate copies of the bidding documents as listed in the Table of Contents.

B.5 PROPOSALS. A proposal shall be comprised of the bidding documents completed by the bidder plus such supplemental information required by the specifications and documents or deemed necessary by the bidder. Eight copies of each proposal shall be prepared and submitted. Proposals which are not prepared and submitted in accordance with these Instructions to Bidders will imply that the bidder does not intend to comply with all of the requirements of the specifications and documents and such proposals may be considered irregular.

If the prospective bidder declines to bid he shall return all copies of the bidding documents and the specifications and documents to the Engineer and give written notice to the Engineer and the Project Manager not later than the time specified for receipt of proposals.

B.5.1 Preparation. Each proposal shall be carefully prepared using the proposal and proposal data forms included as a part of the bidding documents. Entries on the proposal and proposal data forms shall be typed, using dark black ribbon, or legibly written in black ink. All prices shall be stated in words and figures except where the forms provide for figures only.

The bidder shall acknowledge receipt of addenda in the place provided in the proposal. The bidder shall assemble all drawings, catalog data, and other supplementary information necessary to thoroughly describe materials and equipment covered by the proposal, and shall attach such supplemental information to each copy of bidding documents submitted.

B.5.2 Exceptions. Each bidder shall list as provided in the variations and exceptions part of the Proposal Data section all exceptions or conflicts between his proposal and the specifications and documents. If more space is required for this listing, additional pages may be added. If the bidder takes no exceptions, he shall write "None" in the space provided. If the bidder takes exception, then all such exceptions shall be specific in nature and carefully referenced to the applicable page

*EPA Request dated Oct 12, 2010, for Information Pursuant to Section 114 . Response #10 of 17 of Appendix B.

number, article number, and title of the specifications and documents. If the bidder proposes deletion of specification language and substitution of revised language, then such deletion and substitution shall be carefully presented by typing complete paragraphs or articles of the original specification language and incorporating the substitute language. Proposed deletions shall be set off by parentheses, thus: "(delete this language)," and proposed substitute language shall be indicated by underlining, thus: "substitute this language." Exceptions that are general or which make reference to the bidder's descriptive information as a whole will not be acceptable. Proposals which do not comply with these requirements for the presentation of exceptions will not be acceptable and may be rejected.

In the event a proposal includes express or implied exceptions that are not listed as required, the requirements of the specifications and documents shall govern. The bidder shall not alter any part of the specifications and documents in any way, except by stating his exceptions.

B.5.3 Signatures. Each bidder shall sign the proposal with his usual signature and shall give his full business address. The bidder's name stated on the proposal shall be the exact legal name of the firm. The names of all persons signing should also be typed or printed below the signature.

Proposals by partnerships shall be signed with the partnership name followed by the signature and designation of one of the partners or other authorized representative. A complete list of the partners shall be included with the proposal.

Proposals by a corporation shall be signed in the official corporate name of the corporation, as it appears on the bidder's corporate seal followed by the signature and designation of the president, secretary, or other person authorized to bind the corporation.

A proposal by a person who affixes to his signature the word "president," "secretary," "agent," or other designation, without disclosing his principal, will be deemed irregular. Satisfactory evidence of the authority of the officer signing in behalf of the corporation shall be furnished. Bidding corporations shall designate the state in which they are incorporated and the address of their principal office.

B.5.4 Submittal. Proposals shall be submitted not later than the date and time stipulated in the Notice Inviting Proposals as follows.

The original and one copy to:

Intermountain Power Agency
P. O. Box BB
Sandy, Utah 84070

Attention: Executive Officer

*EPA Request dated Oct 12, 2010, for Information Pursuant to Section 114 . Response #10 of 17 of Appendix B.

Four copies (three with pricing information, one unpriced) of the proposal to:

Intermountain Power Project
Department of Water and Power
Room 931, General Office Building
P. O. Box 111 T.A.
Los Angeles, California 90051

Attention: Purchasing Manager

Three copies of the proposal to:

Black & Veatch, Consulting Engineers
P. O. Box 8405
Kansas City, Missouri 64114

Attention: Intermountain Power Project
R. W. Dutton

Instead of mailing to the above addresses, proposals may be delivered by messenger to the following street addresses.

Intermountain Power Agency
8722 South 300 West
Sandy, Utah

Attention: Executive Officer

Intermountain Power Project
Department of Water and Power
Room 931, General Office Building
111 North Hope Street
Los Angeles, California 90012

Attention: Purchasing Manager

Black & Veatch, Consulting Engineers
11401 Lamar
Overland Park, Kansas

Attention: Intermountain Power Project
R. W. Dutton

Proposals shall be submitted in a sealed envelope or package. The envelope shall be plainly marked in the upper or lower left-hand corner with the name and address of the bidder and the words "Proposal for," followed by the name of the proposed work and the specification number. The proposal guarantee shall be enclosed in the envelope or package mailed or delivered to the Project Manager.

*EPA Request dated Oct 12, 2010, for Information Pursuant to Section 114 . Response #10 of 17 of Appendix B.

A single proprietary interest shall not submit multiple proposals for the same work even though the individual proposals are submitted under different names. The Project Manager reserves the right to reject all proposals so submitted.

B.5.5 Withdrawal. Proposals may be withdrawn, altered, and resubmitted at any time before the time set for receipt of proposals. Proposals may not be withdrawn, altered, or resubmitted within 120 days thereafter.

*EPA Request dated Oct 12, 2010, for Information Pursuant to Section 114 . Response #10 of 17 of Appendix B.

B.6 INFORMATION TO BE SUBMITTED WITH PROPOSAL. Each bidder shall submit with his proposal pertinent information concerning proposed equipment and materials, the proposed project organization, a list of established agents or representatives, his quality assurance program, and an inspection and test outline.

B.6.1 Equipment and Materials. Each bidder shall submit with his proposal the name of the manufacturer and the type or model of each principal item of equipment or material he proposes to furnish. He shall also submit drawings and descriptive matter indicating general dimensions, principle of operation, and the materials from which the parts are made. Any proposal not having sufficient descriptive matter to describe accurately the equipment or materials proposed may be deemed irregular. The drawings and descriptive matter submitted by the successful bidder will be retained by the Project Manager. No material departure from these drawings and descriptive matter as submitted will be permitted without written approval from the Project Manager.

*Reliability, availability and maintainability of equipment will be factors considered in evaluation of proposals.

Verbal statements made by the bidder at any time regarding quality, quantity or arrangement of equipment will not be considered.

If alternate equipment or materials are indicated in the proposal, it shall be understood that the Project Manager will have the option of selecting any one of the alternates so indicated and such selection shall not be a cause for extra compensation or extension of time.

B.6.2 Bidder's Project Organization. Each bidder shall submit with his proposal an organization chart showing the names of project management, supervisory, technical, and quality assurance personnel, and the details of the management, supervisory, and technical organization which he proposes to use for this project. The successful bidder's organization will be subject to the review and acceptance of the Project Manager. The names and experience records of the bidder's project manager and other key project and plant site personnel shall be submitted with the proposal. The experience information shall identify a person to contact to obtain any additional information required regarding the experience records.

Prior to award of contract, the Project Manager will interview the successful bidder's prospective project manager. The successful bidder's project manager shall be assigned only after written approval of the Project Manager has been obtained after award of contract, the Contractor's project manager shall not be reassigned without the written approval of the Project Manager before all equipment and erection have been accepted. Replacement personnel for the Contractor's project manager and other key project and plant site personnel shall be selected only after written approval of the Project Manager has been obtained.

*Addendum No. 2

*EPA Request dated Oct 12, 2010, for Information Pursuant to Section 114 . Response #10 of 17 of Appendix B.

The Contractor's project manager shall not be assigned any responsibilities other than the administration of this Contract.

B.6.3 Established Agent or Representative. The Project Manager desires that each bidder have an established agent or representative located in the Los Angeles, California and Kansas City, Missouri areas who is qualified and authorized to give technical assistance when required. In addition, it is important to have an agent or representative located in Utah near the plant site.

Each bidder shall state in the Proposal Data section the name and location of his Los Angeles, Kansas City, and Utah agents or representatives or if such agent or representative is not located in the City of Los Angeles, in Kansas City, or in Utah, the nearest headquarters of such agent or representative.

B.6.4 Quality Assurance Manual. Bidders shall submit with their proposal an uncontrolled copy of their Quality Assurance Manual for a quality assurance program evaluation. The manual shall contain procedures that the bidder will follow for the performance of the work under this Contract. The manual should contain procedures that apply only to work similar to that under this Contract and should contain implementation exhibits that will be used.

B.6.5 Inspection and Test Outline. Bidders shall submit with their proposal an outline of the inspection and test procedures to be followed in furnishing and erecting the equipment. The inspection and test outline shall define points for inspections and testing. The inspection and test outline of the successful bidder is subject to modification as determined by the Project Manager for implementation of an acceptable inspection and *test program for the work. The Project Manager will designate required witness points on the inspection and test outline of the successful bidder.

B.7 PROPOSAL GUARANTEE. Each proposal shall be accompanied by a pro-**posal guarantee in an amount not less than 5 per cent of the total base proposal price indicated on the proposal form. The guarantee shall be a certified check or cashier's check drawn on any solvent bank, or an acceptable bidder's bond executed by the bidder and a surety company authorized to do business in the State of Utah.

The proposal guarantee shall be made payable without condition to Intermountain Power Agency, and the amount thereof may be retained by said Intermountain Power Agency as liquidated damages if the bidder's proposal is accepted and the bidder fails to enter into contract in the form prescribed, with legally responsible surety.

The proposal guarantee of each unsuccessful bidder will be returned. The proposal guarantee of the bidder to whom the contract is awarded will be returned when said bidder executes the Contract Agreement and, if required, files satisfactory Performance, Guarantee and Payment Bonds. The proposal guarantee of the second lowest responsible bidder may be

*Addendum No. 3
**Addendum No. 1

*EPA Request dated Oct 12, 2010, for Information Pursuant to Section 114 . Response #10 of 17 of Appendix B.

IP10_002648

retained for a period not to exceed 120 days pending the execution of the Contract Agreement and Performance, Guarantee and Payment Bonds by the successful bidder.

B.8 LOCAL CONDITIONS. Each bidder shall visit the site of the work or otherwise thoroughly inform himself of all conditions and factors which would affect the prosecution and completion of the field erection work; including, but not limited to, the arrangement and condition of existing or proposed structures affecting or which are affected by the proposed work; the procedure necessary for maintenance of uninterrupted operation; the availability and cost of labor; and facilities for transportation, handling and storage of materials and equipment.

Visits to the site shall be coordinated with the Project Manager at least 10 days in advance by calling telephone number 801-864-3845.

It must be understood and agreed that all such factors have been properly investigated and considered in the preparation of every proposal submitted. No claims for financial adjustment to any contract awarded for the work will be permitted by the Owner which are based on the lack of such prior information or its effect on the cost of the work.

B.9 INTERPRETATION. If any prospective bidder is in doubt as to the true meaning of any part of the specifications and documents, he may submit to the Engineer a written request for an interpretation. The person submitting the request will be responsible for its prompt delivery. Any interpretation of the specifications and documents will be made only by addenda transmitted to each party receiving a set of such documents. The Owner will not be responsible for any other explanations or interpretations of the specifications and documents.

It shall be the bidder's responsibility to advise the Engineer, before the time specified for receipt of proposals, of conflicting requirements or omissions of information which require clarification. Those questions not resolved by addenda shall be listed with the exceptions in the Proposal Data section, together with a statement of the basis upon which the proposal is made as affected by each question.

B.10 BONDS. The bidder to whom the work is awarded may, at the option of the Project Manager, be required to furnish a Performance Bond, a Guarantee Bond, and a Labor and Materials Payment Bond to the Owner.

The Performance Bond shall be in an amount equal to 100 per cent of the contract price for furnishing and erecting the equipment and materials.

The Guarantee Bond shall be in an amount equal to 50 per cent of the contract price for furnishing the equipment and materials.

The Labor and Materials Payment Bond shall be in an amount equal to 100 per cent of the contract price for the erection portion of the work.

*EPA Request dated Oct 12, 2010, for Information Pursuant to Section 114 . Response #10 of 17 of Appendix B.

The bonds shall remain in full force and effect until satisfactory completion of the formal performance guarantee test to be conducted approximately one year after the initial formal performance guarantee test on the flue gas wet scrubber or the satisfactory fulfillment of all other contract requirements, whichever shall last occur.

Where indicated on the proposal form, the cost of the bonds shall be included in the lump sum base bid prices for the work and also in the adjusting prices for optional items of work. Separate prices for adjusting the contract amount for deletion of the bonds shall also be stated. The bond deduction prices shall be stated in dollars per thousand dollars of contract amount.

The bonds shall be prepared on the forms provided herein and executed by a surety company authorized to do business in the State of Utah and acceptable as surety to the Project Manager. A Power of Attorney, certified to include the date of execution of the bond, evidencing the authority of the individual executing the bond on behalf of the surety shall accompany each bond.

B.11 PROPOSAL PRICING. Firm price proposals are requested. However, proposals may be submitted with either, or both, the equipment portion or the erection portion of the proposal price subject to adjustment. The bidder's choice of pricing method shall be designated in the proposal.

If prices are subject to adjustment, the bidder shall submit the price adjustment information requested in the Proposal Data section.

B.11.1 Equipment Pricing. If equipment prices are subject to adjustment, the successful bidder's contract price will be adjusted upward or downward to reflect changes in the equipment adjustment indices.

The price stated for equipment in the proposal shall be the price in effect at the time specified for receipt of proposals. At the bidder's option, the total price or any portion thereof may be firm until a future date and subject to adjustment thereafter.

B.11.1.1 Equipment Adjustment Indices. The bidder shall base any equipment price adjustment on the indices listed herein.

The bidder shall state the date on which the equipment price adjustment shall begin.

The following indices shall apply.

For material:

U.S. Department of Labor, Bureau of Labor Statistics, Producer Prices and Price Indexes for Commodity Groupings and Individual Items, Commodity
* Code 1013, Steel Mill Products and index PPI 07 Rubber and Plastic Products as published in Producer Prices and Price Indexes

*Negotiated Revision 011382

*EPA Request dated Oct 12, 2010, for Information Pursuant to Section 114 . Response #10 of 17 of Appendix B.

For shop labor:

U.S. Department of Labor, Bureau of Labor Statistics, Gross Hours and Earnings of Production or Non-Supervisory Workers on Private Non-Agricultural Payrolls by Industry, Average Hourly Earnings, 1972 SIC Code 34, Fabricated Metal Products as published in Employment and Earnings

The bidder's attention is directed to the article in the General Conditions entitled Equipment Price Adjustment for additional requirements regarding the application of price indices.

B.11.1.2 Equipment Proposal Breakdown. As part of the information to be stated in the Proposal Data section, the bidder shall provide a percentage breakdown of the lump sum proposal price for equipment providing the following information.

Per cent of equipment proposal price not subject to adjustment

Per cent of equipment proposal price subject to material adjustment

Per cent of equipment proposal price subject to shop labor adjustment

B.11.2 Erection Pricing. If an erection proposal subject to adjustment is submitted, the adjustment shall be limited to that necessary to account for changes in craft labor wage rates*/, plus changes in accordance */**with Code 112, Construction Machinery and Equipment, Table 6/ and index PPI 07 Rubber and Plastic Products, Producer Prices and Price Indexes. All such escalation shall be calculated for Construction Material, Equipment, Supplies, etc. The bidder shall base his lump sum proposal price for erection work on the craft labor contracts in effect as of the proposal date. For those crafts whose contracts expire during the term of this Contract, adjustment will be applied to account for the change in labor rates which may occur as new craft labor contracts become effective. The adjustment will apply only to that portion of the particular craft's work remaining to be performed at the expiration of the present craft labor contract. The bidder shall submit information on each craft as requested in the Proposal Data section.

Adjustment of craft wage rates shall be calculated as specified in the article entitled Erection Wage Rate Adjustment in the General Conditions.

*Negotiated Revision
**Negotiated Revision 011382

*EPA Request dated Oct 12, 2010, for Information Pursuant to Section 114 . Response #10 of 17 of Appendix B.

*Construction material, equipment, supplies, etc. shall be ~~escalated~~ adjusted
*/***in accordance with Code 112, Construction Machinery and Equipment, Table 6~~/ and/index/PPI/07/Rubber/and/Plastic/Products/~~ Producer Prices and Price Indexes for commodity groupings and individual items as published in U.S. Department of Labor, Bureau of Labor Statistics Publication "Producer Prices and Price Indexes". ~~The/percentage/of/the/erection/sell price/listed/in/Article/D.15/2/shall/be/used/as/the/escalation/base/for purposes/of/calculating/the/escalation/~~ The base month for purposes of calculating the ~~escalation/increase~~ adjustment is June 1981. ~~The/escalation/shall/be/billed/monthly/as/follows/~~

Per cent billing current month =	Cumulative % of base contract billed in the current month less the cumulative % of base contract billed in the previous month
~~Escalation~~ Adjustment billing in current month =	% billing current month x ~~escalation~~ adjustment base x $\frac{\text{current month index} - \text{base month index}}{\text{base month index}}$

B.12 ACCEPTANCE AND REJECTION OF PROPOSALS. The Owner reserves the
**right to accept the proposal which, in its judgment, is the ~~lowest and~~ best responsive proposal; to reject any and all proposals; and to waive irregularities and informalities in any proposal that is submitted.

Proposals received after the time specified for receipt of proposals will not be considered.

*Negotiated Revision
**Addendum No. 3
***Negotiated Revision 011382

*EPA Request dated Oct 12, 2010, for Information Pursuant to Section 114 . Response #10 of 17 of Appendix B.

All proposals shall become the property of the Owner.

B.13 UTAH LICENSE REQUIREMENTS. Only proposals by contractors licensed under the laws of the State of Utah will be considered. Licensing is supervised by the Department of Contractors, Salt Lake City, Utah. Bidders shall submit with their proposal evidence that they hold a valid license in the proper classification.

Corporations organized outside the State of Utah shall submit duplicate originals of an application of the corporation for a certificate of authority to the Secretary of State, together with a copy of its articles of incorporation and all amendments thereto, duly authenticated by the proper officer of the state or country under the laws of which it is incorporated. Such corporation shall provide the Project Manager with a certificate from the Secretary of State to the effect that a certificate of authority to do business in the State of Utah has been issued by his office.

B.14 SPARE PARTS OPTION. Bidders shall state a lump sum proposal price for furnishing spare parts, and a price breakdown of individual spare parts, such price to cover parts recommended by the bidder and listed in the Proposal Data section. The Project Manager shall retain the option of accepting all or any combination of the itemized spare parts for a period not to exceed 6 months after the date of contract.

B.15 SPECIAL TOOLS. Bidders shall include the cost of one set of all special tools recommended for maintenance of the equipment in the Unit 1 price for equipment and materials stated in the proposal. A list of the recommended tools and the cost of each tool shall be provided as part of the Proposal Data. The Owner shall retain the option of purchasing tools, in addition to those included with the Unit 1 equipment, from the Proposal Data list for a period not to exceed 6 months after the date of contract.

B.16 CONTINGENT CANCELLATION. Bidders are advised that due to circumstances beyond the Owner's control, in any contract to be entered into, *it may become necessary for the Owner to cancel the work for Units 1, 2, 3, ~~and~~ or 4. Bidders shall state in the Proposal ~~Data section the latest dates for cancellation of the Unit 2, 3, and 4 work without any liability being incurred by the Owner for such work~~ the schedule of cancellation charges applicable to each unit.

B.17 PROJECT LABOR AGREEMENT. If the Owner negotiates a Project Labor Agreement for this project, the terms and conditions of such Project Labor Agreement shall apply to all onsite work contemplated within the scope of this Contract. The successful bidder, as Contractor, shall execute such Project Labor Agreement and shall be bound by all provisions thereof.

*Addendum No. 3

*EPA Request dated Oct 12, 2010, for Information Pursuant to Section 114 . Response #10 of 17 of Appendix B.

B.18 TRAINING PROGRAM OPTION. Each bidder shall include with his proposal, a complete detailed description of available training programs and training aids applicable to the equipment. Such programs and aids should be sufficient to familarize the Owner's personnel with equipment assembly and disassembly, operating procedures, performance analysis, and maintenance procedures.

As a minimum requirement, the successful bidder shall provide competent instructors to conduct necessary training of the Owner's operating and maintenance personnel. When available, video tapes of training programs shall be supplied.

The training program proposal shall include an itemization of all costs for providing at any time during the period of at least 2 years after the date of initial operation of Unit 1, the above services, any available alternates, and the bidder's recommendations regarding training.

A firm lump sum price for providing the bidder's recommended training program shall be stated in the Proposal. A breakdown of such lump sum price and costs for available alternate services shall be stated in the Proposal Data section, including per diem and travel costs for onsite instruction.

B.19 COST FACTORS. The following cost factors are provided to aid the bidder in comparison of alternative designs.

Levelized energy cost during unit operation	
Unit 1	$0.109/kWhr
Station (4 units)	$0.117/kWhr
Incremental capacity cost (demand) - July 1986	$600/kW
Current delivered cost of limestone - January 1981	$10/ton
Fixed charge rate	11 per cent

B.20 ALTERNATE DESIGNS. Each bidder shall submit proposals for the base design and all alternate designs described herein. The base design shall be predicated upon the following.

A wet scrubber system based on a minimum of four operating modules plus two spare modules with each module designed to treat 25 per cent of the flue gas flow. More than six modules may be provided if required by the bidder's design. Regardless of the number of modules proposed for the base design, two modules shall be spares.

*EPA Request dated Oct 12, 2010, for Information Pursuant to Section 114 . Response #10 of 17 of Appendix B.

Scrubber modules, reheater casings, and reaction tanks constructed of stainless steel, ASTM A167 Type 317L, except that molybdenum content shall be not less than 4.5 per cent

No forced oxidation system

Bailey Controls Company 7000 Series analog computing type modulating control system

Programmable controller equipment of bidder's standard manufacturer and type as stated in the Proposal Data

Alternate proposals shall be submitted for the following.

A wet scrubber system with one spare scrubber module in lieu of two. Deletion of the second spare module can entail rearrangement of equipment and ductwork if required by the bidder's system. Complete information shall be submitted for the performance and equipment and ductwork arrangement for the system with one spare scrubber module. Price deductions stated in the proposal for deletion of one spare module from the base design shall include deletion of all auxiliary equipment, ductwork and appurtenances associated with the module.

Scrubber modules, reheater casings and reaction tanks constructed of Alloy 904 L or Alloy G as specified in Section 2C or other material as indicated in the Proposal Form

Forced oxidation system as specified in Section 2M

Analog computing type modulating control system manufactured by any of the alternate manufacturers specified in Section 2N in lieu of the Bailey system

Digital computing type modulating control system manufactured by Bailey Controls Company and any of the alternate manufacturers specified in Section 2N, in lieu of the analog computing type modulating control system

Programmable controller equipment manufactured by any of the alternate manufacturers specified in Section 2N in lieu of the bidder's standard programmable controller equipment

Each alternate shall apply individually to the base design, so that prices are included in the Proposal for all combinations of the various alternate designs.

*EPA Request dated Oct 12, 2010, for Information Pursuant to Section 114 . Response #10 of 17 of Appendix B.

B.21 AIR QUALITY CONTROL EQUIPMENT AVAILABILITY EVALUATION. An availability analysis of the air quality control equipment proposed by each bidder will be performed. Information required to perform this analysis is specified in Appendix B. Each bidder shall submit the required availability information as part of his proposal.

B.22 AVAILABILITY IMPROVEMENT PROGRAM. An availability improvement program shall be included as part of the proposal. The program shall consider as a minimum the design, fabrication, erection and operational phases of the project. A description of the activities and measures to be instituted as part of the availability improvement program shall be included as part of the Proposal Data.

B.23 REPLACEMENT PARTS OPTION. Bidders shall state a lump sum proposal price for furnishing all replacement parts required to maintain operation *as proposed and within guarantee levels for all ~~flue/gas/wet/scrubbers~~ recycle and limestone slurry feed pumps furnished under these specifications for a period of 7 years beginning ~~when each flue/gas/wet/scrubber has successfully completed the performance guarantee tests specified in section 2B/~~ with initial operation. As part of this option, a replacement parts supply inventory shall be provided for storage at the plant site. Replacement parts provided for the plant site inventory shall become the property of the Owner. The parts supply inventory will be stored by the Owner. The inventory of parts shall be sufficient to repair or replace any failed or deteriorated component. An itemized parts list shall be provided describing the replacement parts supply inventory proposed. The replacement parts supply inventory may be common for all four generating units. Each replacement part shall be new and shall be interchangeable with and of the same or better material and workmanship than the corresponding part included with the equipment furnished under these specifications.

The Project Manager shall retain the option of accepting the replacement parts option for a period not to exceed 6 months after the date of contract.

B.24 ALTERNATE WORK SCHEDULE OPTION. Work schedules other than five day, eight hour shifts may be necessary at the option of the Project Manager.

Bidders shall provide a description of the basis for adjustments to the contract for erection work schedules other than five day, eight hour shifts. The price adjustments shall be based on a 40 hour workweek accomplished in four working days with all hours over eight hours per day being considered as overtime hours. The bidder shall include all additional costs, including premium pay for overtime hours associated with the alternate work schedule, in his price adjustments. The Project Manager reserves the right to exercise the option for an alternate work schedule at any time within 12 months after contract award.

*Negotiated Revision 120481

*EPA Request dated Oct 12, 2010, for Information Pursuant to Section 114 . Response #10 of 17 of Appendix B.

In the event that a project labor agreement is consummated which adopts a work schedule other than the five day, eight hour shift schedule as standard for the project, then the Contractor shall be bound by the provisions thereof rather than the alternate work schedule price adjustment method specified herein.

*EPA Request dated Oct 12, 2010, for Information Pursuant to Section 114 . Response #10 of 17 of Appendix B.

has not sought by collusion to obtain for himself any advantage over any other bidder or over the Owner.

Dated at Lebanon, PA this 13th day of July, 19 81

Bidder GENERAL ELECTRIC ENVIRONMENTAL SERVICES, INCORPORATED (SEAL)

Attest:

By James R. Geurts (Signature)

James R. Geurts (Typed)

Thomas R. Gallagher

Title President & General Manager

Business Address of Bidder 200 North 7th St., Lebanon, PA 17042

State of Incorporation Delaware

Address of Principal Office 200 North 7th St., Lebanon, PA 17042

Name and Address of Agent for Service of Process GENERAL ELECTRIC ENVIRONMENTAL SERVICES, INCORPORATED

200 North 7th St., Lebanon, PA 17042
Attn: Tom McInerney
Vice President - Legal Operations

[IPP 9255 WET SCRUBBER 62.0202]
[061881 ADDENDUM 3]

*EPA Request dated Oct 12, 2010, for Information Pursuant to Section 114 . Response #10 of 17 of Appendix B.

CHUBB

CHUBB GROUP of Insurance Companies

FEDERAL INSURANCE COMPANY

BID BOND

Bond No. 80885539-F

Amount $5% of Contract Price

Know All Men By These Presents,

That we, General Electric Environmental Services, Inc.
One Penn Plaza
New York, New York 10001

(hereinafter called the "Principal"), as Principal, and the FEDERAL INSURANCE COMPANY, 51 John F. Kennedy Parkway, Short Hills, New Jersey, a corporation duly organized under the laws of the State of New Jersey, (hereinafter called the "Surety"), as Surety, are held and firmly bound unto

Intermountain Power Agency

(hereinafter called the "Obligee"),

in the sum of FIVE PERCENT OF CONTRACT PRICE---------- Dollars ($ 5%), for the payment of which sum, well and truly to be made, we, the said Principal and the said Surety, bind ourselves, our heirs, executors, administrators, successors and assigns, jointly and severally, firmly by these presents.

Sealed with our seals and dated this 8th day of July, A. D. nineteen hundred and eighty one.

WHEREAS, the Principal has submitted a bid, dated July 13th, 19 81, for Intermountain Power Project, Flue Gas Wet Scrubber, Units 1,2,3 & 4, IPP Spec. #9255 62.0202, G.E.E.S.I., Proposal #1057, Engineering, Material Supply & Erection

NOW, THEREFORE, if the Obligee shall accept the bid of the Principal and the Principal shall enter into a contract with the Obligee in accordance with such bid and give bond with good and sufficient surety for the faithful performance of such contract, or in the event of the failure of the Principal to enter into such contract and give such bond, if the Principal shall pay to the Obligee the difference, not to exceed the penalty hereof, between the amount specified in said bid and the amount for which the Obligee may legally contract with another party to perform the work covered by said bid, if the latter amount be in excess of the former, then this obligation shall be null and void, otherwise to remain in full force and effect.

GENERAL ELECTRIC ENVIRONMENTAL SERVICES INC.

Principal

By James R. Geurts

James R. Geurts, President

FEDERAL INSURANCE COMPANY

By

Richard G Hight-Assistant Secretary

Attest

Form 18-02-120 (Formerly 11152-F)

*EPA Request dated Oct 12, 2010, for Information Pursuant to Section 114 . Response #10 of 17 of Appendix B.

(Individual Principal)

STATE OF _____ } ss.:
COUNTY OF _____

On this _____ day of _____ 19 _____, before me personally came _____, to me known and known by me to be the individual described in and who executed the foregoing instrument, and he duly acknowledged to me that he executed the same.

_____ Notary Public

My commission expires _____

(When Principal is a Firm)

STATE OF _____ } ss.:
COUNTY OF _____

On this _____ day of _____ 19 _____, before me personally came _____, to me known and known by me to be a member of the firm of _____, described in and which executed the foregoing instrument, and the said _____ duly acknowledged to me that he executed the said instrument in the name of said firm and for its purposes and on its behalf.

_____ Notary Public

My commission expires _____

(When Principal is a Corporation)

STATE OF Pennsylvania } ss.:
COUNTY OF Lebanon

On this 10th day of July 19 81, before me personally came James R. Geurts to me known, who being by me duly sworn, did depose and say; that he resides in Lebanon that he is the President of General Electric Environmental Services Inc. the corporation described in and which executed the above instrument; that he knows the seal of said corporation; that the seal affixed to said instrument is such corporate seal; that it was so affixed by order of the Board of Directors of said corporation, and that he signed his name thereto by like order.

Susanne H. Bonneville Notary Public

My commission expires 11/5/84

SUSANNE H. BONNEVILLE, NOTARY PUBLIC
CORNWALL BORO, LEBANON COUNTY
MY COMMISSION EXPIRES NOV. 5, 1984
Member, Pennsylvania Association of Notaries

Form 15-10-15 (Formerly 12251)

*EPA Request dated Oct 12, 2010, for Information Pursuant to Section 114 . Response #10 of 17 of Appendix B.

BASIS OF CONTRACT

FOR

WET SCRUBBER

BC.1 GENERAL. The following specific stipulations were agreed upon in the Owner's acceptance of General Electric Environmental Services, Inc., Proposal dated July 13, 1981 and supplements thereto and are hereby made a part of the Contract for Wet Scrubber to be furnished for the Intermountain Generating Station, such Contract identified by Specification 9255.62.0202.

The articles of Specification 9255.62.0202 which are revised, deleted, or clarified by addendum or by negotiations have been identified in the margin of each page. Such identification may take the form of a vertical bar or an asterisk; in any case this identification is described at the bottom of each page.

BC.2 SCHEDULE. The schedule of activities for this Contract are defined in Article 1A.8 of the specifications. The date of Contract Award for purposes of this schedule shall be December 10, 1981.

BC.3 CONTRACT PRICE. The Contract Price to furnish fob Intermountain Generating Station and erect in place the Wet Scrubber complete for Intermountain Power Project is ONE HUNDRED THIRTY-FIVE MILLION EIGHT HUNDRED FIFTY THOUSAND SEVEN HUNDRED DOLLARS ($135,850,700.00). This Contract Price is subject to adjustment in accordance with Article B.11 of the Instructions to Bidders. Table 1 (Items 1 through 19) at the end of this Basis of Contract indicates a complete breakdown of the Contract Price for material and erection for each unit. The basis for this Total Contract Price determined by the base price of the Proposal and changes to this base price as a result of subsequent negotiations is further described as follows.

Item 1. Base price using ASTM A167 Type 317L material in the six scrubber modules, the sum of proposal Articles C.1.1, C.1.2, C.1.3, C.1.4, C.2.1, C.2.2, C.2.3, and C.2.4

Item 2. Rubber lining adjustment specified in Article 2C.4.1 as an alternate proposal

Item 3. Engineering payment schedule specified in Article GC.32.1

Item 4. Deduct for joint award of Wet Scrubber and Fabric Filter Contracts

*EPA Request dated Oct 12, 2010, for Information Pursuant to Section 114 . Response #10 of 17 of Appendix B.

IP10_002661

Item 5. Provide connections (nozzles and internal clips) for future installation of Forced Oxidation system specified in Article 2E.2.6.4.

Item 6. Provide a Seal Water Filtration system specified in Article 2G.7.

Item 7. Provide additional recorders and totalizers specified in Article 2N.4.1.8.

Item 8. Make provisions for future replacement of bare tubes with finned tubes in reheaters specified in Article 2Q.4.

Item 9. Provide immersion heaters for limestone system specified in Article 2D.2.1.1.

Item 10. Comply with piping specification in Article 2H1.6.1.1.

Item 11. Provide Inconel 625 ductwork lining stops specified in Article 3K.2.

Item 12. Provide bottom discharge for recycle pumps specified in Article 2G.1.

Item 13. Redesign of purge air system specified in Article 2C.6

Item 14. 155 F reheater with 6/6 lances per soot blower proposed in Article D.17.23 and D.17.24

Item 15. Adjustment for 5/6 reheater lances per soot blower proposed in Article D.17.24

Item 16. Provide a seven (7) year warranty for rubber liner specified in Article 2B.2.12.

Item 17. Erection optimization

Item 18. Letter of credit in lieu of 10 per cent retention specified in Articles GC.32.2 and GC.32.3

Item 19. Provide Warman recycle pumps specified in Article 2G.1.

BC.4 OPTIONS. The Owner retains the following options.

BC.4.1 Specified Options. The following options which are defined in the Proposal section of the Contract Documents shall be retained until

*EPA Request dated Oct 12, 2010, for Information Pursuant to Section 114 . Response #10 of 17 of Appendix B.

exercised by the Owner or until the expiration date indicated. The option prices are dependent on whether the option to delete one scrubber module from each of Units 3 and 4 is exercised. Table 2 shall be used until the option to delete one scrubber module is exercised. Table 2 shall also be used if the option to delete one scrubber module is never exercised. Table 4 shall be used only if the option to delete one scrubber module has been exercised. These tables, at the end of this Basis of Contract, indicate complete itemized price breakdowns of the options for material and erection for each unit. When exercised, these option prices shall be added to or deducted from the Total Contract Price indicated in Table 1, including change orders, and are further described as follows.

Item 1. Controllers

Analog type specified in Article 2N.2
Digital type specified in Article 2N.2
Programmable type specified in Article 2N.18

Item 2. Spare parts for Units 1 and 2 only specified in Article B.14, proposal Article C.3

Item 3. Training program specified in Article B.18, proposal Article C.4

Item 4. Manufacturer's consulting services such as operations consultant and process chemistry consultant specified in Article 1A.5. The consultants' fees per day are exclusive of travel and living expenses, proposal Articles C.5.1, C.5.2, and C.5.2.1.

Item 5. Seven (7) year replacement parts for limestone feed and recycle pumps specified in Article B.23, proposal Article C.6

Item 6. Five (5) year warranty for rubber liner in lieu of the seven (7) year warranty specified in Article 2B.2.12

Item 7. Ceilcote 103 lining for reaction tanks specified in Article 2E.3

Item 8. Emergency quench system for high temperature in absorber inlet specified in Article 2C.4.1. In addition the Contractor agrees to the following.

The system which shall protect the Owner's absorbers during the lining and prestart-up phase shall consist of automatic water sprays (mist eliminator lines) connected to the Owner-furnished

*EPA Request dated Oct 12, 2010, for Information Pursuant to Section 114 . Response #10 of 17 of Appendix B.

external fire water system. These sprays shall be automatically actuated by smoke detectors within the vessel and shall provide flow at the rate of 0.4 gpm per square foot of lined surface area. This system shall also automatically protect the lining during the preoperation phase when the absorbers are in a "buttoned-up" standby mode. Prior to initial operation, the mist eliminators shall be installed and the automatic provisions disconnected.

Item 9. Working four (4) ten (10) hour days in lieu of the regular five (5) eight (8) hour days specified in Article B.24

BC.4.2 Deletion of One Scrubber Module from Units 3 and 4. Should the Owner exercise the option to delete one scrubber module from each of Units 3 and 4, then the Total Contract Price indicated in Table 1, including change orders, shall be adjusted by a deduct of $7,756,000.00.

Table 3 (Items 1 through 15) at the end of this Basis of Contract indicates a complete itemized breakdown of the total price for the option to delete one scrubber module from each of Units 3 and 4.

BC.4.2.1 Adjustments to Contract Price. Contract Price adjustments for corresponding options in Tables 2 and 4 exercised prior to the Owner's exercising the option to delete one scrubber module from each of Units 3 and 4 shall be determined in the following manner. The option price in Table 2 shall be subtracted from the corresponding option price in Table 4 and the difference shall be added to the Total Contract Price/Unit-Material and Erection in Table 1, including change orders.

The Proposal prices stated in Articles C.1.1.2, C.1.2.1, C.1.3.1, C.1.4.1, C.2.1.1, C.2.2.1, C.2.3.1, and C.2.4.1 are hereby deleted.

BC.4.3 Proposal Options Deleted. The following options submitted with the Proposal are hereby deleted from the Contract.

Alternate materials, Articles C.1.1.3, C.1.2.2, C.1.3.2, C.1.4.2, C.2.1.2, C.2.2.2, C.2.3.2, and C.2.4.2

Forced oxidation, Articles C.1.1.4, C.1.2.3, C.1.3.3, C.1.4.3, C.2.1.3, C.2.2.3, C.2.3.3, and C.2.4.3

Six minute retention tank, Articles C.1.1.9, C.1.2.8, C.1.3.8, C.1.4.8, and appropriate price quotes under the erection prices for Units 1, 2, 3, and 4

BC.5 SPECIAL TOOLS. One special tool per generating unit for servicing the reheater bundles shall be furnished, the price of which is included in the base contract price (Item 1, Table 1).

*EPA Request dated Oct 12, 2010, for Information Pursuant to Section 114 . Response #10 of 17 of Appendix B.

TABLE 1
IPP FLUE GAS SCRUBBER
TABULATION OF CONTRACT PRICE
THOUSANDS OF DOLLARS

	UNIT 1		UNIT 2		UNIT 3		UNIT 4	
	Material	Erection	Material	Erection	Material	Erection	Material	Erection
1. Base Price (317 LM, 6 Modules)	32,706	11,959.1	20,123.6	11,169.1	23,100.7	11,926.3	20,123.6	11,168.1
2. Rubber Lining Adjustment	(3,240)	2,148	(3,240)	2,148	(3,240)	2,148	(3,240)	2,148
3. Engineering Payment Schedule (4 Milestones)	220	NA	NA	NA	NA	NA	NA	NA
4. Joint Award Deduction	NA	(729.3)	NA	(729.2)	NA	(729.3)	NA	(729.2)
5. Connections for Future Installation of Forced Oxidation System	78	NA	78	NA	78	NA	78	NA
6. Provide Seal Water Filter System	61	15	61	15	61	15	61	15
7. Provide Additional Recorders and Totalizers	35	7	35	7	35	7	35	7
8. Provisions for Future Finned Tube Reheater	18	NA	18	NA	18	NA	18	NA
9. Provide Immersion Heaters for Limestone System	5.5	NA	5.0	NA	5.5	NA	5.0	NA
10. Comply with Piping Specifications	57	NA	57	NA	57	NA	57	NA
11. Provide Inconel 625 Ductwork Lining Stops in Lieu of Carbon Steel	41	NA	41	NA	41	NA	41	NA
12. Provide Bottom Discharge for Recycle Pumps	57	NA	57	NA	57	NA	57	NA
13. Redesign Purge Air System	253.5	18.5	253.5	18.5	253.5	18.5	253.5	18.5
14. 155 deg F Reheater with 6/6 Soot Blower Design	588.5	68	588.5	68	588.5	68	588.5	68
15. Adjustment for 5/6 Reheater Soot Blower Design	(60)	(7)	(60)	(7)	(60)	(7)	(60)	(7)
16. 7 Year Warranty for Rubber Liner	700	NA	600	NA	500	NA	500	NA
17. Erection Optimization	NA	(686)	NA	(685.9)	NA	(686)	NA	(685.9)
18. Letter of Credit in Lieu of 10% Retention	(642)	(372)	(543)	(350)	(628)	(372)	(543)	(350)
19. Warman Recycle Pumps	(15)	NA	(15)	NA	(15)	NA	(15)	NA
Total Contract Price/Unit-Material	$30,863.5	NA	$18,059.6	NA	$20,852.2	NA	$17,959.6	NA
-Erection	NA	$12,421.3	NA	$11,653.5	NA	$12,388.5	NA	$11,652.5
Total Contract Price/Unit	$43,284.8		$29,713.1		$33,240.7		$29,612.1	
Total Contract Price			$135,850.7					

NA - not Applicable

041982

*EPA Request dated Oct 12, 2010, for Information Pursuant to Section 114 . Response #10 of 17 of Appendix B.

IP10_002665

TABLE 2
IPP FLUE GAS SCRUBBER
TABULATION OF OPTION PRICES
THOUSANDS OF DOLLARS

	UNIT 1		UNIT 2		UNIT 3		UNIT 4		Exercise By *
	Material	Erection	Material	Erection	Material	Erection	Material	Erection	
1. Controllers									
Foxboro Analog	266.4	NA	259.5	NA	266.4	NA	259.5	NA	10-1-82
Westinghouse Analog	(109.2)	NA	(79.9)	NA	(109.2)	NA	(79.9)	NA	10-1-82
Bailey Digital	(140.6)	NA	(98.2)	NA	(140.6)	NA	(98.2)	NA	10-1-82
Foxboro Digital	237.2	NA	276.1	NA	237.2	NA	276.1	NA	10-1-82
Westinghouse Digital	(141.6)	NA	(94.8)	NA	(141.6)	NA	(94.8)	NA	10-1-82
Forney Digital	(148.4)	NA	(135.3)	NA	(148.4)	NA	(135.3)	NA	10-1-82
Leeds & Northrup Digital	118.8	NA	73.2	NA	118.8	NA	73.2	NA	10-1-82
Leeds & Northrup Analog	(70.3)	NA	(73.3)	NA	(70.3)	NA	(73.3)	NA	10-1-82
Square D Programmable Controller	(6.7)	NA	57.2	NA	(6.7)	NA	57.2	NA	5-1-82
Forney Programmable Controller	475.4	NA	404.3	NA	475.0	NA	404.3	NA	5-1-82
Allen Bradley Programmable Controller	135.5	NA	227.5	NA	135.5	NA	227.5	NA	5-1-82
2. Spare Parts Option (Units 1 & 2)	541	NA	520.7	NA	NA	NA	NA	NA	180 Days
3. Training Program	30	NA	NA	NA	NA	NA	NA	NA	1,260 Days
4. Consultant Fees, Per Day, Not Including Travel and Living Expenses									
Operations Consultant	0.480/day	NA	0.480/day	NA	0.480/day	NA	0.480/day	NA	NA
Process Chemistry Consultant	0.544/day	NA	0.544/day	NA	0.544/day	NA	0.544/day	NA	NA
Erection Consultant	0.544/day	NA	0.544/day	NA	0.544/day	NA	0.544/day	NA	NA
5. Replacement Parts Option - Limestone Feed and Recycle Pumps	1425	NA	1425	NA	1425	NA	1425	NA	180 Days
6. 5 Year Warranty for Rubber Liner	(200)	NA	(200)	NA	(200)	NA	(200)	NA	540 Days
7. Ceilcote Lining for Reaction Tanks	NA	(988.5)	NA	(987)	NA	(988.5)	NA	(987)	60 Days
8. Emergency Quench System	565	216	468	216	468	216	468	216	60 Days
9. 4-10 Erection Workweek	NA	1503	NA	1430	NA	1503	NA	1430	1-1-84

*"Days" are Days After Award
NA - Not Applicable
Note: All Prices Based on 6 Modules Per Unit

JRG OPTIONS ARE ADJUSTABLE IN ACCORDANCE WITH ARTICLES GC32.6 & GC32.7

041982 *EPA Request dated Oct 12, 2010, for Information Pursuant to Section 114 . Response #10 of 17 of Appendix B.

IP10_002666

TABLE 3
IPP FLUE GAS SCRUBBER
ADJUSTMENT TO CONTRACT PRICE
OPTION TO DELETE ONE MODULE FROM UNITS 3 AND 4
THOUSANDS OF DOLLARS

	UNIT 1		UNIT 2		UNIT 3		UNIT 4		Exercise
	Material	Erection	Material	Erection	Material	Erection	Material	Erection	By *
1. Delete One Module	NA	NA	NA	NA	(2,539)	(1,238)	(2,569)	(1,238)	900 Days
(Units 3 & 4 Only)	NA	NA	NA	NA					
2. Connections for Future Installation of Forced Oxidation System	NA	NA	NA	NA	(13)	NA	(13)	NA	900 Days
3. Provide Seal Water Filter System	NA	NA	NA	NA	(10)	(2.5)	(10)	(2.5)	900 Days
4. Provide Additional Totalizers and Recorders	NA	NA	NA	NA	(4)	(1)	(4)	(1)	900 Days
5. Provisions for Future Finned Tube Reheaters	NA	NA	NA	NA	(3)	NA	(3)	NA	900 Days
6. Provide Immersion Heaters for Limestone System	NA	NA	NA	NA	(0)	NA	(0)	NA	900 Days
7. Comply with Piping Specifications	NA	NA	NA	NA	(9)	NA	(9)	NA	900 Days
8. Provide Inconel 625 Ductwork Lining	NA	NA	NA	NA	(4)	NA	(4)	NA	900 Days
Stops in Lieu of Carbon Steel									
9. Provide Bottom Discharge for Recycle Pumps	NA	NA	NA	NA	(9)	NA	(9)	NA	900 Days
10. Redesign Purge Air System	NA	NA	NA	NA	(32)	NA	(32)	NA	900 Days
11. 155 deg F Reheater with 6/6	NA	NA	NA	NA	(97.5)	(12)	(97.5)	(12)	900 Days
Sootblowers									
12. Adjustment for 5/6 Reheat Sootblower Design	NA	NA	NA	NA	10	1	10	1	900 Days
13. 7 Year Warranty for Rubber Liner	NA	NA	NA	NA	(50)	NA	(50)	NA	900 Days
14. Erection Optimization	NA	NA	NA	NA	NA	50	NA	50	900 Days
15. Letter of Credit in Lieu of 10%	NA	NA	NA	NA	60	40	60	40	900 Days
Retention									
Total Optional Adjustment Price/Unit	NA	NA	NA	NA					
Material	NA	NA	NA	NA	(2700.5)	NA	(2730.5)	NA	
Erection	NA	NA	NA	NA	NA	(1162.5)	NA	(1162.5)	
Total Optional Adjustment Price/Unit	NA	NA	NA	NA	(3863.0)		(3893.0)		

* "Days" are Days After Award
NA - Not Applicable

JAG OPTIONS ARE ADJUSTABLE IN ACCORDANCE WITH ARTICLES GC 32.6 & GC32.7

041982

*EPA Request dated Oct 12, 2010, for Information Pursuant to Section 114 . Response #10 of 17 of Appendix B.

IP10_002667

TABLE 4
IPP FLUE GAS SCRUBBER
ADJUSTMENTS TO CONTRACT PRICE
OPTION PRICES WHEN THE OPTION TO DELETE ONE MODULE FROM UNITS 3 AND 4 IS EXERCISED
THOUSANDS OF DOLLARS

	UNIT 1		UNIT 2		UNIT 3		UNIT 4		Exercise
	Material	Erection	Material	Erection	Material	Erection	Material	Erection	By *
1. Controllers									
Foxboro Analog	NA	NA	NA	NA	238.8	NA	230.4	NA	10-1-82
Westinghouse Analog	NA	NA	NA	NA	(78.5)	NA	(50.7)	NA	10-1-82
Bailey Digital	NA	NA	NA	NA	(87.4)	NA	(51.7)	NA	10-1-82
Foxboro Digital	NA	NA	NA	NA	278.9	NA	319.8	NA	10-1-82
Westinghouse Digital	NA	NA	NA	NA	(93.7)	NA	(48.4)	NA	10-1-82
Forney Digital	NA	NA	NA	NA	(101.4)	NA	(85.1)	NA	10-1-82
Leeds & Northrup Digital	NA	NA	NA	NA	101.6	NA	57.5	NA	10-1-82
Leeds & Northrup Analog	NA	NA	NA	NA	(38)	NA	(38)	NA	10-1-82
Square D Programmable Controller	NA	NA	NA	NA	(21.9)	NA	41.9	NA	5-1-82
Forney Programmable Controller	NA	NA	NA	NA	384.7	NA	334.3	NA	5-1-82
Allen Bradley Programmable Controller	NA	NA	NA	NA	118.5	NA	186.1	NA	5-1-82
2. Replacement Parts	NA	NA	NA	NA	1,195	NA	1,195	NA	180 Days
3. 5 Year Warranty for Rubber Lining	NA	NA	NA	NA	(175)	NA	(175)	NA	540 Days
4. Ceilcote Lining for Reaction Tanks	NA	NA	NA	NA	NA	(828.5)	NA	(828.5)	60 Days
5. Emergency Quench System	NA	NA	NA	NA	390	180	390	180	60 Days

* "Days" are Days After Award
NA - Not Applicable

JMG OPTIONS ARE ADJUSTABLE IN ACCORDANCE WITH ARTICLES GC32.6 & GC32.7

*EPA Request dated Oct 12, 2010, for Information Pursuant to Section 114 . Response #10 of 17 of Appendix B.

041982

IP10_002668

PROPOSAL

To: INTERMOUNTAIN POWER AGENCY

PROPOSAL FOR FLUE GAS WET SCRUBBER
INTERMOUNTAIN GENERATING STATION

Gentlemen:

The undersigned bidder, having read and examined the specifications and documents for the above designated equipment which will be incorporated in the Intermountain Generating Station, does hereby propose to furnish and erect the equipment and provide the services as set forth in this Proposal.

The undersigned hereby declares that any and all variations from and exceptions to the requirements of the specifications and documents have been listed in the Proposal Data section and that, otherwise, it is the intent of this Proposal that the work will be performed in strict accordance with the specifications and documents.

The undersigned hereby declares that he will perform the major portion of the work at the jobsite with his own forces. Specific portions of the work not performed by the undersigned will be subcontracted by the subcontractors listed in the Proposal Data section.

The undersigned hereby declares that he is licensed to perform work in the State of Utah and has stated his identifying license numbers in the Proposal Data section.

The undersigned hereby declares that for the lump sum prices stated herein, the:

( ) Equipment pricing is firm, not subject to adjustment.

(x) Equipment pricing is subject to adjustment, such adjustment to be determined as specified in Article B.11 of the Instructions to Bidders, as amended.

( ) Erection pricing is firm, not subject to adjustment.

(x) Erection pricing is subject to adjustment, such adjustment to be determined as specified in Article B.11 of the Instructions to Bidders, as amended.

[IPP 9255 WET SCRUBBER 62.0202]
[120180]
C-1

*EPA Request dated Oct 12, 2010, for Information Pursuant to Section 114 . Response #10 of 17 of Appendix B.

The base proposal is predicated upon the following.

A wet scrubber system with two spare scrubber modules

Modules, reheater casings and reaction tanks constructed of stainless steel, ASTM A167 Type 317L, except that molybdenum content will be not less than 4.5 per cent

No forced oxidation system

Bailey Controls Company 7000 Series analog computing type modulating control system

Programmable controller equipment of manufacturer and type stated in the Proposal Data

C.1 EQUIPMENT AND MATERIALS. The undersigned bidder hereby proposes to furnish, fob Intermountain Generating Station site, one flue gas wet scrubber for each unit and provide services complete in accordance with the contract documents as defined in Article GC.1 of the GENERAL CONDITIONS, for the following prices. These equipment and material prices are exclusive of all applicable sales or use taxes.

C.1.1 Unit 1 and Common Equipment and Materials. Lump sum base price for equipment, materials and services for Unit 1 and equipment, materials and services common to Units 1 and 2:

Thirty Two Million Seven Hundred

Six Thousand ($32,706,000)

(Price in Words)

C.1.1.1 Engineering and Design. Maximum price for engineering and design included in the Item C.1.1 lump sum equipment price:

Nine Million Six Hundred Five Thousand

Four Hundred ($9,605,400)

(Price in Words)

C.1.1.2 Deletion of One Spare Module. Lump sum deduction from the Item C.1.1 equipment and materials price for furnishing a wet scrubber system with one spare module in lieu of the specified base system with two spare modules:

Three Million One Hundred

Nine Thousand ($ 3,109,000)

(Price in Words)

*EPA Request dated Oct 12, 2010, for Information Pursuant to Section 114 . Response #10 of 17 of Appendix B.

IP10_002670

C.1.1.3 Alternate Materials. Lump sum adjustment to the Item C.1.1 equipment and materials price for furnishing scrubber modules, reheater casings, and reaction tanks constructed of each of the following materials in lieu of the specified base material:

Material	Adjustment (Addition or Deduction)	Amount: Two Spares	Amount: One Spare
Alloy 904L		+ $ 2,495,600	$ -1,029,300
Alloy G	Addition	+ $ 9,330,700	$ +4,666,600
Carbon Steel, Rubberlined		$ N/C	$ N/C
(Other) except Reheater casing			

C.1.1.4 Forced Oxidation. Lump sum addition to the Item C.1.1 equipment and materials price for furnishing a forced oxidation system:

	Amount
Scrubber with two spare modules	$ 997,000
Scrubber with one spare module	$ 830,800

C.1.1.5 Modulating Control System. Lump sum adjustment to the C.1.1 equipment and materials price for furnishing modulating control equipment of the analog computing type by one of the following manufacturers in lieu of Bailey Controls:

Alternate Manufacturer	Adjustment (Addition or Deduction)	Amount: Two Spares	Amount: One Spare
Foxboro	Addition	+ $ 266,400	$ +238,800
Westinghouse	Deduct	- $ 109,200	$ - 78,500
Leeds & Northrup		$ No Bid	$ No Bid

Lump sum adjustment to the C.1.1 equipment and materials price for furnishing modulating control equipment of the digital computing type by one of the following manufacturers in lieu of Bailey Controls analog computing type:

Digital System Manufacturer	Adjustment (Addition or Deduction)	Amount: Two Spares	Amount: One Spare
Bailey	Deduct	$ -140,600	$ -87,400
Foxboro	Addition	$ +237,200	$ +278,900

*EPA Request dated Oct 12, 2010, for Information Pursuant to Section 114 . Response #10 of 17 of Appendix B.

Digital System Manufacturer	Adjustment (Addition or Deduction)	Amount Two Spares	Amount One Spare
Westinghouse	Deduct	$-141,600	$-93,700
Leeds & Northrup		$ No Bid	$ No Bid
Forney	Deduct	$-148,400	$-101,400
(Standard supplier)		$	$

The latest date for selection of the modulating control system type (analog or digital) and manufacturer is 18 months before required delivery.

C.1.1.6 Programmable Controllers. Lump sum adjustment to the C.1.1 equipment and materials price for furnishing programmable controller equipment by one of the following manufacturers in lieu of the standard programmable controller equipment:

Alternate Manufacturer	Adjustment (Addition or Deduction)	Amount Two Spares	Amount One Spare
Square D	Deduct	$- 6,700	$- 21,900
Allen-Bradley		$ Later	$
Struthers-Dunn		$ Later	$
Forney	Addition	+ $ 475,400	+ $ 384,700

The latest date for selection of the programmable controller equipment manufacturer is 18 months before required delivery.

C.1.1.7 Performance Bond Deduction. Deduction rate from the total adjusted Unit 1 and common equipment and materials price if the Project Manager does not require a performance bond for Unit 1:

$1.25
(Rate in Dollars per Thousand Dollars of Total Equipment and Materials Price)

C.1.1.8 Guarantee Bond Deduction. Deduction rate from the total adjusted Unit 1 and common equipment and materials price if the Project Manager does not require a guarantee bond for Unit 1:

$0.50
(Rate in Dollars per Thousand Dollars of Total Equipment and Materials Price)

*EPA Request dated Oct 12, 2010, for Information Pursuant to Section 114 . Response #10 of 17 of Appendix B.

C.1.1.9 Six Minute Retention Tank

Deduction from C.1.1 for furnishing recycle tanks with six-minute retention time in lieu of 10 minutes in C.1.1.

With 2 Spare Modules	788,700
" 1 " "	657,200

*EPA Request dated Oct 12, 2010, for Information Pursuant to Section 114 . Response #10 of 17 of Appendix B.

C.1.2 Unit 2 Equipment and Materials. Lump sum base price for Unit 2 equipment, materials and services:

Twenty Million One Hundred
Twenty Three Thousand Six Hundred ($ 20,123,600)
(Price in Words)

C.1.2.1 Deletion of One Spare Module. Lump sum deduction from the Item C.1.2 equipment and materials price for furnishing a wet scrubber system with one spare module in lieu of the specified system with two spare modules:

Three Million One Hundred Nine Thousand
($ 3,109,000)
(Price in Words)

C.1.2.2 Alternate Materials. Lump sum adjustment to the Item C.1.2 equipment and materials price for furnishing scrubber modules, reheater casings, and reaction tanks constructed of each of the following materials in lieu of the specified base material:

Material	Adjustment (Addition or Deduction)	Amount: Two Spares	Amount: One Spare
Alloy 904L		+ $2,495,600	- $1,029,300
Alloy G	Addition	+ $ 9,330,700	+ $4,666,600
Carbon Steel Rubberlined (Other) except Reheater casing		$ N/C	$ N/C

C.1.2.3 Forced Oxidation. Lump sum addition to the Item C.1.2 equipment and materials price for furnishing a scrubber with a forced oxidation system:

	Amount
Scrubber with two spare modules	$ 997,000
Scrubber with one spare module	$ 830,800

C.1.2.4 Modulating Control System. Lump sum adjustment to the C.1.2 equipment and materials price for furnishing modulating control equipment

*EPA Request dated Oct 12, 2010, for Information Pursuant to Section 114 . Response #10 of 17 of Appendix B.

of the analog computing type by one of the following manufacturers in lieu of Bailey Controls:

Alternate Manufacturer	Adjustment (Addition or Deduction)	Amount Two Spares	Amount One Spare
Foxboro	Addition	$259,500	$230,400
Westinghouse	Deduct	$ 79,900	$ 50,700
Leeds & Northrup		$ No Bid	$ No Bid

Lump sum adjustment to the C.1.2 equipment and materials price for furnishing modulating control equipment of the digital computing type by one of the following manufacturers in lieu of Bailey Controls analog computing type:

Digital System Manufacturer	Adjustment (Addition or Deduction)	Amount Two Spares	Amount One Spare
Bailey	Deduct	$ 98,200	$ 51,700
Foxboro	Addition	$276,100	$319,800
Westinghouse	Deduct	$ 94,800	$ 48,400
Leeds & Northrup		$ No Bid	$ No Bid
Forney	Deduct	$135,300	$ 85,100
(Standard supplier)		$	$

C.1.2.5 Programmable Controllers. Lump sum adjustment to the C.1.2 equipment and materials price for furnishing programmable controller equipment by one of the following manufacturers in lieu of the standard programmable controller equipment:

Alternate Manufacturer	Adjustment (Addition or Deduction)	Amount Two Spares	Amount One Spare
Square D	Addition	$ 57,200	$ 41,900
Allen-Bradley	Later	$	$

*EPA Request dated Oct 12, 2010, for Information Pursuant to Section 114 . Response #10 of 17 of Appendix B.

Alternate Manufacturer	Adjustment (Addition or Deduction)	Amount Two Spares	Amount One Spare
Struthers-Dunn	Later	$	$
Forney	Addition	$ 404,300	$ 334,300

C.1.2.6 Performance Bond Deduction. Deduction rate from the total adjusted Unit 2 equipment and materials price if the Project Manager does not require a performance bond for Unit 2:

$1.25
(Rate in Dollars per Thousand Dollars of Total Equipment and Materials Price)

C.1.2.7 Guarantee Bond Deduction. Deduction rate from the total adjusted Unit 2 equipment and materials price if the Project Manager does not require a guarantee bond for Unit 2:

$0.50
(Rate in Dollars per Thousand Dollars of Total Equipment and Materials Price)

C.1.3 Unit 3 and Common Equipment and Materials. Lump sum base price for equipment, materials and services for Unit 3 and equipment, materials and services common to Units 3 and 4:

Twenty Three Million One Hundred Thousand
Seven Hundred ($ 23,100,700)
(Price in Words)

C.1.3.1 Deletion of One Spare Module. Lump sum deduction from the Item C.1.3 equipment and materials price for furnishing a wet scrubber system with one spare module in lieu of the specified system with two spare modules:

Three Million One Hundred Nine Thousand
($ 3,109,000)
(Price in Words)

C.1.3.2 Alternate Materials. Lump sum adjustment to the Item C.1.3 equipment and materials price for furnishing scrubber modules, reheater

*EPA Request dated Oct 12, 2010, for Information Pursuant to Section 114 . Response #10 of 17 of Appendix B.

C1.2.8 Six Minute Retention Tank

Deduction from C.1.2 for furnishing recycle tanks with six-minute retention time in lieu of 10 minutes in C.1.2

With 2 Spare Modules	788,700
" 1 " "	657,200

*EPA Request dated Oct 12, 2010, for Information Pursuant to Section 114 . Response #10 of 17 of Appendix B.

casings, and reaction tanks constructed of each of the following materials in lieu of the specified base material:

Material	Adjustment (Addition or Deduction)	Amount Two Spares	Amount One Spare
Alloy 904L		+ $2,495,600	$ - 1,029,300
Alloy G	Addition	+ $9,330,700	+ $ 4,666,600
Carbon Steel Rubberlined (Other) except Reheater casing		$ N/C	$ N/C

C.1.3.3 Forced Oxidation. Lump sum addition to the Item C.1.3 equipment and materials price for furnishing a scrubber with a forced oxidation system:

	Amount
Scrubber with two spare modules	$ 997,000
Scrubber with one spare module	$ 830,800

C.1.3.4 Modulating Control System. Lump sum adjustment to the C.1.3 equipment and materials price for furnishing modulating control equipment of the analog computing type by one of the following manufacturers in lieu of Bailey Controls:

Alternate Manufacturer	Adjustment (Addition or Deduction)	Amount Two Spares	Amount One Spare
Foxboro	Addition	+ $ 266,400	+ $ 238,800
Westinghouse	Deduct	- $ 109,200	- $ 78,500
Leeds & Northrup		$ No Bid	$ No Bid

Lump sum adjustment to the C.1.3 equipment and materials price for furnishing modulating control equipment of the digital computing type by one of the following manufacturers in lieu of Bailey Controls analog computing type:

Digital System Manufacturer	Adjustment (Addition or Deduction)	Amount Two Spares	Amount One Spare
Bailey	Deduct	$ 140,600	$ 87,400
Foxboro	Addition	$ 237,200	$278,900

*EPA Request dated Oct 12, 2010, for Information Pursuant to Section 114 . Response #10 of 17 of Appendix B.

Digital System Manufacturer	Adjustment (Addition or Deduction)	Amount: Two Spares	Amount: One Spare
Westinghouse	Deduct	- $ 141,600	- $ 93,700
Leeds & Northrup		$ No Bid	$ No Bid
Forney	Deduct	- $ 148,400	- $101,400
(Standard supplier)		$	$

C.1.3.5 Programmable Controllers. Lump sum adjustment to the C.1.3 equipment and materials price for furnishing programmable controller equipment by one of the following manufacturers in lieu of the standard programmable controller equipment:

Alternate Manufacturer	Adjustment (Addition or Deduction)	Amount: Two Spares	Amount: One Spare
Square D	Deduct	- $ 6,700	- $ 21,900
Allen-Bradley		$ Later	$
Struthers-Dunn		$ Later	$
Forney	Addition	+ $475,000	+ $ 384,700

C.1.3.6 Performance Bond Deduction. Deduction rate from the total adjusted Unit 3 and common equipment and materials price if the Project Manager does not require a performance bond for Unit 3:

$1.25
(Rate in Dollars per Thousand Dollars of Total Equipment and Materials Price)

C.1.3.7 Guarantee Bond Deduction. Deduction rate from the total adjusted Unit 3 and common equipment and materials price if the Project Manager does not require a guarantee bond for Unit 3:

$0.50
(Rate in Dollars per Thousand Dollars of Total Equipment and Materials Price)

*EPA Request dated Oct 12, 2010, for Information Pursuant to Section 114 . Response #10 of 17 of Appendix B.

C.1.3.8 <u>6 Minute retention tank.</u> Deduction from C.1.3 for furnishing recycle tanks with 6 minute retention time in lieu of 10 minutes in C.1.3.

With 2 spare modules	788,700
With 1 spare module	657,200

*EPA Request dated Oct 12, 2010, for Information Pursuant to Section 114 . Response #10 of 17 of Appendix B.

C.1.4 Unit 4 Equipment and Materials. Lump sum base price for Unit 4 equipment, materials and services:

Twenty Million One Hundred Twenty Three

Thousand Six Hundred ($ 20,123,600)

(Price in Words)

C.1.4.1 Deletion of One Spare Module. Lump sum deduction from the Item C.1.4 equipment and materials price for furnishing a wet scrubber system with one spare module in lieu of the specified system with two spare modules:

Three Million One Hundred Nine Thousand

($3,109,000)

(Price in Words)

C.1.4.2 Alternate Materials. Lump sum adjustment to the Item C.1.4 equipment and materials price for furnishing scrubber modules, reheater casings, and reaction tanks constructed of each of the following materials in lieu of the specified base material:

Material	Adjustment (Addition or Deduction)	Amount	
		Two Spares	One Spare
Alloy 904L		+ $ 2,495,600	$-1,029,300
Alloy G	Addition	+ $ 9,330,700	+ $ 4,666,600
Carbon Steel Rubberlined (Other) except Rehater casing		$ N/C	$ N/C

C.1.4.3 Forced Oxidation. Lump sum addition to the Item C.1.4 equipment and materials price for furnishing a scrubber with a forced oxidation system:

	Amount
Scrubber with two spare modules	$ 997,000
Scrubber with one spare module	$ 830,800

C.1.4.4 Modulating Control System. Lump sum adjustment to the C.1.4 equipment and materials price for furnishing modulating control equipment

*EPA Request dated Oct 12, 2010, for Information Pursuant to Section 114 . Response #10 of 17 of Appendix B.

of the analog computing type by one of the following manufacturers in lieu of Bailey Controls:

Alternate Manufacturer	Adjustment (Addition or Deduction)	Amount Two Spares	Amount One Spare
Foxboro	Add	$ 259,500	$ 230,400
Westinghouse	Deduct	$ 79,900	$ 50,700
Leeds & Northrup		$ No Bid	$ No Bid

Lump sum adjustment to the C.1.4 equipment and materials price for furnishing modulating control equipment of the digital computing type by one of the following manufacturers in lieu of Bailey Controls analog computing type:

Digital System Manufacturer	Adjustment (Addition or Deduction)	Amount Two Spares	Amount One Spare
Bailey	Deduct	$ 98,200	$ 51,700
Foxboro	Add	$ 276,100	$319,800
Westinghouse	Deduct	$ 94,800	$ 48,400
Leeds & Northrup		$ No Bid	$ No Bid
Forney	Deduct	$ 135,300	$85,100
(Standard supplier)		$	$

C.1.4.5 Programmable Controllers. Lump sum adjustment to the C.1.4 equipment and materials price for furnishing programmable controller equipment by one of the following manufacturers in lieu of the standard programmable controller equipment:

Alternate Manufacturer	Adjustment (Addition or Deduction)	Amount Two Spares	Amount One Spare
Square D	Add	$ 57,200	$ 41,900
Allen-Bradley	Later	$	$

*EPA Request dated Oct 12, 2010, for Information Pursuant to Section 114 . Response #10 of 17 of Appendix B.

C.1.4.8 <u>6 minute retention tank.</u> Deduction from C.1.4 for furnishing recycle tanks with 6 minute retention time in lieu of 10 minutes in C.1.4.

With 2 spare modules	788,700
With 1 spare module	657,200

*EPA Request dated Oct 12, 2010, for Information Pursuant to Section 114 . Response #10 of 17 of Appendix B.

Alternate Manufacturer	Adjustment (Addition or Deduction)	Amount Two Spares	Amount One Spare
Struthers-Dunn	Later	$	$
Forney	Add	$ 404,300	$ 334,300

C.1.4.6 Performance Bond Deduction. Deduction rate from the total adjusted Unit 4 equipment and materials price if the Project Manager does not require a performance bond for Unit 4:

$1.25
(Rate in Dollars per Thousand Dollars of Total Equipment and Materials Price)

C.1.4.7 Guarantee Bond Deduction. Deduction rate from the total adjusted Unit 4 equipment and materials price if the Project Manager does not require a guarantee bond for Unit 4:

$0.50
(Rate in Dollars per Thousand Dollars of Total Equipment and Materials Price)

C.2 ERECTION. The undersigned bidder hereby proposes to unload, store, and field erect the specified equipment and materials for the following prices, including applicable sales and use taxes.

C.2.1 Unit 1 and Common Equipment and Materials Erection. Lump sum base price for erection of equipment and materials for Unit 1 and equipment and materials common to Units 1 and 2:

Eleven Million Nine Hundred Fifty Nine
Thousand One Hundred ($ 11,959,100)
(Price in Words)

C.2.1.1 Deletion of One Spare Module. Lump sum deduction from the Item C.2.1 erection price for erecting a wet scrubber system with one spare module in lieu of the specified system with two spare modules:

Eight Hundred Eighty Thousand
($ 880,000)
(Price in Words)

*EPA Request dated Oct 12, 2010, for Information Pursuant to Section 114 . Response #10 of 17 of Appendix B.

C.2.1.2 Alternate Materials Erection. Lump sum adjustment to the Item C.2.1 erection price for erecting scrubber modules, reheater casings, and reaction tanks constructed of each of the following materials in lieu of the specified base material:

Material	Adjustment (Addition or Deduction)	Amount: Two Spares	Amount: One Spare
Alloy 904L		$ +263,600	$ (-669,500)
Alloy G		$+1,018,900	$ (-400)
Carbon Steel, Rubberlined ~~except~~ reheater casing (Other)		$ N/C	$ N/C

C.2.1.3 Forced Oxidation System Erection. Lump sum addition to the Item C.2.1 erection price for erecting a scrubber with a forced oxidation system:

	Amount
Scrubber with two spare modules	$ 107,500
Scrubber with one spare modula	$ 96,800

C.2.1.4 Modulating Control System Erection. Lump sum adjustment to the C.2.1 erection price for erecting modulating control equipment of the analog computing type by one of the following manufacturers in lieu of Bailey Controls:

Alternate Manufacturer	Adjustment (Addition or Deduction)	Amount: Two Spares	Amount: One Spare
Foxboro		$ N/C	$ N/C
Westinghouse		$	$
Leeds & Northrup		$	$

Lump sum adjustment to the C.2.1 erection price for erecting modulating control equipment of the digital computing type by one of the following manufacturers in lieu of Bailey Controls analog computing type:

Digital System Manufacturer	Adjustment (Addition or Deduction)	Amount: Two Spares	Amount: One Spare
Bailey		$ N/C	$ N/C
Foxboro		$ N/C	$ N/C

*EPA Request dated Oct 12, 2010, for Information Pursuant to Section 114 . Response #10 of 17 of Appendix B.

Digital System Manufacturer	Adjustment (Addition or Deduction)	Amount: Two Spares	Amount: One Spare
Westinghouse	_____	$ N/C	$ N/C
Leeds & Northrup	_____	$ _____	$ _____
Forney	_____	$ _____	$ _____
_____ (Standard supplier)	_____	$ _____	$ _____

C.2.1.5 Programmable Controllers Erection. Lump sum adjustment to the C.2.1 erection price for erecting programmable controller equipment by one of the following manufacturers in lieu of the standard programmable controller equipment:

Alternate Manufacturer	Adjustment (Addition or Deduction)	Amount: Two Spares	Amount: One Spare
Square D	_____	$ N/C	$ N/C
Allen-Bradley	_____	$ _____	$ _____
Struthers-Dunn	_____	$ _____	$ _____
Forney	_____	$ _____	$ _____

C.2.1.6 Performance Bond Deduction. Deduction rate from the total adjusted Unit 1 and common equipment and materials erection price if the Project Manager does not require a performance bond for Unit 1:

1.25
(Rate in Dollars per Thousand Dollars of Total Erection Price)

C.2.1.7 Labor and Materials Payment Bond Deduction. Deduction rate from the total adjusted Unit 1 and common equipment and materials erection price if the Project Manager does not require a labor and materials payment bond for Unit 1:

0.50
(Rate in Dollars per Thousand Dollars of Total Erection Price)

*EPA Request dated Oct 12, 2010, for Information Pursuant to Section 114 . Response #10 of 17 of Appendix B.

Six Minute Retention Tank

Deduction from C.2.1 for erecting recycle tanks with six minute retention time in lieu of 10 minutes in C.2.1.

With 2 Spare Modules	341,100
" 1 " "	283,100

*EPA Request dated Oct 12, 2010, for Information Pursuant to Section 114 . Response #10 of 17 of Appendix B.

C.2.2 Unit 2 Erection. Lump sum base price for erection of Unit 2 equipment and materials:

Eleven Million One Hundred Sixty Nine

Thousand One Hundred ($ 11,169,100)
(Price in Words)

C.2.2.1 Deletion of One Spare Module. Lump sum deduction from the Item C.2.2 erection price for erecting a wet scrubber system with one spare module in lieu of the specified system with two spare modules:

Eight Hundred Fifty Eight Thousand Six

Hundred ($ 858,600).
(Price in Words)

C.2.2.2 Alternate Materials Erection. Lump sum adjustment to the Item C.2.2 erection price for erecting scrubber modules, reheater casings, and reaction tanks constructed of each of the following materials in lieu of the specified base material:

Material	Adjustment (Addition or Deduction)	Amount	
		Two Spares	One Spare
Alloy 904L		$ +266,000	$ -665,600
Alloy G		$ +1,013,200	$ +8200
Carbon Steel Rubberlined except reheater casing (Other)		$ N/C	$ N/C

C.2.2.3 Forced Oxidation System Erection. Lump sum addition to the Item C.2.2 erection price for erecting a scrubber with a forced oxidation system:

	Amount
Scrubber with two spare modules	$ 107,500
Scrubber with one spare module	$ 96,800

C.2.2.4 Modulating Control System Erection. Lump sum adjustment to the C.2.2 erection price for erecting modulating control equipment of the

*EPA Request dated Oct 12, 2010, for Information Pursuant to Section 114 . Response #10 of 17 of Appendix B.

analog computing type by one of the following manufacturers in lieu of Bailey Controls:

Alternate Manufacturer	Adjustment (Addition or Deduction)	Amount: Two Spares	Amount: One Spare
Foxboro	_____	$ N/C	$ N/C
Westinghouse	_____	$ _____	$ _____
Leeds & Northrup	_____	$ _____	$ _____

Lump sum adjustment to the C.2.2 erection price for erecting modulating control equipment of the digital computing type by one of the following manufacturers in lieu of Bailey Controls analog computing type:

Digital System Manufacturer	Adjustment (Addition or Deduction)	Amount: Two Spares	Amount: One Spare
Bailey	_____	$ N/C	$ N/C
Foxboro	_____	$ _____	$ _____
Westinghouse	_____	$ _____	$ _____
Leeds & Northrup	_____	$ _____	$ _____
Forney	_____	$ _____	$ _____
_____ (Standard supplier)	_____	$ _____	$ _____

C.2.2.5 Programmable Controllers Erection. Lump sum adjustment to the C.2.2 erection price for erecting programmable controller equipment by one of the following manufacturers in lieu of the standard programmable controller equipment:

Alternate Manufacturer	Adjustment (Addition or Deduction)	Amount: Two Spares	Amount: One Spare
Square D	_____	$ N/C	$ N/C
Allen-Bradley	_____	$ _____	$ _____
Struthers-Dunn	_____	$ _____	$ _____
Forney	_____	$ _____	$ _____

*EPA Request dated Oct 12, 2010, for Information Pursuant to Section 114 . Response #10 of 17 of Appendix B.

C.2.2.6 Performance Bond Deduction. Deduction rate from the total adjusted Unit 2 erection price if the Project Manager does not require a performance bond for Unit 2:

1.25

(Rate in Dollars per Thousand Dollars of Total Erection Price)

C.2.2.7 Labor and Materials Payment Bond Deduction. Deduction rate from the total adjusted Unit 2 erection price if the Project Manager does not require a labor and materials payment bond for Unit 2:

0.50

(Rate in Dollars per Thousand Dollars of Total Erection Price)

C.2.3 Unit 3 and Common Equipment and Materials Erection. Lump sum base price for erection of equipment and materials for Unit 3 and equipment and materials common to Units 3 and 4:

Eleven Million Nine Hundred Twenty Six

Thousand Three Hundred ($11,926,300)

(Price in Words)

C.2.3.1 Deletion of One Spare Module. Lump sum deduction from the Item C.2.3 erection price for erecting a wet scrubber system with one spare module in lieu of the specified system with two spare modules:

Eight Hundred Eighty Thousand

($880,000)

(Price in Words)

C.2.3.2 Alternate Materials Erection. Lump sum adjustment to the Item C.2.3 erection price for erecting scrubber modules, reheater casings, and reaction tanks constructed of each of the following materials in lieu of the specified base material:

Material	Adjustment (Addition or Deduction)	Amount	
		Two Spares	One Spare
Alloy 904L		$+263,600	$ -669,500
Alloy G		$+1,018,900	$ -400
Carbon Steel, Rubberlined except reheater casing (Other)		$ N/C	$ N/C

*EPA Request dated Oct 12, 2010, for Information Pursuant to Section 114 . Response #10 of 17 of Appendix B.

Six Minute Retention Tank

Deduction from C.2.2 for erecting recycle tanks with six minute retention time in lieu of 10 minutes in C.2.2.

With 2 Spare Modules	341,100
" 1 " "	283,100

*EPA Request dated Oct 12, 2010, for Information Pursuant to Section 114 . Response #10 of 17 of Appendix B.

C.2.3.3 Forced Oxidation System Erection. Lump sum addition to the Item C.2.3 erection price for erecting a scrubber with a forced oxidation system:

	Amount
Scrubber with two spare modules	$ 107,500
Scrubber with one spare module	$ 96,800

C.2.3.4 Modulating Control System Erection. Lump sum adjustment to the C.2.3 erection price for erecting modulating control equipment of the analog computing type by one of the following manufacturers in lieu of Bailey Controls:

Alternate Manufacturer	Adjustment (Addition or Deduction)	Amount: Two Spares	Amount: One Spare
Foxboro	_____	$ N/C	$ N/C
Westinghouse	_____	$ _____	$ _____
Leeds & Northrup	_____	$ _____	$ _____

Lump sum adjustment to the C.2.3 erection price for erecting modulating control equipment of the digital computing type by one of the following manufacturers in lieu of Bailey Controls analog computing type:

Digital System Manufacturer	Adjustment (Addition or Deduction)	Amount: Two Spares	Amount: One Spare
Bailey	_____	$ N/C	$ N/C
Foxboro	_____	$ _____	$ _____
Westinghouse	_____	$ _____	$ _____
Leeds & Northrup	_____	$ _____	$ _____
Forney	_____	$ _____	$ _____
_____ (Standard supplier)	_____	$ _____	$ _____

C.2.3.5 Programmable Controllers Erection. Lump sum adjustment to the C.2.3 erection price for erecting programmable controller equipment by

*EPA Request dated Oct 12, 2010, for Information Pursuant to Section 114 . Response #10 of 17 of Appendix B.

one of the following manufacturers in lieu of the standard programmable controller equipment:

Alternate Manufacturer	Adjustment (Addition or Deduction)	Amount: Two Spares	Amount: One Spare
Square D	_____	$ N/C	$ N/C
Allen-Bradley	_____	$ _____	$ _____
Struthers-Dunn	_____	$ _____	$ _____
Forney	_____	$ _____	$ _____

C.2.3.6 Performance Bond Deduction. Deduction rate from the total adjusted Unit 3 and common equipment and materials erection price if the Project Manager does not require a performance bond for Unit 3:

1.25
(Rate in Dollars per Thousand Dollars of Total Erection Price)

C.2.3.7 Labor and Materials Payment Bond Deduction. Deduction rate from the total adjusted Unit 3 and common equipment and materials erection price if the Project Manager does not require a labor and materials payment bond for Unit 3:

0.50
(Rate in Dollars per Thousand Dollars of Total Erection Price)

C.2.4 Unit 4 Erection. Lump sum base price for erection of Unit 4 equipment and materials:

Eleven Million One Hundred Sixty Eight
Thousand One Hundred ($ 11,168,100)
(Price in Words)

C.2.4.1 Deletion of One Spare Module. Lump sum deduction from the Item C.2.4 erection price for erecting a wet scrubber system with one spare module in lieu of the specified system with two spare modules:

Eight Hundred Fifty Eight Thousand Six Hundred
($ 858,600)
(Price in Words)

*EPA Request dated Oct 12, 2010, for Information Pursuant to Section 114 . Response #10 of 17 of Appendix B.

Six Minute Retention Tank

Deduction from C.2.3 for erecting recycle tanks with 6 minute retention time in lieu of 10 minutes in C.2.3

With 2 Spare Modules	341,100
" 1 " "	283,100

*EPA Request dated Oct 12, 2010, for Information Pursuant to Section 114 . Response #10 of 17 of Appendix B.

C.2.4.2 Alternate Materials Erection. Lump sum adjustment to the Item C.2.4 erection price for erecting scrubber modules, reheater casings, and reaction tanks constructed of each of the following materials in lieu of the specified base material:

Material	Adjustment (Addition or Deduction)	Amount Two Spares	Amount One Spare
Alloy 904L	Addition	$+266,000	$ -665,600
Alloy G	Addition	$+1,013,200	$ + 8,200
Carbon Steel, Rubber~~lined~~ except reheater casing (Other)		$ N/C	$ N/C

C.2.4.3 Forced Oxidation System Erection. Lump sum addition to the Item C.2.4 erection price for erecting a scrubber with a forced oxidation system:

	Amount
Scrubber with two spare modules	$ 107,500
Scrubber with one spare module	$ 96,800

C.2.4.4 Modulating Control System Erection. Lump sum adjustment to the C.2.4 erection price for erecting modulating control equipment of the analog computing type by one of the following manufacturers in lieu of Bailey Controls:

Alternate Manufacturer	Adjustment (Addition or Deduction)	Amount Two Spares	Amount One Spare
Foxboro		$ N/C	$ N/C
Westinghouse		$ "	$ "
Leeds & Northrup		$ "	$ "

Lump sum adjustment to the C.2.4 erection price for erecting modulating control equipment of the digital computing type by one of the following manufacturers in lieu of Bailey Controls analog computing type:

Digital System Manufacturer	Adjustment (Addition or Deduction)	Amount Two Spares	Amount One Spare
Bailey		$ N/C	$ N/C
Foxboro		$ N/C	$ N/C

*EPA Request dated Oct 12, 2010, for Information Pursuant to Section 114 . Response #10 of 17 of Appendix B.

Digital System Manufacturer	Adjustment (Addition or Deduction)	Amount: Two Spares	Amount: One Spare
Westinghouse	_____	$ N/C	$ N/C
Leeds & Northrup	_____	$ _____	$ _____
Forney	_____	$ _____	$ _____
_____ (Standard supplier)	_____	$ _____	$ _____

C.2.4.5 Programmable Controllers Erection. Lump sum adjustment to the C.2.4 erection price for erecting programmable controller equipment by one of the following manufacturers in lieu of the standard programmable controller equipment:

Alternate Manufacturer	Adjustment (Addition or Deduction)	Amount: Two Spares	Amount: One Spare
Square D	_____	$ N/C	$ N/C
Allen-Bradley	_____	$ _____	$ _____
Struthers-Dunn	_____	$ _____	$ _____
Forney	_____	$ _____	$ _____

C.2.4.6 Performance Bond Deduction. Deduction rate from the total adjusted Unit 4 erection price if the Project Manager does not require a performance bond for Unit 4:

1.25
(Rate in Dollars per Thousand Dollars of Total Erection Price)

C.2.4.7 Labor and Materials Payment Bond Deduction. Deduction rate from the total adjusted Unit 4 erection price if the Project Manager does not require a labor and materials payment bond for Unit 4:

0.50
(Rate in Dollars per Thousand Dollars of Total Erection Price)

C.3 SPARE PARTS OPTION. Firm lump sum price option for furnishing spare parts recommended by the bidder in the Proposal Data section, such option to be exercised by the Project Manager within 6 months after date of contract.

*EPA Request dated Oct 12, 2010, for Information Pursuant to Section 114 . Response #10 of 17 of Appendix B.

6 minute retention tank. Deduction

from C.2.4 for erecting recycle tanks with 6 minutes retention time in lieu of 10 minutes in C.2.4.

With 2 spare modules	341,100
With 1 spare module	283,100

*EPA Request dated Oct 12, 2010, for Information Pursuant to Section 114 . Response #10 of 17 of Appendix B.

C.3.1 Unit 1 and Equipment Common to Units 1 and 2.

Five Hundred Forty One Thousand Dollars

(Price in Words) ($ 541,000)

C.3.2 Unit 2.

Five Hundred Twenty Thousand-

Seven Hundred Dollars ($ 520,700)

(Price in Words)

C.4 TRAINING PROGRAM OPTION. Firm lump sum price option for providing training program as described in the Proposal Data section:

Thirty Thousand Dollars

(Price in Words) ($ 30,000)

C.5 MANUFACTURER'S CONSULTING SERVICES. Manufacturer's consulting services as specified in Section 1A will be provided for the following prices.

C.5.1 Operations Consultant Option. Firm lump sum monthly price for providing operations consulting services for the time period specified in Section 1A:

Four hundred eighty dollars

per diem ($ 480/diem)

(Price in Words)

C.5.2 Process Chemistry Consultant Option. Firm lump sum prices for providing process chemistry consulting services as specified in Section 1A:

Monthly price for data analysis and interpretation services	$ 11,968
Lump sum price for 60 days of onsite services (no overtime or weekends)	$ 32,640

*EPA Request dated Oct 12, 2010, for Information Pursuant to Section 114 . Response #10 of 17 of Appendix B.

C.5.2.1 Adjustment Prices. Firm adjustment prices for the process chemistry consultant onsite services price stated in Item C.5.2:

Per diem $ N/A

Per round trip to the site $ N/A

C.6 REPLACEMENT PARTS OPTION. Firm lump sum price option for furnishing replacement parts as specified in the Instructions to Bidders, such option to be exercised by the Project Manager within 6 months after date of contract:

Five million, seven hundred thousand dollars ($5,700,000)
(Price in Words)

C.7 CANCELLATION SCHEDULE AND CHARGES. The undersigned bidder proposes the following schedule of cancellation charges for each unit in accordance with the Contingent Cancellation article of the Instructions to Bidders and the Cancellation of Work article in the General Conditions.

Cancellation Date	Unit 1	Unit 2	Unit 3	Unit 4
	$	$	$	$
	$	$	$	$
	$	$	$	$
	$	$ See Page	$	$
	$	$ 1-A.31A &	$	$
	$	$ 1-A.31B	$	$
	$	$	$	$
	$	$	$	$

C.8 ADDENDA. The undersigned bidder acknowledges receipt of the following Addenda, which have been considered in preparing this Proposal.

Number One (1) Dated May 15, 1981

Number Two (2) Dated May 29, 1981

Number Three (3) Dated June 23, 1981

Number _____ Dated _____

[IPP 9285 WET SCRUBBER 62.0202]
[061881 ADDENDUM 3]

*EPA Request dated Oct 12, 2010, for Information Pursuant to Section 114 . Response #10 of 17 of Appendix B.

LOS ANGELES DEPARTMENT OF WATER AND POWER
INTERMOUNTAIN POWER PROJECT
UNITS NO. 1 TO 4
FGD SYSTEM (REF. 1311)
CANCELLATION CHARGES
PERCENT OF CONTRACT PRICE BEFORE ESCALATION

MONTH	UNIT #1	UNIT #2	UNIT 3#	UNIT #4
12/81	1.1%			
1/82	1.3			
2/82	1.9			
3/82	6.2			
4/82	6.0			
5/82	4.3			
6/82	3.4			
7/82	3.8			
8/82	7.9			
9/82	7.9			
10/82	6.8			
11/82	7.3			
12/82	6.0	4.4%		
1/83	5.0	3.5		
2/83	4.5	2.1		
3/83	6.5	2.1		
4/83	3.1	2.3		
5/83	2.4	8.5		
6/83	1.7	8.5		
7/83	.7	7.7		
8/83	1.4	8.5		
9/83	1.7	6.4		
10/83	.7	5.1		
11/83	.7	5.1		
12/83	.7	8.1	4.4%	
1/84	.7	3.8	3.5	
2/84	.3	3.0	2.1	
3/83	.3	2.1	2.1	
4/84	.3	.9	2.3	
5/84	.3	1.7	8.5	
6/84	.3	2.1	8.5	
7/84	.3	.9	7.7	
8/84	.3	.9	8.5	
9/84	.3	.9	6.4	
10/84	.3	.9	5.1	
11/84	.3	.5	5.1	
12/84	.3	.5	8.1	4.4%
1/85	.3	.5	3.8	3.5
2/85	.3	.5	3.0	2.1
3/85	.3	.5	2.1	2.1
4/85	.3	.5	.9	2.3
5/85	.3	.5	1.7	8.5
6/85	.3	.5	2.1	8.5
7/85	.3	.5	.9	7.7
8/85	.3	.5	.9	8.5

*EPA Request dated Oct 12, 2010, for Information Pursuant to Section 114 . Response #10 of 17 of Appendix B.

LOS ANGELES DEPARTMENT OF WATER AND POWER
INTERMOUNTAIN POWER PROJECT
UNITS NO. 1 TO 4
FGD SYSTEM (REF. 1311)
CANCELLATION CHARGES
PERCENT OF CONTRACT PRICE BEFORE ESCALATION
PAGE 2

MONTH	UNIT #1	UNIT #2	UNIT #3	UNIT #4
9/85	.3%	.5%	.9%	6.4%
10/85	.3	.5	.9	5.1
11/85		.5	.5	5.1
12/85		.5	.5	8.1
1/86		.5	.5	3.8
2/86		.5	.5	3.0
3/86		.5	.5	2.1
4/86		.5	.5	.9
5/86		.5	.5	1.7
6/86		.5	.5	2.1
7/86		.5	.5	.9
8/86			.5	.9
9/86			.5	.9
10/86			.5	.9
11/86			.5	.5
12/86			.5	.5
1/87			.5	.5
2/87			.5	.5
3/87			.5	.5
4/87			.5	.5
5/87			.5	.5
6/87			.5	.5
7/87			.5	.5
8/87				.5
9/87				.5
10/87				.5
11/87				.5
12/87				.5
1/88				.5
2/88				.5
3/88				.5
4/88				.5
5/88				.5
6/88				.5
7/88				.5
	100.0%	100.0%	100.0%	100.0%

I-A.31B

Note: Above are percentages of the total equipment plus construction prices and are additive not cumulative.

*EPA Request dated Oct 12, 2010, for Information Pursuant to Section 114 . Response #10 of 17 of Appendix B.

C.9 DECLARATIONS AND SIGNATURES. The undersigned bidder agrees to furnish the required bonds and to enter into a contract after acceptance of this Proposal within 10 days of the tender by Owner of such contract for execution and further agrees to complete all work covered by the foregoing Proposal, in accordance with specified requirements, on or before the specified completion date.

Enclosed herewith is the required proposal guarantee in the amount of (five (5) per cent of the total of the Item C.1.1, C.1.2, C.1.3, C.1.4, C.2.1, C.2.2, C.2.3 and C.2.4 lump sum base prices)

Seven Million One Hundred Fourteen Thousand Dollars ($7,114,000)
(Amount in Words)

which the undersigned bidder agrees is to be forfeited to and become the property of the Intermountain Power Agency, as liquidated damages, should this Proposal be accepted and a contract be awarded to him and should he fail to enter into a contract in the form prescribed and to furnish the required bonds, but otherwise the aforesaid proposal guarantee will be returned upon his signing the contract and delivering the approved bonds.

In submitting this Proposal it is understood that the right is reserved by the Owner to reject any and all proposals, and it is understood that this Proposal may not be withdrawn during a period of 120 days after the time specified for receipt of proposals.

The undersigned bidder hereby certifies (a) that all conflicts and exceptions have been noted or listed as directed in the Instructions to Bidders; (b) that this Proposal is genuine and is not made in the interest of, or in the behalf of, any undisclosed person, firm or corporation, and is not submitted in conformity with any agreement or rules of any undisclosed group, association, organization, or corporation; (c) that he has not directly or indirectly induced or solicited any other bidder to put in a false or sham proposal; (d) that he has not solicited or induced any person, firm, or corporation to refrain from bidding; and (e) that he

*EPA Request dated Oct 12, 2010, for Information Pursuant to Section 114 . Response #10 of 17 of Appendix B.

NOTARIAL ACKNOWLEDGMENT

CITY, COUNTY & STATE OF NEW YORK, ss

On this 8th day of July 19 81, before me personally came Richard G. Hight Assistant Secretary to me known, who, being by me duly sworn, did depose and say that he is an Assistant Secretary of the FEDERAL INSURANCE COMPANY, the Corporation described in and which executed the annexed instrument; that he knows the corporate seal; that it was so affixed by order and authority of the Board of Directors of said corporation, and that he signed his name thereto by like order and authority.

Sworn to and Acknowledged before me on the date above written

HELEN S. BROWN
NOTARY PUBLIC, State of New York
No. 31-4882188
Qualified in New York County
Commission Expires March 30, 1983

(Notary's Signature, Description and Seal)

CERTIFICATION

CITY AND COUNTY OF NEW YORK: ss

I, the undersigned, Assistant Secretary of the FEDERAL INSURANCE COMPANY, do hereby certify that the following is a true excerpt from the By-Laws of the said Company as adopted by its Board of Directors on March 11, 1953 and amended May 27, 1971 and that this By-Law is in full force and effect.

"ARTICLE XVIII.

Section 2. All bonds, undertakings, contracts and other instruments other than as above for and on behalf of the Company which it is authorized by law or its charter to execute, may and shall be executed in the name and on behalf of the Company either by the Chairman or the Vice-Chairman or the President or a Vice-President, jointly with the Secretary or an Assistant Secretary, under their respective designations, except that any one or more officers or attorneys-in-fact designated in any resolution of the Board of Directors or the Executive Committee, or in any power of attorney executed as provided for in Section 3 below, may execute any such bond, undertaking or other obligation as provided in such resolution or power of attorney.

Section 3. All powers of attorney for and on behalf of the Company may and shall be executed in the name and on behalf of the Company, either by the Chairman or the Vice-Chairman or the President or a Vice-President or an Assistant Vice-President, jointly with the Secretary or an Assistant Secretary, under their respective designations."

And I further certify that I have compared the foregoing copy of the POWER OF ATTORNEY with the original thereof and the same is a correct and true copy of the whole of said original Power of Attorney and that said Power of Attorney has not been revoked.

And I further certify that said FEDERAL INSURANCE COMPANY is duly licensed to transact fidelity and surety business in each of the States of the United States of America, District of Columbia, Puerto Rico, and each of the Provinces of Canada with the exception of Prince Edward Island; and is also duly licensed to become sole surety on bonds, undertakings, etc., permitted or required by law.

Given under my hand and seal of said Company at New York, N.Y., this 8th day of July 19 81

Assistant Secretary

Financial Statement of Federal Insurance Company as of December 31, 1979
IN THOUSANDS OF DOLLARS
STATUTORY BASIS

ASSETS		LIABILITIES AND SURPLUS TO POLICYHOLDERS	
United States Treasury Bonds	$ 100	Unearned Premiums	$ 281,366
United States Government Secured New Housing Bonds	108,141	Outstanding Losses and Claims	561,679
State and Municipal Bonds	449,133	Ceded Reinsurance Balances Payable	6,355
Other Bonds	113,752	Funds Held under Reinsurance Treaties	5,829
Preferred Stocks	100,811	Non-Admitted Reinsurance	12,940
Common Stocks	108,170	Other Liabilities	129,341
Collateral Loans	1,800		
TOTAL INVESTMENTS	881,707	TOTAL LIABILITIES	984,509
Investment in Affiliates:			
Great Northern Insurance Co.	14,456		
Pacific Indemnity Company	68,748		
Chubb Life Insurance Co.	31,914		
Bellmead Development Corp.	38,109	Common Stock	13,987
Other	3,020	Paid-in Surplus	40,802
Cash	20,080	Earned Surplus	168,603
Net Premiums Receivable	139,619	Unrealized Appreciation of Investments	20,955
Reinsurance Recoverable on Paid Losses	8,156	SURPLUS TO POLICYHOLDERS	261,147
Other Assets	40,847		
TOTAL ADMITTED ASSETS	$ 1,245,656	TOTAL	$ 1,245,656

Investments are valued in accordance with requirements of the National Association of Insurance Commissioners.

Investments valued at $71,987,507 are deposited with government authorities as required by law.

*EPA Request dated Oct 12, 2010, for Information Pursuant to Section 114 . Response #10 of 17 of Appendix B.

Certified Copy of

POWER OF ATTORNEY

Know all Men by These Presents, That the FEDERAL INSURANCE COMPANY, 100 William Street, New York, New York, a New Jersey Corporation, has constituted and appointed, and does hereby constitute and appoint Richard G. Hight, Assistant Secretary and Floyd A. Schroppe, David B. Norris, Jr., Muriel Ferrell, Paul Salmon, George W. Rabbe, James E. Altman, Olga Andino, Ed Van Name, Yasmin Marinaro, Edward R. Saunders, Jr., and Bruce Lee Wilson of New York, New York each its true and lawful Attorney-in-Fact to execute under such designation in its name and to affix its corporate seal to and deliver for and on its behalf as surety thereon or otherwise, bonds or obligations given or executed in the course of its business, and any instruments amending or altering the same, and consents to the modification or alteration of any instruments referred to in said bonds or obligations.

In Witness Whereof, the said FEDERAL INSURANCE COMPANY has, pursuant to its By-Laws, caused these presents to be signed by its Assistant Vice-President and Assistant Secretary and its corporate seal to be hereto affixed this 1st day of May 1980.

FEDERAL INSURANCE COMPANY
By

George McClellan
Assistant Vice-President

Richard D. O'Connor
Assistant Secretary

STATE OF NEW JERSEY }
County of Essex } ss:

On this 1st day of May 1980, before me personally came Richard D. O'Connor to me known and by me known to be Assistant Secretary of the FEDERAL INSURANCE COMPANY, the corporation described in and which executed the foregoing Power of Attorney, and the said Richard D. O'Connor being by me duly sworn, did depose and say that he is Assistant Secretary of the FEDERAL INSURANCE COMPANY and knows the corporate seal thereof; that the seal affixed to the foregoing Power of Attorney is such corporate seal and was thereto affixed by authority of the By-Laws of said Company, and that he signed said Power of Attorney as Assistant Secretary of said Company by like authority; and that he is acquainted with George McClellan and knows him to be the Assistant Vice-President of said Company, and that the signature of said George McClellan subscribed to said Power of Attorney is in the genuine handwriting of said George McClellan and was thereto subscribed by authority of said By-Laws and in deponent's presence.

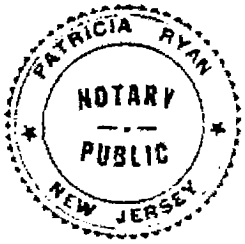

Acknowledged and Sworn to before me on the date above written.

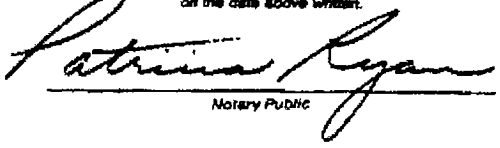

Notary Public

PATRICIA RYAN
Notary Public of New Jersey
My Commission Expires December 11, 1983

Form 21-10-183 (Rev. 5/80 Spec. NYSD) R-18034 (10M)

*EPA Request dated Oct 12, 2010, for Information Pursuant to Section 114 . Response #10 of 17 of Appendix B.

RECOMMENDED SPARE PARTS LIST
INTERMOUNTAIN POWER PROJECT
FLUE GAS DESULFURIZATION
&
LIMESTONE PREPARATION SYSTEM

	EQUIPMENT		SPARE PART	QUAN.	UNIT PRICE
1.	ABSORBERS F-101 THRU F-106 (6 UNITS)	a)	SLURRY SPRAY NOZZLES (REFRAX)	10	292.
		b)	MIST ELIMINATOR SPRAY NOZZLES	8	64.
2.	RECYCLE PUMPS J-101 A,B,C,D THRU J-106 A,B,C,D (18 PUMPS)	a)	SHELL LINER, SUCT. SIDE	1	2095.
		b)	SHELL LINER, ENG. SIDE	1	2021.
		c)	IMPELLER	1	6195.
		d)	SIDE LINER, SUCT. SIDE	1	1362.
		e)	SIDE LINER, ENG. SIDE	1	1001.
		f)	SUCTION SLEEVE	1	956.
		g)	LANTERN RING 317	1	914.
		h)	SHAFT SLEEVE 317	1	800.
		i)	CLAMP PLATE 317	1	330.
		j)	PACKING RING	5	30.
		k)	GEAR REDUCER, 361 RPM	1	16303.
		l)	GEAR REDUCER, 372 RPM	1	16303.
		m)	GEAR REDUCER, 383 RPM	1	16303.
3.	LIMESTONE SLURRY PUMPS J-011 A,B (2 PUMPS)	a)	BEARING & SHAFT ASS'Y.	1	1581.
		b)	FRAME PLATE LINER INSERT	1	527.
		c)	VOLUTE LINER	1	1111.
		d)	THROAT BUSH	1	815.
		e)	IMPELLER	1	922.
		f)	SHAFT SLEEVE	1	179.
		g)	PACKING RINGS	4	33.
4.	M.E. WASH PUMP J-012 A,B (2 PUMPS	a)	SET OF BEARINGS	1	508.
		b)	SHAFT SLEEVE	1	508.
		c)	CASE GASKET	1	22.
		d)	BEARING OIL SEAL	2	64.

*EPA Request dated Oct 12, 2010, for Information Pursuant to Section 114 . Response #10 of 17 of Appendix B.

	EQUIPMENT		SPARE PARTS	QUAN.	UNIT PRICE
5.	LIMESTONE SLURRY TANK AGITATOR L-011	a)	SPARE GEARBOX INCLUDING REDUCER, CHANGE GEARS, AND LOW SPEED COUPLING HALF	1	59920.
		b)	SERVICE KIT	1	733.
6.	RECYCLE TANK AGITATOR L-101 THRU L-106 (6 UNITS)	a)	SPARE GEARBOX INCLUDING REDUCER, CHANGE GEARS AND LOW SPEED COUPLING HALF	1	105649.
		b)	SERVICE KIT	1	1198.
7.	REHEAT SOOT BLOWER L-107 THRU L-112 (6 SYSTEMS = 72 SOOT BLOWERS)	a)	MODEL DVT HEAD ASSY.	3	1374.
		b)	VALVE STEM ASSY.	6	356.
		c)	SPRING RETAINER	4	3.40
		d)	SPRING	4	3.50
		e)	STUFFING BOX	4	54.30
		f)	PACKING SET	12	25.10
		g)	GASKET	4	3.40
		h)	GLAND BUSHING	4	18.40
		i)	GASKET INLET FLANGE	4	18.40
		j)	GASKET EXTENSION	8	1.80
		k)	ROTARY CHAIN (3/4" DP)	20	35.60
		l)	CHAIN CONNECTOR (3/4" DP)	8	4.80
		m)	TRAVERSE CHAIN (2" DP)	20	44.50
		n)	CHAIN CONNECTOR (2" DP)	8	11.20
		o)	CHAIN TIGHTENER (TRAV.)	2	472.
		p)	CHAIN TIGHTENER (ROT.)	2	494.
		q)	MCGILL ROLLER	4	77.80
		r)	JACK SHAFT ASSY. (TRAV.)	2	667.
		s)	JACK SHAFT ASSY. (ROT.)	2	470.
		t)	BALL BEARING	4	33.70
		u)	TRAVELING CARRIAGE ASSY.	1	4100.
		v)	OIL SEAL (STEAM SVE)	2	51.
		w)	OIL SEAL (STEAM SVE)	2	61.
		x)	PACKING SET (STEAM SVE)	12	42.90
		y)	BEARING	4	25.40
		z)	GASKET	12	0.50
		aa)	BUSHING	2	34.30
		bb)	GLAND	2	46.
		cc)	GASKET - LANCE	6	21.30
		dd)	MAIN GEAR BOX TRAVERSE	1	29.48
		ee)	MAIN GEAR BOX ROTARY	1	2732.
		ff)	COVER GASKET	8	3.40
		gg)	GASKET	8	0.80
		hh)	KLOZURE	4	11.90
		ii)	MOTOR TRAVERSE	2	582.
		jj)	MOTOR ROTARY	2	692.
		kk)	STOP CONTROL SWITCH ASSY.	2	366.
		ll)	REVERSE CONTROL SWITCH	2	352.
		mm)	BEARING	8	39.
		nn)	GEAR OIL (5# CAN)	4	37.
		oo)	MOTOR OIL (50# CAN)	1	286.

*EPA Request dated Oct 12, 2010, for Information Pursuant to Section 114 . Response #10 of 17 of Appendix B.

	EQUIPMENT		SPARE PART	QUAN.	UNIT PRIC
7A	RENEAT SOOT BLOWER PROGRAMMABLE CONTROL	a)	80/20 COMPUTER MODULE	1	2380.
		b)	CORE MEMORY MODULE	1	2856.
		c)	POWER SUPPLY	1	1764.
		d)	DIGITAL INPUT CARD	1	249.
		e)	DIGITAL OUTPUT CARD	1	268.
		f)	AC OUTPUT ASSY.	1	1268.
		g)	AC INPUT ASSY.	1	1011.
		h)	I/O DECODER	1	1242.
		i)	AC SIGNAL CONVERTER	1	1107.
		j)	MICRO PERMIT	1	676.
		k)	MPX (DMC) MODULE	1	1059.
		l)	"OR" CARD	1	314.
		m)	LINE DRIVER	1	622.
		n)	DISPLAY DECODER	1	777.
		o)	LIGHT DRIVER	1	297.
		p)	STATUS LIGHT DRIVER	1	928.
		q)	PUSHBUTTON SWITCH	1	62.
		r)	CAPACITOR KIT	1	406.
		s)	SEMICONDUCTOR KIT	1	406.
		t)	PARTS KIT	1	655.
		u)	EXTENDER CARD, UNIT A	1	217.
		v)	EXTENDER CARD, UNIT B	1	217.
		w)	LOGIC PROBE	1	767.
8.	LIMESTONE GRINDING SYSTEM M-OIL A,B,C, THREE (3) SYSTEMS COMMON TO UNITS 1 & 2 AND THREE (3) COMMON TO UNITS 3 & 4.	a)	34 x 16 TRUNNION BEARING BUSHING, 120° SEGMT.	3	2971.
		b)	TRUNNION BEARING OIL SEAL & SPRING ASSY.	24	185.
		c)	TRUNNION BEARING OIL SEAL BAND	6	92.
		d)	SPARE PARTS FOR MARCY 355 AL BEARING LUBRICATION SYSTEM	2	1170.
		e)	SPARE PARTS FOR LINCOLN AGS GEAR SPRAY SYSTEM	2	1389.
		f)	OIL LEVEL SENSOR ASSEMBLY	3	136.
		g)	CYCLONE PLATE LINER	1	32.
		h)	CYCLONE CYLINDER	1	61.
		i)	CYCLONE INLET HEAD	1	127.
		j)	CYCLONE CONE LINER	1	77.
		k)	CYCLONE VORTEX FINDER	1	58.
		l)	CYCLONE APEX	1	146.
9.	LIMESTONE WEIGH FEEDER M-012 A, B, C THREE (3) FEEDERS COMMON TO UNITS 1 & 2 AND THREE (3) COMMON TO UNITS 3 & 4	a)	PRINTED CIRCUIT BOARDS AND RELAYS	1	1012.

*EPA Request dated Oct 12, 2010, for Information Pursuant to Section 114 . Response #10 of 17 of Appendix B.

EQUIPMENT		SPARE PART	QUAN.	UNIT PRI
10. INSTRUMENTATION	a)	MIST ELIMINATOR ON/OFF VALVES	12	953.
	b)	ABSORBER LEVEL CONTROL SENSORS	2	6096.
	c)	DIFFERENTIAL PRESS TRANSMITTORS	2	3048.
	d)	ABSORBER pH ELECTRODE	12	133.
		ABSORBER pH REF. ELECTRODE	12	25.
		ABSORBER pH ULTRASON. GEN/MTR	2	1397.
	e)	LIME SLURRY DENSITY PREAMPLIFIER	2	
	f)	L.S.D. POWER SUPPLY	2	
	g)	L.S.D. PCB BOARD	2	3048.
	h)	L.S.D. PCD AUXL. BOARD	2	
	i)	L.S.D. LINEAR, ZER	2	
	j)	CONTROL PANEL CURRENT TRIP	4	5188.
	k)	C.P. CONTROLLER	4	2000.
	l)	C.P. M/A STATION	2	3810.
	m)	C.P. PUSH BUTTON STATION	2	2350.
	n)	C.P. FENS, POINTERS, FUSES	2	4636.
	o)	C.P. MULTIPLIER	4	2318.
	p)	C.P. DIVIDER	4	2318.
	q)	C.P. ALARM RELAY	8	241.
	r)	C.P. FLASHER	2	254.
11. SLURRY CONTROL PINCH VALVES	a)	2" SLEEVES	2	267.
	b)	2.5" SLEEVES	2	330.
	c)	3" SLEEVES	2	394.
	d)	4" SLEEVES	2	470.
	e)	6" SLEEVES	1	699.
	f)	2" POSITIONER	5	1943.
	g)	3" POSITIONER	5	2223.
12. LIQUID CONTROL GLOBE VALVES	a)	1" C.S. PLUG	2	
	b)	1" C.S. STEM	2	
	c)	1" C.S. SEAT	2	
	d)	1" C.S. GASKET	2	464.
	e)	1" C.S. PIN	2	
	f)	1" C.S. PACKING	2	
	g)	1" C.S. DIAPHRAM	2	
	h)	1" REGULATOR	2	464.
	i)	3" CS/316 PLUG	1	
	j)	3" CS/316 STEM	1	
	k)	3" CS/316 SEAT	1	
	l)	3" CS/316 GASKET	1	3937.
	m)	3" CS/316 PIN	1	
	n)	3" CS/316 PACKING	1	
	o)	3" CS/316 DIAPHRAM	1	

*EPA Request dated Oct 12, 2010, for Information Pursuant to Section 114 . Response #10 of 17 of Appendix B.

EQUIPMENT		SPARE PART	QUAN.	UNIT PR
12. LIQUID CONTROL GLOBE VALVES (CONT'D.)	p)	6" CS/316 PLUG	2	
	q)	6" CS/316 STEM	2	
	r)	6" CS/316 SEAT	2	
	s)	6" CS/316 GASKET	2	13970.
	t)	6" CS/316 PIN	2	
	u)	6" CS/316 PACKING	2	
	v)	6" CS/316 DIAPHRAM	2	
	w)	6" HAST. C PLUG	1	
	x)	6" HAST. C STEM	1	
	y)	6" HAST. C SEAT	1	
	z)	6" HAST. C GASKET	1	9328.
	aa)	6" HAST. C PIN	1	
	bb)	6" HAST. C PACKING	1	
	cc)	6" HAST. C DIAPHRAGM	1	
13. PUMP SHUT-OFF KNIFE GATE VALVES	a)	30" GATES	3	6350.
	b)	30" SLEEVES	5	2096.
14. PUMP EXPANSION JOINTS	a)	RECYCLE PUMPS	4	4191.
	b)	OTHER PUMPS	2	1397.

*EPA Request dated Oct 12, 2010, for Information Pursuant to Section 114 . Response #10 of 17 of Appendix B.

SEVEN YEARS
REPLACEMENT PARTS LIST
INTERMOUNTAIN POWER PROJECT
UNITS 1,2,3 & 4
(PER UNIT - 7 YEARS PERIOD)
APPROXIMATE QUANTITIES

EQUIPMENT	PARTS DESCRIPTION	QUANTITY (PER UNIT)
Recycle Pumps		
J-101 A-D to J-106 A-D (Eighteen [18] per unit)	a. Shell liner, Suct. Side	70
	b. Shell Liner, Eng. Side	70
	c. Impeller	70
	d. Side Liner, Suct. Side	70
	e. Side Liner, Eng. Side	70
	f. Lantern Ring 317	18
	g. Suction Sleeve	70
	h. Shaft Sleeve 317	170
	i. Shaft	9
	j. Clamp Plate 317	18
	k. Set Packing Ring	336
	l. Bearing - Pump Side	18
	m. Bearing - Drive Side	18
	n. Gear Reducer "A Pump"	1
	o. Gear Reducer "B Pump"	1
	p. Gear Reducer "C Pump"	1
	q. Gear Set "A Pump"	3
	r. Gear Set "B Pump"	3
	s. Gear Set "C Pump"	3
Limestone Slurry Pump		
J-011 A,B (Two [2] per unit)	a. Bearing & Shaft Assembly	2
	b. Frame Plate Liner Insert	4
	c. Volute Liner	4
	d. Throat Bush	2
	e. Impeller	4
	f. Shaft Sleeve	14
	g. Set Packing Rings	28
	h. V-belt Set	8

*EPA Request dated Oct 12, 2010, for Information Pursuant to Section 114 . Response #10 of 17 of Appendix B.

GEESI
(Bidder's Name)

LIMESTONE SLURRY TANK

Tank function, fill in	
Retention time for operation at following steam generator operating condition	
At MCR, minutes	Not Applicable △
At 75 per cent of MCR, minutes	"
At 50 per cent of MCR, minutes	"
At 25 per cent of MCR, minutes	"
Weight of each tank, lb	
Dry	95,000
Operating	2,263,000
Flooded	2,398,000

Tank connections

	Connection Description	Size, in.
1	PUMP	6
2	"	"
3	TROUGH	8
4	SUPPLY	3
5	L.I.	3
6	SUMP RETURN	3
7	OVERFLOW	8
8	DRAIN	4
9	MANHOLE	30
10	MANHOLE	24
11	CLEANOUT	24 x 52
12	VAC-BRKR	8
13	SOFTENER SLUDGE	3" △

LIMESTONE SLURRY TANK

Tank mixers, if applicable	
Manufacturer and model	△ △ Chemineer 10 HTD-60 /Mixing Equipment/ Philadelphia Gear
Number per tank	One
Type	Spiral Bevel/Helical-Right Angle

(Trim Line)

[IPP 9255 WET SCRUBBER 62.0202]
D120381 030681]
D-52 b
1-C.45

*EPA Request dated Oct 12, 2010, for Information Pursuant to Section 114 . Response #10 of 17 of Appendix B.

	GEESI (Bidder's Name)
Tank function, fill in	Limestone Slurry
For turbine type mixers	
Location	Top Center
AFBMA L-10 rating of mixer shaft bearings	Not Applicable △
Impeller speed, rpm	20
Gear reducer manufacturer and model	△△ Chemineer #210 HT/Mixing Equipment/Philadelphi Gear
AFBMA L-10 rating of gear reducer bearings	250,000 Hrs
AGMA service factor of gear reducer	2.0 min.
Materials, shaft and impeller / Shaft Dia. △	Carbon Steel / 6-½" △
Impeller and shaft coating (if applicable)	
Material	Natural Rubber
Thickness	3/16"/3/8" on Imp. Edges
Impeller diameter, ft.	13.17 ft.
Motor	
Manufacturer and model	△ Reliance TX, (Mfg. Standard)
Frame size	404 TS
Horsepower/ service factor	60 / 1.15
Space heater rating, watts	164

(Trim Line)

[IPP 9255 WET SCRUBBER 62.0202]
[0120381 030681]
D-53-b
1-C.46

*EPA Request dated Oct 12, 2010, for Information Pursuant to Section 114 . Response #10 of 17 of Appendix B.

GRESI
(Bidder's Name)

(Bidder - Duplicate following)
(four pages as required and)
(fill in for each tank pro-)
(vided.)

D.17.9 Tanks.

Tank function, fill in	Ball Mill Sump Tank
Number provided	3
Will tank be shop fabricated or field erected	Shop
Applicable design code	API 650
Type, open or closed top	Closed top
Material (ASTM number and common name) and thickness	
Plates	Min. 1/4", A36 C.S. △△
Structural shapes	Circular △△

Coatings or linings	Location	Manufacturer and Type
	rubber lined	

Overall dimensions, ft	Approx. 8'6" Dia.
Normal operating depth, ft	5'
Operating volume, gal	3300

(Trim Line)

[IPP 9235 WET SCRUBBER 62.0202]
[0120381 022581]
D-51-C
1-C.47

*EPA Request dated Oct 12, 2010, for Information Pursuant to Section 114 . Response #10 of 17 of Appendix B.

	GEESI (Bidder's Name)
Tank function, fill in	Ball Mill Sump Tank
Retention time for operation at following steam generator operating condition	
At MCR, minutes	N.A.
At 75 per cent of MCR, minutes	
At 50 per cent of MCR, minutes	
At 25 per cent of MCR, minutes	
Weight of each tank, lb	
Dry	△△ Subject to Detail Engineering
Operating	△△ Subject to Detail Engineering
Flooded	△ Subject to Detail Engineering

Tank connections

Connection Description	Size, in.
Outlet	6
Overflow	6
Inlet	6

(Trim Line)

Tank mixers, if applicable	
Manufacturer and model	Philadelphia Mixers/Chemineer/ Mixing Equipment △△
Number per tank	One
Type	Top Entry

[IPP 9255 WET SCRUBBER 62.0202]
[0120381 030681]
D-52-C
1-C.48

*EPA Request dated Oct 12, 2010, for Information Pursuant to Section 114 . Response #10 of 17 of Appendix B.

	GEESI (Bidder's Name)
Tank function, fill in	Ball Mill Sump Tank
For turbine type mixers	
Location	Top Entry
AFBMA L-10 rating of mixer shaft bearings	Not Applicable △
Impeller speed, rpm	56
Gear reducer manufacturer and model	Philadelphia Gear
AFBMA L-10 rating of gear reducer bearings	250,000 Hrs. △
AGMA service factor of gear reducer	2.0 △
Materials, shaft and impeller /Shaft Dia △	Rubber Covered Steel / 2" △
Impeller and shaft coating (if applicable)	
Material	Rubber
Thickness	1/2"
Impeller diameter, ft/ Shaft diameter, in.	38" /2"
Motor	
Manufacturer and model	△△ General Electric, Westinghouse Seemans Allis
Frame size	182T
Horsepower/ service factor	3 / 1.15
Space heater rating, watts	40 △△

(Trim Line)

(IPP 9255 WET SCRUBBER 62.0202)
[0120381 030681]
D-33-C
1-C.49

*EPA Request dated Oct 12, 2010, for Information Pursuant to Section 114 . Response #10 of 17 of Appendix B.

	GEESI (Bidder's Name)
Tank function, fill in	N.A.
For air jet agitation mixers	
Nozzle material	
Number of nozzles	
Blower	
Manufacturer and model	
Type	
Air flow, acfm	
Discharge pressure, psi	
AFBMA L-10 rating of bearings	
Motor	
Manufacturer and model	
Frame size	
Horsepower/ service factor	
Space heater rating, watts	
Piping material, ASTM	
Piping size, in.	

(Trim Line)

[IPP 9255 WET SCRUBBER 62.0202]
[0120381 030981]
D-54
1-C.50

*EPA Request dated Oct 12, 2010, for Information Pursuant to Section 114 . Response #10 of 17 of Appendix B.

GEESI
(Bidder's Name)

(Bidder - Duplicate following)
(three pages as required and)
(fill in for each pump pro-)
(vided.)

D.17.10 Pumps.

Pump function, fill in	Mill Sump Pump
Manufacturer	△ A-S-H / WARMAN/GALIGHER
Model	866
Type	Centrifugal/Horizontal
Belt driven or direct connected	Belt driven
Number supplied	Twelve (12)
Impeller diameter, in.	17"
Design conditions	
Total head, ft (TDH)	97
Capacity, gpm	670
Rotational speed, rpm	1030
Power requirements, bhp, each pump	
At design conditions	40
Maximum	
Pump materials (by common name and ASTM number)	
Casing	Cast Iron, ASTM 48, Class 30
Impellers	Ductile Iron, ASTM A-536-7
Impeller coating	Natural Rubber

(Trim Line)

[IPP 9255 WET SCRUBBER 62.0202]
[0120381 022381]
D-55 -a
1-C.51

*EPA Request dated Oct 12, 2010, for Information Pursuant to Section 114 . Response #10 of 17 of Appendix B.

	GEESI (Bidder's Name)
Pump function, fill in	Mill Sump Pump
Shaft	AISI 1040
Shaft sleeves	420 S.S., 450 BH min.
Impeller wear plates	N.A.
Casing wearing rings	N.A.
Seal or injection water requirements for each pump	
Flow, gpm at 70 F	8 GPM
Required pressure, psi	Discharge Press. + 10 psig
Quality required	1000 ppm/40 microns
Drive motor	
Manufacturer and model	General Electric /Westinghouse/ Siemans-Allis △
Frame size	364 T
Horsepower/service factor	60 / 1.0
Space heater rating, watts	100 △△
Pump function, fill in	Mill Sump Pump
Variable speed drive, if applicable	
Manufacturer	Not Applicable
Type	↓
Model	↓
Lubrication system and recommended lubricant	Splash Oil Lubricated

(Trim Line)

[IPP 9255 WET SCRUBBER 62.0202]
[0120381 022581]
D-56-a
1-C.52

*EPA Request dated Oct 12, 2010, for Information Pursuant to Section 114 . Response #10 of 17 of Appendix B.

	GEESI (Bidder's Name)
Weights, lb	
Pump and baseplate	1720
Motor	750
Lubrication system	N.A.
Variable speed drive	N.A.
Complete assembly	2680
Requirements for Owner-furnished pump motors (350 horsepower and above)	
Motor function and quantity	N.A. / By GEESI
Motor speed, rpm	N.A.
Motor horsepower	N.A.
Special requirements	N.A.
	N.A.

(Trim Line)

[IPP 9255 WET SCRUBBER 62.0202]
[0120381 022581]
D-57-a
1-C.53

*EPA Request dated Oct 12, 2010, for Information Pursuant to Section 114 . Response #10 of 17 of Appendix B.

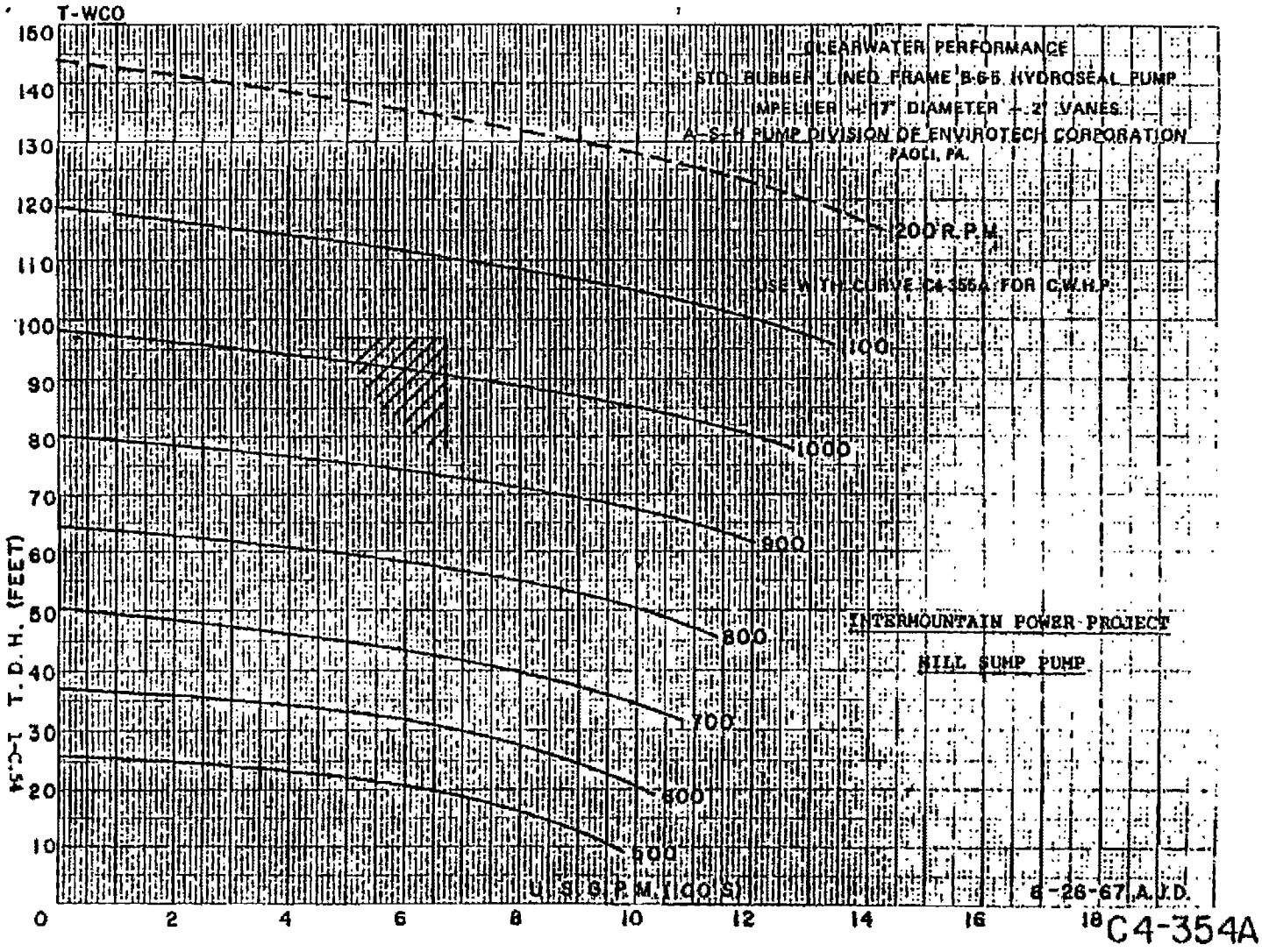

*EPA Request dated Oct 12, 2010, for Information Pursuant to Section 114 . Response #10 of 17 of Appendix B.

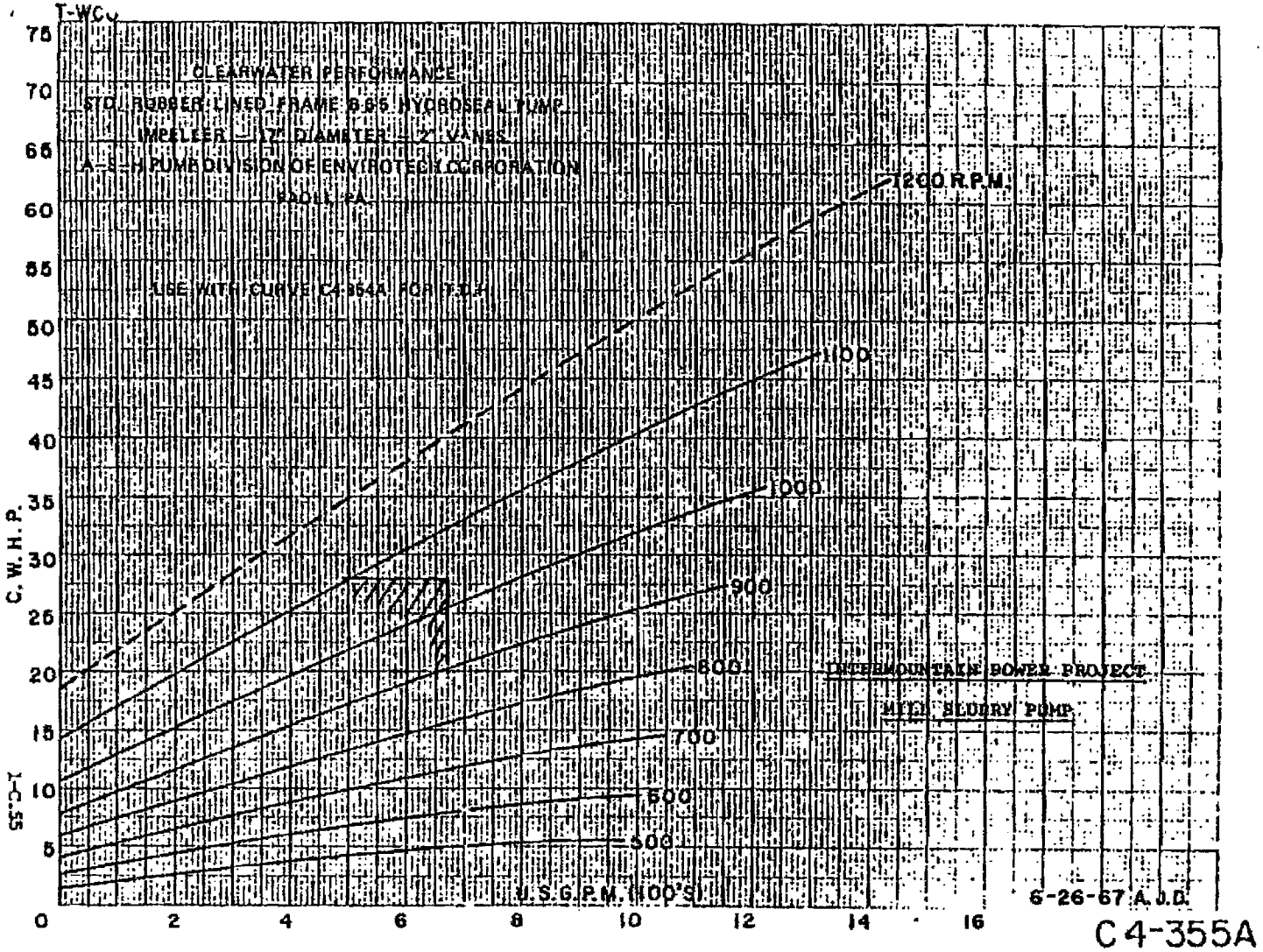

*EPA Request dated Oct 12, 2010, for Information Pursuant to Section 114 . Response #10 of 17 of Appendix B.

GEESI
(Bidder's Name)

(Bidder - Duplicate following)
(three pages as required and)
(fill in for each pump pro-)
(vided.)

D.17.10 Pumps.

Pump function, fill in	Absorber Recycle		
Manufacturer	ASH PUMP △		
Model	GH-9-5	GH-9-5	GH-9-5
Type	HORIZONTAL/CENTRIFUGAL		
Belt driven or direct connected	DIRECT CONNECTED (Gear Reducer)		
Number supplied	72 + 4 △△		
Impeller diameter, in.	41"	41"	41"
Design conditions	"A"	"B"	"C"
Total head, ft	63.5	68.5	73.5
Capacity, gpm	15,600	15,600	15,600
Rotational speed, rpm	316	372	383
Power requirements, bhp, each pump			
At design conditions	337	363	392
Maximum	FOR SYSTEM: SAME AS ABOVE		
Pump materials (by common name and ASTM number)			
Casing	CAST IRON ASTM 48, Class 30		
Impellers	DUCTILE IRON ASTM A536-7 Gr. 6545-12		
Impeller coating	NATURAL RUBBER		

(Trim Line)

[IPP 9255 WET SCRUBBER 62.0202]
[0120281 022581]
D-55-b
1-C.56

*EPA Request dated Oct 12, 2010, for Information Pursuant to Section 114 . Response #10 of 17 of Appendix B.

	GEBSI (Bidder's Name)
Pump function, fill in	Absober Recycle
Shaft	AISI 1045 HOT ROLLED STEEL
Shaft sleeves	317 STAINLESS STEEL
Impeller wear plates	NA
Casing wearing rings	NA
Seal or injection water requirements for each pump	
Flow, gpm at 70 F	15 15 15
Required pressure, psi	10 to 15 psig ABOVE DISCHARGE PRESSURE
Quality required	40 MICRONS/1,000 ppm
Drive motor	
Manufacturer and model	BY PURCHASER △△
Frame size	BY PURCHASER △△
Horsepower/service factor	400/1.0 450/1.0 450/1.0
Space heater rating, watts	BY PURCHASER
Pump function, fill in	ABSORBER RECYCLE
drive, if applicable — Gear Reducer	
Manufacturer	△△ FALK OR APPROVED EQUAL
Type	PARALLEL SHAFT — FAN COOLED
Model	#1100 YFI - S
Lubrication system and recommended lubricant	

(Trim Line)

[IPP 9255 WET SCRUBBER 62.0102]
D120381 022531]
D-36 -b
1-C.57

*EPA Request dated Oct 12, 2010, for Information Pursuant to Section 114 . Response #10 of 17 of Appendix B.

GEESI
(Bidder's Name)

Weights, lb	
Pump and baseplate	16,500/4,100 lb.
Motor	By Purchaser △
Lubrication system	----
Variable speed drive	----
Complete assembly	23,700 lb.
Requirements for Owner-furnished pump motors (350 horsepower and above)	
Motor function and quantity	Absorber Recycle Pump drive / 72
Motor speed, rpm	1800 1800 1800
Motor horsepower	400 450 450
Special requirements	----

Gear reducer	
Thermal Rating	900 Hp
Mechanical	"A" - 741 Hp "B" - 763 Hp "C" - 786 Hp

(Trim Line)

[IPP 9255 WET SCRUBBER 61.0202]
[0120381 022581]
D-57 -b
1-C.58

*EPA Request dated Oct 12, 2010, for Information Pursuant to Section 114 . Response #10 of 17 of Appendix B.

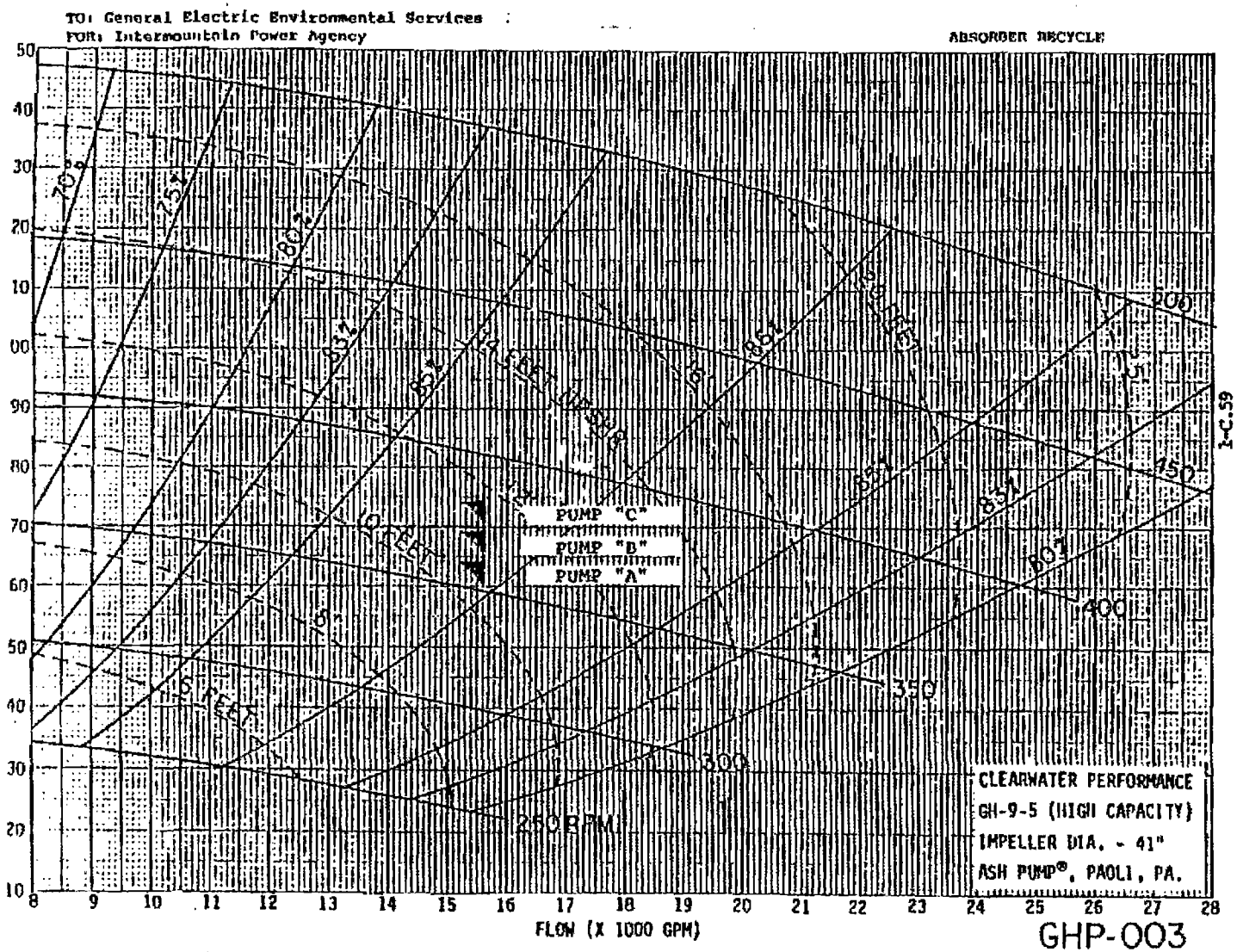

*EPA Request dated Oct 12, 2010, for Information Pursuant to Section 114 . Response #10 of 17 of Appendix B.

GEESI
(Bidder's Name)

(Bidder - Duplicate following)
(three pages as required and)
(fill in for each pump pro-)
(vided.)

D.17.10 Pumps.

Pump function, fill in	ABSORBER RECYCLE △
Manufacturer	WARMAN INTERNATIONAL
Model	450 STL
Type	CENTRIFUGAL SLURRY
Belt driven or direct connected	DIRECT - GEAR
Number supplied	72 + 4 △
Impeller diameter, in.	36.7"
Design conditions	A , B , C
Total head, ft	63.5 , 68.5 , 73.5
Capacity, gpm	15600 , 15600, 15600
Rotational speed, rpm	430 , 445, 460
Power requirements, bhp, each pump	
At design conditions	347 , 372, 399
Maximum	FOR SYSTEM: SAME AS ABOVE
Pump materials (by common name and ASTM number)	
Casing	DUCTILE IRON A536
Impellers	DUCTILE IRON A536
Impeller coating	NATURAL RUBBER
	NATURAL RUBBER

(Trim Line)

[IPP 9255 WET SCRUBBER 62.0202]
[0120381 022581]
D-55-b-1

*EPA Request dated Oct 12, 2010, for Information Pursuant to Section 114 . Response #10 of 17 of Appendix B.

	GEESI (Bidder's Name)
Pump function, fill in	
Shaft	HRS - A576
Shaft sleeves	317 LM
Impeller wear plates	N/A
Casing wearing rings	N/A
Seal or injection water requirements for each pump	USAGE/SYSTEM DESIGN
Flow, gpm at 70 F	5 / 15
Required pressure, psi	5 PSI ABOVE DISCHARGE
Quality required	<200 PPM ; <40 MICRON △△
Drive motor	
Manufacturer and model	BY PURCHASER
Frame size	By Purchaser △△
Horsepower/service factor	400/1.0 450/1.0 450/1.0 /
Space heater rating, watts	BY PURCHASER
Pump function, fill in	ABSORBER RECYCLE
Variable speed drive, if applicable	
Manufacturer	N/A
Type	
Model	
Lubrication system and recommended lubricant	GREASE △△

(Trim Line)

[IPP 9255 WET SCRUBBER 62.0202]
0120381 022581]
D-56 -b-1

*EPA Request dated Oct 12, 2010, for Information Pursuant to Section 114 . Response #10 of 17 of Appendix B.

	GEESI (Bidder's Name)
Weights, lb	
Pump and baseplate + Gear & Cpul	1,5975 #
Motor	By Owner △△
Lubrication system	N/A
Variable speed drive	N/A
Complete assembly	
Requirements for Owner-furnished pump motors (350 horsepower and above)	
Motor function and quantity	72 ABSORBER RECYCLE / PUMP DRIVE
Motor speed, rpm	1800
Motor horsepower	A B C
Special requirements	400 450 450

(Trim Line)

[IPP 9255 WET SCRUBBER 62.0202]
[022581]
D-57 -b-1

*EPA Request dated Oct 12, 2010, for Information Pursuant to Section 114 . Response #10 of 17 of Appendix B.

VARIAN INTERNATIONAL, INC.

SIZE	FRAME	TYPE	IMPELLER VANES	IMPELLER TYPE	IMPELLER MATL	VANE DIA	SHAFT SEAL GLAND	WPA 450A21AU
450	ST	L	5	CLOSED	RUBBER	36.7 in. 933 mm	LEAK MATL RUBBER	EFFECTIVE FROM DEC 1979

APPROXIMATE PERFORMANCE FOR CLEAR WATER — NORM. MAX. R.P.M. n=550* — NORM. MAX. H.P. HP=750 KW=560 — MAX. PARTICLE SIZE SPHERE

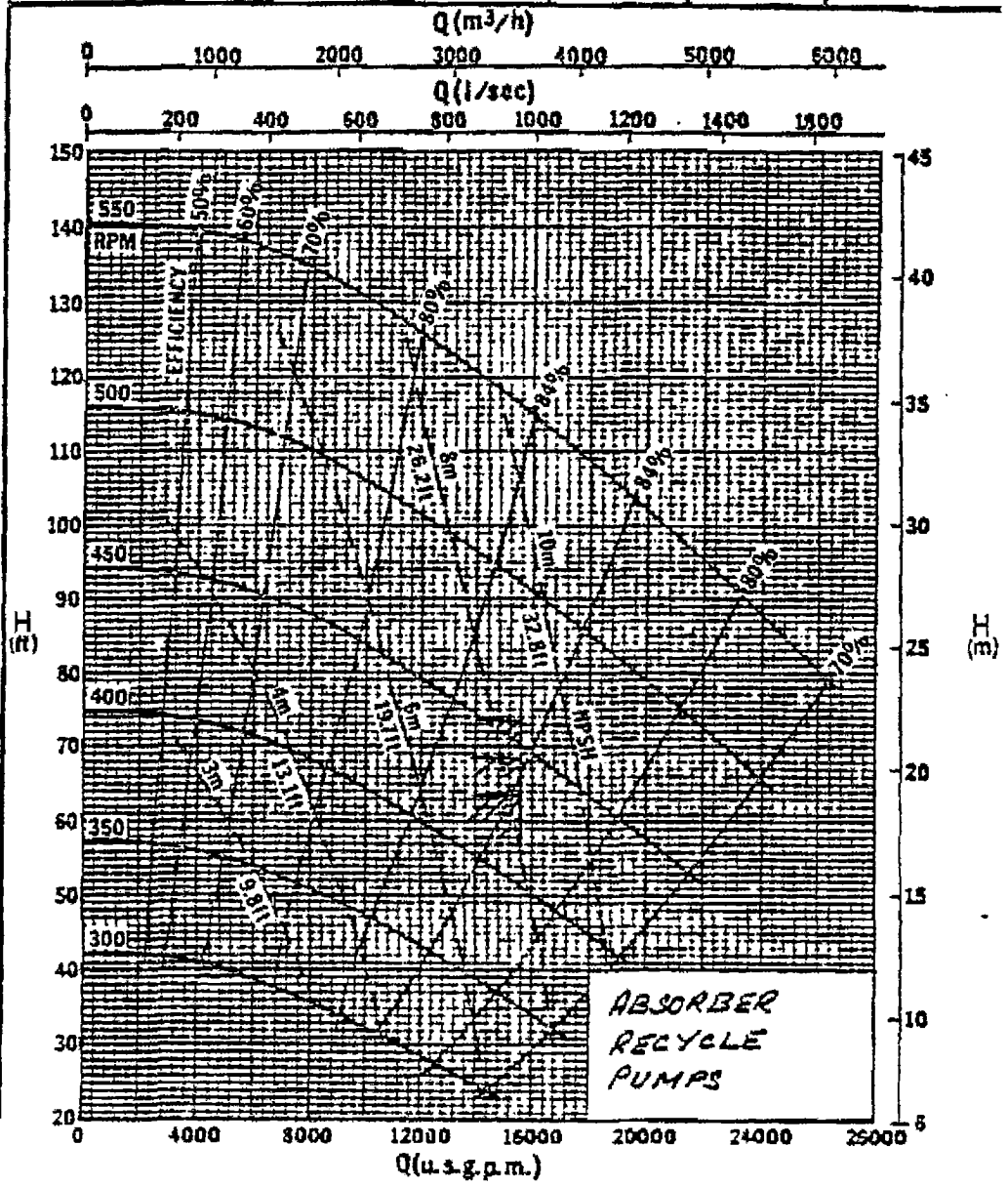

* GUIDE LINE ONLY, CONSULT FACTORY WHEN APPROACHING THESE LIMITS

MA TEST ID: A4-P-286

*EPA Request dated Oct 12, 2010, for Information Pursuant to Section 114 . Response #10 of 17 of Appendix B.

GEESI
(Bidder's Name)

(Bidder - Duplicate following)
(three pages as required and)
(fill in for each pump pro-)
(vided.)

D.17.10 Pumps.

Pump function, fill in	LIMESTONE SLURRY
Manufacturer	△ WARMAN/ ASH
Model	3/2 DHR
Type	HORIZONTAL/CENTRIFUGAL
Belt driven or direct connected	BELT DRIVEN
Number supplied	EIGHT (8)
Impeller diameter, in.	18"
Design conditions	
Total head, ft (TDH)	186
Capacity, gpm	250
Rotational speed, rpm	1170
Power requirements, bhp, each pump	
At design conditions	48.9
Maximum (at runout & 1170 RPM)	69
Pump materials (by common name and ASTM number)	
Casing	ASTM A-536 DUCTILE IRON W/ ASTM A-532 NIHARD LINERS
Impellers	NIHARD ASTM A-532
Impeller coating	N.A.

(Trim Line)

[IPP 9255 WET SCRUBBER 62.0202]
[012381 022581]
D-55 -c
1-C.60

*EPA Request dated Oct 12, 2010, for Information Pursuant to Section 114 . Response #10 of 17 of Appendix B.

	GEESI (Bidder's Name)
Pump function, fill in	LIMESTONE SLURRY
Shaft	ASTM A-576, GR. 1040
Shaft sleeves	420 S.S., 450 BH min.
Impeller wear plates	N.A.
Casing wearing rings	N.A.
Seal or injection water requirements for each pump	
Flow, gpm at 70 F	5 GPM
Required pressure, psi	DISCHARGE PRESS + 10 PSI
Quality required	1000 ppm/40 microns
Drive motor	
Manufacturer and model	△ GENERAL ELECTRIC /Westinghouse/ Siemans-Allis
Frame size	364 T
Horsepower/service factor	60 / 1.0
Space heater rating, watts	100 △△
Pump function, fill in	LIMESTONE SLURRY
Variable speed drive, if applicable	
Manufacturer	N.A.
Type	N.A.
Model	N.A.
Lubrication system and recommended lubricant	GREASE

(Trim Line)

[IPP 9255 WET SCRUBBER 62.0202]
[0120381 022581]
D-56 -C
1-C.61

*EPA Request dated Oct 12, 2010, for Information Pursuant to Section 114 . Response #10 of 17 of Appendix B.

	GEESI (Bidder's Name)
Weights, lb	
Pump and baseplate	2500
Motor	830
Lubrication system	N.A.
Variable speed drive	N.A.
Complete assembly	3490
Requirements for Owner-furnished pump motors (350 horsepower and above)	
Motor function and quantity	N.A. / BY GEESI
Motor speed, rpm	N.A.
Motor horsepower	N.A.
Special requirements	N.A.
	N.A.

(Trim Line)

[IPP 9255 WET SCRUBBER 62.0202]
[0120381 022581]
D-57-C
1-C.62

*EPA Request dated Oct 12, 2010, for Information Pursuant to Section 114 . Response #10 of 17 of Appendix B.

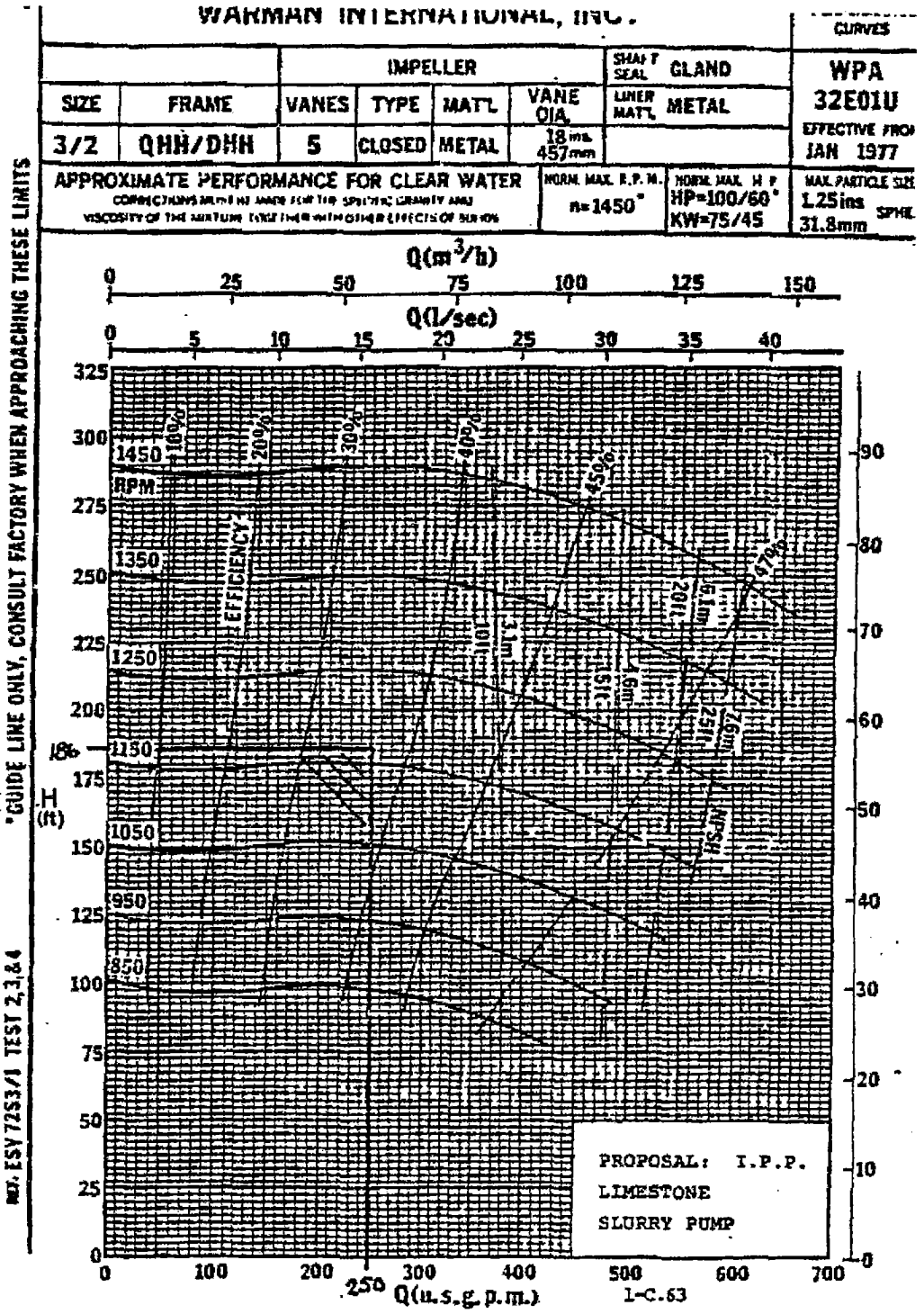

*EPA Request dated Oct 12, 2010, for Information Pursuant to Section 114 . Response #10 of 17 of Appendix B.

GEESI
(Bidder's Name)

(Bidder - Duplicate following)
(three pages as required and)
(fill in for each pump pro-)
(vided.)

D.17.10 Pumps.

Pump function, fill in	MIST ELIMINATOR WASH
Manufacturer	WORTHINGTON, ASH OR WARMAN △△
Model	6x4x13 D-1011
Type	HORIZONTAL/CENTRIFUGAL
Belt driven or direct connected	DIRECT CONNECTED
Number supplied	EIGHT (8)
Impeller diameter, in.	12.5"
Design conditions	
Total head, ft (TDH)	172
Capacity, gpm	1062
Rotational speed, rpm	1770
Power requirements, bhp, each pump	
At design conditions	56.8
Maximum (at design impeller)	70
Pump materials (by common name and ASTM number)	
Casing	316 S. S.
Impellers	316 S. S.
Impeller coating	N.A.

(Trim Line)

[IPP 9253 WET SCRUBBER 62.0000]
[0120381 022581]
D-55
1-C.64

*EPA Request dated Oct 12, 2010, for Information Pursuant to Section 114 . Response #10 of 17 of Appendix B.

	GEESI (Bidder's Name)
Pump function, fill in	MIST ELIMINATOR WASH
Shaft	A-576 GR. 1040
Shaft sleeves	TYPE 316, A-276
Impeller wear plates	N. A.
Casing wearing rings	N. A.
Seal or injection water requirements for each pump	
Flow, gpm at 70 F	2 GPM
Required pressure, psi	S.P. + 10 PSI
Quality required	1000 ppm/40 microns
Drive motor	△
Manufacturer and model	GENERAL ELECTRIC/Westinghouse/Siemans-Allis
Frame size	365 T
Horsepower/service factor	75 / 1.0
Space heater rating, watts	100 △△
Pump function, fill in	MIST ELIMINATOR WASH
Variable speed drive, if applicable	
Manufacturer	N.A.
Type	N.A.
Model	N.A.
Lubrication system and recommended lubricant	OIL BATH

(Trim Line)

[IPP 9255 WET SCRUBBER 62.0202]
[0120381 022581]
D-56
1-C.65

*EPA Request dated Oct 12, 2010, for Information Pursuant to Section 114 . Response #10 of 17 of Appendix B.

	GEESI (Bidder's Name)
Weights, lb	
Pump and baseplate	1033
Motor	480
Lubrication system	N.A.
Variable speed drive	N.A.
Complete assembly	1513
Requirements for Owner-furnished pump motors (350 horsepower and above)	
Motor function and quantity	N.A. / BY GEESI
Motor speed, rpm	N.A.
Motor horsepower	N.A.
Special requirements	N.A.
	N.A.

(Trim Line)

[IPP 9255 WET SCRUBBER 62.0202]
[0120381 022581]
D-57

1-C.66

*EPA Request dated Oct 12, 2010, for Information Pursuant to Section 114 . Response #10 of 17 of Appendix B.

standard end-suction centrifugal pumps type D-1000

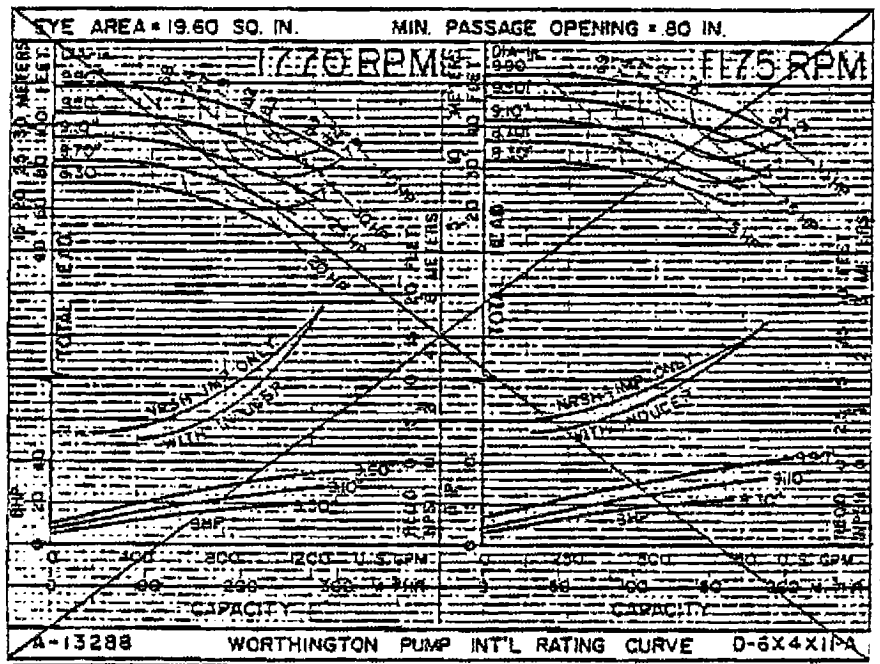

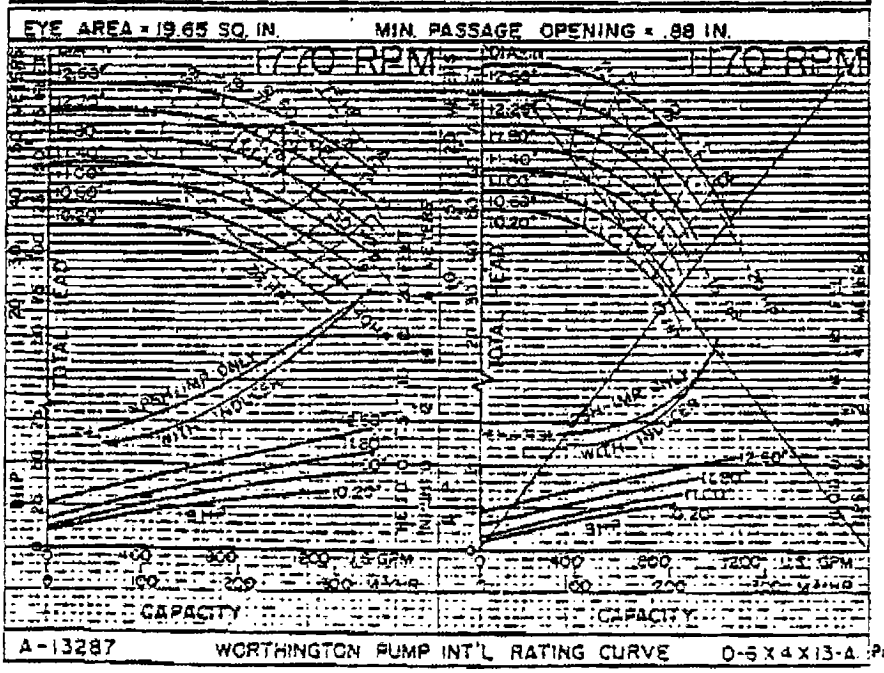

INTERCONNECTION POWER PROJECT
MIST ELIMINATOR WASH PUMP

1-C.57

*EPA Request dated Oct 12, 2010, for Information Pursuant to Section 114 . Response #10 of 17 of Appendix B.

11-19-81

GEESI
(Bidder's Name)

(Bidder - Duplicate this page)
(as required and fill in for)
(each piping system.)

D.17.11 Piping.

Piping system	Recycle Piping
Materials	Rubber lined Carbon Steel
Design velocity, fps	6 to 8 FPS Nom. 10 FPS @ Spray Nozzle Co
Piping system	Limestone Piping
Materials	Rubber Lined Carbon Steel
Design velocity, fps	4 to 8 FPS
Piping system	Return Water Piping
Materials	FRP
Design velocity, fps	3 to 10 FPS
Piping system	Service Water Piping
Materials	FRP
Design velocity, fps	3 to 10 FPS
Piping system	Steam piping
Materials	Carbon Steel
Design velocity, fps	50 - 100 FPS
Piping system	Instrument Air
Materials	Galv. Steel
Design velocity, fps	Negligible

(Trim Line)

[IPP 9255 WET SCRUBBER 62.0202]
[0120381 022581]
D-58

*EPA Request dated Oct 12, 2010, for Information Pursuant to Section 114 . Response #10 of 17 of Appendix B.

GEESI

(Bidder's Name)

Tubing materials and application

Piping supports

Manufacturer

Type(s) and application

VICO, GRINNELL, POWER PIPING

Rigid support for cold piping to consist of rod hangers, beam and column brackets, tee posts, base and riser trunnions. Flexible supports for hot piping to consist of hanger - and base type variable springs. All piping to be controlled by use of guides and anchors to limit movements and vibrations and to protect sensitive equipment.

(Trim Line)

[IPP 9255 WET SCRUBBER 62.0202]
[0120381 022581]
D-59

1-C.69

*EPA Request dated Oct 12, 2010, for Information Pursuant to Section 114 . Response #10 of 17 of Appendix B.

D.17.12 Valves.

Control valves

Steel body general service valves

GRESI

(Bidder's Name)

System	Manufacturer	Figure Number	Size
KNIFE-GATE	Clarkson DeZURIK	130	4"
*	*	829	30"
PLUG	DeZURIK	421	1" THRU 10"
GLOBE	Masoneilan FISHER		4"
DIAPHRAGM	Fille-McCanna SAUNDERS		2"
PLUG	DeZURIK		4"

STEAM SERVICE SPEC 106

Gate	Vogt Crane	33½XU-F	2½ - 24
Globe	Vogt Crane	151½	2½ - 12
Check	Vogt Crane	159½XU	2½ - 12

(Trim Line)

*MFR or Approved Equal

[IPP 9253 WET SCRUBBER 62.0202]
[0120381 022581]
D-60

1-C.70

*EPA Request dated Oct 12, 2010, for Information Pursuant to Section 114 . Response #10 of 17 of Appendix B.

GEESI

(Bidder's Name)

	System	Manufacturer *	Figure Number	Size
Bronze body general service valves	Gate	Vogt Crane	428	½ - 2
	Globe	Vogt Crane	1	½ - 2
	Check	Vogt Crane	37	½ - 2
	Angle	Vogt Crane	2	½ - 2

Butterfly valves

Manufacturer: NONE *

Figure:

Application:

Plug valves

Manufacturer: DeZurik/Clarkson *

Figure: 198 (Rubber Lines)

Application: Slurry & Corrosive Service

Slide gate valves

Manufacturer: Dezurik / Clarkson

Figure: 828

Application: - Recycle Pump
- Oxidation Header Isolation

(Trim Line)

*MFR or Approved Equal

[IPP 9255 [illegible] SCRUBBER 62.0202]

[0120381 022581]

D-61

1-C.71

*EPA Request dated Oct 12, 2010, for Information Pursuant to Section 114 . Response #10 of 17 of Appendix B.

	GEESI (Bidder's Name)
Diaphragm valves	
Manufacturer	ITT Grinnell *
Figure	Weir or Straightway
Application	Slurry & Corrosive Service
Pinch valves	
Manufacturer	RKL or Flow Con *
Figure	LAW or Flex-Valve or Flow-Con △△
Application	Slurry & Corrosive Service
Other valves	
Type	None
Manufacturer	
Figure	
Application	

(Trim Line)

*MFR or Approved Equal △△

[IPP 9255 WET SCRUBBER 62.0202]
[022581]
D-62

1-2.72

*EPA Request dated Oct 12, 2010, for Information Pursuant to Section 114 . Response #10 of 17 of Appendix B.

GEESI

(Bidder's Name)

(Bidder - Duplicate this page as)
(required and fill in for each)
(valve motor operator provided.)

D.17.13 Valve Motor Operators.

	NONE USED
Valve function	
Manufacturer	
Size and model	
Speed of operation, closed to open, sec	
Horsepower/service factor	/ /
Weight, lb	
Maximum differential pressure which operator is capable of operating against, psi	
Valve stem diameter, in.	
Thrust allowance for valve packing friction, lb	
Space heater rating, watts	

(Trim Line)

[IPP 9255 WET SCRUBBER 62.0202]
[0120381 022581]
D-63
1-C.73

*EPA Request dated Oct 12, 2010, for Information Pursuant to Section 114 . Response #10 of 17 of Appendix B.

A 11-19-81

GEESI
(Bidder's Name)

D.17.14 Mist Eliminators.

	Primary	Secondary
Manufacturer	GEESI	GEESI
Type	FOUR PASS CHEVRON	OPEN TYPE
Model		
Material	- POLYPROPELENE	
Support material	EXTREN & RUBBER LINED	EXTREN & RUBBER LI
Wash system		
Continuous wash flow rate, gpm	232 GPM	Either Primary or Seconda
Intermittent wash flow	232 GPM Primary, Shifted to Secondary on Timeer	
Flow rate, gpm		
Frequency	Per Shift	Per Shift
Duration, minutes	6 hr. 36 min.	1 hr. 24 min.
Pressure, psi	172 FT	172 FT
Wash headers		
Manufacturer	FIBERCAST △△	
Type	CL2030 △△	
Model		
Material	FRP	FRP
Wall thickness, in.	0.25	0.25
Wash nozzles		
Manufacturer and type	SPRAGS FULL	CONE △△
Quantity	228	216

(Trim Line)

[IPP 9255 WET SCRUBBER 62.0202]
[0120381 022581]
D-64
1-C.74

*EPA Request dated Oct 12, 2010, for Information Pursuant to Section 114 . Response #10 of 17 of Appendix B.

△ 11-19-81

	GEESI (Bidder's Name)	
	Primary	Secondary
Model	48572016	48572016
Material	FRP	FRP
Type of attachment	1" NPT	1" NPT
Configuration		
Passes per stage	4	4
Distance between stages, in.	48	
Distance between top of ME and first row of reheat tubes, in.	92	△

(Trim Line)

[IPP 9255 WET SCRUBBER 62.0202]
[061881 ADDENDUM 3]
0120381 D-65

*EPA Request dated Oct 12, 2010, for Information Pursuant to Section 114 . Response #10 of 17 of Appendix B.

△ 11-19-81

GEESI
(Bidder's Name)

D.17.15 Ductwork.

	Contract Limits to Module Inlet Including ByPass Duct	Module Outlet to Contract Limits Including Reheater Outlet Duct & Bypass Duct
Ductwork fabricator		
Weight of ductwork, lb	1,081,000	1,164,000
Plate materials by ASTM No. and manufacturer's designation	A588 (Cor-Ten B)	A588 (Cor-Ten B)
Coating, manufacturer and type (limits if more than one type)	-	Saureisen 54 on bottom & 3' on side of outlet ductwork.
Plate thickness, in.	1/4	1/4
Gas velocity, fpm		
At steam generator MCR	500 -	3600 FPM
At 75 per cent of MCR	400 -	2500 FPM
At 50 per cent of MCR	400 -	2200 FPM
At 25 per cent of MCR	300 -	1800 FPM
Access doors		
Number	6	10
Type	Fabricated	Fabricated
Size	18" x 24"	18" x 24"

(Trim Line)

* See Attached Sheet △

[IPP 9255 WET SCRUBBER 62.0202]
[0120381 022581]

*EPA Request dated Oct 12, 2010, for Information Pursuant to Section 114 . Response #10 of 17 of Appendix B.

11-19-81

GENERAL ELECTRIC

DUCTWORK FABRICATORS

GEESI

McNALLY

MARK

TITAN

ST. GEORGE

EATON

UTAH

PSP

HOGAN

ELKHART

CYPRUS

GRANT JUNCTION

ACME STRUCTURAL

TECHNICAL FABRICATORS

DARBYSHIRE STEEL

*EPA Request dated Oct 12, 2010, for Information Pursuant to Section 114 . Response #10 of 17 of Appendix B.

GEESI

(Bidder's Name)

	Contract Limits to Module Inlet	Module Outlet to Contract Limits
Locations	Near Damper	Near Damper
Hopper locations and usable volumes	NONE	NONE
Type of ductwork support, bottom or top	~~BOTTOM~~	BOTTOM
Spring hangers	NONE	NONE
Type		
Manufacturer		
Test port locations	See Dwg. 7-1	
Instrument tap locations	See P & I.D.'s	

(Trim Line)

[IPP 9255 WET SCRUBBER 62.0202]
[0120381 022581]
D-67
1-C.77

*EPA Request dated Oct 12, 2010, for Information Pursuant to Section 114 . Response #10 of 17 of Appendix B.

GEESI

(Bidder's Name)

(Bidder — Duplicate this page)
(as required and fill in for)
(each expansion joint pro-)
(vided.)

D.17.16 Expansion Joints.

Location, describe	INLET, OUTLET, BYPASS & REHEAT DUCTWORK
Manufacturer	CARLOCK/Raybestos Manhattan/Una-Flex/ Flowflex
Material	~~STYLE 8400 SERIES 400~~ U-Type or or elastoneric U-Type or manufacture by Raybestos Manhattan/Una-Flex/Flow-flex △
Maximum safe continuous operating conditions	
Pressure, in. H_2O	50
Vacuum, in. H_2O	50
Temperature range, F	to 400

Expected life for intermittent exposure to temperature above normal, assuming duration of each exposure is 30 minutes

Temperature, F	Life, hours
400	~~CONTINUOUS~~
500	~~1000~~
600	10
700	~~10 (½ HR PER~~ OCCURRENCE)
750	~~1 (½ HR PER OCCURRENCE)~~

(Trim Line)

[IPP 9255 WET SCRUBBER 62.0202]
[0120381 030981]
D-68

1-C.78

*EPA Request dated Oct 12, 2010, for Information Pursuant to Section 114 . Response #10 of 17 of Appendix B.

GEESI

(Bidder's Name)

(Bidder - Duplicate this page)
(as required and fill in for)
(each expansion joint pro-)
(vided.)

D.17.16 Expansion Joints.

Location, describe	PURGE DUCTWORK
Manufacturer	GARLOCK/Raybestos Manhatten/Una-Flex/ Flowflex
Material	STYLE 8400 SERIES 300 U-TYPE
Maximum safe continuous operating conditions	See previous page △
Pressure, in. H_2O	50
Vacuum, in. H_2O	50
Temperature range, F	to 300

Expected life for intermittent exposure to temperature above normal, assuming duration of each exposure is 30 minutes

Temperature, F	Life, hours
400	
500	
600	
700	
750	

(Trim Line)

[IPP 9255 WET SCRUBBER 62.0202]
[0120381 030981]
D-68-A
1-C.79

*EPA Request dated Oct 12, 2010, for Information Pursuant to Section 114 . Response #10 of 17 of Appendix B.

GEESI
(Bidder's Name)

D.17.17 Control Dampers.

Damper location	N.A. (Not Used)
Manufacturer	
Model	
Damper inside dimensions, in.	
Length	
Width	
Damper thickness, in.	
Damper net face area, sq ft	
Weight, lb	
Blade width, in.	
Number of blades	
Damper operating torque, lb-ft, maximum	
Materials of construction	
Frame	
Blades	
Shafts	
Shaft stub ends	
Bearings, type	
Damper operator	
Manufacturer and type	
Frame size	

(Trim Line)

[IPP 9255 WET SCRUBBER 62.0202]
0120381 022581]
D-69
1-C.80

*EPA Request dated Oct 12, 2010, for Information Pursuant to Section 114 . Response #10 of 17 of Appendix B.

	GEESI (Bidder's Name)
Horsepower/service factor	N.A. (Not Used)
Allowable starts per hour	
Space heater rating, watts	
Closure time, minutes	

(Trim Line)

[IPP 9255 WET SCRUBBER 62.0202]
[0120381 022581]
D-70
1-C.81

*EPA Request dated Oct 12, 2010, for Information Pursuant to Section 114 . Response #10 of 17 of Appendix B.

GEESI
(Bidder's Name)

△ N/A

D.17.18 Forced Oxidation System Air Blowers.

Manufacturer	~~Dresser Industries, Inc.~~
Model	~~2026 RAS-J~~
Capacity, guaranteed	
Discharge scfm at inlet conditions of 12.4 psia, 110 F, and 55 per cent relative humidity	~~7600~~
Discharge acfm at inlet conditions of 12.4 psia, 55 F, and 55 pcf	
Discharge pressure, psig	~~12.6~~
Power required, bhp	
Design conditions	~~665~~
110 F	
55 F	
Blower speed, rpm	~~775~~
Rotor tip speed, fps	~~4061 FPM~~
Safety valve	
Manufacturer	~~Fisher, or equal~~
Model	~~10", Pneumatic~~
Expansion joint manufacturer and model	~~20", 18", Unaflex or equal~~
Gear reducer (if used)	
Manufacturer	~~Dresser Ind., or equal~~

(Trim Line)

[IPP 9255 WET SCRUBBER 62.0202]
[0120381 022581]
D-71
1-C.82

*EPA Request dated Oct 12, 2010, for Information Pursuant to Section 114 . Response #10 of 17 of Appendix B.

	GEESI (Bidder's Name)
Model	~~Siz 1101 WLZ~~
Type	~~Parallel Shaft~~
Efficiency, per cent	~~0.95 min.~~
Filter silencer	
Manufacturer	~~Universal, or equal~~
Model	~~SSH 20-3~~
Material	~~304 SS~~
Sound reduction, dBA	~~Later~~
Discharge silencer	
Manufacturer	~~Burgess Manning~~
Model	~~BMSS-19~~
Material	~~Steel~~
Sound reduction, dBA	
Motor	
Manufacturer and model	~~By Purchaser~~
Frame size	
Horsepower/service factor	~~700~~ / ~~1.15~~
Space heater rating, watts	~~By Purchaser~~
Maximum overall sound pressure level of the blower and motor combination at any location 5 feet above the baseplate at a distance of 3 feet from	

N/A

(Trim Line)

[IPP 9255 WET SCRUBBER 62.0202]
[0120381 022581]
D-72
1-C.83

*EPA Request dated Oct 12, 2010, for Information Pursuant to Section 114 . Response #10 of 17 of Appendix B.

GEESI

(Bidder's Name)

a reference perimeter which contains the equipment

Overall sound pressure level, dB to a reference of 0.0002 microbar

"A" scale	~~later~~	N/A
"C" scale	~~later~~	N/A

(Trim Line)

[IPP 9255 WET SCRUBBER 62.0202]
[022581]
D-73

1-C.85

*EPA Request dated Oct 12, 2010, for Information Pursuant to Section 114 . Response #10 of 17 of Appendix B.

GEESI
(Bidder's Name)

(Bidder - Duplicate this page as)
(required and fill in for each)
(integral horsepower motor pro-)
(posed and not previously)
(listed.)

D.17.19 Miscellaneous Motors.

Motor function, fill in	none provided △△
Manufacturer and model	
Frame size	
Horsepower/service factor	/
Space heater rating, watts	
Motor function, fill in	
Manufacturer and model	
Frame size	
Horsepower/service factor	/
Space heater rating, watts	
Motor function, fill in	
Manufacturer and model	
Frame size	
Horsepower/service factor	/
Space heater rating, watts	

(Trim Line)

[IPP 9255 WET SCRUBBER 62.0202]
[0120381 022581]
D-74
1-C.36

*EPA Request dated Oct 12, 2010, for Information Pursuant to Section 114 . Response #10 of 17 of Appendix B.

GEESI

(Bidder's Name)

D.17.20 Controls and Instrumentation.

	Manufacturer △	Type
Analog control system	Bailey /Foxboro/ Westinghouse	7000
Digital control system	Bailey	Network 90 △
Transmitters		
Level	Drexelbrook	Conductance
Pressure	Foxboro/Rosemount	D/P △△
Temperature	Rosemount /Foxboro	TC △
Flow	Foxboro /Rosemount	D/P △
SO_2 analyzer	—	—
Controllers		
Liquid level		
Pressure	Fisher /Foxboro	Self-Regulated △
Temperature	—	—
Flow	—	—
Signal converters	Fisher /Rochester/ Moore	I/P △
Nonslurry flow measurement devices	Foxboro	Orifice Plates
Magnetic flowmeters	Fischer & Porter/Foxboro/Brooks △	
Density measurement devices	Ohmart/Texas Nuclear	Nuclear
pH measurement devices	Uniloc	Immersion
Recorders	Leeds & Northrup	Strip Chart

(Trim Line)

In tanks located adjacent to the scrubber blowdown collection sump. △

[IPP 9255 WET SCRUBBER 62.0202]
[0120381 022581]
D-73
1-C.37

*EPA Request dated Oct 12, 2010, for Information Pursuant to Section 114 . Response #10 of 17 of Appendix B.

GEESI

(Bidder's Name)

	Manufacturer	Type
Panel indicators	Bailey/Foxboro/ Hays Republic	7000 Series
Flow indicators	Universal Flow Monitors, Series S & W	
Valve positioners	Bailey	AP-5
Switches		
Level	Warwick	8B
Pressure	United Electric/ Custom Control/ Static-O-Ring	6 NN & 12NN
Temperature	Partlow/Barksdale /United Electric	802
Flow	Universal Flow Monitors	
Gages		
Pressure	U.S. Gauge/Dresser /Ashcroft	1379
Temperature	Ashcroft/Moeller	600A
Vibration instrumentation		
Thermocouples	Thermoelectric	Type "J"
Oil heater thermostats		
Circuit breakers	G.E.	Molded Case C.B.
Contactors	G.E.	CR 120A & CR 120B
Auxiliary relays	Agastat	700 N
Time delay relays	Agastat	7012
Control switches	Allen Bradley	800 T
Push buttons	Allen Bradley	800 T
Selector switches	Allen Bradley	800 T

(Trim Line)

[IPP 9255 WET SCRUBBER 62.0202]
[022581]
D-76
1-C.88

*EPA Request dated Oct 12, 2010, for Information Pursuant to Section 114 . Response #10 of 17 of Appendix B.

GEESI

(Bidder's Name)

	Manufacturer	Type
Indicating lights	GE	N.A.
Terminal blocks		
Fuse blocks		
Fuses		
Annunciators	Panalarm	Series 70
Scrubber control panel		
Manufacturer	G.E.	
Dimensions	24 Section, 4'-0" Wx7'-6" H x 3'-6"D	
Weight	N.A.	
Scrubber additive preparation control panel		
Manufacturer	General Electric	
Dimensions	N.A.	
Weight	N.A.	
Subpanel for main control panel		
Manufacturer	G.E.	
Dimensions	3'-0" Wx3'-0"H	
Weight	--	
Prefabricated cable manufacturer	N.A.	
Control logic cabinets		
Number	N.A.	

(Trim Line)

[IPP 9255 WET SCRUBBER 62.0202]
[0120381 022581]
D-77
1-C.89

*EPA Request dated Oct 12, 2010, for Information Pursuant to Section 114 . Response #10 of 17 of Appendix B.

	GEESI (Bidder's Name)
Manufacturer	Not Available
Dimensions	
Weight	
Prefabricated cable manufacturer	
Programmable controllers (if provided)	
Manufacturer and type	G.E. Model 6000 / Allen Bradley/ Square D
Working memory	CMOS w/vented Lithium Battery Back-Up and/or PROM
Type	
Word length	16 Bits
Cycle time	1 Millisec for 1024 words (Application Dependent)
Capacity	1000 inputs & 1000 outputs
Bulk memory	
Type	None
Capacity	
Power requirement, VA	
Triac	
Manufacturer and type	G.E. -- isolated points or isola in groups of 4
Continuous power rating, VA	2 Amps continuous 12 Amps in Rush
Voltage	12 volts - 230 V AC
Prefabricated cable manufacturer	G.E.- Series 6
	Twisted pair - Belden #9184

(Trim Line)

[IPP 9255 WET SCRUBBER 62.0202]
[0120381 022581]
D-78
1-C.90

*EPA Request dated Oct 12, 2010, for Information Pursuant to Section 114 . Response #10 of 17 of Appendix B.

GEESI
(Bidder's Name)

D.17.21 Access Provisions.

Manufacturer of floor grating	BLAW KNOX OR APPROVED EQUAL
Manufacturer and type of epoxy coating to be used for interior floor grating	BLAW KNOW "PON BAKE" OR APPROVED EQUAL
Hard dry film thickness of epoxy coating on grating	2 MILS MIN DFT AS PER SPEC
Design live load for stairs, platforms, and walkways	100 PSF
Grating	
Floor	1¼ x 3/16 @ 1 3/16 CRS + ½" TWISTED SQUARE @ 4" CRS CROSS BARS
Stair tread	- DO -
State type of tension devices to be used for ASTM A325 bolts (load indicator washers or load indicator bolts)	LOAD INDICATOR WASHERS

(Trim Line)

[IPP 9255 WET SCRUBBER 62.0202]
[0120381 022581]
D-79
1-C.91

*EPA Request dated Oct 12, 2010, for Information Pursuant to Section 114 . Response #10 of 17 of Appendix B.

△ 11-19-81

GEESI
(Bidder's Name)

D.17.22 Insulation and Lagging.

D.17.22.1 Insulated Surface Areas of Major Equipment and Ductwork.

Ductwork surface area to be insulated, sq ft	
From contract limits indicated on the drawings to module absorber inlets	35500
Reheater outlets to contract limits indicated on the drawings	57600
Other, describe	BYPASS 4875
Total	
Scrubber module surface area to be insulated, each module, sq ft	0.0
Reheater surface area to be insulated, each module, sq ft	0 (Insulated by virtue of Sauereisen 5 Lining inside.) △

(Trim Line)

[IPP 9255 WET SCRUBBER 62.0202]
[0120381 022581]
D-80
1-C.92

*EPA Request dated Oct 12, 2010, for Information Pursuant to Section 114 . Response #10 of 17 of Appendix B.

GEESI
(Bidder's Name)

D.17.22.2 Prefabricated Panel Insulation System.

	N/A △△
Manufacturer	
Insulation	
Manufacturer and type	
ASTM specification and class	
Thickness	
Density, average, pcf	
Compressive strength, minimum load required to produce 10 per cent thickness reduction, psf	
Temperature limit, F	
Conductivity, Btu-in./hr-sq ft-F, at the following mean surface temperatures	
100 F	
200 F	
300 F	
Aluminum lagging	
Thickness	
Manufacturer	
Alloy type	
Flashing	
Thickness	

(Trim Line)

[IPP 9255 WET SCRUBBER 62.0202]
[0120381 022581]
D-81
1-C.93

*EPA Request dated Oct 12, 2010, for Information Pursuant to Section 114 . Response #10 of 17 of Appendix B.

	GEEST (Bidder's Name)
Manufacturer	N/A
Alloy type	
Reflective backing, describe	
Mesh backing	
Manufacturer	
Material and coating	
Wire gage	
Mesh size	

(Trim Line)

[IPP 9255 WET SCRUBBER 62.0202]
[0120381 022581]
D-82
1-C.94

*EPA Request dated Oct 12, 2010, for Information Pursuant to Section 114 . Response #10 of 17 of Appendix B.

	[illegible]
	(Bidder's Name)
D.17.22.3 Field Installed and Lagged System.	
Insulation	
Manufacturer and type	U.S. Gypsum
ASTM specification and class	ASTM C592 CLASS II
Thickness	3" nominal
Density, average, pcf	12 pcf
Compressive strength, minimum load required to produce 10 per cent thickness reduction, psf	ASTM C-165 590#/SF
Temperature limit, F	1350°F
Conductivity, Btu-in./hr-sq ft-F, at the following mean surface temperatures	
100 F	0.26
200 F	0.30
300 F	0.34
Aluminum lagging	Vertical and bottom - 0.040 Top Horizontal - 0.050
Thickness	
Manufacturer	Alocoa or Approved Equal
Alloy type	Allclad 3004 or Approved Equal
Flashing	
Thickness	0.040
Manufacturer	Alcoa or Approved Equal
Alloy type	Allclad 3004 - H36 or Approved Equal

(Trim Line)

[IPP 9255 WET SCRUBBER 62.0202]
[0120381 022581]
D-63

1-C.95

*EPA Request dated Oct 12, 2010, for Information Pursuant to Section 114 . Response #10 of 17 of Appendix B.

ALTERNATE: 155°F REHEAT

FINTUBE

GEESI
(Bidder's Name)

D.17.23 Flue Gas Reheaters.

Manufacturer	HAPPY DIVISION OR YUBA OR AEROFIN OR GEA RAINEY
Model	(3)-50U-3122-B.S. 3W
Design fouling resistance, inside/outside	0.0005 / 1.15 S.F. on AREA
Heating surface area, each scrubber module reheater, sq ft	12,857 (Extended) 2,276 (Effective Bare)
Number of stages	ONE
Face area, each scrubber module, sq ft	818
Number of removable coil sections, each scrubber module	3
Tubes, each coil section	
Tube material	A-199-T11; 1-1/4 CR-½ Mo
Size and wall thickness	1.0" O.D. x 14 BWG M.W.
Active tube length	29'0
Number of tubes (U-tube considered as two tubes)	100
Rows deep	2
Fins (if applicable)	
Material	1-1/4 CR-½ Mo
Number of fins per in. of tube length	3
Method of attaching fins to tubes	Welded

(Trim Line)

[IPP 9255 WET SCRUBBER 62.0202]
[0120381 022581]

*EPA Request dated Oct 12, 2010, for Information Pursuant to Section 114 . Response #10 of 17 of Appendix B.

	ALTERNATE: 155° F REHEAT
	BARE TUBE
	GEESI (Bidder's Name)
D.17.23 Flue Gas Reheaters.	
Manufacturer	△ Happy Division/Yuba/Aerofin/ GEA Rainey
Model	(3)-54 U-3122-Bare Tube
Design fouling resistance, Inside/outside	0.0005 / 1.15 S.F. on AREA
Heating surface area, each scrubber module reheater, sq. ft.	2,171 (Effective)
Number of stages	One
Face area, each scrubber module, sq. ft.	818
Number of removable coil sections, each scrubber module	3
Tubes, each coil section	
Tube material	A-199-T11, 1-¼ CR - ½ Mo
Size and wall thickness	1.0 O.D. x 16 BWG A.W.
Active tube length	29'
Number of tubes (U-tube considered as two tubes)	108
Rows deep	2
Fins (if applicable)	
Material	Not Applicable
Number of fins per in. of tube length	Not Applicable
Method of attaching fins to tubes	Not Applicable

(Trim Line)

(IPP 9255 WET SCRUBBER 62.0202)
(0120381 022581)
D-84a

*EPA Request dated Oct 12, 2010, for Information Pursuant to Section 114 . Response #10 of 17 of Appendix B.

ALTERNATE: 155°F REHEAT

BARE AND FINTUBE (common)

GEESI
(Bidder's Name)

Connections, each coil header, size and number	
Water supply	(3)-4" 300# R.F.
Water return	(3)-4" 300# R.F.
Drain outlet	2"-6000# CPLG
Air vent	3/4"-6000# CPLG
Overall dimensions of reheater assembly for each scrubber module	
Height, in.	5'-6"
Length, ft	30'-0" (Inside Duct)
Width, ft	30'-0" (Inside Duct)
Dimensions, each removable coil section	
Length, in.	31'-0"
Width, in.	9'-4"
Depth, in.	1'-0" (Approximately)
Clearance required to remove one coil section, measured from end of coil support casing	32'-0" (Approximately)
Weight, lb	
Complete reheater assembly, empty	72,000 (Incl. All Coils)
Complete reheater assembly, flooded	77,200 (Incl. All Coils)
One removable coil section, empty	5,700 (Bare Coil), 11,560 (Finned Coil)

(Trim Line)

[IPP 9255 WET SCRUBBER 62.0202]
[0120381 022581]
D-85

*EPA Request dated Oct 12, 2010, for Information Pursuant to Section 114 . Response #10 of 17 of Appendix B.

GEESI
(Bidder's Name)

D.17.24 Soot Blowing Equipment.

Manufacturer of soot blowing equipment	COPES-VULCAN or DIAMOND △
Subpanel dimensions	LTR. Height _____ Width _____ Depth
Power control cabinet dimensions	LTR. Height _____ Width _____ Depth
Logic cabinet dimensions	LTR. Height _____ Width _____ Depth
Manufacturer and type of microprocessor	△ PROGRAMMABLE
Motors	Reversing / Nonreversing / Others
Manufacturer and model	DOERR ELECT. / DOERR ELECT. /
Horsepower/service factor	0.6 / 1.0 / 0.6 / 1.0 /
	Rotary / Retractable
Local motor starters	
Manufacturer and model	ALLEN BRADLEY OR Square D or G E △✓
Retractable soot blowers	
Number furnished	ELEVEN PER DUCT (*) △
Model	T-30 MY-1-E. 1/3-RETRACTABLE
Soot blowing steam requirements per blower	18,900 lb/hr @ 300 psi and 600 F (960#STM PER CYCLE)
Rotary blowers	
Number furnished	N.A.
Model	N.A.
Soot blowing steam requirements per blower	N.A. lb/hr @ N.A. psi and N.A. F

(Trim Line)

[IPP 9255 WET SCRUBBER 62.0202]
[0120381 022581]
D-86

*EPA Request dated Oct 12, 2010, for Information Pursuant to Section 114 . Response #10 of 17 of Appendix B.

GEESI
(Bidder's Name)

Thermal drain valves

Number furnished — SIX (6) PER UNIT (Boiler) △

Model — WC-G △

Size, in. — 1" - 600# △

(*) Five 180° oscillating soot blowers are mounted upstream of the baretube section, and six 360° rotating soot blowers are located between the baretube section and the fintube section of the reheater.

△△ The extreme blowers will be oscillat

(Trim Line)

[IPP 9255 WET SCRUBBER 62.0202]
[0120381 022581]
D-87

*EPA Request dated Oct 12, 2010, for Information Pursuant to Section 114 . Response #10 of 17 of Appendix B.

GEESI
(Bidder's Name)

D.17.25 Painting Systems.

Painting system	Manufacturer	Product Identity
A1	CARBOLINE	CARBO ZINC 12
A2	CARBOLINE	CARBO ZINC SP-81
A5	KOPPERS	BITUMASTIC NO. 50
A7	CARBOLINE	CARBO ZINC SP-76
A8	CARBOLINE	658
A9	CARBOLINE	GP-10 PRIMER
A10	CARBOLINE	CARBO ZINC 11
E1	CARBOLINE	GP-18, AD 51
E2	SHERWIN WILLIAMS	P-61, LGIW40
E3	CARBOLINE	GP-18 PRIMER

(Trim Line)

[IPP 9255 WET SCRUBBER 62.0202]
D120381 022581]
D-88
1-C.101

*EPA Request dated Oct 12, 2010, for Information Pursuant to Section 114 . Response #10 of 17 of Appendix B.

D.17.26 Seal Water Filtration

		GEESI △
		Bidder's Name
Application:	Liquid	CTB
	Flow Rate, GPM	200 Continuous
	Retention	40 Microns
	Solids loading	150 ppm max
	Design Pressure	150 PSI
	Temperature	Ambient
Filter:	Manufacturer	Renningen-Petter
	Model No.	SS-73-212-MX-Auto
	Type	Backwashing Multiplex filter unit to operate and backwash in parallel on common inlet, outlet & drain
	Inlet/Outlet Conn.	4", 150# / 4", 150#
	Drain Conn.	4"/150#
	Materials, unit	316 SS
	Materials, Filter Elements	Polypropylene
	Filter element type	Tubular, #7BCF4B
	No. of elements/size	12/ 3½" x 36"
	Controls	Automatic backwash cleaning on differential pressure
Booster Pumps:	Quantity	Two (2), one operating, one stand-by
	Manufacturer	Worthington, or equal
	Model No.	D-3 x 3 x 4
	Materials	316 SS Construction
	Rating	200 GPM @ Approx. 60 ft. TDH
	Motor Manufacturer	General Electric
	Motor Size	6 HP, 1800 RPM

(Trim Line)

(IPP 9255 WET SCRUBBER 62.0202)
(0120381 022581
D-89
1-C.102

*EPA Request dated Oct 12, 2010, for Information Pursuant to Section 114 . Response #10 of 17 of Appendix B.

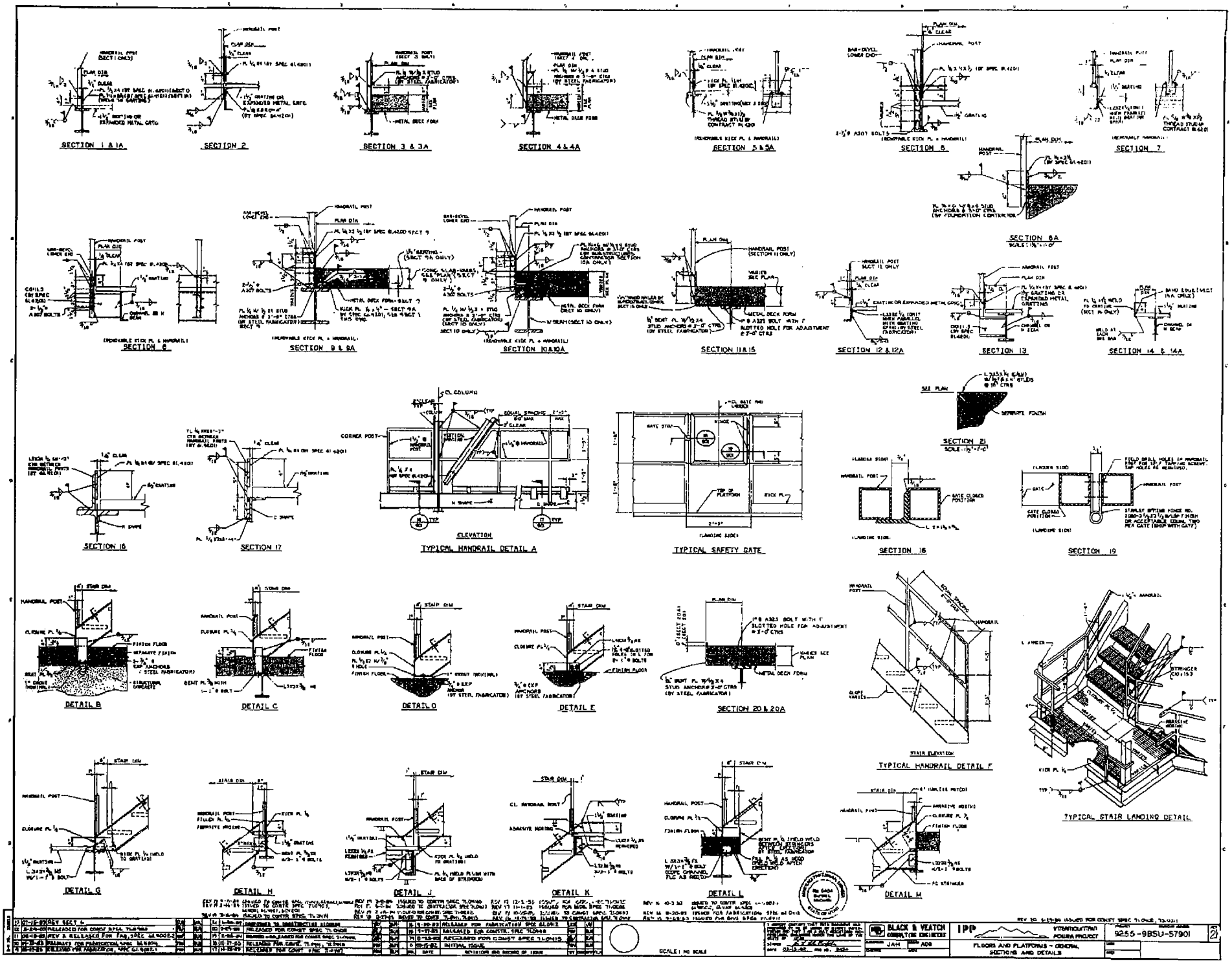

IP10_002775

*EPA Request dated Oct 12, 2010, for Information Pursuant to Section 114 . Response #10 of 17 of Appendix B.

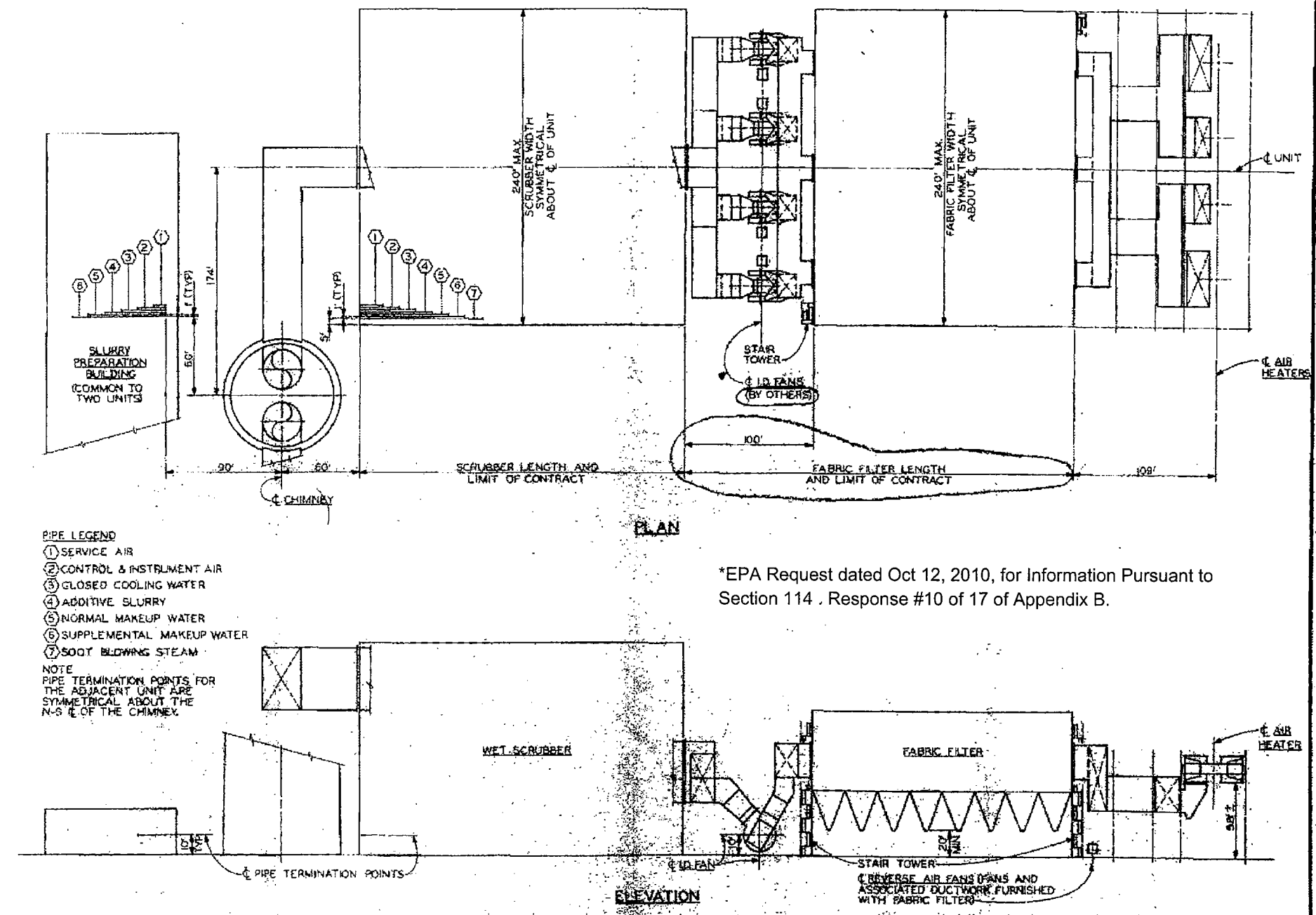

*EPA Request dated Oct 12, 2010, for Information Pursuant to Section 114 . Response #10 of 17 of Appendix B.

PROPOSAL DATA

D.1 GENERAL. Each bidder shall submit complete and definitive information on his offering in sufficient detail to permit a complete analysis of the bid. The requirements stated in the Instructions to Bidders relative to information submittal shall be followed.

The requirements for information contained in this section are basic requirements. Additional information shall be provided as requested by the Project Manager.

The blank data sheets included in this section shall be completely filled in. The data listed therein shall not relieve the Contractor of his responsibility for meeting the requirements of the detailed specifications.

The bidder shall not alter the original Proposal Data section page numbers. If it becomes necessary to add pages, at other than the end of the section, a suffix such as a, b, or c, etc., shall be added to the original number to designate the added page number. Pages added at the end of the section shall be numbered sequentially by continuation of originally established numbering.

If the bidder finds it necessary to reproduce any of the proposal data pages, methods of reproduction shall not appreciably reduce or enlarge the reproduced pages. In the process of preparing the bid evaluation, the right-hand portion of proposal data pages which have a trim line will be trimmed off and matched with corresponding pages received from other bidders. It is therefore desirable that these pages match as nearly as practicable with the original left-hand portion of the page when placed side by side. The bidder shall make no changes to the left of the trim line.

Where alternates are indicated in the proposal or proposal data, the bidder shall provide complete information for each alternate.

D.2 PERFORMANCE CURVES. The following performance curves shall be furnished as specified in Part 2, Equipment Requirements.

Pump characteristic curves

Pump speed-torque curves for pumps for which Owner will furnish drive motors

Ball mill speed-torque curves

Air blower performance curves

*EPA Request dated Oct 12, 2010, for Information Pursuant to Section 114 . Response #10 of 17 of Appendix B.

D.3 DRAWINGS. Drawings shall be submitted indicating the following information. All drawings shall be in sufficient detail to permit preliminary plant arrangement studies to be made.

General arrangement of equipment (plan and elevation)

Modifications required to tentative ductwork arrangement to suit bidder's module arrangement

Recommended method of support including support elevation and loads

Differential expansion details

Major dimensions of system components

Scrubber piping requirements

Locations of all doors, inspection and test points and accessories requiring access; access provisions provided by the Contractor; and suggested arrangement of access provisions to be provided by the Owner

Plan and sectional views of the scrubber modules indicating flow paths, construction features and means of access for operation, testing, and maintenance

Plan and sectional views of proposed ductwork showing dampers, expansion joints, instrument connections, test ports and access platforms, stairs and ladders

Dimensional layout of all pumps

Dimensional layout of limestone slurry preparation equipment and storage tanks

Electrical wiring requirements

Electrical power one-line diagrams

Process and instrumentation diagrams for system proposed showing instrumentation, controls, alarms, and protective interlocks

D.4 SPARE PARTS. Each bidder shall provide a complete listing of spare parts which are required for proper maintenance of the equipment in the bidder's opinion. A lump sum price shall be stated in the Proposal for furnishing these parts. Separate prices and lists shall be provided for Units 1 and 2 as required by the Proposal. Each list shall include quantities to be furnished, the unit price for each part, and a description of each part including the generic part number and manufacturer's part number.

*EPA Request dated Oct 12, 2010, for Information Pursuant to Section 114 . Response #10 of 17 of Appendix B.

Additional lists shall be provided for parts which the bidder recommends that the Owner keep in stock but which are not deemed to be as essential as those on the required lists or as apt to require replacement.

A listing of prices for complete spare turbine type mixers of each type proposed shall be provided.

D.5 SPECIAL TOOLS. Each bidder shall provide a complete listing of special tools which are required for proper maintenance of the equipment in the bidder's opinion. The cost of one set of the special tools shall be included in the price stated in the Proposal for Unit 1 equipment and materials. The list shall include quantity of each tool required, the unit price for each tool, and a description of each tool.

D.6 DELETED.

*EPA Request dated Oct 12, 2010, for Information Pursuant to Section 114 . Response #10 of 17 of Appendix B.

(Bidder's Name)

D.7 TRAINING PROGRAM. The bidder shall provide a complete description of training program, an itemization of costs included in the lump sum proposal price option for training, available alternates, and the bidder's recommendation.

See attached sheets.

(Trim Line)

[IPP 9255 WET SCRUBBER 62.0202]
[~~022581~~]
D-4
0120381

*EPA Request dated Oct 12, 2010, for Information Pursuant to Section 114 . Response #10 of 17 of Appendix B.

OPERATING TRAINING PROGRAM

General Electric Environmental Services, Inc. will provide on-site training program for the Intermountain Generating Station's personnel to familiarize them with operation and maintenance of the FGD System supplied by GEESI. Based on our experience with training programs on similar systems, we offer a program of two sets of three four-hour sessions covering the scope shown on the attached "Operator Training Sessions - Summary of Table of Contents" followed by detailed session contents. Each four-hour session will be given morning and afternoon so that the four shifts of operators can be covered in three days by doubling up on the shifts at each session.

All lectures will be presented by GEESI personnel having extensive experience in both start-up and training sessions. All trainees will be provided with individual copies of the training manual containing text, P&I Drawings and sketches and photos of equipment. Three hours are to be classroom lectures using slides and other suitable training aids, followed by a one-hour plant site visit to have personnel walk past and view the equipment. Thus, training of four operating shifts would be completed in three working days.

An additional one-day session would be scheduled for maintenance personnel where Vendor representatives would be requested to assist GEESI's Start-up Advisor in training to handle equipment such as rubber lined pumps, ball mills and special instrumentation.

~~Video tapes of the training program can be provided under Alternate ___, for an extra fee.~~

*EPA Request dated Oct 12, 2010, for Information Pursuant to Section 114 . Response #10 of 17 of Appendix B.

Operator Training Sessions
Summary of Table of Contents

Session 1 - Gas Flow System

Layout of equipment, gas flow through ducts, dampers, absorbers, mist eliminators, reheaters, gas flow control concept.

Liquid Flows In SO_2 Absorber Towers

Liquid Flow through SO_2 absorber towers, makeup limestone slurry flow, bleed to sump and thickener, mist eliminator washing.

Site Visit

Session 2 - Absorber Control Concept

Process Theory

Limestone Preparation and Handling System and Operation

Layout of limestone slurry system, ball mill grinders, equipment description

Control Concept

Site Visit

Session 3 - Operation, Startup of Limestone and Slurry Preparation System and Slurry Recycle Loop

Start up of absorber, scrubbing liquid loops, mist eliminator wash loops, reheat loops, putting gas flow through absorbers.

Shutdown of Absorbers and Limestone Slurry System.

Safety Precautions

Session 4- Maintenance

Vendor representatives and GEESI startup man will cover maintenance of major equipment and special instrumentation supplied by GEESI.

*EPA Request dated Oct 12, 2010, for Information Pursuant to Section 114 . Response #10 of 17 of Appendix B.

DETAILED TABLE OF CONTENTS

SESSION I

Gas Flow

A. Description of Layout and Major Equipment in FGD System

Training aids-Training Manual, slides of General Arrangement Drawings, absorbers.

B. Gas flow through absorbers and reheaters

C. Gas flow through absorber bypass duct

D. Gas Flow Control Concept

Text - Operator Training Manual

Training Aids - Slide of Gas Flow Diagram

Slide of Interlock System

E. Liquid Flows In SO_2 Absorber Towers

Aids - Slides of Drawings of Absorber Tower, Simplified P&I's, Interlock Slides

Liquid Flow

1. Recycle Pumps and Slurry Sprays
2. Agitators
3. Bleed to Sump and Client's Thickener
4. Limestone Slurry Make-up
5. Recovered Water Make-up
6. Mist Eliminator Sprays and Washing

*EPA Request dated Oct 12, 2010, for Information Pursuant to Section 114 . Response #10 of 17 of Appendix B.

SESSION II

A. Absorber Control Concept

1. Recycle Pumps
2. Agitators
3. pH Control and Limestone Slurry Make-up
4. Control of Recycle Slurry Solids Content

B. Process Theory

1. Factors affecting SO_2 Removal
2. Factors Minimizing Scaling and Other Problems
3. Design Features of System

C. Limestone Preparation System & Operation Aids

Slides of Area General Arrangement Drawings. Drawings of limestone storage silo bottom, weigh feeder, ball mills, wet cyclone classifiers, slurry storage tank, auxiliary equipment.

Layout and Equipment Description

1. Limestone storage silo and vibrating bottom
2. Weight Feeder
3. Ball Mills
4. Wet Cyclone Classifiers
5. Limestone Slurry Tank and Limestone Slurry Pumps

Control Concept

1. Maintaining level in Limestone Slurry Storage Tanks
2. Control of dry limestone feed to Ball Mill
3. Operation of Classifying System
4. Density control of Limestone Slurry
5. Limestone Slurry recycle loop.

Site Visit

*EPA Request dated Oct 12, 2010, for Information Pursuant to Section 114 . Response #10 of 17 of Appendix B.

SESSION III

A. Operation

1. Start-up limestone slurry preparation system, limestone slurry recycle loop.

2. Start-up of absorber tower liquid loops

3. Start-up of Gas Reheat System

4. Putting gas flow through absorbers

5. Mist eliminator washing

B. Normal Shutdown

1. General

2. Absorbers

3. Limestone System

4. Miscellaneous

C. Upset and Emergency Conditions

1. Sumps

2. Absorber Recycle Pumps

3. Limestone System

4. Total Power Failure

5. Instrument Air Failure

6. Boiler Shutdown

D. Safety Procedures and Requirements

*EPA Request dated Oct 12, 2010, for Information Pursuant to Section 114 . Response #10 of 17 of Appendix B.

SESSION IV

Maintenance

Vendor representatives along with GEESI's start-up man will conduct a session for plant maintenance personnel covering maintenance of major equipment such as recycle pumps, agitators, ball mills, etc., and special instrumentation.

*EPA Request dated Oct 12, 2010, for Information Pursuant to Section 114 . Response #10 of 17 of Appendix B.

Time Required - Operator Training
P-1057

SESSION I
A.M. and P.M. Sessions

Eight (8) hours for Instructor and Start-Up Advisor

SESSION II

Eight (8) hours for Instructor and Start-Up Advisor

SESSION III

Eight (8) hours for Instructor and Start-Up Advisor

SESSION IV

Eight (8) hours for Start-Up Advisor and Vendor Representatives for Plant Maintenance

*EPA Request dated Oct 12, 2010, for Information Pursuant to Section 114 . Response #10 of 17 of Appendix B.

Field Time - 32 Hours TOTAL

Training Manual Preparation including writing, making simplified drawings and slides.

6 Weeks for Training Manual write-up, plus typing, and some drafting.

*EPA Request dated Oct 12, 2010, for Information Pursuant to Section 114 . Response #10 of 17 of Appendix B.

D.8 SUPPLEMENTARY INFORMATION. The following supplementary information shall be submitted with the Proposal as provided for in the Instructions to Bidders.

General

List of materials and/or equipment manufactured outside the United States

Complete description of support and maintenance operations that must be performed when the flue gas scrubber system is in operation

Expected maintenance schedule

Detailed descriptions of measures taken to insulate and isolate electrical equipment from ambient temperatures in excess of 50 C. This shall include details of derating of electrical equipment for service in the high ambient temperature, types and ratings of insulating systems proposed, provisions for control of thermal stresses, and anticipated reduction in electrical equipment life because of unavoidable exposure to ambient temperatures above 50 C.

Description of gas envelope leak test

Equipment availability data specified in Appendix B

Description of availability improvement program

Design Criteria and Performance

Detailed information to indicate a history of successful application of equipment of the type specified under conditions equal to, or more severe than, the operating conditions specified. Such information shall include a list of units in operation, the year of their initial operation, overall dimensions of one scrubber module and the quantity of flue gas treated by one scrubber module.

Detailed start-up and shutdown procedures including starting the entire system, placing individual modules in and removing them from service, loading and unloading the modules, and stopping the system under anticipated operating conditions. Information shall be submitted for start-up from

*EPA Request dated Oct 12, 2010, for Information Pursuant to Section 114 . Response #10 of 17 of Appendix B.

both cold and hot conditions. In addition, information shall be submitted for the initial checkout and first start-up of the scrubber system.

Discussion of the number of modules which would be on line for various operational situations including, but not necessarily limited to, the following.

Most efficient operation of the scrubber over the full range of steam generator loads

Configuration to permit rapid response to load increase over the full range of steam generator loads

Discussion of factors related to opacity of discharge

Listing of design codes which will be used to control the design. Such listings shall give the complete code reference and the type of component for which the code applies.

Supporting analysis and recommendation concerning capability of scrubber to collect particulate during abnormal operation of the particulate collection system. The maximum allowable particulate grain loading and duration shall be stated.

Limitations to fully automatic operation during start-up and low load operation

Limitations on removal of sulfur dioxide during start-up and at loads below 25 per cent of steam generator maximum continuous rating

Description of treatment equipment provided for utilizing water from the specified sources, if applicable

Elementary materials balance diagrams

Description of model study proposed

Generic Equipment Construction Information

System components materials, including linings and coatings as applicable, identified by trade name, ASTM or other specification number, or chemical composition and physical properties

*EPA Request dated Oct 12, 2010, for Information Pursuant to Section 114 . Response #10 of 17 of Appendix B.

Detailed description of construction features, surface preparation, and lining installation procedures for vessels with interior linings or coatings

Discussion of the effects of fluorides on the scrubber system equipment

Equipment support requirements including support steel interfaces

Magnitude and direction of thermal expansion including details of methods used to make the predictions; provisions for expansion included in the equipment; and requirements concerning connection of piping and ductwork

Details of equipment construction including extent of shop fabrication and field erection

Details of recommended equipment support structures for enclosures, raceway, and similar electrical equipment to minimize exposure to heat

Recommended insulation for electrical conductors which must connect to electrical equipment

Expected replacement frequency of all parts including spray nozzles

Discussion of methods of preventing scaling in equipment and piping systems containing cooling tower blowdown

Scrubber Modules

Periodic cleanout requirements and description of provisions incorporated for accomplishing cleanout

Discussion of the provisions to prevent spray header and nozzle plugging. The discussion shall include effects of nozzle plugging on system operation. A statement shall be included concerning the quantity of nozzles which can plug or otherwise fail without causing degradation of performance below that required to comply with the specified emission limits.

*EPA Request dated Oct 12, 2010, for Information Pursuant to Section 114 . Response #10 of 17 of Appendix B.

Detailed description of the module purge system

Discussion of the effect of differential pressure across the module on system performance. A statement shall be included concerning the maximum permissible pressure drop that can be tolerated before a module must be removed from service.

Limestone Slurry Preparation Equipment

Description of the limestone slurry preparation and feed system including density control and degree of local and remote control

Description of limestone slurry preparation system instrumentation, controls, alarms, and interlocks

Description of provisions for utilizing water pretreatment sludge in the limestone slurry preparation equipment

Discussion of specifics of ball mill selection and how it relates to reagent solids size in the slurry produced

Mixers

Description of model studies proposed for the mixers

Piping

Description of lined piping lining material, method of application, and manufacturer

Description of provisions for flushing piping systems including method, time required, and controls furnished

Mist Eliminators

Mist eliminator and mist eliminator spray system description including water quality, pressure and flow rate requirements

Description of method used to predict mist eliminator efficiency

Discussion of potential advantages of using river water for mist eliminator washing rather than cooling tower blowdown

*EPA Request dated Oct 12, 2010, for Information Pursuant to Section 114 . Response #10 of 17 of Appendix B.

Dampers

Description of test capabilities and functional testing proposed

Forced Oxidation System

Discussion of the effects of forced oxidation on the utilization of limestone, system operation, performance, and maintenance. Include tabulation of natural and forced oxidation rates for each coal specified.

Controls and Instrumentation

Description of complete flue gas scrubber system instrumentation, control, alarm and interlock systems operation including control and instrument equipment list with manufacturer's model numbers, preliminary logic diagrams and quantities of components

Description of recommended method of measurement of flue gas sulfur dioxide parameters

Description of instrumentation sensor purging capability for pH sensors, pressure sensors, level sensors and any other instrumentation which comes in contact with either the flue gas or scrubber liquid

Description of recommended redundant sample and sensor lines

Description of conditions which would cause a scrubber module to shut down automatically. Describe the control loop sequence for such a shutdown.

Access Provisions

Description of access provisions

Recommendations concerning support of ladders and platforms from equipment

Reheaters

A complete description of the soot blowing system

*EPA Request dated Oct 12, 2010, for Information Pursuant to Section 114 . Response #10 of 17 of Appendix B.

Project Schedule

Milestone type production and erection schedule

Insulation and Lagging

Description of insulation and lagging system, including details, locations, and installation methods for panels as well as for alternate systems proposed in lieu of prefabricated panels

D.9 CONSTRUCTION MANAGEMENT AND PROJECT ORGANIZATION. Bidders shall submit the following information.

1. A narrative description of the organizational, management, and technical service techniques proposed to perform the work as required by the specifications and documents

2. Proposed home office and project site organization charts

3. Résumés of proposed project site management and supervisory personnel

4. A network diagram illustrating the bidder's basic erection sequence

5. A listing of major erection equipment to be used

D.10 QUALITY ASSURANCE ORGANIZATION. Bidders shall submit the following information.

1. A narrative description of the organization, management, and technical services proposed to assure the quality of the work

2. An organization chart illustrating the proposed relationships between home office and technical services including the relationship between project management and the quality assurance organization for both shop and field work. The degree of independence of the quality assurance organization shall be clearly delineated.

3. Résumés of proposed project site personnel assigned to nondestructive examination and welding inspection

4. Résumés of personnel responsible for supervision of nondestructive examinations and welding inspection

*EPA Request dated Oct 12, 2010, for Information Pursuant to Section 114 . Response #10 of 17 of Appendix B.

D.11 ESTIMATED POWER REQUIREMENTS. Bidders shall submit an estimate of their anticipated power requirements including peak and average demand in kilowatts, broken down by calendar quarters, for the erection of the equipment and materials specified. Construction power supply is described in Section 3A.

D.12 SUBCONTRACTS. As stated in the Proposal, the bidder intends to perform the major portion of the work at the jobsite with his own forces. Specific portions of the work not performed by the bidder will be subcontracted by the following subcontractors.

Work Subcontracted	Name of Subcontractor
Insulation	Owens-Corning, Transco, Brand, API
Linings	See attached sheet
Piping	Natkin, Schneider, Newberry
Low Voltage Wiring	Fisk, Lord, Comstock, Commonwealth
Instrumentation	Fisk, Schneider, Newberry

D.13 BIDDER'S REPRESENTATIVES.

Name, address, and telephone number of person to contact for explanation of the details of this Proposal:

Mr. G. Crameri, Project Manager

General Electric Environmental Services

200 North Seventh Street, Lebanon, PA 17042 (717 272-2001)

Name, address, and telephone number of representative located in the Los Angeles, California area:

Mr. Thomas Hoyne

Electric Utilities Sales Division

9350 East Flair Drive, El Monte, CA 91734 (213 572-5207)

Name, address, and telephone number of representativa located in the Kansas City, Missouri area:

Mr. William Green

Electric Utilities Sales Division

10550 Barkley, Overland Park, Kansas 66212 (913 967-6273)

*EPA Request dated Oct 12, 2010, for Information Pursuant to Section 114 . Response #10 of 17 of Appendix B.

Linings Type	Name of Subcontractors
Rubber Lining of Pipe (Shop)	Smith Industries, Akron Rubber Lining Inc., Rubber Engineering, Goodyear
Non-rubber	Ceilcote, Bieglow Liptuck, Chemsteel Construction, RECO/ Tricote, J. T. Thorpe, Rigiline Corporation
Rubber Lining (Field)	Smith Industries, Adron Rubber, Rubber Engineering, RECO/Tricote, Protective Coatings

*EPA Request dated Oct 12, 2010, for Information Pursuant to Section 114 . Response #10 of 17 of Appendix B.

Name, address, and telephone number of representative located in the Utah plant site area:

Mr. John L. Peters

111 Brickyard Road, Salt Lake City, UT 84107

(801 364-1894)

D.14 CONTRACTOR'S LICENSES. Bidders shall state the classification and identifying number of all applicable licenses issued to the bidder by the Department of Contractors of the Division of Business Regulation of the State of Utah.

Classification - Unlimited

License Number - 0000-34124-2

Bidders shall identify all applicable licenses issued to bidder by other governmental body or bodies.

None applicable

*EPA Request dated Oct 12, 2010, for Information Pursuant to Section 114 . Response #10 of 17 of Appendix B.

D.15 PRICE ADJUSTMENTS. If the Equipment Proposal or the Erection Proposal is subject to adjustment, the bidder shall state the basis for such adjustment.

***D.15.1 Equipment Proposal Price Adjustments for Unit 1. If the equipment prices stated in the Proposal are subject to adjustment, the bidder shall state the basis for such adjustment, including all information required by Article B.11 of the Instructions to Bidders.

Portion of Lump Sum Equipment Price	Per Cent of Lump Sum Equipment Price	Index to be Used	Base Index Date	End Index Definition
Firm portion	31			
Shop labor	32	SIC Code 34	6/81	*
Material	32	BPI Code 1013	6/81	*
Material	5	PPI 07	6/81	

*For each portion of the lump sum price, the bidder shall provide all necessary detailed explanations and dates for the end index computations according to the requirements of Article GC.32.6. Additional pages may be added following this page if required.

***D.15.2 Erection Proposal Price Adjustment for Unit 1. If the bidder submits a firm price erection proposal, this information will not be required.

**If the erection prices stated in the Proposal are subject to adjustment, the bidder shall state the basis for such adjustment, including all information required by Article B.11 of the Instructions to Bidders.

Portion of Lump Sum Erection Price	Per Cent of Lump Sum Erection Price	Index to be Used	Base Index Date	End Index Definition
Firm portion	2			
Craft labor	56	Labor Contracts	Craft Expiration Dates pages D-14, D-14a	
Construction material, equip., supplies, etc.	30%	Code 112	6/81	Refer to Article B.11.2 & GC.32.6
Lining Mat'l	12%	PPI 07	6/81	

Craft wage rate adjustment baseline data shall be provided as requested herein for any erection work proposal subject to adjustment. The tabulation page may be reproduced if additional space is needed.

**Negotiated Revision
***Negotiated Revision 120481

*EPA Request dated Oct 12, 2010, for Information Pursuant to Section 114 . Response #10 of 17 of Appendix B.

***D.15.3 Equipment Proposal Price Adjustments for Units 2, 3 and 4. If the equipment prices stated in the Proposal are subject to adjustment, the bidder shall state the basis for such adjustment, including all information required by Article B.11 of the Instructions to Bidders.

Portion of Lump Sum Equipment Price	Per Cent of Lump Sum Equipment Price	Index to be Used	Base Index Date	End Index Definition
Firm portion	0			
Shop labor	46	SIC Code 34	6/81	*
Material	46	PPI Code 1013	6/81	*
Material	8	PPI 07	6/81	

*For each portion of the lump sum price, the bidder shall provide all necessary detailed explanations and dates for the end index computations according to the requirements of Article GC.32.6. Additional pages may be added following this page if required.

***D.15.4 Erection Proposal Price Adjustment for Units 2, 3 and 4. If the bidder submits a firm price erection proposal, this information will not be required.

**If the erection prices stated in the Proposal are subject to adjustment, the bidder shall state the basis for such adjustment, including all information required by Article B.11 of the Instructions to Bidders.

Portion of Lump Sum Erection Price	Per Cent of Lump Sum Erection Price	Index to be Used	Base Index Date	End Index Definition
Firm portion	2			
Craft labor	56	Labor Contracts	Craft Expiration Dates on pages D-14, D-14a	
Construction material, equip., supplies, etc.	30	Code 112	6/81	Refer to Article B.11.2 & GC.32.6
Lining Mat'l	12	PPI 07	6/81	

Craft wage rate adjustment baseline data shall be provided as requested herein for any erection work proposal subject to adjustment. The tabulation page may be reproduced if additional space is needed.

**Negotiated Revision
***Negotiated Revision 120481

*EPA Request dated Oct 12, 2010, for Information Pursuant to Section 114 . Response #10 of 17 of Appendix B.

Craft wage rate adjustment baseline data shall be provided for all onsite labor whether provided by the Contractor's own forces or by any level of onsite subcontractor. The data provided will be used to calculate contract adjustment amounts for erection work when applicable. Contract adjustment shall be calculated as specified in the article entitled Erection Wage Rate Adjustment in the General Conditions.

In the following tabulation, headings shall mean:

"Craft" shall mean the skilled or unskilled labor group for which the data is tabulated.

"Expiration Date" shall mean the date the craft's current wage contract expires. List the month, day, and year.

"Base Wage Rate" shall mean the hourly journeyman wage rate, including fringe benefits and any travel and subsistence allowance, in effect for the craft on the expiration date of the craft labor contract. If more than one journeyman rate applies to a particular craft, make a separate listing for each rate including foremen and general foremen.

*EPA Request dated Oct 12, 2010, for Information Pursuant to Section 114 . Response #10 of 17 of Appendix B.

"Percentage of Erection Work" shall mean the percentage of the total lump sum erection bid price equal to the direct labor costs of the particular craft. The Percentage of Erection Work shall be calculated by dividing the total dollar amount for direct field labor costs for each craft by the lump sum bid price for erection and multiplying the result by 100.

"Percentage After Expiration Date" shall mean the percentage of the total erection work by each craft that is scheduled to be performed after the Expiration Date of the labor contract for each craft. The "Percentage After Expiration Date" shall be calculated by dividing that portion of each craft's work scheduled to be performed after the Expiration Date by the total amount of erection work for that craft and multiplying the result by 100.

*EPA Request dated Oct 12, 2010, for Information Pursuant to Section 114 . Response #10 of 17 of Appendix B.

ERECTION WAGE RATE ADJUSTMENT BASELINE TABULATION

Craft	Expiration Date	Base Wage Rate	Percentage of Erection Work	Percentage after Expiration Date
Boilermaker	9-30-82	$24.44	31.6	100%
Carpenter	6-30-82	15.72	1.3	100%
Electrician	12-31-83	26.70	9.3	95%
Ironworker	6-30-82	22.01	1.1	100%
Laborer	6-30-81	11.31	1.0	100%
Millwright	6-30-82	19.83	1.3	100%
Operating Engineer	6-11-83	26.65	3.1	100%
Oiler	6-11-83	23.08	2.1	100%
Painter	7-31-81	14.09	0.4	100%
Pipefitter	8-1-81	21.83	9.9	100%
Teamster	7-1-81	17.73	1.1	100%
Asbestos Workers	7-31-81	17.80	2.3	150%
			56.0	

[IPP 9255 WET SCRUBBER 62.0202]
[20482]
D-14

*EPA Request dated Oct 12, 2010, for Information Pursuant to Section 114 . Response #10 of 17 of Appendix B.

INTERMOUNTAIN POWER PROJECT
ERECTION WAGE RATE ADJUSTMENT BASELINE TABULATION - WET FGD SYSTEM

CRAFTS

DESCRIPTION	BOILERMAKER	IRON WORKER	OPERATING ENGINEER	OILER	ELECTRICIAN	TEAMSTER
CRAFT EXP. DATE	9-30-82	6-30-82	6-16-83	6-16-83	12-31-83	7-1-81
Journeyman	$16.06	$14.25	$17.49	$14.27	$18.60	$11.00
Travel	.10	.25	.05	.05	--	--
Subsistance	2.75	3.00	2.50	2.50	3.13	1.94
Vacation	1.00	--	1.12	1.12	--	1.00
Health & Welfare	1.30	1.05	1.33	1.33	1.00	1.13
Pension	1.25	1.60	2.05	2.05	.75	1.19
Apprentice	.04	.10	.17	.17	.15	.10
Other Benefits	--	.05	--	--	.94	.02
Insurance and Taxes 9.65%	1.94	1.71	1.94	1.59	2.13	1.35
TOTAL COST	24.44	22.01	26.65	23.08	26.70	17.73

DESCRIPTION	LABORERS	CARPENTERS	PIPE FITTERS	MILLWRIGHTS	ASBESTOS WORKERS
CRAFT EXP. DATE	6-30-81	6-30-82	8-1-81	6-30-82	7-31-81
Journeyman	9.07	12.65	14.31	13.50	14.05
Travel	--	--	.04	--	--
Subsistance	--	--	3.50	2.88	2.18
Vacation	.25	.25	--	.25	
Health & Welfare	.70	.80	1.00	.80	
Pension	.35	.75	1.10	.75	
Apprentice	.04	.03	.06	.03	
Other Benefits	--	--	.07	--	
Insurance and Taxes 9.65%	.90	1.24	1.75	1.62	1.57
TOTAL COST	11.31	15.72	21.83	19.83	17.80

IPP 9255 Wet Scrubber 62.0202
020482
D-14a

*EPA Request dated Oct 12, 2010, for Information Pursuant to Section 114 . Response #10 of 17 of Appendix B.

D.16 VARIATIONS AND EXCEPTIONS. Bidders shall list any and all variations from and exceptions to the requirements of the specifications and documents. Additional pages may be added following this page if required.

None

[IPP 9255 WET SCRUBBER 62.0202]
[~~022581~~]

*EPA Request dated Oct 12, 2010, for Information Pursuant to Section 114 . Response #10 of 17 of Appendix B.

GEESI

(Bidder's Name)

D.17 EQUIPMENT DATA. The following data will be used in comparison and evaluation of bids.

D.17.1 General Data.

Scrubber model — SPRAY TOWER

Scrubber type — SIX (6) BASE CASE

Number of modules

Allowable percentages of limestone constituents other than calcium carbonate

Constituent	Allowable Percentage	Maximum or Minimum
Inerts	15	15 (Max) (1)

Slurry buffering additive material, if required — None

Total installed horsepower, all motors — 8,659 HP (2) / 2202 HP (3) △ Scurbber Syst./Slurry Prep. Syst.

Model testing organization — GEESI

D.17.2 Welding Inspectors. Are the bidder's welding inspectors certified in accordance with AWS QC1

Shop	Field
Yes	Yes

(Trim Line)

(1) Sample Required for Reactivity Test.
(2) Total for One (1) Scrubbing Unit excluding Slurry Preparation.
(3) Total for one (1) Slurry Preparation System common to two units.

△ Revised 11/21/81

△△ Revised 12/03/81

[IPP 9255 WET SCRUBBER 62.0202]
[0120381 ~~022531~~]

*EPA Request dated Oct 12, 2010, for Information Pursuant to Section 114 . Response #10 of 17 of Appendix B.

	GEESI (Bidder's Name)
D.17.3 Performance Data.	
D.17.3.1 25 Per Cent of MCR.	
Steam generator operating point	25 per cent of MCR
Influent flue gas temperature, F	200
Fuel heat input to steam generator, million Btu/hour	2,190
Influent flue gas flow, lb per hour	2,916,000
Sulfur dioxide content of influent flue gas flow, lb per hour	1,716
Number of modules operating	TWO (2)
Liquid to gas ratio in scrubber module, gpm per 1000 acfm	75
Limestone additive requirements	
Consumption based on calcium carbonate content of 90 per cent, lb per hour	2960 (1) *
Stoichiometric ratio, as defined in Section 2B △	1.08 △
Buffering additive consumption, lb per hour	N/A
Sulfur dioxide removal efficiency, per cent	90
Sulfur trioxide (or H_2SO_4) removal efficiency, per cent	70
Sulfur dioxide content in effluent flue gas stream, lb per hour	171.6

(Trim Line)

[IPP 9255 WET SCRUBBER 62.0202]
[0120381 030981]

(1) includes equivalent of 40 lbs/hr Cl in the gas
* Guarantee

*EPA Request dated Oct 12, 2010, for Information Pursuant to Section 114 . Response #10 of 17 of Appendix B.

	GEESI (Bidder's Name)
Sulfur dioxide content in effluent flue gas stream, lb per million Btu	0.078 *
Particulate content in effluent flue gas stream during operation with particulate content at scrubber inlet of 0.020 lb per million Btu, lb per million Btu	0.020 (max) *
Water droplet carry-over in effluent flue gas stream, lb per hour	
Before mist eliminator	--
After primary mist eliminator	--
After secondary mist eliminator	250 *
Acid mist carry-over through mist eliminator, per cent	30
Temperature of effluent flue gas stream, F	155 △
Gas velocity, fps	
Overall effective velocity through scrubber	5.2
Maximum through scrubber	5.2
Maximum through mist eliminator	5.2
Gas stream pressure losses, in. of H_2O	
Ductwork from the contract limits indicated on the drawings to the module inlets △	

△ 0.3" W.C. from the battery limit to the scrubber inlet excluding pressure drop of Purchasers Damper

(Trim Line)

[IPP 9255 WET SCRUBBER 62.0202]
[0120381 022581]
D-18

* Guarantee

1-C.3

*EPA Request dated Oct 12, 2010, for Information Pursuant to Section 114 . Response #10 of 17 of Appendix B.

	GEESI
	(Bidder's Name)
From module inlet to module outlet	0.5 Module Inlet/Reheater Inlet
Prequench section	Included Above
All scrubbing stages	Included Above △△
Mist eliminator	Included Above
Other losses within module, describe	None
Reheater	0.2 △
Ductwork from the module outlets to the contract limits indicated on the drawings △	0.3 " W/C/ from the vessel outlet to the battery limits excluding the pressure drop of Purchaser's Dampers △
Other losses not previously accounted for, describe	None △△
Total, all Contractor-furnished scrubber system components	1.3 "W.C. excluding pressure drop associated with Purchaser's supplied dampers. △ *
Scrubber recirculation flow, per module	
Number of pumps operating	Two (2)
Rate, gpm, total	31,200
Bhp required, total	702
pH value	5.5 to 6.0
Per cent solids by weight	10 (Suspended)
Specific gravity	1.10
Viscosity, centipoise	1 to 2

(Trim Line)

[IPP 9255 WET SCRUBBER 62.0202]
[0120381 022581]
D-19

*Guarantee
1-C.4

*EPA Request dated Oct 12, 2010, for Information Pursuant to Section 114 . Response #10 of 17 of Appendix B.

GEESII

(Bidder's Name)

Scrubber blowdown flow	
Number of pumps operating	Gravity Flow
Rate, gpm, total	80
Bhp required, total	NONE (GRAVITY FLOW) △
pH value	5.5 to 6.0
Per cent solids by weight	10. (Suspended)
Solids discharge rate, lb per hour	4428
Specific gravity	1.1
Viscosity, centipoise	1 to 2
Sulfate to sulfite ratio	
With forced oxidation	9.0 *
Without forced oxidation	4.0
Recycle water flow	
Number of pumps operating	By Owner
Rate, gpm, total	40 (Ave); 150 (Instantaneous Max)
Bhp required, total	By Owner

Makeup water flow (cooling Tower Blowdown)

Usage

(Trim Line)

Description of Usage	Flow Rate, gpm
L/S Grinding	2 (Ave); 50 (Max)
Pump Seals	41 (Ave); 55 (Max)
M.E. Wash	120 (Ave)
Total	163 (Ave)
Guaranteed*	180 (Ave)

[IPP 9255 WET SCRUBBER 62.0202]
[061381 ADDENDUM 3]
0120381 D-20

* Guarantee
(1) Does Not Include Flushing

1-C.5

*EPA Request dated Oct 12, 2010, for Information Pursuant to Section 114 . Response #10 of 17 of Appendix B.

	GEESI (Bidder's Name)
Mist eliminator spray flow	
Total head, ft	172 Ft. TDH
Rate, gpm	
Continuous	120 Total Ave
Intermittent	232 GPM
Sequence	
Primary	1 hr 40 min/shift
Secondary	40 min/Two shifts
Compressed air requirements	
Service air, scfm	336
Control and instrument air, scfm	500 SCFM
Retention time (recycle flow related), minutes	15

	Scrubbing Process	Slurry Preparation
Total operating power requirements, kVA/kW (25% of MCR)		
6900 volt, 3 phase ac * (Includes line and distribution losses) △	* 1380 / * 1196	* 26.2 / * 22.2 △
480 volt, 3 phase ac *	* 265 / * 223	* 7.2 / * 5.5
208 volt, 3 phase ac	-- / --	-- / --
120 volt, ac (programmable controller power supplies)	/ 5.0	/ 1.0
120 volt, ac (all other ** 120 volt ac loads)	/ 2.0	/ 0.5
125 volt dc	-- kW	-- kW

(Trim Line)

*Average hourly power requirement based on a 24-hour average. Guarantee

**Motor Space heaters not included

[IPP 9255 WET SCRUBBER 62.0202]
[0120381 022581]
D-21

1-C.6

*EPA Request dated Oct 12, 2010, for Information Pursuant to Section 114 . Response #10 of 17 of Appendix B.

	GEESI (Bidder's Name)
D.17.3.2 50 Per Cent of MCR.	
Steam generator operating point	50 per cent of MCR
Influent flue gas temperature, F	220
Fuel heat input to steam generator, million Btu/hour	4,248
Influent flue gas flow, lb per hour	5,192,000
Sulfur dioxide content of influent flue gas flow, lb per hour	4,240
Number of modules operating	Three (3)
Liquid to gas ratio in scrubber module, gpm per 1000 acfm	63
Limestone additive requirements	
Consumption based on calcium carbonate content of 90 per cent, lb per hour	7280 (1) *
Stoichiometric ratio, as defined in Section 2B △	1.08 △
Buffering additive consumption, lb per hour	NA
Sulfur dioxide removal efficiency, per cent	90
Sulfur trioxide (or H_2SO_4) removal efficiency, per cent	70
Sulfur dioxide content in effluent flue gas stream, lb per hour	424.0
Sulfur dioxide content in effluent flue gas stream, lb per million Btu	0.1*

(Trim Line)

[IPP 9255 WET SCRUBBER 62.0202]
[0120381 030981]
D-22

(1) includes equivalent of 75 lbs/hr Cl in the gas 1-C.7
*Guarantee

*EPA Request dated Oct 12, 2010, for Information Pursuant to Section 114 . Response #10 of 17 of Appendix B.

	GEESI (Bidder's Name)
Particulate content in effluent flue gas stream during operation with particulate content at scrubber inlet of 0.020 lb per million Btu, lb per million Btu	0.020Max * △△
Water droplet carry-over in effluent flue gas stream, lb per hour	
Before mist eliminator	
After primary mist eliminator	
After secondary mist eliminator	440 *
Acid mist carry-over through mist eliminator, per cent	30
Temperature of effluent flue gas stream, F	155 △
Gas velocity, fps	
Overall effective velocity through scrubber	6.3
Maximum through scrubber	6.3
Maximum through mist eliminator	6.3
Gas stream pressure losses, in. of H_2O	0.4" W.C. from battery limits to scrubber inlet excluding the pressur drop associated with the dampers supplied by Purchaser
Ductwork from the contract limits as indicated on the drawings to the module inlets △	
From module inlet to module outlet	0.7 Module inlet/reheater inlet
Prequench section	Included in Above

(Trim Line)

[IPP 9255 WET SCRUBBER 62.0202]
[0120381 022581]
D-23
1-C.8

*Guarantee

*EPA Request dated Oct 12, 2010, for Information Pursuant to Section 114 . Response #10 of 17 of Appendix B.

	GEESI (Bidder's Name)
All scrubbing stages	Included Above
Mist eliminator	(SEE PAGE D-23
Other losses within module, describe	
Reheater	0.3 △
Ductwork from the module outlets to the contract limits as indicated on the drawings △	0.4" W.C. from the vessel outlet to the battery limits excluding the pressure drop associated with the dampers supplied by Purchaser
Other losses not previously accounted for, describe	NONE △
Total, all Contractor-furnished scrubber system components	1.8" W.C. excluding the pressure drop associated with the dampers supplied by Purchaser *
Scrubber recirculation flow, per module	
Number of pumps operating	Two (2)
Rate, gpm, total	31,200
Bhp required, total	
pH value	5.5 - 6.0
Per cent solids by weight	10.0 (Suspended)
Specific gravity	1.10
Viscosity, centipoise	1 to 2
Scrubber blowdown flow	
Number of pumps operating	Gravity Flow

(Trim Line)

[IPP 9255 WET SCRUBBER 62.0202]
[0120381 022581]
D-24

*Guarantee 1-C.9

*EPA Request dated Oct 12, 2010, for Information Pursuant to Section 114 . Response #10 of 17 of Appendix B.

	GEESI
	(Bidder's Name)
Rate, gpm, total	194
Velocity, fps	VARIABLE △
Bhp required, total	NONE (GRAVITY FLOW) △
pH value	5.5 to 6.0
Per cent solids by weight	10.0
Solids discharge rate, lb per hour	10,700
Specific gravity	1.1
Viscosity, centipoise	1 to 2
Sulfate to sulfite ratio	
With forced oxidation	9.0*
Without forced oxidation	2.3
Recycle water flow	
Number of pumps operating	By Owner
Rate, gpm, total	103 (Ave); 202 (inst. max
Bhp required, total	By Owner
Makeup water flow (Cooling Tower Blowdown)	
Usage	

(This Line)

Description of Usage	Flow Rate, gpm
L/S Grinding	6 (Ave); 50 (Max)
Pump Seals	62 (Ave); 75 (Max)
M.E. Wash	279 (Ave)
Total	347 (Ave)
Guaranteed*	382 (Ave)

[IPP 9255 WET SCRUBBER 62.0202]
[061881 ADDENDUM 3]
0120381 D-25

* Guaranteed
(1) Does not include flushing

1-C.10

*EPA Request dated Oct 12, 2010, for Information Pursuant to Section 114 . Response #10 of 17 of Appendix B.

	GEEST (Bidder's Name)
Mist eliminator spray flow	
Total head, ft	172 Ft TDH
Rate, gpm	
Continuous	279 GPM Total Average
Intermittent	232 GPM
Sequence	
Primary	2 hr 35 min/Shift
Secondary	80 min/Three Shifts
Compressed air requirements	
Service air, scfm	504
Control and instrument air, scfm	500 SCFM
Retention time (recycle flow related), minutes	15

	Scrubbing Process	Slurry Preparation
Total operating power requirements, kVA/kW (50% of MCR)		
6900 volt, 3 phase ac (Includes Line and Distribution Losses) * △	2078* / 1801*	63.6* / 54* △
480 volt, 3 phase ac *	318* / 267*	10* / 8*
208 volt, 3 phase ac	-- / --	-- / --
120 volt, ac (programmable controller power supplies) **	/ 5.0	/ 1.0
120 volt, ac (all other 120 volt ac loads)	/ 2.0	/ 0.5
125 volt dc	-- kW	-- kW

(Trim Line)

*Average hourly power requirement based on a 24 hour average. Guarantee

[IPP 9255 WET SCRUBBER 62.0202]

[0120381 022581]

D-26

1-C.11

**Motor Space heaters are not included

*EPA Request dated Oct 12, 2010, for Information Pursuant to Section 114 . Response #10 of 17 of Appendix B.

	GEESI (Bidder's Name)
D.17.3.3 75 Per Cent of MCR.	
Steam generator operating point	75 per cent of MCR
Influent flue gas temperature, F	255
Fuel heat input to steam generator, million Btu/hour	6,142
Influent flue gas flow, lb per hour	7,508,000
Sulfur dioxide content of influent flue gas flow, lb per hour	6,165
Number of modules operating	Four (4)
Liquid to gas ratio in scrubber module, gpm per 1000 acfm	64
Limestone additive requirements	
Consumption based on calcium carbonate content of 90 per cent, lb per hour	10580* (1)
Stoichiometric ratio, as defined in Section 2B △	1.08 △
Buffering additive consumption, lb per hour	N/A
Sulfur dioxide removal efficiency, per cent	90
Sulfur trioxide (or H_2SO_4) removal efficiency, per cent	70
Sulfur dioxide content in effluent flue gas stream, lb per hour	616.5
Sulfur dioxide content in effluent flue gas stream, lb per million Btu	0.1*

(Trim Line)

[IPP 9255 WET SCRUBBER 62.0202]
[0120381 030981]

(1) includes equivalent of 112 lbs/h Cl in the gas

*Guarantee

D-27

1-C.12

*EPA Request dated Oct 12, 2010, for Information Pursuant to Section 114 . Response #10 of 17 of Appendix B.

	GEESI (Bidder's Name)
Particulate content in effluent flue gas stream during operation with particulate content at scrubber inlet of 0.020 lb per million Btu, lb per million Btu	0.020(Max) * △△
Water droplet carry-over in effluent flue gas stream, lb per hour	
Before mist eliminator	---
After primary mist eliminator	---
After secondary mist eliminator	640 *
Acid mist carry-over through mist eliminator, per cent	30
Temperature of effluent flue gas stream, F	155 △
Gas velocity, fps	
Overall effective velocity through scrubber	6.9
Maximum through scrubber	6.9
Maximum through mist eliminator	6.9
Gas stream pressure losses, in. of H_2O	0.41" W.C. from battery limits to th scrubber inlet excluding the pressur drop associated with the dampers supplied by Purchaser
Ductwork from the contract limits as indicated on the drawings to the module inlets	0.8 Module/Reheater Inlet
From module inlet to module outlet	
Prequench section	Included above

(Trim Line)

[IPP 9255 WET SCRUBBER 62.0202]
[0120381 022581]
D-28
*Guarantee 1-C.13

*EPA Request dated Oct 12, 2010, for Information Pursuant to Section 114 . Response #10 of 17 of Appendix B.

	GEESI (Bidder's Name)
All scrubbing stages	Included Above
Mist eliminator	SEE PAGE D-28
Other losses within module, describe	
Reheater	0.4 △
Ductwork from the module outlets to the contract limits as indicated on the drawings △	0.54"W.C. from the vessel outlet to the battery limit excluding the pressure drop associated with the dampers supplied by the Purchaser.
Other losses not previously accounted for, describe	NONE △
Total, all Contractor-furnished scrubber system components	2.15"W.C. excluding the pressure drc associated with the dampers supplied by the Purchaser.
Scrubber recirculation flow, per module	
Number of pumps operating	Three/Two/Two/Two
Rate, gpm, total	46800/31200/31200/31200
Bhp required, total	800 Average
pH value	5.5 to 6.0
Per cent solids by weight	10 (Suspended)
Specific gravity	1.10
Viscosity, centipoise	1 to 2
Scrubber blowdown flow	
Number of pumps operating	Gravity Flow

(Trim Line)

[IPP 9255 WET SCRUBBER 62.0202]
[0120381 022581]

*Guarantee

1-C.14

*EPA Request dated Oct 12, 2010, for Information Pursuant to Section 114 . Response #10 of 17 of Appendix B.

	GEESI (Bidder's Name)
Rate, gpm, total	282
Velocity, fps	VARIABLE △
Bhp required, total	NONE (GRAVITY FLOW) △
pH value	5.5 to 6.0
Per cent solids by weight	10 (Suspended)
Solids discharge rate, lb per hour	15,522
Specific gravity	1.1 (Slurry)
Viscosity, centipoise	1 to 2
Sulfate to sulfite ratio	
With forced oxidation	9.0*
Without forced oxidation	2.3
Recycle water flow	
Number of pumps operating	By Owner
Rate, gpm, total	120 (Ave); 213 (Max) (1)
Bhp required, total	By Owner
Makeup water flow (Cooling Tower Blowdown)	
Usage	

Description of Usage	Flow Rate, gpm
L/S Grinding	8.5 (Ave); 50 (Max
Pump Seals	92.5 (Ave); 105 (M
M.E. Wash	535 (Ave)
Total	636 (Ave)
Guaranteed	700 (Ave)

(Trim Line)

[IPP 9255 WET SCRUBBER 62.0202]
[061881 ADDENDUM 3]
0120381 D-30

*Guarantee

(1) Does not include flushing

1-C.15

*EPA Request dated Oct 12, 2010, for Information Pursuant to Section 114 . Response #10 of 17 of Appendix B.

	GEESI (Bidder's Name)
Mist eliminator spray flow	
Total head, ft	172 Ft. TDH
Rate, gpm	
Continuous	535 GPM Total Average
Intermittent	232 GPM
Sequence	
Primary	3 hr. 45 min/Shift
Secondary	40 min/Shift
Compressed air requirements	
Service air, scfm	672
Control and instrument air, scfm	500 SCFM
Retention time (recycle flow related), minutes	10;15;15;15

	Scrubbing Process	Slurry Preparation
Total operating power requirements, kVA/kW (75% of MCR)		
6900 volt, 3 phase ac * (Includes line and distribution losses) △	3142* / 2724*	92* / 78* △
480 volt, 3 phase ac *	370* / 312*	12.7* / 10*
208 volt, 3 phase ac	-- / --	-- / --
120 volt, ac (programmable controller power supplies)	/ 5.0	/ 1.0
120 volt, ac (all other 120 volt ac loads) **	/ 2.0	/ 0.5
125 volt dc	-- kW	-- kW

(Trim Line)

*Average hourly power requirement based on a 24-hour average. Guarantee

[IPP 9255 WET SCRUBBER 62.0202]
[0120381 022581]

**Motor space heaters are not included.

D-31

1-C.16

*EPA Request dated Oct 12, 2010, for Information Pursuant to Section 114 . Response #10 of 17 of Appendix B.

GEESI
(Bidder's Name)

D.17.3.4 Maximum Continuous Rating.

Steam generator operating point	Maximum continuous rating
Influent flue gas temperature, F	285
Fuel heat input to steam generator, million Btu/hour	8,352
Influent flue gas flow, lb per hour	10,453,000
Sulfur dioxide content of influent flue gas flow, lb per hour	12,530
Number of modules operating	Four (4)
Liquid to gas ratio in scrubber module, gpm per 1000 acfm	60
Limestone additive requirements	
Consumption based on calcium carbonate content of 90 per cent, lb per hour	21,370 (1) *
Stoichiometric ratio, as defined in Section 2B △	1.08 △
Buffering additive consumption, lb per hour	N/A
Sulfur dioxide removal efficiency, per cent	90
Sulfur trioxide (or H_2SO_4) removal efficiency, per cent	70
Sulfur dioxide content in effluent flue gas stream, lb per hour	1253
Sulfur dioxide content in effluent flue gas stream, lb per million Btu	0.150*

(Trim Line)

[IPP 9255 WET SCRUBBER 62.0202]
[0120381 030981]

(1) Includes equivalent of 143 lbs Cl in the gas.
*Guarantee 1-C.17

*EPA Request dated Oct 12, 2010, for Information Pursuant to Section 114 . Response #10 of 17 of Appendix B.

	GEESI (Bidder's Name)
Particulate content in effluent flue gas stream during operation with particulate content at scrubber inlet of 0.020 lb per million Btu, lb per million Btu	0.020 (Max) * △△
Water droplet carry-over in effluent flue gas stream, lb per hour	
Before mist eliminator	
After primary mist eliminator	
After secondary mist eliminator	885*
Acid mist carry-over through mist eliminator, per cent	30
Temperature of effluent flue gas stream, F	155 △
Gas velocity, fps	
Overall effective velocity through scrubber	9.8
Maximum through scrubber	9.8
Maximum through mist eliminator	9.8
Gas stream pressure losses, in. of H_2O	0.81" W.C. from the battery limit to the scrubber inlet excluding the pressure drop associated with the Purchasers supplied damper.
Ductwork from the limits of the contract as indicated on the drawings to the module inlets	
From module inlet to module outlet	1.6 Module Inlet/Reheater Inlet
Prequench section	Included Above

(Trim Line)

[IPP 9255 WET SCRUBBER 62.0202]
[0120381 022581]
D-33
1-C.18

*Guarantee

*EPA Request dated Oct 12, 2010, for Information Pursuant to Section 114 . Response #10 of 17 of Appendix B.

	GEEST (Bidder's Name)
All scrubbing stages	Included Above
Mist eliminator	SEE PAGE D-33
Other losses with'n module, describe (outlet duct)	0.24"WC
Reheater	0.7 " W.C.
** Total, module inlet to module outlet duct	2.54" W.C.
Ductwork from the module outlets to the limits of the contract as indicated on the drawings	1.0" "W.C. from the vessel outlet to the battery limits excluding the pressure drop associated with the Purchasers supplied dampers
Other losses not previously accounted for, describe	None
Total, all Contractor-furnished scrubber system components	4.1 " W.C. excluding the pressure* drop associated with the Purchasers supplied damper
Scrubber recirculation flow, per module	
Number of pumps operating	Three (3)
Rate, gpm, total	46,800
Bhp required, total	10,094
pH value	5.5 to 6.0
Per cent solids by weight	10 (Suspended)
Specific gravity	1.1
Viscosity, centipoise	1 to 2
Scrubber blowdown flow	
Number of pumps operating	Gravity Flow

(Trim Line)

[IPP 9255 WET SCRUBBER 62.0202]
[0120381 022581]
D-34
*Guarantee 1-C.19

** Test for Rated Capacity

*EPA Request dated Oct 12, 2010, for Information Pursuant to Section 114 . Response #10 of 17 of Appendix B.

	GESSI (Bidder's Name)
Rate, gpm, total	546
Bhp required, total	Gravity Flow △
pH value	5.5 to 6.0
Per cent solids by weight	10 (Suspended)
Solids discharge rate, lb per hour	30,042
Specific gravity	1.1 (slurry)
Viscosity, centipoise	1 to 2
Sulfate to sulfite ratio	
With forced oxidation	9.0*
Without forced oxidation	1.0
Recycle water flow	
Number of pumps operating	By Owner
Rate, gpm, total	276 (Ave); 348 (inst. max) (1)
Bhp required, total	By Owner

Makeup water flow (Cooling Tower Blowdown)

Usage	Description of Usage	Flow Rate, gpm
	L/S Grinding	18 (Ave); 50 (Max)
	Pump Seal	125 (Ave); 135 (Max)
	M.E. Wash	926 (Ave)
	Total	1069 (Ave)
	Guaranteed*	1175 (Ave)

(Trim Line)

[IPP 9255 WET SCRUBBER 62.0202]
[0120381 030981]
D-35

*Guarantee
(1) Does not include flushing

1-C.20

*EPA Request dated Oct 12, 2010, for Information Pursuant to Section 114 . Response #10 of 17 of Appendix B.

	GEESI (Bidder's Name)
Mist eliminator spray flow	
Total head, ft	172 Ft. TDH
Rate, gpm	
Continuous	926 GPM Total Average
Intermittent	232 GPM/Vessel
Sequence	
Primary	6 hr. 36 min/Shift
Secondary	1 hr. 24 min/Shift
Compressed air requirements	
Service air, scfm	672
Control and instrument air, scfm	500 SCFM
Retention time (recycle flow related), minutes	10

Total operating power requirements, kVA/kW	Scrubbing Process	Slurry Preparation
6900 volt, 3 phase ac (Includes Line and Distribution Losses) * △	4284* / 3718*	184* / 156* △
480 volt, 3 phase ac *	370* / 312*	20 */ 16*
208 volt, 3 phase ac	-- / --	-- / --
120 volt, ac (programmable controller power supplies)	/ 5.0	/ 1.0
120 volt, ac (all other 120 volt ac loads) **	2.0 /	0.5 /
125 volt dc	-- kW	-- kW

(Trim Line)

*Average hourly power requirement based on a 24-hour average. Guarantee

**Motor space heaters are not included.

[IPP 9255 WET SCRUBBER 62.0202]
[0120381 022581]
D-36
1-C.21

*EPA Request dated Oct 12, 2010, for Information Pursuant to Section 114 . Response #10 of 17 of Appendix B.

GEESI

(Bidder's Name)

(Bidder - Duplicate this page)
(as required and fill in for)
(each item of equipment re-)
(quiring cooling water.)

D.17.4 Cooling Water.

Item of equipment	Oxidation Air Blower Reducer
Flow rate required, gpm at 105 F	~~10~~
Heat load, Btu/hr	~~Later~~
Pressure loss, psi at 105 F	~~Later~~
Item of equipment	N/A
Flow rate required, gpm at 105 F	N/A
Heat load, Btu/hr	N/A
Pressure loss, psi at 105 F	N/A
Item of equipment	N/A
Flow rate required, gpm at 105 F	N/A
Heat load, Btu/hr	N/A
Pressure loss, psi at 105 F	N/A
Item of equipment	N/A
Flow rate required, gpm at 105 F	N/A
Heat load, Btu/hr	N/A
Pressure loss, psi at 105 F	N/A

(Trim Line)

[IPP 9255 WET SCRUBBER 62.0202]
[0120381 022581]

*EPA Request dated Oct 12, 2010, for Information Pursuant to Section 114 . Response #10 of 17 of Appendix B.

GESSI

(Bidder's Name)

(Bidder - Duplicate this page)
(as required and fill in for)
(each required usage of cool-)
(ing tower blowdown water.)

D.17.5 Cooling Tower Blowdown Water.

Description of usage	Mist Eliminator Spray Service Water Limestone Grinding
Flow rate required, gpm	20 (Ave.)
Minimum inlet pressure, psi	See M.E. Wash Pump Head △
Description of usage	Pump Seal
Flow rate required, gpm	138 (Ave.)
Minimum inlet pressure, psi	See M.E. Wash Pump Head △
Description of usage	M.E. Wash
Flow rate required, gpm	1017 (Ave.)
Minimum inlet pressure, psi	See M.E. Wash Pump Head △
Description of usage	Total
Flow rate required, gpm	1175 (Ave.)
Minimum inlet pressure, psi	21 PSIG at Elev. 20'-0" △
Description of usage	—
Flow rate required, gpm	—
Minimum inlet pressure, psi	—

(Trim Line)

[IPP 9255 WET SCRUBBER 62.0202]
[0120381 022581]
D-38
1-C.23

*EPA Request dated Oct 12, 2010, for Information Pursuant to Section 114 . Response #10 of 17 of Appendix B.

GESSI
(Bidder's Name)

(Bidder - Duplicate this page)
(as required and fill in for)
(each required usage of)
(river water.)

D.17.6 River Water.

Description of usage	NONE
Flow rate required, gpm	"
Minimum inlet pressure, psi	"
Description of usage	"
Flow rate required, gpm	"
Minimum inlet pressure, psi	"
Description of usage	"
Flow rate required, gpm	"
Minimum inlet pressure, psi	"
Description of usage	"
Flow rate required, gpm	"
Minimum inlet pressure, psi	"
Description of usage	"
Flow rate required, gpm	"
Minimum inlet pressure, psi	"

(Trim Line)

[IPP 9255 WET SCRUBBER 62.0202]
[0120381 022581]
D-39

1-C 24

*EPA Request dated Oct 12, 2010, for Information Pursuant to Section 114 . Response #10 of 17 of Appendix B.

GEESI
(Bidder's Name)

D.17.7 Scrubber Modules.

Overall dimensions of each module, ft	37'-2¼" Length 35'-6 Width 58'2½" Height
Overall dimensions of space required for all modules, ft	40'-0" Length 38'0" Width 58'-6" Height
Number of scrubbing stages per module	
Gas flow area, each module, sq ft	
Inlet	390.68
Absorber section	1320.9
Mist eliminator section	1230
Outlet	900
Distance between final spray bank and the primary mist eliminator, ft	12'-0"
Materials	
Shell	C.S. WITH R.L. (A 36 STEEL)
Overflow seal box (not required)	ABSORPTION SPRAY PIPING-C.S. RUBBER LINED - INSIDE & OUTSIDE.
Other internals	MIST ELIMINATOR MODULE-POLYPROPELENE MIST ELIM. PIPING - FRP MIST ELIM. MODULE SUPPORT-C.S. W/R.L. & FRP. ABSORPTION SPRAY PIPING SUPPORT-C.S. RUBBER LINED.
REHEATER CASING	C.S. A-36 WITH 1½" THICK SAUREIESEN 54 LINING △

(Trim Line)

[IPP 9255 WET SCRUBBER 62.0202]
D120381 022581]

*EPA Request dated Oct 12, 2010, for Information Pursuant to Section 114 . Response #10 of 17 of Appendix B.

Δ 11-19-81

	GEESI (Bidder's Name)
Prequencher sprays (if required)	
Flow, gpm	NOT REQUIRED
Pressure, psi	
Water quality requirements (select appropriate source from those specified in Section 2A)	
Shell thickness, minimum, in.	3/16
Access doors	
Number, each module	SIX (6)
Locations, describe	(a) To service absorption spray piping (b) To service both stages of mist eliminator
Type	FABRICATED
Size	a- 42" x 48" b- 24" x 48", c - 18" x 24"
Seal type and material	JM - 100 OR APPROVED EQUAL ΔΔ
Observation ports	
Number, each module	TWO (2) 12" Ø
Locations, describe	AT MIST ELIMINATOR LEVEL
Type	FABRICATED
Size	12" Ø
Seal type and material	JM - 100 OR APPROVED EQUAL ΔΔ

(Trim Line)

[IPP 9255 WET SCRUBBER 62.0202]
[0120381 022581]

*EPA Request dated Oct 12, 2010, for Information Pursuant to Section 114 . Response #10 of 17 of Appendix B.

	GEESI (Bidder's Name)
Observation openings	
Number, each module	NONE
Locations, describe	
Type	
Size	
Seal type and material	
Spray headers	
Manufacturer and type	Fabricated ΔΔ
Quantity per scrubber module	36
Quantity per scrubbing stage	12
Model	-
Material	C.S. RUBBER LINED INSIDE AND OUTSIDE
Wall thickness, in.	MINIMUM 1/4"
Design header pressure, psi	11 psi
Design flow per header, gpm	1302
Distance between headers, in.	72"
Distance between nozzles, in.	27"
Spray nozzles	
Manufacturer and type	ΔΔ SPRACO'S RAMP BOTTOM HOLLOW CONE OR EQUAL Approve Equal
Material	SILICONE CARBIDE "REFRAX" OR APPROVED EQUAL ΔΔ

(Trim Line)

[IPP 9255 WET SCRUBBER 62.0202]
[0120381 022581]

*EPA Request dated Oct 12, 2010, for Information Pursuant to Section 114 . Response #10 of 17 of Appendix B.

	GEESI (Bidder's Name)
Materials manufacturer	CARBORUNDUM APPROVED EQUAL △△
Quantity	
Total, per module	504
Per scrubbing stage	168
Per header	14
Design flow per nozzle, gpm	93
Design differential pressure, psi	11
Internal diameter, in.	1 9/32
Provisions for nozzle removal	BOLTED FLANGED CONNECTION
Estimated life of nozzle	
Maximum particle size which can be passed by nozzle	1¼" DIAMETER
High water level detector type and modal	
Weight of each module, lb	
Dry	345,000
Operating	390,000
Flooded	NOT APPLICABLE
Module support	____ Top X Intermediate ____ Bottom
Purge system fan	
Manufacturer/No △△	Buffalo Forge or Approved Equal / Two △△
Model	Type BL-Aerofoil-44½" dia wheel

(Trim Line)

[IPP 9255 WET SCRUBBER 62.0202]
0120381 022581]
D-43

*EPA Request dated Oct 12, 2010, for Information Pursuant to Section 114 . Response #10 of 17 of Appendix B.

	GEESI
	(Bidder's Name)
Capacity, scfm	31,300 ACFM
Power required, bhp	44
Motor	
Manufacturer and model	*General Electric, ~~Equal~~ Severe Duty or
Frame size	364T
Horsepower/service factor	60 / 1.0
Purge system ductwork	
Material	Cor-Ten △
Gage	10 GA

*Westinghouse and/or Siemans-Allis △

(Trim Line)

[IPP 9255 WET SCRUBBER 62.0202]
[0120381 030981]
D-44
1-C.29

*EPA Request dated Oct 12, 2010, for Information Pursuant to Section 114 . Response #10 of 17 of Appendix B.

GEESI
(Bidder's Name)

D.17.8 Limestone Slurry Preparation Equipment.

Limestone feed bin cutoff gates	
Manufacturer and model	Mines & Smelter/KVS and/or Fuller or Koppers △
Quantity	one per mill
Type	knife gate
Size	14" x 14"
Material	carbon steel
Limestone feeders	
Manufacturer and model	Merrick #450PSC /Ramsey/Thayer △
Quantity	one per mill
Type	Gravimetric
Weight, lb	~~later~~ △
Capacity, each, minimum to maximum, lb per hour	0-30.3 tph
Allowable limestone size range, in.	3/4" by 0" Feed
Motor	
Manufacturer and model	TENV variable speed D-C motor
Frame size	~~later~~ △
Horsepower/service factor	1 / 1.0
Description of feeder control	Feed rate controller with electronic totalizer and TPH rate signal output (4-20 mA)

(Trim Line)

[IPP 9255 WET SCRUBBER 62.0202]
[0120381 022581]
D-45
1-C.30

*EPA Request dated Oct 12, 2010, for Information Pursuant to Section 114 . Response #10 of 17 of Appendix B.

	GEESI (Bidder's Name)
Ball mill	
Manufacturer and model	Mine and Smelter/KVS/Fuller/Koppers △
Size (diameter by length), ft	9'6" dia. ins. shell x 13' grind'g chamb length
Number provided	6 (4 operating & 2 spare) total
Capacity, minimum to maximum, tph	0 to 30
Design water flow to ball mill, gpm	65 gpm △
Ball mill speed, rpm	
Operating	19.1 RPM
Critical	74.7% critical
Drive speed, rpm	1170 RPM
Power requirements, bhp	
At design conditions	535 @ motor shaft
Maximum	560
Gear drive	
Manufacturer	Mine and Smelter (Same as Ball Mill Manufacturer)
Model or type	Helical
Gear ratio	13.666
Service factor	1.5 durability, 2.5 strength
Maximum horsepower rating	Not Available △△
Gears	
Material	Meehanite S100
Hardness	245-285

(Trim Line)

[IPP 9255 WET SCRUBBER 62.0202]
0120381 022581 I
9-46
I-C.31

*EPA Request dated Oct 12, 2010, for Information Pursuant to Section 114 . Response #10 of 17 of Appendix B.

	GEESI (Bidder's Name)
Contact stress	N/A
Reliability factor	N/A
Load distribution factor	N/A
Life factor	N/A
Type of internal lubrication system	Grease spray
Requirements for Owner-furnished ball mill motors (350 horsepower and above)	
Motor speed, rpm	1170
Motor horsepower	600
Special requirements	Speed-tongue requirment to be submitted per schedule
Classifier	
Type	Cyclone
Manufacturer and model	Krebs D6B-12-838 /Ramsey/Thayer
Particle size	90 per cent through 200 mesh
Overall dimensions, ft	Length 6" Width Height
Weight, lb	6100
Materials of construction	Rubber lined metal

(Trim Line)

[EPP 3255 WET SCRUBBER 62.0202]
[0120381 022581]
2-47

1-C.32

*EPA Request dated Oct 12, 2010, for Information Pursuant to Section 114 . Response #10 of 17 of Appendix B.

GEESI
(Bidder's Name)

Trunnion bearing lubricating oil package	
Manufacturer and model	Mine and Smelter
Oil flow, gpm per package	3 GPM/ One like unit per bearing △△
High pressure pump manufacturer and model	Rivett pru 1002 2501
Low pressure pump manufacturer and model	Viking H475M
High pressure pump motor	
Manufacturer and model	Baldor or GE △△
Frame size	213 TC
Horsepower/service factor	3 / 1.15
Low pressure pump motor	
Manufacturer and model	Baldor or GE △△
Frame size	184 TC
Horsepower/service factor	2 / 1.15
Electric heaters	
Manufacturer	Chromalox
Number per package	One △
Type	Immersion △

(Trim Line)

[EPP 9255 Wet Scrubber 61.0000]
[0120381 022531]
D-48
I-C.33

*EPA Request dated Oct 12, 2010, for Information Pursuant to Section 114 . Response #10 of 17 of Appendix B.

	GEESI (Bidder's Name)
Voltage/phase	460 / 3
Watts, each	500
Thermostat, if separate from heater	
Manufacturer	Chromalox
Number per package	1
Type	ARC 590
Contactor, if separate from heater	
Manufacturer	Westinghouse
Number per package	1
Type	A20 KACA
Lubricating oil capacity, gal	80 gallons
Overall dimensions of package, in.	
Length	24"
Width	10"
Height	30"
Gear drive lubricating package	
Manufacturer and model	Lincoln AGS 3 (Mfg. Standard) △
Oil flow, if oil is used, gpm	Variable 0 to .1 gpm
Pump manufacturer, air drive	Lincoln (Mfg. Standard) △

(Trim Line)

[IP9 9253 WET SCRUBBER 62.0202]
[0120381 022581]
D-49
1-C.34

*EPA Request dated Oct 12, 2010, for Information Pursuant to Section 114 . Response #10 of 17 of Appendix B.

	GEESI (Bidder's Name)
Air requirements	1 scfm @ 75 psi
Electric heaters	
Manufacturer	Not Applicable
Number per package	"
Type	"
Voltage/phase	" /
Watts, each	"
Thermostat, if separate from heater	
Manufacturer	Not Applicable
Number per package	"
Type	"
Contactor, if separate from heater	
Manufacturer	Not Applicable
Number per package	"
Type	"
Limestone slurry characteristics	
Per cent solids, by weight (approximate)	40%
Viscosity, centipoise (approximate)	N.A. △
Specific gravity (approximate)	1.35
Particle size	90 per cent through 200 mesh

(Trim Line)

[IPP 9255 WET SCRUBBER 62.0202]
[0120381 022581]
D-50

1-C.35

*EPA Request dated Oct 12, 2010, for Information Pursuant to Section 114 . Response #10 of 17 of Appendix B.

SPEED-TORQUE CURVE OF INDUCTION MOTORS VS MILL DURING START-UP

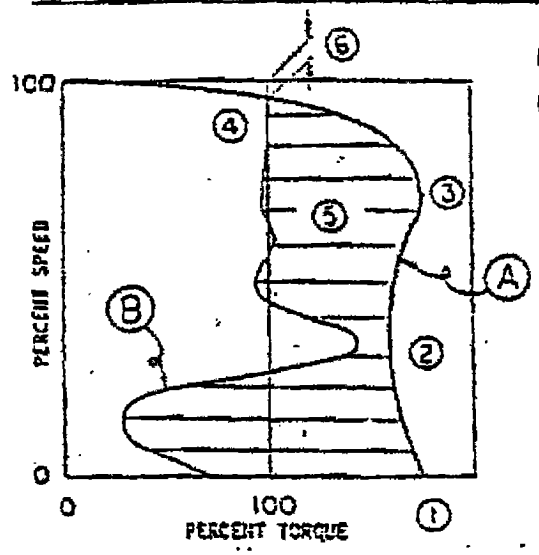

(A) Motor start with connected load
(B) Mill torque
(1) Starting Torque
(2) Pull-up Torque
(3) Breakdown Torque
(4) Full load Torque
(5) Acceleration Torque
(6) Slip

NOTE: NEMA torque designs applicable to NEMA frame motors only (1-200hp). On larger ratings torques are custom design to suit application.

STARTING TORQUE also known as locked rotor-torque, breakaway torque or static torque. This is the minimum torque at rest for rated voltage applied. This torque is affected by the motor inrush.

PULL-UP TORQUE is the minimum torque developed in the "cusp" area just above starting torque. Many motors do not develop this cusp characteristic. Per NEMA Standards; the minimum torque of NEMA A, B and C shall not be less than 70% of the listed starting torque but in no case less than rated full load torque.

BREAKDOWN TORQUE is the maximum torque that the motor can develop without stalling. Some times also called pull-out torque.

FULL-LOAD TORQUE - is the torque that the motor develops in producing rated horsepower at rated full load speed.

ACCELERATION TORQUE is the plus torque developed by the motor that is beyond the torque required by the load at any given speed.

MILL ACCELERATION TORQUE (See sheet L2)

SLIP is the difference between the synchronous speed of the rotor's magnetic field and the rotor. The slip for NEMA designs A, B and C motors under full load is approximately 3-1/2%.

BALL MILL
INTERMOUNTAIN POWER PROJECT

ENGINEERING STANDARD	SUBJECT: GRINDING MILL ENGINEERING CALCULATIONS MILL DRIVE AND MOTOR SELECTION 5. SQUIRREL CAGE INDUCTION MOTOR 1-C.36	ENGINEER Page 11

*EPA Request dated Oct 12, 2010, for Information Pursuant to Section 114 . Response #10 of 17 of Appendix B.

SCHEMATIC CROSS SECTIONS OF BALL OR ROD MILLS DURING STARTING

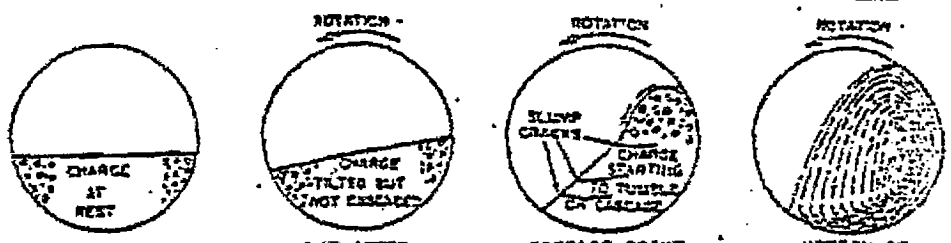

BREAKAWAY	JUST AFTER BREAKAWAY	CASCADE POINT (ANGLE OF REPOSE OF CHARGE EXCEEDED)	MOTION OF CHARGE DURING OPERATION
40-70%	20-40%	110-140%	100%

TYPICAL NET TORQUES NEEDED

TYPICAL BALL MILL SPEED - TORQUE CURVE

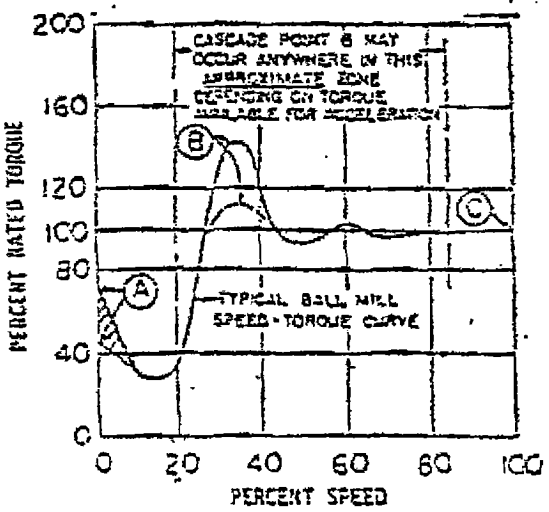

(A) Breakaway torque, usually about 40-70 percent of running torque C.

(B) Cascade point, usually about 110-140 percent of running torque C.

(C) Mill Running torque at operating conditions (if mill user is going to operate at maximum grinding point instead of maximum efficiency point of mill, the torque required for maximum grinding is that which the drive motor must synchronize). Power system voltage drops during starting will increase "full voltage" motor torques needed to start mill.

BALL MILL
INTER MOUNTAIN
POWER
PROJECT

ENGINEERING STANDARD	SUBJECT: GRINDING MILL ENGINEERING CALCULATIONS MILL DRIVE AND MOTOR SELECTION 2. GRINDING MILL STARTING TORQUES 1-C.37	ENGINEER Page 2

*EPA Request dated Oct 12, 2010, for Information Pursuant to Section 114 . Response #10 of 17 of Appendix B.

△ 11-19-81

GEESI
(Bidder's Name)

(Bidder - Duplicate following)
(four pages as required and)
(fill in for each tank pro-)
(vided.)

D.17.9 Tanks.

Tank function, fill in	RECYCLE TANK △
Number provided	One (1) per module
Will tank be shop fabricated or field erected	FIELD ERECTED
Applicable design code	API 650
Type, open or closed top	CLOSED, 1/4" C.S. lined with flakeglass lining △△
Material (ASTM number and common name) and thickness	
Plates	△△ C. S. A36, Min. 1/4" thick
Structural shapes	
Coatings or linings	

Location	Manufacturer and Type
SHELL	1/4"-LS 582 - GOODYEAR
BOTTOM	1/4"-LS 582 - GOODYEAR

Overall dimensions, ft	58' DIA x 25' -8" HIGH - BASE CASE
Normal operating depth, ft	23'-8" - BASE
Operating volume, gal	468.000

(Trim Line)

[IPP 9255 WET SCRUBBER 62.0202]
[0120381 022581]
D-51

*EPA Request dated Oct 12, 2010, for Information Pursuant to Section 114 . Response #10 of 17 of Appendix B.

GESSI

(Bidder's Name)

Tank function, fill in	RECYCLE TANK △
Retention time for operation at following steam generator operating condition	
At MCR, minutes	10
At 75 per cent of MCR, minutes	10 to 15
At 50 per cent of MCR, minutes	15
At 25 per cent of MCR, minutes	15
Weight of each tank, lb	
Dry	215,000
Operating	4,351,000
Flooded	4,700,000

Tank connections

	Connection Description	Size, in.
1	OVERFLOW	6
2	LIQUID INDICATER	3
3	PUMP SUCTION	30
4	" "	"
5	" "	"
6	DRAIN	6
7	MISC (3)	2
8	LIME	2
9	MAKEUP	3
10	CLEANOUT DOOR	24" x 57"
11	MANHOLE	30"
12	MANHOLE	24"
14	OXIDATION △△	10"

(Grin Line)

Tank mixers, if applicable	
Manufacturer and model	△△ Chemineer 10HTD - 60 /Mixing Equipment/
Number per tank	One - Philadelphia Gear
Type	Spiral Bevel/Helical-Rgt. Angle

[IPP 9255 WET SCRUBBER 62.0202]
[0120381 030681]
D-52
1-C.39

*EPA Request dated Oct 12, 2010, for Information Pursuant to Section 114 . Response #10 of 17 of Appendix B.

	GEESI (Bidder's Name)
Tank function, fill in	Recycle Tank. △
For turbine type mixers	
Location	Top Center
AFBMA L-10 rating of mixer shaft bearings	N.A. △
Impeller speed, rpm	20
Gear reducer manufacturer and model	Chemineer # 210 HT (Mfg. Standard)
AFBMA L-10 rating of gear reducer bearings	250,000 Hrs
AGMA service factor of gear reducer	2.0 min.
Materials, shaft and impeller / Shaft Dia. △	Carbon Steel / 6½" △
Impeller and shaft coating (if applicable)	
Material	Natural Rubber
Thickness	3/16"/3/8" on Impeller Edges
Impeller diameter, ft	13:17
Motor	
Manufacturer and model	Reliance XT, (Mfg. Standard) △
Frame size	404 TS
Horsepower/ service factor	60 / 1.15
Space heater rating, watts	164

(Trim Line)

[IPP 9255 WET SCRUBBER 62.0202]
[0120381 030681]
D-53
1-C.40

*EPA Request dated Oct 12, 2010, for Information Pursuant to Section 114 . Response #10 of 17 of Appendix B.

GEESI
(Bidder's Name)

(Bidder - Duplicate following)
(four pages as required and)
(fill in for each tank pro-)
(vided.)

D.17.8 Tanks.

Tank function, fill in	~~LIMESTONE SLURRY TANK~~
Number provided	FOUR (4)
Will tank be shop fabricated or field erected	FIELD ERRECTED
Applicable design code	API 650
Type, open or closed top	CLOSED
Material (ASTM number and common name) and thickness	
Plates	A283 GR"C" CR "D" C.S.
Structural shapes	A36 C.S. per AISC Std. ΔΔ

Location	Manufacturer and Type
NONE	

Coatings or linings	
Overall dimensions, ft	32' DIA x 34' HIGH
Normal operating depth, ft	32'-0"
Operating volume, gal	169,500

(Trim Line)

[IPP 9255 WET SCRUBBER 62.0202]
0120381 022581]
D-51 b
1-C.44

*EPA Request dated Oct 12, 2010, for Information Pursuant to Section 114 . Response #10 of 17 of Appendix B.