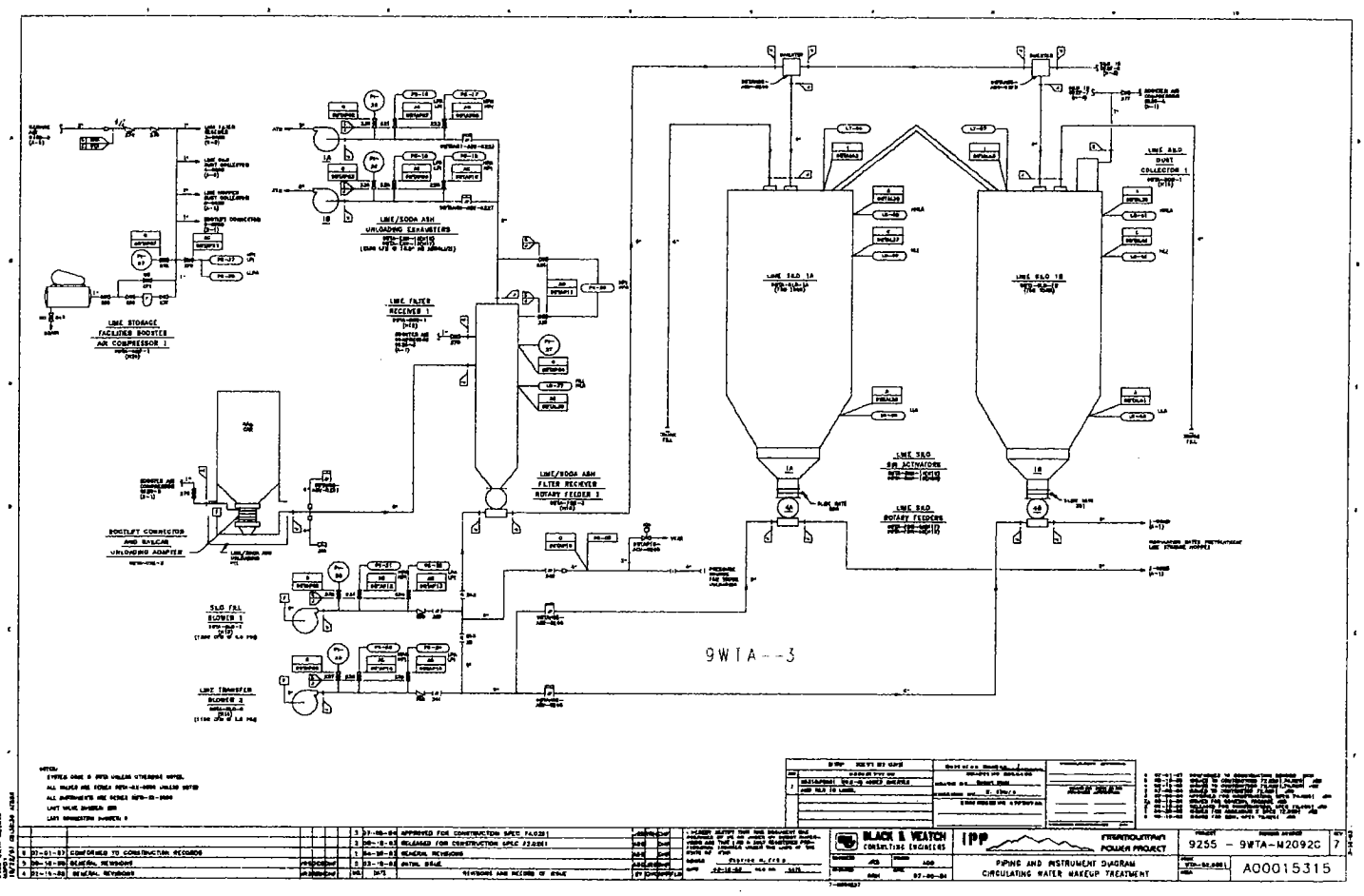
LIME STORAGE FACILITIES BOOSTER AIR COMPRESSOR 1
LIME/SODA ASH UNLOADING EXHAUSTERS
LIME FILTER RECEIVER 1
LIME/SODA ASH FILTER RECEIVER ROTARY FEEDER 1
LIME SILO 1A
LIME SILO 1B
LIME SILO DUST COLLECTOR 1
LIME SILO SIR ACTIVATORS
LIME SILO ROTARY FEEDERS
SILO FILL BLOWER 1
LIME TRANSFER BLOWER 2
9WTA--3
BLACK & VEATCH CONSULTING ENGINEERS
IPP
INTERMOUNTAIN POWER PROJECT
PIPING AND INSTRUMENT DIAGRAM
CIRCULATING WATER MAKEUP TREATMENT
9255 - 9WTA-M2092C
A00015315

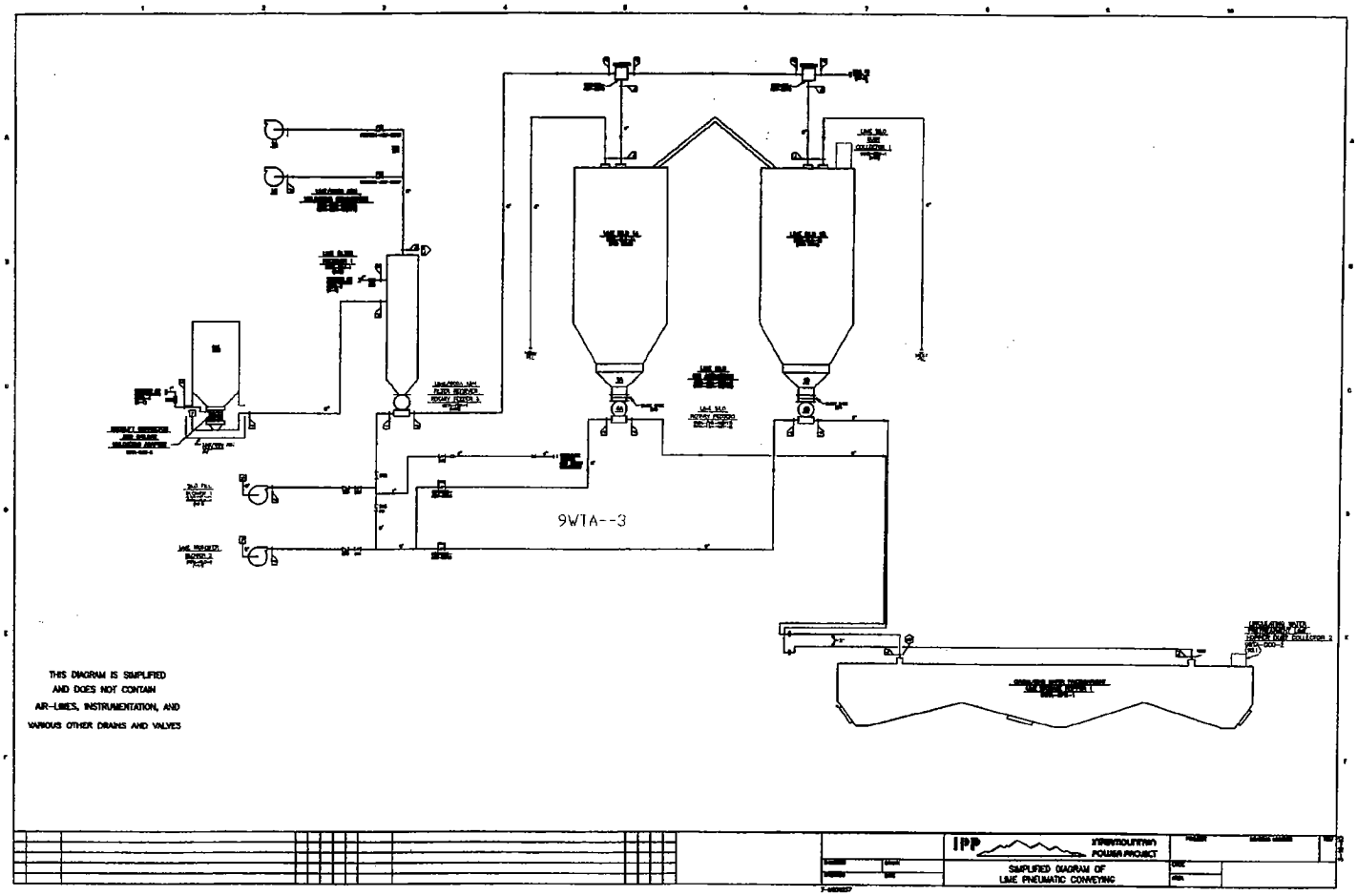
9WTA--3
THIS DIAGRAM IS SIMPLIFIED
AND DOES NOT CONTAIN
AIR-LINES, INSTRUMENTATION, AND
VARIOUS OTHER DRAINS AND VALVES
IPP
INTERMOUNTAIN POWER PROJECT
SIMPLIFIED DIAGRAM OF
LIME PNEUMATIC CONVEYING