TSD File Inventory Index

Date: August 28, 2000

Initial: CM Generoso

Facility Name: Pierce & Stevens Corporation			
Facility Identification Number: ILD 055 434 443			
A.1 General Correspondence		**B.2 Permit Docket (B.1.2)**	
A.2 Part A / Interim Status A.2	1	.1 Correspondence	
.1 Correspondence	Y	.2 All Other Permitting Documents (Not Part of the ARA)	
.2 Notification and Acknowledgment	Y	**C.1 Compliance - (Inspection Reports)** See C.2	
.3 Part A Application and Amendments	Y	**C.2 Compliance/Enforcement** C.2	1
.4 Financial Insurance (Sudden, Non Sudden)		.1 Land Disposal Restriction Notifications	
.5 Change Under Interim Status Requests		.2 Import/Export Notifications	
.6 Annual and Biennial Reports		**C.3 FOIA Exemptions - Non-Releasable Documents** C.3	1
A.3 Groundwater Monitoring		**D.1 Corrective Action/Facility Assessment**	
.1 Correspondence		.1 RFA Correspondence	
.2 Reports		.2 Background Reports, Supporting Docs and Studies	
A.4 Closure/Post Closure		.3 State Prelim. Investigation Memos	
.1 Correspondence A.4.1-A.4.5	1	.4 RFA Reports D.1.4	1
.2 Closure/Post Closure Plans, Certificates, etc See A.4.1		**D. 2 Corrective Action/Facility Investigation**	
A.5 Ambient Air Monitoring		.1 RFI Correspondence	
.1 Correspondence		.2 RFI Workplan	
.2 Reports		.3 RFI Program Reports and Oversight	
B.1 Administrative Record		.4 RFI Draft /Final Report	

Total - 5

.5 RFI QAPP		.7 Lab data, Soil Sampling/Groundwater	
.6 RFI QAPP Correspondence		.8 Progress Reports	
.7 Lab Data, Soil-Sampling/Groundwater		**D.5 Corrective Action/Enforcement**	
.8 RFI Progress Reports		.1 Administrative Record 3008(h) Order	
.9 Interim Measures Correspondence		.2 Other Non-AR Documents	
.10 Interim Measures Workplan and Reports		**D.6 Environmental Indicator Determinations**	
D.3 Corrective Action/Remediation Study		.1 Forms/Checklists	
.1 CMS Correspondence		**E. Boilers and Industrial Furnaces (BIF)**	
.2 Interim Measures		.1 Correspondence	
.3 CMS Workplan		.2 Reports	
.4 CMS Draft/Final Report		**F Imagery/Special Studies** (Videos, photos, disks, maps, blueprints, drawings, and other special materials.)	
.5 Stabilization		**G.1 Risk Assessment**	
.6 CMS Progress Reports		.1 Human/Ecological Assessment	
.7 Lab Data, Soil-Sampling/Groundwater		.2 Compliance and Enforcement	
D.4 Corrective Action Remediation Implementation		.3 Enforcement Confidential	
.1 CMI Correspondence		.4 Ecological - Administrative Record	
.2 CMI Workplan		.5 Permitting	
.3 CMI Program Reports and Oversight		.6 Corrective Action Remediation Study	
.4 CMI Draft/Final Reports		.7 Corrective Action/Remediation Implementation	
.5 CMI QAPP		.8 Endangered Species Act	
.6 CMI Correspondence		.9 Environmental Justice	

Note: Transmittal Letter to Be Included with Reports.
Comments:_____

PLACE STICKER AT TOP OF ENVELOPE TO THE RIGHT OF THE RETURN ADDRESS, FOLD AT DOTTED LINE

SENDER: *COMPLETE THIS SECTION*

- Complete items 1, 2, and 3. Also complete item 4 if Restricted Delivery is desired.
- Print your name and address on the reverse so that we can return the card to you.
- Attach this card to the back of the mailpiece, or on the front if space permits.

1. Article Addressed to:
James F. Drzewiecki
Health Safety & Environmental Mgr.
Sovereign Specialty Chemicals
710 Ohio Street
Buffalo NY 14203

COMPLETE THIS SECTION ON DELIVERY

A. Received by *(Please Print Clearly)* Lou Linares

B. Date of Delivery 9/15

C. Signature
X Lou Linares
☐ Agent
☐ Addressee

D. Is delivery address different from item 1? ☐ Yes
If YES, enter delivery address below: ☐ No

3. Service Type
☒ Certified Mail ☐ Express Mail
☐ Registered ☒ Return Receipt for Merchandise
☐ Insured Mail ☐ C.O.D.

4. Restricted Delivery? *(Extra Fee)* ☐ Yes

2. Article Number *(Copy from service label)* 7001 0320 0006 1565 5496

PS Form 3811, July 1999 Domestic Return Receipt 102595-99-M-1789

UNITED STATES POSTAL SERVICE

First-Class Mail
Postage & Fees Paid
USPS
Permit No. G-10

• Sender: Please print your name, address, and ZIP+4 in this box •

U.S. EPA
77 W. Jackson Blvd
Chicago, Illinois 60604
ATTN: Judith Kriz DE-9J

10

UNITED STATES ENVIRONMENTAL PROTECTION AGENCY
REGION 5
77 WEST JACKSON BOULEVARD
CHICAGO, IL 60604-3590

SEP 11 2003

REPLY TO THE ATTENTION OF
DE-9J

CERTIFIED MAIL
RETURN RECEIPT REQUESTED

James F. Drzewiecki
Health, Safety & Environmental Manager
Sovereign Specialty Chemicals
710 Ohio Street
Buffalo, NY 14203

Re: Pierce & Stevens Corporation, Carol Stream, IL
Consent Agreement and Final Order
Docket No. 5-RCRA-98-006

Dear Mr. Drzewiecki:

This letter is to inform you that based on the information submitted by Sovereign Specialty Chemicals and Pierce & Stevens Corporation, relating to Pierce & Stevens Corporation's facility in Carol Stream, Illinois, the U.S. Environmental Protection Agency, Region 5 ("U.S. EPA") has concluded that you have complied with the terms of the above-referenced Consent Agreement and Final Order ("CAFO"), including the Supplemental Environmental Project. U.S. EPA hereby provides written notice of the termination of the CAFO, as required under Paragraph 41 of the CAFO.

Thank you for your cooperation in this matter. If you have any questions regarding this letter, please contact Ms. Judith Kriz of my staff at (312) 353-6057.

Sincerely,

Joseph M. Boyle

Joseph M. Boyle, Chief
RCRA Enforcement and Compliance Assurance Branch
Waste, Pesticides and Toxics Division

cc: Judith Kriz (DE-9J)
Kevin Chow (C-14J)

Recycled/Recyclable • Printed with Vegetable Oil Based Inks on 50% Recycled Paper (20% Postconsumer)

OFFICE OF REGIONAL COUNSEL CONCURRENCE SHEET

SUBJECT: PIERCE + STEVENS CORP., CAROL STREAM, IL
CAFO TERMINATION LETTER

CONTROL NO. (if applicable): _____

Originator and first level supervisor are responsible for assuring that documents are in plain language. All other reviewers should consider plain language in their reviews. *See* plain language checklist on reverse side of this sheet.

Originator	(Chow	) K.Chow	Date 8-19-03
Section Chief	(Puchalski	) CLP	Date 8-19-03
Branch Chief	(Nelson	)	Date
Deputy RC	(Frey	)	Date
Regional Counsel	(Ullrich (Acting)	)	Date

COMMENTS: _____

(PLEASE INDICATE NAME OF APPROPRIATE DIVISION(S) WHERE CONCURRENT SIGNOFF IS NECESSARY)

NAME OF DIVISION RCRA ENFORCEMENT + COMPLIANCE ASSURANCE BRANCH

Assigned Staff Person	(J. FRIZ	)	Date 9/10/03
Other	(L. JEREZA	)	Date 9-11-03
Other	(J. BOYLE	) JMB	Date 9/11/03
Division Director	(	)	Date

OFFICE OF THE REGIONAL ADMINISTRATOR

Other	(	)	Date
Other	(	)	Date
Deputy Regional Administrator	(Mathur	)	Date
Regional Administrator	(Skinner	)	Date

COMMENTS: _____

~~RETURN TO ORC-Cheryl Klebenow (886-6771)(C-14J)~~ ~~04/29/02 Version~~

Return package to Kevin Chow (36181) (C-14J) after mailing of original letter.

ENFORCEMENT AND COMPLIANCE ASSURANCE BRANCH

SECRETARY	SECRETARY	SECRETARY	SECRETARY
AUTHOR/ TYPIST	CS-1 SECTION CHIEF	ECAB BRANCH CHIEF	WPTD DIVISION DIRECTOR
9/11/03	for LS 9-11-03	JMB 9/11/03	

MB for CLP 9/11/03

9-11-03

PIERCE & STEVENS CORP.

Division of Sovereign
Specialty Chemicals, Inc.

June 25, 2001

Mr. Patrick F. Kuefler
Enforcement and Compliance Assurance Branch
Waste, Pesticides and Toxics Division
EPA, Region 5 (DE-9J)
77 West Jackson Boulevard
Chicago, Illinois 60604-3590

Kevin C. Chow
Associate Regional Counsel
EPA, Region V (C-14J)
77 W. Jackson Boulevard
Chicago, Illinois 60604-3590

Re: Consent Agreement and Final Order – Docket No. 5-RCRA-"98-006" – Pierce & Stevens Corp., Carol Stream, IL. EPA ID No. ILD 055 434 443 – Annual Reporting Requirement.

Dear Sirs:

As per the above Consent Order, provided is the information required by Paragraph 18.b. – Annual Reports - for the previous 12-month operating period for the SEP for our Carol Stream Illinois facility.

18.b.(i) The operating problems encountered during the previous year are as follows – also provided are the solutions to said problems:

None.

18.b.(ii) The itemized costs for treatment chemicals and service and electrical operating costs are as follows (please see attached for supporting purchase orders, invoices, etc):

1.	Cooling Tower Treatment Chemicals and Maintenance Contract	$8,970
2.	Water Consumption (@ $0.0045/gal)	$4,663
3.	Electrical Consumption*	$10,327

*Electrical power consumptions are based upon the system's motors operating at 60% of rated horsepower an average cost of $0.0765/kwh.

18.b.(iii) Certification Statement:

I hereby certify that the SEP has been fully implemented pursuant to the provisions of the CAFO.

I certify under penalty of the law that I have examined and am familiar with the information submitted in this document and all attachments and that, based on my inquiry of those individuals immediately responsible for obtaining the information, I believe that the information is true, accurate, and complete. I am aware that there are significant penalties for submitting false information, including the possibility of fines and imprisonment.

Please contact me if there are any questions, comments or concerns with any of the above information. I can be reached at 630-653-3800, extension 808.

Sincerely,

PIERCE & STEVENS CORP.

Martin D. Mulholland

Martin D. Mulholland, P.E.
Plant Manager

CC: Kevin W. Johnston, CIH, CSP
James F. Drzewiecki
Jeryl L. Olson, Esq.

SOVEREIGN
SPECIALTY CHEMICALS

Packaging and Converting Industrial Construction

James F. Drzewiecki
Health, Safety & Environmental Manager
james.drzewiecki@sovereignsc.com

710 Ohio Street
Buffalo, New York 14203
Office: (716) 856-4941, extension 206
Fax: (716) 856-3062
www.sovereignsc.com

June 23, 2003

Mr. Patrick F. Kuefler
Enforcement and Compliance Assurance Branch
Waste, Pesticides and Toxics Division
EPA, Region 5 (DE-9J)
77 West Jackson Boulevard
Chicago, Illinois 60604-3590

Kevin C. Chow
Associate Regional Counsel
EPA, Region V (C-14J)
77 W. Jackson Boulevard
Chicago, Illinois 60604-3590

Re: Consent Agreement and Final Order – Docket No. 5-RCRA-"98-006" – Pierce & Stevens Corp., Carol Stream, IL. EPA ID No. ILD 055 434 443 – Annual Reporting Requirement.

Dear Sirs:

As per the above Consent Order, provided is the information required by Paragraph 18.b. – Annual Reports - for our Carol Stream Illinois facility.

18.b.(i) The operating problems encountered during the previous year are as follows – also provided are the solutions to said problems:

None.

18.b.(ii) The itemized costs for treatment chemicals and service and electrical operating costs are as follows (please see attached for supporting purchase orders, invoices, etc):

1. Cooling Tower Treatment Chemicals and Maintenance Contract*	$8,350
2. Water Consumption at $0.0051/gal.	$3,614
3. Electrical Consumption**	$10,300

* Per Purchase Order #225526.

** Electrical power consumptions are based upon the systems motors operating at 60% of the rated horsepower an average cost of $0.0765/kwh.

18.b.(iii) Certification Statement:
I certify under penalty of the law that I have examined and am familiar with the information submitted in this document and all attachments and that, based on my inquiry of those individuals immediately responsible for obtaining the information, I believe that the information is true, accurate, and complete. I am aware that there are significant penalties for submitting false information, including the possibility of fines and imprisonment.

It is our understanding that this is the last of the annual reports that is required under our consent agreement and final order.

Please contact me if there are any questions, comments or concerns with any of the above information. I can be reached at 716-856-4941, extension 206.

Sincerely,

SOVEREIGN PACKAGING GROUP, INC.

James F. Drzewiecki

James F. Drzewiecki
Health, Safety & Environmental Manager

CC: D. Dirienzo
K. W. Johnston MS, CIH, CSP
T. Levy
Jeryl L. Olson, Esq.

SOVEREIGN SPECIALTY CHEMICALS

This number must appear on all invoice, shipping papers, packages and related correspondence	
PURCHASE ORDER NUMBER	
225526	
P.O. DATE	REVISION #
2/22/03	00

SUPPLIER
ONDEO NALCO CHEMCIAL CO.
PO BOX 640863

PITTSBURG, PA 152640863

SHIP TO
SOVEREIGN PACKAGING GROUP, INC
245 E. KEHOE BLVD.

CAROL STREAM, IL 60188

BILL TO
SOVEREIGN PKG GROUP, INC
ACCOUNTS PAYABLE
P.O. BOX 2535
BUFFALO, NY 14240

SUPPLIER #	SUPPLIER CONTACT & PHONE #	SHIP VIA	F.O.B.	TERMS
04011		SELLERS TRUCK	DEST / PPD	

BUYER	
HELEN SCHECKEL X804	630-653-3800

SOVEREIGN ITEM CODE	DESCRIPTION/SUPPLIER ITEM#	DUE DATE	QUANTITY	U/M	UNIT COST	EXTENDED COST
	*** CONFIRMING ONLY DO NOT DUPLICATE ***					
	* / COOLING TOWER CONTRACT	3/31/04	1.00	EA	8,350.0000	8,350.00
	Cost Center 420-105-0-000					
	Contract to supply services, chemicals, and equipment for cooling tower maintenance, as per Total Water Management Agreement with effective date 4/1/03 (copy attached).					
	Payments are to be made in advance on a quarterly basis. Contract period is April 1, 2003 through March 31, 2004.					
	Prior to the commencement of work, Contractor shall submit the following:					

(CONTINUED)

Seller warrants that they will comply with applicable provisions to Executive Order No. 11246 AC amended pertaining to equal employment opportunity.
Material must be identical to that previously supplied within established specification limits. We must be advised on any deviation.
C of A required for each lot shipped.
Code number must appear on shipping containers and shipping documents.
Show on Bill of Lading, "NO DELIVERIES ACCEPTED AFTER 2:30 P.M. OR ON SATURDAY."
Standard purchasing terms and conditions apply. Contact buyer if not on file.
- "FREIGHT COLLECT" shipments, please advice carrier to forward freight
to: FRANKLIN TRAFFIC SERVICE, INC.
3596 RANSOMVILLE ROAD
RANSOMVILLE, NEW YORK 14131

H Schechel
AUTHORIZED BY

SOVEREIGN SPECIALTY CHEMICALS

This number must appear on all invoice, shipping papers, packages and related correspondence	
PURCHASE ORDER NUMBER	
225526	
P.O. DATE	REVISION #
2/22/03	00

ONDEO NALCO CHEMCIAL CO.
PO BOX 640863

PITTSBURG, PA 152640863

SHIP TO

SOVEREIGN PACKAGING GROUP, INC
245 E. KEHOE BLVD.

CAROL STREAM, IL 60188

BILL TO

SOVEREIGN PKG GROUP, INC
ACCOUNTS PAYABLE
P.O. BOX 2535
BUFFALO, NY 14240

LIER #	SUPPLIER CONTACT & PHONE #	SHIP VIA	F.O.B.	TERMS
)11		SELLERS TRUCK	DEST / PPD	

BUYER
HELEN SCHECKEL X804 630-653-3800

VEREIGN M CODE	DESCRIPTION/SUPPLIER ITEM#	DUE DATE	QUANTITY	U/M	UNIT COST	EXTENDED COST
	1. Signed acknowledgement of this Purchase Order. 2. Signed "Special Requirements" form. 3. Insurance certificate in the amounts indicated on the "Special Requirements" form. 4. Acknowledgement of receipt of, and agreement to comply with, Contractors Handbook containing the site specific safety rules and work rules. Purchase Order Acknowledgement: _____For Ondeo Nalco Co Name: Title: Date:					8,350.00

eller warrants that they will comply with applicable provisions to Executive Order No. 11246 AC amended pertaining to equal employment opportunity.
laterial must be identical to that previously supplied within established specification limits. We must be advised on any deviation.
ofA required for each lot shipped.
ode number must appear on shipping containers and shipping documents.
now on Bill of Lading, "NO DELIVERIES ACCEPTED AFTER 2:30 P.M. OR ON SATURDAY."
:andard purchasing terms and conditions apply. Contact buyer if not on file.
r "FREIGHT COLLECT" shipments, please advice carrier to forward freight
li: FRANKLIN TRAFFIC SERVICE, INC.
3596 RANSOMVILLE ROAD
RANSOMVILLE, NEW YORK 14131

END OF PO

H Scheckel
AUTHORIZED BY

ONDEO NALCO COMPANY
ONDEO NALCO CENTER ▯ NAPERVILLE, ILLINOIS 60563-1198
Phone: 630-305-1000

TOTAL WATER MANAGEMENT AGREEMENT

Effective Date 4/1/03

ONDEO NALCO COMPANY (ONDEO NALCO) agrees to provide services and chemicals and certain equipment incidental to the services as described in the following program summary, for a Period of 12 months from the effective date and from Period to Period thereafter until terminated as provided for below.

SHIP TO:

Sovereign Specialty Chemicals
245 East Kehoe Blvd.
Carol Stream, Illinois 60188

BILL TO:

Same

For this program, CUSTOMER agrees to pay to ONDEO NALCO the total sum of:

Eight Thousand Three Hundred Fifty and no/100 - - - - - - - Dollars ($ 8,350.00)
in 4 installments according to invoice rendered by ONDEO NALCO, such invoices to be paid by CUSTOMER in advance. State and local taxes will be added to each invoice unless a tax exemption certificate is submitted to ONDEO NALCO.

This Agreement may be terminated at the end of any Period upon 30 day written notice from one party to the other. If customer terminates the Agreement prior to the end of the given Period, customer shall pay to ONDEO NALCO a termination penalty of $0.

This Agreement will be subject to the terms stated on the reverse of this form.

Customer : Sovereign Specialty Chemicals

By:
(Customer Signature)

Tom Levy
(Printed Name)

Title:

ONDEO NALCO COMPANY

By:
(Ondeo Nalco Company Officer Signature)

(Printed Name)

Title:

Tax Exempt Check One) ☐ Yes ☒ No
If yes, a tax exemption certificate needs to be attached to the agreement in order to process the contract.

04/02 PO # 225526

VILLAGE OF CAROL STREAM
*** MESSAGE CENTER ***

On April 7, 2003, the Village Board approved Ordinance No. 2003-04-15 which increased the sewer rate by 20 /1,000 gallons. The increase is effective as of May 1, 2003. This increase is the first of three annual 20 /1,000 increases that are needed to repay the loan that was taken out to fund the $8 million expansion to the Water Reclamation Center.

Prevent a Potential 25% Water Rate Increase - Your support is needed to stop an attempt by the County Board Chairman from redirecting your tax dollars to bail out the county's budget woes. Visit www.carolstream.org & click on Water Customer Alert to see how you can help.

Mother's Day Breakfast - On Saturday, May 10th from 9-11AM, Carol Stream mothers and their families are invited to the Town Center to enjoy a pancake breakfast followed by prize drawings and other special activities. The DuPage Garden Club will sell plants from 9am - Noon.

VILLAGE OF CAROL STREAM BILL DATE: 04/30/2003

ACCOUNT NUMBER: 301-0635-00-00
NAME: PIERCE STEVENS
SERVICE ADDRESS: 245 KEHOE BLVD

61200
5/15/03 5/13/03 verbal OK Tom Levy

METER INFORMATION:

PRESENT READING	TYPE OF READ	PREVIOUS READING	USAGE GALLONS	DAYS OF SERVICE
1069190 04/10/2003	ACTUAL	1020850 03/12/2003	483400	29

PREVIOUS AMOUNT	$ 1222.61	
PAYMENT RECEIVED	$ 0.00	
PENALTY	$ 122.26	
BALANCE FORWARD. DUE BY 5:00PM ON 05/05/2003		$ 1344.87
CURRENT WATER SERVICE	$ 1571.05	
CURRENT SEWER SERVICE	$ 870.12	
CURRENT AMOUNT DUE IF PAID BY 05/20/2003		$ 2441.17
CURRENT AMOUNT DUE IF PAID AFTER 05/20/2003		$ 2685.29
TOTAL AMOUNT DUE		$ 3786.04

PAID 4/22/03 CK # 167905

RETURN BOTTOM PORTION WITH YOUR CHECK MADE PAYABLE TO VILLAGE OF CAROL STREAM.
RETAIN THIS PORTION FOR YOUR RECORDS.

2,441.17

☎ *Billing Inquiries:* (888) 698-1728
customerservice@peoplesenergy.net
Electric Emergency/Outage (ComEd): (800) 334-7661

PEOPLES ENERGY Services

3143
6/12/03

Bill ID: 536000099727
Page: 1

Account Summary

Activity Type	Description	Amount
Previous Balance		13,175.68
Adjustments		-10,152.65
Payment	Applied to account 05/13/03	-13,175.68
Charge		11,976.89
Current Balance		1,824.24

Account Number:	5360000000
Name on Account:	Pierce And Stevens
Bill Date:	05/28/03
Due Date:	06/09/03

Current Activity Detail

Service Address

245 Kehoe Blvd

Service Type	Service Period	Description	Amount
Electric Service	04/24/03 - 05/21/03	Non-Summer Energy: 136,567.76 kWh @ $0.04019	5,488.66
Fixed Price		Customer Charge	30.71
Utility Account: 6507701006		Rider 21	4.50
		Meter Service Charge	25.34
		Distribution Facilities Charge	2,179.70
		Customer Transition Charge	3,157.45
		Decommissioning Adjustment	116.08
		Meter Rental	7.15
		Franchise Cost	27.13
		State Tax	419.83
		Municipal Tax	520.34
		Subtotal	**11,976.89**
		PES Rebate (05/28/03)	-10,152.65

History (Average Daily kWh and Temperature)

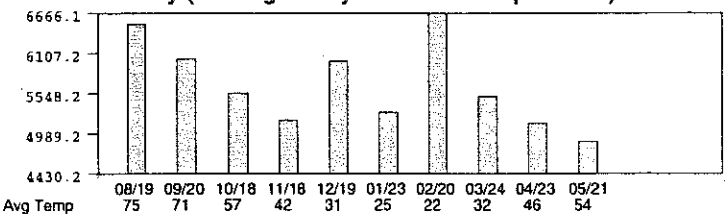

Meter #	Prior Read Date	Prior Reading	Current Read Date	Current Reading	Constant	Current Usage
117745699	04/23/03	154,247.00 ✓	05/21/03	136,567.76 ✓	1.0	136,567.76 KWH TOTALKWH
117745699	04/23/03	65,523.67 ✓	05/21/03	53,962.70 ✓	1.0	53,962.70 KWH OFF-PEAK
117745699	04/23/03	585.58 ✓	05/21/03	598.82 ✓	1.0	598.82 KW

✓ *indicates an actual read*

Messages

Peoples Energy Services appreciates your business. Pay your electric bills the easy way with Automatic Payment. Call 888-698-1728 for details!

RECEIVED
JUN 10 2003
By

SOVEREIGN
SPECIALTY CHEMICALS

Packaging and Converting Industrial Construction

James F. Drzewiecki
Health, Safety & Environmental Manager
james.drzewiecki@sovereignsc.com

710 Ohio Street
Buffalo, New York 14203
Office: (716) 856-4941, extension 206
Fax: (716) 856-3062
www.sovereignsc.com

June 21, 2002

Mr. Patrick F. Kuefler
Enforcement and Compliance Assurance Branch
Waste, Pesticides and Toxics Division
EPA, Region 5 (DE-9J)
77 West Jackson Boulevard
Chicago, Illinois 60604-3590

Kevin C. Chow
Associate Regional Counsel
EPA, Region V (C-14J)
77 W. Jackson Boulevard
Chicago, Illinois 60604-3590

Re: Consent Agreement and Final Order – Docket No. 5-RCRA-"98-006" – Pierce & Stevens Corp., Carol Stream, IL. EPA ID No. ILD 055 434 443 – Annual Reporting Requirement.

Dear Sirs:

As per the above Consent Order, provided is the information required by Paragraph 18.b. – Annual Reports - for our Carol Stream Illinois facility. Please note that the facility is now called Sovereign Packaging Group, Inc. as of January 2002. Please update your records accordingly.

18.b.(i) The operating problems encountered during the previous year are as follows – also provided are the solutions to said problems:

None.

18.b.(ii) The itemized costs for treatment chemicals and service and electrical operating costs are as follows (please see attached for supporting purchase orders, invoices, etc):

1. Cooling Tower Treatment Chemicals and Maintenance Contract*	$8,000
2. Water Consumption at $0.0051/gal.	$3,437
3. Electrical Consumption**	$5,165

* Per Purchase Order #261501.

** Electrical power consumptions are based upon the systems motors operating at 60% of the rated horsepower an average cost of $0.035/kwh.

18.b.(iii) Certification Statement:
I certify under penalty of the law that I have examined and am familiar with the information submitted in this document and all attachments and that, based on my inquiry of those individuals immediately responsible for obtaining the information, I believe that the information is true, accurate, and complete. I am aware that there are significant penalties for submitting false information, including the possibility of fines and imprisonment.

Please contact me if there are any questions, comments or concerns with any of the above information. I can be reached at 716-856-4941, extension 206.

Sincerely,

SOVEREIGN PACKAGING GROUP, INC.

James F. Drzewiecki

James F. Drzewiecki
Health, Safety & Environmental Manager

CC: Jeff Coyne
Kevin W. Johnston, CIH, CSP
W. Pete Smith
Jeryl L. Olson, Esq.

hal - Microsoft Access Edition

Activities Graphs Window Help

urchase Orders

Sort By Vendor Name

Filter (None)

View Record View | Costs | Order | Vendor Address | Ship To | Confirm To | Notes | EDI

PO No. 261501

Release No. 0

Status Completed

Vendor ID NALCO

NALCO CHEMICAL CO.

Order Date 2/6/02

☐ Is Blanket PO

Last Modified By PMC

PO Type

☑ Taxable

Date Last Modified 3/5/02

Buyer

☑ Select for Printing

Time Last Modified 3:12:21 AM

Date Last Printed 2/6/02

ist | Order Information | Receipts

Requested (UOP)	Qty Received (UOP)	Unit Cost	Qty per UOP	Unit of Purchase	Unit of Measure	Receive To	Receive S
1.00	1.00	$8,000.00	1.00	YEAR	YEAR	Equipment	

d 119 of 176

ofessional

Inbox - Microsoft Outlook

En 2:15 P

2/ 6/02

Purchase Orders

PIERCE & STEVENS CORP.
245 E. KEHOE BLVD.

CAROL STREAM IL 60188

Telephone No. 630-653-3800 Ext.
Fax 630-510-0927

PO No. 261501
Release No. 0
Order Date 2/ 6/02

VENDOR NALCO CHEMICAL CO.
Vendor ID NALCO
6216 WEST 66TH PLACE
CHICAGO IL 60638-5299
USA
Contact FORREST ANDERSON
Telephone No. 1-800-477-3025 **Ext.**
Fax 1-708-496-5015

SHIP TO PIERCE & STEVENS CORP.
245 E. KEHOE BLVD.
CAROL STREAM IL 60188
USA
Telephone No. 630-653-3800

INVOICE TO Pierce & Stevens Corp.
P.O. BOX 2535
Buffalo NY 14240
USA

CONFIRM TO PIERCE & STEVENS CORP.
245 E. KEHOE BLVD.
CAROL STREAM IL 60188
USA

Freight Terms
Ship Via VENDOR TRK
Freight Carrier

Payment Terms N/30 DAYS
Shipping Terms PPD

Item	Qty / Unit / Due Date	Item No. / Cost Center / Acct. Code	Vendor Item No. / Description / Specification	Unit Cost $	Total Cost $
1	1.000 YEAR	WATER TREATMENT 426 CS99-6	WATER TREATMENT & SERVICE FOR COOLING TOWER	8,000.000	8,000.000

O.K.
To pay
Brian Smith

Subtotal	$	8,000.00
Tax Charge 1	$	0.00
Tax Charge 2	$	0.00
Shipping	$	0.00
Misc.	$	0.00
Order Total	$	8,000.00

Approval **Date**

VILLAGE OF CAROL STREAM
*** MESSAGE CENTER ***

Mother's Day Continental Breakfast - On Saturday, May 11th from 9am until 11am, Carol Stream mothers and their families are invited to the Village Town Center to enjoy a light breakfast followed by live entertainment, prize drawings and other special activities planned. Also, the DuPage Organic Garden Club will host their annual plant sale from 9 am until Noon.

Community Pride Award Nominations Due- Residents & businesses are encouraged to nominate local properties with attractive landscape features and showcase facades by Friday, May 24th. Nomination forms are available in the spring newsletter, on the Village website, at the Village Hall, Library, Park District and local banks. Mail or drop off entries to the Village Manager's Office at 500 N. Gary for a chance to win a $500 gift certificate. Phone 871-6250.

Pond & Stream Sweep -Volunteers are needed for the Sat., June 1st cleanup. Phone 871-6220.

VILLAGE OF CAROL STREAM

ACCOUNT NUMBER: 301-0635-00-00
NAME: PIERCE STEVENS
SERVICE ADDRESS: 245 KEHOE BLVD

BILL DATE: 04/30/2002

METER INFORMATION:

PRESENT READING	TYPE OF READ	PREVIOUS READING	USAGE GALLONS	DAYS OF SERVICE
731240 04/03/2002	ESTIMATED	704280 03/07/2002	269600	27

PREVIOUS AMOUNT	$1271.59	
PAYMENT RECEIVED 04/19/2002	$1271.59	
PENALTY	$0.00	
BALANCE FORWARD. DUE BY 5:00PM ON 05/05/2002		$0.00
CURRENT WATER SERVICE	$876.20	
CURRENT SEWER SERVICE	$485.28	
CURRENT AMOUNT DUE IF PAID BY 05/20/2002		$1361.48
CURRENT AMOUNT DUE IF PAID **AFTER** 05/20/2002		$1497.63
TOTAL AMOUNT DUE		$1361.48

.00505

DETACH HERE

Village of Carol Stream
500 N. Gary Avenue • Carol Stream, Illinois 60188-1899
(630) 871-6222

Carol Stream
© 1996 Village of Carol Stream

ACCOUNT NUMBER: 301-0635-00-00

PAST DUE BALANCE DUE BY 5:00PM ON 05/05/2002	$0.00
CURRENT AMOUNT DUE BY 05/20/2002	$1361.48
TOTAL AMOUNT DUE	$1361.48
AMOUNT PAID	

8099

PIERCE STEVENS
245 KEHOE BLVD
CAROL STREAM, IL 60188-1815

01 30106350000000136148

Billing Inquiries: (888) 698-1728
customerservice@peoplesenergy.net
Electric Emergency/Outage (ComEd): (800) 334-7661

PEOPLES ENERGY Services

Bill ID: 536000096983
Page: 1

Account Summary

Activity Type	Description	Amount
Previous Balance		12,510.69
Payment	Applied to account 05/06/02	-12,510.69
Charge		10,780.17
Current Balance		10,780.17

Account Number:	5360000000
Name on Account:	Pierce And Stevens
Bill Date:	05/29/02
Due Date:	06/10/02

Current Activity Detail

Service Address

245 Kehoe Blvd

Service Type	Service Period	Description	Amount
Electric Service	04/24/02 - 05/21/02	Monthly Customer Charge	8.83
Rate 6 General Service Non-Time of Day		Energy: 30,000 kWh @ $0.04247	1,274.10
Utility Account: 6567701006		Energy: next 102,429 kWh @ $0.03167	3,243.93
		Non-Summer Demand: 501.05 kW @ $11.13	5,576.69
		Guaranteed Savings: -4%	-404.14
		Rider 21 Charge	4.50
		Decommisioning Adjustment: 132,429 kWh @ $0.00087	115.21
		Municipal Tax	506.67
		Franchise Cost	39.70
		Meter Rental	7.15
		State Tax	407.53
		Subtotal	**10,780.17**

History (Average Daily kWh and Temperature)

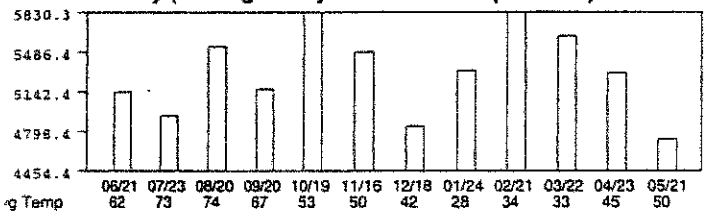

Meter #	Prior Read Date	Prior Reading	Current Read Date	Current Reading	Constant	Current Usage
117745699	04/23/02	169,761.00 ✓	05/21/02	132,429.00 ✓	1.0	132,429.00 KWH TOTALKWH
117745699	04/23/02	78,189.00 ✓	05/21/02	54,058.00 ✓	1.0	54,058.00 KWH OFF-PEAK
117745699	04/23/02	531.07 ✓	05/21/02	501.05 ✓	1.0	501.05 KW

✓ indicates an actual read

Messages

Thank you for choosing Peoples Energy Services Corp.

Please include this portion of the bill with your payment.

To avoid a late penalty, payment must be RECEIVED by ***06/10/02***

Account Number	Bill Date	Balance Due
5360000000	05/29/02	**$10,780.17**

☐ Address change?
Check box and see reverse.

Pierce And Stevens
Attn: Robert Cervenka
245 E Kehoe Blvd
Carol Stream IL 60188

Make Check Payable To:

Peoples Energy Services Corporation
135 S. LaSalle, Dept. 8752
Chicago, IL 60674-8752

5360000000 5 536000096983 052902061002 0001078017 2

UNITED STATES ENVIRONMENTAL PROTECTION AGENCY
REGION 5
77 WEST JACKSON BOULEVARD
CHICAGO, IL 60604-3590

REPLY TO THE ATTENTION OF

SEP 12 2000

DE-9J

CERTIFIED MAIL
RETURN RECEIPT REQUESTED

Jeryl L. Olson, Esq.
Susannah A. Smetana, Esq.
Seyfarth, Shaw, Fairweather & Geraldson
55 East Monroe Street, Suite 4200
Chicago, Illinois 60603-5803

Re: Consent Agreement and Final Order
Pierce & Stevens Corporation
Docket No: 5-RCRA-98-006

Dear Ms. Olsen and Ms. Smetana:

Pursuant to Paragraph 22 of the Consent Agreement and Final Order (CAFO) entered in the above referenced matter, the United States Environmental Protection Agency (EPA) has reviewed your Supplemental Environmental Project (SEP) Completion Report dated June 26, 2000. EPA has concluded that Pierce & Stevens Corporation has satisfactorily completed the SEP Completion Report and the SEP. This written approval does not apply to Pierce & Stevens Corporation's future or on-going obligations under the CAFO to submit annual reports and to develop and implement a closure plan for the Central Accumulation Area.

Thank you for your cooperation in resolving this matter.

Sincerely,

Lorna M. Jereza, P.E., Chief
Compliance Section 1
Enforcement and Compliance Assurance Branch
Waste, Pesticides and Toxics Division

cc: Todd Marvel, IEPA (w/enclosure)

Recycled/Recyclable • Printed with Vegetable Oil Based Inks on 50% Recycled Paper (20% Postconsumer)

PIERCE & STEVENS CORP.

Division of Sovereign
Specialty Chemicals, Inc.

June 26, 2000

Mr. Patrick F. Kuefler
Enforcement and Compliance Assurance Branch
Waste, Pesticides and Toxics Division
EPA, Region 5 (DE-9J)
77 West Jackson Boulevard
Chicago, Illinois 60604-3590

Kevin C. Chow
Associate Regional Counsel
EPA, Region V (C-14J)
77 West Jackson Boulevard
Chicago, Illinois 60604-3590

Ref: EPA Docket No.5-RCRA-98-006

Dear Mr. Kuefler and Mr. Chow:

Pursuant to Section 18 of the CAFO entered in the above-referenced matter, Pierce & Stevens submits its SEP Completion Report as follows:

(i) Description of the SEP as implemented: The SEP cooling tower was installed as described in Exhibit A of the CAFO. A process and instrumentation drawing (P&ID),which depicts the installation, is provided for your convenience. Please note that in place of two smaller cooling towers and pumps, one larger tower and pump were installed. The total of 6,000,000 BTUs was maintained with the one larger unit. In addition, the cost of installation exceeded the required $145,000 specified in the CAFO.

(ii) Description of the operating problems encountered and the solutions thereto: Please refer to the attached memorandum from Mr. Robinson.

(iii) Itemized costs: Please refer to the attached purchase order log, as well as copies of key purchase orders.

(iv) Certification that the SEP has been fully implemented pursuant to the provisions of this CAFO: This letter, and the certification statement below, serves to certify that the SEP has been fully implemented in accordance with the provisions of the CAFO. Except, the cooling tower construction differs slightly from the scope of work in that one larger tower, instead of two, was used to achieve the same reduction, and an alternative flow-meter configuration and method was used to measure reduction of water consumption and discharge. Ongoing measurement of water consumption and discharge is expected to continue to demonstrate that the performance of the system exceeds the agreed upon 80% reduction.

(v) Description of the environmental and public health benefits resulting from implementation of the SEP: As discussed in the CAFO, the cooling tower project reduces by not less than 80% the amount of non-contact cooling water discharged and consumed. Previously, once-through cooling water, from a municipal source, would have been discharged via a NPDES permitted outfall. The SEP conserves this water for other uses by the municipality.

As required by section 34 of the CAFO, this letter certifies that funds expended in the performance of the SEP will not be deducted from Federal taxes. However, Pierce & Stevens intends to deduct from Federal taxes the amount by which the cooling tower construction costs exceeded the $145,000 construction costs identified in the CAFO. The acceptability of such deduction for excess construction costs was confirmed by our legal counsel with the EPA's SEP Division.

"I certify under penalty of law that I have examined and am familiar with the information submitted in this document and all attachments and that, based on my inquiry of those individuals immediately responsible for obtaining the information, I believe that the information is true, accurate, and complete. I am aware that there are significant penalties for submitting false information, including the possibility of fines and imprisonment."

Signed_____ Date 6/23/2000
Kevin W. Johnston
Director, Health, Safety & Environment

Please feel free to contact me with any questions.

Very truly yours,

PIERCE & STEVENS CORP.

Kevin W. Johnston, CIH, CSP
Director, Health, Safety & Environment

710 Ohio Street, Buffalo, NY 14203 PHONE: 716/856-4910 FAX: 716.856.3018

SOVEREIGN
SPECIALTY CHEMICALS, INC.

INTEROFFICE MEMORANDUM

TO: MARTY MULHOLLAND

FROM: RICHARD C. ROBINSON

SUBJECT: PROJECT COMPLETION REPORT – COOLING TOWER PROJECT

DATE: 6/9/2000

CC: STEPHEN ZAVODNY, KEVIN JOHNSTON, DAN OH

The Cooling Tower Project has been completed for the Pierce & Stevens Corp. Carol Stream, Il Facility. Construction on the system was completed on March 31st., 2000. Start-up Trials were completed on April 28th., 2000 with the unit being released for normal production operation at that time. Below is a summary of corrective actions taken prior to startup, the Check-out Checklist that was completed at the end of construction and a narrative of some of the problems and corrective actions implemented during the Startup Trials period.

Minor Changes to equipment prior to Start-up:

1. Had to replace the two level sensors on the "Hot Well Tank" T-200. LSH-201 and LSL-202 were of the wrong type (did not have dry contacts) and would not give the desired function for water level maintenance and control. We contacted G.O.E. and they were able to supply level switches that included dry contacts. These units were shipped to Carol Stream, via. UPS, and were installed into the tanks and properly wired prior to filling the tanks with the initial water charge. Units functioned as desired during pre-startup checks.

2. We had to replace one of the two totalizing meter heads on the water meters for this project. The dial would sometime stick on the Neptune water meter that was going to be installed on the blow-down / separator drain line for the system (FQI-101). Since the data collected from this meter is to be used in our consent order compliance calculations, it was necessary to have reliable and accurate information so we had the meter head replaced with a new one. G.O.E. sent us a new meter head for the Neptune water meter (FQI-101) via. UPS. The meter and meter dial head were installed prior to the initial filling of the water tanks. Meter functioned as desired during pre-startup checks.

3. The backpressure regulators in the 1st. floor and 2nd. floor manufacturing area water supply mains were installed with the wrong pressure operating range. PRV-203 and PRV-204 were supplied and installed from the Mechanical Contractor with a operating ranged of 30 – 60 psig. Backpressure valve specifications in the project drawings had the desired operating pressure range at 30 – 100 psig. This problem was brought to the attention of the Mechanical Contractor. American Mechanical removed the installed valves and replaced them with units of the proper operating range. Units functioned as desired during pre-startup checks, no leaks or problems were noticed.

PRE-STARTUP CHECKLIST ITEMS – COOLING TOWER PROJECT 3/31/00

COOLING TOWER

- Has the motor wiring from the ACVFD been completed? ***YES, Completed***
- Have all terminations been done and verified with Tech. Rep. From Danfoss? ***YES, verified as proper.***
- Has the ACVFD been properly programmed and tested in Auto and Faceplate control modes? ***YES***
- Are all the access ports/fittings on the tower been adequately plugged and made watertight? ***YES, watertight.***
- Has the Tower Fan motor been checked for proper rotation direction? ***YES, unit rotation OK.***
- Have all shipping restraints/brackets been removed? ***YES***
- Has the Tower Fan motor/drive pulleys been greased? ***YES, factory lubricated.***
- Has the fan drive belt been checked for proper tension? ***YES, appears to be proper tension.***

VARIOUS WATER PUMPS

- Do all three pumps have indicator for proper pump rotation? ***NO, had to verify & then properly label. OK'd***
- Have all three pump motors been "bumped" and checked for proper rotation? ***YES, correct directions.***
- Has the starter circuits been verified for proper wiring and function? ***YES, inspected by RCR, OK'd***
- Have the pump motors and gearboxes been greased and checked for proper lubrication? ***YES, factory lubricated***
- Has the pump motors/gearboxes and pump heads been checked for proper alignment? ***YES, alignment OK***

WATER STORAGE TANKS

- Have all open ports been "blanked off" and made watertight? ***YES***
- Are all flange connections gasketed and properly tightened/installed? ***YES, appears to be OK***
- Has the proper instrumentation been installed? ***YES, instruments are accounted for & installed.***
- Are the tank drain lines / overfill drains installed and complete? ***YES, appears to be OK***
- How do we drain the water tanks completed for cleaning / maintenance? ***Drain valve and hose fitting have been installed by the Mech. Contractor to allow draining to sanitary sewer system.***

PIPING SYSTEM

- Have all the "weldelettes" been plugged or have had a valve installed in them? ***YES, appears to be OK***
- Is the cooling water supply and return loops "watertight"? ***YES, appears to be OK***
- Have all the gauge instruments been installed into the system? Are they functional and in the proper locations? (** This is a minimum requirement for operating the system while the DeltaV is being commissioned**) ***YES, gauges installed and checked, DeltaV became operational on 4/3/00 (see below)***
- Has the water feed line been completed? Is it operational? ***NO, not completed as of 3/31/00. Completed on 4/4/00*** Is the automatic tank level control operational? ***YES, appears to be OK***
- Is the Chemical Treatment System installed? Is it operational? ***No, not completed as of 3/31/00, missing a valve and some interconnect piping. Chemical Treatment System completed on 4/4/00 and operational on 4/7/00 (see below)***
- Have the drain lines / overflow lines been completed? ***YES, appears to be OK***
- Has the separator piping and the automatic drain piping been completed? (At least to the point where the system will hold and flow water) ***Yes, piping completed. Automatic valve not functional, manual function only. Seems to be a problem with the diff. press. switch. Automatic valve function placed on timer 4/30/00. (see below)***

INITIAL SYSTEM OPERATION – STARTUP AND NORMAL OPERATION

1. Run through the pre-startup system checks (outlined previously) ***DONE***
   - ❑ Run the Cooling Tower Recirculation Pump (from the MCC) ***DONE, OK***
   - ❑ Start the pump and check for leaks in piping, connections and shaft seals. ***DONE, No problems***

- ❑ After all air pockets (cutting oils, etc.) are flushed from the piping, stop the pump (from the MCC). ***OK***

2. Run the Main Process Pump #1
   - ❑ Run the Main Process Recirculation Pump#1 (from the MCC) ***DONE, No problems***
   - ❑ Start the pump and check for leaks in piping, connections and shaft seals. Piping on both levels of Manufacturing (Upper and Lower) must be carefully checked. ***DONE, inspected by RCR, RRC and Mech. Contractor Foreman, no problems found.***
   - ❑ After all air pockets (cutting oils, etc.) are flushed from the piping, stop the pump (from the MCC) ***DONE***

3. Run the Backup Process Pump#2
   - ❑ Run the Main Process Recirculation Pump#2 (from the MCC) ***DONE, OK***
   - ❑ Start the pump and check for leaks in piping, connections and shaft seals. Piping on both levels of Manufacturing (Upper and Lower) must be carefully checked. ***DONE, as outlined above in Step #2***
   - ❑ After all air pockets (cutting oils, etc.) are flushed from the piping, stop the pump (from the MCC) ***DONE***

4. Run the Cooling Tower Fan
   - ❑ From the ACVFD Faceplate, run the motor from 0% to 100% output. Note the minimal output value at which the fan starts turning. ***DONE – Fan starts rotating at 5% output from ACVFD***
   - ❑ Start and Stop the fan several times from the ACVFD Faceplate. ***DONE, no problems, unit functions OK***
   - ❑ Verify that the "run" and "fault" contacts are functional. Use a continuity meter across the relays. ***YES, functional***

FULL SYSTEM RUN TEST

1) Turn the Main Process Recirculating Pump "on" ***DONE***
2) Turn the Cooling Tower Recirculating Pump "on" ***DONE***
3) Turn the Cooling Tower Fan to "on" and run it at 100% output. ***DONE***
   - ❑ Check the system liquid levels in both tanks ***H2O level in cold well higher than hot well and water flows from cold well to hot well via. 8"tank connection pipe. Maintaining an adequate liq. level in both tanks.***
   - ❑ Verify that the tank refill controller is functioning and adding water to the system as designed. ***YES, added water for approx 2 min. and then shut off at upper control point.***
   - ❑ Allow the liquid levels to stabilize in both tanks. ***DONE, stabilized after approx. 5 min.***
   - ❑ Run through this process several times, utilize both the main and backup recirculating pumps. ***DONE***

SHUTDOWN AFTER FULL SYSTEM TEST.

1) Turn the Main Process Recirculating Pump "off" ***DONE, shutdown OK***
2) Ramp the cooling tower fan speed to 0% and turn the motor "off" ***DONE, shutdown OK***
3) Turn the Cooling Tower Recirculating Pump "off" ***DONE, shutdown OK***
   Shutdown complete.

START-UP TRIALS

DELTAV SYSTEM CONTROL COMMISSIONING

On Monday, April 3rd., 2000 Mr. Greg Frederick, Systems Engineer from North East Controls, Bob Cervenka and I brought the DeltaV control portion of the Cooling Tower Project "on-line". Greg loaded the control configuration software into the Pro-Plus Console and downloaded the new configuration into the new DeltaV controller. Greg ran through several systems checks and diagnostics on the new controller and I/O modules. No problems were found and the controller came on line as expected. Keeping in communication via. walkie-talkie, Greg , Bob Cervenka & I went through each piece of equipment; testing function and communications between the field devices and the control system. The devices checked were:

CP-101 Main Process Circulating Pump – Tested on/off control from DeltaV and run/stopped indication, OK'd
CP-102 Back-up Circulating Pump – Tested on/off control from DeltaV and run/stopped indication, OK'd
CP-201 Cooling Tower Circulating Pump - Tested on/off control from DeltaV and run/stopped indication, OK'd
CTCS-300 Cooling Tower Fan Motor – Tested remote on/off control, run/stopped/fault indication and remote speed setpoint from DeltaV, OK'd.
TT-201, TT-202, TT203 & TT-204. All temperature transmitters came up with no problems, data being sent was consistent with what was expected, OK'd.
LSL-201 Low Water Level. Tanks were filled with water so there was no input coming into the DeltaV from the sensor. We temporarily changed the sensors state from N.O. to N.C. for water contact. After doing so, the sensor opened and we got an alarm on the DeltaV. The sensor was restored to it's normal, default operation state. OK'd.
PSL-201 Cooling Loop Low Pressure Switch. Opened and Closed with CP-101 and CP-102 being turned off and on. Since this input is part of the automatic stand-by pump activation program, we turning off the main pump (CP-101) at the MCC and allowed the DeltaV to automatically turn the stand-by pump "on". The contact opened as it should and the DeltaV automatically changed over to the back-up pump. Everything functioned as desired. OK'd.

We then tested the remote operator control station (DCS-100) for function. We allowed the DeltaV to handle the sequential starting and stopping of the pumps and tower fan motor. We "started" and "stopped" the cooling water system several times with the remote operator station. Everything worked as desired; starting, stopping and the "run" indication pilot light on the panel functioned. We then simulated an alarm condition by shutting the cooling tower fan motor off at the ACVFD. This action tripped a supervisory alarm on the DeltaV and the "alarm" indication pilot light on the panel functioned. The cooling tower fan motor was then turned back "on" and the "stop" button was pressed, allowing the DeltaV to shutdown the entire system.

We also checked the function of the automatic switch over between primary (CP-101) and back-up (CP-102) circulating pumps. This function as expected and no problems were found. The change over between pumps was rapid and worked as desired. OK'd.

We checked the function of the water temperature control logic. The DeltaV controls the cooling water temperature by varying the speed of the cooling tower fan motor. More fan speed, more water being evaporated, colder the water coming down from the cooling tower. We adjusted the desired water temperature setpoint up and down several times and the DeltaV adjusted the fan motor speed to achieve the desired cooling water temperature. Control functioned nicely, OK'd

ADDITIONAL CORRECTIVE ACTIONS TAKEN DURING START-UP

A. Chemical Treatment System. The missing valve and the tie-in piping was installed on 4/4/00. Mr. Forrest Anderson from NALCO Chemical Co., came to the site on 4/5/00 to work with Bob Cervenka on bring the Chemical treatment system on line. The chemical treatment control system and instrumentation was programmed and tested. The initial charge of chemicals was delayed until 4/7/00. This was due to having to add a detergent to the tower water system, at Mr. Anderson's recommendation, and allowing it to re-circulate for two days remove all the cutting and mill oils from the piping and tower. This cleaning water solution was drained to sanitary sewer, the cooling tower system was then refilled with fresh water and the chemical treatment packages (liquids) were added. The Cooling Tower Chemical Treatment System was fully operational on 4/7/00.

B. Temperature Reading Discrepancy on Two Transmitters: On 4/10 it was noticed that the water exiting the cooling tower was warmer than the water going into the cooling tower. This is contrary to how the tower is suppose to function, due to evaporative cooling. It was decided that we probably had a problem in the wiring connections. The wiring for TT-203 (Tower water outlet) and TT-204 (Tower water inlet) were switched (reversed), connected to the wrong DeltaV terminals. This was confirmed by disconnecting the wiring at the TT-203 and watching the screen data for TT-204 disappear. The wiring was reversed, placing the right transmitter on the proper terminal block input locations. The temperature displays and wiring connections were re-verified,

problem corrected and back to normal on 4/10/00.

C. Balancing the 1st & 2nd Floor Cooling Water Loop Pressures: The Back Pressure Regulating Valves, PRV-203 and PRV-204, had to be adjusted in order to provide greater water pressure to the 2nd. Floor portion of the system. Since the three main distillation process condensers are feed off the 2nd Floor Loop, higher water pressure was required on the 2nd. Floor to meet the flow demands of the equipment. Adjusting loop pressure and water flow distribution between the 1st. & 2nd. Floor Cooling water loops was expected, hence the adjustable PRV's and the balancing flow valves.

D. Automatic Blow-down valve on the LACOS solids separator: During the initial system checkout trials, it was noticed that the automatic blow-down valve on the LACOS separator was staying in the open position, resulting in cooling loop water being sent to the sanitary sewer. The valve was disconnected from the differential pressure cell controlling it's operation. P&S Maintenance was instructed to manually flush the LACOS separator once a week, via. the manual drain valve, until the problem with the automatic valve could be resolved. After further investigation with the separator manufacturer (LACOS), the normal pressure drop across the separator was equal to the trip point on the differential pressure cell controlling the automatic blow-down valve. Because the differential cell was "activated" whenever the process pumps were running, it was sending a signal to the valve to stay open. The simplest solution recommended by LACOS was to remove the differential pressure and hook the automatic valve to a timer, which would then control the blow-down valve. This recommendation was implemented. The LACOS separator is now flushed or "blown-down" once a day via. the timer settings and automatic blow-down valve.

CONCLUSION:

The system start-up went well, only a few minor problems we experienced and they have been corrected. The system was released from Start-up for normal operations on April 28th., 2000.

PURCHASE ORDER LOG

Project No.:		CS-99-6				Project Manager: R.C. Robinson			
Project Title:		Carol Stream Plant Cooling Tower Proj.				Date: 1/4/2000			
Location:		P&S Carol Stream, IL Facility				CS -99-6 Approved Amt: $260,200			
						CS-99-7 Approved Amount: $60,000			
Code	P.O. No.	Vendor	Rev. No.	Date	Item No.	Description	Cost($)	Del. Cost ($)	Del. Date
	220741	Scheid Architectural		1/3/00	1	A&E Services for system design	$36,610	$35,227	2/1/00
	260851	American Mechanical, Inc.		12/9/99	1	Const ./ inst. Of Tower Project	$157,500	$157,500	12/1/99
		American Mechanical, Inc.			2	Const. Of cooling H2O room	$36,203	$36,203	
		American Mechanical, Inc.		2/1/00	CO#1	check valves, sising, conc. , drain and H2O line		$6,550	2/1/00
		American Mechanical, Inc.		2/29/00	CO#2	Sewer line modifications, flanges & flexes		$21,311	3/1/00
		American Mechanical, Inc.		3/1/00	CO#3	Additional switches & pilot lights		$985	3/1/00
					CO#3	Addition of a disconnect at tower motor elec.		$1,092	5/1/00
	260894	Fisher Rosemount		1/17/00	1	Temperature Transmitters - 4ttl	$3,833	$3,833	3/1/00
	260889	C.J. Mulanix		1/13/00	1	3ea. Level switches	$750	$750	2/1/00
	260859	G.O.E.		12/16/99	1	7'6"x9' tall - 3,000 gal PE Tank	$9,938	$9,938	1/1/00
						Freight on poly tanks - GOE		$1,025	
	260865	SIEWERT Equip. Co.		12/17/99	1	2 recirc & 1 tower pump - Aurora	$6,474	$6,474	2/1/00
	260862	Pro Air Plus		12/16/99	1	Grahm 40hp. ACVFD	$3,843	$3,843	2/1/00
	261002	Danfoss Grahm		4/3/00	1	AC Drive Relay Output Card		$250	3/28/00
	260858	BAC c/o Pro Air Plus		12/16/99	1	Cooling Tower VTI-N209-P	$16,347	$16,347	2/1/00
	260926	North East Controls		1/28/00	1	DeltaV, I/O & Config. Services **see note		$49,583	3/17/00
		North East Controls		3/1/00		On site startup assistance & travel for G. Frederick		$3,174	4/3/00
	260983	G.O.E.		3/22/00	1	2 additional level switches & 1 neptune meter reg.		$929	3/28/00
	260993	Granger		3/27/00	1	marking tape, y-strainer and inline strainers		$410	4/1/00
	261032	R.J. Keck Pipe & Supply		4/27/00	1	Various size brass threaded ball valves and fittings		$515	4/31/00
	261033	Granger		4/27/00	1	Paint for cooling water feed and return lines		$163	
	260983	Nalco		2/25/00	1	Chemical Treatment System for cooling tower		$8,970	3/15/00
	261042	Grainder		5/5/00	1	Pull stations, alarm horn/light & alarm horn box.		$167	5/5/00
						Deduction for portion of control system used for other systems.		-$22,475	
						Costs Total:	$271,498	$342,764	

Purchase Orders

PIERCE & STEVENS CORP.
245 E. KEHOE BLVD.

PO No. 260851
Release No. 0
Order Date 12/ 9/99

.ROL STREAM IL 60188
USA
Telephone No. 630-653-3800 **Ext.**
Fax 630-510-0927

VENDOR AMERICAN MECHANICAL
Vendor ID 3073
2150 LIVELY BLVD.

ELK GROVE VILLAGE IL 60007
USA
Contact MIKE DONNER
Telephone No. 847-981-9630 **Ext.**
Fax 847-981-0164

SHIP TO PIERCE & STEVENS CORP.
245 E. KEHOE BLVD.

CAROL STREAM IL 60188
USA
Telephone No. 630-653-3800

INVOICE TO Pierce & Stevens Corp.
P.O. BOX 2535

Buffalo NY 14240
USA

CONFIRM TO PIERCE & STEVENS CORP.
245 E. KEHOE BLVD.

CAROL STREAM IL 60188
USA

Freight Terms
Ship Via
Freight Carrier

Payment Terms
Shipping Terms

Item	Qty Unit Due Date	Item No. Cost Center Acct. Code	Vendor Item No. Description Specification	Unit Cost $	Total Cost $
1	1.000 EACH	CONTRACT CS99-6 CS99-6	INSTALL COOLING TOWER	193,703.000	193,703.000
2	1.000 EACH	CONTRACT CS99-6 CS99-6	P & S CHANGE ORDER #1	6,550.000	6,550.000
3	1.000 EACH	CONTRACT CS99-6 CS99-6	P & S CHANGE ORDER #2	23,397.000	23,397.000
4	1.000 EACH	CONTRACT CS99-6 CS99-6	P & S CHANGE ORDER #3	2,077.000	2,077.000

CONTRACT TO BE INVOICED IN TWO SEPERATE INVOICES
1 FOR $157,500.00 FOR CS99-6
1 FOR $36203 FOR CS99-7

P & S CHANGE ORDER #1 ADD AMI CO#'S 3,6,7,8,9,10,11 TOTAL COST OF CHANGE ORDERS $6,550.00
P & S CHANGE ORDER #2 ADD AMI CO#'S 1,4,5,12 TOTAL COST OF CHANGE ORDERS $23397.00
P & S CHANGE ORDER #3 ADD SERVICE DISCONNECT AT TOWER AND STOP START ˜WITCHES IN MCC $2077.00

Subtotal	$	225,727.00
Tax Charge 1	$	0.00
Tax Charge 2	$	0.00
Shipping	$	0.00
Misc.	$	0.00
Order Total	$	225,727.00

Approval **Date**

12/20/99

Purchase Orders

PIERCE & STEVENS CORP.
245 E. KEHOE BLVD.

CA. STREAM IL 60188
USA
Telephone No. 630-653-3800 **Ext.**
Fax 630-510-0927

PO No. 260858
Release No. 0
Order Date 12/16/99

VENDOR PRO AIR PLUS
Vendor ID PRO AIR PLUS
205 E. MAIN ST.

EAST AURORA NY 14052
USA
Contact C\O BALTIMORE AIRCOIL CO.
Telephone No. **Ext.**
Fax

SHIP TO PIERCE & STEVENS CORP.
245 E. KEHOE BLVD.

CAROL STREAM IL 60188
USA
Telephone No. 630-653-3800

INVOICE TO Pierce & Stevens Corp.
P.O. BOX 2535

Buffalo NY 14240
USA

CONFIRM TO PIERCE & STEVENS CORP.
245 E. KEHOE BLVD.

CAROL STREAM IL 60188
USA

Freight Terms
Ship Via
Freight Carrier

Payment Terms
Shipping Terms

Item	Qty Unit Due Date	Item No. Cost Center Acct. Code	Vendor Item No. Description Specification	Unit Cost $	Total Cost $
1	1.000 EACH	COOLING TOWER CS99-6 CS99-6	VT1-N209-P BAC VT1-N209-P	16,347.000	16,347.000

BAC Model VT1-N209-P Cooling Tower rated at 400gpm. capacity, 40 hp. TEFC fan motor, 460VAC, 3ph. Unit factury install and coated with Baltibond Corrosion Protection System, side outletconnection for remote sump application, spring type vibration isolation rails and a galvanized steel fan wheel.
FOB Paxton IL. with all freight prepaid and allowed to Chicago Area.

Subtotal	$	16,347.00
Tax Charge 1	$	0.00
Tax Charge 2	$	0.00
Shipping	$	0.00
Misc.	$	0.00
Order Total	$	16,347.00

Approval **Date**

12/20/99

PIERCE & STEVENS CORP.
245 E. KEHOE BLVD.

Purchase Orders

PO No. 260859
Release No. 0
Order Date 12/16/99

CA[illegible] STREAM IL 60188
US.
Telephone No. 630-653-3800
Fax 630-510-0927 **Ext.**

VENDOR GOE
Vendor ID 25930
2800 Kenmore Ave.

Tonawanda NY 14150
USA
Contact
Telephone No. 1-716-875-2800 **Ext.**
Fax

SHIP TO PIERCE & STEVENS CORP.
245 E. KEHOE BLVD.

CAROL STREAM IL 60188
USA
Telephone No. 630-653-3800

INVOICE TO Pierce & Stevens Corp.
P.O. BOX 2535

Buffalo NY 14240
USA

CONFIRM TO PIERCE & STEVENS CORP.
245 E. KEHOE BLVD.

CAROL STREAM IL 60188
USA

Freight Terms
Ship Via
Freight Carrier UPS

Payment Terms N/30
Shipping Terms PPD & ADD

Item	Qty / Unit / Due Date	Item No. / Cost Center / Acct. Code	Vendor Item No. / Description / Specification	Unit Cost	Total Cost
				$	$
1	2.000 EACH	POLY-TANK-3000 CS99-6 CS99-6	7'6" X 9' TALL 3000 GAL. POLY TANK	4,969.000	9,938.000

Polypropylene tanks, 7'6" dia.x 9' tall, flat bottom, domed top, fittings per P&S supplied nozel drawings and schedule, 16" manway. 2-3 week delivery, freight extra, ARO factory.

Subtotal	$	9,938.00
Tax Charge 1	$	0.00
Tax Charge 2	$	0.00
Shipping	$	0.00
Misc.	$	0.00
Order Total	$	9,938.00

Approval Date

1/24/00

Purchase Orders

PIERCE & STEVENS CORP.
245 E. KEHOE BLVD.

PO No. 260862
Release No. 0
Order Date 12/16/99

C L STREAM IL 60188
USA
Telephone No. 630-653-3800 **Ext.**
Fax 630-510-0927

VENDOR PRO AIR PLUS
Vendor ID PRO AIR PLUS
205 E. MAIN ST.

EAST AURORA NY 14052
USA
Contact
Telephone No. **Ext.**
Fax

SHIP TO PIERCE & STEVENS CORP.
245 E. KEHOE BLVD.

CAROL STREAM IL 60188
USA
Telephone No. 630-653-3800

INVOICE TO Pierce & Stevens Corp.
P.O. BOX 2535

Buffalo NY 14240
USA

CONFIRM TO PIERCE & STEVENS CORP.
245 E. KEHOE BLVD.

CAROL STREAM IL 60188
USA

Freight Terms
Ship Via
Freight Carrier

Payment Terms
Shipping Terms

Item	Qty / Unit / Due Date	Item No. / Cost Center / Acct. Code	Vendor Item No. / Description / Specification	Unit Cost $	Total Cost $
1	1.000 EACH	VFD-40 CS99-6 CS99-6	VLT6000H52/460/3/60 GRAHM 40 HP. VARIABLE FREQ. DRIVE	3,843.000	3,843.000

Subtotal	$	3,843.00
Tax Charge 1	$	0.00
Tax Charge 2	$	0.00
Shipping	$	0.00
Misc.	$	0.00
Order Total	$	3,843.00

Approval Date

1/17/00

Purchase Orders

PIERCE & STEVENS CORP.
245 E. KEHOE BLVD.

CAROL STREAM IL 60188
USA
Telephone No. 630-653-3800 **Ext.**
Fax 630-510-0927

PO No. 260865
Release No. 0
Order Date 12/17/99

VENDOR SIEWERT EQUIPMENT CO., INC.
Vendor ID 54020
175 AKRON ST.

ROCHESTER NY 14609
USA
Contact
Telephone No. 1-716-482-9640 **Ext.**
Fax 1-716-482-4149

SHIP TO PIERCE & STEVENS CORP.
245 E. KEHOE BLVD.

CAROL STREAM IL 60188
USA
Telephone No. 630-653-3800

INVOICE TO Pierce & Stevens Corp.
P.O. BOX 2535

Buffalo NY 14240
USA

CONFIRM TO PIERCE & STEVENS CORP.
245 E. KEHOE BLVD.

CAROL STREAM IL 60188
USA

Freight Terms
Ship Via
Freight Carrier

Payment Terms
Shipping Terms

Item	Qty / Unit / Due Date	Item No. / Cost Center / Acct. Code	Vendor Item No. / Description / Specification	Unit Cost $	Total Cost $
1	1.000 EACH	PUMP-COOLING TOWER CS99-6 CS99-6	AURORA PUMP 4X5X9 344A-BF	1,790.000	1,790.000
2	2.000 EACH	PUMP-TOWER RECIRC CS99-6 CS99-6	AURORA PUMP 2X2.5X9 344A-BF	2,342.000	4,684.000

Cooling Tower Pump:

(1) ea. Aurora Model 344A-BF size 4 x 5 x 9" in bronze fitted construction consisting of cast iron casing, bronze impeller, steel shaft, bronze casing wearing ring, bronze sleeve with a cast iron power frame and bracket with a carbon/ni-resist/Buna mechanical seal. Pump is base mounted on a carbon steel base with coupling, coupling guard, and a 7.5 hp. 1750 RPM , 230/460 VAC, 3 ph. TEFC EPACT efficiency Motor. Cost: $ 1,760.00 each.

Recirculating Pumps

(2) ea. Aurora Model 344A-BF size 2 x 2.5 x 9" in bronze fitted construction consisting of cast iron casing, bronze impeller, steel shaft, bronze casing wearing ring, bronze sleeve with a cast iron power frame and bracket with a carbon/ni-resist/Buna mechanical seal. Pump is base mounted on a carbon steel base with coupling, coupling guard, and a 20 hp. 1750 RPM , 230/460 VAC, 3 ph. TEFC EPACT efficiency Motor. Cost: $ 2,342.00 each.

Subtotal	$	6,474.00
Tax Charge 1	$	0.00
Tax Charge 2	$	0.00
Shipping	$	0.00
Misc.	$	0.00
Order Total	$	6,474.00

Approval **Date**

2/25/00

Purchase Orders

PIERCE & STEVENS CORP.
245 E. KEHOE BLVD.

CA STREAM IL 60188
USA
Telephone No. 630-653-3800 **Ext.**
Fax 630-510-0927

PO No. 260894
Release No. 0
Order Date 1/17/00

VENDOR ROSEMONT INC.
Vendor ID ROSEMONT
8200 MARKET BLVD.

CHANHASSEN MN 55317
USA
Contact JANELL
Telephone No. 1-800-999-9307 **Ext.**
Fax

SHIP TO Pierce & Stevens Corp.
245 E. Kehoe Blvd.

Carol Stream IL 60188
U.S.A.
Telephone No. 630-653-3800

INVOICE TO Pierce & Stevens Corp.
P.O. BOX 2535

Buffalo NY 14240
USA

CONFIRM TO Pierce & Stevens Corp.
245 E. Kehoe Blvd.

Carol Stream IL 60188
U.S.A.

Freight Terms
Ship Via
Freight Carrier

Payment Terms
Shipping Terms

Item	Qty Unit Due Date	Item No. Cost Center Acct. Code	Vendor Item No. Description Specification	Unit Cost $	Total Cost $
1	4.000 EACH	SMART TEMP. TRANSMITT CS99-6 CS99-6	3144D1E5B4 SMART TEMPERATURE TRANSMITTER	702.000	2,808.000
2	3.000 EACH	PLATINUM RTD CS99-6 CS99-6	0068R21C30A040T22 THIN-FILM PLATINUM RTD	245.100	735.300
3	1.000 EACH	PLATINUM RTD-2 CS99-6 CS99-6	0068R21C30A090T22 THIN-FILM PLATINUM RTD	289.750	289.750

Subtotal	$	3,833.05
Tax Charge 1	$	0.00
Tax Charge 2	$	0.00
Shipping	$	0.00
Misc.	$	0.00
Order Total	$	3,833.05

Approval **Date**

1/13/00

Purchase Orders

PIERCE & STEVENS CORP.
245 E. KEHOE BLVD.

PO No. 260889
Release No. 0
Order Date 1/13/00

C. ..OL STREAM IL 60188
USA
Telephone No. 630-653-3800 **Ext.**
Fax 630-510-0927

VENDOR C.J. MULANIX CO.
Vendor ID 03663
9050 LAPP ROAD
CLARENCE CENTER NY 14032
Contact
Telephone No. 716-741-3735 **Ext.**
Fax 716-741-7181

SHIP TO PIERCE & STEVENS CORP.
245 E. KEHOE BLVD.
CAROL STREAM IL 60188
USA
Telephone No. 630-653-3800

INVOICE TO Pierce & Stevens Corp.
P.O. BOX 2535
Buffalo NY 14240
USA

CONFIRM TO PIERCE & STEVENS CORP.
245 E. KEHOE BLVD.
CAROL STREAM IL 60188
USA

Freight Terms
Ship Via UPS
Freight Carrier

Payment Terms
Shipping Terms PPD&ADD

Item	Qty Unit Due Date	Item No. Cost Center Acct. Code	Vendor Item No. Description Specification	Unit Cost $	Total Cost $
1	3.000 EACH 1/27/00	LEVEL SENSORS CS99-6 CS99-6	TFTL260 LEVEL SENSORS FOR COOLING TOWER	250.000	750.000

E&H LIQUIPHANT TFTL260 LIQUID LEVEL SWITCH 120 VAC, 1" NPT CONNECTION COST
$250.00 EACH PER QUOTE #110899-CM. 1-2 WEEK DELIVERY

Subtotal	$	750.00
Tax Charge 1	$	0.00
Tax Charge 2	$	0.00
Shipping	$	0.00
Misc.	$	0.00
Order Total	$	750.00

Approval **Date**

3/15/00

Purchase Orders

PIERCE & STEVENS CORP.
245 E. KEHOE BLVD.

.OL STREAM IL 60188
USA
Telephone No. 630-653-3800 **Ext.**
Fax 630-510-0927

PO No. 260926
Release No. 0
Order Date 2/ 2/00

VENDOR NORTHEAST CONTROLS, INC.
Vendor ID 02318
3 BADERTSCHER DRIVE

CLIFTON PARK NY 12065
USA
Contact
Telephone No. 1-518-664-0225 **Ext.**
Fax 1-518-664-8500

SHIP TO PIERCE & STEVENS CORP.
245 E. KEHOE BLVD.

CAROL STREAM IL 60188
USA
Telephone No. 630-653-3800

INVOICE TO Pierce & Stevens Corp. -
P.O. BOX 2535

Buffalo NY 14240
USA

CONFIRM TO PIERCE & STEVENS CORP.
245 E. KEHOE BLVD.

CAROL STREAM IL 60188
USA

Freight Terms
Ship Via
Freight Carrier

Payment Terms
Shipping Terms

Item	Qty / Unit / Due Date	Item No. / Cost Center / Acct. Code	Vendor Item No. / Description / Specification	Unit Cost $	Total Cost $
1	1.000 EACH	DELTA V CS99-6 CS99-6	DELTA V CONTROL WORK PER ATTACHED QUOTE	49,583.000	49,583.000

N HEAST QUOTE # FRS36285-612303-1-D

Subtotal	$	49,583.00
Tax Charge 1	$	0.00
Tax Charge 2	$	0.00
Shipping	$	0.00
Misc.	$	0.00
Order Total	$	49,583.00

Approval Date

2/28/00

Purchase Orders

PIERCE & STEVENS CORP.
245 E. KEHOE BLVD.

C. L STREAM IL 60188
USA
Telephone No. 630-653-3800 **Ext.**
Fax 630-510-0927

PO No. 260962
Release No. 0
Order Date 2/25/00

VENDOR NALCO CHEMICAL CO.
Vendor ID NALCO
6216 WEST 66TH PLACE
CHICAGO IL 60638-5299
USA
Contact FORREST ANDERSON
Telephone No. 1-800-477-3025 **Ext.**
Fax 1-708-496-5015

SHIP TO PIERCE & STEVENS CORP.
245 E. KEHOE BLVD.
CAROL STREAM IL 60188
USA
Telephone No. 630-653-3800

INVOICE TO Pierce & Stevens Corp.
P.O. BOX 2535
Buffalo NY 14240
USA

CONFIRM TO PIERCE & STEVENS CORP.
245 E. KEHOE BLVD.
CAROL STREAM IL 60188
USA

Freight Terms
Ship Via
Freight Carrier VENDOR TRK

Payment Terms N/30 DAYS
Shipping Terms PPD

Item	Qty Unit Due Date	Item No. Cost Center Acct. Code	Vendor Item No. Description Specification	Unit Cost $	Total Cost $
1	1.000 EACH	WATER TREATMENT CS99-6 CS99-6	COOLING TOWER WATER TREATMENT PACKAGE	8,970.000	8,970.000

Subtotal	$	8,970.00
Tax Charge 1	$	605.48
Tax Charge 2	$	0.00
Shipping	$	0.00
Misc.	$	0.00
Order Total	$	9,575.48

Approval	Date

4/ 3/00

Purchase Orders

PIERCE & STEVENS CORP.
245 E. KEHOE BLVD.

C[illegible]L STREAM IL 60188
U[illegible]
Telephone No. 630-653-3800 **Ext.**
Fax 630-510-0927

PO No. 260983
Release No. 0
Order Date 3/22/00

VENDOR GOE
Vendor ID 25930
2800 Kenmore Ave.
Tonawanda NY 14150
USA
Contact
Telephone No. 1-716-691-7012 **Ext.**
Fax

SHIP TO PIERCE & STEVENS CORP.
245 E. KEHOE BLVD.
CAROL STREAM IL 60188
USA
Telephone No. 630-653-3800

INVOICE TO Pierce & Stevens Corp.
P.O. BOX 2535
Buffalo NY 14240
USA

CONFIRM TO PIERCE & STEVENS CORP.
245 E. KEHOE BLVD.
CAROL STREAM IL 60188
USA

Freight Terms
Ship Via UPS
Freight Carrier

Payment Terms N/30
Shipping Terms PPD & ADD

Item	Qty / Unit / Due Date	Item No. / Cost Center / Acct. Code	Vendor Item No. / Description / Specification	Unit Cost $	Total Cost $
1	2.000 EACH	LEVEL SENSORS CS99-6 CS99-6	EH FTL-360 LEVEL SENSORS FOR COOLING TOWER	428.000	856.000

Subtotal	$	856.00
Tax Charge 1	$	0.00
Tax Charge 2	$	0.00
Shipping	$	0.00
Misc.	$	0.00
Order Total	$	856.00

Approval Date

5/ 1/00

Purchase Orders

PIERCE & STEVENS CORP.
245 E. KEHOE BLVD.

PO No. 260993
Release No. 0
Order Date 3/27/00

ROL STREAM IL 60188
USA
Telephone No. 630-653-3800 **Ext.**
Fax 630-510-0927

VENDOR GRAINGER
Vendor ID 27051
1545 FULLERTON AVE.

ADDISON IL 60101
USA
Contact
Telephone No. 630-953-9933 **Ext.**
Fax

SHIP TO PIERCE & STEVENS CORP.
245 E. KEHOE BLVD.

CAROL STREAM IL 60188
USA
Telephone No. 630-653-3800

INVOICE TO Pierce & Stevens Corp.
P.O. BOX 2535

Buffalo NY 14240
USA

CONFIRM TO PIERCE & STEVENS CORP.
245 E. KEHOE BLVD.

CAROL STREAM IL 60188
USA

Freight Terms
Ship Via UPS
Freight Carrier

Payment Terms NET 30
Shipping Terms PPD & ADD

Item	Qty Unit Due Date	Item No. Cost Center Acct. Code	Vendor Item No. Description Specification	Unit Cost $	Total Cost $
1	2.000 EACH 5/ 5/00	LABEL-RIBBON-WHITE CS99-6 CS99-6	4VH74 HANDIMARK WHITE RIBBON CARTRIDGE	23.470	46.940
2	2.000 EACH	LABEL-TAPE-GREEN-1 CS99-6 CS99-6	4VH86 1" GREEN LABEL TAPE	40.420	80.840
3	1.000 EACH 5/ 5/00	LABEL-TAPE-GREEN CS99-6 CS99-6	4VH87 HANDIMARK GREEN LABEL TAPE 2"	61.130	61.130
4	3.000 EACH	LABEL-ARROW-GREEN CS99-6 CS99-6	4T564 2" GREEN & WHITE ARROW TAPE	39.380	118.140
5	1.000 EACH	STRAINER-Y-2 CS99-6 CS99-6	3P854 2" Y TYPE STRAINER 40 MESH	42.750	42.750
6	1.000 EACH	STRAINER-LINE-1 CS99-6 CS99-6	2P583 1" LINE STRAINER 40 MESH	23.750	23.750
7	12.000 EACH	THREADED ROD-5/16 CS99-6 CS99-6	2G834 5/16" THREAD ROD 6' LENGHT	3.020	36.240

Subtotal	$	409.79
Tax Charge 1	$	0.00
Tax Charge 2	$	0.00
Shipping	$	0.00
Misc.	$	0.00
Order Total	$	409.79

Approval **Date**

Purchase Orders

PIERCE & STEVENS CORP.
245 E. KEHOE BLVD.

CAR STREAM IL 60188
USA
Telephone No. 630-653-3800 **Ext.**
Fax 630-510-0927

PO No. 261002
Release No. 0
Order Date 4/ 3/00

VENDOR DANFOSS GRAHAM
Vendor ID GRAHAM
3800 W. BRADLEY RD.

MILWAUKEE WI 53224

Contact
Telephone No. 414-355-8800 **Ext.**
Fax

SHIP TO PIERCE & STEVENS CORP.
245 E. KEHOE BLVD.

CAROL STREAM IL 60188
USA
Telephone No. 630-653-3800

INVOICE TO Pierce & Stevens Corp.
P.O. BOX 2535

Buffalo NY 14240
USA

CONFIRM TO PIERCE & STEVENS CORP.
245 E. KEHOE BLVD.

CAROL STREAM IL 60188
USA

Freight Terms
Ship Via
Freight Carrier

Payment Terms
Shipping Terms PPD

Item	Qty Unit Due Date	Item No. Cost Center Acct. Code	Vendor Item No. Description Specification	Unit Cost $	Total Cost $
1	1.000 EACH	DRIVE RELAY CARD CS99-6 CS99-6	AC DRIVE RELAY OUTPUT CARD	250.000	250.000

Subtotal	$	250.00
Tax Charge 1	$	0.00
Tax Charge 2	$	0.00
Shipping	$	0.00
Misc.	$	0.00
Order Total	$	250.00

Approval	Date

Purchase Orders

PIERCE & STEVENS CORP.
245 E. KEHOE BLVD.

PO No. 261033
Release No. 0
Order Date 4/27/00

CAROL STREAM IL 60188
U
Telephone No. 630-653-3800 **Ext.**
Fax 630-510-0927

VENDOR GRAINGER
Vendor ID 27051
1545 FULLERTON AVE.
ADDISON IL 60101
USA
Contact
Telephone No. 630-953-9933 **Ext.**
Fax

SHIP TO PIERCE & STEVENS CORP.
245 E. KEHOE BLVD.
CAROL STREAM IL 60188
USA
Telephone No. 630-653-3800

INVOICE TO Pierce & Stevens Corp.
P.O. BOX 2535
Buffalo NY 14240
USA

CONFIRM TO PIERCE & STEVENS CORP.
245 E. KEHOE BLVD.
CAROL STREAM IL 60188
USA

Freight Terms
Ship Via UPS
Freight Carrier

Payment Terms NET 30
Shipping Terms PPD & ADD

Item	Qty Unit Due Date	Item No. Cost Center Acct. Code	Vendor Item No. Description Specification	Unit Cost $	Total Cost $
1	1.000 GALLON 4/28/00	PAINT- WATER CS99-6 CS99-6	6A928 NATIONAL BLUE BRUSH ON PAINT	30.050	30.050
2	1.000 GALLON	PAINT-COOLING RETURN CS99-6 CS99-6	6A387 COOLING WATER RETURN MARLIN BLUE	30.840	30.840
3	1.000 GALLON 4/28/00	PAINT-HAZARD 420 420-009-0-140	6H383 SAFETY YELLOW BRUSH ON PAINT	39.750	39.750

Subtotal	$	100.64
Tax Charge 1	$	2.78
Tax Charge 2	$	0.00
Shipping	$	0.00
Misc.	$	0.00
Order Total	$	103.42

Approval **Date**

5/ 1/00

Purchase Orders

PIERCE & STEVENS CORP.
245 E. KEHOE BLVD.

PO No. 261032
Release No. 0
Order Date 4/27/00

CAROL STREAM IL 60188

Telephone No. 630-653-3800 **Ext.**
Fax 630-510-0927

VENDOR R.J.KECK PIPE & SUPPLY
Vendor ID 01488
300 N. LAKE ST.

MONTGOMERY IL 60538
USA
Contact KRIS/GREG
Telephone No. 1-630-859-3111 **Ext.**
Fax 1-630-859-3126

SHIP TO PIERCE & STEVENS CORP.
245 E. KEHOE BLVD.

CAROL STREAM IL 60188
USA
Telephone No. 630-653-3800

INVOICE TO Pierce & Stevens Corp.
P.O. BOX 2535

Buffalo NY 14240
USA

CONFIRM TO PIERCE & STEVENS CORP.
245 E. KEHOE BLVD.

CAROL STREAM IL 60188
USA

Freight Terms
Ship Via
Freight Carrier VEND\UPS

Payment Terms
Shipping Terms

Item	Qty Unit Due Date	Item No. Cost Center Acct. Code	Vendor Item No. Description Specification	Unit Cost $	Total Cost $
1	6.000 EACH 4/27/00	BVT-BRASS-1.25 CS99-6 CS99-6	HAM8901114 1-1/4" brass ball valve threaded	17.685	106.111
2	6.000 EACH 4/27/00	BVT-BRASS-1.5 CS99-6 CS99-6	HAM8901112 1-1/2" brass ball valve threaded	22.038	132.226
3	6.000 EACH 4/27/00	BVT-BRASS-1/2 CS99-6 CS99-6	HAM890112 1/2" brass ball valve threaded	4.649	27.893
4	6.000 EACH 4/27/00	BVT-BRASS-2 CS99-6 CS99-6	HAM89012 2" brass ball valve threaded	29.910	179.462
5	6.000 EACH 4/27/00	BVT-BRASS-3/4 CS99-6 CS99-6	HAM890134 3/4" brass ball valve threaded	7.062	42.370
6	6.000 EACH 4/29/00	PLG-THRD-BLK-1/2 CS99-6 CS99-6	BSHP12 1/2" plug threaded blk iron 1/2"	0.499	2.995
7	12.000 EACH 5/10/00	PLUG-THRD-BLK-1.5 CS99-6 CS99-6	BSHPF112 1-1/2" PLUG	1.264	15.163
8	6.000 EACH 4/28/00	PLUG-THRD-BLK-2 CS99-6 CS99-6	BSHPF2 2" plug threaded blk iron	1.478	8.869

Subtotal	$	515.09
Tax Charge 1	$	0.00
Tax Charge 2	$	0.00
Shipping	$	0.00
Misc.	$	0.00
Order Total	$	515.09

Approval **Date**

Purchase Orders

PIERCE & STEVENS CORP.
245 E. KEHOE BLVD.

PO No. 261042
Release No. 0
Order Date 5/ 5/00

ROL STREAM IL 60188
USA
Telephone No. 630-653-3800 **Ext.**
Fax 630-510-0927

VENDOR MCMASTER CARR SUPPLY
Vendor ID 37900
600 COUNTY LINE RD.

ELMHURST IL 60126
USA
Contact MARY
Telephone No. 1-630-833-0300 **Ext.**
Fax 1-630-834-9427

SHIP TO PIERCE & STEVENS CORP.
245 E. KEHOE BLVD.

CAROL STREAM IL 60188
USA
Telephone No. 630-653-3800

INVOICE TO Pierce & Stevens Corp.
P.O. BOX 2535

Buffalo NY 14240
USA

CONFIRM TO PIERCE & STEVENS CORP.
245 E. KEHOE BLVD.

CAROL STREAM IL 60188
USA

Freight Terms
Ship Via UPS
Freight Carrier UPS

Payment Terms NET 30
Shipping Terms PPD&ADD

Item	Qty Unit Due Date	Item No. Cost Center Acct. Code	Vendor Item No. Description Specification	Unit Cost $	Total Cost $
1	3.000 PKG	CLAMP-3 CS98-3D CS98-3D	3006T16 3" CONDUIT HANGERS	5.500	16.500
2	6.000 EACH	COUP-PVC-2 CS98-3D CS98-3D	4881K76 2" Schedule 80 coupling PVC	4.190	25.140
3	12.000 EACH	SOLENOID-3WAY CS98-3D CS98-3D	47835K23 3 WAY BRASS SOLENOID VALVE	65.630	787.560
4	24.000 EACH	COMP-FITTING CS98-3D CS98-3D	51875K66 3/8" TUBE 1/4" NPT BRASS COMPRESSION FITTING W/SL	1.890	45.360
5	2.000 EACH	CAM&GRO0VE-A-2 CS98-3D CS98-3D	52155K55 2" A-ADAPTER	9.590	19.180
6	7.000 EACH	CAM&GROOVE-A-1.5-SS CS98-3D CS98-3D	53015K54 1-1/2" SS A-ADAPTER	22.490	157.430
7	6.000 EACH	CAM&GROOVE-C-1.5 CS98-3D CS98-3D	52155K164 1-1/2" C-COUPLER LOCKING	29.950	179.700
8	5.000 EACH	CAM&GROOVE-CAP-1.5 CS98-3D CS98-3D	52155K84 1-1/2" DUST CAP	16.030	80.150
9	2.000 EACH	CAM&GROOVE-CAP-2 CS98-3D CS98-3D	52155K85 2" DUST CAP	18.010	36.020
10	2.000 EACH	ALARM-PULL BOX CS99-6 CS99-6	6652T11 PULL STATION	35.430	70.860
11	1.000 EACH	ALARM-HORN/LIGHT CS99-6 CS99-6	83005T25 ALARM HORN	84.280	84.280
12	1.000 EACH	ALARM-HORN BOX CS99-6 CS99-6	83005T87 HORN MOUNTING BOX	11.980	11.980

Subtotal	$	1,514.16
Tax Charge 1	$	0.00
Tax Charge 2	$	0.00

PIERCE & STEVENS CORP.
245 E. KEHOE BLVD.

PO No. 261042
Release No. 0
Order Date 5/ 5/00

CAROL STREAM IL 60188
USA
Telephone No. 630-653-3800 **Ext.**
Fax 630-510-0927

VENDOR MCMASTER CARR SUPPLY
Vendor ID 37900
600 COUNTY LINE RD.

ELMHURST IL 60126
USA
Contact MARY
Telephone No. 1-630-833-0300 **Ext.**
Fax 1-630-834-9427

SHIP TO PIERCE & STEVENS CORP.
245 E. KEHOE BLVD.

CAROL STREAM IL 60188
USA
Telephone No. 630-653-3800

INVOICE TO Pierce & Stevens Corp.
P.O. BOX 2535

Buffalo NY 14240
USA

CONFIRM TO PIERCE & STEVENS CORP.
245 E. KEHOE BLVD.

CAROL STREAM IL 60188
USA

Freight Terms
Ship Via UPS
Freight Carrier UPS

Payment Terms NET 30
Shipping Terms PPD&ADD

Item	Qty / Unit / Due Date	Item No. / Cost Center / Acct. Code	Vendor Item No. / Description / Specification	Unit Cost $	Total Cost $

Approval **Date**

Shipping	$	0.00
Misc.	$	0.00
Order Total	$	1,514.16

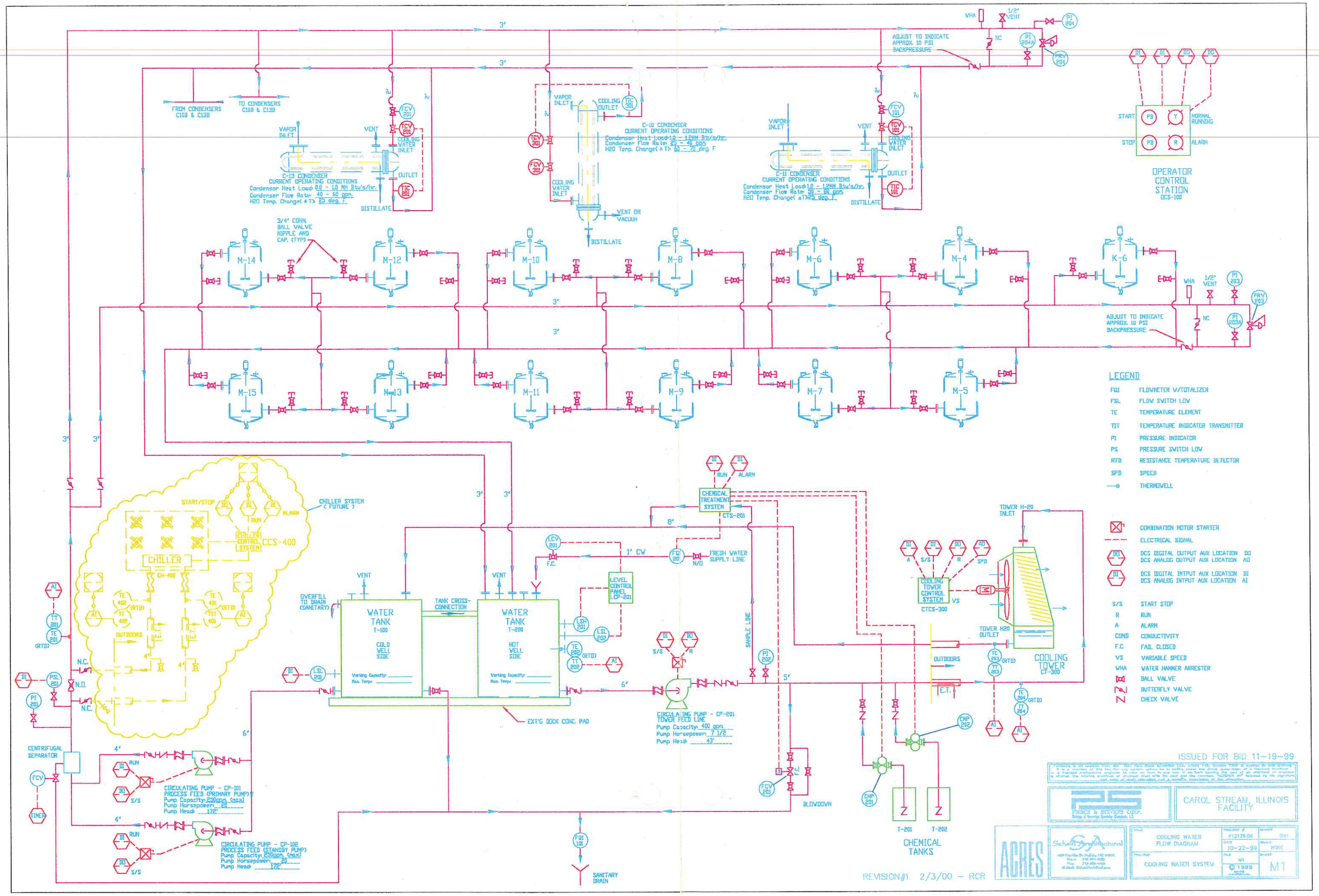
FROM CONDENSERS C10B & C13B
TO CONDENSERS C10B & C13B
VAPOR INLET
VENT
COOLING WATER INLET
OUTLET
DISTILLATE
C-13 CONDENSER
CURRENT OPERATING CONDITIONS
Condensor Heat Load: 0.8 - 1.0 MM Btu's/hr.
Condensor Flow Rate: 40 - 50 gpm.
H2O Temp. Change(ΔT): 20 deg. F
C-10 CONDENSER
CURRENT OPERATING CONDITIONS
Condensor Heat Load: 1.0 - 1.2MM Btu's/hr.
Condensor Flow Rate: 25 - 40 GPM
H2O Temp. Change(ΔT): 50 - 70 deg. F
C-11 CONDENSER
CURRENT OPERATING CONDITIONS
Condensor Heat Load: 1.0 - 1.2MM Btu's/hr.
Condensor Flow Rate: 30 - 40 gpm.
H2O Temp. Change(ΔT): 25 deg. F
VENT OR VACUUM
ADJUST TO INDICATE APPROX. 10 PSI BACKPRESSURE
WHA
1/2" VENT
PI 204
PI 204A
PRV 204
START
STOP
NORMAL RUNNING
ALARM
OPERATOR CONTROL STATION
OCS-100
3/4" CORA BALL VALVE NIPPLE AND CAP. (TYP)
M-14
M-12
M-10
M-8
M-6
M-4
K-6
M-15
M-13
M-11
M-9
M-7
M-5
PI 203
PRV 203
PI 203A
LEGEND
FQI FLOWMETER W/TOTALIZER
FSL FLOW SWITCH LOW
TE TEMPERATURE ELEMENT
TIT TEMPERATURE INDICATOR TRANSMITTER
PI PRESSURE INDICATOR
PS PRESSURE SWITCH LOW
RTD RESISTANCE TEMPERATURE DETECTOR
SPD SPEED
THERMOWELL
COMBINATION MOTOR STARTER
ELECTRICAL SIGNAL
DCS DIGITAL OUTPUT AUX LOCATION DO
DCS ANALOG OUTPUT AUX LOCATION AO
DCS DIGITAL INTPUT AUX LOCATION DI
DCS ANALOG INTPUT AUX LOCATION AI
S/S START STOP
R RUN
A ALARM
COND CONDUCTIVITY
F.C. FAIL CLOSED
VS VARIABLE SPEED
WHA WATER HAMMER ARRESTER
BALL VALVE
BUTTERFLY VALVE
CHECK VALVE
CHILLER SYSTEM (FUTURE)
START/STOP
RUN
ALARM
CHILLER CONTROL SYSTEM
CCS-400
CHILLER
CH-400
OUTDOORS
TE 402 (RTD)
TT 402
TE 401 (RTD)
TT 401
TT 201
TE 201 (RTD)
N.C.
N.O.
PSL 201
PI 201
CENTRIFUGAL SEPARATOR
FCV
TIMER
CIRCULATING PUMP - CP-101
PROCESS FEED (PRIMARY PUMP)
Pump Capacity: 250gpm (max)
Pump Horsepower: 20
Pump Head: 172'
CIRCULATING PUMP - CP-102
PROCESS FEED (STANDBY PUMP)
Pump Capacity: 250gpm (max)
Pump Horsepower: 20
Pump Head: 172'
OVERFILL TO DRAIN (SANITARY)
VENT
WATER TANK
T-100
COLD WELL SIDE
Working Capacity:
Max. Temp:
TANK CROSS-CONNECTION
WATER TANK
T-200
HOT WELL SIDE
LSL 201
EXT'G DOCK CONC. PAD
LCV 201
F.C.
1" CW
FQI 201
N/O
FRESH WATER SUPPLY LINE
LEVEL CONTROL PANEL LCP-201
LSH 201
LSL 202
TE 202 (RTD)
TT 202
CIRCULATING PUMP - CP-201
TOWER FEED LINE
Pump Capacity: 400 gpm
Pump Horsepower: 7 1/2
Pump Head: 43'
SAMPLE LINE
PI 202
FQI 101
SANITARY DRAIN
CHEMICAL TREATMENT SYSTEM
CTS-201
RUN
ALARM
FCV 201
BLOWDOWN
CNP 201
CNP 202
T-201
T-202
CHEMICAL TANKS
TOWER H-20 INLET
COOLING TOWER CONTROL SYSTEM
CTCS-300
VS
TOWER H20 OUTLET
OUTDOORS
E.T.
TE 203 (RTD)
TT 203
TE 204 (RTD)
TT 204
COOLING TOWER
CT-300
ISSUED FOR BID 11-19-99
CAROL STREAM, ILLINOIS FACILITY
COOLING WATER FLOW DIAGRAM
COOLING WATER SYSTEM
P13178.00
10-22-99
NONE
M1
REVISION #1 2/3/00 - RCR

UNITED STATES ENVIRONMENTAL PROTECTION AGENCY
REGION V

IN RE:	)	
	)	DOCKET NO.
P[illegible]CE & STEVENS CORPORATION	)	
6[illegible] EAST KEHOE	)	
CAROL STREAM, ILLINOIS 60187	)	COMPLAINT, FINDINGS
	)	OF VIOLATION AND
U.S. EPA ID No. ILD 055 434 443	)	COMPLIANCE ORDER
	)	
Respondent	)	

COMPLAINT

1. This is a civil administrative action instituted pursuant to Section 3008(a)(1) of the Resource Conservation and Recovery Act of 1976, as amended ("RCRA"), 42 U.S.C. § 6928(a)(1), and Sections 22.01(a)(4), 22.13 and 22.37 of the Consolidated Rules of Practice Governing the Administrative Assessment of Civil Penalties and the Revocation or Suspension of Permits, 40 CFR §§ 22.01(a)(4), 22.13 and 22.37.
2. The Complainant is, by lawful delegation, Chief of the Enforcement and Compliance Assurance Branch, Waste, Pesticides and Toxics Division, Region 5, United States Environmental Protection Agency ("U.S. EPA").
3. The Respondent is the Pierce & Stevens Corporation, which is and was at all times relevant to this Complaint, the owner

and operator of a facility located at 6245 East Kehoe, Carol Stream, Illinois (the "Facility").

4. Respondent is a "person" as defined at Section 1004(15) of RCRA, 42 U.S.C. § 6903(15), and Title 35 Illinois Administrative Code ("IAC") § 720.110, and is subject to the regulations promulgated pursuant to Subtitle C of RCRA, 42 U.S.C. §§ 6921-6939, and the analogous Illinois regulations as part of the applicable state hazardous waste management program for the State of Illinois.

5. Respondent is a New York corporation whose registered agent is CT Corporation located at 208 South LaSalle Street, Chicago, Illinois 60604.

6. Jurisdiction for this action is conferred upon U.S. EPA by Sections 2002(a)(1), 3006(b), and 3008 of RCRA, 42 U.S.C. §§ 6912(a)(1), 6926(b), and 6928 respectively. U.S. EPA has promulgated regulations codified at 40 CFR Parts 260 through 271 governing generators and transporters of hazardous wastes and facilities that treat, store, and dispose of hazardous waste.

7. Pursuant to Section 3006(b) of RCRA, 42 U.S.C. § 6926(b), on January 31, 1986, the State of Illinois was granted Final Authorization by the Administrator of the U.S. EPA to

administer a hazardous waste program in lieu of the Federal program. See 51 Federal Register 3778 (January 31, 1986). As a result, Illinois regulations at 35 IAC Part 720 et. seq. govern generation, transportation, treatment, storage and disposal of hazardous waste, rather than the Federal regulations set forth at 40 CFR Parts 260 et. seq., except for the applicable requirements pursuant to provisions of the Hazardous and Solid Waste Amendments of 1984 ("HSWA") for which Illinois is not authorized. Section 3008(a) of RCRA, 42 U.S.C. § 6928(a), provides the U.S. EPA with the authority to enforce state regulations in those States authorized to administer a hazardous waste program. U.S. EPA has provided notice to the State of Illinois regarding this action.

8. Section 3010(a) of RCRA, 42 U.S.C. § 6930(a), requires any person who generates or transports hazardous waste, or owns or operates a facility for the treatment, storage, or disposal of hazardous waste, to notify U.S. EPA of such activity within 90 days of the promulgation of regulations under Section 3001 of RCRA. Section 3010 of RCRA also provides that no hazardous waste subject to regulations may be transported, treated, stored, or disposed of unless the

required notification has been given.

9. U.S. EPA first published regulations concerning the identification, generation, transportation, treatment, storage or disposal of hazardous waste on May 19, 1980. These regulations are codified at 40 CFR Parts 260 through 265. Notification to U.S. EPA of hazardous waste activity was required in most instances no later than August 18, 1980. The regulations which concern the identification and listing of hazardous waste are codified at 40 CFR Part 261. The regulations governing generators are codified at 40 CFR Part 262.

10. Facilities that treat, store or dispose of hazardous waste must have interim status or obtain a permit pursuant to 40 CFR Part 270 and Sections 3005 and 3006 of RCRA, 42 U.S.C. §§ 6925 and 6926.

11. "Storage" is defined at 35 IAC § 728.102(c) and 40 CFR § 260.10 as "the holding of hazardous waste for a temporary period, at the end of which the hazardous waste is treated, disposed of, or stored elsewhere."

12. Respondent conducts, and conducted at all time relevant to this Complaint, "storage" of hazardous waste as that term is defined at 35 IAC § 728.102(c) and 40 CFR § 260.10.

13. "Generator" is defined at 40 CFR § 260.10 and 35 IAC § 720.110 as any person, by site, whose act or process produces hazardous waste identified or listed in 40 CFR Part 261.
14. On August 18, 1980, Respondent filed a notification of hazardous waste activity for the Facility with U.S. EPA pursuant to Section 3010 of RCRA, 42 U.S.C. § 6930, for the generation of hazardous waste.
15. Respondent generates spent solvents including xylene, acetone, acetate, toluene, and Methyl Ethyl Ketone (MEK), with U.S. EPA Hazardous Waste Numbers F003 (xylene, acetone, and acetate), F005 (toluene and MEK), D035 (MEK), D018 (Benzene) and D001 (characteristic for ignitability). These spent solvents are listed hazardous wastes and characteristic hazardous wastes respectively pursuant to 35 IAC § 721.121 and 40 CFR § 261.21; 35 IAC § 721.124 and 40 CFR § 261.24; and 35 IAC § 721.131 and 40 CFR § 261.31.
16. Respondent is, or was at all times relevant to this Complaint, a "generator" as defined at 40 CFR § 260.10.
17. Respondent generates, or generated at all times relevant to this Complaint, quantities of hazardous waste in excess of 1,000 kilograms per month at the Facility.

18. Respondent is, or was at all times relevant to this Complaint, an "owner" or "operator" of a facility as those terms are defined at 40 CFR § 260.10 and 35 IAC § 720.110.

19. On December 12, 1997, U.S. EPA inspected the Facility and reviewed Facility records related to hazardous waste management including manifest, container inspection logs, training, and contingency plan records.

20. Any violation of regulations promulgated pursuant to Subtitle C, Sections 3001-3019 of RCRA, 42 U.S.C. §§ 6921-6939a, or any state pro 3006 of RCRA, 42 U.S.C. § 6926, constitutes a violation of RCRA, subject to the assessment of civil or criminal penalties and compliance orders as provided in Section 3008 of RCRA, 42 U.S.C. § 6928.

FINDINGS OF VIOLATION

COUNT I: Owning or Operating a Facility Without a Permit

A. Accumulation of Hazardous Waste in Excess of 90 Days

21. Paragraphs 1 through 20 of this Complaint are incorporated by reference as though set forth here in full.

22. Section 3005 of RCRA, 42 U.S.C. § 6925, 35 IAC § 703.121(a)(1), and 40 CFR Part 270.1 require each person

owning or operating a hazardous waste storage facility to have a permit.

23. 40 CFR § 262.34(a) and 35 IAC § 722.134(a) provide that a generator of greater than 1,000 kilograms of hazardous waste per month may accumulate hazardous waste on-site for ninety days or less without a permit or without having interim status, provided that the generator complies with 40 CFR §§ 262.34(a)(1)-(4) and 35 IAC §§ 722.134(a)(1)-(4).

24. 40 CFR § 262.34(b) and 35 IAC § 722.134(b) provide that a generator of greater than 1,000 kilograms of hazardous waste per month who accumulates hazardous waste on-site for more than ninety days is an operator of a storage facility and is subject to the requirements of 35 IAC §§ 724, 725, and 702, and 40 CFR Parts 264 and 265, as well as the permit requirements of 40 CFR Part 270, unless granted an extension to the 90-day period pursuant to Section 37 of the Illinois Environmental Protection Act, 415 ILCS 5/37.

25. At all times relevant to this Complaint, Respondent was a generator of hazardous waste in quantities greater than 1,000 kilograms per month at its Facility.

26. On December 12, 1997, U.S. EPA conducted an inspection of the Facility, including a review of Uniform Hazardous Waste

Manifest Forms ("Manifests") and handwritten hazardous waste container inspection logs ("logs"), including logs which recorded changes in the number of drums stored in a ninety-day accumulation area 1995 and June 23, 1997.

27. A log titled "Central Accum. Area" indicates that Respondent was storing, as of October 30, 1996, at least seven drums of hazardous waste in the ninety-day accumulation area at the Facility.

28. The log referenced in Paragraph 27 above indicates that Respondent was storing, as of November 1, 1996, at least forty-three drums of hazardous waste in the ninety-day accumulation area at the Facility.

29. According to a Manifest identified as State Manifest Document Number INA1110314, seventy-eight drums were transported from Respondent's Facility to an off-site location on or about February 11, 1997.

30. The seventy-eight drums referenced in Paragraph 29 included the drums referenced in Paragraphs 27 and 28.

31. The drums identified in Paragraphs 27 and 28 above were stored at the Facility in excess of ninety days.

32. At all times relevant to this Complaint, the Respondent did

not, and does not, have a permit to store hazardous waste, as required by Section 3005 of RCRA, 42 U.S.C. § 6925, 35 IAC § 703.121(a)(1), and 40 CFR § 270.1.

33. At all times relevant to this Complaint, Respondent was not granted, and has not been granted, an extension to the ninety-day accumulation period.

34. At all times relevant to this Complaint, Respondent conducted "storage" of hazardous waste as defined at 35 IAC § 728.102(c) and 40 CFR § 260.10, at its Facility.

35. As a result of its storage of hazardous waste in excess of ninety days and its failure to have a permit for the storage of hazardous waste, Respondent has violated Section 3005 of RCRA, 42 U.S.C. § 6925, 35 IAC §§ 703.134(a) and (b), 40 CFR §§ 262.34(a) and (b), 35 IAC § 703.121(a)(1) and 40 CFR § 270.1.

36. As a result of its storage of hazardous waste in excess of ninety days, Respondent is subject to 35 IAC §§ 724, 725, and 702, 40 CFR Parts 264 and 265, and the additional permit requirements of 40 CFR Part 270, pursuant to 35 IAC § 722.134(b) and 40 CFR § 262.34(b).

B. Weekly Inspections

37. Section 3002 of RCRA, 42 U.S.C. § 6922, 35 IAC § 134(a)(1)(i), and 40 CFR § 262.34(a)(1)(i) allow generators of hazardous waste to accumulate hazardous wastes for ninety days or less without obtaining a permit provided the generator complies with the container management requirements of Subpart I of 35 IAC § 725 and Subpart I of 40 CFR Part 265, including 35 IAC § 725.274 and 40 CFR § 265.174.

38. 35 IAC § 725.274 and 40 CFR § 265.174 require the owner or operator to inspect areas where containers are stored, at least weekly, looking for leaks and for deterioration caused by corrosion or other factors.

39. 35 IAC § 725.115(d) and 40 CFR § 265.15(d) require the owner or operator of a facility to record inspections in an inspection log or summary.

40. On December 12, 1997, an inspector for U.S. EPA requested and reviewed inspection records for the Facility's ninety-day hazardous waste acc hazardous waste container inspection logs recording the storage of drums in the ninety-day accumulation area between December 15, 1995 and June 23, 1997.

41. A log titled "Central Accum. Area" indicates that no inspections were conducted between December 15, 1995 and January 9, 1996; between January 9, 1996 and March 11, 1996; between March 11, 1996 and April 3, 1996; between April 3, 1996 and May 3, 1996; between May 3, 1996 and June 26, 1996; between June 26, 1996 and September 20, 1996; between September 20, 1996 and October 30, 1996; and between November 1, 1996 and January 7, 1997.

42. The log referenced in Paragraph 41 above also indicates that the last inspection of the ninety-day accumulation area occurred on June 23, 1997.

43. Respondent did not provide the U.S. EPA inspector with any records indicating that any weekly inspections of the ninety-day accumulation area took place after June 23, 1997.

44. Respondent has failed to inspect containers of hazardous waste at least weekly pursuant to 35 IAC § 725.274, and 40 CFR §§ 262.34(a)(1)(i) and 265.174.

45. At all times relevant to this Complaint, the Respondent did not, and does not, have a permit to store hazardous waste, as required by Section 3005 of RCRA, 42 U.S.C. § 6925, 35 IAC § 703.121(a)(1), and 40 CFR Part 270.1.

46. As a result of its failure to conduct inspections on a

weekly basis and its failure to have a permit for the storage of hazardous waste, Respondent has violated Section 3005 of RCRA, 42 U.S.C. § 6925, 35 IAC §§ 722.134(a) and (b) and 40 CFR §§ 262.34(a) and (b); and 35 IAC § 703.121(a)(1) and 40 CFR § 270.1.

C. Contingency Plan

4. Section 3002 of RCRA, 42 U.S.C. § 6922, 35 IAC § 134(a)(4), and 40 CFR § 262.34(a)(4) allow generators of hazardous waste to accumulate hazardous wastes for ninety days or less without obtaining a permit provided the generator complies with the requirements for owners or operators in Subparts C and D in 40 CFR Part 265, including 40 CFR §§ 265.52(e) and (f).

48. 40 CFR Part 265, Subpart D requires the owner or operator of a facility to have a contingency plan for the facility.

49. 40 CFR § 265.52(e) requires the contingency plan to include a list of all emergency equipment at the facility and a brief outline of each item's capabilities.

50. 40 CFR § 265.52(f) requires the contingency plan to include a description of evacuation routes.

51. On December 12, 1997, an inspector for U.S. EPA requested and reviewed the Respondent's contingency plan for the

Facility required pursuant to 35 IAC Part 725, Subpart D and 40 CFR Part 265, Subpart D.

52. The Facility's contingency plan supplied to the U.S. EPA inspector on December 12, 1997, did not include a brief outline of the capabilities of each item of emergency equipment located at the Facility or an evacuation plan for Facility personnel, as required by 35 IAC §§ 725.152(e) and (f), and 40 CFR §§ 265.52 (e) and (f).

53. Respondent provided a corrected and updated contingency plan within a submittal to U.S. EPA dated January 19, 1998.

54. On December 12, 1997, Respondent was not in compliance with 35 IAC §§ 725.152(e) and (f), and 40 CFR §§ 265.52 (e) and (f).

55. At all times relevant to this Complaint, the Respondent did not, and does not, have a permit to store hazardous waste, as required by Section 3005 of RCRA, 42 U.S.C. § 6925, 35 IAC § 703.121(a)(1), and 40 CFR Part 270.1.

56. As a result of the deficiencies in Respondent's contingency plan identified in Paragraph 51 above and Respondent's failure to have a permit for the storage of hazardous waste, Respondent has violated Section 3005 of RCRA, 42 U.S.C. § 6925, 35 IAC §§ 722.134(a) and (b) and 40 CFR §§ 262.34(a)

and (b), and 35 IAC § 703.121(a)(1) and 40 CFR § 270.1.

D. Training Records

57. Section 3002 of RCRA, 42 U.S.C. § 6922, 35 IAC § 134(a)(4), and 40 CFR § 262.34(a)(4) allow generators of hazardous waste to accumulate hazardous wastes for ninety days or less without obtaining a permit provided the generator complies with 35 IAC § 725.116 and 40 CFR § 265.16.

58. 35 IAC § 725.116 and 40 CFR § 265.16 require Facility personnel to successfully complete a program of classroom instruction or on-the-job training which ensures, among other things, that Facility personnel are able to respond effectively to emergencies.

59. 35 IAC § 725.116(d) and 40 CFR § 265.16(d) require the owner or operator of a facility to maintain, at the facility, certain records and documents related to hazardous waste training.

60. 35 IAC § 725.116(d)(2) and 40 CFR § 265.16(d)(2) require the owner or operator to maintain, at the facility, documents or records that provide a written description for each position at the facility related to hazardous waste management.

61. 35 IAC § 725.116(d)(4) and 40 CFR § 265.16(d)(4) require the owner or operator to maintain, at the facility, records that

document that the required training or job experience has been given to, and completed by, facility personnel.

62. On December 12, 1997, an inspector for U.S. EPA requested and reviewed training documents and records for Respondent's hazardous waste training program for the Facility.

63. On December 12, 1997, Respondent did not provide the U.S. EPA inspector with written job descriptions as required by 35 IAC § 725.116(d)(2) and 40 CFR § 265.16(d)(2).

64. On December 12, 1997, Respondent did not provide the U.S. EPA inspector with records required under 35 IAC § 725.116(d)(4) and 40 CFR § 265.16(d)(4) that document that the training or job experience required by the Facility's training program had been completed by Facility staff.

65. Respondent did not provide job descriptions until January 19, 1998, after records were located in the Respondent's Buffalo, New York office.

66. As of December 12, 1997, Respondent was not in compliance with 35 IAC § 725.116(d) and 40 CFR § 265.16(d).

67. At all times relevant to this Complaint, the Respondent did not, and does not, have a permit to store hazardous waste, as required by Section 3005 of RCRA, 42 U.S.C. § 6925, 35 IAC § 703.121(a)(1), and 40 CFR Part 270.1.

68. As a result of the absence of records identified in Paragraphs 63 and 64 above and Respondent's failure to have a permit for the storage of hazardous waste, Respondent has violated Section 3005 of RCRA, 42 U.S.C. § 6925, 35 IAC § 722.134(a) and (b), 40 CFR § 262.34(a) and (b), 35 IAC § 703.121(a)(1), and 40 CFR § 270.1.

E. Drum Labeling

69. Section 3002 of RCRA, 42 U.S.C. § 6922, 35 IAC § 134(a)(2), and 40 CFR § 262.34(a)(2) allow generators of hazardous waste to accumulate hazardous wastes for ninety days or less without obtaining a permit provided the date upon which each period of accumulation begins is clearly marked and visible for inspection on each container.

70. On December 12, 1997, a U.S. EPA inspector observed one drum of hazardous waste spent filter (EPA Waste Code F005) stored in the Facility's central accumulation area without a date marked on the drum indicating the date of initial accumulation.

71. On December 12, 1997, Respondent was not in compliance with 35 IAC § 722.134(a)(2) and 40 CFR Part § 262.34(a)(2).

72. At all times relevant to this Complaint, the Respondent did

not, and does not, have a permit to store hazardous waste, as required by Section 3005 of RCRA, 42 U.S.C. § 6925, 35 IAC § 703.121(a)(1), and 40 CFR Part 270.1.

73. As a result of the absence of the initial accumulation date on the drum identified in Paragraph 70 above and Respondent's failure to have a permit for the storage of hazardous waste, Respondent has violated Section 3005 of RCRA, 42 U.S.C. § 6925, 35 IAC § 722.134(a)and (b), 40 CFR § 262.34(a) and (b), 35 IAC § 703.121(a)(1), and 40 CFR § 270.1.

PROPOSED CIVIL PENALTY

74. Section 3008 of RCRA, 42 U.S.C. § 6928, authorizes the assessment of a civil penalty of up to $25,000 per day for each violation of Subtitle C of RCRA. The Civil Monetary Penalty Inflation Adjustment Rule, published at 40 CFR Part 19, increased penalties for violations occurring or continuing on or after January 31, 1997, by 10%, thereby authorizing U.S. EPA to assess a civil penalty of up to $27,500 per day for each violation of Subtitle C of RCRA. Complainant proposes that Respondent be assessed a civil penalty of ONE HUNDRED TWENTY THREE THOUSAND SIX HUNDRED

NINETY FIVE DOLLARS ($123,695) for the violation alleged in this Complaint. The proposed civil penalty has been determined in accordance with RCRA Section 3008, 42 U.S.C. § 6928. For purposes of determining the amount of penalty to be assessed, Section 3008 requires U.S. EPA to take into account the seriousness of the violation and any good faith efforts to comply with applicable requirements. To develop the proposed penalty in this Complaint, Complainant has taken into account the particular facts and circumstances of this case with specific reference to U.S. EPA's RCRA Civil Penalty Policy, a copy of which is enclosed with this Complaint. This policy provides a rational, consistent and equitable calculation methodology for applying the statutory penalty factors enumerated above to this case. Attachment 1 of this Complaint provides a detailed summary of the proposed civil penalty. Respondent may pay this penalty by certified or cashier's check, payable to "Treasurer, the United States of America", and remit to:

U.S. Environmental Protection Agency, Region 5
P.O. Box 70753
Chicago, Illinois 60673

A copy of the check shall be sent to:

Multi-Media Branch I Secretary
Office of Regional Counsel (C-14J)
U.S. Environmental Protection Agency
77 West Jackson Boulevard
Chicago, Illinois 60604

A transmittal letter identifying this Complaint shall accompany the remittance and the copy of the check.

COMPLIANCE ORDER

Respondent is ordered to come into compliance with the requirements of Sections 3002 and 3005 of RCRA, 42 U.S.C. §§ 6922 and 6925 and 40 C.F.R. Parts 262, 265, and 270, to undertake the following activities, and to make submittals and certification to Complainant within the times specified below. All days are consecutive calendar days from the effective date of this Complaint. In accordance with the findings presented in this Complaint, Respondent is hereby ordered to:

1. Respondent shall, immediately upon this Compliance Order ("Order") becoming final, comply with the hazardous waste generator requirements at 35 IAC § 722 and 40 CFR Part 262.

2. Respondent shall, within 45 days of this Order becoming final, submit inspection logs for inspections required under 40 CFR Part 265.174.

3. Respondent shall, immediately upon this Order becoming

final, not store hazardous waste without a RCRA permit.

4. Respondent shall, no later than thirty (30) days from this Order becoming final, submit a closure plan pursuant to 35 IAC Part 725, Subpart G and 40 CFR Part 265, Subpart G addressing closure of the container storage area to Illinois Environmental Protection Agency ("IEPA") for review and approval at the following address:

Illinois Environmental Protection Agency
Bureau of Land
P.O. Box 19276
1021 North Grand Ave. East
Springfield, IL 62794-9276
Attention: Ed Bakowski

5. Upon approval of the closure plan by IEPA, Respondent shall carry out and complete all closure activities according to the time frames stated in the closure plan.

6. Within sixty (60) days of completion of final closure of the container storage area, Respondent shall submit to IEPA (pursuant to 35 IAC § 725.215), by registered mail, a certification that these hazardous waste management units have been closed in accordance with the specifications in the approved closure plans. The certification must be signed by the owner or operat7. Respondent shall notify U.S. EPA in writing within

seven (7) days of achieving compliance with each requirement of this Order. This notification shall be submitted no later than the time stipulated above to the U.S. EPA, Region 5, Waste Pesticide and Toxics Division, 77 West Jackson Boulevard, Chicago, Illinois 60604, Attention: Mr. Patrick F. Kuefler, RCRA Enforcement and Compliance Assurance Branch (DE-9J).

8. The Respondent shall provide to IEPA a written cost estimate in current dollars of the cost of closing the facility, pursuant to 35 IAC § 725.242(a).

9. The Respondent shall demonstrate and submit to IEPA (with a copy to U.S. EPA) documentation of financial assurance for closure activities of the facility (the Warehouse/Shipping Building hazardous waste storage area) in accordance with 35 IAC § 725.243.

10. The Respondent will demonstrate to IEPA (with a copy to U.S. EPA) documentation of liability insurance coverage for sudden accidental occurrences, pursuant to 35 IAC § 725.247(a).

OPPORTUNITY TO REQUEST A HEARING

In accordance with the Administrative Procedure Act ("APA"), 5 U.S.C. §§ 551 et. seq., you have the right to request a hearing to contest any material fact contained in this Complaint, and/or

to contest the amount of the proposed penalty. Any hearing that
to contest the amount of the proposed penalty. Any hearing that
you request will be held and conducted in accordance with the provisions of the APA, 5 U.S.C. §§551 et. seq., and the "Consolidated Rules of Practice Governing the Administrative Assessment of Civil Penalties and the Revocation or Suspension of Permits", 40 CFR Part 22. A copy of these rules accompanies this Complaint.

Unless Respondent has filed an answer not later than thirty (30) days from the date this Complaint is filed with the Regional Hearing Clerk, Respondent may be found in default of the above Complaint. If you wish to avoid being found in default, you must file a written Answer to this Complaint with the Regional Hearing Clerk, Planning and Management Division (MF-19J), U.S. Environmental Protection Agency, Region 5, 77 West Jackson Boulevard, Chicago, Illinois 60604, by _____. The Answer must clearly and directly admit, deny or explain each of the factual allegations contained in the Complaint with respect to which Respondent has any knowledge, or clearly state that Respondent has no knowledge as to particular factual allegations in the Complaint. The Answer should also state:

1. The circumstances or arguments that you allege constitute the grounds of defense;

2. The facts that you intend to place at issue; and

3. Whether you request a hearing.

Failure to deny any of the factual allegations in this Complaint constitutes admission of the undenied allegations.

A copy of this Answer and any subsequent documents filed in this action should be sent to Kevin Chow, Assistant Regional Counsel, Office of Regional Counsel (C-14J), U.S. Environmental Protection Agency, Region 5, 77 West Jackson Boulevard, Chicago, Illinois 60604. He may be telephoned at (312) 353-6181.

If you fail to file a written Answer, with or without a Request for Hearing, by the required date, the Regional Administrator or Presiding Officer may issue a Default Order.

SETTLEMENT CONFERENCE

Whether or not you request a hearing, you may request an informal conference in order to discuss the facts of this case and to arrive at a settlement. To request a settlement conference, write to Patrick F. Kuefler, Enforcement and Compliance Assurance Branch (DE-9J), United States Environmental Protection Agency, Region 5, 77 West Jackson Boulevard, Chicago, Illinois 60604, or telephone him at (312) 353-6268.

Your request for an informal settlement conference does not

extend the thirty (30) day period during which you must submit a written Answer and Request for Hearing. You may pursue the informal conference procedure simultaneously with the adjudicatory hearing procedure.

U.S. EPA encourages all parties against whom a civil penalty is proposed to pursue the possibilities of settlement through an informal conference. However, U.S. EPA will not reduce the penalty simply because such a conference is held. Any settlement that may be reached as a result of such conference shall be embodied in a written Consent Agreement and Consent Order ("CACO") issued by the Director, Waste Pesticides and Toxics Division, U.S. EPA, Region 5. The issuance of such a CACO shall constitute a waiver of your right to request a hearing on any stipulated matter in the Agreement.

Dated this_____ day of_____, 1998.

_____

Joseph M. Boyle, Chief
Enforcement and Compliance Assurance Branch
Waste, Pesticides and Toxics Division
U.S. Environmental Protection Agency
Region 5
Complainant

PIERCE & STEVENS CORP.
Division of Sovereign
Specialty Chemicals, L.P.

October 22, 1999

Treasurer of the United States of America
EPA, Region 5
P.O. Box 70753
Chicago, Illinois 60673
Attention: Regional Finance Officer

Re: EPA Docket No. 5-RCRA-98-006

To Whom It May Concern:

Please find enclosed a cashier's check in the amount $50,000 from Pierce & Stevens Corp. in regards to the following matter:

EPA Docket Number: 5-RCRA-98-006
Billing Document Number: BD054299007

Very Truly Yours,

Pierce & Stevens Corp.

Neil Weissman

Neil Weissman
Assistant Controller

CC: Kevin Johnston
John Zielinski

THIS MULTI-TONE AREA OF THE DOCUMENT CHANGES COLOR GRADUALLY AND EVENLY FROM DARK TO LIGHT WITH DARKER AREAS BOTH TOP AND BOTTOM

M&T Bank
Manufacturers and Traders Trust Company
BUFFALO, N. Y. 14240

OFFICIAL CHECK

No. 3667884

10-4
220

Pierce & Stevens Corp
REMITTER

October 22, 19 99

PAY TO THE ORDER OF***Treasurer, United States Of America*** $***50,000 00***

50,000dls00cts

TWO AUTHORIZED SIGNATURES REQUIRED FOR AMOUNTS $2,500.00 & OVER

EPA DOCKET NUMBER: 5-RCRA-98-006
BILLING DOCUMENT NUMBER: BD 054299007

AUTHORIZED SIGNATURE

AUTHORIZED SIGNATURE

COPYBAN+ ANTI-FRAUD PROTECTION - PATENTS 4,210,346; 4,227,720; 4,310,180; 5,197,765; 5,346,189

⑈3667884⑈ ⑆022000046⑆ 56⑈219 9⑈

THE ORIGINAL DOCUMENT HAS A REFLECTIVE WATERMARK ON THE BACK. HOLD AT AN ANGLE TO VIEW WHEN CHECKING THE ENDORSEMENT.

UNITED STATES ENVIRONMENTAL PROTECTION AGENCY
REGION 5
77 WEST JACKSON BOULEVARD
CHICAGO, IL 60604-3590

September 28, 1999

REPLY TO THE ATTENTION OF:

C-14J

CERTIFIED MAIL
RETURN RECEIPT REQUESTED

Jeryl L. Olson, Esq.
Susannah A. Smetana, Esq.
Seyfarth, Shaw, Fairweather & Geraldson
55 East Monroe Street, Suite 4200
Chicago, Illinois 60603-5803

Re: Pierce & Stevens Corp., Docket No. 5-RCRA-98-006
Consent Agreement and Final Order

Dear Ms. Olson and Ms. Smetana:

Enclosed please find one of two original signed copies of a fully executed Consent Agreement and Final Order ("CAFO") in resolution of the above case. The other original was filed on September 28, 1999, with the Regional Hearing Clerk.

Please have Pierce & Stevens Corporation pay the civil penalty in the amount of $50,000.00 in the manner prescribed in paragraph 13 of the CAFO, and reference your check with the number BD054299007 and Docket No. 5-RCRA-98-006. The payment is due within 30 calender days of the effective date.

Thank you for your cooperation in resolving this matter.

Sincerely,

Kevin C. Chow
Associate Regional Counsel

Enclosure

cc: Todd Marvel, IEPA (w/enclosure)

Recycled/Recyclable • Printed with Vegetable Oil Based Inks on 50% Recycled Paper (20% Postconsumer)

bcc: Kevin Chow, ORC (w/enclosure)

Regional Hearing Clerk, E-19J (w/enclosure)

DE-9J/PK:be/9/22/99/filename:P&Stra

ENFORCEMENT AND COMPLIANCE ASSURANCE BRANCH

SECRETARY	SECRETARY	SECRETARY	SECRETARY	SECRETARY	SECRETARY
9/22/99					9/28/99
AUTHOR/ TYPIST	MINN/OHIO SECTION CHIEF	MICHIGAN/ WISCONSIN SECTION CHIEF	ILLINOIS/ INDIANA SECTION CHIEF	ECAB BRANCH CHIEF	WPTD DIVISION DIRECTOR
			9/22/99	for JHB 9-27-99	RS 9-27-99

UNITED STATES ENVIRONMENTAL PROTECTION AGENCY
REGION 5
BEFORE THE ADMINISTRATOR

'99 SEP 28 AM 11:18

In the Matter of:	)	
	)	
Pierce & Stevens Corporation	)	Docket No. 5-RCRA-'98-006
245 East Kehoe Boulevard	)	
Carol Stream, Illinois 60187	)	Administrative Law Judge
	)	Barbara A. Gunning, Presiding
EPA ID No. ILD 055 434 443	)	
	)	
Respondent.	)	
	)	

CONSENT AGREEMENT AND FINAL ORDER

Complainant being, by lawful designation, the Chief of the Enforcement and Compliance Assurance Branch, Waste, Pesticides & Toxics Division, United States Environmental Protection Agency, Region 5 ("EPA");

Respondent being Pierce & Stevens Corporation, a corporation organized under the laws of New York, which operates a business at 245 East Kehoe, Carol Stream, Illinois ("the facility").

Complainant having initiated this civil administrative proceeding for the assessment of a civil penalty, pursuant to Section 3008(a)(1) of the Resource Conservation and Recovery Act of 1976, as amended ("RCRA"), 42 U.S.C. § 6928(a)(1), and Sections 22.01(a)(4), 22.13, and 22.37 of the Consolidated Rules of Practice Governing the Administrative Assessment of Civil Penalties and the Revocation or Suspension of Permits, 40 CFR §§ 22.01(a)(4), 22.13, and 22.37, by filing the Complaint, Findings

of Violation and Compliance Order ("Complaint") herein on August 14, 1998, against Respondent Pierce & Stevens Corporation; and

Complainant and Respondent (the "Parties") having agreed that settlement of this matter is in the public interest, and that entry of this Consent Agreement and Final Order ("CAFO"), pursuant to 40 C.F.R. § 22.18, without further litigation is the most appropriate means of resolving this matter.

NOW, THEREFORE, before the taking of any testimony, upon the pleadings, without adjudication of any issue of fact or law, and upon consent and agreement of the Parties, it is hereby Ordered and Adjudged as follows:

I. STIPULATIONS

The Parties, desiring to settle this action, enter into the following stipulations:

1. Respondent has been served with a copy of the Complaint in this matter.

2. The Complaint alleges various violations by Respondent of RCRA and the regulations promulgated thereunder. The Complaint is fully incorporated herein by reference.

3. Respondent filed an Answer and requested a hearing in accordance with the Administrative Procedure Act, 5 U.S.C. §§ 551 et seq., and the Consolidated Rules of Practice Governing the Administrative Assessment of Civil Penalties and the Revocation

or Suspension of Permits, 40 CFR Part 22. The Answer and Request for Hearing is fully incorporated herein by reference.

4. This Consent Agreement and Final Order shall apply to and be binding upon Respondent, its officers, directors, employees, successors and assigns, including, but not limited to, subsequent purchasers. Respondent shall give notice and a copy of this CAFO to any successor in interest prior to any transfer of ownership or operational control of the facility.

5. Respondent admits the jurisdictional allegations of the Complaint. Respondent waives any defenses it might have as to jurisdiction and venue, and agrees not to contest such jurisdiction and venue in any proceeding to enforce the provisions of this CAFO.

6. Respondent neither admits nor denies the factual allegations and the conclusions of law contained in the Complaint. By entering this CAFO and complying with its terms, Respondent neither admits nor denies any other particular fact, statement, legal conclusion, liability or past or present violation of any law or regulation, and the CAFO shall not be interpreted as including such admission or denial.

7. Respondent hereby withdraws its request for a hearing, and waives any and all rights under any provisions of law to a judicial or administrative hearing or appeal on any issue of law

or fact set forth in the Complaint or to challenge the terms and conditions of this CAFO.

8. Respondent waives any rights it may possess in law or equity to challenge the authority of EPA to bring a civil action in the appropriate United States District Court to compel compliance with the CAFO and/or to seek an additional penalty for the noncompliance.

9. This CAFO shall become effective on the date it is signed by the Director of the Waste, Pesticides and Toxic Division, EPA, Region 5.

10. Respondent consents to the terms of this CAFO.

II. CONSENT AGREEMENT

Based on the foregoing stipulations, the Parties agree to the entry of the following Consent Agreement:

11. Respondent consents to the issuance of this CAFO and consents for the purposes of settlement to: the payment of the civil penalty set forth below; the performance of the Supplemental Environmental Project ("SEP") described herein; and the closure of the hazardous waste management unit at Respondent's facility, also referred to as the Central Accumulation Area, in accordance with the applicable provisions of 35 IAC Part 725, Subpart G, and 40 CFR Part 265, Subpart G.

12. Pursuant to Sections 3008(a) and 3008(g) of RCRA, 42 U.S.C. §§ 6928(a) and (g), the nature of the alleged violations, Respondent's agreement to perform a SEP, and other relevant factors, EPA has determined that an appropriate civil penalty to settle this action is in the amount of FIFTY THOUSAND DOLLARS ($50,000).

13. Not more than thirty (30) days after the effective date of the executed CAFO signed by the Director of the Waste, Pesticides and Toxics Division, EPA, Region 5, Respondent shall submit a cashier's or certified check, payable to the order of the "Treasurer, United States of America," in the amount of FIFTY THOUSAND DOLLARS ($50,000), to:

EPA, Region 5
P.O. Box 70753
Chicago, Illinois 60673
Attention: Regional Finance Officer

Respondent shall provide a copy of the check and a copy of the transmittal of the payment to:

Sonja R. Brooks
Regional Hearing Clerk
EPA, Region 5 (E-19J)
77 West Jackson Boulevard
Chicago, Illinois 60604-3590

and

Kevin C. Chow
Associate Regional Counsel
EPA, Region 5 (C-14J)
77 West Jackson Boulevard
Chicago, Illinois 60604-3590

and

Mr. Patrick Kuefler
Enforcement and Compliance Assurance Branch
Waste, Pesticides and Toxics Division
EPA, Region 5 (DE-9J)
77 West Jackson Boulevard
Chicago, Illinois 60604-3590

The check shall bear the Respondent's name, the case docket number, and billing document number BD054299007. Interest and late charges shall be paid as specified in Paragraph 26 herein.

14. Respondent agrees not to claim or attempt to claim a Federal income tax deduction or credit covering all or any part of the cash civil penalty paid to the U.S. Treasury.

15. a. Respondent shall undertake and complete the following SEP, which is agreed to by the Parties, and which is intended to secure significant environmental or public health protection and improvements. The SEP consists of the construction and operation of a cooling tower which will recirculate non-contact cooling water used for cooling chemical reactors at the facility. The operation of the cooling tower will reduce, by not less than 80%, the amount of non-contact cooling water discharged. The operation of the cooling tower will also reduce non-contact cooling water consumption by not less than 80%. These reductions will be determined as specified in the scope of work. The construction and operation of the cooling tower will not result in the release of any hazardous constituents except in compliance with environmental laws.

Respondent shall begin construction of the cooling tower within four (4) months of the effective date of this CAFO.

b. Respondent shall complete the SEP as specifically described in the scope of work (hereinafter, the "Scope of Work"), attached hereto as Exhibit A and incorporated herein by reference. Respondent shall apply for and obtain all permits and approvals necessary for the implementation and completion of the SEP activities.

16. The total expenditure for the SEP shall be not less than ONE HUNDRED AND FORTY-FIVE THOUSAND DOLLARS ($145,000) to purchase the equipment and construct the cooling tower, and an additional FOURTEEN THOUSAND DOLLARS ($14,000) annually to operate the cooling tower for a period of no less than 3 years in accordance with the specifications set forth in the Scope of Work. Respondent shall include documentation of the expenditures made in connection with the SEP as part of the SEP Completion Report.

17. Respondent hereby certifies that, as of the date of this CAFO, Respondent is not required to perform or develop the SEP by any Federal, State or local law or regulation; nor is Respondent required to perform or develop the SEP by any other agreement, grant or as injunctive relief in this or any other case. Additionally, Respondent certifies that it is not funding any aspect of the SEP with any funding provided by a Federal,

State, or local grant. Respondent further certifies that it has not received, and is not presently negotiating to receive, credit in any other enforcement action for the SEP.

18. a. Respondent shall submit a SEP Completion Report to EPA within sixty (60) days after completion of the start-up trials/system commissioning period of the SEP. The SEP Completion Report shall contain the following information:

(i) A detailed description of the SEP as implemented;

(ii) A description of any operating problems encountered and the solutions thereto;

(iii) Itemized costs;

(iv) Certification that the SEP has been fully implemented pursuant to the provisions of this CAFO; and

(v) A description of the environmental and public health benefits resulting from implementation of the SEP.

b. Respondent shall submit Annual Reports due one year from the date of submission of the SEP Completion Report and each year from that date for two years thereafter, describing the following:

(i) A description of any operating problems encountered during the previous year and the solutions thereto;

(ii) Itemized costs of operating the cooling tower during the year;

(iii) Certification that the SEP has been fully implemented pursuant to the provisions of this CAFO.

c. Respondent agrees that failure to submit the SEP Completion Report or any Annual Report required by subsections a. and b. above shall be deemed a violation of this CAFO and Respondent shall become liable for stipulated penalties pursuant to paragraph 25 below.

d. In itemizing its costs in the SEP Completion Report, Respondent shall clearly identify and provide acceptable documentation for all eligible SEP costs. Where the SEP Completion Report includes costs not eligible for SEP credit, those costs must be clearly identified as such. For purposes of this paragraph, "acceptable documentation" includes invoices, purchase orders, or other documentation that specifically identifies and itemizes the individual costs of the goods and/or services for which payment is being made. Canceled drafts do not constitute acceptable documentation unless such drafts specifically identify and itemize the individual costs of the goods and/or services for which payment is being made.

19. Respondent agrees that EPA and/or the Illinois Environmental Protection Agency ("IEPA") may inspect the facility at any time in order to confirm that the SEP is being undertaken in conformity with the representations made herein, and that all records pertaining to the SEP will be kept at the facility and made available to EPA and IEPA upon request.

20. Respondent shall continuously use or operate the systems installed as the SEP for not less than three (3) years subsequent to installation.

21. Respondent shall maintain legible copies of data underlying all documents or reports submitted to EPA pursuant to this CAFO and shall provide the data to EPA not more than seven days after a request for such information. Respondent shall, by its officers, sign and certify under penalty of law that the information contained in the SEP Completion Report, Annual Reports and data referenced herein is true, accurate, and not misleading by signing the following statement:

> I certify under penalty of law that I have examined and am familiar with the information submitted in this document and all attachments and that, based on my inquiry of those individuals immediately responsible for obtaining the information, I believe that the information is true, accurate, and complete. I am aware that there are significant penalties for submitting false information, including the possibility of fines and imprisonment.

22. a. After receipt of the SEP Completion Report described in paragraph 18(a) above, EPA will notify the Respondent, in writing, regarding: (i) any deficiencies in the SEP Completion Report itself along with a grant of an additional thirty (30) days for Respondent to correct any deficiencies; or (ii) EPA's conclusion that the project has been completed satisfactorily; or (iii) a determination by EPA that the project

has not been completed satisfactorily and seeking stipulated penalties in accordance with paragraph 25 herein.

b. If EPA identifies deficiencies as set forth in paragraph 22(a)(i) above, i.e., if the SEP Completion Report is determined to be deficient but EPA has not yet made a final determination about the adequacy of SEP completion itself, EPA shall permit Respondent the opportunity to object in writing to the notification of deficiency given pursuant to this paragraph within ten (10) days of receipt of such notification. EPA and Respondent shall have an additional thirty (30) days from the receipt by EPA of the notification of objection to reach agreement on changes necessary to the SEP Completion Report. If agreement cannot be reached on any such issue within this thirty (30) day period, EPA shall provide a written statement of its decision on adequacy of the SEP Completion Report to Respondent, which decision shall be final and binding on Respondent.

23. For purposes of paragraph 22(a) above, the determination of whether Respondent has fulfilled the requirements of the SEP as specified in paragraphs 15 and 16 of this CAFO and the scope of work shall be in the sole discretion of EPA.

24. Whenever, under the terms of this CAFO, notice is required to be given or a document sent by one Party to another,

it shall be directed to the individuals at the addresses specified below:

As to EPA:

Mr. Patrick F. Kuefler
Enforcement and Compliance Assurance Branch
Waste, Pesticides and Toxics Division
EPA, Region 5 (DE-9J)
77 West Jackson Boulevard
Chicago, Illinois 60604-3590

and

Kevin C. Chow
Associate Regional Counsel
EPA, Region V (C-14J)
77 W. Jackson Boulevard
Chicago, Illinois 60604-3590

As to Respondent:

Mr. Kevin Johnston
Manager, Health, Safety & Environment
Pierce & Stevens Corporation
710 Ohio Street
Buffalo, NY 14203

and

Jeryl L. Olson, Esq.
Seyfarth, Shaw, Fairweather & Geraldson
55 E. Monroe Street, Suite 4200
Chicago, Illinois 60603

25. a. In the event that Respondent fails to comply with any of the terms or provisions of this CAFO relating to the performance of the SEP, Respondent shall be liable for stipulated penalties according to the provisions set forth below:

(i) Except as provided in subparagraph (ii) immediately below, for a SEP which has not been completed satisfactorily pursuant to this CAFO and the SEP Scope of Work, Respondent shall pay a stipulated penalty to the United States in the amount of $37,798.

(ii) If the SEP is not completed in accordance with paragraphs 15 and 20 and the SEP Scope of Work, but the Complainant determines that the Respondent: (a) made good faith and timely efforts to complete the project; and (b) certifies, with supporting documentation, that at least 90 percent of the amount of money which was required to be spent was expended on the SEP as described in paragraph 16, Respondent shall not be liable for any stipulated penalty.

(iii) If the SEP is completed in accordance with paragraphs 15 and 20 and the SEP Scope of Work, but the Respondent spent less than 90 percent of the amount of money required to be spent for the project as described in paragraph 16, Respondent shall pay a stipulated penalty to the United States in the amount of $9,000.

(iv) If the SEP is completed in accordance with paragraphs 15 and 20 and the SEP Scope of Work, and the Respondent spent at least 90 percent of the amount of money required to be spent for the project as described in paragraph 16, Respondent shall not be liable for any stipulated penalty.

(v) For failure to submit the SEP Completion Report required by paragraph 18(a) above, Respondent shall pay a stipulated penalty in the amount of $200 for each day after the date the report was due, until the report is submitted.

(vi) For failure to submit any other report required by paragraph 18(b) above, Respondent shall pay a stipulated penalty in the amount of $200 for each day after the report was originally due until the report is submitted.

b. For purposes of determining the amount of stipulated penalties above, the determinations of whether the SEP has been satisfactorily completed and whether the Respondent has made a good faith, timely effort to implement the SEP shall be at the sole discretion of EPA.

c. Stipulated penalties for subparagraphs (a)(v) and (vi) above shall begin to accrue on the day after performance is due, and shall continue to accrue through the final day of the completion of the activity.

d. Respondent shall pay stipulated penalties not more than fifteen (15) days after receipt of written demand by EPA for such penalties. Method of payment shall be in accordance with the provisions of paragraph 13 above. Interest and late charges shall be paid as stated in paragraph 26 herein.

26. Pursuant to 31 U.S.C. § 3717, EPA is entitled to assess interest and penalties on debts owed to the United States and a charge to cover the cost of processing and handling a delinquent claim. Any unpaid portion of a civil or stipulated penalty shall bear interest at the rate established by the Secretary of the Treasury pursuant to 31 U.S.C. § 3717(a)(1). Interest will therefore begin to accrue on a civil or stipulated penalty if it is not paid by the last date required. Interest will be assessed at the rate of the United States Treasury tax and loan rate in accordance with 4 CFR § 102.13(c). A charge will be assessed to cover the costs of debt collection, including processing and handling costs and attorneys fees. In this regard, Respondent shall pay a late payment handling charge of $15.00 on any late payment, with an additional charge of $15.00 for each subsequent thirty (30) calender day period over which an unpaid balance remains. In addition, a non-payment penalty charge of six (6) percent per year compounded annually will be assessed on any portion of a civil or stipulated penalty which remains delinquent more than ninety (90) days after payment is due. Any such non-payment penalty charge on the debt will accrue from the date the penalty payment becomes due and is not paid. This non-payment penalty is in addition to charges which accrue or may accrue as interest or late payment handling charges. 4 CFR §§ 102.13(d) and (e).

27. Respondent shall immediately comply with the hazardous waste generator requirements at 35 IAC Part 722 and 40 CFR Part 262.

28. Respondent shall within sixty (60) days of the effective date of this CAFO submit a closure plan pursuant to 35 IAC Part 725, Subpart G, and 40 CFR Part 265, Subpart G, addressing closure of the Respondent's Central Accumulation Area to the Illinois Environmental Protection Agency for review and approval at the following address:

Illinois Environmental Protection Agency
Bureau of Land
1021 North Grand Avenue East
Springfield, IL 62702-3998
Attention: Joyce Munie

The closure plan must include a written cost estimate in current dollars of the cost of closing the Facility's Central Accumulation Area, in accordance with 35 IAC § 725.242(a) and 40 CFR § 265.142(a).

29. Respondent shall upon approval of the closure plan by IEPA, carry out and complete all closure activities according to the time frames stated in the approved closure plan.

30. Respondent shall within sixty (60) days of completion of final closure of the Central Accumulation Area, submit to IEPA (pursuant to 35 IAC § 725.215 and 40 CFR § 265.115), by registered mail, a certification that the Central Accumulation Area has been closed in accordance with the specifications in the

approved closure plan. The certification must be signed by the owner or operator and by an independent registered professional engineer.

31. Respondent shall provide EPA with copies of all submittals required by Paragraphs 28-30 of this CAFO and all closure-related correspondence with IEPA within fourteen (14) days of Respondent's submittal of each document to IEPA.

32. Any public statement, oral or written, in print, film, or other media, made by Respondent making reference to the SEP shall include the following language, "This project was undertaken in connection with the settlement of an enforcement action taken by the U.S. Environmental Protection Agency for alleged violations of RCRA and its regulations."

33. This CAFO shall not relieve, nor shall anything in this CAFO be construed to relieve, Respondent of its obligation to comply with all applicable provisions of Federal, State or local statutes and regulations, including the RCRA Subtitle C requirements at 40 CFR Parts 260 through 270, nor shall it be construed to be a ruling on, or determination of, any issue related to any Federal, State or local permit, nor shall it be construed to constitute EPA approval of the equipment or technology installed by Respondent in connection with the SEP undertaken pursuant to this CAFO.

34. Respondent hereby agrees not to claim any funds expended in the performance of the SEP as a deductible business expense for purposes of Federal taxes. In addition, Respondent hereby agrees that it will submit to EPA certification that any funds expended in the construction of the SEP have not been deducted from Federal taxes. Such certification shall be provided in the SEP Completion Report or the first appropriate Annual Report submitted by Respondent under Paragraph 18.

35. This CAFO constitutes the entire settlement between the Parties, and constitutes a settlement by EPA of all claims for civil penalties pursuant to RCRA for the violations alleged in the Complaint. Nothing in this CAFO is intended to nor shall be construed to operate in any way to resolve any criminal liability of the Respondent. Compliance with this CAFO shall not be a defense to any actions subsequently commenced pursuant to federal laws and regulations administered by EPA.

36. Except for purposes of enforcing the terms of this CAFO, and except for EPA's reservation of its rights to consider this CAFO as evidence of Respondent's prior history of violations for the purpose of making appropriate adjustments in the calculation of a proposed penalty in any enforcement proceeding against Respondent taken subsequent to the filing of this CAFO, this CAFO shall not be used against Respondent as evidence of any liability or violation. This CAFO shall not prejudice or impair

any right, remedy or defense EPA or Respondent may have in any other future legal proceeding, except as specified by the terms of this CAFO, including all stipulations, agreements, waivers, admissions, and reservations made in this CAFO.

37. Each undersigned representative of the parties to this CAFO certifies that he or she is fully authorized by the party represented to enter into the terms and conditions of this CAFO and to execute and legally bind that party to it.

38. Each party shall bear its own costs and attorneys fees in connection with the action resolved by this CAFO.

39. The information required to be maintained or submitted pursuant to this CAFO is not subject to the Paperwork Reduction Act of 1980, 44 U.S.C. §§ 3501 et seq.

40. Notwithstanding any other provision of this CAFO, EPA expressly reserves any and all rights to bring an enforcement action pursuant to Section 7003 of RCRA, 42 U.S.C. § 6973, or other statutory authority should EPA find that the handling, storage, treatment, transportation, or disposal of solid waste or hazardous waste at the facility may present an imminent and substantial endangerment to health or the environment. EPA also expressly reserves the right: (a) for any matters other than violations alleged in the Complaint, to take any action authorized under Section 3008 of RCRA; (b) to enforce compliance with the applicable provisions of 35 IAC Parts 700 through 730;

(c) to take any action under 40 CFR Parts 124 and 270; (d) to enforce compliance with this CAFO, including seeking any lawful remedies or sanctions available by virtue of Respondent's violation of this agreement; and (e) to bring an enforcement action for Respondent's alleged violations of any applicable provision of law other than those alleged in the Complaint.

41. This CAFO shall terminate after: (1) EPA reviews the submissions by Respondent to EPA, as required by this CAFO; (2) EPA determines that Respondent has fully complied with all terms and conditions of this CAFO, including payment, in full of all penalties due and owing; and (3) EPA provides written notice to Respondent of such termination within 120 days of Respondent's fulfillment of Respondent's last outstanding obligation under this CAFO.

III. SIGNATORIES

Each undersigned representative of a Party to this CAFO, consisting of twenty-two (22) pages and an exhibit, certifies that he or she is fully authorized to enter into the terms and conditions of this CAFO and to legally bind such party to this document.

For Pierce & Stevens Corporation:

Agreed to this 17th day of September, 1999.

By: Frederick A. Quinn

Frederick A. Quinn, President
Pierce & Stevens Corporation
Respondent

For the United States Environmental Protection Agency, Region 5:

Agreed to this 27th day of September, 1999.

By: George Hamper

for Joseph M. Boyle, Chief
RCRA Enforcement and Compliance Assurance Branch
Waste, Pesticides and Toxics Division
EPA, Region 5
Complainant

IV. ORDER

The foregoing Consent Agreement, being agreed and consented to, is hereby approved and incorporated by reference into this Order. The Respondent is hereby ordered to comply with the terms of the above Consent Agreement, effective immediately.

Date: September 28, 1999

Robert L. Springer, Director
Waste, Pesticides and Toxics Division
U.S. Environmental Protection Agency,
Region 5

IN THE MATTER OF:
Pierce & Stevens Corp.
Carol Stream, Illinois

DOCKET NO. 5-RCRA-'98-006

IN THE MATTER OF: PIERCE & STEVENS CORPORATION,
Docket No. 5-RCRA-'98-006

EXHIBIT A

SCOPE OF WORK FOR SUPPLEMENTAL ENVIRONMENTAL PROJECT

"Cooling Tower Scope of Work"
Pierce & Stevens Corporation
245 East Kehoe Blvd.
Carol Stream. IL 60187
Docket No. 5-RCRA-98-006
Condenser/ Jacket Cooling Tower Project

Pursuant to the Consent Agreement and Final Order between U.S. EPA and Pierce & Stevens Corporation, the following "Cooling Tower Project Scope" is provided. The project scope is defined as follows:

The project consists of the construction and operation of a cooling tower which will recirculate non-contact cooling water. The operation of the cooling tower will reduce by not less than 80% the amount of non-contact cooling water discharged. The amount of water which would have been discharged without the cooling tower in place (Q) will be measured by the installation of a flowmeter or flowmeters installed in non-contact cooling water supply or return lines. The amount of water which will be discharged to the outfall, after cooling tower installation (D), will be measured by a flowmeter installed in the cooling tower blow-down discharge line. The percent reduction will be calculated as follows: {(Q-D)/Q} x 100.

The operation of the cooling tower will reduce non-contact cooling water consumption by not less than 80%. This percent reduction will be determined by measuring water flow rate through non-contact cooling water usage points (Q), subtracting the cooling tower make-up water (M), and dividing the result by the non-contact cooling water flow {(Q-M)/Q} x 100.

Equipment

- Minimum of two (2) open evaporative cooling towers with capacity to cool jacket water approximately 6,000,000 btu/hr (peak load) utilizing a 30-40°F differential.

- Two (2) base mounted cooling tower pumps to deliver approximately 400 GPM from the storage tanks to the cooling towers.

- Minimum of two (2) 3000-gallon storage tanks to act as buffers for the load side of the system. Three thousands gallon tank is the maximum size that will fit through existing door openings. Tanks shall be constructed of polyethylene and shall be fitted with proper vent, cross connects, drain, and pump connections.

- Two (2) load-side circulating pumps (primary and stand-by) which pump cooling water directly to the water jackets of the tank condensers. Approximate capacity of 250 @ 50 psig. Pumps shall be base mounted end suction type centrifugal pumps equal to "Aroura".

- A centrifugal separator shall be provided downstream of the open cooling towers to reduce heat exchanger fouling. The separator shall be a vertical type unit equal to "Lakos", and shall be provided with a timed blow-down control.

- Interior distribution piping shall be schedule 40 CPVC or fiberglass reinforced plastic (FRP) piping. All exterior piping to cooling towers shall be schedule 40 black steel with a protective insulating jacket.

- Instrumentation shall be digital type and shall include the following:
  - Cooling tower pump start/stop – tower #1 (DO)
  - Cooling tower fan variable speed drive control – tower #1 (AO)
  - Cooling tower pump start/stop – tower #2 (DO)
  - Cooling tower fan variable speed drive control – tower #2 (AO)
  - Cooling tower discharge water temperature – tower #1 (AI)
  - Cooling tower discharge water temperature – tower #2 (AI)
  - Cooling tower return water temperature – tower #1 (AI)
  - Cooling tower return water temperature – tower #1 (AI)
  - Load side pump start/stop – primary pump (DO)
  - Load side pump start/stop – primary pump (DO)
  - Load side discharge water temperature (AI)
  - Load side return water temperature (AI)

All digital controls shall be compatible with the facilities existing control system.

Cooling Tower Scope of Work – Project Schedule
Pierce & Stevens Corporation
245 East Kehoe Blvd.
Carol Stream. IL 60187
Docket No. 5-RCRA-98-006

Pierce & Stevens, Carol Stream, IL Facility
Cooling Tower Project

No.	Task Description
1.	Project Scope Development
2.	Project Scope Review
3.	Detailed Engineering Design Phase
4.	Design Review
5.	Construction Bid Package Development
6.	Bid Phase - Construction / Installation
7.	Bid Review - Construction
8.	Award Construction Contract / Issue P.O.
9.	Equipment Bid Phase - P&S Buyouts
10.	Equipment Procurement Phase - P&S
11.	Receive Equipment - P&S
12.	Construction Phase / Installation Phase
13.	Start-up Trials / System Commissioning
14.	Operator Training
15.	Normal Operations - System Acceptance

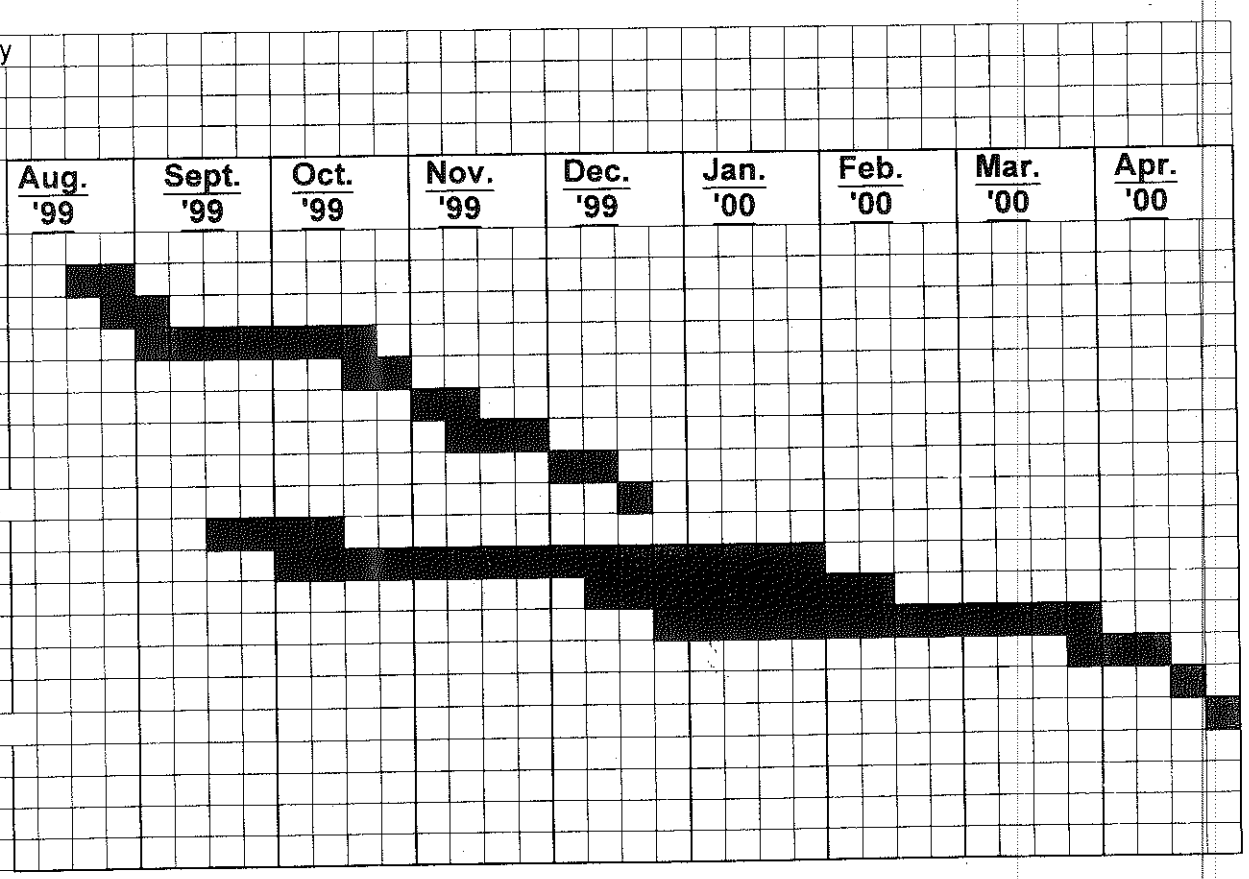

Note: Each box within the above chart represents one week.
Construction to begin no later than December 31, 1999
Construction Complete by March 31, 2000
Start-up Phase complete by April 30, 2000
Commencement of normal cooling tower operations no later than April 30, 2000

IN THE MATTER OF: PIERCE & STEVENS CORPORATION
Docket No. 5-RCRA-'98-006

CERTIFICATE OF SERVICE

I hereby certify that I have caused a copy of the foregoing Consent Agreement and Final Order to be served upon the persons designated below, on the date below, by causing said copy to be deposited in the U.S. Mail, First Class and certified-return receipt requested, postage prepaid, at Chicago, Illinois, in an envelope addressed to:

Jeryl L. Olson, Esq.
Susannah A. Smetana, Esq.
Seyfarth, Shaw, Fairweather & Geraldson
55 East Monroe Street, Suite 4200
Chicago, Illinois 60603-5803

I have further caused an original of the Consent Agreement and Final Order and this Certificate of Service to be personally served in the Office of the Regional Hearing Clerk located at U.S. EPA, Region 5, 77 West Jackson Boulevard, Chicago, Illinois 60604, on the date below.

I have further caused a copy of the Consent Agreement and Final Order and this Certificate of Service to be sent by Pouch Mail to: Honorable Barbara A. Gunning, Administrative Law Judge, Office of Administrative Law Judges (A-110), U.S. Environmental Protection Agency, 401 M Street, S.W., Washington, D.C. 20460, on the date below.

These are said persons' last addresses known to the subscriber.

Dated this 28th day of September, 1999.

Kevin C. Chow
Associate Regional Counsel
U.S. EPA, Region 5

MEMORANDUM

From: Kevin Chow
Office of Regional Counsel

To: Pierce & Stevens case file

Date: September 24, 1999

Re: Change to CAFO

During sign-off, a typographical error in the CAFO was found after execution by the Respondent. I called Susannah Smetana, counsel for Pierce & Stevens, and notified her that EPA would correct the error and substitute the page with a typo-free page, and continue to process the CAFO for final execution and issuance. She concurred.

The error at issue was in the second sentence of Paragraph 26 of the CAFO. The phrase "Secretary of those Treasury" was corrected to "Secretary of the Treasury".

RCRA CONSENT AGREEMENT AND FINAL ORDER SIGN-OFF

PART I **BACKGROUND**

Facility Name Pierce + Stevens Corp

Facility EPA ID Number ILD 055 434 443

Docket Nmber 5 RCRA - 98 - 006

ECAB Assignee/Phone Kneffler 3-6282 ORC Assignee/Phone Chow 3-6181

Summary of Agreement Pay $50K cash and conduct a sep of $175K = penalty credit of $37,798

PART II **CONCURRENCES ON PROPOSED CAFO (PROPOSAL NO. 1)**

		Initials	Date	Agree	Disagree
1.	ECAB Assignee	[illegible]	9/13/99	✓	
2.	Chief, ECAB Section	[illegible] for Lorna Jerome	9/13/99	✓	
3.	Asst. Regional Counsel	kcc	9/14/99	✓	
4.	Chief, ECAB	[illegible]	9/14/99	yes	

PART III **RETURN TO ORC ASSIGNEE FOR TRANSMITAL OF TWO ORIGINAL COPIES OF DRAFT TO RESPONDENT.**

PART IV **FINAL CAFO APPROVAL, AFTER RESPONDENT HAS SIGNED BOTH COPIES OF PROPOSED CAFO**

		Initials	Date	Agree	Disagree
1.	ECAB Assignee	[illegible]	9/22/99	✓	
2.	Chief, ECAB Section	MJ	9/27/99	X	
3.	Asst. Regional Counsel	kcc	9/22/99	✓	
4.	ORC Section Chief	CLP	9/23/99	✓	
5.	Chief, ECAB	[illegible] for MB	9/27/99	✓	
6.	Director, WPTD	RS	9/28/99	✓	
~~7.~~	~~Regional Administrator~~		/ /		

PART V **RETURN TO A. PERRY, DRE-8J, FOR MAILING**

☑ **HAVE YOU COMPLETED THE CASE CONCLUSION DATA SHEET? DO NOT FORWARD IF IT IS NOT INCLUDED IN SIGN-OFF PACKAGE.**

RCRA CONSENT AGREEMENT AND FINAL ORDER SIGN-OFF

PART I **BACKGROUND**

Facility Name Pierce & Stevens Corp.

Facility EPA ID Number ILD 005 434 443

Docket Nmber 5 - RCRA - 98 - 006

ECAB Assignee/Phone Kuefler 3-6268 ORC Assignee/Phone Chow 3-6181

Summary of Agreement Pay $50 cash, conduct $145,000 SEP & conduct Subpart G closure on storage unit.

PART II **CONCURRENCES ON PROPOSAL CAFO (PROPOSAL NO. _____)**

		Initials	Date	Agree	Disagree
1.	ECAB Assignee	pa	7/1/99	X	
2.	Chief, ECAB Section	GW	7/7/99	✓	
3.	Asst. Regional Counsel	KCC	7/7/99	✓	
4.	Chief, ECAB		/ /		

PART III **RETURN TO ORC ASSIGNEE FOR TRANSMITAL OF TWO ORIGINAL COPIES OF DRAFT TO RESPONDENT.**

PART IV **FINAL CAFO APPROVAL, AFTER RESPONDENT HAS SIGNED BOTH COPIES OF PROPOSED CAFO**

		Initials	Date	Agree	Disagree
1.	ECAB Assignee		/ /		
2.	Chief, ECAB Section		/ /		
3.	Asst. Regional Counsel		/ /		
4.	ORC Section Chief		/ /		
5.	Chief, ECAB		/ /		
6.	Director, WPTD		/ /		
7.	Regional Administrator		/ /		

PART V **RETURN TO A. PERRY, DRE-8J, FOR MAILING**

☐ **HAVE YOU COMPLETED THE CASE CONCLUSION DATA SHEET? DO NOT FORWARD IF IT IS NOT INCLUDED IN SIGN-OFF PACKAGE.**

OECA/ORC/052098

CASE CONCLUSION DATA SHEET

(NOTE: PLEASE DO NOT LEAVE SPACES BLANK -- PUT N/A IF NOT APPLICABLE)

.F THIS MATTER INVOLVES A "SMALL ENTITY" PER THE SBA DEFINITION (61.Fed.Reg. 3280 (1996)) ALSO COMPLETE A *SBREFA FORM*--

Name: PATRICK KUEFLER
Phone: 3-6268
Date: 6/30/99

A. Case and Facility Background - ORC LEADK. CHOW

1. ORC DOCKET MATTER NUMBER:

2. Court Docket / Regional Hearing Clerk Docket Number: 5-RCRA-98-006

3. Case name: PIERCE & STEVENS CORP
(Add Defendants/Respondents if other than case name):

Information for one Facility (If more, attach additional pages.)
4.(a) EPA-FINDS facility-identification-number:

4.(b) EPA Program ID for the facility:ILD005434443

5. Facility Name: PIERCE & STEVENS CORP

6. Facility Address / Street: City: St: Zip: 6245 E. KEHOE, IL 60187

7.(a) Primary 4-digit SIC-code: 2891 (b) Other 4-digit SIC-codes:

8. Dun & Bradstreet number (not applicable for CERCLA actions):

9.(a) EPA Lead Attorney: CHOW

9.(b) EPA Program Contact:KUEFLER

10. **STATUTE(s)** and Section(s) violated **(COMMON STATUTE NAME, NOT C.F.R. or U.S.C.):** RCRA

11. ACTION TYPE
___ (a) Consent decree or court order resolving a civil judicial action - NOTE: when CD entered, send copy of CD and accounts receivable form to ORC DOCKET clerk, and to Comptroller Branch.
DOES THIS CD RESOLVE ALL ISSUES IN THIS CASE _____YES _____NO
_X__ (b) Administrative penalty order (with/without injunctive relief)
___ (c) Superfund administrative order for cost recovery
___ (d) Federal facility compliance agreement (not incl. RCRA matters)
___ (e) Field citation
___ (f) Administrative compliance order

12. **ACTION DATE:** Issued /filed: 8/12/98 Final order:

13. **AUTHORIZING SECTION** for administrative actions **(COMMON STATUTE NAME, NOT C.F.R. or U.S.C.): 3008A**

14. Was this an overfile action? __ Yes __X_ No
(Overfiling occurs when (1) a state/local delegated or approved program has taken no action or an inadequate action to address a violation at facility; AND (2) EPA takes an enforcement action against the same facility for the same violation; AND (3) the state has not joined with EPA in the EPA action nor asked EPA to bring the action.)

15. Was this a multi-media action? __ Yes _X_ No
Check all that make this action multi-media: __ inspection __ complaint __ settlement __ SEP

16. Was this action a part of a geographic initiative? __ No _X__Yes: Which? __UMR_____

17. Was the Agency activity taken in response to Environmental Justice concerns? __ Yes _X_ No

18. Was Alternative Dispute Resolution used in this action? __ Yes _X_ No

Compliance Actions (Non-SEP related) - **PROGRAM LEAD**

19. What action did violator accomplish prior to receipt of settlement/order or will take to return to compliance or meet additional requirements? This may be due to settlement/order requirements or otherwise required by statute or regulation (e.g. actions related to an APO which did not specify compliance requirements). Where separate penalty and/or compliance orders are issued in connection w/ same violations, report the following information for only one of those orders. Select responses from the following: NA
Use reduction ___ Testing ___

CASE CONCLUSION DATA SHEET

C DOCKET Matter Number: (Copy from page 1)

Industrial process change ___
Site access ___
Storage/disposal change _X__
Remediation ___
Restoration ___
Removal ___
RD/RA ___
RI/FS ___
No action (penalty only) ___
Other (please describe) ___

Auditing ___
Monitoring/Sampling ___
Record keeping __X_
Labeling/manifesting ___
Information letter response ___
Permit application ___
Training ___
Emissions/discharge change (install/modify controls) ___

>>PROVIDE DESCRIPTION OF COMPLIANCE ACTIONS: UNDER THE SETTLEMENT P&S WILL STOP STORING HAZARDOUS WASTE FOR >90 DAYS AND WILL CONDUCT RCRA CLOSURE OF ONE HAZARDOUS WASTE STORAGE UNIT.

20. Cost of actions described in item #19: (Actual cost data supplied by violator is preferred figure.)
Physical actions: $ 8,000 Non-physical actions: $

21. (a) Quantitative environmental impact of actions described in item #19:
REDUCTIONS/ELIMINATIONS: NA

Pollutant	Pollutant code/CAS #	Amount	Units	Percent	Media
___	___	___	___	___%	_____
___	___	___	___	___%	_____

REPORTED INFORMATION: NA

Pollutant	Pollutant code/CAS#	Amount	Units	Media
___	___	___	___	_____
___	___	___	___	_____

21. (b) Qualitative environmental impact of actions listed in item #19. Select one or more of the following observed or predicted benefits:

Human health protection: Actual___ Potential__X_ Reductions beyond compliance requirements___
Worker protection: Actual___ Potential__X_ Increased public awareness___
Ecosystem protection: Actual___ Potential___ Increased fed/st/local govt knowledge___
Environmental restoration/land use___
Other (please describe)___

C. Supplemental Environmental Project (SEP) Information - PROGRAM LEAD

22. Categories of SEP(s) (check all the appropriate categories; if none go to #27.)
__ (a) Public health
__ (b) Pollution prevention
__ (1) equipment/technology modifications
__ (2) process/procedure modification
__ (3) product reformulation/redesign
__ (4) raw materials substitution
__ (5) improved housekeeping/O&M/training/inventory control
__ (6) in-process recycling
_X_ (7) energy efficiency/conservation
_X_ (c) Pollution reduction
__ (d) Environmental restoration and protection
__ (e) Assessments and audits
__ (f) Environmental compliance promotion
__ (g) Emergency planning and preparedness
__ (h) Other SEP category (specify): _____

DOES SEP ADDRESS ANY OF THE REGION 5 ENVTL. PRIORITIES? NO
___Toxics Reduction
___Brownfields redevelopment
___Environmental justice
___Sediment clean-up
___Ozone air quality standards attainment
___Critical habitat protection and restoration

23. SEP description: FACILIITY WILL INSTALL EQUIPMENT WHICH WILL ALLOW THEM TO REDUCE WATER CONSUMPTION AND DISCHARGE BY APPROXIMATELY 80%.

24. Cost of SEP. Cost calculated by the Project Model is preferred. $ 47,248

CASE CONCLUSION DATA SHEET

25. Is Environmental Justice addressed by SEP? ___Yes __X__No

ORC DOCKET Matter Number: _____ (Copy from page 1)

26. (a) Quantitative environmental impact of SEP; pollutants and/or chemicals and/or waste-streams, and amount of reductions/eliminations (e.g., emissions/discharges): REDUCES DISCHARGE OF HOT WATER ONLY. CONSUMPTION AND DISCHARGE DIMINNISHED BY APPROXIMATELY 80%.

Pollutant	Pollutant code/CAS #	Amount	Units	Percent	Media
___	___	___	___	___%	_____
___	___	___	___	___%	_____

26. (b) Qualitative environmental impact of SEP. Select one or more of the following predicted benefits:

Human health protection: Actual___ Potential___
Worker protection: Actual___ Potential___
Ecosystem protection: Actual___ Potential_X__
Environmental restoration ___
Increased public awareness ___
Increased fed/state/local govt knowledge ___

Other (please describe): ___

D. Penalty (if there is no penalty, enter 0 and go to #29.) - **ORC LEAD**

Proposed penalty $123,695

27. (a) Assessed penalty $ 87,7989 ($50,000 CASH AND $37,798 SEP)
27. (b) (if shared) federal share $ NA
27. (c) (if shared) state or local share $NA
28. For multi-media actions, federal amounts by statute: NA

Statute	Amount
___	$
___	$

E. Cost Recovery - ORC LEAD

29. Amount of cost recovery awarded: $ EPA; $ State and/or local government; $ OTHER

>>Please add additional information, including **SHORT CASE SUMMARY**, here:

The Complaint was issued for violations concerning the storage of hazardous waste without a permit regulations found at 40 CFR Part 270.

P&S failed to manage hazardous waste solvents properly. Violations included the illegal storage of hazardous waste by storing waste for greater than 90-days without a permit.

In this Order, P&S has agreed to satisfy the **compromised** RCRA civil penalty of $87,798 by direct payment of 57% of the assessed penalty amount ($50,000.00) and satisfying the balance by completing a Supplemental Environmental Project (SEP) which is projected to reduce the consumption and discharge of heated water by 80% of current levels. Actual cost of the SEP is estimated to be $145,500 and the after-tax present value is $37,798. In addition, P&S will undertake RCRA closure of the affected areas of the facility.

RCRA Technical Contact: Patrick Kuefler
(312) 353-6268
Legal Contact: Kevin Chow
(312) 353-6181
Media Contact: Phillippa Cannon
(312) 353-6218

EPA SETTLES WITH PIERCE & STEVENS CORPORATION ON HAZARDOUS WASTE VIOLATIONS; $50,000 FINE LEVIED

U.S. Environmental Protection Agency (EPA) Region 5 announced today that it has settled an administrative action against Pierce & Stevens Corporation (Carol Stream, IL) for alleged hazardous waste storage violations at its Carol Stream, IL adhesives manufacturing facility. The company has agreed to pay a $50,000 cash penalty, conduct an environmental project with an estimated cost of $145,000, and close the hazardous waste storage unit. The environmental project is anticipated to reduce the consumption of water by 80% at its Carol Stream facility.

During a December 1997 inspection, EPA noted alleged hazardous waste storage violations. EPA alleges that the company stored hazardous waste solvents without a permit.

Under the Resource Conservation and Recovery Act, EPA regulates the management and disposal of municipal and industrial solid wastes, from the time of production to their final disposal.

###

UNITED STATES ENVIRONMENTAL PROTECTION AGENCY
REGION 5
77 WEST JACKSON BOULEVARD
CHICAGO, IL 60604-3590

MAR 25 1999

REPLY TO THE ATTENTION OF

C-14J

VIA HAND DELIVERY

Sonja R. Brooks
Regional Hearing Clerk
U.S. EPA, Region 5
77 West Jackson Boulevard
Chicago, IL 60604

Re: In the Matter of: Pierce & Stevens Corporation
Docket No. 5-RCRA-'98-006
Complainant's Motion for Accelerated Decision

Dear Ms. Brooks:

Enclosed please find an original copy of the U.S. Environmental Protection Agency's Motion for Accelerated Decision in this matter.

Sincerely,

Kevin C. Chow
Assistant Regional Counsel

Enclosure

cc: Judge Barbara A. Gunning
Brent I. Clark, Esq.
Jeryl L. Olson, Esq.
Susannah A. Smetana, Esq.

Recycled/Recyclable • Printed with Vegetable Oil Based Inks on 50% Recycled Paper (20% Postconsumer)

RECEIVED
REGIONAL HEARING
'99 MAR 25 [illegible]

UNITED STATES ENVIRONMENTAL PROTECTION AGENCY
REGION 5

BEFORE THE ADMINISTRATOR

IN THE MATTER OF:	)	
	)	DOCKET No. 5-RCRA-'98-006
PIERCE & STEVENS CORPORATION	)	
	)	Administrative Law Judge
Respondent.	)	Barbara A. Gunning, Presiding
	)	

MOTION FOR ACCELERATED DECISION

Complainant, by and through its counsel, hereby requests that an accelerated decision be granted in the above matter, under the provisions of 40 C.F.R. § 22.20, finding that Respondent is liable for penalties under Section 3008 of the Resource Conservation and Recovery Act ("RCRA"), as amended, 42 U.S.C. § 6928, for owning or operating a facility without a permit in violation of Section 3005 of RCRA, 42 U.S.C. § 6925, and certain provisions of the hazardous waste regulations set forth generally at 40 C.F.R. §§ 262, 265, and 270, relating to the conditions under which a generator of hazardous waste may store such waste without a permit.

I. INTRODUCTION

Under 40 C.F.R. § 22.20(a), the Presiding Officer, upon motion of any party or sua sponte, may at any time render an accelerated decision in favor of the complainant or respondent as to all or any part of the proceeding, without further hearing or upon such limited additional evidence, such as affidavits, as the Presiding Officer may require, if no genuine issue of material fact exists and a party is entitled to judgment as a matter of law, as to all or any part of the proceeding.

In the Complaint, Findings of Violation and Compliance Order ("Complaint"), issued on August 12, 1998, Complainant alleged that, among other things: (1) Respondent does not have a permit to store hazardous waste; (2) Respondent stored hazardous waste in excess of ninety days without a permit for the storage of hazardous waste; (3) Respondent's records indicate that Respondent failed to conduct weekly inspections of a hazardous waste accumulation area; (4) Respondent's contingency plan at the time of the inspection did not include a brief outline of the capabilities of each item of emergency equipment or an evacuation plan; (5) Respondent's facility did not provide at the time of

the inspection certain written job descriptions for each position at the facility related to hazardous waste management, nor did it provide records that document that training or job experience required by the facility's training program had been completed by facility staff; and (6) a drum was stored without a date marked on the drum indicating the date of initial accumulation. The Complaint alleged that as a result of these violations, Respondent did not meet the conditions required under RCRA and its regulations for the storage of hazardous waste for ninety days or less without a permit.

A review of the record in this matter reveals that there is no genuine issue of material fact with respect to the matters addressed herein, and that Complainant is entitled to judgment as a matter of law. Furthermore, the affirmative and other defenses raised by Respondent in its Answer fail to demonstrate the existence of a genuine issue of material fact concerning liability in this matter.

On the granting of this motion, Complainant would request that the above matter be set for hearing, pursuant to 40 C.F.R. § 22.27(b), in order to determine the dollar amount of the penalty to be assessed, as this motion addresses only the issue of Respondent's liability.

II. FINDING OF LIABILITY FOR VIOLATIONS ALLEGED

In support of this motion, Complainant requests that the Presiding Officer enter the following Findings of Fact and Findings of Law. These findings include allegations Respondent has admitted or not denied in its Answer, allegations of fact which are supported by documents submitted in Complainant's Prehearing Exchange, and allegations that have not been controverted by information or documents submitted by Respondent to U.S. EPA or in Respondent's Prehearing Exchange in spite of Respondent's denials of such allegations.

A. Findings of Fact

1. That the Complainant is, by lawful designation, Chief of the Enforcement and Compliance Assurance Branch, Waste, Pesticides and Toxics Division, Region 5, United States Environmental Protection Agency ("U.S. EPA or "the Agency").

2. That the Respondent is the Pierce & Stevens Corporation, which is and was at all times relevant to this action the owner and operator of a facility located at 6245 East

Kehoe Boulevard, Carol Stream, Illinois ("the Facility"). Respondent has admitted this allegation.

3. That Respondent is a New York corporation whose registered agent is CT Corporation located at 208 South LaSalle Street, Chicago, Illinois 60604. Respondent has admitted this allegation.

4. That on December 12, 1997, an inspector for U.S. EPA inspected the Facility and reviewed Facility records related to hazardous waste management, including manifest, container inspection logs, training, and contingency plan records. Respondent has admitted that an inspection took place on such date.

Count 1.A.: Accumulation of Hazardous Waste in Excess of 90 Days

5. That on December 12, 1997, U.S. EPA conducted an inspection of the Facility, including a review of Uniform Hazardous Waste Manifest Forms ("Manifests") and handwritten hazardous waste container inspection logs ("logs"), including logs which recorded changes in the number of drums stored in a ninety-day accumulation area at the Facility between December 15, 1995, and June 23, 1997. Respondent has admitted that an inspection took place on such date.

6. That a log titled "Central Accum. Area" (included in Complainant's Exhibit 1) indicates that Respondent was storing, as of October 30, 1996, at least seven drums of hazardous waste in the ninety-day accumulation area at the Facility. Respondent has admitted this allegation.

7. That the log indicates that Respondent was storing, as of November 1, 1996, at least forty-three drums of hazardous waste in the ninety-day accumulation area at the Facility. Respondent has admitted this allegation.

8. That the date January 28, 1997, is ninety days after October 30, 1996.

9. That the date January 30, 1997, is ninety days after November 1, 1996.

10. That the log titled "Central Accum. Area" indicates that Respondent was storing as of February 10, 1997, at least seventy-eight drums of hazardous waste in the ninety-day accumulation area at the Facility.

11. That according to a Manifest identified as State Manifest Document Number INA1110314 (included in Complainant's Exhibit 1), seventy-eight drums were transported from Respondent's Facility to an off-site location on or about February 11, 1997. Respondent has admitted this allegation.

12. That the only record demonstrating the off-site transportation of waste from Respondent's Facility prior to February 11, 1997, is a Manifest included in Complainant's Exhibit 1 identified as State Manifest Document Number AR-844118, and dated October 17, 1996, such date being thirteen days before October 30, 1996.

13. That in spite of bare assertions by Respondent that off-site waste shipments are reduced by the recycling of waste (see Complainant's Exhibits 3 and 5), Respondent's Prehearing Exchange and the record in this action do not include any documents or other evidence indicating that the drums of hazardous waste stored in the ninety-day accumulation area on October 30, 1996, were transported off-site, or otherwise no longer stored as hazardous waste at the Facility, prior to January 28, 1997.

14. That in spite of bare assertions by Respondent that off-site waste shipments are reduced by the recycling of waste (see Complainant's Exhibits 3 and 5), Respondent's Prehearing Exchange and the record in this action do not include any documents or other evidence indicating that the drums of hazardous waste stored in the ninety-day accumulation area on November 1, 1996, were transported off-site, or otherwise no longer stored as hazardous waste at the Facility, prior to January 30, 1997.

15. That according to the Manifest identified as State Manifest Document Number INA1110314 (included in Complainant's Exhibit 1), the seventy-eight drums that were transported from Respondent's Facility to an off-site location on or about February 11, 1997, weighed 34,600 pounds.

16. That the average weight of each of the drums transported off-site on or about February 11, 1997, was 443.59 pounds (34,600 lbs/78 drums = 443.59 lbs/drum).

17. That one kilogram equals approximately 2.2 pounds, and therefore the average weight, in kilograms, of each drum transported off-site on or about February 11, 1997, was approximately 201.63 kilograms (443.59 lbs/2.2 lbs = 201.63).

18. That the estimated total weight in kilograms of the seven drums stored in the ninety-day accumulation area at Respondent's Facility on October 30, 1996, was approximately 1,411 kilograms (7 drums x 201.63 kgs = 1,411 kgs).

19. That the estimated total weight in kilograms of the forty-three drums stored in the ninety-day accumulation area at Respondent's Facility on November 1, 1996, was approximately 8,670 kilograms (43 drums x 201.63 kgs = 8,670 kgs).

20. That during the period of time in which the wastes at issue were generated, Respondent generated hazardous waste in quantities greater than 1,000 kilograms in a calender month at its Facility. Respondent has denied this allegation.[1]

21. That Respondent's Prehearing Exchange and the record in this action are devoid of any documents or other evidence indicating that Respondent generated less than 1,000 kilograms of hazardous waste in a calender month during the period of time relevant to this action.

22. That at all times relevant to this action, Respondent did not, and does not, have a permit to store hazardous waste under Section 3005 of RCRA, 42 U.S.C. § 6925, 35 Illinois Administrative Code ("IAC") § 703.121(a)(1), and 40 C.F.R. § 270.1. Respondent has admitted this allegation.

23. That at all times relevant to this action, Respondent was not granted, and has not been granted, an extension to the ninety-day accumulation period. Respondent has admitted this allegation.

Count 1.B.: Weekly Inspections

24. That the log titled "Central Accum. Area" does not indicate that Respondent conducted any inspections of the ninety-day accumulation area between December 15, 1995 and January 9,

---

[1] While Respondent has denied this allegation, Respondent has not produced any information or evidence in the record that contradicts the allegation that during the period of time in which the wastes at issue were generated, Respondent generated more than 1,000 kilograms of waste in a calender month. Summary disposition may not be avoided by merely alleging that a factual dispute may exist, or that future proceedings may turn up something. In Re Green Thumb Nursery, Inc., FIFRA Appeal No. 95-4a, footnote 24 (EAB, March 6, 1997). Not only must a party opposing summary judgment raise an issue of material fact, but that party must demonstrate that this dispute is "genuine" by referencing probative evidence in the record, or producing such evidence. Id. at 16.

1996; between January 9, 1996 and March 11, 1996; between March 11, 1996 and April 3, 1996; between April 3, 1996 and May 3, 1996; between May 3, 1996 and June 26, 1996; between June 26, 1996 and September 20, 1996; between September 20, 1996 and October 30, 1996; and between November 1, 1996 and January 7, 1997. Respondent has denied this allegation.[2]

25. That Respondent's Prehearing Exchange and the record in this action are devoid of any documents or evidence to corroborate Respondent's bare claim that the ninety-day accumulation area is inspected on a daily basis (see Complainant's Exhibit 5), or that the ninety-day accumulation area was inspected on a daily basis between December 15, 1995 and January 9, 1996; between January 9, 1996 and March 11, 1996; between March 11, 1996 and April 3, 1996; between April 3, 1996 and May 3, 1996; between May 3, 1996 and June 26, 1996; between June 26, 1996 and September 20, 1996; between September 20, 1996 and October 30, 1996; and between November 1, 1996 and January 7, 1997.

Count 1.C.: Contingency Plan

26. That on December 12, 1997, the inspector for U.S. EPA requested and reviewed the Respondent's contingency plan for the Facility required pursuant to 35 IAC Part 725, Subpart D, and 40 C.F.R. Part 265, Subpart D. Respondent admits that the U.S. EPA inspector requested the contingency plan for review.

27. That the Facility's contingency plan supplied to the U.S. EPA inspector on December 12, 1997, did not include a brief outline of the capabilities of each item of emergency equipment located at the Facility or an evacuation plan for Facility personnel, as required by 35 IAC §§ 725.152(e) and (f), 40 C.F.R. §§ 265.52(e) and (f). Respondent admits that the contingency plan lacked an outline of the capabilities of each item of equipment, but denies that such an outline was required due to the type of equipment listed.[3]

---

[2] While Respondent has denied this allegation, Respondent has not produced any information or evidence in the record that contradicts the allegation that no inspections were conducted within the identified time periods.

[3] While the list, which is contained in Complainant's Exhibit 1, included items of relatively simple operation, such as brooms and shovels, the list also included respirators, which are relatively sophisticated in operation. Regardless of the type of equipment involved, the regulation is clear in requiring an outline of each item's capabilities.

28. That the record in this action, including Respondent's Prehearing Exchange, does not indicate that Respondent's Respiratory Protection Program, embodied in a document titled "Respiratory Protection Policy: Pratt & Lambert, Inc." (Respondent's Exhibit 3), and relating to respirator use, was included in the contingency plan supplied to the U.S. EPA inspector on December 12, 1997.

29. That the map of posted evacuation routes supplied in the updated contingency plan sent by Respondent to U.S. EPA on January 19, 1998 (see Complainant's Exhibit 3) was not included in the contingency plan reviewed by the U.S. EPA inspector on December 12, 1997.

Count 1.D.: Training Records

30. That on December 12, 1997, the inspector for U.S. EPA requested and reviewed training documents and records for Respondent's hazardous waste training program for the Facility. Respondent has admitted this allegation.

31. That Respondent's Prehearing Exchange and the record in this action are devoid of any documents or evidence indicating that on December 12, 1997, Respondent supplied the U.S. EPA inspector with documents or records that provide a written description for each position at the Facility related to hazardous waste management.

32. That the written job descriptions for hazardous waste management personnel sent by Respondent to U.S. EPA on January 19, 1998 (see Complainant's Exhibit 3) were not supplied to the U.S. EPA inspector at the time of his inspection on December 12, 1997. Respondent has denied these allegations.[4]

33. That Respondent's Prehearing Exchange and the record in this action are devoid of any documents or evidence that Respondent supplied the U.S. EPA inspector with records at the time of his inspection demonstrating that the training or job experience required by the Facility's training program had been completed by Facility staff. Respondent has denied the allegation

---

[4] While Respondent denies these allegations, Respondent has not proffered information or evidence in the record to demonstrate that such written job descriptions were provided to the U.S. EPA inspector at the time of the inspection.

that no proof of training had been supplied to the inspector during the inspection.[5]

34. That the certificates of training for Mr. Robert Cervenka, currently Production Manager for Respondent's Facility, supplied to U.S. EPA by correspondence dated June 9, 1998 (see Complainant's Exhibit 5) were not supplied to the U.S. inspector at the time of his inspection on December 12, 1997.

35. That the Employee Training Record included in Respondent's June 9, 1998, correspondence (see Complainant's Exhibit 5) is dated December 17, 1997, and therefore was not supplied to the U.S. EPA inspector at the time of his inspection on December 12, 1997.

Count 1.E.: Drum Labeling

36. That on December 12, 1997, the U.S. EPA inspector observed one drum of hazardous waste spent filter (EPA Waste Code F005) stored in the Facility's central accumulation area without a date marked on the drum indicating the date of initial accumulation. Respondent has stated that it is without knowledge as to the inspector's observations.

37. That Respondent's Prehearing Exchange and the record in this action are devoid of any documents or evidence that the drum in question was labeled with the date of its initial accumulation.

B. Findings of Law

38. That Respondent is a "person" as defined at Section 1004(15) of RCRA, 42 U.S.C. § 6903(15), and 35 IAC § 720.110, and is subject to the regulations promulgated pursuant to Subtitle C of RCRA, 42 U.S.C. §§ 6921-6939, and the analagous Illinois regulations as part of the applicable state hazardous waste management program for the State of Illinois.

39. That jurisdiction for this action is conferred upon U.S. EPA by Sections 2002(a)(1), 3006(b), and 3008 of RCRA, 42 U.S.C. §§ 6912(a)(1), 6926(b), and 6928, respectively.

---

[5] While Respondent denies this allegation, Respondent has not proffered information or evidence in the record to demonstrate that proof of training had been supplied to the U.S. EPA inspector at the time of the inspection.

40. That facilities that treat, store or dispose of hazardous waste must have interim status or obtain a permit pursuant to 40 C.F.R. Part 270, 35 IAC § 703.121(a), and Sections 3005 and 3006 of RCRA, 42 U.S.C. §§ 6925 and 6926.

41. That "storage" is defined at 35 IAC § 728.102(c) and 40 C.F.R. § 260.10 as "the holding of hazardous waste for a temporary period, at the end of which the hazardous waste is treated, disposed of, or stored elsewhere."

42. That Respondent conducts, and conducted at all times relevant to this action, "storage" of hazardous waste as that term is defined at 35 IAC § 728.102(c) and 40 C.F.R. § 260.10. Respondent has admitted this allegation.

43. That "generator" is defined at 40 C.F.R. § 260.10 and 35 IAC § 720.110 as any person, by site, whose act or process produces hazardous waste identified or listed in 40 C.F.R. Part 261.

44. That on August 18, 1980, Respondent filed a notification of hazardous waste activity for the Facility with U.S. EPA pursuant to Section 3010 of RCRA, 42 U.S.C. § 6930, for the generation of hazardous waste. Respondent has admitted this allegation.

45. That Respondent generates spent solvents including xylene, acetone, acetate, toluene, and Methyl Ethyl Ketone (MEK), with U.S. EPA Hazardous Waste Numbers F003 (xylene, acetone, and acetate), F005 (toluene and MEK), D035 (MEK), D018 (Benzene) and D001 (characteristic for ignitability).[6] These spent solvents are listed hazardous wastes and characteristic hazardous wastes respectively pursuant to 35 IAC § 721.121 and 40 C.F.R. § 261.21; 35 IAC § 721.124 and 40 C.F.R. § 261.24; and 35 IAC § 721.131 and 40 C.F.R. § 261.31.

---

[6] Respondent has admitted that it generates xylene, acetone, toluene, and methyl ethyl ketone, but has denied that it generates any of the other identified wastes, i.e., benzene and acetate. However, a Manifest dated September 22, 1997, State Manifest Document Number INA 1179690, among several other Manifests, identifies listed Hazardous Waste Number D018 (Benzene) as a waste transported from Respondent's Facility. This and the other Manifests are included in Complainant's Exhibit 1. Acetate was identified as a waste in the U.S. EPA inspector's inspection report (Complainant's Exhibit 1). Respondent has not produced information or evidence in the record to contradict the allegation that Respondent generates waste acetate.

46. That Respondent is, or was at all times relevant to this Complaint, a "generator" as defined at 40 C.F.R. § 260.10. Respondent has admitted this allegation.

Count 1.A.: Accumulation of Hazardous Waste in Excess of 90 Days

47. That Section 3005 of RCRA, 42 U.S.C. § 6925, 35 IAC § 703.121(a)(1), and 40 C.F.R. Part 270.1 require each person owning or operating a hazardous waste storage facility to have a permit.

48. That 40 C.F.R. § 262.34(a) and 35 IAC § 722.134(a) provide that a generator who generates more than 1,000 kilograms of hazardous waste per month may accumulate hazardous waste on-site for ninety days or less without a permit or without having interim status, provided that the generator complies with 40 C.F.R. §§ 262.34(a)(1)-(4) and 35 IAC §§ 722.134(a)(1)-(4).

49. That 40 C.F.R. § 262.34(b) and 35 IAC § 722.134(b) provide that a generator of greater than 1,000 kilograms of hazardous waste per month who accumulates hazardous waste on-site for more than ninety days is an operator of a storage facility and is subject to the requirements of 35 IAC §§ 724, 725, and 702, and 40 C.F.R. Parts 264 and 265, as well as the permit requirements of 40 C.F.R. Part 270, unless granted an extension to the 90-day period pursuant to Section 37 of the Illinois Environmental Protection Act, 415 ILCS 5/37.

50. That during the period of time in which the wastes at issue were generated, Respondent generated hazardous waste in quantities greater than 1,000 kilograms in a calender month at its Facility, as described herein at Findings of Fact Nos. 15 through 19.

51. That as a result of its generation of hazardous waste in excess of 1,000 kilograms in a calender month, Respondent did not qualify as a "conditionally exempt small quantity generator" under 40 C.F.R. § 261.5 for the relevant month or months.[7]

52. That as a result of its generation of waste in excess of 1,000 kilograms in a calender month, and its accumulation of

---

[7] Under 40 C.F.R. § 261.5(a), a generator is a "conditionally exempt small quantity generator" in a calender month if the person generates no more than 100 kilograms of hazardous waste in that month. A conditionally exempt small quantity generator's hazardous wastes are not subject to, inter alia, the regulations found at 40 C.F.R. Parts 262 through 266, 268, 270, and 124. 40 C.F.R. § 261.5(b).

waste on-site in excess of 6,000 kilograms as described in Finding of Fact No. 19, Respondent did not qualify for the 180-day accumulation period allowed under 40 C.F.R. § 262.34(d).[8]

53. That the drums of hazardous waste stored at Respondent's Facility as of October 30, 1996, and November 1, 1997, were not transported off-site until on or about February 11, 1997, more than ninety days after the dates of their initial accumulation, as described herein at Findings of Fact Nos. 5 through 14.

54. That by accumulating hazardous waste in excess of ninety days, Respondent, by operation of 40 C.F.R. § 262.34(b) and 35 IAC § 722.134(b), became an "operator" of a storage facility. Respondent has denied the allegation that it is, or was at all times relevant to this action, an "owner" or "operator" of a facility, and has offered such a denial as an affirmative, or other, defense. This defense is discussed in Section III, below.

55. That Respondent was not granted, and has not been granted, an extension to the ninety-day period, as described herein at Finding of Fact No. 23.

56. That Respondent did not have, and does not have, a permit for the storage of hazardous waste, as required of operators of storage facilities, as described herein at Finding of Fact No. 22.

57. That by storing hazardous waste in excess of ninety days and by failing to have a permit for the storage of hazardous waste, Respondent violated Section 3005 of RCRA, 42 U.S.C. § 6925; 35 IAC §§ 703.134(a) and (b), 40 C.F.R. §§ 262.34(a) and (b); and 35 IAC § 703.121(a)(1) and 40 C.F.R. § 270.1.

58. That by accumulating hazardous waste in excess of ninety days, Respondent, by operation of 40 C.F.R. § 262.34(b) and 35 IAC § 722.134(b), became an "operator" of a storage facility and therefore became subject to 35 IAC §§ 724, 725, and 702, 40 C.F.R. Parts 264 and 265, and the additional permit requirements of 40 C.F.R. Part 270.

---

[8] Under 40 C.F.R. § 262.34(d), a generator who generates greater than 100 kilograms but less than 1,000 kilograms of hazardous waste in a calender month may accumulate hazardous waste on-site for 180 days or less without a permit, provided that, inter alia, the quantity of waste accumulated on-site never exceeds 6,000 kilograms.

Count 1.B.: Weekly Inspections

59. That Section 3002 of RCRA, 42 U.S.C. § 6922, 35 IAC § 134(a)(1)(i), and 40 C.F.R. § 262.34(a)(1)(i) allow generators of hazardous waste to accumulate hazardous wastes for ninety days or less without obtaining a permit provided the generator complies with the container management requirements of Subpart I of 35 IAC § 725 and Subpart I of 40 C.F.R. Part 265, including 35 IAC § 725.274 and 40 C.F.R. § 265.174.

60. That 35 IAC § 725.274 and 40 C.F.R. § 265.174 require the owner or operator to inspect areas where containers are stored, at least weekly, looking for leaks and for deterioration caused by corrosion or other factors.

61. That Respondent failed to conduct weekly inspections of the containers in the ninety-day accumulation area at the Facility, as described herein at Findings of Fact Nos. 24 and 25, in violation of 35 IAC § 725.274 and 40 C.F.R. § 265.174.

62. That Respondent's failure to conduct weekly inspections and to have a permit to store hazardous waste constitute a violation of Section 3005 of RCRA, 42 U.S.C. § 6925, 35 IAC §§ 722.134(a) and (b) and 40 C.F.R. §§ 262.34(a) and (b), and 35 IAC § 703.121(a)(1) and 40 C.F.R. § 270.1.

Count 1.C.: Contingency Plan

63. That Section 3002 of RCRA, 42 U.S.C. § 6922, 35 IAC § 134(a)(4), and 40 C.F.R. § 262.34(a)(4) allow generators of hazardous waste to accumulate hazardous wastes for ninety days or less without obtaining a permit provided the generator complies with the requirements for owners or operators in Subparts C and D in 40 C.F.R. Part 265, including 40 C.F.R. §§ 265.52(e) and (f).

64. That 35 IAC Part 275, Subpart D and 40 C.F.R. Part 265, Subpart D require the owner or operator of a facility to have a contingency plan for the facility.

65. That 35 IAC § 725.152(e) and 40 C.F.R. § 265.52(e) require the contingency plan to include a list of all emergency equipment at the facility and a brief outline of each item's capabilities.

66. That 35 IAC § 725.152(f) and 40 C.F.R. § 265.52(f) require the contingency plan to include a description of evacuation routes.

67. That the contingency plan supplied to the U.S. EPA inspector during the December 12, 1997, inspection did not contain a brief outline of the capabilities of each emergency equipment at the Facility, and did not include a description of evacuation routes, as described herein at Findings of Fact Nos. 26 through 29, in violation of 35 IAC §§ 725.152(e) and (f), and 40 C.F.R. §§ 265.152(e) and (f).

68. As a result of the deficiencies in Respondent's contingency plan and Respondent's failure to have a permit for the storage of hazardous waste, Respondent has violated Section 3005 of RCRA, 42 U.S.C. § 6925, 35 IAC §§ 722.134(a) and (b) and 40 C.F.R. §§ 262.34(a) and (b), and 35 IAC § 703.121(a)(1) and 40 C.F.R. § 270.1.

Count 1.D.: Training Records

69. That Section 3002 of RCRA, 42 U.S.C. § 6922, 35 IAC § 134(a)(4), and 40 C.F.R. § 262.34(a)(4) allow generators of hazardous waste to accumulate hazardous wastes for ninety days or less without obtaining a permit provided the generator complies with 35 IAC § 725.116 and 40 C.F.R. § 265.16.

70. That 35 IAC § 725.116 and 40 C.F.R. § 265.16 require facility personnel to successfully complete a program of classroom instruction or on-the-job training which ensures, among other things, that facility personnel are able to respond effectively to emergencies.

71. That 35 IAC § 725.116(d) and 40 C.F.R. § 265.16(d) require the owner or operator of a facility to maintain, at the facility, certain records and documents related to hazardous waste training.

72. That 35 IAC § 725.116(d)(2) and 40 C.F.R. § 265.16(d)(2) require the owner or operator to maintain, at the facility, documents or records that provide a written description for each position at the facility related to hazardous waste management.

73. That 35 IAC § 725.116(d)(4) and 40 C.F.R. § 265.16(d)(4) require the owner or operator to maintain, at the facility, records that document that the required training or job experience has been given to, and completed by, facility personnel.

74. That the training records supplied to the U.S. EPA inspector during the December 12, 1997, inspection did not

include records that documented that the training or job experience required by the Facility's training program had been completed by Facility staff, nor did they include job descriptions for hazardous waste management positions at the Facility, as described herein at Findings of Fact Nos. 30 through 35, in violation of 35 IAC § 725.116(d) and 40 C.F.R. § 265.16(d).

75. That as a result of the absence of the training records and Respondent's failure to have a permit to store hazardous waste, Respondent has violated of Section 3005 of RCRA, 42 U.S.C. § 6925, 35 IAC §§ 722.134(a) and (b) and 40 C.F.R. §§ 262.34(a) and (b), and 35 IAC § 703.121(a)(1) and 40 C.F.R. § 270.1.

Count 1.E.: Drum Labeling

76. That Section 3002 of RCRA, 42 U.S.C. § 6922, 35 IAC § 134(a)(2), and 40 C.F.R. § 262.34(a)(2) allow generators of hazardous waste to accumulate hazardous wastes for ninety days or less without obtaining a permit provided the date upon which each period of accumulation begins is clearly marked and visible for inspection on each container.

77. That during the December 12, 1997, inspection, the U.S. EPA inspector observed one drum of hazardous waste being stored without a date marked on the drum indicating the date of initial accumulation, as described herein at Findings of Fact Nos. 36 and 37, in violation of 35 IAC § 722.134(a)(2) and 40 C.F.R. § 262.34(a)(2).

78. That as a result of the absence of the initial accumulation date on the drum and Respondent's failure to have a permit for the storage of hazardous waste, Respondent has violated Section 3005 of RCRA, 42 U.S.C. § 6925, 35 IAC §§ 722.134(a) and (b) and 40 C.F.R. §§ 262.34(a) and (b), and 35 IAC § 703.121(a)(1) and 40 C.F.R. § 270.1.

III. AFFIRMATIVE DEFENSES

In its Answer to the Complaint, Respondent asserts two "affirmative and other defenses". A review of these "defenses" in consideration of the applicable law reveals that no genuine issue of fact requiring trial is identified therein by Respondent.

The Consolidated Rules of Practice Governing the Administrative Assessment of Civil Penalties and the Revocation

or Suspension of Permits, set forth at 40 C.F.R. Part 22, govern these proceedings. 40 C.F.R. § 22.15(c) provides that when requested, a hearing shall be held "upon the issues raised by the complaint and answer". 40 C.F.R. § 22.15(b) provides that a respondent's answer shall state (1) the circumstances or arguments which are alleged to constitute the grounds of defense, and (2) the facts which respondent intends to place at issue.

Respondent's first defense is that Respondent did not, and does not, own or operate a facility within the meaning of RCRA. As the record in this action indicates, Respondent stored hazardous waste in excess of ninety days. Under 40 C.F.R. § 262.34(b), a generator who accumulates hazardous waste for more than ninety days is an operator of a storage facility and is subject to requirements of 40 C.F.R. Parts 264 and 265, and the permit requirements of 40 C.F.R. Part 270. By operation of 40 C.F.R. § 262.34, Respondent became an "operator" within the meaning of RCRA. Additionally, Respondent admitted to being the owner and operator of a facility located at 6245 East Kehoe Boulevard, Carol Stream, Illinois, in its Answer to Paragraph 3 of the Complaint. Respondent's first defense therefore fails.

Furthermore, Respondent's assertion of this defense is defective in that Respondent's Answer and Prehearing Exchange has not articulated, or presented evidence in the record regarding, the circumstances or arguments constituting the grounds for such a defense, nor has Respondent presented the specific facts which Respondent intends to place at issue relating to this defense. Additionally, to the extent that Respondent's defense raises any issues, the matter at issue is more in the nature of a legal conclusion rather than a question of fact. Thus, there is no genuine issue of material fact requiring trial on this defense.

Respondent's second defense is a bare assertion, stating that "[a] number of allegations set forth in the Complaint are unsupported by law and fail to state a claim." Respondent's "defense" in and of itself presents no factual issues requiring an evidentiary hearing, and fails to state the circumstances or arguments constituting the grounds for such a defense. Even assuming that Respondent has raised any issues in its assertion, they would not be issues of fact. Consequently, there is no genuine issue of material fact requiring a hearing on this "defense".

IV. CONCLUSION

For the reasons which have been set forth above, Complainant requests that an initial decision be issued in this manner, on an accelerated basis as provided for in 40 C.F.R. § 22.20, finding that there are no genuine issues of material fact as to Respondent's liability for violations alleged in the Complaint.

Complainant respectfully requests leave to respond to Respondent's written response to this motion within ten days after service of Respondent's response.

Respectfully submitted,
UNITED STATES ENVIRONMENTAL
PROTECTION AGENCY

By: Kevin C. Chow

Kevin C. Chow
Assistant Regional Counsel
U.S. EPA, Region 5
Mail Code C-14J
77 West Jackson Boulevard
Chicago, IL 60604-3590
(312) 353-6181

Dated: March 25, 1999

CERTIFICATE OF SERVICE

I hereby certify that the Complainant's Motion for Accelerated Decision, dated March 25, 1999, was sent this day in the following manner to the addresses listed below:

Original Hand Delivered to:

Sonja Brooks
Regional Hearing Clerk
U.S. EPA, Region 5
77 West Jackson Boulevard
Chicago, Illinois 60604

Copy by Pouch Mail to:

Honorable Barbara A. Gunning
Administrative Law Judge
Office of Administrative Law Judges (A-110)
U.S. EPA
401 M Street, S.W.
Washington, D.C. 20460

Copy by Certified Mail to:

Attorneys for the Respondent:

Brent I. Clark, Esq.
Jeryl L. Olson, Esq.
Susannah A. Smetana, Esq.
Seyfarth, Shaw, Fairweather & Geraldson
55 East Monroe Street
Suite 4200
Chicago, IL 60603

Dated: March 25, 1999

Kevin C. Chow
Assistant Regional Counsel

SEYFARTH, SHAW, FAIRWEATHER & GERALDSON

ATTORNEYS AT LAW

815 CONNECTICUT AVENUE N.W. - SUITE 500
WASHINGTON, D.C. 20006-4004
(202) 463-2400
FAX (202) 828-5393

ONE CENTURY PLAZA - SUITE 3300
2029 CENTURY PARK EAST
LOS ANGELES, CA 90067-3061
(310) 277-7200
FAX (310) 201-5219

1270 AVENUE OF THE AMERICAS - SUITE 2500
NEW YORK, NY 10020-1801
(212) 218-5500
FAX (212) 218-5526

101 CALIFORNIA STREET - SUITE 2900
SAN FRANCISCO, CA 94111-5858
(415) 397-2823
FAX (415) 397-8549

55 EAST MONROE STREET - SUITE 4200
CHICAGO, ILLINOIS 60603-5803
(312) 346-8000
FAX (312) 269-8869

WRITER'S DIRECT DIAL
(312) 269-8876

400 CAPITOL MALL - SUITE 2350
SACRAMENTO, CA 95814-4420
(916) 448-0159
FAX (916) 558-4839

700 LOUISIANA STREET - SUITE 3850
HOUSTON, TX 77002-2731
(713) 225-2300
FAX (713) 225-2340

ONE ATLANTIC CENTER - SUITE 5050
1201 WEST PEACHTREE STREET
ATLANTA, GA 30309-3400
(404) 892-6412
FAX (404) 892-7056

INTERNATIONAL

AVENUE LOUISE 500, BOÎTE 8
1050 BRUSSELS, BELGIUM
TELEPHONE (32) (2) 647.60.25
FAX (32) (2) 640.70.71

March 3, 1999

ILD 005 434 443

VIA MESSENGER

Ms. Sonja R. Brooks
Regional Hearing Clerk
U.S. EPA, Region 5
77 West Jackson Boulevard
Chicago, Illinois 60604

Re: In the Matter of: Pierce & Stevens Corporation
Docket No. 5-RCRA-98-006
Respondent's Prehearing Exchange

Dear Ms. Brooks:

In accordance with the Prehearing Order, issued on October 14, 1998, by Administrative Law Judge Barbara A. Gunning, requiring Respondent to file its Prehearing Exchange in this matter by or on March 3, 1999, Pierce & Stevens Corporation hereby submits the original copy of its Prehearing Exchange.

Very truly yours,

SEYFARTH, SHAW, FAIRWEATHER & GERALDSON

By Brent I. Clark
Brent I. Clark

Enclosure
cc: Judge Barbara A. Gunning
Kevin C. Chow, Esq.

2120589

UNITED STATES ENVIRONMENTAL PROTECTION AGENCY
REGION 5

IN RE:	)	
	)	
PIERCE & STEVENS CORPORATION	)	
245 EAST KEHOE	)	
CAROL STREAM, ILLINOIS 60188	)	Docket No. 5-RCRA-98-006
	)	
RESPONDENT	)	
	)	

RESPONDENT'S PREHEARING EXCHANGE

NOW COMES, Pierce & Stevens Corporation, through its attorneys, in accordance with the Prehearing Order entered in this matter by Honorable Barbara A. Gunning on October 14, 1998, and in accordance with Section 22.19(b) of Part 40 of the Code of Federal Regulations, submits its Prehearing Exchange as follows.

The Complaint alleges that Pierce & Stevens violated certain regulatory requirements promulgated pursuant to the Resource Conservation and Recovery Act ("RCRA"). Complainant alleges that Respondent: (1) stored hazardous waste for a period longer than ninety days without a permit; (2) failed to conduct weekly inspections of the accumulation area; (3) failed to have a contingency plan, at the time of the inspection, that outlined the capabilities of each item of emergency equipment and provided an evacuation plan; (4) did not provide, at the time of the inspection, written job descriptions and records of training or job experience for employees with positions related to hazardous waste management. As set forth in its Answer, Respondent denies each of these allegations.

I. WITNESSES

In accordance with the Prehearing Order, Respondent submits "the names of all the expert and other witnesses it intends to call at the hearing, together with a brief narrative summary of each witness' expected testimony" as follows.

1. Robert Cervenka
   Production Manager
   Pierce & Stevens Corp.
   245 East Kehoe Boulevard
   Carol Stream, Illinois 60188

Mr. Cervenka, if called, will testify as to his employment experience and job responsibilities. Mr. Cervenka is expected to also testify regarding the procedures used by Pierce & Stevens for the accumulation of hazardous waste at its Carol Stream plant. Mr. Cervenka is expected to testify regarding the condition in which the central accumulation area is maintained. Mr. Cervenka is expected to testify regarding the arrangement for off-site transport and disposal of hazardous waste. Mr. Cervenka is expected to testify that it is, and has always been, the intent and standard practice of the Carol Stream plant to comply with RCRA's 90-day limitation on the accumulation of hazardous waste and not to be a RCRA storage facility. Mr. Cervenka is expected, in addition, to testify that he and others with jobs involving hazardous waste management have received the training required pursuant to 40 CFR §265.16. Further, Mr. Cervenka is expected to testify that he was present during the inspection conducted by the U.S. EPA on December 12, 1997 at 245 East Kehoe, Carol Stream, Illinois.

2. Jim Drzewiecki
Health, Safety & Environmental Coordinator
Pierce & Stevens Corp.
610 Ohio Street
Buffalo, New York 14240

Mr. Drzewiecki, if called, will testify as to his employment experience and job responsibilities. Mr. Drzewiecki is expected to testify regarding the administration of the training program for employees at the Carol Stream plant involved in the management of hazardous waste. Mr. Drzewiecki is also expected to testify regarding any knowledge he has concerning the management of hazardous waste at the Carol Stream plant. Mr. Drzewiecki, if called, is expected to testify that it is, and has always been, the intent and standard practice of the Carol Stream plant to comply with RCRA's 90-day limitation on the accumulation of hazardous waste and not to be a RCRA storage facility.

3. Kevin Johnson
Manager, Health, Safety & Environmental Affairs
Pierce & Stevens Corp.
610 Ohio Street
Buffalo, New York 14240

Mr. Johnson, if called, will testify as to his employment and job responsibilities. If called, he is also expected to testify regarding the company's practice with respect to environmental matters, including the management of hazardous waste. Mr. Johnson, if called, is expected to testify that it is, and has always been, the intent and standard practice of the Carol Stream plant to comply with RCRA's 90-day limitation on the accumulation of hazardous waste and not to be a RCRA storage facility.

4. Helen Scheckel
Materials Manager
Pierce & Stevens Corp.
245 East Kehoe Boulevard
Carol Stream, Illinois 60188

Ms. Scheckel, if called, will testify as to her employment experience and job responsibilities. Ms. Scheckel is also expected to testify regarding the recycling practices at the Carol Stream plant and the generation of waste when material is not recyclable.

II. DOCUMENTS AND EXHIBITS

In accordance with the Prehearing Order, Respondent submits copies of all documents and exhibits which it intends to introduce into evidence. Respondent identifies these documents and exhibits as follows:

Respondent's Exhibit 1

Pierce & Stevens HAZWOPER - Emergency Response Plan for Hazardous Material Releases.

Respondent's Exhibit 2

Pierce & Stevens Manual on Label and Drum Details for Hazardous and Non-Hazardous Waste.

Respondent's Exhibit 3

Pierce & Stevens Respiratory Protection Program.

Respondent's Exhibit 4

Selected pages from the central accumulation area log book for the period from April 1997 to November 1998.

Respondent's Exhibit 5

Selected Orders of the Illinois Pollution Control Board granting provisional variances allowing for the accumulation of hazardous waste for a period greater than 90 days and the corresponding Agency Recommendations and Petitioner's Requests for an extension of the 90-day period for the accumulation of hazardous waste.

Respondent reserves the right to introduce during the hearing any exhibits identified in Complainant's Prehearing Exchange, including any attachments to such exhibits. Respondent reserves the right to amend its list of Documents and Exhibits upon timely notice to the Administrative Law Judge and Complainant.

III. DESIRED LOCATION OF HEARING

In accordance with the Prehearing Order, Respondent states its view as to the place for the hearing and estimates the amount of time needed to present its direct case as follows.

Respondent's desired location for the hearing is Chicago, Illinois. This location meets the requirements of 40 C.F.R. § 22.21(d) and § 22.19(d) as it is "the city in which the relevant Environmental Protection Agency Regional Office is located." Respondent and Respondent's witnesses are also located in the Chicago area.

Respondent estimates that the direct examination of its witnesses will take no more than two days.

IV. RESPONSE TO COMPLAINANT'S PROPOSED CIVIL PENALTY

Respondent objects to the explanation provided by Complainant supporting its proposed penalty calculation and believes that if a penalty is appropriate, which Respondent denies, Complainant has improperly calculated such penalty. Respondent reserves its right to

rebut the Complainant's penalty calculation and does not waive any objections it may have.

Respectfully submitted,

PIERCE & STEVENS CORPORATION

By: Brent I. Clark
One of its attorneys

Brent I. Clark
Jeryl L. Olson
Susannah A. Smetana
SEYFARTH, SHAW, FAIRWEATHER
& GERALDSON
55 East Monroe Street
Suite 4200
Chicago, IL 60603
(312) 346-8000

2120267

CERTIFICATE OF SERVICE

The undersigned attorney hereby certifies that he caused a copy of Respondent's Prehearing Exchange to be served upon the following on this 3rd day of March, 1999:

Via Messenger
Kevin Chow, Esq.
Office of Regional Counsel (C-14J)
U.S. Environmental Protection Agency, Region 5
77 West Jackson Boulevard
Chicago, Illinois 60604-3590

Via Certified Mail
The Honorable Barbara A. Gunning
Administrative Law Judge
Office of the Administrative Law Judges (A-110)
U.S. Environmental Protection Agency
401 M Street, S.W.
Washington, DC 20460

Brent I. Clark

Brent I. Clark

2120267.1

PIERCE & STEVENS CORPORATION

HAZWOPER - EMERGENCY RESPONSE PLAN FOR HAZARDOUS MATERIAL (HAZMAT) RELEASES

I. INTRODUCTION & ORGANIZATION STRUCTURE
2

II. EMERGENCY ORGANIZATION RESPONSIBILITIES & TRAINING
4

III. MEDICAL SURVEILLANCE & CONSULTATION
9

IV. PERSONAL PROTECTIVE EQUIPMENT
11

V. SITE CONTROL
11

VI. HAZARDOUS SUBSTANCE RELEASE PREVENTION AND PREPARATION 14

VII. HAZARDOUS SUBSTANCE RELEASE RECOGNITION AND RESPONSE 15

VIII. HAZMAT RESPONSE PROCEDURE
17

IX. POST EMERGENCY RESPONSE CLEANUP OPERATIONS
18

X. DECONTAMINATION
20

XI. EMERGENCY MEDICAL & FIRST AID TREATMENT
21

XII. EMERGENCY RESPONSE FOLLOW-UP & CRITIQUE
21

XIII. TERMS AND DEFINITIONS
25

Appendix A - Determination of Fitness for Duty
28

Appendix B - General Description & Discussion of Levels of Protect. & PPE 29 - 32

Appendix C – Decontamination 33 – 41

Appendix D – List of Current HAZMAT Members / Emergency Contact Numbers 42

Appendix E – Emergency Recognition Guidance 43

Appendix F – Training Matrix 47

Appendix G - List of hazardous Substances and Reportable Quantities (RQ's) 48

I. INTRODUCTION

On December 19, 1986, OSHA promulgated Interim Standard 1910.120, Hazardous Waste Operations and Emergency Response. On March 6, 1989, OSHA issued it's Final Rule, with an effective date of March 6, 1990.

Due to the seriousness of the Safety and Health hazards related to hazardous substances, OSHA issued this standard specifically to protect workers responding to emergencies involving hazardous substances.

This rule regulates responses to hazardous substances releases occurring at all workplaces. It covers all employees engaged in emergency response operations involving releases of or substantial threats of releases of hazardous substances, and post emergency response operations (clean-up). This includes emergency response teams, industrial fire brigades, hazardous material (HAZMAT) teams, and clean-up personnel.

This procedure addresses the required elements of the emergency response plan as well as the reporting requirements for EPA, DOT and other Federal and State regulatory agencies and internal requirements.

I.

INCIDENT COMMAND POST
ORGANIZATIONAL STRUCTURE

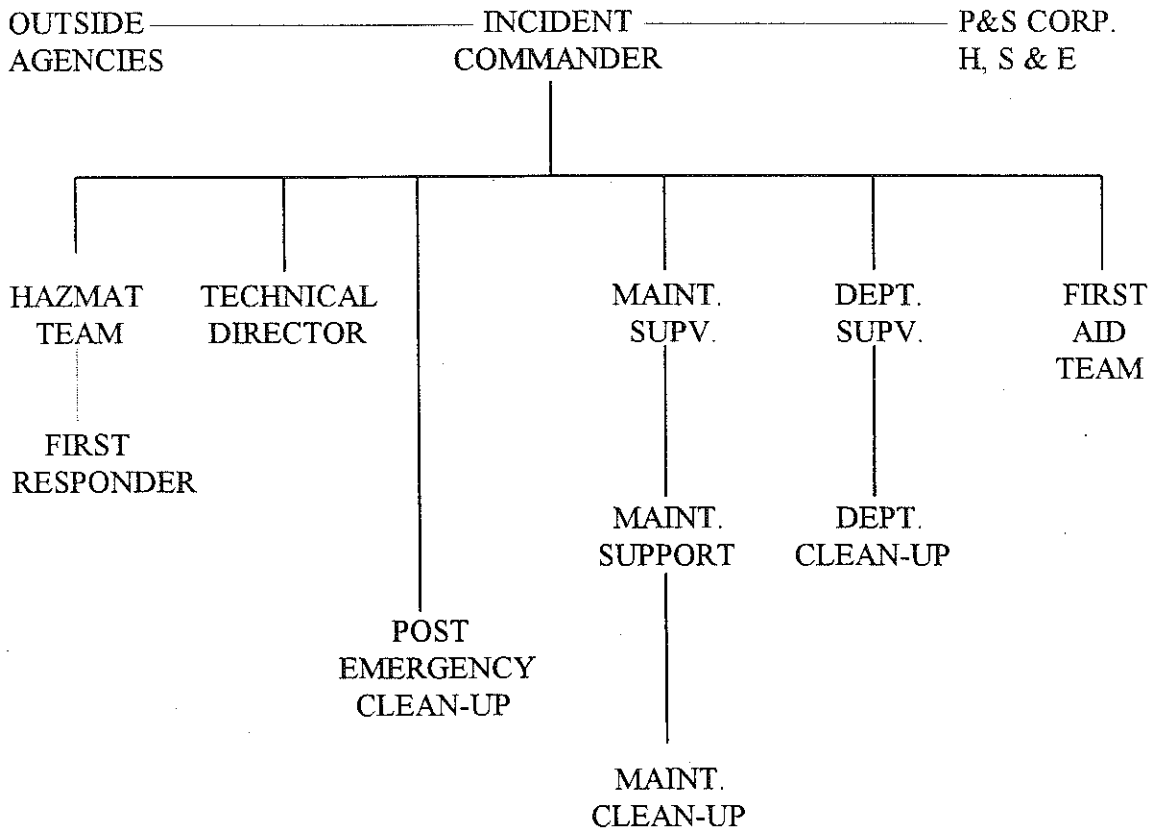

II. EMERGENCY ORGANIZATION RESPONSIBILITIES & TRAINING REQUIREMENTS

A. INCIDENT COMMANDER

1. Shall assume control of the Incident Command System and Command Post (CP).

2. Shall implement appropriate emergency operations primarily based on analysis of hazardous substances and conditions present, including determination of appropriate personal protective equipment (PPE) based on employee exposure levels, through the use of monitoring equipment and consultation with P&S Corp. Safety. Knowledge of hazardous substances is essential to operations.

3. Shall designate or assume responsibilities of the Safety Coordinator.

4. Shall receive at least 24 hours of training (total) equal to the HAZMAT Specialist level and have known competency in the following areas:

    a. Know and be able to implement the Incident Command System.

    b. Know how to implement the Emergency Response Plan.

    c. Know and understand the hazards and risks associated with employees working in chemical protective clothing.

    d. Know how to implement the local emergency response plan.

    e. Know of the State and/or Regional Emergency Response Plan.

    f. Know and understand the importance of decontamination procedures.

    g. Have familiarity with the hazardous materials handled on-site.

5. Shall complete training requirements established by P&S Corp. Safety for dealing with notification to the community.

6. Shall make required notifications to P&S Corp. Safety, the Federal EPA, local authorities, etc., as necessary based upon the materials involved, quantities involved and extent of the release.

B. HAZMAT RESPONDER - TECHNICIAN AND SPECIALIST LEVELS

Hazardous materials technician. Hazardous materials technicians respond to releases or potential releases to stop them. They assume a more aggressive role than a first responder at the operations level in that they approach the point of release to plug, patch, or otherwise stop the release of a hazardous substance.

Hazardous materials specialist. Hazardous materials specialists respond with and provide support to hazardous materials technicians. Their duties are similar to those of the hazardous material technician, but require a more directed or specific knowledge of the various substances they may be called upon to contain. The hazardous materials specialist also would act as the site liaison with federal, state, local, and other government authorities in regard to site activities.

1. Shall respond to hazardous substance releases or potential releases for purpose of stopping the release.

2. Shall receive at least 24 hours of training (total) and have shown competency in the following areas:

    a. Know how to implement the emergency response plan.

    b. Know the classification, identification and verification of known and unknown materials by using field survey instruments and equipment.

    c. Know how to select and use proper specialized chemical PPE provided.

    d. Understand hazard and risk assessment techniques.

    e. Be able to perform advance control, containment, and / or confinement operations within the capabilities and resources and PPE available.

    f. Be able to determine and implement the necessary decontamination procedures based upon the materials and exposures.

    g. Understand basic chemical and toxicological and hazardous materials terminology and behavior.

    h. Understand and be capable of donning and removing PPE.

    I. Understand and be able to implement decontamination procedures.

C. FIRST RESPONDER - GENERAL AWARENESS AND OPERATIONS LEVEL

First responder awareness level. First responders at the awareness level are individuals who are likely to witness or discover a hazardous substance release and who have been trained to initiate an emergency response sequence by notifying the proper authorities of the release. They would take no further action beyond notifying the authorities of the release.

First responder operations level. First responders at operations levels are individuals who respond to releases or potential releases of hazardous substances as part of the initial response to the site for the purpose of protecting nearby persons, property, or the environment from the effects of the release. They are trained to respond in a defensive fashion without actually trying to stop the release. Their function is to contain the release from a safe distance, keep it from spreading, and prevent exposures.

1. All employees shall be trained to initiate an emergency response sequence by notifying appropriate personnel of the release.

2. When the release has occurred within their own lab or manufacturing department work area and the materials are known, the first responder must be educated and therefore able to determine whether or not it is safe to shut down potential ignition sources prior to evacuation, or if no further action beyond notification of the release can be taken.

3. All employees shall have sufficient training or sufficient experience to objectively demonstrate competency in the following areas:

    a. Understand what hazardous materials are and the risks associated with them in an incident.

    b. Understand the potential outcomes associated with an emergency created when hazardous materials are present.

    c. Be able to recognize the presence of hazardous materials in an emergency situation.

    d. Be able to identify the hazardous materials, if possible based upon the circumstances.

    e. Be able to recognize the need for additional resources, and to make appropriate internal notifications.

EMERGENCY ORGANIZATION RESPONSIBILITIES & TRAINING REQUIREMENTS CONTINUED.

4. Training shall include: Hazard Communication (HMIS), Emergency Evacuation and Emergency Response and Notification Procedures.

D. FIRST-AID TEAM

1. Be trained and capable of providing initial emergency first-aid.
2. Shall be trained to a minimum of basic first-aid and CPR.
3. Shall know how to enact the emergency notification procedures in accordance with internal P&S contingency plans.

E. TECHNICAL DIRECTOR, CHEMIST, ETC.

1. Be capable of providing technical information regarding hazardous substance involved.

F. MAINTENANCE FOREMAN OR SUPERVISOR

1. Provide maintenance support regarding piping, electrical, utilities, buildings, etc.

G. DEPARTMENT SUPERVISORS AND FOREMAN

1. Assist in personnel control and implementation of emergency plans as necessary.

H. P&S HEALTH, SAFETY & ENVIRONMENTAL AFFAIRS DEPT.

1. Guide personnel and implementation of emergency plans as necessary.
2. Ability and authority to notify outside agencies.
3. Be capable of providing technical information regarding hazardous substance involved.
4. Provide training and additional resources.

I. OUTSIDE AGENCIES

1. Local Emergency Planning Committee
2. Fire Department
3. Sewer Authority
4. Spill Response Contractor

EMERGENCY ORGANIZATION RESPONSIBILITIES & TRAINING REQUIREMENTS CONTINUED.

5. Medical Center or Hospital

6. Local and / or State EPA

7. Utilities: Gas, Electric & Water

8. Police Department

9. News Media

10. State Emergency Response Commission

11. National Response Center

J. TRAINING REQUIREMENTS

Training requirements for personnel vary according to the responsibilities assigned. OSHA requires that specific subjects be covered and that training be of a specific duration, depending on the position. The following is a matrix of positions and training periods P&S Safety feels is necessary to meet internal and OSHA requirements.

Position	**Min. # Required**	**Training (TOTAL)**	**Min. yrs. of P&S Service**
Incident Commander	1	40 Hrs.	NA
HAZMAT Responder (Technician / Specialist)	2 / shift	24 Hrs.	2
Maint. Foreman / Leader	1 / facility	Millwright	5
First Responder (Operations Level)	All Mfg. and Lab associates	8 Hrs.	NA
First Responder (Awareness Level)	All other associates	2.5 Hrs.	NA

TRAINING CRITERIA MUST BE PROVIDED AS PER THE ATTACHED MATRIX – Appendix F. CONTRACTOR TRAINING PROGRAMS MUST FIRST BE APPROVED BY P&S HEALTH, SAFETY & ENVIRONMENTAL AFFAIRS DEPARTMENT.

III. MEDICAL SURVEILLANCE & CONSULTATION

A. A medical surveillance program shall be instituted for the following employees:

1. Members of the HAZMAT Team.

2. Associates who are injured due to overexposure from an incident involving a hazardous substance.

3. Employees who may be required to wear any type of respiratory equipment while responding to an emergency incident. (See Safety Procedure # 10.08, Respiratory Policy).

B. Medical Examinations shall include a medical and a work history with special emphasis on symptoms related to handling of hazardous substances and health hazards and fitness for duty, including the ability to wear all types of PPE under conditions (i.e., temperature extremes) that may be expected at the work site. The content of the medical examination shall be determined by the attending physician. See Appendix A.

C. Physicians shall be provided the following information prior to examinations:

1. Description of employees duties as they relate to employees exposure.

2. Anticipated and / or existing exposure levels.

3. PPE that may be worn.

4. Information from previous medical exams.

5. Information required by the P&S Respiratory Protection Policy, Safety Procedure # 10.08.

D. The physicians written report shall contain the following:

1. The physicians opinion as to whether the employee has any detected medical conditions which could place the employee at increased risk to employee's health from work in emergency response or respirator use.

2. The physicians recommended limitations upon the employees assigned work.

3. A statement that the employee has been informed by the physician of the results of the medical examination and any medical conditions which require further examination or treatment.

E. Each examined employee shall be given a copy of the written opinion from the physician.

F. Medical examinations and consultations shall be completed according to the following schedule:

1. Prior to assignment.

2. At least every 12 months unless the physician believes a longer interval (not greater than biennially) is appropriate.

3. At termination of employment or reassignment to an area where the employee would not be covered if the employee has not had an examination within the last six months.

4. As soon as possible upon notification by an employee that the employee has developed signs or symptoms indicating possible overexposure to hazardous substances or exposure above the PEL's or published exposure limits in an emergency situation.

G. An accurate record of employee medical records and medical surveillance shall be retained for at least the duration of employment plus 30 years. Biological monitoring results designated as exposure records by specific occupational health and safety standards shall be retained as required by the specific standard.

IV. PERSONAL PROTECTIVE EQUIPMENT

A. Personal Protective Equipment (PPE) shall be selected and used which will protect employees from the hazards and the potential hazards they are likely to encounter as identified during site characterization and analysis of an emergency response.

B. PPE should be selected and worn according to the procedures defined in this policy (see Appendix B and the Respiratory Protection Policy, Safety Procedure # 10.08).

C. SCBA or SABA equipped with an escape air supply shall be used when chemical exposure levels are unknown or required by the IC based on release situation and results of air monitoring.

D. Totally encapsulating chemical protective suits (Level A protection) shall be used in conditions where skin absorption of a hazardous substance may result in a substantial possibility of death, immediate serious illness or injury, or impair the ability to escape.

E. The level of PPE required may be increased or decreased based on information obtained during site analysis or analysis of the release.

F. The use of PPE can itself create significant work hazards, such as heat stress, physical and physcologic stress, and impaired vision, mobility and communication. For any given situation, equipment and clothing should be selected that provide an adequate level of protection. However, overprotection, as well as under-protection, can be as hazardous and should be avoided.

V. SITE CONTROL

A. The purpose of site control is to minimize potential contamination of workers and possibly protect the public from the site's hazards.

B. A facility map should be available showing buildings, drainage, sewer openings, secondary containment dikes, impoundment's , etc.

C. To reduce the accidental spread of hazardous substances by workers from a contaminated area , working control zones should be delineated and established. This delineation is necessary in that it will protect personnel and the facility by: 1.) Preventing spread of contamination exposing personnel and additional property. 2.) Allowing first-aid and emergency personnel safe access to those in need of attention. 3.) Ensuring that the proper level of PPE is being utilized when in proximity to a spill. See the diagram below.

SITE CONTROL CONT.

D. As seen in the diagram on the preceding page, the spill, site should be set up into three area: HOT ZONE (HZ); WARM ZONE (WZ); and the COLD ZONE (CZ).

E. The HOT ZONE is the area where contamination has or could occur. The area should be clearly marked by hazard tape, signs or other types of barriers. A single access point should be established to regulate the flow of personnel and equipment. Personnel allowed in the HZ would include HAZMAT members or Safety Coordinator, with the proper level of PPE. PPE to be worn in the HZ will be determined by the IC. An entire room or building could be an HZ.

F. The WARM ZONE is the transition area between the contaminated area and the clean area. This area is designed to reduce the probability that the clean SUPPORT ZONE (SZ) / CZ will become contaminated or effected by other site hazards. The location and size of the WZ will depend on the location and extent of the spill. Decontamination procedures shall take place in the WZ. Depending on the personnel and equipment involved, there may be more than one decontamination area. PPE worn by personnel working in the warm zone shall be determined by the IC.

G. The COLD ZONE is the location of the IC's command post and other support functions. Any function that need not or cannot be performed in a hazardous area is performed here. Any contaminated or potentially contaminated clothing should not be brought into the CZ; equipment or samples must remain in the WZ until decontaminated.

H. The line between the HZ and the WZ is called the HOTLINE. The line between the WZ and the CZ is called the CONTAMINATION CONTROL LINE.

I. Emergency evacuation plans should be reviewed to insure safe egress for emergency responders in the event of necessary evacuation. Any necessary changes to existing routes due to the hazardous substance release shall be conveyed to all applicable employees prior to entering the area.

VI. HAZARDOUS SUBSTANCE RELEASE PREVENTION & PREPARATION

A spill which results in the violation of one or more safety or environmental regulations will usually be due to the failure of design, equipment, maintenance procedure, or personnel. In order to identify the critical locations where these failures are most likely to occur, the following should be completed:

1. Identify the hazardous substances at the facility.

2. Prepare general hazardous material process flow schematics

    a. Identify critical points in terms of a release or "spill".

    b. Evaluate operating and maintenance procedures for the critical points.

    c. Identify permit release points for air, water and waste.

    d. Identify possible routes of spilled or released material.

    e. Identify primary and secondary containment systems.

3. Identify critical points in inspection programs to insure proper maintenance and work procedures for preventing and containing spills.

4. Maintain a supply of spill containment materials and equipment. This should include, but not be limited to:

    a. Push brooms, squeegees, shovels (non-sparking and non-static generating).
    b. Adsorbent booms, dikes (pigs), sand bags.
    c. Adsorbent pillows, sheets, clay, sealing mats.
    d. Salvage drums, pails.
    e. Polyethylene disposable bags.
    f. Blank HMIS and Hazardous Waste labels.
    g. Plugs, patches, wedges.
    h. AFFF portable fire extinguishers (optional).

VII. HAZARDOUS SUBSTANCE RELEASE RECOGNITION & RESPONSE

A. Any unplanned release should be considered a "spill.

B. All employees shall be trained at the First Responder Awareness Level.

C. Responses to incidental releases of hazardous substances where the substance can be absorbed, neutralized or otherwise controlled at the time of the release by employees in the immediate area, or by maintenance personnel, are not considered to be an emergency response.

D. An employee who works in the immediate area of a release may terminate, control and clean up the release if the operator:

1. Can readily identify the material.

2. Is familiar with the hazards of the material.

3. In the operators determination, will not be exposed to any greater extent than would be under normal working conditions.

E. An employee who works in the immediate area of a release shall initiate the emergency response sequence if:

1. The material cannot be readily identified.

2. In the operator's determination he / she may be exposed to the material to a greater extent than normal working conditions.

3. The release cannot be quickly and safely terminated.

4. The release involves a material with a HMIS rating of 4, or a material with an unknown HMIS rating or the release is located in a non-explosion proof electrical classification area.

5. The operator is alone at the time the release occurs or is discovered.

F. An employee observing a spill who initiates the emergency response sequence shall try to obtain the following information, if possible, before calling to report the spill:

1. Material(s) involved (name or code number).

2. HMIS Ratings.

3. Location and extent of the spill.

4. Whether or not the leak or release is spreading, shut off or continuing.

When obtaining this information the employee should be in no immediate danger due to fire, imminent ignition, inhalation or contact exposure. If so, the employee should leave the area immediately.

G. Once notification has been properly completed, the employee shall notify nearby workers of the situation and keep personnel from entering the spill area.

VIII. HAZMAT RESPONSE PROCEDURE

A. The Incident Commander (IC) shall establish a Command Post (CP)/be positioned at a safe location, through which all communication shall pass.

B. The IC shall gather and analyze all information available and determine the proper response to the emergency. This shall include, but not be limited to: Evacuation of personnel; establishment of the HZ, WZ and CZ; means and methods of spill control; PPE to be worn; delegation of duties, notifications to be made, etc.

1. Air Monitoring. The IC shall determine the PPE required for initial air monitoring. Minimum allowed respiratory protection consists of a full face respirator with appropriate chemical cartridge(s). The buddy system shall be used during air monitoring in the HZ. Air monitoring results will be used to determine if a greater level of respiratory protection is required, level of PPE, and how release termination, control and cleanup are to be implemented.

2. Air monitoring equipment to be utilized includes, but is not limited to:

   a. Combustible Gas Analyzer (LEL).

   b. Oxygen analyzer.

   c. Organic Vapor Analyzer.

   d. Colorimetric tubes.

   e. pH paper or meters.

C. Employees with potential exposure to hazardous substances presenting an unknown inhalation hazard shall wear positive pressure self contained breathing apparatus (SCBA) or supplied air breathing apparatus (SABA) while engaged in emergency response, until such time as the IC determines, through the use of air monitoring, that a decreased level of respiratory protection will not result in hazardous exposure to employees.

D. All operations within hazardous or potentially hazardous area (HOT ZONE) shall be performed using the buddy system in groups of two or more.

E. Backup personnel shall stand by with identical and surplus equipment ready to provide assistance or rescue.

F If the emergency response involves a confined area entry, The Confined Area Entry Safety Procedure (No. 2.21) shall be utilized prior to the entry.

G. Outside personnel who are skilled in the operation of certain equipment, such as earth moving or digging equipment, etc., who are needed to perform immediate emergency support work and who will or may be exposed to the hazards at the emergency response scene, are required to meet the training requirements of HAZMAT responders. In addition, these personnel shall be given an initial briefing at the scene prior to their participation in any response. The initial briefing shall include what chemical hazards are involved, what duties are to be performed, and decontamination procedures*. All other safety & health precautions provided to employees shall be used to assure the safety and health of these personnel. Outside personnel must supply their own PPE and equipment.

* The IC shall ensure that only those personnel with the appropriate training perform the various duties required at the emergency response site.

H. After emergency response operations have been completed, the IC shall implement appropriate decontamination and Post Emergency Response Cleanup Operations.

IX. POST EMERGENCY RESPONSE CLEANUP OPERATIONS

A. The IC shall terminate emergency response operations and implement cleanup operations as necessary.

B. Employees shall utilize PPE as deemed appropriate by the IC, based on hazardous substance exposures. This includes use of appropriate respiratory protective equipment. (Refer to Respiratory Protection Policy, Safety Procedure No. 10.08)

C. Employees involved in cleanup operations shall be trained in the following areas - as a minimum:

1. Facility Pre-Emergency Plan.

2. Respiratory Protection Policy.

3. Hazard Communication (HMIS).

4. Proper use of PPE and decontamination procedures.

D. Upon completion of the cleanup, the HZ should be checked for residual contamination using applicable monitoring equipment. Site restoration should not be started until monitoring the area shows the area to be clear of contamination.

X. DECONTAMINATION

A. All applicable employees shall be trained in decontamination procedures.

B. A decontamination plan and procedure should be established for each hazardous substance release based on the materials involved, PPE to be worn and exposures expected. The plan should include the following:

1. Determine the layout of areas to minimize exposure of uncontaminated employees or equipment.

2. Determine the decontamination equipment and materials needed.

3. Determine appropriate decontamination methods.

4. Establish procedures to prevent contamination of clean zones.

5. Establish methods and procedures to minimize worker contact with contaminants during removal of PPE.

6. Establish methods for safe disposal of contaminated PPE, equipment and materials.

C. Decontamination procedures shall be monitored by the Safety Coordinator to determine there effectiveness. When such procedures are found to be ineffective, appropriate steps shall be taken to correct any deficiencies.

D. The plan should be revised whenever the type of PPE changes , the site conditions change, or the site hazards are reassessed based on new information.

E. Emergency decontamination procedures should be established. This should include criteria for protecting medical personnel, controlling contaminated materials, and communicating chemical information to medical facilities in a timely manner.

XI. EMERGENCY MEDICAL & FIRST AID TREATMENT

A. Arrangements shall be made with the local medical clinics or hospitals to provide emergency medical and first aid treatment for employees.

B. It is preferred to have one or more employees per work shift, certified in first - aid and CPR in order to provide immediate first-aid treatment. Employees need not be part of a company sponsored first-aid team, but trained employees can act as "Good Samaritans" to render assistance.

C. An appropriate type and amount of first-aid supplies should be kept on-site at all times. The supplies must be properly stored, labeled and easily accessed in case of an emergency.

XII. EMERGENCY RESPONSE FOLLOW UP & CRITIQUE

A. The IC shall insure that the required notifications have been made to the P&S Safety Department, the EPA, local authorities, etc.

B. Spill report forms (see pages 22 and 23) should be completed and distributed as quickly as possible as required.

C. A meeting(s) should be held as soon as possible to review the incident to determine if there are deficiencies, omissions, etc., and to determine methods for corrections and / or improvements. Meeting minutes should be sent to the P&S Health, Safety & Environmental Affairs Department.

D. A review of all critiques should be made and appropriate revisions to the emergency response plan made.

INITIAL HAZARDOUS SUBSTANCE RELEASE REPORT

FACILITY OR LOCATION:

Date of Release: Time of Occurrence:

Location of Release: Area Covered:

Material(s) Released (include Corp. Code No.)

Volume Released: _____

CHECK ALL THAT APPLY

Release contained to:	If outside of bldg.:	Notification to:
_____ immediate area	_____ paved area	_____ Dept. Supervisor
_____ bldg., room/floor	_____ soil	_____ Plant. Manager
_____ bldg., rooms or	_____ Public waterway,	_____ HAZMAT Team
_____ outside of bldg.	_____ ditch, creek, etc.	_____ H, S & E Dept.
_____ off property	_____ public roadway	_____ Fire Dept.
_____ Other	_____ public land	_____ outside agencies
_____ sq. ft.	_____ Other(list below)	_____

Description of how release occurred:

Description of how release was stopped & contained:

Air monitoring results:

Description of how release was cleaned up:

Outside agencies notified:

Completed by: Date:

cc: Plant Manager, Safety Coordinator, P&S Safety, Other _____

FOLLOW-UP HAZARDOUS SUBSTANCE RELEASE REPORT

FACILITY OR LOCATION:

DATE OF RELEASE: TIME OF OCCURRENCE:

How did the release occur? (Describe the events and conditions leading up to the release)

What was the immediate cause(s) of the release?

Recommendations to prevent recurrence? (Immediate and future)

What actions have been taken?

Additional correspondence to or from outside agencies? (list and describe)

Completed by: Date:

cc: Plant Manager, Safety Coordinator, SEAD, Other _____

Verbal notification must include:

1. Company name, address, phone # and caller's name.

2. Chemical name (if a mixture, list all hazardous ingredients)

3. Nature of the release: a) solid_____ liquid_____ vapor_____
   b) estimates quantity
   c) time of release
   d) duration of the release
   e) location of release

4. Hazardous material: health_____ skin_____ respiratory_____
   flammability_____ reactivity_____ other_____.

5. Current status: a) weather condition
   b) containment/clean-up operations underway
   c) evacuation plans

6. List agencies called and time:

The Plant Manager and the Safety Coordinator must write a report describing the synopsis of events and actions and submit it to the P&S Safety Department with copies routed to Kevin Johnston and John Edholm. Additional reports to the federal, state and local agencies will follow.

NOTE: Immediate reactions to situations involving hazardous substances or conditions can be extremely dangerous if proper procedures are not followed and proper PPE is not worn.

Depending on conditions, evacuation of the area or the entire building may be necessary. If necessary, follow your posted evacuation routes and procedures.

XIII. TERMS AND DEFINITIONS

"Buddy system" means a system of organizing employees into work groups in such a manner that each employee of the work group is designated to be observed by at least one other employee in the work group. The purpose of the buddy system is to provide rapid assistance to employees in the event of an emergency.

"Clean-up operation" means an operation where hazardous substances are removed, contained, incinerated, neutralized, stabilized, cleared-up, or in any other manner processed or handled with the ultimate goal of making the facility safer for people or the environment.

"Combustible Liquid" means a liquid having a flash point at or above 100°F (HMIS Rating = 2)

"Command Post" means a location whose functions include the development of an incident action plan, information release point, establishment of a staging area for equipment and a safe refuge area for people, and coordination of the operations needed to resolve the incident safely.

"Decontamination" means the removal of hazardous substances from employees and their equipment to the extent necessary to preclude the occurrence of foreseeable adverse health affects. Decontamination protects workers from hazardous substances that may contaminate and eventually permiate PPE.

"Electrical Area Classification" Class I electrical equipment is required in areas where flammable liquids or vapors exist or may exist in sufficient quantities to produce an explosion or fire.

"Emergency response" or "responding to emergencies" means a response effort by employees from outside the immediate release area (i.e., Spill Brigade or HAZMAT Team) or by other designated responders (i.e., mutual-aid groups, local fire departments, etc.) to an occurrence which results, or is likely to result, in an uncontrolled release of a hazardous substance. Responses to incidental releases of hazardous substances where the substance can be absorbed, neutralized, or otherwise controlled at the time of release by employees in the immediate release area, or by maintenance personnel are not considered to be emergency responses within the scope of the OSHA standard or this Program. Responses to releases of hazardous substances where there is no potential safety or health hazard (i.e., fire, explosion, or chemical exposure) are not considered to be emergency responses.

"Facility" means (A) any building, structure, installation, equipment, pipe or pipeline (including any pipe into a sewer or publicly owned treatment works), well, pit, pond,

lagoon, impoundment, ditch, storage container, or motor vehicle or (B) any site or area where a hazardous substance has been deposited, stored, disposed of, or placed, or otherwise come to be located; but does not include any consumer product in consumer use.

"Flammable Liquid" means a liquid having a flash point below 100°F (HMIS Rating = 3 or 4)

"Hazardous materials response (HAZMAT or Spill Brigade) team" means an organized group of employees, designated by the employer, who are expected to perform work to handle and control actual or potential leaks or spills of hazardous substances requiring possible close approach to the substance. The team members perform responses to releases or potential releases of hazardous substances for the purpose of control or stabilization of the incident. A HAZMAT team is not a fire brigade nor is a typical fire brigade a HAZMAT team. A HAZMAT team, however, may be a separate component of a fire brigade or fire department.

"Hazardous substance" means any substance designated or listed under paragraphs (A) through (D) of this definition, exposure to which results or may result in adverse affects on the health or safety of employees:
(A) Any substance defined under section 101(14) of CERCLA ;
(B) Any biological agent and other disease-causing agent which after release into the environment and upon exposure, ingestion, inhalation, or assimilation into any person, either directly from the environment or indirectly by ingestion through food chains, will or may reasonably be anticipated to cause death, disease, behavioral abnormalities, cancer, genetic mutation, physiological malfunctions (including malfunctions in reproduction) or physical deformations in such persons or their offspring;
[Definition of "hazardous substance" revised, effective April 13, 1990, by 55 FR 14073, April 13, 1990]
(C) Any substance listed by the U.S. Department of Transportation as hazardous materials under 49 CFR 172.101 and appendices; and
(D) Hazardous waste as herein defined.

"Hazardous waste" means—
(A) A waste or combination of wastes as defined in 40 CFR 261.3 , or
(B) Those substances defined as hazardous wastes in 49 CFR 171.8 .

"Health hazard" means a chemical, mixture of chemicals or a pathogen for which there is statistically significant evidence based on at least one study conducted in accordance with established scientific principles that acute or chronic health effects may occur in exposed employees. The term "health hazard" includes chemicals which are carcinogens, toxic or highly toxic agents, reproductive toxins, irritants, corrosives, sensitizers, hepatoxins, nephrotoxins, neurotoxins, agents which act on the hematopoietic system, and agents which damage the lungs, skin, eyes, or mucous membranes. It also includes stress due to

temperature extremes. Further definition of the terms used above can be found in Appendix A to 29 CFR 1910.1200 .

"IDLH" or "Immediately dangerous to life or health " means an atmospheric concentration of any toxic, corrosive or asphyxiant substance that poses an immediate threat to life or would cause irreversible or delayed adverse health effects or would interfere with an individual's ability to escape from a dangerous atmosphere.

"Incident Command System" means an organized system of roles, responsibilities and standard operating procedures used to manage and direct emergency response operations.

"Oxygen deficiency " means that concentration of oxygen by volume below which atmosphere supplying respiratory protection must be provided. It exists in atmospheres where the percentage of oxygen by volume is less than 19.5 percent oxygen.

"Permissible exposure limit" means the exposure, inhalation or dermal permissible exposure limit specified in 29 CFR Part 1910, Subparts G and Z.

"Published exposure level" means the exposure limits published in "NIOSH Recommendations for Occupational Health Standards" dated 1986 incorporated by refer ence, or if none is specified, the exposure limits published in the standards specified by the American Conference of Governmental Industrial Hygienists in their publication "Threshold Limit Values and Biological Exposure Indices for 1987 -88" dated 1987 incorporated by reference.

"Post emergency response" means that portion of an emergency response performed after the immediate threat of a release has been stabilized or eliminated and clean-up of the site has begun. If post emergency response is performed by an employer's own employees who were part of the initial emergency response, it is considered to be part of the initial response and not post emergency response. However, if a group of an employer's own employees, separate from the group providing initial response, performs the clean-up operation, then the separate group of employees would be considered to be performing post-emergency response and subject to the requirements of section 2.G. of this policy. [Definition of "Post emergency response" revised, effective April 13, 1990, by 55 FR 14073, April 13, 1990]

"Qualified person" means a person with specific training, knowledge and experience in the area for which the person has the responsibility and the authority to control.

"Site Safety Coordinator / Safety and Health Supervisor" means the individual located at facility who is responsible and has the authority and knowledge necessary to implement the site safety and health plan and verify compliance with applicable safety and health requirements.

Appendix A

Determination of Fitness For Duty

1) Occupation and Medical History

   a) Review past illnesses and diseases, particularly atopic diseases such as eczema and asthma, lung diseases, and cardiovascular disease.

   b) Review symptoms, especially shortness of breath or labored breathing on exertion, other chronic respiratory symptoms, chest pain, high blood pressure, and heat tolerance.

   c) Identify individuals who are vulnerable to particular substances (i.e. allergic reactions).

   d) Record relevant lifestyle habits (e.g. cigarette smoking, alcohol and drug use) and hobbies.

2) Physical Examination

   a) Comprehensive physical examination, focusing on the pulmonary, cardiovascular and musculoskeletal systems.

   b) Note conditions that could increase susceptibility to heat stroke, such as obesity and lack of physical exercise.

3) Ability to Work While Wearing Protective Equipment

   a) Make a written assessment of the worker's capacity to perform while wearing a respirator.

   b) Provide additional testing (e.g. chest x-ray, pulmonary function, electrocardiogram) for ability to wear protective equipment where necessary. Base the determination on the worker's medical history and physical examination.

   c) Disqualify individuals who are clearly unable to perform based on their medical history and physical examination.

Appendix B

General Description and Discussion of the Levels of Protection and Protective Gear

As detectable by the standard, PPE must be selected which will protect employees from the specific hazards which they are likely to encounter during their work at the spill site.

Selection of the appropriate PPE is a complex process which should take into consideration a variety of factors. Key factors involved in this process are identification of the hazards, their routes of potential hazard to employees (inhalation, skin absorption, ingestion, and eye or skin contact), and the performance of the PPE materials (and seams) in providing a barrier to these hazards. The amount of protection provided by PPE is material-hazard specific. That is, protective equipment materials will protect well against some hazardous substances and poorly, or not at all, against others. In many instances, protective equipment materials cannot be found which will provide continuous protection from the particular hazardous substance. In these cases, the breakthrough time of the protective material should exceed the work durations, or the exposure after breakthrough may not pose a hazardous level.

The more that is known about the hazards at the site, the easier the job of PPE selection becomes. As more information about the hazards and conditions at the spill site becomes available, the site supervisor can make decisions to up-grade or down-grade the level of PPE protection to match the tasks at hand.

The following are guidelines that can be used to begin selection of appropriate PPE. It should be noted that PPE selection, evaluation and re-selection is an ongoing process until sufficient information about the hazards and PPE performance is obtained.

PPE Levels of Protection

Level of Protection: XA

Equipment:

Recommended:

- Self-contained breathing apparatus (SCBA) or Supplied-Air Breathing Apparatus (SABA) with escape air.
- Encapsulation Chemical resistant suit (Keppler 77484 Responder, or equivalent)
- Safety shoes with Chemical resistant boots
- Chemical resistant gloves

As required:

- Disposable chemical resistant boot cover
- Disposable inner gloves

Protection Provided:

- Maximum level respiratory protection
- Maximum eye protection
- Maximum skin protection

Should be Worn When:

1) Air contaminant levels are unknown or exposure levels require SCBA or SABA.

2) The atmospheric contaminants, liquid splashes, or direct contact will adversely affect exposed skin or skin exposed to contaminated clothing.

3) Work functions are likely to include splashes or physical contact with hazardous levels of chemicals or unknown chemicals.

4) Response involves "extremely hazardous substances" or special hazardous substances as defined by P&S H,S & E.

PPE Levels of Protection

Level of Protection: XB

Equipment:

Recommended:

- Self-contained breathing apparatus (SCBA) or Supplied-Air Breathing Apparatus (SABA) with escape air.
- Safety shoes with Chemical resistant boots
- Chemical resistant gloves
- Saranex Coated Tyvek coveralls, Keppler 77417 or equivalent, hood as necessary.

Protection Provided:

- Maximum level respiratory protection
- Maximum eye protection
- Moderate skin protection

Should be Worn When:

1) Air contaminant levels are unknown or exposure levels require SCBA or SABA.

2) Moderate risk of skin contact exists.

PPE Levels of Protection

Level of Protection: XC

Equipment:

Recommended:

- Full face air purifying respirator (type cartridge based on exposure level)
- Chemical resistant boots
- Chemical resistant gloves
- Safety shoes
- Safety glasses
- Chemical resistant suit or clothing (Saranex Tyvek Keppler 77417)
- Chemical splash goggles or face shield

As required:

- Disposable chemical resistant shoe covers
- Saranex Tyvek hood

Protection Provided:

- Moderate level respiratory protection
- Eye protection
- Skin protection

Should be Worn When:

1) Air contaminant have been identified, concentration measured and levels fall within respiratory protection criteria.

2) The atmospheric contaminants, liquid splashes, or direct contact will adversely affect exposed skin or skin exposed to contaminated clothing.

3) Work functions are likely to include splashes or physical contact with hazardous levels of chemicals or unknown chemicals.

Appendix C

Decontamination

Decontamination is the process of removing or neutralizing contaminants that have accumulated on personnel and equipment. Decontamination protects workers from hazardous substances that may contaminate and eventually permeate the protective clothing, respiratory equipment, tools, vehicle and other equipment used on site. It protects all site personnel by minimizing the transfer of harmful materials into clean areas; it prevents mixing of incompatible chemicals; and it protects the community by preventing uncontrolled transportation of contaminants from the site.

Types of Contamination

Contaminants can be located either on the surface of personal protective equipment or permeated into the PPE material. Surface contaminants may be easy to detect and remove; however, contaminants that have permeated a material are difficult or impossible to detect and remove. If contaminants that have permeated a material are not removed by decontamination, they may continue to permeate to either surface of the material where they can cause an unexpected exposure.

Five major factors affect the extent of permeation:

1) Contact time. The longer a contaminant is in contact with an object, the greater the probability and extent of permeation. For this reason, minimizing contact time is one of the most important objectives of a decontamination program.

2) Concentration. Molecules flow from areas of high concentration to areas of low concentration. As concentrations of wastes increase, the potential for permeation of personal protective clothing increases.

3) Temperature. An increase in temperature generally increases the permeation rate of contaminants.

4) Size of contaminant molecules and pore space. Permeation increases as the contaminant molecule becomes smaller, and as the pore space of the material to be permeated increases.

5) Physical state of wastes. As a rule, gases, vapors and low viscosity liquids tend to permeate more readily than high-viscosity liquids or solids.

Decontamination Methods

All personnel, clothing, equipment and samples leaving the contaminated area of a site (generally referred to as the Exclusion Zone) must be decontaminated to remove any harmful chemicals or infectious organisms that may have adhered to them. Decontamination method either (1) physically remove contaminants, (2) inactivate contaminants by chemical detoxification or disinfecting/sterilization, or (3) remove contaminants by a combination of both physical and chemical means.

Contaminant Removal

- Water rinse, using pressurized or gravity flow
- Chemical leaching and extraction
- Evaporation/vaporization
- Pressurized air jets
- Scrubbing/scraping. Commonly done using brushes, scrapers, or sponges and water compatible solvent cleaning solutions.
- Steam jets

Removal of Contaminated Surfaces

- Disposal of deeply permeated materials, e.g. clothing, floor mats and seats
- Disposal of protective coverings/coatings

Chemical Detoxification

- Halogen stripping
- Neutralization
- Oxidation/reduction
- Thermal/degradation

Disinfection/Sterilization

- Chemical disinfection
- Dry heat sterilization
- Gas/vapor sterilization
- Irradiation
- Steam sterilization

<u>Physical Removal</u>

In many cases, gross contamination can be removed by physical means involving dislodging/displacement, rinsing, wiping off and evaporation. Physical methods involving high pressure and/or heat should be used only as necessary and with caution since they can spread contamination and cause burns. Contaminants that can be removed by physical means can be categorized as follows:

Loose contaminants, adhering contaminants, volatile liquids.

Chemical Removal

Physical removal should be followed by a wash/rinse process using cleaning solutions. These cleaning solutions normally utilize one or more of the following methods:

- Dissolving contaminants. Chemical removal of surface contaminants can be accomplished by dissolving them in a solvent. The solvent must be chemically compatible with the equipment being cleaned. Organic solvents include alcohols, ethers, ketones, aromatics, and common petroleum products.

Solvent	**Soluble contaminants**
Water	Low-chain hydrocarbons Inorganic compounds Salts Some organic acids and other polar compounds
Dilute Acids	Basic (caustic) compounds Amines Hydrazines
Dilute Bases For example: - detergent - soap	Acidic compounds Phenols Thiols Some nitro and sulfonic compounds
Organic Solvents* For example: - alcohols - ethers - ketones - aromatics - straight-chain alkanes (e.g. hexane) - common petroleum products (e.g. fuel oil, kerosene)	Nonpolar compounds (e.g. some organic compnds)

* Warning: Some organic solvents can permeate and/or degrade the protective clothing.

- Surfactants. Surfactants augment physical cleaning methods by reducing adhesion forces between contaminants and the surface being cleaned, and by preventing redeposit of the contaminants.

- Solidification. Solidifying liquid or gel contaminants can enhance their physical removal. The mechanisms of solidification are (1) moisture removal through the use of absorbents such as grounded clay or powdered lime; (2) chemical reactions via polymerization catalysts and chemical reagents.

- Rinsing. Rinsing removes contaminants through dilution, physical attraction, and solubilization. Multiple rinses with clean solutions remove more contaminants than a single rinse with the same volume of solution. Continuous rinsing with large volumes will remove even more contaminants than multiple rinsings with a lesser total volume.

- Disinfection/Sterilization. Chemical disinfectants are a practical means of inactivating infectious agents. Unfortunately, standard sterilization techniques are generally impractical for large equipment and for personal protective clothing and equipment.

Many factors, such as cost, availability, and ease of implementation, influence the selection of a decontamination method. From a health and safety standpoint, two questions must be addressed:

1) Is the decontamination method effective for the specific substances present?
2) Does the method itself pose any health or safety hazards?

Testing for the Effectiveness of Decontamination

Decontamination methods vary in their effectiveness for removing different substances. The effectiveness of any decontamination should be assessed at the beginning of a program and throughout its use. If contaminated, materials are not being removed or are penetrating protective clothing, the decontamination program must be revised.

Health & Safety Hazards

While decontamination is performed to protect health and safety, it can pose hazards under certain circumstances. Decontamination methods may:

- Be incompatible with the hazardous substances being removed (i.e., a decontamination method may react with contaminants to produce an explosion, heat, or toxic products).

- Be incompatible with the clothing or equipment being decontaminated (e.g., some organic solvents can permeate and/or degrade protective clothing).

- Pose a direct health hazard to workers (e.g., vapors from chemical decontamination solutions may be hazardous if inhaled, or they may be flammable).

The chemical and physical compatibility of the decontamination solutions or other decontamination materials must be determined before they are used. Any decontamination method that permeates, degrades, damages, or otherwise impairs the safe functioning of the PPE is incompatible with such PPE and should not be used. If a decontamination method does pose a direct health hazard, measures must be taken to protect both decontamination personnel and the workers being decontaminated. The following page presents a decision aid for evaluating the health and safety aspects of decontamination methods.

Decontamination Area Layout

At a hazardous material release site, decontamination facilities should be located in the Warm Zone (WZ). Decontamination procedures must provide an organized process by which levels of contamination are reduced. The decontamination process should consist of a series of procedures performed in a specific sequence. Each procedure should be performed at a separate station in order to prevent cross contamination.

Stations should be separated physically to prevent cross contamination and should be arranged in order of decreasing contamination. Entry and exit points should be conspicuously marked.

Some recommended equipment for decontamination of personnel and personal protective clothing and equipment is listed below. In selecting decontamination equipment, consider whether the equipment itself can be decontaminated for reuse or can be easily disposed of.

- Drop cloths of plastic or other suitable materials on which heavily contaminated equipment and outer protective clothing may be deposited.

- Collection containers, such as drums or suitably lined trash cans, for storing disposable clothing and heavily contaminated personal protective clothing or equipment that must be discarded.

- Lined box with absorbents for wiping or rinsing off gross contaminants and liquid contaminants.

- Large galvanized tubs, stock tanks, or children's wading pools to hold wash and rinse solutions. These should be at least large enough for a worker to place a booted foot in, and should have either no drain or a drain connected to a collection tank or appropriate treatment system.

- Wash solutions selected to wash off and reduce the hazards associated with the contaminants.

- Rinse solutions selected to remove contaminants and contaminated wash solutions.

- Long-handled, soft-bristled brushes to help wash and rinse off contaminants.

- Paper or cloth towels for drying protective clothing and equipment.

- Lockers and cabinets for storage of decontaminated clothing and equipment.

Recommended equipment for decontamination, cont.

- Metal or plastic cans or drums for contaminated wash and rinse solutions.

- Plastic sheeting, sealed pads with drains, or other appropriate methods for containing and collecting contaminated wash and rinse solutions spilled during decontamination.

- Shower facilities for full body wash or, at a minimum, personal wash sinks (with drains connected to a collection tank or appropriate treatment system).

- Soap or wash solution, wash cloths, and towels for personnel.

- Lockers or closets for clean clothing and personal item storage.

All workers who assist in decontamination must themselves be decontaminated before entering the Cold Zone (CZ). The extent of their decontamination should be determined by the types of contaminants they may have contacted and the type of work they performed.

Emergency Decontamination

In addition to routine decontamination procedures, emergency decontamination procedures must be established. In an emergency, the primary concern is to prevent the loss of life or severe injury to site personnel. If immediate medical treatment is required to save a life, decontamination should be delayed until the victim is stabilized. If decontamination can be performed without interfering with essential life-saving techniques or first aid, or is a worker has been contaminated with an extremely toxic or corrosive material that could cause sever injury or loss of life, decontamination must be performed immediately. If an emergency due to a heat-related illness develops, protective clothing should be removed from the victim as soon as possible to reduce the heat stress. During an emergency, provisions must also be made for protecting medical personnel and disposing of contaminated clothing and equipment.

Decontamination Procedures

1) PPE Level XD Decontamination

Station 1 - Segregated equipment drop: Deposit equipment used onsite (tools, sampling devices, containers, etc.) on non-static generating plastic drop cloths or in containers with non-static generating plastic liners for decontamination at a later time.

Equipment - various size containers, non-static generating plastic container liners and plastic drop cloths.

Station 2 - Boot and glove wash: Scrub outer boots and gloves with soap and water.

Equipment - tub(s), soap & water, brush

Station 3 - Boot and glove rinse: Rinse off soapy water with clean water.

Equipment - tub(s), clean water, small pail or spray bottle

Station 4 - Boot and glove removal: Remove tape, gloves and boots and deposit in container for disposal or reuse.

Equipment - disposal container or storage container

Station 5 - Remove any non-chemical resistant PPE or clothing that has been contaminated and deposit in container for disposal.

Equipment - disposal container

Station 6 - Field wash: Wash face, hands and skin area that may have come in contact with chemicals.

Equipment - clean water, soap, basins or buckets, table, paper towels

2) PPE Level XC Decontamination

Station 1 - Segregated equipment drop: Deposit equipment used onsite (tools, sampling devices, containers, etc.) on non-static generating plastic drop cloths or in containers with non-static generating plastic liners for decontamination at a later time.

Equipment - various size containers, non-static generating plastic container liners and plastic drop cloths

Station 2 - Outer suit, boot and glove wash: Scrub PPE with decon solution or detergent/water

Equipment - tub(s), decon solution, detergent/water, brush

Station 3 - Outer suit, boot and glove rinse: Rinse PPE using copious amounts of water. Repeat as many times as necessary.

Equipment - tub(s), clean water, small pail, spray bottle, paper towels

Station 4 - Outer PPE removal: Remove tape, gloves, boots and suit, and deposit in container for disposal or reuse.

Equipment - disposal container or storage container

Station 5 - Respirator removal and wash: Remove respirator without touching any contaminated or potentially contaminated portion. If contaminated, wear protective gloves while washing respirator. Dispose of filter cartridges. Store in proper container and location.

Equipment - spray cleaner, basin or bucket, disinfectant, paper towels, brush

Station 6 - Remove any non-chemical resistant PPE or clothing that has been contaminated and deposit in container for disposal.

Equipment - disposal container

Station 7 - Field wash: Wash face, hands and skin area that may have come in contact with chemicals.

Equipment - clean water, soap, basins or buckets, table, paper towels

3) PPE Level XB Decontamination

Station 1 - Segregated equipment drop: Deposit equipment used onsite (tools, sampling devices, containers, etc.) on non-static generating plastic drop cloths or in containers with non-static plastic liners for decontamination at a later time.

Equipment - various size containers, non-static generating plastic container liners and plastic drop cloths.

Station 2 - Breathing gear, outer suit, boot and glove wash: With assistance, scrub contaminated breathing gear with decon solution or detergent/water. Scrub PPE with decon solution or detergent/water.

Equipment - tub(s), decon solution, detergent/water, brush

Station 3 - Breathing gear, outer suit, boot and glove rinse: Rinse breathing gear and PPE using copious amounts of water. Repeat as many times as necessary.

Equipment - tub(s), clean water, small pail, spray bottle, paper towels

Station 4 - Breathing gear removal: While still wearing respirator, disconnect air supply hose at regulator and breathing tube at regulator. Remove air tank or escape bottle.

Equipment - table, storage container

Station 5 - Outer PPE removal: Remove tape, gloves, boots and suit and deposit in container for disposal or reuse.

Equipment - disposal container or storage container

Station 6 - Respirator removal and wash: Remove respirator facepiece without touching any contaminated or potentially contaminated portion. If contaminated, wear protective gloves while washing respirator. Store in proper container.

Equipment - spray cleaner, basin or bucket, disinfectant, paper towels, brush

Station 7 - Remove any non-chemical resistant PPE or clothing that has been contaminated and deposit in container for disposal.

Equipment - disposal container

Station 8 - Field wash: Wash face, hands and skin area that may have come in contact with chemicals.

Equipment - clean water, soap, basins or buckets, table, paper towels.

Listing of Current HAZMAT Team Members

Emergency Contact Numbers Work Extension; Home #; Pager

Incident Commanders (IC's):

1. Primary (Plant Manager):

2. Alternate (Plant Engineer / Safety Coordinator):

HAZMAT Spill Team Members:

1.

2.

3.

4.

5.

6.

7.

Health, Safety & Environmental Affairs Department:

1. Kevin W. Johnston – Manager – Health, Safety & Environmental Affairs Dept.
   Work: (716) 856-4941, ext.: 288 Home: (716) 6893195 Pager: 1(800) 988-7074

2. James F. Drzewiecki – Health, Safety & Environmental Coordinator
   Work: (716) 856-4941, ext. 206 Home: (716) 683-8263 Pager: 1(800) 988-7075

24 Hour Emergency: (716) 856-4910

APPENDIX E - Emergency Recognition

OSHA defines incidental and emergency responses in a document titled "CPL 2-2.59". The applicable portion in identifying emergencies is located in Appendix E as follows:

Releases of Hazardous Substances that Require an Emergency Response

The function of this appendix is to present a thorough discussion of the distinction between incidental releases of hazardous substances and releases that require an emergency response, and hence, compliance with the provisions of 1910.120(q) Emergency response to hazardous substance releases. This has been a point of considerable inquiry to and interpretation by OSHA.

An understanding of the distinction between an incidental release of a hazardous substance and a release that requires an emergency response is fundamental to proper compliance with the provisions of 29 CFR 1910.120(q). This part of the standard was written to cover a wide array of facilities and situations: "Emergency response operations for releases of, or substantial threats of releases of, hazardous substances without regard to the location of the hazard." (29 CFR 1910.120(a)(1)(v))

Potential releases of hazardous substances in the workplace can be categorized into three distinct groups in terms of the planning provisions of 1910.120(q). These groups are:

1. Releases that are clearly incidental regardless of the circumstances,

2. Releases that may be incidental or may require an emergency response depending on the circumstances,

3. Releases that clearly require an emergency response regardless of the circumstances.

Releases that are Clearly Incidental

The scope of the HAZWOPER standard does not cover the inevitable release of a hazardous substance that is limited in quantity and poses no emergency or significant threat to the safety and health of employees in the immediate vicinity. This type of release is referred to as an "incidental release" in 29 CFR 1910.120(a)(3), where "emergency response" is defined.

An incidental release is a release of hazardous substance which does not pose a significant safety or health hazard to employees in the immediate vicinity or to the employee cleaning it up, nor does it have the potential to become an emergency within a short time frame. Incidental releases are limited in quantity, exposure potential, or toxicity and present minor safety or health hazards to employees in the immediate work area or those assigned to clean them up.

If the hazardous substances that are in the work area are always stored in very small quantities, such as a laboratory which handles amounts in pint sizes down to test tubes, and the hazardous substances do not pose a significant safety and health threat at that volume, then the risks of having a release that escalates into an emergency are minimal. In this setting incidental releases will generally be the norm and employees will be trained to protect themselves in handling incidental releases per the training requirements of the Hazard Communication standard (29 CFR 1910.1200).

Releases That May Be Incidental or Require an Emergency Response

Depending on the circumstances, the properties of hazardous substances, such as toxicity, volatility, flammability, explosiveness, corrosiveness, etc., as well as the particular circumstances of the release itself, such a quantity, confined space considerations, ventilation, etc., will have an impact on what employees can handle safely and what procedures should be followed. Additionally, there are other factors which may mitigate the hazards associated with a release and its remediation, such as the knowledge of the employee in the immediate work area, the response and personal protective equipment (PPE) at hand, and the pre-established standard operating procedures for responding to releases of hazardous substances.

There are some engineering control measures that will mitigate the release which employees can activate to assist them in controlling and stopping the release.

These considerations (properties of the hazardous substance, the circumstances of the release, and the mitigating factors in the work area) combine to define the distinction between incidental releases and releases that require an emergency response. The distinction is facility-specific and is a function of the emergency response plan. For Example: A spill of the solvent toluene in a facility that manufactures toluene may not require an emergency response because of the advanced knowledge of the personnel in the immediate vicinity and equipment available to absorb and clean up the spill. However, the same spill inside a furniture refinishing shop with personnel that have had only the basic hazard communication training on toluene, may require an emergency response by more highly trained personnel. The furniture refinishing shop's emergency response plan in this case would call for evacuation for all but the most minor spills, while evacuation and emergency response would be necessary for only much larger spills at the chemical manufacturing facility.

Releases that Require an Emergency Response Regardless of the Circumstances

There are releases of hazardous substances that pose a significant enough threat to health and safety that, by their very nature, require an emergency response regardless of the circumstances surrounding the release or the mitigating factors. An employer must determine the potential for an emergency in a reasonably predictable worst-case scenario (or "anticipated emergencies," 29 CFR 1910.120(q)(1)), and plan response procedures accordingly.

An emergency response includes, but is not limited to, the following situations:

1. The response comes from outside the immediate release area;

2. The release requires evacuation of employees in the area;

3. The release poses, or has the potential to pose, conditions that are immediately dangerous to life and health (IDLH);

4. The release poses a serious threat of fire or explosion (exceeds or has the potential to exceed the lower explosive limit or lower flammable limit);

5. The release requires immediate attention because of imminent danger;

6. The release may cause high levels of exposure to toxic substances;

7. There is uncertainty that the employee in the work area can handle the severity of the hazard with the PPE and equipment that has been provided and the exposure limit could easily be exceeded; and

8. The situation is unclear, or data is lacking on important factors.

Responders from Outside the Immediate Release Area

"Emergency response" is defined in 29 CFR 1910.120(a)(3) as follows:

"Emergency response" . . . means a response effort by employees from outside the immediate release area or by other designated responders (i.e., mutual-aid groups, local fire departments, etc.) to an occurrence which results, or is likely to result, in an uncontrolled release of a hazardous substance. Responses to incidental releases of hazardous substances where the substance can be absorbed, neutralized, or otherwise controlled at the time of release by employees in the immediate release area, or by maintenance personnel are not considered to be emergency responses with in the scope of this standard. Responses to releases of hazardous substances where there is no potential safety or health hazard (i.e., fire, explosion, or chemical exposure) are not considered to be emergency responses.

The standard covers responses "by other designated responders". The use of the "or" means that responders are a separate group, different from employees within the immediate release area, directed to respond to the emergency by the employer. Employees working in the immediate release area (not just outsiders) are covered if the employer designates them as emergency responders. The standard, 29 CFR 1910.120(q), uses the term "responders" generally to refer to employees who respond to emergencies.

The Superfund Amendments and Reauthorization Act (SARA), the statute that mandated HAZWOPER, directs broad coverage of all employees responding to emergencies with no limitation on their location. SARA states, ". . . standards shall set forth responding requirements for training of workers who are responsible for, responding to hazardous emergency situations who may be exposed to toxic substances." (See SARA 126(d)(4).) For an emergency to be covered by the standard, conditions causing a dangerous situation which involve hazardous substances are sufficient, there need not be both an emergency and a response by outside responders before the employer prepares for an emergency. For Example: A release of chlorine gas above the IDLH, obscuring visibility and moving through a facility is an emergency situation even if the initial responders are from the immediate release area. Employees who would respond to this hypothetical situation, whether they work in the immediate area or come from outside, would need to act in accordance with 29 CFR 1910.120(q).

Employees must not be made to respond to releases in the immediate release area that would otherwise require outside assistance from a trained hazardous materials team merely because the definition of an emergency response states that an emergency response is ". . . a response effort by employees from outside the immediate release area." Conversely, incidental releases of hazardous substances that are routinely cleaned up by those from outside the immediate release area need not be considered emergency responses solely because the employee responsible for cleaning it up comes from outside the immediate release area. For Example: Paint thinner is spilled in an art studio and the janitor is called from outside the immediate release area to mop it up. The janitor does not have to respond in accordance with 29 CFR 1910.120,

although the janitor would be expected to understand the hazards associated with paint thinner through the hazard communication training.

18 - Hazardous Waste and Off-Specification Material Handling Procedure

1.) Wear proper PPE.

2.) Inspect tools and equipment (e.g., grounding and bonding straps, 55 gallon drum, PPE, funnels, etc.).

3.) Are you familiar with the hazards of the material ? If so, you may proceed. If not, refer to HMIS, batchcard, MSDS, container label, or contact your Foreman or Plant Management.

4.) Ensure that the local or area exhaust ventilation system is in operation.

5.) Remove any static generators (e.g., plastic lined drums, plastic shrink wrap, etc.) from the hazardous area and take all precautions against static electrical buildup.

6.) If necessary obtain an empty / sound 55 gallon drum whose previous contents will be compatible with the material you are handling. See compatibility chart or contact Foreman or Plant Management.

7.) Remove all existing labels and P&S markings from the drum. Stencil the correct product recycle or waste code on the head and side of the drum. Adhere a Hazardous Waste label to the drum as necessary. Complete waste labeling requirements as per RCRA training and internal program.

8.) In a safe / designated location: Bond the container and then transfer material into the properly grounded and labeled drum.

9.) After transfer of material, ensure that the drum is sealed.

10.) Reuse, or properly empty and discard the container as per RCRA procedure. Note: To be disposed of as ordinary plant trash, the container must be emptied to the extent possible. Therefore, the container must be scraped clean, or depending on the material, cleaned per other equally effective means such as pouring. Only dried material, no more than 3 percent by weight of the total capacity of the container can remain in the container or inner liner. Unless the container is rendered free of liquid as per the above, it must be disposed of as hazardous waste.

PIERCE & STEVENS CORP.

HAZARDOUS AND NON-HAZARDOUS WASTE

LABEL AND DRUM DETAILS

HAZARDOUS WASTE

FEDERAL LAW PROHIBITS IMPROPER DISPOSAL

IF FOUND CONTACT THE NEAREST POLICE, OR PUBLIC SAFETY AUTHORITY, OR THE U.S. ENVIRONMENTAL PROTECTION AGENCY

GENERATOR INFORMATION:
NAME PIERCE & STEVENS CORP.

ADDRESS 710 OHIO STREET PHONE (716) 856-4910

CITY BUFFALO STATE NY ZIP 14203

EPA ID NO. / MANIFEST DOCUMENT NO. NYDOO2108629 MANIFEST NUMBER / _____

ACCUMULATION START DATE _____ EPA WASTE NO. _____

_____

_____

_____

D.O.T PROPER SHIPPING NAME AND UN OR NA NO. WITH PREFIX

HANDLE WITH CARE !

W:\hseinfo\rcra\waste_labels2.doc 1/29/99

P&S WASTE & OFF -SPEC. MATERIAL CODES

P&S CODE	DESCRIPTION OF P&S WASTE & OFF-SPEC MATERIAL CODES	DESIGNATION
7990	Water-Borne Material	NON-HAZARDOUS
8060	Solvent-Borne Material (Low Solids - Pumpable)	**HAZARDOUS**
9099	Solvent-Borne Material (High Solids - Non-pumpable)	**HAZARDOUS**
9403	Water-Borne Ignitable Material	**HAZARDOUS**
9404	Acrylate Mixed with Solvent and Styrene	**HAZARDOUS**
9405	Multifunctional Monomeric Acrylate (No Solvents)	NON-HAZARDOUS
9406	MDI and/or TDI	**HAZARDOUS**
9407	MDI and/or TDI in small containers within the drum	**HAZARDOUS**
9408	Aromatic Amines	**HAZARDOUS**
9409	Multifunctional Monomeric Acrylate mixed with water	NON-HAZARDOUS
9410	Water-Borne Adhesive	NON-HAZARDOUS
9411	Out of Spec. Dualite	NON-HAZARDOUS
9412	Rags, Filter Bags and Filter Cartridges	**HAZARDOUS**
9413	Coagulum/Hot Melt Scrap	NON-HAZARDOUS
9414	C-Pryme Waste	**HAZARDOUS**
9415	Mercury Compound Rags, PPE, Containers, etc.	**HAZARDOUS**
9415**H**	High Mercury Conc. (>260ppm) Cocure M4436M, J9638A, etc.	**HAZARDOUS**
9416	Non-Hazardous Filter Bags, Cartridges and Rags	NON-HAZARDOUS
9417	Spent Chlorinated Solvent Material	**HAZARDOUS**

P&S NON - HAZARDOUS WASTE CODE: 7990

LABEL DETAIL

NON-HAZARDOUS WASTE

OPTIONAL INFORMATION:

SHIPPER PIERCE & STEVENS CORP.

ADDRESS 710 OHIO STREET

CITY, STATE, ZIP BUFFALO, NY 14203

CONTENTS: ~~WATER-BORNE NON-HAZARDOUS WASTE~~

NON-HAZARDOUS WASTE

DRUM DETAIL FOR WASTE CODE: 7990

STENCIL **7990** ON HEAD AND SIDE OF DRUM.

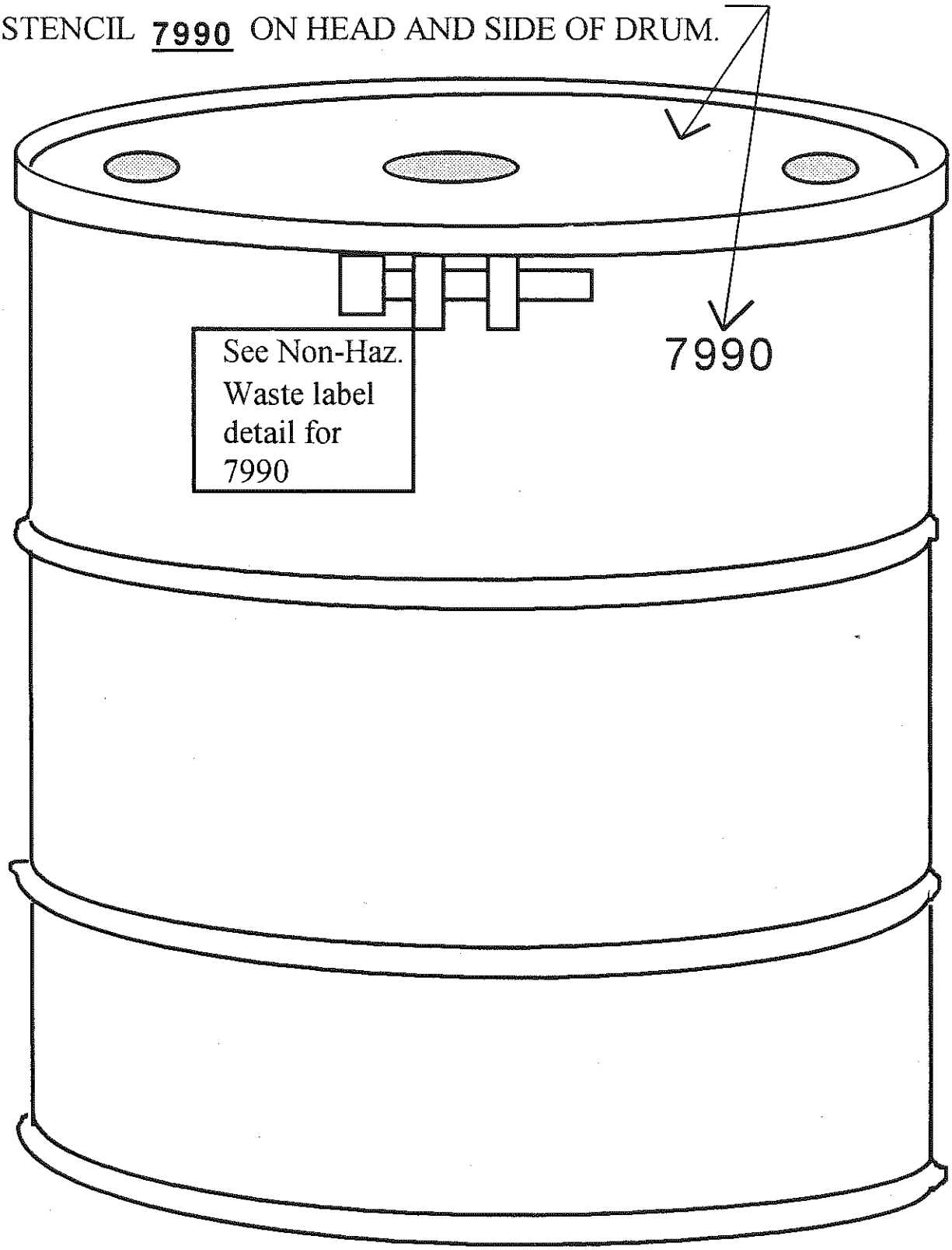

P&S HAZARDOUS WASTE CODE: 8060

LABEL DETAIL

HAZARDOUS WASTE *(DATE DRUM BECAME FULL ?)*

FEDERAL LAW PROHIBITS IMPROPER DISPOSAL

IF FOUND CONTACT THE NEAREST POLICE, OR PUBLIC SAFETY AUTHORITY, OR THE U.S. ENVIRONMENTAL PROTECTION AGENCY

GENERATOR INFORMATION:
NAME PIERCE & STEVENS CORP.

ADDRESS 710 OHIO STREET PHONE (716) 856-4910

CITY BUFFALO STATE NY ZIP 14203

EPA ID NO. MANIFEST DOCUMENT NO. NYDOO2108629 MANIFEST NUMBER *(ADD)* ?

ACCUMULATION START DATE ? *(ADD)* ? EPA WASTE NO.D001, D035, F003, F005

WASTE FLAMMABLE LIQUID, N.O.S.(TOLUENE, METHYL ETHYL KETONE)

3 UN1993, PG II (D001) RQ

D.O.T PROPER SHIPPING NAME AND UN OR NA NO. WITH PREFIX

HANDLE WITH CARE !

DRUM DETAIL FOR WASTE CODE: 8060

STENCIL **8060** ON HEAD AND SIDE OF DRUM.

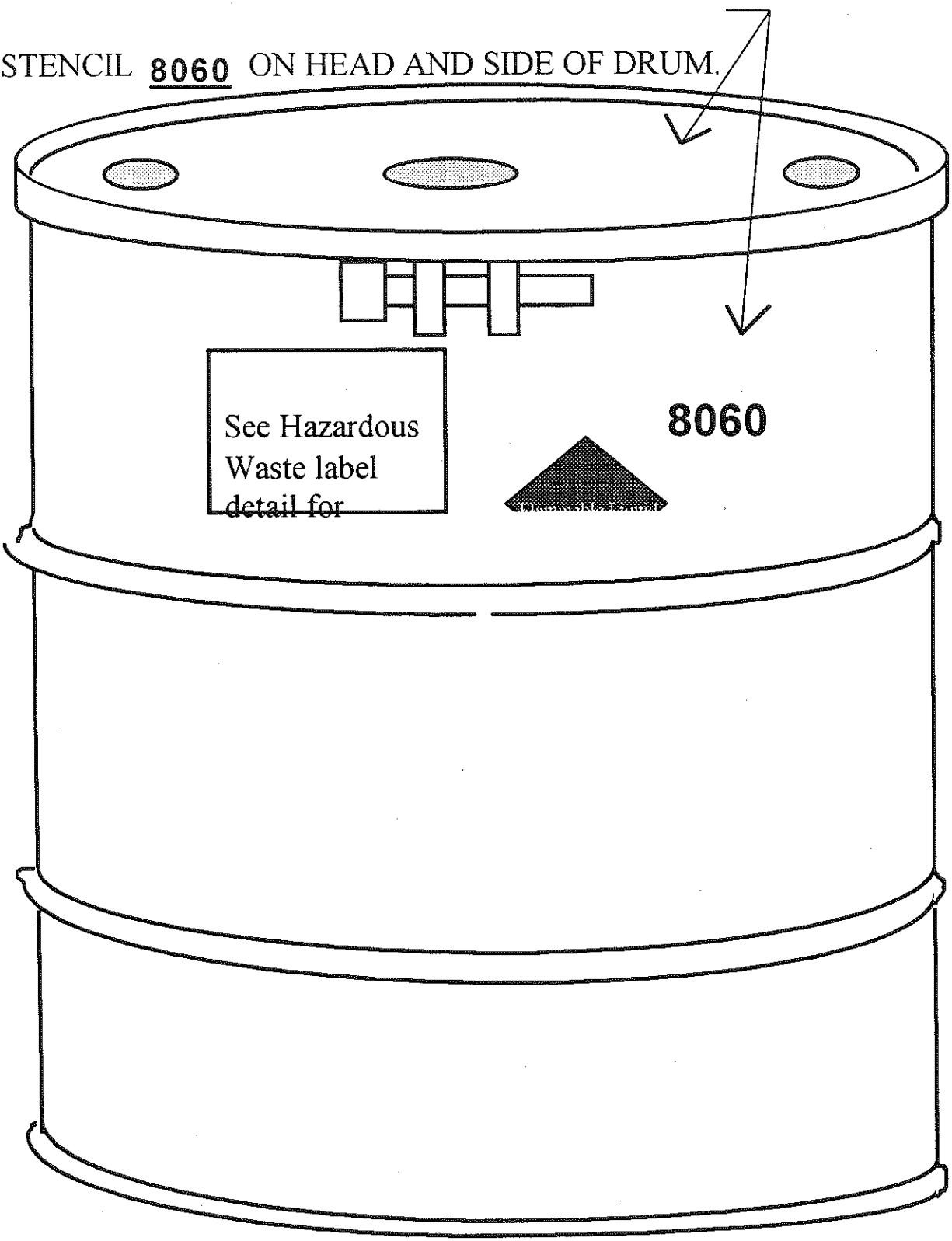

P&S HAZARDOUS WASTE CODE: 9099

LABEL DETAIL

HAZARDOUS WASTE *(DATE DRUM BECAME FULL ?)*

FEDERAL LAW PROHIBITS IMPROPER D!SPOSAL

IF FOUND CONTACT THE NEAREST POLICE, OR PUBLIC SAFETY AUTHORITY, OR THE U.S. ENVIRONMENTAL PROTECTION AGENCY

GENERATOR INFORMATION:
NAME PIERCE & STEVENS CORP.

ADDRESS 710 OHIO STREET PHONE (716) 856-4910

CITY BUFFALO STATE NY ZIP 14203

EPA ID NO. MANIFEST DOCUMENT NO. NYDOO2108629 MANIFEST NUMBER *(ADD)* ?

ACCUMULATION START DATE ? *(ADD)* ? EPA WASTE NO. D001, D035

WASTE FLAMMABLE LIQUID N.O.S. (TOLUENE, METHYL ETHYL KETONE

3 UN1993, PG II (DOO1) RQ

D.O.T PROPER SHIPPING NAME AND UN OR NA NO. WITH PREFIX

HANDLE WITH CARE !

DRUM DETAIL FOR WASTE CODE: 9099

STENCIL **9099** ON HEAD AND SIDE OF DRUM.

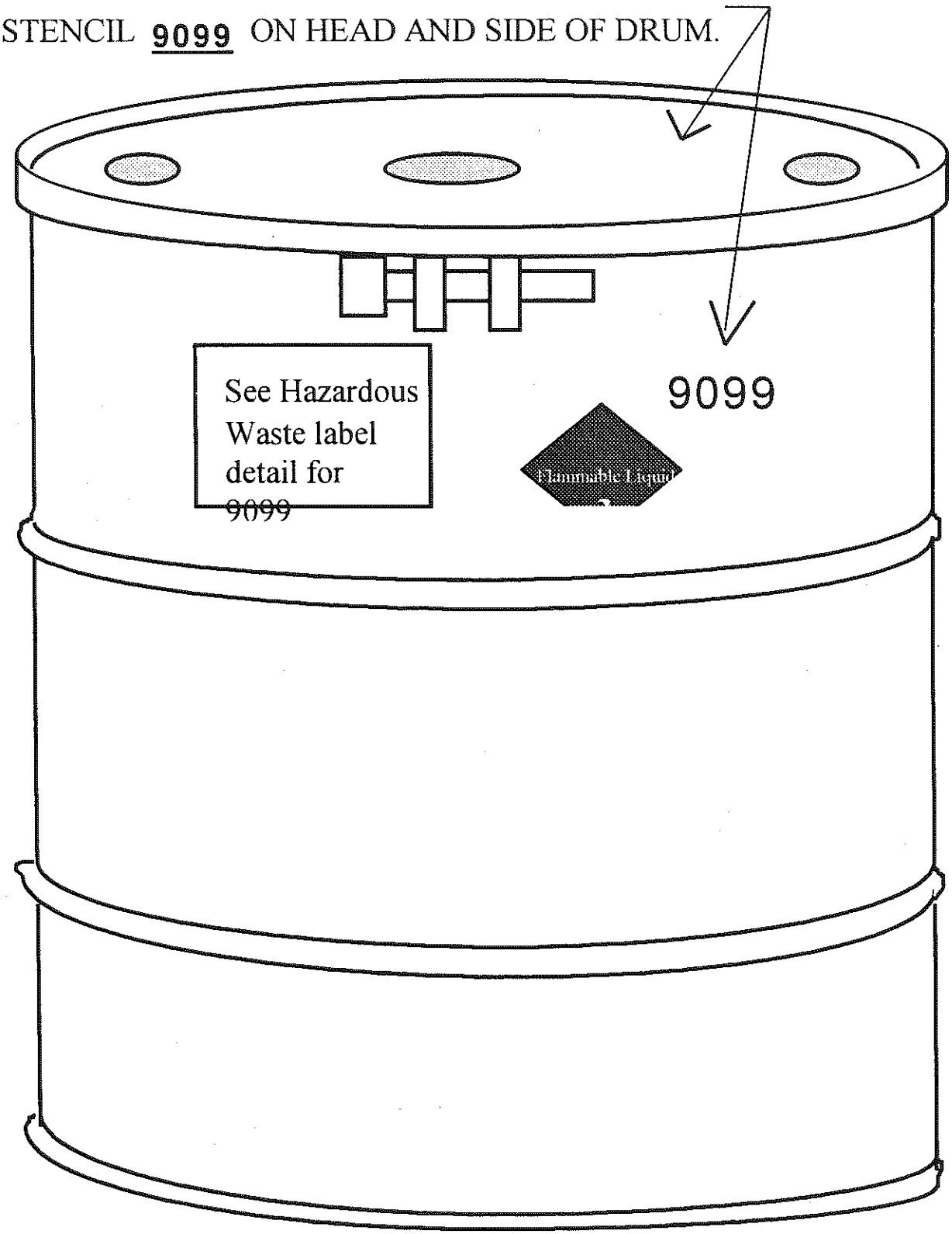

P&S HAZARDOUS WASTE CODE: 9403

LABEL DETAIL

HAZARDOUS WASTE *(DATE DRUM BECAME FULL ?)*

FEDERAL LAW PROHIBITS IMPROPER DISPOSAL

IF FOUND CONTACT THE NEAREST POLICE, OR PUBLIC SAFETY AUTHORITY, OR THE U.S. ENVIRONMENTAL PROTECTION AGENCY

GENERATOR INFORMATION:
NAME PIERCE & STEVENS CORP.

ADDRESS 710 OHIO STREET **PHONE** (716) 856-4910

CITY BUFFALO **STATE** NY **ZIP** 14203

EPA ID NO. / MANIFEST DOCUMENT NO. NYDOO2108629 **MANIFEST NUMBER /** *(ADD)* ?

ACCUMULATION START DATE ? *(ADD)* ? **EPA WASTE NO.** D001

WASTE COMBUSTIBLE LIQUID N.O.S.(ISOPROPYL ALCOHOL, ETHANOL)

3 UN1993, PG III (D001) RQ

D.O.T PROPER SHIPPING NAME AND UN OR NA NO. WITH PREFIX

HANDLE WITH CARE !

DRUM DETAIL FOR WASTE CODE: 9403

STENCIL **9403** ON HEAD AND SIDE OF DRUM.

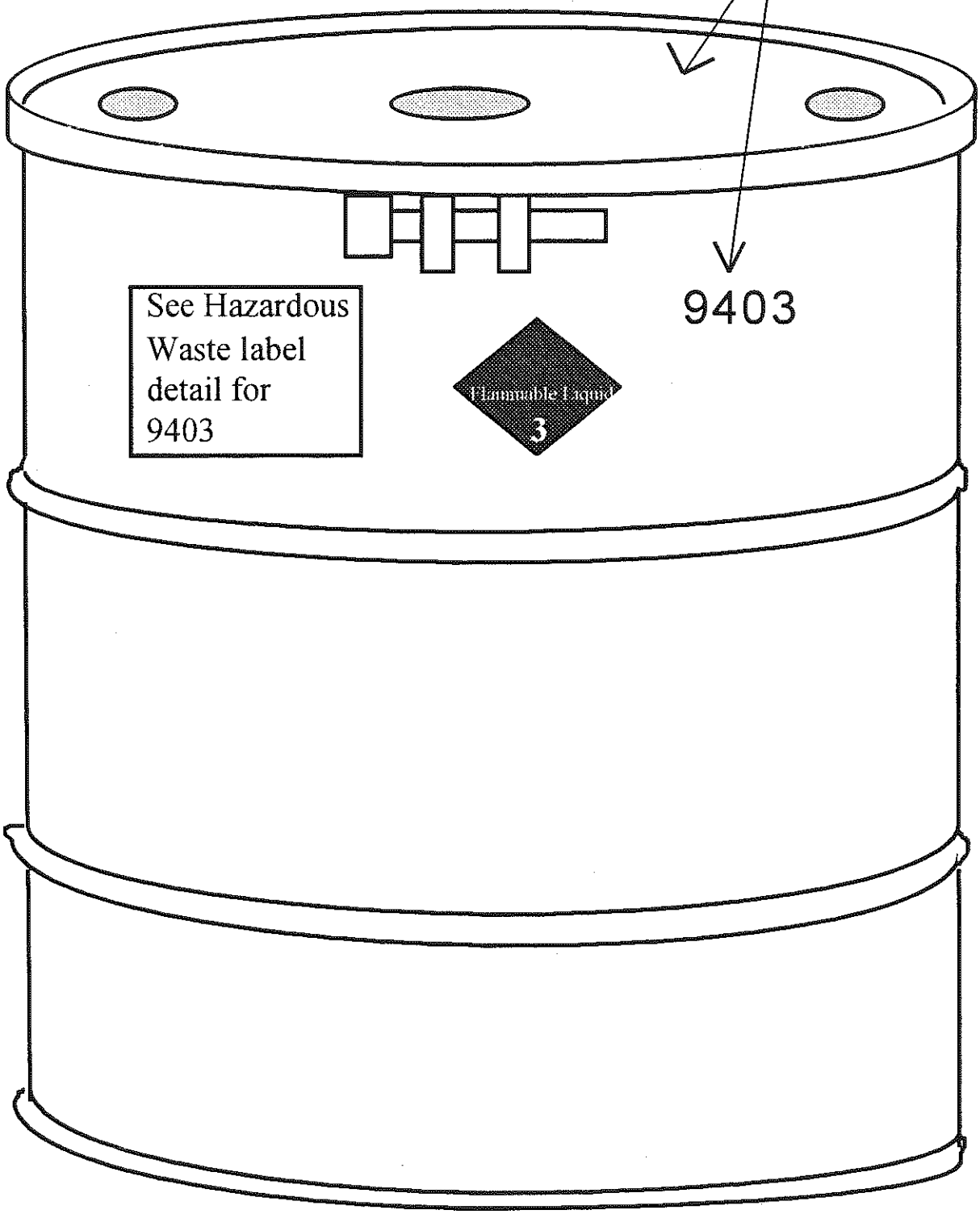

P&S HAZARDOUS WASTE CODE: 9404

LABEL DETAIL

HAZARDOUS WASTE *(DATE DRUM BECAME FULL ?)*

FEDERAL LAW PROHIBITS IMPROPER DISPOSAL

IF FOUND CONTACT THE NEAREST POLICE, OR PUBLIC SAFETY AUTHORITY, OR THE U.S. ENVIRONMENTAL PROTECTION AGENCY

GENERATOR INFORMATION:
NAME PIERCE & STEVENS CORP.

ADDRESS 710 OHIO STREET **PHONE** (716) 856-4910

CITY BUFFALO **STATE** NY **ZIP** 14203

EPA ID NO. / MANIFEST DOCUMENT NO. NYDOO2108629 **MANIFEST NUMBER /** *(ADD)* ~~?~~

ACCUMULATION START DATE ~~? *(ADD)* ?~~ **EPA WASTE NO.** ~~D001, F003~~

WASTE FLAMMABLE LIQUID N.O.S. (ETHYL ACETATE)

3 UN1993, PG II (5000#) RQ

D.O.T PROPER SHIPPING NAME AND UN OR NA NO. WITH PREFIX

HANDLE WITH CARE !

DRUM DETAIL FOR WASTE CODE: 9404

STENCIL **9404** ON HEAD AND SIDE OF DRUM.

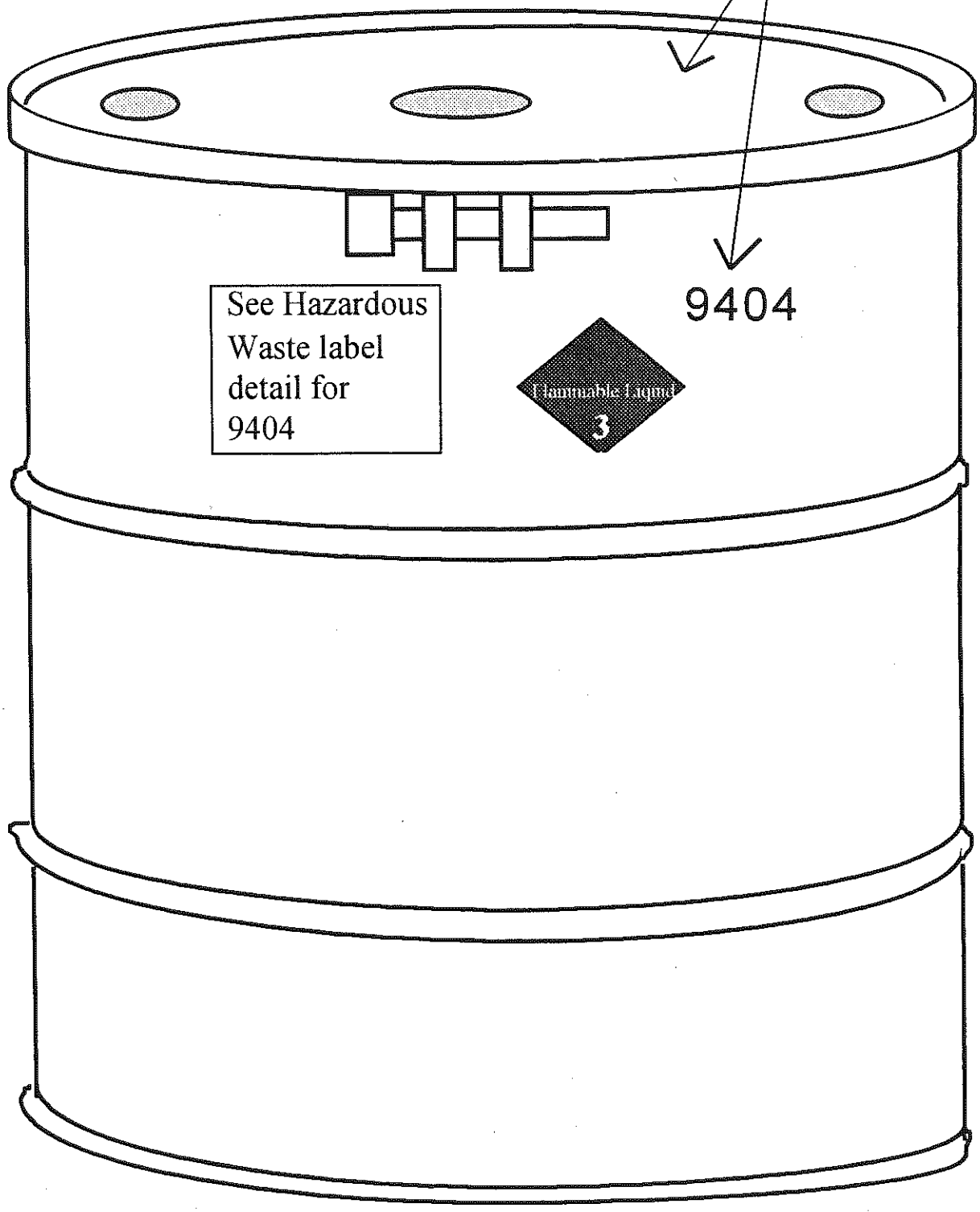

P&S NON - HAZARDOUS WASTE CODE: 9405

LABEL DETAIL

NON-HAZARDOUS WASTE

OPTIONAL INFORMATION:

SHIPPER PIERCE & STEVENS CORP.

ADDRESS 710 OHIO STREET

CITY, STATE, ZIP BUFFALO, NY 14203

CONTENTS: MULTI-FUNCTIONAL MONOMERIC ACRYLATE WASTE (NO SOLVENTS)

NON-HAZARDOUS WASTE

DRUM DETAIL FOR WASTE CODE: 9505

STENCIL **9505** ON HEAD AND SIDE OF DRUM.

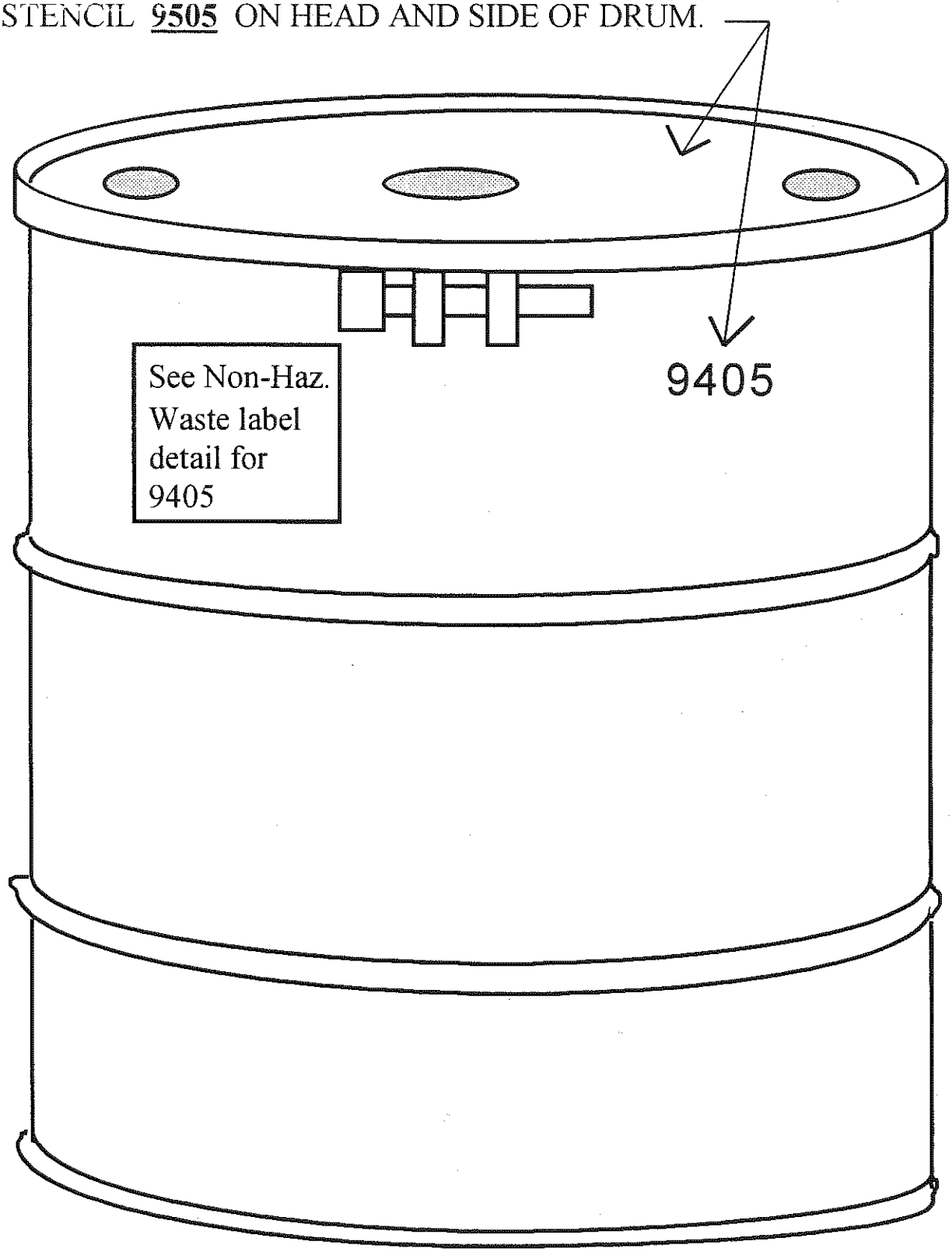

P&S HAZARDOUS WASTE CODE: 9406

LABEL DETAIL

HAZARDOUS WASTE *(DATE DRUM BECAME FULL ?)*

FEDERAL LAW PROHIBITS IMPROPER DISPOSAL

IF FOUND CONTACT THE NEAREST POLICE, OR PUBLIC SAFETY AUTHORITY, OR THE U.S. ENVIRONMENTAL PROTECTION AGENCY

GENERATOR INFORMATION:
NAME PIERCE & STEVENS CORP.

ADDRESS 710 OHIO STREET **PHONE** (716) 856-4910

CITY BUFFALO **STATE** NY **ZIP** 14203

EPA ID NO. / MANIFEST DOCUMENT NO. NYDOO2108629 **MANIFEST NUMBER /** *(ADD)* ?

ACCUMULATION START DATE ? *(ADD)* ? **EPA WASTE NO.** D003

HAZARDOUS WASTE LIQUID N.O.S.(POLYISOCYANATE PREPOLYMER)

9 NA3082, PGIII (D003) RQ

D.O.T PROPER SHIPPING NAME AND UN OR NA NO. WITH PREFIX

HANDLE WITH CARE !

DRUM DETAIL FOR WASTE CODE: 9406

STENCIL **9406** ON HEAD AND SIDE OF DRUM.

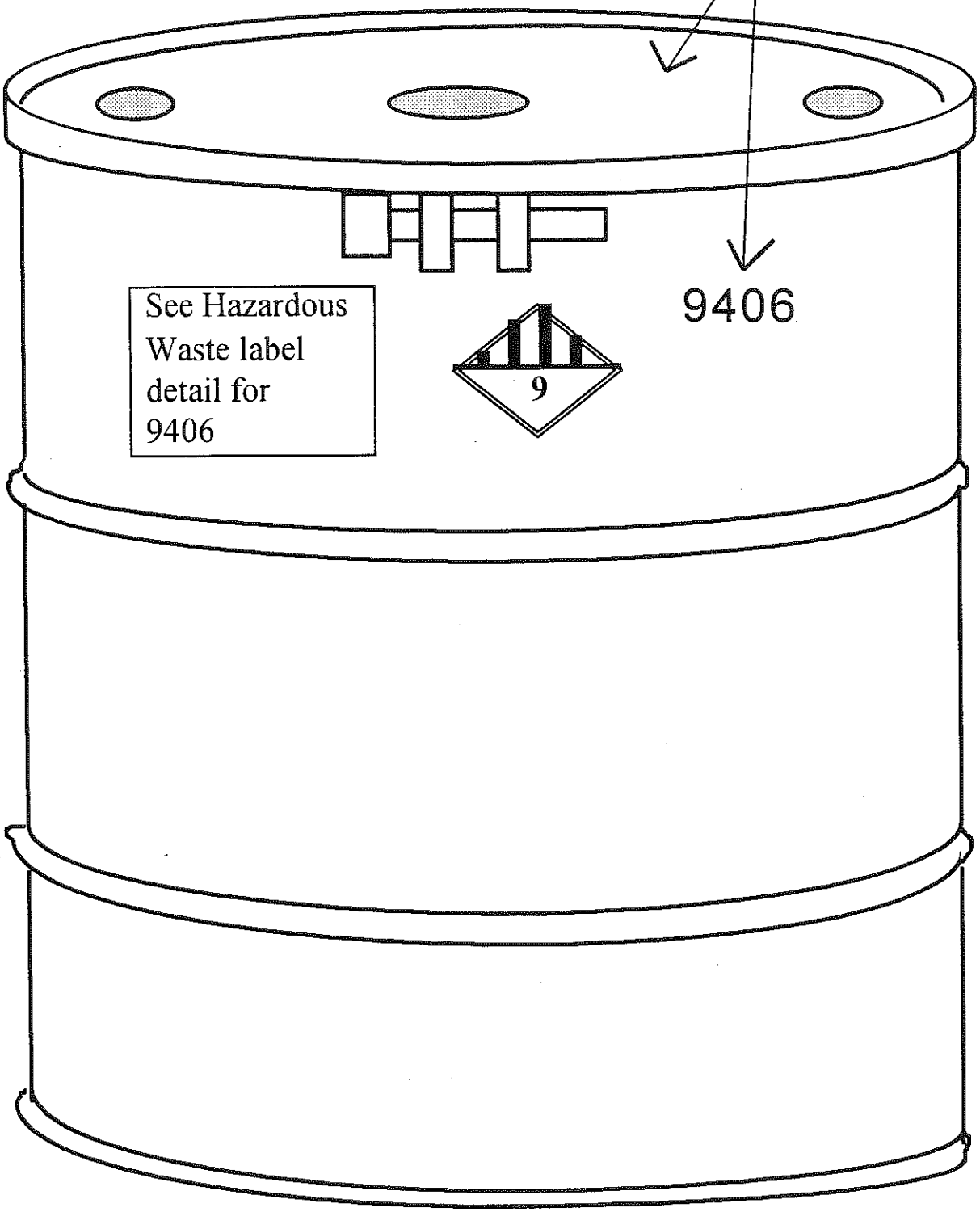

P&S HAZARDOUS WASTE CODE: 9407

LABEL DETAIL

HAZARDOUS WASTE *(DATE DRUM BECAME FULL ?)*

FEDERAL LAW PROHIBITS IMPROPER DISPOSAL

IF FOUND CONTACT THE NEAREST POLICE, OR PUBLIC SAFETY AUTHORITY, OR THE U.S. ENVIRONMENTAL PROTECTION AGENCY

GENERATOR INFORMATION:
NAME PIERCE & STEVENS CORP.

ADDRESS 710 OHIO STREET **PHONE** (716) 856-4910

CITY BUFFALO **STATE** NY **ZIP** 14203

EPA ID NO. / MANIFEST DOCUMENT NO. NYDOO2108629 **MANIFEST NUMBER /** *(ADD)* ?

ACCUMULATION START DATE ? *(ADD)* ? **EPA WASTE NO.** D003

HAZARDOUS WASTE LIQUID N.O.S. (POLYISOCYANATE PREPOLYMER)

9 NA3082, PG III (D003) RQ

D.O.T PROPER SHIPPING NAME AND UN OR NA NO. WITH PREFIX

HANDLE WITH CARE !

DRUM DETAIL FOR WASTE CODE: 9407

STENCIL **9407** ON HEAD AND SIDE OF DRUM.

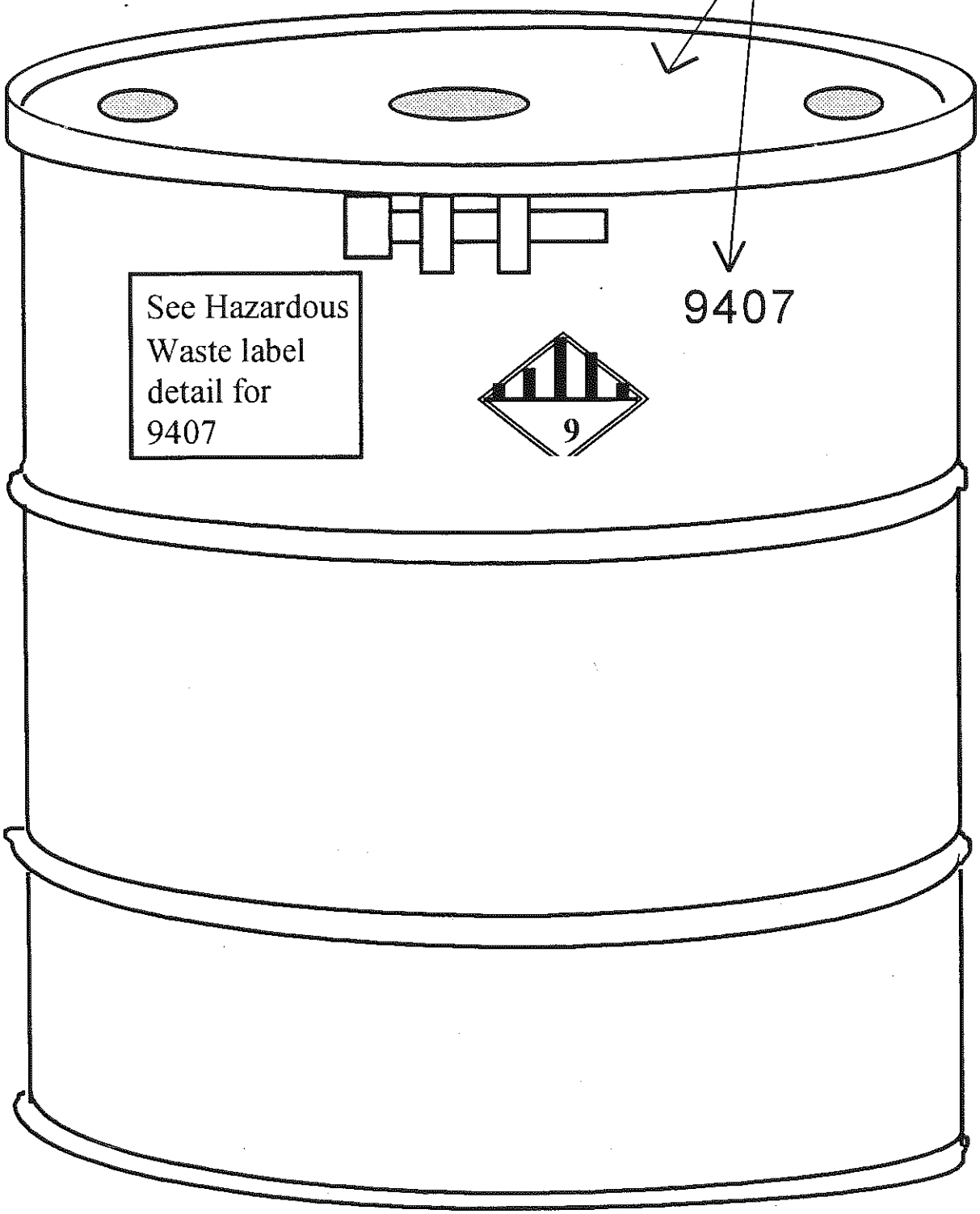

P&S HAZARDOUS WASTE CODE: 9408

LABEL DETAIL

HAZARDOUS WASTE *(DATE DRUM BECAME FULL ?)*

FEDERAL LAW PROHIBITS IMPROPER DISPOSAL

IF FOUND CONTACT THE NEAREST POLICE, OR PUBLIC SAFETY AUTHORITY, OR THE U.S. ENVIRONMENTAL PROTECTION AGENCY

GENERATOR INFORMATION:
NAME PIERCE & STEVENS CORP.

ADDRESS 710 OHIO STREET PHONE (716) 856-4910

CITY BUFFALO STATE NY ZIP 14203

EPA ID NO. / MANIFEST DOCUMENT NO. NYDOO2108629 MANIFEST NUMBER / *(ADD)* ?

ACCUMULATION START DATE ? *(ADD)* ? EPA WASTE NO. D001

WASTE FLAMMABLE LIQUID NOS (MORPHOLINE)

3 UN1993, PGIII (D001) RQ

D.O.T PROPER SHIPPING NAME AND UN OR NA NO. WITH PREFIX

HANDLE WITH CARE !

DRUM DETAIL FOR WASTE CODE: 9408

STENCIL **9408** ON HEAD AND SIDE OF DRUM.

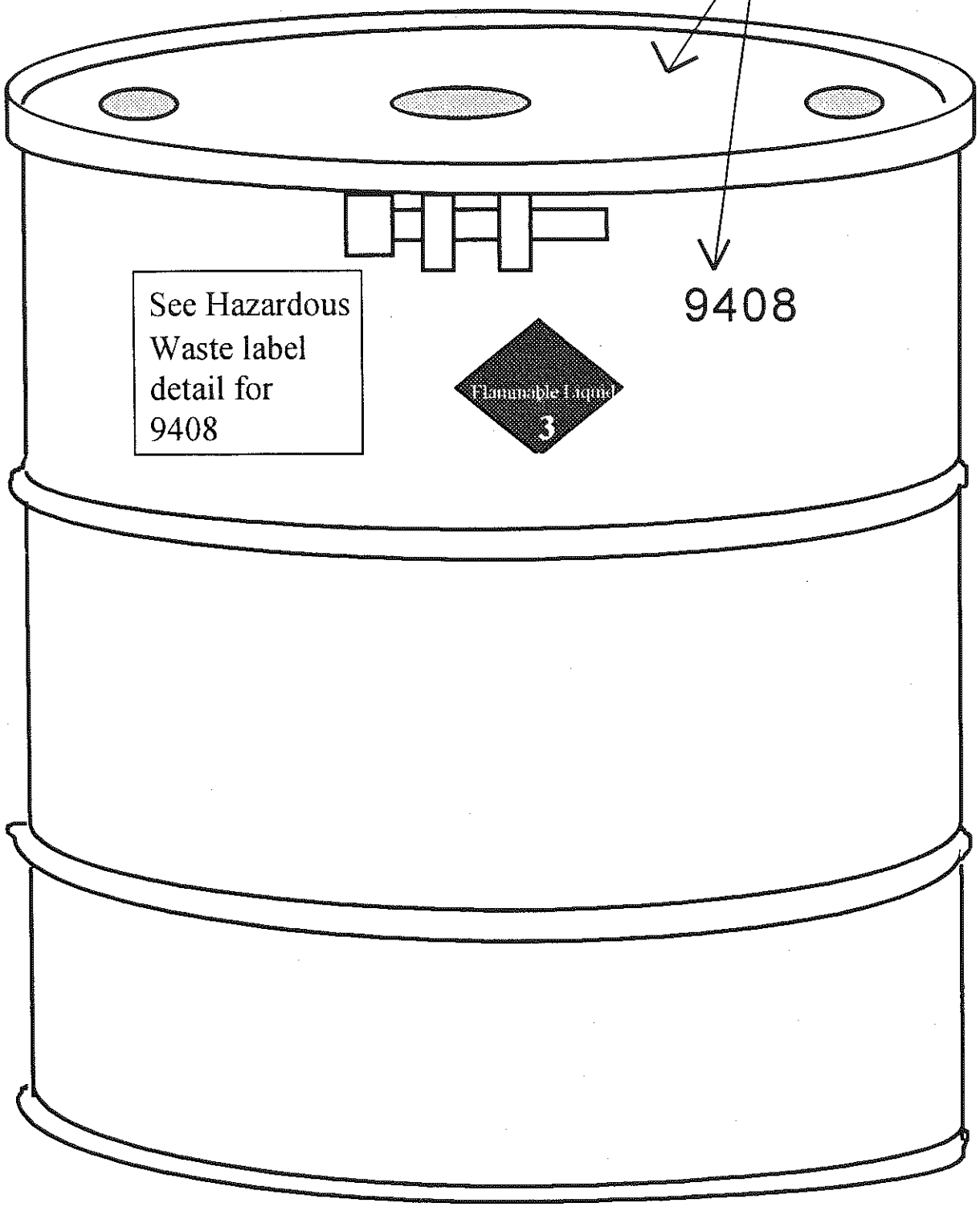

P&S NON - HAZARDOUS WASTE CODE: 9409

LABEL DETAIL

NON-HAZARDOUS WASTE

OPTIONAL INFORMATION:

SHIPPER PIERCE & STEVENS CORP.

ADDRESS 710 OHIO STREET

CITY, STATE, ZIP BUFFALO, NY 14203

CONTENTS: MULTIFUNCTIONAL MONOMERIC ACRYLATE WASTE WITH WATER

NON-HAZARDOUS WASTE

DRUM DETAIL FOR WASTE CODE: 9409

STENCIL **9409** ON HEAD AND SIDE OF DRUM.

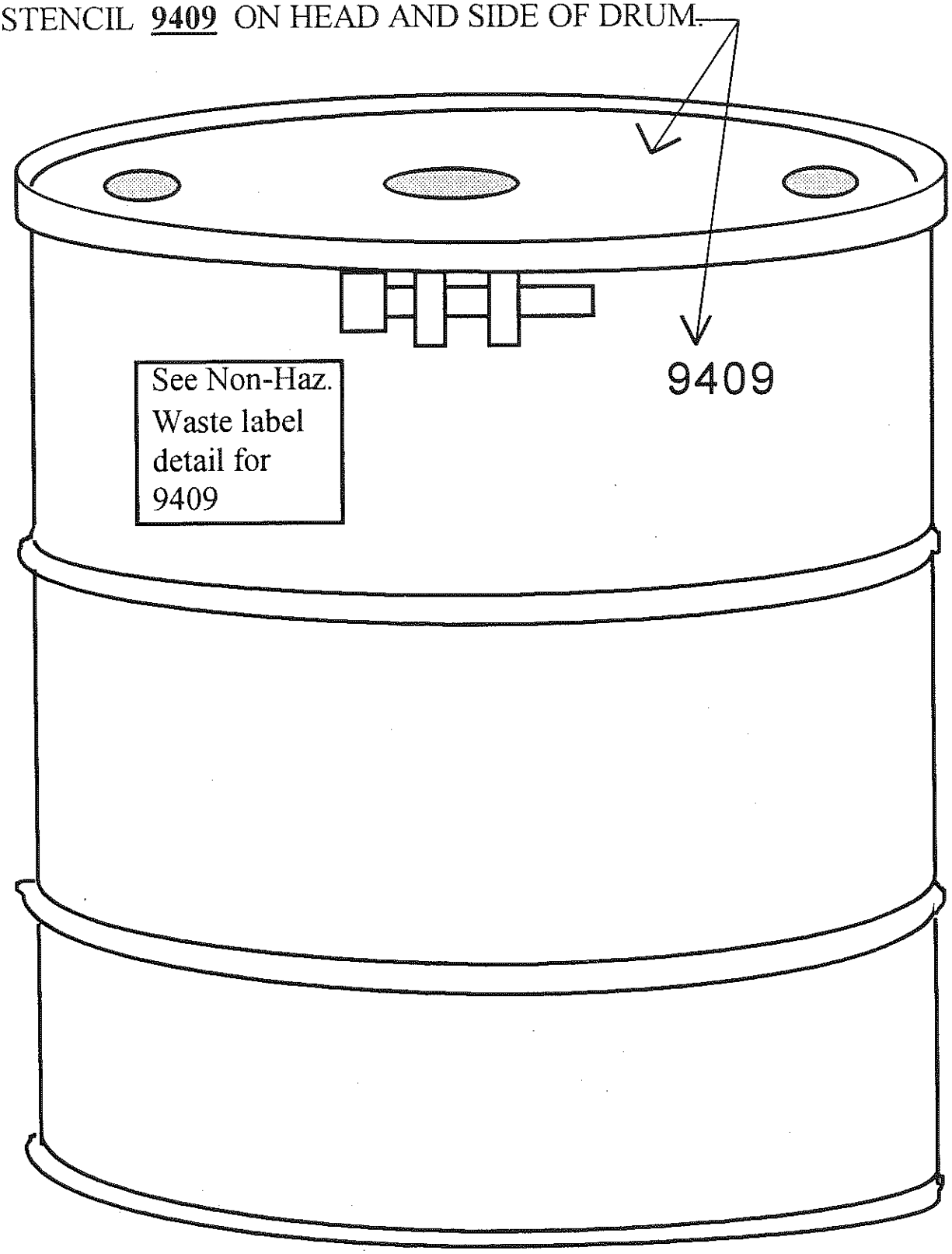

P&S NON - HAZARDOUS WASTE CODE: 9410

LABEL DETAIL

NON-HAZARDOUS WASTE

OPTIONAL INFORMATION:

SHIPPER PIERCE & STEVENS CORP.

ADDRESS 710 OHIO STREET

CITY, STATE, ZIP BUFFALO, NY 14203

CONTENTS: WATER-BORNE ADHESIVE

(NON-HAZARDOUS)

NON-HAZARDOUS WASTE

DRUM DETAIL FOR WASTE CODE: 9410

STENCIL **9410** ON HEAD AND SIDE OF DRUM

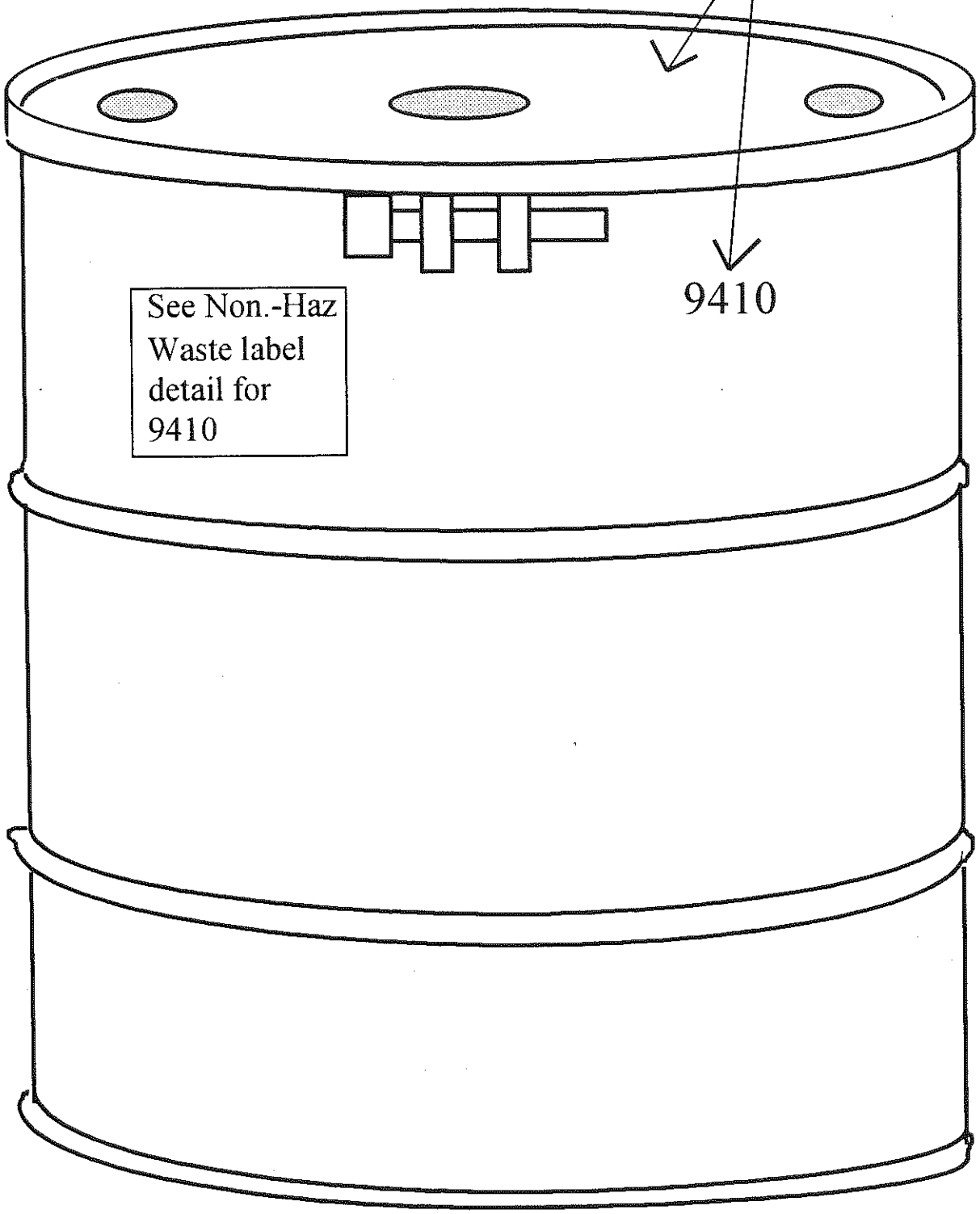

P&S NON - HAZARDOUS WASTE CODE: 9411

LABEL DETAIL

NON-HAZARDOUS WASTE

OPTIONAL INFORMATION:

SHIPPER PIERCE & STEVENS CORP.

ADDRESS 710 OHIO STREET

CITY, STATE, ZIP BUFFALO, NY 14203

CONTENTS: CALCIUM CARBONATE WITH POLYMERIC MICROSPHERES

NON-HAZARDOUS WASTE

DRUM DETAIL FOR WASTE CODE: 9411

STENCIL **9411** ON HEAD AND SIDE OF DRUM.

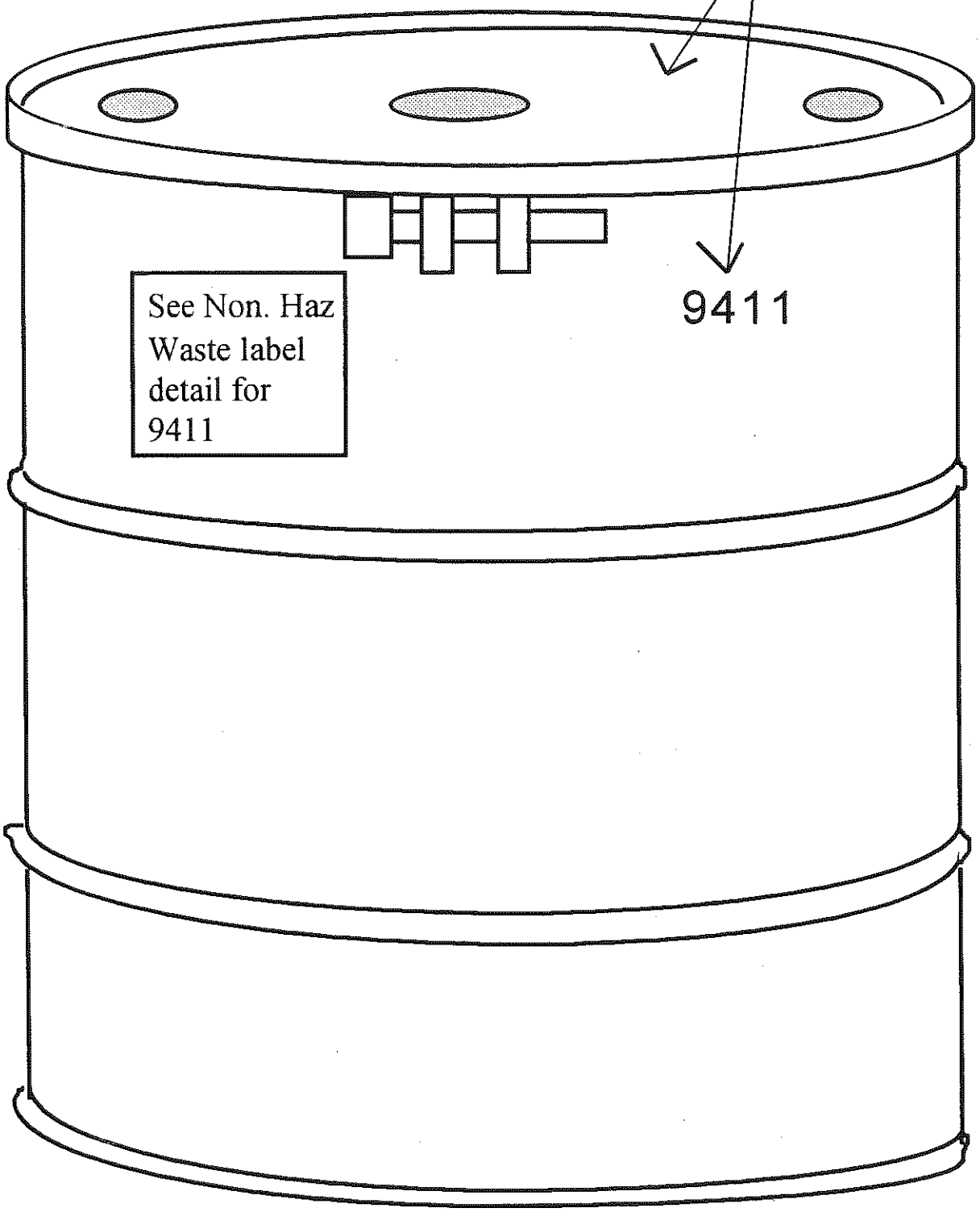

P&S HAZARDOUS WASTE CODE: 9412

LABEL DETAIL

HAZARDOUS WASTE *(DATE DRUM BECAME FULL ?)*

FEDERAL LAW PROHIBITS IMPROPER DISPOSAL

IF FOUND CONTACT THE NEAREST POLICE, OR PUBLIC SAFETY AUTHORITY, OR THE U.S. ENVIRONMENTAL PROTECTION AGENCY

GENERATOR INFORMATION:
NAME PIERCE & STEVENS CORP.

ADDRESS 710 OHIO STREET PHONE (716) 856-4910

CITY BUFFALO STATE NY ZIP 14203

EPA ID NO. / MANIFEST DOCUMENT NO. NYDOO2108629 MANIFEST NUMBER / *(ADD)* ?

ACCUMULATION START DATE ? *(ADD)* ?

EPA WASTE NO. U161, U220, U239, D035, U154 U159, U002, U031, U112 D001, F003, F005

HAZARDOUS WASTE SOLID N.O.S.(TOLUENE, METHYL ETHYL KETONE)

9 NA3077, PGIII (U002) RQ

D.O.T PROPER SHIPPING NAME AND UN OR NA NO. WITH PREFIX

HANDLE WITH CARE !

DRUM DETAIL FOR WASTE CODE: 9412

STENCIL **9412** ON HEAD AND SIDE OF DRUM.

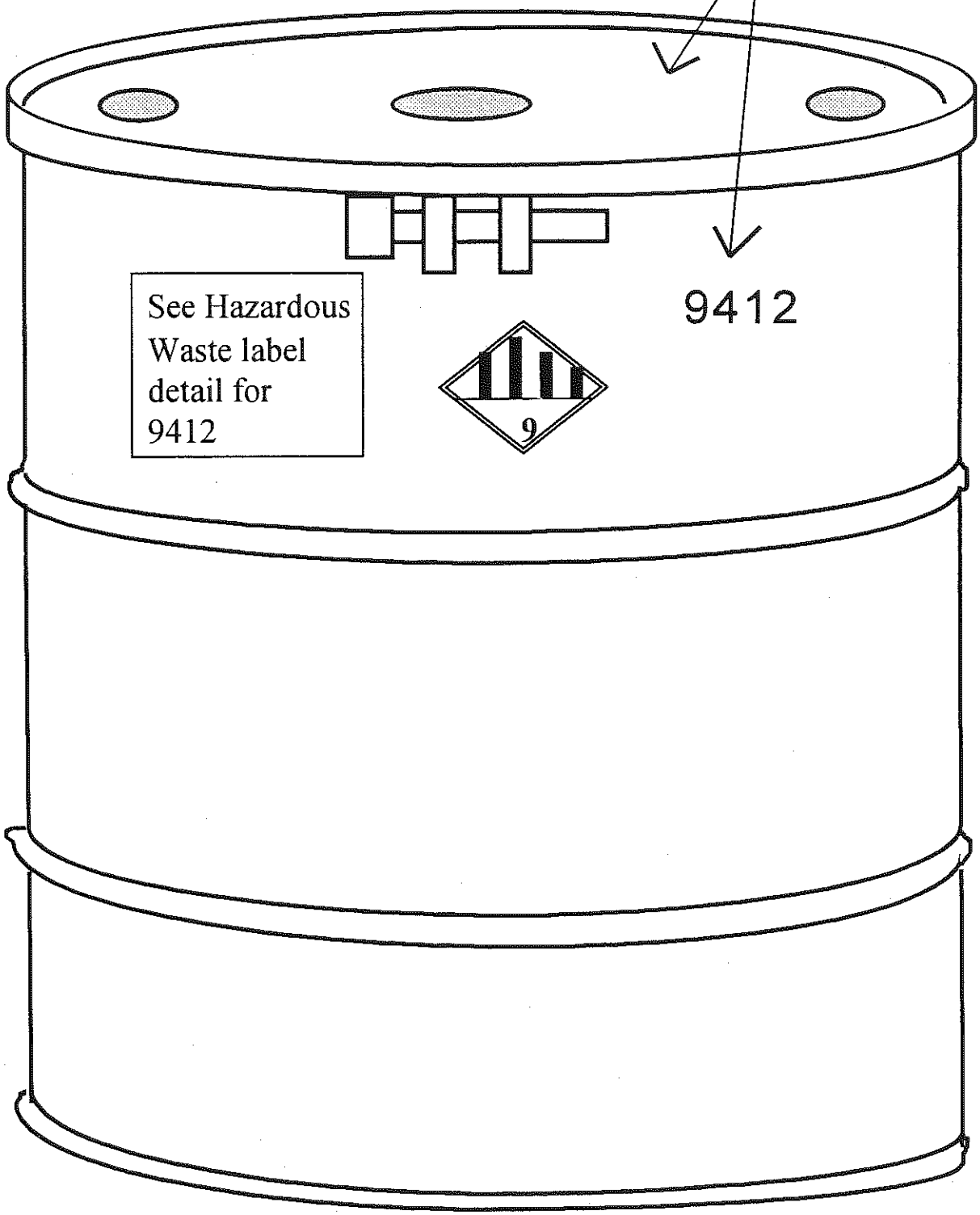

P&S NON - HAZARDOUS WASTE CODE: 9413

LABEL DETAIL

NON-HAZARDOUS WASTE

OPTIONAL INFORMATION:

SHIPPER PIERCE & STEVENS CORP.

ADDRESS 710 OHIO STREET

CITY, STATE, ZIP BUFFALO, NY 14203

CONTENTS: OFF-SPEC. HOT MELT MATERIAL

AND COAGULUM

NON-HAZARDOUS WASTE

DRUM DETAIL FOR WASTE CODE: 9413

STENCIL **9413** ON HEAD AND SIDE OF DRUM.

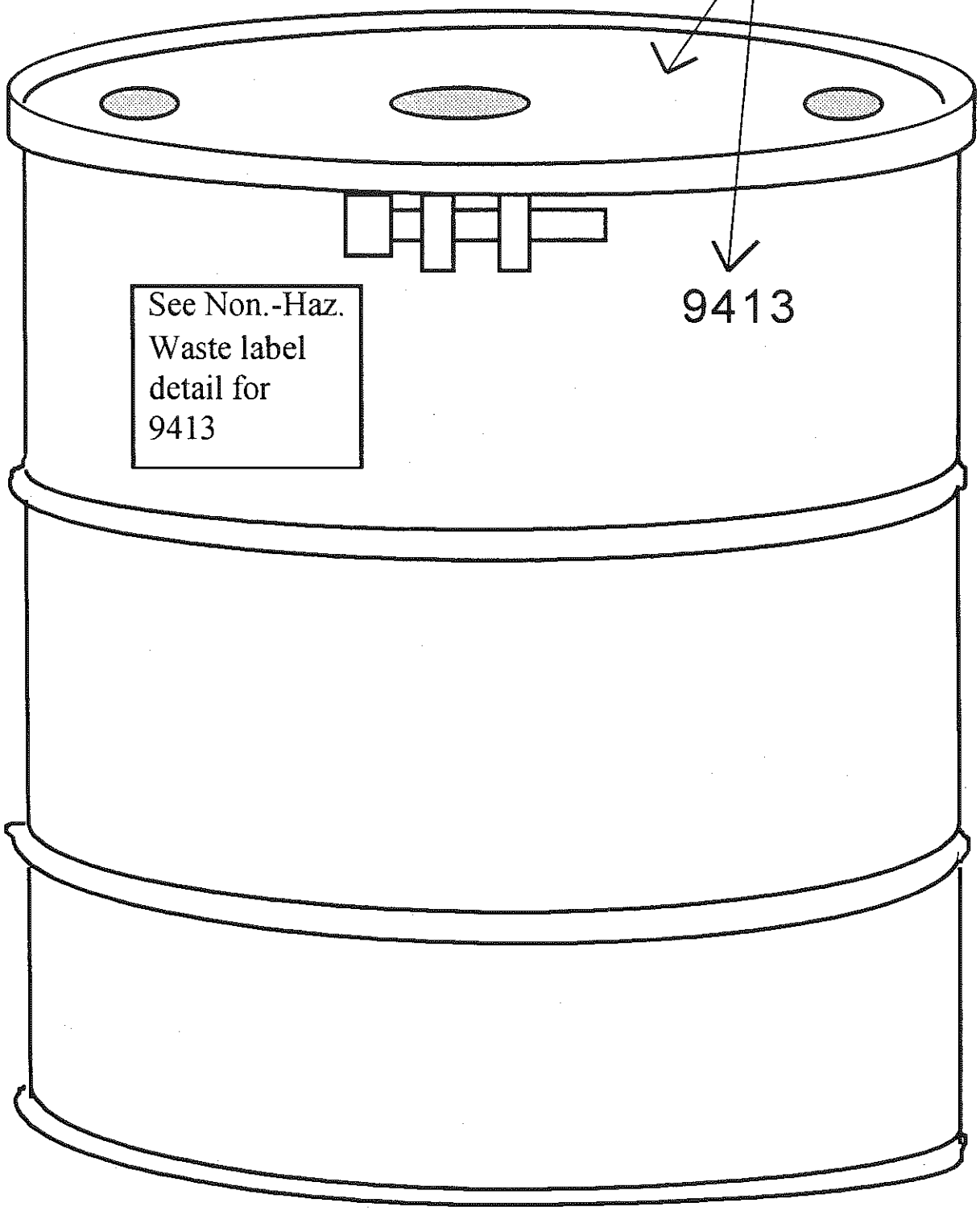

P&S HAZARDOUS WASTE CODE: 9414

LABEL DETAIL

HAZARDOUS WASTE *(DATE DRUM BECAME FULL ?)*

FEDERAL LAW PROHIBITS IMPROPER DISPOSAL

IF FOUND CONTACT THE NEAREST POLICE, OR PUBLIC SAFETY AUTHORITY, OR THE U.S. ENVIRONMENTAL PROTECTION AGENCY

GENERATOR INFORMATION:
NAME PIERCE & STEVENS CORP.

ADDRESS 710 OHIO STREET PHONE (716) 856-4910

CITY BUFFALO STATE NY ZIP 14203

EPA ID NO. / MANIFEST DOCUMENT NO. NYDOO2108629 MANIFEST NUMBER / *(ADD)* ?

ACCUMULATION START DATE ~~? *(ADD)* ?~~ EPA WASTE NO. ~~D001~~

WASTE ETHYL ACETATE MIXTURE

3 UN1173, PGII (D001) RQ

D.O.T PROPER SHIPPING NAME AND UN OR NA NO. WITH PREFIX

HANDLE WITH CARE !

DRUM DETAIL FOR WASTE CODE: 9414

STENCIL **9414** ON HEAD AND SIDE OF DRUM.

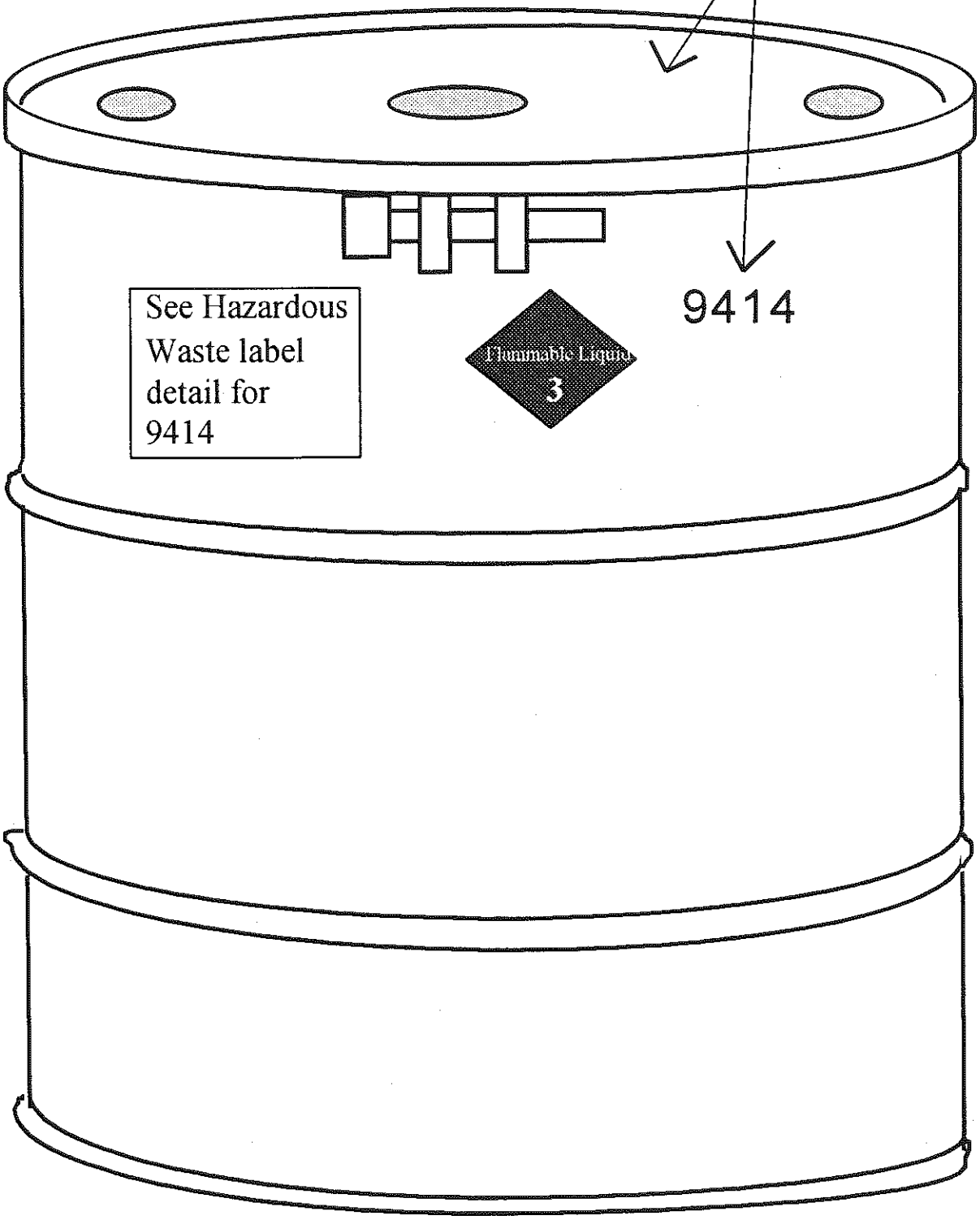

P&S HAZARDOUS WASTE CODE: 9415

LABEL DETAIL

HAZARDOUS WASTE *(DATE DRUM BECAME FULL ?)*

FEDERAL LAW PROHIBITS IMPROPER DISPOSAL

IF FOUND CONTACT THE NEAREST POLICE, OR PUBLIC SAFETY AUTHORITY, OR THE U.S. ENVIRONMENTAL PROTECTION AGENCY

GENERATOR INFORMATION:
NAME PIERCE & STEVENS CORP.

ADDRESS 710 OHIO STREET **PHONE** (716) 856-4910

CITY BUFFALO **STATE** NY **ZIP** 14203

EPA ID NO. / MANIFEST DOCUMENT NO. NYDOO2108629 **MANIFEST NUMBER /** *(ADD)* ~~?~~

ACCUMULATION START DATE ~~? *(ADD)* ?~~ **EPA WASTE NO.** ~~D009~~

HAZARDOUS WASTE MERCURY COMPOUND LIQUID, N.O.S.

(ARYL MERCURY) 6.1 UN2024, PGIII (1#) RQ

D.O.T PROPER SHIPPING NAME AND UN OR NA NO. WITH PREFIX

HANDLE WITH CARE !

DRUM DETAIL FOR WASTE CODE: 9415

STENCIL **9415** ON HEAD AND SIDE OF DRUM.

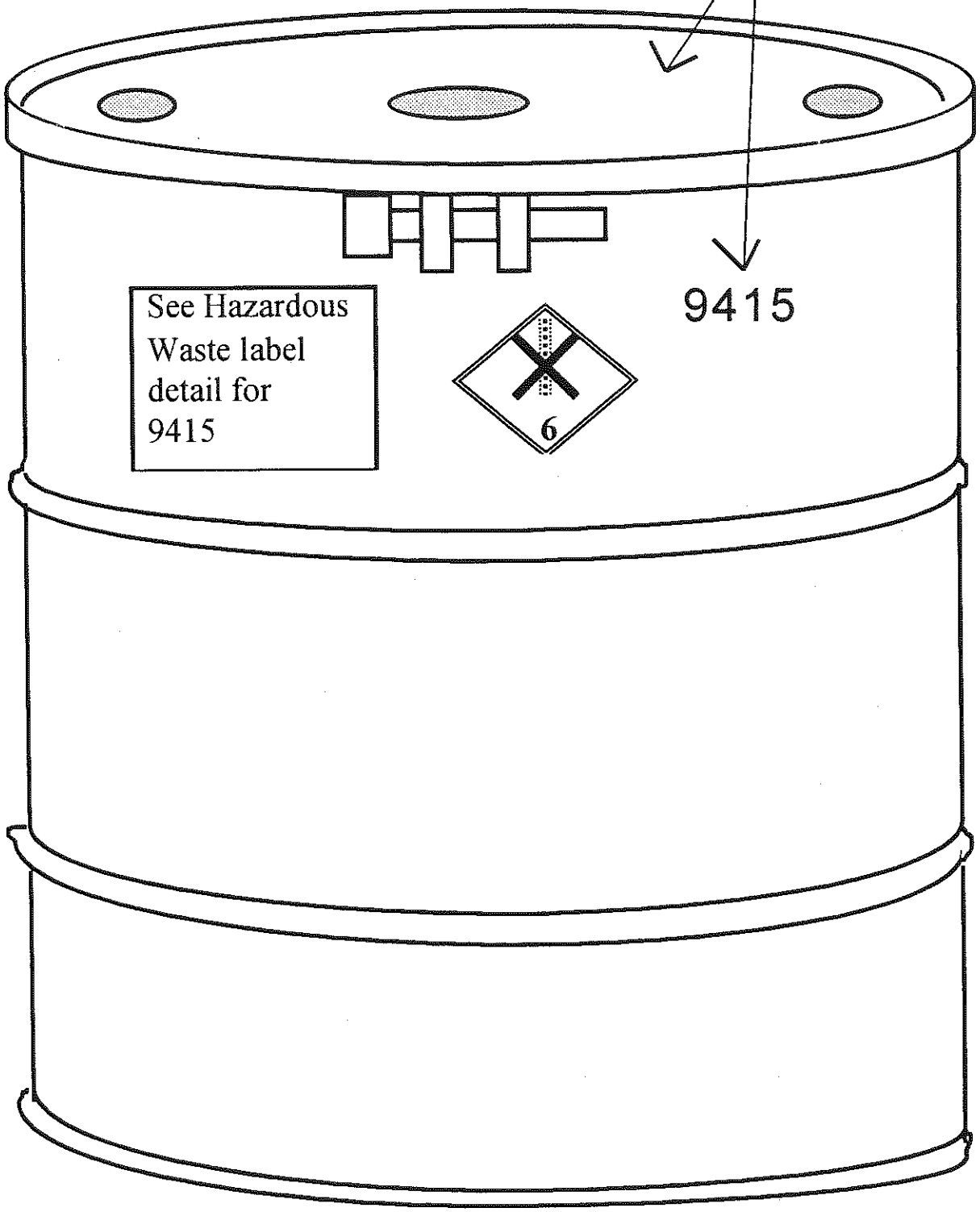

P&S HAZARDOUS WASTE CODE: 9415H

LABEL DETAIL

HAZARDOUS WASTE *(DATE DRUM BECAME FULL ?)*

FEDERAL LAW PROHIBITS IMPROPER DISPOSAL

IF FOUND CONTACT THE NEAREST POLICE, OR PUBLIC SAFETY AUTHORITY, OR THE U.S. ENVIRONMENTAL PROTECTION AGENCY

GENERATOR INFORMATION:
NAME PIERCE & STEVENS CORP.

ADDRESS 710 OHIO STREET **PHONE** (716) 856-4910

CITY BUFFALO **STATE** NY **ZIP** 14203

EPA ID NO. / MANIFEST DOCUMENT NO. NYDOO2108629 **MANIFEST NUMBER /** *(ADD)* ?

ACCUMULATION START DATE ? *(ADD)* ? **EPA WASTE NO.** ~~D009, U151~~

HAZARDOUS WASTE LIQUID N.O.S. (MERCURY COMPOUND)

6 NA3082, PGIII (D009) RQ

D.O.T PROPER SHIPPING NAME AND UN OR NA NO. WITH PREFIX

HANDLE WITH CARE !

DRUM DETAIL FOR WASTE CODE: 9415H

STENCIL **9415H** ON HEAD AND SIDE OF DRUM.

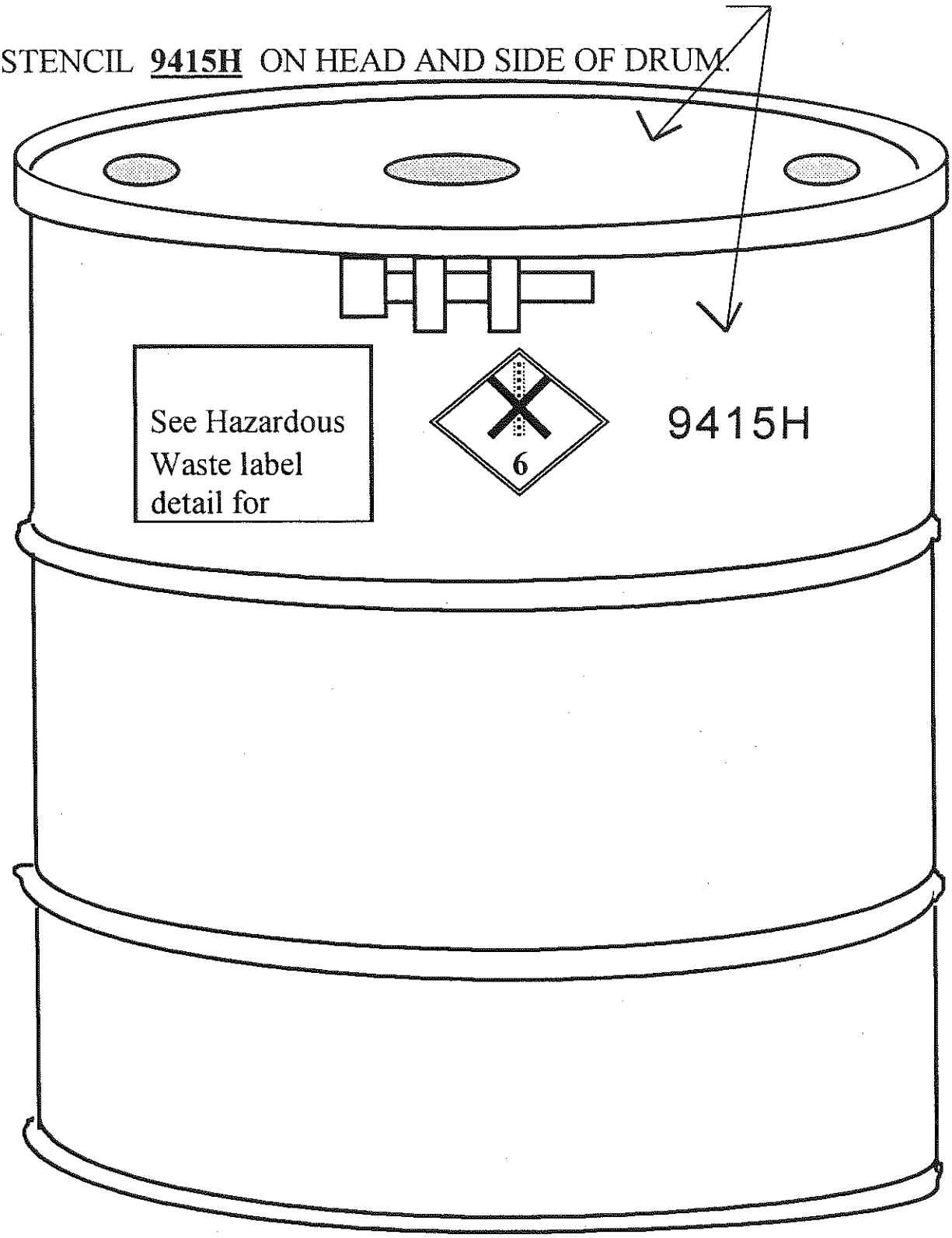

P&S NON - HAZARDOUS WASTE CODE: 9416

LABEL DETAIL

NON-HAZARDOUS WASTE

OPTIONAL INFORMATION:

SHIPPER PIERCE & STEVENS CORP.

ADDRESS 710 OHIO STREET

CITY, STATE, ZIP BUFFALO, NY 14203

CONTENTS:FILTER BAGS, CARTRIDGES AND RAGS

FROM THE PROD. OF NON-HAZ. MATERIALS

NON-HAZARDOUS WASTE

DRUM DETAIL FOR WASTE CODE: 9416

STENCIL **9416** ON HEAD AND SIDE OF DRUM.

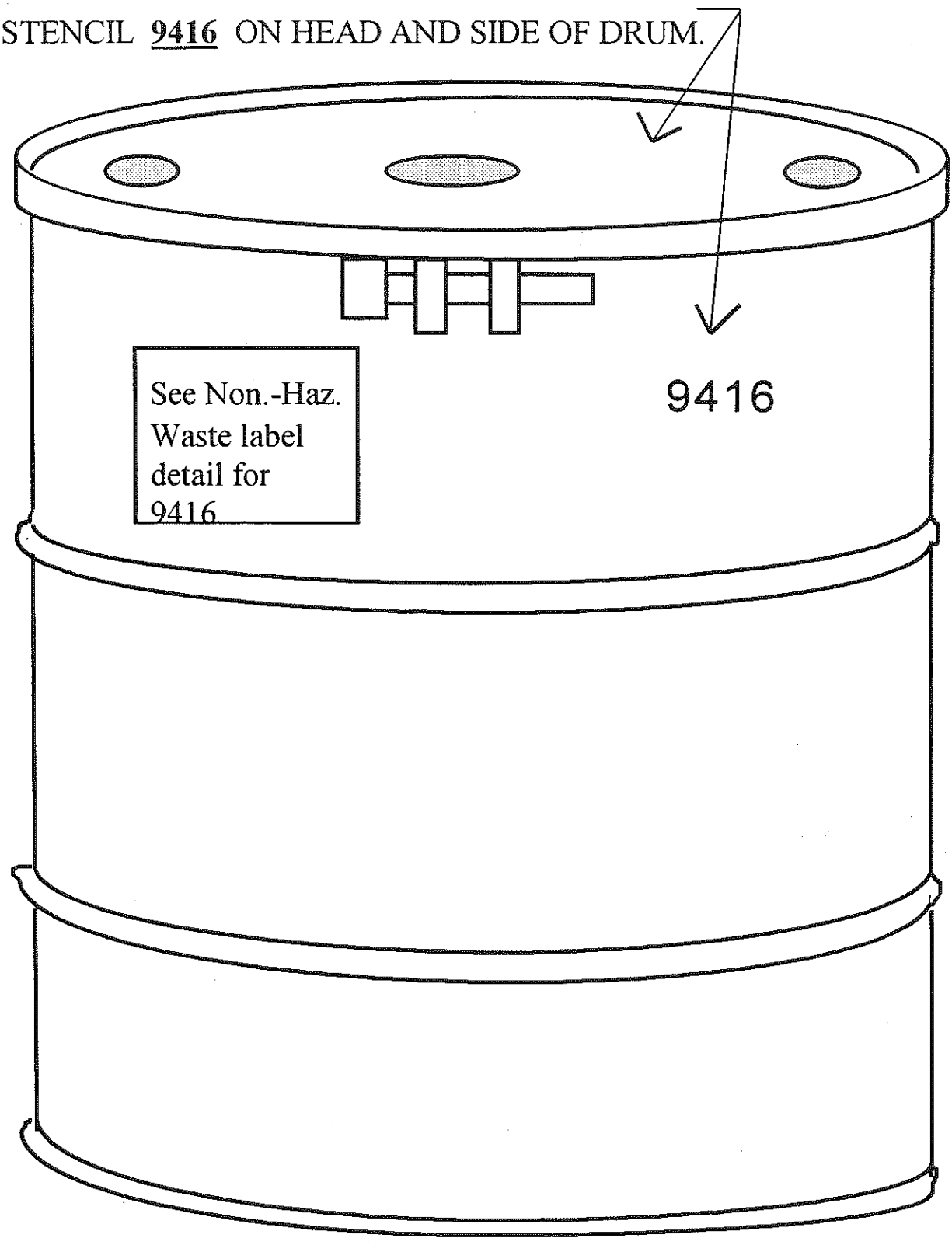

P&S HAZARDOUS WASTE CODE: 9417

(FOR METHYLENE CHLORIDE)

LABEL DETAIL

PLEASE NOTE: THERE IS A SPECIFIC LABEL FOR WASTE 1,1,1 - TRICLOROETHANE

HAZARDOUS WASTE *(DATE DRUM BECAME FULL ?)*

FEDERAL LAW PROHIBITS IMPROPER DISPOSAL

IF FOUND CONTACT THE NEAREST POLICE, OR PUBLIC SAFETY AUTHORITY, OR THE U.S. ENVIRONMENTAL PROTECTION AGENCY

GENERATOR INFORMATION:

NAME PIERCE & STEVENS CORP.

ADDRESS 710 OHIO STREET **PHONE** (716) 856-4910

CITY BUFFALO **STATE** NY **ZIP** 14203

EPA ID NO. / MANIFEST DOCUMENT NO. NYDOO2108629 **MANIFEST NUMBER** / *(ADD)* ~~?~~

ACCUMULATION START DATE ~~? *(ADD)* ?~~ **EPA WASTE NO.** ~~F002~~

HAZARDOUS WASTE LIQUID N.O.S. (DICHLOROMETHANE)

9 NA3082, PGIII (1000#) RQ

D.O.T PROPER SHIPPING NAME AND UN OR NA NO. WITH PREFIX

HANDLE WITH CARE !

DRUM DETAIL FOR WASTE CODE: 9417

STENCIL **9417** ON HEAD AND SIDE OF DRUM.

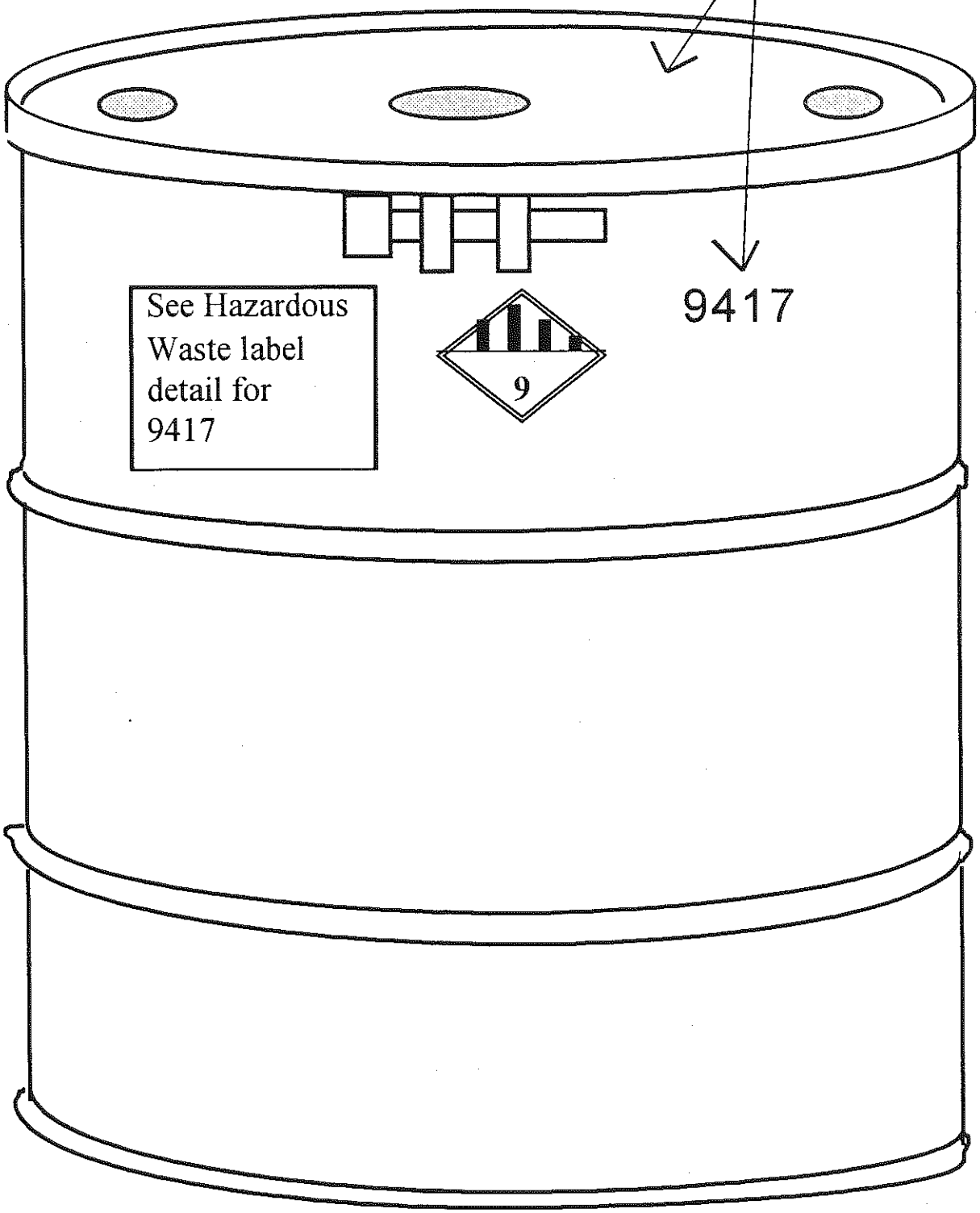

PRATT & LAMBERT

Safety Procedures

No. 10.08

July 1989

RESPIRATORY PROTECTION POLICY

PRATT & LAMBERT, INC.

SAFETY CONSCIOUSNESS...OUR SIXTH SENSE

I. Policy Statement

It is recognized that manufacturing, research and emergency operations performed by employees of Pratt & Lambert, Inc., may create conditions of potential chemical exposure or oxygen deficiency. These exposures will be maintained within acceptable exposure limits through the enclosure or confinement of the exposure source, exhaust ventilation, and substitution of less toxic substances. When such control measures are not feasible, or when they fail to sufficiently reduce exposures, respiratory protective devices will be used by exposed employees.

This policy applies to all Pratt & Lambert, Inc., employees. For the purpose of this policy, "employee" includes all full time, part time, temporary, seasonal, contract and contractor employees.

Division and facility management will allocate the resources necessary to comply with all provisions of this policy.

II. Designation of a Program Coordinator

Each facility which requires or permits the use of respirators by employees must appoint a Respirator Program Coordinator (RPC). The RPC is responsible for the implementation of this policy at his/her facility. Management has designated _____ as the RPC for the _____facility.

The responsibilities of the RPC include:

1) In consultation with the Corporate Industrial Hygienist, select respiratory protective equipment.

2) Conduct employee training and fit testing.

3) Establish a continuing program of cleaning, inspection and maintenance of respiratory protective equipment.

4) Establish proper storage areas for respirators.

5) Establish and issue an accounting procedure for users of respiratory protective equipment.

6) Assure that the necessary medical approval has been received for each user of respiratory protective equipment.

7) Perform all necessary record keeping identified in this policy.

8) Perform continuing inspection and evaluation of all aspects of the respiratory protection program to assure their continued functioning and effectiveness.

9) Notify the Corporate Industrial Hygienist immediately of the failure of a respirator.

III. Employee Responsibilities.

1) Employees shall use assigned respirators in accordance with instructions and training received.

2) Employees shall be responsible for cleaning, inspecting and making minor repairs on his/her respirator(s) in accordance with instruction and training received.

3) Employees shall immediately report any malfunction or difficulty with a respirator to his/her supervisor.

4) Employees shall not make any unauthorized alterations to respirators or associated equipment.

5) If required by the type of respirator in use, the employee will remain clean shaven in those areas where respirator-to-skin contact is required.

6) Employees may periodically be required to wear personal air monitoring devices which are required to establish the need or continued need for respiratory protection.

IV. Respirator Selection

The Respirator Program Coordinator, in consultation with the Corporate Industrial Hygienist, will select respiratory protective equipment based on the logic provided in this section. This selection logic applies to all uses of respiratory protective equipment (i.e., non-mandatory use of respirators also requires proper selection).

1) Only "approved" respirators will be used at Pratt & Lambert, Inc. facilities. (See Section XIX).

2) The Corporate Industrial Hygienist will identify areas and operations which may result in employee exposures above permissible exposure limits. (i.e., "Air Monitoring"). In such cases the use of respirators will be mandatory.

   The Corporate Industrial Hygienist and/or the facility management may identify areas or operations which require the use of respirators, even though employee exposures do not exceed permissible exposure limits. Employee use of respirators in such situations will be mandatory (i.e., Management Decision).

   Facility management may identify areas in which the use of respiratory protection is considered to be voluntary (i.e., "Employee Voluntary"). Voluntary use of respirators is permitted only in areas where exposures do not exceed permissible exposure limits.

   The use of respirators in all situations requires proper selection and full compliance with this entire program.

The following decision logic taken from "NIOSH Respirator Decision Logic" - May, 1987, will be used for the selection of respirators.

RESPIRATOR DECISION LOGIC

This decision logic contains a series of questions regarding situations which may require the use of respirators. (See Respirator Decision Logic Sequence, In answering these questions, the user of this decision logic is assisted in identifying specific classes of respirators, applicable restrictions, and the appropriate respirator selection table to use. When using one of the tables to identify a suitable class of respirators, the user must keep in mind the restrictions identified in the question section of this decision logic.

This decision logic identifies the criteria necessary to determine the classes of respirators that will provide the minimum acceptable degree of protection for a chemical at a given concentration. Classes of respirators offering greater protection can usually be used in place of the minimum acceptable class of respirators. Respirator classes are consistent with respirator certification groupings as specified in 30 CFR 11.

The recommendations in this decision logic are based primarily on the physical, chemical, and toxicologic properties of the contaminant and on the limitations of each class of respirators, including filtration efficiency, air supply capability, and face seal characteristics and leakage. Thus this decision logic is limited to identifying classes of acceptable respirators, rather than individual respirators.

After various classes of respirators are identified as being suitable for a given situation, an evaluation is made of other factors of the particular work environment so that the best respirator within the recommended classes can be chosen. In some situations, the selection of a respirator classified as providing a higher level of protection may be advisable.

To assist the user, this decision logic contains ten subparagraphs following the Respirator Decision Logic Sequence that describe respirator limitations, use of applicable exposure limits, warning properties, protection factors, oxygen limitations, and medical evaluation of suitability to wear respirators. Additional supporting information is contained in Appendices A through E. To properly use this decision logic, the user should carefully read the subparagraphs.

The assigned protection factors (APF's) used in this decision logic were based on quantitative fit factor data developed by Los Alamos National Laboratories (LANL) under contract to NIOSH and on field evaluation data gathered by NIOSH and others. Specific references and summaries of the data used to generate certain protection factors can be found in Subparagraph 8. Fit factors determined for the individual wearer of a respirator by quantitative fit testing or by any other method used to determine fit should not be substituted for the APF given for each class of respirators. However, the fit factor determined through quantitative fit testing must be greater than the APF; otherwise, the respirator cannot be used by the worker.

The Respirator Decision Logic Sequence is presented in Figure 1 in the form of a flow chart. This flow chart can be used to identify suitable classes of respirators for adequate protection against specific environmental conditions. Refer to the corresponding narrative section for additional information pertaining to a specific part of the flow chart.

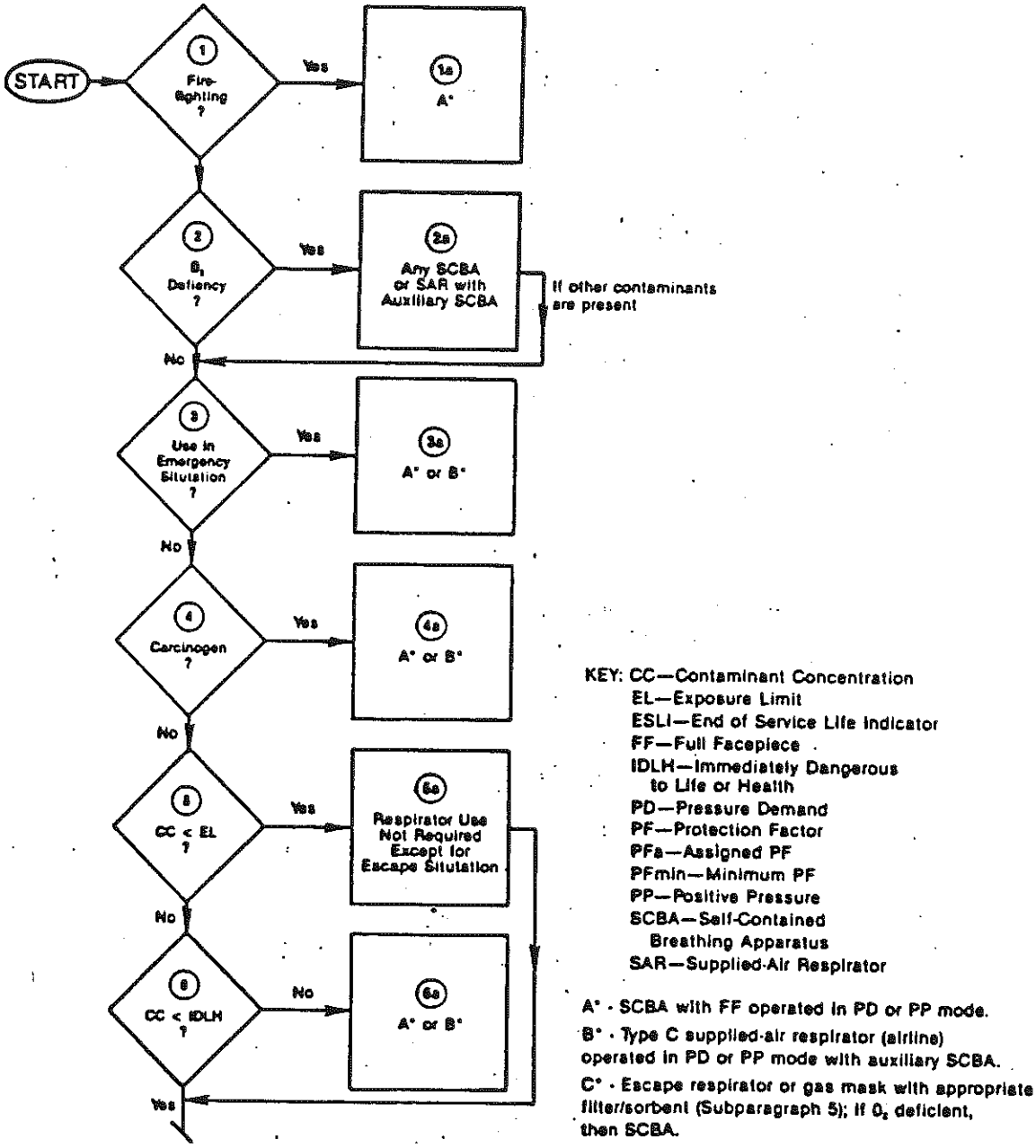

Figure 1. — Flow Chart of Respirator Decision Logic Sequence

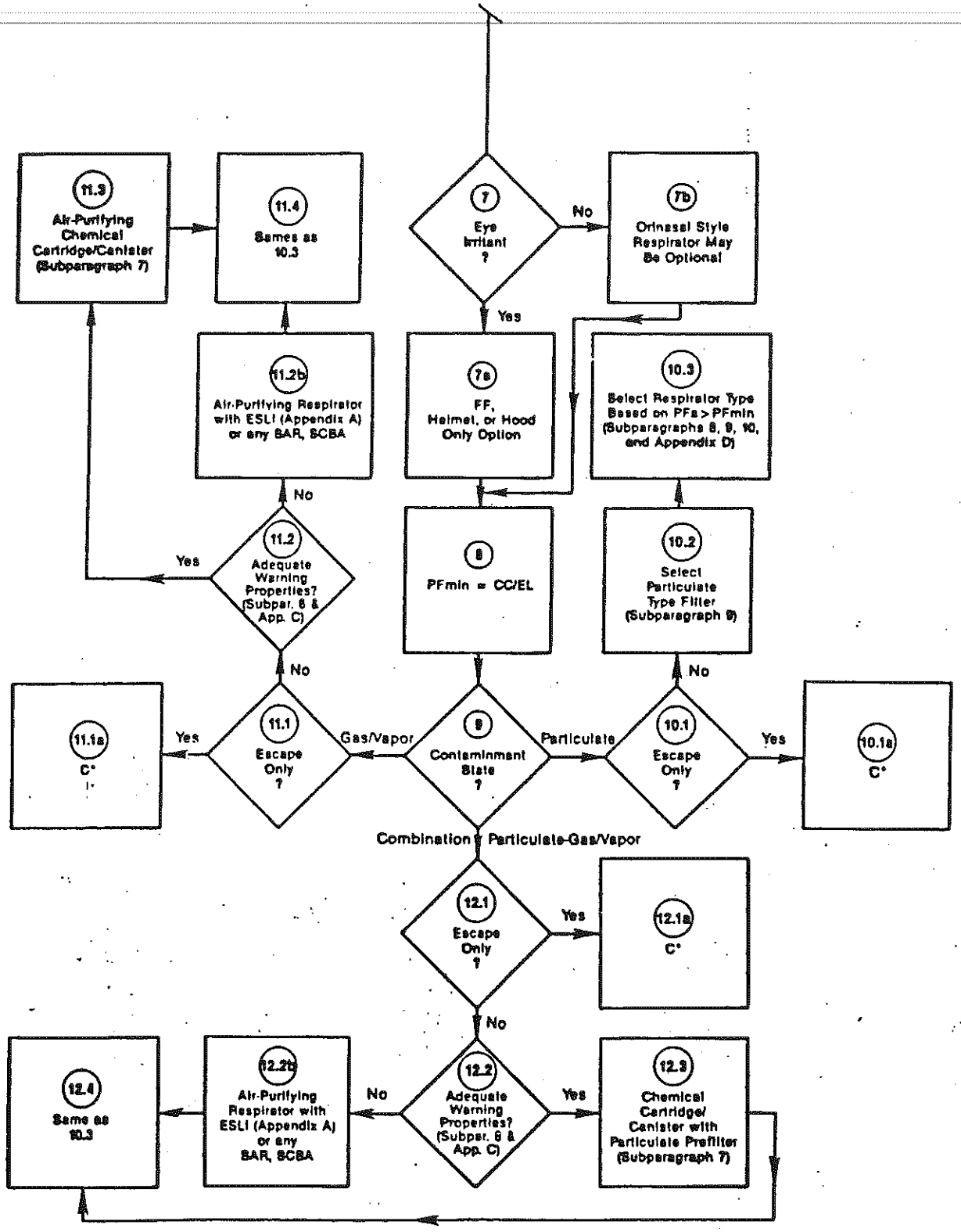

Figure 1. — Flow Chart of Respirator Decision Logic Sequence — Continued

Respirator Decision Logic Sequence

After all criteria have been identified and evaluated and after the requirements and restrictions of the respiratory protection program have been met, the following sequence of questions can be used to identify the class of respirators that should provide adequate respiratory protection:

1. Is the respirator intended for use during fire fighting?

   a. If yes, only a self-contained breathing apparatus (SCBA) with a full facepiece operated in pressure demand or other positive pressure mode is recommended.

   b. If no, proceed to Step 2.

2. Is the respirator intended for use in an oxygen-deficient atmosphere, i.e., less than 19.5% oxygen at sea level? (Refer to Subparagraph 1, page 21, for a discussion of oxygen deficiency.)

   a. If yes, any type of SCBA or supplied-air respirator (SAR) with an auxiliary SCBA is recommended. Auxiliary SCBA must be of sufficient duration to permit escape to safety if the air supply is interrupted. If additional contaminants are present, proceed to Step 3.

b. If no, proceed to Step 3.

3. Is the respirator intended for use during emergency situations?

a. If yes, two types of respirators are recommended: a SCBA with a full facepiece operated in pressure demand or other positive pressure mode or an SAR with a full facepiece operated in pressure demand or other positive pressure mode in combination with an auxiliary SCBA operated in pressure demand or other positive pressure mode. Auxiliary SCBA must be of sufficient duration to permit escape to safety if the air supply is interrupted.

b. If no, proceed to Step 4.

4. Is the contaminant regulated by the Department of Labor as a potential occupational carcinogen or identified by IARC as a potential human carcinogen in the workplace, and is the contaminant detectable in the atmosphere?

a. If yes,* two types of respirators are recommended: a SCBA with a full facepiece operated in pressure demand or other positive pressure mode or an SAR with a full facepiece operated in pressure demand or other positive pressure mode in combination with an auxiliary SCBA operated in pressure demand or other positive pressure mode. Auxiliary SCBA must be of sufficient duration to permit escape to safety if the air supply is interrupted.

b. If no, proceed to Step 5.

5. Is the exposure concentration of the contaminant, as determined by acceptable industrial hygiene methods, less than the applicable exposure limit? (Whenever a worker is given a respirator to use on a voluntary basis when ambient levels are below applicable limits, OSHA requires the implementation of a complete respiratory protection program, which includes medical evaluation, training, fit testing, periodic environmental monitoring, and all other requirements in 29 CFR 1910.134.)

a. If yes, a respirator would not be required except for an escape situation. Proceed to Step 7.

b. If no, proceed to Step 6.

6. Are conditions such that a worker who is required to wear a respirator can escape from the work area and not suffer loss of life or immediate or delayed irreversible health effects if the respirator fails, i.e., are the conditions <u>not</u> immediately dangerous to life or health (IDLH)? (Refer to Subparagraph 3, for additional information on IDLH's.)

* The Corporate Industrial Hygienist may permit the use of air purifying respirators.

a. If yes, conditions are not considered to be IDLH. Proceed to Step 7.

b. If no, conditions are considered to be IDLH. Two types of respirators are recommended: a SCBA with a full facepiece operated in pressure demand or other positive pressure mode or an SAR with a full facepiece operated in pressure demand or other positive pressure mode in combination with an auxiliary SCBA operated in pressure demand or other positive pressure mode. The auxiliary SCBA must be of sufficient duration to permit escape to safety if the air supply is interrupted.

7. Is the contaminant an eye irritant, or can the contaminant cause eye damage at the exposure concentration? (Refer to Subparagraph 4, for a discussion of eye irritation and damage.)

a. If yes, a respirator equipped with a full facepiece, helmet, or hood is recommended. Proceed to Step 8.

b. If no, an orinasal respirator may still be an option, depending on the exposure concentration. Proceed to Step 8.

3. Divide the 8-hour time-weighted average (TWA) exposure concentration for the contaminant (or maximum exposure concentration for a contaminant with a ceiling limit) determined in Step 5 by the applicable exposure limit to determine the minimum protection factor required. For escape respirators, determine the potential for generation of a hazardous condition caused by an accident or equipment failure. If a potentially hazardous condition could occur or a minimum protection factor has been calculated, proceed to Step 9.

9. If the physical state of the contaminant is a particulate (solid or liquid) during periods of respirator use, proceed to Step 10; if it is a gas or vapor, proceed to Step 11; if it is a combination of gas or vapor and particulate, proceed to Step 12.

10. Particulate Respirators

10.1. Is the particulate respirator intended only for escape purposes?

a. If yes, refer to Subparagraph 5, for a discussion and selection of "escape only" respirators.

b. If no, the particulate respirator is intended for use during normal work activities. Proceed to Step 10.2.

10.2. A filter medium that will provide protection against exposure to the particulate in question is recommended. (Refer to Subparagraph 9, page 29, for a discussion on limitations of approvals for filter media.) Proceed to Step 10.3.

10.3. Respirators that have not been previously eliminated from Table 1 and that have APF's equal to or greater than the minimum protection factor determined in Step 8 are recommended. (Refer to Subparagraph 8. and Appendix D. for a discussion of protection factors, and to Subparagraph 9. for a discussion on limitations of filter approvals.) Maximum airborne concentrations for each level of respiratory protection can be calculated by multiplying the applicable exposure limit by the APF for that class of respirators. Workers wearing respirators should meet the medical guidelines discussed in Subparagraph 10.

11. Gas/Vapor Respirators

11.1. Is the gas/vapor respirator intended for "escape only" purposes?

a. If yes, refer to Subparagraph 5. for a discussion on selection of "escape only" respirators.

b. If no, the gas/vapor respirator is intended for use during normal work activities. Proceed to Step 11.2.

11.2. Are the warning properties for the gas/vapor contaminant adequate at or below the applicable exposure limit? (Refer to Subparagraph 6. and Appendix C. for additional information on requirements for adequate warning properties.)

a. If yes, proceed to Step 11.3.

b. If no, an air-purifying respirator equipped with an effective end-of-service-life indicator (ESLI), a supplied-air respirator, or a self-contained breathing apparatus is recommended. (Refer to Appendix A. for additional information on approval of air-purifying respirators with ESLI's.) Proceed to Step 11.4.

11.3. An air-purifying chemical cartridge/canister respirator is recommended that has a sorbent suitable for the chemical properties of the anticipated gas/vapor contaminant(s) and for the anticipated exposure levels. (Refer to Subparagraph 7. for the recommended maximum use concentrations of air-purifying chemical cartridge/canister respirators.) Proceed to Step 11.4.

11.4. Respirators that have not been previously eliminated from Table 2 and that have APF's equal to or greater than the minimum protection factor determined in Step 8 are recommended. (Refer to Subparagraph 8. and Appendix D. for a discussion of protection factors.) Maximum airborne concentrations for each class of respiratory protection can be calculated by multiplying the applicable exposure limit by the APF for that class of respirators. The calculated maximum use concentration limits should not exceed the limitations noted in Subparagraph 7. Workers wearing respirators should meet the medical guidelines discussed in Subparagraph 10.

12. Combination Particulate and Gas/Vapor Respirators

12.1. Is the combination respirator intended for "escape only" purposes?

a. If yes, refer to Subparagraph 5, for a discussion and selection of "escape only" respirators.

b. If no, the combination respirator is intended for use during normal work activities. Proceed to Step 12.2.

12.2. Does the gas/vapor contaminant have adequate warning properties at or below the NIOSH REL or other applicable exposure limit? (Refer to Subparagraph 6, and Appendix C, for additional information on requirements for adequate warning properties.)

a. If yes, proceed to Step 12.3.

b. If no, either an air-purifying respirator equipped with an effective ESLI, a supplied-air respirator, or a self-contained respirator is recommended. Proceed to Step 12.4.

12.3. An air-purifying chemical cartridge/canister is recommended that has a particulate prefilter suitable for the specific type(s) of gas/vapor and particulate contaminant(s) and for the exposure concentrations. (Refer to and Subparagraph 9, for recommended maximum use concentrations and filter limitations.) Proceed to Step 12.4.

12.4. Respirators that have not been previously eliminated from Table 3 and that have APF's equal to or greater than the minimum protection factor determined in Step 8 are recommended. (Refer to Subparagraph 8, and Appendix D, for a discussion of protection factors and Subparagraph 9, for a discussion on limitations of filter approvals.) Maximum airborne concentrations for each level of respiratory protection can be calculated by multiplying the applicable exposure limit by the APF for that class of respirators. The calculated maximum use concentration limits should not exceed the limitations noted in Subparagraph 7, Workers wearing respirators should meet the medical guidelines discussed in Subparagraph 10

Table 1.—Assigned protection factor classifications of respirators for protection against particulate exposures[1]

Assigned protection factor	Type of respirator
5	Single-use (see definition in Glossary) or quarter mask[2] respirator
10	Any air-purifying half-mask respirator including disposable[3] (see definition in Glossary) equipped with any type of particulate filter except single use[2,4]
	Any air-purifying full facepiece respirator equipped with any type of particulate filter[5]
	Any supplied-air respirator equipped with a half-mask and operated in a demand (negative pressure) mode[2]
25	Any powered air-purifying respirator equipped with a hood or helmet and any type of particulate filter[4]
	Any supplied-air respirator equipped with a hood or helmet and operated in a continuous flow mode[4]
50	Any air-purifying full facepiece respirator equipped with a high efficiency filter[2]
	Any powered air-purifying respirator equipped with a tight-fitting facepiece and a high efficiency filter[4]
	Any supplied-air respirator equipped with a full facepiece and operated in a demand (negative pressure) mode[2]
	Any supplied-air respirator equipped with a tight-fitting facepiece and operated in a continuous flow mode[4]

1 Only high efficiency filters are permitted for protection against particulates having exposure limits less than 0.05 mg/m^3.
2 The assigned protection factors (APF's) were determined by Los Alamos National Laboratories (LANL) by conducting quantitative fit testing on a panel of human volunteers [6].
3 An APF factor of 10 can be assigned to disposable particulate respirators if they have been properly fitted using a quantitative fit test.
4 APF's were based on workplace protection factor (WPF) data or laboratory data more recently reported than the LANL data [7-11, 14-17].
5 The APF was based on consideration of efficiency of dust, fume, and/or mist filters.

Table 1.—Assigned protection factor classifications of respirators for protection against particulate exposures[1]—Continued

Assigned protection factor	Type of respirator
50 cont.	Any self-contained respirator equipped with a full facepiece and operated in a demand (negative pressure) mode[2]
1,000	Any supplied-air respirator equipped with a half-mask and operated in a pressure demand or other positive pressure mode[2]
2,000	Any supplied-air respirator equipped with a full facepiece and operated in a pressure demand or other positive pressure mode[2]
10,000	Any self-contained respirator equipped with a full facepiece and operated in a pressure demand or other positive pressure mode[2]
	Any supplied-air respirator equipped with a full facepiece operated in a pressure demand or other positive pressure mode in combination with an auxiliary self-contained breathing apparatus operated in a pressure demand or other positive pressure mode[2]

1 Only high efficiency filters are permitted for protection against particulates having exposure limits less than 0.05 mg/m^3.
2 The assigned protection factors (APF's) were determined by Los Alamos National Laboratories (LANL) by conducting quantitative fit testing on a panel of human volunteers [6].
3 An APF of 10 can be assigned to disposable particulate respirators if they have been properly fitted using a quantitative fit test.
4 The APF's were based on workplace protection factor (WPF) data or laboratory data more recently reported than the LANL data [7-11, 14-17].
5 The APF was based on consideration of efficiency of dust, fume, and/or mist filters.

Table 2.—Assigned protection factor classifications of respirators for protection against gas/vapor exposures

Assigned protection factor[1]	Type of respirator
10	Any air-purifying half mask respirator (including disposable) equipped with appropriate gas/vapor cartridges[2]
	Any supplied-air respirator equipped with a half mask and operated in a demand (negative pressure) mode[2]
25	Any powered air-purifying respirator with a loose-fitting hood or helmet[3]
	Any supplied-air respirator equipped with a hood or helmet and operated in a continuous flow mode[3]
50	Any air-purifying full facepiece respirator equipped with appropriate gas/vapor cartridges or gas mask (canister respirator)[2]
	Any powered air-purifying respirator equipped with a tight-fitting facepiece and appropriate gas/vapor cartridges or canisters[3]
	Any supplied-air respirator equipped with a full facepiece and operated in a demand (negative pressure) mode[2]
	Any supplied-air respirator equipped with a tight-fitting facepiece operated in a continuous flow mode[3]
	Any self-contained respirator equipped with a full facepiece and operated in a demand (negative pressure) mode[2]
1,000	Any supplied-air respirator equipped with a half-mask and operated in a pressure demand or other positive pressure mode[2]

1 The assigned protection factor (APF) for a given class of air-purifying respirators may be further reduced by considering the maximum use concentrations for each type of gas and vapor air-purifying element.

2 The APF's were determined by Los Alamos National Laboratories (LANL) by conducting quantitative fit testing on a panel of human volunteers [6].

3 The APF's were based on workplace protection factor (WPF) data or laboratory data more recently reported than the LANL data [7-11, 14-17].

Table 2.—Assigned protection factor classifications of respirators for protection against gas/vapor exposures—Continued

Assigned protection factor[1]	Type of respirator
2,000	Any supplied-air respirator equipped with a full facepiece and operated in a pressure demand or other positive pressure mode[2]
10,000	Any self-contained respirator equipped with a full facepiece and operated in a pressure demand or other positive pressure mode[2]
	Any supplied-air respirator equipped with a full facepiece operated in a pressure demand or other positive pressure mode in combination with an auxiliary self-contained breathing apparatus operated in a pressure demand or other positive pressure mode[2]

1 The assigned protection factor (APF) for a given class of air-purifying respirators may be further reduced by considering the maximum use concentrations for each type of gas and vapor air-purifying element.

2 The APF's were determined by Los Alamos National Laboratories (LANL) by conducting quantitative fit testing on a panel of human volunteers [6].

3 The APF's were based on workplace protection factor (WPF) data or laboratory data more recently reported than the LANL data [7-11, 14-17].

Table 3.—Assigned protection factor classifications of respirators for protection against combination gas/vapor and particulate exposures[1]

Assigned protection factor[2]	Type of respirator
10	Any air-purifying half-mask respirator equipped with appropriate gas/vapor cartridges in combination with any type of particulate filter[3]
	Any full facepiece respirator with appropriate gas/vapor cartridges in combination with a dust or mist or fume; dust and mist; or dust, mist, and fume filter[4]
	Any supplied-air respirator equipped with a half-mask and operated in a demand (negative pressure) mode[3]
25	Any powered air-purifying respirator equipped with a loose-fitting hood or helmet[5]
	Any supplied-air respirator equipped with a hood or helmet and operated in a continuous flow mode[5]
50	Any air-purifying full facepiece respirator equipped with appropriate gas/vapor cartridges in combination with a high efficiency filter or an appropriate canister incorporating a high efficiency filter[3]
	Any powered air-purifying respirator with a tight-fitting facepiece equipped with appropriate gas/vapor cartridges in combination with a high efficiency filter or an appropriate canister incorporating a high efficiency filter[5]
	Any supplied-air respirator equipped with a full facepiece and operated in a demand (negative pressure) mode[3]

1 Only high efficiency filters are permitted for protection against particulates having exposure limits less than 0.05 mg/m^3.
2 The assigned protection factor (APF) for a given class of air-purifying respirators may be further reduced by considering the maximum use concentrations for each type of gas and vapor air-purifying element.
3 The APF's were determined by Los Alamos National Laboratories (LANL) by conducting quantitative fit testing on a panel of human volunteers [6].
4 The APF was based on consideration of efficiency of dust, fume, and/or mist filters.
5 The APF's were based on workplace protection factor (WPF) data or laboratory data more recently reported than the LANL data [7-11, 14-17].

Table 3.—Assigned protection factor classifications of respirators for protection against combination gas/vapor and particulate exposures[1]—Continued

Assigned protection factor[2]	Type of respirator
50 cont.	Any supplied-air respirator equipped with a tight-fitting facepiece and operated in a continuous flow mode[5]
	Any self-contained respirator equipped with a full facepiece and operated in a demand (negative pressure) mode[3]
1,000	Any supplied-air respirator equipped with a half-mask and operated in a pressure demand or other positive pressure mode[3]
2,000	Any supplied-air respirator equipped with a full facepiece and operated in a pressure demand or other positive pressure mode[3]
10,000	Any self-contained respirator equipped with a full facepiece and operated in a pressure demand or other positive pressure mode[3]
	Any supplied-air respirator equipped with a full facepiece operated in a pressure demand or other positive pressure mode in combination with an auxiliary self-contained breathing apparatus operated in a pressure demand or other positive pressure mode[3]

1 Only high efficiency filters are permitted for protection against particulates having exposure limits less than 0.05 mg/m^3.
2 The assigned protection factor (APF) for a given class of air-purifying respirators may be further reduced by considering the maximum use concentrations for each type of gas and vapor air-purifying element.
3 The APF's were determined by Los Alamos National Laboratories (LANL) by conducting quantitative fit testing on a panel of human volunteers [6].
4 The APF was based on consideration of efficiency of dust, fume, and/or mist filters.
5 The APF's were based on workplace protection factor (WPF) data or laboratory data more recently reported than the LANL data [7-11, 14-17].

Further explanation of the Respirator Decision Logic is provided in Appendix E - Subparagraphs.

VI. Air Purifying Respirators

Air purifying respirators may be used in those situations in which they have been properly selected as defined in Section V. The use of disposable or single use respirators is not permitted in situations where the use of respiratory protection is based on "Air Monitoring" or "Management Decision." Single use or disposable respirators are not permitted for any activities involving asbestos.

The use of air purifying respirators is <u>not</u> permitted in the following situations:

1) Oxygen deficiency (<19.5% O_2).

2) I.D.L.H. (Immediately Dangerous to Life or Health) exposures.

3) For protection against highly toxic substances as identified by the Corporate Industrial Hygienist.

4) For protection against substances with poor warning properties.

5) For entry into areas of unknown exposure levels or unknown chemical substances.

VII. Air Line Respirators

The use of air line respirators is required as defined by the selection procedure (Section V).

1) The use of air line respirators requires that the supplied breathing air be of Type I (gaseous) Grade D (or higher, i.e., D-J) as defined by Table 1 of ANSI Z86.1 - 1973 (See Appendix F).

2) The use of facility or any other compressors requires the use of carbon monoxide continuous monitor and appropriate filters as required to produce Grade D or better breathing air.

   a) Carbon monoxide monitors should be calibrated as per the manufacturer's instructions. However, as a minimum, calibration should be performed on a weekly basis.

   b) Breathing air derived from compressors shall be monitored on a monthly basis for the presence of oxygen, carbon monoxide, carbon dioxide, oil mist and vapor. (Draeger detector tubes air available for this purpose).

   c) Documentation of calibrations and monitoring results shall be maintained. (See Section XX).

3) Compressed air cylinders may be used in the absence of a compressor. The quality of the compressed air must be Grade D or higher. A suitable regulator must be used to reduce air pressure to respiratory specifications provided by the manufacturer and as defined by the Air Flow Requirements (4). Cylinders must be clearly marked "Breathing Air" and must indicate the Grade of breathing air as defined by Appendix F.

   a) Suppliers of Breathing Air Cylinders must provide written documentation of the quality of the breathing air and the methods used in the analysis.

4) Air Flow Requirements

The air supply system, compressor or cylinder, must meet the following requirements:

TABLE I

Type of Respirator	Air Flow Cubic Feet Min (CFM) Min	Max
Continuous flow - full or half facepiece	4	15
Continuous flow - hood or helmet	6	15
Pressure demand - full or half facepiece	4	15

5) Compressed Oxygen shall never be used as a breathing air source.

6) The maximum length of hose and inlet pressure used with an air line respirator shall not exceed the manufacturer's recommendations and at no time shall exceed 300 feet and 125 psig, respectively.

7) Air line couplings shall be incompatible with outlets for other gas systems.

VIII. Self Contained Breathing Apparatus (SCBA)

SCBA units will be used in situations as defined by Section IV (Respirator Selection).

1) The users of SCBA units must receive training in the use of the specific model SCBA to be used. (See Section X).

2) SCBA units will be filled with compressed breathing air of Grade D or better (See Section VII.) Records of breathing air quality reports provided by the Compressed Air suppliers shall be maintained. (See Section XX).

3) SCBA units shall be inspected monthly. (See Section VII).

IX. Exclusive Employee Use

Insofar as practicable, all individuals who are required to wear respiratory protective equipment shall be provided such equipment for their exclusive use. Respirators used by more than one individual (e.g., SCBA) shall be properly cleaned before storage. (See Section XIII).

X. Training

1) Respirator Program Coordinators (RPC) shall receive appropriate training, as defined by the Corporate Industrial Hygienist. This training will enable the RPC, in consultation with the Corporate Industrial Hygienist, to effectively administer this program.

2) Supervisors and employees will receive appropriate training which, as a minimum, shall consist of the following:

   a) "AIR-Purifying Respirators" (video) prepared by ITS.

   b) Hands on instruction in the proper fit testing, donning, inspection, storage and maintenance of the specific respirators in use.

   For those employees involved in the use of Air Supplying Respirators:

   c) "AIR-Supplying Respirators" (video) prepared by ITS.

   d) Hands on instruction in the proper fit testing, donning, inspection, storage and maintenance of the specific respirators in use.

3) All required respirator training will be provided to the user <u>prior</u> to his or her first use of a respirator.

4) As a minimum, training will be repeated annually.

5) Records of employee training will be maintained. (See Section XX).

XI. Donning - Employee Respirator Selection

1) The wearer shall be allowed to pick the most comfortable respirator from a selection which includes respirators of various sizes from different manufacturers.

2) The selection process shall be conducted in a room separate from the fit test area (in order to prevent odor fatigue).

3) Prior to the selection process, the test subject shall be shown how to put on a respirator, how it should be positioned and adjusted.

4) Respirator "comfort" shall be evaluated by considering the following: Positioning of mask on nose, room for eye protection, room to talk, positioning mask on face and cheeks, chin placement.

5) Before conducting negative or positive fit testing, the wearer shall be told to "seat" the mask by rapidly moving the head from side to side and up and down, while taking a few deep breaths.

XII. Fitting

1) a. All employees, including voluntary users, who wear respirators must receive qualitative fit testing. Fit testing is required for each type of respirator to be used by the employee.

   b. The medical approval described in Section XVII must be completed prior to fit testing.

2) Negative Pressure and Positive Pressure fit testing described in 4) below, must be performed each time an employee dons a respirator. "Test Atmosphere" qualitative fit testing described in 5) below, must be performed at least on an annual basis.

3) Documentation of employee "Test Atmosphere" qualitative fit test must be maintained. (See Section XX).

4) a. Positive Pressure Test

   The wearer must properly don the respirator per

the manufacturer's instructions. The wearer then covers the exhalation valve and exhales gently into the face piece. The fit is considered satisfactory if a slight positive pressure can be built up inside the face piece without any evidence of outward leakage.

b. Negative Pressure Test

Upon completion of the Positive Pressure Test, the inlets of the canister, cartridge(s) or filter(s) must be closed by covering with the palm(s) of the wearer's hand(s) or by using a seal or cover. The wearer inhales gently, so that the face piece collapses slightly, and continues to hold his/her breath for ten seconds. The respirator must remain slightly collapsed, and there must be no inward leakage detected.

5) Test Atmosphere Qualitative Fit Testing

All employees required to wear respirators based on Air Monitoring results or a Management Decision must use non-disposable respirators, for which an "Irritant Smoke Fit Test" may be performed.

a) "Irritant Smoke Fit Testing. All respirators used during an "Irritant Smoke Fit Test" must be equipped with a combination high-efficiency and acid gas cartridge.

b) The test subject shall be allowed to smell a weak concentration of the irritant smoke to familiarize him with the characteristic odor.

c) The test subject shall properly don the respirator selected as above and wear it for at least ten minutes before starting the fit test.

d) The negative and positive pressure fit tests described in (4) above shall be performed.

e) Break both ends of a ventilation smoke tube containing stannic oxychloride, such as MSA Part #5645, or equivalent. Attach a short length of tubing to one end of the tube along with an aspirator bulb so that air may be forced through the tube to generate irritant smoke.

   Advise the test subject that the smoke can be irritating to the eyes and instruct the subject to keep the eyes closed while the test is performed.

f) The test conductor shall direct the stream of irritant smoke from the tube towards the face seal area of the test subject. (The test subject is preferably located within a clear polyethylene enclosure which is open to the atmosphere at waist height).

g) The test subject shall be instructed to do the following exercises while the respirator is being challenged by the smoke. Each exercise shall be performed for one minute.

i) Breathe normally.
ii) Breathe deeply. Be certain breaths and regular.
iii) Turn head all the way from one side other. Be certain the movement is c Inhale on each side. Do not bump th respirator against the shoulders.
iv) Nod head up and down. Be certain mot complete and made every second. Inha looking toward ceiling. Do not bump respirator against chest.
v) Talk. Talk aloud and slowly for sever minutes. (Rainbow Passage Appendix F n used.)
vi) Jog in place for several minutes.
vii) Breathe normally.

These disp be fit tes Saccharin same as t atmosphe Kit" FTO equivale

h) The test subject shall indicate to the test conductor if the irritant smoke is detected, w indicates a fit test failure.

i) The test shall not be conducted if there is any hair growth between the skin and the face piece sealing surface.

j) If the test subject exhibits difficulty in breathing during the test, the fit test shall be discontinued and the employee referred to a physician.

6) Fit testing described in (5) shall be repeated annually. In addition, fit testing shall be repeated immediately when the test subject has:

a) Weight change of 20 pounds or more.
b) Significant facial scarring in the area of the face piece seal.
c) Significant dental changes, i.e., multiple extractions without prosthesis or acquiring dentures.
d) Reconstructive or cosmetic surgery.
e) Any other condition which may interfere with face piece sealing.

7) The use of disposable respirators is permitted in those situations where respirator use is considered to be employee voluntary.

8) Employe respire and ho piece seal. the e

These disposable respirators, such as the 3M 8710, must be fit tested in a test atmosphere containing a Saccharin Aerosol. The test subject procedure is the same as that described in (5). The saccharin test atmosphere will be generated by using the 3M "Fit Test Kit" FT02, or the FT10 "Fit Test Apparatus," or equivalent.

8) Employees who are required to wear full facepiece respirators and eyeglasses shall be fitted with lenses and holders designed to fit entirely within the face piece and which do not interfere with the respirator seal. These glasses shall be provided at no cost to the employee.

XIII. Cleaning

As a minimum, non disposable respirators will be cleaned at the end of the shift during which they were used. In certain circumstances more frequent cleaning may be required.

The cleaning procedure shall be performed in a clean area, remote from the source of exposure.

The cleaning shall include at least the following. (Note: Refer to respirator manufacturer's recommendations.)

1) Remove any filters, cartridges, and headbands, and disassemble the major respirator parts.

2) Wash all respirator parts (except cartridges and elastic headbands) in a cleaner-disinfectant solution at about 120° F. Use a hand brush to remove dirt.

3) Rinse thoroughly in clean warm water to remove all traces of detergent, cleaner and sanitizer.

4) Cool air dry, or clean paper towel dry the respirator in a clean area.

5) Inspect all parts, replace with new parts if defective.

6) Re-assemble the respirator and insert new or unexpired filters or cartridges. Make sure the seal is tight.

7) Place respirator in a clean plastic bag and seal it for storage.

8) As a minimum, disposable respirators shall be replaced at the end of one shift, and do not require cleaning.

XIV. Storage

1) Respiratory protective equipment shall be stored so as to protect it from dust, sunlight, heat, extreme cold, excessive moisture and damaging chemicals.

2) Respirators shall be stored in a convenient, clean and sanitary location where they are protected against damage or distortion by overcrowding. (Storage in tool boxes is not permitted).

3) Respirators intended for emergency use shall be stored in a cabinet or case located in a non-contaminated but readily accessible area.

XV. Inspection

The RPC will ensure that the following periodic inspections are completed.

1) Periodic inspection of individual employee respirators. A written record of these inspections will be maintained (Form 3).

2) As a minimum, weekly inspections of the respirator cleaning area. A written record of these inspections will be maintained (Form 5).

3) As a minimum, SCBA or other equipment designed for emergency use shall be inspected monthly. A weekly inspection of breathing air cylinder pressure is required. A written record of these inspections shall be maintained. (Form 4).

XVI. Repair

1) Respirator repairs must be performed according to manufacturer's recommendations. Employees are permitted to perform minor repairs. Major repairs (e.g., repairs to regulators, etc.) must be performed by the manufacturer or manufacturer trained individuals.

2) Replacement parts used in repairs must be provided by the manufacturer of the respirator.

XVII. Medical Approval

1) No person shall be assigned to tasks requiring the use of respirators unless it has been determined that they are physically able to perform the required work while wearing a respirator. Medical evaluations shall be performed by a licensed physician.

2) Medical evaluations shall be performed prior to the employee's first use of a respirator and shall be repeated as indicated in Table 2.

Table 2

Required Frequency of Medical Fitness Determinations*

	Worker Age in Years		
	<35	35-45	>45
Most work conditions requiring respirators	Every 5 years	Every 2 years	1 - 2 years
Strenuous work conditions with SCBA**	Every 3 years	Every 18 mos.	Annually

* Interim testing would be needed if changes in health status occur.

** SCBA = Self-contained breathing apparatus.

3) The respirator program coordinator shall ensure that a written record of the required medical evaluations is maintained (Section II).

4) The RPC shall ensure that Letter #1 provided in Appendix G and the listed references are provided to each physician performing employee fitness evaluations.

Letter #2 must be provided to the physician for each employee receiving the medical evaluation.

XVIII. Accounting Procedures

The RPC shall establish accounting procedures for the issuing and replacement of respirators.

Employees should be required to return damaged or worn respirators prior to being issued a new respirator.

XIX. Approved Respirators

All respirators used by Pratt and Lambert employees must be approved for their intended use by NIOSH/MSHA. It is the responsibility of the RPC to ensure that all respirators used within the facility are NIOSH/MSHA approved.

XX. Recordkeeping

The RPC is responsible for ensuring that the following records are maintained:

Record Type	Form #	Frequency	Comments
o Respirator Fit Test	1	Annually	One form per employee per respirator type
o Respirator Use Inventory	2	Continual.	
o Respirator Inspection	3	Minimum of monthly inspections	
o Supplied Air & Emergency Use Respirator Inspection	4	Equipment monthly. Air pressure weekly	
o Respirator cleaning area inspections	5	Weekly	
o Training Records	6	Annually	Form 6 may be used for one or more individuals.
o Medical Approval	(See Section XVII)		

FORM 1

RESPIRATOR FIT TEST

Employee Name_____ Today's Date_____

Social Security No._____ Tested by:_____

Date of Birth_____ Sex: M F

Medical Approval Date_____
Restrictions_____
_____

Type of respirator(s) selected: Model:_____
Size:_____
(Complete one form for each type of respirator used).

Enter a check (✓) for "acceptable" or "U" for "unacceptable" for each of the following:

Chin properly placed___ Strap Tension____ Room to talk___
Respirator slippage___ Room for safety glasses___ Fit across nose bridge___

Enter "T" (True) or "F" (False) for each of the following. (If "F" to any one, subject fails fit test).

___ Employee has completed required training program.

___ Employee is clean shaven in areas where respirator contacts skin.

___ Glasses and/or temple bars do not interfere with seal.

___ Facial scars do not interfere with seal.

___ Other facial features do not interfere with seal.

___ Employee does not complain of discomfort due to respirator.

___ Employee is able to "seat" respirator properly.

___ Employee is able to demonstrate adequate positive pressure test.

___ Employee is able to demonstrate adequate negative pressure fit test.

___ Employee has worn respirator for the ten minutes prior to initiating the "Test Atmosphere Fit Test.

TEST ATMOSPHERE QUALITATIVE FIT TEST

Type of Test Atmosphere (Circle one)
Isoamyl Acetate
Saccharin
Irritant Smoke

	PASS	FAIL
Employee Sensitive to Test Atmosphere	___	___
Breathe Normally	___	___
Breathe Deeply	___	___
Turn Head from Side to Side	___	___
Move Head Up & Down, Inhale With Head Up	___	___
Talk Aloud (Rainbow Passage)	___	___
Count	___	___
Jog in Place for Three Minutes	___	___
Breathe Normally	___	___
Overall Evaluation of Respirator Fit	___	___

Restrictions/Limitations_____

_____

_____

Date Respirator Issued:_____

FORM 2

RESPIRATOR USE INVENTORY

FACILITY NAME_____

INSPECTOR NAME_____

Employee Name/ Social Sec. No.	Job/ Activity Requiring Respirator	*Basis For Respirator Use	Air Purifying	Model	Hrs/ Day	Air Supplying	Model	Hrs/ Wk	Date of Last Medical Exam	Date of Last Fit Test

*A.M. = Air Monitoring, M.D. = Management Decision, E. V. = Employee Voluntary.

FORM 3

RESPIRATOR INSPECTION RECORD

FACILITY NAME_____

INSPECTOR NAME_____

Employee Name Social Sec. No.	Job/ Activity Requiring Respirator	Model Observed In Use	Cleaning	Storage	Worn Properly	Worn When Required	Maintenance/ Repair	Notes/Comments

A = Acceptable U = Unacceptable

FORM 5

RESPIRATOR CLEANING AREA INSPECTIONS

Cleaning Area No. or Description	Date Inspected	Inspected By _____	Notes/Comments

FORM 5

RESPIRATOR CLEANING AREA INSPECTIONS

Cleaning Area No. or Description	Date Inspected	Inspected By _____	Notes/Comments

FORM 6

EMPLOYEE TRAINING RECORDS

Employee Name	Employee Social Security #	Date	Program Description/ Title	Employee Signature	Trainer Initials

GLOSSARY

The following definitions of terms are provided to assist in the understanding and application of this decision logic.

ASSIGNED PROTECTION FACTOR (APF): See **PROTECTION FACTOR.**

BREAKTHROUGH: The penetration of challenge material(s) through a gas or a vapor air-purifying element. The quantity or extent of breakthrough during service life testing is often referred to as the percentage of the input concentration.

DISPOSABLE RESPIRATORS: A respirator that is discarded after the end of its recommended period of use, after excessive resistance or physical damage, or when odor breakthrough or other warning indicators render the respirator unsuitable for further use.

DUST: A solid, mechanically produced particle with a size ranging from submicroscopic to macroscopic.

EMERGENCY RESPIRATOR USE SITUATION: A situation that requires the use of respirators due to the unplanned generation of a hazardous atmosphere (often of unknown composition) caused by an accident, mechanical failure, or other means and that requires evacuation of personnel or immediate entry for rescue or corrective action.

ESCAPE GAS MASK: A gas mask that consists of a half-mask facepiece or mouthpiece, a canister, and associated connections and that is designed for use during escape only from hazardous atmospheres (see Subparagraph 5).

ESCAPE ONLY RESPIRATOR: Respiratory devices that are designed for use only during escape from hazardous atmospheres.

FILTERING FACEPIECE: A particulate respirator with a filter as an integral part of the facepiece or with the entire facepiece composed of the filtering medium. (See **SINGLE-USE DUST** or **DUST** and **MIST RESPIRATORS** and **DISPOSABLE RESPIRATORS.**)

FIT FACTOR: A quantitative measure of the fit of a specific respirator facepiece to a particular individual. (For further discussion of fit factors, refer to Appendix D.)

FUME: A solid condensation particulate, usually of a vaporized metal.

GAS: An aeriform fluid that is in a gaseous state at standard temperature and pressure.

IMMEDIATELY DANGEROUS TO LIFE OR HEALTH (IDLH): Acute respiratory exposure that poses an immediate threat of loss of life, immediate or

delayed irreversible adverse effects on health, or acute eye exposure that would prevent escape from a hazardous atmosphere.

MIST: A liquid condensation particle.

ORINASAL RESPIRATOR: A respirator that covers the nose and mouth and that generally consists of a quarter- or half-facepiece.

PLANNED or UNPLANNED ENTRY into an IDLH ENVIRONMENT, AN ENVIRONMENT OF UNKNOWN CONCENTRATION of HAZARDOUS CONTAMINANT, or an ENVIRONMENT of UNKNOWN COMPOSITION: A situation in which respiratory devices are recommended to provide adequate protection to workers entering an area where the contaminant concentration is above the IDLH or is unknown.

POTENTIAL OCCUPATIONAL CARCINOGEN: Any substance, or combination or mixture of substances, which causes an increased incidence of benign and/or malignant neoplasms, or a substantial decrease in the latency period between exposure and onset of neoplasms in humans or in one or more experimental mammalian species as the result of any oral, respiratory, or dermal exposure, or any other exposure which results in the induction of tumors at a site other than the site of administration. This definition also includes any substance that is metabolized into one or more potential occupational carcinogens by mammals (29 CFR 1990.103, OSHA Cancer Policy).

PROTECTION FACTORS (See Appendix D):

ASSIGNED PROTECTION FACTOR (APF): The minimum anticipated protection provided by a properly functioning respirator or class of respirators to a given percentage of properly fitted and trained users.

SIMULATED WORKPLACE PROTECTION FACTOR (SWPF): A surrogate measure of the workplace protection provided by a respirator.

WORKPLACE PROTECTION FACTOR (WPF): A measure of the protection provided in the workplace by a properly functioning respirator when correctly worn and used.

RECOMMENDED EXPOSURE LIMIT (REL): An 8- or 10-hour time-weighted average (TWA) or ceiling (C) exposure concentration recommended by NIOSH that is based on an evaluation of the health effects data.

SERVICE LIFE: The length of time required for an air-purifying element to reach a specific effluent concentration. Service life is determined by the type of substance being removed, the concentration of the substance, the ambient temperature, the specific element being tested (cartridge or canister), the flow rate resistance, and the selected breakthrough value. The service life for a self-contained breathing apparatus (SCBA) is the period of time, as determined by the NIOSH certification tests, in which adequate breathing gas is supplied.

RPC: Respirator Program Coordinator.

SINGLE-USE DUST or DUST AND MIST RESPIRATORS: Respirators approved for use against dusts or mists that may cause pneumoconiosis and fibrosis.

VAPOR: The gaseous state of a substance that is solid or liquid at temperatures and pressures normally encountered.

APPENDICES A, B, & C

Consult "NIOSH Respirator Decision Logic DHHS (NIOSH) Publication No. 87-108.

APPENDIX A END OF SERVICE LIFE INDICATORS

APPENDIX B POLICY - SINGLE USE RESPIRATORS - ASBESTOS

APPPENDIX C ODOR WARNING

APPENDIX D. PROTECTION FACTOR: BACKGROUND INFORMATION

The U.S. Bureau of Mines referred to the term "Decontamination Factor" in their Approval Schedule 21B, first issued in 1965, and defined it to be "the ratio of the concentration of dust, fume, or mist present in the ambient atmosphere to the concentration of dust, fume, or mist within the facepiece while the respirator is being worn." The decontamination factor is now referred to as the respirator protection factor. The original definition and application given in schedule 21B has been somewhat generalized over the years.

The protection factor of a respirator is an expression of performance based on the ratio of two measured variables, C_I and C_O. The variable C_I is defined only as the measured concentration of a contaminant inside the respirator facepiece cavity, and C_O is defined only as the measured contaminant concentration outside the respirator facepiece. The relationship between these two variables can be expressed not only as the protection factor (C_O/C_I) but also as the penetration (C_I/C_O) or efficiency [$(C_O-C_I)/C_O$].

The protection factor can be related to the penetration (p) and efficiency (E) as follows:

$$PF = C_O/C_I = 1/p = 1/(1-E)$$

A further implicit condition on the PF function is that $C_I \leq C_O$; therefore, the PF will always be greater than unity.

Protection factor assessments are made almost exclusively on man/respirator systems, while penetration and efficiency assessments are made only on component parts of the respirator system. It is important to recognize that on a man/respirator system, the measured variable C_I becomes a complicated function of many individual sources of penetration (e.g., air-purifying element penetration, exhalation valve penetration, face seal penetration, and other inboard penetration) and those environmental conditions that would effect penetration. To deal with the multiple methods for determining and applying protection factors, a number of definitions have been proposed [13]. These definitions, described below in greater detail than in the Glossary, are as follows:

ASSIGNED PROTECTION FACTOR (APF): A special application of the general protection factor concept, APF is defined as a measure of the minimum anticipated workplace level of respiratory protection that would be provided by a properly functioning respirator or class of respirators to a percentage of properly fitted and trained users. The maximum specified use concentration for a respirator is generally determined by multiplying the exposure limit for the contaminant by the protection factor assigned to a specific class of respirators [13].

APPENDIX D. PROTECTION FACTOR: BACKGROUND INFORMATION

The U.S. Bureau of Mines referred to the term "Decontamination Factor" in their Approval Schedule 21B, first issued in 1965, and defined it to be "the ratio of the concentration of dust, fume, or mist present in the ambient atmosphere to the concentration of dust, fume, or mist within the facepiece while the respirator is being worn." The decontamination factor is now referred to as the respirator protection factor. The original definition and application given in schedule 21B has been somewhat generalized over the years.

The protection factor of a respirator is an expression of performance based on the ratio of two measured variables, C_I and C_O. The variable C_I is defined only as the measured concentration of a contaminant inside the respirator facepiece cavity, and C_O is defined only as the measured contaminant concentration outside the respirator facepiece. The relationship between these two variables can be expressed not only as the protection factor (C_O/C_I) but also as the penetration (C_I/C_O) or efficiency [$(C_O-C_I)/C_O$].

The protection factor can be related to the penetration (p) and efficiency (E) as follows:

$$PF = C_O/C_I = 1/p = 1/(1-E)$$

A further implicit condition on the PF function is that $C_I \leq C_O$; therefore, the PF will always be greater than unity.

Protection factor assessments are made almost exclusively on man/respirator systems, while penetration and efficiency assessments are made only on component parts of the respirator system. It is important to recognize that on a man/respirator system, the measured variable C_I becomes a complicated function of many individual sources of penetration (e.g., air-purifying element penetration, exhalation valve penetration, face seal penetration, and other inboard penetration) and those environmental conditions that would effect penetration. To deal with the multiple methods for determining and applying protection factors, a number of definitions have been proposed [13]. These definitions, described below in greater detail than in the Glossary, are as follows:

ASSIGNED PROTECTION FACTOR (APF): A special application of the general protection factor concept, APF is defined as a measure of the minimum anticipated workplace level of respiratory protection that would be provided by a properly functioning respirator or class of respirators to a percentage of properly fitted and trained users. The maximum specified use concentration for a respirator is generally determined by multiplying the exposure limit for the contaminant by the protection factor assigned to a specific class of respirators [13].

SIMULATED WORKPLACE PROTECTION FACTOR (SWPF): A surrogate measure of the workplace protection factor (WPF) of a respirator, SWPF differs from the WPF only in that it is measured in a laboratory simulation of a workplace setting rather than in the actual workplace. The definitions and restrictions of C_0 and C_i are as described for the WPF. For laboratory protection factor testing to reliably estimate WPF's, a relationship must be demonstrated between the two tests. No such relationship has been identified in the literature. Until such a relationship can be shown to exist, the laboratory protection factor is of questionable use in determining or predicting the WPF [13].

WORKPLACE PROTECTION FACTOR (WPF): A measure of the actual protection provided in the workplace under the conditions of that workplace by a properly functioning respirator when correctly worn and used, WPF is defined as the ratio of the estimated contaminant concentration outside the respirator facepiece (C_0) to the contaminant concentration inside the respirator facepiece (C_i). The sampling restrictions placed on C_0 and C_i are that both C_0 and C_i should be TWA samples taken simultaneously while the respirator is being properly worn and used during normal work activities. In practice, the WPF would be determined by measuring the concentration inside and outside the facepiece during the activities of a normal workday [13].

FIT FACTOR: A special application of the protection factor ratio that represents a quantitative measure of the fit of a particular respirator facepiece to a particular individual, the fit factor is defined under the conditions of quantitative fit testing as the aerosol concentration in the test chamber (C_0) divided by the penetration that occurs through the respirator face seal interface (C_i) [34]. For C_i to reflect only face seal leakage, high efficiency filters [greater than 99.97% efficient against 0.3 µm aerodynamic mass median diameter (AMMD) dioctylphthalate aerosol] are installed on the respirator. It is assumed that either no leakage or only a negligible amount of leakage into the facepiece occurs through the exhalation valve or any source other than the face seal. The fit factor is measured on a complete respirator worn by a test subject who follows a regimen of slow head movements, deep breathing, and talking; a polydispersed oil mist or sodium chloride aerosol is used that has an AMMD of approximately 0.6 $\pm$ 0.1 µm (with a geometric standard deviation of approximately 2 to 2.4).

Table 5.—NIOSH recommended maximum use concentrations (expressed in ppm) for gas and vapor air-purifying elements

Type of gas or vapor	Classification of gas and vapor air-purifying elements		
	Cartridge(s)	Chin-style canister	Front- or back-mounted canister
Organic vapors	1,000*	5,000†	20,000†
Acid gases			
Sulfur dioxide (SO_2)	50	100	100
Chlorine (Cl_2)	10	25	25
Hydrochloric (HCl)	50	100	100
Ammonia (NH_3)	300	500	500
Methyl amine (CH_3NH_2)	100	--	--
Carbon monoxide (CO)	NA	NA	1,500

* Maximum use concentration will be 1,000 ppm or the immediately dangerous to life or health (IDLH) value for the specific organic vapor, whichever is lower.

† Maximum use concentration for "entry into" will be limited to the value listed or to the IDLH value for the specific organic vapor, whichever is lower.

RAINBOW PASSAGE

When the sunlight strikes raindrops in the air, they act like a prism and form a rainbow. The rainbow is a division of white light into many beautiful colors. These take the shape of a long round arch, with its path high above, and its two ends apparently beyond the horizon. There is, according to legend, a boiling pot of gold at one end. People look, but no one finds it. When a man looks for something beyond his reach, his friends say he is looking for the pot of gold at the end of the rainbow.

AIR SPECIFICATION

1. SCOPE

1.1 This document describes the specification requirements for air, including atmospheric air and air synthesized by blending oxygen and nitrogen in the proper proportions. It is different from other gas specifications because atmospheric air is not a manufactured product but is naturally occuring. Atmospheric air contains a large variety of trace constituents on many of which it is impractical to set individual limits. However, this specification qualifies certain grades of air by limiting the concentrations of specific trace constituents.

2. CLASSIFICATION

2.1 Types — Gaseous air is denoted as Type I and liquid air as Type II.

2.2 Grades — Table 1 presents the component maxima, in ppm (v/v) unless shown otherwise, for the types and grades of air. A blank indicates no maximum limiting characteristic.

TABLE 1

Limiting Characteristics	TYPE I (GASEOUS) GRADES									TYPE II (LIQUID)	
	A	B	C	D	E	F	G	H	J	A	B
% O_2 (v/v) Balance Predominantly N_2 (Note 1)	atm.	atm.	atm. 19.5-23.5	atm/ 19.5-23.5	atm/ 19.5-23.5	atm/ 19.5-23.5	atm. 19.5-23.5	atm/ 19.5-23.5	atm/ 19.5-23.5	atm/ 19.5-23.5	atm/ 19.5-23.5
Water		none condensed (per 5.3.1)	note 2	note 2	note 2	note 2	note 2	note 2	1 −10.4°F		note 2
Hydrocarbons (condensed) in Mg/m³ of gas at NTP (Note 3)		none (per 5.4.1)	5	5	5						
Carbon Monoxide			50	20	10	5	5	5	1		5
Odor			see 5.1.5	see 5.1.5	see 5.1.5	see 5.1.5	see 5.1.5	see 5.1.5	see 5.1.5		none
Carbon Dioxide				1000	500	500	500	500	0.5		5
Gaseous Hydrocarbons (as methane)						25	15	10	0.5		10
Nitrogen Dioxide							2.5	0.5	0.1		0.5
Nitrous Oxide									0.1		
Sulfur Dioxide							2.5	0.5	0.1		0.5
Halogenated Solvents							10	1	0.1		1
Acetylene									0.05		0.5
Permanent Particulates											—.15

Note 1: The term "atm" (atmospheric) denotes the oxygen content normally present in atmospheric air; the numerical values denote the oxygen limits for synthesized air.

Note 2: The water content of compressed air required for any particular grade may vary with the intended use from saturated to very dry. If a specific water limit is required, it should be specified as a limiting dewpoint or concentration in ppm (v/v). Dewpoint is expressed in temperature °F at one atmosphere absolute pressure (760 mmHg). To convert dewpoint °F to °C, ppm (v/v), or mg/liter, see 7.1.

Note 3: No limits are given for condensed hydrocarbons beyond grade E since the gaseous hydrocarbon limits could not be met if condensed hydrocarbons were present.

APPENDIX G

Letter #1

Dear (Company Physician):

As part of a comprehensive respiratory protection program, we plan to require a medical evaluation of all employees who may be required to wear respiratory protective equipment.

Enclosed is an example letter which will accompany each request for such an evaluation. This letter will provide a general description of the type of respirator(s) to be used by the employee, as well as the conditions of use. If you require any additional information, please feel free to contact _____at _____.

Also enclosed are two references for your information:

1) "Screening Prospective Workers for the Ability to Use Respirators," Thomas K. Hodous, M.D., Journal of Occupational Medicine Vol. 28, No. 10, October 1986.

2) "Clinical Pulmonary Function Tests as Predictors of Work Performance During Respirator Wear," American Industrial Hygiene Association Journal, 50(1):51-57 (1989).

APPENDIX G

(Letter #2)

Dear (Company Physician):

As required by the OSHA Respiratory Protection Standard, 29 CFR 1910.134, and as part of our overall respiratory protection program, we ask that you perform a medical evaluation of _____ _____ to determine his/her ability to wear the respirator(s) during the corresponding conditions of use, as described on the attached form.

Sincerely,

(Letter #2 - page 2) EMPLOYEE NAME _____

Respirator Type	Hrs/ Day	Week	Description	Physician (Please initial) Approval	Disapproval	Comments
Air Purifying						
Disposable Half Mask						
Half Mask						
Full Facepiece						
Powered Air Purifying						
Air Supplying						
Self Contained Breathing Apparatus						
Air Line Respirator Full-Face						
Helmet - or Hood						

Central Accum. Area

DATE	REMARKS	INSPECTED BY	DRUMS TAGGED	DRUMS LEAKERS	AREA AISLES	AREA CLEAN
12-15-95	8 DRUMS	JN	8	NONE	✓	YES
1-9-96	4 DRUMS	JN	4	NONE	✓	YES
1-9-96	1 DRUM (FILTERS)	JN	1	NONE	✓	YES
3-11-96	10 DRUMS	JN	10	NONE	✓	YES
3-11-96	1 DRUM (FILTERS)	JN	1	NONE	✓	YES
4-3-96	1 DRUM (FILTERS)	JN	1	NONE	✓	YES
4-3-96	6 DRUMS	JN	6	NONE	✓	YES
05-03-96	5 DRUMS	JN	5	NONE	✓	YES
06-26-96	8 DRUMS	JN	8	NONE	✓	YES
06-26-96	1 DRUM (FILTERS)	JN	1	NONE	✓	YES
09-20-96	17 DRUMS	JN	17	NONE	✓	YES
09-20-96	1 DRUM (FILTERS)	JN	1	NONE	✓	YES
10-30-96	6 DRUMS	JN	6	✓	✓	✓
10-30-96	1 DR. (FILTER)	JN	1	✓	✓	✓
11-1-96	43 DRUMS	JN	43	✓	✓	✓

RRC Assumed Respon. On 1-1-97

1-7-97	80 Drums	2 Filter BL	80	None	✓	Yes
1-14-97	Miss counting 80 Drums	2 Filter	80	None	✓	✓
1-22-97	66 Drums	2 Filter	66	None	✓	✓
1-28-97	74 Drums	2 Filter	74	None	✓	✓
2-5-97	76 Drums	2 Filter	76	None	✓	✓
2-10-97	76 Lin 2 Filter	BL	78	None	✓	✓
2-19-97	0	Empty BL				✓
2-25-97	1 Drum		1	None	✓	Yes
3-4-97	2	1 Filter	2	"	✓	"
3-13-97	3		3	"	✓	"
3-17-97	4	2 Filter	4	"	✓	"
3-24-97	4 Drums	BL	4	None	✓	Yes

Central Accumulation Area

Date	Remarks	Insp By	Drums Tagged	Drums Leakers	Area Aisle	Area Clean
4-1-97	4 Drms	2 Filter BC	Yes	None	✓	Yes
4-8-97	9 Drms	3 Filter BC	Yes	None	✓	✓
4-16-97	9 Drms	4 Filter BC	Yes	"	✓	"
4-22-97	9 Drms	4 Filter BC	Yes	"	✓	"
4-28-97	11 Drms	4 Filter BC	"	"	✓	"
5-5-97	11 "	4 Filter BC	"	"	✓	"
5-13-97	14 "	" BC	"	"	✓	"
5-19-97	14 "	" BC	"	"	✓	"
5-28-97	18 "	" BC	"	"	✓	"
6-3-97	18 "	" BC	"	"	✓	"
6-11-97	18 "	5 Filter BC	"	"	✓	"
6-17-97	18 "	5 Filter BC	"	"	✓	✓
6-23-97	21 "	6 Filter BC	"	"	✓	✓

Should Be 1998 BC

12-15-97	10 Drms	2-Filter BC	Yes	None	Yes	Yes	
12-23-97	10 Drms	2-Filter BC	"	"	"	"	Called In
12-29-97	11 Drms	2-Filter BC	"	"	"	"	
1-5-97	12 Drms	2-Filter BC	"	"	"	"	
1-12-97	4 Drms	1-Filter BC	"	"	"	"	
1-20-97	11 Drms	BC	"	"	"	"	
1-28-98	2 Drms	1 Filter BC	"	"	"	"	
2-3-98	13 Drums	1 Filter BC	"	"	"	"	
2-9-98	15 Drums	1 Filter BC	"	"	"	"	
2-16-98	15 Drms	1 Filter BC	"	"	"	"	
2-25-98	18 Drms	2 Filter BC	"	"	"	"	
3-4-98	0 —	BC	"	"	"	"	
3-9-98	0 —	BC	0	0	"	"	

Central Accumulation Area

Date	Remarks	Insp By	Drums Tagged	Drums Leakers	Aisle Aisle	Aisle Clean
3-17-98	0 Drums	BC	—	—	—	—
3-30-98	2 Drums	BC	✓	✓	✓	✓
4-6-98	2 Filter 11 Lg. (13)	BC	✓	✓	✓	✓
4-14-98	2 Fil. 11 Lg.	BC	✓	✓	✓	✓
4-20-98	2 Filt. 13 Lg	BC	✓	✓	✓	✓
5-5-98	2 Filt. 18 Total	BC	✓	✓	✓	✓
5-14-98	2 Filt 20 Total	BC	✓	✓	✓	✓
5-20-98	2 Filt 20 Total	BC	✓	✓	✓	✓
6-2-98	3 Filt 23 Total	Collie	✓	✓	✓	✓
6-8-98	3 Fill 23 Total	[illegible]	✓	✓	✓	✓
6-18-98	0 0	BC	0	0	✓	✓
6-23-98	0 Filt. 2 Total	BC	✓	✓	✓	✓
7-1-98	0 Filt. 2 Total	BC	✓	✓	✓	✓
7-7-98	0 Fill. 16 Total	BC	✓	✓	✓	✓
7-15-98	0 Fill. 17 Total	BC	✓	✓	✓	✓
7-24-98	1 Filt. 20 Total	BC	✓	✓	✓	✓
8-5-98	1 Fill. 20 Total	BC	✓	✓	✓	✓
8-10-98	1 Fill. 41 Total	BC	✓	✓	✓	✓
8-17-98	2 Filt. 42 Total	BC	✓	✓	✓	✓
8-24-98	0 0 Total	BC	✓	✓	✓	✓
8-31-98	1 1 Total	BC	✓	✓	✓	✓
9-8-98	68 Drums 0 Fill.	BC	✓	✓	✓	✓
9-14-98	81 Drums 1 Filt. 82 Total	BC	✓	✓	✓	✓
9-22-98	82 Drums 1 Filt 83 Total	BC	✓	✓	✓	✓
9-29-98	80 Drum 1 Filt. 81 Total	BC	✓	✓	✓	✓
10-5-98	8 Drums Lg.	Marty	✓	✓	✓	✓
10-15-98	8 Drums Lg.	[illegible]	✓	✓	✓	✓
10-21-98	16 Drums Lg. 2 Filter	BC	✓	✓	✓	✓
10-26-98	50 Lg. 2 Filt. (52)	BC	✓	✓	✓	✓
11-3-98	[illegible] 2 Filt (60)	BC	✓	✓	✓	✓
11-13-98	58 Lg. 2 Filt. (60)	BC	✓	✓	✓	✓

ILLINOIS POLLUTION CONTROL BOARD
November 5, 1998

MOBIL OIL CORPORATION,	)	
	)	
Petitioner,	)	
	)	
v.	)	PCB 99-59
	)	(Provisional Variance - RCRA)
ILLINOIS ENVIRONMENTAL PROTECTION AGENCY,	)	
	)	
Respondent.	)	

ORDER OF THE BOARD (by C.A. Manning):

On November 4, 1998, the Illinois Environmental Protection Agency (Agency) filed a request for a provisional variance and notification of recommendation. The Agency recommends that the Board grant a 30-day provisional variance. The provisional variance would allow this Will County petitioner to continue accumulating hazardous waste for a period in excess of 90 days. In making its recommendation, the Agency states that failure to grant the requested provisional variance for 30 days will result in an arbitrary or unreasonable hardship on the petitioner.

The Board is required, in a provisional variance, to adopt a formal order, assure formal maintenance of the record, assure the enforceability of the variance, and provide notification of the action by press release. Pursuant to Section 35(b) of the Environmental Protection Act (Act) (415 ILCS 5/35(b) (1996)), the Board must issue the provisional variance within two days of the filing. The Board grants the petitioner a provisional variance from the 90-day limitation on the accumulation of hazardous wastes, as set forth in 35 Ill. Adm. Code 722.134(b), for the period from November 13, 1998 to December 13, 1998.

IT IS SO ORDERED.

Section 41 of the Environmental Protection Act (415 ILCS 5/41 (1996)) provides for the appeal of final Board orders to the Illinois Appellate Court within 35 days of service of this order. Illinois Supreme Court Rule 335 establishes such filing requirements. See 172 Ill. 2d R. 335; see also 35 Ill. Adm. Code 101.246, Motions for Reconsideration.

I, Dorothy M. Gunn, Clerk of the Illinois Pollution Control Board, hereby certify that the above order was adopted on the 5th day of November 1998 by a vote of 7-0.

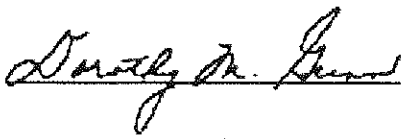

Dorothy M. Gunn, Clerk
Illinois Pollution Control Board

RECEIVED
REGIONAL HEARING
'99 FEB -3 A9:36
US ENVIRONMENTAL PROTECTION AGENCY
REGION V

UNITED STATES ENVIRONMENTAL PROTECTION AGENCY
REGION 5

BEFORE THE ADMINISTRATOR

IN THE MATTER OF:	)	
	)	DOCKET No. 5-RCRA-98-006
PIERCE & STEVENS CORPORATION	)	
	)	Administrative Law Judge
Respondent.	)	Barbara A. Gunning, Presiding
	)	

COMPLAINANT'S PREHEARING EXCHANGE

NOW COMES the Complainant, the United States Environmental Protection Agency ("U.S. EPA" or "the Agency"), by and through its counsel, and hereby complies with the Prehearing Order ("Order"), dated October 14, 1998, directing the Complainant to file its prehearing exchange for this civil administrative action by February 3, 1999. The following is submitted as directed.

I. WITNESSES TO BE CALLED

The Order states that each party shall submit "the names of all the expert and other witnesses it intends to call at the hearing, together with a brief narrative summary of each witness' expected testimony."

1. Patrick F. Kuefler
   Environmental Scientist
   RCRA Enforcement and Compliance
   Assurance Branch
   U.S. EPA, Region 5 (Mail Code DE-9J)
   77 West Jackson Boulevard
   Chicago, Illinois 60604

Mr. Kuefler will testify as to his educational background and employment experience.

Mr. Kuefler will also testify generally regarding the facts supporting the violations alleged in the Complaint and denied in the Respondent's Answer, and the basis for the $123,695 penalty sought in the Complaint. More specifically, he will testify that on December 12, 1997, pursuant to his duties as an Environmental Scientist for U.S. EPA, he conducted an inspection of Respondent's facility located at 6245 East Kehoe Boulevard, Carol Stream, Illinois, including a review of documents kept at the facility. He will testify that his inspection and review of the

documents indicated, among other things, that: (1) Respondent does not have a permit to store hazardous waste; (2) Respondent stored hazardous waste in excess of ninety days without a permit for the storage of hazardous waste; (3) Respondent's records indicate that Respondent failed to conduct weekly inspections of a hazardous waste accumulation area; (4) Respondent's contingency plan at the time of the inspection did not include a brief outline of the capabilities of each item of emergency equipment or an evacuation plan; (5) Respondent's facility did not provide at the time of the inspection certain written job descriptions for each position at the facility related to hazardous waste management, nor did it provide records that document that training or job experience required by the facility's training program had been completed by facility staff; and (6) a drum was stored without a date marked on the drum indicating the date of initial accumulation.

Mr. Kuefler will testify that as a result of these violations, Respondent did not meet the conditions required under RCRA and its regulations for storing hazardous waste for ninety days or less without obtaining a permit for storage of hazardous waste. As part of such testimony, he will explain the recordkeeping and waste container management practices generally required of hazardous waste generators in order for such generators to maintain their exemption from hazardous waste permit requirements.

He will further testify that the proposed penalty of $123,695 was assessed in a manner consistent with RCRA, the 1990 RCRA Civil Penalty Policy, and the 1997 Civil Monetary Penalty Inflation Rule. Mr. Kuefler's testimony will demonstrate that the proposed penalty took into account the seriousness of the violations and any good faith efforts by Respondent to comply, as well as the gravity of the violations, the appropriateness of multi-day penalties, the degree of any wilfulness or negligence, history of non-compliance, ability to pay, and economic benefit. Such testimony will include a description of the determination of the gravity component of the penalty calculation, and the potential for harm to the RCRA regulatory program posed by hazardous waste generators who operate without a permit, where such permit is required.

2. Joseph M. Boyle, Chief
RCRA Enforcement and Compliance
Assurance Branch
U.S. EPA, Region 5 (Mail Code DE-8J)
77 West Jackson Boulevard
Chicago, Illinois 60604

Mr. Boyle, if called, will testify as to his educational background and employment experience.

He is further expected to testify concerning the U.S. EPA RCRA Enforcement and Compliance Assurance Branch's use of the 1990 RCRA Civil Penalty Policy when assessing the violations of generators, transporters, treaters, storers, and disposers of hazardous solid waste, under 42 U.S.C. Section 6901 et seq. Mr. Boyle will further testify that based on his considerable experience and knowledge as the Chief of the Enforcement and Compliance Assurance Branch, Office of RCRA, the calculation of a penalty amount of $123,695 in the present case was appropriately arrived at and should be considered applicable to the violations allegedly committed by Respondent in light of the standards set forth in RCRA and the 1990 RCRA Civil Penalty Policy.

3. Lorna M. Jereza, Section Chief
IL/IN Section
RCRA Enforcement and Compliance
Assurance Branch
U.S. EPA, Region 5 (Mail Code DE-8J)
77 West Jackson Boulevard
Chicago, Illinois 60604

Ms. Jereza, if called, will testify as to her educational background and employment experience.

She is further expected to testify concerning the U.S. EPA RCRA Enforcement and Compliance Assurance Branch's use of the 1990 RCRA Civil Penalty Policy when assessing the violations of generators, transporters, treaters, storers, and disposers of hazardous solid waste, under 42 U.S.C. Section 6901 et seq. Ms. Jereza will further testify that based on her considerable experience and knowledge as a Section Chief in the Enforcement and Compliance Assurance Branch, Office of RCRA, the calculation of a penalty amount of $123,695 in the present case was appropriately arrived at and should be considered applicable to the violations allegedly committed by Respondent in light of the standards set forth in RCRA and the 1990 RCRA Civil Penalty Policy.

Complainant respectfully reserves the right to amend its Witnesses to be Called upon timely notice to the Court and Respondent.

II. DOCUMENTS AND EXHIBITS

The Order states that each party shall submit "copies of all documents and exhibits which each party intends to introduce into evidence." Complainant intends to offer into evidence seven (7) exhibits. A copy of each exhibit is enclosed.[1]

Complainant's Exhibit 1

RCRA Compliance Evaluation Inspection Report, prepared by Patrick F. Kuefler, U.S. Environmental Protection Agency, Region 5, for an inspection conducted December 12, 1997, including attachments.

Complainant's Exhibit 2

Field notes of December 12, 1997, inspection conducted by Patrick F. Kuefler, U.S. Environmental Protection Agency, Region 5.

Complainant's Exhibit 3

Letter dated January 19, 1998, from Sam H. Mauldin, Plant Manager, Pierce & Stevens Corporation, to Patrick Kuefler, U.S. Environmental Protection Agency, Region 5, including enclosures.

Complainant's Exhibit 4

Copy of Pre-Filing Notice Letter, dated June 3, 1998, from Joseph M. Boyle, U.S. Environmental Protection Agency, Region 5, to Robert R. Cervenka, Production Coordinator, Pierce & Stevens Corporation, including green card.

---

[1] The Order also requires that if photographs are submitted, the photographs must be actual unretouched photographs. Complainant's Exhibit 1 includes photographs which are attachments to U.S. EPA's report on the inspection of Respondent's facility. The actual, unretouched photographs will be filed as part of Complainant's Exhibit 1 in the original copy of Complainant's Prehearing Exchange filed with the Regional Hearing Clerk. Color photostat copies of the photographs will be included in the copies of Complainant's Exhibit 1 forwarded to the Office of Administrative Law Judges and Respondent's counsel.

Complainant's Exhibit 5

Letter dated June 9, 1998, from Martin D. Mulholland, Plant Manager, Pierce & Stevens Corporation, to Joseph M. Boyle, U.S. EPA, Region 5, in response to Pre-Filing Notice Letter, including enclosures.

Complainant's Exhibit 6

U.S. EPA Penalty Computation Worksheet

Complainant's Exhibit 7

The U.S. EPA RCRA Civil Penalty Policy, dated October 1990.

Complainant respectfully reserves the right to amend its list of Documents and Exhibits upon timely notice to the Court and Respondent.

III. DESIRED LOCATION OF HEARING

The Order states that each party shall submit "a statement expressing its view as to the place for the hearing and the estimated amount of time needed to present its direct case."

Complainant's desired location for the hearing is Chicago, Illinois. This location meets the requirements of 22.21(d) and 22.19(d) of the Rules as it is "the city in which the relevant Environmental Protection Agency Regional Office is located." Also, Complainant's offices, witnesses, and attorney are located in Chicago. Respondent and Respondent's counsel are also located in Chicago or the Chicago area. Moreover, Chicago is a major transportation hub, convenient for any others who would have to travel for hearing attendance.

Complainant estimates that the direct examination of its witnesses will take no more than two days.

IV. THE PROPOSED CIVIL PENALTY

The Order requires Complainant to submit "a statement explaining in detail how the proposed penalty was determined, including a description of how the specific provisions of any Agency penalty or enforcement policies and/or guidelines were applied in calculating the penalty." Complainant submits the following as directed. Complainant has also submitted its

Penalty Calculation Worksheet as Complainant's Exhibit 6, which also explains the proposed penalty in detail.

In determining the amount of any penalty assessed under Section 3008(a) of RCRA, 42 U.S.C. § 6928(a), the Administrator shall take into account the seriousness of the violation and any good faith efforts to comply with applicable requirements. 42 U.S.C. § 6928(a)(3). Any penalty assessed shall not exceed $25,000 per day of noncompliance for each violation. Id. The Civil Monetary Penalty Inflation Adjustment Rule, published at 40 C.F.R. Part 19, increases penalties occuring or continuing on or after January 31, 1997, by 10%, thereby authorizing U.S. EPA to seek a penalty of up to $27,500 per day per violation.

Complainant has proposed a $123,695 civil penalty against Pierce & Stevens Corporation for violations of RCRA and regulations promulgated thereunder as alleged in the Complaint, pursuant to Section 3008(a) of RCRA, 42 U.S.C. § 6928(a)(3). To develop the proposed penalty, Complainant has taken into account the particular facts and circumstances of this case with specific reference to the 1990 RCRA Civil Penalty Policy (attached as Complainant's Exhibit 7), which provides a rational, consistent, and equitable calculation methodology for applying the statutory penalty factors enumerated above.

Under the 1990 RCRA Civil Penalty Policy, the total penalty amount is the sum of a gravity-based penalty amount, the amount of any multiday penalties, an amount for any economic benefit enjoyed by the respondent as a result of noncompliance, and any downward or upward adjustments.

The gravity component is a measure of the seriousness of the violation, and is determined by examining two factors: potential for harm and the extent of deviation from a statutory or regulatory requirement. The gravity amount is selected from an appropriate cell in a penalty matrix formed by these two factors. The multiday component reflects the duration of the violation at issue. Multiday penalties may be mandatory, presumptive, or discretionary under the 1990 RCRA Civil Penalty Policy. The specific per day penalty amount is selected from a multiday penalty matrix, which also is based upon the potential for harm and extent of deviation of the violation at issue. The economic benefit component is calculated through use of the BEN computer model. Factors considered by U.S. EPA in making upward or downward adjustments to the penalty amount include: any good faith efforts to comply or the lack of good faith; the degree of any willfulness or negligence; any history of noncompliance; and respondent's ability to pay a penalty.

A. Gravity (Seriousness of the Violation)

1. Potential for Harm

Under the 1990 RCRA Civil Penalty Policy, potential for harm may be categorized as "major", "moderate", or "minor". Id. at 15. Potential for harm is considered "moderate" where the violation at issue may pose a "significant" risk of exposure to humans or the environment, and/or may have a "significant" adverse effect on statutory or regulatory purposes, or on the RCRA program. Id.

In evaluating the harm arising from Respondent's violation, Complainant considered the potential harm to the environment and human health, and any harm to the RCRA regulatory program. Potential harm to the environment and human health as a result of Respondent's storage of hazardous waste in excess of 90 days without a permit was considered minor. However, the 90-day storage violation, Respondent's failure to inspect weekly, the deficiencies in Respondent's contingency plan, the lack of certain training records, and improperly labelled drum, were considered in their total effect to be significantly harmful to the RCRA program and to the statutory and regulatory purposes of RCRA. Complainant therefore determined that the potential for harm in this instance was moderate.

The potential harm to the RCRA program exists for the following reasons. The RCRA program provides for increased regulatory oversight of hazardous waste facilities in proportion to the scale, duration, and complexity of their hazardous waste management. For example, a facility that poses a greater potential threat of hazardous waste releases or accidents is required to maintain financial assurance, is inspected more frequently, is subject to greater recordkeeping requirements, and is required to conduct remedial investigations throughout the facility. A generator of hazardous waste that stores its waste at its facility for long periods of time (for example, in excess of ninety days) may pose a greater threat of release than one which stores for short periods of time. The long-term storage of waste by a facility which does not have a permit harms the RCRA program's ability to identify and provide the higher level of oversight statutorily mandated pursuant to Section 3007(e) of RCRA, 42 U.S.C. § 6927(e). Thus, although the potential harm to human health or the environment posed by Respondent's 90-day storage violation is considered minor, significant potential harm to the RCRA program exists because Respondent's facility operated in a manner that required a permit, yet escaped the regulatory oversight that the permit process requires, including biennual

compliance inspections. Potential harm to the RCRA program also exists due to the competitive advantage that a facility which avoids obtaining a permit may enjoy.

2. Extent of Deviation

The extent of a respondent's deviation from RCRA and its regulatory requirements may be categorized as "major", "moderate", or "minor". Id. at 17. In this instance, the extent of Respondent's deviation from the requirement to store waste for 90 days or less in order to avoid a permit was considered minor, due to the limited duration of the waste storage beyond the 90-day requirement, and the single documented occurrence of such storage. Additionally, the waste containers were in good condition and stored in a well-engineered storage building.

3. Penalty Assessment Matrix

Once a violation's potential for harm and extent of deviation have each been categorized as "major", "moderate", or "minor", a penalty amount is selected from a penalty matrix found on page 19 of the 1990 RCRA Civil Penalty Policy. Under the matrix, where potential for harm is moderate and extent of deviation is minor, U.S. EPA may assess a penalty for the violation at issue ranging from $4,999 to $3,000. Complainant selected a gravity amount of $4,000, the mid-point within the cell.

B. Multiday Component

Multiday penalties are categorized as "mandatory", "presumptive", or "discretionary" under the 1990 RCRA Civil Penalty Policy. Id. at 23. Multiday penalties are "discretionary" where the violation has received a "moderate-minor" gravity-based designation. The gravity designation in this instance is moderate-minor. Thus, the assessment of multiday penalties against Respondent was within Complainant's discretion.

Complainant considers Respondent's failure to comply with its obligation to obtain a permit for the storage of hazardous waste to be a continuing violation. This obligation was triggered on the first day that Respondent stored hazardous waste in excess of 90 days. Respondent further failed to fulfill additional conditions necessary to store waste without a permit, i.e., Respondent failed to conduct weekly inspections, maintain a complete contingency plan and complete training records, and properly label a certain drum. Respondent did not have, and has

not since obtained, a permit, nor has Respondent conducted RCRA closure activities for the affected solid waste management unit. RCRA provides regulatory remedies for facilities wishing to store hazardous waste for greater than 90 days without obtaining a permit. For example, under 40 C.F.R. § 262.34(b), generators may seek a 30-day extension to the 90-day storage limit. In addition, if conditions warrant such action, a facility may seek an emergency storage permit pursuant to 40 C.F.R. § 270.61. Respondent failed to exercise these options. U.S. EPA expects persons who wish to avoid the process of applying for a storage permit to adhere to the explicitly identified conditions under which they may store waste without a permit. U.S. EPA therefore believes that a significant multiday component, as summarized below, is appropriate.

Respondent stored waste for fourteen days beyond the 90-day storage requirement. Day 1 of this violation is already accounted for by the gravity-based component of the penalty, i.e., $4,000. See id. at 24. Subsequent daily penalties are calculated with reference to the Multi-Day Matrix on page 24 of the 1990 RCRA Civil Penalty Policy. Once again, in this instance, the gravity designation of moderate potential for harm and minor extent of deviation was used to select the appropriate cell in the Multi-day Matrix. The daily penalty amount for this cell ranges from $1,000 to $150. Complainant selected the upper limit in this cell, or $1,000 per day, to account for Days 2 through 14 of Respondent's storage of waste without a permit. By Day 15, the waste that had been stored was shipped off-site for disposal. However, Respondent still did not have a permit and Respondent failed to comply with additional conditions for storing waste without a permit, as identified in the Complaint. Complainant therefore selected the mid-point of the cell, or $575 per day, for Days 15 through 180 of the violation. No amount was assessed for any days beyond 180.

The multiday component was therefore calculated as follows:

Days 2-14 (13 days at$1,000/day):	$ 13,000
Days 15-180 (166 days at $575/day):	$ 95,450
Total Multiday Penalty:	$108,450

C. ECONOMIC BENEFIT

Using the factors considered in the BEN computer model and U.S. EPA guidance document entitled "Estimating Cost for the Economic Benefit of RCRA Noncompliance", dated March, 1997, Complainant calculated the economic benefit realized by Respondent to be $1,293.31. This amount was not considered to be

significant and therefore was not included in the proposed penalty.

D. ADJUSTMENT FACTORS

As noted earlier, factors considered by U.S. EPA in making upward or downward adjustments to the penalty amount include: any good faith efforts to comply or the lack of good faith; the degree of any willfulness or negligence; any history of noncompliance; and respondent's ability to pay a penalty. In this instance, no upward or downward adjustments were made based on these factors. With regard to good faith efforts to comply, while Respondent eventually corrected certain deficiencies noted by U.S. EPA, Respondent did not obtain, and has not since obtained, a permit. U.S. EPA believes that the obligation to obtain a permit, or conduct RCRA closure of the affected solid waste management unit, once triggered, continues until the permit is obtained or closure is completed. With regard to the other factors, at the time that the Complaint was issued, U.S. EPA did not have a basis upon which to make any adjustments.

E. CIVIL MONETARY PENALTY INFLATION RULE

The Civil Monetary Penalty Inflation Adjustment Rule, published at 40 CFR Part 19, increases penalties occuring or continuing on or after January 30, 1997, by 10%, thereby authorizing U.S. EPA to seek a penalty of up to $27,500 per day per violation. In this case, an increase of 10% was justified, since Respondent's obligation to obtain a permit continued after January 30, 1997.

F. TOTAL PENALTY AMOUNT

The total proposed penalty amount of $123,695 sought in the Complaint was calculated as follows:

Gravity Component:	$ 4,000
Multiday Component:	$108,450
Base Penalty (Gravity + Multiday):	$112,450
10% of Base Penalty:	$ 11,245
Total Penalty (Base Penalty + 10%):	$123,695

V. THE PAPERWORK REDUCTION ACT

The Order requires Complainant to "submit a statement regarding whether the Paperwork Reduction Act of 1980 ("PRA"), 44 U.S.C. §§ 3501 et seq., applies to this proceeding, whether there is a current Office of Management and Budget control number involved herein and whether the provisions of Section 3512 of the PRA are applicable in this case."

U.S. EPA's Complaint includes alleged violations of the following RCRA regulations: 40 C.F.R. §§ 262.34, 265.174, 265.52, 265.16, and 270.1. U.S. EPA has also alleged in Paragraph 39 of the Complaint that 40 C.F.R. § 265.15 requires owners and operators of a facility to record inspections in an inspection log or summary.

The following currently valid Office of Management and Budget ("OMB") Control Numbers and U.S. EPA ICR Numbers have been assigned to the following aforementioned regulations:

	40 C.F.R. §	OMB Control No.	U.S. EPA ICR No.
1.	262.34	2050-0035, 2050-0085	0820.07, 1442
2.	265.15	2050-0120	1571.05
3.	265.16	2050-0120	1571.05
4.	265.52	2050-0120	1571.05
5.	270.1	2050-0028, 2050-0034, and 2050-0009	0261.12, 0262.08, and 1573.05

These OMB Control Numbers are displayed in the Federal Register, and in the Code of Federal Regulations at 40 C.F.R. Part 9. No OMB Control Number has been assigned to 40 C.F.R. § 265.174.

With respect to those regulations which have currently valid OMB Control Numbers, U.S. EPA believes that it is in compliance with the requirements of the PRA.[2] With respect to 40 C.F.R. § 265.174, U.S. EPA believes that the PRA does not apply and

---

[2] The PRA was originally enacted on December 11, 1980, by Public Law ("P.L") 96-511. Individual sections of the PRA were amended at various times through 1989 but did not fundamentally alter the regulatory structure of the statute. On May 22, 1995, the PRA was substantially revised by P.L. 104-13 (entitled the "Paperwork Reduction Act of 1995"). Due to the significance of the revisions, P.L. 104-13 provided that the terms of the 1995 PRA would affect only agency collections of information that are first assigned an OMB Control Number after October 1, 1995, or upon the first reapproval of an existing number by OMB after October 1, 1995. In U.S. EPA's analysis of whether the PRA has any effect on this matter, appropriate reference will be made to either the 1980 PRA, the 1995 PRA, or both.

therefore no OMB Control Number is necessary. Additionally, U.S. EPA notes that the PRA only applies to information collection requests or collections of information made by federal agencies and is inapplicable to information requirements imposed by state law. Thus, it is U.S. EPA's position that the PRA requirements do not apply to violations of the Illinois Administrative Code. However, since each state law provision involved in this case has a parallel federal law provision, a PRA analysis for each federal regulation allegedly violated by Respondent is set forth below.

1. 40 C.F.R. § 262.34 (OMB Control No. 2050-0035)[3]

In its Complaint, U.S. EPA alleged that Respondent violated 40 C.F.R. § 262.34 by failing to meet certain conditions under which a facility may store waste without obtaining a permit, and by failing to properly label a drum. Respondent's obligation to obtain a permit began on the first day that Respondent stored hazardous waste in excess of 90 days, that is, on or about January 29, 1997. The improperly labeled drum was observed on December 12, 1997, the date of U.S. EPA's inspection. The OMB Control Number for this regulation was approved by OMB on February 3, 1995, and was to expire on February 28, 1998. See 60 Fed. Reg. 15564 (March 24, 1995). Thereafter, the expiration date was extended on a monthly basis. The number was eventually re-approved by OMB on September 30, 1998. 63 Fed. Reg. 57677, 57678 (October 28, 1998). The current expiration date is September 30, 2001. Id.

Since the OMB Control Number for 40 C.F.R. § 262.34 was in effect on September 30, 1995, the provisions of the 1980 PRA applied to the collection of information at issue until September

---

[3] There are two OMB Control Numbers for 40 C.F.R. § 262.34: 2050-0035 and 2050-0085. Only the former number is relevant in this case. The other number, OMB Control Number 2050-0085, applies primarily to the information collection requirements contained in the Land Disposal Restrictions found at 40 C.F.R. Part 268. However, 40 C.F.R. § 262.34(a)(4) does make a reference to Part 268; it states that a generator of hazardous waste may store waste for 90 days or less without a permit if the generator complies with, among other regulations, 40 C.F.R. § 268.7(a)(4), which requires generators to develop a waste analysis plan if they are managing and treating prohibited waste to meet applicable land disposal restriction requirements found at 40 C.F.R. § 268.40. There is a similar reference to 40 C.F.R. § 268.7(a)(4) contained in 40 C.F.R. § 262.34(d)(4). The only provisions in 40 C.F.R. § 262.34 to which OMB Control Number 2050-0085 applies are those that require generators to develop a waste analysis plan pursuant to 40 C.F.R. § 268(a)(4). U.S. EPA has not alleged any failure by Respondent to develop a waste analysis plan. Therefore, OMB Control Number 2050-0085 does not apply in this matter.

30, 1998, the date that the number was re-approved by OMB. Thereafter, the 1995 PRA applies.

Section 3512 of the 1980 PRA, 44 U.S.C. § 3512, states:

> Notwithstanding any other provision of law, no person shall be subject to any penalty for failure to maintain or provide information to any agency if the information collection request[4] involved was made after December 31, 1981, and does not display a current control number assigned by the Director [of the OMB], or fails to state that such request is not subject to this chapter.

In this case, a valid OMB Control Number for the information collection request at issue was in fact displayed in both the Federal Register and the Code of Federal Regulations. See 60 Fed. Reg. 15564 (March 24, 1995), 40 C.F.R. Part 9. Furthermore, a valid OMB Control Number was applicable during the entire period of alleged violations of 40 C.F.R. § 262.34, that is, between January 29, 1997, and the present. No lapses of approval have occured between February 3, 1995, and the present. The period of violation relevant to U.S. EPA's calculation of the proposed penalty amount includes 180 days of failing to have a storage permit, beginning on or about January 29, 1997. Even after this 180-day period, the OMB Control Number remained valid, and will continue to be valid until at least September 30, 2001. Thus, with respect to 40 C.F.R. § 262.34, U.S. EPA is in compliance with the 1980 PRA, and the provisions of Section 3512 of the 1980 PRA have no effect.

The OMB Control Number for 40 C.F.R. § 262.34 was re-approved on September 30, 1998. The 1995 PRA, not the 1980 PRA, applies to the subsequent time period. In this instance, Respondent's failure to obtain a storage permit continues to this day, well past September 30, 1998. As explained below, the 1995 PRA does not preclude U.S. EPA from attempting to seek penalties, or any other relief, such as closure of the affected solid waste management unit, for such violation.

---

[4] An "information collection request" is defined at Section 3502 of the 1980 PRA, 44 U.S.C. § 3502, as: "a written report form, application form, schedule, questionnaire, reporting or recordkeeping requirement, collection of information requirement, or other similar method calling for the collection of information." 40 C.F.R. § 262.34 contains provisions that are information collection requests under this definition, reflected in the fact that it has been assigned an OMB Control Number.

Section 3512 of the 1995 PRA, 44 U.S.C. § 3512, provides that no person shall be subject to any penalty for failing to comply with a collection of information if the collection of information[5] does not display a valid OMB Control Number, or the agency fails to inform the person who is to respond to the collection of information that such person is not required to respond to the collection of information unless it displays a valid control number.

In this case, the OMB Control Number for 40 C.F.R. § 262.34 was re-approved by OMB on September 30, 1998, and remains valid until it expires on September 30, 2001. Furthermore, the number was displayed in both the Federal Register and the Code of Federal Regulations. Thus, the 1995 PRA does not preclude U.S. EPA from seeking relief for Respondent's continuing violations of 40 C.F.R. § 262.34.

3. 40 C.F.R. §§ 265.16, 265.52 (OMB Control No. 2050-0120)

U.S. EPA has alleged that Respondent failed to comply with 40 C.F.R. § 265.16(d) by not maintaining certain training records at the facility, and that Respondent failed to comply with 40 C.F.R. §§ 265.52(e) and (f) due to certain deficiencies in Respondent's contingency plan. U.S. EPA has alleged that as a result of these violations, Respondent failed to meet the conditions necessary for storing hazardous waste without a permit. These recordkeeping violations were observed on December 12, 1997, the date of U.S. EPA's inspection. The OMB Control Number shared by these regulations was approved by OMB on November 4, 1996, and will expire on November 30, 1999. 61 Fed. Reg. 58408 (November 14, 1996). Thus, on the date that Respondent allegedly violated 40 C.F.R. §§ 265.16 and 265.52 , a valid OMB Control Number was assigned to the relevant regulations. Furthermore, this number was displayed in the Federal Register and the Code of Federal Regulations. See 40 C.F.R. Part 9, 61 Fed. Reg. 58408 (November 14, 1996). With respect to these regulations, U.S. EPA was in compliance with the

---

[5] "Collection of information" is defined in the 1995 PRA as the obtaining, causing to be obtained, soliciting, or requiring the disclosure to third parties or the public, of facts or opinions by or for an agency, regardless of form or format, calling for, among other things, answers to identical questions posed to, or identical reporting or recordkeeping requirements imposed on, ten or more persons, other than agencies, instrumentalities, or employees of the United States. 44 U.S.C. § 3502(3). 40 C.F.R. § 262.34 contains provisions that are collections of information under this definition. This is reflected by the fact that an OMB Control Number has been assigned to this regulation.

1995 PRA. Consequently, Section 3512 of the 1995 PRA, 44 U.S.C. § 3512, does not preclude U.S. EPA from seeking appropriate relief.

2. 40 C.F.R. § 265.15 (OMB Control No. 2050-0120)

U.S. EPA has not alleged that Respondent is in violation of 40 C.F.R. § 265.15. Rather, U.S. EPA has merely stated in Paragraph 39 of the Complaint that under this regulation, a facility is required to record inspections in an inspection log or summary. Paragraph 37 of the Complaint alleges that a facility that wishes to avoid obtaining a storage permit for its hazardous waste must, among other things, comply with 40 C.F.R. § 265.174 by inspecting its containers on a weekly basis. U.S. EPA relied on copies of Respondent's inspection logs or summaries which were supplied to U.S. EPA during its December 12, 1997, inspection of Respondent's facility, and which are contained in Complainant's Exhibit 1, to determine that Respondent violated 40 C.F.R. § 265.174 by failing to inspect, on a weekly basis, areas where containers are stored. Numerous gaps in the inspection logs exist in which no inspection was recorded for one week or more.

40 C.F.R. § 265.15(d) imposes a responsibility upon Respondent to maintain inspection logs. U.S. EPA maintains that U.S. EPA was, and is, in compliance with the PRA with respect to this regulation. The gaps of one week or more in Respondent's inspection logs occur at various times between December 15, 1995, and January 7, 1997. OMB Control Number 2050-0120 was approved by OMB on October 20, 1993, and expired on October 31, 1996. See 59 Fed. Reg. 10643 (March 7, 1994). The number was re-approved by OMB on November 4, 1996, and expires on November 30, 1999. See 61 Fed. Reg. 58408 (November 14, 1996). Thus, 40 C.F.R. § 265.15 had a valid OMB Control Number between December 15, 1995, and January 7, 1997. Furthermore, the number was displayed in the Federal Register and the Code of Federal Regulations. U.S. EPA was in compliance with the 1980 PRA, and is in compliance with the 1995 PRA.

However, OMB Control Number 2050-0120 may have lapsed between October 31, 1996, and November 4, 1996. In Paragraph 41 of the Complaint, U.S. EPA alleged that Respondent's inspection logs indicate no inspections were conducted between November 1, 1996, and January 7, 1997, a period of time which is considerably longer than one week. Any lapse in the validity of the OMB Control Number for 40 C.F.R. § 265.15 was for a few days only. The number was still valid between November 4, 1996, and January 7, 1997. This period remains considerably longer than one week.

The possible lapse, therefore, has no effect on U.S. EPA's allegation that Respondent failed to conduct inspections on a weekly basis.

4. 40 C.F.R. § 270.1 (OMB Control Nos. 2050-0028, 2050-0034, and 2050-0009)

U.S. EPA has alleged that Respondent violated 40 C.F.R. § 270.1 by failing to have a permit to store hazardous waste, which it was required to obtain as a result of Respondent's failure to meet the regulatory conditions under which Respondent may store waste without a permit, which include a requirement to store waste for 90 days or less. U.S. EPA calculated the multiday component of its proposed civil penalty by first determining that Respondent's obligation to obtain a permit began on the first day that Respondent stored waste over 90 days, that is, on or about January 29, 1997. Respondent did not have a permit on that date, and still does not have a permit. As demonstrated below, the OMB Control Numbers for 40 C.F.R. § 270.1 have been valid between January 29, 1997, and the present.

OMB Control Number 2050-0028 was approved on October 9, 1996, and expires on October 31, 1999. See 61 Fed. Reg. 54998 (October 23, 1996). OMB Control Number 2050-0034 was approved on September 30, 1996, and expires on October 31, 1999. See 62 Fed. Reg. 10057 (March 5, 1997). OMB Control Number 2050-0009 was approved on December 31, 1996, and expires on December 31, 1999. See 62 Fed. Reg. 5983 (February 10, 1997). All three numbers were valid on January 29, 1997, and will continue to be valid until they expire in late 1999. Furthermore, all three numbers were displayed in the Federal Register, and in the Code of Federal Regulations at 40 C.F.R. Part 9. Thus, U.S. EPA is in compliance with the 1995 PRA. Section 3512 of the 1995 PRA, 44 U.S.C. § 3512, therefore does not preclude U.S. EPA from seeking relief for violations of 40 C.F.R. § 270.1.

5. 40 C.F.R. § 265.174

40 C.F.R. § 265.174 has not been assigned an OMB Control Number. This regulation requires owners and operators of hazardous waste facilities to inspect areas where containers are stored, at least weekly, looking for leaks and for deterioration caused by corrosion or other factors. This regulation in and of itself does not impose any actions that would fall within the scope of the term "information collection request" (see definition noted in Footnote 4, above), or the term "collection of information" (see definition in Footnote 5, above). It simply requires facilities to inspect waste container storage areas on a

weekly basis; it does not require any written information or documents to be gathered and submitted to U.S. EPA or any other person.

In addition, the regulation does not fall within the term "recordkeeping requirement", which is defined at Section 3502(13) of the 1995 PRA, 44 U.S.C. § 3502(13), as a requirement imposed by or for an agency on persons to maintain specified records, including a requirement to: retain such records; notify third parties, the Federal Government, or the public of the existence of such records; disclose such records to such persons; or report to such persons regarding such records. 40 C.F.R. § 265.174 does not in and of itself require facilities to retain any records, notify any persons of the existence of such records, disclose any records, or report any information to third parties, U.S. EPA, or the public.

To the extent that any information obtained from the inspection must be recorded and/or reported, other provisions of the RCRA regulations may apply which themselves have valid OMB Control Numbers, such as 40 C.F.R. § 265.15, discussed above. The regulation discussed here is not subject to the PRA, and therefore Section 3512 of the PRA, 44 U.S.C. § 3512, does not preclude U.S. EPA from seeking relief for Respondent's violation.

Respectfully submitted,
UNITED STATES ENVIRONMENTAL
PROTECTION AGENCY

By: Kevin C. Chow

Kevin C. Chow
Assistant Regional Counsel
U.S. EPA, Region 5
Mail Code C-14J
77 West Jackson Boulevard
Chicago, IL 60604-3590
(312) 353-6181

Dated: February 3, 1999

I hereby certify that the Complainant's Prehearing Exchange, dated February 3, 1999, was sent this day in the following manner to the addresses listed below:

Original Hand Delivered to:

Sonja Brooks
Regional Hearing Clerk
U.S. EPA, Region 5
77 West Jackson Boulevard
Chicago, Illinois 60604

Copy by Pouch Mail to:

Honorable Barbara A. Gunning
Administrative Law Judge
Office of Administrative Law Judges (A-110)
U.S. EPA
401 M Street, S.W.
Washington, D.C. 20460

Copy by Certified Mail to:

Attorney for the Respondent:

Jeryl L. Olson, Esq.
Seyfarth, Shaw, Fairweather & Geraldson
55 E. Monroe St., Suite 4200
Chicago, IL 60603-5803

Dated: February 3, 1999

Kevin C. Chow
Assistant Regional Counsel

COMPLAINANT'S EXHIBIT 1

RCRA COMPLIANCE EVALUATION INSPECTION REPORT
U.S. ENVIRONMENTAL PROTECTION AGENCY, REGION 5

Purpose: RCRA Compliance Evaluation Inspection

Facility: Pierce & Stevens Chemical
6245 East Kehoe
Carol Stream, IL 60187

Facility ID Number: ILD055434443

Date of Inspection: December 12, 1997

PA Representatives:

Patrick F. Kuefler
Environmental Scientist
(312) 353-6268

Facility Representatives:

Robert Cervenka
Production Coordinator
(630) 653-3800

Jim Drzewiecki
Corporate Health & Safety

Report Prepared by:

Patrick F. Kuefler

RCRA INSPECTION REPORT

PIERCE & STEVENS CHEMICAL
ILD055434443
DECEMBER 1997

Introduction

On December 12, 1997 the United States Environmental Protection Agency (U.S. EPA) conducted a Resource Conservation and Recovery Act (RCRA) compliance evaluation inspection at Pierce & Stevens Chemical (PSC) located at 245 East Kehoe Boulevard in Carol Stream, DuPage County, Illinois.

Facility Background

PSC operates an adhesives, coatings and fillers production facility. The adhesives and coatings are solvent-based, water-based dispersions and hot melt formulations. The fillers are a proprietary thermoplastic microsphere technology. The facility operations include mixing and heating raw materials, filter coatings, and forming adhesives pellets and microsheres. All facility operations take place in the 60,000-square-foot facility building. Raw materials include solvents, nitrocellulose, acids and caustics, resins, polymers, waxes, oils, plasticizers, and soaps.

According to facility manifest records reviewed on-site during the inspection, PSC is a Large Quantity Generator (LQG) of hazardous waste for wastes generated on-site. The facility's largest hazardous waste stream is a waste comprised of several spent solvents including xylene, acetone, acetate, toluene, and MEK generated from the clean out of reactor vessels which have the EPA waste codes D035, D001, D018, F003, and F005 respectively. The facility also generates a lesser quantity of hazardous waste spent filters and variable Wastestreams generated by customer returns and periodic clean out of off-specification chemicals from the on-site quality assurance laboratory. All hazardous wastes are managed in containers. A completed inspection checklist is provided as **Attachment A.**

Inspection

The Inspection was conducted without prior notice to the facility. The inspection began with an in-briefing meeting with Robert Cervenka, the person on-site primarily responsible for the facility's environmental issues. During the meeting an overview of the facility processes were provided by the facility. A copy of the facility process flow diagram is provided as **Attachment B**. Following the discussion of the facility processes, the facility production areas and waste accumulation areas were inspected.

The inspection consisted of following the production process including viewing the material storage warehouse, the reactor filling area on the upper level of the plant, and the lower level of the reactor area where finished coatings are emptied from the reactors. A facility map is provided as **Attachment C**. Two satellite accumulation areas were observed, one on each level of the reactor area. In both cases the containers in accumulation were stored open, a situation corrected during the inspection. The 90-day accumulation area was also inspected. At the time of the inspection, the area held 6 drums of spent solvent waste and 2 drums of hazardous waste spent filters. One drum did not have an accumulation date as required. The facility's maintenance shop and quality assurance laboratory were also inspected. No discrepancies were noted in those areas. Upon completion of the inspection of the mill, the rest of the afternoon was used reviewing records including the continency plan, manifest, waste analysis, and training records.

Document Review

Manifests - Hazardous wastes manifests generated during the last 3 years were reviewed for completeness, including the presence of LDR forms. No discrepancies were noted but based on manifest shipping dates and rate of generation, the facility appears to have accumulated hazardous waste for greater than 90 days in violation of 40 CFR 262.34(a). Copies of the manifests are provided as **Attachment D.**

Manifest shipments spent solvent and spent hazardous waste filter bag wastes were as listed below:

Date	Manifest #	# of 55-gal. Drums	Approx. Weight
10/17/96	843118	37 (spent solvent)	14,200 lbs.
		3 (spent filters)	600 lbs.
2/11/97*	1110314	76 (spent solvent)	34,200 lbs.
		2 (spent filters)	400 lbs.
6/26/97*	1138608	21 (spent solvent)	10,200 lbs.
		6 (spent filters)	1,200 lbs.
9/22/97	1179690	44 (spent solvent)	19,400 lbs.
		4 (spent filters)	1,200 lbs.

*** indicates instances when the facility generated greater than 1,000 kilograms of hazardous waste per month and accumulated the waste for greater than 90-days.**

Training Records - Training records were reviewed for compliance with **40 CFR 265.16** requirements. Although the facility provided an outline of hazardous waste training provided to all staff, no record was provided that the training took place. Mr. Cervenka is the hazardous waste trainer for the facility but at the time of the inspection he could not provide documentation that he had training in hazardous waste management, or a written job description for his position in violation of 40 CFR 265.16.

Continency Plan - The contingency plan was review for compliance with 40 CFR 265 Subpart D requirements. The plan lacked the required description of the operation of spill equipment available at the facility or a map depicting facility evacuation routes as required by 40 CFR 265.52.d & c.

Waste Analysis Records - Waste analysis records for the facility's major waste streams were reviewed. Proper documentation of analytical tests were provided by the facility. No discrepancies were noted.

Inspection records - Inspection records for the hazardous waste 90-day accumulation area indicated that the inspections were not consistently conducted weekly as required by 40 CFR 265.174. A copy of the inspection log is provided as **Attachment E.**

Potential Violations

I.A.C. 722.134(a)(2)/ 40 CFR 262.34(a)(2) -PSC failed to label or mark a container managing hazardous waste solvent with the accumulation start date as required. (corrected during the inspection)

I.A.C. 722.134(c)/ 40 CFR 262.34(c) -PSC failed to manage containers of hazardous waste solvent being accumulated at the point of generation, closed as required. (corrected during the inspection)

I.A.C. 725.274/40 CFR 262.34(a)/40 CFR 265.174 - PSC failed to inspect containers managing hazardous waste weekly as required.

I.A.C. 725.152(a)/ 40 CFR 262.34(a)(4)/40 CFR 265.52(d) & (e) - PSC failed to maintain a contingency plan which includes a depiction of evacuation routes and a description of the operation of emergency spill equipment as required.(corrected January 19, 1998 by submittal)

I.A.C. 722.134(a)/ 40 CFR 262.34(a) - PSC failed to accumulate hazardous waste for less than 90-days, as required.

I.A.C. 725.16(a)(2)/ 40 CFR 265.16(a)(2) - PSC failed to provide training for Mr. Cervenka as hazardous waste management trainer for the facility.

I.A.C. 725.16(d)(4)/ 40 CFR 265.16(d)(4) - PSC failed to maintain records indicating that required hazardous waste had been provided to facility workers.

LIST OF ATTACHMENTS

Attachment A	IEPA Inspection Checklist
Attachment B	Facility Process Flow Diagrams
Attachment C	Facility Map
Attachment D	Manifests
Attachment E	90-Day Accumulation Area Inspection Log
Attachment F	Inspection Photos
Attachment G	1996 Annual Report-Hazardous Waste
Attachment H	Emergency Response Plan, page 1.

Illinois Environmental Protection Agency
Division of Land Pollution Control

RCRA INSPECTION REPORT

USEPA #: IL D 0 5 5 4 3 4 4 4 3	IEPA #:
Facility Name: Pierce & Stevens	Phone #: 630 653-3800
Street Address: 6245 East Kehoe	County: DuPage
City: Carol Stream	State: IL Zip: 60187
Region: Maywood	Inspection Date: 12/12/97 From: 9:30 am To: 3:00 pm
Weather: Overcast	

TYPE OF FACILITY

Notified As: SQG	Regulated As: LQG
LDF? (Yes or No) HPV?	90-Day F/U Required?: YES ____ NO ____

TYPE OF INSPECTION

CEI: X Sampling: ____ Citizen Complaint: ____ Closed: ____ Other: ____

CME/O&M: ____ Record Review: ____ Follow-Up to Inspection of: ____ Withdrawal: ____

NON-REGULATED STATUS

SQG: ____ Claimed Nonhandler: ____ Other (Specify in Narrative): ____

PART A

Notification Date: ___/___/___, from (initial) or (subsequent) Notification.

Initial Part A Date: ___/___/___ Amended: ___/___/___

Part A Withdrawal requested: ___/___/___ Approved by (US)(IL) EPA: ___/___/___

PART B PERMIT APPLICATION

Part B Permit Submitted: Y or N ___/___/___ Final Permit Issued: ___/___/___

ENFORCEMENT

Has the firm been referred to -- USEPA: Y or N ___/___/___

Illinois Attorney General: Y or N ___/___/___ County State's Attorney: Y or N ___/___/___

ORDERS ISSUED

CACO: ___/___/___ CAFO: ___/___/___ Consent Decree: ___/___/___

Federal Court Order: ___/___/___ State Court Order: ___/___/___ IPCB Order: ___/___/___

TSD FACILITY ACTIVITY SUMMARY

Activity by Process Code	On Part A?	Activity Conducted Prior to 1980?	Was Activity Ever Done?	Closed	Being done at Time of Insp.?	Exempt per 35 IAC, Sec.	On Annual Report 19	19	19
NA									

OWNER	OPERATOR
Name Pierce + Steven Corp	Name Same
Address Same as previous	Address
City	City
State Zip	State Zip
Phone #	Phone #

PERSON(S) INTERVIEWED	TITLE	PHONE #
Robert Cervenka	Production Coordinator	630/653-3800
Jim Przewiecki (by phone, exit meeting only)	Corp. H+S	unknown

INSPECTION PARTICIPANT(S)	AGENCY/TITLE	PHONE #
Patrick Kuefler	U.S. EPA	312/353-6268

PREPARED BY	AGENCY/TITLE	PHONE #
Patrick Kuefler	U.S. EPA	312/353-6268

SUMMARY OF APPARENT VIOLATIONS

Area	Class	Section
See Narrative of report		

Area	Class	Section

Area	Class	Section

Regulation	RCRA GENERATOR INSPECTION CHECKLIST (PART 722)	Violation
	Part 722: Standards Applicable to Generators of Hazardous Waste (>1000 Kg/mo.)	
	Subpart A: General	
	Section 722.111: Hazardous Waste Determination	
722.111	Has the generator correctly determined if the solid waste(s) it generates is a hazardous waste? Yes ✓ No___ N/A___	722.111
	Have hazardous wastes been identified for purposes of compliance with Part 728? Yes ✓ No___ N/A___	
808.121(a)	Has the generator correctly determined if the solid waste(s) it generates is a special waste? Yes ✓ No___ N/A___	808.121(a)
	Section 722.112: USEPA Identification Numbers	
722.112(a)	Has the generator obtained a USEPA identification number? Yes ✓ No___ N/A___	722.112(a)
722.112(c)	Has the generator offered its hazardous waste only to transporters or to treatment, storage or disposal facilities that have a USEPA identification number? Yes ✓ No___ N/A___	722.112(c)
	Subpart B: The Manifest	
	Section 722.120: General Requirements	
722.120(a)	Does the facility manifest its waste off-site? Yes ✓ No___ N/A___	722.120(a)
722.120(b)	Does the manifest designate a facility permitted to handle the waste? Yes ✓ No___ N/A___	722.120(b)
722.120(d)	Has the generator shipped any waste that could not be delivered to the designated facility? Yes___ No ✓ N/A___	722.120(d)
	Section 722.121: Acquisition of Manifests	
	Has the generator used:	
722.121(a)	– an Illinois manifest for wastes designated to a facility within Illinois? Yes ✓ No___ N/A___	722.121(a)
722.121(b)	– a manifest from the State to which the manifest is designated? Yes ✓ No___ N/A___	722.121(b)
	– an Illinois manifest if the State to which the waste is designated has no manifest of its own? Yes ✓ No___ N/A___	
	Section 722.122: Number of Copies	
722.122	Does the manifest consist of at least 6 copies? Yes ✓ No___ N/A___	722.122
	Section 722.123: Use of the Manifest	
	For each manifest reviewed, has the generator:	
722.123(a)	– signed the certificate by hand? Yes ✓ No___ N/A___	722.123(a)
	– obtained the handwritten signature and the date of acceptance by the initial transporter? Yes ✓ No___ N/A___	
	– retained one copy as required by Section 722.140(a)? Yes ✓ No___ N/A___	
	– apparently sent a copy (part 5 for the Illinois manifest) to the Agency within 2 working days? Yes___ No___ N/A ✓ unknown	
722.123(b)	– has the generator apparently given the remaining copies to the transporter? Yes ✓ No___ N/A___	722.123(b)

Regulation	RCRA GENERATOR INSPECTION CHECKLIST (PART 722)	Violation
722.123(c)	– has the generator followed the procedures prescribed in Section 722.123 for manifesting bulk shipments of hazardous waste by rail or water? Yes____ No____ N/A ✓	722.123(c)
	Subpart C: Pre–Transport Requirements Is there any hazardous waste ready for transport off–site? Yes ✓ No____ N/A____ If so, is the generator complying with the pre–transport requirements in Subpart C? Yes ~~✓~~ No ✓ PK N/A____	
	Section 722.134: Accumulation Time	
722.134(a)	Has the generator complied with the following requirements: Yes____ No ✓ N/A____ >90 accumulation (see manifests)	722.134(a)
722.134(a)(1)	A) For waste in containers, has the generator complied with the requirements of Part 725, Subpart I? Yes____ No ✓ N/A____ No inspections and/or B) For waste in tanks, has the generator complied with the requirements of Part 725, Subpart J (except Sections 725.297(c) and 725.300)? Yes____ No____ N/A ✓ and/or C) For waste on drip pads, has the generator complied with the requirements of Part 725, Subpart W and maintained the required records identified in this subsection? Yes____ No____ N/A ✓ and/or D) For waste in containment buildings, has the generator complied with Part 725, Subpart DD and maintained the required records identified in this subsection? Yes____ No____ N/A ✓	
134(a)(2)	For waste in containers, has the generator marked and made visible for inspection on each container, the date upon which accumulation began? Yes____ No ✓ N/A____	
722.134(a)(3)	For waste in containers and tanks, has the generator marked or labeled each with the words "Hazardous Waste"? Yes ✓ No____ N/A____	
722.134(a)(4)	Has the generator complied with the requirements of Part 725, Subparts C and D, and Sections 725.116 and 728.107(a)(4)? Yes____ No ✓ N/A____ Specifically, the requirements of items 1 and/or 4 above (listed by regulation) which need to be complied with are as follows: Cont. Plan lacked evac route + description of safety equip usage Does the facility accumulate hazardous waste in containers? Yes ✓ No____ N/A____ If "No", go to Subpart J.	

Regulation	RCRA GENERATOR INSPECTION CHECKLIST (PART 722)	Violation
	Subpart I: Use and Management of Containers	
	Has the generator closed an accumulation area? Yes____ No✓ N/A____ Not at satellite area. corrected during Insp.	
(725.211) (725.214)	If "Yes", was the accumulation area closed in accordance with Sections 725.211 and 725.214? Yes____ No____ N/A____	
(725.271)	If the containers have leaked or are in poor condition, has the owner/operator transferred the hazardous waste to a suitable container? Yes____ No____ N/A✓	
(725.272)	Is the waste compatible with the container and/or liner? Yes✓ No____ N/A____	
(725.273a)	Are containers of hazardous waste always closed except to remove or add waste during accumulation? Yes____ No✓ N/A____ See above	
(725.273b)	Are containers of hazardous waste being opened, handled, or stored in a manner which will prevent the rupture of the container or prevent it from leaking? Yes✓ No____ N/A____	
(725.274)	Is the owner/operator inspecting the accumulation area(s) at least weekly, looking for leaks or deterioration? Yes____ No✓ N/A____	
	Is the accumulation area free from any evidence of leaking or deteriorating containers? (See also Section 725.131) Yes✓ No____ N/A____	
(725.276)	Are containers holding ignitable or reactive wastes located at least 15 meters (50 feet) from the facility's property line? Yes✓ No____ N/A____	
	Note: See Section 725.117(a) for additional requirements for ignitable, reactive or incompatible wastes.	
(725.277)	Is the owner/operator complying with the requirements concerning incompatible wastes? Yes✓ No____ N/A____	
	Comments:	
	Does the generator accumulate and/or treat hazardous waste in tanks? Yes____ No✓ N/A____	
	Note: If "No", go to Subpart C.	

Regulation	RCRA GENERATOR INSPECTION CHECKLIST (PART 722)	Violation
	Subpart C: Preparedness and Prevention	
725.131)	Is the facility being operated and maintained to minimize the possibility of a fire, explosion or any release of hazardous waste or hazardous waste constituents which could threaten human health or the environment? Yes ✓ No____ N/A____	
(725.132)	Is the facility equipped with the following, if necessary: a) an internal communication or alarm system(s)? Yes ✓ No____ N/A____ b) a telephone or other device to summon emergency assistance from local authorities? Yes ✓ No____ N/A____ c) portable fire extinguishers, fire control equipment, spill control equipment and decontamination equipment? Yes ✓ No____ N/A____ d) water at adequate volume and pressure for fire control? Yes ✓ No____ N/A____	
(725.133)	Is the facility testing and maintaining communication/alarm system(s), fire protection equipment, spill control equipment and decontamination equipment? Yes ✓ No____ N/A____	
(725.134)	a) Where hazardous waste is being handled, do all employees have immediate access to an internal alarm or other emergency communication device? Yes ✓ No____ N/A____ b) If there is ever just one employee on the premises when the facility is operating, does he/she have immediate access to a device capable of summoning external emergency assistance? Yes ✓ No____ N/A____	
(725.135)	Is the facility maintaining adequate aisle space? Yes ✓ No____ N/A____	
725.137)	Has the facility attempted to make the following arrangements, as appropriate, for the type of facility and waste: – arrangements with local emergency authorities (i.e. police and fire departments, other emergency response agencies) to familiarize them with the layout of the facility, properties of hazardous waste handled, places where facility personnel would be working, entrances to roads inside the facility and evacuation routes? Yes ✓ No____ N/A____ – agreements designating the primary authority where more than one police or fire department might respond? Yes ✓ No____ N/A____ – agreements with State emergency response teams, contractors and equipment suppliers? Yes ✓ No____ N/A____ – arrangements to familiarize local hospitals with the properties of hazardous waste handled at the facility and the type of injuries or illnesses which could result from fires, explosions or releases at the facility? Yes ✓ No____ N/A____	
	Subpart D: Contingency Plan and Emergency Procedures	
(725.151a)	Is the contingency plan available? Yes ✓ No____ N/A____ If "No", skip to Section 725.155. Is the plan designed to protect human health and the environment from releases to the air, soil and water? Yes ✓ No____ N/A____	
(725.151b)	Has there been a fire, explosion or release of hazardous waste? Yes ~~✗~~ PK No ✓ N/A____ If "Yes", has the contingency plan been carried out immediately? Yes____ No____ N/A ✓	

Regulation	RCRA GENERATOR INSPECTION CHECKLIST (PART 722)				Violation
(725.152a)	Does the plan describe the actions required for response to:				
	– fires?	Yes ✓	No____	N/A____	
	– explosions?	Yes ✓	No____	N/A____	
	– releases?	Yes ✓	No____	N/A____	
(725.152c)	Does the plan describe arrangements with:				
	– police and fire departments?	Yes ✓	No____	N/A____	
	– hospitals?	Yes ✓	No____	N/A____	
	– contractors?	Yes ✓	No____	N/A____	
	– emergency response teams?	Yes ✓	No____	N/A____	
(725.152d)	Does the plan contain the current emergency coordinator's name, phone (office and home) and address?	Yes ✓	No____	N/A____	
(725.152e)	Does the plan identify all emergency equipment including:				
	– description?	Yes____	No ✓	N/A____	
	– capability?	Yes____	No ✓	N/A____	
	– location?	Yes____	No ✓	N/A____	
	Is the list of emergency equipment up–to–date?	Yes ✓	No____	N/A____	
(725.152f)	Does the plan include:				
	– an evacuation plan?	Yes____	No ✓	N/A____	
	– an evacuation signal?	Yes ✓	No____	N/A____	
	– alternate evacuation routes?	Yes____	No ✓	N/A____	
(725.153)	Has the contingency plan (including all revisions) been:				
	a) maintained at the facility?	Yes ✓	No____	N/A____	
	b) submitted to:				
	– police department?	Yes ✓	No____	N/A____	
	– fire department?	Yes ✓	No____	N/A____	
	– hospital?	Yes ✓	No____	N/A____	
	– emergency response teams?	Yes ✓	No____	N/A____	
(725.154)	Has the contingency plan been reviewed and revised whenever:				
	a) regulations are revised?	Yes____	No____	N/A ✓	unknown
	b) the plan fails in an emergency?	Yes____	No____	N/A ✓	unknown
	c) the facility changes in a way that modifies the emergency response necessary?	Yes____	No____	N/A____	unknown
	d) information regarding emergency coordinators changes?	Yes____	No____	N/A____	" "
	e) information regarding equipment changes?	Yes____	No____	N/A____	" "
(725.155)	Is the emergency coordinator on–site or on call at all times?	Yes____	No____	N/A____	
	Is the emergency coordinator familiar with all facility activities, wastes, records, layout and contingency plan?	Yes ✓	No____	N/A____	
	Does the emergency coordinator have the authority to commit the resources needed to carry out the actions specified in the contingency plan?	Yes ✓	No____	N/A____	
(725.156)	If the facility has had a release, fire or explosion, have the procedures of this Section been followed regarding assessment, response and reporting?	Yes____	No ✓	N/A____	
	Note: If the facility has had a release, explain in detail.				

Regulation	RCRA GENERATOR INSPECTION CHECKLIST (PART 722)	Violation
	Section 725.116: Personnel Training	
725.116a)	Does the facility have a training program? Yes ✓ No____ N/A____	
	Have facility personnel successfully completed a program of classroom or on–the–job training that teaches them to perform their duties in a way that ensures the facility's compliance with the requirements of Part 725? No records available Yes ✓ PK No ✓ N/A____	
	Is the program directed by a person trained in hazardous waste management procedures? Yes____ No ✓ N/A____ No records available	
	Does the program teach facility personnel hazardous waste management procedures (including contingency plan implementation) relevant to the positions in which they are employed? Yes ✓ No____ N/A____	
	Does the program cover, at a minimum: – procedures to familiarize facility personnel with emergency procedures, emergency equipment and emergency systems? Yes ✓ No____ N/A____ – procedures for using, inspecting, repairing and replacing facility emergency and monitoring equipment? Yes ✓ No____ N/A____ – key parameters for automatic waste feed cut–off systems? Yes ✓ No____ N/A____ – communications or alarm systems? Yes ✓ No____ N/A____ – response to fire or explosions? Yes ✓ No____ N/A____ – response to groundwater contamination incidents? Yes ✓ No____ N/A____ – shutdown of operations? Yes ✓ No____ N/A____	
(725.116b)	Have new employees completed the program within 6 months of the date of employment or assignment to a position requiring them to manage hazardous waste? Yes ✓ No____ N/A____	
(725.116c)	Have facility personnel received an annual review of the initial training? No records Yes____ No X N/A____	
(725.116d)	Are the following documents and records being maintained at the facility: 1) the job title for each position related to hazardous waste management and the name(s) of the employee(s) filling each job? Yes ✓ No____ N/A____ 2) a written job description for each position above, including the requisite skill, education or other qualifications and duties of personnel assigned to each position? Yes ✓ No____ N/A____ 3) a written description of the type and amount of both initial and continuing training that will be given to each person filling a position dealing with hazardous waste management? Yes ✓ No____ N/A____ 4) records documenting that the training or job experience has been given to and completed by facility personnel? Yes____ No ✓ N/A____	
(725.116e)	Is the facility maintaining training records until closure of the facility and those of former employees for at least 3 years from the last date of employment? Yes____ No ✓ N/A____	

Regulation	RCRA GENERATOR INSPECTION CHECKLIST (PART 722)	Violation
	Section 728.107: Waste Analysis and Recordkeeping	
(728.107a4)	Has the generator who treats a prohibited waste in tanks or containers in order to meet the treatment standards developed and followed a waste analysis plan? Yes____ No____ N/A ✓ Is the plan on-site? Yes____ No____ N/A ✓ Does the plan include a detailed physical and chemical analysis? Yes____ No____ N/A ✓ Has the plan been filed with the Agency at least 30 days prior to commencement of treatment activity? Yes____ No____ N/A ✓ Has the generator submitted the required notification and certification that the waste meets treatment standards when the waste is shipped off-site? Yes ✓ No____ N/A ~~N~~ pn	
	Subsection 722.134(c): Satellite Accumulation	
722.134(c)	Is the generator who accumulates hazardous waste at or near any point of generation where wastes initially accumulate and which is under the control of the operator of the process generating the waste limiting such accumulation to 55 gallons of hazardous waste or 1 quart of **acutely** hazardous waste marking the containers with the words "Hazardous Waste" or other words identifying the contents? Yes ✓ No____ N/A____ Has the generator who accumulates more than 55 gallons of hazardous waste or 1 quart of **acutely** hazardous waste complied with the requirements of Section 722.134(a) within 3 working days? Yes ✓ No____ N/A____ If there are more than 55 gallons of hazardous waste or 1 quart of **acutely** hazardous waste in the satellite accumulation area, are the containers marked with the date accumulation began? Yes ✓ No____ N/A____ During the 3 day period, is the generator continuing to comply with the requirements of Section 722.134(c)(1) with respect to the excess waste? Yes ✓ No____ N/A____	722.134(c)
	Subpart D: Recordkeeping and Reporting	
	Section 722.140: Recordkeeping	
722.140(a)	Has the generator retained for a period of 3 years: – a copy of each signed manifest? Yes ✓ No____ N/A____	722.140(a)
722.140(b)	Has the generator retained a copy of each Annual Report and Exception Report for a period of at least three years from the due date of the report (March 1)? Yes ✓ No____ N/A____	722.140(b)
722.140(c)	Has the generator retained for a period of 3 years: – copies of test results, waste analyses or other determinations made in accordance with Section 722.111? Yes ✓ No____ N/A____	722.140(c)
722.140(d)	Does a generator who is involved in any unresolved enforcement action or as requested by the Director continue to maintain the records required in subsections a) and c)? Yes____ No____ N/A ✓	722.140(d)
	Section: 722.141: Annual Reporting	
722.141(a)	Has the generator who ships hazardous waste off-site for treatment, storage or disposal filed an annual report with the Agency by March 1 for the preceding calendar year? Yes ✓ No____ N/A____ **Note:** If "No", or if deficiencies are noted with the annual report reviewed, contact the Planning and Reporting Section.	722.141(a)

Regulation	RCRA GENERATOR INSPECTION CHECKLIST (PART 722)	Violation
722.141(b)	Has the generator who treats, stores or disposes of hazardous waste on–site, filed an annual report with the Agency by March 1 for the preceding calendar year? Yes ✓ No____ N/A____	722.141(b)
	Section 722.142: Exception Reporting	
722.142(a)(1)	If the generator has not received a copy of the manifest from the TSD facility within 35 days of the date of delivery to the transporter, has the generator contacted the transporter or the TSD facility to determine the status of the hazardous waste? Yes____ No____ N/A ✓	722.142(a)(1)
722.142(a)(2)	If the generator has not received a copy of the signed manifest within 45 days of the date of delivery to the transporter, has he filed an exception report with the Agency in accordance with the requirements of this Section? Yes ✓ No____ N/A____	722.142(a)(2)
	Section 722.143: Additional Reporting	
722.143	Has the generator furnished additional reports as required by the Director? Yes____ No____ N/A ✓	722.143
	Subpart E: Exports of Hazardous Waste	
	Is the generator an exporter of hazardous waste? Yes____ No____ N/A ✓ If "Yes", has the generator complied with the requirements of Subpart E? Yes____ No____ N/A ✓	
	Subpart F: Imports of Hazardous Waste	
	Is the generator an importer of hazardous waste? Yes____ No____ N/A ✓ If "Yes", has the generator complied with the requirements of Subpart F? Yes____ No____ N/A ✓	
	Subpart G: Farmers	
	Is the generator a farmer? Yes____ No____ N/A ✓ If "Yes", has the generator complied with the requirements of Subpart G? Yes____ No____ N/A ✓	
	Comments:	

inspection)

I.A.C. 725.274/40 CFR 262.34(a)/40 CFR 265.174 - PSC failed to inspect containers managing hazardous waste weekly as required.

I.A.C. 725.152(a)/ 40 CFR 262.34(a)(4)/40 CFR 265.52(d) & (e) - PSC failed to maintain a contingency plan which includes a depiction of evacuation routes and a description of the operation of emergency spill equipment as required.

I.A.C. 722.134(a)/ 40 CFR 262.34(a) - PSC failed to accumulate hazardous waste for less than 90-days, as required.

I.A.C. 725.16(a)(2)/ 40 CFR 265.16(a)(2) - PSC failed to provide training for Mr. Cervenka as hazardous waste management trainer for the facility.

I.A.C. 725.16(d)(4)/ 40 CFR 265.16(d)(4) - PSC failed to maintain records indicating that required hazardous waste had been provided to facility workers.

LIST OF ATTACHMENTS

Attachment A	IEPA Inspection Checklist
Attachment B	Facility Process Flow Diagrams
Attachment C	Facility Map
Attachment D	Manifests
Attachment E	Training Plan Outline
Attachment F	90-Day Accumulation Area Inspection Log
Attachment G	Inspection Photos
Attachment H	1996 Annual Report-Hazardous Waste
Attachment I	Emergency Response Plan, page 1.

PROCESS CHEMISTRY FOR STIR & BLEND SOLVENT BORNE ADHESIVES

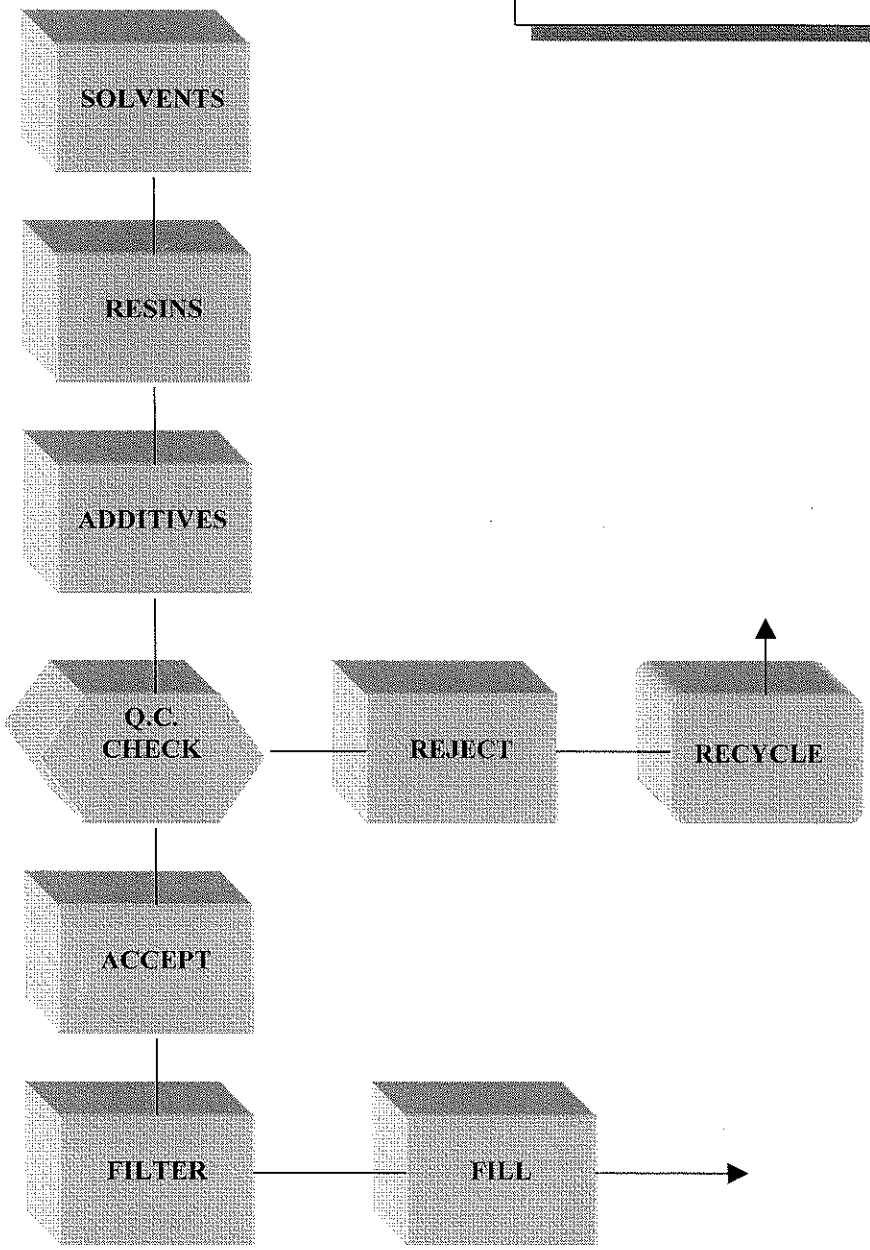

Q.C. Check for viscosity, solids and coating quality

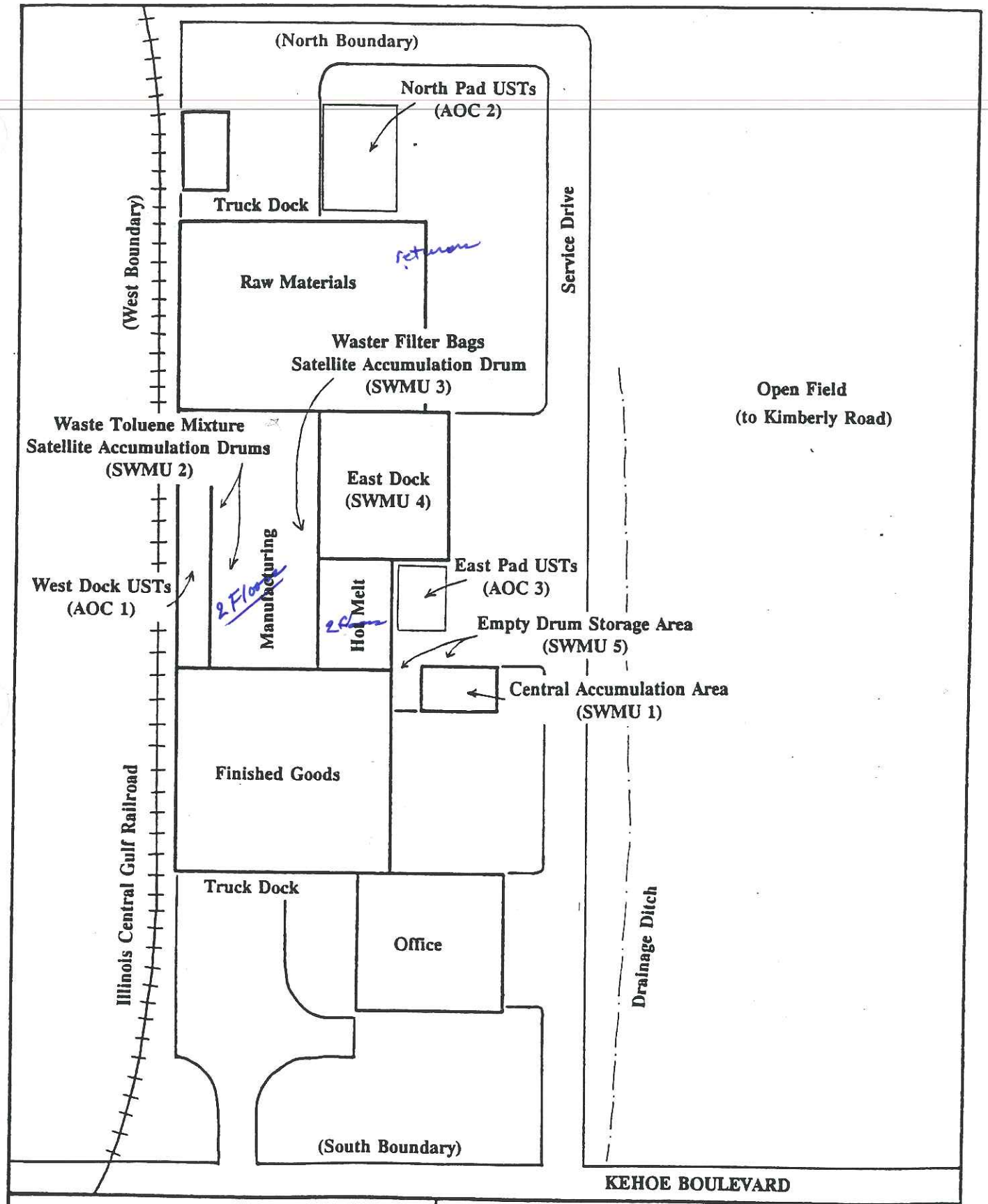

SCALE = 1:1,000
SOURCE: Modified from PSC, 1992

NORTH

FIGURE 2
FACILITY LAYOUT

STATE OF ARKANSAS
Department of Pollution Control and Ecology
P. O. Box 8913 Little Rock, Arkansas 72219-8913
Telephone 501-562-7444

WO#693542

1

Form Approved. OMB No. 2050-0039. EXPIRES 9-30-96

Pl[illegible] [illegible]int or type. (Form designed for use on elite (12-pitch) typewriter.)

UNIFORM HAZARDOUS WASTE MANIFEST

1. Generator's US EPA ID No.: ILD055434443 — Manifest Document No.: 08337
2. Page 1 of 1
Information in the shaded areas is not required by Federal law.

3. Generator's Name and Mailing Address
Pierce & Stevens
245 E. Kehoe
Carol Stream, IL 60188
Attn: Bob Cervenka

4. Generator's Phone (708-653-3800

A. State Manifest Document Number: AR- 796337
B. State Generator's ID: 0430200004

5. Transporter 1 Company Name: Tri-State Motor Transit Co.
6. US EPA ID Number: MOD095038998
C. State Transporter's ID: PC 0711 H 011
D. Transporter's Phone: 800-234-8768

7. Transporter 2 Company Name:
8. US EPA ID Number:
E. State Transporter's ID: PC ____ H ___
F. Transporter's Phone:

9. Designated Facility Name and Site Address
RINECO
1007 Vulcan Rd.-Haskell
Benton, AR 72015
10. US EPA ID Number: ARD981057870
G. State Facility's ID: 905 119 3002
H. Facility's Phone: 501/778-9089

11. US DOT Description (Including Proper Shipping Name, Hazard Class, and ID Number)	12. Containers No.	Type	13. Total Quantity	14. Unit Wt/Vol	I. Waste No.
a. Waste Flammable Liquid, N.O.S. (Toluene / Acetone) 3, UN1993, PGIII	32	DM	1760	G	D001/F003/F005 D035/D018
b. Hazardous Waste Solid, N.O.S. (Paint / Toluene) 9, NA3077, PGIII	2	DM	110	G	F005
c.					

J. Additional Descriptions for Materials Listed Above
a. 9502-01466 ERG#27 (Toluene Waste)
b. 9502-01467 ERG#31 (Waste Filters) BIF

if no alternate TSDF, return to generator **P/U Date: 11/29/95 11am Load # 9695**

K. Handling Codes for Wastes Listed Above
EMERGENCY RESPONSE INFORMATION:
Bob Cervenka
708-653-3800

15. Special Handling Instructions and Additional Information
Transporter Illinois ID# 1513-999

16. **GENERATOR'S CERTIFICATION:** I hereby declare that the contents of this consignment are fully and accurately described above by proper shipping name and are classified, packed, marked, and labeled, and are in all respects in proper condition for transport by highway according to applicable international and national government regulations and Arkansas state regulations.
If I am a large quantity generator, I certify that I have a program in place to reduce the volumn and toxicity of waste generated to the degree I have determined to be economically practicable and that I have selected the practicable method of treatment, storage, or disposal currently available to me which minimizes the present and future threat to human health and the environment; OR, if I am a small quantity generator, I have made a good faith effort to minimize my waste generation and select the best waste management method that is available to me and that I can afford.

Printed/Typed Name: Robert Cervenka — Signature: Robert Cervenka — Month Day Year: 11 29 95

17. Transporter 1 Acknowledgement of Receipt of Materials
Printed/Typed Name: Bill Cooper — Signature: Bill Cooper — Month Day Year: 11 29 95

18. Transporter 2 Acknowledgement of Receipt of Materials
Printed/Typed Name: — Signature: — Month Day Year:

19. Discrepancy Indication Space

20. Facility Owner or Operator: Certification of receipt of hazardous materials covered by this manifest except as noted in Item 19.
Printed/Typed Name: Michael Hudson — Signature: Michael Hudson — Month Day Year: 12 08 95

EPA Form 8700-22 (Rev. 9-88) Previous edition is obsolete.

NOTICE: THE ORIGINAL AND NOT LESS THAN TWO (2) COPIES MUST MOVE WITH THE HAZARDOUS WASTE SHIPMENT. ONCE DELIVERED, THE TREATMENT/STORAGE/DISPOSAL FACILITY MUST RETURN THIS ORIGINAL COPY TO THE GENERATOR.

STATE OF ARKANSAS
Department of Pollution Control and Ecology
P. O. Box 8913 Little Rock, Arkansas 72219-8913
Telephone 501-562-7444

(5) 1

Form Approved. OMB No. 2050-0039. EXPIRES 9-30-96

Please print or type. (Form designed for use on elite (12-pitch) typewriter.)

UNIFORM HAZARDOUS WASTE MANIFEST

1. Generator's US EPA ID No.: ILD055434443 — Manifest Document No.: 766437
2. Page 1 of 1
Information in the shaded areas is not required by Federal law.

3. Generator's Name and Mailing Address
Pierce & Stevens
245 E. Kehoe
Carol Stream, IL 60188
Attn: Bob Cervenka

4. Generator's Phone (708-653-3800

A. State Manifest Document Number: AR- 766437
B. State Generator's ID: 0430200004
C. State Transporter's ID: PC 0711 H 011
D. Transporter's Phone: 800-234-8768
E. State Transporter's ID: PC ____ H ___
F. Transporter's Phone:
G. State Facility's ID: 905 119 3002
H. Facility's Phone: 501/778-9089

5. Transporter 1 Company Name: Tri-State Motor Transit Co.
6. US EPA ID Number: MOD095038998
7. Transporter 2 Company Name:
8. US EPA ID Number:
9. Designated Facility Name and Site Address
RINECO
1007 Vulcan Rd.-Haskell
Benton, AR 72015
10. US EPA ID Number: ARD981057870

11. US DOT Description (Including Proper Shipping Name, Hazard Class, and ID Number)	12. Containers No.	Type	13. Total Quantity	14. Unit Wt/Vol	I. Waste No.
a. Waste Flammable Liquid, N.O.S. (Toluene / Acetone) 3 UN1993 PGIII	036	DM	01980	G	D001/F003/F005 D035/D018
b. Hazardous Waste Solid, N.O.S. (Paint / Toluene) 9 NA3077 PGIII	003	DM	00165	G	F005
c.					
d.					

J. Additional Descriptions for Materials Listed Above
a. 9502-01466 ERG#27 (Toluene Waste)
b. 9502-01467 ERG#31 (Waste Filters) BIF

if no alternate TSDF, return to generator **P/U Date: 7/27/95 11:00 am Load # 8574**

K. Handling Codes for Wastes Listed Above
EMERGENCY RESPONSE INFORMATION:
Bob Cervenka
708-653-3800

15. Special Handling Instructions and Additional Information
Transporter Illinois ID# 1513-999

16. **GENERATOR'S CERTIFICATION:** I hereby declare that the contents of this consignment are fully and accurately described above by proper shipping name and are classified, packed, marked, and labeled, and are in all respects in proper condition for transport by highway according to applicable international and national government regulations and Arkansas state regulations.
If I am a large quantity generator, I certify that I have a program in place to reduce the volumn and toxicity of waste generated to the degree I have determined to be economically practicable and that I have selected the practicable method of treatment, storage, or disposal currently available to me which minimizes the present and future threat to human health and the environment; OR, if I am a small quantity generator, I have made a good faith effort to minimize my waste generation and select the best waste management method that is available to me and that I can afford.

Printed/Typed Name: Robert Cervenka — Signature: Robert Cervenka — Month Day Year: 07 27 95

17. Transporter 1 Acknowledgement of Receipt of Materials
Printed/Typed Name: Pat Connelly — Signature: Pat Connelly — Month Day Year: 07 27 95

18. Transporter 2 Acknowledgement of Receipt of Materials
Printed/Typed Name: — Signature: — Month Day Year:

19. Discrepancy Indication Space

20. Facility Owner or Operator: Certification of receipt of hazardous materials covered by this manifest except as noted in Item 19.
Printed/Typed Name: DALE BALLARD — Signature: Dale Ballard — Month Day Year: 08 01 95

EPA Form 8700-22 (Rev. 9-88) Previous edition is obsolete.

NOTICE: THE ORIGINAL AND NOT LESS THAN TWO (2) COPIES MUST MOVE WITH THE HAZARDOUS WASTE SHIPMENT. ONCE DELIVERED, THE TREATMENT/STORAGE/DISPOSAL FACILITY MUST RETURN THIS ORIGINAL COPY TO THE GENERATOR.

AR-9-94

STATE OF ARKANSAS
Department of Pollution Control and Ecology
P. O. Box 8913 Little Rock, Arkansas 72219-8913
Telephone 501-562-7444

6

Please print or type. *(Form designed for use on elite (12-pitch) typewriter.)*

Form Approved. OMB No. 2050-0039. EXPIRES 9-30-96

UNIFORM HAZARDOUS WASTE MANIFEST

1. Generator's US EPA ID No. | Manifest Document No. | 2. Page 1 of | Information in the shaded areas is not required by Federal law.

3. Generator's Name and Mailing Address

4. Generator's Phone ( )

A. State Manifest Document Number: AR- 753257

B. State Generator's ID

5. Transporter 1 Company Name | 6. US EPA ID Number

C. State Transporter's ID PC ____ H ___

D. Transporter's Phone

7. Transporter 2 Company Name | 8. US EPA ID Number

E. State Transporter's ID PC ____ H ___

F. Transporter's Phone

9. Designated Facility Name and Site Address | 10. US EPA ID Number

G. State Facility's ID 805 119 3002

H. Facility's Phone 501/778-9089

11. US DOT Description *(Including Proper Shipping Name, Hazard Class, and ID Number)*	12. Containers No.	Type	13. Total Quantity	14. Unit Wt/Vol	I. Waste No.
a. Waste Flammable Liquid, N.O.S. (Toluene / Acetone) [illegible]	032	DM	1760	G	[illegible]
b. Hazardous Waste Solid, N.O.S. (Paint / Toluene) [illegible]	002	DM	175	G	[illegible]
c.					
d.					

J. Additional Descriptions for Materials Listed Above

K. Handling Codes for Wastes Listed Above

EMERGENCY RESPONSE INFORMATION:

If no alternate TSDF, return to generator Load # 7743

15. Special Handling Instructions and Additional Information

16. **GENERATOR'S CERTIFICATION:** I hereby declare that the contents of this consignment are fully and accurately described above by proper shipping name and are classified, packed, marked, and labeled, and are in all respects in proper condition for transport by highway according to applicable international and national government regulations and Arkansas state regulations.
If I am a large quantity generator, I certify that I have a program in place to reduce the volumn and toxicity of waste generated to the degree I have determined to be economically practicable and that I have selected the practicable method of treatment, storage, or disposal currently available to me which minimizes the present and future threat to human health and the environment; OR, if I am a small quantity generator, I have made a good faith effort to minimize my waste generation and select the best waste management method that is available to me and that I can afford.

Printed/Typed Name: Robert Ceruska | Signature | Month Day Year: 04 30 95

17. Transporter 1 Acknowledgement of Receipt of Materials

Printed/Typed Name: Richard E Williams | Signature | Month Day Year: 04 30 95

18. Transporter 2 Acknowledgement of Receipt of Materials

Printed/Typed Name | Signature | Month Day Year

19. Discrepancy Indication Space

20. Facility Owner or Operator: Certification of receipt of hazardous materials covered by this manifest except as noted in Item 19.

Printed/Typed Name | Signature | Month Day Year

GENERATOR — TRANSPORTER — FACILITY

AR-9-94

EPA Form 8700-22 (Rev. 9-88) Previous edition is obsolete.

GENERATOR INITIAL COPY

SEE INSTRUCTIONS ON REVERSE SIDE OF COPY 6.

STATE OF WISCONSIN

Chapter 144, Wis. Stats.
Form 4400-66P Rev. 10-93

WISCONSIN DEPT. OF NATURAL RESOURCES

ALL COPIES MUST BE LEGIBLE, PLEASE TYPE

State of Wisconsin
Department of Natural Resources
Bureau of Solid and Hazardous Waste Mgt.
Box 8094
Madison, Wisconsin 53708

FOR DNR USE ONLY

Designed for use on elite (12-pitch) typewriter.

Form Approved. OMB No. 2050-0039. Expires 9-30-94

UNIFORM HAZARDOUS WASTE MANIFEST

1. Generator's US EPA ID No.: ILD055434443
Manifest Document No.:
2. Page 1 of 1
Information in the shaded areas is not required by Federal law.

3. Generator's Name and Mailing Address: Pierce + Stevens Corp. 245 Kehoe Carol Stream Fl.
Site Location If Different:
4. Generator's Phone: (708) 653-3800

A. State Manifest Document Number: WIJ492611
B. State Generator's ID: 0430200004

5. Transporter 1 Company Name: Transwood
6. US EPA ID Number: NE0000080580
C. State Transporter's ID:
D. Transporter's Phone: 1-800-220-1555

7. Transporter 2 Company Name:
8. US EPA ID Number:
E. State Transporter's ID: ~~1-800-220-155~~
F. Transporter's Phone:

9. Designated Facility Name and Site Address: Hydrite Chem. 114 N. Main St. Cottage Grove, Wi. 53527
10. US EPA ID Number: WID000808824
G. State Facility's ID:
H. Facility's Phone:

11. US DOT Description (Including Proper Shipping Name, Hazard Class, and ID Number)	12. Containers No.	Type	13. Total Quantity	14. Unit Wt/Vol	I. Waste No.
a. RQ, Waste Flammable Liquid, NOS (Chlorotolulene, Tetrachloroethylene), 3, VN1993, PG II	6	DM	330	G	F003
b.					
c.					
d.					

Additional Descriptions for Materials Listed Above: D018 D019 D028 D001 F005

K. Handling Codes for Wastes Listed Above: ERG27

15. Special Handling Instructions and Additional Information: 24 Hr. # 1-800-255-3924

16. GENERATOR'S CERTIFICATION: I hereby declare that the contents of this consignment are fully and accurately described above by proper shipping name and are classified, packed, marked, and labeled, and are in all respects in proper condition for transport by highway according to applicable international and national governmental regulations and according to the requirements of the Wisconsin Department of Natural Resources. If I am a large quantity generator, I also certify that I have a program in place to reduce the volume and toxicity of waste generated to the degree I have determined to be economically practicable and I have selected the practicable method of treatment, storage, or disposal currently available to me which minimizes the present and future threat to human health and the environment;

OR, if I am a small quantity generator, I have made a good faith effort to minimize my waste generation and select the best waste management method that is available to me and that I can afford.

Printed/Typed Name & Position Title: Robert Cervenka Reg. Coordinator
Signature: Robert Cervenka
Date: Month 04 Day 25 Year 95

17. TRANSPORTER 1 Acknowledgement of Receipt of Materials
Printed/Typed Name & Position Title: ROBERT STARKER DRIVER
Signature: Robert Starker
Date: Month 04 Day 25 Year 95

18. TRANSPORTER 2 Acknowledgement of Receipt of Materials
Printed/Typed Name & Position Title:
Signature:
Date: Month Day Year

19. Discrepancy Indication Space: E. TRANSPORTER PHONE WRITTEN IN ERROR

20. FACILITY OWNER OR OPERATOR: Certification of receipt of hazardous materials covered by this manifest except as noted in Item 19.

Printed/Typed Name & Position Title:
Signature:
Date: Month Day Year

GENERATOR

TRANSPORTER

FACILITY

EPA Form 8700-22 (Rev. 9-88) Previous editions are obsolete.

Emergency 24 Hour Assistance Telephone Number
In Wisconsin (608) 266-3232
Outside Wisconsin (800) 424-8802

COPY 2- GENERATOR RETAIN

Copy Distribution:
1 — Generator send to Wis. DNR
2 — Generator retain
3 — Facility send to Wis. DNR
4 — Facility retain
5 — Facility send to Generator
6 — Transporter retain

Copies 1 & 3 mail to Wis. DNR at above address.

STATE OF ARKANSAS
Department of Pollution Control and Ecology
P. O. Box 8913 Little Rock, Arkansas 72219-8913
Telephone 501-562-7444

1

Please print or type. (Form designed for use on elite (12-pitch) typewriter.) Form Approved. OMB No. 2050-0039. Expires 9-30-94

AR-2-94

UNIFORM HAZARDOUS WASTE MANIFEST

1. Generator's US EPA ID No.: ILD055434443 Manifest Document No.: 053167
2. Page 1 of 1
Information in the shaded areas is not required by Federal law.

3. Generator's Name and Mailing Address
Pierce & Stevens
245 E. Kehoe
Attn: Bob Cervenka
Carol Stream IL 60188
4. Generator's Phone (708-653-3800

A. State Manifest Document Number: AR- 729853
B. State Generator's ID: 0430200004

5. Transporter 1 Company Name: Tri-State Motor Transit Co.
6. US EPA ID Number: MOD095038998
C. State Transporter's ID: PC 0711 - H 011
D. Transporter's Phone: 800-234-8768

7. Transporter 2 Company Name:
8. US EPA ID Number:
E. State Transporter's ID: PC ____ H ___
F. Transporter's Phone:

9. Designated Facility Name and Site Address
RINECO
1007 Vulcan Rd.-Haskell
Benton, AR 72015
10. US EPA ID Number: ARD981057870
G. State Facility's ID: 905 119 3002
H. Facility's Phone: 501/778-9089

11. US DOT Description (Including Proper Shipping Name, Hazard Class, and ID Number)	12. Containers No.	Type	13. Total Quantity	14. Unit Wt/Vol	I. Waste No.
a. Waste Flammable Liquid, N.O.S. (Toluene / Acetone) ,3, UN1993, PGIII	010	DM	00550	G	D001/F003/F005 D035/D018
b. Hazardous Waste Solid, N.O.S. (Paint / Toluene) ,9, NA3077, PGIII	002	DM	00110	G	F005
c.					
d.					

J. Additional Descriptions for Materials Listed Above
a. 9502-01466 ERG#27 (Toluene Waste)
b. 9502-01467 ERG#31 (Waste Filters) BIF

if no alternate TSDF, return to generator P/U Date:2/15/95 Load # 7209

K. Handling Codes for Wastes Listed Above
EMERGENCY RESPONSE INFORMATION:
Bob Cervenka
708-653-3800

15. Special Handling Instructions and Additional Information

16. GENERATOR'S CERTIFICATION: I hereby declare that the contents of this consignment are fully and accurately described above by proper shipping name and are classified, packed, marked, and labeled, and are in all respects in proper condition for transport by highway according to applicable international and national government regulations and Arkansas state regulations.
If I am a large quantity generator, I certify that I have a program in place to reduce the volumn and toxicity of waste generated to the degree I have determined to be economically practicable and that I have selected the practicable method of treatment, storage, or disposal currently available to me which minimizes the present and future threat to human health and the environment; OR, if I am a small quantity generator, I have made a good faith effort to minimize my waste generation and select the best waste management method that is available to me and that I can afford.

Printed/Typed Name: Robert Cervenka
Signature: Robert Cervenka
Month Day Year: 02 15 95

17. Transporter 1 Acknowledgement of Receipt of Materials
Printed/Typed Name: WALTER J. GORSKI
Signature: Walter J Gorski
Month Day Year: 02 15 95

18. Transporter 2 Acknowledgement of Receipt of Materials
Printed/Typed Name:
Signature:
Month Day Year:

19. Discrepancy Indication Space

20. Facility Owner or Operator: Certification of receipt of hazardous materials covered by this manifest except as noted in Item 19.
Printed/Typed Name: Richard A. Still
Signature: Richard A. Still
Month Day Year: 02 17 95

EPA Form 8700-22 (Rev. 9-88) Previous edition is obsolete.

NOTICE: THE ORIGINAL AND NOT LESS THAN TWO (2) COPIES MUST MOVE WITH THE HAZARDOUS WASTE SHIPMENT. ONCE DELIVERED, THE TREATMENT/STORAGE/DISPOSAL FACILITY MUST RETURN THIS ORIGINAL COPY TO THE GENERATOR.

STATE OF ILLINOIS
ENVIRONMENTAL PROTECTION AGENCY DIVISION OF LAND POLLUTION CONTROL

P.O. BOX 19276 SPRINGFIELD, ILLINOIS 62794-9276 (217) 782-6761

FOR SHIPMENT OF HAZARDOUS AND SPECIAL WASTE

State Form LPC 62 8/81 IL532-0610

PLEASE TYPE (Form designed for use on elite (12-pitch) typewriter.) EPA Form 8700-22 (Rev. 6-89) Form Approved. OMB No. 2050-0039, Expires 9-30-94

UNIFORM [redacted] WASTE MANIFEST

1. Generator's US EPA ID No.: ILD055434443
Manifest Document No.: 06821
2. Page 1 of 1
Information in the shaded areas is not required by Federal law, but is required by Illinois law.

3. Generator's Name and Mailing Address — Location If Different
PIERCE & STEVENS CORP.
245 E. KEHOE BLVD., CAROL STREAM, IL 60188

A. Illinois Manifest Document Number: IL 6706821 FEE PAID IF APPLICABLE

4. *24 HOUR EMERGENCY AND SPILL ASSISTANCE NUMBERS* (708)653-3800

B. Illinois Generator's ID: 0430200004

5. Transporter 1 Company Name: OZINGA TRANSPORTATION SYSTEMS
6. US EPA ID Number: ILD982067175

C. Illinois Transporter's ID: 11070
D. (708)388-6257 Transporter's Phone

7. Transporter 2 Company Name
8. US EPA ID Number

E. Illinois Transporter's ID
F. ( ) Transporter's Phone

9. Designated Facility Name and Site Address
ALTRACHEM, INC.
18 HENDERSON AVENUE
JOLIET, IL 60432
10. US EPA ID Number: N/A

G. Illinois Facility's ID: 1970450025
H. Facility's Phone: (815)726-8659

GENERATOR

11. US DOT Description (Including Proper Shipping Name, Hazard Class, and ID Number)	12. Containers No.	Type	13. Total Quantity	14. Unit Wt/Vol	I. Waste No.
a. NOT HAZARDOUS BY DOT (WAX\RESIN POWDER)	32	CF	43	Y	EPA HW Number: XX A; Authorization Number: 000144
b.					EPA HW Number: XX; Authorization Number:
c.					EPA HW Number: XX; Authorization Number:
d.					EPA HW Number: XX; Authorization Number:

J. Additional Description for Materials Listed Above
a. WAX\RESIN POWDER (10101-01)A
b.
c.
d.

K. Handling Codes for Wastes Listed Above In Item #14
G = Gallons Y = Cubic Yards

15. Special Handling Instructions and Additional Information
Emergency Contact # (708)653-3800

16. **GENERATOR'S CERTIFICATION:** I hereby declare that the contents of this consignment are fully and accurately described above by proper shipping name and are classified, packed, marked, and labeled, and are in all respects in proper condition for transport by highway according to applicable international and national government regulations.

If I am a large quantity generator, I certify that I have a program in place to reduce the volume and toxicity of waste generated to the degree I have determined to be economically practicable and that I have selected the practicable method of treatment, storage, or disposal currently available to me which minimizes the present and future threat to human health and the environment; **OR,** if I am a small quantity generator, I have made a good faith effort to minimize my waste generation and select the best waste management method that is available to me and that I can afford.

Printed/Typed Name: Robert Cervenka
Signature: Robert Cervenka
Date (Month Day Year): 01 31 96

TRANSPORTER

17. Transporter 1 Acknowledgement of Receipt of Materials
Printed/Typed Name: JOHN FRISON
Signature: John Frison
Date (Month Day Year): 01 31 96

18. Transporter 2 Acknowledgement of Receipt of Materials
Printed/Typed Name:
Signature:
Date (Month Day Year):

FACILITY

19. Discrepancy Indication Space

20. Facility Owner or Operator: Certification of receipt of hazardous materials covered by this manifest except as noted in item 19.
Printed/Typed Name: N. H. EDMONDS JR
Signature: N. H. Edmonds Jr.
Date (Month Day Year): 01 31 96

This Agency is authorized to require, pursuant to Illinois Revised Statute, 1989, Chapter 111 1/2, Section 1004 and 1021, that this information be submitted to the Agency. Failure to provide this information may result in a civil penalty against the owner or operator not to exceed $25,000 per day of violation. Falsification of this information may result in a fine up to $50,000 per day of violation and imprisonment up to 5 years. This form has been approved by the Forms Management Center.

COPY 1. TSD MAIL TO GENERATOR

... copy of a spill call the Illinois Office of Emergency Response at 217/782-7860 and the National Response Center at 800/424-8802 or 202/426-2675.

STATE OF ARKANSAS
Department of Pollution Control and Ecology
P. O. Box 8913 Little Rock, Arkansas 72219-8913
Telephone 501-562-7444

TSMP W.O. 715108 548052

1

Please print or type. (Form designed for use on elite (12-pitch) typewriter.)

Form Approved. OMB No. 2050-0039. EXPIRES 9-30-96

UNIFORM HAZARDOUS WASTE MANIFEST

1. Generator's US EPA ID No.: ILD054344443
Manifest Document No.:
2. Page 1 of 1
Information in the shaded areas is not required by Federal law.

3. Generator's Name and Mailing Address
Pierce & Stevens
245 E. Kehoe
Carol Stream, IL 60188
4. Generator's Phone (708-653-3800 Attn: Bob Cervenka

A. State Manifest Document Number: AR- 816001
B. State Generator's ID: 0430200004

5. Transporter 1 Company Name: Tri-State Motor Transit Co.
6. US EPA ID Number: MOD095038998
C. State Transporter's ID: PC 0711 H 011
D. Transporter's Phone: 800-234-8768

7. Transporter 2 Company Name:
8. US EPA ID Number:
E. State Transporter's ID: PC ---- H ---
F. Transporter's Phone:

9. Designated Facility Name and Site Address
RINECO
1007 Vulcan Rd.-Haskell
Benton, AR 72015
10. US EPA ID Number: ARD981057870
G. State Facility's ID: 905 119 3002
H. Facility's Phone: 501/778-9089

11. US DOT Description (Including Proper Shipping Name, Hazard Class, and ID Number)	12. Containers No.	Type	13. Total Quantity	14. Unit Wt/Vol	I. Waste No.
a. Waste Flammable Liquid, N.O.S. (Toluene / Acetone) 3 UN1993 PGIII	028	DM	01540	G	D001/F003/F005 D035/D018
b. Hazardous Waste Solid, N.O.S. (Paint / Toluene) 9 NA3077 PGIII	003	DM	00165	G	F005
c.					
d.					

J. Additional Description for Materials Listed Above
a. 9602-02873 ERG#27 (Toluene Waste)
b. 9602-02875 ERG#31 (Waste Filters) BIF

K. Emergency Response Information:
Bob Cervenka
708-653-3800

If no alternate TSDF, return to generator Pick Up Date: 0501/96 11am Load #11148

15. Special Handling Instructions and Additional Information
Transporter Illinois ID# 1513-999

16. **GENERATOR'S CERTIFICATION:** I hereby declare that the contents of this consignment are fully and accurately described above by proper shipping name and are classified, packed, marked, and labeled, and are in all respects in proper condition for transport by highway according to applicable international and national government regulations and Arkansas state regulations.
If I am a large quantity generator, I certify that I have a program in place to reduce the volumn and toxicity of waste generated to the degree I have determined to be economically practicable and that I have selected the practicable method of treatment, storage, or disposal currently available to me which minimizes the present and future threat to human health and the environment; OR, if I am a small quantity generator, I have made a good faith effort to minimize my waste generation and select the best waste management method that is available to me and that I can afford.

Printed/Typed Name: Robert Cervenka
Signature: Robert Cervenka
Month Day Year: 05 01 96

17. Transporter 1 Acknowledgement of Receipt of Materials
Printed/Typed Name: Dennis P. Lord Jr.
Signature:
Month Day Year: 05 01 96

18. Transporter 2 Acknowledgement of Receipt of Materials
Printed/Typed Name:
Signature:
Month Day Year:

19. Discrepancy Indication Space

20. Facility Owner or Operator: Certification of receipt of hazardous materials covered by this manifest except as noted in Item 19.
Printed/Typed Name: Marvin Thomas
Signature: Marvin Thomas
Month Day Year: 05 04 96

GENERATOR — TRANSPORTER — FACILITY

AR-9-95

EPA Form 8700-22 (Rev. 9-88) Previous edition is obsolete.

NOTICE: THE ORIGINAL AND NOT LESS THAN TWO (2) COPIES MUST MOVE WITH THE HAZARDOUS WASTE SHIPMENT. ONCE DELIVERED, THE TREATMENT/STORAGE/DISPOSAL FACILITY MUST RETURN THIS ORIGINAL COPY TO THE GENERATOR.

STATE OF ILLINOIS

ENVIRONMENTAL PROTECTION AGENCY DIVISION OF LAND POLLUTION CONTROL

P.O. BOX 19276 SPRINGFIELD, ILLINOIS 62794-9276 (217) 782-6761

State Form LPC 62 8/81 IL532-0610

FOR SHIPMENT OF HAZARDOUS AND SPECIAL WASTE

PLEASE TYPE (Form designed for use on elite (12-pitch) typewriter.) EPA Form 8700-22 (Rev. 6-89) Form Approved. OMB No. 2050-0039, Expires 9-30-94

UNIFORM [redacted] WASTE MANIFEST

1. Generator's US EPA ID No. ILD055443443 Manifest Document No. 80558

2. Page 1 of 1

Information in the shaded areas is not required by Federal law, but is required by Illinois law.

3. Generator's Name and Mailing Address: Pierce + Stevens Corp. 245 E. Kehoe Blvd. Carol Stream, Il. 60188

Location If Different

4. *24 HOUR EMERGENCY AND SPILL ASSISTANCE NUMBERS* 1-800-255-3924

A. Illinois Manifest Document Number: IL6786586 FEE PAID IF APPLICABLE

B. Illinois Generator's ID: 0430200004

5. Transporter 1 Company Name: Transwood

6. US EPA ID Number: NE0000080580

C. Illinois Transporter's ID: 3250

D. (800) 220-1555 Transporter's Phone

7. Transporter 2 Company Name

8. US EPA ID Number

E. Illinois Transporter's ID

F. ( ) Transporter's Phone

9. Designated Facility Name and Site Address: Hydrite Chemical Co. 114 N. Main St. Cottage Grove, Wi. 53527

10. US EPA ID Number: WID000808824

G. Illinois Facility's ID

H. Facility's Phone: (608) 257-1414

GENERATOR

11. US DOT Description (Including Proper Shipping Name, Hazard Class, and ID Number)	12. Containers No.	Type	13. Total Quantity	14. Unit Wt/Vol	I. Waste No.
a. Environmentally Hazardous Substance, Liquid NOS (2-Chloro-1,3-Butadiene; Methacrylic Acid) 9 (Class 9 Miscellaneous)	70	DM	3850	G	EPA HW Number XX NRM; Authorization Number
b.					EPA HW Number XX; Authorization Number
c.					EPA HW Number XX; Authorization Number
d.					EPA HW Number XX; Authorization Number

J. Additional Description for Materials Listed Above: None

K. Handling Codes for Wastes Listed Above in Item #14: G = Gallons Y = Cubic Yards ERG: 31

15. Special Handling Instructions and Additional Information: Authorization # 116599-H-80558 Emergency # 1-800-559-3924

16. **GENERATOR'S CERTIFICATION:** I hereby declare that the contents of this consignment are fully and accurately described above by proper shipping name and are classified, packed, marked, and labeled, and are in all respects in proper condition for transport by highway according to applicable international and national government regulations.

If I am a large quantity generator, I certify that I have a program in place to reduce the volume and toxicity of waste generated to the degree I have determined to be economically practicable and that I have selected the practicable method of treatment, storage, or disposal currently available to me which minimizes the present and future threat to human health and the environment; **OR,** if I am a small quantity generator, I have made a good faith effort to minimize my waste generation and select the best waste management method that is available to me and that I can afford.

Printed/Typed Name: Robert Cervenka Signature: [signature] Date (Month Day Year): 06 10 96

TRANSPORTER

17. Transporter 1 Acknowledgement of Receipt of Materials

Printed/Typed Name: Joel Thompson Signature: [signature] Date (Month Day Year): 06 10 96

18. Transporter 2 Acknowledgement of Receipt of Materials

Printed/Typed Name: Signature: Date (Month Day Year):

FACILITY

19. Discrepancy Indication Space

20. Facility Owner or Operator: Certification of receipt of hazardous materials covered by this manifest except as noted in item 19.

Printed/Typed Name: Dan Bohnsack Signature: [signature] Date (Month Day Year): 06 10 96

This Agency is authorized to require, pursuant to Illinois Revised Statute, 1989, Chapter 111 1/2, Section 1004 and 1021, that this information be submitted to the Agency. Failure to provide this information may result in a civil penalty against the owner or operator not to exceed $25,000 per day of violation. Falsification of this information may result in a fine up to $50,000 per day of violation and imprisonment up to 5 years. This form has been approved by the Forms Management Center.

COPY 1. TSD MAIL TO GENERATOR

In case of a Spill Call the Illinois Office of Emergency Response at 217/782-7860 and the National Response Center at 800/424-8802 or 202/426-2675.

INDIANA DEPARTMENT OF ENVIRONMENTAL MANAGEMENT
OFFICE OF SOLID AND HAZARDOUS WASTE MANAGEMENT
P.O. Box 7035
Indianapolis, IN 46207-7035

PLEASE PRINT OR TYPE (Form designed for use on elite (12-pitch typewriter.) Form approved. OMB No. 2050-0039. Expires 9-30-95 99

UNIFORM HAZARDOUS WASTE MANIFEST

1. Generator's US EPA No.: I.L.D.0.5.5.4.3.4.4.4.3 — Manifest Document No.: 3.8.6.0.8
2. Page 1 of 1 — Information in the shaded areas is not required by Federal law, but items D, F, H, I and K are required by State law.

3. Generator's Name and Mailing Address: PIERCE AND STEVENS CORPORATION
245 EAST KEHOE BLVD.
CAROL STREAM IL 60185
4. Generator's Phone (630) 653-3800

A. State Manifest Document Number: INA 1138608
B. State Generator's ID:

5. Transporter 1 Company Name: Ashland Chemical, Inc.
6. US EPA ID Number: I.N.D.0.1.6.6.2.1.4.7.6
C. State Transporter's ID:
D. Transporter's Phone: (219) 233-0033

7. Transporter 2 Company Name:
8. US EPA ID Number:
E. State Transporter's ID:
F. Transporter's Phone:

9. Designated Facility Name and Site Address: Pollution Control Industres
4343 Kennedy Avenue
East Chicago IN 46312
10. US EPA ID Number: I.N.D.0.0.0.6.4.6.9.4.3
G. State Facility's ID:
H. Facility's Phone: (219) 397-3951

11. US DOT Description (Including Proper Shipping Name, Hazard Class, and ID Number)	12. Containers No.	Type	13. Total Quantity	14. Unit Wt/Vol.	I. Waste No.
a RQ WASTE FLAMMABLE LIQUID N.O.S. (TOLUENE, ACETONE) 3 UN1993 PGII (D001,F003,F005)	021	DM	1,0500	P	D001, F003 F005, D018 D035
b RQ WASTE FLAMMABLE LIQUID N.O.S. METHYL ETHYL KETONE, TOLUENE) 3 UN1993 PGII (D001,F005)	006	DM	1,200	P	D001, F005 D018, D035
c					
d					

J. Additional Descriptions for Materials Listed Above: A: A 213275L B: A 213277N
K. Handling Codes for Wastes Listed Above: A: T50 B: T50

S01

15. Special Handling Instructions and Additional Information: SHOULD ANY ACCIDENT INVOLVING THIS SHIPMENT, MUST BE REPORTED TO CHEMTREC, DAY OR NIGHT, AT 800-424-9300.
A. ERG# 128 B. ERG# 128

16. GENERATOR'S CERTIFICATION: I hereby declare that the contents of this consignment are fully and accurately described above by proper shipping name and are classified, packed, marked, and labeled, and are in all respects in proper condition for transport by highway according to applicable international and national governmental regulations.

If I am a large quantity generator, I certify that I have a program in place to reduce the volume and toxicity of waste generated to the degree I have determined to be economically practicable and that I have selected the practicable method of treatment, storage, or disposal currently available to me which minimizes the present and future threat to human health and the environment; OR, if I am a small quantity generator, I have made a good faith effort to minimize my waste generation and select the best waste management method that is available to me and that I can afford.

Printed/Typed Name: Bob Cervenka — Signature: [signature] — Date: Month 06 Day 26 Year 97

17. Transporter 1 Acknowledgement of Receipt of Materials
Printed/Typed Name: Ron J Andrews — Signature: Ron J Andrews — Date: Month 06 Day 26 Year 97

18. Transporter 2 Acknowledgement of Receipt of Materials
Printed/Typed Name: — Signature: — Date: Month Day Year

19. Discrepancy Indication Space

20. Facility Owner or Operator: Certification of receipt of hazardous materials covered by this manifest except as noted item 19.
Printed/Typed Name: MARK Spuletto — Signature: [signature] — Date: Month 06 Day 30 Year 97

GENERATOR — TRANSPORTER — FACILITY

In case of a spill call the Indiana Office of Environmental Response at 317/241-4336 (day or night) and the ...al Response Center at 800/424-8802 or 202/426-2675.

INA 1138608

EPA Form 8700-22
Previous editions are obsolete
State Form 11865 (R2 / 1-94)

COPY 4. TSD MAIL TO GENERATOR

STATE OF ARKANSAS
Department of Pollution Control and Ecology
P. O. Box 8913 Little Rock, Arkansas 72219-8913
Telephone 501-562-7444

1

Please print or type. (Form designed for use on elite (12-pitch) typewriter.)

Form Approved. OMB No. 2050-0039. EXPIRES 9-30-96

UNIFORM HAZARDOUS WASTE MANIFEST

1. Generator's US EPA ID No.: ILD055434443
Manifest Document No.: 00005
2. Page 1 of 1
Information in the shaded areas is not required by Federal law.

3. Generator's Name and Mailing Address
Pierce & Stevens
245 E. Kehoe
Carol Stream, IL 60188
4. Generator's Phone (708-653-3800 Attn: Bob Cervenka

A. State Manifest Document Number: AR-843118
B. State Generator's ID: 0430200004

5. Transporter 1 Company Name: Tri-State Motor Transit Co.
6. US EPA ID Number: MOD095038998
C. State Transporter's ID: PC - 0711 H - 011
D. Transporter's Phone: 800-234-8768

7. Transporter 2 Company Name
8. US EPA ID Number
E. State Transporter's ID: PC ---- H ---
F. Transporter's Phone

9. Designated Facility Name and Site Address
RINECO
1007 Vulcan Rd.-Haskell
Benton, AR 72015
10. US EPA ID Number: ARD981057870
G. State Facility's ID: 905 119 3002
H. Facility's Phone: 501/778-9089

GENERATOR

11. US DOT Description (Including Proper Shipping Name, Hazard Class, and ID Number)	12. Containers No.	Type	13. Total Quantity	14. Unit Wt/Vol	I. Waste No.
a. Waste Flammable Liquid, N.O.S. (Toluene / Acetone) 3 UN1993 PGIII	037 ~~037~~	DM	2035	G	D001/F003/F005 D035/D018
b. Hazardous Waste Solid, N.O.S. (Paint / Toluene) 9 NA3077 PGIII	003	DM	165	G	F005
c.					
d.					

J. Additional Description for Materials Listed Above
a. 9602-02873 ERG#128 (Toluene Waste)
b. 9602-02875 ERG#171 (Waste Filters) BIF

K. Emergency Response Information:
Bob Cervenka
708-653-3800

if no alternate TSDF, return to generator Pick-Up Date: 10-17-96 Load # 12805

15. Special Handling Instructions and Additional Information
Transporter Illinois ID# 1513

16. GENERATOR'S CERTIFICATION: I hereby declare that the contents of this consignment are fully and accurately described above by proper shipping name and are classified, packed, marked, and labeled, and are in all respects in proper condition for transport by highway according to applicable international and national government regulations and Arkansas state regulations.
If I am a large quantity generator, I certify that I have a program in place to reduce the volumn and toxicity of waste generated to the degree I have determined to be economically practicable and that I have selected the practicable method of treatment, storage, or disposal currently available to me which minimizes the present and future threat to human health and the environment; OR, if I am a small quantity generator, I have made a good faith effort to minimize my waste generation and select the best waste management method that is available to me and that I can afford.

Printed/Typed Name: Robert Cervenka
Signature: Robert Cervenka
Month Day Year: 10 17 96

TRANSPORTER

17. Transporter 1 Acknowledgement of Receipt of Materials
Printed/Typed Name: DONALD Lee DAVIS
Signature: Donald Lee Davis
Month Day Year: 10 17 96

18. Transporter 2 Acknowledgement of Receipt of Materials
Printed/Typed Name
Signature
Month Day Year

19. Discrepancy Indication Space

FACILITY

20. Facility Owner or Operator: Certification of receipt of hazardous materials covered by this manifest except as noted in Item 19.
Printed/Typed Name: MARVIN THOMAS
Signature: Marvin Thomas
Month Day Year: 10 29 96

EPA Form 8700-22 (Rev. 9-88) Previous edition is obsolete.

NOTICE: THE ORIGINAL AND NOT LESS THAN TWO (2) COPIES MUST MOVE WITH THE HAZARDOUS WASTE SHIPMENT. ONCE DELIVERED, THE TREATMENT/STORAGE/DISPOSAL FACILITY MUST RETURN THIS ORIGINAL COPY TO THE GENERATOR.

AR-2-96

INDIANA DEPARTMENT OF ENVIRONMENTAL MANAGEMENT
OFFICE OF SOLID AND HAZARDOUS WASTE MANAGEMENT
P.O. Box 7035
Indianapolis, IN 46207-7035

PLEASE PRINT OR TYPE (Form designed for use on elite (12-pitch typewriter.) Form approved. OMB No. 2050-0039. Expires 9-30-95

UNIFORM HAZARDOUS WASTE MANIFEST

1. Generator's US EPA No. [illegible] Manifest Document No. 77690
2. Page 1 of 1
Information in the shaded areas is not required by Federal law, but items D, F, H, I and K are required by State law.

3. Generator's Name and Mailing Address PIERCE AND STEVENS CORPORATION
845 EAST KENDE BLVD.
CAROL STREAM IL 60185
4. Generator's Phone (630) 653-3800

A. State Manifest Document Number INA 1179690
B. State Generator's ID

5. Transporter 1 Company Name: Ashland Chemical Company
6. US EPA ID Number: INDIN5521475
C. State Transporter's ID 1066
D. Transporter's Phone (219) 233-8833
7. Transporter 2 Company Name
8. US EPA ID Number
E. State Transporter's ID
F. Transporter's Phone

9. Designated Facility Name and Site Address: Pollution Control Industries
4343 Kennedy Avenue
East Chicago IN 46312
10. US EPA ID Number: INDIN9[illegible]
G. State Facility's ID
H. Facility's Phone (219) 397-3951

11. US DOT Description (Including Proper Shipping Name, Hazard Class, and ID Number)	12. Containers No.	Type	13. Total Quantity	14. Unit Wt/Vol.	I. Waste No.
a RQ WASTE FLAMMABLE LIQUID N.O.S. (TOLUENE, ACETONE) 3 UN1993 PGII (D001,F003,F005)	44	DM	1980.	P	D001, F003 F005, D018 D035
b RQ WASTE FLAMMABLE LIQUID N.O.S. METHYL ETHYL KETONE, TOLUENE) 3 UN1993 PGII (D001,F005)	4	DM	1200.	P	D001, F005 D018, D035
c					
d					

J. Additional Descriptions for Materials Listed Above
A: A 213275L (ERG# 128)
B: A 213277N (ERG# 128)

K. Handling Codes for Wastes Listed Above
A: T50
B: T50

1179690 501

15. Special Handling Instructions and Additional Information
EVERY SPILL, RELEASE OR INCIDENT INVOLVING THIS SHIPMENT, MUST BE REPORTED TO CHEMTREC, DAY OR NIGHT, AT 800-424-9300.

0700

16. GENERATOR'S CERTIFICATION: I hereby declare that the contents of this consignment are fully and accurately described above by proper shipping name and are classified, packed, marked, and labeled, and are in all respects in proper condition for transport by highway according to applicable international and national governmental regulations.

If I am a large quantity generator, I certify that I have a program in place to reduce the volume and toxicity of waste generated to the degree I have determined to be economically practicable and that I have selected the practicable method of treatment, storage, or disposal currently available to me which minimizes the present and future threat to human health and the environment; OR, if I am a small quantity generator, I have made a good faith effort to minimize my waste generation and select the best waste management method that is available to me and that I can afford.

GENERATOR — Printed/Typed Name: Robert Ceravolo — Signature: [signature] — Date: Month 07 Day 22 Year 97

TRANSPORTER
17. Transporter 1 Acknowledgement of Receipt of Materials — Printed/Typed Name: Ron J Andrews — Signature: [signature] — Date: Month 07 Day 22 Year 97
18. Transporter 2 Acknowledgement of Receipt of Materials — Printed/Typed Name — Signature — Date: Month Day Year

FACILITY
19. Discrepancy Indication Space

20. Facility Owner or Operator: Certification of receipt of hazardous materials covered by this manifest except as noted item 19.
Printed/Typed Name: Jeff Tirrantello — Signature: [signature] — Date: Month 07 Day 22 Year 97

INA 1179690

EPA Form 8700-22
Previous editions are obsolete
State Form 11865 (R2 / 1-94)

COPY 4. TSD MAIL TO GENERATOR

e of a spill call the Indiana Office of Environmental Response at 317/241-4336 (day or night) and the
onal Response Center at 800/424-8802 or 202/426-2675.

INDIANA DEPARTMENT OF ENVIRONMENTAL MANAGEMENT
OFFICE OF SOLID AND HAZARDOUS WASTE MANAGEMENT
P.O. Box 7035
Indianapolis, IN 46207-7035

PLEASE PRINT OR TYPE (Form designed for use on elite (12-pitch typewriter.) Form approved. OMB No. 2050-0039. Expires 9-30-94 XX99

UNIFORM HAZARDOUS WASTE MANIFEST

1. Generator's US EPA No.: I.L.D.0.5.5.4.3.4.4.4.3 | Manifest Document No.: 10.[illegible]

2. Page 1 of 1 — Information in the shaded areas is not required by Federal law, but items D, F, H, I and K are required by State law.

3. Generator's Name and Mailing Address
Pierce and Stevens Corp.
245 East Kehoe Blvd., Carol Stream IL 60188

4. Generator's Phone (630) 653-3800

A. State Manifest Document Number: INA1110314

B. State Generator's ID: 0430200004

5. Transporter 1 Company Name: Ashland Chemical Company

6. US EPA ID Number: I.N.D.0.1.6.6.2.1.4.7.6

C. State Transporter's ID: 1066 IL

D. Transporter's Phone: 219-233-0033

7. Transporter 2 Company Name:

8. US EPA ID Number: . . . . . .

E. State Transporter's ID:

F. Transporter's Phone:

9. Designated Facility Name and Site Address
Pollution Control Industries
4343 Kennedy Avenue
East Chicago, IN 46312

10. US EPA ID Number: I.N.D.0.0.0.6.4.6.9.4.3

G. State Facility's ID:

H. Facility's Phone: 800-388-7242

11. US DOT Description (Including Proper Shipping Name, Hazard Class, and ID Number)	12. Containers No.	Type	13. Total Quantity	14. Unit Wt/Vol.	I. Waste No.
a RQ Waste Flammable Liquid N.O.S. (Toluene, Acetone) 3 (Flammable Liquid) UN1993 PGII (D001,F003,F005)	076	DM	34,200	P	D035 D001,D018 F003,F005
b RQ Waste Flammable Liquid N.O.S. (Methyl Ethyl Ketone, Toluene) 3 (Flammable Liquid) UN1993 PGII (D001,F005)	002	DM	400	P	D001,F005 D018,D035
c					
d					

J. Additional Descriptions for Materials Listed Above
a. Profile# A 213275L
b. Profile# A 213277N

K. Handling Codes for Wastes Listed Above
a. T50
b. T50

15. Special Handling Instructions and Additional Information a. ERG# 128 b. ERG# 128
Every spill, release or incident involving this shipment, must be reported to CHEMTREC, day or night, at 800-424-9300.

16. GENERATOR'S CERTIFICATION: I hereby declare that the contents of this consignment are fully and accurately described above by proper shipping name and are classified, packed, marked, and labeled, and are in all respects in proper condition for transport by highway according to applicable international and national governmental regulations.

If I am a large quantity generator, I certify that I have a program in place to reduce the volume and toxicity of waste generated to the degree I have determined to be economically practicable and that I have selected the practicable method of treatment, storage, or disposal currently available to me which minimizes the present and future threat to human health and the environment; OR, if I am a small quantity generator, I have made a good faith effort to minimize my waste generation and select the best waste management method that is available to me and that I can afford.

Printed/Typed Name: [illegible] | Signature: [illegible] | Date: Month 02 Day 11 Year 97

17. Transporter 1 Acknowledgement of Receipt of Materials
Printed/Typed Name: [illegible] | Signature: [illegible] | Date: Month 02 Day 11 Year 97

18. Transporter 2 Acknowledgement of Receipt of Materials
Printed/Typed Name: | Signature: | Date: Month Day Year

19. Discrepancy Indication Space

20. Facility Owner or Operator: Certification of receipt of hazardous materials covered by this manifest except as noted item 19.
Printed/Typed Name: LIN L MAYDEN | Signature: [illegible] | Date: Month 02 Day 13 Year 97

GENERATOR / TRANSPORTER / FACILITY

In case of a spill call the Indiana Office of Environmental Response at [illegible] (day or night) and the National Response Center at [illegible] or [illegible]

INA 1110314

EPA Form 8700-22
Previous editions are obsolete
State Form 11865 (R2 / 1-94)

STATE OF ILLINOIS

ENVIRONMENTAL PROTECTION AGENCY DIVISION OF LAND POLLUTION CONTROL

P.O. BOX 19276 SPRINGFIELD, ILLINOIS 62794-9276 (217) 782-6761

State Form LPC 62 8/81 IL532-0610

FOR SHIPMENT OF HAZARDOUS AND SPECIAL WASTE

PLEASE TYPE (Form designed for use on elite (12-pitch) typewriter.)

EPA Form 8700-22 (Rev. 6-89)

Form Approved. OMB No. 2050-0039, Expires 9-30-96

UNIFORM HAZARDOUS WASTE MANIFEST

1. Generator's US EPA ID No. ILD 055434443 — Manifest Document No.

2. Page 1 of 1

Information in the shaded areas is not required by Federal law, but is required by Illinois law.

3. Generator's Name and Mailing Address: 245 E. Kehoe, Carol Stream, IL 60188

Location If Different: attn: Bob Cervenka

4. *24 HOUR EMERGENCY AND SPILL ASSISTANCE NUMBERS* 0006450265

A. Illinois Manifest Document Number: IL 7345414 FEE PAID IF APPLICABLE

B. Illinois Generator's ID: 4 2 0 2 0 0 0 0 4 1 4 7

5. Transporter 1 Company Name: Clean Harbors Env. Services Inc.

6. US EPA ID Number: MAD 03 [illegible]

C. Illinois Transporter's ID

D. (617) 849-1800 Transporter's Phone

7. Transporter 2 Company Name

8. US EPA ID Number

E. Illinois Transporter's ID

F. ( ) Transporter's Phone

9. Designated Facility Name and Site Address: [illegible] INC. 11800 S. STONY ISLAND AVE, CHICAGO, IL 60617

10. US EPA ID Number: ILD000608471

G. Illinois Facility's ID: 0 3 1 6 0 0 0 0 5 1

H. Facility's Phone: (773) 646-6202

11. US DOT Description (Including Proper Shipping Name, Hazard Class, and ID Number)	12. Containers No.	Type	13. Total Quantity	14. Unit Wt/Vol	I. Waste No.
a. [illegible]	0 0 1	D F	0 0 0 0 1	G	EPA HW Number XX [illegible] Authorization Number 0 0 0 2 0 5
b. Non Hazardous, Non D.O.T. Regulated, NOS, RCA (organic resins)	0 0 1	D F	0 0 0 1 0	G	EPA HW Number XX [illegible] Authorization Number 0 0 0 2 0 5
c.					EPA HW Number XX Authorization Number
d.					EPA HW Number XX Authorization Number

J. Additional Description for Materials Listed Above: [illegible]

K. Handling Codes for Wastes Listed Above In Item #14

15. Special Handling Instructions and Additional Information: [illegible]

16. **GENERATOR'S CERTIFICATION:** I hereby declare that the contents of this consignment are fully and accurately described above by proper shipping name and are classified, packed, marked, and labeled, and are in all respects in proper condition for transport by highway according to applicable international and national government regulations.

If I am a large quantity generator, I certify that I have a program in place to reduce the volume and toxicity of waste generated to the degree I have determined to be economically practicable and that I have selected the practicable method of treatment, storage, or disposal currently available to me which minimizes the present and future threat to human health and the environment; **OR,** if I am a small quantity generator, I have made a good faith effort to minimize my waste generation and select the best waste management method that is available to me and that I can afford.

Printed/Typed Name: Bob Cervenka — Signature: [signature] — Date: Month Day Year 0 4 2 2 0 7

17. Transporter 1 Acknowledgement of Receipt of Materials

Printed/Typed Name: mike loftus — Signature: [signature] — Date: Month Day Year 0 4 2 2 0 7

18. Transporter 2 Acknowledgement of Receipt of Materials

Printed/Typed Name — Signature — Date: Month Day Year

19. Discrepancy Indication Space

20. Facility Owner or Operator: Certification of receipt of hazardous materials covered by this manifest except as noted in item 19.

Printed/Typed Name — Signature — Date: Month Day Year

GENERATOR

TRANSPORTER

FACI

In case of a spill call the Illinois Office of Emergency Response at 217/782-7860 and the National Response Center at 800/424-8802 or 202/426-2675.

This Agency is authorized to require, pursuant to Illinois Revised Statute, 1989, Chapter 111 1/2, Section 1004 and 1021, that this information be submitted to the Agency. Failure to provide this information may result in a civil penalty against the owner or operator not to exceed $25,000 per day of violation. Falsification of this information may result in a fine up to $50,000 per day of violation and imprisonment up to 5 years. This form has been approved by the Forms Management Center.

COPY 6. GENERATOR'S COPY

STATE OF ILLINOIS

ENVIRONMENTAL PROTECTION AGENCY DIVISION OF LAND POLLUTION CONTROL

P.O. BOX 19276 SPRINGFIELD, ILLINOIS 62794-9276 (217) 782-6761

FOR SHIPMENT OF HAZARDOUS AND SPECIAL WASTE nb6011

State Form LPC 62 8/81 IL532-0610

PLEASE TYPE (Form designed for use on elite (12-pitch) typewriter.) EPA Form 8700-22 (Rev. 6-89) Form Approved. OMB No. 2050-0039, Expires 9-30-96

UNIFORM HAZARDOUS WASTE MANIFEST

1. Generator's US EPA ID No.: ILD 055424443 — Manifest Document No.: 45912

2. Page 1 of 1

Information in the shaded areas is not required by Federal law, but is required by Illinois law.

3. Generator's Name and Mailing Address: [illegible] 245 E. Kehoe Carol Stream, IL 60188

Location If Different: attn Bob Cervenka

4. *24 HOUR EMERGENCY AND SPILL ASSISTANCE NUMBERS* 0006458265

A. Illinois Manifest Document Number: IL 7345413 FEE PAID IF APPLICABLE

B. Illinois Generator's ID: 3 0 2 0 0 0 0 4

5. Transporter 1 Company Name: Clean Harbors Env. Services Inc.

6. US EPA ID Number: MAD 02-932-2250

C. Illinois Transporter's ID: 1 4 7 8

D. (617) 849-1800 Transporter's Phone

7. Transporter 2 Company Name

8. US EPA ID Number

E. Illinois Transporter's ID

F. ( ) Transporter's Phone

9. Designated Facility Name and Site Address: CLEAN HARBORS SERVICES, INC. 11800 S. STONY ISLAND AVE. CHICAGO, IL, 60617

10. US EPA ID Number: ILD000608471

G. Illinois Facility's ID: 0 9 1 6 0 0 0 0 5 1

H. Facility's Phone: (773) 646-6202

11. US DOT Description (Including Proper Shipping Name, Hazard Class, and ID Number)	12. Containers No.	Type	13. Total Quantity	14. Unit Wt/Vol	I. Waste No.
a. WASTE, CORROSIVE LIQUID, ACIDIC, INORGANIC, N.O.S., 8, UN3264, PG II (hydrochloric acid, chromium chloride)	0 0 1	D.F	0 0 0 0 1	G	EPA HW Number: XX D 0 0 2; Authorization Number: 0 0 0 2 8 1
b. WASTE, OXIDIZING SOLID, N.O.S., 5.1, UN1479, PG II (iodine, chromium trioxide)	0 0 1	D.F	0 0 0 1 3	F	EPA HW Number: XX D 0 0 1; Authorization Number: 0 0 0 2 8 1
c. WASTE, Flammable liquids, n.o.s., 3, UN1993, PG II (pet dist solvents, acrylonitrile)	0 0 2	D.F	0 0 0 0 7	G	EPA HW Number: XX D 0 0 1; Authorization Number: 0 0 0 2 8 4
d. WASTE, Paint related material, 3, UN1263, PG II	0 0 1	D.F	0 0 0 0 2	G	EPA HW Number: XX D 0 0 1; Authorization Number: 0 0 0 2 8 4

J. Additional Description for Materials Listed Above
a: LP 1x16 (L.C.E) D007
b: LP 1x5 (S.I.E) D007
c: LP 1x5, 1x16 (L.E.I) D038
d: LP 1x16 (L.I)

K. Handling Codes for Wastes Listed Above In Item #14

15. Special Handling Instructions and Additional Information
truck 587

16. **GENERATOR'S CERTIFICATION:** I hereby declare that the contents of this consignment are fully and accurately described above by proper shipping name and are classified, packed, marked, and labeled, and are in all respects in proper condition for transport by highway according to applicable international and national government regulations.

If I am a large quantity generator, I certify that I have a program in place to reduce the volume and toxicity of waste generated to the degree I have determined to be economically practicable and that I have selected the practicable method of treatment, storage, or disposal currently available to me which minimizes the present and future threat to human health and the environment; **OR,** if I am a small quantity generator, I have made a good faith effort to minimize my waste generation and select the best waste management method that is available to me and that I can afford.

Printed/Typed Name: Bob Cervenka — Signature: [signature] — Date (Month Day Year): 0 4 2 2 9 7

17. Transporter 1 Acknowledgement of Receipt of Materials

Printed/Typed Name: mike loftus — Signature: [signature] — Date (Month Day Year): 0 4 2 2 9 7

18. Transporter 2 Acknowledgement of Receipt of Materials

Printed/Typed Name — Signature — Date (Month Day Year)

19. Discrepancy Indication Space

20. Facility Owner or Operator: Certification of receipt of hazardous materials covered by this manifest except as noted in item 19.

Printed/Typed Name — Signature — Date (Month Day Year)

GENERATOR — TRANSPORTER — FACILITY

This Agency is authorized to require, pursuant to Illinois Revised Statute, 1989, Chapter 111 1/2, Section 1004 and 1021, that this information be submitted to the Agency. Failure to provide this information may result in a civil penalty against the owner or operator not to exceed $25,000 per day of violation. Falsification of this information may result in a fine up to $50,000 per day of violation and imprisonment up to 5 years. This form has been approved by the Forms Management Center.

COPY 6. GENERATOR'S COPY

In case of a spill call the Illinois Office of Emergency Response at 217/782-7860 and the National Response Center at 800/424-8802 or 202/426-2675.

P.O. BOX 19276 SPRINGFIELD, ILLINOIS 62794-9276 (217) 782-6761

State Form LPC 62 8/81 IL532-0610

FOR SHIPMENT OF HAZARDOUS AND SPECIAL WASTE

nb6011

PLEASE TYPE (Form designed for use on elite (12-pitch) typewriter.) EPA Form 8700-22 (Rev. 6-89) Form Approved. OMB No. 2050-0039, Expires 9-30-96

UNIFORM HAZARDOUS WASTE MANIFEST

1. Generator's US EPA ID No.: ILD 055434342 — Manifest Document No.: 99412

2. Page 1 of 1 — Information in the shaded areas is not required by Federal law, but is required by Illinois law.

3. Generator's Name and Mailing Address: Pierce Stevens, 245 E. Kehoe, Carol Stream, IL 60188 — Location If Different: attn: Bob Cervenka

4. *24 HOUR EMERGENCY AND SPILL ASSISTANCE NUMBERS* 9006458265

A. Illinois Manifest Document Number: IL 7345412 FEE PAID IF APPLICABLE

B. Illinois Generator's ID: 0 4 2 0 2 0 0 0 0 4

5. Transporter 1 Company Name: Clean Harbors Env. Services Inc — 6. US EPA ID Number: MAD 03-932-2250

C. Illinois Transporter's ID: 1 4 7 5

D. (617) 849-1800 Transporter's Phone

7. Transporter 2 Company Name — 8. US EPA ID Number

E. Illinois Transporter's ID

F. ( ) Transporter's Phone

9. Designated Facility Name and Site Address: CLEAN HARBORS SERVICES, INC., 11800 S. STONY ISLAND AVE., CHICAGO, IL 60617 — 10. US EPA ID Number: ILD000608471

G. Illinois Facility's ID: 0 3 1 6 0 0 0 0 5 1

H. Facility's Phone: (773) 646-6202

11. US DOT Description (Including Proper Shipping Name, Hazard Class, and ID Number)	12. Containers No.	Type	13. Total Quantity	14. Unit Wt/Vol	I. Waste No.
a. WASTE, MERCURY COMPOUNDS, SOLID, N.O.S., 6.1, UN2025, PG II (phenylmercuric acetate)	0 0 1	D F	0 0 0 0 1	G	EPA HW Number: XX p p p p; Authorization Number: 0 0 0 2 8 4
b. WASTE, CORROSIVE LIQUIDS, FLAMMABLE, N.O.S., 8, UN2920, PG II (cyclohexylamine, diamylamine)	0 0 1	D F	0 0 0 0 1	G	EPA HW Number: XX 0 0 0 1; Authorization Number: 0 0 0 2 8 4
c. WASTE, CORROSIVE SOLIDS, N.O.S., 8, UN1759, PG II (phthalic anhydride)	0 0 1	D F	0 0 0 0 1	P	EPA HW Number: XX U 1 9 0; Authorization Number: 0 0 0 2 8 4
d. WASTE, CORROSIVE LIQUID, BASIC, INORGANIC, N.O.S., 8, UN2266, PG II (potassium hydroxide)	0 0 1	D F	0 0 0 0 1	G	EPA HW Number: XX p p p p; Authorization Number: 0 0 0 2 8 1

J. Additional Description for Materials Listed Above
a: LP 1x5 (L,H)
b: LP 1x5 (L,C,I) D002
c: LP 1x5 (S,T)
d: LP 1x5 (L,C)

K. Handling Codes for Wastes Listed Above In Item #14

15. Special Handling Instructions and Additional Information
truck 587

16. **GENERATOR'S CERTIFICATION:** I hereby declare that the contents of this consignment are fully and accurately described above by proper shipping name and are classified, packed, marked, and labeled, and are in all respects in proper condition for transport by highway according to applicable international and national government regulations.

If I am a large quantity generator, I certify that I have a program in place to reduce the volume and toxicity of waste generated to the degree I have determined to be economically practicable and that I have selected the practicable method of treatment, storage, or disposal currently available to me which minimizes the present and future threat to human health and the environment; **OR,** if I am a small quantity generator, I have made a good faith effort to minimize my waste generation and select the best waste management method that is available to me and that I can afford.

Printed/Typed Name: Bob Cervenka — Signature: [signature] — Date (Month Day Year): 0 4 2 2 9 7

17. Transporter 1 Acknowledgement of Receipt of Materials — Printed/Typed Name: mike loftus — Signature: [signature] — Date (Month Day Year): 0 4 2 2 9 7

18. Transporter 2 Acknowledgement of Receipt of Materials — Printed/Typed Name — Signature — Date (Month Day Year)

19. Discrepancy Indication Space

20. Facility Owner or Operator: Certification of receipt of hazardous materials covered by this manifest except as noted in item 19. — Printed/Typed Name — Signature — Date (Month Day)

This Agency is authorized to require, pursuant to Illinois Revised Statute, 1989, Chapter 111 1/2, Section 1004 and 1021, that this information be submitted to the Agency. Failure to this information may result in a civil penalty against the owner or operator not to exceed $25,000 per day of violation. Falsification of this information may result in a fine up to per day of violation and imprisonment up to 5 years. This form has been approved by the Forms Management Center.

COPY 6. GENERATOR'S COPY

In case of a spill call the Illinois Office of Emergency Response at 217/782-7860 and the National Response Center at 800/424-8802 or 202

Satellite Areas

Date	Remarks	Insp By	Upstairs Tagged	Upstairs Clean	Downstairs Tagged	Downstairs Clean
4-1-97	OK	BC	✓	✓	✓	✓
4-8-97	Up - 2 Halt Dumps Down -	BC	✓	✓	✓	✓
4-16-97	OK	BC	✓	✓	✓	✓
4-22-97	OK	BC	✓	✓	✓	✓
4-28-97	OK	BC	✓	✓	✓	✓
5-5-97	OK	BC	✓	✓	✓	✓
5-13-97	OK	BC	✓	✓	✓	✓
5-14-97	OK	BC	✓	✓	✓	✓
5-28-97	OK	BC	✓	✓	✓	✓
6-3-97	OK	BC	✓	✓	✓	✓
6-11-97	OK	BC	✓	✓	✓	✓
6-17-97	OK	BC	✓	✓	✓	✓
6-23-97	OK	BC	✓	✓	✓	✓

Central Accum. Area

DATE	REMARKS	INSPECTED BY	DRUMS TAGGED	LEAKERS	AREA AISLES	CLEAN
12-15-95	8 DRUMS	JN	8	NONE	✓	YES
1-9-96	4 DRUMS	JN	4	NONE	✓	YES
1-9-96	1 DRUM (FILTERS)	JN	1	NONE	✓	YES
3-11-96	10 DRUMS	JN	10	NONE	✓	YES
3-11-96	1 DRUM (FILTERS)	JN	1	NONE	✓	YES
4-3-96	1 DRUM (FILTERS)	JN	1	NONE	✓	YES
4-3-96	6 DRUMS	JN	6	NONE	✓	YES
05-03-96	5 DRUMS	JN	5	NONE	✓	YES
06-26-96	8 DRUMS	JN	8	NONE	✓	YES
06-26-96	1 DRUM (FILTERS)	JN	1	NONE	✓	YES
09-20-96	17 DRUMS	JN	17	NONE	✓	YES
09-20-96	1 DRUM (FILTERS)	JN	1	NONE	✓	YES
10-30-96	6 DRUMS	JN	6	✓	✓	✓
10-30-96	1 DR. (FILTER)	JN	1	✓	✓	✓
11-1-96	43 DRUMS	JN	43	✓	✓	✓

RRC Assumed Respon. On 1-1-97

1-7-97	40 Drums	2 Filter	BL	40	None	✓	Yes
1-14-97	Miss counted 60 Drums	2 Filter		60	None	✓	✓
1-22-97	66 Drms	2 Filter		66	None	✓	✓
1-28-97	74 Drms	2 Filter		74	None	✓	✓
2-5-97	76 Drms	2 Filter		76	None	✓	✓
2-10-97	76 Lin 2 Filter		BL	78	None	✓	✓
2-19-97	0	Empty	BL				✓
2-25-97	1 Drum			1	None	✓	Yes
3-4-97	2	1 Filter		2	"	✓	"
3-13-97	3			3	"	✓	"
3-17-97	4	2 Filter		4	"	✓	"
3-24-97	4 Drums		BL	4	None	✓	Yes

Central Accumulation Area

Date	Remarks	Insp By	Drums Tagged	Drums Leakers	Area Aisle	Area Clean
4-1-97	4 Drms	2 Filter MC	Yes	None	✓	Yes
4-8-97	9 Drms	3 Filter MC	Yes	None	✓	✓
4-16-97	9 Drms	4 Filter MC	Yes	"	✓	"
4-22-97	9 Drms	4 Filter MC	Yes	"	✓	"
4-28-97	11 Drms	4 Filter MC	"	"	✓	"
5-5-97	11 "	4 Filter MC	"	"	✓	"
5-13-97	14 "	" MC	"	"	✓	"
5-19-97	14 "	" MC	"	"	✓	"
5-28-97	18 "	" MC	"	"	✓	"
6-3-97	18 "	" MC	"	"	✓	"
6-11-97	18 "	5 Filter MC	"	"	✓	"
6-17-97	18 "	5 Filter MC	"	"	✓	✓
6-23-97	21 "	6 Filter MC	"	"	✓	✓

Date
4-1-
4-8-
4-16-
4-22-
4-28-
5-5-
5-13-
5-19-
5-28-
6-3-
6-11-
6-17-
6-23-

1. Spill kit station located in the North Warehouse.

2. Six drums of spent solvent waste and two drums of spent filters located in the Central Accumulation Area. One drum was not marked with an accumulation date.

3. Entrance to the Central Accumulation.

4. View of the satellite accumulation area located on the lower level of the facility.

PIERCE & STEVENS CORP.

Division of Sovereign
Specialty Chemicals, L.P.

February 13th, 1997

ILLINOIS ENVIRONMENTAL PROTECTION AGENCY
Division of Land Pollution Control #2
P.O. Box 19276
Springfield, Il. 62794-9276

RE: PIERCE & STEVENS CORP.
Carol Stream, IL. 60188
Annual Hazardous Waste Report

Gentleman/Ladies:

Provided is the Annual Hazardous Waste Report for our facility for the year of 1996. Please feel free to contact me at (630) 653-3800 should there be any questions or comments regarding our report.

Sincerely,

PIERCE & STEVENS CORP.

Robert Cervenka

Robert Cervenka
Safety & Regulatory Coordinator

Enc.
C.C. K. W. Johnston
S. H. Mauldin
C. S. Waste File

ILLINOIS Environmental Protection Agency
1996 Hazardous Waste Report
Form IC -- Identification and Certification

Instructions for this form found on pages 3 ...
This form must be completed for the location shown on the above label. If you need additional forms for other locations, call IEPA.

SECTION 1. GENERATOR STATUS

A. 31 __1__ RCRA Generator Status (*enter one code*)
- 1 = LQG
- 2 = SQG
- 3 = CESGQ
- } Skip to Box C
- 4 = Nongenerator (continue to Box B)

B. Reason for not generating (*Check all that apply*)
- 32 ___ Never generated
- 33 ___ Out of business
- 34 ___ Only excluded or delisted waste generated
- 35 ___ Only non-hazardous waste generated
- 36 ___ Periodic generator, none in reporting year
- 37 ___ Waste minimization activity
- 38 ___ Other (*specify in comments box*)

C. 39 __1__ Status Time Period: 1= Expected to be the same next year and following years 2 = Expected to change next year

SECTION 2. ENTER THE SIC CODE(S) FOR THIS LOCATION

40 __2 8 9 1__ 44 ___ ___ ___ ___ 48 ___ ___ ___ ___ 52 ___ ___ ___ ___

SECTION 3. ON-SITE WASTE MANAGEMENT STATUS (*enter one code for each question*)

A. 56 __4__ RCRA regulated (permitted or interim status) storage
B. 57 __1__ RCRA permitted or interim status treatment, disposal, or recycling
C. 58 __1__ Treatment, disposal, or recycling exempt from RCRA permit requirements

SECTION 4. WASTE MINIMIZATION ACTIVITY DURING THE REPORTING YEAR. *(Only LQGs are required either to complete Section IV or submit detailed waste minimization description (see page 3).)*

A. 59 __Y__ Does your facility have a waste minimization plan or organized approach to investigate source reduction and recycling opportunities? *Enter Y for Yes* (Continue to Question B) *or N for No* (Skip to Question C)

B. Enter Y (Yes) for all activities that describe your waste minimization program.
- a. 60 __N__ Set a waste minimization goal
- b. 61 __Y__ Use team approach for planning
- c. 62 __Y__ Provide employee training
- d. 63 __Y__ Identify types and amounts of waste generated by various processes and their causes
- e. 64 __Y__ Assess total costs of waste management
- f. 65 __N__ Prioritize waste minimization options based on costs, benefits and feasibility
- g. 66 __Y__ Periodically update the program and re-evaluate options
- h. 67 __Y__ Encourage employees to offer waste minimization suggestions
- i. 68 __N__ Incorporate waste minimization into procurement, marketing and product development activities
- j. 69 __N__ Other (*describe in comments box*)

C. What kind of incentives would you like to see developed to help promote more source reduction activity at your facility? *Enter Y (Yes) for all that apply.*
- a. 70 ___ Tax incentives
- b. 71 ___ Loan assistance for equipment
- c. 72 ___ Compliance flexibility
- d. 73 ___ On-site technical assistance
- e. 74 ___ Regulatory compliance assistance
- f. 75 ___ Employee training
- g. 76 ___ R&D assistance
- h. 77 ___ Expedited permit review
- i. 78 ___ Other (enter comments on separate page)

D. Would you like to receive information on waste minimization? *Enter Y (Yes) for information requested.*
- a. 79 ___ General information packet on how to develop a plan for eliminating or reducing waste
- b. 80 ___ Fact sheet on industry or process-specific source reduction options
- c. 81 ___ On-site technical consultation
- d. 82 __Y__ Information on future conferences and workshops

Comments: 83 ___ *Enter Y (Yes) if you have comments regarding this page and attach extra sheet.*

Section 5. The Environmental Protection Agency is authorized to require this information under the Illinois Compiled Statutes ("ILCS"), 1994 as amended, Chapter 415 ILCS 5/4 and 21. Disclosure of this information is required. Failure to disclose this information may result in civil and criminal penalties pursuant to 415 ILCS 5/42 and 44. This form has been approved by the Forms Management Center.

Certification: I certify under penalty of law that I have personally examined and am familiar with the information submitted in this and all attached documents, and that based on my inquiry of those individuals immediately responsible for obtaining the information, I believe that the submitted information true, accurate and complete. I am aware that there are significant penalities for submitting false information, including the possibility of fine and imprisonment.

A. Please print: Last Name Cervenka First Name Robert B. Title Regulatory Coord.

C. Signature Robert Cervenka D. Date of Signature 2/13/97

ILLINOIS Environmental Protection Agency
1996 Hazardous Waste Report
Form GM -- Generation and Management

Instructions for this form ...

SECTION 1. WASTE DESCRIPTION

A. Waste Description: Ignitable spent solvent from equip. cleaning/unsalvagable mtr

B. EPA Hazardous Waste Code: (31) F003 (35) F005 (39) D001 (43) D018 (47) D035

C. SIC code: (51) 2891

D. Origin Code: (55) 1 System type: (56) M

E. Source Code: (60) A 09 (63) A 32 (66) A 58

F. Point of Measurement: (69) 2

G. Waste form code: (70) B 203

H. Radioactive mixed: (74) 2

I. TRI Constituent: (75) 3

J. CAS numbers: 1. (76) 108 - 88 - 3 2. (84) 78 - 93 - 3 3. (92) - - 4. (100) - - 5. (108) - -

SECTION 2. QUANTITY GENERATED

A. UOM: (116) 1 Density (117) 7.20 (*Same unit and density must be used for all quantities on this page*).

Quantity generated in: B. Previous reporting year: (121) 6875.0

C. Current reporting year: (131) 3905.0

D. QUANTITY MANAGED ON-SITE: Did this location manage some or all of this waste in exempt or regulated treatment, recycling, or disposal units **at this location**? (141) N Y = Yes (continue to system 1) N = No (skip to section 3)

On-Site System 1: System Type (142) M Status (146) Quantity managed on-site this year: (147) .

On-Site System 2: System Type (157) M Status (161) Quantity managed on-site this year: (162) .

SECTION 3. OFF- SITE SHIPMENT

A. Was any of this waste shipped off site this reporting year? (172) Y Y = Yes (Continue to Site 1) N = No (Skip to Section 4)

SITE 1. Name and address of facility: Rineco
1007 Vulcan Rd.-Haskell
Benton, AR 72015

B. U.S. EPA ID No. of facility waste was shipped to: (173) ARD981057870

C. System type shipped to: (185) M 061 D. Off-site availability code: (189)

E. Total quantity shipped in this reporting year: (190) 3905.0

SITE 2. Name and address of facility:

B. U.S. EPA ID No. of facility waste was shipped to: (200)

C. System type shipped to: (212) M D. Off-site availability code: (216)

E. Total quantity shipped in this reporting year: (217) .

SECTION 4. WASTE MINIMIZATION ACTIVITIES

A. Did you engage in any waste minimization activities for this reporting year? (227) N Y = Yes (Cont to Box B) N = No (Cont to Section 5)

B. Activity: (228) W, (231) W, (234) W, (237) W, (240) W, (243) W C. Other Effects? (Y = Yes, N = No) (246)

D. How many new waste minimization activities were implemented in this reporting year for this waste? (247) (Number)

E. Quantity recycled in reporting year due to new activities: (248) .

F. Activity/Production index: (258) . G. Source Reduction quantity due to new activities: (261) .

SECTION 5. REGULATED STORAGE

A. Did this site store RCRA wastes 90 days or more and then ship it off-site (to site shown in Section 3)? (Y=Yes, N=No) (271) N

B. Did this site store RCRA wastes on-site for more than 90 days but waste is in storage at year end: (y=Yes, N=No) (272) N

Quantity stored at year end and for 90 days or more, generated this reporting year: (273) .

Quantity stored at year end that was generated prior to this reporting year: (283) .

COMMENTS: (293) Enter Y (Yes) if you have comments regarding this page and attach extra sheet. Page (13) 2 of 3

ILD 055 434 443 43 2/[illegible]
PIERCE & STEVENS CHEMICAL CORP
245 E KEHOE BLVD
P.O. BOX 13[illegible]
CAROL STREAM IL
6 188

ILLINOIS Environmental Protection Agency
1996 Hazardous Waste Report
Form TI -- Transporter Identification

Instructions for this form found on page 28.

1. U.S. EPA ID No. MOD095038998 (31) Illinois Special Waste Hauling Permit No. 0711 (127)
   Transporter Name and Address: Tri-State Motor Transit
   East 7th
   Joplin, MO 64801

2. U.S. EPA ID No. _____ (43) Illinois Special Waste Hauling Permit No. _____ (131)
   Transporter Name and Address:

3. U.S. EPA ID No. _____ (55) Illinois Special Waste Hauling Permit No. _____ (135)
   Transporter Name and Address:

4. U.S. EPA ID No. _____ (67) Illinois Special Waste Hauling Permit No. _____ (139)
   Transporter Name and Address:

5. U.S. EPA ID No. _____ (79) Illinois Special Waste Hauling Permit No. _____ (143)
   Transporter Name and Address:

6. U.S. EPA ID No. _____ (91) Illinois Special Waste Hauling Permit No. _____ (147)
   Transporter Name and Address:

7. U.S. EPA ID No. _____ (103) Illinois Special Waste Hauling Permit No. _____ (151)
   Transporter Name and Address:

8. U.S. EPA ID No. _____ (115) Illinois Special Waste Hauling Permit No. _____ (155)
   Transporter Name and Address:

COMMENTS: ___ (159) Enter Y(Yes) if you have comments regarding this page and attach extra sheet. Page 3 of 3 (13)

0430200004 / DuPage
Pierce & Stevens Chemical C
Compliance

UNITED STATES ENVIRONMENTAL PROTECTION AGENCY
REGION 5
77 WEST JACKSON BOULEVARD
CHICAGO, IL 60604-3590

WITHHELD # 3
CONFIDENTIAL

REPLY TO THE ATTENTION OF:

MAR 0 5 1998

DE-9J

ENFORCEMENT CONFIDENTIAL

William Child, Chief
Bureau of Land Pollution Control
Illinois Environmental Protection Agency
1021 North Grand Ave, East
P.O. Box 19276
Springfield, Illinois 62794-9276

RECEIVED
MAR 0 9 1998
I.E.P.A. / B.O.L.

Re: Enforcement Case Referral
Pierce & Stevens Chemical Company
Carol Stream, IL
ILD 055 434 443

Dear Mr. Child:

In coordination with Illinois Environmental Protection Agency (IEPA), the United States Environmental Protection Agency (U.S. EPA), Region 5, Enforcement and Compliance Assurance Branch conducted a compliance evaluation inspection on December 12, 1997, at the Pierce & Stevens Chemical Company facility located in Carol Stream. The facility is an adhesives and coatings manufacturer and a large quantity generator of hazardous waste.

The inspection identified several violations of Illinois hazardous waste regulations; the most significant of which was storage of hazardous waste for greater than 90-days without a permit. U.S. EPA has evaluated the inspection findings and has determined that the nature of the violations identified, classify the facility as a significant non-complier as defined in U.S. EPA's 1996 Enforcement Response Policy (ERP) to the substantial deviation from RCRA statutory or regulatory requirements. The ERP also requires that formal enforcement be initiated that includes the collection of a monetary penalty.

With this letter, the U.S. EPA is referring this matter to IEPA for appropriate action. In accordance with the 1998 Environmental Performance Partnership Agreement, IEPA should take action within 30 days or refer the matter back to U.S. EPA. U.S. EPA is considering a multimedia action in this matter and is available to assist IEPA in this RCRA matter including, if necessary, full case management.

RELEASED
DATE 8/25/04
RIN #
INITIALS MV per Kevin Chow (one)

Recycled/Recyclable-Printed with Vegetable Oil Based Inks on 100% Recycled Paper (40% Postconsumer)

Enclosed please find a copy of the inspection report. If you have any questions, please contact Patrick Kuelfler, of my staff, at (312)353-6268.

Sincerely yours,

Joseph M. Boyle

Joseph M. Boyle, Chief
Enforcement and Compliance Assurance Branch
Waste, Pesticides and Toxics Division

Enclosure

cc: Todd Marvel, IEPA (w/o att.)

Enclosure

REQUEST FOR ENFORCEMENT DECISION
PRIVILEGED AND CONFIDENTIAL

I. Chronology
The site was inspected by U.S. EPA's RCRA program as part of series of inspections targeted at large quantity generators of hazardous waste within the state that met a variety of EPA selection criteria. The list of potential inspection targets was provided to BOL prior to the inspection. IEPA declined the opportunity to accompany the EPA inspector and the inspection occurred on December 12, 1997.

II. Site History/Discussion of Violations:
The last previous inspection was in 1988. Violations were found but resolved informally. The December 12, 1997 inspection found several violations, the most serious of which was storage of hazardous waste without a permit. As a LQG, the facility may only store waste up to 90-days without first obtaining a RCRA permit. Review of manifest records indicate that on a couple of occasions within the last year the facility exceeded those time frames by over a month.
In addition to the storage violations, the facility also had lesser violations including container management violations of improper labeling, failure to conduct weekly inspections, and failure to store containers closed. The facility also failed to update it's continency plan and maintain adequate training records. The specific provisions found in violation are as follows:

I.A.C. 722.134(a)-storage for greater than 90-days without a permit
I.A.C. 722.134(a)(2)-Labeling
I.A.C. 722.134(c)-open containers in satellite
I.A.C. 725.274-container inspections
I.A.C. 725.152(a)-maintenance of continency plan
I.A.C. 725.116(a)(2)-inadequate training records

III. EDG History:
Unknown

IV. Recommendation:
U.S. EPA is prepared to issue an administrative enforcement order. Refer the matter to U.S. EPA.

V. Concurrence:

FOS Manager:_____Date_____

RELEASED
DATE 8/25/04
RIN #
INITIALS MV per Kevin Chow (OKC)

"EMERGENCY RESPONSE TO HAZARDOUS SUBSTANCE RELEASES"
PIERCE & STEVENS CAROL STREAM FACILITY, MARCH '93

I. INITIAL RESPONSE

A. I.C.E.

1. I: Identify and isolate the hazard area.
2. C: Call for help and communicate pertinent information.
3. E: Evacuate and enact the preplan.

B. EVALUATION, EVACUATION, AND ENACTMENT OF PREPLAN

1. G.J. Novak, H.E. Twomey will coordinate a head count and obtain ` pertinent MSDS's.

2. R.R. Cervenka, T.R. Buenz, S.H. Mauldin, or the senior trained employee will evaluate and then institute the appropriate plan of action.

3. Ancillary emergency response organizations will be contacted at this time of deemed necessary by incident command.

4. The in-house response team under the authority of the incident command will access the response carts and prepare for containment procedures.

5. The incident command and safety officer will oversee containment operations, clean up procedures, and decon. (*Note: If at any time the evolution becomes unsafe or deteriorates, it is the sole decision of the safety officer to terminate the response and evacuate the involved personnel.

6. Upon completion of the response, all personnel and equipment will be decontaminated, evacuated, and debriefed as needed.

`C. RESPONSE CART CONTENTS

1. 2- push brooms
2. 2- squeegees
3. 1- polypropylene scoop shovel
4. 1- bag 23 kg. ab/adsorbent
5. 4- polyethylene Hazmat disposal bags
6. 12- ab/adsorbent pillows
7. 20- ab/adsorbent brooms
8. 2- full face respirators with amine and organic
9. 2- (1-m. 1.1g) Nomex response team coveralls
10. 2- Nomex hoods
11. 1- FFFP fire extinguisher - ATC foam
12. 2- Saranex coated Tyvek coveralls (1 lge., 1 Xlge)

COMPLAINANT'S EXHIBIT 2

Pierce Stevens

coating + adhesives

xylene
acetone
ethyl acetate
toluene
MEK

D001
F003
F005

waste solvent
Filter Bags
returns

Q what do you use
- Nitro cellulose for?

- ISOcyanate?

* need description of equip + uses. 265.52.e

26552.f - evac. route in plan.

p2

conts plan review

Plant Mgr.
Plant Safety
Production Cond.
incompatibles
* UV waste with copper
nitrocellulose with caustics

- now have 10 solvent mixers

Clean Harbors does labpacks →

manifest (97)

(1) 2/11/97 # 1110314
76 Dm 34,200 - D035, D001 D018, F003, F005
2 Dm 400 - D001, F005 D018, D035

(2) 4/22/97
2016 lab pack
3 manifest 100 app of various compounds. Clean out of old methanol from QA lab.

(3) 9/22/97 # 1179690
~~44 Dm~~ PK ~~D001 F003~~ PK
44 Drums 19800 P
4 Dm 1200 P
" same as

(4) 6/26/97 #1138608
Solvent 21 Dm 10,500 P
Bugs 6 Dm 1,200 P

(96)

(5) 10/17/96 ~~#7256608~~ pk
843118
37 DM (Sol.) 2035 G
3 DM (Bug) 165 G

(6) 5/1/96 #816001
28 DM 1540 G
3 Dm 165 G

Manifest 95

— 2/1/95 729853
10 DM 5506
2 DM 110 G

4/25/95 WI 0492611
— 6 DM 330 G F003

— 4/20/95 AR 753257
32 DM 1760 G
2 110 G

— 7/27/95 AR 76643

36 DM 1980 G
3 DM 165 G

— 11/29/95 AR 796337

32 DM 1760 G
2 DM 110 G

Site tour
RM warehouse (North)
return stored drum

spill kits locked + spill
team has keys.

- spill/ER procedures
posted. + Evac route

pho 1 spill Kit. N. Warehouse

open drum sat area 2nd floor
- on Bath floors
- floor

pho 2 - 6 DM HW
2 DM Filter HW
one no date

ph 3 overview of sat area

ph 4 - downstairs sat
area

wipes in lab need marking

Training records - not much here.

Bob C is the trainer but doesn't have any documentation that he has training.

- faculty train all staff similarly. outline provided

- BC no job description for training

- sign in sheet that Bob gave is _____

PIERCE & STEVENS CORP.
Division of Sovereign Specialty Chemicals, L.P.

Robert R. Cervenka
Production Coordinator

245 East Kehoe Blvd.
Carol Stream, IL 60188
Phone: 630.653.3800
Fax: 630.510.0927
Voice Mail: 800.777.7099 (#724)
Customer Service: 800.592.1998

Committed to Quality, Service and Innovation...Since 1884

Jim Drzewiecki Buffalo Corp. office.
Bob cop. H+S

Summary

— Cont plan — 265.52 d,e
- description of equip
- evacuation maps

copy — arrangement with locale
(SARA report)

— Work analysis — OK
— Manifest — OK

— contain. Sat — open bunge
- 90 days area No date
- > 90 storage?

— Training records.
- Training no formal training
- no job description
- no record that staff has been trained
- have record for spill team grps.

send copy of report Kevin Johnston
Mgr. H+S+EN Affairs
Buffalo.

COMPLAINANT'S EXHIBIT 3

PIERCE & STEVENS CORP.
Division of Sovereign Specialty Chemicals, Inc.

January 19, 1998

Environmental Protection Agency
Mr. Pat Kuefler
Mail Code: DRE-9J
77 West Jackson Boulevard
Chicago, IL 60606

Dear Mr. Kuefler:

As a result of the Federal EPA RCRA Inspection at Pierce & Stevens in Carol Stream, Illinois, the following items have been addressed:

Update of the contingency plan:

The plan has been updated to reflect the change in ownership and the current members of Carol Stream, Buffalo management and the Carol Stream Spill Team. The emergency telephone numbers for contractors that can provide emergency response to spills relating to over the road and site specific have been addressed. The Changes made are in place and the revised plan has been distributed to the appropriate personnel and location. A copy has been included for your information.

In response to shipping of hazardous waste, the guidelines are that no generated waste will be accumulated and held for a period greater than 90 days. We adhere to this practice. However, due to the variation in time an actual waste is generated, our accumulation of waste to be shipped may not occur within a 90 day cycle.

The Carol Stream facility has a Recycle Waste Process and team that continually monitors and recycles wash/waste solvents, raw materials, rejected items and returned or obsolete finished goods back into our production batches. With this recycle process, waste that can be created is only sporadic and would result in hazardous waste shipments at varying dates; not necessarily beginning every 90 days. All accumulated waste will be dated and not exceed the 90 day accumulation period.

245 EAST KEHOE BOULEVARD • CAROL STREAM, ILLINOIS 60188 • (630) 653-3800 • FAX (630) 510-0927

Once the scrap or waste is generated, the accumulation time period begins. The waste is labeled, dated and shipped within the 90 day period.

Attachments to his letter will include items 1 – 4.

1. A predictable spill response operation

2. Emergency equipment and capabilities

3. Map of each posted evacuation route

4. Cover pages for correspondence of SARA 312 transmissions to the State, Local Fire Department and Local Emergency Planning Committee, verifying our communications with each organization. Included are statements to the routine visits by the Carol Stream Fire Department and activities involving the Occupational Medicine medical group.

5. HAZWOPER Training: Training was provided in March of 1993 and the plan is to provide annual refresher training. Our most recent annual refresher training was March of 1997.

   The prior annual training records that could not be located in Carol Stream the day of inspection have been found, stored in Buffalo, and will be transferred to Carol Stream.

6. On-site RCRA Training: RCRA Training Program 40CFR265.16 has been provided for Robert Cervenka, Jeff Friedman and Sam Mauldin.

If you have any questions or comments regarding these matters, please contact me.

Yours truly, Sam H Mauldin

PIERCE & STEVENS, CORP.

Sam H. Mauldin,
Plant Manager

SHM:sld

IX. EMERGENCY PROCEDURES

A. SPILL RESPONSE

Upon discovering an incident, you must:

Approach Cautiously - Resist the urge to rush in, you can not help others or attempt to contain the spill until you know what you are facing.

Identify the Hazard - Container labels, product numbers and MSDSs are your information sources.

Secure the Scene - Shut down all potential ignition sources i.e. mixers, fork trucks, pumps, etc. Open windows and doors if possible to ventilate the area. Without entering the immediate hazard area, do what you can to isolate the area and assure the safety of other employees, the environment and equipment.

Obtain Help - Inform the operator via telephone to announce the following details:

1. The type or name of spilled substance.
2. The location of the spill.
3. The quantity of spilled substance and other important details.

If an employee needs emergency medical assistance, call 911. Give the operator a brief description of the scene and describe the condition of the employee. If an employee needs first aid assistance, call the First Aid Team, announce the location of the victim and describe the condition of the employee and their environment.

In all cases, the incident must be reported to management. Refer to the MSDS file located in the department and the emergency response guidebook located in Safety/Environmental Office – Office #139.

Site Entry - Enter the area wearing the proper personal protection equipment (PPE) based upon exposure levels. If exposure levels or substances are unknown, self-contained breathing apparatus should be worn. Exposure levels of known substances can be determined by the use of a monitoring device such as dragger detector tubes. Use of proper PPE is mandatory.

Containment and Clean-up - Wearing proper PPE, begin containment and clean-up operations utilizing available equipment located on the north wall of the lower finished goods warehouse and the south wall of the upper raw materials warehouse..

Disposal - Dispose of all spent absorbents, PPE, equipment, etc. in accordance with applicable regulations. Follow the internal Waste Program for guidance on proper storage, labeling, etc.

HOW TO REPORT A RELEASE OF ANY HAZARDOUS OR EXTREMLY HAZARDOUS SUBSTANCE INTO THE ENVIRONMENT

Emergency Organizational Control Committee *(Notify in this order)*

1. Plant Manager – Sam Mauldin
   Phone – Business: 653-3800 ext 230 Home: (773) 743-4523

2. Production Team Leader – Robert Cervenka
   Phone – Business: 653-3800 ext 220 Home: (630) 858-4956

3. Production Team Leader – Helen Twomey
   Phone – Business: 653-3800 ext 221 Home: (815) 485-3507

4. Health, Safety & Environmental Coordinator – Jim Drzewiecki, Jr.
   Phone – Business: (716) 856-4941 ext 206 Home: (716) 683-8263

5. Manager, Safety, Health & Environmental Affairs – Kevin W. Johnston
   Phone – Business: (716) 856-4941 ext 288 Home: (716) 689-3195

6. Vice President of Manufacturing – Paul Gavlinski
   Phone – Business (716) 856-4910 ext 347 Home: (716) 774-2765

Federal law requires that a release/spill above or equal to the reportable quantity (RQ) of a hazardous substance into the environment must immediately be reported to the National Response Center by calling (800) 424-8802. The owner/operator must also immediately notify the Illinois Environmental Protection Agency by calling (800) 682-7925. Verbal notification must be made immediately. Written notification must be provided as soon as practical after a release. Release notification requirements do not apply to a release which results in exposure to persons solely within the aboundaries of the facility. See Section V. for all state and local emergency response phone numbers and/or hotlines.

Verbal notification must include:

1. Company name, address, phone, and caller's name
2. Chemical name (if a mixture, list all hazardous ingredients)
3. Nature of release:
   a. solid _____ liquid _____ vapor
   b. time of release
   c. duration of release
   d. location of release
4. Hazardous material:
   Health, Skin, Respiratory, Flammability, Reactivity, Other _____
5. Current Status:
   a. Weather conditions
   b. Containment/clean up operations underway

c. Evacuation plans

6. List agencies called and time.

A written report describing the synopsis of the events and actions should be submitted to Safety management. Additional reports to the federal, state and local agencies will follow and will be directed with assistance of the Safety Department.

NOTE: Immediate reactions to situations involving hazardous substances or conditions can be extremely dangerous if proper procedures are not followed and if proper PPE is not worn.

Depending on conditions, evacuation of the area or the entire building may be necessary. If necessary, follow the posted evacuation routes and procedures.

Spill Team Members	Home Phone Numbers
Jeff Friedman	(630) 871-2979
Robert Cervenka	(630) 858-4956
Mark Van Dyke	(630) 264-0102
James Cobb	(815) 886-0288
Sam Mauldin	(773) 743-4523
Joe Padula	(630) 510-0764
Mike Chandler	(815) 895-8045
Phil Sala	(630) 293-9251

Sam Mauldin and Robert Cervenka will act as the on-site incident commanders.

P&S 24 Hour Emergency Phone Number – (716) 856-4910

Local Police	668-2167 or 911
Local Fire	668-4836 or 911
Hospitals	682-1600 (Central DuPage Hospital) 545-8000 (Glenoaks Hospital)

PRE-RELEASE PLANNING

The major areas of concern for a chemical spill at the facility is the small ditch that runs across the street to the west. The ditch does lead to a navigable or flowing body of water as it discharges to the DuPage River. The second area of concern would be a hazardous substance finding its way into the storm sewer through a manhole located at our Bulk unloading area. For these reasons, our bulk storage tank area is diked. The tank truck unloading area, storm sewer has a valve to close while unloading Bulk Solvents. The hazardous and non-hazardous waste area is located inside.

The manufacturing areas are not contained, however, spills in these areas would be relatively small and provisions have been made to help prevent runoff from escaping the building. Emergency spill containment equipment is in place at strategic locations throughout the facility. Available equipment is located on the north wall of the lower finished goods warehouse and the south wall of the upper raw materials warehouse.

COUNTER MEASURES

In the event of a hazardous material spill, the appropriate management and emergency will be notified. A decision will then be made as to (a) the needed for evacuation, (b) the need for the Spill Team, (c) the need to call in Local Emergency Planning Committee and State Emergency Response Commission or outside contractor.

The first job of the Spill Team/Emergency Coordinator is to determine the nature of the spill, e.g. flammable material, toxic material, non-hazardous material, etc. Proper protective equipment can then be selected. Proper protective gear is available for handling all materials stored on-site.

Once assessment of a spill has been made, if safe to do so, the internal Spill Team will proceed to contain the spill, particularly to prevent the run of the material outdoors or off site into the ground or ditch. At the same time, efforts to stop the leak, if not ongoing, will begin. Absorbent booms and/or oil dry are available for containment.

ATTACHMENT #2

PIERCE & STEVENS CORP. – CAROL STREAM, IL

MAIN SPILL CART EQUIPMENT LIST

Personal Protective Equipment (PPE)

2	Tyvek Suits
2	3M – Half Mask Respirators
2 pair	Butyl Rubber Gloves
2 pair	Cotton Gloves
2	3M – Fullface Respirators
2	Ranger – Positive Pressure, Self Contained Breathing Apparatus (SCBA)

Tools

1	Berylliam Scraper
3 rolls	Barricade Tape
9	Non-Sparking Scoop Shovels
2	Non-Sparking Squeegees

Equipment & Cleanup Supplies

3	Caution Signs
1 bag	55# - sodium perborate tetrahydrate
2 bags	Absorbent Dikes
1 box	Absorbent Rags

Miscellaneous

1	P&S HAZCOM Policy

SPILL DRILLS & TRAINING

In addition to annual Spill Team refresher training, two mock spill drills are conducted annually. The drills allow the Spill Team to practice their skills, don PPE, handle specialized equipment and work through varied release scenarios. Every spill drill is critiqued by Plant Management so that positive aspects of the response and any deficiencies can be discussed. Corrective action is taken and retraining conducted as necessary.

GENERAL OUTLINE OF SPILL TEAM TRAINING

Internal Spill Reporting Requirements
External Reporting Requirements
Reportable Quantities (RQ's)
Classification of Hazardous Materials
Definitions
Hazards of Chemical Incidents
Static Electricity / Bonding & Grounding
Hazardous Wastes
Packaging Requirements and Salvage Containers
Potential for Fire, Exposure, etc.
DOT Emergency Response Guidebook
Respiratory Protective Equipment
Selection of Proper Respiratory Protective Equipment
Personal Protective Equipment (PPE)
Selection of Proper PPE, levels of PPE, etc.
Notification Procedures
Maintenance and Inspection of PPE
Cleanup Techniques
Work Zones
Personnel, Facility and Equipment Cleaning and Decontamination Procedures
Incident Control
Evacuation Procedures
Emergency Medical Plan
Emergency Exposure Plan
Physical Examinations
Hazard Identification
Monitoring Equipment

Attachment #3

1st FLOOR EMERGENCY EXITS

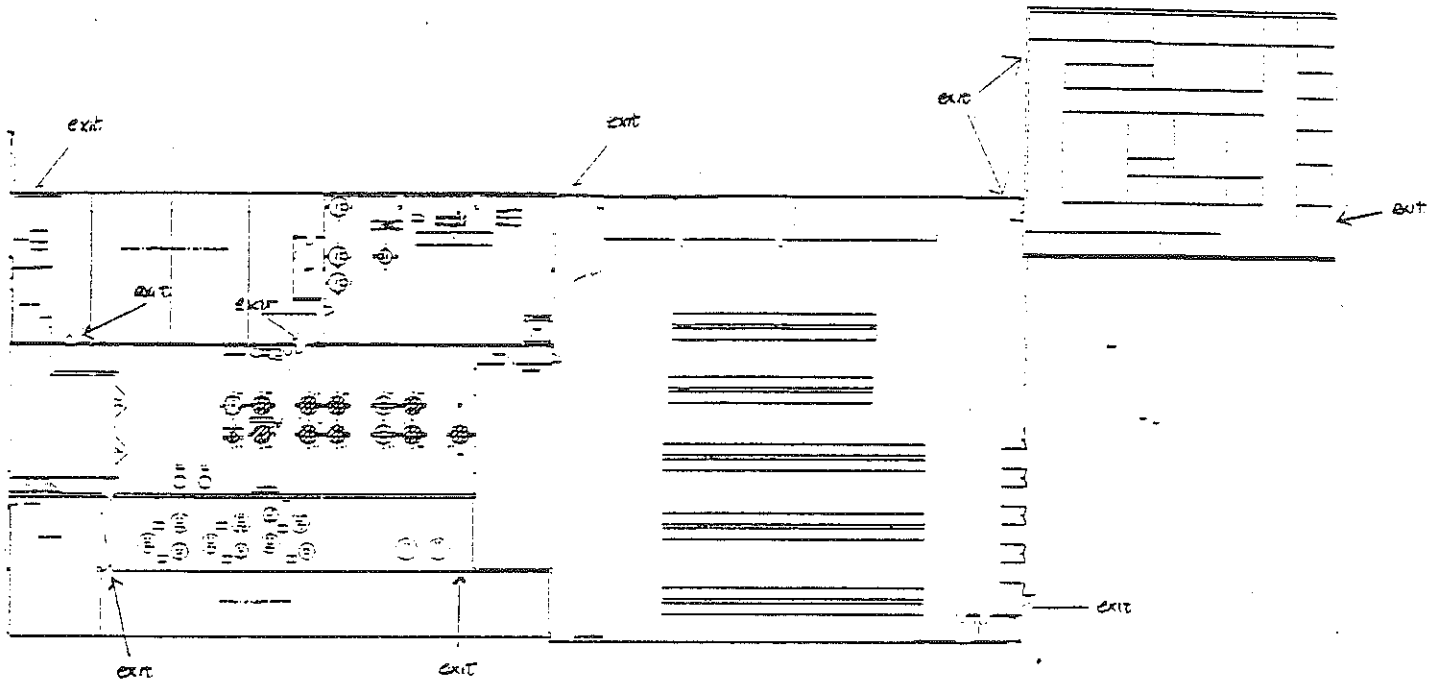

2nd FLOOR EMERGENCY EXITS

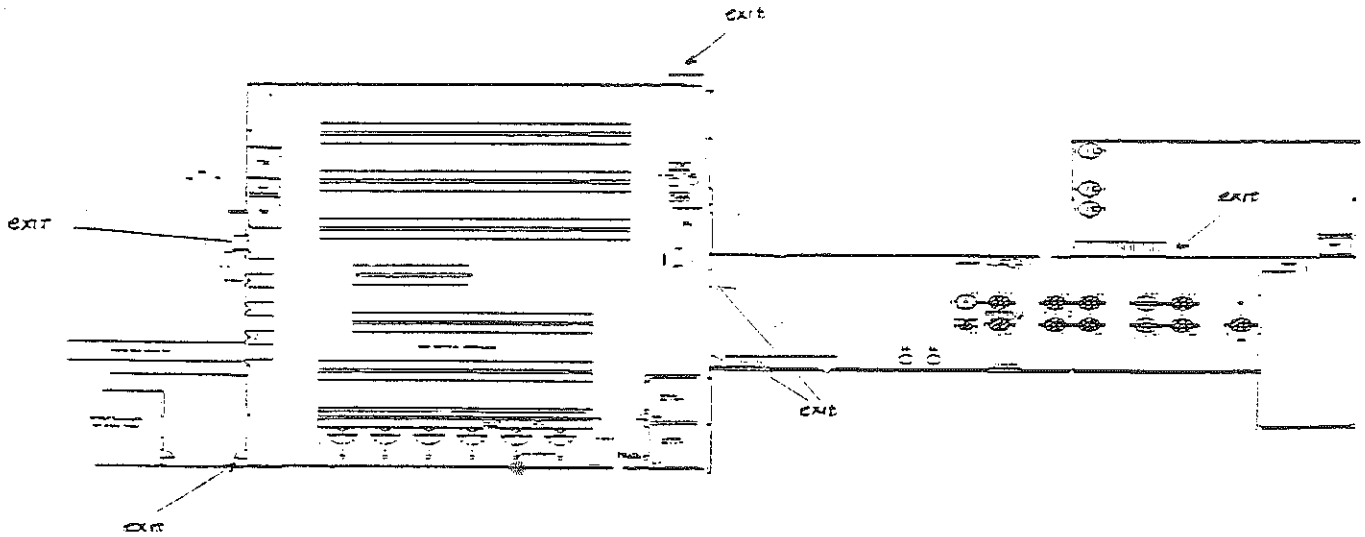

ATTACHMENT #4

The OMNI Group and Dr. Williamson-Link have routinely provided care and physicals for employees at this facility and are familiar with the processes, chemicals, physical requirements, procedures and policies.

The Carol Stream Fire Department routinely visits the Carol Stream facility twice each year.

Attached: SARA 312 correspondence

PIERCE & STEVENS CORP.

Division of Sovereign Specialty Chemicals, L.P.

February 26th. 1997

Du Page County O.E.M
136 N. County Farm Rd.
Wheaton, Il. 60187

Dear Sir/Madam:

Enclosed please find our 1996 SARA 312 (TIER 1) report for our facility named therein. Please feel free to contact me at (630)653-3800 in the event you need additional information, or assistance.

Sincerely,
PIERCE & STEVENS CORPORATION

Robert Cervenka
Production & Regulatory Coordinator

enc.
cc K.Johnston

PIERCE & STEVENS CORP.

Division of Sovereign Specialty Chemicals, L.P.

February 26th, 1997

Carol Stream Fire Protection District
P.O. Box 88717
500 N. Kuhn Rd.
Carol Stream, Il. 60188

Dear Sir/Madam:

Enclosed please find our 1996 SARA 312 (TIER 1) report for our facility named therein. Please feel free to contact me at (630)653-3800 in the event you need additional information, or assistance.

Sincerely,
PIERCE & STEVENS CORPORATION

Robert Cervenka
Production & Regulatory Coordinator

enc.
cc K.Johnston

PIERCE & STEVENS CORP.

Division of Sovereign Specialty Chemicals, L.P.

February 26th, 1997

Illinois O.E.M
110 E. Adams
Springfield, Il. 62706

Dear Sir/Madam:

Enclosed please find our 1996 SARA 312 (TIER 1) report for our facility named therein. Please feel free to contact me at (630)653-3800 in the event you need additional information, or assistance.

Sincerely,
PIERCE & STEVENS CORPORATION

Robert Cervenka
Production & Regulatory Coordinator

enc.
cc K.Johnston

PIERCE & STEVENS CORP.

PROCESS SAFETY MANAGEMENT

Emergency Planning & Response

Pierce & Stevens Corp. has developed site specific written emergency action plans so that we can effectively deal with emergencies in a timely, precise and proficient manner.

Our contingency plans have been developed and can be implemented so as to prevent and mitigate damages in the event of emergency. The plans are written so that we may eliminated or reduce injuries due to incidents we reasonably expect could occur at our facilities. The emergency plans comply with the requirements of 29CFR 1910.38(a).

Our contingency plans consist of the following information:

1. Description of Industrial Activity
2. Organization Structure
3. Emergency Control Committee
4. General Site Information
5. Emergency Response Procedures
    a. Fire & Explosion
    b. Release & Spill
6. Material & Waste Inventory
7. Security & Alarm Systems
8. External Factors
9. Emergency Procedures
    a. First Aid & Medical Emergencies
    b. Fire & Explosion
    c. Spill Response
10. Emergency Evacuation Procedures
11. Housekeeping & Inspection Program
12. Incompatible Substances and Wastes
13. Isocyanate Handling
14. Training Program

Copies of our plans are available to all employees. They are stored on our computer network system, with backup paper copies within the office of Plant Management and Health, Safety & Environmental Affairs Department. Copies of our contingency plans are also kept at homes of members of management for reference during off hours.

The plans were developed with the assistance of the Health, Safety & Environmental Affairs Department and are updated and redistributed by the Environmental Coordinator/Site Safety Coordinator.

GENERAL CONTINGENCY PLANS

(INCLUDING)

PREPAREDNESS, PREVENTION, AND CONTINGENCY PLANS (PPE)
AND
SPILL PREVENTION/RESPONSE PLAN (SPR)

PIERCE & STEVENS CORP.
245 EAST KEHOE BLVD.
CAROL STREAM, IL 60188

I.	GENERAL DESCRIPTION OF INDUSTRIAL ACTIVITY	pg. 2
II.	ORGANIZATIONAL STRUCTURE	pg. 3
III.	EMERGENCY CONTROL COMMITTEE	pg. 4-5
IV.	GENERAL INFORMATION	pg. 6-7
V.	EMERGENCY RESPONSE PROCEDURES	pg. 8
VI.	MATERIAL AND WASTE INVENTORY	pg. 9
VII.	SECURITY AND ALARM SYSTEMS	pg. 9
VIII.	EXTERNAL FACTORS	pg. 9
IX.	EMERGENCY PROCEDURES	pg. 10-20
X.	HOUSEKEEPING AND INSPECTION PROGRAM	pg. 21
XI.	INCOMPATIBLE SUBSTANCES AND WASTES	pg. 22-25
XII.	EMERGENCY CALL LIST	pg. 26
XIII.	TRAINING PROGRAM	pg. 27
XIV.	DOWNSTREAM NOTIFICATION	pg. 28
XV.	MSDS FOR ALL HAZARDOUS SUBSTANCES	pg. 29
XVI.	EMERGENCY EXITS	pg. 30

Rev. 1/98

GENERAL DESCRIPTION OF INDUSTRIAL ACTIVITY

Pierce & Stevens Corp. is a division of Sovereign Specialty Chemicals, Inc. Pierce & Stevens Corp., founded in 1886, is headquartered in Buffalo, New York. Pierce & Stevens became a division of Sovereign Specialty Chemicals, Inc. in August of 1996. The Carol Stream facility (formerly, Pyroxlin Products) was purchased by Pierce & Stevens in 1967.

Pierce & Stevens Corp., at their Carol Stream, IL facility, manufactures adhesives, coatings, low density fillers and compounding bases. Examples include blister package adhesives, lacquers, UV curable coatings, pressure sensitive adhesives, staple cements, hot melt adhesives, and Dualite ® products. The facility produces approximately 2,000,000 gallons of these products annually. The work force is typically composed of 20 production workers and 10 office, sales, laboratory and administrative/supervisory personnel.

The production of finished goods involves mixing and blending of raw materials in closed vessels, at both ambient and elevated temperatures. Mixing takes place in stainless and carbon steel mixers, ranging from 200 to 2,000 gallons in size.

Materials are processed for a sufficient time to dissolve and uniformly blend all ingredients. Cycle time varies from 3 to 14 hours depending on batch size and processing complexity. After testing for conformance to specifications, the finished goods are packaged in portable bulk tanks, drums, bags, cartons, etc.

Another manufacturing process involves the use of polymeric microspheres and inerts such as calcium carbonate. The microspheres are coated with the inert material and then heated to cause expansion into the finished product form (see Dualite ® above). This product is a lightweight filler which it is added.

All mixers that utilize organic solvents discharge through a condenser to the atmosphere. Other emissions occur when volatiles escape through the mixer hatchways and exit via ceiling and wall fans. A large portion of manufacturing results in the production of low V.O.C. products.

Most manufacturing processes utilize a broad array of polymers, elastomers, resins, waxes, solvents, etc. The majority of raw materials are stored in bulk underground tanks in 55 gallon drums and in 50 lb. bags.

There are no by-product streams generated by the facility. Process wastes are generated sporadically and consist of solvents used for housekeeping, spent filters, coagulum and returned or obsolete finished goods which cannot be worked-off in new production. Much of the waste at the facility is flammable-characteristic of ignitability (D001); some is characteristic of methyl ethyl ketone toxicity (D035). Other waste contains spent solvents listed as F003 and F005. This material is collected in drums and sent to a permitted solvent recovery Corp., incinerator, or fuels blender. All waste is clearly marked as required.

II. ORGANIZATIONAL STRUCTURE

Pierce & Stevens Corp. Division of Sovereign Specialty Chemicals, Inc.

A. President:
John H. Edholm
710 Ohio Street, Buffalo, NY 14240
Phone: Business: (716) 856-4910 (ext. 254)
Home: (716) 695-2755

B. Vice President, Operations:
Paul Gavlinski
710 Ohio Street, Buffalo, NY 14240
Phone: Business: (716) 836-4910
Home: (716) 774-2765 (NY)
Home: (616) 723-2173 (MI)

C. Operations Manager, Buffalo Facility:
Mike Braunscheidel
710 Ohio Street, Buffalo, NY 14240
Phone: Business: (716) 856-4910 (ext. 284)
Home: (716) 648-0346

D. Operations Manager, Carol Stream Facility:
Sam Mauldin
245 East Kehoe Boulevard, Carol Stream, IL 60188
Phone: Business: (630) 653-3800
Home: (773) 743-4523

E. Environmental & Safety Coordinator, Carol Stream Facility:
Robert Cervenka
245 East Kehoe Boulevard, Carol Stream, IL 60188
Phone: Business (630) 653-3800
Home: (630) 858-4956

F. Health, Safety & Environmental Affairs Director:
Kevin W. Johnston
710 Ohio Street, Buffalo, NY 14240
Phone: Business: (716) 856-4910 (ext. 288)
Home: (716) 689-3195
Pager: (800) 759-8888 PIN 1825546

G. Regulator/Safety Coordinator
Jim Drzewiecki, Jr.
710 Ohio Street, Buffalo, NY 14240
Phone: Business: (716) 856-4910 (ext. 206)
Home: (716) 683-8263
Pager: (800) 257-0165

III. EMERGENCY CONTROL COMMITTEE

A. Organization {Notify in order as listed below}

1. Facility Manager - Sam Mauldin
   Business: (630) 653-3800
   Home: (773) 743-4523

2. Environmental & Safety Coordinator - Robert Cervenka
   Business: (630) 653-3800
   Home: (630) 858-4956

3. Health, Safety & Environmental Director – Kevin Johnston
   Business: (716) 856-4941 (ext. 288)
   Home: (716) 689-3195
   Pager: (800) 988-7074 PIN 1825546

4. Regulatory/Safety Coordinator - Jim Drzewiecki, Jr.
   Business: (716) 856-4941 (ext. 206)
   Home: (716) 683-8263
   Pager: (800) 988-7075

5. Vice President, Operations – Paul Gavlinski
   Business: (716) 856-4910 (ext. 247)
   FAX: (716) 856-8611
   Home: (716) 774-2765

6. Pierce & Stevens Corp. - Buffalo/24 Hour Emergency
   (716) 856-4910

7. Chemtel (800) 255-3924

III. EMERGENCY CONTROL COMMITTEE (Continued)

B. Responsibility

1. Report to "Emergency Control Agency" in case of fire, explosion, bomb threat, major spill or disaster.

2. Provide free, unobstructed access to emergency scene.

3. Communicate with utilities.

4. Report the emergency details (cause, damage, injuries, fatalities and effect on operations) verbally to Buffalo management as soon as possible.

5. Post written report on the emergency to Buffalo management and other required agencies with in 48 hrs. after the emergency has ceased.

C. Emergency Brigades

Because of the size of our operations, there is no fire fighting group.

Spills will be evaluated and controlled by facility management and supervisory personnel, and through consultation with regulatory management at Pierce & Stevens' corporate offices in Buffalo, NY.

Depending upon the situation, the In-House Hazmat Spill Team may provide cleanup services.

Carol Stream Spill Team

Jeff Friedman	(630) 871-2979
Mark Van Dyke	(630) 264-0102 - Pager (326) 58-9521
Martin Olsen	(630) 690-0430
Joe Padula	(630) 510-0764
James Cobb	(815) 886-0288
Phil Sala	(630) 293-9251
Mike Chandler	(815) 895-8045 – Pager (630) 486-8022

IV. GENERAL INFORMATION

A. PPE & SPR Contingency Plans

Pierce & Stevens' Carol Stream facility has in effect a PPE & SPR plan in case an emergency situation arises within the facility at 245 E. Kehoe, Carol Stream, DuPage County, Illinois. Pierce & Stevens Corp. is a division of Sovereign Specialty Chemicals. Inc.. 225 West Washington Street. Suite 2200. Chicago. IL 60606 – Phone: (312) 419-7299 – Fax: (312) 419-7145.

Kevin Johnston is corporate Health, Safety & Environmental Affairs Director. Paul Gavlinski is Vice President. Operations. Sam Mauldin, Plant Manager at Carol Stream, is the local contact for DER, EPA, emergency and other state, county and community agencies. Pierce & Stevens' corporate office are located at 710 Ohio St., P.O. Box 1092. Buffalo, NY 14240. Phone – (716) 856-4910.

B. Emergency Coordinators

In the event that an emergency situation develops, the manager (listed on page 2 f the PPE & SPR plan will be the first individual contacted. The manager has the authority to commit total facility and emergency equipment and personnel to an emergency situation. Pages 2 & # list all current telephone numbers of management and emergency control groups.

C. Implementation of the PPE & SPR Plan

The PPE & SPR plan will be activated in any emergency situation which could threaten human life. health. the environment. plant. lab. and office facilities. Pages 6 & 11 list all telephone numbers of emergency support groups such as fire department. ambulance, etc. In following discussions. the terms, "preparedness, prevention and contingency plans" and "spill prevention response plan" will be considered the same under General Contingency Plan. The following situations would call for implementation of the contingency plan.

1. Fire and/or Explosion

a. Any portable or large mixing vessel within which there has been an explosion or fire.

b. Any outbreak of fire in the laboratory of office areas.

c. Any outbreak of fire in the raw material or finished goods storage areas.

d. Any outbreak of fire in an outside storage area, whether located in the raw material or hazardous waste area.

e. Any outbreak of fire on plant grounds which would spread to storage areas. buildings or adjoining properties.

f. And otherwise, anywhere within the facility if an explosion or fire outbreak occurs.

2. Spills or Material Releases

a. If any bulk storage tank ruptures causing flammable liquids to spread and create a potential for fire due to solvent vapors.

b. If a spill occurs which would cause ground, water, or air contamination by a release equal to or above the reportable quantity for any hazardous or extremely hazardous substance. And otherwise, any spill which would cause land or water contamination.

3. Serious Injury or Accident

a. Any caller threatening immediate destruction, damage or act of violence to the facility or its occupants.

D. Pre-release Planning

While the manufacturing floors and shipping/receiving docks are not contained, spills in these areas are expected to be small. Emergency spill containment equipment is in place for use in preventing any such spill from reaching the outside.

F. Contractors:

[Companies that provide emergency spill services.]

1. Primary: OHM Corp. (419) 423-4939

2. Alternate: GZA Geo Environmental of New York (716) 685-2300

[Companies that respond within 48 hours.]

4. Primary: DuPage County Emergency Response (630) 682-7925

5. Alternate: Carol Stream Fire Department – Phone 911

V. EMERGENCY RESPONSE PROCEDURES

A. Notification

If any emergency situation exists (described above). all plant employees, fire department, police department and/or other associate agencies would be notified immediately. Appropriate health and environmental representatives and federal EPA personnel would also be contacted once the emergency situation has been defined. (Refer to page 2 for organization emergency telephone numbers).

B. Identification of Hazardous Wastes

The Plant Manager, Plant Safety Coord.. or Production Coord. would evaluate any potential emergency related to the outbreak of fire, explosion, spillage or release to the environment and adjoining properties. All waste at the facility is not compatible, i.e., UV waste with copper or nitrocellulose with caustics. Primary concerns would be:

a. Degree of fire outbreak.
b. Volume of spill
c. Potential hazard to health and environment
d. Potential magnitude of emergency
e. Potential hazard to community and adjoining properties.

(NOTE: See XI for description of incompatible substances.)

C. Coordination Agreements with Local Departments and Agencies

a. Police Department

Police response can be solicited by calling 911 or 668-2161. The Carol Stream Police will respond to any emergency situation. The security system is centrally monitored to alert supervision and the police department upon entry.

b. Fire Department

The Carol Stream Fire Protection District can be contacted by calling 911 or 665-2171. The sprinkler system is monitored to notify the fire department in the event of a pressure drop as sprinkler heads open in the event of fire.

c. Local Emergency Response Team

The local Emergency Management Agency can be contacted by calling (630) 682-7925. They are equipped to control and coordinate a situation involving a release or emergency beyond the control of our facility's emergency response capability.

d. Hospital

GlenOaks Hospital (630) 858-9741. or Central DuPage Emergency (630) 682-1600. can be reached at the indicated numbers.

e. Clean-Up Response Agencies

See Attachment for References.

f. Ambulance

An Ambulance can be summoned to our facility by calling 911.

VI. MATERIAL AND WASTE INVENTORY

Attached to this plan is a list of all raw material and finished products used or stored at the facility which have the potential for endangering public health and safety-through spills or other accidental releases. [See attached plot plan for locations.] Each of these raw materials and finished goods items is documented on a Material Safety Data Sheet (MSDS). As part of this plan, copies of such documents will be kept available in several locations within the facility, in keysafes accessible by local emergency agencies and in the files of P&S's central offices in Buffalo, NY. The entrance to the plant will be posted with the names and telephone numbers of those having or knowing the location of this information.

Further, the maintenance foreman (Mark Van Dyke) and laboratory supervisory personnel (Ted Buenz) will be responsible for knowing the location of the on-site plan, and for being able to direct emergency personnel to it as required.

VII. SECURITY AND ALARM SYSTEMS

All buildings are equipped with automatic sprinkler systems. The office/laboratory section of the facility is equipped with automatic alarms to signal unauthorized entry. Both sprinkler and security systems are central station monitored to notify the fire department in the event of sprinkler flow and police and supervisory personnel in the case of unauthorized entry.

The security system is tested daily when activated for plant closing. The fire and building alarm systems are tested monthly.

All visitors must sign-in at the office and only those who are accompanied by Pierce & Steven's personnel are allowed access to areas other than the lobby.

All areas are covered by a plant wide paging system which can be accessed from any telephone.

VIII. EXTERNAL FACTORS

While unusual external conditions such as power outages, weather emergencies, etc., could stop the operation of the plant, they would not necessarily increase the chance for events detrimental to the environment.

1. Any loss of power will be evaluated by the appropriate plant supervisory personnel.

2. Utilities will be contacted to determine the length of service interruption. A decision will then be made by the Plant Mgr. or his designate as to whether the work force should be retained or released.

IX. EMERGENCY PROCEDURES

A. SPILL RESPONSE

Upon discovering an incident, you must:

Approach Cautiously - Resist the urge to rush in. you can not help others or attempt to contain the spill until you know what you are facing.

Identify the Hazard - Container labels. product numbers and MSDSs are your information sources.

Secure the Scene - Shut down all potential ignition sources i.e. mixers, fork trucks, pumps, etc. Open windows and doors if possible to ventilate the area. Without entering the immediate hazard area, do what you can to isolate the area and assure the safety of other employees, the environment and equipment.

Obtain Help - Inform the operator via telephone to announce the following details:

1. The type or name of spilled substance.
2. The location of the spill.
3. The quantity of spilled substance and other important details.

If an employee needs emergency medical assistance, call 911. Give the operator a brief description of the scene and describe the condition of the employee. If an employee needs first aid assistance. call the First Aid Team, announce the location of the victim and describe the condition of the employee and their environment.

In all cases, the incident must be reported to management. Refer to the MSDS file located in the department and the emergency response guidebook located in Safety/Environmental Office – Office #139.

Site Entry - Enter the area wearing the proper personal protection equipment (PPE) based upon exposure levels. If exposure levels or substances are unknown, self-contained breathing apparatus should be worn. Exposure levels of known substances can be determined by the use of a monitoring device such as dragger detector tubes. Use of proper PPE is mandatory.

Containment and Clean-up - Wearing proper PPE, begin containment and clean-up operations utilizing available equipment located on the north wall of the lower finished goods warehouse and the south wall of the upper raw materials warehouse..

Disposal - Dispose of all spent absorbents, PPE, equipment, etc. in accordance with applicable regulations. Follow the internal Waste Program for guidance on proper storage, labeling, etc.

HOW TO REPORT A RELEASE OF ANY HAZARDOUS OR EXTREMLY HAZARDOUS SUBSTANCE INTO THE ENVIRONMENT

Emergency Organizational Control Committee *(Notify in this order)*

1. Plant Manager – Sam Mauldin
   Phone – Business: 653-3800 ext 230 Home: (773) 743-4523

2. Production Team Leader – Robert Cervenka
   Phone – Business: 653-3800 ext 220 Home: (630) 858-4956

3. Production Team Leader – Helen Twomey
   Phone – Business: 653-3800 ext 221 Home: (815) 485-3507

4. Health, Safety & Environmental Coordinator – Jim Drzewiecki, Jr.
   Phone – Business: (716) 856-4941 ext 206 Home: (716) 683-8263

5. Manager, Safety, Health & Environmental Affairs – Kevin W. Johnston
   Phone – Business: (716) 856-4941 ext 288 Home: (716) 689-3195

6. Vice President of Manufacturing – Paul Gavlinski
   Phone – Business (716) 856-4910 ext 347 Home: (716) 774-2765

Federal law requires that a release/spill above or equal to the reportable quantity (RQ) of a hazardous substance into the environment must immediately be reported to the National Response Center by calling (800) 424-8802. The owner/operator must also immediately notify the Illinois Environmental Protection Agency by calling (800) 682-7925. Verbal notification must be made immediately. Written notification must be provided as soon as practical after a release. Release notification requirements do not apply to a release which results in exposure to persons solely within the aboundaries of the facility. See Section V. for all state and local emergency response phone numbers and/or hotlines.

Verbal notification must include:

1. Company name, address, phone, and caller's name
2. Chemical name (if a mixture, list all hazardous ingredients)
3. Nature of release:
   a. solid _____ liquid _____ vapor
   b. time of release
   c. duration of release
   d. location of release
4. Hazardous material:
   Health, Skin, Respiratory, Flammability, Reactivity, Other _____
5. Current Status:
   a. Weather conditions
   b. Containment/clean up operations underway

B. TYPICAL SILL RESPONSE OPERATIONS FOR VARIOUS SCENARIOS.

TO REPORT A RELEASE ABOVE OR EQUAL TO THE REPORTABLE QUANTITY (RQ) OF ANY HAZARDOUS OR EXTREMELY HAZARDOUS SUBSTANCE INTO THE ENVIRONMENT

Organizational Emergency Control Committee *(notify in this order)*

1. Plant Manager: Sam Mauldin
   Phone: Business - (630) 653-3800, ext. 230, Home: (773) 743-4523

2. Safety Coordinator: Bob Cervenka
   Phone: Business - (630) 653-3800, ext. 248, Home: (630) 858-4956

3. Vice President, Manufacturing: Paul Gavlinski
   Phone: Business – (716) 856-4910, ext. 247, Home: (716) 774-2765

4. Regulatory/Safety Facilitator: Jim Drzewiecki, Jr.
   Phone: Business - (716) 856-4910, ext. 257, Home: (716) 683-8263

6. Health, Safety & Environmental Affairs: Kevin Johnston
   Phone: Business - (716) 873-6000, ext. 288, Home: (716) 689-3195

Pierce & Stevens 24 hour Emergency Phone Number - (716) 856-4910

Additional Emergency Response Phone Numbers:
Local Police - 911
Local Fire Department - 911
Hospital - 911

Federal law requires that a release above or equal to the reportable quantity (RQ) of a hazardous substance into the environment must immediately be reported to the **National Response Center** by calling **1-800-424-8802**. The owner/operator must also immediately notify the **State Emergency Response Commission** by calling **(217)782-7860** and the **Emergency Coordinator for the local Emergency Planning Committee** by calling **(708)682-7925**. Verbal notification must be made immediately. Written notification must be provided as soon as practicable after a release.

Release notification requirements do not apply to a release which results in exposure to persons solely within the boundaries of the facility.

Verbal notification must include:

1. Company name, address, phone # and caller's name.

2. Chemical name (if a mixture, list all hazardous ingredients)

3. Nature of the release:
   a) solid_____ liquid_____ vapor_____
   b) estimates quantity
   c) time of release
   d) duration of the release
   e) location of release

4. Hazardous material: health_____ skin_____ respiratory_____
   flammability_____ reactivity_____ other_____.

5. Current status:
   a) weather condition
   b) containment/clean-up operations underway
   c) evacuation plans

6. List agencies called and time:

The Plant Manager and the Safety Coordinator must write a report describing the synopsis of events and actions and submit it to the Corporate Safety and Environmental Affairs Department with copies routed to Jim Drzewiecki and Paul Gavlinski. Additional reports to the federal, state and local agencies will follow.

NOTE: Immediate reactions to situations involving hazardous substances or conditions can be extremely dangerous if proper procedures are not followed and proper PPE is not worn.

Depending on conditions, evacuation of the area or the entire building may be necessary. If necessary, follow your posted evacuation routes and procedures.

INITIAL HAZARDOUS SUBSTANCE RELEASE REPORT

DIVISION: FACILITY OR LOCATION:

Date of Release: Time of Occurrence:

Location of Release: Area Covered:

Material(s) Released (include Corp. Code No.)

Volume Released:_____

CHECK ALL THAT APPLY

Release contained to:	If outside of bldg.:	Notification to:
_____ immediate area	_____ paved area	_____ Dept. Supervisor
_____ bldg., room/floor	_____ soil	_____ Plt. Manager
_____ bldg., rooms or	_____ Public waterway,	_____ Hazmat Team
_____ outside of bldg.	_____ ditch, creek, etc.	_____ SEAD
_____ off property	_____ public roadway	_____ Fire Dept.
_____ Other	_____ public land	_____ outside agencies
_____ sq. ft.	_____ Other(list below)	_____

Description of how release occurred:

Description of how release was stopped & contained:

Air monitoring results:

Description of how release was cleaned up:

Outside agencies notified:

Completed by: Date:

cc: Plant Manager, Safety Coordinator, SEAD, Other _____ _____

FOLLOW-UP HAZARDOUS SUBSTANCE RELEASE REPORT

DIVISION: FACILITY OR LOCATION:

DATE OF RELEASE: TIME OF OCCURRENCE:

How did the release occur? (Describe the events and conditions leading up to the release)

What was the immediate cause(s) of the release?

Recommendations to prevent recurrence? (Immediate and future)

What actions have been taken?

Additional correspondence to or from outside agencies? (list and describe)

Completed by: Date:

cc: Plant Manager, Safety Coordinator, SEAD. Other _____

"EMERGENCY RESPONSE TO HAZARDOUS SUBSTANCE RELEASES"

In accordance with 29 CFR 1910.120 paragraph (q), we are establishing a/an Emergency Response Plan at the Carol Stream facility. The primary elements of this plan are:

1. Emergency preplanning and coordination with outside authorities.

2. Personnel roles. Lines of authority, training, and communication.

3. Emergency recognition and prevention.

4. Safe distances and places of refuge.

5. Site security and control.

6. Evacuation routes and procedures.

7. Decontamination.

8. Emergency medical treatment and first aid.

9. Emergency alerting and response procedures.

10. Response critique and follow-up.

11. PPE and emergency equipment.

12. Ancillary emergency response organizations.

(Paragraph (q), section (2) 2-12 09 CFR 1910.120)

1. **Emergency Preplanning and Coordination with Outside Authorities.**
   - In dealing with section 1, we will institute the ICE acronym.
   I - Identify and isolate the hazard.
   C- Call for help and communicate (i.e. location, hazard, etc.)
   E- Evaluate, evacuate, and enact the preplan in-house, CSFD, EPA, & OSHA.

2. **Personnel Roles. Lines of Authority, Training, & Communication.**
Personnel Roles: Incident command of a/an in-house response will be S.H. Mauldin, R.R. Cervenka, or the senior foreman on shift; if an outside agency responds, their incident command will automatically supersede ours and we will assist them according to their authority structure.

Lines of Authority: All communications and operations will be coordinated through the incident command with no exceptions.

Training & Communication: R.R. Cervenka, T.R. Buenz, and S.H. Mauldin will be responsible for in-house training and communication with ancillary agencies. No employee who has not been trained in proper response procedures will be involved in the primary response team.

3. **EMERGENCY RECOGNITION AND PREVENTION**

   This section deals with overall awareness of a potential situation and the ability to identify and institute corrective measures before an emergency exists.

4. **SAFE DISTANCES AND PLACES OF REFUGE**

   Refer to the D.O.T. Emergency response Guide Book.

5. **SITE SECURITY AND CONTROL**

   This responsibility lies under the jurisdiction of the incident commander and his appointed safety officer.

6. **EVACUATION ROUTES AND PROCEDURES**

   See attached - this covers in-house procedures, if a public evacuation is deemed necessary this will be the responsibility of the incident commander.

7. **DECONTAMINATION**

   In-house - conducted by R.R. Cervenka, T.R. Buenz, S.H. Mauldin, or senior shift Foreman. Otherwise, governed or directed by appointed safety officer.

8. **EMERGENCY MEDICAL TREATMENT AND FIRST AID**

   Judged appropriate by R.R. Cervenka or the CSFD MICU Senior Paramedic.

9. **EMERGENCY ALERTING AND RESPONSE PROCEDURES**

   Refer to ICE for alerting. Response will consist of designated control personnel and trained employee response team.

10. **RESPONSE CRITIQUE AND FOLLOW-UP**

    This is the responsibility of the incident command, in conjunction with all involved personnel.

11. **P.P.E. AND EMERGENCY EQUIPMENT**

    In-house use, suitability and training will be determined by R.R. Cervenka, K.W. Johnston, J.F. Drzewiecki, Jr. Otherwise, determination and usage will be controlled by the incident commander and his appointed safety officer.

12. **ANCILLARY EMERGENCY RESPONSE ORGANIZATIONS**

    These will be at the discretion of the incident command or as dictated by law.

"EMERGENCY RESPONSE TO HAZARDOUS SUBSTANCE RELEASES"
PIERCE & STEVENS CAROL STREAM FACILITY, JANUARY 1998

I. INITIAL RESPONSE

A. I.C.E.

1. I: Identify and isolate the hazard area.
2. C: Call for help and communicate pertinent information.
3. E: Evacuate and enact the preplan.

B. EVALUATION, EVACUATION, AND ENACTMENT OF PREPLAN

1. Ted Buenz and H.E. Twomey will coordinate a head count and obtain pertinent MSDS's.

2. R.R. Cervenka, T.R. Buenz, S.H. Mauldin, or the senior trained employee will evaluate and then institute the appropriate plan of action.

3. Ancillary emergency response organizations will be contacted at this time of deemed necessary by incident command.

4. The in-house response team under the authority of the incident command will access the response carts and prepare for containment procedures.

5. The incident command and safety officer will oversee containment operations, clean up procedures, and decon. (*Note: If at any time the evolution becomes unsafe or deteriorates, it is the sole decision of the safety officer to terminate the response and evacuate the involved personnel.

6. Upon completion of the response, all personnel and equipment will be decontaminated, evacuated, and debriefed as needed.

B. RESPONSE CART CONTENTS

1. 2- push brooms
2. 2- squeegees
3. 1- polypropylene scoop shovel
4. 1- bag 23 kg. ab/adsorbent
5. 4- polyethylene Hazmat disposal bags
6. 12- ab/adsorbent pillows
7. 20- ab/adsorbent brooms
8. 2- full face respirators with amine and organic
9. 2- (1-m. 1.1g) Nomex response team coveralls
10. 2- Nomex hoods
11. 1- FFFP fire extinguisher - ATC foam
12. 2- Saranex coated Tyvek coveralls (1 lge., 1 Xlge)

D. IGNITION SOURCE CONTROL

1. Shut down any lift trucks
2. Cut off electrical service from remote supply rooms
3. Use only U.L. approved explosion proof lights, fans, etc.
4. Use only non-sparking tools
5. Inert any other possible sources of ignition
6. Avoid use of static generating materials

E. RESPONSE TEAM

1. Incident commander - Sam Mauldin
2. Safety Coordinator - Bob Cervenka
3. Trained employee's - J. Cobb, M. Chandler, J. Friedman, R. Karraker, P. Sala
4. Product proximity responders
   a. Nomex coveralls and hoods for identification
   b. Appropriate cartridge respirators if oxygen at 19.5 - 21.5%
   c. SABA with SCBA backup
   d. Gloves and approved safety shoes
   e. Operations will be conducted from the perimeters, NOT IN THE PRODUCT
   f. Operations will be teams of 2 @ 15 min. intervals
   g. Teams will know distances and avenues of egress from the hot zone, warm zone, and cold zone
   h. Will obey orders and directives from the incident and safety officer
   i. Will have an LFL/02 meter alarm in close proximity to them at all times
   j. Will be familiar with and trained in the usage of all equipment in the response cart
   k. Will always work in pairs with a safety/back up ready

F. CLEAN UP AND CRITIQUE

1. Determined of area and safety and suitability is the I.C. and S.O. responsibility.
2. The critique will be chaired by the I.C. and involves all response personnel.

G. TRAINING

1. Will be conducted on a regular basis with specific identification of qualified personnel.
2. Personnel not trained, or deemed unsuitable for primary response will operate as ancillary aides on an as needed basis (to operate in the cold zone only).
3. Training and continuing education will be documented and included in the permanent personnel files

H. OUTSIDE AGENCIES

1. Upon the arrival of outside agencies, they will be given I.C., responsibility and control of the total response.
2. All personnel will comply fully with any request made be an I.C.
3. Final jurisdiction will be in the hands of the I.C. at a response in regard to any decisions, actions, or use of ancillary agencies.

If you have any questions, please contact the author.

II. EMERGENCY PROCEDURES

A. FIRE AND/OR EXPLOSION - (first Shift)

1. Call the switchboard (unless the building alarm has sounded) and advise the operator of the specific location of the fire.
2. Switchboard operator - report information through out the paging system and immediately activate the building and agency notification alarm system. In the event of a system malfunction. phone the Carol Stream Fire Protection District (911 or 665-2171).
3. **If possible,** all equipment and boilers are to be shut down and mixer lids closed. **If possible,** Emulsion operator must shut off stem supply, defoamer, then mixer - in that order, conditions permitting.
4. If the fire is discovered in the incipient stage, use fire fighting equipment. If it is determined that the fire is beyond incipient stage (i.e., producing copious smoke, spread beyond a 10 square foot area, etc., immediately evacuate the building. **Do not take unnecessary risks!**
5. If evaluation is necessary. follow designated evacuation routes. All employees and visitors (i.e., contractors, repair/service representatives, salespeople, truck drivers, etc.) are to exit the building and assemble near the southeast corner of the parking lot.
6. A head count will be taken by H.E. Twomey, S. Thomason, or J. Hollendoner. All employees and visitors must be accounted for as either present or missing.
7. EVACUEES MUST REMAIN OUTSIDE UNTIL AN "ALL CLEAR" IS GIVEN BY AN AUTHORIZED AGENT OF THE CAROL STREAM FIRE PROTECTION DISTRICT.
8. In the event of missing person. try to pinpoint their last known location and possible avenue of egress. Give this information to the first arriving emergency response agency personnel. **DO NOT RE-ENTER THE BUILDING**
9. Jurisdiction of the facility will transfer to the acting chief of the responding agency. All employees will comply fully with their instructions.
10. S. Mauldin. R. Cervenka, T. Buenz, or the senior trained employee will act as Information liaison to the responding emergency agency.

**** Procedures for Night/Weekend Shift Personnel are Outlined Below.****

1. Immediately determine if the fire can be safely extinguished using fire extinguishers. If not·

2. Activate any of the fire alarm pull stations in the facility. In the event of a system malfunction call the Carol Stream Fire Protection Dist. (911 or 665-2171).

3. Immediately evacuate the building. **Do not take unnecessary risks!**

4. **If possible,** shut down boilers and other equipment. Assemble in the southeast corner of the parking lot for roll call.

5. Assist the responding emergency personnel if required - and then call (in order shown):
   1. Bob Cervenka (630) 858-4956
   2. Steve Thomason (630) 213-1602
   3. Ted Buenz (630)810-1325
   4. Sam Mauldin (773) 743-4523

B. MAJOR SPILL RELEASE TO THE ENVIRONMENT

See SPILL RESPONSE PLAN, which can be found in either of the two (2) Spill Response Kits.

C. BOMB THREAT

1. If received by an employee, all information included should be recorded as precisely as possible. The Plant Manager (Sam Mauldin) and Vice President, Paul Gavlinski, Pierce & Stevens Corp., Buffalo, NY, should be contacted immediately.

2. If caller threatens immediate destruction or violence, the plant should be evacuated through designated exit routes. Employees and visitors should congregate at the southeast corner of parking lot to be checked in for head count.

3. Call Carol Stream Police Department (911).

D. MAJOR POWER FAILURE

1. Any loss of power will be evaluated by the appropriate management or supervisory personnel.

2. See External Factors (pg. 9 of Contingency Plan).

E. SERIOUS INJURY OR ACCIDENT

Day Shift:

- Page via the building public access system, the Safety Coordinator or a Member of the First Aid Team.
- Safety Coordinator and/or the First Aid Team will designate someone to call 911.
- First Aid Team will administer treatment until ambulance arrives.

Night/Weekend Shift:

- Call 911 & enlist the assistance of a First Aid Team member, if available.
- Notify the Safety Coordinator, Plant Manager, or any Team Coordinator.
- DO NOT move the person. Try to keep him/her calm until help arrives.

X. HOUSEKEEPING AND INSPECTION PROGRAM

All manufacturing and processing areas are "aisle-marked" where appropriate to maintain orderly storage. clean-up and to allow unobstructed access.

At the beginning and end of each shift, the Department Foreman should perform a "walk through" to check aisle conditions. Once a week. the Plant Manager will formally check all areas for housekeeping.

All spills. regardless of size or material, will be cleaned up immediately before proceeding.

Before charging any mixer. the draw-off valve will be checked for closure.

Each morning. maintenance will make a visual check of the tank farm, outside piping, pumps. other ancillary equipment, etc. Operating Foreman will check all inside piping and equipment.

The Plant Manager will perform a weekly inspection of the hazardous waste storage and accumulation areas.

Inspections will include the monitoring of all:

- Pipes
- Pumps
- Valves and fittings for leaks
- Tanks and supports for corrosion
- Foundations for deterioration
- Evidence of spilled materials
- Damage to containers

XI. INCOMPATIBLE SUBSTANCES AND WASTE

A. Acrylate ester monomers (contained in U.V. products, wastes and as raw materials)

Reactivity Data
Stability: unstable
Hazardous polymerization: May occur

Conditions to Avoid:
Container storage above 100°F, exposure to light, loss of dissolved air, loss of polymerization inhibitor, contamination with incompatible materials.

Incompatible Materials - Materials to Avoid:
Polymerization initiators including peroxides, strong oxidizing agents, copper, copper alloys, carbon steel, iron, rust, strong bases, and nitrocellulose.

Spill or Leak Procedures
Steps to be taken in case material is released or spilled. Spontaneous polymerization may occur. Eliminate ignition sources. Use eye and skin protection. Place leaking containers in a well ventilated area. Absorb with inert material and dispose. Flush area with water: prevent washings from entering waterways. Spills above or equal to reportable quantity is reportable.

Fire and Explosion Data
Flashpoint: > 200°F Setaflash
LEL: No data

Unusual Fire and Explosion Hazards
High temperatures and fire conditions may cause rapid and uncontrolled polymerization which can result in explosions and the violent rupture of storage vessels or containers. Avoid the use of a stream of water to control fires since frothing can occur.

Extinguishing Media:
Use carbon dioxide or dry chemical for small fires; aqueous foam or water for large fires.

Special Fire Fighting Procedures
Remove all ignition sources. Wear self-contained breathing apparatus and complete personal protective equipment when entering confined area where potential for exposure to vapors or products of combustion exists. Fumes produced when heated to decomposition may include carbon monoxide and carbon dioxide.

C. ISOCYANATE HANDLING

A. Hazards

1. Health

a. Inhalation - Severe irritation of the mucous membranes, especially the respiratory tract characterized by respiratory distress. May cause lung irritation and allergic respiratory reaction.

b. Eye Contact - Eye contact with liquid or vapors may cause cornea damage. Injury results from reaction of substance with eye fluid, which may dehydrate the tissue.

c. Skin Contact - Reacts with skin protein and tissue moisture. If not promptly removed, liquid spills on the skin can cause reddening, swelling, and blistering of the exposed area.

2. Fire

Fire hazard is "slight" as defined by the HMIS system. Decomposition may result in the release of cyanide, nitrogen dioxide and TDI vapors. Fire fighters must be protected with self contained breathing apparatus.

3. Reactivity

TDI contact with water/moisture will result in pressure build-up within sealed containers. TDI may also react with alcohols, strong bases and metal compounds.

4. First Aid

a. Inhalation - Persons showing symptoms of isocyanate exposure should be promptly removed from contaminated area. Oxygen can be administered to alleviate labored breathing. If breathing has stopped, artificial.

IN THE EVENT OF A POLLUTION INCIDENT, THE FOLLOWING AGENCIES SHOULD BE NOTIFIED:

1. National Response Center (Response Chemical Release)	- (800) 424-8802
2. Illinois - Environmental Protection Agency	- (800) 782-7860
3. DuPage County Emergency Disaster Agency	- (630) 682-7925
4. U.S. Environmental Protection Agency	- (800) 424-8802

* ADDITIONAL HOTLINES:

Chemical Emergency Preparedness Hotline CERCLA (Sara Title III)	- (800) 535-0202
Chem-Tel	- (800) 255-3924
CMA Chemical Referral Center	- (800) CMA-8200
EPA, RCRA, Superfund, Hazardous Waste Hotline - Office of Solid Waste & Emergency Response	- (800) 424-9346
National Safety Council	- (312) 527-4800
Substance Identification	- (800) 848-6538
U.S. Dot Hotline	- (202) 366-4488

Local Emergency Phone Numbers

Carol Stream - Police	911 or 668-2161
Central DuPage Emergency - Hospital	682-1600
Carol Stream Fire Department	911 or 665-2171

NOTE: Report any release to the environment that is above or equal to the reportable quantity for any hazardous substance. (see attached list)

XII. PIERCE & STEVENS CORP. - EMERGENCY CALL LIST

I. In case of any emergency, the following people should be notified:

1. Sam Mauldin Plant Manager		(773) 473-4523
2. Bob Cervenka	Safety Coordinator	(630) 858-4956
3. Pierce & Stevens, Buffalo, 24 hour Emergency		(716) 856-4910
4. Jim Drzewiecki	Regulatory/ Safety Facilitator	(716) 683-8263
5. Kevin Johnston	Director, Health, Safety & Environmental Affairs	(716) 683-3195
6. Paul Gavlinski	VP Manufacturing	(716) 774-2765

II. In case of fire:

Carol Stream Fire Department 911 or 668-2171

III. In case of Hazardous Material Release (includes SARA, CERCLA, RCRA):

1. DuPage County Emergency Disaster Agency	(630) 682-7925
2. U.S. Emergency and Remedial Response Branch	(630) 886-7570
3. National Response Center	(800) 424-8802

IV. For any chemical release to a waterway:

Public Water Supplies (630) 741-7771

V. For any chemical release to the sewer:

Sewer Authority (630) 741-7771

VI. Other numbers:

1. Illinois Department of Environmental Resources	(800) 782-7860
2. EPA Regional Office	(630) 917-2550
3. Chem-Tel	(800) 255-3924
4. Cook County Department of Public Health	(630) 856-6100

XIII. TRAINING PROGRAM

Employees receive annual training in the following areas:

1. Hazardous Materials Identification System (HMIS)

2. Hazardous Materials Handling / Operations

3. Personal Protection Equipment

4. Fire Extinguisher Use

5. Lockout/ Tagout Standard

6. Confined Area Entry

7. First Aid Response - CPR

8. Spill Response

9. Skin, Eye, and Back Safety

10. Forklift Operator Safety Training

11. MSDS System

12. Working Safely with:

    a. Solvents
    b. Nitrocellulose
    c. Flammable and combustible liquids
    d. Static electricity
    e. Isocyanates

13. Emergency Exiting Procedures

XIV. DOWNSTREAM NOTIFICATION

Upon the occurrence of a release at the above ground storage tank. Pierce & Stevens shall immediately notify the Carol Stream Fire Department (911) and the DuPage County Emergency Disaster Agency at (630) 682-7925) and the Environmental Protection Agency of Illinois at (800) 782-7860, all downstream water companies, downstream municipalities and downstream industrial users within 20 miles of our facility. Notification is on a priority basis based on the proximity of the release. Notification must take place within 2 hours of any release which enters a water supply or which threatens the water supply of downstream users.

If release occurs which has the potential to endanger public water:
Call Illinois EPA - 24 hour phone #(800) 782-7860

MUNICIPALITIES WITHIN 20 MILES DOWNSTREAM OF P&S

AURORA	(630) 896-4714
BATAVIA	(630) 879-1510
EOLA	(630) 896-4714
GENEVA	(630) 232-9555
MONTGOMERY	(630) 896-1357
NAPERVILLE	(630) 420-6009
NORTH AURORA	(630) 897-1457
PLAINFIELD	(815) 436-5335
SUGAR GROVE	(630) 896-4714
WARRENVILLE	(630) 393-5758
WEST CHICAGO	(630) 293-2240
WHEATON	(630) 260-2110
WINFIELD	(630) 665-1778

UPDATED MATERIAL SAFETY DATA SHEETS ARE LOCATED IN THE SAFETY COORDINATORS OFFICE

Attachment #3

1st FLOOR EMERGENCY EXITS

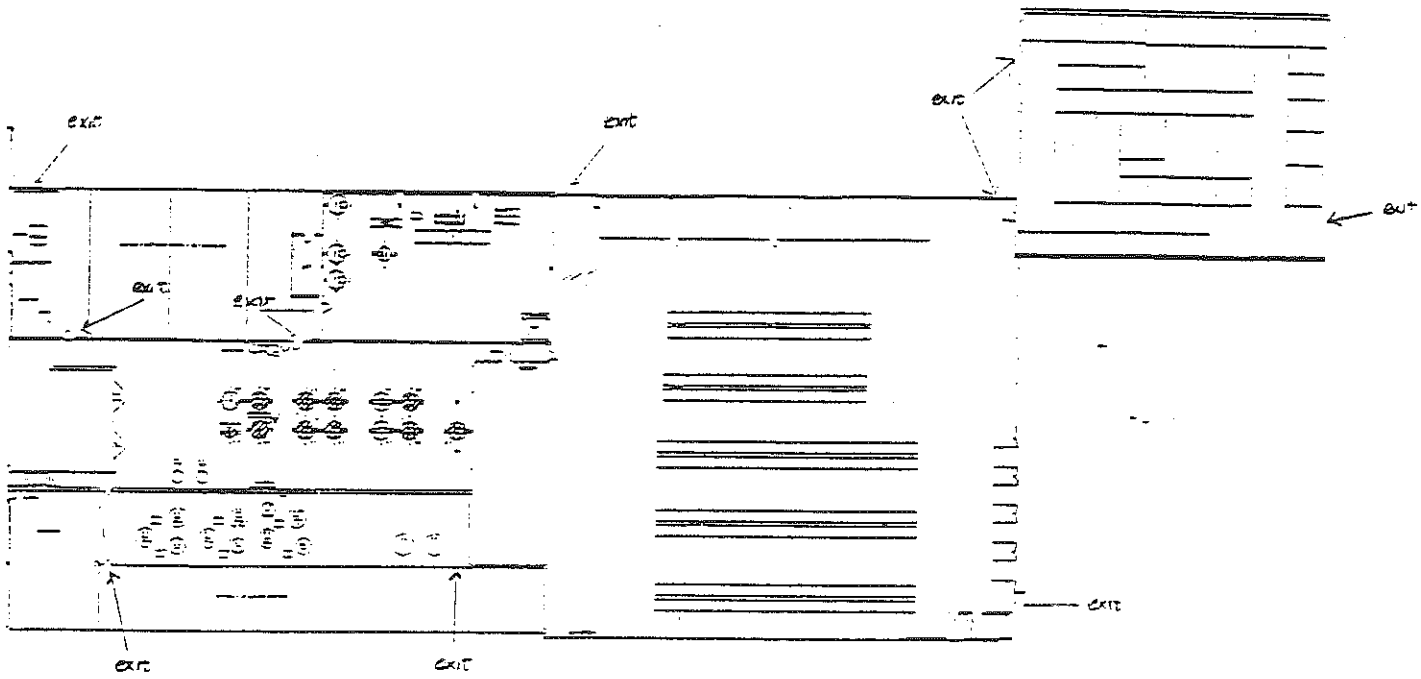

2nd FLOOR EMERGENCY EXITS

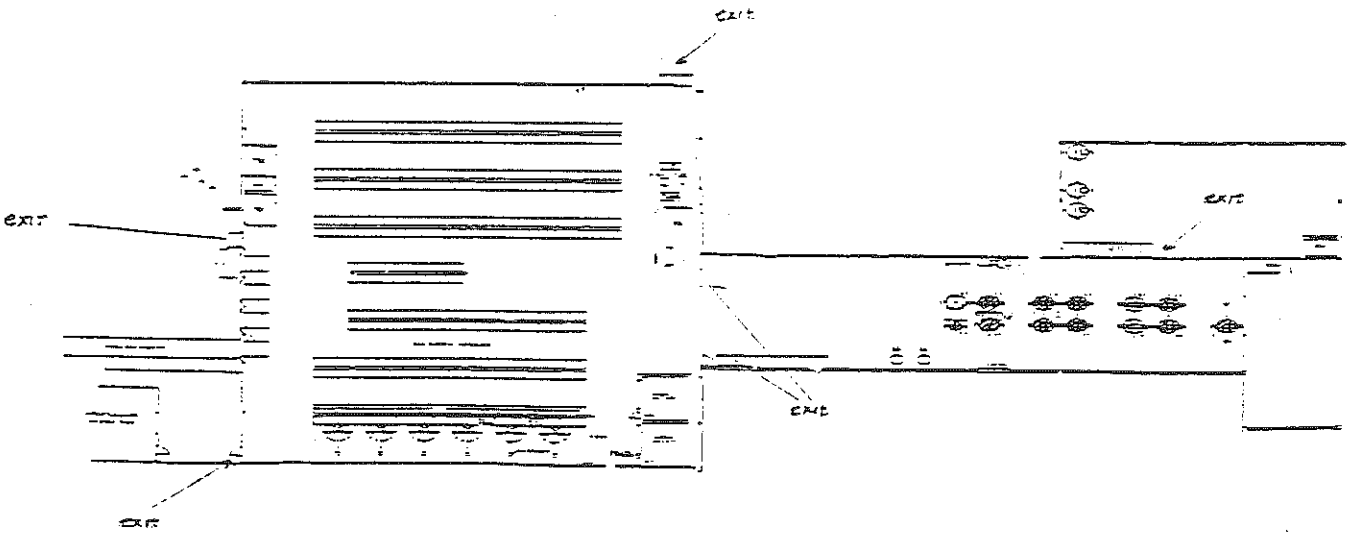

Item #6

PIERCE & STEVENS CORP.

Hazardous Waste and Off-Specification Material Handling Procedure

1. Wear proper PPE
2. Inspect tools and equipment (e.g., grounding and bonding straps, 55 gallon drum, PPE, funnels, etc.)
3. Are you familiar with the hazards of the material? If so, you may proceed. If not, refer to HMIS, batch card, MSDS, container label, or contact your Foreman or Plant Management.
4. Ensure that the local or area exhaust ventilation system is in operation.
5. Remove any static generators (e.g., plastic lined drums, plastic shrink wrap, etc.) from the hazardous area and take all precautions against static electrical buildup.
6. If necessary, obtain an empty/sound 55 gallon drum whose previous contents will be compatible with the material you are handling. Ensure all bungs and closures are tight. See compatibility chart or contact Foreman or Plant Management.
7. Remove all existing labels and P&S marking from drum. Stencil the correct product recycle or waste code on the head and side of the drum. Adhere a Hazardous Waste label to the drum as necessary. Complete waste labeling requirements as per RCRA training and internal program.
8. In a safe designated location: Bond the container and then transfer material into the properly grounded and labeled drum.
9. After transfer of material, ensure that all bungs and closures are tight and sealed.
10. Reuse, or properly empty and discard the container as per RCRA procedure.
    Note: To be disposed of as ordinary plant trash, the container must be emptied to the extent possible. Therefore, the container must be scraped clean, or depending on the material, cleaned per other equally effective means such as pouring. Only dried materials, no more than 3 percent by weight of the total capacity of the container can remain in the container or inner liner. Unless the container is rendered free of liquid as per above, it must be disposed of as hazardous waste.

Item #7

PIERCE & STEVENS CORP.

Carol Stream, Illinois
RCRA/Hazardous Waste Operations Job Descriptions

Title	Job Description under RCRA/Hazardous Waste Operations
Plant Management	Supervise employees and oversee all EPA and DOT RCRA requirements with regard to training, inspection, reporting, record-keeping, transportation, disposal, selection and use of PPE, emergency notification, waste minimization and the protection of the environment, etc.
Environmental & Safety Coordinator	Recommends specifies a DOT container, supervises employees responsible for general activities such as: Preparation of waste containers for transportation, recommends container and manifest markings, understanding contingency plans and emergency notification procedures., etc. Completed manifests, exception reports and supplies data for internal and governmental reports.
Batchmaker/Filler Foreman	Generator of hazardous wastes who is responsible for selection of proper PPE, protection of employees and the environment, waste minimization and segregation. Oversees and controls Batchmakers (generators of waste). Ensures that s/he and subordinate employees meet general requirements such as the following: Container labeling, sealed containers, selection of proper container, maintain clean accumulation areas, coordinates movement of filled containers, understanding contingency plans and emergency notification procedures. Incidental spill cleanups within own work area when hazards are known.
Batchmaker/Filler	Generator of hazardous waste who is responsible for the minimization, segregation, correct labeling of containers, cleanliness of accumulation areas, proper handling and disposal, proper use of appropriate personal protective equipment (PPE) and the safety of surrounding employees and the environment, understanding contingency plans and emergency notification procedures. Incidental spill cleanups within own work area when hazards are known. Determinations of what wastes are hazardous.
Utility Worker	Handler of waste responsible for the segregation, correct labeling of containers, selection of PPE, cleanliness of accumulation areas, proper disposal of waste materials and sealing of containers and the safety of surrounding employees and the environment, understanding contingency plans and emergency notification procedures. Incidental spill cleanups within own work area when hazards are known. Determinations of what wastes are hazardous.

Shipper/Receiver	Potential waste generator responsible for the safe handling and transportation of waste on-site. Prepares containers and shipping documents. Conducts final inspection of waste containers to ensure that none are leaking, proper labeling and paperwork is in place. Responsible for the segregation, correct labeling of containers, selection of PPE, proper waste disposal and the safety of surrounding employees and the environment, understanding contingency plans and emergency notification procedures. Incidental spill cleanups within own work area when hazards are known. Determinations of what wastes are hazardous.
Forklift Operator	Is responsible for the safe on-site transportation and shipping of waste. Understanding the hazards associated with each waste, proper storage, PPE requirements and understanding contingency plans and emergency notification procedures. Incidental spill cleanups within own work area when hazards are known. Determinations of what wastes are hazardous
Maintenance Worker	Potential generator and a handler of waste responsible for the segregation, correct labeling of containers, selection of PPE, cleanliness of accumulation areas, proper disposal of waste materials and sealing of containers and the safety of surrounding employees and the environment, understanding contingency plans and emergency notification procedures. Incidental spill cleanups within own work area when hazards are known. Determinations of what wastes are hazardous.
Q.A. Technician	Generator of hazardous waste who is responsible for the minimization, segregation, correct labeling of containers, sealing containers, cleanliness of accumulation areas, proper handling and disposal, proper use of appropriate personal protective equipment (PPE) and the safety of surrounding employees and the environment, understanding contingency plans and emergency notification procedures. Incidental spill cleanups within own work area when hazards are known. Determinations of what wastes are hazardous.
Shipping/Receiving Foreman	Potential waste generator responsible for a the safe handling and transportation of waste on-site. Prepares containers and shipping documents. Oversees final inspection of waste containers to ensure that none are leaking, proper labeling and paperwork is in place. Responsible for the segregation, correct labeling of containers, selection of PPE, proper waste disposal and the safety of surrounding employees, visitors, contractors and the environment, understanding contingency plans and emergency notification procedures. Incidental spill cleanups within own work area when hazards are known. Determinations of what wastes are hazardous.
Labeler	Potential generator and handler of waste responsible for the segregation, correct labeling of containers, selection of PPE, cleanliness of accumulation areas, proper disposal of waste materials and sealing of containers and the safety of surrounding employees and the environment, understanding contingency plans and emergency notification procedures. Incidental spill cleanups within own work area when hazards are known. Determinations of what wastes are hazardous.

PIERCE & STEVENS CORP., 245 E. KIMOE BLVD., CAROL STREAM, ILLINOIS 60188

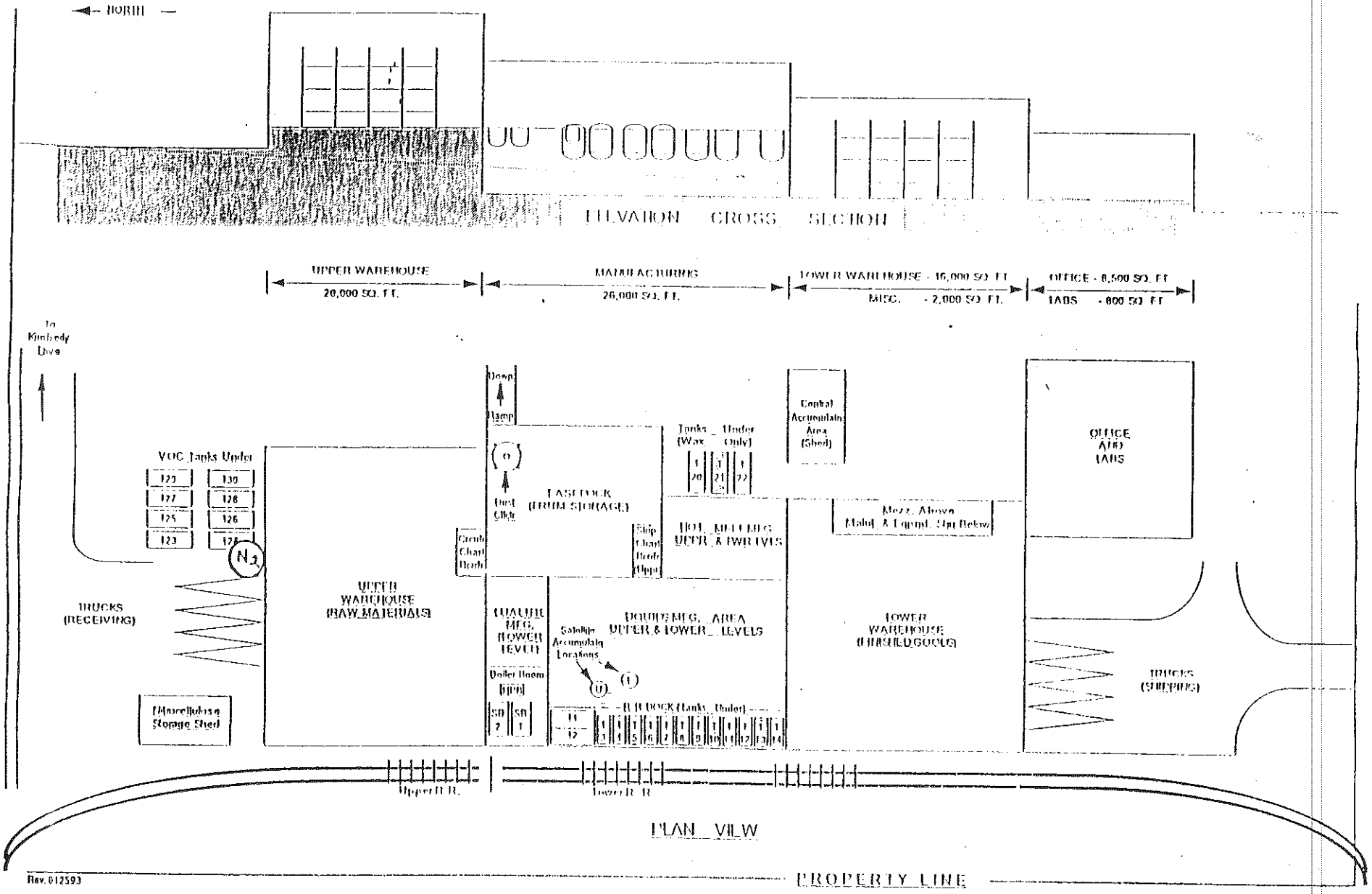

Rev. 012593

COMPLAINANT'S EXHIBIT 4

P 366 562 186

JUN 03 1998

DE-9J

CERTIFIED MAIL
RETURN RECEIPT REQUESTED

Mr. Robert R. Cervenka
Production Coordinator
Pierce & Stevens Corp.
245 East Kehoe Blvd.
Carol Stream, Illinois 60188

Re: Pre-Filing Notice Letter
Pierce & Stevens Corp.
ILD 055 434 443

Dear Mr. Cervenka:

This letter is to notify you that the United States Environmental Protection Agency (U.S. EPA) is prepared to bring a civil administrative or judicial enforcement proceeding against Pierce & Stevens Corporation (P&S) for violations of the Resource Conservation and Recovery Act (RCRA). The complaint will allege that P&S has violated Sections 3002 and 3005 of RCRA, and 40 CFR Parts 262, 265, and 270, in that P&S stored hazardous waste for ninety days or more without a permit, failed to conduct weekly inspections of containers of hazardous waste, and failed to maintain complete training records for workers handling hazardous waste. The complaint will seek penalties for these violations.

Before filing the complaint, however, we are extending to you the opportunity to advise the U.S. EPA of any factors that you believe should be considered before issuing the civil complaint. Relevant factors might include any evidence of reliance upon on-site compliance assistance provided by U.S. EPA or State agencies exercising delegated authority, misidentification of the proper party, or financial factors bearing on your ability to pay a civil penalty. If you believe that there are financial factors which bear upon your ability to pay a civil penalty, please submit financial statements, including balance sheets and income statements for the past three years.

Please note that U.S. EPA may consider and use information provided by you in a civil or criminal proceeding related to this matter.

It is our intention to file the civil administrative complaint two weeks from your receipt of this letter. Please submit your response to this office within ten (10) business days of receipt of this letter. If you have any questions regarding this matter, please contact Patrick Kuefler, of my staff, at (312) 353-6268. Your response should be sent to the United States Environmental Protection Agency, Region 5, Enforcement and Compliance Assurance Branch (DE-9J), 77 West Jackson Boulevard, Chicago, Illinois 60604-3590, Attention: Patrick Kuefler. Thank you for your prompt attention to this matter.

Sincerely yours,

ORIGINAL SIGNED BY
JOSEPH M. BOYLE

Joseph M. Boyle, Chief
Enforcement and Compliance Assurance Branch
Waste, Pesticides and Toxics Division

cc: Todd Marvel. IEPA (w/o encl.)

Is your RETURN ADDRESS completed on the reverse side?

SENDER:
- Complete items 1 and/or 2 for additional services.
- Complete items 3, and 4a & b.
- Print your name and address on the reverse of this form so that we can return this card to you.
- Attach this form to the front of the mailpiece, or on the back if space does not permit.
- Write "Return Receipt Requested" on the mailpiece below the article number.
- The Return Receipt will show to whom the article was delivered and the date delivered.

I also wish to receive the following services (for an extra fee):
1. ☐ Addressee's Address
2. ☐ Restricted Delivery

Consult postmaster for fee.

3. Article Addressed to:

Mr. Robert Cervenka
245 East Kehoe Blvd.
Carol Stream, IL 60188

4a. Article Number

4b. Service Type
☐ Registered ☐ Insured
☐ Certified ☐ COD
☐ Express Mail ☐ Return Receipt for Merchandise

7. Date of Delivery 6/5/98

5. Signature (Addressee)

6. Signature (Agent)

8. Addressee's Address (Only if requested and fee is paid)

PS Form 3811, December 1991 ★U.S. GPO: 1993—352-714 **DOMESTIC RETURN RECEIPT**

Thank you for using Return Receipt Service.

P 366 562 186

RECEIPT FOR CERTIFIED MAIL

NO INSURANCE COVERAGE PROVIDED
NOT FOR INTERNATIONAL MAIL
(See Reverse)

555

Sent to

Mr. Robert Cervenka
Piersce and Stevens Corp.
245 East Kehoe Blvd.
Carol Stream, IL 60188

32

Certified Fee	135
Special Delivery Fee	
Restricted Delivery Fee	110
Return Receipt showing to whom and Date Delivered	
Return Receipt showing to whom, Date, and Address of Delivery	
TOTAL Postage and Fees	277
Postmark or Date	

CHICAGO IL JUN 3 1998 USPO

PS Form 3800, June 1985

P&S HAZARDOUS WASTE CODE: 8060
LABEL DETAIL

HAZARDOUS WASTE **(ADD DATE DRUM BECAME FULL ?)**

FEDERAL LAW PROHIBITS IMPROPER DISPOSAL IF FOUND CONTACT THE NEAREST POLICE, OR PUBLIC SAFETY AUTHORITY, OR THE U.S. ENVIRONMENTAL PROTECTION AGENCY

GENERATOR INFORMATION:
NAME PIERCE & STEVENS CORP.
ADDRESS 710 OHIO STREET PHONE (716) 856-4910
CITY BUFFALO STATE NY ZIP 14203
EPA MANIFEST **? MANIFEST (ADD)**
ID NO. NYDOO2108629 DOCUMENT NO. **NUMBER ?**

ACCUMULATION EPA
START DATE **? (ADD) ?** WASTE NO. D001, D035, F003, F005

WASTE FLAMMABLE LIQUID, N.O.S.(TOLUENE, METHYL ETHYL KETONE)
UN1993 (D001) RQ
D.O.T. PROPER SHIPPING NAME AND UN OR NA NO. WITH PREFIX

HANDLE WITH CARE !

CONTAINER SELECTION & PREPARATION

- Choose a DOT approved, metal open head, 55 gallon drum that is in good condition
  - free of large dents or other damage
  - free of incompatible material
  - remove all labels
  - proper bungs, gaskets and ring
- Add proper labels and stencils per waste code
- Locate drum in proper area (typically satelite accumulation areas for waste)

SAFETY TIPS / REQUIREMENTS

- ALWAYS GROUND AND BOND DRUMS
- SEAL DRUMS WHEN NOT IN USE
- USE AVAILABLE LOCAL EXHAUST VENTILATION SYSTEMS
- UTILIZE PROPER PPE WHEN TRANSFERRING WASTE
  - Minimum: Approp. gloves, safety glasses, work clothes
- USE PROPER FUNNELS AND NON-SPARKING TOOLS

ALWAYS WEAR PROPER PPE !

IF QUESTIONS...SEE MANAGEMENT

CONTAINER HANDLING

- Ensure bungs and ring are secured and labeling is complete before transporting
- Always use drum trucks or other mechanical means when loading trailer
- Utilize forklifts for palletized waste
- Never roll drums on their sides or mishandle in any manner

INTERNAL INSPECTIONS

- Depending upon responsibility within your facility, ensure that weekly visual inspection of storage areas is documented
  - look for leaks, bulging (pressurized drums drums, improper labeling, improper care o equipment, 90 day rule, etc.

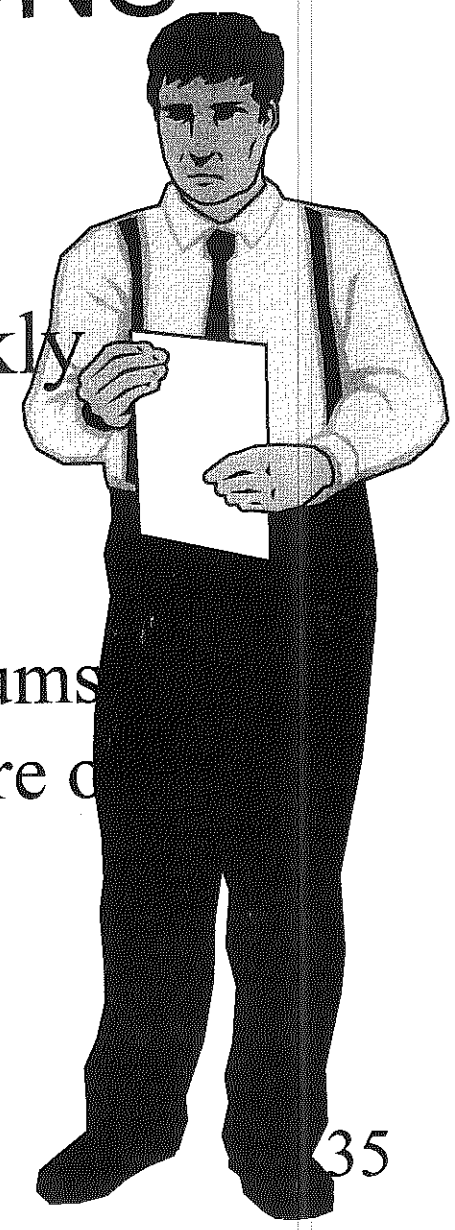

OTHER REGULATORY REQUIREMENTS

- FILLED CONTAINERS MUST BE MOVED TO THE CENTRAL STORAGE AREA WITHIN 3 DAYS OF BECOMING FULL
- CONTAINERS MUST BE SHIPPED WITHIN 90 DAYS OF BECOMING FULL

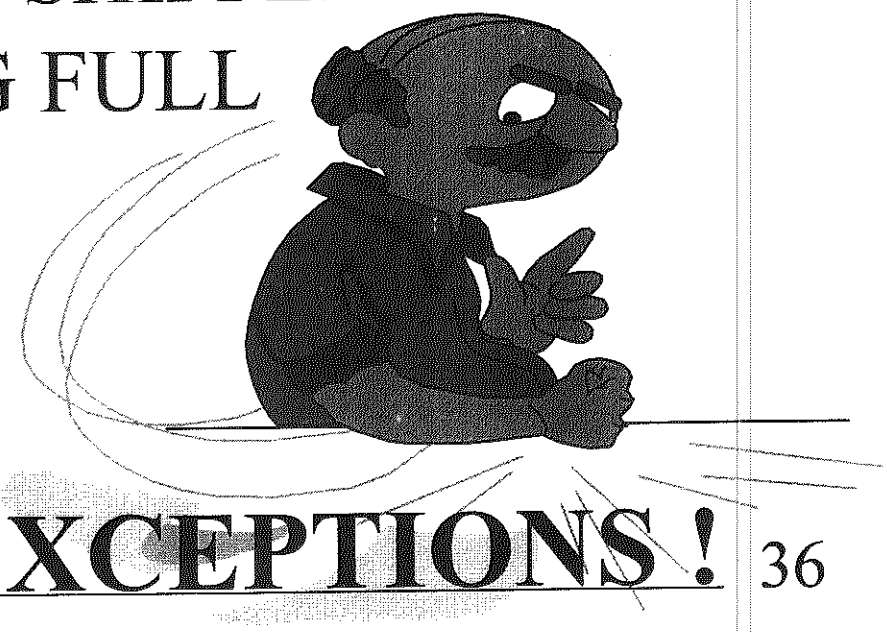

THERE ARE NO EXCEPTIONS !

WASTE SHIPMENTS

- Do final visual inspection of containers
  - ensure there are no leaking containers, bungs are sealed, labels are correct, manifest / drum count is correct, extertior of drums are clean
- Forklift to assist with loading
- Offer driver proper placards (document this)
- Alert management of any concerns before truck driver leaves our property
- Properly brace loads
- Do not allow commingling of incompatibles

COMMUNICATION & ALARM SYSTEMS

- BUILDING P.A. and TELEPHONE SYSTEM
  - Internal telephone (eg., 6-2 bldg. page)
- BUILDING ALARM SYSTEM (SIREN)
  - Activated by pulling manual alarm station
- PORTABLE "WALKIE TALKIES"
- DIAL 9-1-1 FROM INTERNAL PHONE

FIRE TRAINING

- "HANDS ON" is MANDATORY
- CLASSROOM TYPE is MANDATORY
- RE: INCIPIENT STAGE FIRES - USING HAND HELD FIRE EXTINGUISHERS ONLY

TYPES OF EXTINGUISHERS

- CLASS A EXTINGUISH ORDINARY COMBUSTIBLES SUCH AS CARDBOARD
  - PRESSURIZED WATER, FOAM, DRY CHEM.
- CLASS B EXTINGUISH FLAMMABLE LIQUIDS, GREASES OR GASES
  - Foam, Dry Chemical, CO2 or HALON
- CLASS C EXTINGUISH ENERGIZED ELECTRICAL EQUIPMENT
  - CO2, DRY CHEM. and HALON (NO WATER)
- CLASS D EXTINGUISH COMB. METALS
  - SPECIAL DRY POWDER AGENTS

TYPES OF FIRES

- CLASS A - ORDINARY COMBUSTIBLES SUCH AS CARDBOARD
- CLASS B - FLAMMABLE LIQUIDS, GREASES OR GASES
- CLASS C - ENERGIZED ELECTRICAL EQUIPMENT
- CLASS D - COMBUSTIBLE METALS

USING A PORTABLE EXTINGUISHER

1. PULL THE PIN
2. TEST EXTINGUISHER
3. AIM NOZZLE AT BASE OF FLAMES
4. SQUEEZE HANDLE WHILE HOLDING EXTINGUISHER UPRIGHT
5. SWEEP FROM SIDE TO SIDE COVERING THE AREA

IF ONE UNIT DOES NOT DO IT...GET OUT

HOW TO PREVENT FIRES

- Keep wastes segregated
- Be sure to use bonding and grounding clamps
- Transfer waste in well ventilated areas near hazardous electrical equipment installations
- Keep containers sealed when not in use
- Never mix incompatible wastes
- Use only non-sparking tools
- Report problems to management ASAP
- No Smoking or static generators

WHAT IS AN INCIPIENT STAGE FIRE ?

- Incipient (beginning) stage fires:
  - ✦Not producing large quantity of smoke
  - ✦You are not breathing smoke
  - ✦The fire has not spread beyond a 10 square foot area
  - ✦You feel it is safe to attempt to extinguish the fire based on it's location, size, etc...

WHEN IN DOUBT...GET OUT !

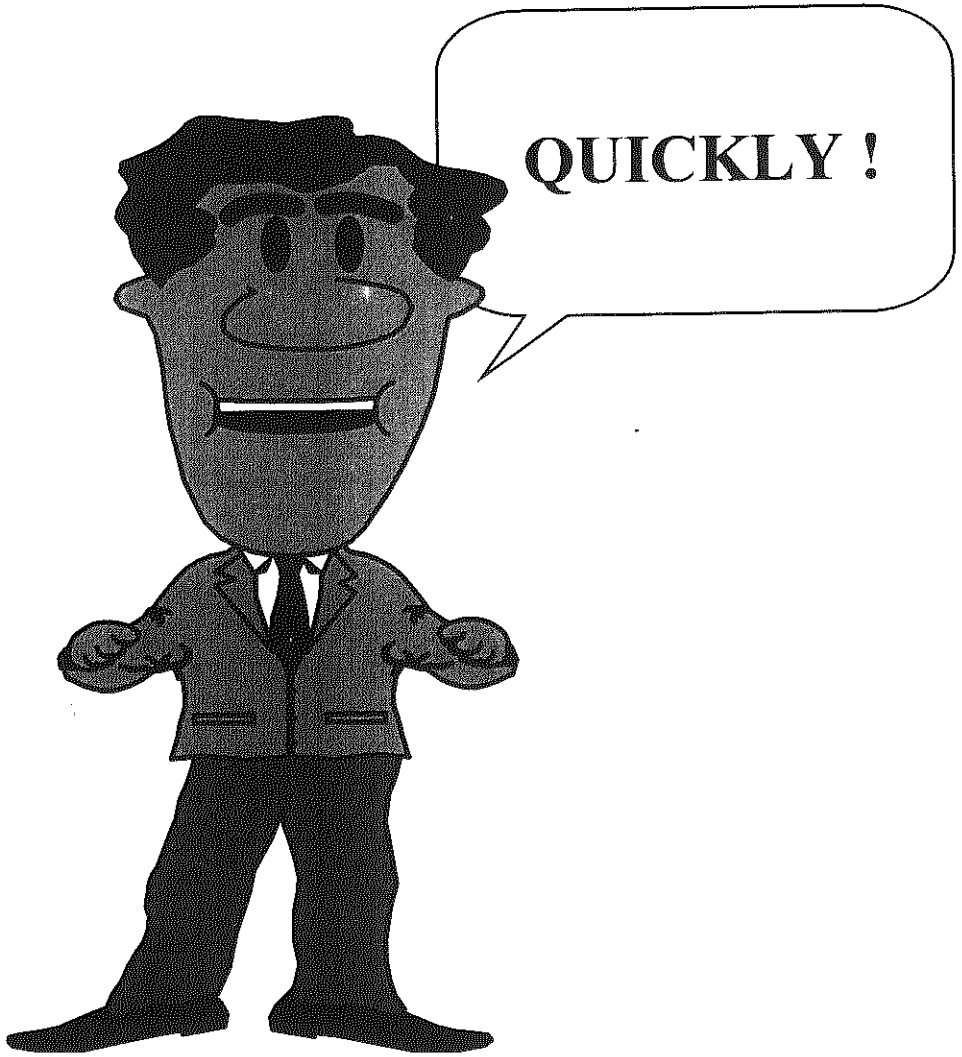

THANK YOU

PLEASE WORK SAFELY AND HAVE A NICE DAY.

CERTIFICATE OF TRAINING

This is to Certify that

ROBERT CERVENKA

Has successfully completed

Hazardous Materials Training

for the

Transportation of Dangerous Goods

Pierce & Stevens, Modules 1,2 & 3
"General Awareness, Function Specific and Safety Training"

9/13/93
Date

Bill Brennan
Trainer

CERTIFICATE OF COURSE COMPLETION

AS a matter of record, this document attests to the undersigned's diligence in pursuing a standard of excellence and the fulfillment of all obligations and responsibilities associated with the completion of the Keye Productivity Center® two-day training course titled

OSHA Compliance: The Two-Day Certification Workshop

THIS individual, by undergoing an intensive training session, has indisputably proven to be worthy of all rights and privileges in correlation with the conclusion of the aforementioned course.

Robert Cervenka

Participant

Duane A. Daugherty

Course Leader

3/6-7/95

Date

KEYE PRODUCTIVITY CENTER
2-DAY COURSE

KEYCERT-2U

KOD005

AM
18-24, 32

EMPLOYEE TRAINING RECORD

Program Title/Description: PSM Traingsing

Program Instructor: Bob Cervenka

Date & Location: 12-17-97 Carol Stream

	EMPLOYEE NAME (print)	SSN#	EMPLOYEE SIGNATURE
3,19-22	WILLIAM DUERR	325-30-6096	[illegible]
24,32	MARK VANDYKE	326-58-9521	[illegible]
4-24,32	MARTIN OLSEN	320-52-9107	[illegible]
	JOE PASULA	352-66-1952	[illegible]
	Timothy Decker	325-64-3258	[illegible]

PM

EMPLOYEE TRAINING RECORD

Sections
26-32
15, 19-21
1-10

Program Title/Description: PSM Training

Program Instructor: Bob Cervenka

Date & Location: 12-16-971 Carol Stream

	EMPLOYEE NAME (print)	SSN#	EMPLOYEE SIGNATURE
5, 26-31	Fred Cunningham	357-62-8702	Fred Cunningham
1-10, 15, 26-31	DUANE J. GATES	339-56-2722	Duane J. Gates
	ROBERT OLIPHANT	357-60-2048	Robert Oliphant
	Steve Thomason	491-68-8495	Steve Thomason
	PHIL SALA	359-42-3311	Phil Sala
	Mike Chandler	351-58-5586	Michael D Chandler
1-10, 15	JAMES B. COBB	348-60-8775	James B. Cobb
1-10, 15	ROSS Karraker	328-68-9625	Ross Karraker

PIERCE & STEVENS CORPORATION

HAZARDOUS MATERIALS TRANSPORTATION IN A GLOBAL MARKET

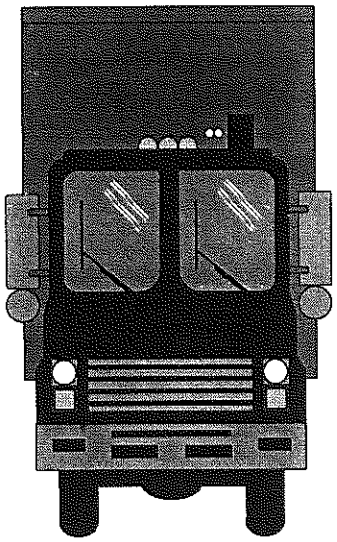

HM126F - HAZARDOUS MATERIALS UNIFORM SAFETY ACT OF 1990

(VOLUME 1 - GENERAL AWARENESS / FAMILIARIZATION)

1996

" It is the responsibility

of each hazmat employer,

subject to the requirements

of this subchapter,

to ensure that each

hazmat employee is trained

in accordance with the requirements

prescribed in this subchapter."

CODE OF FEDERAL REGULATIONS, CHAPTER 49, PARAGRAPH 173.1(b)

PURPOSE & OBJECTIVES

- Training in the products we manufacture will assist all of us in our journey to become experts and "World Class" competitors.

- Our commitment to our customers goes beyond the manufacture and delivery of our goods. Our customers can count on our expertise to assist them in complying with the prescribed regulations.

- We are committed to providing a safe workplace for ourselves and our co-workers.

- We are committed to doing our share to protect our environment for future generations.

- We will do all we possibly can to ensure the safety of our Public Emergency Responders who are called on to react to potential disasters.

GENERAL SAFETY

What should you do and where should you go in the event of a hazardous materials incident? Each facility has there own set procedure for emergency response, but the goal of each program is the same - follow our set priorities:

EMPLOYEE SAFETY

PROTECTION OF OUR ENVIRONMENT

PROTECTION OF OUR FACILITIES AND NEIGHBORS

COMPLIANCE WITH GOVERNMENTAL REGULATIONS

This challenge can only be met by training, proper equipment, adequate supervision, and conscientious employees acting responsibly.

What should I do in the event of a fire or explosion in our plant?

First, it is the responsibility of all of us to work and act in a manner that reduces the possibility of fire.

In the event a fire does occur, an immediate decision must be made to either:

* Fight the fire using a portable fire extinguisher. This should only be attempted if the fire is in the incipient (early) stage.

* Immediately evacuate the area making every effort to alert fellow workers and to pull the manual fire alarm upon exiting.

Common sense and good judgment must be exercised when faced with a fire.

The sprinkler systems are in place to help control fire. Their design and output is far more effective than a squad of employees armed with portable fire extinguishers.

Do not risk life for inanimate objects!

Do not panic!

And remember: IF IN DOUBT....GET OUT!

The following page outlines our preparedness and evacuation plan.

FIRE PREPAREDNESS AND EVACUATION PLAN

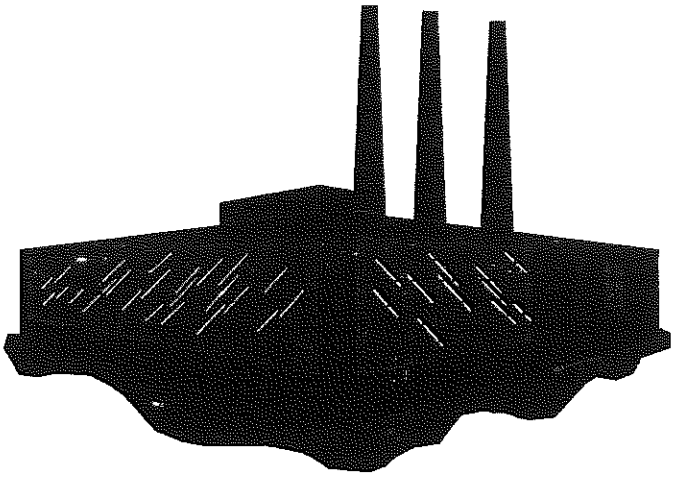

* If the fire is discovered in it's incipient stage, use available fire fighting equipment. If it is determined that the fire has progressed beyond the incipient stage, i.e. heavy smoke, occupying more than a ten square foot area, etc., immediately evacuate the building. Do not take unnecessary risks.

* Pull manual fire alarm upon exiting.

* If evacuation is necessary, follow posted evacuation routes. All employees are required to assemble in their designated areas per the Emergency Evacuation Procedure and to check in with their respective Fire Captains.

* If at all possible and conditions permit doing so, all equipment should be shut down and mixer lids should be closed upon exiting.

* Assist fire company with information, directions, special circumstances as requested.

* During evening hours exit to a safe location and contact plant management.

What should I do if I discover a spill or leaking goods that I suspect may be hazardous?

As with a fire, an immediate decision must be made to do one of two things:

* If the goods and potential risks are known, immediately clean up the spill in a safe, efficient manner.

* Evacuate the area or building if necessary, and page the Spill Response Team. The page should clearly identify the location and other information such as the product and quantity spilled.

Each facility has a spill team of which each member has been more thoroughly trained in the use of safe handling and personal protective procedures.

You must be familiar with the potential hazards associated with the spilled goods in order to make the determination to clean up or page the response team.

All facilities maintain a current file of Material Safety Data Sheets for all products found in the workplace.

Knowing where to look and what to look for is your best bet for a safe response.

Everyone is encouraged to periodically review supplier as well as our own Material Safety Data Sheets (MSDS) to become familiar with the information available.

The MSDS is the best source of information relating to potential hazards, clean up procedures, and personal protective equipment requirements.

The following page reviews our spill response plan.

SPILL RESPONSE - RECOGNITION AND NOTIFICATION

What to do upon discovering a leak or spill:

* **Approach cautiously.** Resist the urge to rush in, you cannot help others or attempt to contain the spill until you know what you're facing.

* **Identify the hazards.** Containers, labels, product numbers and MSDS are all additional information sources.

* **Secure the scene.** Shut down all potential ignition sources (i.e. mixers, forktrucks, pumps, etc.). Open windows and doors if possible to ventilate the area. Without entering the immediate area do what you can to isolate the area and assure the safety of fellow workers, the environment and equipment.

* **Obtain help.** Inform the spill team via the paging system. Announce as much detail as possible - name or type of substance spilled, location of the spill, quantity or amount spilled, etc.

If it is determined that a coworker needs emergency medical assistance, call **'911'**. Give the operator a brief description of the scene and describe the apparent condition of the victim.

If a victim needs first aid assistance, call your First Aid Team via your paging system, again giving as much detail as possible.

In all cases, the incident must be reported to management for investigation and corrective action.

This is a condensed version of the Pierce and Stevens spill response procedure that is posted throughout all manufacturing facilities. The actual full length version of the plan should be referenced to become familiar with the additional information available. Reporting procedures, emergency contact telephone numbers and cleanup and disposal methods are described in further detail.

How do I know what to look for to determine if the goods I am working with are considered hazardous?

In answer to this question, there are several ways to identify hazardous goods. One of the most effective ways will be discussed many times in this program, and that is the required transportation labels.

Transportation labels are required on all goods deemed to pose a risk in transport. All dangerous goods both coming in and exiting our facilities are required to be labeled according to transportation regulations.

In addition to transportation communication requirements, OSHA in it's Hazard Communication Standard requires employers to utilize a communication system to protect workers from exposure to hazmats in the workplace.

To comply with the OSHA requirement, Pierce and Stevens has adopted the Paint and Coatings Association's HMIS system.

The HMIS system for communication uses a numbering and lettering guide on a label to immediately identify risks and personal protective equipment requirements. All raw materials in our plants have a HMIS label on them either applied at the receiving dock or already displayed by the supplier.

The HMIS program consists of identification labels, wallet cards and workplace posters used to identify safe handling methods of the over 1500 known chemicals in industry today.

The following page describes the HMIS system.

OSHA HAZARD COMMUNICATION STANDARD

A HMIS label is broken into five separate sections, usually color coded for recognition at a distance:

First:	**White**	***Product identification***, usually expressed as a corporate code number but may list the chemical by name.
Second:	**Blue**	***Health***, identifies the degree of hazard to your health
Third:	**Red**	***Flammability***, identifies the risk of fire or explosion
Fourth:	**Yellow**	***Reactivity***, identifies potential risk of contact with other substances.
Fifth:	**White**	***Personal Protection***, suggests PPE to be used when handling the goods.

In the case of Health, Flammability and Reactivity, the degree of risk is identified by a number from zero to four, zero being the least risk and four being the most severe.

4 - SEVERE HAZARD

3 - SERIOUS HAZARD

2 - MODERATE HAZARD

1 - SLIGHT HAZARD

0 - MINIMAL HAZARD

The section marked Personal Protection identifies, through the use of a letter, what personal protective equipment should be used when handling the goods.

Cross referencing the index on the wallet card or poster, you will see what protection is required such as safety glasses, gloves, respirators, etc.

An "X" in the personal protection section would tell you not to attempt to work with the goods without checking further with a supervisor or person more knowledgeable with the goods.

Understanding the regulations does not mean that you must study the volumes of text that have been written about hazardous materials.

A more practical education is to grasp a basic understanding of the intent of the regulations, and to apply the knowledge in your everyday life.

The two most fundamental issues relating to hazardous materials regulations are:

<u>Hazard Communication</u> - the conveying of warnings and cautions, through documentation and labeling, relating to the hazards associated with specific goods.

<u>Hazardous Materials Packaging</u> - insuring the quality and integrity of packaging to be used to transport and store hazardous goods through specified testing procedures.

While there is obviously more to the regulations than these two statements imply, understanding the requirements of these two concepts will give a fairly thorough education of the intent of the hazardous materials regulations.

One of the best ways to learn is through example. To give an illustration of the hazardous communications and their use, the following paragraph describes a typical emergency response situation.

A local fire company is dispatched to the scene of an accident on a major thoroughfare. Upon arrival, the responders see a tractor-trailer has left the road and gone down an embankment, flipping over and spilling it's contents. From a distance the responders can see that the trailer has been marked on all four sides with red warning signs. The signs, called "PLACARDS", tell the firemen that the vehicle contains flammable liquid in it's cargo hold, and therefore they should approach the vehicle with the knowledge that there is a risk of fire.

Approaching the vehicle with caution, the responders open the drivers door of the tractor where the freight manifests for hazardous materials are required to be stored in the side pocket. From the documents, the responders are provided the following information:

- **Proper shipping name of all hazardous goods carried on the vehicle**
- **Hazard Class of all hazardous goods carried on the vehicle**
- **United Nations (UN) identification number for all hazardous goods**
- **Packing Group description of all hazardous goods (the degree of danger)**
- **Total quantity of hazardous goods carried on the vehicle**
- **Emergency telephone number of each shipper of hazardous goods on the vehicle where they could request more information and a Material Safety Data Sheet**

The responder then contacts the shipper's designated emergency contact and requests MSDS on all goods involved in the incident. The MSDS' are faxed to the responder on the scene and the responder familiarizes himself/herself with the hazards involved before approaching the vehicle.

Once the responder is confident he understands the potential hazards, he can approach the vehicle to begin clean up. As he approaches the goods that have come off the trailer, he sees a drum, bearing a smaller version of the same red label that was seen on the outside of the trailer, leaking a liquid from a puncture hole in it's side. This red label now identifies the specific package that contains flammable liquid. Through his own training, he is able to choose the appropriate personal protective equipment (PPE), properly secure the area, safely handle the goods, and restore the safety of fellow responders and the public.

The chances of this situation turning into a major disaster were significantly reduced because all of the proper hazard communication requirements were satisfied.

By breaking down the chain of events of this response situation, you will be given an education in the area that the Department of Transportation has identified as:

"General Awareness & Familiarization Training"

General awareness and familiarization training is intended to raise a hazmat employee's awareness of the hazardous materials regulations and the purpose and meanings of the hazard communication requirements.

Recognizing and identifying hazardous materials in the work place is the expected result.

Over the next several pages, we will dissect the example given and more fully explain the significant communications that were used to assist the emergency responders on the scene.

Upon completion, you will have gained a clear understanding of the purpose of the regulations, and the reasoning used in selecting the specific means of communication.

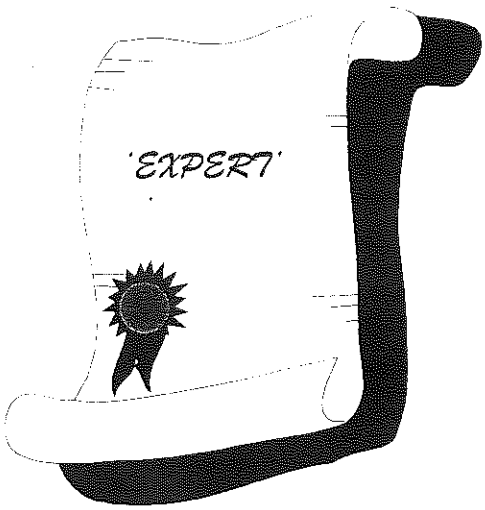

You will be an **"EXPERT"** at recognizing hazards in the workplace.

For starters, let's look at the very first sign that the responders were given warning them of the presence of hazardous materials.

> Upon approaching the scene, from a distance they could clearly see the *PLACARDS* that were affixed to all four sides of the vehicle. This told them immediately, before entering the area that there were hazardous goods on the trailer.

Placards are a form of communication that are intended to be universal in language meaning that they should be recognized anywhere in the world by their color and universal symbol.

Each placard measures approximately eleven inches square and are positioned in a point to point (diamond) fashion, rather than on their sides (square).

Placards are tendered to the driver by the shipper (or offeror) of the goods, as it is the shipper who is most knowledgeable of the hazards associated with the goods he ships.

In order to accept a placarded shipment, a driver is required to have received hazmat training. The completion of the required training is recorded as an endorsement on the driver's CDL (Commercial Drivers License). It is a recommended practice to check a drivers license for a hazmat endorsement before tendering the shipment.

Placarded loads have restrictions for travel, such as not being allowed to travel through tunnels, and have specific requirements to follow in the event of a breakdown.

COMPLAINANT'S EXHIBIT 5

PIERCE & STEVENS CORP.

Division of Sovereign
Specialty Chemicals, Inc.

RECEIVED
JUN 17 1998
Enforcement & Compliance Assurance Branch
Waste, Pesticides & Toxics Division
U.S. EPA – REGION 5

June 9, 1998

Sent Via Certified Mail

Joseph M. Boyle, Chief
Enforcement and Compliance Assurance Branch
Waste, Pesticides and Toxics Division
United States Environmental Protection Agency
Region 5
77 West Jackson Boulevard
Chicago, IL 60604-3590

Re: Pre-Filling Notice Letter
Pierce & Stevens Corp.
ILD 055 434 443

Dear Mr. Boyle

Your letter of June 3, 1998 indicated that the U.S. E.P.A. is prepared to bring civil or administrative enforcement proceedings regarding the following alleged complaints:

1.) Waste was stored ninety days or more without a permit
2.) Weekly inspection of hazardous waste was not conducted.
3.) Training records for workers handling hazardous wastes were not maintained.

Pierce & Stevens believes that these allegations are unwarranted and provides the following explanation and clarification of the issues raised.

Regarding the allegation of waste storage beyond ninety days, it is our position that the inspection report incorrectly concluded that absent a quarterly shipment, storage beyond ninety days must have occurred. This wrongly assumes that the pattern of waste generation at the facility is always consistent, which in fact it is not, largely because our recycling efforts have significantly reduced our waste shipments. Moreover, we are not aware of any containers observed by Mr. Kuefler, which were labeled as being present onsite for more than ninety days. In fact, it was our impression that Mr. Kuefler was favorably impressed with our recycling effort. We are continually working toward a goal of 100% recycling. It is important to recognize that we produce numerous formulations, each with varying abilities to accept recycled materials. The production pattern of these various formulas varies with customer demand. Therefore, as expected, we experience variations in waste shipment frequency based on our variable recycling patterns. As recycling efforts increase one should expect even greater waste shipment variability, as we are beginning to observe at our facility. Therefore, we are puzzled by the fact that our

recycling efforts were recognized and encouraged, and yet the potential impact on the frequency of waste shipments was not considered, especially after the extensive discussion of this during the inspection and in subsequent correspondence.

Regarding the weekly inspections of the hazardous waste storage areas, we agree that our record filing system needs improvement. However, this waste area is inspected on a daily basis. As the result of the EPA inspection we have modified our record keeping to include a bound logbook to record weekly inspections.

Regarding the issue of training records for individuals handling hazardous waste, it is important to recognize that the constituents which qualify our materials as hazardous are present in much larger quantities and higher concentrations in our raw materials. The OSHA hazard communication standard mandates extensive training for the individuals involved in handling these materials. Therefore, all production employees have received extensive training regarding the hazards of these materials. This includes hazard communication and HMIS training which involves the explanation of basic toxicology concepts, the health effects of specific materials, the physical hazards of such materials (e.g. flammability), the use of personal protective equipment, emergency response, first aid etc. In addition, those individuals who handle materials identified as RCRA wastes receive additional training regarding the applicable regulations. Provided attached are example programs which have been presented to employees involved in handling RCRA regulated waste, along with correspondence associated with the review and presentation of this material. Also provided are copies of sign-in sheets and other course materials. It should be noted that Mr. Cervenka has served as the instructor for some of this material. He has received training from our corporate Health Safety & Environmental Affairs Department, which specifically included RCRA training.

We strongly disagree with the conclusion that training has not been provided. We have however improved our filing system by initiating an electronic filing system, which will include scanned images of documents such as sign-in sheets and test results. These files will be sorted by individual, and will be readily available during future inspections

P&S is committed to the continual improvement of our environmental management system. We appreciate EPA's comments and will be glad to work with you and discuss these matters further. We believe that the findings of the inspection do not justify an enforcement action.

Please feel free to contact me with any additional questions you might have.

Very truly yours,

PIERCE & STEVENS CORP.

Martin D. Mulholland

Martin D. Mulholland, P.E.
Plant Manager

245 East Kehoe Blvd., Carol Stream, IL 60188 PHONE: 630.653.3800 FAX: 630.510.0927

18 - Hazardous Waste and Off-Specification Material Handling Procedure

1.) Wear proper PPE.

2.) Inspect tools and equipment (e.g., grounding and bonding straps, 55 gallon drum, PPE, funnels, etc.).

3.) Are you familiar with the hazards of the material ? If so, you may proceed. If not, refer to HMIS, batchcard, MSDS, container label, or contact your Foreman or Plant Management.

4.) Ensure that the local or area exhaust ventilation system is in operation.

5.) Remove any static generators (e.g., plastic lined drums, plastic shrink wrap, etc.) from the hazardous area and take all precautions against static electrical buildup.

6.) If necessary obtain an empty / sound 55 gallon drum whose previous contents will be compatible with the material you are handling. See compatibility chart or contact Foreman or Plant Management.

7.) Remove all existing labels and P&S markings from the drum. Stencil the correct product recycle or waste code on the head and side of the drum. Adhere a Hazardous Waste label to the drum as necessary. Complete waste labeling requirements as per RCRA training and internal program.

8.) In a safe / designated location: Bond the container and then transfer material into the properly grounded and labeled drum.

9.) After transfer of material, ensure that the drum is sealed.

10.) Reuse, or properly empty and discard the container as per RCRA procedure. Note: To be disposed of as ordinary plant trash, the container must be emptied to the extent possible. Therefore, the container must be scraped clean, or depending on the material, cleaned per other equally effective means such as pouring. Only dried material, no more than 3 percent by weight of the total capacity of the container can remain in the container or inner liner. Unless the container is rendered free of liquid as per the above, it must be disposed of as hazardous waste.

Jim Drzewiecki

From: Jim Drzewiecki [BUF/BUFPO/UBFCOJFD]
Sent: Thursday, November 07, 1996 10:46 AM
To: Robert Cervenka; Randy Siti
Subject: RCRATRAN.PPT

Guys, do each of you have access to Power Point from the network? If so, you can open the attached training program I put together for RCRA training purposes. Pls. review and provide me with your comments. Excerpts of this can be used for future PSM training purposes.
If need be I can provide you with a hard copy.
THX, Jim

Jim Drzewiecki

From: Robert Cervenka [CS/CSPO/UCSCORRC]
Sent: Thursday, November 07, 1996 1:23 PM
To: Jim Drzewiecki
Subject: RE: RCRATRAN.PPT

VERY well done James!!! Now how about doing the rest of our training topics in this format?

From: Jim Drzewiecki
To: Robert Cervenka; Randy Siti
Subject: RCRATRAN.PPT
Date: Thursday, November 07, 1996 10:45AM

<<File Attachment: RCRATRAN.PPT>> Guys, do each of you have access to Power Point from the network? If so, you can open the attached training program I put together for RCRA training purposes. Pls. review and provide me with your comments. Excerpts of this can be used for future PSM training purposes.
If need be I can provide you with a hard copy.
THX, Jim

PIERCE & STEVENS CORP.

Resource Conservation and Recovery Act (RCRA) Training Program (40 CFR 265.16 -)

JFD - 11/5/96

WHO IS REGULATED?

- All generators of hazardous waste
- All shippers of hazardous waste
- All transporters
- All Treatment Storage & Disposal Facilities (TSDF's) that receive waste

What is the government looking for ?

- Well run and managed:
  - Treatment Storage and Disposal Facilities
  - Manufacturing Plants
  - Transportation Companies

WHY ?

- To prevent Superfund Sites
- To prevent illegal dumping of Hazardous Waste
- Ensure safe transportation
- Reduce the number of Incidents
  - Injuries, illnesses, deaths and catastrophes

PIERCE & STEVENS CORP.

- Our facilities have been granted United States EPA permits allowing us to generate and temporarily store Hazardous Waste

Consequences of a Poor Hazardous Waste Management System

- Citations leading to large fines and possible imprisonment
- Loss of our permit to generate and temporarily store hazardous waste
  - Loss of manufacturing capabilities

Benefits of a Strong Management System

- Job security
- Favorable inspections and higher opinion of our facilities by regulatory agencies and public
- Waste minimization = $ savings
- Fewer incidents = safer facility
- Less chance of causing environmental damage = lower liability and potential of claims

WHO MUST BE TRAINED?

- All employees who must work with hazardous waste materials

WHAT IS THE REQUIRED FREQUENCY OF TRAINING?

- Upon initial assignment into the area or job classification (within 6 months)
- At least annually thereafter
- Workers must be supervised until they have received this training

WHAT IS THE REQUIRED CONTENT OF THE TRAINING?

- Teach personnel waste management procedures
- Train to be able to respond to emergencies
- Communication and alarm systems
- Shutdown procedures
- Fire training (Incipient Stage Fires)

WHY MUST WE TRAIN?

1. Government regulation

2. Keep employees and our facilities safe

3. Keep the environment and public safe

SIGNS OF A DEFICIENT WASTE MANAGEMENT SYSTEM

- Inadequate waste identification
- Inadequate assignment of responsibilities
- Inadequate facility standards
- Inadequate information
- Inadequate emergency notification

IN THE EYES OF A REGULATOR, ALL EQUAL A NON-SYSTEM

KEY STEPS

- Proper identification of Hazardous Waste
- Sound emergency response and alarm system training
- Sound manifest system
- Accurate training records and well kept files
- Use of reliable transporters
- Use of permitted TSDF's

Identification of Hazardous Wastes

- Proper ID is necessary for the following reasons:
  - Segregate wastes so that hazardous reactions do not take place
  - Ensure that the Treatment Storage & Disposal Facility (TSDF) receives a uniform waste
    - ensures proper treatment methods and recycling, etc....
  - Proper accounting and recordkeeping for annual waste reports and pollution prevention plans, etc...

Definition of Hazardous Waste

- Simplified Version
  - If it is considered:
    - Ignitable / Flammable
    - Toxic
    - Reactive
    - Corrosive

INTERNAL WASTE CODES

P &S CODE	DESCRIPTION OF WASTE & OFF-SPEC MAT. CODES	DESIGNATION
7990	Water-Borne Material	Non-Hazardous
8060	Solvent-Borne Material (Low Solids - Pumpable)	Hazardous
9099	Solvent-Borne Material (High Solids - Non-pumpable)	Hazardous
9403	Water-Borne Ignitable Material	Hazardous
9404	Acrylate mixed with Solvent and Styrene	Hazardous
9405	Multifunctional Monomeric Acrylate (No Solvents)	Non-Hazardous
9406	MDI and/or TDI	Hazardous
9407	MDI and/or TDI in small containers within the drum	Hazardous
9408	Aromatic Amines	Hazardous
9409	Multifunctional Monomeric Acrylate mixed w/ water	Non-Hazardous
9410	Water-Born Adhesive	Non-Hazardous
9411	Out of Spec Dualite	Non-Hazardous
9412	Rags, Filter Bags and Filter Cartridges	Hazardous
9413	Coagulum/Hot Melt Scrap	Non-Hazardous
9414	C-Pryme Waste	Hazardous
9415	Mercury Compound Rags, PPE, Containers, etc...	Hazardous
9415H	High Mercury Conc. (>260PPM) M4436M, J9638A,	Hazardous
9416	Non-Hazardous Filter Bags, Cartridges and Rags	Non-Hazardous
9417	Chlorinated Solvent Material	Hazardous

Sources of Hazardous Waste

- Off-Specification product & raw materials
- Residues or debris from spills
- Contaminated containers, pipes, etc...
- Mixer and equipment washings and drainings
- Contaminated PPE
- Customer returns

IF IN DOUBT...ASK PLANT MANAGEMENT

EMERGENCY PLANS

- RESPONSE AND NOTIFICATION PROCEDURES FOR:
  - SPILLS and RELEASES
  - FIRE and EXPLOSION
  - MEDICAL & FIRST AID EMERGENCIES
  - EMPLOYEE EXPOSURE TO CHEMICALS

SPILLS & RELEASES

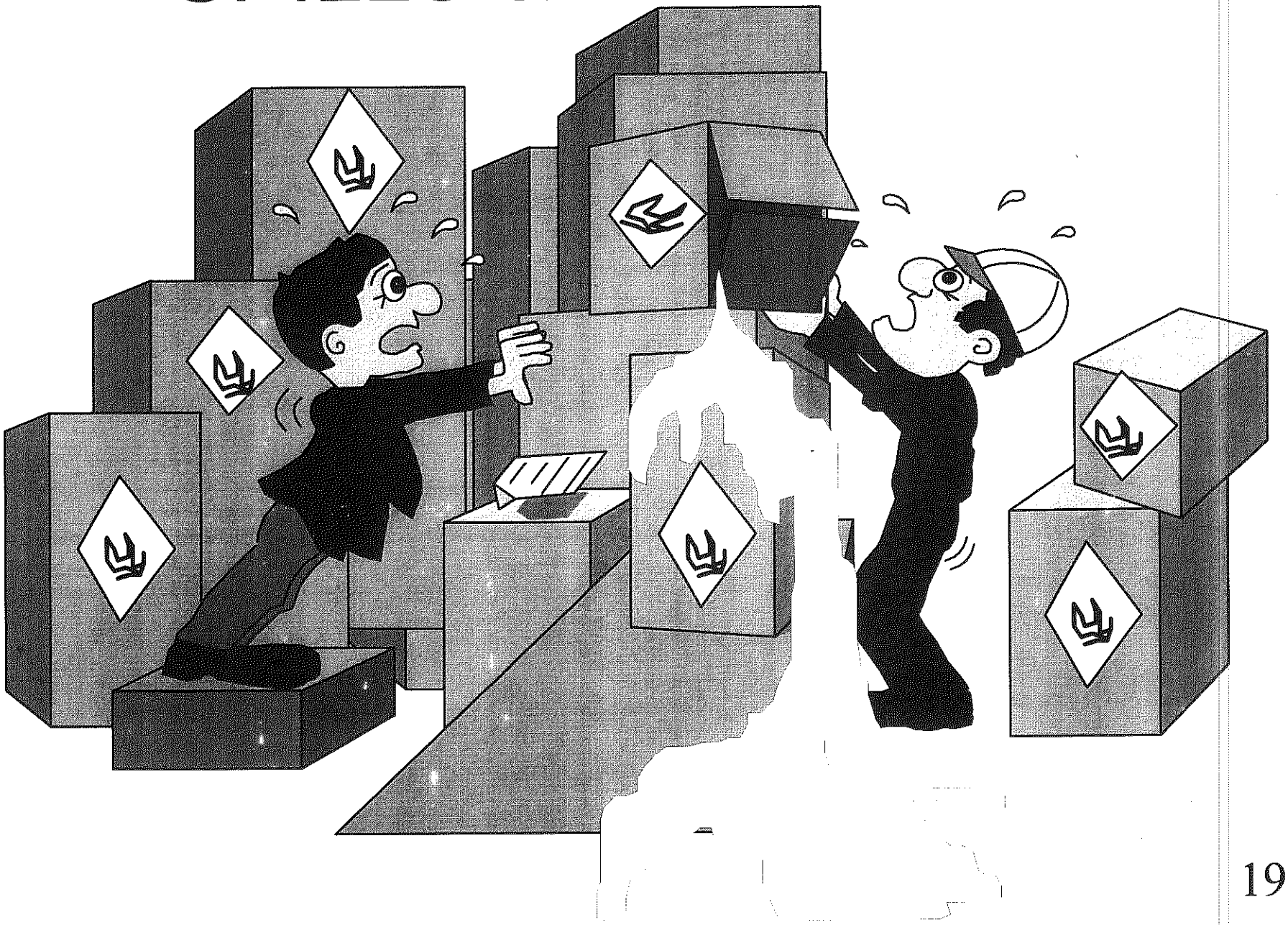

SPILLS AND RELEASES

- Upon discovering an incident you must:
  - Approach cautiosly
    - You cannot help others or attempt to conatin the spill unless you are trained and know what you are facing. If in doubt and /or untrained - GET OUT !
  - Identify the hazards from a safe distance
    - Use container labels, product numbers and MSDS
  - Secure the scene
    - Shut down potential ignition souces, open windows and doors and warn others who are approaching, etc...
  - Obtain Help
    - Inform the Spill Team via the facility paging system
    - Provide Spill Team with any available details
  - Notify Plant Management ASAP

FIRE & EXPLOSION

- You may attempt to extinguish incipient stage fires only.
  - Incipient (beginning) stage fires:
    - Not producing large quantity of smoke
    - You are not breathing smoke
    - The fire has not spread beyond a 10 square foot area
    - You feel it is safe to attempt to extinguish the fire based on it's location, size, etc...
  - You must first be trained in the use of portable fire extinguishers

FIRE & EXPLOSION

- Response & Notification Procedure:
  - If beyond incipient stage: IMMEDIATELY EVACUATE THE BUILDING
  - Pull manual fire alarm pull station upon your exit
  - Shut down equipment <u>only if it is safe to do so</u>
  - Evacuate to your predetermined location in the parking lot
  - Notify Plant Management / provide any details while at a safe location

EXPLOSION

- IMMEDIATELY EVACUATE THE BUILDING AND REPORT TO YOUR PRE-DETERMINED SAFE LOCATION

- ACTIVATE A MANUAL PULL STATION UON YOUR EXIT

- NOTIFY PLANT MANAGEMENT IF YOU ARE AWARE OF DETAILS

MEDICAL & FIRST AID EMERGENCIES

- Types of Medical and First-Aid emergencies:
  - Bleeding
  - Electrical shock
  - Burns
  - Choking
  - Poisonings
  - Allergic Reaction
  - Chemical exposure

MEDICAL & FIRST-AID EMERGENCIES

- Notify the First-Aid Team via the facility paging system from any internal phone
  - Provide location and number of injured, type of injury, conditions at the scene, etc....
  - If safe, stay with the individual until help arrives.
  - If necessary, call 9-1-1.
  - Notify Plant Management ASAP

EMPLOYEE EXPOSURE TO CHEMICALS

- Primary Routes of Entry:
  - Contact/Absorption
  - Absorption or permeation of skin
  - Ingestion
  - Inhalation

  Be sure to get fresh air and/or rinse with water for at least 15 minutes if exposed. Utilize emergency eye wash and shower stations. Report all exposures to management ASAP.

EMPLOYEE EXPOSURE TO CHEMICALS

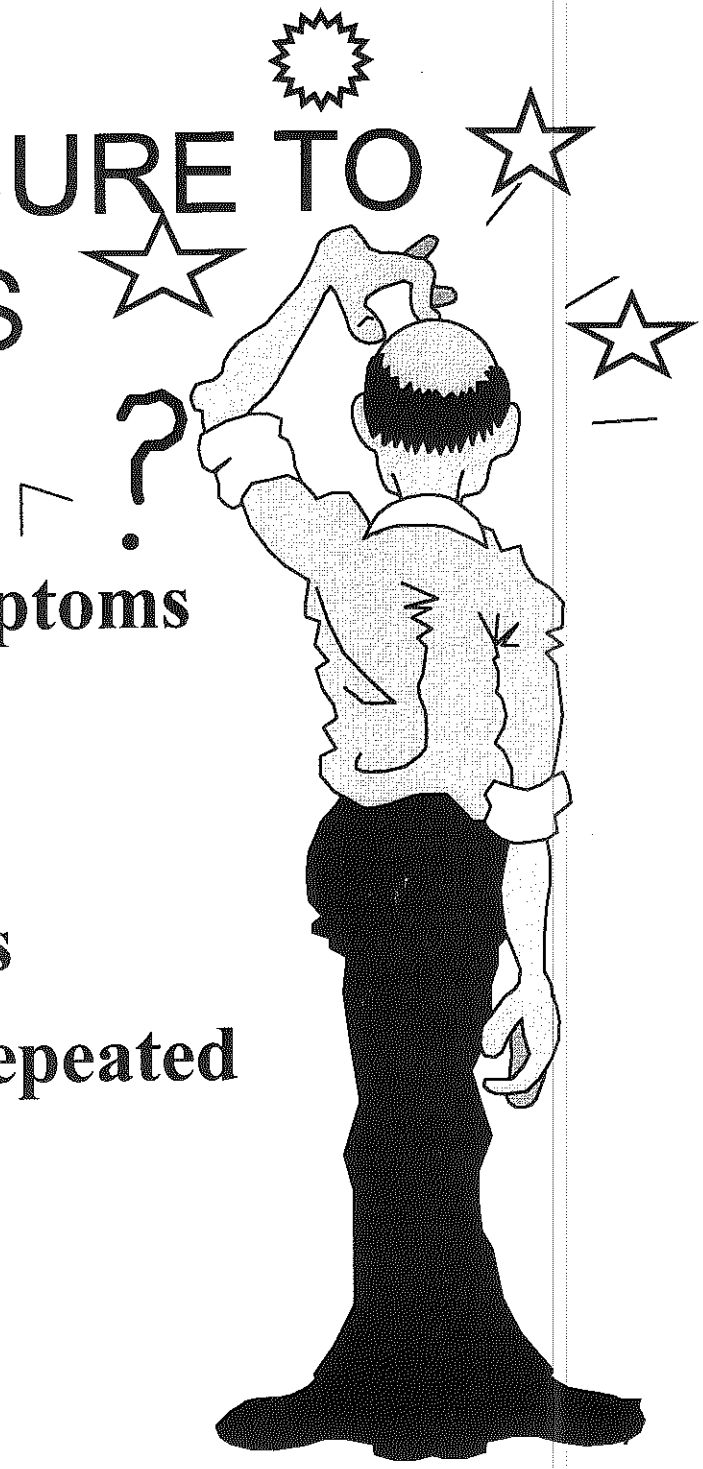

Results of exposure:

- **ACUTE - rapid onset of symptoms**
- **shortly after exposure**

- **CHRONIC - exposure occurs**
- **over a prolonged period or repeated exposure before**
- **symptoms occur**

EMPLOYEE EXPOSURE TO CHEMICALS

EXPOSURE POLICY:

1. **Identify the substance**
2. **Identify the hazards - MSDS, product labels, etc....**
3. **Notify the First Aid Team and Plant Management**
4. **Observe Employee and Render Assistance**
5. **Arrange for Prompt Medical Evaluation**

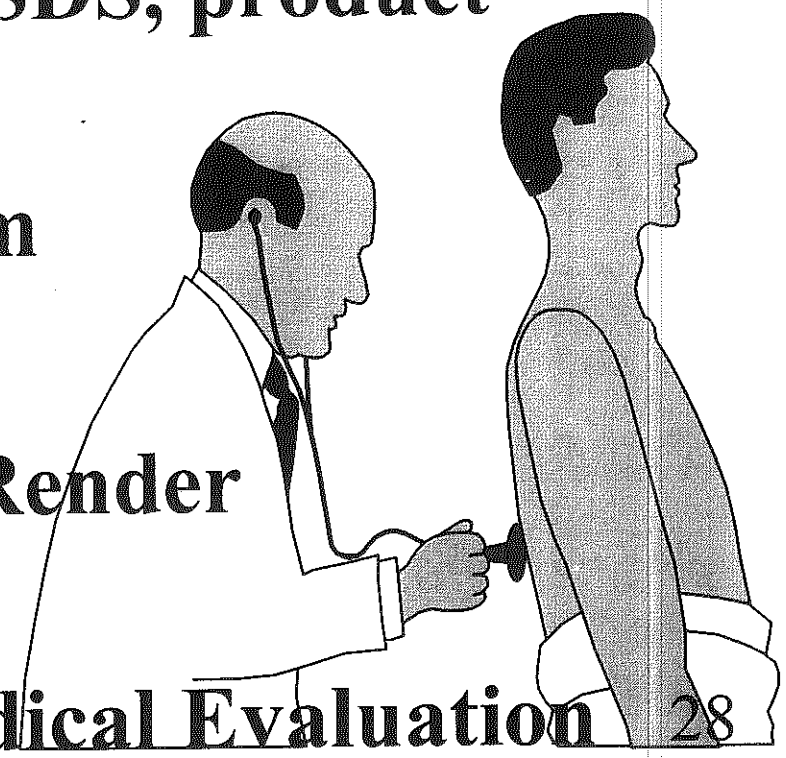

WASTE MANAGEMENT PROCEDURES

- DRUM LABELING
- CONTAINER PREPARATION / SELECTION
- CONTAINER HANDLING
- INSPECTIONS
- PREPARATION FOR SHIPMENT

The next important point to note in our fictitious incident relates to the documentation of hazardous goods.

There are several issues relating to the documentation that have been touched on in this case:

* **First, the location of the documents in transit** - the regulations state that hazardous materials documents must be carried in the cab of the truck within the reach of the driver. When the driver leaves the cab, the documents must be left on his seat or in the pocket of the drivers door. The emergency responder knew right where to go to retrieve the documents.

* Next, from the documents the responder was able to view several pieces of information to describe the nature of the hazard.

  - **Proper shipping name** of the goods - Each hazardous material is assigned a proper shipping name from a table in the Code of Federal Regulations known as Table 172.101. It is the responsibility of the manufacturer of the goods to determine the best appropriate name from the table.

  - **Hazard Class** - Dangerous goods are divided into nine classes based on a long established international system. As stated previously, each class is represented by number, color and international symbol. In our case study, the red placards immediately identified "Flammable Liquids" as being part of the load on the vehicle.

  - **UN Number** - Each proper shipping name in the hazmat table is assigned an ID number. The ID number is a reference to a specific procedure or precaution to be followed in an emergency. Again, this is an internationally recognized system of communication. A typical example in our case would be the UN number for Adhesives.

    Flammable liquid Adhesives are assigned UN number 1133. A cross reference to the Emergency Response Guidebook to UN1133 takes you to guide number 26 which is a full page description of procedures to follow in the event of a discharge. Emergency response guidebook will be further discussed later.

  - **Packing Group** - Some hazardous goods are assigned into a degree of hazard category called a Packing Group. The Packing Group, listed in roman numerals I, II, or III, relates to the degree of danger of the goods. Flammable liquids are assigned packing groups based on the Flash Point and Boiling Point of the product. Packing Group I products are considered of great danger, Packing Group II moderate danger, and Packing Group III are considered minor danger.

    Packing Group I = Boiling Point less that 95 deg F = Great Danger
    Packing Group II = Flash Point less than 73 deg F = Moderate Danger
    Packing Group III = Flash Point between 73 - 141 deg F = Minor Danger

For the shipping documents, all four pieces of information are required for each hazmat, and they must be entered in the order specified. Additional information may be entered before or after the description requirements.

Proper Shipping Name	Hazard Class	ID Number	Packing Group
Adhesives	**3**	**UN1133**	**II**

The total quantity must be entered either before or after the description.

Hazardous goods must be separated from non-hazardous goods on the documents in any one of three ways:

* Hazardous Materials must be entered first

or

* Hazardous materials must be highlighted

or

* May be preceded by an "X" in a column headed "HM"

Pierce & Stevens bills of lading are preprinted with a column headed "HM" and this is the alternative of our choice. Each hazardous material on our shipping document will have an "X" in the column headed "HM", allowing entry onto the document in any order.

Another feature that has been programmed into the P & S shipping documents is the use of the ERG page in the description. This entry describes which page of the Emergency Response Guidebook applies to each line of goods. This is the same page that will be found through the cross reference with the UN number, but eliminates the need to research the cross reference.

A typical bill of lading description for a Pierce & Stevens shipment would look like this:

PKGS	CONT	H.M.	SHIPPING NAME	CLASS	I.D.	P.G.	WGT
1	DRUM	X	ADHESIVES ERG 26	3	UN1133	II	500 LB. 227 KGS

While the regulations do not require the listing of weights in both units of measure, we again elected to enter both pounds and kilos to avoid confusion.

Finally, there are a few more requirements beyond the product description.

Emergency Telephone Contact - A person who offers a hazardous material for transport must provide a 24 hour emergency response telephone number for use in the event of an emergency. The number must be printed on the shipping document, and the phone line must be monitored at all times the material is in transport. Pierce & Stevens, like most larger shippers of hazmats, has elected to retain a third party agent to monitor the 24 hour contact number. Our bills of lading are preprinted with the CHEM-TEL telephone number to call for an emergency. **CHEM-TEL stores copies of all MSDS for P & S products and will send a copy to any inquiry on request.**

"EMERGENCY CONTACT: CHEM-TEL 800-255-3924"

* Shipping documents must show both the **shipper and consignee name and address**.

* Shipping documents must be written **legibly and in English**.

* Shipping documents must be **signed** by an agent of the shipper.

* Multiple pages must be **consecutively numbered** and each page must denote the total number of pages (1 of 1; 1 of 3, etc.).

MARKING & LABELING

As the responders approached the vehicle, they were able to see the drum that had spilled was marked with a red label similar to a placard indicating Flammable Liquid.

This form of communication is referred to as **marking.**

Additional requirements of marking are:

* Marks must be in English
* Must be durable and legible
* Printed or affixed to the package
* Displayed on a background of contrasting color
* Unobscured by other labels or attachments
* Located away from advertising or other marking
* Proper Shipping Name and ID number must appear on same surface
* Either consignee or consignor name or address must be clearly marked
* Flammable liquids packed in outer packaging must have two orientation arrows applied to opposite panels.

From our point of view at P & S, there are a few **'tricks of the trade'** that we need to remember :

* Vehicles carrying an amount in excess of 1000 lb. of hazardous goods need to be placarded.

* Hazardous goods described as 'limited quantities' on the shipping documents do not require placards.

* Vehicles carrying more than one class of dangerous goods may use a "Dangerous" placard as long as no one class of hazardous goods on board exceeds 5000 lb.

* Similarly, if a vehicle is carrying 5000 lb. of one class of hazmats, the vehicle must bear that placard. (Flammable Liquids for example).

* If the vehicle is carrying one or more packages that contain 119 gallons or more in one package (tote tanks for example), the placard must be the type that bears the UN Number across the face (1133 for example). This tells an emergency responder from a distance that if there is a discharge, there is a chance the quantity would exceed 119 gallons if even one package ruptured.

* If a vehicle approaching the dock for a pickup is already displaying placards, care must be taken to be certain that what is already loaded is compatible with what you plan to load. The regulations list a table called the "segregation table" that must be referenced to be certain loading is approved. Some hazmats may be loaded together, some may not; while others require space between goods. For example:

  Flammable Liquids cannot be loaded on the same vehicle with Poisonous liquids, Zone A, PG I

  Flammable Liquids may be loaded on the same vehicle with Oxidizers as long as separated by a distance of 4 feet and packages are on pallets.

* While we routinely offer placards to accompany our products shipped, it is extremely important to require the driver to initial the shipping order acknowledging their receipt. It is always possible that a driver may decide to remove the placards after leaving the loading dock and claim that the placards were not offered.

PACKAGING REQUIREMENTS FOR HAZARDOUS MATERIALS

The second most difficult aspect of hazardous materials transportation is packaging.

There has been an increased awareness over the past several years of packaging issues with the coming of **Performance Orientated Packaging** rules.

At one time, packaging specifications were written into the regulations which identified specific construction, design and other criteria for the packaging of hazardous materials. In order to ship hazmats, a shipper would refer to the regulations to find out which package could be used.

Now, the rules have been changed to allow more flexibility in the choice of packaging materials.

The new regulations specify **test criteria** that must be met by the packaging choice. The tests include vibration, stacking and drop tests to name a few. A hazmat shipper needs to determine what hazard a product displays, choose any available packaging materials, and must then subject the packaging choice to the required testing procedures. Once the tests have been passed, the package can be marked as certified to transport the goods.

The tested package then fulfills the requirements of **"Performance Orientated Packaging",** which simply means it has passed the required testing to safely transport the goods enclosed.

Performance orientated packaging requirements are now mandated for air shipments as well as all international shipments of dangerous goods. In order to ship hazmats internationally or by air the package must bear the UN markings of performance orientated packaging.

However, just as with most regulations, things just aren't that simple!

In reality, the cost of the additional materials required, combined with the costs associated with the initial and periodic testing has significantly added to the overall cost of packaging. In addition, the heavier construction required to pass the performance tests would result in increased accumulation of packaging waste for the impacted industries.

For these and other reasons, several groups have successfully lobbied the US Government to except certain categories of hazardous materials from the performance orientated packaging requirements.

Paints, Paint Related Materials, Adhesives, Ink and Resins are among the groups of materials that have the benefit of this exception. (CFR49, 173.173)

Since most of Pierce & Stevens products fall under these headings, we are able to take advantage of the exception to use non-specification packaging for domestic transportation. The package must be well constructed and must meet the general packaging requirements of the regulations, but need not meet testing criteria.

The greatest impact of the exception is found in the use of goods packaged in less than pail quantities. Since the regulations have been updated to encompass the performance orientated packaging requirements, most tote tanks, drums, and pails have been tested and are purchased already tested to store goods with hazard degrees higher than the products that we produce.

The regulations do authorize the use of a package tested for higher level hazards with goods of lesser hazard. For instance, a pail tested to packing group II flammable liquids may be filled with a packing group III flammable liquid.

There are two other exceptions written into the **domestic regulations** that we can take advantage of in terms of packaging.

First is an exception for Combustible Liquid. A flammable liquid with a flash point above 100 degrees F may be reclassified as a Combustible Liquid. This exception allows a product that meets this criteria to be packaged in non-specification containers, and relieves us of the requirement to apply a red label. **Combustible liquids do not require the red label for domestic (U.S.) ground transportation, unless shipped in bulk packaging.**

The second exception that is available for typical P & S products is the exception for **Limited Quantities** found in 173.150.

The limited quantity exception was written into the regulations based on historical data relating to incidents in transit. Through experience it was determined that if a hazardous material is packaged in a small quantity the likelihood of a significant release of the materials is very slim. Due to the amount of packaging materials required in shipping small containers, the recorded incidents reveal very little spillage of hazardous goods.

The limited quantity exception offers relief from packaging , hazard labels and placarding. The exception specifies the maximum inner container size based on the packing group of the goods.

Packing group II flammable liquids packaged in inner containers up to 1 L (1 quart) may be classified as limited quantity.

For example: 12 quarts packaged in one outside carton may be called limited quantity.

Packing group III flammable liquids packaged in inner containers up to 4 L (1 gallon) may be classified as limited quantity.

For example: 4 gallons packed in one outer carton may be called limited quantity.

Again, this exception applies to domestic ground transport only, not to air or international shipments.

THE INTERNATIONAL HAZARD CLASSES

CLASS 1 - EXPLOSIVES
Placard & label - Orange background , explosive symbol

CLASS 2 - NON FLAMMABLE GAS
Placard & label - Green background, cylinder symbol
POISON GAS
Placard & label - White background , skull & crossbones
FLAMMABLE GAS
Placard & label - Red background , flame symbol

CLASS 3 - FLAMMABLE LIQUID
Placard & label - Red background , flame symbol

CLASS 4 - FLAMMABLE SOLID
Placard & label - White & red striped background , flame symbol
SPONTANEOUSLY COMBUSTIBLE
Placard & label - Lower half red, upper half white, flame symbol
DANGEROUS WHEN WET
Placard & label - Blue background , flame symbol

CLASS 5 - OXIDIZER
Placard & label - Yellow background , sphere with flames on top
ORGANIC PEROXIDE
Placard & label - Yellow background , sphere with flames on top

CLASS 6 - POISON
Placard & label - White background , skull & crossbones
STOW AWAY FROM FOODSTUFFS
Placard & label - White background , "X" over stalk of wheat

CLASS 7 - RADIOACTIVE
Placard & label - White lower half, yellow triangle in upper half, international radioactive symbol

CLASS 8 - CORROSIVE
Placard & label - Black lower half, white triangle in upper half, material flowing from test tubes to skin & metal

CLASS 9 - MISCELLANEOUS
Placard & labels - White with black stripes on top, solid white bottom

CONGRATULATIONS!!!!

YOU CAN NOW CONSIDER YOURSELF AN "EXPERT"

AT HAZARDOUS MATERIALS TRANSPORTATION.

You have just completed Module 1 - General Awareness. You have only to complete the attached test and send it back to me for your personal record , as well as for the required records of the Federal Government.

The regulations also require hazmat employees to receive "Function Specific" training in their specific areas of responsibility.

There are a total of three modules attached:

Module 1 - General Awareness / Familiarization intended to be given to all Pierce & Stevens employees. This has been Module one - recognizing the potential hazards in the workplace.

Module 2 - Function Specific / Safety in shipping and receiving

Module 3 - Function Specific / Safety in batchmaking and filling

Each module has been written in a 'self help' format just like the program you've just completed. It was written to be simple and easy to understand.

You have been instructed which modules you are required to take.

While not necessarily required, feel free to continue through the other modules and complete the test certification at the end of each. Forward all completed tests to Bill Brennan for your personnel file.

The more we all know, the easier our jobs will be.

The greater the level of training, the less apt we are to make mistakes.

POST AWARENESS TEST - HM126F
MODULE 1 - GENERAL AWARENESS

Name: _____ Date: _____

Department: _____ Location: _____

1.) Name the two most fundamental issues surrounding the hazardous materials regulations:

_____ _____

2.) How can you tell if a truck is carrying hazardous goods?

_____

3.) Shipping papers accompanying hazmats must include:
   a. Shipper's name and address
   b. Description of dangerous goods
   c. 24 Hour emergency contact telephone number
   d. All of the above

4.) Name the four pieces of information required on a hazmat shipping document.

_____ _____ _____ _____

5.) The three degrees of danger represented by the Packing Group designation are Great, Moderate and Minor

TRUE or FALSE

6.) The 24 hour emergency contact telephone number must be monitored by a company Lab Technician.

TRUE or FALSE

7.) Truck drivers are not required to undergo hazmat training because their company did not manufacture and does not own the goods.

TRUE or FALSE

8.) What Packing Group would an Adhesive with a flash point of 10 degrees F fall into?

I II III

9.) What is the degree of hazard of a Packing Group II material?

GREAT MODERATE MINOR

10.) Match the Class Number with the Class Description:

Class 1	Radioactive
Class 2	Oxidizer
Class 3	Poison Gas
Class 4	Corrosive
Class 5	Poison
Class 6	Flammable Liquid
Class 7	Miscellaneous
Class 8	Explosives
Class 9	Flammable Solids

CERTIFICATION:

This is to certify that the employee listed above has received hazardous materials transportation general awareness training and has been tested in accordance with 49 CFR 172.700 - 172.704.

Pierce & Stevens Corporation
Module 1 - General Awareness / Familiarization
Bill Brennan, Transportation Coordinator

PIERCE & STEVENS CORPORATION

HAZARDOUS MATERIALS TRANSPORTATION IN A GLOBAL MARKET

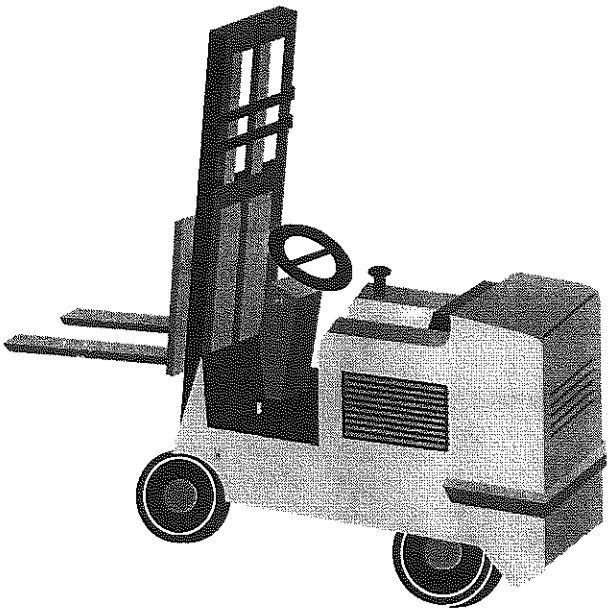

HM126F - HAZARDOUS MATERIALS UNIFORM SAFETY ACT OF 1990

(VOLUME 2 - FUNCTION SPECIFIC/SAFETY TRAINING - SHIPPING & RECEIVING PROCESS)

1996

SAFETY ON THE DOCKS

WHAT DOES IT TAKE TO INSURE A SAFE WORK ENVIRONMENT?

AWARENESS, TRAINING, AND

COMMITMENT TO EXCELLENCE

ARE ALL GOOD STARTS!!

Hazardous materials regulations place the burden of compliance on the shipper of hazardous goods as it is the shipper of the goods who is most knowledgeable of the goods being shipped.

LETS LOOK AT TYPICAL DOCK ISSUES . . .

"WORKING THE DOCKS"

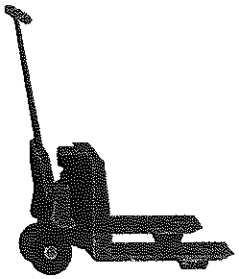

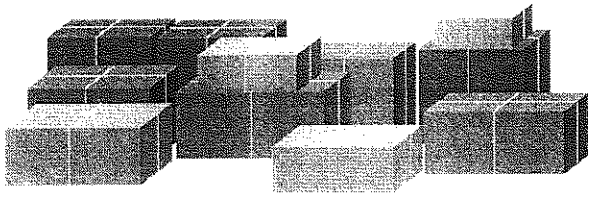

* Smoking on or about any motor vehicle while loading or unloading hazardous materials is prohibited.

* Extreme care should be taken in the loading or unloading of hazardous material to keep fire away and to keep persons in the vicinity from smoking, lighting matches or carrying any flame or lighted cigar, pipe or cigarette.

* Vehicle engines must be shut off, emergency brakes set, wheel chocks or similar positive restraint must be put into place to prevent motion before attempting to load hazardous goods.

* Forklifts, drum trucks, two and four wheel carts are all available for the movement of materials. Wherever possible a sound mechanical means of transporting hazardous materials must be used.

* No tools which are likely to damage the effectiveness of the closure of any package shall be used for the loading or unloading of hazardous goods.

Let's look at a P & S product:

If it has been determined that a drum of material being shipped is a flammable liquid adhesive, we must communicate that information to any person who may come in contact with that drum.

Label - The drum must bear the Hazard Label communicating the hazard of the goods being shipped. (For example: Red Label 3)

Shipping name - The Proper Shipping Name of the goods must appear on the same surface as the hazard label. (For example: Adhesives)

I.D. Number - The identification number must appear on the same surface as the Hazard Label and the Proper Shipping Name. (For example: UN1133)

Shipper or Consignee name and address - For hazardous materials shipped domestically by road, either the shipper or consignee name and address must be printed on each package. In most cases, the product label applied to the goods will sufficiently list Pierce & Stevens Corporation and our addresses on our label.

Documents - The documents must use the required description, and the description must be the same as the communication on the package. (Adhesives, 3, UN1133, PGII). The documents must also list the degree of danger (stated in PG in above example), list the total quantity of the goods, emergency response telephone number, be signed and certified, and indicate if placards have been offered.

Placards - The driver must be supplied with placards to communicate the hazard. It is the shippers responsibility to offer the required placards. (In this example, the total quantity offered for one drum would be under the 1000 LB minimum for placarding. Had there been over one thousand pounds offered, a Class 3 placard should be offered).

Things to Remember

Liquid hazardous goods packed into an outer pack such as a fiberboard box must be packed with the closures of the inner package in an upward direction. Orientation arrows, (up arrows) must be displayed on two opposite panels of the outside package.

Packaged goods shipped under the Limited Quantity exception do not need hazard labels and do not require placards to be offered.

Hazardous materials shipped by air or internationally have separate regulations governing their transport. This training program will not specifically address air shipments or international shipments. Separate sections covering international air shipments are planned for future training modules.

When loading a shipment of hazardous materials on a transport vehicle, look for the problem areas:

* Confirm that the driver possesses a CDL (Commercial Drivers License) with Hazmat endorsement

* Make certain the package is properly marked:
  - Hazard label
  - Proper Shipping Name
  - Shipper or consignee name and address
  - Up arrows if liquids are packed in a fiberboard box

* Make certain the description on the documents matches the goods.

* Have the driver properly sign the shipping documents:
  - Sign in full for shipment at bottom of bill of lading
  - Initial the acknowledgment of CDL with Hazmat
  - Initial the presence of Emergency Response Guidebook or offering of reproduced guidebook information sheets.

* Be sure the proper placards are shown on the bill as being offered.

* Visually check packages for leaks or damage.

* Before releasing truck, ensure all cargo is secure.

LOADING, BLOCKING AND BRACING

Before attempting to load a vehicle to transport hazardous goods, a visual inspection of the equipment should be taken.

* Engine should be off and trailer wheels chocked before entering
* Floor, body and doors must be tight and free of loose boards.
* Nails, staples or protrusions must be removed or redriven.
* Vehicle must be free of debris or spillage from previous cargo.

SECURE LOAD TO PREVENT MOTION

* Lading should be blocked and braced tightly both length and crosswise
* Spaces between pieces should be filled with dunnage to prevent shifting
* Loading diagram should be prepared in advance to ensure secure loads and complete utilization of space.
* When floor loading **metal** drums, either a staggered pattern of 4..3..4 etc., or a straight line of 4..4..4 etc. is acceptable.
* When floor loading **fiber** drums a straight line pattern of one drum behind the other is recommended.
* Palletized loads of drums must be stretch wrapped to prevent drums from walking off the pallet.
* All palletized loads of pails and/or case goods must be stretch wrapped to prevent shifting.

* When loading mixed packagings onto the same transport vehicle, care must be given to reduce interaction between packages. Containers will inflict damage to each other in transit if there is constant interaction between.

* All pallets used in transit must be in good to excellent condition.

* Portable tanks carrying hazardous goods may not be stacked, nor may any other freight be stacked on them in transit.

* All bungs, hatches and valves on tote tanks, drums and pails must be closed and inspected for closure and integrity.

In any single motor vehicle, hazardous goods shall not be loaded together if prohibited by the loading and segregation chart. Items that *cannot* typically be loaded with Flammable Liquids include:

- Explosives
- Poisonous Gas Zone A 2.3
- Poisonous Liquids PGI Zone A 6.1

Typical items that *may be loaded* with Flammable Liquids if separated include:

- Poisonous Gas other than Zone A 2.3
- Oxidizers 5.1

Refer to the chart for more details and instructions.

Weight Distribution

* Load weight must be evenly distributed within trailers.

* Total gross weight loaded must not exceed legal limits.

* Product should be loaded so that it can be easily unloaded by customer.

* Where load does not fill trailer width, goods should be loaded against the walls with dunnage in the center to secure load.

* When top loading, heavier containers should be loaded on bottom layer.

APPROVED RESTRAINT SYSTEMS

* **Stretchwrap** - low cost, excellent result, required for all palletized goods.

* **Plastic strapping** - highly effective means to unitize goods to pallets. Caution should be exercised when banding drums - not properly banding drums to pallet will cause goods to 'walk off' the pallet.

* **Toe boards** - (wooden boards nailed to the trailer floor) highly recommended when loading portable tanks and floor loading drums.

* **Load locks** - offer excellent protection when used in combination with other restraint systems.

TANK TRUCK UNLOADING

* Smoking, fire or open flame on premises is not permitted.

* Parking brake must be set and wheels chocked.

* Engine shut off (unless required to run pumps).

* Qualified person within 25 feet of controls with an unobstructed view of vehicle.

* Cargo tanks must be bonded and grounded to eliminate potential for spark.

* Manholes, valves and outlets must be closed and leak free upon completion.

* Never unload flammable products from a tank truck during an electrical storm.

SALVAGE DRUMS

* Salvage drums may be used to transport damaged or leaking packages to their final destination or back to the original shipper.
* Salvage drums must be of metal construction.
* Cushioning material must be used between inside of drum and inner packages.
* Absorbent must be added sufficient to soak up any free liquid.
* Drum, absorbent and cushioning must be compatible with hazardous goods.
* Capacity of salvage drum cannot exceed 110 gallons.
* Salvage drum must be marked in accordance with inner packaging including:
    - Proper Shipping Name
    - Hazard Labels as required
    - Name and address of consignee
    - Must also be marked "Recovery Drum" or "Salvage Drum"

That's it! You are now trained in the proper handling of dangerous goods in the shipping and receiving area.

All that you'll need to do to complete this section is to complete the attached questionnaire for your records.

POST AWARENESS TEST - HM126F
MODULE 2 - SHIPPING/RECEIVING

Name: _____ Date: _____

Department: _____ Location: _____

1.) When are orientation (up) arrows required on packages of hazardous goods?

_____ Required on all hazardous goods

_____ Only required on Pierce & Stevens products

_____ When liquids are packaged inside outer packages

_____ Only when shipping internationally

2.) In order to transport a placarded load of hazardous materials, a driver must possess a commercial drivers license with a hazmat endorsement.

TRUE or FALSE

3.) It is not necessary to chock the wheels of a trailer before loading if it is still attached to the tractor.

TRUE or FALSE

4.) It is the NOT the shippers responsibility to securely brace hazardous goods on a trailer.

TRUE or FALSE

5.) Flammable goods can be loaded onto a vehicle with no regard for other goods loaded onto the same trailer.

TRUE or FALSE

6.) Stretchwrap, strapping, toe boards and load locks are examples of load restraint systems.

TRUE or FALSE

7.) Once a tank truck is properly connected and pumping, it is not necessary to stay within view of the operation.

TRUE or FALSE

8.) Salvage drums may be filled and shipped with finished product if no other drum is available.

TRUE or FALSE

9.) If a leaking package is temporarily overpacked into a salvage drum only to return to the shipper, it does not need to be properly labeled.

TRUE or FALSE

10.) Are there any questions or topics that you are unsure of that you would like to receive more details on?

_____

_____

_____

_____

_____

_____

CERTIFICATION:

This is to certify that the employee listed above has received hazardous materials transportation function specific training and has been tested in accordance with 49 CFR 172.700 - 172.704.

Pierce & Stevens Corporation
Module 2 - Function Specific, Shipping & Receiving
Bill Brennan, Transportation Coordinator

PIERCE & STEVENS CORPORATION

HAZARDOUS MATERIALS TRANSPORTATION IN A GLOBAL MARKET

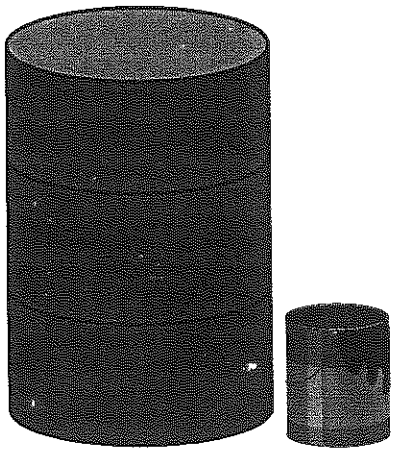

HM126F ~ HAZARDOUS MATERIALS UNIFORM SAFETY ACT OF 1990

(VOLUME 3 - FUNCTION SPECIFIC/SAFETY TRAINING -BATCHMAKING & FILLING PROCESS)

1996

The areas of batchmaking and filling are the processes that are least affected by the Transportation Regulations.

There are however some areas that are best addressed in these areas:

* Proper packaging
* Proper labeling
* Proper safety procedures

Most of the safety requirements are addressed in the Corporate training sessions that we have all received. Since the batchmaking and filling operators are the individuals most exposed to open containers and potential hazardous surroundings, several categories of training have been identified and administered. Some of the categories covered in our safety training programs are:

* Flammable & Combustible Liquids
* Respiratory Protection
* Ventilation
* The Controls of Hazardous Energy (Lockout/Tagout)
* Portable Fire Extinguishers
* Eye & Face Protection; PPE
* Powered Industrial Trucks
* Manual Material Handling
* Static Electricity
* Confined Area Entry

Since these and other areas have been covered in our Safety Training sessions, here we will concentrate on packaging and labeling.

PACKAGING HAZARDOUS MATERIALS FOR TRANSPORT:

The packaging of hazardous materials for transportation by air, highway, rail or water must be as specified in the regulations.

Each mode of transportation has separate regulatory requirements that may or may not be the same. Generally speaking, ***the potential risk of a hazardous material release on board an aircraft is significantly greater than that of a release on the highway that is accessible to emergency responders. Therefore, shipment of hazardous goods by air is more strictly regulated and quantities allowed are generally significantly lowered.***

The regulations list many products that are either forbidden for transport, or are required to be handled by specific means to transport, such as certain explosives or self-reactive chemicals. Fortunately we have not historically been involved in handling or shipping products of this nature.

Most of the products produced by Pierce & Stevens that are considered hazardous fall within three hazard categories:

* Flammable Liquids
* Poisons
* Corrosives

In order to transport any hazardous material, the regulations require that:

Each package used for the shipment of hazardous materials shall be designed, constructed, maintained, filled, it's contents so limited, and closed, so that under conditions normally incident to transportation:

1.) there will be no identifiable release of hazardous materials to the environment

2.) the effectiveness of the package will not be substantially reduced

3.) there will be no mixture of gases or vapors in the package which could significantly reduce the effectiveness of the package.

Some specific references in the regulations that are applicable to what we manufacture are listed below.

* Packaging materials and contents must be such that there will be no significant chemical or galvanic reaction between the materials and the contents.

* Hazardous materials may not be packed or mixed together in the same outer packaging with other hazardous or non hazardous materials if such materials are capable of reacting dangerously with each other.

* When filling packagings and receptacles for liquids, sufficient ullage (outage) must be left to insure that neither leakage nor permanent distortion of the package will occur as a result of expansion of the liquid caused by temperatures encountered during transportation.

* Liquids filled into bulk packagings (tote tanks) must be so loaded that the outage is at least one percent of the total capacity.

* A combination packaging containing liquid hazardous materials must be packed so that closures on inner packagings are upright.

* A non-bulk packaging which, upon inspection, shows evidence of a reduction in integrity may not be reused unless it is reconditioned in accordance with the regulations. Reuse through reconditioning entails conversion to a DOT spec or UN standard as described in the regulations.

* **No hazardous material may remain on the outside of a package after filling.**

MARKING AND LABELING HAZARDOUS MATERIALS

Each person who offers a hazardous material for transportation shall **mark** each package containing the hazardous material in the manner required by the regulations:

* Proper shipping name and identification number (preceded by a UN or NA)

* Consignee's or consignor's name and address

* Must be durable, in English and printed or affixed to the surface of the package or on a label, tag or sign.

* Must be displayed on a background of sharply contrasting color.

* Must be unobscured by labels or attachments.

* Must be located away from any other markings that could substantially reduce it's effectiveness (such as advertising).

* Bulk packagings (tote tanks) must be marked with the identification number for the material on two opposing sides if the packaging has a capacity of less than 1,000 gallons, and four opposing sides for packagings of 1,000 gallons or more.

* Bulk packaging must remain marked when emptied unless it is:
  - cleaned of residue and purged of vapors, or
  - refilled with a material requiring different markings or no markings.

* No person may offer for transportation a package which is marked with the proper shipping name or identification number of a hazardous material unless the package contains the identified hazardous material or it's residue.

* Each non bulk combination packaging having inner packagings containing liquid hazardous materials must be:
  - packed with closures upward, and
  - legibly marked, with orientation arrows (up arrows) on two opposite vertical sides of the package with the arrows pointing in the correct upward direction. Arrows for purposes other than indicating proper package orientation may not be displayed on a package containing a liquid hazardous material.

Each person who offers hazardous materials for transportation shall **label** the package or containment device with labels specified in the table (172.101) of the regulations.

* Labeling is required for a hazardous material which meets one or more hazard class definition.

* A package may **not** bear a label specified in the regulations unless it contains a material that is a hazardous material, and the label represents the hazard of the goods in the package.

* The appropriate hazard class or division number **shall** be displayed in the lower corner of a primary hazard label.

* The hazard class or division number shall **not** be displayed in the lower corner of a subsidiary label.

* When hazardous materials having different hazard classes are packed within the same outside container, the outside container must be labeled as required for each class of hazardous materials contained within.

* For class 1,2,3,4,5,6, and 8, wording indicating a hazard (FLAMMABLE LIQUID for example) is not required on a label.

* Each label required must be printed or affixed to a surface (other than the bottom) of the package and be located on the same surface and near the proper shipping name.

* When primary and subsidiary labels are required, they must be displayed next to each other.

* <u>Labels must be printed or affixed to a background of contrasting color, or must have a dotted or solid line outer border.</u>

* Hazard labels must be at least 100mm (3.9") on each side with each side having a solid line inner border 5.0 to 6.3mm (0.2-0.25") from the edge.

* The background color on each label must be as required, with the symbol, text numbers and border in black; white may be used on a label of one color background of green, red or blue.

Awareness of the requirements will insure that the products we ship will be in full compliance with the regulations, will delight our customers, and will protect ourselves, our co-workers and our environment.

A quick checklist to follow to help insure accuracy:

* Inspect your workplace for safety before beginning your work.
* Ascertain correct packaging to be filled.
* Be certain package is properly marked - shipping name, consignee or consignor's name and address, orientation arrows if required.
* Be certain package is properly labeled - primary and subsidiary labels.
* Be certain container is securely closed/sealed when filled.
* **No spillage, drippage or overflow** can appear on outside of package.
* Package can show no evidence of reduction in integrity (dents, cracks).

Following these simple rules will significantly reduce the potential for error.

Congratulations! You have completed module 3 - Batchmaking and Filling. Simply complete the attached test and return it for your file.

Together, we can offer the Expertise our customers seek in the safe handling of hazardous goods.

POST AWARENESS TEST - HM126F
MODULE 3 - BATCHMAKING & FILLING

Name: _____ Date: _____

Department: _____ Location: _____

1.) Packages used for shipping hazardous materials must be securely closed so that:

_____ There will be no release of goods during transit.

_____ The effectiveness of the package will not be reduced.

_____ There will be no mixture of gasses or vapors in transit.

_____ All of the above

2.) Different hazardous materials may not be packaged together in the same outer packaging under any conditions.

TRUE or FALSE

3.) Bulk packages must not be totally filled to allow for material expansion.

TRUE or FALSE

4.) Each package of hazardous materials must be marked with:

_____ Proper shipping name

_____ Identification number preceded by UN or NA

_____ Consignee or consignor's name and address

_____ All of the above

5.) Once a tote tank is emptied, it need not be marked for transport.

TRUE or FALSE

6.) Hazardous liquids packaged in combination packaging must display orientation arrows.

TRUE or FALSE

7.) Hazard class numbers must appear in the lower corner of primary hazard labels.

TRUE or FALSE

8.) Hazard labels must be applied to the same surface of the package as the proper shipping name and identification number.

TRUE or FALSE

9.) Hazmat labels are not required to meet a specific size as long as the color and symbol are accurate.

TRUE or FALSE

10.) Are there any questions or topics that you are unsure of that you would like to receive more details on?

_____

_____

_____

_____

CERTIFICATION:

This is to certify that the employee listed above has received hazardous materials transportation function specific training and has been tested in accordance with 49 CFR 172.700 - 172.704.

Pierce & Stevens Corporation
Module 3 - Function Specific, Batchmaking & Filling
Bill Brennan, Transportation Coordinator

RECEIVED
CLERK'S OFFICE
NOV - 4 1998
STATE OF ILLINOIS
Pollution Control Board

BEFORE THE POLLUTION CONTROL BOARD
OF THE STATE OF ILLINOIS

MOBIL OIL CORPORATION,	)	
Petitioner,	)	
v.	)	PCB # 99-59
	)	Provisional Variance
ILLINOIS ENVIRONMENTAL PROTECTION AGENCY,	)	
Respondent.	)	

NOTICE

TO: Dorothy Gunn, Clerk
Pollution Control Board
100 West Randolph Street
Suite 11-500
Chicago, Illinois 60601

Jennifer M. Martin, Esq.
Hodge & Dwyer
808 South Second Street
Post Office Box 5776
Springfield, Illinois 62705-5776

PLEASE TAKE NOTICE that I have filed with the Office of the Clerk of the Pollution Control Board the AGENCY RECOMMENDATION of the Illinois Environmental Protection Agency, a copy of which is herewith served upon you.

ENVIRONMENTAL PROTECTION AGENCY
OF THE STATE OF ILLINOIS

By: Scott O. Phillips /sca
Scott O. Phillips
Deputy Counsel
Division of Legal Counsel

Dated: November 2, 1998
Agency File No.: 694-98

2200 Churchill Road
Post Office Box 19276
Springfield, Illinois 62794-9276
(217) 782-5544

THIS FILING IS SUBMITTED ON RECYCLED PAPER

RECEIVED
CLERK'S OFFICE
NOV - 4 1998
STATE OF ILLINOIS
Pollution Control Board

BEFORE THE POLLUTION CONTROL BOARD
OF THE STATE OF ILLINOIS

MOBIL OIL CORPORATION, Petitioner, v. ILLINOIS ENVIRONMENTAL PROTECTION AGENCY, Respondent.	)	PCB # 99-59 Provisional Variance

AGENCY RECOMMENDATION

The Illinois Environmental Protection Agency recommends that, because of an arbitrary and unreasonable hardship, the Petitioner be granted a provisional variance for 30 days pursuant to 35 Ill. Adm. Code 722.134(b) and Section 37 of the Environmental Protection Act. ACTION MUST BE TAKEN WITHIN 2 DAYS OF NOTIFICATION OF THIS RECOMMENDATION FROM THE AGENCY.

1. On October 22, 1998, the Agency received the attached letter from Petitioner. Petitioner requests an extension of time pursuant to 35 Ill. Adm. Code 722.134(b) for its facility in Will County.

2. The Agency has concluded that the hazardous wastes must remain on-site for longer than 90 days due to unforeseen, temporary and uncontrollable circumstances and that compliance with the accumulation time requirements of 35 Ill. Adm. Code 722.134 would impose, under these circumstances, an arbitrary or unreasonable hardship. The grant of this provisional variance appears consistent with 40 CFR 262.34(b) (1991), adopted pursuant to the Resource Conservation and Recovery Act of 1976 (P.L. 94-580), which authorizes the Regional Administrator for the United

States Environmental Protection Agency to grant similar extensions for up to 30 days when hazardous wastes must remain on-site for longer than 90 days due to unforeseen, temporary, and uncontrollable circumstances.

3. The Agency recommends that Petitioner be granted a provisional variance pursuant to 35 Ill. Adm. Code 722.134(b) from November 13, 1998 to December 13, 1998.

Illinois Environmental Protection Agency

By: Scott O. Phillips /JCL
Scott O. Phillips
Deputy Counsel
Division of Legal Counsel

Dated: November 2, 1998

2200 Churchill Road
Post Office Box 19276
Springfield, Illinois 62794-9276

SOP:JCL

THIS FILING IS SUBMITTED ON RECYCLED PAPER

H & D

HODGE & DWYER
ATTORNEYS AT LAW

KATHERINE D. HODGE
EDWARD W. DWYER
CHRISTINE G. ZEMAN

JENNIFER M. MARTIN
N. LADONNA DRIVER
KAREN L. BERNOTEIT
DAVID M. WALTER

808 SOUTH SECOND STREET
POST OFFICE BOX 5776
SPRINGFIELD, ILLINOIS 62705-5776
TELEPHONE: (217) 523-4900
FACSIMILE: (217) 523-4948
E-MAIL: hodgdwyr@midwest.net

October 22, 1998

VIA HAND-DELIVERY

Scott Phillips, Esq.
Deputy Counsel, Bureau of Land
Illinois Environmental Protection Agency
1021 North Grand Avenue East
Springfield, Illinois 62794-9276

RE: Mobil Oil Corporation
Request for Provisional Variance
Our File No. - MOBO:021

Dear Mr. Phillips:

The purpose of this letter is to request a provisional variance for Mobil Oil Corporation's ("Mobil's") Joliet Refinery ("Refinery") for a period of 30 days commencing November 13, 1998, or until such time as Mobil notifies the Agency that it has either recycled the oil-bearing hazardous secondary materials, which are the subject of this variance, in the manner allowed by applicable regulatory requirements, or has shipped the subject materials off-site for disposal as F037 hazardous waste. Mobil seeks this provisional variance pursuant to Sections 35(b) and 37(b) of the Act (415 ILCS 5/35(b) and 5/37(b)) and 35 Ill. Adm. Code 722.134(b). Mobil seeks relief from the regulatory standards governing accumulation time for hazardous waste found at Section 722.134, and requests a 30-day extension of the 90-day accumulation period.

Mobil is a large-quantity generator of hazardous waste, designated by USEPA Generator I.D. #IL064403199, and IEPA Generator #1978090004. During the time period from approximately August 15, 1998 to August 30, 1998, Mobil generated thirty containers of oil-bearing hazardous secondary materials in its Refinery operations, which are classified as F037 listed hazardous waste when disposed. Each container holds approximately 20 cubic yards of material. As permitted by current regulatory standards, Mobil's standard practice is to recycle the above-described oil-bearing hazardous secondary materials by reintroducing such materials into its MOSC ("Mobil Oil Sludge Coking") Process. See 35 Ill. Admin. Code 721.106(a)(3)(D). The above-described materials are inserted into the MOSC Process within 90 days of generation, as required by 35 Ill. Admin. Code 722.134(a).

On August 6, 1998, the United States Environmental Protection Agency ("USEPA") promulgated a Final Rule entitled Hazardous Waste Management System; Identification and Listing of Hazardous Waste; Petroleum Refining Process Wastes; Land Disposal Restrictions for Newly Identified Wastes; And CERCLA Hazardous Substance Designation and Reportable

Quantities (63 Fed. Reg. 42109; August 6, 1998) ("Final Rule"). The Final Rule added a new exclusion to the definition of "solid waste" at 40 CFR 261.4(a)(12)(i) for "oil-bearing hazardous secondary materials" which are generated at petroleum refineries and recycled by being "inserted into the petroleum refining process," unless such materials are placed on the land or speculatively accumulated. 63 Fed. Reg. at 42184. Such materials are designated as F037 listed hazardous waste when disposed, rather than recycled. Id. Pursuant to the Final Rule, the above-described exclusion from the definition of "solid waste" for recycling oil-bearing hazardous secondary materials was effective on August 6, 1998. (Other portions of the Final Rule, which included the listing of newly identified hazardous wastes, were made effective on February 8, 1998.) As stated in the Final Rule, USEPA "strongly encourages" States to adopt the exclusions to the definition of "solid waste" included in the Final Rule because "these exclusions encourage material recovery" within the petroleum refining industry. Id. at 42171. Adoption of the Final Rule would allow the above-described oil-bearing hazardous secondary materials at the Mobil Refinery to be accumulated for a period longer than the 90-day accumulation period provided for in 35 Ill. Admin. Code 722.134(a), as long as such materials are to be recycled by being utilized within the MOSC process.

The above-described exclusion from the definition of "solid waste" for oil-bearing hazardous secondary materials was effective on August 6, 1998, under the terms of the Final Rule. 63 Fed. Reg. 42110. The oil-bearing hazardous secondary materials which are the subject of this Request for Provisional Variance were generated from August 15, 1998, to August 30, 1998. Mobil intended to seek variance relief from the Pollution Control Board in order to recycle the subject material in accordance with the Final Rule and exclusion provided at 40 CFR 261.4(a)(12), which does not impose a time frame on the accumulation of such material (except to note that such material may not be speculatively accumulated). However, on October 9, 1998, the USEPA issued a second Final Rule addressing Technical Amendments to Hazardous Waste Management System; Identification and Listing of Hazardous Waste; Petroleum Refining Process Wastes; Land Disposal Restrictions for Newly Identified Wastes; And CERCLA Hazardous Substances Designation and Reportable Quantities; Correction of Effective Date Under Congressional Review Act (63 Fed. Reg. 54356; October 9, 1998) ("Final Rule 2"). In the Final Rule 2, USEPA explained that the Office of Management and Budget ("OMB") recently determined that the Final Rule was a "major" rule requiring review under the Congressional Review Act ("CRA"). 63 Fed. Reg. 54356. In order to comply with the requirements of the CRA, the Final Rule 2 changes the effective date for the relevant provisions of the Final Rule from August 6, 1998 to December 8, 1998 (sixty days after publication of the Final Rule 2).

Due to the quantity of subject material generated at the Refinery during the period between August 15, 1998 and August 30, 1998, Mobil needs additional time beyond the 90-day accumulation period to process such material utilizing the MOSC process. Moreover, due to seasonal weather changes which may cause some of the subject material to freeze, it may be necessary for Mobil to send some of the subject material off-site for disposal. In light of the change to the effective date of the above-described regulatory provisions, Mobil is seeking a provisional variance to allow Mobil more time to recycle the subject materials by utilization in the MOSC Process, or, if necessary, dispose of such materials off-site. The containers of F037 waste are appropriately lined and covered, and are currently stored in a secure and access-restricted location at the Refinery. Mobil is contacting disposal contractors regarding the removal and disposal of the above-described containers, in the event that such off-site disposal becomes necessary. Mobil requests that the provisional variance terminate when it notifies the Agency that it

has either recycled the subject material in the MOSC Process, as allowed by applicable regulatory requirements, or has shipped the subject materials off-site for disposal as F037 hazardous waste.

There will be no impact to the environment during the period of this provisional variance. However, denial of this request for provisional variance would constitute an arbitrary or unreasonable hardship to Mobil. Based on the Final Rule, which was effective at the time of the generation of the subject materials, Mobil anticipated being able to utilize a time period greater than 90 days in which to recycle these materials. Since the change in the effective date of the Final Rule, Mobil has acted promptly to recycle the subject materials by utilization in the MOSC Process, and has contacted disposal contractors regarding the off-site disposal of any unusable materials. However, there is no method by which Mobil can complete its processing of the above-described oil-bearing hazardous secondary materials before the expiration of the 90-day accumulation period on November 13, 1998. Finally, there are no known enforcement matters pertaining to the Mobil Refinery.

For the reasons discussed above, Mobil respectfully requests that the Agency recommend and the Board grant it a provisional variance for a period of 30 days commencing from November 13, 1998, or until such time as Mobil is able to either recycle the oil-bearing hazardous secondary materials which are the subject of this variance in the manner allowed by applicable regulatory requirements, or has shipped the subject materials off-site for disposal as F037 hazardous waste.

If you have any questions, please do not hesitate to call.

Very truly yours,

Jennifer M. Martin

JMM:KDH:jas
pc: Ms. Liliana Gachich
Mr. Terry Jagiello

MOBO:021/Corr/Phillips Ltr - Prov.Var.

STATE OF ILLINOIS)
)
COUNTY OF SANGAMON)

PROOF OF SERVICE

I, the undersigned, on oath state that I have served the attached AGENCY RECOMMENDATION upon the person(s) to whom it is directed, by placing a copy in an envelope addressed to:

Dorothy Gunn, Clerk
Pollution Control Board
100 West Randolph Street
Suite 11-500
Chicago, Illinois 60601

(FEDERAL EXPRESS)

Jennifer M. Martin, Esq.
Hodge & Dwyer
808 South Second Street
Post Office Box 5776
Springfield, Illinois 62705-5776

(CERTIFIED MAIL)

and mailing it from Springfield, Illinois on November 2, 1998, with sufficient postage affixed.

SUBSCRIBED AND SWORN TO BEFORE ME
this 2nd day of November, 1998.

Brenda Boehner
Notary Public

OFFICIAL SEAL
BRENDA BOEHNER
NOTARY PUBLIC, STATE OF ILLINOIS
MY COMMISSION EXPIRES 11-14-2001

THIS FILING IS SUBMITTED ON RECYCLED PAPER

ILLINOIS POLLUTION CONTROL BOARD
November 20, 1997

FEDDERS CORPORATION,	)	
	)	
Petitioner,	)	
	)	
v.	)	PCB 98-68
	)	(Provisional Variance - RCRA)
ILLINOIS ENVIRONMENTAL PROTECTION AGENCY,	)	
	)	
Respondent.	)	

ORDER OF THE BOARD (by C.A. Manning):

On November 12, 1997, Fedders Corporation (petitioner), filed a request with the Illinois Environmental Protection Agency (Agency) requesting that it be granted a provisional variance to allow its facility in Effingham County, Illinois, to continue accumulating hazardous waste for a period in excess of 90 days. Such request for a provisional variance and the notification of recommendation were filed with the Board by the Agency on November 18, 1997. Pursuant to Section 35(b) of the Environmental Protection Act (415 ILCS 5/35(b) (1996)), the Board must issue the variance within two (2) days of this filing.

Specifically, the Agency recommends that we grant a 30-day provisional variance from the 90-day limitation on the accumulation of hazardous wastes, as set forth in 35 Ill. Adm. Code 722.134(b), for the period from November 13, 1997 to December 13, 1997.

Upon receipt of the request from the petitioner, the Agency issued its recommendation notifying the Board that due to unforeseen, temporary, and uncontrollable circumstances, failure to grant the requested 30-day provisional variance would impose an arbitrary or unreasonable hardship on the petitioner.

Provisional variances are by their very nature temporary. The responsibilities of the Agency and the Board in these short-term provisional variances are different from the responsibilities in standard variances. See 415 ILCS 5/35(b), 36(c) (1996). In provisional variances it is the responsibility of the Agency to make the technical determinations and finding of arbitrary or unreasonable hardship. The Board's responsibility is to adopt a formal order, to assure the formal maintenance of the record, to assure the enforceability of the variance, and to provide notification of the action by a press release.

Having received the Agency recommendation notifying the Board that a denial of the requested relief would impose an arbitrary or unreasonable hardship, the Board hereby grants

the petitioner a provisional variance for the period from November 13, 1997, to December 13, 1997.

IT IS SO ORDERED.

Section 41 of the Environmental Protection Act (415 ILCS 5/41 (1996)) provides for the appeal of final Board orders to the Illinois Appellate Court within 35 days of service of this order. Illinois Supreme Court Rule 335 establishes such filing requirements. See 145 Ill. 2d R. 335; see also 35 Ill. Adm. Code 101.246, Motions for Reconsideration.

I, Dorothy M. Gunn, Clerk of the Illinois Pollution Control Board, hereby certify that the above order was adopted on the 20th day of November 1997, by a vote of 7-0.

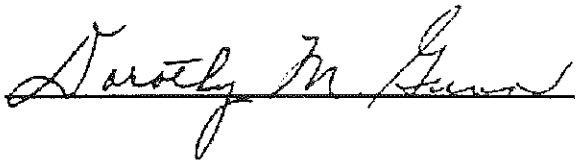

Dorothy M. Gunn, Clerk
Illinois Pollution Control Board

RECEIVED
CLERK'S OFFICE
NOV 18 1997
STATE OF ILLINOIS
POLLUTION CONTROL BOARD

BEFORE THE POLLUTION CONTROL BOARD
OF THE STATE OF ILLINOIS

FEDDERS CORPORATION Petitioner, v. ILLINOIS ENVIRONMENTAL PROTECTION AGENCY, Respondent.	))))))))))	PCB # 98-68 Provisional Variance

NOTICE

TO: Dorothy Gunn, Clerk
Pollution Control Board
100 West Randolph Street
Suite 11-500
Chicago, Illinois 60601

Derick A. Reedy
Fedders Corporation
415 Wabash Avenue
P.O. Box 200
Effingham, Illinois 62401

PLEASE TAKE NOTICE that I have filed with the Office of the Clerk of the Pollution Control Board the AGENCY RECOMMENDATION of the Illinois Environmental Protection Agency, a copy of which is herewith served upon you.

ENVIRONMENTAL PROTECTION AGENCY
OF THE STATE OF ILLINOIS

By: Scott O. Phillips
Deputy Counsel
Division of Legal Counsel

Dated: November 13, 1997
Agency File No.:

2200 Churchill Road
Post Office Box 19276
Springfield, Illinois 62794-9276
(217) 782-5544

THIS FILING IS SUBMITTED ON RECYCLED PAPER

RECEIVED
CLERK'S OFFICE
NOV 18 1997
STATE OF ILLINOIS
POLLUTION CONTROL BOARD

BEFORE THE POLLUTION CONTROL BOARD
OF THE STATE OF ILLINOIS

FEDDERS CORPORATION Petitioner, v. ILLINOIS ENVIRONMENTAL PROTECTION AGENCY, Respondent.	))))))))))	PCB # 98-68 Provisional Variance

AGENCY RECOMMENDATION

The Illinois Environmental Protection Agency recommends that, because of an arbitrary and unreasonable hardship, the Petitioner be granted a provisional variance for 30 days pursuant to 35 Ill. Adm. Code 722.134(b) and Section 37 of the Environmental Protection Act. ACTION MUST BE TAKEN WITHIN 2 DAYS OF NOTIFICATION OF THIS RECOMMENDATION FROM THE AGENCY.

1. On November 12, 1997, the Agency received the attached letter from Petitioner. Petitioner requests an extension of time pursuant to 35 Ill. Adm. Code 722.134(b) for its facility in Effingham County.

2. The Agency has concluded that the hazardous wastes must remain on-site for longer than 90 days due to unforeseen, temporary and uncontrollable circumstances and that compliance with the accumulation time requirements of 35 Ill. Adm. Code 722.134 would impose, under these circumstances, an arbitrary or unreasonable hardship. The grant of this provisional variance appears consistent with 40 CFR 262.34(b) (1991), adopted pursuant to the Resource Conservation and Recovery Act of 1976 (P.L. 94-580), which authorizes the Regional Administrator for the United States Envi-

ronmental Protection Agency to grant similar extensions for up to 30 days when hazardous wastes must remain on-site for longer than 90 days due to unforeseen, temporary, and uncontrollable circumstances.

3. The Agency recommends that Petitioner be granted a provisional variance pursuant to 35 Ill. Adm. Code 722.134(b) from November 13, 1997 to December 13, 1997.

Illinois Environmental Protection Agency

By: _____
Scott O. Phillips
Deputy Counsel
Division of Legal Counsel

Dated: November 13, 1997

2200 Churchill Road
Post Office Box 19276
Springfield, Illinois 62794-9276

SOP:JCL

THIS FILING IS SUBMITTED ON RECYCLED PAPER

FEDDERS

Fedders Corporation

415 Wabash Avenue
P.O. Box 200
Effingham, IL 62401
Fax 217/342-6824
Tel 217/342-3901

ATTACHMENT

November 12, 1997

I.E.P.A. - Div. of Legal Counsel
Attn: Scott Phillips
1021 N. Grand Avenue East
Springfield, IL 62794

Subject: Provisional Variance request - 90 Day Hazardous Waste Storage Limit

IEPA Generator Number: 0490250003
USEPA Generator Number: ILD052606621

Dear Scott:

We are a large quantity generator that normally ships several loads of hazardous waste per year. We just ran into a problem with an indemnification certificate that our hazardous waste disposal contractor wants signed by us prior to shipment. Our legal department is requesting a 30 day one time provisional variance to further review this indemnification clause and store the following hazardous waste beyond the 90 day storage limit:

Waste I.D.	Qty.	Accum. Start Date
Waste Flammable Paint Solids	3 - 55 Gal. Drums	8/15/97
Vapor Degreaser Still Bottoms	1 - 95 Gal. Drum	9/05/97
Waste Flammable Paint Solids	3 - 55 Gal. Drums	9/05/97
Waste Flammable Paint Solids	2 - 55 Gal. Drums	9/09/97
Waste Flammable Paint with Solids	1 - 55 Gal. Drum	9/05/97
Waste Flammable Paint Liquid	1 - 55 Gal. Drum	9/05/97
Grinder Shavings/fluid	1 - 55 Gal. Drum	9/11/97

This would extend our storage limit date to December 15, 1997. All of these wastes are stored in our outdoor hazardous waste storage area at our Gate #2 location.

I have faxed a copy of this letter to John Little to make sure this request is received by the I.E.P.A. prior to our 90 day storage limit being exceeded.

Sincerely,

Derick A. Reedy
Facilities Engineer
Supply Chain

DAR/jp

g:\ltr-iepa.leg
cc: T. Brown

STATE OF ILLINOIS)
)
COUNTY OF SANGAMON)

PROOF OF SERVICE

I, the undersigned, on oath state that I have served the attached AGENCY RECOMMENDATION upon the person(s) to whom it is directed, by placing a copy in an envelope addressed to:

Dorothy Gunn, Clerk
Pollution Control Board
100 West Randolph Street
Suite 11-500
Chicago, Illinois 60601

(AIRBORNE EXPRESS)

Derick A. Reedy
Fedders Corporation
415 Wabash Avenue
P.O. Box 200
Effingham, Illinois 62401

(CERTIFIED MAIL)

and mailing it from Springfield, Illinois on November 17, 1997, with sufficient postage affixed.

SUBSCRIBED AND SWORN TO BEFORE ME
this 13th day of November, 1997.

Cynthia L. Wolfe
Notary Public

OFFICIAL SEAL
CYNTHIA L. WOLFE
NOTARY PUBLIC, STATE OF ILLINOIS
MY COMMISSION EXPIRES 5-2-99

THIS FILING IS SUBMITTED ON RECYCLED PAPER

ILLINOIS POLLUTION CONTROL BOARD
November 6, 1997

DIAMOND PLATING CO. INC.,	)	
	)	
Petitioner,	)	
	)	
v.	)	PCB 98-66
	)	(Provisional Variance - RCRA)
ILLINOIS ENVIRONMENTAL PROTECTION AGENCY,	)	
	)	
Respondent.	)	

ORDER OF THE BOARD (by C.A. Manning):

On October 28, 1997, Diamond Plating Co. Inc. (petitioner) , filed a request with the Illinois Environmental Protection Agency (Agency) recommending that it be granted a provisional variance to allow its facility in Madison County to continue accumulating hazardous waste for a period in excess of 90 days. Such request for a provisional variance and the notification of recommendation were filed with the Board by the Agency on November 5, 1997. Pursuant to Section 35(b) of the Environmental Protection Act (Act) (415 ILCS 5/35(b) (1996)), the Board must issue the variance within two (2) days of this filing.

Specifically, the Agency recommends that we grant a nine-day provisional variance from the 90-day limitation on the accumulation of hazardous wastes, as set forth in 35 Ill. Adm. Code 722.134(b), for the period from October 26, 1997, to November 3, 1997.

Upon receipt of the request from the petitioner, the Agency issued its recommendation, notifying the Board that due to unforeseen, temporary, and uncontrollable circumstances, failure to grant the requested nine-day provisional variance would impose an arbitrary or unreasonable hardship on the petitioner.

Provisional variances are by their very nature temporary. The responsibilities of the Agency and the Board in these short-term provisional variances are different from the responsibilities in standard variances. See 415 ILCS 5/35(b), 36(c) (1996). In provisional variances it is the responsibility of the Agency to make the technical determinations and to find arbitrary or unreasonable hardship. The Board's responsibility is to adopt a formal order, to assure the formal maintenance of the record, to assure the enforceability of the variance, and to provide notification of the action by a press release.

Having received the Agency recommendation notifying the Board that a denial of the requested relief would impose an arbitrary or unreasonable hardship, the Board hereby grants

the petitioner a provisional variance for the period from October 26, 1997, to November 3, 1997.

IT IS SO ORDERED.

Section 41 of the Environmental Protection Act (415 ILCS 5/41 (1996)) provides for the appeal of final Board orders to the Illinois Appellate Court within 35 days of service of this order. Illinois Supreme Court Rule 335 establishes such filing requirements. See 145 Ill. 2d R. 335; see also 35 Ill. Adm. Code 101.246, Motions for Reconsideration.

I, Dorothy M. Gunn, Clerk of the Illinois Pollution Control Board, hereby certify that the above order was adopted on the 6th day of November 1997, by a vote of 7-0.

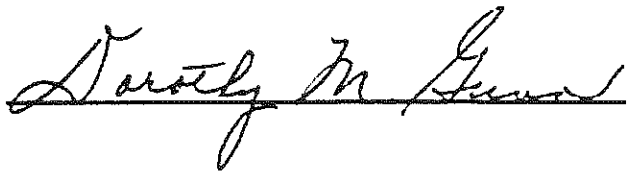

Dorothy M. Gunn, Clerk
Illinois Pollution Control Board

RECEIVED
CLERK'S OFFICE
NOV - 5 1997
STATE OF ILLINOIS
POLLUTION CONTROL BOARD

BEFORE THE POLLUTION CONTROL BOARD
OF THE STATE OF ILLINOIS

DIAMOND PLATING CO., INC. Petitioner, v. ILLINOIS ENVIRONMENTAL PROTECTION AGENCY, Respondent.	)))))))))	PCB # 98-66 Provisional Variance

NOTICE

TO: Dorothy Gunn, Clerk
Pollution Control Board
100 West Randolph Street
Suite 11-500
Chicago, Illinois 60601

Gina L. Scaturro
Diamond Plating Co., Inc.
Post Office Box 129
Madison, Illinois 62060

PLEASE TAKE NOTICE that I have filed with the Office of the Clerk of the Pollution Control Board the AGENCY RECOMMENDATION of the Illinois Environmental Protection Agency, a copy of which is herewith served upon you.

ENVIRONMENTAL PROTECTION AGENCY
OF THE STATE OF ILLINOIS

By: Scott O. Phillips
Scott O. Phillips
Deputy Counsel
Division of Legal Counsel

Dated: November 3, 1997
Agency File No.: 478-97

2200 Churchill Road
Post Office Box 19276
Springfield, Illinois 62794-9276
(217) 782-5544

THIS FILING IS SUBMITTED ON RECYCLED PAPER

RECEIVED
CLERK'S OFFICE
NOV - 5 1997
STATE OF ILLINOIS
POLLUTION CONTROL BOARD

BEFORE THE POLLUTION CONTROL BOARD
OF THE STATE OF ILLINOIS

DIAMOND PLATING CO., INC. Petitioner, v. ILLINOIS ENVIRONMENTAL PROTECTION AGENCY, Respondent.	)))))))))	PCB # 98-66 Provisional Variance

AGENCY RECOMMENDATION

The Illinois Environmental Protection Agency recommends that, because of an arbitrary and unreasonable hardship, the Petitioner be granted a provisional variance for 30 days pursuant to 35 Ill. Adm. Code 722.134(b) and Section 37 of the Environmental Protection Act. ACTION MUST BE TAKEN WITHIN 2 DAYS OF NOTIFICATION OF THIS RECOMMENDATION FROM THE AGENCY.

1. On October 28, 1997, the Agency received the attached letter from Petitioner. Petitioner requests an extension of time pursuant to 35 Ill. Adm. Code 722.134(b) for its facility in Madison County.

2. The Agency has concluded that the hazardous wastes must remain on-site for longer than 90 days due to unforeseen, temporary and uncontrollable circumstances and that compliance with the accumulation time requirements of 35 Ill. Adm. Code 722.134 would impose, under these circumstances, an arbitrary or unreasonable hardship. The grant of this provisional variance appears consistent with 40 CFR 262.34(b) (1991), adopted pursuant to the Resource Conservation and Recovery Act of 1976 (P.L. 94-580), which authorizes the Regional Administrator for the United States Envi-

ronmental Protection Agency to grant similar extensions for up to 30 days when hazardous wastes must remain on-site for longer than 90 days due to unforeseen, temporary, and uncontrollable circumstances.

3. The Petitioner has informed the Agency that the waste in question will be transported off-site on October 31, 1997. Therefore, the Agency recommends that Petitioner be granted a provisional variance pursuant to 35 Ill. Adm. Code 722.134(b) from October 26, 1997 to November 3, 1997.

Illinois Environmental Protection Agency

By: _____
Scott O. Phillips
Deputy Counsel
Division of Legal Counsel

Dated: November 3, 1997

2200 Churchill Road
Post Office Box 19276
Springfield, Illinois 62794-9276

SOP:JCL

THIS FILING IS SUBMITTED ON RECYCLED PAPER

DIAMOND PLATING CO., INC.
NICKEL & CHROME
STEPHEN MAERAS INDUSTRIAL PARK • P.O. BOX 129 • MADISON, ILL. 62060
PHONES: 618/451-7740 - 451-7741 - 451-7742 • FAX: 618/451-7756

October 28, 1997

Scott Phillips
Division of Legal Counsel
1021 N. Grand Ave. East
Springfield, IL 62794

ATTACHMENT

Attention: Scott Phillips

Diamond Plating Company, Inc. is asking for an extension for Waste Disposal of our F006.

We had a mix up with the payment on a previous invoice and have worked this out. Shipment was to be picked up today October 28, and was cancelled by our Transporter. They will be here to pick up on October 31, 1997.

Our USEPA # is ILD006264402
IL ID # 1190655010
Quantity to be shipped 17 ~~bags~~
bags over 90 days 2.
Storage Date beginning 7-28-97

We are small quantity generator. Peoria Disposal is the transporter.

If more information is needed, please contact Edgar Finley or Gina L. Scaturro.

Thank you for your assistance.

Sincerely,

DIAMOND PLATING COMPANY, INC.

Gina L. Scaturro

Gina L. Scaturro
Secretary/Treasurer

STATE OF ILLINOIS)
)
COUNTY OF SANGAMON)

PROOF OF SERVICE

I, the undersigned, on oath state that I have served the attached AGENCY RECOMMENDATION upon the person(s) to whom it is directed, by placing a copy in an envelope addressed to:

Dorothy Gunn, Clerk
Pollution Control Board
100 West Randolph Street
Suite 11-500
Chicago, Illinois 60601

(AIRBORNE EXPRESS)

Gina L. Scaturro
Diamond Plating Co., Inc.
Post Office Box 129
Madison, Illinois 62060

(CERTIFIED MAIL)

and mailing it from Springfield, Illinois on November 3, 1997, with sufficient postage affixed.

SUBSCRIBED AND SWORN TO BEFORE ME
this 3rd day of November, 1997.

Notary Public

OFFICIAL SEAL
CYNTHIA L. WOLFE
NOTARY PUBLIC, STATE OF ILLINOIS
MY COMMISSION EXPIRES 5-2-99

THIS FILING IS SUBMITTED ON RECYCLED PAPER

Citation 997 WL 530558 | Search Result | Rank(R) 1 of 1 | Database ILENV-ADMIN
Cite as: 1997 WL 530558 (Ill.Pol.Control.Bd.)

Illinois Pollution Control Board
State of Illinois

***1 MARATHON** OIL COMPANY, PETITIONER
v.
ILLINOIS ENVIRONMENTAL PROTECTION AGENCY, RESPONDENT
PCB **98-27**
August 21, 1997

(Provisional Variance - RCRA)

ORDER OF THE BOARD

On August 14, 1997, **Marathon** Oil Company (petitioner) filed a request with the Illinois Environmental Protection Agency (Agency) recommending that it be granted a provisional variance to allow its facility in Crawford County to continue accumulating hazardous waste for a period in excess of 90 days. Such request for a provisional variance and the Notification of Recommendation were filed with the Board by the Agency on August 19, 1997. Pursuant to Section 35(b) of the Environmental Protection Act (Act) (415 ILCS 5/35(b) (1996)), the Board must issue the variance within two (2) days of this filing.

Specifically, the Agency recommends that we grant a 30-day provisional variance from the 90-day limitation on the accumulation of hazardous wastes, as set forth in 35 Ill. Adm. Code 722.134(b), for the period from September 7, 1997 to October 7, 1997.

Upon receipt of the request from the petitioner, the Agency issued its recommendation, notifying the Board that due to unforeseen, temporary and uncontrollable circumstances, failure to grant the requested 30-day provisional variance would impose an arbitrary or unreasonable hardship on the petitioner.

Provisional variances are by their very nature temporary. The responsibilities of the Agency and the Board in these short-term provisional variances are different from the responsibilities in standard variances. See 415 ILCS 5/35(b), 36(c) (1996). In provisional variances it is the responsibility of the Agency to make the technical determinations and to find arbitrary or unreasonable hardship. The Board's responsibility is to adopt a formal order, to assure the formal maintenance of the record, to assure the enforceability of the variance, and to provide notification of the action by a press release.

Having received the Agency recommendation notifying the Board that a denial of the requested relief would impose an arbitrary or unreasonable hardship, the Board hereby grants the petitioner a provisional variance for the period from August 14, 1997 to September 13, 1997.

IT IS SO ORDERED.

R.C. Flemal

1997 WL 530558 (Ill.Pol.Control.Bd.)

END OF DOCUMENT

Copr. (C) West 1999 No Claim to Orig. U.S. Govt. Works

Westlaw

RECEIVED
CLERK'S OFFICE
AUG 19 1997
STATE OF ILLINOIS
POLLUTION CONTROL BOARD

BEFORE THE POLLUTION CONTROL BOARD
OF THE STATE OF ILLINOIS

MARATHON OIL COMPANY Petitioner, v. ILLINOIS ENVIRONMENTAL PROTECTION AGENCY, Respondent.	))))))))))	PCB # 98-27 Provisional Variance

NOTICE

TO: Dorothy Gunn, Clerk
Pollution Control Board
100 West Randolph Street
Suite 11-500
Chicago, Illinois 60601

David Saad
Marathon Oil Company
Illinois Refining Division
Post Office Box 1200
Robinson, Illinois 62454-0903

PLEASE TAKE NOTICE that I have filed with the Office of the Clerk of the Pollution Control Board the AGENCY RECOMMENDATION of the Illinois Environmental Protection Agency, a copy of which is herewith served upon you.

ENVIRONMENTAL PROTECTION AGENCY
OF THE STATE OF ILLINOIS

By: _____
Scott O. Phillips
Deputy Counsel
Division of Legal Counsel

Dated: August 18, 1997
Agency File No.:

2200 Churchill Road
Post Office Box 19276
Springfield, Illinois 62794-9276
(217) 782-5544

THIS FILING IS SUBMITTED ON RECYCLED PAPER

RECEIVED
CLERK'S OFFICE
AUG 19 1997
STATE OF ILLINOIS
POLLUTION CONTROL BOARD

BEFORE THE POLLUTION CONTROL BOARD
OF THE STATE OF ILLINOIS

MARATHON OIL COMPANY Petitioner, v. ILLINOIS ENVIRONMENTAL PROTECTION AGENCY, Respondent.	)))))))))	PCB # 98-27 Provisional Variance

AGENCY RECOMMENDATION

The Illinois Environmental Protection Agency recommends that, because of an arbitrary and unreasonable hardship, the Petitioner be granted a provisional variance for 30 days pursuant to 35 Ill. Adm. Code 722.134(b) and Section 37 of the Environmental Protection Act. ACTION MUST BE TAKEN WITHIN 2 DAYS OF NOTIFICATION OF THIS RECOMMENDATION FROM THE AGENCY.

1. On August 14, 1997, the Agency received the attached letter from Petitioner. Petitioner requests an extension of time pursuant to 35 Ill. Adm. Code 722.134(b) for its facility in Crawford County.

2. The Agency has concluded that the hazardous wastes must remain on-site for longer than 90 days due to unforeseen, temporary and uncontrollable circumstances and that compliance with the accumulation time requirements of 35 Ill. Adm. Code 722.134 would impose, under these circumstances, an arbitrary or unreasonable hardship. The grant of this provisional variance appears consistent with 40 CFR 262.34(b) (1991), adopted pursuant to the Resource Conservation and Recovery Act of 1976 (P.L. 94-580), which authorizes the Regional Administrator for the United States

mental Protection Agency to grant similar extensions for up to 30 days when hazardous wastes must remain on-site for longer than 90 days due to unforeseen, temporary, and uncontrollable circumstances.

3. The Agency recommends that Petitioner be granted a provisional variance pursuant to 35 Ill. Adm. Code 722.134(b) from September 7, 1997 to October 7, 1997.

Illinois Environmental Protection Agency

By: _____
Scott O. Phillips
Deputy Counsel
Division of Legal Counsel

Dated: August 18, 1997

2200 Churchill Road
Post Office Box 19276
Springfield, Illinois 62794-9276

SOP:JCL

THIS FILING IS SUBMITTED ON RECYCLED PAPER

CERTIFIED MAIL - RETURN RECEIPT REQUESTED
CERTIFIED NO. Z 684 083 938

August 14, 1997

Mr. Edwin C. Bakowski, P.E.
Manager, Permit Section
Bureau of Land
Illinois Environmental Protection Agency
1021 North Grand Avenue East
Springfield, IL 62794-9276

RE: Marathon/Robinson
30-Day Extension to 90-Day Accumulation Period
#ILD 005 476 882

Dear Mr. Bakowski:

Marathon Oil Company, Illinois Refining Division, Robinson, Illinois (USEPA #ILD 005 476 882) is seeking a 30-day extension to the 90-day accumulation time for one specific waste stream. This waste stream is spent catalyst/support, a solid waste material generated at the Robinson IL refinery in the DHT reactors. This material is a waste by-product from the refining of crude oil.

The gray/black material is currently held in 25 sealed rolloff boxes and has an approximate weight of 600,000 pounds. The material was first placed in the rolloff boxes on June 9, 1997. The material is TCLP hazardous for benzene and arsenic.

The spent catalyst and support material is a routine waste stream that is generated from time to time as part of normal maintenance operations. In late July and early August, it was believed that adequate documentation was available for the proper shipping and recycling of this material. A catalyst regeneration facility contracted to buy the material for off-site regeneration and eventual resale, for reuse , to other petroleum refiners. Additional testing

(by that facility) concluded that the material would not be suitable for reuse after being regenerated.

In August when it was determined that the material could not be regenerated for reuse/recycling, various other disposal and recycling options were explored. The two options currently being considered are (1) landfill in Canada and (2) metals reclamation. At this time Marathon plans to pursue the metal reclamation approach. The 90-day on-site storage period will expire September 7, 1997.

Marathon is working expeditiously to have the material, in question, shipped off-site by September 7, 1997. At this time it is apparent that all of the material will not be off-site by the end of the 90-day period. However, several of the loads should be off-site by September 7, 1997. The paper trail generated, by Marathon's effort, indicates the seriousness and persistence with which we have worked to properly recycle/dispose of the material in a timely fashion.

The current situation is that the material is properly contained in 25 sealed rolloff containers. It will require a few days more than the 90 days in order to properly ship and recycle/dispose of this material off-site. We hope this notice meets the regulatory requirements justifying the 30-day extension. We await your response.

If you have any questions and or comments please advise.

Sincerely,

David R. Saad
Environmental Coordinator

DRS:ckm

cc: John Riekstins, IEPA (E-Mail, Hard Copy)
Jeff Turner, IEPA (E-Mail, Hard Copy)
David Riker, MOC
File

STATE OF ILLINOIS)
)
COUNTY OF SANGAMON)

PROOF OF SERVICE

I, the undersigned, on oath state that I have served the attached AGENCY RECOMMENDATION upon the person(s) to whom it is directed, by placing a copy in an envelope addressed to:

Dorothy Gunn, Clerk Pollution Control Board 100 West Randolph Street Suite 11-500 Chicago, Illinois 60601	David Saad Marathon Oil Company Illinois Refining Division Post Office Box 1200 Robinson, Illinois 62454-0903
(AIRBORNE EXPRESS)	(CERTIFIED MAIL)

and mailing it from Springfield, Illinois on August 18, 1997 with sufficient postage affixed.

SUBSCRIBED AND SWORN TO BEFORE ME
this 18th day of August, 1997.

Notary Public

OFFICIAL SEAL
CYNTHIA L. WOLFE
NOTARY PUBLIC, STATE OF ILLINOIS
MY COMMISSION EXPIRES 5-2-99

THIS FILING IS SUBMITTED ON RECYCLED PAPER

Citation 996 WL 709232 | Search Result | Rank(R) 1 of 1 | Database ILENV-ADMIN
Cite as: 1996 WL 709232 (Ill.Pol.Control.Bd.))

Illinois Pollution Control Board
State of Illinois

***1 TARACORP** INDUSTRIES, INC., PETITIONER
v.
ILLINOIS ENVIRONMENTAL PROTECTION AGENCY, RESPONDENT
PCB **97-90**
November 21, 1996

(Provisional Variance - RCRA)

ORDER OF THE BOARD

Pursuant to Section 35(b) of the Environmental Protection Act (Act) (415 ILCS 5/35(b)), **Taracorp** Industries, Inc. **(Taracorp)** has requested that the Illinois Environmental Protection Agency (Agency) recommend that the Board grant a provisional variance to allow **Taracorp's** facility in Madison County to continue accumulating hazardous waste for a period in excess of 90 days. Such request for a provisional variance and the notification of recommendation were filed with the Board by the Agency on Tuesday, November 19, 1996. Pursuant to Section 35(b) of the Act, the Board must issue the variance within two (2) days of this filing.

Specifically, the Agency recommends that we grant a 30-day provisional variance from the 90-day limitation on the accumulation of hazardous wastes, as set forth in 35 Ill. Adm. Code 722.134(b), for the period from November 5, 1996 to December 5, 1996.

Upon receipt of the request, the Agency issued its recommendation notifying the Board that due to unforeseen, temporary, and uncontrollable circumstances, failure to grant the requested 30-day provisional variance would impose an arbitrary or unreasonable hardship on the petitioner.

Provisional variances are by their very nature temporary. The responsibilities of the Agency and the Board in these short-term provisional variances are different from the responsibilities in standard variances. (See 415 ILCS 5/35(b) & 36(c)). In provisional variances it is the responsibility of the Agency to make the technical determinations and finding of arbitrary or unreasonable hardship. The Board's responsibility is to adopt a formal order, to assure the formal maintenance of the record, to assure the enforceability of the variance, and to provide notification of the action by a press release.

Having received the Agency recommendation notifying the Board that a denial of the requested relief would impose an arbitrary or unreasonable hardship, the Board hereby grants the petitioner a provisional variance.

IT IS SO ORDERED.

C.A. Manning

1996 WL 709232 (Ill.Pol.Control.Bd.)

END OF DOCUMENT

Copr. (C) West 1999 No Claim to Orig. U.S. Govt. Works

RECEIVED
CLERK'S OFFICE

NOV 19 1996

STATE OF ILLINOIS
POLLUTION CONTROL BOARD

BEFORE THE POLLUTION CONTROL BOARD
OF THE STATE OF ILLINOIS

TARACORP INDUSTRIES, INC. Petitioner, v. ILLINOIS ENVIRONMENTAL PROTECTION AGENCY, Respondent.	)))))))))	PCB 97-90 PROVISIONAL VARIANCE

NOTICE

TO: Dorothy Gunn, Clerk
Pollution Control Board
100 West Randolph Street
Suite 11-500
Chicago, Illinois 60601

George E. Webb
Taracorp Industries, Inc.
1200 16th Street
Granite City, Illinois 62040-4495

PLEASE TAKE NOTICE that I have filed with the Office of the Clerk of the Pollution Control Board the AGENCY RECOMMENDATION of the Illinois Environmental Protection Agency, a copy of which is herewith served upon you.

ENVIRONMENTAL PROTECTION AGENCY
OF THE STATE OF ILLINOIS

By: Scott O. Phillips
Scott O. Phillips
Deputy Counsel
Division of Legal Counsel

Dated: November 18, 1996
Agency File No.: 523-96

2200 Churchill Road
Post Office Box 19276
Springfield, Illinois 62794-9276
(217) 782-5544

THIS FILING IS SUBMITTED ON RECYCLED PAPER

RECEIVED
CLERK'S OFFICE
NOV 19 1996
STATE OF ILLINOIS
POLLUTION CONTROL BOARD

BEFORE THE POLLUTION CONTROL BOARD
OF THE STATE OF ILLINOIS

TARACORP INDUSTRIES, INC.	)	
	)	
Petitioner,	)	
	)	
v.	)	PCB 97-90
	)	PROVISIONAL VARIANCE
ILLINOIS ENVIRONMENTAL PROTECTION AGENCY,	)	
	)	
Respondent.	)	

AGENCY RECOMMENDATION

The Illinois Environmental Protection Agency recommends that, because of an arbitrary and unreasonable hardship, the Petitioner be granted a provisional variance for 30 days pursuant to 35 Ill. Adm. Code 722.134(b) and Section 37 of the Environmental Protection Act. ACTION MUST BE TAKEN WITHIN 2 DAYS OF NOTIFICATION OF THIS RECOMMENDATION FROM THE AGENCY.

1. On November 12, 1996, the Agency received the attached letter from Petitioner. Petitioner requests an extension of time pursuant to 35 Ill. Adm. Code 722.134(b) for its facility in Madison County.

2. The Agency has concluded that the hazardous wastes must remain on-site for longer than 90 days due to unforeseen, temporary and uncontrollable circumstances and that compliance with the accumulation time requirements of 35 Ill. Adm. Code 722.134 would impose, under these circumstances, an arbitrary or unreasonable hardship. The grant of this provisional variance appears consistent with 40 CFR 262.34(b) (1991), adopted pursuant to the Resource Conservation and Recovery Act of 1976 (P.L. 94-580), which

authorizes the Regional Administrator for the United States Environmental Protection Agency to grant similar extensions for up to 30 days when hazardous wastes must remain on-site for longer than 90 days due to unforeseen, temporary, and uncontrollable circumstances.

3. The Agency recommends that Petitioner be granted a provisional variance pursuant to 35 Ill. Adm. Code 722.134(b) from November 5, 1996, to December 5, 1996.

Illinois Environmental Protection Agency

By: _____
Scott O. Phillips
Deputy Counsel
Division of Legal Counsel

Dated: November 18, 1996

2200 Churchill Road
Post Office Box 19276
Springfield, Illinois 62794-9276

SOP:JCL

THIS FILING IS SUBMITTED ON RECYCLED PAPER

EXHIBIT A

TARACORP
INDUSTRIES
INC.

November 4, 1996

Mr. Scott Phillips, Esq.
Attorney, Enforcements Program
Illinois Environmental Protection Agency
Division of Land Pollution Control
2200 Churchill Road
P.O. Box 19276
Springfield, IL 62794-9276

RECEIVED
Division of Legal Counsel
NOV 0 6 1996
Environmental Protection Agency

Re : #1190400007 - Madison County
Taracorp Industries, Inc.

Subject : Provisional Variance Request,
35 Ill. Adm. Code Section 722.134(b)

Dear Mr. Phillips:

Pursuant to 35 Ill. Adm. Code Section 722.134(b), we are requesting a three (3) day extension of the 90-day period allowed for on-site accumulation of hazardous waste due to unforeseen, temporary and uncontrollable circumstances.

This specific extension request is being made for two (2) 55 gallon drums of emission control dust, DOT Waste Name - "RQ - Hazardous Waste, Solid, n.o.s. (D004, D006, D008); 9; NA3077; PG III", with accumulation start dates as follows:

1 barrel - August 7, 1996
1 barrel - August 8, 1996

This wastestream results from on-site air pollution control baghouses, and is scheduled for pickup by Schuylkill Metals Corporation out of Baton Rouge, Louisiana (USEPA ID No. LAD 008184137) on Thursday, November 7, 1996. Schuylkill Metals Corporation is a Resource Recovery facility engaged in high temperature metals recovery. Taracorp Industries, Inc. has, since 1991, beneficially recycled this wastestream at available high temperature metals recovery (i.e. secondary lead smelting) facilities, for lead alloy recovery.

1200 16th Street
Granite City, Illinois 62040-4495
(618) 451-4400 FAX (618) 451-9310

This particular quarterly shipment had been confirmed for shipping no later than November 5, 1996. However, we have today learned that Schuylkill Metal Corporation's transportation division will not have a truck available for our area until Thursday, November 7th, thus necessitating this Provisional Variance Report.

Should you have any questions, please feel free to contact me at 618.451.4400.100.

Sincerely,

George E. Webb, Jr.
Director
Environmental Control & Safety

GEW:dls

STATE OF ILLINOIS)
)
COUNTY OF SANGAMON)

PROOF OF SERVICE

I, the undersigned, on oath state that I have served the attached AGENCY RECOMMENDATION upon the person(s) to whom it is directed, by placing a copy in an envelope addressed to:

TO: Dorothy Gunn, Clerk
Pollution Control Board
100 West Randolph Street
Suite 11-500
Chicago, Illinois 60601

(AIRBORNE EXPRESS)

George E. Webb
Taracorp Industries, Inc.
1200 16th Street
Granite City, Illinois 62040-4495

(CERTIFIED MAIL)

and mailing it from Springfield, Illinois on November 18, 1996 with sufficient postage affixed.

SUBSCRIBED AND SWORN TO BEFORE ME
this 18th day of November, 1996.

Cynthia L. Wolfe
Notary Public

OFFICIAL SEAL
CYNTHIA L. WOLFE
NOTARY PUBLIC, STATE OF ILLINOIS
MY COMMISSION EXPIRES 5-2-99

THIS FILING IS SUBMITTED ON RECYCLED PAPER

Citation Search Result Rank(R) 1 of 1 Database
1996 WL 633275 ILENV-ADMIN
Cite as: 1996 WL 633275 (Ill.Pol.Control.Bd.)

Illinois Pollution Control Board
State of Illinois

***1 MARATHON** OIL COMPANY, PETITIONER
v.
ILLINOIS ENVIRONMENTAL PROTECTION AGENCY, RESPONDENT
PCB **97-74**
October 17, 1996

(Provisional Variance - RCRA)

ORDER OF THE BOARD

Pursuant to Section 35(b) of the Environmental Protection Act (Act) (415 ILCS 5/35(b)), **Marathon** Oil Company **(Marathon)** has requested that the Illinois Environmental Protection Agency (Agency) recommend that the Board grant a provisional variance to allow **Marathon's** facility in Crawford County to continue accumulating hazardous waste for a period in excess of 90 days. Such request for a provisional variance and the notification of recommendation were filed with the Board by the Agency on October 16, 1996. Pursuant to Section 35(b) of the Act, the Board must issue the variance within two (2) days of this filing.

Specifically, the Agency recommends that we grant a 30-day provisional variance from the 90-day limitation on the accumulation of hazardous wastes, as set forth in 35 Ill. Adm. Code 722.134(b), for the period from October 14, 1996 to November 13, 1996.

Upon receipt of the request, the Agency issued its recommendation, notifying the Board that due to unforeseen, temporary and uncontrollable circumstances, failure to grant the requested 30-day provisional variance would impose an arbitrary or unreasonable hardship on the petitioner.

Provisional variances are by their very nature temporary. The responsibilities of the Agency and the Board in these short-term provisional variances are different from the responsibilities in standard variances. (See 415 ILCS 5/35(b) & 36(c).) In provisional variances it is the responsibility of the Agency to make the technical determinations and finding of an arbitrary or unreasonable hardship. The Board's responsibility is to adopt a formal order, to assure the formal maintenance of the record, to assure the enforceability of the variance, and to provide notification of the action by a press release.

Having received the Agency recommendation notifying the Board that a denial of the requested relief would impose an arbitrary or unreasonable hardship, the Board hereby grants the petitioner a provisional variance.

IT IS SO ORDERED.

Board Member K.M. Hennessey abstained.

C.A. Manning

1996 WL 633275 (Ill.Pol.Control.Bd.)

END OF DOCUMENT

Copr. (C) West 1999 No Claim to Orig. U.S. Govt. Works

Westlaw

ORIGINAL

RECEIVED
CLERK'S OFFICE
OCT 23 1996
STATE OF ILLINOIS
POLLUTION CONTROL BOARD

BEFORE THE POLLUTION CONTROL BOARD
OF THE STATE OF ILLINOIS

MARATHON OIL COMPANY Petitioner, v. ILLINOIS ENVIRONMENTAL PROTECTION AGENCY, Respondent.	))))))))))	PCB # 97-74 Provisional Variance

NOTICE

TO: Dorothy Gunn, Clerk
Pollution Control Board
100 West Randolph Street
Suite 11-500
Chicago, Illinois 60601

David Saad
Marathon Oil Company
Illinois Refining Division
Post Office Box 1200
Robinson, Illinois 62454-0903

PLEASE TAKE NOTICE that I have filed with the Office of the Clerk of the Pollution Control Board the CORRECTED AGENCY RECOMMENDATION of the Illinois Environmental Protection Agency, a copy of which is herewith served upon you.

ENVIRONMENTAL PROTECTION AGENCY
OF THE STATE OF ILLINOIS

By: Scott O. Phillips
Scott O. Phillips
Deputy Counsel
Division of Legal Counsel

Dated: October 16th, 1996
Agency File No.: 489-96

2200 Churchill Road
Post Office Box 19276
Springfield, Illinois 62794-9276
(217) 782-5544

THIS FILING IS SUBMITTED ON RECYCLED PAPER

RECEIVED
CLERK'S OFFICE
OCT 23 1996
STATE OF ILLINOIS
POLLUTION CONTROL BOARD

BEFORE THE POLLUTION CONTROL BOARD
OF THE STATE OF ILLINOIS

MARATHON OIL COMPANY Petitioner, v. ILLINOIS ENVIRONMENTAL PROTECTION AGENCY, Respondent.	))))))))))	PCB # 97-74 Provisional Variance

CORRECTED AGENCY RECOMMENDATION

The Illinois Environmental Protection Agency recommends that, because of an arbitrary and unreasonable hardship, the Petitioner be granted a provisional variance for 30 days pursuant to 35 Ill. Adm. Code 722.134(b) and Section 37 of the Environmental Protection Act. ACTION MUST BE TAKEN WITHIN 2 DAYS OF NOTIFICATION OF THIS RECOMMENDATION FROM THE AGENCY.

1. On October 14, 1996, the Agency received the attached letter from Petitioner. Petitioner requests an extension of time pursuant to 35 Ill. Adm. Code 722.134(b) for its facility in Crawford County.

2. The Agency has concluded that the hazardous wastes must remain on-site for longer than 90 days due to unforeseen, temporary and uncontrollable circumstances and that compliance with the accumulation time requirements of 35 Ill. Adm. Code 722.134 would impose, under these circumstances, an arbitrary or unreasonable hardship. The grant of this provisional variance appears consistent with 40 CFR 262.34(b) (1991), adopted pursuant to the Resource Conservation and Recovery Act of 1976 (P.L. 94-580), which authorizes the Regional Administrator for the United States Environ-

mental Protection Agency to grant similar extensions for up to 30 days when hazardous wastes must remain on-site for longer than 90 days due to unforeseen, temporary, and uncontrollable circumstances.

3. The Agency recommends that Petitioner be granted a provisional variance pursuant to 35 Ill. Adm. Code 722.134(b) from October 14, 1996 to November 13, 1996. [*The original Agency Recommendation was error in that it extended the provisional variance beyond a 30-day timeframe to November 18, 1996.*]

Illinois Environmental Protection Agency

By: Scott O. Phillips /JCL

Scott O. Phillips
Deputy Counsel
Division of Legal Counsel

Dated: October 16, 1996

2200 Churchill Road
Post Office Box 19276
Springfield, Illinois 62794-9276

SOP:JCL

THIS FILING IS SUBMITTED ON RECYCLED PAPER

Illinois Refining Division

Marathon Oil Company

P.O. Box 1200
Robinson, IL 62454-0903
Telephone 618/544-2121

October 11, 1996

Mr. John Rickstins
Division of Land Pollution Control
Illinois Environmental Protection Agency
1340 N. 9th Street
Springfield, IL 62702

RE: Marathon/Robinson
30-Day Extension to 90-Day Accumulation Period
#ILD 005 476 882

Dear Mr. Rickstins:

Marathon Oil Company, Illinois Refining Division, Robinson, Illinois (USEPA #ILD 005 476 882) is seeking a 30-day extension to the 90-day accumulation time for one specific waste stream. This waste stream is spent catalyst/support, a solid waste material generated at the Robinson IL refinery in 69C-1A reactor. This material is a waste by-product from the refining of crude oil.

The gray/black material is currently held in two sealed rolloff boxes and may have a total volume of 25 to 30 cubic yards. The material was first placed in the rolloff boxes on July 16, 1996.

The 69C-1A spent catalyst and support material is a routine waste stream that is generated from time to time as part of normal maintenance operations. In late July and early August, it was believed that adequate documentation was available for the proper shipping and disposal of this material. However, it was decided that a new analysis should be obtained. On August 6, 1996 Mr. David Riker obtained a representative sample and submitted it to Environmental Certification Labs, Farmersburg, Indiana for analysis. On August 22, 1996 the test results were obtained, indicating that the waste stream was hazardous due to arsenic at 68.5 ppm, TCLP.

The laboratory data was submitted to Peoria Disposal Company (PDC) in late August and by mid-September, in fact on September 8, 1996, further treatability studies were stopped because PDC had informed our broker/transporter, Advanced Waste Management, Inc., (AWM) that they could not treat the material. This was after PDC had requested additional testing to be run on the waste stream, which was actually taken on August 29, 1996 and reported by Environmental Certification Labs on September 11, 1996. All referenced testing data is attached.

Now as the 90-day period was drawing to an end, Marathon instructed AWM to investigate disposal at another TSD. Applications were filed with the State of Oklahoma and Laidlaw Environmental Services, USPCI facility at Lone Mountain, Oklahoma. More treatability studies were required by USPCI/Laidlaw and these treatability studies and resulting laboratory results were to be carried out on a "rush" basis. To date, Friday, October 11, 1996, the final test results have not been received. It is anticipated that this data will be available the week of October 13th, and the shipment of the material can be carried out in the later part of October or certainly before November 13, 1996.

We believe that the paper trail that has been generated by the many laboratory tests and filings with TSD facilities in tow different states indicate the seriousness and persistence with which Marathon has worked to properly dispose of this material in a timely fashion.

The current situation is that the material is properly contained in two sealed rolloff containers. It will require a few days more than the 90-days in order to properly ship and dispose of this material. Marathon ships thousands of tons of waste material annually and of these thousands of tons and literally hundreds of waste loads, this is the first shipment that has needed to receive a 30-day extension in several years.

We hope this documentation meets the regulatory requirements justifying the 30-day extension. We await your response.

If you have any comments or questions, please give me a call or write to the above address.

Sincerely,

David R. Saad
Environmental Coordinator

DRS:ckm

cc: Jeff Turner (IEPA)
David Riker
File

Enclosures

STATE OF ILLINOIS)
)
COUNTY OF SANGAMON)

PROOF OF SERVICE

I, the undersigned, on oath state that I have served the attached CORRECTED AGENCY RECOMMENDATION upon the person(s) to whom it is directed, by placing a copy in an envelope addressed to:

Dorothy Gunn, Clerk
Pollution Control Board
100 West Randolph Street
Suite 11-500
Chicago, Illinois 60601

(AIRBORNE EXPRESS)

David Saad
Marathon Oil Company
Illinois Refining Division
Post Office Box 1200
Robinson, Illinois 62454-0903

(CERTIFIED MAIL)

and mailing it from Springfield, Illinois on October 16, 1996 with sufficient postage affixed.

SUBSCRIBED AND SWORN TO BEFORE ME
this 16th day of October, 1996.

Notary Public

OFFICIAL SEAL
RICHARD C. WARRINGTON
NOTARY PUBLIC STATE OF ILLINOIS
My Commission Expires Jan. 27, 2000

THIS FILING IS SUBMITTED ON RECYCLED PAPER

ILLINOIS POLLUTION CONTROL BOARD
May 16, 1996

TARACORP INDUSTRIES, INC.,	)	
	)	
Petitioner,	)	
	)	PCB 96-232
v.	)	(Provisional Variance - RCRA)
	)	
ILLINOIS ENVIRONMENTAL PROTECTION AGENCY,	)	
	)	
Respondent.	)	

ORDER OF THE BOARD (by C.A. Manning):

Pursuant to Section 35(b) of the Environmental Protection Act (Act) (415 ILCS 5/35(b)) (1994), Taracorp Industries, Inc. (Taracorp) has requested that the Illinois Environmental Protection Agency (Agency) recommend that the Board grant a provisional variance to allow Taracorp's facility in Madison County to continue accumulating hazardous waste for a period in excess of 90 days. Such request for a provisional variance and the notification of recommendation were filed with the Board by the Agency on Tuesday, May 14, 1996. Pursuant to Section 35(b) of the Act, the Board must issue the variance within two (2) days of this filing.

Specifically, the Agency recommends that we grant a 4-day provisional variance from the 90-day limitation on the accumulation of hazardous wastes, as set forth in 35 Ill. Adm. Code 722.134(b), for the period from April 28, 1996 to May 1, 1996.

Upon receipt of the request, the Agency issued its recommendation, notifying the Board that due to unforeseen, temporary, and uncontrollable circumstances, failure to grant the requested 4-day provisional variance would impose an arbitrary or unreasonable hardship on the petitioner.

Provisional variances are by their very nature temporary. The responsibilities of the Agency and the Board in these short-term provisional variances are different from the responsibilities in standard variances. (See 415 ILCS 5/35(b) & 36(c).) In provisional variances it is the responsibility of the Agency to make the technical determinations and finding of arbitrary or unreasonable hardship. The Board's responsibility is to adopt a formal order, to assure the formal maintenance of the record, to assure the enforceability of the variance, and to provide notification of the action by a press release.

Having received the Agency recommendation notifying the Board that a denial of the requested relief would impose an arbitrary or unreasonable hardship, the Board hereby grants the petitioner a provisional variance from 35 Ill. Adm. Code 722-134(b) from April 28, 1996 to May 1, 1996.

IT IS SO ORDERED.

Section 41 of the Environmental Protection Act (415 ILCS 5/41 (1994)) provides for the appeal of final Board orders within 35 days of the date of service of this order. The Rules of the Supreme Court of Illinois establish filing requirements. (See also 35 Ill. Adm. Code 101.246 "Motions for Reconsideration.")

I, Dorothy M. Gunn, Clerk of the Illinois Pollution Control Board, hereby certify that the above order was adopted on the 16th day of May, 1996, by a vote of 7-0.

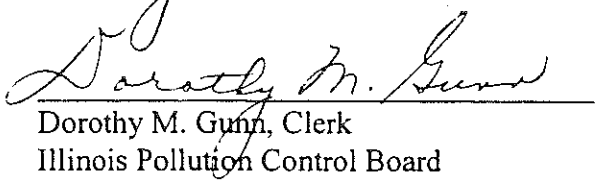

Dorothy M. Gunn, Clerk
Illinois Pollution Control Board

RECEIVED
CLERK'S OFFICE

BEFORE THE POLLUTION CONTROL BOARD
OF THE STATE OF ILLINOIS

TARACORP INDUSTRIES, INC. Petitioner, v. ILLINOIS ENVIRONMENTAL PROTECTION AGENCY, Respondent.	)))))))))	PCB 96-232 PROVISIONAL VARIANCE

NOTICE

TO: Dorothy Gunn, Clerk
Pollution Control Board
100 West Randolph Street
Suite 11-500
Chicago, Illinois 60601

George E. Webb
Taracorp Industries, Inc.
1200 16th Street
Granite City, Illinois 62040-4495

PLEASE TAKE NOTICE that I have filed with the Office of the Clerk of the Pollution Control Board the AGENCY RECOMMENDATION of the Illinois Environmental Protection Agency, a copy of which is herewith served upon you.

ENVIRONMENTAL PROTECTION AGENCY
OF THE STATE OF ILLINOIS

By: _____
Scott O. Phillips
Deputy Counsel
Division of Legal Counsel

Dated: May 13, 1996
Agency File No.: 206-96

2200 Churchill Road
Post Office Box 19276
Springfield, Illinois 62794-9276
(217) 782-5544

THIS FILING IS SUBMITTED ON RECYCLED PAPER

RECEIVED
CLERK'S OFFICE

BEFORE THE POLLUTION CONTROL BOARD
OF THE STATE OF ILLINOIS

TARACORP INDUSTRIES, INC. Petitioner, v. ILLINOIS ENVIRONMENTAL PROTECTION AGENCY, Respondent.	)))))))))	PCB 96-232 PROVISIONAL VARIANCE

AGENCY RECOMMENDATION

The Illinois Environmental Protection Agency recommends that, because of an arbitrary and unreasonable hardship, the Petitioner be granted a provisional variance for 30 days pursuant to 35 Ill. Adm. Code 722.134(b) and Section 37 of the Environmental Protection Act. ACTION MUST BE TAKEN WITHIN 2 DAYS OF NOTIFICATION OF THIS RECOMMENDATION FROM THE AGENCY.

1. On April 29, 1996, the Agency received the attached letters from Petitioner. Petitioner requests an extension of time pursuant to 35 Ill. Adm. Code 722.134(b) for its facility in Madison County.

2. The Agency has concluded that the hazardous wastes must remain on-site for longer than 90 days due to unforeseen, temporary and uncontrollable circumstances and that compliance with the accumulation time requirements of 35 Ill. Adm. Code 722.134 would impose, under these circumstances, an arbitrary or unreasonable hardship. The grant of this provisional variance appears consistent with 40 CFR 262.34(b) (1991), adopted pursuant to the Resource Conservation and Recovery Act of 1976 (P.L. 94-580,) which authorizes

the Regional Administrator for the United States Environmental Protection Agency to grant similar extensions for up to 30 days when hazardous wastes must remain on-site for longer than 90 days due to unforeseen, temporary, and uncontrollable circumstances.

3. The Agency has been in communication with the Petitioner and is to understand that the four (4) 55 gallon drums of emission control dust which were the subject of the Petitioner's request for provisional variance have been removed from the Petitioner's site for disposal as of April 30, 1996.

4. The Agency recommends that Petitioner be granted a provisional variance pursuant to 35 Ill. Adm. Code 722.134(b) from April 28, 1996 to May 1, 1996.

Illinois Environmental Protection Agency

By: _____
Scott O. Phillips
Deputy Counsel
Division of Legal Counsel

Dated: May 13, 1996

2200 Churchill Road
Post Office Box 19276
Springfield, Illinois 62794-9276

SOP:JCL

THIS FILING IS SUBMITTED ON RECYCLED PAPER

ILLINOIS POLLUTION CONTROL BOARD
April 4, 1996

RICHARDSON ELECTRONICS, LTD.,	)	
	)	
Petitioner,	)	
	)	PCB 96-210
v.	)	(Provisional Variance - RCRA)
	)	
ILLINOIS ENVIRONMENTAL PROTECTION AGENCY,	)	
	)	
Respondent.	)	

ORDER OF THE BOARD (by C.A. Manning):

Pursuant to Section 35(b) of the Environmental Protection Act (Act) (415 ILCS 5/35(b)), Richardson Electronics Ltd. (Richardson) has requested that the Illinois Environmental Protection Agency (Agency) recommend that the Board grant a provisional variance to allow Richardson's facility in Kane County to continue accumulating hazardous waste for a period in excess of 90 days. Such request for a provisional variance and the notification of recommendation were filed with the Board by the Agency on Thursday, April 4, 1996. Pursuant to Section 35(b) of the Act, the Board must issue the variance within two (2) days of this filing.

Specifically, the Agency recommends that we grant a 30-day provisional variance from the 90-day limitation on the accumulation of hazardous wastes, as set forth in 35 Ill. Adm. Code 722.134(b), for the period from March 28, 1996 to April 27, 1996.

Upon receipt of the request, the Agency issued its recommendation notifying the Board that due to unforeseen, temporary and uncontrollable circumstances, failure to grant the requested 30-day provisional variance would impose an arbitrary or unreasonable hardship on the petitioner.

Provisional variances are by their very nature temporary. The responsibilities of the Agency and the Board in these short-term provisional variances are different from the responsibilities in standard variances. (See 415 ILCS 5/35(b) & 36(c).) In provisional variances it is the responsibility of the Agency to make the technical determinations and finding of arbitrary or unreasonable hardship. The Board's responsibility is to adopt a formal order, to assure the formal maintenance of the record, to assure the enforceability of the variance, and to provide notification of the action by a press release.

Having received the Agency recommendation notifying the Board that a denial of the requested relief would impose an arbitrary or unreasonable hardship, the Board hereby grants the petitioner a provisional variance from 35 Ill. Adm. Code 722.134(b) from March 28, 1996 to April 27, 1996.

Section 41 of the Act (415 ILCS 5/41 (1994)) provides for the appeal of final Board orders within 35 days of the date of service of this order. The Rules of the Supreme Court of Illinois establish filing requirements. (See also 35 Ill. Adm. Code 101.246 "Motions for Reconsideration.")

IT IS SO ORDERED.

I, Dorothy M. Gunn, Clerk of the Illinois Pollution Control Board, hereby certify that the above order was adopted on the 4th day of April, 1996, by a vote of 7-0.

Dorothy M. Gunn, pro.
Dorothy M. Gunn, Clerk
Illinois Pollution Control Board

RECEIVED
CLERK'S OFFICE

BEFORE THE POLLUTION CONTROL BOARD
OF THE STATE OF ILLINOIS

RICHARDSON ELECTRONICS, LTD. Petitioner, v. ILLINOIS ENVIRONMENTAL PROTECTION AGENCY, Respondent.	))))))))))	PCB # 96-210 Provisional Variance

NOTICE

TO: Dorothy Gunn, Clerk
Pollution Control Board
100 West Randolph Street
Suite 11-500
Chicago, Illinois 60601

Mr. George C. Graham
Richardson Electronics, Ltd.
40W267 Keslinger Road
LaFox, Illinois 60147

PLEASE TAKE NOTICE that I have filed with the Office of the Clerk of the Pollution Control Board the AGENCY RECOMMENDATION of the Illinois Environmental Protection Agency, a copy of which is herewith served upon you.

ENVIRONMENTAL PROTECTION AGENCY
OF THE STATE OF ILLINOIS

By: _____
Scott O. Phillips
Deputy Counsel
Division of Legal Counsel

Dated: April 1, 1996

Agency File No.: 153-96

2200 Churchill Road
Post Office Box 19276
Springfield, Illinois 62794-9276
(217) 782-5544

THIS FILING IS SUBMITTED ON RECYCLED PAPER

RECEIVED
CLERK'S OFFICE

BEFORE THE POLLUTION CONTROL BOARD
OF THE STATE OF ILLINOIS

RICHARDSON ELECTRONICS, LTD. Petitioner, v. ILLINOIS ENVIRONMENTAL PROTECTION AGENCY, Respondent.	))))))))))	PCB 96-210 PROVISIONAL VARIANCE

AGENCY RECOMMENDATION

The Illinois Environmental Protection Agency recommends that, because of an arbitrary and unreasonable hardship, the Petitioner be granted a provisional variance for 30 days pursuant to 35 Ill. Adm. Code 722.134(b) and Section 37 of the Environmental Protection Act. ACTION MUST BE TAKEN WITHIN 2 DAYS OF NOTIFICATION OF THIS RECOMMENDATION FROM THE AGENCY.

1. On March 27, 1996, the Agency received the attached letter from Petitioner. Petitioner requests an extension of time pursuant to 35 Ill. Adm. Code 722.134(b) for its facility in Kane County.

2. The Agency has concluded that the hazardous wastes must remain on-site for longer than 90 days due to unforeseen, temporary and uncontrollable circumstances and that compliance with the accumulation time requirements of 35 Ill. Adm. Code 722.134 would impose, under these circumstances, an arbitrary or unreasonable hardship. The grant of this provisional variance appears consistent with 40 CFR 262.34(b) (1991), adopted pursuant to the

Resource Conservation and Recovery Act of 1976 (P.L. 94-580), which authorizes the Regional Administrator for the United States Environmental Protection Agency to grant similar extensions for up to 30 days when hazardous wastes must remain on-site for longer than 90 days due to unforeseen, temporary, and uncontrollable circumstances.

3. The Agency recommends that Petitioner be granted a provisional variance pursuant to 35 Ill. Adm. Code 722.134(b) from March 28, 1996 to April 27, 1996.

Illinois Environmental Protection Agency

By: _____
Scott O. Phillips
Deputy Counsel
Division of Legal Counsel

Dated: April 1, 1996

2200 Churchill Road
Post Office Box 19276
Springfield, Illinois 62794-9276

SOP:JCL

THIS FILING IS SUBMITTED ON RECYCLED PAPER

STATE OF ILLINOIS)
)
COUNTY OF SANGAMON)

PROOF OF SERVICE

I, the undersigned, on oath state that I have served the attached AGENCY RECOMMENDATION upon the person(s) to whom it is directed, by placing a copy in an envelope addressed to:

Dorothy Gunn, Clerk
Pollution Control Board
100 West Randolph Street
Suite 11-500
Chicago, Illinois 60601

(AIRBORNE EXPRESS)

Mr. George C. Graham
Richardson Electronics, Ltd.
40W267 Keslinger Road
LaFox, Illinois 60147

(CERTIFIED MAIL)

and mailing it from Springfield, Illinois on April 1, 1995 with sufficient postage affixed.

SUBSCRIBED AND SWORN TO BEFORE ME
this 1st day of April, 1995.

Barbara K. McGee
Notary Public

"OFFICIAL SEAL"
BARBARA K. McGEE
Notary Public, State of Illinois
My Commission Expires 4-13-99

THIS FILING IS SUBMITTED ON RECYCLED PAPER

ILLINOIS POLLUTION CONTROL BOARD
January 4, 1996

ENVIRITE CORPORATION, Petitioner, v. ILLINOIS ENVIRONMENTAL PROTECTION AGENCY, Respondent.	))))))))))	PCB 96-150 (Provisional Variance)

ORDER OF THE BOARD (by C. A. Manning):

Pursuant to Section 35(b) of the Environmental Protection Act (Act) (415 ILCS 5/35(b)), Envirite Corporation has requested that the Illinois Environmental Protection Agency (Agency) recommend that the Board grant a provisional variance to allow Envirite Corporation to continue accumulating hazardous waste for a period in excess of ninety (90) days. Such request for a provisional variance and the Notification of Recommendation was filed with the Board by the Agency on Tuesday, January 2, 1996. Pursuant to Section 35(b) of the Act, the Board must issue the variance within two (2) days of this filing.

Specifically, the Agency recommends that we grant a thirty (30)-day provisional variance from the ninety (90)-day limitation on the accumulation of hazardous wastes, as set forth in 35 Ill. Adm. Code 722.134(b), for the period from January 6, 1996 to February 5, 1996.

Upon receipt of the request, the Agency issued its recommendation, notifying the Board that due to unforeseen, temporary and uncontrollable circumstances, failure to grant the requested thirty (30)-day provisional variance would impose an arbitrary or unreasonable hardship on the petitioner.

Provisional variances are by their very nature temporary. The responsibilities of the Agency and the Board in these short-term provisional variances are different from the responsibilities in standard variances. (See 415 ILCS 5/35(b) & 36(c)). In provisional variances it is the responsibility of the Agency to make the technical determinations and finding of arbitrary or unreasonable hardship. The Board's responsibility is to adopt a formal order, to assure the formal maintenance of the record, to assure the enforceability of the variance, and to provide notification of the action by a press release.

Having received the Agency recommendation notifying the Board that a denial of the requested relief would impose an arbitrary or unreasonable hardship, the Board hereby grants the petitioner a provisional variance from 35 Ill. Adm. Code

722.134(b) from January 6, 1996 to February 5, 1996.

IT IS SO ORDERED.

I, Dorothy M. Gunn, Clerk of the Illinois Pollution Control Board, do hereby certify that the above order was adopted on the 4th day of January, 1996, by a vote of 7-0.

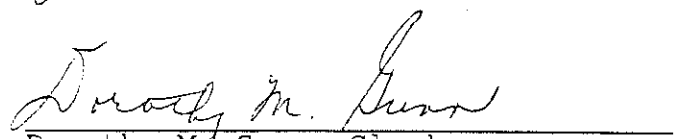

Dorothy M. Gunn, Clerk
Illinois Pollution Control Board

RECEIVED
CLERK'S OFFICE

BEFORE THE POLLUTION CONTROL BOARD
OF THE STATE OF ILLINOIS

ENVIRITE CORPORATION, Petitioner, v. ILLINOIS ENVIRONMENTAL PROTECTION AGENCY, Respondent.	))))))))))	PCB # 96-150 Provisional Variance

NOTICE

TO: Dorothy Gunn, Clerk
Pollution Control Board
100 West Randolph Street
Suite 11-500
Chicago, Illinois 60601

Ms. Ellen M. Riley
ENVIRITE CORPORATION
16436 South Center Street
Harvey, Illinois 60426-6078

PLEASE TAKE NOTICE that I have filed with the Office of the Clerk of the Pollution Control Board the AGENCY RECOMMENDATION of the Illinois Environmental Protection Agency, a copy of which is herewith served upon you.

ENVIRONMENTAL PROTECTION AGENCY
OF THE STATE OF ILLINOIS

By: Scott O. Phillips by WDI
Scott O. Phillips
Deputy Counsel
Division of Legal Counsel

Dated: December 29, 1995

Agency File No.: 903-95

2200 Churchill Road
Post Office Box 19276
Springfield, Illinois 62794-9276
(217) 782-5544

THIS FILING IS SUBMITTED ON RECYCLED PAPER

BEFORE THE POLLUTION CONTROL BOARD
OF THE STATE OF ILLINOIS

ENVIRITE CORPORATION, Petitioner, v. ILLINOIS ENVIRONMENTAL PROTECTION AGENCY, Respondent.	)	PCB 96-150 PROVISIONAL VARIANCE

AGENCY RECOMMENDATION

The Illinois Environmental Protection Agency recommends that, because of an arbitrary and unreasonable hardship, the Petitioner be granted a provisional variance for 30 days pursuant to 35 Ill. Adm. Code 722.134(b) and Section 37 of the Environmental Protection Act. ACTION MUST BE TAKEN WITHIN 2 DAYS OF NOTIFICATION OF THIS RECOMMENDATION FROM THE AGENCY.

1. On December 21, 1995, the Agency received the attached letter from Petitioner. Petitioner requests an extension of time pursuant to 35 Ill. Adm. Code 722.134(b) for its facility in Cook County.

2. The Agency has concluded that the hazardous wastes must remain on-site for longer than 90 days due to unforeseen, temporary and uncontrollable circumstances and that compliance with the accumulation time requirements of 35 Ill. Adm. Code 722.134 would impose, under these circumstances, an arbitrary or unreasonable hardship. The grant of this provisional variance appears consistent with 40 CFR 262.34(b) (1991), adopted pursuant to the

BEFORE THE POLLUTION CONTROL BOARD
OF THE STATE OF ILLINOIS

ENVIRITE CORPORATION, Petitioner, v. ILLINOIS ENVIRONMENTAL PROTECTION AGENCY, Respondent.	)))))))))	PCB 96-150 PROVISIONAL VARIANCE

AGENCY RECOMMENDATION

The Illinois Environmental Protection Agency recommends that, because of an arbitrary and unreasonable hardship, the Petitioner be granted a provisional variance for 30 days pursuant to 35 Ill. Adm. Code 722.134(b) and Section 37 of the Environmental Protection Act. ACTION MUST BE TAKEN WITHIN 2 DAYS OF NOTIFICATION OF THIS RECOMMENDATION FROM THE AGENCY.

1. On December 21, 1995, the Agency received the attached letter from Petitioner. Petitioner requests an extension of time pursuant to 35 Ill. Adm. Code 722.134(b) for its facility in Cook County.

2. The Agency has concluded that the hazardous wastes must remain on-site for longer than 90 days due to unforeseen, temporary and uncontrollable circumstances and that compliance with the accumulation time requirements of 35 Ill. Adm. Code 722.134 would impose, under these circumstances, an arbitrary or unreasonable hardship. The grant of this provisional variance appears consistent with 40 CFR 262.34(b) (1991), adopted pursuant to the

Resource Conservation and Recovery Act of 1976 (P.L. 94-580), which authorizes the Regional Administrator for the United States Environmental Protection Agency to grant similar extensions for up to 30 days when hazardous wastes must remain on-site for longer than 90 days due to unforeseen, temporary, and uncontrollable circumstances.

3. The Agency recommends that Petitioner be granted a provisional variance pursuant to 35 Ill. Adm. Code 722.134(b) from January 6, 1996 to February 5, 1996.

Illinois Environmental Protection Agency

By: Scott O. Phillips by WBT
Scott O. Phillips
Deputy Counsel
Division of Legal Counsel

Dated: December 29, 1995

2200 Churchill Road
Post Office Box 19276
Springfield, Illinois 62794-9276

SOP:MJM

THIS FILING IS SUBMITTED ON RECYCLED PAPER

UNITED STATES ENVIRONMENTAL PROTECTION AGENCY
REGION 5
77 WEST JACKSON BOULEVARD
CHICAGO, IL 60604-3590

FEB 03 1999

REPLY TO THE ATTENTION OF

C-14J

VIA HAND DELIVERY

Sonja R. Brooks
Regional Hearing Clerk
U.S. EPA, Region 5
77 West Jackson Boulevard
Chicago, Illinois 60604

Re: In the Matter of: Pierce & Stevens Corporation
Docket No. 5-RCRA-'98-006
Complainant's Prehearing Exchange

Dear Ms. Brooks:

In accordance with the Prehearing Order, issued on October 14, 1998, by Administrative Law Judge Barbara A. Gunning, requiring the U.S. Environmental Protection Agency to file its prehearing exchange in this matter by or on February 3, 1999, please find enclosed the original copy of the U.S. Environmental Protection Agency's Prehearing Exchange.

Sincerely,

Kevin C. Chow
Assistant Regional Counsel

Enclosure

cc: Judge Barbara A. Gunning
Jeryl L. Olson, Esq.

Recycled/Recyclable • Printed with Vegetable Oil Based Inks on 50% Recycled Paper (20% Postconsumer)

ILLINOIS ENVIRONMENTAL PROTECTION AGENCY

1021 North Grand Avenue East, P.O. Box 19276, Springfield, Illinois 62794-9276 Mary A. Gade, Director

(217)782-5544
TDD: (217)782-9143

November 17, 1998

Mr. Bob Springer, Acting Director
Waste, Pesticides and Toxics Division
U.S. Environmental Protection Agency, Region V
77 West Jackson Boulevard
Chicago, Illinois 60604

Re: 0430200004 - DuPage County
Carol Stream/Pierce & Stevens Chemical Corporation
ILD 055434443
Compliance

Dear Mr. Springer:

The Illinois Environmental Protection Agency ("Illinois EPA") is referring the above-described site to your office for its failure to comply with the Resource Conservation and Recovery Act ("RCRA") and the applicable regulations. The compliance deficiencies cited in this referral were observed during a RCRA inspection of the Pierce & Stevens Chemical Corporation ("Pierce & Stevens") facility that was conducted by the United States Environmental Protection Agency ("U.S. EPA").

The U.S. EPA inspection of the Pierce & Stevens facility at 6245 East Kehoe, Carol Stream, DuPage County, Illinois 60187 was conducted on December 12, 1997. The inspection revealed that the site had stored hazardous wastes for greater than 90 days in violation of 40 CFR 262.34(a). It also revealed the following additional violations of RCRA regulations: failure to have adequate training records, in violation of 40 CFR 265.16; failure to have an adequate contingency plan, in violation of 40 CFR 265.52(d) & (e); and failure to have adequate inspections records, in violation of 40 CFR 265.174. A number of potential violations were also discovered and enumerated in the inspection report. A copy of the report of this inspection is enclosed, together with correspondence from the U.S. EPA to the Illinois EPA dated March 5, 1998.

Printed on Recycled Paper

Please take the appropriate steps to compel Pierce & Stevens to return to compliance with the RCRA regulations. The Illinois EPA shall defer the issue of the penalty assessment for the apparent violations outlined in this referral to your office.

Please advise Donald Gimbel of the Division of Legal Counsel if the Illinois EPA may be of further assistance in this matter. Please provide copies of all pleadings and correspondence related to this matter to the Illinois EPA. The copies may be submitted to Mr. Gimbel's attention. He is located at the Illinois EPA Maywood regional office, 1701 south First Avenue, Suite 600, Maywood, Illinois 60153, phone number (708)338-7932.

Sincerely,

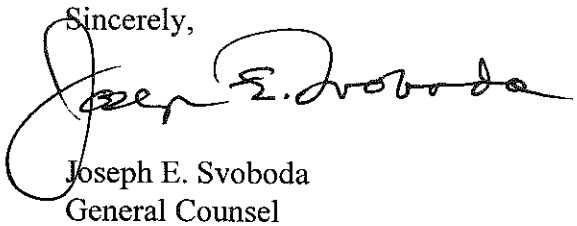

Joseph E. Svoboda
General Counsel
Division of Legal Counsel

G:\GIMBEL\Pierce.Stevens.wpd

UNITED STATES ENVIRONMENTAL PROTECTION AGENCY
WASHINGTON, D.C. 20460

September 10, 1998

Mail Code 1900L

Chief
Administrative Law Judge

Kevin Chow, Esquire
Assistant Regional Counsel
U.S. EPA
77 West Jackson Boulevard
Chicago, IL 60604-3590

Re: Pierce & Stevens Corporation
Docket No. 5-RCRA-006-1998

Dear Mr. Chow:

This Office is engaged in a pilot project to evaluate the usefulness of Alternative Dispute Resolution (ADR) approaches n facilitating the settlement of adjudicative cases. Please advise me by September 24, 1998, whether you would like ADR to be used in the above cited case. The ADR process will be conducted pursuant to the Dispute Resolution Act of 1990, 5 U.S.C. Secs. 571-583, by a Judge of this Office serving as a neutral. The process will be entirely voluntary and completely confidential; both these points, together with general procedures, are reviewed below.

Voluntary ADR will be utilized in a case only with the consent of both parties; the choice to use or not to use ADR is without prejudice to either party. If ADR is utilized, either party may terminate the process at any time.

Confidential The ADR process will be conducted in a confidential manner, in accord with Section 584 of the Dispute Resolution Act of 1990. The Judge who serves as the neutral will not disclose to anyone the contents of any of the parties' ADR communications.

Procedures A Judge in this Office will serve as a neutral. The ADR Judge will ordinarily begin by arranging a telephone conference with the parties to establish procedures. The specific role the ADR Judge will play will be determined after consultation with the parties.

Printed on Recycled Paper

Authorization to Commit For the ADR process to be effective, the persons communicating with the neutral must either have authority to commit his or her side to a settlement, or have ready access to somebody with such authority.

Duration Unless terminated earlier by either party, the ADR process will continue for 60 days from the date of the case assignment to the ADR Judge; after that time, if no settlement has been reached, the case will be assigned to another Judge to commence the litigation process.

Follow Up At the termination of the ADR process, I will send the parties a questionnaire to elicit their views and experience with the process. The contents of individual questionnaires will be kept confidential and will be made available to the neutrals and others only in a composite format.

Again, please inform me in writing or by phone (202-564-6255) by September 24, 1998, if you would like to use the ADR process that I have described.

Very truly yours,

Susan L. Biro
Chief Administrative Law Judge

cc: Jeryl L. Olson, Esquire
Sonja R. Brooks, Regional Hearing Clerk

9/3/98

UNITED STATES ENVIRONMENTAL PROTECTION AGENCY
REGION V

IN RE:	)	
	)	
PIERCE & STEVENS CORPORATION	)	
6245 EAST KEHOE	)	
CAROL STREAM, ILLINOIS 60187	)	Docket No. 5-RCRA-98-006
	)	
U.S. EPA ID No. ILD 055 434 443	)	
	)	
Respondent.	)	
	)	

ANSWER TO COMPLAINT AND REQUEST FOR HEARING

Respondent, Pierce & Stevens Corporation, through its attorneys, Seyfarth, Shaw, Fairweather & Geraldson, for its answer to the Complaint of the United States Environmental Protection Agency, Region V ("U.S. EPA") states as follows:

PARAGRAPH 1:

This is a civil administrative action instituted pursuant to Section 3008(a)(1) of the Resource Conservation and Recovery Act of 1976, as amended ("RCRA"), 42 U.S.C. § 6928(a)(1), and Sections 22.01(a)(4), 22.13 and 22.37 of the Consolidated Rules of Practice Governing the Administrative Assessment of Civil Penalties and the Revocation or Suspension of Permits, 40 CFR §§ 22.01(a)(4), 22.13 and 22.37.

ANSWER:

The referenced statutory and regulatory sections speak for themselves and no response is required.

PARAGRAPH 2:

The Complainant is, by lawful delegation, Chief of the Enforcement and Compliance Assurance Branch, Waste, Pesticides and Toxics Division, Region 5, United States Environmental Protection Agency ("U.S. EPA").

ANSWER:

Respondent is without knowledge of the Complainant.

PARAGRAPH 3:

The Respondent is the Pierce & Stevens Corporation, which is and was at all times relevant to this Complaint, the owner and operator of a facility located at 6245 East Kehoe, Carol Stream, Illinois (the "Facility").

ANSWER:

Respondent admits the allegations of paragraph 3.

PARAGRAPH 4:

Respondent is a "person" as defined at Section 1004(15) of RCRA, 42 U.S.C. § 6903(15), and Title 35 Illinois Administrative Code ("IAC") § 720.110, and is subject to the regulations promulgated pursuant to Subtitle C of RCRA, 42 U.S.C. §§ 6921-6939, and the analogous Illinois regulations as part of the applicable state hazardous waste management program for the State of Illinois.

ANSWER:

The referenced statutory and regulatory sections speak for themselves, and no response is required.

PARAGRAPH 5:

Respondent is a New York corporation whose registered agency is CT Corporation located at 208 South LaSalle Street, Chicago, Illinois 60604.

ANSWER:

Respondent admits the allegations contained in paragraph 5.

PARAGRAPH 6:

Jurisdiction for this action is conferred upon U.S. EPA by Sections 2002(a)(1), 3006(b), and 3008 of RCRA, 42 U.S.C. §§ 6912(a)(1), 6926(b), and 6928 respectively. U.S. EPA has promulgated regulations codified at 40 CFR Parts 260 through 271 governing generators and transporters of hazardous wastes and facilities that treat, store, and dispose of hazardous waste.

ANSWER:

The referenced statutory and regulatory sections speak for themselves, and no response is required.

PARAGRAPH 7:

Pursuant to Section 3006(b) of RCRA, 42 U.S.C. § 6926(b), on January 31, 1986, the State of Illinois was granted final Authorization by the Administrator of the U.S. EPA to administer a hazardous waste program in lieu of the Federal program. See 51 Federal Register 3778 (January 31, 1986). As a result, Illinois regulations at 35 IAC Part 720 et. seq. govern generation, transportation, treatment, storage and disposal of hazardous waste, rather than the Federal regulations set forth at 40 CFR Parts 260 et. seq., except for the applicable requirements pursuant to provisions of the Hazardous and Solid Waste Amendments of 1984 ("HSWA") for which Illinois is not authorized. Section 3008(a) of RCRA, 42 U.S.C. § 6928(a), provides the U.S. EPA with the authority to enforce state regulations in those States authorized to administer a hazardous waste program. U.S. EPA has provided notice to the State of Illinois regarding this action.

ANSWER:

The referenced statutory and regulatory sections speak for themselves, and no response is required.

PARAGRAPH 8:

Section 3010(a) of RCRA, 42 U.S.C. § 6930(a), requires any person who generates or transports hazardous waste, or owns or operates a facility for the treatment, storage, or disposal of hazardous waste, to notify U.S. EPA of such activity within 90 days of the promulgation of regulations under Section 3001 of RCRA. Section 3010 of RCRA also

provides that no hazardous waste subject to regulations may be transported, treated, stored, or disposed of unless the required notification has been given.

ANSWER:

The referenced statutory and regulatory sections speak for themselves, and no response is required.

PARAGRAPH 9:

U.S. EPA first published regulations concerning the identification, generation, transportation, treatment, storage or disposal of hazardous waste on May 19, 1980. These regulations are codified at 40 CFR Parts 260 through 265. Notification to U.S. EPA of hazardous waste activity was required in most instances no later than August 18, 1980. The regulations which concern the identification and listing of hazardous waste are codified at 40 CFR Part 261. The regulations governing generators are codified at 40 CFR Part 262.

ANSWER:

Respondent is without knowledge of the publication dates of the referenced regulations. Further answering, the referenced regulatory sections speak for themselves, and no response is required.

PARAGRAPH 10:

Facilities that treat, store or dispose of hazardous waste must have interim status or obtain a permit pursuant to 40 CFR Part 270 and Sections 3005 and 3006 of RCRA, 42 U.S.C. §§ 6925 and 6926.

ANSWER:

The referenced statutory and regulatory sections speak for themselves, and no response is required.

PARAGRAPH 11:

"Storage" is defined at 35 IAC § 728.102(c) and 40 CFR § 260.10 as "the holding of hazardous waste for a temporary period, at the end of which the hazardous waste is treated, disposed of, or stored elsewhere."

ANSWER:

The referenced statutory and regulatory sections speak for themselves, and no response is required.

PARAGRAPH 12:

Respondent conducts, and conducted at all time relevant to this Complaint, "storage" of hazardous waste as that term is defined at 35 IAC § 728.102(c) and 40 CFR § 260.10.

ANSWER:

Respondent admits the allegations contained in paragraph 12.

PARAGRAPH 13:

"Generator" is defined at 40 C.F.R § 260.10 and 35 IAC § 720.110 as any person, by site, whose act or process produces hazardous waste identified or listed in 40 CFR Party 261.

ANSWER:

The referenced statutory and regulatory sections speak for themselves, and no response is required.

PARAGRAPH 14:

On August 18, 1980, Respondent filed a notification of hazardous waste activity for the Facility with U.S. EPA pursuant to Section 3010 of RCRA, 42 U.S.C. § 6930, for the generation of hazardous waste.

ANSWER:

Respondent admits the allegations of paragraph 14.

PARAGRAPH 15:

Respondent generates spent solvents including xylene, acetone, acetate, toluene, and Methyl Ethyl Ketone (MEK), with U.S. EPA Hazardous Waste Numbers F003 (xylene, acetone, and acetate), F005 (toluene and MEK), D035 (MEK), D018 (Benzene) and D001 (characteristic for ignitability). These spent solvents are listed hazardous wastes and characteristic hazardous wastes respectively pursuant to 35 IAC § 721.121 and 40 CFR § 261.21; 35 IAC § 721.124 and 40 CFR § 261.24; and 35 IAC § 721.131 and 40 CFR § 261.31.

ANSWER:

Respondent admits that it generates the following spent solvents: xylene, acetone, toluene, and methyl ethyl ketone (MEK), but denies that it generates any of the other spent solvents listed in paragraph 15. Further answering, the referenced regulatory sections speak for themselves, and no further response is required.

PARAGRAPH 16:

Respondent is, or was at all times relevant to this Complaint, a "generator" as defined at 40 CFR § 260.10.

ANSWER:

Respondent admits the allegations contained in paragraph 16.

PARAGRAPH 17:

Respondent generates, or generated at all times relevant to this Complaint, quantities of hazardous waste in excess of 1,000 kilograms per month at the Facility.

ANSWER:

Respondent denies the allegations of Paragraph 17.

PARAGRAPH 18:

Respondent is, or was at all times relevant to this Complaint, an "owner" or "operator" of a facility as those terms are defined at 40 CFR § 260.10 and 35 IAC § 720.110.

ANSWER:

Respondent denies the allegations of paragraph 18. Further answering, the referenced regulatory sections speak for themselves.

PARAGRAPH 19:

On December 12, 1997, U.S. EPA inspected the Facility and reviewed Facility records related to hazardous waste management including manifest, container inspection logs, training, and contingency plan records.

ANSWER:

Respondent admits that U.S. EPA inspected its plant on December 12, 1997 but is without knowledge with respect to all other allegations of paragraph 17.

PARAGRAPH 20:

Any violation of regulations promulgated pursuant to Subtitle C, Sections 3001-3019 of RCRA, 42 U.S.C. §§ 6921-6939a, or any state provision approved pursuant to Section 3006 of RCRA, 42 U.S.C. § 6926, constitutes a violation of RCRA, subject to the assessment of civil or criminal penalties and compliance orders as provided in Section 3008 of RCRA, 42 U.S.C. § 6928.

ANSWER:

The referenced statutory sections speak for themselves, and no response is required.

FINDINGS OF VIOLATION

Count I: **Owning or Operating a Facility Without a Permit**

A. Accumulation of Hazardous Waste in Excess of 90 Days

PARAGRAPH 21:

Paragraphs 1 through 20 of this Complaint are incorporated by reference as though set forth here in full.

ANSWER:

Respondent incorporates by reference its answers to paragraphs 1 through 20 as through set forth here in full.

PARAGRAPH 22:

Section 3005 of RCRA, 42 U.S.C. § 6925, 35 IAC § 703.121(a)(1), and 40 CFR Part 270.1 require each person owning or operating a hazardous waste storage facility to have a permit.

ANSWER:

The referenced statutory and regulatory sections speak for themselves, and no response is required.

PARAGRAPH 23:

40 CFR § 262.34(a) and 35 IAC § 722.134(a) provide that a generator of greater than 1,000 kilograms of hazardous waste per month may accumulate hazardous waste on-site for ninety days or less without a permit or without having interim status, provided that the generator complies with 40 CFR §§ 262.34(a)(1)-(4) and 35 IAC §§ 722.134(a)(1)-(4).

ANSWER:

The referenced statutory and regulatory sections speak for themselves, and no response is required.

PARAGRAPH 24:

40 CFR § 262.34(b) and 35 IAC § 722.134(b) provide that a generator of greater than 1,000 kilograms of hazardous waste per month who accumulates hazardous waste on-site for more than ninety days is an operator of a storage facility and is subject to the requirements of 35 IAC §§ 724, 725, and 702, and 40 CFR Parts 264 and 265, as well as the permit requirements of 40 CFR Part 270, unless granted an extension to the 90-day period pursuant to Section 37 of the Illinois Environmental Protection Act, 415 ILCS 5/37.

ANSWER:

The referenced statutory and regulatory sections speak for themselves, and no response is required.

PARAGRAPH 25:

At all times relevant to this Complaint, Respondent was a generator of hazardous waste in quantities greater than 1,000 kilograms per month at its Facility.

ANSWER:

Respondent denies the allegations of paragraph 25.

PARAGRAPH 26:

On December 12, 1997, U.S. EPA conducted an inspection of the Facility, including a review of Uniform Hazardous Waste Manifest Forms ("Manifests") and handwritten hazardous waste container inspection logs ("logs"), including logs which recorded changes in the number of drums stored in a ninety-day accumulation area at the Facility between December 15, 1995 and June 23, 1997.

ANSWER:

Respondent admits that U.S. EPA conducted an inspection on December 12, 1997 at its plant but is without knowledge with respect to the remaining allegations of paragraph 26.

PARAGRAPH 27:

A log titled "Central Accum. Area" indicates that Respondent was storing, as of October 30, 1996, at least seven drums of hazardous waste in the ninety-day accumulation area at the Facility.

ANSWER:

Respondent admits the allegations of paragraph 27.

PARAGRAPH 28:

The log referenced in Paragraph 27 above indicates that Respondent was storing, as of November 1, 1996, at least forty-three drums of hazardous waste in the ninety-day accumulation area at the Facility.

ANSWER:

Respondent admits the allegations of paragraph 28.

PARAGRAPH 29:

According to a Manifest identified as State Manifest Document Number INA1110314, seventy-eight drums were transported from Respondent's Facility to an off-site location on or about February 11, 1997.

ANSWER:

Respondent admits the allegations of paragraph 29.

PARAGRAPH 30:

The seventy-eight drums referenced in Paragraph 29 included the drums referenced in Paragraphs 27 and 28.

ANSWER:

Respondent is without knowledge of the allegations contained in paragraph 30.

PARAGRAPH 31:

The drums identified in Paragraphs 27 and 28 above were stored at the Facility in excess of ninety days.

ANSWER:

Respondent denies the allegations of paragraph 31.

PARAGRAPH 32:

At all times relevant to this Complaint, the Respondent did not, and does not, have a permit to store hazardous waste, as required by Section 3005 of RCRA, 42 U.S.C § 6925, 35 IAC § 703.121(a)(1), and 40 CFR § 270.1.

ANSWER:

Respondent admits that it did not, and does not, have a permit to store hazardous waste but denies that such a permit was required.

PARAGRAPH 33:

At all times relevant to this Complaint, Respondent was not granted, and has not been granted, an extension to the ninety-day accumulation period.

ANSWER:

Respondent admits the allegations of paragraph 33.

PARAGRAPH 34:

At all times relevant to this Complaint, Respondent conducted "storage" of hazardous waste as defined at 35 IAC § 728.102(c) and 40 CFR § 260.10, at its Facility.

ANSWER:

Respondent admits the allegations of paragraph 34.

PARAGRAPH 35:

As a result of its storage of hazardous waste in excess of ninety days and its failure to have a permit for the storage of hazardous waste, Respondent has violated Section 3005 of RCRA, 42 U.S.C. § 6925, 35 IAC §§ 703.134(a) and (b), 40 CFR §§ 262.34(a) and (b), 35 IAC § 703.121(a)(1) and 40 CFR § 270.1.

ANSWER:

Respondent denies the allegations of paragraph 35.

PARAGRAPH 36:

As a result of its storage of hazardous waste in excess of ninety days, Respondent is subject to 35 IAC §§ 724, 725, and 702, 40 CFR Parts 264 and 265, and the additional permit requirements of 40 CFR Part 270, pursuant to 35 IAC § 722.134(b) and 40 CFR § 262.34(b).

ANSWER:

Respondent denies the allegations of paragraph 36.

B. Weekly Inspections

PARAGRAPH 37:

Section 3002 of RCRA, 42 U.S.C. § 6922, 35 IAC § 134(a)(1)(i), and 40 CFR § 262.34(a)(1)(i) allow generators of hazardous waste to accumulate hazardous wastes for ninety days or less without obtaining a permit provided the generator complies with the

container management requirements of Subpart I of 35 IAC § 725 and Subpart I of 40 CFR Part 265, including 35 IAC § 725.274 and 40 CFR § 265.174.

ANSWER:

The referenced statutory and regulatory sections speak for themselves, and no response is required.

PARAGRAPH 38:

35 IAC § 725.274 and 40 CFR § 265.174 require the owner or operator to inspect areas where containers are stored, at least weekly, looking for leaks and for deterioration caused by corrosion or other factors.

ANSWER:

The referenced regulatory sections speak for themselves, and no response is required.

PARAGRAPH 39:

35 IAC § 725.115(d) and 40 CFR § 265.15(d) require the owner or operator of a facility to record inspections in an inspection log or summary.

ANSWER:

The referenced regulatory sections speak for themselves, and no response is required.

PARAGRAPH 40:

On December 12, 1997, an inspector for U.S. EPA requested and reviewed inspection records for the Facility's ninety-day hazardous waste accumulation area, including handwritten hazardous waste container inspection logs recording the storage of drums in the ninety-day accumulation area between December 15, 1995 and June 23, 1997.

ANSWER:

Respondent admits that an inspector for U.S. EPA requested certain records on December 12, 1997. Respondent is without knowledge as to the remaining allegations of paragraph 40.

PARAGRAPH 41:

A log titled "Central Accum. Area" indicates that no inspections were conducted between December 15, 1995 and January 9, 1996; between January 9, 1996 and March 11, 1996; between March 11, 1996 and April 3, 1996; between April 3, 1996 and May 3, 1996; between May 3, 1996 and June 26, 1996; between June 26, 1996 and September 20, 1996; between September 20, 1996 and October 30, 1996; and between November 1, 1996 and January 7, 1997.

ANSWER:

Respondent denies the allegations of paragraph 41.

PARAGRAPH 42:

The log referenced in Paragraph 41 above also indicates that the last inspection of the ninety-day accumulation area occurred on June 23, 1997.

ANSWER:

Respondent denies the allegations of paragraph 42.

PARAGRAPH 43:

Respondent did not provide the U.S. EPA inspector with any records indicating that any weekly inspections of the ninety-day accumulation area took place after June 23, 1997.

ANSWER:

Respondent denies the allegations of paragraph 43. Further answering, the applicable regulatory provisions do not require respondent to maintain records of weekly inspections of containers in which waste accumulates.

PARAGRAPH 44:

Respondent has failed to inspect containers of hazardous waste at least weekly pursuant to 35 IAC § 725.274, and 40 CFR §§ 262.34(a)(1)(i) and 265.174.

ANSWER:

Respondent denies the allegations of paragraph 44.

PARAGRAPH 45:

At all times relevant to this Complaint, the Respondent did not, and does not, have a permit to store hazardous waste, as required by Section 3005 of RCRA, 42 U.S.C. § 6925, 35 IAC 703.121(a)(1), and 40 CFR Part 270.1.

ANSWER:

Respondent admits that it did not, and does not, have a permit to store hazardous waste but denies that such a permit was required.

PARAGRAPH 46:

As a result of its failure to conduct inspections on a weekly basis and its failure to have a permit for the storage of hazardous waste, Respondent has violated Section 3005 of RCRA, 42 U.S.C. § 6925, 35 IAC §§ 722.134(a) and (b) and 40 CFR §§ 262.34(a) and (b), and 35 IAC § 703.121(a)(1) and 40 CFR § 270.1.

ANSWER:

Respondent denies the allegations of paragraph 46.

C. Contingency Plan

PARAGRAPH 47:

Section 3002 of RCRA, 42 U.S.C. § 6922, 35 IAC § 134(a)(4), and 40 CFR § 262.34(a)(4) allow generators of hazardous waste to accumulate hazardous wastes for ninety days or less without obtaining a permit provided the generator complies with the requirements for owners or operators in Subparts C and D in 40 CFR Part 265, including 40 CFR §§ 265.52(e) and (f).

ANSWER:

The referenced statutory and regulatory sections speak for themselves, and no response is required.

PARAGRAPH 48:

40 CFR Part 265, Subpart D requires the owner or operator of a facility to have a contingency plan for the facility.

ANSWER:

The referenced statutory and regulatory sections speak for themselves, and no response is required.

PARAGRAPH 49:

40 CFR § 265.52(e) requires the contingency plan to include a list of all emergency equipment at the facility and a brief outline of each item's capabilities.

ANSWER:

The referenced statutory and regulatory sections speak for themselves, and no response is required.

PARAGRAPH 50:

40 CFR § 265.52(f) requires the contingency plan to include a description of evacuation routes.

ANSWER:

The referenced statutory and regulatory sections speak for themselves, and no response is required.

PARAGRAPH 51:

On December 12, 1997, an inspector for U.S. EPA requested and reviewed the Respondent's contingency plan for the Facility required pursuant to 35 IAC Part 725, Subpart D and 40 CFR Part 265, Subpart D.

ANSWER:

Respondent admits that on December 12, 1997 an inspector for U.S. EPA requested for review Respondent's contingency plan. Further answering, the referenced regulatory sections speak for themselves, and no further response is required.

PARAGRAPH 52:

The Facility's contingency plan supplied to the U.S. EPA inspector on December 12, 1997, did not include a brief outline of the capabilities of each item of emergency equipment located at the Facility or an evacuation plan for Facility personnel, as required by 35 IAC §§ 725.152(e) and (f), and 40 CFR §§ 265.52(e) and (f).

ANSWER:

Respondent admits that the contingency plan provided on December 12, 1997 did not include an outline of the capabilities of each item of equipment but denies that such an outline was required due to the type of equipment listed.

PARAGRAPH 53:

Respondent provided a corrected and updated contingency plan within a submittal to U.S. EPA dated January 19, 1998.

ANSWER:

Respondent admits the allegations of paragraph 53.

PARAGRAPH 54:

On December 12, 1997, Respondent was not in compliance with 35 IAC §§ 725.152(e) and (f), and 40 CFR §§ 265.52(e) and (f).

ANSWER:

Respondent denies the allegations of paragraph 54.

PARAGRAPH 55:

At all times relevant to this Complaint, the Respondent did not, and does not, have a permit to store hazardous waste, as required by Section 3005 of RCRA, 42 U.S.C. § 6925, 35 IAC § 703.121(a)(1), and 40 CFR Part 270.1.

ANSWER:

Respondent admits that it did not, and does not, have a permit to store hazardous waste but denies that such a permit was required.

PARAGRAPH 56:

As a result of the deficiencies in Respondent's contingency plan identified in Paragraph 51 above and Respondent's failure to have a permit for the storage of hazardous waste, Respondent has violated Section 3005 of RCRA, 42 U.S.C. § 6925, 35 IAC §§ 722.134(a) and (b) and 40 CFR §§ 262.34(a) and (b), and 35 IAC § 703.121(a)(1) and 40 CFR § 270.1.

ANSWER:

Respondent denies the allegations of paragraph 56.

D. Training Records

PARAGRAPH 57:

Section 3002 of RCRA, 42 U.S.C. § 6922, 35 IAC § 134(a)(4), and 40 CFR § 262.34(a)(4) allow generators of hazardous waste to accumulate hazardous wastes for ninety days or less without obtaining a permit provided the generator complies with 35 IAC § 725.116 and 40 CFR § 265.16.

ANSWER:

The referenced statutory and regulatory sections speak for themselves, and no response is required.

PARAGRAPH 58:

35 IAC § 725.116 and 40 CFR § 265.16 require Facility personnel to successfully complete a program of classroom instruction or on-the-job training which ensures, among other things, that Facility personnel are able to respond effectively to emergencies.

ANSWER:

The referenced statutory and regulatory sections speak for themselves, and no response is required.

PARAGRAPH 59:

35 IAC § 725.116(d) and 40 CFR § 265.16(d) require the owner or operator of a facility to maintain, at the facility, certain records and documents related to hazardous waste training.

ANSWER:

The referenced statutory and regulatory sections speak for themselves, and no response is required.

PARAGRAPH 60:

35 IAC § 725.116(d)(2) and 40 CFR § 265.16(d)(2) require the owner or operator to maintain, at the facility, documents or records that provide a written description for each position at the facility related to hazardous waste management.

ANSWER:

The referenced statutory and regulatory sections speak for themselves, and no response is required.

PARAGRAPH 61:

35 IAC § 725.116(d)(4) and 40 CFR § 265.16(d)(4) require the owner or operator to maintain, at the facility, records that document that the required training or job experience has been given to, and completed by, facility personnel.

ANSWER:

The referenced statutory and regulatory sections speak for themselves, and no response is required.

PARAGRAPH 62:

On December 12, 1997, an inspector for U.S. EPA requested and reviewed training documents and records for Respondent's hazardous waste training program for the Facility.

ANSWER:

Respondent admits the allegations of paragraph 62.

PARAGRAPH 63:

On December 12, 1997, Respondent did not provide the U.S. EPA inspector with written job descriptions as required by 35 IAC § 725.116(d)(2) and 40 CFR § 265.16(d)(2).

ANSWER:

Respondent denies the allegations of paragraph 63.

PARAGRAPH 64:

On December 12, 1997, Respondent did not provide the U.S. EPA inspector with records required under 35 IAC § 725.116(d)(4) and 40 CFR § 265.16(d)(4) that document that the training or job experience required by the Facility's training program had been completed by Facility staff.

ANSWER:

Respondent denies the allegations of paragraph 64.

PARAGRAPH 65:

Respondent did not provide job descriptions until January 19, 1998, after records were located in the Respondent's Buffalo, New York office.

ANSWER:

Respondent denies the allegations contained in paragraph 65.

PARAGRAPH 66:

As of December 12, 1997, Respondent was not in compliance with 35 IAC § 725.116(d) and 40 CFR § 265.16(d).

ANSWER:

Respondent denies the allegations of paragraph 66.

PARAGRAPH 67:

At all times relevant to this Complaint, the Respondent did not, and does not, have a permit to store hazardous waste, as required by Section 3005 of RCRA, 42 U.S.C. § 6925, 35 IAC § 703.121(a)(1), and 40 CFR Part 270.1.

ANSWER:

Respondent admits that it did not, and does not, have a permit to store hazardous waste but denies that such a permit was required.

PARAGRAPH 68:

As a result of the absence of records identified in Paragraphs 63 and 64 above and Respondent's failure to have a permit for the storage of hazardous waste, Respondent has violated Section 3005 of RCRA, 42 U.S.C. § 6925, 35 IAC § 722.134(a) and (b), 40 CFR § 262.34(a) and (b), 35 IAC § 703.121(a)(1), and 40 CFR § 270.1.

ANSWER:

Respondent denies the allegations of paragraph 68.

E. Drum Labeling

PARAGRAPH 69:

Section 3002 of RCRA, 42 U.S.C. § 6922, 35 IAC § 134(a)(2), and 40 CFR § 262.34(a)(2) allow generators of hazardous waste to accumulate hazardous wastes for ninety days or less without obtaining a permit provided the date upon which each period of accumulation begins is clearly marked and visible for inspection on each container.

ANSWER:

The referenced statutory and regulatory sections speak for themselves, and no response is required.

PARAGRAPH 70:

On December 12, 1997, a U.S. EPA inspector observed one drum of hazardous waste spent filter (EPA Waste Code F005) stored in the Facility's central accumulation area without a date marked on the drum indicating the date of initial accumulation.

ANSWER:

Respondent is without knowledge to the inspector's observations on December 12, 1997.

PARAGRAPH 71:

On December 12, 1997, Respondent was not in compliance with 35 IAC § 722.134(a)(2) and 40 CFR Part § 262.34(a)(2).

ANSWER:

Respondent denies the allegations of paragraph 71.

PARAGRAPH 72:

At all times relevant to this Complaint, the Respondent did not, and does not, have a permit to store hazardous waste, as required by Section 3005 of RCRA, 42 U.S.C. § 6925, 35 IAC § 703.121(a)(1), and 40 CFR Part 270.1.

ANSWER:

Respondent admits that it did not, and does not, have a permit to store hazardous waste but denies that such a permit was required.

PARAGRAPH 73:

As a result of the absence of the initial accumulation date on the drum identified in Paragraph 70 above and Respondent's failure to have a permit for the storage of hazardous waste, Respondent has violated Section 3005 of RCRA, 42 U.S.C. § 6925, 35 IAC § 722.134(a) and (b), 40 CFR § 262.34(a) and (b), 35 IAC § 703.121(a)(1), and 40 CFR § 270.1.

ANSWER:

Respondent denies the allegations of paragraph 73.

PROPOSED CIVIL PENALTY

The allegations of the proposed civil penalty assessment contain conclusions of law to which no response is required. To the extent a response is required, they are denied. The proposed civil penalty assessment ignores the lack of environmental harm, the lack of economic benefit to Respondent, and Respondent's substantial effort to comply and history of compliance.

COMPLIANCE ORDER

The allegations of the compliance order contain conclusions of law to which no response is required. To the extent a response is required, Respondent has denied all material allegations related to paragraphs 1 through 10 of the compliance order.

AFFIRMATIVE DEFENSES AND OTHER DEFENSES

Respondent states its Affirmative Defenses and other Defenses to the Complaint as follows:

FIRST DEFENSE

Respondent did not, and does not, own or operate a facility within the meaning of RCRA.

SECOND DEFENSE

A number of allegations set forth in the Complaint are unsupported by law and fail to state a claim.

REQUEST FOR A FORMAL HEARING

Respondent respectfully requests that it be granted a formal hearing in this matter in accordance with the Administrative Procedure Act, 5 U.S.C. §§ 551 et seq. To the extent

required, Respondent hereby reaffirms its Request that a hearing be held upon the issues raised by the Complaint and responses and defenses raised by this Answer.

Respectfully submitted,

PIERCE & STEVENS CORP.

By: Susannah A. Smetana
One of Its Attorneys

Jeryl L. Olson
Susannah A. Smetana
SEYFARTH, SHAW, FAIRWEATHER
& GERALDSON
55 East Monroe Street
Suite 4200
Chicago, IL 60603
(312) 346-8000
Dated: September 3, 1998
1206406.1

CERTIFICATE OF SERVICE

The undersigned attorney hereby certifies that she caused a copy of the foregoing Answer to Complaint and Request for Hearing to be served upon the following on this 3rd day of September, 1998:

VIA MESSENGER

Kevin Chow
Office of Regional Counsel (C-14J)
U.S. Environmental Protection Agency, Region 5
77 West Jackson Boulevard
Chicago, Illinois 60604-3590

Susannah A. Smetana

Susannah A. Smetana

1206406.1

UNITED STATES ENVIRONMENTAL PROTECTION AGENCY
REGION 5
77 WEST JACKSON BOULEVARD
CHICAGO, IL 60604-3590

September 2, 1998

REPLY TO THE ATTENTION OF:

C-14J

VIA FAX AND U.S. MAIL

Jeryl Olson, Esq.
Seyfarth, Shaw, Fairweather & Geraldson
55 East Monroe Street, Suite 4200
Chicago, IL 60603-5803

Re: In Re: Pierce & Stevens Corporation
Complaint, Findings of Violation, and Compliance Order
U.S. EPA Docket No. 5-RCRA-'98-006

Dear Ms. Olson:

This is to let you know that the informal conference requested by you on behalf of your client, Pierce & Stevens Corporation, and scheduled for September 15, 1998, will take place at the U.S. Environmental Protection Agency's offices located at 77 West Jackson Boulevard, Chicago, Illinois, in Room 1416 on the 14th Floor, at 1:30 p.m. When you arrive on the 14th Floor at that time, I, or the receptionist, will be able to direct you to the conference room. Please note that you will have to go through building security prior to entering the elevators.

We look forward to discussing the above-referenced matter with you. If you have any questions, please feel free to call me at (312) 353-6181.

Sincerely,

Kevin C. Chow
Assistant Regional Counsel

cc: Patrick Kuefler (DE-9J)

Recycled/Recyclable•Printed with Vegetable Oil Based Inks on 100% Recycled Paper (40% Postconsumer)

Is your RETURN ADDRESS completed on the reverse side?

SENDER:

- Complete items 1 and/or 2 for additional services.
- Complete items 3, 4a, and 4b.
- Print your name and address on the reverse of this form so that we can return this card to you.
- Attach this form to the front of the mailpiece, or on the back if space does not permit.
- Write *"Return Receipt Requested"* on the mailpiece below the article number.
- The Return Receipt will show to whom the article was delivered and the date delivered.

I also wish to receive the following services (for an extra fee):

1. ☐ Addressee's Address
2. ☐ Restricted Delivery

Consult postmaster for fee.

3. Article Addressed to:

Pierce + Stevens Corp.
6245 East Kehoe Blvd.
Carol Stream, IL
60187

4a. Article Number

P 140 889 181

4b. Service Type

☐ Registered ☒ Certified
☐ Express Mail ☐ Insured
☐ Return Receipt for Merchandise ☐ COD

7. Date of Delivery

8-17-98

5. Received By: *(Print Name)*

~~Carc~~ ARLENE AVILA

6. Signature: *(Addressee or Agent)*

X

8. Addressee's Address *(Only if requested and fee is paid)*

PS Form **3811**, December 1994

Domestic Return Receipt

Thank you for using Return Receipt Service.

UNITED STATES POSTAL SERVICE

CAROL STREAM ILLINOIS 60188
PM
17 AUG
1998

First-Class Mail
Postage & Fees Paid
USPS
Permit No. G-10

● Print your name, address, and ZIP Code in this box ●

P. Kuefler, DE-9J
U.S. EPA
77 W. Jackson Blvd.
Chicago, IL 60604

UNITED STATES ENVIRONMENTAL PROTECTION AGENCY
REGION 5
77 WEST JACKSON BOULEVARD
CHICAGO, IL 60604-3590

AUG 14 1998

REPLY TO THE ATTENTION OF:
DE-9J

CERTIFIED MAIL
RETURN RECEIPT REQUESTED

CT Corporation
Registered Agent for
Pierce & Stevens Corporation
208 South LaSalle Street
Chicago, Illinois 60604

Re: Complaint, Findings of
Violation and Compliance Order,
Pierce & Stevens Corporation
EPA ID No.: ILD 055 434 443

5-RCRA-'98-006

Dear Sir or Madam:

Enclosed please find an Administrative Complaint, Findings of Violation and Compliance Order ("Complaint") which specifies the United States Environmental Protection Agency's (U.S. EPA's) determination of a violation of the Resource Conservation and Recovery Act (RCRA) as amended, 42 U.S.C. §6901 et. seq., by the Pierce & Stevens Corporation(P&S). U.S. EPA's determination is based on a December 12, 1997, inspection of the facility located at 6245 East Kehoe, Carol Stream, Illinois 60187, and information in U.S. EPA files. The general allegations in the Complaint state the reasons for such a determination. Specifically, P&S failed to meet the requirements of RCRA relating to storage of hazardous waste.

Accompanying this Complaint is a Notice of Opportunity for Hearing. Should you desire to contest the Complaint, a written request for a hearing is required to be filed within thirty (30) days of the date this Complaint has been filed with the Regional Hearing Clerk. The request for hearing must be filed with the Regional Hearing Clerk (MF-19J), United States Environmental Protection Agency, Region 5, 77 West Jackson Boulevard, Chicago, Illinois 60604. A copy of your request should also be sent to Kevin Chow, Office of Regional Counsel (C-14J), at the above address.

Recycled/Recyclable • Printed with Vegetable Oil Based Inks on 50% Recycled Paper (20% Postconsumer)

Regardless of whether you choose to request a hearing within the prescribed time limit following the filing of this Complaint, you are extended an opportunity to request an informal settlement conference. Topics for discussion at the settlement conference may include the mitigation of the proposed penalty in accordance with U.S. EPA guidance on pollution prevention and supplemental environmental projects. A request for an informal settlement conference with U.S. EPA will not affect or extend the thirty (30) day deadline to file an Answer in order to avoid a Finding of Default on the Complaint.

If you have any questions or want to request an informal settlement conference for the purpose of settlement with Waste, Pesticides and Toxics Division staff, please contact Patrick F. Kuefler, United States Environmental Protection Agency, RCRA Enforcement and Compliance Assurance Branch (DE-9J), 77 West Jackson Boulevard, Chicago, Illinois 60604. He may also be reached at (312) 353-6268.

Sincerely yours,

for Joseph M Boyle, Chief
Enforcement and Compliance Assurance Branch
Waste, Pesticides and Toxics Division

Enclosure

cc: Todd Marvel, IEPA w/enclosure

UNITED STATES ENVIRONMENTAL PROTECTION AGENCY
REGION V

IN RE:	)	
	)	DOCKET NO. 5-RCRA-'98-006
PIERCE & STEVENS CORPORATION	)	
6245 EAST KEHOE	)	
CAROL STREAM, ILLINOIS 60187	)	COMPLAINT, FINDINGS
	)	OF VIOLATION AND
U.S. EPA ID No. ILD 055 434 443	)	COMPLIANCE ORDER
	)	
Respondent	)	

COMPLAINT

1. This is a civil administrative action instituted pursuant to Section 3008(a)(1) of the Resource Conservation and Recovery Act of 1976, as amended ("RCRA"), 42 U.S.C. § 6928(a)(1), and Sections 22.01(a)(4), 22.13 and 22.37 of the Consolidated Rules of Practice Governing the Administrative Assessment of Civil Penalties and the Revocation or Suspension of Permits, 40 CFR §§ 22.01(a)(4), 22.13 and 22.37.

2. The Complainant is, by lawful delegation, Chief of the Enforcement and Compliance Assurance Branch, Waste, Pesticides and Toxics Division, Region 5, United States Environmental Protection Agency ("U.S. EPA").

3. The Respondent is the Pierce & Stevens Corporation, which is and was at all times relevant to this Complaint, the owner

and operator of a facility located at 6245 East Kehoe, Carol Stream, Illinois (the "Facility").

4. Respondent is a "person" as defined at Section 1004(15) of RCRA, 42 U.S.C. § 6903(15), and Title 35 Illinois Administrative Code ("IAC") § 720.110, and is subject to the regulations promulgated pursuant to Subtitle C of RCRA, 42 U.S.C. §§ 6921-6939, and the analogous Illinois regulations as part of the applicable state hazardous waste management program for the State of Illinois.

5. Respondent is a New York corporation whose registered agent is CT Corporation located at 208 South LaSalle Street, Chicago, Illinois 60604.

6. Jurisdiction for this action is conferred upon U.S. EPA by Sections 2002(a)(1), 3006(b), and 3008 of RCRA, 42 U.S.C. §§ 6912(a)(1), 6926(b), and 6928 respectively. U.S. EPA has promulgated regulations codified at 40 CFR Parts 260 through 271 governing generators and transporters of hazardous wastes and facilities that treat, store, and dispose of hazardous waste.

7. Pursuant to Section 3006(b) of RCRA, 42 U.S.C. § 6926(b), on January 31, 1986, the State of Illinois was granted Final Authorization by the Administrator of the U.S. EPA to

administer a hazardous waste program in lieu of the Federal program. See 51 Federal Register 3778 (January 31, 1986). As a result, Illinois regulations at 35 IAC Part 720 et. seq. govern generation, transportation, treatment, storage and disposal of hazardous waste, rather than the Federal regulations set forth at 40 CFR Parts 260 et. seq., except for the applicable requirements pursuant to provisions of the Hazardous and Solid Waste Amendments of 1984 ("HSWA") for which Illinois is not authorized. Section 3008(a) of RCRA, 42 U.S.C. § 6928(a), provides the U.S. EPA with the authority to enforce state regulations in those States authorized to administer a hazardous waste program. U.S. EPA has provided notice to the State of Illinois regarding this action.

8. Section 3010(a) of RCRA, 42 U.S.C. § 6930(a), requires any person who generates or transports hazardous waste, or owns or operates a facility for the treatment, storage, or disposal of hazardous waste, to notify U.S. EPA of such activity within 90 days of the promulgation of regulations under Section 3001 of RCRA. Section 3010 of RCRA also provides that no hazardous waste subject to regulations may be transported, treated, stored, or disposed of unless the

required notification has been given.

9. U.S. EPA first published regulations concerning the identification, generation, transportation, treatment, storage or disposal of hazardous waste on May 19, 1980. These regulations are codified at 40 CFR Parts 260 through 265. Notification to U.S. EPA of hazardous waste activity was required in most instances no later than August 18, 1980. The regulations which concern the identification and listing of hazardous waste are codified at 40 CFR Part 261. The regulations governing generators are codified at 40 CFR Part 262.

10. Facilities that treat, store or dispose of hazardous waste must have interim status or obtain a permit pursuant to 40 CFR Part 270 and Sections 3005 and 3006 of RCRA, 42 U.S.C. §§ 6925 and 6926.

11. "Storage" is defined at 35 IAC § 728.102(c) and 40 CFR § 260.10 as "the holding of hazardous waste for a temporary period, at the end of which the hazardous waste is treated, disposed of, or stored elsewhere."

12. Respondent conducts, and conducted at all time relevant to this Complaint, "storage" of hazardous waste as that term is defined at 35 IAC § 728.102(c) and 40 CFR § 260.10.

13. "Generator" is defined at 40 CFR § 260.10 and 35 IAC § 720.110 as any person, by site, whose act or process produces hazardous waste identified or listed in 40 CFR Part 261.

14. On August 18, 1980, Respondent filed a notification of hazardous waste activity for the Facility with U.S. EPA pursuant to Section 3010 of RCRA, 42 U.S.C. § 6930, for the generation of hazardous waste.

15. Respondent generates spent solvents including xylene, acetone, acetate, toluene, and Methyl Ethyl Ketone (MEK), with U.S. EPA Hazardous Waste Numbers F003 (xylene, acetone, and acetate), F005 (toluene and MEK), D035 (MEK), D018 (Benzene) and D001 (characteristic for ignitability). These spent solvents are listed hazardous wastes and characteristic hazardous wastes respectively pursuant to 35 IAC § 721.121 and 40 CFR § 261.21; 35 IAC § 721.124 and 40 CFR § 261.24; and 35 IAC § 721.131 and 40 CFR § 261.31.

16. Respondent is, or was at all times relevant to this Complaint, a "generator" as defined at 40 CFR § 260.10.

17. Respondent generates, or generated at all times relevant to this Complaint, quantities of hazardous waste in excess of 1,000 kilograms per month at the Facility.

18. Respondent is, or was at all times relevant to this Complaint, an "owner" or "operator" of a facility as those terms are defined at 40 CFR § 260.10 and 35 IAC § 720.110.

19. On December 12, 1997, U.S. EPA inspected the Facility and reviewed Facility records related to hazardous waste management including manifest, container inspection logs, training, and contingency plan records.

20. Any violation of regulations promulgated pursuant to Subtitle C, Sections 3001-3019 of RCRA, 42 U.S.C. §§ 6921-6939a, or any state provision approved pursuant to Section 3006 of RCRA, 42 U.S.C. § 6926, constitutes a violation of RCRA, subject to the assessment of civil or criminal penalties and compliance orders as provided in Section 3008 of RCRA, 42 U.S.C. § 6928.

FINDINGS OF VIOLATION

COUNT I: Owning or Operating a Facility Without a Permit

A. Accumulation of Hazardous Waste in Excess of 90 Days

21. Paragraphs 1 through 20 of this Complaint are incorporated by reference as though set forth here in full.

22. Section 3005 of RCRA, 42 U.S.C. § 6925, 35 IAC § 703.121(a)(1), and 40 CFR Part 270.1 require each person

owning or operating a hazardous waste storage facility to have a permit.

23. 40 CFR § 262.34(a) and 35 IAC § 722.134(a) provide that a generator of greater than 1,000 kilograms of hazardous waste per month may accumulate hazardous waste on-site for ninety days or less without a permit or without having interim status, provided that the generator complies with 40 CFR §§ 262.34(a)(1)-(4) and 35 IAC §§ 722.134(a)(1)-(4).

24. 40 CFR § 262.34(b) and 35 IAC § 722.134(b) provide that a generator of greater than 1,000 kilograms of hazardous waste per month who accumulates hazardous waste on-site for more than ninety days is an operator of a storage facility and is subject to the requirements of 35 IAC §§ 724, 725, and 702, and 40 CFR Parts 264 and 265, as well as the permit requirements of 40 CFR Part 270, unless granted an extension to the 90-day period pursuant to Section 37 of the Illinois Environmental Protection Act, 415 ILCS 5/37.

25. At all times relevant to this Complaint, Respondent was a generator of hazardous waste in quantities greater than 1,000 kilograms per month at its Facility.

26. On December 12, 1997, U.S. EPA conducted an inspection of the Facility, including a review of Uniform Hazardous Waste

Manifest Forms ("Manifests") and handwritten hazardous waste container inspection logs ("logs"), including logs which recorded changes in the number of drums stored in a ninety-day accumulation area at the Facility between December 15, 1995 and June 23, 1997.

27. A log titled "Central Accum. Area" indicates that Respondent was storing, as of October 30, 1996, at least seven drums of hazardous waste in the ninety-day accumulation area at the Facility.

28. The log referenced in Paragraph 27 above indicates that Respondent was storing, as of November 1, 1996, at least forty-three drums of hazardous waste in the ninety-day accumulation area at the Facility.

29. According to a Manifest identified as State Manifest Document Number INA1110314, seventy-eight drums were transported from Respondent's Facility to an off-site location on or about February 11, 1997.

30. The seventy-eight drums referenced in Paragraph 29 included the drums referenced in Paragraphs 27 and 28.

31. The drums identified in Paragraphs 27 and 28 above were stored at the Facility in excess of ninety days.

32. At all times relevant to this Complaint, the Respondent did

not, and does not, have a permit to store hazardous waste, as required by Section 3005 of RCRA, 42 U.S.C. § 6925, 35 IAC § 703.121(a)(1), and 40 CFR § 270.1.

33. At all times relevant to this Complaint, Respondent was not granted, and has not been granted, an extension to the ninety-day accumulation period.

34. At all times relevant to this Complaint, Respondent conducted "storage" of hazardous waste as defined at 35 IAC § 728.102(c) and 40 CFR § 260.10, at its Facility.

35. As a result of its storage of hazardous waste in excess of ninety days and its failure to have a permit for the storage of hazardous waste, Respondent has violated Section 3005 of RCRA, 42 U.S.C. § 6925, 35 IAC §§ 703.134(a) and (b), 40 CFR §§ 262.34(a) and (b), 35 IAC § 703.121(a)(1) and 40 CFR § 270.1.

36. As a result of its storage of hazardous waste in excess of ninety days, Respondent is subject to 35 IAC §§ 724, 725, and 702, 40 CFR Parts 264 and 265, and the additional permit requirements of 40 CFR Part 270, pursuant to 35 IAC § 722.134(b) and 40 CFR § 262.34(b).

B. Weekly Inspections

37. Section 3002 of RCRA, 42 U.S.C. § 6922, 35 IAC § 134(a)(1)(i), and 40 CFR § 262.34(a)(1)(i) allow generators of hazardous waste to accumulate hazardous wastes for ninety days or less without obtaining a permit provided the generator complies with the container management requirements of Subpart I of 35 IAC § 725 and Subpart I of 40 CFR Part 265, including 35 IAC § 725.274 and 40 CFR § 265.174.

38. 35 IAC § 725.274 and 40 CFR § 265.174 require the owner or operator to inspect areas where containers are stored, at least weekly, looking for leaks and for deterioration caused by corrosion or other factors.

39. 35 IAC § 725.115(d) and 40 CFR § 265.15(d) require the owner or operator of a facility to record inspections in an inspection log or summary.

40. On December 12, 1997, an inspector for U.S. EPA requested and reviewed inspection records for the Facility's ninety-day hazardous waste accumulation area, including handwritten hazardous waste container inspection logs recording the storage of drums in the ninety-day accumulation area between December 15, 1995 and June 23, 1997.

41. A log titled "Central Accum. Area" indicates that no inspections were conducted between December 15, 1995 and January 9, 1996; between January 9, 1996 and March 11, 1996; between March 11, 1996 and April 3, 1996; between April 3, 1996 and May 3, 1996; between May 3, 1996 and June 26, 1996; between June 26, 1996 and September 20, 1996; between September 20, 1996 and October 30, 1996; and between November 1, 1996 and January 7, 1997.

42. The log referenced in Paragraph 41 above also indicates that the last inspection of the ninety-day accumulation area occurred on June 23, 1997.

43. Respondent did not provide the U.S. EPA inspector with any records indicating that any weekly inspections of the ninety-day accumulation area took place after June 23, 1997.

44. Respondent has failed to inspect containers of hazardous waste at least weekly pursuant to 35 IAC § 725.274, and 40 CFR §§ 262.34(a)(1)(i) and 265.174.

45. At all times relevant to this Complaint, the Respondent did not, and does not, have a permit to store hazardous waste, as required by Section 3005 of RCRA, 42 U.S.C. § 6925, 35 IAC § 703.121(a)(1), and 40 CFR Part 270.1.

46. As a result of its failure to conduct inspections on a

weekly basis and its failure to have a permit for the storage of hazardous waste, Respondent has violated Section 3005 of RCRA, 42 U.S.C. § 6925, 35 IAC §§ 722.134(a) and (b) and 40 CFR §§ 262.34(a) and (b), and 35 IAC § 703.121(a)(1) and 40 CFR § 270.1.

C. Contingency Plan

47. Section 3002 of RCRA, 42 U.S.C. § 6922, 35 IAC § 134(a)(4), and 40 CFR § 262.34(a)(4) allow generators of hazardous waste to accumulate hazardous wastes for ninety days or less without obtaining a permit provided the generator complies with the requirements for owners or operators in Subparts C and D in 40 CFR Part 265, including 40 CFR §§ 265.52(e) and (f).

48. 40 CFR Part 265, Subpart D requires the owner or operator of a facility to have a contingency plan for the facility.

49. 40 CFR § 265.52(e) requires the contingency plan to include a list of all emergency equipment at the facility and a brief outline of each item's capabilities.

50. 40 CFR § 265.52(f) requires the contingency plan to include a description of evacuation routes.

51. On December 12, 1997, an inspector for U.S. EPA requested and reviewed the Respondent's contingency plan for the

Facility required pursuant to 35 IAC Part 725, Subpart D and 40 CFR Part 265, Subpart D.

52. The Facility's contingency plan supplied to the U.S. EPA inspector on December 12, 1997, did not include a brief outline of the capabilities of each item of emergency equipment located at the Facility or an evacuation plan for Facility personnel, as required by 35 IAC §§ 725.152(e) and (f), and 40 CFR §§ 265.52 (e) and (f).

53. Respondent provided a corrected and updated contingency plan within a submittal to U.S. EPA dated January 19, 1998.

54. On December 12, 1997, Respondent was not in compliance with 35 IAC §§ 725.152(e) and (f), and 40 CFR §§ 265.52 (e) and (f).

55. At all times relevant to this Complaint, the Respondent did not, and does not, have a permit to store hazardous waste, as required by Section 3005 of RCRA, 42 U.S.C. § 6925, 35 IAC § 703.121(a)(1), and 40 CFR Part 270.1.

56. As a result of the deficiencies in Respondent's contingency plan identified in Paragraph 51 above and Respondent's failure to have a permit for the storage of hazardous waste, Respondent has violated Section 3005 of RCRA, 42 U.S.C. § 6925, 35 IAC §§ 722.134(a) and (b) and 40 CFR §§ 262.34(a)

and (b), and 35 IAC § 703.121(a)(1) and 40 CFR § 270.1.

D. Training Records

57. Section 3002 of RCRA, 42 U.S.C. § 6922, 35 IAC § 134(a)(4), and 40 CFR § 262.34(a)(4) allow generators of hazardous waste to accumulate hazardous wastes for ninety days or less without obtaining a permit provided the generator complies with 35 IAC § 725.116 and 40 CFR § 265.16.

58. 35 IAC § 725.116 and 40 CFR § 265.16 require Facility personnel to successfully complete a program of classroom instruction or on-the-job training which ensures, among other things, that Facility personnel are able to respond effectively to emergencies.

59. 35 IAC § 725.116(d) and 40 CFR § 265.16(d) require the owner or operator of a facility to maintain, at the facility, certain records and documents related to hazardous waste training.

60. 35 IAC § 725.116(d)(2) and 40 CFR § 265.16(d)(2) require the owner or operator to maintain, at the facility, documents or records that provide a written description for each position at the facility related to hazardous waste management.

61. 35 IAC § 725.116(d)(4) and 40 CFR § 265.16(d)(4) require the owner or operator to maintain, at the facility, records that

document that the required training or job experience has been given to, and completed by, facility personnel.

62. On December 12, 1997, an inspector for U.S. EPA requested and reviewed training documents and records for Respondent's hazardous waste training program for the Facility.

63. On December 12, 1997, Respondent did not provide the U.S. EPA inspector with written job descriptions as required by 35 IAC § 725.116(d)(2) and 40 CFR § 265.16(d)(2).

64. On December 12, 1997, Respondent did not provide the U.S. EPA inspector with records required under 35 IAC § 725.116(d)(4) and 40 CFR § 265.16(d)(4) that document that the training or job experience required by the Facility's training program had been completed by Facility staff.

65. Respondent did not provide job descriptions until January 19, 1998, after records were located in the Respondent's Buffalo, New York office.

66. As of December 12, 1997, Respondent was not in compliance with 35 IAC § 725.116(d) and 40 CFR § 265.16(d).

67. At all times relevant to this Complaint, the Respondent did not, and does not, have a permit to store hazardous waste, as required by Section 3005 of RCRA, 42 U.S.C. § 6925, 35 IAC § 703.121(a)(1), and 40 CFR Part 270.1.

68. As a result of the absence of records identified in Paragraphs 63 and 64 above and Respondent's failure to have a permit for the storage of hazardous waste, Respondent has violated Section 3005 of RCRA, 42 U.S.C. § 6925, 35 IAC § 722.134(a) and (b), 40 CFR § 262.34(a) and (b), 35 IAC § 703.121(a)(1), and 40 CFR § 270.1.

E. Drum Labeling

69. Section 3002 of RCRA, 42 U.S.C. § 6922, 35 IAC § 134(a)(2), and 40 CFR § 262.34(a)(2) allow generators of hazardous waste to accumulate hazardous wastes for ninety days or less without obtaining a permit provided the date upon which each period of accumulation begins is clearly marked and visible for inspection on each container.

70. On December 12, 1997, a U.S. EPA inspector observed one drum of hazardous waste spent filter (EPA Waste Code F005) stored in the Facility's central accumulation area without a date marked on the drum indicating the date of initial accumulation.

71. On December 12, 1997, Respondent was not in compliance with 35 IAC § 722.134(a)(2) and 40 CFR Part § 262.34(a)(2).

72. At all times relevant to this Complaint, the Respondent did

not, and does not, have a permit to store hazardous waste, as required by Section 3005 of RCRA, 42 U.S.C. § 6925, 35 IAC § 703.121(a)(1), and 40 CFR Part 270.1.

73. As a result of the absence of the initial accumulation date on the drum identified in Paragraph 70 above and Respondent's failure to have a permit for the storage of hazardous waste, Respondent has violated Section 3005 of RCRA, 42 U.S.C. § 6925, 35 IAC § 722.134(a)and (b), 40 CFR § 262.34(a) and (b), 35 IAC § 703.121(a)(1), and 40 CFR § 270.1.

PROPOSED CIVIL PENALTY

74. Section 3008 of RCRA, 42 U.S.C. § 6928, authorizes the assessment of a civil penalty of up to $25,000 per day for each violation of Subtitle C of RCRA. The Civil Monetary Penalty Inflation Adjustment Rule, published at 40 CFR Part 19, increased penalties for violations occurring or continuing on or after January 31, 1997, by 10%, thereby authorizing U.S. EPA to assess a civil penalty of up to $27,500 per day for each violation of Subtitle C of RCRA. Complainant proposes that Respondent be assessed a civil penalty of ONE HUNDRED TWENTY THREE THOUSAND SIX HUNDRED

NINETY FIVE DOLLARS ($123,695) for the violation alleged in this Complaint. The proposed civil penalty has been determined in accordance with RCRA Section 3008, 42 U.S.C. § 6928. For purposes of determining the amount of penalty to be assessed, Section 3008 requires U.S. EPA to take into account the seriousness of the violation and any good faith efforts to comply with applicable requirements. To develop the proposed penalty in this Complaint, Complainant has taken into account the particular facts and circumstances of this case with specific reference to U.S. EPA's RCRA Civil Penalty Policy, a copy of which is enclosed with this Complaint. This policy provides a rational, consistent and equitable calculation methodology for applying the statutory penalty factors enumerated above to this case. Attachment 1 of this Complaint provides a detailed summary of the proposed civil penalty. Respondent may pay this penalty by certified or cashier's check, payable to "Treasurer, the United States of America", and remit to:

U.S. Environmental Protection Agency, Region 5
P.O. Box 70753
Chicago, Illinois 60673

A copy of the check shall be sent to:

Multi-Media Branch I Secretary
Office of Regional Counsel (C-14J)
U.S. Environmental Protection Agency
77 West Jackson Boulevard
Chicago, Illinois 60604

A transmittal letter identifying this Complaint shall accompany the remittance and the copy of the check.

COMPLIANCE ORDER

Respondent is ordered to come into compliance with the requirements of Sections 3002 and 3005 of RCRA, 42 U.S.C. §§ 6922 and 6925 and 40 C.F.R. Parts 262, 265, and 270, to undertake the following activities, and to make submittals and certification to Complainant within the times specified below. All days are consecutive calendar days from the effective date of this Complaint. In accordance with the findings presented in this Complaint, Respondent is hereby ordered to:

1. Respondent shall, immediately upon this Compliance Order ("Order") becoming final, comply with the hazardous waste generator requirements at 35 IAC § 722 and 40 CFR Part 262.

2. Respondent shall, within 45 days of this Order becoming final, submit inspection logs for inspections required under 40 CFR Part 265.174.

3. Respondent shall, immediately upon this Order becoming

final, not store hazardous waste without a RCRA permit.

4. Respondent shall, no later than thirty (30) days from this Order becoming final, submit a closure plan pursuant to 35 IAC Part 725, Subpart G and 40 CFR Part 265, Subpart G addressing closure of the container storage area to Illinois Environmental Protection Agency ("IEPA") for review and approval at the following address:

Illinois Environmental Protection Agency
Bureau of Land
P.O. Box 19276
1021 North Grand Ave. East
Springfield, IL 62794-9276
Attention: Ed Bakowski

5. Upon approval of the closure plan by IEPA, Respondent shall carry out and complete all closure activities according to the time frames stated in the closure plan.

6. Within sixty (60) days of completion of final closure of the container storage area, Respondent shall submit to IEPA (pursuant to 35 IAC § 725.215), by registered mail, a certification that these hazardous waste management units have been closed in accordance with the specifications in the approved closure plans. The certification must be signed by the owner or operator and by an independent registered professional engineer.

7. Respondent shall notify U.S. EPA in writing within

seven (7) days of achieving compliance with each requirement of this Order. This notification shall be submitted no later than the time stipulated above to the U.S. EPA, Region 5, Waste Pesticide and Toxics Division, 77 West Jackson Boulevard, Chicago, Illinois 60604, Attention: Mr. Patrick F. Kuefler, RCRA Enforcement and Compliance Assurance Branch (DE-9J).

8. The Respondent shall provide to IEPA a written cost estimate in current dollars of the cost of closing the facility, pursuant to 35 IAC § 725.242(a).

9. The Respondent shall demonstrate and submit to IEPA (with a copy to U.S. EPA) documentation of financial assurance for closure activities of the facility (the Warehouse/Shipping Building hazardous waste storage area) in accordance with 35 IAC § 725.243.

10. The Respondent will demonstrate to IEPA (with a copy to U.S. EPA) documentation of liability insurance coverage for sudden accidental occurrences, pursuant to 35 IAC § 725.247(a).

OPPORTUNITY TO REQUEST A HEARING

In accordance with the Administrative Procedure Act ("APA"), 5 U.S.C. §§ 551 et. seq., you have the right to request a hearing to contest any material fact contained in this Complaint, and/or

to contest the amount of the proposed penalty. Any hearing that you request will be held and conducted in accordance with the provisions of the APA, 5 U.S.C. §§551 et. seq., and the "Consolidated Rules of Practice Governing the Administrative Assessment of Civil Penalties and the Revocation or Suspension of Permits", 40 CFR Part 22. A copy of these rules accompanies this Complaint.

Unless Respondent has filed an answer not later than thirty (30) days from the date this Complaint is filed with the Regional Hearing Clerk, Respondent may be found in default of the above Complaint. If you wish to avoid being found in default, you must file a written Answer to this Complaint with the Regional Hearing Clerk, Planning and Management Division (MF-19J), U.S. Environmental Protection Agency, Region 5, 77 West Jackson Boulevard, Chicago, Illinois 60604, by SEP 13 1999. The Answer must clearly and directly admit, deny or explain each of the factual allegations contained in the Complaint with respect to which Respondent has any knowledge, or clearly state that Respondent has no knowledge as to particular factual allegations in the Complaint. The Answer should also state:

1. The circumstances or arguments that you allege constitute the grounds of defense;

2. The facts that you intend to place at issue; and

3. Whether you request a hearing.

Failure to deny any of the factual allegations in this Complaint constitutes admission of the undenied allegations.

A copy of this Answer and any subsequent documents filed in this action should be sent to Kevin Chow, Assistant Regional Counsel, Office of Regional Counsel (C-14J), U.S. Environmental Protection Agency, Region 5, 77 West Jackson Boulevard, Chicago, Illinois 60604. He may be telephoned at (312) 353-6181.

If you fail to file a written Answer, with or without a Request for Hearing, by the required date, the Regional Administrator or Presiding Officer may issue a Default Order.

SETTLEMENT CONFERENCE

Whether or not you request a hearing, you may request an informal conference in order to discuss the facts of this case and to arrive at a settlement. To request a settlement conference, write to Patrick F. Kuefler, Enforcement and Compliance Assurance Branch (DE-9J), United States Environmental Protection Agency, Region 5, 77 West Jackson Boulevard, Chicago, Illinois 60604, or telephone him at (312) 353-6268.

Your request for an informal settlement conference does not

extend the thirty (30) day period during which you must submit a written Answer and Request for Hearing. You may pursue the informal conference procedure simultaneously with the adjudicatory hearing procedure.

U.S. EPA encourages all parties against whom a civil penalty is proposed to pursue the possibilities of settlement through an informal conference. However, U.S. EPA will not reduce the penalty simply because such a conference is held. Any settlement that may be reached as a result of such conference shall be embodied in a written Consent Agreement and Consent Order ("CACO") issued by the Director, Waste Pesticides and Toxics Division, U.S. EPA, Region 5. The issuance of such a CACO shall constitute a waiver of your right to request a hearing on any stipulated matter in the Agreement.

Dated this 12th day of August, 1998.

Laura M. Jenger

for Joseph M. Boyle, Chief
Enforcement and Compliance Assurance Branch
Waste, Pesticides and Toxics Division
U.S. Environmental Protection Agency
Region 5
Complainant

5-RCRA- 98-006

CERTIFICATE OF SERVICE

I hereby certify that I have caused a copy of the foregoing Complaint to be served upon the persons designated below, on the date below, by causing said copy to be deposited in the U.S. Mail, First Class and certified-return receipt requested, postage prepaid, at Chicago, Illinois, in an envelope addressed to:

Pierce & Stevens Corporation
6245 East Kehoe Boulevard
Carol Stream, IL 60187

CT Corporation
Registered Agent for
Pierce & Stevens Corporation
208 South LaSalle Street
Chicago, Illinois 60604

US ENVIRONMENTAL PROTECTION AGENCY REGION V '98 AUG 14 A10:55 REGIONAL HEARING CLERK

I have further caused the original of the Complaint and this Certificate of Service to be served in the Office of the Regional Hearing Clerk located in the Planning and Management Division, U.S. EPA, Region 5, 77 West Jackson Boulevard, Chicago, Illinois 60604, on the date below.

These are said persons' last known addresses to the subscriber.

Dated this 14th day of August, 1998.

Anita Perry

Secretary, Enforcement and
Compliance Assurance Branch
U.S. EPA, Region 5

UNITED STATES ENVIRONMENTAL PROTECTION AGENCY
REGION 5

ENFORCEMENT CONFIDENTIAL

DATE: March 19, 1998

SUBJECT: Significant Non-Complier (SNC) Determination

THROUGH: Lorna M. Jereza, Chief
Illinois/Indiana Section

FROM: Patrick F. Kuefler
Illinois/Indiana Section

TO: Joseph M. Boyle, Chief
Enforcement and Compliance Assurance Branch

I have evaluated an installation's violations of RCRA regulations in accordance with the Agency's "Hazardous Waste Enforcement Response Policy" (ERP), and have determined the violator to be a Significant Non-Complier (SNC).

Please review the following violator information and sign this memo where indicated if you agree with the recommended action.

- Installation Name: Pierce and Stevens Chemical
- U.S. EPA ID # : ILD 055 434 443

  Address: 6245 East Kehoe
  Carol Stream, IL

- RCRA violations meet one or more criteria under the ERP's SNC definition:

☐ Actual or substantial likelihood of exposure to hazardous waste /constituents

☐ Chronic or recalcitrant

x☐ **Substantial deviation from terms of a permit, order,**

agreement or RCRA statutory or regulatory requirements

☐ Exceedance of secondary violator compliance schedule

- Recommended Action: [1]
  - ☐ Refer to Department of Justice
  - X☐ Issue Administrative Complaint
  - ☐ Refer to Criminal Investigation Division

Date:

To: Lorna M. Jereza, Chief
Illinois/Indiana Section

From: _____
Joseph Boyle, Chief
Enforcement and Compliance
Assurance Branch

☐ Concur
☐ Do not concur

[1] In accordance with Agency's GM-85, guidance "Regional Enforcement Management: Enhanced Regional Case Screening", and the "Forum Selection" guidance.

AUG 14 1998

DE-9J

CERTIFIED MAIL P 140 889 180
RETURN RECEIPT REQUESTED

CT Corporation
Registered Agent for
Pierce & Stevens Corporation
208 South LaSalle Street
Chicago, Illinois 60604

Re: Complaint, Findings of
Violation and Compliance Order,
Pierce & Stevens Corporation
EPA ID No.: ILD 055 434 443

Dear Sir or Madam:

Enclosed please find an Administrative Complaint, Findings of Violation and Compliance Order ("Complaint") which specifies the United States Environmental Protection Agency's (U.S. EPA's) determination of a violation of the Resource Conservation and Recovery Act (RCRA) as amended, 42 U.S.C. §6901 et. seq., by the Pierce & Stevens Corporation(P&S). U.S. EPA's determination is based on a December 12, 1997, inspection of the facility located at 6245 East Kehoe, Carol Stream, Illinois 60187, and information in U.S. EPA files. The general allegations in the Complaint state the reasons for such a determination. Specifically, P&S failed to meet the requirements of RCRA relating to storage of hazardous waste.

Accompanying this Complaint is a Notice of Opportunity for Hearing. Should you desire to contest the Complaint, a written request for a hearing is required to be filed within thirty (30) days of the date this Complaint has been filed with the Regional Hearing Clerk. The request for hearing must be filed with the Regional Hearing Clerk (MF-19J), United States Environmental Protection Agency, Region 5, 77 West Jackson Boulevard, Chicago, Illinois 60604. A copy of your request should also be sent to Kevin Chow, Office of Regional Counsel (C-14J), at the above address.

Regardless of whether you choose to request a hearing within the prescribed time limit following the filing of this Complaint, you are extended an opportunity to request an informal settlement conference. Topics for discussion at the settlement conference may include the mitigation of the proposed penalty in accordance with U.S. EPA guidance on pollution prevention and supplemental environmental projects. A request for an informal settlement conference with U.S. EPA will not affect or extend the thirty (30) day deadline to file an Answer in order to avoid a Finding of Default on the Complaint.

If you have any questions or want to request an informal settlement conference for the purpose of settlement with Waste, Pesticides and Toxics Division staff, please contact Patrick F. Kuefler, United States Environmental Protection Agency, RCRA Enforcement and Compliance Assurance Branch (DE-9J), 77 West Jackson Boulevard, Chicago, Illinois 60604. He may also be reached at (312) 353-6268.

Sincerely yours,

for Joseph M Boyle, Chief
Enforcement and Compliance Assurance Branch
Waste, Pesticides and Toxics Division

Enclosure

cc: Todd Marvel, IEPA w/enclosure

bcc: Public Affairs, D-19J
Anita Perry, DE-9J
Kevin Chow, C-14J
Christina Moraga, DE-8J

c:\enforcement\P&S\8atranst.wpd

ENFORCEMENT AND COMPLIANCE ASSURANCE BRANCH

SECRETARY	SECRETARY	SECRETARY	SECRETARY	SECRETARY	
AUTHOR/ TYPIST PK 8/3/98	ORC STAFF ATTORNEY KCC 8/3/98	ORC SECTION CHIEF	ILLINOIS/ INDIANA SECTION CHIEF	ECAB BRANCH CHIEF	
8/10/98		8/11/98	8/6/98	8/14/98	

P. Kuefler, DE-9J, U.S. EPA, 77 W. Jackson Blvd. Chicago, IL 60604

P 140 889 181

US Postal Service
Receipt for Certified Mail
No Insurance Coverage Provided.
Do not use for International Mail *(See reverse)*

Sent to Pierce + Stevens Corp.	
Street & Number 6245 E. Kehoe Blvd	
Post Office, State, & ZIP Code Carol Stream, IL 60187	
Postage	$ 1.47
Certified Fee	1.35
Special Delivery Fee	
Restricted Delivery Fee	
Return Receipt Showing to Whom & Date Delivered	1.10
Return Receipt Showing to Whom, Date, & Addressee's Address	
TOTAL Postage & Fees	$ 3.92
Postmark or Date	AUG 14 1998

PS Form **3800**, April 1995

P 140 889 180

US Postal Service
Receipt for Certified Mail
No Insurance Coverage Provided.
Do not use for International Mail *(See reverse)*

Sent to CT Corporation	
Street & Number 208 S. LaSalle St.	
Post Office, State, & ZIP Code Chicago, IL 60604	
Postage	$ 3.00
Certified Fee	1.35
Special Delivery Fee	
Restricted Delivery Fee	
Return Receipt Showing to Whom & Date Delivered	1.10
Return Receipt Showing to Whom, Date, & Addressee's Address	
TOTAL Postage & Fees	$ 5.45
Postmark or Date	AUG 17 1998

PS Form **3800**, April 1995

P. Kuefler, DE-9J, U.S. EPA, 77 W. Jackson Blvd. Chicago, IL 60604

Is your RETURN ADDRESS completed on the reverse side?

SENDER:
- Complete items 1 and/or 2 for additional services.
- Complete items 3, 4a, and 4b.
- Print your name and address on the reverse of this form so that we can return this card to you.
- Attach this form to the front of the mailpiece, or on the back if space does not permit.
- Write *"Return Receipt Requested"* on the mailpiece below the article number.
- The Return Receipt will show to whom the article was delivered and the date delivered.

I also wish to receive the following services (for an extra fee):
1. ☐ Addressee's Address
2. ☐ Restricted Delivery

Consult postmaster for fee.

3. Article Addressed to:
CT Corporation
Registered Agent for
Pierce + Stevens Corp.
208 South LaSalle St.
Chicago, IL 60604

CT Corporation System
208 S. LaSalle Street
Chicago, Illinois 60604

4a. Article Number
P 140 889 180

4b. Service Type
☐ Registered ☒ Certified
☐ Express Mail ☐ Insured
☐ Return Receipt for Merchandise ☐ COD

7. Date of Delivery
AUG 17 1998

5. Received By: *(Print Name)*

8. Addressee's Address *(Only if requested and fee is paid)*

6. Signature: *(Addressee or Agent)*
X

Thank you for using Return Receipt Service.

PS Form **3811**, December 1994

Domestic Return Receipt

RCRA ENFORCEMENT ACTION SIGN-OFF

PART I BACKGROUND

FACILITY NAME Pierce + Stevens Chemical

FACILITY LOCATION Carol Stream IL

EPA ID NUMBER ILD055434443

ASSIGNEES ECAB Pat Kuefler ORC Kevin Chow

NATURE OF VIOLATION Storage without a Permit

DATE OF DISCOVERY 12/12/97

DATE OF REFERRAL FROM STATE ---------- (✓) NOT APPLICABLE

ANY OTHER OUTSTANDING OR PAST ENFORCEMENT ACTIONS AGAINST THIS FACILITY:

None. SBREFA sent 6/3/98

PART II RECOMMENDATION ----------

PART III CONCURRENCES ON DRAFT

	INITIALS	DATE	AGREE	DISAGREE
1. ECAB ASSIGNEE	PK	7/23/98	(✓)	( )
2. CHIEF, ECAB SECTION	LMJ	8/6/98	(✓)	( )
3. ASSISTANT REGIONAL COUNSEL	KCC	8/3/98	(✓)	( )

PART IV ADDRESSEE & DATE OF 3008(A)(2) NOTICE LETTER ----------

---

PART V APPROVAL

1. ECAB ASSIGNEE	PK	8/6/98	(✓)	( )
2. ECAB SECTION CHIEF	LMJ	8/12/98	(✓)	( )
3. ASSISTANT REGIONAL COUNSEL	KCC	8/6/98 with comment on cover letter	(✓)	( )
~~[illegible]~~	CCP	-----	( )	( )
4. CHIEF, ORC SECTION	CCP	-----	(✓)	( )
5. ECAB BRANCH CHIEF	LMJ / J. Doyle	8/12/98	(✓)	( )
~~6. DIRECTOR, WPTD~~	------	-----	( )	( )

NOTE: Attach sign-off sheets to yellow copy of the enforcement action.

RETURN TO A. PERRY, DRE-~~8~~9J, FOR MAILING.

343020-0004

PIERCE & STEVENS CHEMICAL CORP.
245 E. KEHOE BLVD. BOX 130
CAROL STREAM, ILL. 60187
ADHESIVES • COATINGS
BUFFALO, NEW YORK
CAROL STREAM, ILLINOIS
KIMBERTON, PA. (PHILADELPHIA)
MILPITAS, CALIF. (SAN FRANCISCO)
FT. ERIE, ONTARIO, CANADA
W. U. TELEX 72-2432
PHONE: AREA CODE 312 653-3800

August 11, 1988

RECEIVED
AUG 15 1988
ILL. E.P.A. - D.L.P.C.
STATE OF ILLINOIS

Illinois Environmental Protection Agency
1701 S. First Avenue
Maywood, IL 60153

Attn: Mr. C.J. Gruntman

Dear Sir:

Per our discussion and conference on Wednesday, June 29, 1988 regarding the violations set forth in Attachment "A", we wish to submit the following changes, resolutions, and recommendations:

1. a) We will determine if the waste is excluded from regulation under Section 721.104.

   b) We have recently determined the waste in our last shipment as F005 and F001 combination.

   c) Presently, we do not have a hazardous waste that is not listed in Subpart "D" of Part 721. If the occasion arises, we will follow and conform with your recommendations under #1 & 2.

   To conclude I'm attaching an amended manifest and a declaration described as Exhibit "A" attached to conform with the Federal EPA.

2. a) If any hazardous waste is accumulated on site over 90 days, we will comply with 35 Illinois Adm. Code 725 Subpart 1.

   b) The date upon which each period of accumulation begins is clearly marked and visible for inspection.

   c) While being accumulated on-site, each container and tank is labeled or marked clearly with the words, "Hazardous Waste".

   d) We will comply with the requirements in Code 725, Subparts C & D, and Code 725.116. Specifically, the requirements which are not complied with, as well as the deficiencies, will be corrected as listed under "A".

Code 725.116

On the job training has been going on for over a year as shown by documents left with you at the meeting. As you had suggested, we should be more descriptive on our records especially the topics. Please refer to the latest meeting and training dated 8/3/88 (Exhibit "B").

Mr. T. Buenz and W. Oswald are trained to direct the hazardous waste management procedures. Also, the corporate environmental staff of Pratt & Lambert has directed us adequately as to all aspects of hazardous waste. We are also contracting and obtaining the services of the American Waste Haulers to construct a professional crisis control program by using complimentary contractural services.

A. 1) Safety & Emergency Equipment

Procedures for using and inspecting safety equipment have been finalized and put into effect immediately. Each employee will be indoctrinated and orientated with all of our safety and emergency equipment. Proper training in the use of respirators and safety harnesses have commenced and will be repeated yearly. Please see exhibit "C".

2) Communications or Alarm System

Please refer to updated exhibit "D" (Evacuation Plan) and Exhibit "E". We have had this alarm system for over ten years, and this system covers all shifts and is practised at least twice a year. Each person is orientated as to the signals for evacuation or release of hazardous materials.

3) The attached exhibits "D" and "E" also describe the function of each individual in response to fire, spillage or explosion. Accountability of all personnel and isolating any hazard or fire is done by the emergency crew who are trained to provide an adequate reponse to a fire, explosion or spillage.

4) Implementation of the Contingency Plan

The contingency plan is updated and revised per you recommendations. Exhibit "E".

B. Contingency Plan

The contingency plan is updated as shown in Exhibit E. Telephone numbers of Central DuPage emergency and the Doctors on Duty (Alexian Brothers Clinic) are posted in the contingency plan along with the phone numbers of local response team and the Illinois Environmental Protection Agency. All employees will be advised and briefed of the contingency plan.

We have retained a clinic called Doctors on Duty to handle medical problems and also the Central DuPage Emergency Hospital.

C. Contingency PLan - Emergency Coordinator

The emergency coordinator list in the contingency plan (pre-emergency plan) is brought up to date as listed in Exhibit E.

D. Contingency Plan - Emergency Equipment

Please see Exhibit C

1. The exhibit "C" attached to the contingency plan gives a physical description of all emergency equipment at this facility.

2. A brief outline describes the capability of each piece of emergency equipment and will be reviewed yearly.

3. The location of each piece of equipment is attached.

E. Contingency Plan Review

The pre-emergency plan has been amended with the up-to-date list of emergency coordinators and the up-to-date list of emergency equipment.

I do appreciate your recommendations and help in formalizing our contingency plan. We trust our initiative, response, and implementation will resolve any differences. Please contact us as soon as possible on any discrepancies or any questions to be answered.

Regarding our application to remove us from Part "A" as a hazardous waste generator, this has not materialized. At no time we have accumulated hazardous waste over 90 days at this site to my knowledge. After any analysis on this problem, we would appreciate the correction direction we should take to avoid any conflicts with the directives. We solicit your cooperation and consideration.

Sincerely yours,

W.A. Oswald
Plant Manager

WAO:ht
Encl.

cc: P. Reed
B. White
H. Chappel

Gus

UNITED STATES ENVIRONMENTAL PROTECTION AGENCY

5HR-12

no folder

02 AUG 1988

Mr. William Oswald
Pierce & Stevens Corporation
245 East Kehoe
Carol Stream, Illinois 60187

Re: Pierce & Stevens Corporation
ILD 055 434 443

Dear Mr. Oswald:

The United States Environmental Protection Agency has reviewed the information which you submitted to this office on July 25, 1988. The stated actions appear to adequately address the land disposal restrictions deficiencies outlined in our July 11, 1988, Notice of Violation.

Your cooperation and efforts in this matter are appreciated. Should you have further questions, please feel free to contact Ms. Janet Haff of my staff at (312) 353-7923.

Sincerely yours,

Paul E. Dimock, Chief
IL/MI/WI Enforcement Program Section

cc: Glen Savage, IEPA, FOS
Harry Chappel, IEPA, CMS

CONCURRENCES

SYMBOL				PED				
SURNAME	E.V.	90						
DATE	7/29/88	7/29/88		8-1-88				

EPA Form 1320-1 (12-70)

OFFICIAL FILE COPY

*U.S. GPO : 1985-467-853

A copy of the inspection report is enclosed for your records. Please submit to this office, within thirty (30) days of receipt of this Notice of Violation, documentation demonstrating that the above-cited violations have been corrected and indicating what measures have been initiated to assure future compliance. Failure to correct the violations may subject the facility to further Federal enforcement action.

If you have any questions regarding this correspondence, please contact Ms. Janet Haff of my staff at (312) 353-7923.

Sincerely yours,

Paul E. Dimock, Chief
IL/MI/WI Enforcements Program Section

Enclosure

cc: Harry Chappel, IEPA
Glenn Savage, IEPA

5HS-12:JHAFF:7/5/88:ev DISK #1

CONCURRENCES

SYMBOL				PED				
SURNAME	E.V.							
DATE	7/5/88	7/7/88		7-8-88				

P-571 916 737

RECEIPT FOR CERTIFIED MAIL

NO INSURANCE COVERAGE PROVIDED
NOT FOR INTERNATIONAL MAIL
(See Reverse)

U.S.G.P.O. 153-506

Sent to Mr. William Oswald	
Street and No. 245 East Kehoe	
P.O., State and ZIP Code Carol Stream, IL 60187	
Postage	$ .65
Certified Fee	1.00
Special Delivery Fee	.85
Restricted Delivery Fee	
Return Receipt showing to whom and Date Delivered	.85
Return Receipt showing to whom, Date, and Address of Delivery	
TOTAL Postage and Fees	$ 2.40
Postmark or Date	

PS Form 3800, June 1985

RECEIVED
JUL 1 1988
OFFICE OF RCRA
Waste Management Div.
U.S. EPA, REGION V

J. Haff (5HS-12) 230 S. Dearborn, Chg., IL 60604

SENDER: Complete items 1 and 2 when additional services are desired, and complete items 3 and 4.
Put your address in the "RETURN TO" Space on the reverse side. Failure to do this will prevent this card from being returned to you. The return receipt fee will provide you the name of the person delivered to and the date of delivery. For additional fees the following services are available. Consult postmaster for fees and check box(es) for additional service(s) requested.

1. ☒ Show to whom delivered, date, and addressee's address. ↑*(Extra charge)*↑
2. ☐ Restricted Delivery ↑*(Extra charge)*↑

3. Article Addressed to:

Mr. William Oswald
Pierce & Stevens Corporation
245 East Kehoe
Carol Stream, Illinois 60187

4. Article Number
P-571 916 737

Type of Service:
☐ Registered ☐ Insured
☒ Certified ☐ COD
☐ Express Mail

Always obtain signature of addressee or agent and DATE DELIVERED.

5. Signature — Addressee
X Helen Downey

6. Signature — Agent
X

7. Date of Delivery

8. Addressee's Address *(ONLY if requested and fee paid)*

PS Form **3811**, Mar. 1987 ★ U.S.G.P.O. 1987-178-268 **DOMESTIC RETURN RECEIPT**

Duplicate Letter sent to client by Janet Hoff.

facility already returned to compliance

JUL 2 2 1988

5HS-12

CERTIFIED MAIL
RETURN RECEIPT REQUESTED

Mr. William A. Oswald
Pierce & Stevens Chemical Corporation
245 East Kehoe
Carol Stream, Illinois 60187

Re: Notice of Violation
Pierce & Stevens Chemical Corp.
ILD 055 434 443

Dear Mr. Oswald:

On February 9, 1988, the Illinois Environmental Protection Agency (IEPA), representing the U.S. Environmental Protection Agency, conducted a Resource Conservation and Recovery Act (RCRA) inspection of the above-referenced facility. The purpose of the inspection was to determine the facility's compliance with the applicable hazardous waste management requirements of RCRA, including the Federal land disposal restrictions. The Land Disposal Restrictions for F001-F005 spent solvents became effective on November 8, 1986, (40 CFR Part 268, and revisions to 40 CFR Parts 260-265 and 270-271).

With respect to the land disposal restrictions section of the inspection, your facility was found to be in violation of the following:

1. Failure to determine the appropriate treatability group of the waste as required by Section 268.41;

2. Failure to determine whether the waste exceeds treatment standards as required by Section 268.7(a); and

3. Failure to provide a separate written notice attached to the manifest for each shipment of F-solvent wastes with the U.S. EPA hazardous waste numbers, the applicable treatment standards, manifest number, and waste analysis data, where available, as required by Section 268.7(a)(1).

A copy of the inspection report is enclosed for your records. Please submit to this office, within thirty (30) days of receipt of this Notice of Violation, documentation demonstrating that the above-cited violations have been corrected

and indicating what measures have been initiated to assure future compliance. Failure to correct the violations may subject the facility to further Federal enforcement action.

If you have any questions regarding this correspondence, please contact Ms. Gertrud Matuschkovitz of my staff at (312) 353-7921.

Sincerely yours,

Paul E. Dimock, Chief
IL/MI/WI Enforcement Program Section

Enclosure

cc: Harry Chappel, IEPA
Glenn Savage, IEPA

CONCURRENCES

SYMBOL				acting				
SURNAME	O.R	GM		PEB				
DATE	7/20/88	7-21-88		7-21-88				

PIERCE & STEVENS CHEMICAL CORP.
245 E. KEHOE BLVD. BOX 130
CAROL STREAM, ILL. 60187
ADHESIVES • COATINGS
BUFFALO, NEW YORK
CAROL STREAM, ILLINOIS
KIMBERTON, PA. (PHILADELPHIA)
MILPITAS, CALIF. (SAN FRANCISCO)
FT. ERIE, ONTARIO, CANADA
W. U. TELEX 72-2432
PHONE: AREA CODE 312 653-3800

July 19, 1988

United States Environmental Protection Agency
Region 5
230 South Dearborn Street
Chicago, IL 60604

Attn: Mr. Paul E. Dimock, Chief
IL/MI/WI Enforcements Program Section

Dear Mr. Dimock:

Regarding your notice of violation (5HS-12), we are attaching our provision of a written notice for a shipment of hazardous waste in compliance with Section 268.7 (a)(1). Please confirm this initiation which assures future compliance.

Sincerely yours,

William A. Oswald
Plant Manager

cc: Harry Chappel, IEPA
Glenn Savage, IEPA

WAO:ht

RECEIVED
JUL 25 1988
U.S. EPA, REGION V
WASTE MANAGEMENT DIVISION
OFFICE OF THE DIRECTOR

NOTIFICATION OF TREATMENT REQUIREMENTS FOR LAND DISPOSAL RESTRICTED WASTE STREAMS

Company Pierce & Stevens Co. Address 245 E. Kehoe, Carol Stream, IL

E.P.A. Waste No. F003, F005 Manifest # WI 98556

This serves as notification that the above-referenced waste stream is affected by the U.S. EPA Land Disposal Restrictions set forth in 40 CFR 268. The following indicated substances and treatment standards are those applicable to this waste stream.

U.S. E.P.A. ID # ILD055434443

TREATMENT STANDARDS FOR SPENT SOLVENT WASTES

F001 - F005 Spent Solvents	Waste Waters Containing Spent Solvents Concentration mg/L	All Other Spent Solvent Waters Concentration mg/L
X Acetone	0.05	0.59
___ n-Butyl alcohol	5.0	5.0
___ Carbon disulfide	1.05	4.81
___ Carbon tetrachloride	.05	.96
___ Chlorobenzene	.15	.05
___ Cresols (and Cresylic acid)	2.82	.75
___ Cyclohexanone	.125	.75
___ 1,2-Dichlorobenzene	.65	.125
___ Ethylacetate	.05	.75
___ Ethyl benzene	.05	.053
___ Ethyl ether	.05	.75
___ Isobutanol	5.0	5.0
___ Methanol	.25	.75
___ Methylene chloride	.20	.96
___ Methylene chloride (from the pharmaceutical industry)	12.7	.96
X Methyl ethyl ketone	0.05	0.75
___ Methyl isobutyl ketone	0.05	0.33
___ Nitrobenzene	0.66	0.125
___ Pyridine	1.12	0.33
___ Tetrachloroethylene	0.079	0.05
X Toluene	1.12	0.33
___ 1,1,1-Trichloroethane	1.05	.41
___ 1,2,3-Trichloro -1,2,2-trifluoroethane	1.05	0.96
___ Trichloroethylene	0.062	0.091
___ Trichlorofluoromethane	0.05	0.96
X Xylene	0.05	0.15

TREATMENT STANDARDS FOR CALIFORNIA LIST CONSTITUENTS

Constituent	Concentration** (mg/L)
___ Cyanides	1000
___ Arsenic	500
___ Cadmium	100
___ Chromium VI	500
___ Lead	500
___ Mercury	20
___ Nickel	134
___ Selenium	100
___ Thallium	130
___ Liquids with pH ≤ 2.0	---
___ Liquids with PCB's	50 ppm
___ Wastes containing HOC's*	
- Liquid containing HOC's	1000 mg/L
- Solid containing HOC's	1000 mg/kg

* Halogenated organic compounds

** Cyanide and metal concentrations subject to change with issuance of final regulation. See 52 FR 29992, August 12, 1987

The above information is based upon ( ) an attached waste analysis or (X) generator knowledge of the waste stream(s).

GENERATOR INFORMATION

Signed William A. Oswald Printed Name William A. Oswald

Title Plant Manager Date 7/19/88

1 1 JUL 1988

5HS-12

CERTIFIED MAIL
RETURN RECEIPT REQUESTED

Mr. William Oswald
Pierce & Stevens Corporation
245 East Kehoe
Carol Stream, Illinois 60187

Re: Notice of Violation
Pierce & Stevens Corporation
ILD 055 434 443

Dear Mr. Oswald:

On February 9, 1988, the Illinois Environmental Protection Agency (IEPA), representing the U.S. Environmental Protection Agency (U.S. EPA), conducted a Resource Conservation and Recovery Act (RCRA) inspection of the above-referenced facility. The purpose of the inspection was to determine the compliance status of your facility with respect to the applicable hazardous waste management requirements of RCRA, including the Federal land disposal restrictions. The land disposal restrictions for F001-F005 waste solvents became effective on November 8, 1986, (reference 51 Federal Register 40636: revisions to 40 CFR Parts 260-265, 268, and 270-271) and for "California List" hazardous wastes on July 8, 1987, (reference 52 Federal register 25760: revisions to 40 CFR Parts 262, 264, 265, 268, and 270-271).

With respect to the land disposal restrictions (40 CFR Part 268) section of the inspection, your facility was found to be in violation of the following:

1. Failure to determine the appropriate treatability group of the waste as required by Section 268.41;

2. Failure to determine whether the waste exceeds treatment standards as required by Section 268.7(a); and

3. Failure to provide a separate written notice attached to the manifest for each shipment of F-solvent wastes with the U.S. EPA hazardous waste numbers, the applicable treatment standards, manifest number, and waste analysis data, where available, as required by Section 268.7(a)(1).

711 Maywood

Illinois Environmental Protection Agency 2200 Churchill Road, Springfield, IL 62706

217/782-6761

Refer to: 0430200004 -- DuPage County
Pierce & Stevens Chemical Corporation
ILD055434443
Compliance File

PRE-ENFORCEMENT CONFERENCE LETTER

Certified # P 514 263 199

RECEIVED
JUN 29 1988
ILL. E.P.A. - D.L.P.C.
STATE OF ILLINOIS

June 20, 1988

Pierce & Stevens Chemical Corporation
ATTN: William Oswald
245 East Kehoe Boulevard
Carol Stream, Illinois 60187

Dear Mr. Oswald:

By copy of this letter the Agency hereby informs Pierce & Stevens Chemical Corporation of apparent violations of the Illinois Environmental Protection Act and/or rules and regulations adopted thereunder. These apparent violations are set forth in Attachment A of this letter.

As a result of these apparent violations, it is our intent to refer this matter to the Agency's legal staff for the preparation of a formal enforcement case. The Agency's legal staff will, in turn, refer this matter to the Office of Attorney General or to the United States Environmental Protection Agency for the filing of a formal complaint.

Prior to taking such action, however, you are requested to attend a Pre-Enforcement Conference to be held at the Illinois Environmental Protection Agency, 1701 South First Avenue, Suite 600, Maywood, Illinois. The purpose of this Conference will be:

1. To discuss the validity of the apparent violations noted by Agency staff, and

2. To arrive at a program to eliminate existing and/or future violations.

You should, therefore, bring such personnel and records to the conference as will enable a complete discussion of the above items. We have scheduled the Conference for Wednesday, June 29th, 1988, at 1:00 PM. If this arrangement is inconvenient, please contact Phyllis Reed at 312/345-9780 to arrange for an alternative date and time.

In addition, please be advised that this letter constitutes the notice required by Section 31(d) of the Illinois Environmental Protection Act prior to the filing of a formal complaint. The cited Section of the Illinois Environmental Protection Act requires the Agency to inform you of the charges which are to be alleged and offer you the opportunity to meet with appropriate officials within thirty days of this notice date in an effort to resolve such conflict which could lead to the filing of formal action.

Sincerely,

Harry A. Chappel, P.E., Manager
Compliance Section
Division of Land Pollution Control

aa
HAC:BW:lab/1795j, 18-19

Attachment

cc: Division File
Maywood Region
Phyllis Reed
Brian White

Attachment A

1. Pursuant to 35 Ill. Adm. Code 722.111, a person who generates a solid waste as defined in Section 721.102, must determine if that waste is a hazardous waste using the following method:

   a. He should first determine if the waste is excluded from regulation under Section 721.104.

   b. He must then determine if the waste is listed as a hazardous waste in Subpart D of Part 721.

   Note: Even if a waste is listed, the generator still has an opportunity under Section 720.122 and 40 CFR Section 260.22 to demonstrate that the waste from his particular facility or operation is not a hazardous waste.

   c. If the waste is not listed as a hazardous waste in Subpart D of Part 721, he must determine whether the waste is identified in Subpart C of Part 721 by either:

      1. Testing the waste according to the methods set forth in Subpart C of Part 721, or according to an equivalent method approved by the Board under Section 720.120; or

      2. Applying knowledge of the hazard characteristic of the waste in light of the materials or the processes used.

   You are in apparent violation of Section 722.111 for the following reason(s): You have misclassified the waste flammable liquid as D001 when it should be F003 and F005. You did not use the proper method to identify your waste..

2. Pursuant to 35 Ill. Adm. Code 722.134(a), except as provided in Subsections (d), (e) or (f), a generator may accumulate hazardous waste on-site for 90 days or less without a permit or without having interim status provided that:

   1. The waste is placed in containers and the generator complies with 35 Ill. Adm. Code 725 Subpart I (Use and Management of Containers) or the waste is placed in tanks and the generator complies with 35 Ill. Adm. Code 725 Subpart J (Tanks) except 35 Ill. Adm. Code 725.293;

   2. The date upon which each period of accumulation begins is clearly marked and visible for inspection on each container;

   3. While being accumulated on-site, each container and tank is labeled or marked clearly with the words,"Hazardous Waste", and

   4. The generator complies with the requirements for owners or operators in 35 Ill. Adm. Code 725 Subparts C (Preparedness and Prevention) and D (Contingency Plan and Emergency Procedures) and with 35 Ill. Adm. Code 725.116 (Personnel Training).

You are in apparent violation of 35 Ill. Adm. Code 722.134(a) in that item(s) 4 above was/were not complied with.

Specifically, the requirements of item 1 and/or 4 above (listed by regulation) which were not complied with, as well as the deficiencies observed, are:

A. Pursuant to 35 Ill. Adm. Code 725.116(a), facility personnel must complete a program of classroom instruction or on-the-job training directed by a person trained in hazardous waste management procedures. The training must be designed to ensure that facility personnel are able to respond to emergencies, and at a minimum meet the applicable requirements of Section 725.116(a)(3). You are in apparent violation of 35 Ill. Adm. Code 725.116(a) for the following reason(s): Your personnel training program does not address the following:

1. using and inspecting safety equipment;

2. the communications or alarm systems;

3. the response to fire or explosion; and

4. implementing the contingency plan.

B. Pursuant to 35 Ill. Adm. Code 725.152(c), the contingency plan must describe arrangements agreed to by local police departments, fire departments, hospitals, contractors and state and local emergency response teams to coordinate emergency services, pursuant to Section 725.137. You are in apparent violation of 35 Ill. Adm. Code 725.152(c) for the following reason(s): The contingency plan (pre-emergency plan) does not describe the arrangements agreed to by the hospitals, contractors, and state and local emergency response teams.

C. Pursuant to 35 Ill. Adm. Code 725.152(d), the contingency plan must list names, addresses and phone numbers (office and home) of all persons qualified to act as emergency coordinator (see 725.155) and must be kept up to date. You are in apparent violation of 35 Ill. Adm. Code 725.152(d) for the following reason(s): The emergency coordinator list in the contingency plan (pre-emergency plan) is not up-to-date.

D. Pursuant to 35 Ill. Adm. Code 725.152(e), the contingency plan must include an up-to-date list of all emergency equipment at the facility. The plan must include the location and a physical description of each item and a brief outline of its capabilities. You are in apparent violation of 35 Ill. Adm. Code 725.152(e) for the

following reason(s): The contingency plan (pre-emergency plan) does not identify:

1. a physical description of all the emergency equipment at the facility;

2. a brief outline of the capability of each piece of emergency equipment; and

3. the location of each piece of emergency equipment.

Also, the list of emergency equipment is not up-to-date in the contingency plan (pre-emergency plan).

E. Pursuant to 35 Ill. Adm. Code 725.154, the contingency plan must be reviewed and immediately amended, if necessary, whenever:

a. Applicable regulations are revised;

b. The plan fails in an emergency;

c. The facility changes — in its design, construction, operation, maintenance or other circumstances -- in a way that materially increases the potential for fires, explosions or releases of hazardous waste or hazardous waste constituents or changes the response necessary in an emergency;

d. The list of emergency coordinators changes;

e. The list of emergency equipment changes.

You are in apparent violation of 35 Ill. Adm. Code 725.154 for the following reason(s): The pre-emergency plan (contingency plan) should be amended with the up-to-date list of emergency coordinators and the up-to-date list of emergency equipment.

NAC:SW:lab/1795j, 20-22

P4186652586

Illinois Environmental Protection Agency 2200 Churchill Road, Springfield, IL 62706

217/782-6761

Refer to: # 0430200004 -- DuPage County
Pierce & Stevens Chemical Corp.
ILD 055434443
RCRA - Permits

May 6, 1988

Pierce & Stevens Chemical Corp.
245 E. Kehoe Blvd.
Carol Stream, Illinois 60188

Attn: Environmental Coordinator or
Plant Manager

Dear Sir:

According to Agency files, your facility currently manages hazardous waste in containers and/or tanks subject to the requirements of 35 IAC 700-725. 35 IAC 703.157(f) states that interim status for any hazardous waste storage or treatment facility will be terminated November 8, 1992, unless the facility submits Part B of the RCRA permit application for these units to this Agency by November 8, 1988. This letter is written to (1) make you aware of this requirement and (2) describe the actions which must be taken in response to this requirement.

According to 35 IAC 703.157(f), if an existing facility desires to (1) store hazardous waste on-site for greater than ninety (90) days, (2) treat hazardous waste, or (3) store hazardous waste as a commercial facility after November 8, 1992, it must submit Part B of the RCRA permit application to this Agency by November 8, 1988. The information which must be contained in this application is described in 35 IAC 703, Subpart B. The enclosed document, entitled "RCRA Permit Guidance" provides more detail regarding the necessary contents of the application and also identifies several guidance documents which will be useful in developing the application. Also included in this document is the form which must be used when submitting the application.

If a facility does not desire to continue storing and/or treating hazardous waste after November 8, 1992, it must close the storage and/or treatment unit(s) present at the facility prior to this date. Closure, in this instance, basically means that all contamination must be removed from the unit(s) and if necessary, from the area surrounding these units. The requirements which must be met in closing these units are contained in 35 IAC 725, Subpart G. For you convenience, guidance for the development of a closure plan is contained in the enclosed document entitled "Instructions for the Preparation of Closure Plans for Interim Status RCRA Hazardous Waste Facilities." PLEASE NOTE THAT A CLOSURE PLAN DOES NOT NEED TO BE SUBMITTED AT THIS TIME. IT MUST HOWEVER, BE SUBMITTED TO THE AGENCY NO LATER THAN MAY 8, 1992.

In some instances, there may be several interim status hazardous waste management units at a facility. The facility may desire to pursue a final RCRA permit for a portion of these units and close the rest of them. Because of the uncertainty associated with this option, all interim status units at a facility must be included in Part B of the RCRA permit application, unless a closure plan for the units being closed is submitted with the Part B. If a closure plan is submitted with the Part B, the application need only address those units which will remain in operation.

The only alternatives available for hazardous waste treatment and storage facilities to meet the requirements of 35 IAC 703.157(f) are (1) submit Part B of the RCRA permit application by November 8, 1988 or (2) close by November 8, 1992. However, some facilities may have previously filed Part A of the RCRA permit application in error and now feel that the hazardous waste management activities carried out at the facility do not require a RCRA permit (i.e. the Part A was filed for protective measures). If this is the case, the Agency requests that information supporting this position be submitted no later than November 8, 1988. The Agency can then review the information submitted and correct its records accordingly. The information which must be submitted to make this demonstration is contained in the enclosed document entitled "Facility Part A Withdrawal Request Form."

Finally, some facilities may have closed or are currently closing in accordance with an IEPA approved closure plan. (Please bear in mind this letter is going out to over 200 facilities; some closed facilities may inadvertently receive this letter.) In this instance, the Agency requests that a copy of (1) the closure plan approval letter and (2) the letter from the Agency accepting the certifications of the owner/operator and the rgistered professional engineer that closure was carried out in accordance with the approved closure plan (if closure has been completed) be submitted by November 8, 1988. The Agency will again be able to review this information and correct its records accordingly.

Because of the large number of facilities subject to the requirements of 35 IAC 703.157(f), the Agency requests that all facilities receiving this letter complete the enclosed form entitled "RCRA Permit Information Form." The form has been developed such that it can be used by a facility falling into any of the five categories described above (pursuing a final permit, planning to close, pursuing a permit for only a portion of the interim status units and closing the other units, protective filers, closed in accordance with an IEPA approved closure plan). This form must be submitted to the Agency no later than November 8, 1988, along with all required attachments. Failure to do so may subject a facility to enforcement under State and/or Federal regulations and possible monetary penalties up to $25,000 per day of noncompliance.

The RCRA Permit Information Form and all required attachments must be submitted in triplicate (original and two (2) copies) to the following address:

Permit Section, RCRA Unit
Division of Land Pollution Control
Illinois Environmental Protection Agency
2200 Churchill Road
P.O. Box 19276
Springfield, IL 62794-9276

If you have any questions regarding this letter, please contact Jim Moore at 217/782-9875.

Very truly yours,

Lawrence W. Eastep, P.E., Manager
Permit Section
Division of Land Pollution Control

LWE:JKM:dks/1238j/1244j/1-3

Enclosures

cc: Division File
Compliance
Maywood Region
USPEA Region V

F.O.S.

2ND. F-SOL. COMPLETED BB 7/11/88

DuPage Co.

RCRA LAND DISPOSAL RESTRICTION INSPECTION

Facility: Pierce & Stevens Chemical Corporation

U.S. EPA I.D. No.: ILD055434443 LPC 0430200004

Street: 245 E. Kehoe

City: Carol Stream State: IL Zip Code: 60187

Telephone: 312/653-3800

Operator: same as above

Street:

City: State: Zip Code:

Telephone:

Owner: Pratt & Lambert Inc.

Street: 75 Tonawanda Street

City: Buffalo State: NY Zip Code: 14207

Telephone: 716/873-6000

Inspection Date: 2/9/88 Time: 9:30A - 2:15p Weather Conditions: —

	Name	Affiliation	Telephone
Inspectors:	Phyllis Reed	IEPA	312/345-9780

Facility Representatives: William A. Oswald, plant manager

	RCRA Status	LDR Status F-Solvent	LDR Status California List
Generator	Yes	Yes	NA
Transporter	No	No	
Treater	No	No	
Storer			
Disposer	No	No	

RECEIVED JUN 21 1988 IEPA-DLPC

Revised 11-03-87

INSPECTION SUMMARY

Company generates the following F-solvent waste: xylene, acetone, ethyl acetate, toluene, methyl ethyl Ketone

Company has misclassified the F003 and F005 waste as D001.

RECEIVED
JUN 21 1993
EPA-DLPC

NARRATIVE

Pierce & Steven Corporation is a manufacturer of adhesives and coatings. This company has a laboratory which is used for testing the viscosity and specific gravity of their products. Per William Oswald (Plant Manager for Pierce & Stevens), any solvents generated in the laboratory are directly added to the solvent batch which are used through the process or used for cleaning the mixing kettles.

Pierce & Stevens has a policy with their clientele to take back any of their products which the clients are not satisfied with. Per Oswald, if this material cannot be used again; it is then sent off-site as waste. As for the solvents, the solvents are re-used until they can no longer be used.

Hazardous Waste

Waste Flammable liquid, F003 and F005

- generated from cleaning the mixing kettles and/or returned finished products which cannot be reworked through the process.
- rate of generation varies.
- last shipment was on 12/30/87 to EWR in Coal City, IL for secondary fuel/incineration.
- none on-site.

Also, this waste is sent to Avganic Industries, Inc. in Cottage Grove, WI for recycling.

Additional information . . .

1. During the inspection, no waste was observed on-site. Approximately 75 drums of the wash solvent was on-site to be re-used.
2. The underground storage tanks located outside are used for holding raw materials.
3. Company wants to withdraw the Part A because they claim that they have never stored hazardous waste.
4. Facility Part A Withdrawal Request Forms were provided to the company.

RECEIVED JUN 21 1988 IEPA-DLPC

APPARENT VIOLATIONS

722.111 - Company has misclassified the waste flammable liquid as D001 when it should be F003 and F005.

722.134
(725.116) - Personnel training program does not cover using and inspecting safety equipment.

- Personnel training program does not address the communications or alarm system.

- Personnel training program does not cover the response to fire or explosion.

- Personnel training program does not cover implementing the contingency plan.

722.134
(725.152) - The contingency plan (Pre-emergency Plan) does not describe the arrangements agreed to by the hospitals, contractors, and state and local emergency response teams.

The list of emergency coordinators in the contingency plan (Pre-emergency Plan) is not up-to-date.

The contingency plan (Pre-emergency Plan) does not identify:

1. a physical description of all the emergency equipment at the facility.

2. a brief outline of the capability of each piece of emergency equipment.

3. the location of each piece of emergency equipment.

- The list of emergency equipment is not up-to-date in the contingency plan (Pre-emergency Plan).

722.134
(725.154) - The Pre-emergency Plan (contingency plan) should be amended with the up-to date list of Emergency Coordinators and the up-to-date list of emergency equipment.

PR:sa:0117S

RCRA LAND DISPOSAL RESTRICTION INSPECTION

APPLICABILITY CHECKLIST

Does the facility handle the following wastes?

		Gen.	Treat	Store	Disp.	Trans.
A.	**F-Solvent Wastes**					
1.	F001	___	___	___	___	___
2.	F002	___	___	___	___	___
3.	F003	✓	___	___	___	___
4.	F004	___	___	___	___	___
5.	F005	✓	___	___	___	___

Note: Use Appendix A to determine whether the facility is misclassifying any of its wastes.

B. **California List Wastes** NA

1. Liquid hazardous waste (including free liquids associated with any solid or sludge) that contains the following metals at concentrations greater than or equal to those specified

		Gen.	Treat	Store	Disp.	Trans.
Arsenic	500 mg/L	___	___	___	___	___
Cadmium	100 mg/L	___	___	___	___	___
Chromium VI	500 mg/L	___	___	___	___	___
Lead	500 mg/L	___	___	___	___	___
Mercury	20 mg/L	___	___	___	___	___
Nickel	134 mg/L	___	___	___	___	___
Selenium	100 mg/L	___	___	___	___	___
Thallium	130 mg/L	___	___	___	___	___

RECEIVED JUN 21 1988 IEPA-DLPC

2. Liquid hazardous waste (including free liquids associated with any solid or sludge) that contains free cyanides at concentrations greater than or equal to 1,000 mg/L

Gen.	Treat	Store	Disp.	Trans.
____	____	____	____	____

3. Liquid hazardous waste that has a pH of less than or equal to 2.0

____	____	____	____	____

4. Liquid hazardous waste that contains PCBs at concentrations greater than or equal to

50 ppm	____	____	____	____	____
500 ppm	____	____	____	____	____

Does the facility mix liquid hazardous waste that contains PCBs with other types of wastes?

____ Yes ____ No ____ NA

If yes, state reasons for mixing:

_____

_____

5. Liquid hazardous waste that is primarily water and that contains HOCs greater than or equal to 1,000 mg/L (dilute HOC wastewater) and less than 10,000 mg/L

____	____	____	____	____

Note: The prohibitions of 268.32(a)(3) and (e) do not apply if the HOC waste is also subject to the solvent restrictions of 268 Subpart C or a specific HOC.

RCRA LAND DISPOSAL RESTRICTION INSPECTION

GENERATOR CHECKLIST

GENERATOR REQUIREMENTS

A. <u>BDAT Treatability Group - Treatment Standards Identification</u>

1. F-Solvent Wastes: Does the generator correctly determine the appropriate treatability group of the waste?

   ____ Yes ✓ No ____ NA

   If yes, check the appropriate treatability group.

   ___ Wastewaters containing solvents (less than or equal to 1% TOC by weight)
   ___ Pharmaceutical wastewater containing spent methylene chloride
   ✓ All other spent solvent wastes

2. California List Wastes: Does the generator correctly determine the appropriate treatment standard of the waste? NA

   a. For liquid hazardous waste that contains PCBs at concentrations greater than or equal to 50 but less 500 ppm, is the treatment in accordance with existing TSCA thermal treatment regulations for burning in high efficiency boilers (40 CFR 761.60) or incineration (40 CFR 761.70)?

      ____ Yes ____ No ____ NA

      If yes, specify the method: _____

   b. For liquid hazardous waste that contains PCBs at concentrations greater than or equal to 500 ppm, is the waste incinerated or disposed of by other approved alternate methods (40 CFR 761. 60 (e))?

      ____ Yes ____ No ____ NA

      If yes, specify the method and state whether the facility has submitted a written request to the Regional Administrator or Assistant Administrator for an exemption from the incineration requirement:

      _____
      _____
      _____

B. Waste Analysis

1. F-Solvent Wastes

a. Does the generator determine whether the F-solvent waste exceeds treatment standards?

____ Yes ✓ No ____ NA

How was this determination made?

- Knowledge of waste

____ Yes ✓ No

If yes, note how this is adequate: _____

- TCLP

____ Yes ✓ No

If yes, provide the date of last test, the frequency of testing, and note any problems. Attach test results.

b. Does the F-solvent waste exceed applicable treatability group treatment standards upon generation [268.7(a)(2)]?

✓ Yes ____ No ____ NA

If yes, specify the waste stream: _____

c. Does the generator dilute the F-solvent waste as a substitute for adequate treatment [268.3]? No dilution

____ Yes ____ No ✓ NA

d. How does the generator test F-solvent waste when a process or waste stream changes? NA
The process and/or the waste stream has not changed

2. California List Wastes NA

a. Does the generator determine whether the waste is a liquid according to the Paint Filter Liquids Test (PFLT method 9095) as described by SW-846?

____ Yes ____ No ____ NA

b. If the waste is determined to be a liquid according to PFLT, is an absorbent added to the waste?

____ Yes ____ No ____ NA

What type of absorbent is used? _____

Check the types of waste to which absorbent is added.

____ Liquid hazardous waste having a pH less than or equal to 2

____ Liquid hazardous waste containing HOCs in concentrations greater than or equal to 1,000 mg/L, but less than 10,000 mg/L

____ Liquid hazardous waste containing metals

____ Liquid hazardous waste containing free cyanides

c. Does the generator determine whether the concentration levels (not extract or filtrate) in the waste equal or exceed the prohibition levels or whether the waste has a pH of less than or equal to 2.0 based on:

- Knowledge of wastes

  ____ Yes ____ No ____ NA

  If yes, note how this is adequate: _____

- Testing

  ____ Yes ____ No ____ NA

  If yes, list test method used: _____

d. Does the generator determine if concentration levels in PFLT extract exceed cyanide and metals concentration levels?

____ Yes ____ No ____ NA

- If yes, list test method used and constituent and concentration levels that exceeded prohibition levels: _____

e. Does the generator dilute the waste as a substitute for adequate treatment [268.3]?

____ Yes ____ No ____ NA

C. Management

1. On-Site Management

Is waste that exceeds the treatment standards treated, stored, or disposed on-site?

____ Yes ✓ No

If yes, the TSD Checklist must be completed.

2. Off-Site Management

a. Does the generator ship any waste that exceeds the treatment standards to an off-site treatment or storage facility?

✓ Yes ____ No

If yes, does the generator provide notification to the treatment or storage facility [268.7(a)(1)]?

____ Yes ✓ No

If yes, does notification contain the following?

EPA Hazardous waste number(s)	____ Yes	✓ No
Applicable treatment standards	____ Yes	✓ No
Manifest number	____ Yes	✓ No
Waste analysis data, if available	____ Yes	✓ No

Identify off-site treatment or storage facilities: Last shipment was on 12/30/17 to EWR in Coal City, IL for secondary fuel/incineration

b. Does the generator ship any waste that meets the treatment standards to an off-site disposal facility?

____ Yes ✓ No

If yes, does the generator provide notification and certification to the disposal facility [268.7(a)(2)]?

____ Yes ____ No

If yes, does notification contain the following?

EPA Hazardous waste number(s)	____ Yes	____ No
Applicable treatment standards	____ Yes	____ No
Manifest number	____ Yes	____ No
Waste analysis data, if available	____ Yes	____ No
Certification that the waste meets treatment standards	____ Yes	____ No

Identify off-site land disposal facilities: _____

c. If the waste is subject to a nationwide variance (e.g., solvent-water mixtures less than 1%), extension (268.5), or petition (268.6), does the generator provide notification to the off-site disposal facility that the waste is exempt from land disposal restrictions [268.7(a)(3)]?

____ Yes ____ No ✓ NA

D. Treatment Using RCRA 264/265 Exempt Units or Processes (i.e., boilers, furnaces, distillation units, wastewater treatment tanks, elementary neutralization, etc.)

Are treatment residuals generated from units or processes exempt under RCRA 264/265?

____ Yes ____ No ✓ NA

If yes, list types of waste treatment units and processes:
No exempt units or processes

IEPA-DLPC
JUN 21 1988
RECEIVED

STATE OF ILLINOIS
ENVIRONMENTAL PROTECTION AGENCY
INSPECTION REPORT

USEPA Number: ILD055434443 IEPA Number: 0430200004

Facility Name: Pierce & Stevens Chemical Corporation

Street: 245 E. Keihoe Blvd.
City: Carol Stream Telephone: 312/653-3800
County: DuPage State: IL Zip Code: 60187

Type of Facility: Notified As: G/S Regulated As: G (S)
LDF? yes __ no ✓ HPV? yes __ no ✓ 90 Day Follow-up Required? yes __ no ✓

Region: II Date of Inspection: February 9, 1988 From: 9:30AM to 2:15pm
Weather (LDF Only): _____

Type of Inspection
ISS: ✓ Sampling: __ Citizen Complaint: __ Closed: __ Withdrawal: __
Record Review: __ Follow-up to Inspection of _____: __ Other: __

Non Regulated Status
Small Quant. Gen.: __ Claimed Nonhandler: __ Other(Specify in narrative): __

Notified As/Regulated As Matrix Number: 39 Key Letter: E

Notification date, _____, from initial __ or subsequent __ notification.

Part A date, 11/19/80, from initial __ or amended __. Part A withdrawn: _____

Part B permit application submitted? yes __ no ✓

Has the firm been referred to: USEPA? yes __ no ✓; IAG? yes __ no ✓; County States Attorney? yes __ no ✓. Date of referral to USEPA: _____, IAG: _____, County States Attorney: _____.

Federal Court Order Issued: _____ State Court Order Issued: _____

USEPA CACO Issued: _____ CAFO Issued: _____ ALJ Decision Issued: _____

Illinois PCB Order Issued: _____

TSD Facility Activity Summary

Activity (by Process Code)	On Pt A	Activity Conducted Prior to 1980	Was Activity Ever Done	Closed	Being Done at Time of Inspection	Exempt from Regulation per 35 IAC, Section:	On Annual Report For 86	85	84
S01	Yes	?	?	No	No	No	*	*	*
		Container storage							
	* No Facility Annual Reports for 1986, 1985, 1984								

Operator: Pierce & Stevens Chemical Telephone #: 312/653-3804

Street: 245 E. Kehoe Blvd.

City: Carol Stream State: IL Zip Code: 60187

Owner: Pratt & Lambert, Inc. Telephone #: 716/873-

Street: 75 Tonawanda Street

City: Buffalo State: NY Zip Code: 14207

Person Interviewed	Title	Telephone #
William A. Oswald	Plant Manager	312/653-38

Inspection Participants	Agency/Title	Telephone #
Phyllis Reed	IEPA/EPS I	312/345-978

Prepared By	Agency/Title	Telephone #
Phyllis Reed	IEPA/EPS I	312/345-9780

Summary of Apparent Violations

Area	Class	Section
OTH	I	722.111
OTH	II	722.134

Area	Class	Section

Area	Class	Section

WASTE DISPOSITION FORM

Facility Na : Pierce & Stevens Chemical Corporation USEPA #: ILD055434443 IEPA #: 0430200004

Waste Name (Include haz & non-haz special & waste for which no determination has been made)	Generating Process (For waste gen. on site. N/A for TSD)	Date of Last Analysis	USEPA Haz Waste #	On 8700-12 *	On 3510-3 *	On Annual Rpt. for 86 *	85 *	84 *	Amount on Site	Rate of Generation	Last Manifested Shipment	Disposition
Waste Flammable Liquid	From the process, from cleaning out Returned unusable off spec. products	—	F003 F005	Y	Y	Y	Y	Y	None	Varies	12/30/87	EWK in Coal City, IL for secondary fuel/incineration

* All "No" responses must be explained in the narrative

NARRATIVE

Pierce & Steven Corporation is a manufacturer of adhesives and coatings. This company has a laboratory which is used for testing the viscosity and specific gravity of their products. Per William Oswald (Plant Manager for Pierce & Stevens), any solvents generated in the laboratory are directly added to the solvent batch which are used through the process or used for cleaning the mixing kettles.

Pierce & Stevens has a policy with their clientele to take back any of their products which the clients are not satisfied with. Per Oswald, if this material cannot be used again; it is then sent off-site as waste. As for the solvents, the solvents are re-used until they can no longer be used.

Hazardous Waste

Waste Flammable liquid, F003 and F005

- generated from cleaning the mixing kettles and/or returned finished products which cannot be reworked through the process.
- rate of generation varies.
- last shipment was on 12/30/87 to EWR in Coal City, IL for secondary fuel/incineration.
- none on-site.

Also, this waste is sent to Avganic Industries, Inc. in Cottage Grove, WI for recycling.

Additional information . . .

1. During the inspection, no waste was observed on-site. Approximately 75 drums of the wash solvent was on-site to be re-used.
2. The underground storage tanks located outside are used for holding raw materials.
3. Company wants to withdraw the Part A because they claim that they have never stored hazardous waste.
4. Facility Part A Withdrawal Request Forms were provided to the company.

APPARENT VIOLATIONS

722.111 - Company has misclassified the waste flammable liquid as D001 when it should be F003 and F005.

722.134
(725.116) - Personnel training program does not cover using and inspecting safety equipment.

- Personnel training program does not address the communications or alarm system.

- Personnel training program does not cover the response to fire or explosion.

- Personnel training program does not cover implementing the contingency plan.

722.134
(725.152) - The contingency plan (Pre-emergency Plan) does not describe the arrangements agreed to by the hospitals, contractors, and state and local emergency response teams.

The list of emergency coordinators in the contingency plan (Pre-emergency Plan) is not up-to-date.

The contingency plan (Pre-emergency Plan) does not identify:

1. a physical description of all the emergency equipment at the facility.

2. a brief outline of the capability of each piece of emergency equipment.

3. the location of each piece of emergency equipment.

- The list of emergency equipment is not up-to-date in the contingency plan (Pre-emergency Plan).

722.134
(725.154) - The Pre-emergency Plan (contingency plan) should be amended with the up-to date list of Emergency Coordinators and the up-to-date list of emergency equipment.

Area	Cl	90 Day F/U Req	Key Ltr Sub-sec	Requirement	In Apparent Compliance? Yes	No	N/A	Remarks or Comment Number
				PART 722 GENERATOR STANDARDS: Subpart A: General				
OTH	1		B, C, F, G, I, J	Section 722.111: Hazardous Waste Determination		✓		
				Has the generator determined if the solid waste it generates is a hazardous waste? Yes ✓ No ___				
				Did the generator follow the procedures specified in this section in making its determination? Yes ___ No ✓				Company has misclassified the waste flammable liquid as D001, when it should be F003 and F005
			B	Section 722.112: USEPA Identification Number	✓			
			§ a)	Has the generator obtained a USEPA identification number? Yes ✓ No ___				
			§ b)	Has the generator offered his hazardous waste only to transporters or to treatment, storage or disposal facilities that have received a USEPA identification number? Yes ✓ No ___				

Area	Cl	90 Day F/U Req	Key Ltr / Sub-sec	Requirement	In Apparent Compliance? Yes	No	N/A	Remarks or Comment Number
MAN	2			PART 722 GENERATOR STANDARDS. Subpart B: The Manifest				
				Section 722.120: General Requirements	✓			
			§ a)	Has the generator who transports; or who offers its hazardous waste for transportation off-site for treatment, storage or disposal prepared a uniform hazardous waste manifest? Yes ✓ No ___				
			§ b)	For hazardous waste going outside Illinois for treatment, storage or disposal, has the generator used the manifest supplied by the Agency if the State to which the hazardous waste is being shipped does not supply and require the completion of its own State manifest? Yes ✓ No ___ N/A ___				Used Illinois manifest on 11/28/84 for waste going to Bedford, Ohio
			§ c)	For hazardous waste going outside Illinois for treatment, storage or disposal, has the generator used the manifest supplied by and requiring completion by the State to which the hazardous waste is being shipped? Yes ✓ No ___ N/A ___				Wisconsin manifests used
			§ d)	Did the generator designate on the manifest one facility which is permitted to handle the hazardous waste therein described? Yes ✓ No ___ N/A ___ Note: The generator may also designate an alternate facility permitted to handle the hazardous waste in the event an emergency prevents delivery of the hazardous waste to the primary designated facility.				
			§ d)					

		Day F/U	Ltr Sub Sec	Requirement	Compliance? Yes	No	N/A	Remarks or Comment Number
			d)	In any instances where the transporter was unable to deliver the hazardous waste to the designated or alternate permitted facility, has the generator designated another permitted facility or instructed the transporter to return the waste? Yes ____ No ____ N/A ✓				No instances
MAN	2			Section 722.121 Acquisition of Manifests	✓			
			a) or B)	This section reiterates the requirements for generators to use Illinois manifests for hazardous waste going for treatment, storage or disposal in Illinois; or consignment State manifests for wastes going out of State for treatment, storage or disposal unless the consignment State does not supply its own manifest, in which case the generator must use the Illinois manifest. A "No" answer to the second or third question under Section 722.120, General Requirements, also indicates non-compliance with this section.				
MAN	2			Section 722.122 Number of Copies	✓			
				Does the manifest the generator is using consist of at least six copies (plus one copy for each additional transporter)? Yes ✓ No ____				

		Day F/U	Ltr Sub Sec	Requirement	Compliance? Yes	No	N/A	Remarks or Comment Number
HAN				Section 722.123 Use of the Manifest	✓			
			a)	For each manifest reviewed, has the generator?				
				1) Signed the certificate by hand? Yes ✓ No ____				
				2) Obtained the handwritten signature and the date of acceptance by the initial transporter? Yes ✓ No ____				
				3) Retained one copy as required by Section 722.140(a), Record keeping? Yes ✓ No ____				
				4) Apparently sent a copy (Part 5 for Illinois manifests) to the Agency within two working days? Yes ✓ No ____				
			b)	Has the generator apparently given the remaining copies of the manifest to the transporter? Yes ✓ No ____				
			c)	Has the generator followed the procedures prescribed in Section 722.123 (c) for manifesting bulk shipments of hazardous waste by water? Yes ____ No ____ N/A ✓				No bulk shipments of hazardous waste by water or rail
			d)	Has the generator followed the procedures prescribed in Section 722.123 (d) for manifesting bulk shipments of hazardous waste by rail? Yes ____ No ____ N/A ✓				

		Day I/II	Ltr Sub Sec	Requirement	Compliance? Yes	No	N/A	Remarks or Comment
				Part 722				
				GENERATOR STANDARDS				
				Subpart C: Pre-transport Requirements				
				Section 722.130 Packaging				No waste on-site ready for transporting
OTH	1	X		Is waste which is ready for transportation off-site packaged in accordance with 49CFR, Parts 173, 178 and 179? Yes _____ No _____			✓	
OTH	1	X		Section 722.131 Labeling				
				Is each package of hazardous waste which is ready for transportation off-site labeled in accordance with 49CRR Part 172? Yes _____ No _____			✓	
OTH	1	X		Section 722.132 Marking				
			a)	Is each package of hazardous waste which is ready for transportation off-site marked in accordance with 49CFR Part 172? Yes ___ No___			✓	
			b)	Is each package of hazardous waste which is ready for transportation off-site marked in accordance with:				
				- The generator's name and address? Yes _____ No _____				
				- The manifest document number associated with the container? Yes _____ No _____				

		Day I/U	Lit Sub Sec	Requirement	Compliance? Yes	No	N/A	Remarks or Comment Number
				- The words "Hazardous Waste - Federal Law Prohibits Improper Disposal. If found contact the nearest police, or public safety authority or the U.S. Environmental Protection Agency"? Yes _____ No _____				
OTH	I			Section 722.133 : Placarding Does the generator have, for the waste it generates, the proper placards to: - Placard the transport vehicle, or - Offer to the first transporter, according to 49CFR, Part 172, Subpart F? Yes ___ No ___	___	___	✓	Transporter supplies Fully regulated generato
OTH	I	X		Section 722.134 Accumulation Time Has the generator (who is not a small quantity generator in compliance with the requirements in Section 721.105) only accumulated hazardous waste on site for periods of 90 days or less? Yes ✓ No _____ UNKNOWN Note: If the answer is "Yes", complete the following questions. If the answer is "No", and there is more than 1000 kg (one kg of accute hazardous waste or 100 kg of any residue or contaminated soil, waste or other debris resulting from the clean up of a spill, into or on any land or water, of any accute hazardous waste listed in Sections 721.121, 721.132 or 721.133 (e)) the firm is a storage facility. Complete the TSD inspection form, unless the generator has requested and has been granted an extension as provided for in Section 722.134 (b).	___	✓	___	the company is making the claim that hazardous waste is only accumulated on-site for 90 days or less. During the inspection, no hazardous waste was observed on-site, only materials which were going to be reused throughout the process.

Day	LTC	Requirement	Compliance? Yes	No	N/A	Remarks or Comment Number
		Is the waste stored or treated in such a way that it is protected from any material or conditions which may cause the waste to ignite or react? Yes ____ No ____ N/A ____				
		Is ignitable or reactive waste placed in a tank that is used solely for emergencies? Yes ____ No ____ N/A ____				
		Is the owner or operator complying with the buffer zone requirements for tanks contained in Table 1-2 through 2-6 of the NFPA "Flammable and Combustible Liquids Code" for covered tanks in which ignitable or reactive wastes are treated or stored? Yes ____ No ____ N/A ____				
		Note: For each tank in which ignitable or reactive waste is treated or stored provide the following information: 1) Tank capacity in gallons. 2) Tank diameter in feet. 3) Distance of tank from property line in feet. ____				
		Special Requirements for Incompatible Wastes				
		Is the owner or operator complying with the requirements concerning the management of incompatible wastes or incompatible wastes and materials contained in this section? Yes ____ No ____				
	a)2)	For waste in containers, has the generator marked and made visible for inspection on each container, the date upon which accumulation began? Yes ____ No ____ N/A ✓				No accumulation. Materials currently on-site will be reused throughout the process.

Day F/U	Ltr Sub-Sec.	Requirement	Compliance? Yes	No	N/A	Remarks or Comment Number
	a)3)	For waste in containers and tanks, has the generator marked or labeled each with the words "Hazardous Waste"? Yes ___ No ___ NA ✓				
	a) 4)	Has the generator complied with the requirements of 35 Ill. Adm. Code 725, Subpart C: Preparedness and Prevention listed below:				
		Maintenance and Operation of Facility				
		Is the facility being maintained and operated to minimize the possibility of a fire, explosion or any unplanned and sudden or non-sudden release of hazardous waste or hazardous waste constituents to: - Air - Soil, or - Surface water, which would threaten human health or the environment? Yes ✓ No ___				
		Required Equipment				
		Is the facility equipped with the following, unless none of the hazards posed by waste handled at the facility could require a particular kind of equipment:				
		An internal communications or alarm system capable of providing immediate emergency instructions? Yes ✓ No ___ N/A ___				Alarm systems

		Day F/U	LLL 506-[illegible]	Requirement	Compliance? Yes	No	N/A	Remarks or Comment Num
				- A device such as a telephone (immediately available at the scene of operations) capable of summoning emergency assistance from local police or fire departments or State or local emergency response teams? Yes ✓ No ___ N/A ___				
				- Portable fire extinguishers, fire control equiment, spill control equipment and decontamination equipment? Yes ✓ No ___ N/A ___				Fire extinguishers, squeezy, mops, brooms, absorbents
				- Water at adequate volume and pressure to supply water hose streams or foam producing equipment or automatic sprinklers or water spray systems? Yes ✓ No ___ N/A ___				Automatic sprinklers
				Note: Any "N/A" answers must be explained in the Remarks column.				
				Testing and Maintenance of Equipment				
				Where required, is the facility testing and maintaining, as necessary, to assure proper operation in time of emergency:				
				- Communications/alarm systems? Yes ✓ No ___ N/A ___				Monthly for alarms Daily for communication system
				- Fire protection equipment? Yes ✓ No ___ N/A ___				Annually
				- Spill control equipment? Yes ✓ No ___ N/A ___				Once a week
				- Decontamination equipment? Yes ✓ No ___ N/A ___				Weekly

		Day F/H	Ltr Sub-Sec	Requirement	Compliance? Yes	No	N/A	Remarks or Comment Number
				Note: Any "N/A" answer must be explained in the Comments.				
				Access To Communications Or Alarm Systems				
				Do all personnel involved in handling hazardous waste have immediate access to an internal alarm or emergency communication device, either directly or thru visual or voice contact with another employee, unless not required under Section 725.132? Yes ✓ No ___ N/A ___				
				If there is ever just one employee on the premises while the facility is operating, does he have immediate access to a device, such as a telephone, capable of summoning external emergency assistance, unless such a device is not required under Section 725.132? Yes ___ No ___ N/A ✓				No one employee on premises
				Required Aisle Space				
				Is the owner or operator maintaining sufficient aisle space to allow the unobstructed movement of personnel, fire equipment and decontamination equipment to any area of the facility? Yes ___ No ___ N/A ✓				During the inspection, no waste was observed on-site. Only materials which were going to be reused throughout the process.
				Arrangements with Local Authorities				
				Has the owner or operator made or attempted to make the following arrangements, as appropriate for the type of waste handled at his facility and the potential need for the services of these organizations:				

16

Area		Day F/U	Key Ltr	Requirement	In Apparent Compliance? Yes	No	N/A	Remarks or Comment Number
				1) Arrangements to familiarize police and fire departments and emergency response teams with the layout of the facility, properties of hazardous wastes handled at the facility and associated hazards, places where personnel would normally be working, entrances to roads inside the facility and possible evactuation routes? Yes ✓ No ___ N/A ___				Carol Stream Fire Department & Police Department
				2) Where more than one police or fire department might respond to an emergency, has one been designated as the primary emergency authority with the others agreeing to provide support to the the primary emergency authority? Yes ___ No ___ N/A ✓				
				3) Agreements with State emergency response teams, emergency response contractors and equipment suppliers? Yes ✓ No ___ N/A ___				IESDA
				4) Arrangements to familiarize local hospitals with the properties of hazardous waste handled at the facility and the types of injuries or illnesses which could result from fires, explosions or releases at the facility? Yes ✓ No ___ N/A ___				Flexion Brothers Clinic in Hanover Park
				Note: Any "N/A" answer must be explained in the comments.				
				Has the owner or operator documented; in the operating record, refusal of State or local authorities to enter into any or all of the above arrangements? Yes ___ No ___ N/A ✓				No refusals

		Day F/U	Ltr Sub-Para	Requirement	Compliance? Yes	No	N/A	Remarks or Comment Number
			a)11)	Has the generator complied with the requirements of 35 Ill. Admin. Code 725, Subpart D: Contingency Plan and Emergency Procedures listed below:				
				Purpose and Implementation of Contingency Plan				
				Is the plan designed to minimize hazards to human health or the environment from fires, explosions or any unplanned sudden or non-sudden release of hazardous waste or hazardous waste constituents to air, soil or surface waters? Yes ✓ No ___				
				Have the provisions of the plan been carried out immediately whenever there was a fire, explosion or release of hazardous waste constituents which could threaten human health or the environment? Yes ___ No ___ N/A ✓				Not necessary
				Content of Contingency Plan				
				Does the plan describe the actions facility personnel must take to comply with Sections 725.151 and 725.156 in response to:				Called Pre-emergency Plan
				1) Fires. Yes ✓ No ___				
				2) Explosions. Yes ✓ No ___				
				3) Unplanned sudden or non-sudden releases of hazardous waste or hazardous waste constituents to air, soil or surface water? Yes ✓ No ___				

		Day F/U	LTC Sub-Page	Requirement	Compliance? Yes	No	N/A	Remarks or Comment Number
				Does the plan describe the arrangements agreed to by:				
				1) Local police and fire departments? Yes ✓ No ___				Plan does not describe arrangements with any of these organizations
				2) Hospitals? Yes ___ No ✓				
				3) Contractors? Yes ___ No ✓				
				4) State and local emergency response teams? Yes ___ No ✓				
				Does the plan list the names, addresses and phone number (office and home) of all personnel qualified to act as emergency coordinators? Yes ✓ No ___				
				Is the list of emergency coordinators up-to-date? Yes ___ No ✓				List of Emergency Coordinators not up-to-date
				If more than one person is designated as an emergency coordinator is a primary coordinator identified? Yes ✓ No ___				William Oswald Plant Manager
				Does the Plan identify:				
				facility to include a physical description of the equipment? Yes ___ No ✓				Contingency plan does not identify any of these
				2) A brief outline of the capability of each piece of emergency equipment? Yes ___ No ✓				
				3) The location of each piece of emergency equipment? Yes ___ No ✓				
				Is the list of emergency equipment up-to-date? Yes ___ No ✓				

		Day F/H	Ltr Sub-[illegible]	Requirement	Compliance? Yes	No	N/A	Remarks or Comment Number
				Does the plan include an evacuation plan for facility personnel where there is a possibility that evacuation could be necessary? Yes ✓ No ___				
				Does the plan identify the signal to be used to begin evacutation? Yes ✓ No ___				
				Are alternate evacuation routes identified? Yes ✓ No ___				
				Copies of Contingency Plan				
				Has a copy (and all revisions) of the contingency plan:				
				a) Been maintained at the facility? Yes ✓ No ___				
				b) Been submitted to all local police and fire departments, hospitals, and State and local emergency response teams that may be called upon to provide emergency service? Yes ✓ No ___				
				Amendment of Contingency Plan				
				Has the contingency plan been reviewed, and if necessary, amended whenever:				
				1) Applicable regulations are revised? Yes ___ No ___ NA ✓				Not needed
				2) The plan fails in an emergency? Yes ___ No ___ N/A ✓				

		Day F/D	Ltr Sub-Sec	Requirement	Compliance? Yes	No	N/A	Remarks or Comment Num
				3) The facility changes - in its design, construction, operation, maintenance or other circumstances - in a way that materially increases the potential for fires, explosions, or releases of hazardous waste or hazardous waste constituents or changes the response necessary in an emergency? Yes ___ No ___ N/A ✓				
				4) The list of emergency coordinators changes? Yes ___ No ✓				List of emergency coordinators is not up-to-date.
				5) The list of emergency equipement changes? Yes ___ No ✓				List of emergency equipment is not up-to-date.
				Emergency Coordinator				
				Is there an emergency coordinator on site or on call at all times?, Yes ✓ No ___				William Oswald Plant Manager
				Is there an emergency coordinator familiar with all aspects of the contingency plan, all operations and activities at the facility, the location and characteristics of the wastes handled, the location of all records in the facility and the facility layout? Yes ___ No ___				
				Does the coordinator have the authority to commit the resources to carry out the contingency plan? Yes ✓ No ___				
				Emergency Procedures				
				Has the facility had a release, fire or explosion? Yes ___ No ✓				

Area	CI	90 Day F/U	Key Ltr 500-308	Requirement	In Apparent Compliance? Yes	No	N/A	Remarks or Comment Number
				Note: ~~If the answer is "No" check N/A.~~ If the answer is "Yes", explain in detail the incident and how the facility did or did not follow the procedures prescribed in this section. Review the requirements while completing the explanation. If the company failed to meet one or more of the requirements, check "No" in the Apparent Compliance column.				
			(d)4)	Has the generator complied with the requirements of 35 Ill. Admin. Code 725.116, Personnel Training listed below:				
				Personnel Training				
				Have facility personnel who are involved with hazardous waste managment successfully completed a program of classroom or on-the-job training that teaches them to perform their duties in a way that ensures the facility's compliance with the requirements of this Part? Yes ✓ No ___				
				Is the training program formalized, i.e. written down? Yes ✓ No ___				
				Is the program directed by a person who has been trained in hazardous waste management procedures? Yes ✓ No ___				
				Does the program cover, at a minimum:				Program does not cover using and inspecting safety equipment.
				A) Procedures for using, inspecting, repairing and replacing facility emergency and monitoring equipment? Yes ___ No ✓ N/A ___				

		Day F/H	Ltr [illegible]	Requirement	Compliance? Yes	No	N/A	Remarks or Comment Number
				B) Key parameters for automatic waste feed cutoff systems? Yes ___ No ___ N/A ✓				Not necessary
				C) Communications or alarm systems? Yes ___ No ✓ N/A ___				Program does not address communications or alarm system; does not address response to fires or explosions.
				D) Response to fire or explosion? Yes ___ No ✓ N/A ___				
				E) Response to ground water contamination incidents? Yes ___ No ___ N/A ✓				Not needed
				Does the program cover the implementation of the contingency plan? Yes ___ No ✓				Training does not cover implementing the contingency plan.
				Have new employees completed the program within six months of the date of employment or assignment to a position requiring them to manage hazardous waste? Yes ___ No ___ N/A ✓				No new employees
				Has the facility conducted an annual review of the initial training? Yes ✓ No ___ N/A ___				
				Are the following documents and records being maintained at the facility:				
				1) The job title for each position related to the management of hazardous waste and the name(s) of the employee(s) filling each job? Yes ✓ No ___				
				2) A written job description for each job position above, to include the requisite skill, education or other qualifications and duties of personnel assigned to each position? Yes ✓ No ___				

		Day F/U	Ltr Sub Sec	Requirement	Compliance? Yes	No	N/A	Remarks or Comment Number
			a)4)	3) A written description of the type and amount of both initial and continuing training that will be given to each person holding a position dealing with hazardous waste management? Yes ✓ No ___				
				4) Records to document that the training or job experience have been given to and completed by personnel dealing with hazardous wastes management? Yes ✓ No ___				
				Is the facility maintaining training records of former employees who were involved in hazardous waste management for a period of at least three years? Yes ✓ No ___ N/A ___				
				form and need not be repeated in this portion.				
				Any violations noted in completing the aforementioned pages from the TSD inspection form at firms whose key letters are A and D are violations of only the requirements in Section 722.134, not the requirements of Part 725.				
			c)1)	Is the generator who accumulates hazardous waste in containers at or near any point of generation where wastes initially accumulate and which is under the control of the operator of the process generating the waste:				Currently no hazardous waste was observed on-site. Only materials to be reused through the process.

				Requirement	Compliance? Yes	No	N/A	Remarks or Comment
				Are containers of hazardous waste being opened, handled or stored in manner which will prevent the rupture of the container or prevent it from leaking? Yes ___ No ___				
				Inspections				
				Is the owner or operator inspecting areas where the containers are stored at least weekly, looking for leaks and for deterioration caused by corrosion or other factors? Yes ___ No ___				
				Note: Any evidence of leakage may be a reason to answer "No" to the above question, even if there are inspection records that indicate that inspections are being done. ___				
				Special Requirements for Incompatible Wastes				
				Is the owner complying with the requirements concerning the management of incompatible wastes or incompatible wastes and materials contained in this Section? Yes ___ No ___ NA ✓				No incompatible wastes on-site
			d)	Has the generator complied with the following relating to the accumulation of hazardous waste in tanks:				No accumulation of hazardous waste in tanks
				General Operating Requirements				
				Is the treatment or storage of hazardous wste in tanks in compliance with Section 725.117(b) (General Requirements for Ignitable, Reactive or Incompatible Wastes) ? Yes ___ No ___ N/A ✓				

		Day F/U	Ltr Sub Sec	Requirement	Compliance? Yes	No	N/A	Remarks or Comment Number
				Part 722				
				GENERATOR STANDARDS Subpart D: Record keeping and Reporting	✓			
OTH	2			Section 722.140 Recordkeeping Has the generator retained for a period of three years:				
			a)	- A copy of each signed manifest? Yes ✓ No ___				
			b)	- A copy of each annual report? Yes ✓ No ___				
			b)	- A copy of each exception report? Yes ___ No ___ NA ✓				Not required
			c)	- Copies of test results, waste analyses or other determinations made in accordance with Section 722-111? Yes ✓ No ___				
			d)	Does a generator who is involved in any unresolved enforcement action continue to maintain the records required in 722.140 (a) thru (c)? Yes ___ No ___ N/A ✓				No unresolved enforcement
			d)	If the Director has requested that the records required in 722.140 (a) thru (c) be maintained for a period longer than three years, has the generator continued to maintain them? Yes ___ No ___ N/A ✓				No request
OTH	2			Section 722.141 Annual Reporting	✓			
			a)	Has the generator who ships waste off-site prepared and submitted a copy of an annual report, as supplied by the Agency, to the Agency by March 1, for the preceeding calendar year? Yes ✓ No ___				

Area	Ref	90 Day F/U	Key Ltr Sub Sec	Requirement	In Apparent Compliance? Yes	No	N/A	Remarks or Comment
			a)	Does the annual report include a description of: - The efforts undertaken during the year to reduce volume and toxicity of waste generated? Yes ✓ No ____ N/A ____ - The changes in volume and toxicity of waste actually achieved during the year in comparison to previous years to the extent such information is available for years prior to 1984?. Yes ✓ No ____ N/A ____ Note: The above descriptions will be required on annual reports for calendar year 1986 and later. Note: A generator who treats, stores or disposes of hazardous waste on-site must submit an annual report as a TSD in accordance with the requirements of 35 Ill. Adm. Code 702, 703, 724, 725 and 40 CFR 266.				
MAN.	1			Section 722.142 Exception Reporting	____	____	✓	Not required
			a)	Has the generator who has not received a signed copy of the manifest from the designated TSD within 35 days of the date the waste was accepted by the initial transporter determined the status of its hazardous waste? Yes ____ No____				

Area	Cl	90 Day F/U	Key Ltr Sub Sec	Requirement	Is Apparent Compliance? Yes	No	N/A	Remarks or Comment Number
			b)	Has the generator who has not received a signed copy of the manifest from the designated TSD within 45 days of the date the waste was accepted by the original transporter submitted an exception report to the director? Yes _____ No_____				
			b)	Does any exception report submitted to the Director contain the following? - A legible copy of the manifest for which the generator does not have confirmation of delivery, and - A cover letter signed by the generator or his authorized representative explaining the efforts taken to locate the hazardous waste and the results of those efforts? Yes ___ No ___ N/A ___				
OTH	1			Section 722.143 Additional Reporting	___	___	✓	
				Has the generator submitted all additional reports concerning quantities and disposition of wastes as required by the Director? Yes ____ No ____				
OTH	2			Section 722.144 Special Requirements for Generators of Between 100 and 1000 Kilograms ~~of~~ per Month.	___	___	✓	Fully regulated generator
				Has the generator retained for a period of three years: - A copy of each signed				

Area	[illegible]	90 Day F/U	Key Ltr Sub Sec	Requirement	In Apparent Compliance? Yes	No	N/A	Remarks or Comment Number
				Part 722				
				GENERATOR STANDARDS				
				Subpart E: Special Conditions				
OTH	I			Section 722.150 International Shipments	___	___	✓	No international shipments
			b)1)	Has the generator notified the Administrator and Agency, in writing, four weeks before the initial shipment of hazardous waste to each country in each calendar year? Yes ___ No ___ N/A ___				
			b)1)	Does the notice include the following?				
				- The waste identification by its USEPA hazardous waste identification number and its DOT shipping description and,				
				- The name and address of the foreign consignee? Yes ___ No ___				
			b)2)	Has the generator received confirmation, in writing, from the foreign consignee that the waste had been delivered? Yes ___ No ___				
				Note: A copy of the manifest signed by the foreign consignee may be used for this purpose.				
			b)3)	Has the generator met the manifest requirements of Section 722.120 except that:				
				- 'In place of the name, address, and USEPA identification number of the designated facility, the name and				

Area	CI	90 Day F/U	Key Ltr Sub Sec	Requirement	In Apparent Compliance? Yes	No	N/A	Remarks or Comment Number
			e)1)	Has the person importing hazardous waste met the manifest requirements of Section 722.120 except that: In place of the generator's name, address and USEPA identification number, the name and address of the foreign generator and the importer's name, address and USEPA identification number are used.				
			e)2)	Has the importer or his agent signed the manifest in place of the generator? Yes ___ No ___ N/A ___				
			e)2)	Has the importer or his agent obtained the signature of the initial transporter? Yes ___ No ___ N/A ___				
			f)	Is the person importing hazardous waste using manifests obtained from the Agency? Yes ___ No ___ N/A ___				
OTH	2	X		Section 722.151 Farmers Is a farmer who is disposing of waste pesticides from his own use which are hazardous wastes: - Triple rinsing each emptied pesticide container in accordance with 35 Ill. Adm. Code 727.107 (b)(3), Residues of Hazardous Waste in Empty Containers? Yes ___ No ___ N/A ___	___	___	✓	No farming activities