AC PACKAGED UNIT SCHEDULE

DESIGNATION	CFM	ESP	H.P.	RPM	TOTAL CAPACITY	SENSIBLE CAPACITY	MIN. COIL FACE AREA	ROWS	FINS PER FOOT	ENT DB	ENT WB	LVG DB	LVG WB	COND. WATER ENT TEMP.	COND. WATER LVG TEMP.	GPM	FILTER FACE AREA	FILTER TYPE	MCA	MAX FUSE SIZE	WEIGHT	TRANE MODEL NO.	HEIGHT x WEIGHT x DEPTH	REMARKS
AC-30N	6000	2.5	5	1199	208.7	178.3	16.04	3	144	85	67	58.2	55.9	85	95	45	16.6	30/30	29	35	1208	SWUB15	89x88x30	UNIT REQUIRED (2)*
AC-30S	6000	2.5	5	1199	208.7	178.3	16.04	3	144	85	67	58.2	55.9	85	95	45	16.6	30/30	29	35	1208	SWUB15	89x88x30	UNIT REQUIRED (2)*
AC-31	3200	2.5	3	1356	125.1	96	9.8	3	144	85	67	58	54.4	85	95	31.8	10.4	30/30	6.1	15	509	SWUB10	85x65x30.	- *
AC-29N	3200	2.5	3	1356	125.1	96	9.8	3	144	85	67	58	54.4	85	95	31.8	10.4	30/30	6.1	15	509	SWUB10	85x65x30	- *
AC-15S	2385	0.5	0.5 H.A.		70.525	53.1	7.3	3	144	85	67	58	54.4	85	95	15	4.8	30/30	15	20	312	2500H6001		CARRIER (2) UNITS REQ'D (1) COMPR. 460V-3Ø-60H. 30% GLYCOL
AC-15S	2385	0.5	0.5 H.A.		70.525	53.1	7.3	3	144	85	67	58	54.4	85	95	15	4.8	30/30	15	20	312	2500H6001		CARRIER (2) UNITS REQ'D (1) COMPR. 460V-3Ø-60H. 30% GLYCOL

NOTES:
* PROVIDE 30% FILTERS & RETURN GRILLE.
* PROVIDE DUAL COMPRESSURES
* 30% GLYCOL

CONDENSATE PUMP AND RECEIVER SCHEDULE

DESIGNATION	SERVICE	LOCATION	WATER FLOW RATE (GPM)	PUMP HEAD	SIMPLEX PUMPS	MOTOR DATA: MOTOR H.P.	RPM	VOLTS/PHASE	PACKAGED PUMP CONTROLLER W/RECEIVER SWITCH (Y/N)	EMERG POWER REQ'D (Y/N)	RECEIVER CAPACITY (GALLONS)	OPERATING WEIGHT (LBS)	MANUFACTURER/ NUMBER REQ.	REMARKS/ MODEL NO.
CP-30N	AC-30N	30TH FLOOR	60	15 FT	YES	1/25	-	120/1	-	-	-	-	BECKETT (2)	CU-40-1UL *
CP-30S	AC-30S	30TH FLOOR	60	15 FT	YES	1/25	-	120/1	-	-	-	-	BECKETT (2)	CU-40-1UL *

NOTES:
* FLOAT SWITCH TO CONTROL PUMP OPERATION. PUMP, MOTOR, RESERVOIR AND UL LABEL OR APPROVED EQUAL. UNIT SHALL INCLUDE A SAFETY SWITCH WHICH SHALL PROVIDE A 24 VOLT SIGNAL HIGH LEVEL IN THE RESERVOIR

FAN SCHEDULE

DESIGNATION	SERVICE	LOCATION	TYPE	MAXIMUM AIR QUANTITY (CFM)	TOTAL STATIC PRESSURE (IN. OF WATER)	FAN SPEED/T.S. (RPM)	OUTLET VELOCITY (FPM)	WHEEL DIAMETER (INCHES)	DISCHARGE DIRECTION	CONTROL TYPE	FAN MOTOR DATA: MOTOR BHP	MOTOR HP	SPEED (RPM)	VOLTS/PHASE	MOTOR LOCATION	STARTER BY (DIV 15 OR 16)	STARTER TYPE A-AUTO B-AUTO TRANSF C-ACROSS THE LINE	EMERGENCY POWER REQ'D (Y/N)	MANUFACTURER	MODEL NO.	REMARKS
EM-9	ELEV. 30	29TH FLOOR	PROPELLER	890	.5	5089	-	-	WALL	-	-	½	810	460/3	-	-	-	-	GREENHECK	SPF 24	-
EM-13	ELEV. 32	29TH FLOOR	PROPELLER	890	.5	5089	-	-	WALL	-	-	½	810	460/3	-	-	-	-	GREENHECK	SPF 24	-
EM-36	ELEV. 36	ABOVE ELEV. MACH. RM.	UTILITY FAN	1005	1.5	1661	-	13	UB	-	.47	¾	-	460/3	-	-	-	-	TRANE	CUBA 13	-

NOTES:
1. REFER TO SECTION 15240, "MECHANICAL SOUND & VIBRATION CONTROL", FOR VIBRATION ISOLATION AND INERTIA BASE REQUIREMENTS.

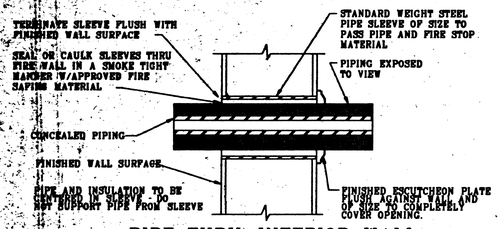

PIPE THRU INTERIOR WALL

PIPING WALL PENETRATION DETAILS
NOT TO SCALE

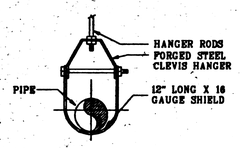

TYPICAL HANGER FOR CHILLED & CONDENSER WATER PIPING

PIPE SUPPORT DETAIL (TYPICAL HANGERS)

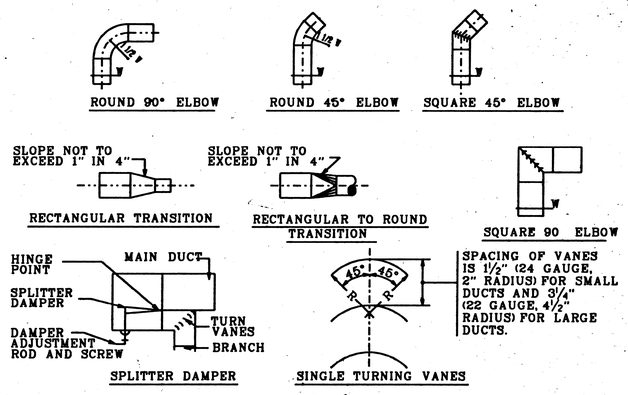

LOW VELOCITY DUCT LAYOUT
NO SCALE

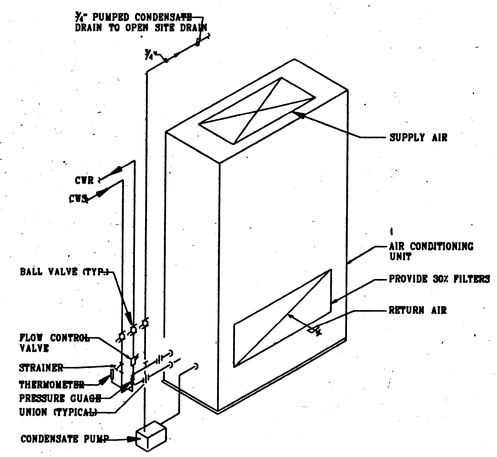

A/C UNIT DETAIL
NOT TO SCALE

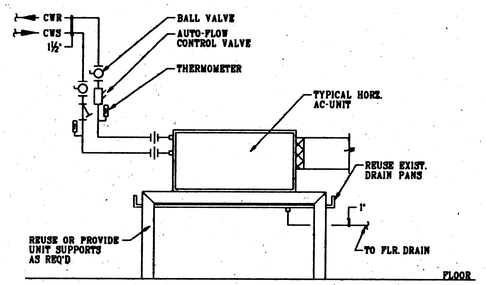

TYP. HORZ. AC. UNITS DETAIL
NOT TO SCALE

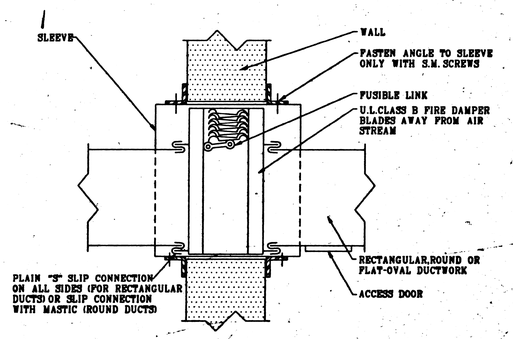

FIRE DAMPER DETAIL
NOT TO SCALE

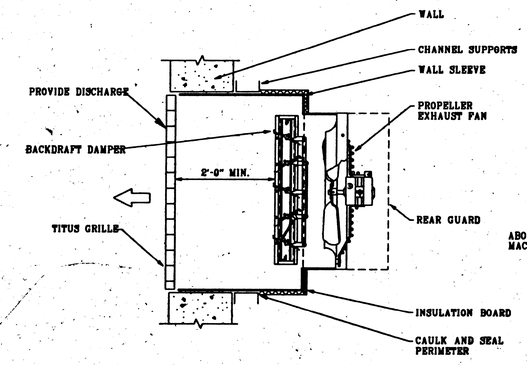

WALL EXHAUST FAN DETAIL
NOT TO SCALE

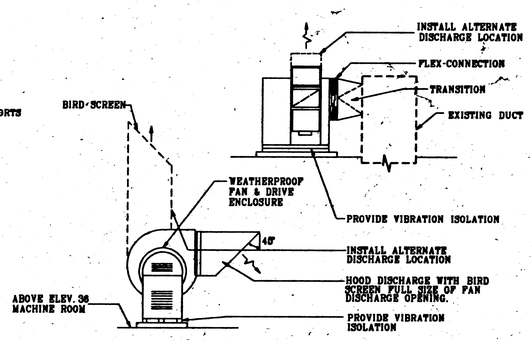

CENTRIFUGAL EXHAUST FAN DETAIL
NOT TO SCALE

NO.	REVISION	DATE
	FINAL	2/23/96

ENVIRONMENTAL SYSTEMS DESIGN
CONSULTING ENGINEERS
MECHANICAL - ELECTRICAL
55 EAST MONROE ST.-SUITE 1660
CHICAGO, ILLINOIS 60603
(312) 372-1200

J. MARTIN ASSOCIATES
Elevator Consultants
Williamsburg Commons
4 Aster Court
East Brunswick, N.J. 08816-5825
908-613-9680 FAX 908-613-9696

GENERAL SERVICES ADMINISTRATION
PUBLIC BUILDING SERVICE
CHICAGO IL

BUILDING	NAME	E. M. DIRKSEN (EMD) BUILDING		
	ADDRESS	STREET 219 S. DEARBORN ST		
		CITY CHICAGO	STATE IL	
	NUMBER			
PROJECT	DESCRIPTION	ELEVATOR IMPROVEMENT FOR EMD BLDG		
	NUMBER	11L94004		
DRAWING	DRAWN BY	ML	CKD BY KS	DATE 2/23/96
	TITLE	SCHEDULES & DETAILS		
	TYPE	MECHANICAL		
	NUMBER	9 (TYPE)	M (SERIES)	11 (SEQUENCE)