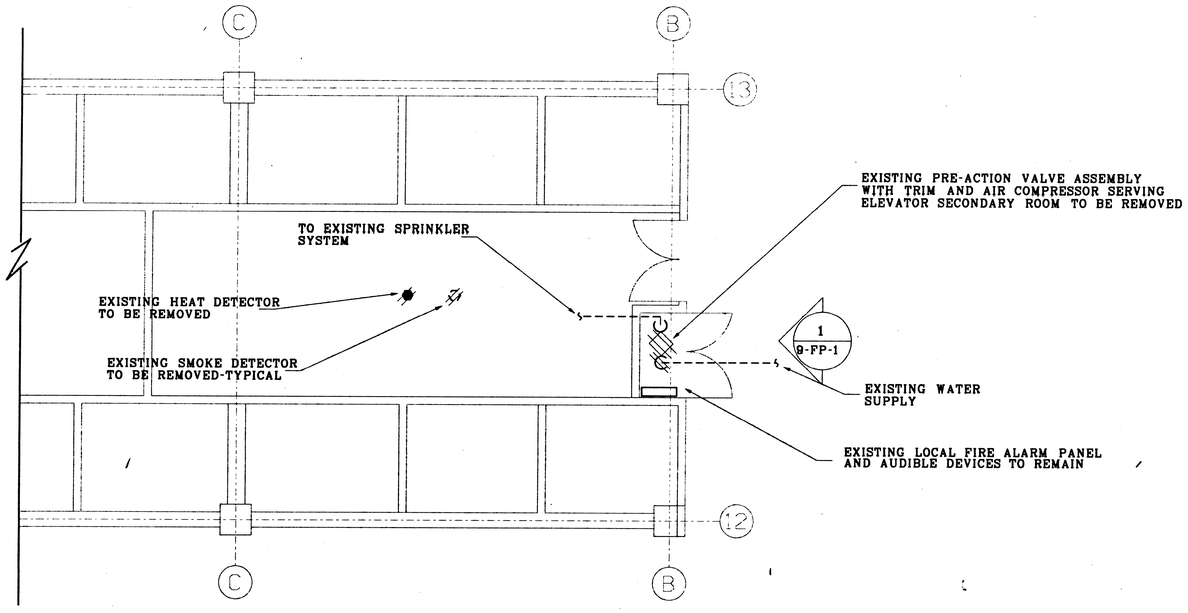

ELEVATOR NOS. 7 THRU 12 MOTOR GENERATOR ROOM DEMO PLAN @ 15TH FLOOR (SOUTH)

SCALE: 1/4" = 1"-0"

NORTH

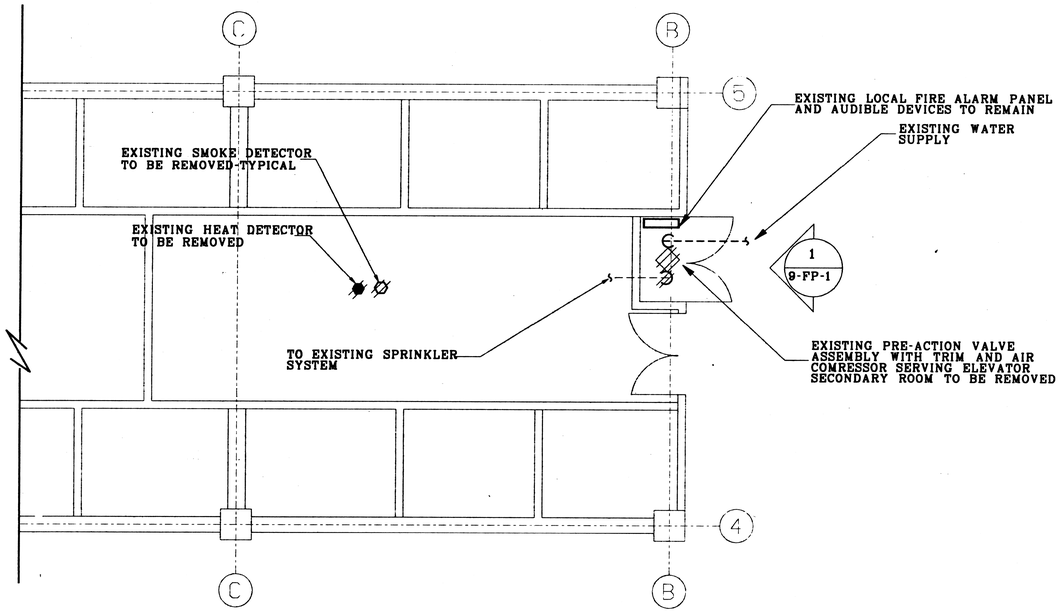

ELEVATOR NOS. 1 THRU 6 MOTOR GENERATOR ROOM DEMO PLAN @ 15TH FLOOR (NORTH)

SCALE: 1/4" = 1"-0"

NORTH

NO.	REVISION	DATE
	FINAL	2/23/96

ENVIRONMENTAL SYSTEMS DESIGN
ESD CONSULTING ENGINEERS MECHANICAL - ELECTRICAL
55 EAST MONROE ST.-SUITE 1660
CHICAGO, ILLINOIS 60603
(312) 372-1200

J. MARTIN ASSOCIATES
Elevator Consultants
Williamsburg Commons
4 Aner Court
East Brunswick, N.J. 08816-5826
908-613-9600 FAX 908-613-9696

GENERAL SERVICES ADMINISTRATION
PUBLIC BUILDING SERVICE
CHICAGO IL

BUILDING	NAME	E. M. DIRKSEN (EMD) BUILDING			
	ADDRESS	STREET 219 S. DEARBORN ST.			
		CITY CHICAGO		STATE IL	
	NUMBER				
PROJECT	DESCRIPTION	ELEVATOR IMPROVEMENT FOR EMD BLDG			
	NUMBER	IIL94004			
DRAWINGS	DRAWN BY	M.R.	CKD BY S.S.	DATE	2/23/96
	TITLE	15TH FLOOR MOTOR GEN. DEMO.			
	TYPE	FIRE PROTECTION PLAN			
	NUMBER	9 (TYPE)	FP (SERIES)	2 (SEQUENCE)	

Copyright © 1994 by Environmental Systems Design, Inc.