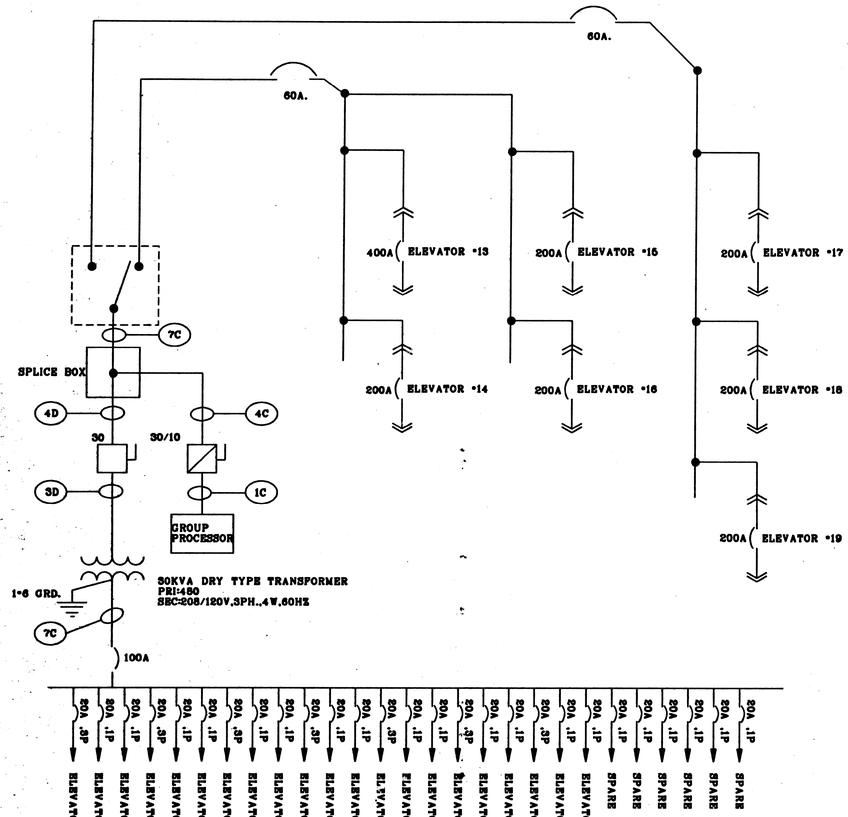

SINGLE LINE DIAGRAM
ELEVATORS NOS. 13 THRU 19
30th. FLOOR (NORTH)
4/B EI NTS

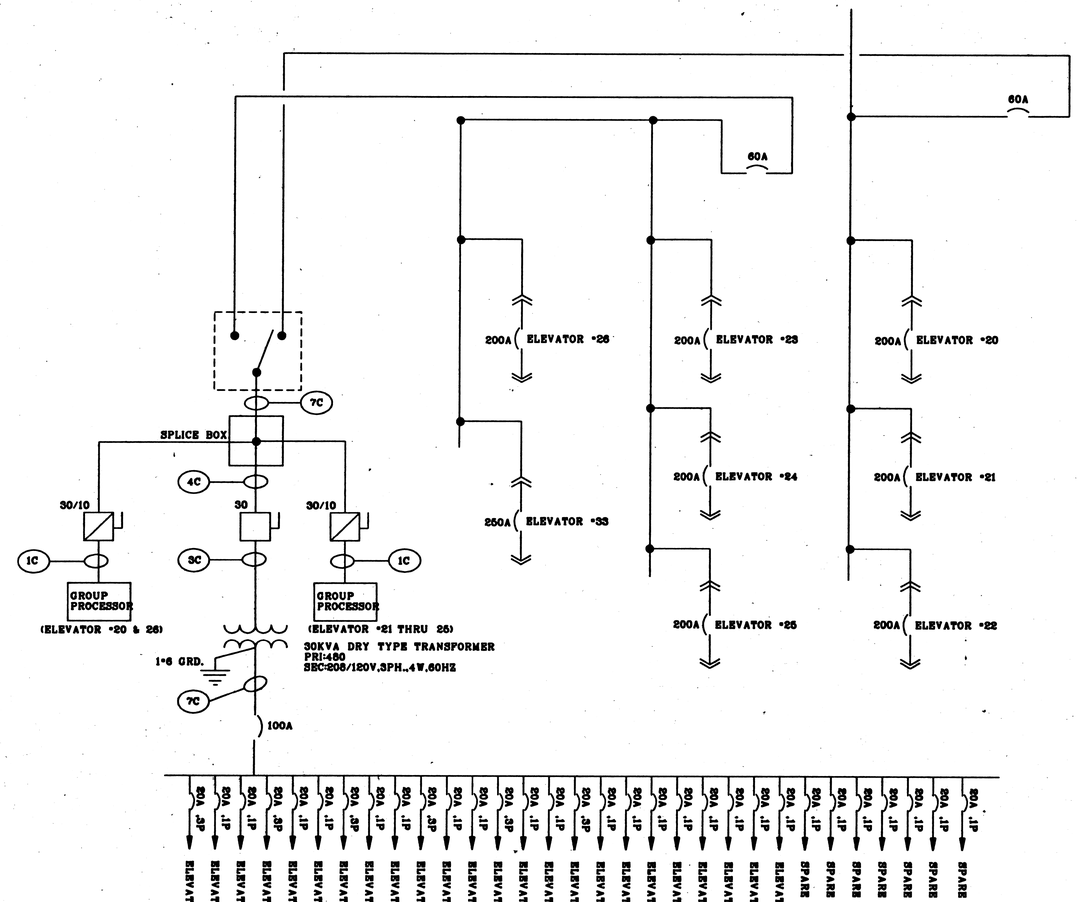

SINGLE LINE DIAGRAM
ELEVATORS NOS. 20 THRU 26 & 33
30th. FLOOR (NORTH)
5/B EI NTS

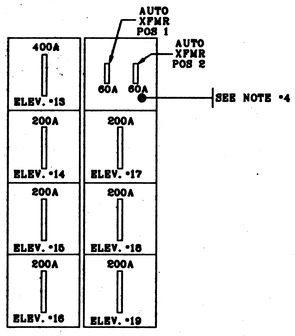

EXISTING ELEVATOR SWITCHBOARD
MACHINE ROOM 30TH FLOOR(NORTH)
4 EI NTS

NOTES:

1.BREAKER FOR ELEVATOR #13 IS RATED FOR 600AMPS. SET AT 400AMPS TRIP. PROVIDE NECESSARY C/T FOR TRIP AT 180AMPS. VERIFY NEW TRIP RATING WITH ELEVATOR MANUFACTURER.

2.BREAKER FOR ELEVATOR #14 THRU 19 ARE RATED FOR 250AMPS MAXIMUM. BREAKERS HAVE FOLLOWING SETTING:
A-125
B-156
C-176
D-220
E-250
PROVIDE TRIP AT 180 AMPS

3.BREAKERS FOR ELEVATOR #14,16 & 18 REQUIRES REPAIR.

4.REPLACE EXISTING 20AMPS. CIRCUIT BREAKER WITH 60A,3P. CONFER WITH MANUFACTURER AND PROVIDE NEW WIRING.

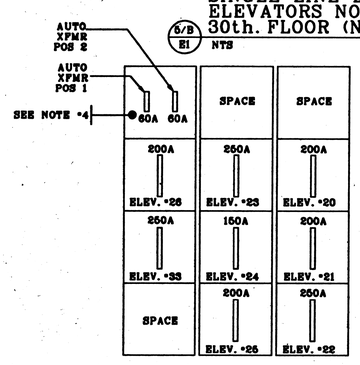

EXISTING ELEVATOR SWITCHBOARD
MACHINE ROOM 30TH FLOOR(SOUTH)
6 EI NTS

NOTES:

1.BREAKER FOR ELEVATOR #20,21,22,23,25,26 & 33 ARE RATED FOR 250AMPS MAXIMUM WITH THE FOLLOWING SETTING:
A-125
B-156
C-176
D-220
E-250
PRESENT SETTING IS AT 200AMPS. PROVIDE TRIP AT 180AMPS. VERIFY WITH MANUFACTURER.

2.BREAKER FOR ELEVATOR #24 IS RATED FOR 250AMPS MAXIMUM WITH FOLLOWING SETTINGS:
A-125
B-156
C-176
D-220
E-250
PRESENT SETTING IS AT 150AMPS. PROVIDE TRIP AT 180AMPS. VERIFY WITH MANUFACTURER.

3.BREAKERS FOR ELEVATOR #33 REQUIRES REPAIR. SET TRIP AT 140 AMPS. USE 10D AS FEEDER SIZE . PROVIDE 200/130 FUSED DISCONNECT SWITCH

4.REPLACE EXISTING 20AMPS. CIRCUIT BREAKER WITH 60A,3P. CONFER WITH MANUFACTURER AND PROVIDE NEW WIRING.

NO.	REVISION	DATE
	FINAL	2/23/96

ENVIRONMENTAL SYSTEMS DESIGN
CONSULTING ENGINEERS
MECHANICAL - ELECTRICAL
55 EAST MONROE ST.-SUITE 1660
CHICAGO, ILLINOIS 60603
(312) 372-1200

J.MARTIN ASSOCIATES
Elevator Consultants
Williamsburg Commons
4 Aster Court
East Brunswick, N.J. 08816-5835
908-613-9400 FAX 908-613-9490

GENERAL SERVICES ADMINISTRATION
PUBLIC BUILDING SERVICE
CHICAGO IL

BUILDING	NAME	E. M. DIRKSEN (EMD) BUILDING
	ADDRESS	219 S. DEARBORN ST
	CITY / STATE	CHICAGO IL
	NUMBER	
PROJECT	DESCRIPTION	ELEVATOR IMPROVEMENT FOR EMD BLDG
	NUMBER	IIL94004
GRAPHICS	DRAWN BY	RC
	CKD BY	MA/JS
	DATE	2/23/96
	TITLE	MISCELLANOUS
	TYPE	ELECTRICAL
	NUMBER	9 E 3

Copyright © 1994 by Environmental Systems Design, Inc.