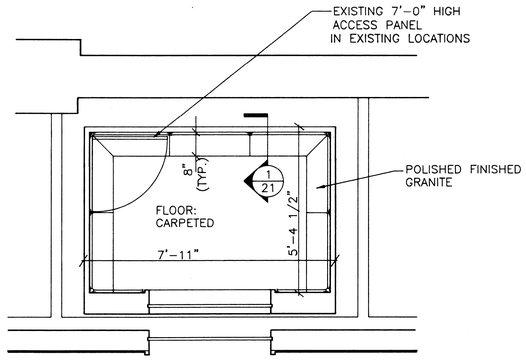

TYPICAL CAB FLOOR PLAN

PASSENGER ELEVATOR

SCALE: 1/2 : 1'-0"

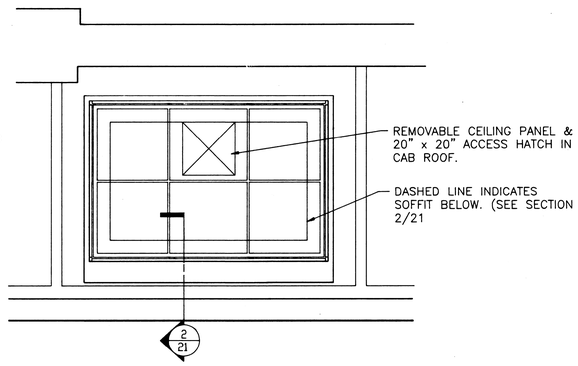

TYPICAL CAB FLOOR PLAN

PASSENGER ELEVATOR

SCALE: 1/2 : 1'-0"

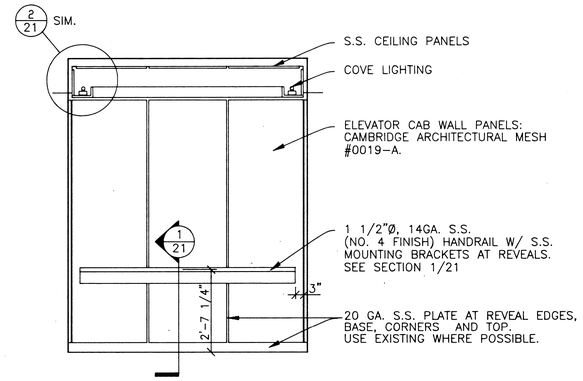

CAB REAR ELEVATION

SCALE: 1/2 : 1'-0"

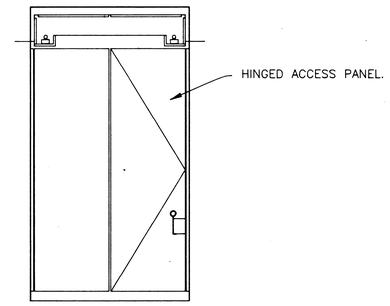

CAB SIDE ELEVATION

SCALE: 1/2 : 1'-0"

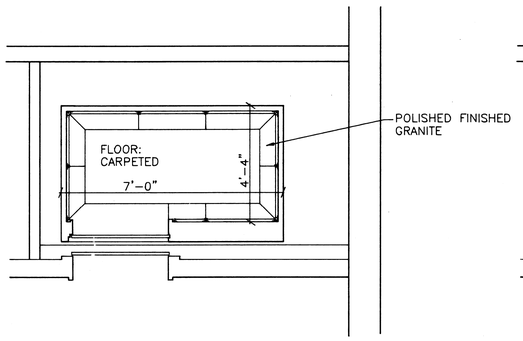

TYPICAL CAB FLOOR PLAN

JUDGES ELEVATOR

SCALE: 1/2 : 1'-0"

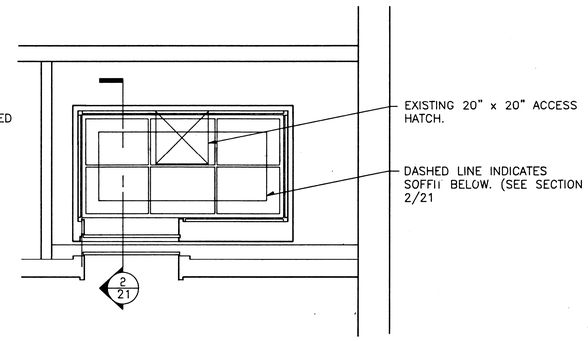

TYPICAL CAB REFLECTED CEILING PLAN

JUDGES ELEVATOR

SCALE: 1/2 : 1'-0"

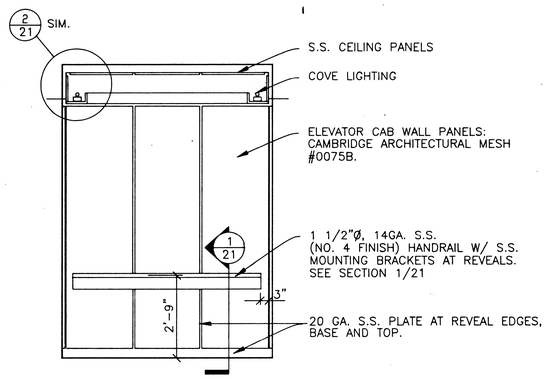

CAB REAR ELEVATION

SCALE: 1/2 : 1'-0"

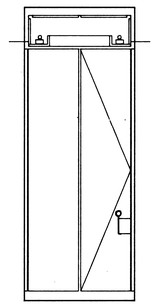

CAB SIDE ELEVATION

SCALE: 1/2 : 1'-0"

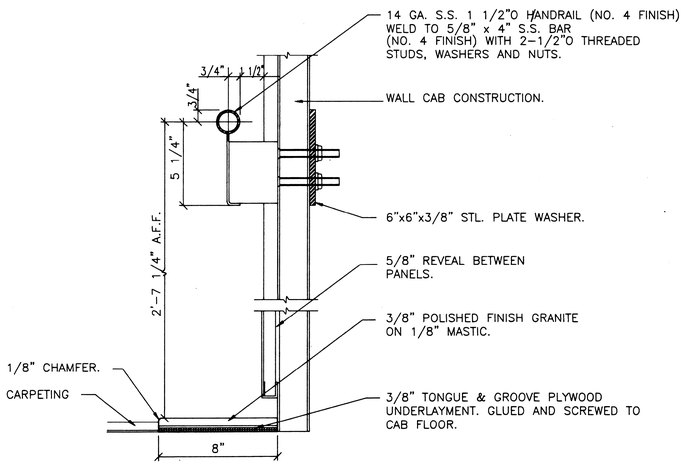

1 DETAIL

SCALE: 3" : 1'-0"

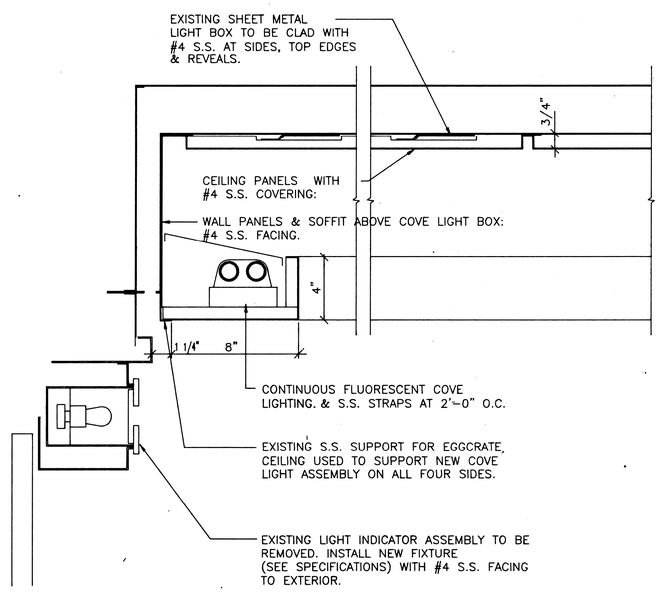

2 DETAIL

SCALE: 3" : 1'-0"

GENERAL NOTE:

CAB WALL PANELS TO BE THE SAME SIZE AS EXISTING PANELS.

NO.	REVISION	DATE
	FINAL	2/23/96

MDL
MC BRIDE & DUDLEY, LTD.

3 SOUTH PROSPECT AVE.
SUITE 8
PARK RIDGE, ILLINOIS
60068
847/823-1114

ARCHITECTURAL SERVICES

J. MARTIN ASSOCIATES
Elevator Consultants
Williamsburg Commons
4 Auer Court
East Brunswick, N.J. 08816-5826
908-613-9600 FAX 908-613-9696

GENERAL SERVICES ADMINISTRATION
PUBLIC BUILDING SERVICE
CHICAGO, ILLINOIS

BUILDING	NAME	E.M. DIRKSEN BUILDING		
	ADDRESS	STREET 219 S. DEARBORN ST.		
		CITY CHICAGO	STATE IL.	
	NUMBER			
PROJECT	DESCRIPTION	ELEVATOR IMPROVEMENT FOR EMD BLDG		
	NUMBER	IIL94004		
DRAWINGS	DRAWN BY	WGO	CKD BY REM	DATE 2/23/96
	TITLE			
	TYPE	PASSENGER CAB PLANS & DETAILS		
	NUMBER	3 (TYPE)	EV (SERIES)	21 (SEQUENCE)