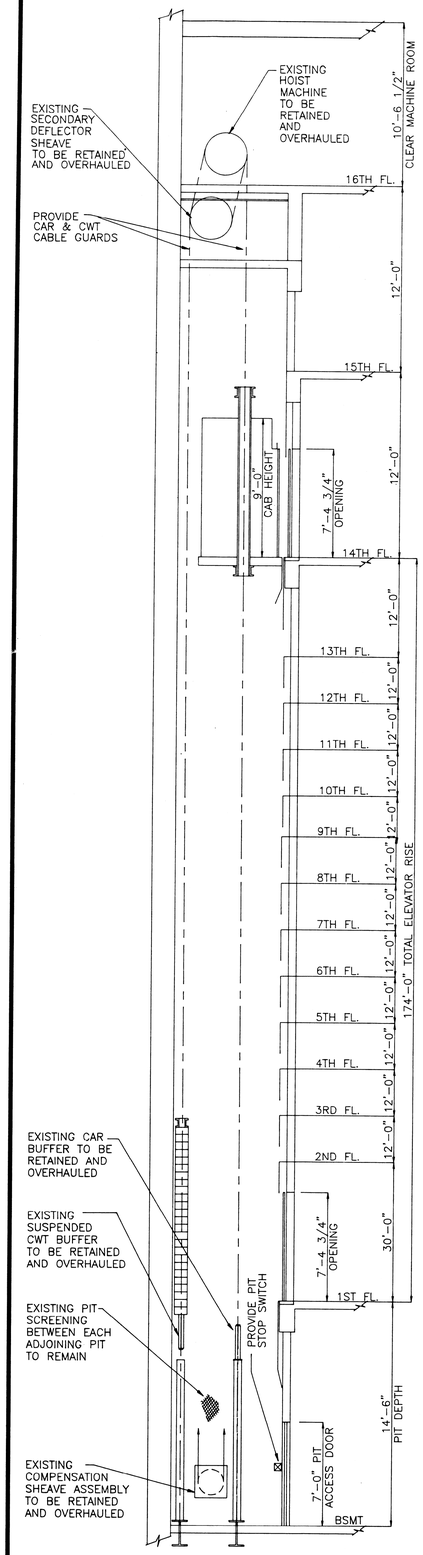

SECTION A EV2 EV3

ELEVATOR NOS. 1 THRU 5

SCALE: 1/4" = 1'-0"

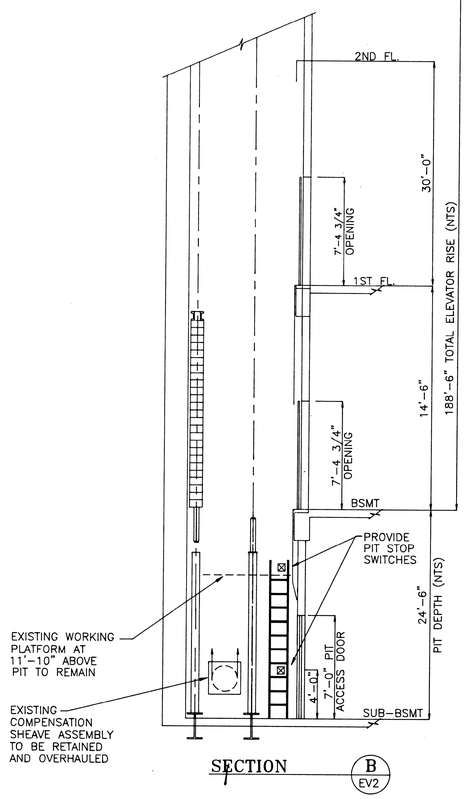

SECTION B EV2

ELEVATOR NO. 6

SCALE: 1/4" = 1'-0"

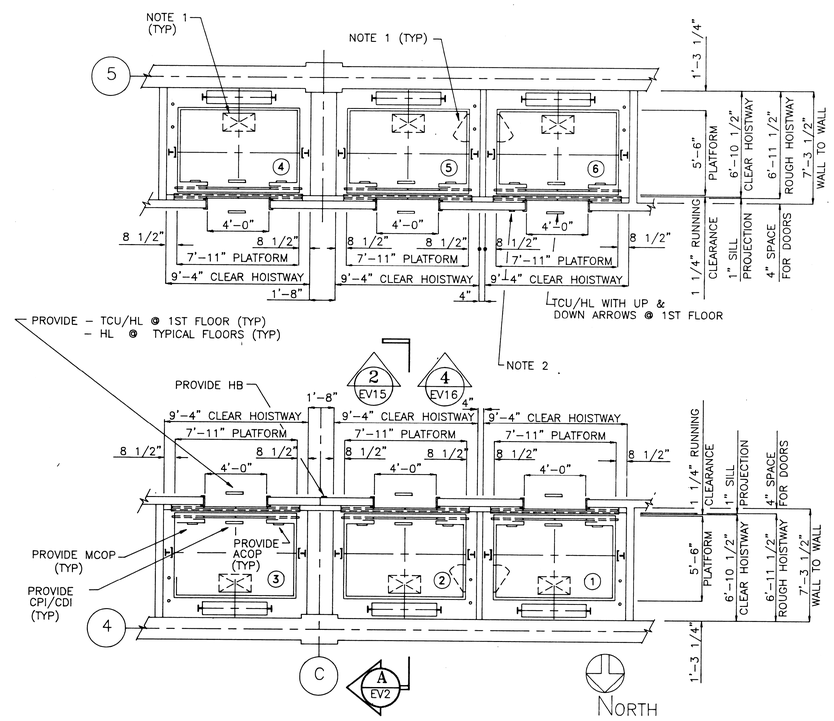

TYPICAL HOISTWAY PLAN
ELEVATOR NOS. 1 THRU 6
3500 LBS. @ 600 F.P.M.

SCALE: 1/4" = 1'-0"

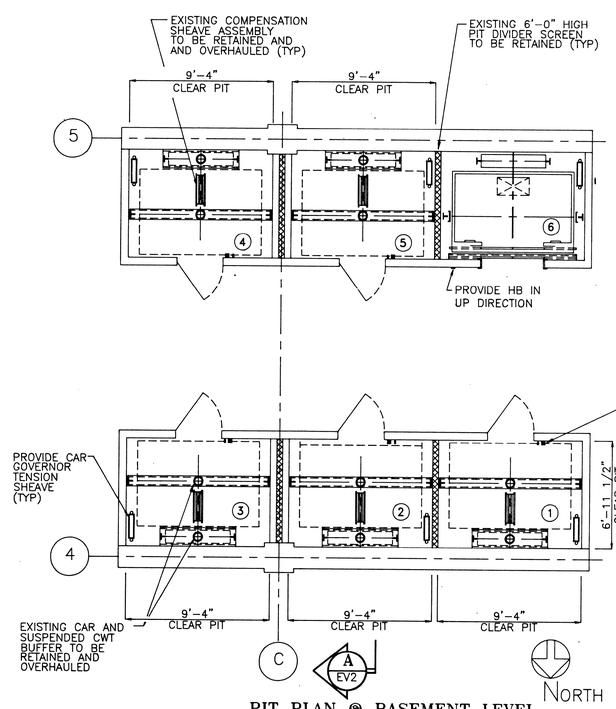

PIT PLAN @ BASEMENT LEVEL
ELEVATOR NOS. 1 THRU 5

SCALE: 1/4" = 1'-0"

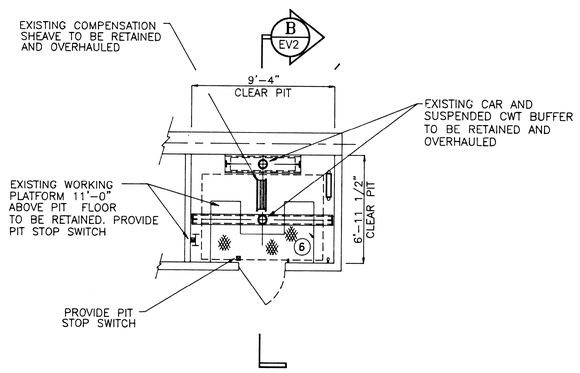

PIT PLAN @ SUB BASEMENT LEVEL
ELEVATOR NO. 6

SCALE: 1/4" = 1'-0"

NOTE:

1. EXISTING SIDE AND TOP ACCESS OPENING TO REMAIN WITH NEW CONTACT SWITCHES AND LOCKING CYLINDERS.
2. PROVIDE HB @ 1ST FLOOR INCLUDE DOWN CALL BUTTON FOR ELEVATOR NO. 6

NO.	REVISION	DATE
	FINAL	2/23/96

ENVIRONMENTAL SYSTEMS DESIGN
CONSULTING ENGINEERS
MECHANICAL – ELECTRICAL
55 EAST MONROE ST.–SUITE 1660
CHICAGO, ILLINOIS 60603
(312) 372–1200

J. MARTIN ASSOCIATES
Elevator Consultants
Williamsburg Commons
4 Auer Court
East Brunswick, N.J. 08816-5826
908-613-9600 FAX 908-613-9696

GENERAL SERVICES ADMINISTRATION
PUBLIC BUILDING SERVICE
CHICAGO, ILLINOIS

BUILDING	NAME	E. M. DIRKSEN BUILDING
	ADDRESS	219 S. DEARBORN ST. / CHICAGO / IL
	NUMBER	
PROJECT	DESCRIPTION	ELEVATOR IMPROVEMENT FOR EMD BLDG
	NUMBER	IIL94004
DRAWINGS	DRAWN BY	KP / CKD BY LP / DATE 2/23/96
	TITLE	HW PLANS & SECTION: ELEVS. 1 – 6
	TYPE	
	NUMBER	3 (TYPE) / EV (SERIES) / 2 (SEQUENCE)