CITY OF ELMIRA, NEW YORK

HERITAGE PARK URBAN RENEWAL PROJECT

SITE IMPROVEMENTS CONTRACT No. 2 N.Y. R-174

STRUCTURE "R" AND "L" DETAILS

NEWMAN & DOLL

WHITE PLAINS, N.Y. — NEW HAVEN, CONN.

Date: January, 1972

Scale: As Shown

Sheet No. 28 of 36

AS-BUILT Sept. 1974

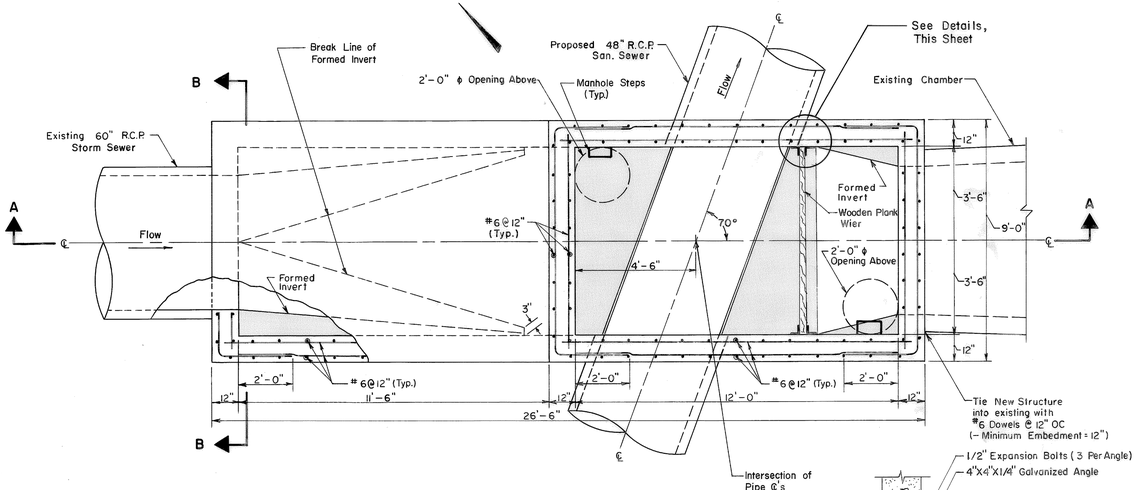

PLAN

Scale: 3/8" = 1'-0"

STRUCTURE "L"

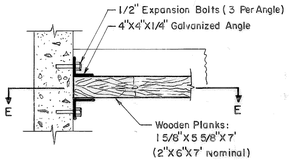

PLAN

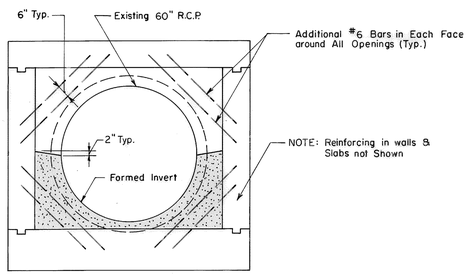

SECTION "B-B"

Scale: 3/8" = 1'-0"

STRUCTURE "L"

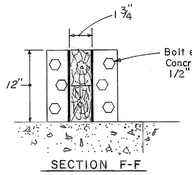

SECTION F-F

WOODEN PLANK WEIR

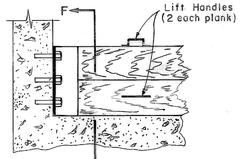

SECTION E-E

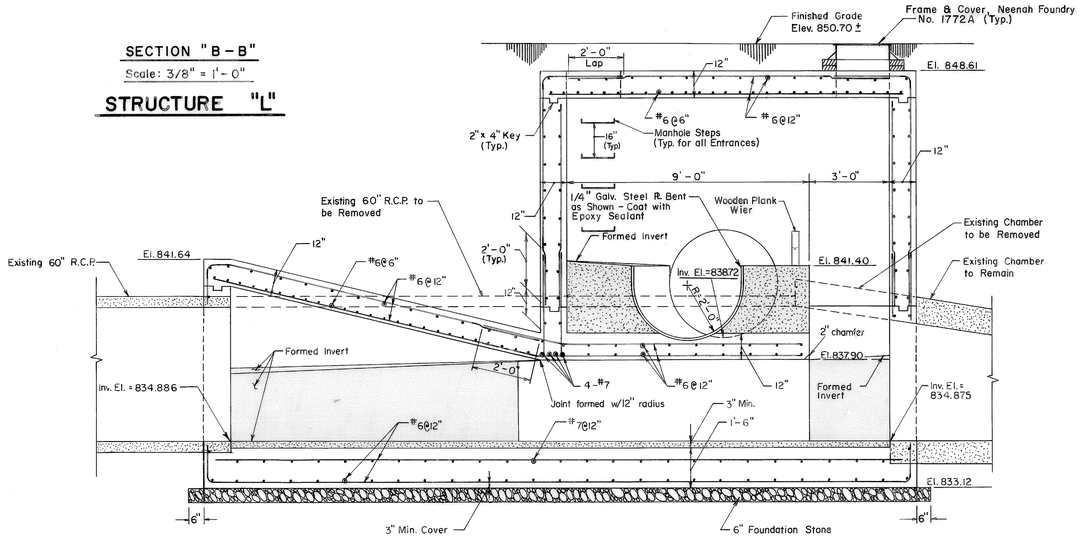

SECTION "A-A"

Scale: 3/8" = 1'-0"

STRUCTURE "L"

STA. 28+66 E. WATER ST.

(SEE SHEET #7)

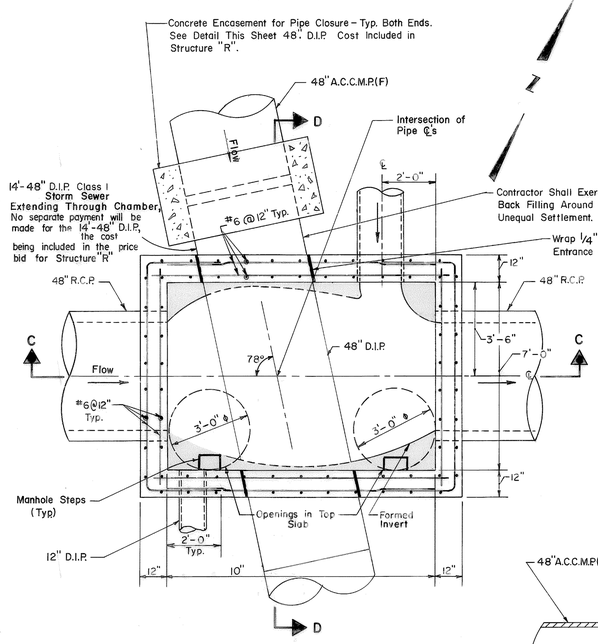

PLAN

Scale: 3/8" = 1'-0"

STRUCTURE "R"

GENERAL NOTES (FOR ALL STRUCTURES)

1. Concrete for structure shall be class "B" concrete, f'_c = 3000 p.s.i.
2. Bar reinforcement shall conform to ASTM, A-615, Grade 40, f_s (tensile) = 20,000 p.s.i.
3. Provide keyed construction joints between successive pours of concrete.
4. Provide 2-#6 bars E.F. around pipe and manhole openings.
5. Reinforcing bars shall be spliced 30 dia. unless otherwise shown.
6. Concrete cover to reinforcement shall be 2" min. or as shown.
7. Provide 6" minimum compacted granular material for foundation or as directed by the Engineer.
8. For locations of Structures "R" and "L" See Sheet #6 and #7 respectively.

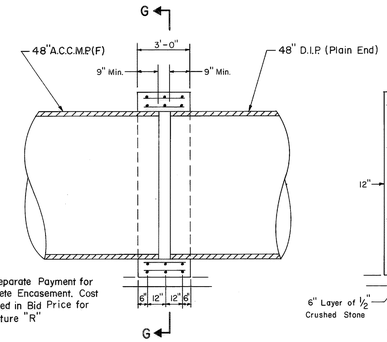

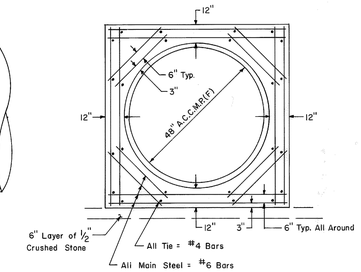

SECTION G-G

CONCRETE ENCASEMENT FOR STORM DRAIN CLOSURE

N.T.S.

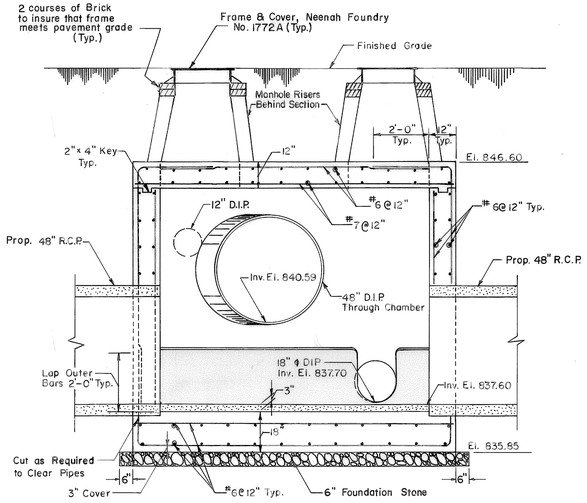

SECTION "C-C"

Scale: 3/8" = 1'-0"

STRUCTURE "R"

STA. 21+22 E. WATER ST.

(SEE SHEET #6)

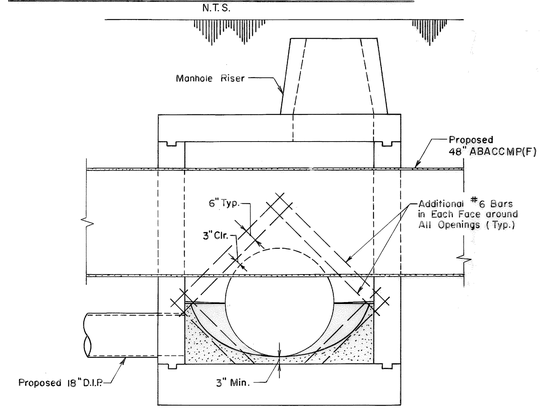

SECTION "D-D"

Scale: 3/8" = 1'-0"

STRUCTURE "R"

D-1-1903