HYUNDAI HEAVY INDUSTRIES CO.,LTD.	**HiBallast™ Ballast Water Management System**

Document 4-2. Shipboard Test Report

APPLICATION/PROJECT	Alternate Management System (AMS)
APPROVAL AUTHORITY	USCG
DOCUMENT NO.	HiB-04200-AMS
APPLICANT	Hyundai Heavy Industries Co., Ltd.
ISSUING PARTY	Engine & Machinery Research Institute / R&D Division

Rev.	Date	Reason for Issue	Prepared	Checked	Approved
0	30 Sep., 2012	Draft	T. J. Rhee	Y. G. Kim	K. N. Chung
1	30 Oct., 2012	Final	S. H. Yoon	Y. G. Kim	K. N. Chung
2					
3					
4					

시 험 성 적 서
Certificate of Test

1. 신 청 자
Applicant

ㅇ **회사명** : Hyundae Heavy Industries Co., Ltd.
Company Name

ㅇ **주 소** : #1 Jeonha-Dong, Dong-Gu, Ulsan, Korea
Address

ㅇ **접수일자** : Jan. 14, 2011
Date of Receipt

2. 시험대상품
Equipment under Test

ㅇ **시료명** : Ballast Water Management System
Name of Product

ㅇ **모 델** : HiBallast-1200
Model

ㅇ **일련번호** : HiB-2010-001
Serial No.

3. 시험규격 : The Provisional Regulation for Type Approval of Ballast Water Management System」 of No. 2011-342 notified by Ministry of Land, Transport and Maritime Affairs, and Methods in accordance with the requirements of G8 (IMO. Res. MEPC. 174 (58), Annex 4, PART 2, 2.2)
Test Standards

4. 성적서 용도 : Type Approval by the Ministry of Land, Transport and Maritime Affair (Shipboard test)
Purpose of Test

5. 시험기간 : Feb. 19, 2011 ~ Oct. 11, 2011
Test Period

6. 시험환경 : ㅇ **Temperature** : (20.0 ± 1.0) ℃ , ㅇ **Relative Humidity** : (40 ± 5) % R.H.
Environment

7. 시험결과 : **PASS**
Test Result

본 시험성적서의 시험결과는 상기 신청인으로부터 제공된 시험품에만 적용되며, 본 연구원의 사전 서면승인 없이 성적서의 전부 또는 일부를 복사하여 사용할 수 없음.

The test results attached herewith contained apply only to the test sample(s) supplied by the named applicant, and this test report shall not be reproduced in full or in part without the prior written approval of the KOMERI.

Oct. 20, 2011

Prepared by Documentation Specialist
Name : Kyung-Min Kim

Approved by Quality Manager
Name : Jae-Uk Kang

한국조선해양기자재연구원
Korea Marine Equipment Research Institute

부산광역시 영도구 해양로 435 (우 606-806)
435 Haeyang-ro Yeongdo-gu 606-806 Busan Korea
Tel:+82-51-400-5000 Fax:+82-51-400-5091
http://www.komeri.re.kr

TEST REPORT

1. APPLICANT INFORMATION

Company Name	:	Hyundai Heavy Industries Co., Ltd.
Address	:	#1 Jeonha-Dong, Dong-Gu, Ulsan, Korea
Name of Applicant	:	Jai-Seong Lee, Oe-Hyeon Kim
Telephone	:	+82-52-202-3229
Facsimile	:	+82-52-202-9588

2. MANUFACTURER INFORMATION

Company Name	:	Hyundai Heavy Industries Co., Ltd.
Address	:	#1 Jeonha-Dong, Dong-Gu, Ulsan, Korea
Telephone	:	+82-52-202-3229
Facsimile	:	+82-52-202-9588

3. LABORATORY INFORMATION

Laboratory	:	Korea Marine Equipment Research Institute
Address	:	435 Haeyang-ro Yeongdo-gu Busan 606-806 Korea
Telephone	:	+82-51-400-5000
Facsimile	:	+82-51-400-5091

4. EQUIPMENT UNDER TEST (EUT) INFORMATION

Name of Product	:	Ballast Water Management System
Model	:	HiBallast-1200
Serial No.	:	HiB-2010-001
Treatment Rated Capacity	:	1 200 m^3/hr, AC 220 V/440 V, 60 Hz

5. TEST SUMMARY

No.	Test Item	Test Standard	Result
1	1st Shipboard test (Hongkong port in Hongkong to Busan new port in Korea)	The Provisional Regulation for Type Approval of Ballast Water Management System」 of No. 2011-342 notified by Ministry of Land, Transport and Maritime Affairs, and Methods in accordance with the requirements of G8 (IMO. Res. MEPC. 174 (58), Annex 4, PART 2, 2.2)	PASS
2	2nd Shipboard test (Shinsundae port in Korea to Shanghai bay in China)		PASS
3	3rd Shipboard test (Shanghai port in China to Xiamen bay in China)		PASS
4	4th Shipboard test (Shinsundae port in Korea to Shinsundae port in Korea)		PASS

TABLE OF CONTENTS

1. SHIPBOARD TEST 5

APPENDIX I. DRAWING 10
APPENDIX II. PROCEDURE ON SHIPBOARD TEST 11
APPENDIX III. TEST RESULT DETAILS 12
APPENDIX IV. ANALYZED SAMPLE PICTURES 20

1. SHIPBOARD TEST

1.1 TEST ENVIRONMENT

· Ambient temperature	(20.0 ± 1.0) ℃	※15.0 ℃ to 35.0 ℃
· Relative Humidity	(40 ± 5) % R.H.	※25 % R.H. to 75 % R.H.

1.2 TEST STANDARD

· The Provisional Regulation for Type Approval of Ballast Water Management System」 of No. 2011-342 notified by Ministry of Land, Transport and Maritime Affairs, and Methods in accordance with the requirements of G8 (IMO. Res. MEPC. 174 (58), Annex 4, PART 2, 2.2)

Item	Test standard	Remark
◆ pH	Standard Method 4500 H^+ B:2005	Measurement with Electrode multiprobe (Hydrolab, USA)
◆ Water temperature	Standard Method 2550:2005	Measurement with Electrode multiprobe (Hydrolab, USA)
◆ DO	ASTM Standard Method D888-09 C:2010	Measurement with Electrode multiprobe (Hydrolab, USA)
◆ ORP	Standard Method 2580:2005	Measurement with Electrode multiprobe (Hydrolab, USA)
◆ Salinity	Standard Method 2520 B:2005	Measurement with Electrode multiprobe (Hydrolab, USA)
◆ Turbidity	Standard Method 2130 B:2005	Measurement with Turbidity meter (Hach, 2100 P)
◆ TOC/DOC/POC	ISO 8245:1999	-
◆ TSS	Standard Method 2540 D:2005	-
◆ Viable organisms (≥ 50 μm)	Fleming & Coughlan, 1978, US EPA 600/R-10/146:2010, Standard Method 10200 C:2005	Staining with Neutral Red, Touch with the point of a fine dissecting needle, Concentration techniques
◆ Viable organisms (≥ 10-50 μm)	Anja et al., 2005, Standard Method 10200 C:2005	Fluorescence dyeing with 5-CFDA AM, Concentration techniques
◆ Heterotrophic bacteria	Standard Method 9215:2005	-
◆ Total coliform	Standard Method 9222 B:2005	-
◆ *Escherichia coli*	US EPA 1603:2009	-
◆ Intestinal *Enterococci*	US EPA 1600:2009	-
◆ Toxicogenic *Vibrio cholerae* (O1, O139)	Standard Method 9260 H:2005 and/or API 20E kit (BioMerieux, Inc.)	-

1.3 TEST EQUIPMENTS

Description	Manufacturer	Model Number	Calibration Due
◆ Fluorescent microscope	Olympus	CFX41-33FL	-
◆ Sedgewick-Rafter chamber	Pyser-SGI	-	-
◆ Stereo-microscope	Olympus	SZ40	-
◆ Bogorov counting chamber	DH Sci.	-	-
◆ Multiprobe (Hydrolab)	Hach company	Hydrolab DS5	-
◆ Portable cleanbooth	DS Tech.	-	-
◆ Turbidity meter	Hach company	2100 P	-
◆ Digital imaging	BAUMER	TDI DMC3	-
◆ Digital imaging	Olympus	JUJAK 5.5	
◆ Standard sieve	Sefar	50 μm	~ 2011. 12. 24
◆ Standard sieve	Sefar	10 μm	-
◆ Plankton net	SA Sci.	conical type (50 μm)	-
◆ Auto pipette	Labnet International, inc.	BP-10000	~ 2011. 12. 06
◆ Micro (Pasteur) pipette	Hilgenberg	31 501 02	-
◆ Auto pipette	Labnet International, inc.	BP-1000	~ 2011. 12. 06
◆ Auto pipette	Labnet International, inc.	BP-200	~ 2011. 12. 06
◆ Filtration system	Nalgene	350 mL	-
◆ Vacuum pump	THOMAS	-	~ 2011. 12. 08
◆ Mass cylinder	Witeg	100 mL	~ 2015. 06. 04
◆ Portable incubators	CAIS	KC2500	-

1.4 TEST SET-UP

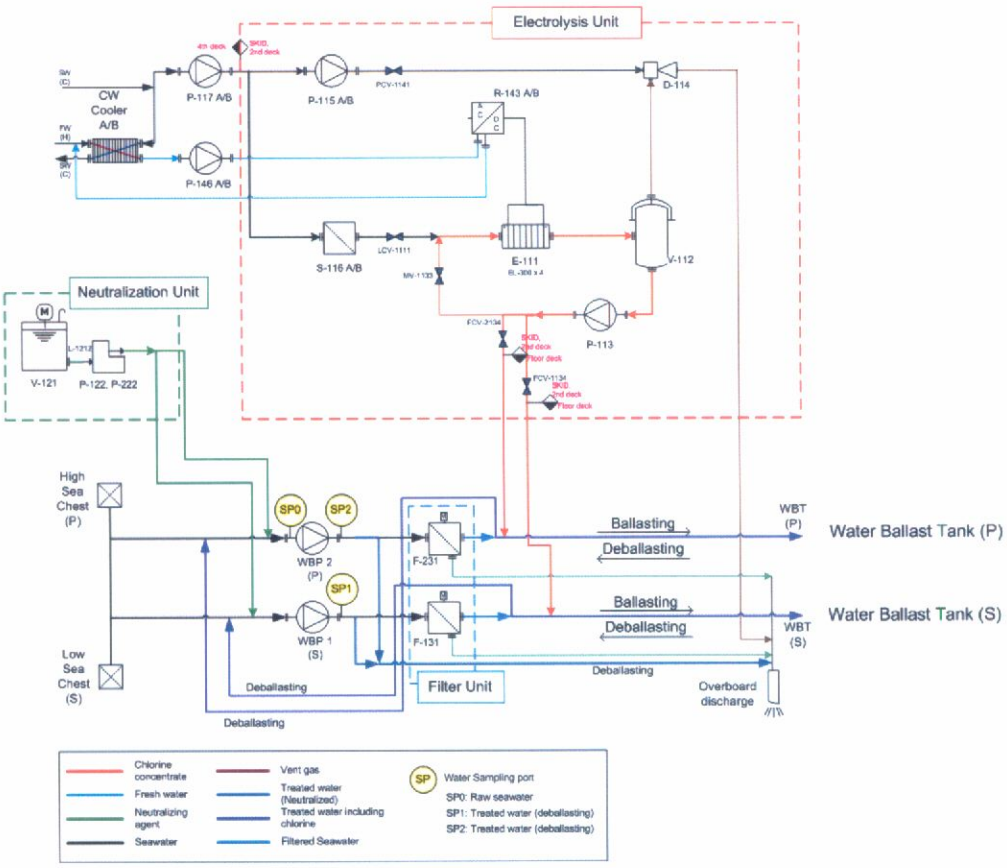

Figure 1. Schematic Diagram of the shipboard test facility of the HiBallast BWM System.

1.5 TEST PROCEDURE

· See Appendix II. PROCEDURE ON SHIPBOARD TEST.

1.6 TEST SCHEDULE

Test period	Test date		Test Site	Salinity (psu*)
	Ballasting	de-Ballasting		
1st	Feb. 19, 2011	Feb. 23, 2011	Hongkong port in Hongkong to Busan new port in Korea	32.66
2nd	Aug. 09, 2011	Aug. 10, 2011	Shinsundae port in Korea to Shanghai bay in China	33.17
3rd	Aug. 10, 2011	Aug. 12, 2011	Shanghai port in China to Xiamen bay in China	23.45
4th	Oct. 10, 2011	Oct. 10, 2011	Shinsundae port in Korea to Shinsundae port in Korea	32.66

* Practical salinity unit.

1.7 TEST RESULTS

1.7.1 Assessment of valid tests

(1) Viable organisms of influent water

Test period	≥ 50 μm organisms (inds./m^3)	≥ 10-50 μm organisms (inds./mL)	Remarks
1st	11 306	162	**PASS**
2nd	30 917	152	**PASS**
3rd	34 167	141	**PASS**
4th	31 389	189	**PASS**
Standard requirement	**> 100**	**> 100**	

※ Data indicates an arithmetic mean from 3 replicates.

(2) Viable organisms of discharge control water

Test period	≥ 50 μm organisms (inds./m^3)	≥ 10-50 μm organisms (inds./mL)	Remarks
1st	5 783	26	**PASS**
2nd	32 417	30	**PASS**
3rd	30 194	28	**PASS**
4th	35 334	161	**PASS**
Valid requirement	**> 10**	**> 10**	

※ Data indicates an arithmetic mean from 3 replicates.

1.7.2 Assessment of discharge treated water

Test period	≥ 50 μm organisms (inds./m^3)	≥ 10-50 μm organisms (inds./mL)	*Escherichia coli* (cfu/100 mL)	Intestinal *Enterococci* (cfu/100 mL)	Toxicogenic *Vibrio cholerae* O1, O139 (cfu/100 mL)	Remarks
1st	3	0	0	0	0	PASS
2nd	1	0	0	0	0	PASS
3rd	1	0	0	0	0	PASS
4th	3	0	0	0	0	PASS
Discharge requirement	< 10	< 10	< 250	< 100	< 1	

※ Data indicates an arithmetic mean from 3 replicates.

Tested by : Jun-Hyuk Yang

Technical Manager : Young-Soo Kim

APPENDIX

I. DRAWING

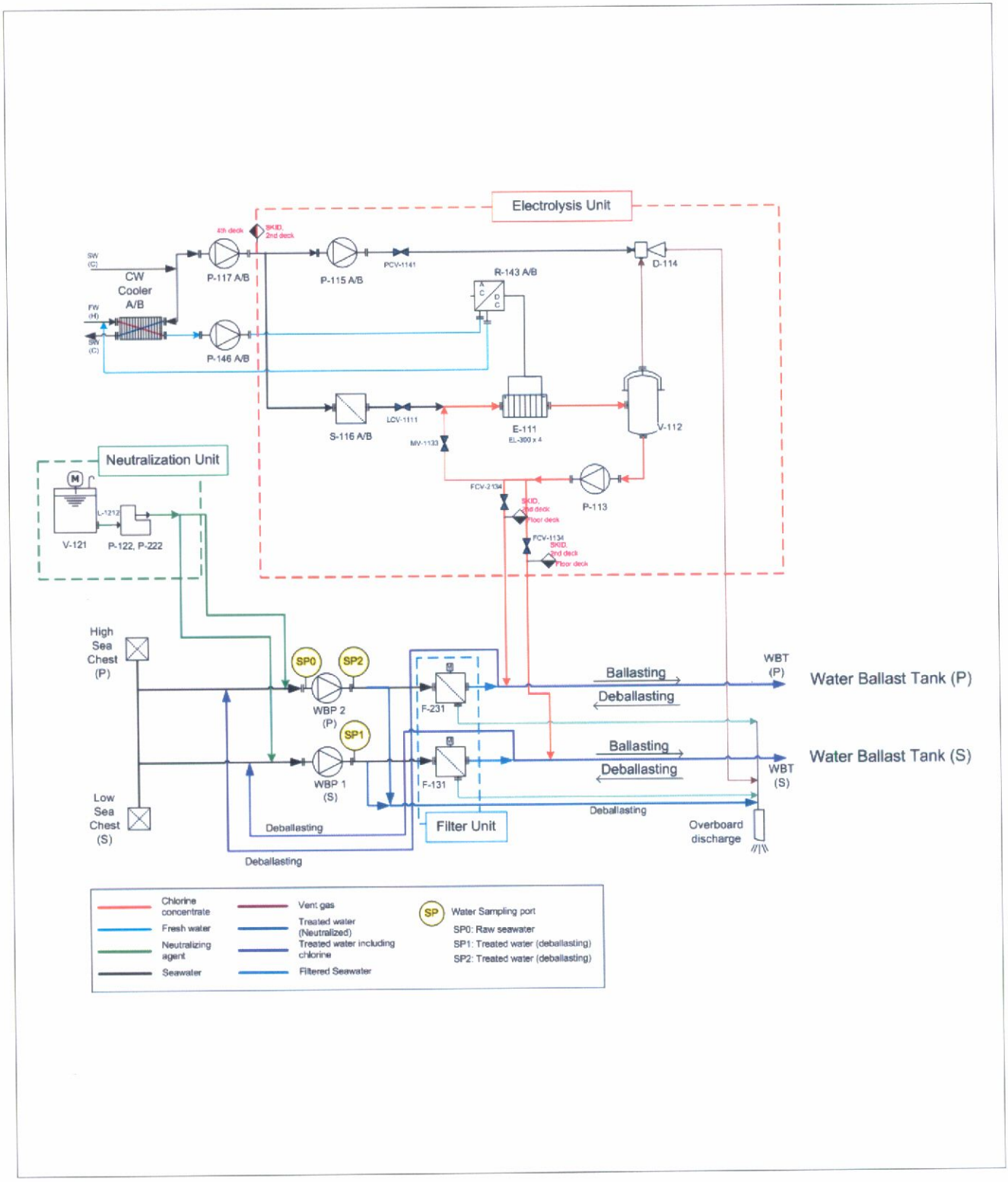

II. PROCEDURE ON SHIPBOARD TEST

KOMERI SOP BWMS 02
Rev. 2.0 May 2011

BWMS Test Procedure on Shipboard Test

The test cycles including invalid and unsuccessful test cycles are to span a trial period of not less than six months.

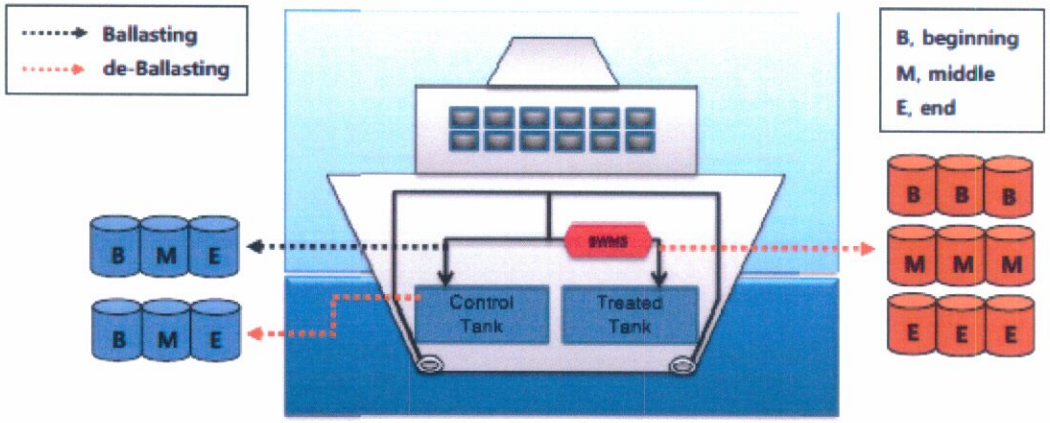

Sample volume			
Ballasting	Infleunt water	≥ 50 μm organisms	1 m³ × 3
		≥ 10-50 μm organisms	1 L × 3
		Bacteria	500 mL × 3
de-Ballasting	Discharge control water	≥ 50 μm organisms	1 m³ × 3
		≥ 10-50 μm organisms	1 L × 3
	Discharge Treated water	≥ 50 μm organisms	1 m³ × 9
		≥ 10-50 μm organisms	1 L × 9
		Bacteria	500 mL × 9

<Standard for valid test>

Ballasting		
Influent water	≥ 50 μm organisms	> 100 inds./m³
	≥ 10-50 μm organisms	> 100 inds./mL

de-Ballasting		
Discharge Control water	≥ 50 μm organisms	> 10 inds./m³
	≥ 10-50 μm organisms	> 10 inds./mL
Discharge Treated water	≥ 50 μm organisms	< 10 inds./m³
	≥ 10-50 μm organisms	< 10 inds./mL
	Toxicogenic *Vibrio cholera* (O1, O139)	< 1 cfu/100 mL
	Eschenichia coil	< 250 cfu/100 mL
	Intestinal Enterococci	< 100 cfu/100 mL

E.coil
Intestinal *Enterococci*
Total Coliform
→ Membrane filteration

Toxicogenic *V. cholerae* (O1, O139) → Spread-plate method

Heterotrophic bacteria → Dry rehydratable film method

≥ 50 μm organisms → Stereomicroscopic investigation → Neutral red stain / Touch method

≥ 10-50 μm organisms → 5-CFDA AM stain → Light microscopic investigation

III. TEST RESULT DETAILS

· **Ballasting (1st period : Feb. 19, 2011)**

Test Item	Ballasting			
	Source water	Influent water		
		B[1]	M[2]	E[3]
Water temperature (°C)	16.21	15.71	15.87	15.78
pH	8.31	7.75	7.62	7.85
ORP (mV)	398	387	383	374
Salinity (psu)	32.66	32.77	32.91	32.83
DO (mg/L)	7.76	7.69	7.91	7.42
Turbidity (NTU)	8.33	7.24	6.61	7.15
TSS (mg/L)	18.0	-	-	-
DOC (mg/L)	1.39	-	-	-
POC (mg/L)	0.15	-	-	-
≥ 50 μm organisms (inds./m^3)	-	10 667	13 167	10 084
≥ 10-50 μm organisms (inds./mL)	-	120	158	209
Heterotrophic bacteria (cells/mL)	-	TNTC[4]	TNTC	TNTC
Total coliform (cfu/100 mL)	-	TNTC	TNTC	TNTC
Escherichia coli (cfu/100 mL)	-	TNTC	TNTC	TNTC
Intestinal *Enterococci* (cfu/100 mL)	-	71	103	77
Toxicogenic *Vibrio cholerae* O1, O139 (cfu/100 mL)	-	0	0	0

[1]Beginning, [2]Middle, [3]End, [4]Too Numerous To Count.

· de-Ballasting (1st period : Feb. 23, 2011)

Test Item	de-Ballasting											
	Discharge contol water			Discharge treated water								
	B[1]	M[2]	E[3]	B1	B2	B3	M1	M2	M3	E1	E2	E3
Water temperature (℃)	14.57	14.44	14.39	13.97	13.99	14.09	14.05	14.04	14.01	14.01	13.97	13.94
pH	7.82	7.92	7.97	7.76	7.50	7.84	7.90	7.92	7.90	7.91	7.84	7.99
ORP (mV)	581	600	678	598	663	696	677	693	709	714	713	671
Salinity (psu)	34.04	33.92	33.81	33.02	33.02	32.99	33.08	33.04	33.04	33.03	32.99	33.03
DO (mg/L)	7.92	8.19	7.92	8.18	8.32	8.39	8.36	8.40	8.44	8.11	8.08	8.19
Turbidity (NTU)	1.61	2.81	1.82	5.21	3.05	3.62	1.78	2.25	2.05	2.60	2.06	3.39
≥ 50 μm organisms (inds./m^3)	7 350	4 500	5 500	5	3	1	3	2	1	0	2	3
≥ 10-50 μm organisms (inds./mL)	30	22	27	0	0	0	0	0	0	0	0	0
Heterotrophic bacteria (cells/mL)	-	-	-	0	0	0	0	0	0	0	0	9
Total Coliform (cfu/100 mL)	-	-	-	0	0	0	0	0	0	0	0	0
Escherichia coli (cfu/100 mL)	-	-	-	0	0	0	0	0	0	0	0	0
Intestinal *Enterococci* (cfu/100 mL)	-	-	-	0	0	0	0	0	0	0	0	0
Toxicogenic *Vibrio cholerae* O1, O139 (cfu/100 mL)	-	-	-	0	0	0	0	0	0	0	0	0

[1]Beginning, [2]Middle, [3]End.

· **Ballasting (2nd period : Aug. 9, 2011)**

Test Item	Ballasting			
	Source water	Influent water		
		B[1]	M[2]	E[3]
Water temperature (°C)	20.06	20.07	18.58	17.56
pH	8.12	8.13	8.13	8.14
ORP (mV)	372	372	364	359
Salinity (psu)	33.17	33.18	33.63	34.03
DO (mg/L)	6.15	6.15	6.36	6.69
Turbidity (NTU)	7.55	7.99	7.76	8.28
TSS (mg/L)	18.3	-	-	-
DOC (mg/L)	1.28	-	-	-
POC (mg/L)	0.21	-	-	-
≥ 50 μm organisms (inds./m^3)	-	31 500	34 000	27 250
≥ 10-50 μm organisms (inds./mL)	-	159	147	149
Heterotrophic bacteria (cells/mL)	-	TNTC[4]	TNTC	TNTC
Total coliform (cfu/100 mL)	-	TNTC	TNTC	TNTC
Escherichia coli (cfu/100 mL)	-	52	42	52
Intestinal *Enterococci* (cfu/100 mL)	-	5	7	10
Toxicogenic *Vibrio cholerae* O1, O139 (cfu/100 mL)	-	0	0	0

[1]Beginning, [2]Middle, [3]End, [4]Too Numerous To Count.

· **de-Ballasting (2nd period : Aug. 10, 2011)**

Test Item	de-Ballasting											
	Discharge control water			Discharge treated water								
	B[1]	M[2]	E[3]	B1	B2	B3	M1	M2	M3	E1	E2	E3
Water temperature (℃)	24.17	24.10	24.65	23.66	23.61	23.61	23.77	23.75	23.97	23.61	23.61	23.62
pH	8.06	8.07	8.09	8.09	8.09	8.05	7.98	7.98	7.98	7.98	7.98	7.09
ORP (mV)	340	575	493	668	736	635	552	525	511	480	459	444
Salinity (psu)	34.49	34.15	34.30	34.41	34.46	34.45	34.45	34.52	34.27	34.50	34.53	34.53
DO (mg/L)	6.54	6.39	6.38	6.51	6.64	6.59	6.54	6.59	6.58	6.61	6.63	6.65
Turbidity (NTU)	5.76	4.82	9.03	5.79	5.70	5.54	6.01	6.89	6.22	6.92	8.29	8.61
≥ 50 μm organisms (inds./m^3)	41 667	29 000	26 583	0	2	1	0	0	0	1	0	3
≥ 10-50 μm organisms (inds./mL)	37	32	22	0	0	0	0	0	0	0	0	0
Heterotrophic bacteria (cells/mL)	-	-	-	0	0	0	0	0	0	0	4	97
Total Coliform (cfu/100 mL)	-	-	-	2	0	5	7	2	2	1	5	8
Escherichia coli (cfu/100 mL)	-	-	-	0	0	0	0	0	0	0	0	0
Intestinal *Enterococci* (cfu/100 mL)	-	-	-	0	0	0	0	0	0	0	0	0
Toxicogenic *Vibrio cholerae* O1, O139 (cfu/100 mL)	-	-	-	0	0	0	0	0	0	0	0	0

[1]Beginning, [2]Middle, [3]End

· **Ballasting (3th period : Aug. 10, 2011)**

Test Item	Ballasting			
	Source water	Influent water		
		B[1]	M[2]	E[3]
Water temperature (°C)	26.84	27.32	27.13	27.23
pH	8.13	8.13	8.15	8.15
ORP (mV)	305	297	298	301
Salinity (psu)	23.45	23.23	22.69	22.73
DO (mg/L)	6.28	6.44	6.52	6.57
Turbidity (NTU)	86.6	76.60	41.20	42.70
TSS (mg/L)	116.3	-	-	-
DOC (mg/L)	1.44	-	-	-
POC (mg/L)	0.97	-	-	-
≥ 50 μm organisms (inds./m^3)	-	34 500	31 667	36 333
≥ 10-50 μm organisms (inds./mL)	-	121	138	164
Heterotrophic bacteria (cells/mL)	-	TNTC[4]	TNTC	TNTC
Total coliform (cfu/100 mL)	-	68	40	42
Escherichia coli (cfu/100 mL)	-	8	2	2
Intestinal *Enterococci* (cfu/100 mL)	-	0	2	2
Toxicogenic *Vibrio cholerae* O1, O139 (cfu/100 mL)	-	0	0	0

[1]Beginning, [2]Middle, [3]End, [4]Too Numerous To Count.

· de-Ballasting (3th period : Aug. 12, 2011)

Test Item	de-Ballasting											
	Discharge contol water			Discharge treated water								
	B[1]	M[2]	E[3]	B1	B2	B3	M1	M2	M3	E1	E2	E3
Water temperature (℃)	27.16	27.53	27.63	27.36	27.19	27.24	27.95	27.32	27.31	27.31	37.36	27.38
pH	8.12	8.12	8.11	8.12	8.09	8.12	8.08	7.95	7.97	7.90	7.96	7.92
ORP (mV)	325	319	315	6.74	741	752	752	675	640	633	608	592
Salinity (psu)	24.55	24.34	24.30	24.66	24.62	24.55	24.62	24.39	24.41	24.35	24.27	24.27
DO (mg/L)	6.82	6.64	6.40	6.67	6.61	6.61	6.57	6.67	6.74	6.70	6.65	6.66
Turbidity (NTU)	6.73	5.86	4.89	4.52	4.15	4.49	4.27	5.13	5.78	6.44	7.84	10.00
≥ 50 μm organisms (inds./m^3)	35 583	33 167	21 833	0	0	0	1	0	1	0	2	0
≥ 10-50 μm organisms (inds./mL)	26	32	27	0	0	0	0	0	0	0	0	0
Heterotrophic bacteria (cells/mL)	-	-	-	0	0	0	0	0	0	0	0	0
Total Coliform (cfu/100 mL)	-	-	-	0	0	0	0	0	0	0	0	0
Escherichia coli (cfu/100 mL)	-	-	-	0	0	0	0	0	0	0	0	0
Intestinal *Enterococci* (cfu/100 mL)	-	-	-	0	0	0	0	0	0	0	0	0
Toxicogenic *Vibrio cholerae* O1, O139 (cfu/100 mL)	-	-	-	0	0	0	0	0	0	0	0	0

[1]Beginning, [2]Middle, [3]End

· **Ballasting (4th period : Oct. 10, 2011)**

Test Item	Ballasting			
	Source water	Influent water		
		B[1]	M[2]	E[3]
Water temperature (°C)	20.37	20.87	21.27	19.96
pH	8.20	8.19	8.21	8.21
ORP (mV)	421	385	373	358
Salinity (psu)	34.32	34.28	33.64	34.36
DO (mg/L)	7.62	6.71	6.86	7.01
Turbidity (NTU)	14.50	12.00	11.90	9.16
TSS (mg/L)	18.0	-	-	-
DOC (mg/L)	1.23	-	-	-
POC (mg/L)	0.34	-	-	-
≥ 50 μm organisms (inds./m^3)	-	30 667	29 500	34 000
≥ 10-50 μm organisms (inds./mL)	-	191	184	191
Heterotrophic bacteria (cells/mL)	-	27	34	22
Total coliform (cfu/100 mL)	-	37	137	73
Escherichia coli (cfu/100 mL)	-	3	0	0
Intestinal *Enterococci* (cfu/100 mL)	-	13	3	10
Toxicogenic *Vibrio cholerae* O1, O139 (cfu/100 mL)	-	0	0	0

[1]Beginning, [2]Middle, [3]End.

· **de-Ballasting (4th period : Oct. 10, 2011)**

Test Item	de-Ballasting											
	Discharge contol water			Discharge treated water								
	B[1]	M[2]	E[3]	B1	B2	B3	M1	M2	M3	E1	E2	E3
Water temperature (℃)	22.74	21.49	20.81	22.56	20.33	20.06	20.04	20.11	20.13	20.43	20.20	20.10
pH	8.22	8.22	8.25	8.01	8.01	8.02	8.05	7.99	8.06	8.10	8.07	8.08
ORP (mV)	421	380	369	387	401	338	281	247	242	481	575	510
Salinity (psu)	34.71	34.46	35.04	34.61	34.34	34.45	34.44	34.42	34.40	33.91	34.30	34.46
DO (mg/L)	7.73	7.41	7.60	6.75	7.23	7.31	7.24	7.32	7.32	7.17	7.26	7.25
Turbidity (NTU)	3.29	4.26	4.77	4.50	9.02	9.00	10.20	9.54	11.50	10.40	11.60	11.70
≥ 50 μm organisms (inds./m^3)	40 167	40 334	25 500	2	0	3	2	0	4	4	4	7
≥ 10-50 μm organisms (inds./mL)	160	132	192	0	0	0	0	0	0	0	0	0
Heterotrophic bacteria (cells/mL)	-	-	-	0	0	0	8	0	0	0	0	0
Total Coliform (cfu/100 mL)	-	-	-	0	0	0	0	0	0	0	0	0
Escherichia coli (cfu/100 mL)	-	-	-	0	0	0	0	0	0	0	0	0
Intestinal *Enterococci* (cfu/100 mL)	-	-	-	0	0	0	0	0	0	0	0	0
Toxicogenic *Vibrio cholerae* O1, O139 (cfu/100 mL)	-	-	-	0	0	0	0	0	0	0	0	0

[1]Beginning, [2]Middle, [3]End.