FORM 1 GENERAL

EPA

ENVIRONMENTAL PROTECTION AGENCY
GENERAL INFORMATION
Compliance Assurance Program
Read the "General Instructions" before starting.

LATEST VERSION

11000792053 5

I. EPA I.D. NUMBER

II. FACILITY NAME

III. FACILITY MAILING ADDRESS

IV. FACILITY LOCATION

PLEASE PLACE LABEL IN THIS SPACE

RECEIVED
APR 5 - 2004
ANCHORAGE-ADOR

II. POLLUTANT CHARACTERISTICS

INSTRUCTIONS: Complete A through J to determine whether you need to submit any permit application forms to the EPA. If you answer "yes" to any questions, you must submit this form and the supplemental form listed in the parenthesis following the question. Mark "X" in the box in the third column if the supplemental form is attached. If you answer "no" to each question, you need not submit any of these forms. You may answer "no" if your activity is excluded from permit requirements; see Section C of the instructions. See also, Section D of the instructions for definitions of bold-faced terms.

SPECIFIC QUESTIONS	MARK "X" YES	MARK "X" NO	MARK "X" FORM ATTACHED
A. Is this facility a publicly owned treatment works which results in a discharge to waters of the U.S.? (FORM 2A)		X	
C. Is this a facility which currently results in discharges to waters of the U.S. other than those described in A or B above? (FORM 2C)	X		
E. Does or will this facility treat, store, or dispose of hazardous wastes? (FORM 3)		X	
G. Do you or will you inject at this facility any produced water or other fluids which are brought to the surface in connection with conventional oil or natural gas production, inject fluids used for enhanced recovery of oil or natural gas, or inject fluids for storage of liquid hydrocarbons? (FORM 4)	X		N/A
I. Is this facility a proposed stationary source which is one of the 28 industrial categories listed in the instructions and which will potentially emit 100 tons per year of any air pollutant regulated under the Clean Air Act and may affect or be located in an attainment area? (FORM 5)		X	

SPECIFIC QUESTIONS	MARK "X" YES	MARK "X" NO	MARK "X" FORM ATTACHED
B. Does or will this facility (*either existing or proposed*) include a **concentrated animal feeding operation** or **aquatic animal production facility** which results in a discharge to waters of the U.S.? (FORM 2B)		X	
D. Is this a proposed facility (*other than those described in A or B above*) which will result in a discharge to waters of the U.S.? (FORM 2D)		X	
F. Do you or will you inject at this facility industrial or municipal effluent below the lowermost stratum containing, within one quarter mile of the well bore, underground sources of drinking water? (FORM 4)		X	
H. Do you or will you inject at this facility fluids for special processes such as mining of sulfur by the Frasch process, solution mining of minerals, in situ combustion of fossil fuel, or recovery of geothermal energy? (FORM 4)		X	
J. Is this facility a proposed stationary source which is NOT one of the 28 industrial categories listed in the instructions and which will potentially emit 250 tons per year of any air pollutant regulated under the Clean Air Act and may affect or be located in an attainment area? (FORM 5)	X		N/A

III. NAME OF FACILITY

1 SKIP Grayling Platform

IV. FACILITY CONTACT

A. NAME & TITLE (last, first, & title): Faye Sullivan

B. PHONE (area code & no.): 907 276 7600

V. FACILITY MAILING ADDRESS

A. STREET OR P.O. BOX: P.O. Box 196247

B. CITY OR TOWN: Anchorage

C. STATE: AK

D. ZIP CODE: 99519-6247

VI. FACILITY LOCATION

A. STREET, ROUTE NO. OR OTHER SPECIFIC IDENTIFIER: N/A

B. COUNTY NAME: Kenai Peninsula Borough

C. CITY OR TOWN: Cook Inlet

D. STATE: AK

E. ZIP CODE:

F. COUNTY CODE:

CONTINUE ON REVERSE

EPA Form 3510-1 (8-90)

CONTINUED FROM THE FRONT

VII. SIC CODES (4-digit, in order of priority)

A. FIRST: 7 1311 (specify) Oil and Gas Production

B. SECOND: 7 (specify)

C. THIRD: 7 (specify)

D. FOURTH: 7 (specify)

VIII. OPERATOR INFORMATION

A. NAME: 8 Union Oil Company of California (dba UNOCAL)

B. Is the name listed Item VIII-A also owner? [X] YES [ ] N

C. STATUS OF OPERATOR (Enter the appropriate letter into the answer box; if "Other", specify.)

F = FEDERAL
S = STATE
P = PRIVATE
M = PUBLIC (other than federal or state)
O = OTHER (specify)

P (specify) Oil/Gas Company

D. PHONE (area code & no.): A 907 276 7600

E. STREET OR P.O. BOX: P.O. Box 196247

F. CITY OR TOWN: 8 Anchorage

G. STATE: AK

H. ZIP CODE: 99519

IX. INDIAN LAND: Is the facility located on Indian lands? [ ] YES [X] NO

X. EXISTING ENVIRONMENTAL PERMITS

A. NPDES (Discharges to Surface Water): 9 N AKG285016

B. PSD (Air Emissions from Proposed Sources): 9 P 069TVP01

C. UIC (Underground Injection of Fluids): 9 U 5 (AIO)

D. OTHER (specify): 9 (specify)

E. RCRA (Hazardous Wastes): 9 R AKD982655847

F. OTHER (specify): 9 (specify)

XI. MAP

Attach to this application a topographic map of the area extending to at least one mile beyond property bounderies. The map must show the outline of the facility, the location of each of its existing and proposed intake and discharge structures, each of its hazardous waste treatment, storage, or disposal facilities, and each well where it injects fluids underground. Include all springs, rivers and other surface water bodies in the map area. See instructions for precise requirements. See Attached Application

XII. NATURE OF BUSINESS (provide a brief description)

Offshore Oil and Gas Platform

XIII. CERTIFICATION (see instructions)

I certify under penalty of law that I have personally examined and am familiar with the information submitted in this application and all attachments and that, based on my inquiry of those persons immediately responsible for obtaining the information contained in the application, I believe that the information is true, accurate and complete. I am aware that there are significant penalties for submitting false information, including the possibility of fine and imprisonment.

A. NAME & OFFICIAL TITLE (type or print): Dale Haines - Operations Manager

B. SIGNATURE: Dale A. Haines

C. DATE SIGNED: 08 25 03

COMMENTS FOR OFFICIAL USE ONLY

EPA Form 3510-1 (6-90)

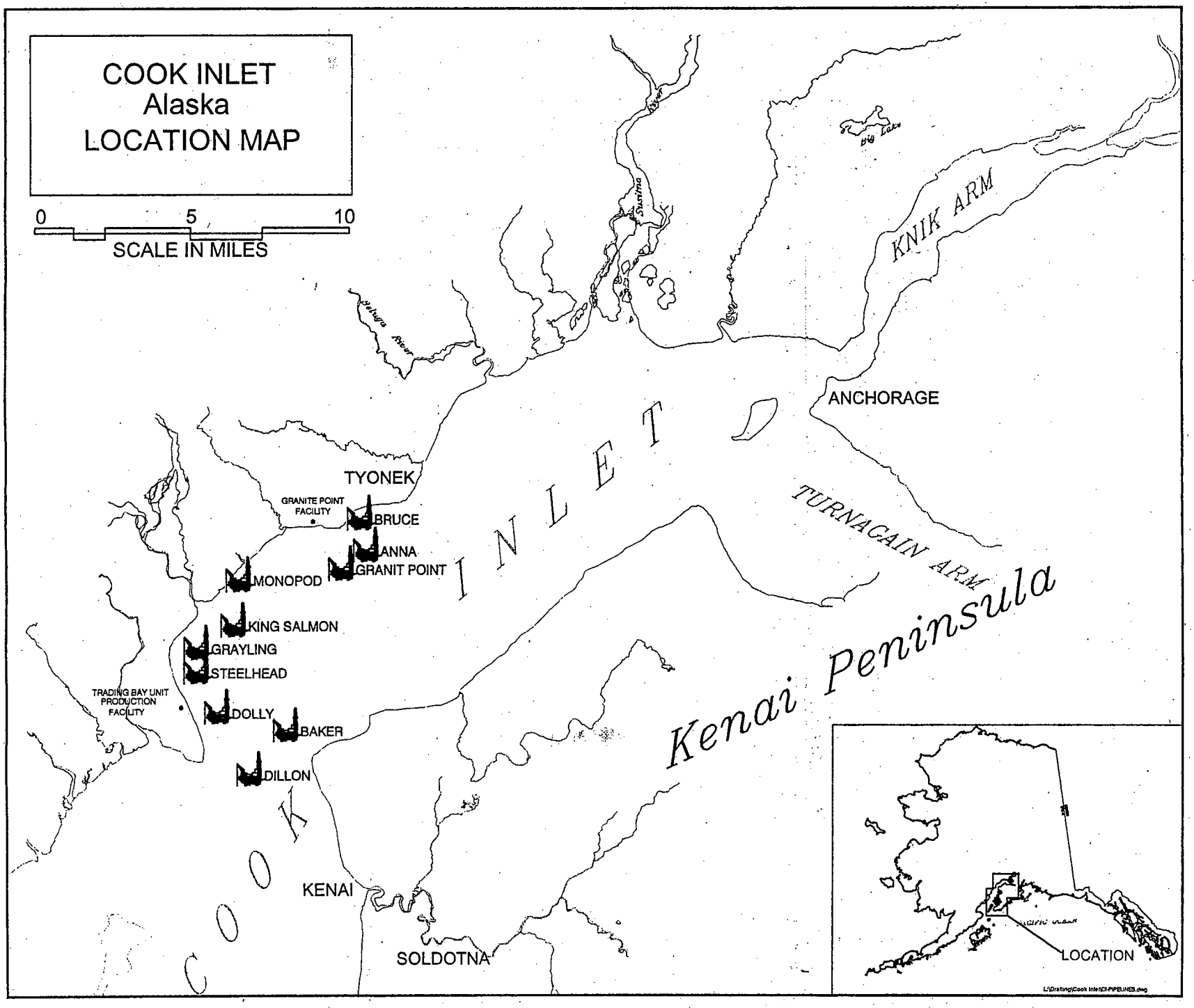
COOK INLET
Alaska
LOCATION MAP
0
5
10
SCALE IN MILES
KNIK ARM
ANCHORAGE
TYONEK
GRANITE POINT FACILITY
BRUCE
ANNA
GRANIT POINT
MONOPOD
KING SALMON
GRAYLING
STEELHEAD
TRADING BAY UNIT PRODUCTION FACILITY
DOLLY
BAKER
DILLON
KENAI
SOLDOTNA
TURNAGAIN ARM
Kenai Peninsula
LOCATION

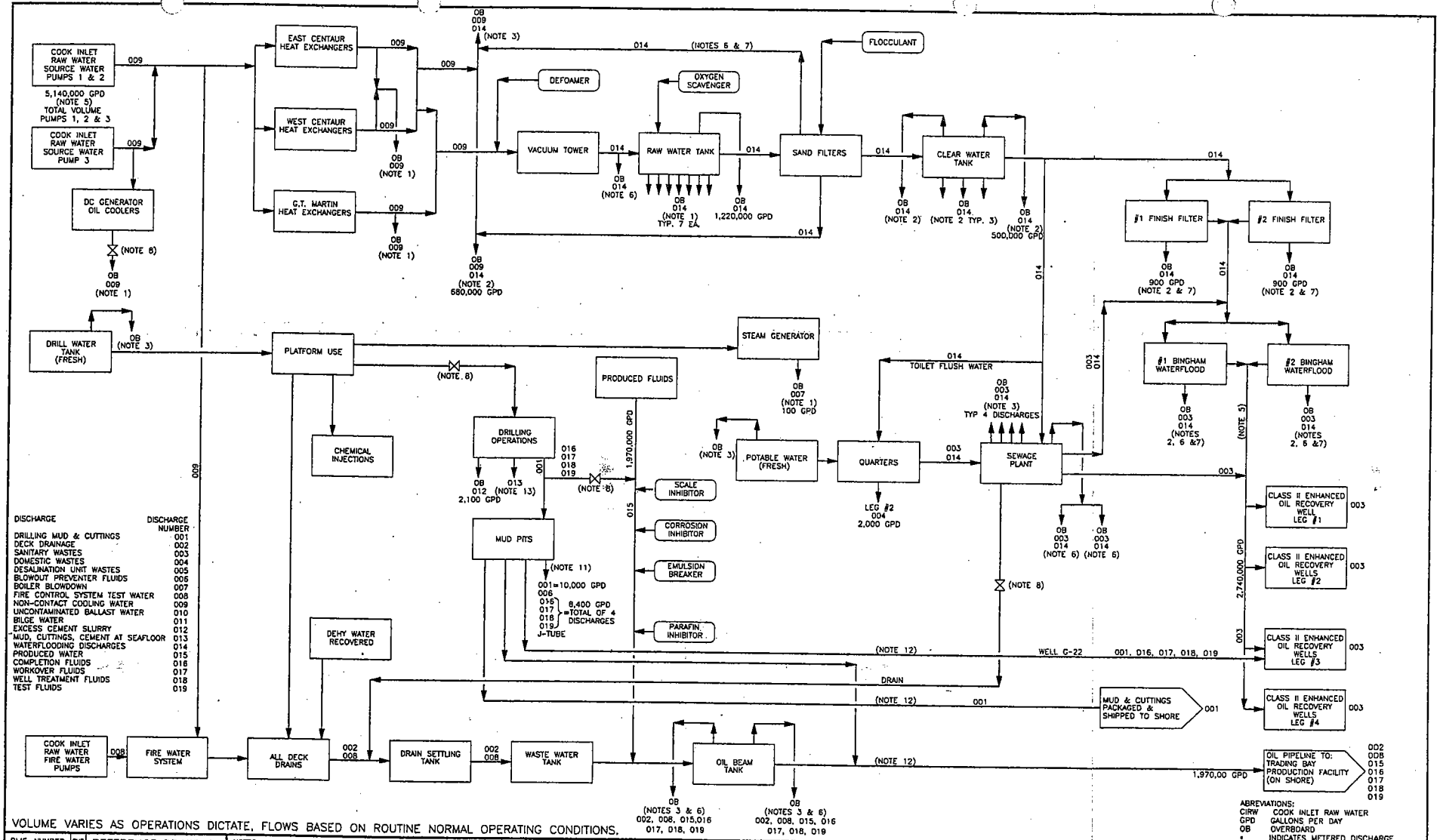

DISCHARGE	DISCHARGE NUMBER
DRILLING MUD & CUTTINGS	001
DECK DRAINAGE	002
SANITARY WASTES	003
DOMESTIC WASTES	004
DESALINATION UNIT WASTES	005
BLOWOUT PREVENTER FLUIDS	006
BOILER BLOWDOWN	007
FIRE CONTROL SYSTEM TEST WATER	008
NON-CONTACT COOLING WATER	009
UNCONTAMINATED BALLAST WATER	010
BILGE WATER	011
EXCESS CEMENT SLURRY	012
MUD, CUTTINGS, CEMENT AT SEAFLOOR	013
WATERFLOODING DISCHARGES	014
PRODUCED WATER	015
COMPLETION FLUIDS	016
WORKOVER FLUIDS	017
WELL TREATMENT FLUIDS	018
TEST FLUIDS	019

VOLUME VARIES AS OPERATIONS DICTATE, FLOWS BASED ON ROUTINE NORMAL OPERATING CONDITIONS.

ABREVIATIONS:
CIRW COOK INLET RAW WATER
GPD GALLONS PER DAY
OB OVERBOARD
* INDICATES METERED DISCHARGE

DWG. NUMBER	SHT	REFERENCE DRAWINGS

NOTES:
1) OVERBOARD VALVE, OPERATED MANUALLY AS NEEDED.
2) CALLED OUT AS CODE 009 IN PRESENT REPORTING PROCESS.
3) VENT, BUT IT IS A POSSIBLE OVERBOARD PATH FOR LIQUIDS.
4) SUBSURFACE DISCHARGE.
5) NOTE REMOVED.
6) PRESSURE SAFETY DEVICE.
7) AUTOMATIC VALVE, OPERATES AS PROCESS REQUIRES.
8) VALVE, NORMALLY CLOSED.
9) UNCONTAMINATED.
10) ALL VOLUMES SHOWN ARE FOR "NORMAL OPERATIONS".
11) MATERIALS THAT MEET DISCHARGE REQUIREMNETS.
12) MATERIALS THAT DO NOT MEET DISCHARGE REQUIREMNETS.
13) NO CURRENT DISCHARGE, FUTURE OPTION.

REV	DATE	REVISED (DESTROY ALL PRINTS BEARING EARLIER DATE)	REV BY	CKD BY	APP'D BY
0	05/12/03	ISSUED FOR PERMIT RENEWAL APPLICATION	RRM	SJF	BS

APPROVED FOR CONSTRUCTION: A. F. E. | DATE | SIGNED

DRAWN BY RRM
CHECKED BY
TRACED BY
TRAC'D. CKD.
APP'D.
APP'D.
SCALE NONE
DATE 4/11/03

CONTRACTOR: Peak Oilfield Service Co. 2525 C Street, Suite 201 Anchorage, Alaska 99503 Phone: (907) 263-7000 Fax: (907) 263-7070
JOB NUMBER: 24000-03019

GRAYLING PLATFORM
COOK INLET, ALASKA

DISCHARGE FLOW DIAGRAM NPDES PERMIT

UNOCAL®
DRAWING NO. GF-0005

Drawing: G-F-0005 / Date: 06-25-03 / Time: 18:04am

EPA_COOK_INKPR_000297

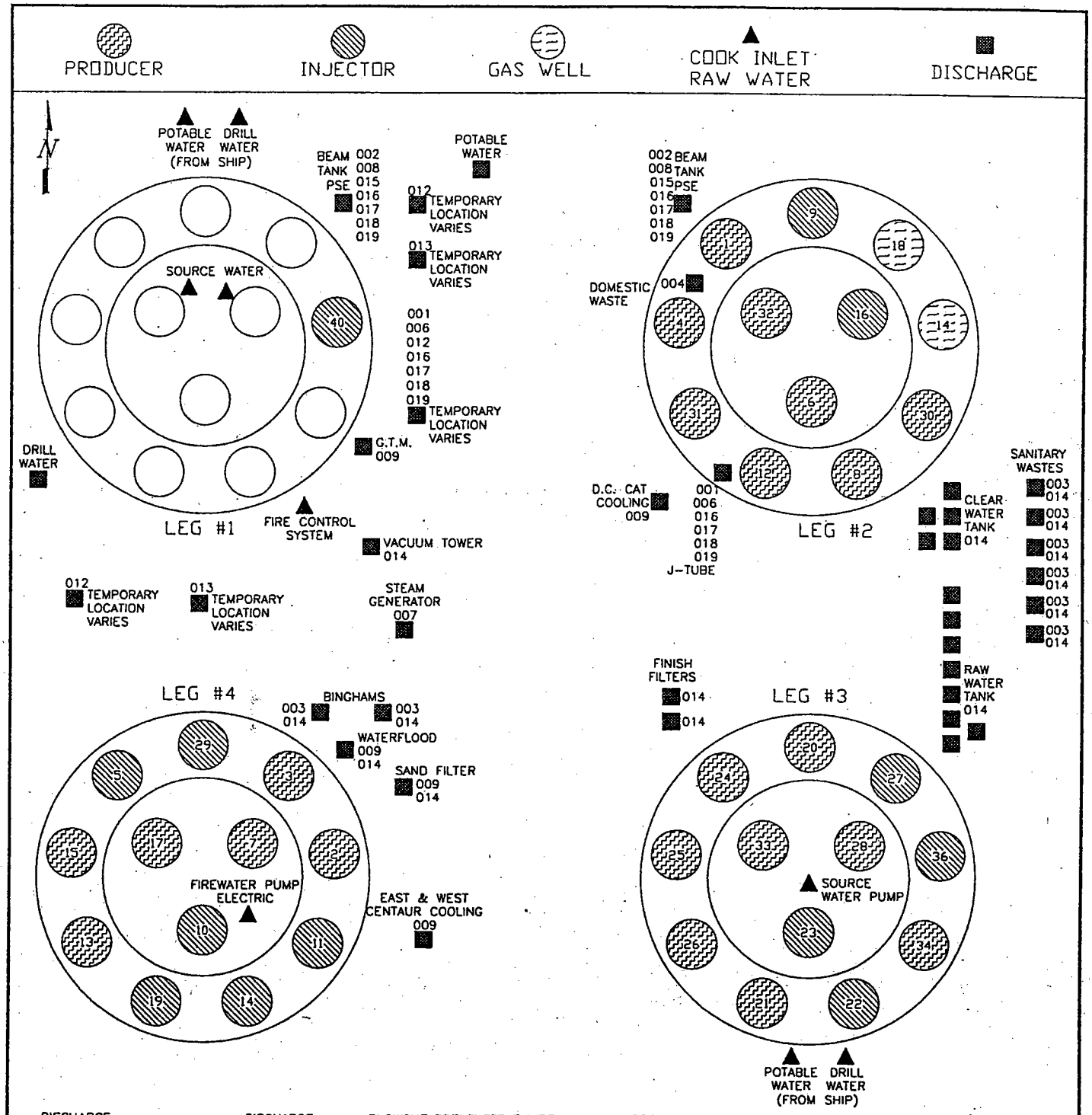

DISCHARGE	DISCHARGE NUMBER				
DRILLING MUD & CUTTINGS	001	BLOWOUT PREVENTER FLUIDS	006	MUD, CUTTINGS, CEMENT AT SEAFLOOR	013
DECK DRAINAGE	002	BOILER BLOWDOWN	007	WATERFLOODING DISCHARGES	014
SANITARY WASTES	003	FIRE CONTROL SYSTEM TEST WATER	008	PRODUCED WATER	015
DOMESTIC WASTES	004	NON-CONTACT COOLING WATER	009	COMPLETION FLUIDS	016
DESALINATION UNIT WASTES	005	UNCONTAMINATED BALLAST WATER	010	WORKOVER FLUIDS	017
		BILGE WATER	011	WELL TREATMENT FLUIDS	018
		EXCESS CEMENT SLURRY	012	TEST FLUIDS	019

MISC. CONDENSED WATER VAPOR DRIPS MAYBE VISIBLE UNDERNEATH PLATFORM.

REV	DATE	REVISED — DESTROY ALL PRINTS BEARING EARLIER DATE	REV BY	CKD BY	APP'D BY
0	08/12/03	ISSUED FOR PERMIT RENEWAL APPLICATION	RRM	SJF	BSS

DRAWN BY RRM
CHECKED BY
TRACED BY
TRAC'D. CKD.
APP'D.
APP'D.
SCALE NONE
DATE 04/14/03

CONTRACTOR: Peak Oilfield Service Co., 2525 C Street, Suite 201, Anchorage, Alaska 99503, Phone: (907) 263-7000, Fax: (907) 263-7070

JOB NUMBER 24000-03019

GRAYLING PLATFORM

COOK INLET, ALASKA

DISCHARGE LOCATION DRAWING
NPDES PERMIT

UNOCAL 76

DRAWING NO. G-F-0006

Drawing: G-F-0006 / Date: 08-22-03 / Time: 12:50am

Application Form 2C
I. Outfall Location

Facility	EPA ID #	Existing NPDES #	Outfall Number(s)	Latitude	Longitude	Receiving Water
Grayling Platform	110007920535	AKG285016	001,002, 003, 004, 006, 007, 008, 009, 012, 013, 014, 015, 016, 017, 018, 019	60° 50' 13" N	151° 36' 47" W	Cook Inlet, Alaska

EPA_COOK_INKPR_000299

II. Flows, sources of Pollution and Treatment Technologies

A. Line Drawing

A line drawing (i.e. Discharge Flow Diagram) for this facility is attached to this application. Platform applications also include a Well Slot drawing.

B. Outfalls

1. Outfall No.	2. Operations Contributing Flow		3. Treatment	
	a. Operation	b. Average Flow	a. Description	b. List Codes from Table 2C-1
001	Drilling Mud and Cuttings	See Attached Discharge Flow Diagram (II A)	See Attached General Treatment Practices Table	
002	Deck Drainage			
003	Sanitary Wastes			
004	Domestic Wastes			
006	Blowout Preventer Fluid			
007	Boiler Blowdown			
008	Fire Control System Test Water			
009	Non-Contact Cooling Water			
012	Excess Cement Slurry			
013	Mud, Cuttings, Cement at Seafloor			
014	Waterflooding Discharges			
015	Produced Water			
016	Completion Fluids			
017	Workover Fluids			
018	Well Treatment Fluids			
019	Test Fluids			

EPA_COOK_INKPR_000300

II. B. 3. b. General Treatment Practices

See Flow Diagrams for Facility-Specific Practices

Outfall	Description	1L	1U	2E	2F	2I	3A	3E	4A	4B	4D
		Grinding	Sedimentation (settling)	Dechlorination	Disinfection (chlorine)	Electro-chemical	Activated Sludge	Pre-Aeration	Discharge to surface water	ocean discharge through outfall	Undergrou injection
001	Drilling mud and cuttings	X								X	X
002	deck drainage		X							X	
003	sanitary wastes - MSD	X	X	X	X	X				X	X
	sanitary wastes - biological	X	X				X	X		X	X
004	domestic wastes									X	X
005	deslination unit wastes								X	X	
006	blowout preventer fluids									X	
007	boiler blowdown								X		
008	fire control system test water		X						X	X	
009	non-contact cooling water								X		X
012	excess cement slurry								X		
013	mud, cuttings, cement at seafloor									X	
014	waterflooding discharges								X	X	X
015	produced water									X	X
016	completion fluid									X	X
017	workover fluids									X	X
018	well treatment fluids									X	X
019	test fluids									X	X

EPA_COOK_INKPR_000301

II. Flows, sources of Pollution and Treatment Technologies
C. Intermittent or Seasonal Flows

1. Outfall No.	2. Operations Contributing to Flow	3. Frequency ***		4. Flow				
		a. days/week	b. months/year	a. Flow Rate (mgd)		b. Total Volume (gal)		c. Duration (days)
				1. Long Term Average *	2. Maximum Daily	1. Long Term Average * (gpd)	2. Maximum Daily (gal)	
001	Drilling Mud and Cuttings	7	12	0.0100	0.0189	9,996	18,942	23 days/year.
003	Sanitary Wastes	7	12	0.0012	0.0041	1,200	4,100	365 days/year
004	Domestic Wastes	7	12	0.0020	0.0069	2,000	6,900	365 days/year
006 **	Blowout Preventer Fluid	3	1	0.00003	0.00003	30	30	3 days/year
007	Boiler Blowdown	5	6	0.000100	0.0001	100	100	30 days/year
008*****	Fire Control System Test Water	1 day/month	12	0.0000	0.0001	0	100	12 days/year
012	Excess Cement Slurry	1	12	0.0021	0.0031	2,100	3,066	2 days/year
016, 017, 018, 019 ****	Completion, workover, well treatment, and test fluids	3	12	0.050297	0.2200	50,297	220,038	13 days/year

* Long Term Averages (within the last year) are from historical DMR data or 2002 Non-Produced Water Annual Report (where available and consistent with current standardized calculation methods) or the Discharge Flow Diagram.

** 006 Release of blowout preventer fluid is extremely rare and occurance cannot be predicted. Estimate based on one event per year with discharge once every 3 days for an 11 day drilling event.

*** If an event can occur during any month of the year, "12" has been entered in column 3.b. See duration (4.c.) for frequency in a year.

**** 016, 017, 018, 019 long term average includes drilling wastes at 8400 gal/day (historical drilling activity) and 41,897 gal/day (well treatment from 2002 annual non-produced water report-Trading Bay)

***** 008 Procedures for fire water testing vary by platform. Information provided is based on current practices.

Note: Deck Drainage (002) is commingled with a continuous discharge (produced water) and cannot be differentiated.

Note: Flowrates for Mud, Cuttings, and Cement at Seafloor (013) are not available. Discharge at seafloor is an uncommon practice which may be necessary under uniqure circumstances in the future.

Note: for 001, 012, and 016-019: The number provided is based on a historical average for duration of discharge and a generic projection of future drilling activity.

EPA_COOK_INKPR_000302

III. Production

A. Does an effluent guideline limitation promulgated by EPA under Sec. 304 of the Clean Water Act apply to your facility?

Yes (Complete Item IIIB)

B. Are the limitations in the application effluent guideline expressed in terms of production (or other measure of operation)?

No (go to Section IV)

C. if yes to IIIB, complete production table.

Not applicable.

IV. Improvements

A. Are you now required by any Federal, State, or local authority to meet any implementation schedule for the construction,, upgrading or operation of wastewater treatment equipment or practices or any other environmental programs which may affect the discharges described in this application? This includes, but is not limited to, permit conditions, administrative or enforcement orders, enforcement compliance schedule letters, stipulations, court orders, and grant or load conditions.

No (go to Item IV-B)

B. OPTIONAL: You may attach additional sheets describing any additional water pollution control programs (or other environmental projects which may affect your discharges) you now have underway or which you plan, indicate whether each program is now underway or planned, and indicate your actual or planned schedules for construction.

Optional - No Attached Sheets

EPA_COOK_INKPR_000303

V. Intake and Effluent Characteristics

A, B, C: Tables V-1 through V-9
D. List any of the pollutants in Table 2c-3 of the instructions, which you know or have reason to believe is discharged or may be discharged from any outfall. For every pollutant you list, briefly describe the reasons you believe it to be present and report any analytical data in your possession.

1. Pollutant	2. Source	Reason(s)
Xylene	Drilling Muds and Cuttings (001) Excess Cement Slurry (012) Muds, Cuttings, Cement at Seafloor (013) Produced Water (015) Completion Fluids (016) Workover Fluids (017) Well Treatment Fluids (018) Test Fluids (019)	Potential exists because this parameter was detected in Produced Water sample(s) and can be a component of non-produced fluids. See Unocal's NPDES Application cover letter appendix for Analytical Data.

VI. Potential Discharges Not Covered by Analysis

Is any pollutant listed in Item V-C a substance or a component of a substance which you currently use or manufacture as an intermediate or final product or by product?

Yes.

Metals, cyanides and total phenols, listed in table V-C may be present as naturally occuring, present in intake water, present in crude oil, or as a component of drilling mud and cuttings, well testing and well treatment chemicals. U.S. EPA Region 10, Water Compliance Section was notified by letter Dated July 10, 2003 of the use of a flocculant at Anna and Bruce platforms which contains zinc.

Volatile compounds, Acid Compounds and Base/Neutral Compounds listed in table V-C may be present in drilling and well treatment chemicals and are so designated in the sampling plan provided to EPA in the cover letter of this application. Volatile compounds that are present in the product crude oil are also so designated in the sampling plan. Note that xylene (not listed on EPA's Form 2C table V-C) has been included in our Table V-C submission voluntarily and is both potentially present in intermediates and product as well as used as a well treatment chemical.

No Dioxins or Pesticides are used or manufactured.

EPA_COOK_INKPR_000304

VII. Biological Toxicity Testing Data

Do you have any knowledge or reason to believe that any biological test for acute or chronic toxicity has been made on any of your discharges or on a receiving water in relation to your discharge within the last 3 years?

Yes, (Identify the test(s) and describe their purposes below)

Date	Mysidopsis bahia	Menidia beryllina	Mytilis sp	Purpose
		No Wet Testing Performed - Not Required		

EPA_COOK_INKPR_000305

VIII. Contract Analysis Information

Were any of the analyses reported in item V performed by a contract laboratory or consulting firm?

telephone number of and pollutants analyzed by, each such laboratory or firm below)

Laboratory Name	Address	Telephone	Pollutants Analyzed
Analytica Alaska, Inc.	5438 Shaune Drive Juneau, Alaska 99801	(908) 780-6668	Metals including mercury but excluding Magnesium and Iron; BOD; Phosphorous; TSS; Nitrite & Nitrate as N, Fluoride; Sulfate
Analytica Environmental Laboratories, Inc. (AEL)	12189 Pennsylvania Street Thornton, Colorado 80241	(303) 469-8868	Organochlorine Pesticides & PCB's, Volatile Organic Compounds, Semi-Volatile Organic Analysis (Base, Neutrals & Acids), Iron, Magnesium, Total Recoverable Phenols, Ammonia as Nitrogen, Chemical Oxygen Demand, Hexane-Extractable Material, Bromide, Cyanide
Northern Testing Laboratory, Inc.	5761 Silverado Way, Unit N Anchorage, AK 99518	(907) 349-1000	TOC, BOD, MBAS/Surfactants, Color, Fluoride, Bromide, and Sulfate, Total Kjeldahl Nitrogen
Triangle Laboratories	2445 S. Alston Ave. Durham, NC 27713	(919) 544-5729	Dioxins
State of Washington Lab	1610 N.E. 150th Street Shoreline, WA 98155	(206)361-2896	Gross Alpha/Beta and Radium/Radium 226
Laucks	940 South Harney St Seattle, WA 98108	(206)769-5060	Sulfide
Northern Test Lab	35186 Spur Highway, Soldotna, Alaska 99669	(907) 262-4624	Biological Oxygen Demand, Total Suspended Solids, Fecal Coliform
SGS (CT&E Environmental Services, Inc).	200 W. Potter Drive, Anchorage, AK 99518-1605	(907) 562-2343	Total Organic Carbon, Ammonia, and Chemical Oxygen Demand
Analytica Alaska, Inc.	811 W. 8th Ave. Anchorage, Alaska 99501	(907) 258-2155	Cental Coordination for lab analyses

EPA_COOK_INKPR_000306

X. Certification

certify under penalty of law that this document and all attachments were prepared under my direction or supervision in accordance with a system designed to assure that qualified personnel properly gather and evaluate the information submitted. Based on my inquiry of the person or persons who manage the system or hose persons directly responsible for gathering the information, the information submitted is, to the best of my knowledge and belief, true, accurate, and complete. am aware that there are significant penalties for submitting false information, including the possibility of fine and imprisonment for knowing violations.

DALE C. HAINES OPERATIONS MANAGER
A. Name and Official Title (type or print)

(907) 276-7600
B Phone No. (area code & no.)

Dale C. Haines
C. Signature

08/25/03
D. Date Signed

EPA_COOK_INKPR_000307

V. INTAKE AND EFFLUENT CHARACTERISTICS

EPA ID. No	110007920535
Outfall No.	001

Part A. Provide the results of at least one analysis for every pollutant in this table. Complete one table for each outfall.

1. Pollutant	2. Effluent a. Maximum Daily Value (1) Conc.	2. Effluent a. Maximum Daily Value (2) mass	2. Effluent b. Max. 30-Day Value (if available) (1) Conc.	2. Effluent b. Max. 30-Day Value (if available) (2) mass	2. Effluent c. Long Term Avg. Value (if available) (1) Conc.	2. Effluent c. Long Term Avg. Value (if available) (2) mass	2. Effluent d. No of Analyses	3. Units (specify if blank) a.Conc.	3. Units (specify if blank) b. mass	4. Intake (optional) ** a. Long Term Average Value (1) Conc. (mg/L)	4. Intake (optional) ** a. Long Term Average Value (2) mass (kg/day)	4. Intake (optional) ** b. No of Analysis
a. Biochemical Oxygen Demand (BOD)	Not Available		Not Compulsory		Not Compulsory		0	mg/L	kg/day	ND	ND	1
b. Chemical Oxygen Demand (COD)							0	mg/L	kg/day	ND	ND	1
c. Total Organic Carbon (TOC)							0	mg/L	kg/day	ND	ND	1
d. Total Suspended Solids (TSS)							0	mg/L	kg/day	5.30	0.042	1
e. Ammonia (as N)							0	mg/L	kg/day	0.55	0.004	1
f. Flow *	9996 GPD						NA	GPD		2,100	GPD	not applicable
g. Temperature (winter)	Not Available						0	°C		not available		not available
h. Temperature (summer)							0	°C		not available		not available
i. pH							0	Std Units				

* Flow rate for intake is either total for all Cook Inlet used at facility or total of fresh water uses excluding drilling which varies widely and therefore cannot be predicted reliably. This is not outfall-specific.

** The Long Term Average mass was calculated from the facility-specific flowrates on the attached Discharge Flow Diagrams.

*** Conversions used for mass (kg/day) are as follows: 3.78 L= 1 gal; 1 g = 1000 mg; 1000g = 1 kg

ND - non-detect

NA - not applicable

NTBA - not tested - believed absent

EPA_COOK_INKPR_000308

EPA ID. No.	110007920535	Outfall No.	001

Part B. Mark "X" in column 2-a for each pollutant you know or have reason to believe is present. Mark "X" in column 2-b for each pollutant you believe to be absent.

If you mark column 2a for any pollutant which is limited either directly, or indirectly but expressly, in an effluent limitations guideline, you must provide the results of at least one analysis for that pollutant. For other pollutants for which you mark column 2a, you must provide quantitative data or an explanation of their presence in your discharge. Complete one table for each outfall. See the instructions for additional details and requirements.

1. Pollutant	2. Mark 'X'		3. Effluent							4. Units		5. Intake **		
	a. Believed Present	b. Believed Absent	a. Maximum Daily Value		b. Maximum 30-Day Value		c. Long Term Average Value		d. No of Analyses			a. Long Term Average Value		b. No of Analyses
			(1) Conc.	(2) mass	(1) Conc.	(2) mass	(1) Conc.	(2) mass		(1) Conc.	b. mass	(1) Conc.	(2) mass	
Bromide	X		Not Available		Not Compulsory		Not Compulsory		0	mg/L	kg/day	ND	ND	1
Chlorine, Total Residual		X	NTBA						0	mg/L				
Color	X		Not Available						0	ug/L	kg/day	ND	ND	1
Fecal Coliform		X	NTBA						0	not available				0
Fluoride (16984-48-8)	X		Not Available						0	mg/L	kg/day	ND	ND	1
Nitrate-Nitrite (as N)	X								0	mg/L	kg/day	ND	ND	1
Nitrogen, Total Organic (as N)	X								0	mg/L	kg/day	Not Available		0
Oil and Grease	X								0	mg/L	kg/day	ND	ND	1
Phosphorus (as P), Total (7723-14-0)	X								0	mg/L	kg/day	0.0600	0.00048	1
Alpha, Total		X	NTBA						0	analyses in progress				1
Beta, Total		X							0					1
Radium, Total		X							0					1
Radium 226, Total	X		Not Available						0					1
Sulfate (as SO4) (14808-79-8)	X								0	mg/L	kg/day	6	0.048	1
Sulfide (as S)	X								0	mg/L	kg/day	Not Available		1
Sulfite (as SO3) (14265-45-3)	X								0	mg/L	kg/day			1
Surfactants	X								0	mg/L	kg/day	0.13	0.00103	1
Aluminum, Total (7429-90-5)	X								0	ug/L	kg/day	54.70	0.00043	1
Barium, Total (7440-39-3)	X								0	ug/L	kg/day	43.5	0.00035	1
Boron, Total (7440-42-8)		X	NTBA						0	ug/L	kg/day	19.7	0.00016	1
Cobalt, Total (7440-48-4)		X							0	ug/L	kg/day	ND	ND	
Iron, Total (7439-89-6)	X		Not Available						0	mg/L	kg/day	0.26	0.00206	1
Magnesium, Total (7439-95-4)	X								0	mg/L	kg/day	11	0.087	1
Molybdenum, Total (7439-98-7)	X								0	ug/L	kg/day	0.447	0.000004	1
Manganese, Total (7439-96-5)		X	NTBA						0	ug/L	kg/day	688	0.00546	1
Tin, Total (7440-31-5)	X		Not Available						0	ug/L	kg/day	ND	ND	1
Titanium, Total (7440-32-6)	X								0	ug/L	kg/day	5.81	0.00005	1

* Flow rate for intake is either total for all Cook Inlet used at facility or total of fresh water uses excluding drilling which varies widely and therefore cannot be predicted reliably. This is not outfall-specific.

** The Long Term Average mass was calculated from the facility-specific flowrates on the attached Discharge Flow Diagrams.
*** Conversions used for mass (kg/day) are as follows: 3.78 L= 1 gal; 1 g = 1000 mg; 1000g = 1 kg
ND - non-detect
NA - not applicable
NTBA - not tested - believed absent
Intake Flowrate: 2,100 GPD

EPA_COOK_INKPR_000309

Part C.

EPA ID. No.	110007920535

Outfall No.	001

1. Pollutant	2. Mark "X" a. Testing Required	b. Believed Present	c. Believed Absent	3. Effluent a. Maximum Daily Value (1) Conc.	(2) mass	b. Maximum 30-Day Value (1) Conc.	(2) mass	c. Long Term Average Value (1) Conc.	(2) mass	d. No of Analyses	4. Units a. Conc.	b. mass	5. Intake a. Long Term Average Value (1) Conc.	(2) mass	b. No of Analyses
Metals, Cyanide, and Total Phenols															
Antimony, Total (7440-36-0)		X		Not Available		Not Compulsory		Not Compulsory		0	ug/L	kg/day	ND	ND	1
Arsenic, Total (7440-38-2)		X								0	ug/L	kg/day	8.27	0.0001	1
Beryllium, Total (7440-41-7)		X								0	ug/L	kg/day	ND	ND	1
Cadmium, Total (7440-43-9)		X								0	ug/L	kg/day	ND	ND	1
Chromium, Total (7440-47-3)		X								0	ug/L	kg/day	0.165	0.000001	1
Copper, Total (7440-50-8)		X								0	ug/L	kg/day	0.260	0.000002	1
Lead, Total (7439-92-1)		X								0	ug/L	kg/day	ND	ND	1
Mercury, Total (7439-97-6)		X								0	ug/L	kg/day	ND	ND	1
Nickel, Total (7440-02-0)		X								0	ug/L	kg/day	1.84	0.00001	1
Selenium, Total (7782-49-2)		X								0	ug/L	kg/day	0.555	0.000004	1
Silver, Total (7440-22-4)		X								0	ug/L	kg/day	ND	ND	1
Thallium, Total (7440-28-0)		X								0	ug/L	kg/day	ND	ND	1
Zinc, Total (7440-66-6)		X								0	ug/L	kg/day	14.3	0.0001	1
Cyanide, Total (57-12-5)			X	NTBA						0	mg/L	kg/day	ND	ND	1
Phenols, Total			X							0	mg/L	kg/day	0.055	0.0004	1
Dioxin															
2,3,7,8 - Tetra-chlorodibenzo-P-Dioxin (1764-01-6)			X	NTBA						0	pg/L	NA	ND	ND	1
Volatile Compounds															
Acrolein (107-02-8)			X	NTBA						0	ug/L	kg/day	ND	ND	1
Acrylonitrile (107-13-1)		X		Not Available						0	ug/L	kg/day	ND	ND	1
Benzene (71-43-2)		X								0	ug/L	kg/day	ND	ND	1
Bis(Chloromethyl) Ether (542-88-1)			X	NTBA						0	ug/L	kg/day	Not Available		0
Bromoform (75-25-2)			X			Not Compulsory		Not Compulsory		0	ug/L	kg/day	ND	ND	1
Carbon Tetrachloride (56-23-5)			X							0	ug/L	kg/day	ND	ND	1
Chlorobenzene (108-90-7)			X							0	ug/L	kg/day	ND	ND	1
Chlorodibromomethane (124-48-1)			X							0	ug/L	kg/day	ND	ND	1
Chloroethane (75-00-3)			X							0	ug/L	kg/day	ND	ND	1
2-Chloroethylvinyl Ether (110-75-8)			X							0	ug/L	kg/day	ND	ND	1
Chloroform (67-66-3)			X							0	ug/L	kg/day	ND	ND	1
Dichlorobromomethane (75-27-4)			X							0	ug/L	kg/day	ND	ND	1

EPA_COOK_INKPR_000310

Part C.

EPA ID. No. 110007920535

Outfall No. 001

1. Pollutant	2. Mark "X" a. Testing Required	b. Believed Present	c. Believed Absent	3. Effluent a. Maximum Daily Value (1) Conc.	(2) mass	b. Maximum 30-Day Value (1) Conc.	(2) mass	c. Long Term Average Value (1) Conc.	(2) mass	d. No of Analyses	4. Units a. Conc.	b. mass	5. Intake a. Long Term Average Value (1) Conc.	(2) mass	b. No of Analyses
Dichlorodifluoromethane (75-71-8)			X	NTBA		Not Compulsory		Not Compulsory		0	ug/L	kg/day	ND	ND	1
1,1-Dichloroethane (75-34-3)			X							0	ug/L	kg/day	ND	ND	1
1,2-Dichloroethane (107-06-2)			X							0	ug/L	kg/day	ND	ND	1
1,1-Dichloroethylene (75-35-4)			X							0	ug/L	kg/day	ND	ND	1
1,2-Dichloropropane (78-87-5)			X							0	ug/L	kg/day	ND	ND	1
1,3-Dichloropropylene (542-75-6)			X							0	ug/L	kg/day	Not Available		0
Ethylbenzene (100-41-4)		X		Not Available						0	ug/L	kg/day	ND	ND	1
Methyl Bromide (74-83-9)			X	NTBA						0	ug/L	kg/day	ND	ND	1
Methyl Chloride (74-87-3)			X							0	ug/L	kg/day	ND	ND	1
Methylene Chloride (75-09-2)			X							0	ug/L	kg/day	ND	ND	1
1,1,2,2-Tetrachloroethane (79-34-5)			X							0	ug/L	kg/day	ND	ND	1
Tetrachloroethylene (127-18-4)			X							0	ug/L	kg/day	ND	ND	1
Toluene (108-88-3)		X		Not Available						0	ug/L	kg/day	ND	ND	1
1,2-Trans-Dichloroethylene (156-60-5)			X	NTBA						0	ug/L	kg/day	ND	ND	1
1,1,1-Trichloroethane (71-55-6)			X							0	ug/L	kg/day	ND	ND	1
1,1,2-Trichloroethane (79-00-5)			X							0	ug/L	kg/day	ND	ND	1
Trichloroethylene (79-01-6)			X							0	ug/L	kg/day	ND	ND	1
Trichlorofluoromethane (75-69-4)			X							0	ug/L	kg/day	ND	ND	1
Vinyl Chloride (75-01-4)			X							0	ug/L	kg/day	ND	ND	1
Acid Compounds															
2-Chlorophenol (95-57-8)			X	NTBA						0	ug/L	kg/day	ND	ND	1
2,4-Dichlorophenol (120-83-2)			X							0	ug/L	kg/day	ND	ND	1

EPA_COOK_INKPR_000311

Part C.

EPA ID. No.	110007920535

Outfall No.	001

1. Pollutant	2. Mark "X"			3. Effluent							4. Units		5. Intake		
	a. Testing Required	b. Believed Present	c. Believed Absent	a. Maximum Daily Value		b. Maximum 30-Day Value		c. Long Term Average Value		d. No of Analyses	a. Conc	b. mass	a. Long Term Average Value		b. No of Analyses
				(1) Conc.	(2) mass	(1) Conc.	(2) mass	(1) Conc.	(2) mass				(1) Conc.	(2) mass	
2,4-Dimethylephenol (105-67-9)			X	NTBA		Not Compulsory		Not Compulsory		0	ug/L	kg/day	ND	ND	1
4,6-Dinitro-O-Cresol (534-52-1)			X							0	ug/L	kg/day	ND	ND	1
2,4-Dinitrophenol (51-28-5)			X							0	ug/L	kg/day	ND	ND	1
2-Nitrophenol (88-75-5)			X							0	ug/L	kg/day	ND	ND	1
4-Nitrophenol (100-02-7)			X							0	ug/L	kg/day	ND	ND	1
P-Chloro-M-Cresol (59-50-7)			X							0	ug/L	kg/day	ND	ND	1
Pentachlorophenol (87-86-5)			X							0	ug/L	kg/day	ND	ND	1
Phenol (108-95-2)		X		Not Available						0	ug/L	kg/day	ND	ND	1
2,4,6-Trichlorophenol (88-06-2)			X	NTBA						0	ug/L	kg/day	ND	ND	1
Base/Neutral Compounds															
Acenaphthene (83-32-9)		X		Not Available		Not Compulsory		Not Compulsory		0	ug/L	kg/day	ND	ND	1
Acenaphtylene (208-96-8)		X								0	ug/L	kg/day	ND	ND	1
Anthracene (120-12-7)		X								0	ug/L	kg/day	ND	ND	1
Benzidine (92-87-5)		X								0	ug/L	kg/day	ND	ND	1
Benzo (a) Anthracene (56-55-3)		X								0	ug/L	kg/day	ND	ND	1
Benzo (a) Pyrene (50-32-8)		X								0	ug/L	kg/day	ND	ND	1
3,4-Benzo-fluoranthene (205-99-2)		X								0	ug/L	kg/day	ND	ND	1
Benzo (ghi) Perylene (191-24-2)		X								0	ug/L	kg/day	ND	ND	1
Benzo (k) Fluoranthene (207-08-9)		X								0	ug/L	kg/day	ND	ND	1
Bis (2-Chloroethoxy) Methane (111-91-1)			X	NTBA						0	ug/L	kg/day	ND	ND	1
Bis (2-Chloroethyl) Ether (111-44-4)			X							0	ug/L	kg/day	ND	ND	1
Bis (2-Chloroisopropyl) Ether (108-60-1)			X							0	ug/L	kg/day	ND	ND	1

Part C.

EPA ID. No. 110007920535 **Outfall No.** 001

1. Pollutant	2. Mark "X" a. Testing Required	b. Believed Present	c. Believed Absent	3. Effluent a. Maximum Daily Value (1) Conc.	(2) mass	b. Maximum 30-Day Value (1) Conc.	(2) mass	c. Long Term Average Value (1) Conc.	(2) mass	d. No of Analyses	4. Units a. Conc.	b. mass	5. Intake a. Long Term Average Value (1) Conc.	(2) mass	b. No of Analyses
Bis (2-Ethyl-hexyl) Phthalate (117-81-7)		X		Not Available		Not Compulsory		Not Compulsory		0	ug/L	kg/day	ND	ND	1
4-Bromophenyl Phenyl (101-55-3)			X	NTBA						0	ug/L	kg/day	ND	ND	1
Butyl Benzyl Phthalate (85-68-7)			X							0	ug/L	kg/day	ND	ND	1
2-Chloro-naphthalene (91-58-7)			X							0	ug/L	kg/day	ND	ND	1
4-Chlorophenyl Phenyl Ether (7005-72-3)			X							0	ug/L	kg/day	ND	ND	1
Chrysene (218-01-9)		X		Not Available						0	ug/L	kg/day	ND	ND	1
Dibenzo (a,h) Anthracene (53-70-3)		X								0	ug/L	kg/day	ND	ND	1
1,2-Dichlorobenzene (95-50-1)			X	NTBA						0	ug/L	kg/day	ND	ND	1
1,3-Dichlorobenzene (541-73-1)			X							0	ug/L	kg/day	ND	ND	1
1,4-Dichlorobenzene (106-46-7)			X							0	ug/L	kg/day	ND	ND	1
3,3'-Dichlorobenzidine (91-94-1)			X							0	ug/L	kg/day	ND	ND	1
Diethyl Phthalate (84-66-2)			X							0	ug/L	kg/day	ND	ND	1
Dimethyl Phthalate (131-11-3)			X							0	ug/L	kg/day	ND	ND	1
Di-N-Butyl Phthalate (84-74-2)		X		Not Available						0	ug/L	kg/day	1.8	0.00001	1
2,4-Dinitrotoluene (121-14-2)			X	NTBA						0	ug/L	kg/day	ND	ND	1
2,6-Dinitrotoluene (606-20-2)			X							0	ug/L	kg/day	ND	ND	1
Di-N-Octyl Phthalate (117-84-0)		X		Not Available						0	ug/L	kg/day	ND	ND	1
1,2-Diphenyl-hydrazine (as Azo-benzene) (122-66-7)			X	NTBA						0	ug/L	kg/day	ND	ND	1
Fluoranthene (206-44-0)		X		Not Available						0	ug/L	kg/day	ND	ND	1
Fluorene (86-73-7)		X								0	ug/L	kg/day	ND	ND	1
Hexachlorobenzene (118-74-1)			X	NTBA						0	ug/L	kg/day	ND	ND	1
Hexachlorobutadiene (87-68-3)			X							0	ug/L	kg/day	ND	ND	1

EPA_COOK_INKPR_000313

Part C.

EPA ID. No. 110007920535

Outfall No. 001

1. Pollutant	2. Mark 'X' a. Testing Required	b. Believed Present	c. Believed Absent	3. Effluent a. Maximum Daily Value (1) Conc.	(2) mass	b. Maximum 30-Day Value (1) Conc.	(2) mass	c. Long Term Average Value (1) Conc.	(2) mass	d. No of Analyses	4. Units a. Conc.	b. mass	5. Intake a. Long Term Average Value (1) Conc.	(2) mass	b. No of Analyses
Hexachlorocyclopentadiene (77-47-4)			X	NTBA		Not Compulsory		Not Compulsory		0	ug/L	kg/day	ND	ND	1
Hexachloroethane (67-72-1)			X							0	ug/L	kg/day	ND	ND	1
Indeno (1,2,3-cd) Pyrene (193-39-5)		X		Not Available						0	ug/L	kg/day	ND	ND	1
Isophorone (78-59-1)		X								0	ug/L	kg/day	ND	ND	1
Naphthalene (91-20-3)		X								0	ug/L	kg/day	ND	ND	1
Nitrobenzene (98-95-3)			X	NTBA						0	ug/L	kg/day	ND	ND	1
N-Nitro-sodimethylamine (62-75-9)			X							0	ug/L	kg/day	ND	ND	1
N-Nitrosodi-N-Propylamine (621-64-7)			X							0	ug/L	kg/day	ND	ND	1
N-Nitrosodiphenylamine (86-30-6)			X							0	ug/L	kg/day	ND	ND	1
Phenanthrene (85-01-8)		X		Not Available						0	ug/L	kg/day	ND	ND	1
Pyrene (129-00-0)		X								0	ug/L	kg/day	ND	ND	1
1,2,4-Trichlorobenzene (120-82-1)			X	NTBA						0	ug/L	kg/day	ND	ND	1
Pesticides															
Aldrin (309-00-2)			X	NTBA		Not Compulsory		Not Compulsory		0	ug/L	kg/day	ND	ND	1
α-BHC (319-84-6)			X							0	ug/L	kg/day	ND	ND	1
β-BHC (319-85-7)			X							0	ug/L	kg/day	ND	ND	1
γ-BHC (58-89-9)			X							0	ug/L	kg/day	ND	ND	1
δ-BHC (319-86-8)			X							0	ug/L	kg/day	ND	ND	1
Chlordane (57-74-9)			X							0	ug/L	kg/day	ND	ND	1
4,4'-DDT (50-29-3)			X							0	ug/L	kg/day	ND	ND	1
4,4'-DDE (72-55-9)			X							0	ug/L	kg/day	ND	ND	1
4,4'-DDD (72-54-8)			X							0	ug/L	kg/day	ND	ND	1
Dieldrin (60-57-1)			X							0	ug/L	kg/day	ND	ND	1
α-Endosulfan (115-29-7)			X							0	ug/L	kg/day	ND	ND	1

EPA_COOK_INKPR_000314

Part C.

EPA ID. No.	110007920535

Outfall No.	001

1. Pollutant	2. Mark 'X' a. Testing Required	b. Believed Present	c. Believed Absent	3. Effluent a. Maximum Daily Value (1) Conc.	(2) mass	b. Maximum 30-Day Value (1) Conc.	(2) mass	c. Long Term Average Value (1) Conc.	(2) mass	d. No of Analyses	4. Units a. Conc.	b. mass	5. Intake a. Long Term Average Value (1) Conc.	(2) mass	b. No of Analyses
b-Endosulfan (115-29-7)			X	NTBA		Not Compulsory		Not Compulsory		0	ug/L	kg/day	ND	ND	1
Endosulfan Sulfate (1031-07-8)			X							0	ug/L	kg/day	ND	ND	1
Endrin (72-20-8)			X							0	ug/L	kg/day	ND	ND	1
Endrin Aldehyde (7421-93-4)			X							0	ug/L	kg/day	ND	ND	1
Heptachlor (76-44-8)			X							0	ug/L	kg/day	ND	ND	1
Heptachlor Epoxide (1024-57-3)			X							0	ug/L	kg/day	ND	ND	1
PCB-1242 (53469-21-9)			X	NTBA						0	ug/L	kg/day	ND	ND	1
PCB-1254 (11097-69-1)			X							0	ug/L	kg/day	ND	ND	1
PCB-1221 (11104-28-2)			X							0	ug/L	kg/day	ND	ND	1
PCB-1232 (11141-16-5)			X							0	ug/L	kg/day	ND	ND	1
PCB-1248 (12672-29-6)			X							0	ug/L	kg/day	ND	ND	1
PCB-1260 (11096-82-5)			X							0	ug/L	kg/day	ND	ND	1
PCB-1016 (12674-11-2)			X							0	ug/L	kg/day	ND	ND	1
Toxaphene (8001-35-2)			X							0	ug/L	kg/day	ND	ND	1

* Flow rate for intake is either total for all Cook Inlet used at facility or total of fresh water uses excluding drilling which varies widely and therefore cannot be predicted reliably. This is not outfall-specific.

** The Long Term Average mass was calculated from the facility-specific flowrates on the attached Discharge Flow Diagrams.

*** Conversions used for mass (kg/day) are as follows: 3.78 L= 1 gal; 1 g = 1000 mg; 1000g = 1 kg

ND - non-detect

NA - not applicable

NTBA - not tested - believed absent

Intake Flowrate: 2,100 GPD

EPA_COOK_INKPR_000315

V. INTAKE AND EFFLUENT CHARACTERISTICS

EPA ID. No.	110007920535
Outfall No.	003

Part A. Provide the results of at least one analysis for every pollutant in this table. Complete one table for each outfall.

1. Pollutant	2. Effluent							3. Units (specify if blank)		4. Intake (optional)		
	a. Maximum Daily Value		b. Max. 30-Day Value (if available)		c. Long Term Avg. Value (if available)		d. No of Analyses			a. Long Term Average Value		b. No of Analysis
	(1) Conc.	(2) mass	(1) Conc.	(2) mass	(1) Conc.	(2) mass		a.Conc.	b. mass	(1) Conc.	(2) mass	
a. Biochemical Oxygen Demand (BOD)	20.5	0.09	Not Compulsory		Not Compulsory		1	mg/L	kg/day	ND	ND	1
b. Chemical Oxygen Demand (COD)	1,180	5.35					1	mg/L	kg/day	1,970	38,276	1
c. Total Organic Carbon (TOC)	not available	not available					1	mg/L	kg/day	1.56	30	1
d. Total Suspended Solids (TSS)	48.4	0.22					1	mg/L	kg/day	81.5	1,583	1
e. Ammonia (as N)	22.4	0.10					1	mg/L	kg/day	ND	ND	1
f. Flow	1,200						NA	GPD		5,140,000	GPD	not applicable
g. Temperature (winter)	not available						1	°C		not available		not available
h. Temperature (summer)	18						1	°C		not available		not available
i. pH	Minimum	Maximum						Std Units				
	not available	not available					0					

* Flow rate for intake is either total for all Cook Inlet used at facility or total of fresh water uses excluding drilling which varies widely and therefore cannot be predicted reliably. This is not outfall-specific.
** The Long Term Average mass was calculated from the facility-specific flowrates on the attached Discharge Flow Diagrams.
*** Conversions used for mass (kg/day) are as follows: 3.78 L= 1 gal; 1 g = 1000 mg; 1000g = 1 kg
ND - non-detect
NA - not applicable
NTBA - not tested -believed absent

EPA_COOK_INKPR_000316

NPDES Permit AKG 285000 Renewal

EPA ID. No.	110007920535	Outfall No.	003

Part B. Mark "X" in column 2-a for each pollutant you know or have reason to believe is present. Mark "X" in column 2-b for each pollutant you believe to be absent.

If you mark column 2a for any pollutant which is limited either directly, or indirectly but expressly, in an effluent limitations guideline, you must provide the results of at least one analysis for that pollutant. For other pollutants for which you mark column 2a, you must provide quantitative data or an explanation of their presence in your discharge. Complete one table for each outfall. See the instructions for additional details and requirements.

1. Pollutant	2. Mark "X"		3. Effluent							4. Units		5. Intake **		
	a. Believed Present	b. Believed Absent	a. Maximum Daily Value		b. Maximum 30-Day Value		c. Long Term Average Value		d. No of Analyses			a. Long Term Average Value		b. No of Analyses
			(1) Conc.	(2) mass	(1) Conc.	(2) mass	(1) Conc.	(2) mass		(1) Conc.	b. mass	(1) Conc.	(2) mass	
Bromide		X	NTBA		Not Compulsory		Not Compulsory		0	mg/L	kg/day	87	1,690	1
Chlorine, Total Residual	X		Not Available				1.7	0.008	51	not available				0
Color		X	NTBA				Not Compulsory		0	ug/L	kg/day	5.0	0.10	1
Fecal Coliform	X		3	N/A					1	not available				0
Fluoride (16984-48-8)		X	NTBA						0	mg/L	kg/day	ND	ND	1
Nitrate-Nitrite (as N)		X							0	mg/L	kg/day	ND	ND	1
Nitrogen, Total Organic (as N)		X							0	mg/L	kg/day	Not Available		0
Oil and Grease		X							0	mg/L	kg/day	ND	ND	1
Phosphorus (as P), Total (7723-14-0)		X							0	mg/L	kg/day	0.110	2.14	1
Alpha, Total		X							0	analyses in progress				1
Beta, Total		X							0					1
Radium, Total		X							0					1
Radium 226, Total		X							0					1
Sulfate (as SO4) (14808-79-8)		X							0	mg/L	kg/day	1,610	31,281	1
Sulfide (as S)		X							0	mg/L	kg/day	ND		1
Sulfite (as SO3) (14265-45-3)		X							0	mg/L	kg/day			1
Surfactants		X							0	mg/L	kg/day	1.38	26.81	1
Aluminum, Total (7429-90-5)		X							0	ug/L	kg/day	1,920	37.30	1
Barium, Total (7440-39-3)		X							0	ug/L	kg/day	36.1	0.70	1
Boron, Total (7440-42-8)		X							0	ug/L	kg/day	3220	62.56	1
Cobalt, Total (7440-48-4)		X							0	ug/L	kg/day	2.06	0.04	1
Iron, Total (7439-89-6)		X							0	mg/L	kg/day	0.33	6.41	1
Magnesium, Total (7439-95-4)		X							0	mg/L	kg/day	800	15,543	1
Molybdenum, Total (7439-98-7)		X							0	ug/L	kg/day	8.38	0.16	1
Manganese, Total (7439-96-5)		X							0	ug/L	kg/day	86.1	1.67	1
Tin, Total (7440-31-5)		X							0	ug/L	kg/day	ND	ND	1
Titanium, Total (7440-32-6)		X							0	ug/L	kg/day	149	2.89	1

* Flow rate for intake is either total for all Cook Inlet used at facility or total of fresh water uses excluding drilling which varies widely and therefore cannot be predicted reliably. This is not outfall-specific.

** The Long Term Average mass was calculated from the facility-specific flowrates on the attached Discharge Flow Diagrams.

*** Conversions used for mass (kg/day) are as follows: 3.78 L= 1 gal; 1 g = 1000 mg; 1000g = 1 kg

ND - non-detect

NA - not applicable

NTBA - not tested- believed absent

003 Flowrate: 1200 GPD

EPA_COOK_INKPR_000317

Part C.

EPA ID. No. 110007920535

Outfall No. 003

1. Pollutant	2. Mark 'X' a. Testing Required	b. Believed Present	c. Believed Absent	3. Effluent a. Maximum Daily Value (1) Conc.	(2) mass	b. Maximum 30-Day Value (1) Conc.	(2) mass	c. Long Term Average Value (1) Conc.	(2) mass	d. No of Analyses	4. Units a. Conc.	b. mass	5. Intake a. Long Term Average Value (1) Conc.	(2) mass	b. No of Analyses
Metals, Cyanide, and Total Phenols															
Antimony, Total (7440-36-0)			X							0	ug/L	kg/day	1.97	0.04	1
Arsenic, Total (7440-38-2)			X							0	ug/L	kg/day	60.5	1.18	1
Beryllium, Total (7440-41-7)			X							0	ug/L	kg/day	ND	ND	1
Cadmium, Total (7440-43-9)			X							0	ug/L	kg/day	ND	ND	1
Chromium, Total (7440-47-3)			X							0	ug/L	kg/day	10.3	0.20	1
Copper, Total (7440-50-8)			X							0	ug/L	kg/day	12.8	0.25	1
Lead, Total (7439-92-1)			X							0	ug/L	kg/day	1.71	0.03	1
Mercury, Total (7439-97-6)			X							0	ug/L	kg/day	0.0896	0.002	1
Nickel, Total (7440-02-0)			X							0	ug/L	kg/day	16.7	0.32	1
Selenium, Total (7782-49-2)			X							0	ug/L	kg/day	175	3.40	1
Silver, Total (7440-22-4)			X							0	ug/L	kg/day	ND	ND	1
Thallium, Total (7440-28-0)			X							0	ug/L	kg/day	ND	ND	1
Zinc, Total (7440-66-6)			X							0	ug/L	kg/day	11.7	0.23	1
Cyanide, Total (57-12-5)			X							0	mg/L	kg/day	ND	ND	1
Phenols, Total			X							0	mg/L	kg/day	ND	ND	1
Dioxin															
2,3,7,8 - Tetra-chlorodibenzo-P-Dioxin (1764-01-6)			X							0	pg/L	NA	ND	ND	1
Volatile Compounds															
Acrolein (107-02-8)			X							0	ug/L	kg/day	ND	ND	1
Acrylonitrile (107-13-1)			X							0	ug/L	kg/day	ND	ND	1
Benzene (71-43-2)			X							0	ug/L	kg/day	ND	ND	1
Bis(Chloromethyl) Ether (542-88-1)			X							0	ug/L	kg/day	Not Available		0
Bromoform (75-25-2)			X							0	ug/L	kg/day	ND	ND	1
Carbon Tetrachloride (56-23-5)			X							0	ug/L	kg/day	ND	ND	1
Chlorobenzene (108-90-7)			X							0	ug/L	kg/day	ND	ND	1
Chlorodibromomethane (124-48-1)			X							0	ug/L	kg/day	ND	ND	1
Chloroethane (75-00-3)			X							0	ug/L	kg/day	ND	ND	1
2-Chloroethylvinyl Ether (110-75-8)			X							0	ug/L	kg/day	ND	ND	1
Chloroform (67-66-3)			X							0	ug/L	kg/day	ND	ND	1
Dichlorobromomethane (75-27-4)			X							0	ug/L	kg/day	ND	ND	1
Dichlorodifluoromethane (75-71-8)			X							0	ug/L	kg/day	ND	ND	1

NTBA — Not Compulsory

EPA_COOK_INKPR_000318

Part C.

EPA ID. No. 110007920535

Outfall No. 003

1. Pollutant	2. Mark 'X' a. Testing Required	b. Believed Present	c. Believed Absent	3. Effluent a. Maximum Daily Value (1) Conc.	(2) mass	b. Maximum 30-Day Value (1) Conc.	(2) mass	c. Long Term Average Value (1) Conc.	(2) mass	d. No of Analyses	4. Units a. Conc.	b. mass	5. Intake a. Long Term Average Value (1) Conc.	(2) mass	b. No of Analyses
1,1-Dichloroethane (75-34-3)			X							0	ug/L	kg/day	ND	ND	1
1,2-Dichloroethane (107-06-2)			X							0	ug/L	kg/day	ND	ND	1
1,1-Dichloroethylene (75-35-4)			X							0	ug/L	kg/day	ND	ND	1
1,2-Dichloropropane (78-87-5)			X	NTBA		Not Compulsory		Not Compulsory		0	ug/L	kg/day	ND	ND	1
1,3-Dichloropropylene (542-75-6)			X							0	ug/L	kg/day	Not Available		0
Ethylbenzene (100-41-4)			X							0	ug/L	kg/day	ND	ND	1
Methyl Bromide (74-83-9)			X							0	ug/L	kg/day	ND	ND	1
Methyl Chloride (74-87-3)			X							0	ug/L	kg/day	ND	ND	1
Methylene Chloride (75-09-2)			X							0	ug/L	kg/day	ND	ND	1
1,1,2,2-Tetrachloroethane (79-34-5)			X							0	ug/L	kg/day	ND	ND	1
Tetrachloroethylene (127-18-4)			X							0	ug/L	kg/day	ND	ND	1
Toluene (108-88-3)			X	NTBA						0	ug/L	kg/day	ND	ND	1
1,2-Trans-Dichloroethylene (156-60-5)			X							0	ug/L	kg/day	ND	ND	1
1,1,1-Trichloroethane (71-55-6)			X							0	ug/L	kg/day	ND	ND	1
1,1,2-Trichloroethane (79-00-5)			X			Not Compulsory		Not Compulsory		0	ug/L	kg/day	ND	ND	1
Trichloroethylene (79-01-6)			X							0	ug/L	kg/day	ND	ND	1
Trichlorofluoromethane (75-69-4)			X							0	ug/L	kg/day	ND	ND	1
Vinyl Chloride (75-01-4)			X							0	ug/L	kg/day	ND	ND	1
				NTBA											
Acid Compounds															
2-Chlorophenol (95-57-8)			X							0	ug/L	kg/day	ND	ND	1
2,4-Dichlorophenol (120-83-2)			X							0	ug/L	kg/day	ND	ND	1
2,4-Dimethylephenol (105-67-9)			X							0	ug/L	kg/day	ND	ND	1

EPA_COOK_INKPR_000319

Part C.

EPA ID. No. 110007920535

Outfall No. 003

1. Pollutant	2. Mark X			3. Effluent							4. Units		5. Intake		
	a. Testing Required	b. Believed Present	c. Believed Absent	a. Maximum Daily Value		b. Maximum 30-Day Value		c. Long Term Average Value		d. No of Analyses	a. Conc.	b. mass	a. Long Term Average Value		b. No of Analyses
				(1) Conc.	(2) mass	(1) Conc.	(2) mass	(1) Conc.	(2) mass				(1) Conc.	(2) mass	
4,6-Dinitro-O-Cresol (534-52-1)			X							0	ug/L	kg/day	ND	ND	1
2,4-Dinitrophenol (51-28-5)			X							0	ug/L	kg/day	ND	ND	1
2-Nitrophenol (88-75-5)			X							0	ug/L	kg/day	ND	ND	1
4-Nitrophenol (100-02-7)			X							0	ug/L	kg/day	ND	ND	1
P-Chloro-M-Cresol (59-50-7)			X							0	ug/L	kg/day	ND	ND	1
Pentachlorophenol (87-86-5)			X							0	ug/L	kg/day	ND	ND	1
Phenol (108-95-2)			X							0	ug/L	kg/day	ND	ND	1
2,4,6-Trichlorophenol (88-06-2)			X							0	ug/L	kg/day	ND	ND	1
Base/Neutral Compounds															
Acenaphthene (83-32-9)			X							0	ug/L	kg/day	ND	ND	1
Acenaphtylene (208-96-8)			X							0	ug/L	kg/day	ND	ND	1
Anthracene (120-12-7)			X							0	ug/L	kg/day	ND	ND	1
Benzidine (92-87-5)			X							0	ug/L	kg/day	ND	ND	1
Benzo (a) Anthracene (56-55-3)			X							0	ug/L	kg/day	ND	ND	1
Benzo (a) Pyrene (50-32-8)			X							0	ug/L	kg/day	ND	ND	1
3,4-Benzo-fluoranthene (205-99-2)			X							0	ug/L	kg/day	ND	ND	1
Benzo (ghi) Perylene (191-24-2)			X							0	ug/L	kg/day	ND	ND	1
Benzo (k) Fluoranthene (207-08-9)			X							0	ug/L	kg/day	ND	ND	1
Bis (2-Chloroethoxy) Methane (111-91-1)			X							0	ug/L	kg/day	ND	ND	1
Bis (2-Chloroethyl) Ether (111-44-4)			X							0	ug/L	kg/day	ND	ND	1
Bis (2-Chloroisopropyl) Ether (108-60-1)			X							0	ug/L	kg/day	ND	ND	1
Bis (2-Ethyl-hexyl) Phthalate (117-81-7)			X							0	ug/L	kg/day	ND	ND	1
4-Bromophenyl Phenyl (101-55-3)			X							0	ug/L	kg/day	ND	ND	1

NTBA

Not Compulsory

Part C.

EPA ID. No.	110007920535

Outfall No.	003

1. Pollutant	2. Mark 'X'			3. Effluent							4. Units		5. Intake		
	a. Testing Required	b. Believed Present	c. Believed Absent	a. Maximum Daily Value		b. Maximum 30-Day Value		c. Long Term Average Value		d. No of Analyses	a. Conc.	b. mass	a. Long Term Average Value		b. No of Analyses
				(1) Conc.	(2) mass	(1) Conc.	(2) mass	(1) Conc.	(2) mass				(1) Conc.	(2) mass	
Butyl Benzyl Phthalate (85-68-7)			X							0	ug/L	kg/day	ND	ND	1
2-Chloro-naphthalene (91-58-7)			X							0	ug/L	kg/day	ND	ND	1
4-Chlorophenyl Phenyl Ether (7005-72-3)			X			Not Compulsory		Not Compulsory		0	ug/L	kg/day	ND	ND	1
Chrysene (218-01-9)			X							0	ug/L	kg/day	ND	ND	1
Dibenzo (a,h) Anthracene (53-70-3)			X							0	ug/L	kg/day	ND	ND	1
1,2-Dichlorobenzene (95-50-1)			X							0	ug/L	kg/day	ND	ND	1
1,3-Dichlorobenzene (541-73-1)			X		NTBA					0	ug/L	kg/day	ND	ND	1
1,4-Dichlorobenzene (106-46-7)			X							0	ug/L	kg/day	ND	ND	1
3,3'-Dichlorobenzidine (91-94-1)			X							0	ug/L	kg/day	ND	ND	1
Diethyl Phthalate (84-66-2)			X							0	ug/L	kg/day	ND	ND	1
Dimethyl Phthalate (131-11-3)			X							0	ug/L	kg/day	ND	ND	1
Di-N-Butyl Phthalate (84-74-2)			X							0	ug/L	kg/day	1.2	0.02	1
2,4-Dinitrotoluene (121-14-2)			X							0	ug/L	kg/day	ND	ND	1
2,6-Dinitrotoluene (606-20-2)			X			Not Compulsory		Not Compulsory		0	ug/L	kg/day	ND	ND	1
Di-N-Octyl Phthalate (117-84-0)			X							0	ug/L	kg/day	ND	ND	1
1,2-Diphenyl-hydrazine (as Azo-benzene) (122-66-7)			X		NTBA					0	ug/L	kg/day	ND	ND	1
Fluoranthene (206-44-0)			X							0	ug/L	kg/day	ND	ND	1
Fluorene (86-73-7)			X							0	ug/L	kg/day	ND	ND	1
Hexachlorobenzene (118-74-1)			X							0	ug/L	kg/day	ND	ND	1
Hexachlorobutadiene (87-68-3)			X							0	ug/L	kg/day	ND	ND	1
Hexachlorocyclopentadiene (77-47-4)			X							0	ug/L	kg/day	ND	ND	1
Hexachloroethane (67-72-1)			X							0	ug/L	kg/day	ND	ND	1
Indeno (1,2,3-cd) Pyrene (193-39-5)			X							0	ug/L	kg/day	ND	ND	1

EPA_COOK_INKPR_000321

Part C.

EPA ID. No. 110007920535

Outfall No. 003

1. Pollutant	2. Mark 'X' a. Testing Required	b. Believed Present	c. Believed Absent	3. Effluent a. Maximum Daily Value (1) Conc.	(2) mass	b. Maximum 30-Day Value (1) Conc.	(2) mass	c. Long Term Average Value (1) Conc.	(2) mass	d. No of Analyses	4. Units a. Conc	b. mass	5. Intake a. Long Term Average Value (1) Conc.	(2) mass	b. No of Analyses
Isophorone (78-59-1)			X							0	ug/L	kg/day	ND	ND	1
Naphthalene (91-20-3)			X							0	ug/L	kg/day	ND	ND	1
Nitrobenzene (98-95-3)			X							0	ug/L	kg/day	ND	ND	1
N-Nitro-sodimethylamine (62-75-9)			X							0	ug/L	kg/day	ND	ND	1
N-Nitrosodi-N-Propylamine (621-64-7)			X							0	ug/L	kg/day	ND	ND	1
N-Nitrosodiphenylamine (86-30-6)			X							0	ug/L	kg/day	ND	ND	1
Phenanthrene (85-01-8)			X							0	ug/L	kg/day	ND	ND	1
Pyrene (129-00-0)			X							0	ug/L	kg/day	ND	ND	1
1,2,4-Trichlorobenzene (120-82-1)			X							0	ug/L	kg/day	ND	ND	1
Pesticides															
Aldrin (309-00-2)			X							0	ug/L	kg/day	ND	ND	1
α-BHC (319-84-6)			X							0	ug/L	kg/day	ND	ND	1
β-BHC (319-85-7)			X							0	ug/L	kg/day	ND	ND	1
γ-BHC (58-89-9)			X							0	ug/L	kg/day	ND	ND	1
δ-BHC (319-86-8)			X							0	ug/L	kg/day	ND	ND	1
Chlordane (57-74-9)			X							0	ug/L	kg/day	ND	ND	1
4,4'-DDT (50-29-3)			X							0	ug/L	kg/day	ND	ND	1
4,4'-DDE (72-55-9)			X							0	ug/L	kg/day	ND	ND	1
4,4'-DDD (72-54-8)			X							0	ug/L	kg/day	ND	ND	1
Dieldrin (60-57-1)			X							0	ug/L	kg/day	ND	ND	1
α-Endosulfan (115-29-7)			X							0	ug/L	kg/day	ND	ND	1
β-Endosulfan (115-29-7)			X							0	ug/L	kg/day	ND	ND	1
Endosulfan Sulfate (1031-07-8)			X							0	ug/L	kg/day	ND	ND	1
Endrin (72-20-8)			X							0	ug/L	kg/day	ND	ND	1

NTBA — Not Compulsory

Part C.

EPA ID. No.	110007920535

Outfall No.	003

1. Pollutant	2. Mark 'X' a. Testing Required	b. Believed Present	c. Believed Absent	3. Effluent a. Maximum Daily Value (1) Conc.	(2) mass	b. Maximum 30-Day Value (1) Conc.	(2) mass	c. Long Term Average Value (1) Conc.	(2) mass	d. No of Analyses	4. Units a. Conc.	b. mass	5. Intake a. Long Term Average Value (1) Conc.	(2) mass	b. No of Analyses
Endrin Aldehyde (7421-93-4)			X	NTBA		Not Compulsory		Not Compulsory		0	ug/L	kg/day	ND	ND	1
Heptachlor (76-44-8)			X							0	ug/L	kg/day	ND	ND	1
Heptachlor Epoxide (1024-57-3)			X							0	ug/L	kg/day	ND	ND	1
PCB-1242 (53469-21-9)			X							0	ug/L	kg/day	ND	ND	1
PCB-1254 (11097-69-1)			X							0	ug/L	kg/day	ND	ND	1
PCB-1221 (11104-28-2)			X							0	ug/L	kg/day	ND	ND	1
PCB-1232 (11141-16-5)			X							0	ug/L	kg/day	ND	ND	1
PCB-1248 (12672-29-6)			X							0	ug/L	kg/day	ND	ND	1
PCB-1260 (11096-82-5)			X							0	ug/L	kg/day	ND	ND	1
PCB-1016 (12674-11-2)			X							0	ug/L	kg/day	ND	ND	1
Toxaphene (8001-35-2)			X							0	ug/L	kg/day	ND	ND	1

* Flow rate for intake is either total for all Cook Inlet used at facility or total of fresh water uses excluding drilling which varies widely and therefore cannot be predicted reliably. This is not outfall-specific.

** The Long Term Average mass was calculated from the facility-specific flowrates on the attached Discharge Flow Diagrams.

*** Conversions used for mass (kg/day) are as follows: 3.78 L= 1 gal; 1 g = 1000 mg; 1000g = 1 kg

ND - non-detect

NA - not applicable

NTBA - not tested- believed absent

EPA_COOK_INKPR_000323

V. INTAKE AND EFFLUENT CHARACTERISTICS

EPA ID. No.	110007920535

Part A. Provide the results of at least one analysis for every pollutant in this table. Complete one table for each outfall.

Outfall No.	004

1. Pollutant	2. Effluent							3. Units (specify if blank)		4. Intake (optional) **		
	a. Maximum Daily Value		b. Max. 30-Day Value (if available)		c. Long Term Avg. Value (if available)		d. No of Analyses			a. Long Term Average Value		b. No of Analysis
	(1) Conc. (mg/L)	(2) mass (kg/day) ***	(1) Conc.	(2) mass	(1) Conc.	(2) mass		a.Conc.	b. mass	(1) Conc. (mg/L)	(2) mass (kg/day)	
a. Biochemical Oxygen Demand (BOD)	172	1.30	Not Compulsory		Not Compulsory		2	mg/L	kg/day	ND	ND	1
b. Chemical Oxygen Demand (COD)	281	2.12					2	mg/L	kg/day	ND	ND	1
c. Total Organic Carbon (TOC)	53.3	0.40					2	mg/L	kg/day	ND	ND	1
d. Total Suspended Solids (TSS)	32.1	0.24					2	mg/L	kg/day	5.30	0.042	1
e. Ammonia (as N)	1.9	0.01					2	mg/L	kg/day	0.55	0.004	1
f. Flow *	2,000	GPD					NA	GPD		2,100	GPD	not applicable
g. Temperature (winter)	not available						0	°C		not available		not available
h. Temperature (summer)	not available						0	°C		not available		not available
i. pH	Minimum: not available	Maximum: not available					0	Std Units				

* Flow rate for intake is either total for all Cook Inlet used at facility or total of fresh water uses excluding drilling which varies widely and therefore cannot be predicted reliably. This is not outfall-specific.

** The Long Term Average mass was calculated from the facility-specific flowrates on the attached Discharge Flow Diagrams.

*** Conversions used for mass (kg/day) are as follows: 3.78 L= 1 gal; 1 g = 1000 mg; 1000g = 1 kg

ND - non-detect

NA - not applicable

*Two samples were collected for 004 (domestic waste); one sample and one duplicate. The results in this table are maximum value of the two samples.

NTBA - not tested - believed absent

EPA_COOK_INKPR_000324

NPDES Permit AKG 285000 Renewal

EPA ID. No.	110007920535	Outfall No.	004

Part B. Mark "X" in column 2-a for each pollutant you know or have reason to believe is present. Mark "X" in column 2-b for each pollutant you believe to be absent.

If you mark column 2a for any pollutant which is limited either directly, or indirectly but expressly, in an effluent limitations guideline, you must provide the results of at least one analysis for that pollutant.

For other pollutants for which you mark column 2a, you must provide quantitative data or an explanation of their presence in your discharge. Complete one table for each outfall. See the instructions for additional details and requirements.

1. Pollutant	2. Mark 'X'		3. Effluent							4. Units		5. Intake **		
	a. Believed Present	b. Believed Absent	a. Maximum Daily		b. Maximum 30-Day		c. Long Term		d. No of Analyses			a. Long Term		b. No of Analyses
			(1) Conc.	(2) mass	(1) Conc.	(2) mass	(1) Conc.	(2) mass		(1) Conc.	b. mass	(1) Conc.	(2) mass	
Bromide		X	NTBA		Not Compulsory		Not Compulsory		0	mg/L	kg/day	ND	ND	1
Chlorine, Total Residual		X							0	mg/L	kg/day	not available		0
Color		X							0	ug/L	kg/day	ND	ND	1
Fecal Coliform		X							0	not available				0
Fluoride (16984-48-8)		X							0	mg/L	kg/day	ND	ND	1
Nitrate-Nitrite (as N)		X							0	mg/L	kg/day	ND	ND	1
Nitrogen, Total Organic (as N)		X							0	mg/L	kg/day	Not Available		0
Oil and Grease	X		5.7	0.04					2	mg/L	kg/day	ND	ND	1
Phosphorus (as P), Total (7723-14-0)		X	NTBA						0	mg/L	kg/day	0.0600	0.00048	1
Alpha, Total		X							0	analyses in progress				1
Beta, Total		X							0					1
Radium, Total		X							0					1
Radium 226, Total		X							0					1
Sulfate (as SO4) (14808-79-8)		X							0	mg/L	kg/day	6	0.048	1
Sulfide (as S)		X							0	mg/L	kg/day	Not Available		1
Sulfite (as SO3) (14265-45-3)		X							0	mg/L	kg/day			1
Surfactants		X							0	mg/L	kg/day	0.13	0.00103	1
Aluminum, Total (7429-90-5)		X							0	ug/L	kg/day	54.70	0.00043	1
Barium, Total (7440-39-3)		X							0	ug/L	kg/day	43.5	0.00035	1
Boron, Total (7440-42-8)		X							0	ug/L	kg/day	19.7	0.00016	1
Cobalt, Total (7440-48-4)		X							0	ug/L	kg/day	ND	ND	1
Iron, Total (7439-89-6)		X							0	mg/L	kg/day	0.26	0.00206	1
Magnesium, Total (7439-95-4)		X							0	mg/L	kg/day	11	0.087	1
Molybdenum, Total (7439-98-7)		X							0	ug/L	kg/day	0.447	0.000004	1
Manganese, Total (7439-96-5)		X							0	ug/L	kg/day	688	0.00546	1
Tin, Total (7440-31-5)		X							0	ug/L	kg/day	ND	ND	1
Titanium, Total (7440-32-6)		X							0	ug/L	kg/day	5.81	0.00005	1

* Flow rate for intake is either total for all Cook Inlet used at facility or total of fresh water uses excluding drilling which varies widely and therefore cannot be predicted reliably. This is not outfall-specific.

** The Long Term Average mass was calculated from the facility-specific flowrates on the attached Discharge Flow Diagrams.

*** Conversions used for mass (kg/day) are as follows: 3.78 L= 1 gal; 1 g = 1000 mg; 1000g = 1 kg

ND - non-detect

NA - not applicable

NTBA - not tested - believed absent

004 Flowrate: 2000 GPD

EPA_COOK_INKPR_000325

Part C.

EPA ID. No. 110007920535 | Outfall No. 004

1. Pollutant	2. Mark 'X' a. Testing Required	b. Believed Present	c. Believed Absent	3. Effluent a. Maximum Daily Value (1) Conc.	(2) mass	b. Maximum 30-Day Value (1) Conc.	(2) mass	c. Long Term Average Value (1) Conc.	(2) mass	d. No of Analyses	4. Units a. Conc.	b. mass	5. Intake a. Long Term Average Value (1) Conc.	(2) mass	b. No of Analyses
Metals, Cyanide, and Total Phenols															
Antimony, Total			X	NTBA		Not Compulsory		Not Compulsory		0	ug/L	kg/day	ND	ND	1
Arsenic, Total (7440-38-2)			X							0	ug/L	kg/day	8.27	0.0001	1
Beryllium, Total (7440-41-7)			X							0	ug/L	kg/day	ND	ND	1
Cadmium, Total (7440-43-9)			X							0	ug/L	kg/day	ND	ND	1
Chromium, Total (7440-47-3)			X							0	ug/L	kg/day	0.165	0.000001	1
Copper, Total (7440-50-8)			X							0	ug/L	kg/day	0.260	0.000002	1
Lead, Total (7439-92-1)			X							0	ug/L	kg/day	ND	ND	1
Mercury, Total (7439-97-6)			X							0	ug/L	kg/day	ND	ND	1
Nickel, Total (7440-02-0)			X							0	ug/L	kg/day	1.84	0.00001	1
Selenium, Total (7782-49-2)			X							0	ug/L	kg/day	0.555	0.000004	1
Silver, Total (7440-22-4)			X							0	ug/L	kg/day	ND	ND	1
Thallium, Total (7440-28-0)			X							0	ug/L	kg/day	ND	ND	1
Zinc, Total (7440-66-6)			X							0	ug/L	kg/day	14.3	0.0001	1
Cyanide, Total (57-12-5)			X							0	mg/L	kg/day	ND	ND	1
Phenols, Total			X							0	mg/L	kg/day	0.055	0.0004	1
Dioxin															
2,3,7,8 - Tetra-chlorodibenzo-P-Dioxin (1764-01-6)			X							0	pg/L	NA	ND	ND	1
Volatile Compounds															
Acrolein (107-02-8)			X	NTBA		Not Compulsory		Not Compulsory		0	ug/L	kg/day	ND	ND	1
Acrylonitrile (107-13-1)			X							0	ug/L	kg/day	ND	ND	1
Benzene (71-43-2)			X							0	ug/L	kg/day	ND	ND	1
Bis(Chloromethyl) Ether (542-88-1)			X							0	ug/L	kg/day	Not Available		0
Bromoform (75-25-2)			X							0	ug/L	kg/day	ND	ND	1
Carbon Tetrachloride (56-23-5)			X							0	ug/L	kg/day	ND	ND	1
Chlorobenzene (108-90-7)			X							0	ug/L	kg/day	ND	ND	1
Chlorodibromomethane (124-48-1)			X							0	ug/L	kg/day	ND	ND	1
Chloroethane (75-00-3)			X	NTBA		Not Compulsory		Not Compulsory		0	ug/L	kg/day	ND	ND	1
2-Chloroethylvinyl Ether (110-75-8)			X							0	ug/L	kg/day	ND	ND	1
Chloroform (67-66-3)			X							0	ug/L	kg/day	ND	ND	1
Dichlorobromomethane (75-27-4)			X							0	ug/L	kg/day	ND	ND	1
Dichlorodifluoromethane (75-71-8)			X							0	ug/L	kg/day	ND	ND	1

Part C.

EPA ID. No. 110007920535

Outfall No. 004

1. Pollutant	2. Mark 'X' a. Testing Required	b. Believed Present	c. Believed Absent	3. Effluent a. Maximum Daily Value (1) Conc.	(2) mass	b. Maximum 30-Day Value (1) Conc.	(2) mass	c. Long Term Average Value (1) Conc.	(2) mass	d. No of Analyses	4. Units a. Conc.	b. mass	5. Intake a. Long Term Average Value (1) Conc.	(2) mass	b. No of Analyses
1,1-Dichloroethane (75-34-3)			X							0	ug/L	kg/day	ND	ND	1
1,2-Dichloroethane (107-06-2)			X							0	ug/L	kg/day	ND	ND	1
1,1-Dichloroethylene (75-35-4)			X	NTBA		Not Compulsory		Not Compulsory		0	ug/L	kg/day	ND	ND	1
1,2-Dichloropropane (78-87-5)			X							0	ug/L	kg/day	ND	ND	1
1,3-Dichloropropylene (542-75-6)			X							0	ug/L	kg/day	Not Available		0
Ethylbenzene (100-41-4)			X							0	ug/L	kg/day	ND	ND	1
Methyl Bromide (74-83-9)			X							0	ug/L	kg/day	ND	ND	1
Methyl Chloride (74-87-3)			X							0	ug/L	kg/day	ND	ND	1
Methylene Chloride (75-09-2)			X							0	ug/L	kg/day	ND	ND	1
1,1,2,2-Tetrachloroethane (79-34-5)			X							0	ug/L	kg/day	ND	ND	1
Tetrachloroethylene (127-18-4)			X	NTBA						0	ug/L	kg/day	ND	ND	1
Toluene (108-88-3)			X							0	ug/L	kg/day	ND	ND	1
1,2-Trans-Dichloroethylene (156-60-5)			X							0	ug/L	kg/day	ND	ND	1
1,1,1-Trichloroethane (71-55-6)			X							0	ug/L	kg/day	ND	ND	1
1,1,2-Trichloroethane (79-00-5)			X			Not Compulsory		Not Compulsory		0	ug/L	kg/day	ND	ND	1
Trichloroethylene (79-01-6)			X							0	ug/L	kg/day	ND	ND	1
Trichlorofluoromethane (75-69-4)			X							0	ug/L	kg/day	ND	ND	1
Vinyl Chloride (75-01-4)			X							0	ug/L	kg/day	ND	ND	1
				NTBA											
Acid Compounds															
2-Chlorophenol (95-57-8)			X							0	ug/L	kg/day	ND	ND	1
2,4-Dichlorophenol (120-83-2)			X							0	ug/L	kg/day	ND	ND	1
2,4-Dimethylephenol (105-67-9)			X							0	ug/L	kg/day	ND	ND	1

EPA_COOK_INKPR_000327

Part C.

EPA ID. No. 110007920535

Outfall No. 004

1. Pollutant	2. Mark 'X' a. Testing Required	b. Believed Present	c. Believed Absent	3. Effluent a. Maximum Daily Value (1) Conc.	(2) mass	b. Maximum 30-Day Value (1) Conc.	(2) mass	c. Long Term Average Value (1) Conc.	(2) mass	d. No of Analyses	4. Units a. Conc.	b. mass	5. Intake a. Long Term Average Value (1) Conc.	(2) mass	b. No of Analyses
4,6-Dinitro-O-Cresol (534-52-1)			X							0	ug/L	kg/day	ND	ND	1
2,4-Dinitrophenol (51-28-5)			X							0	ug/L	kg/day	ND	ND	1
2-Nitrophenol (88-75-5)			X	NTBA		Not Compulsory		Not Compulsory		0	ug/L	kg/day	ND	ND	1
4-Nitrophenol (100-02-7)			X							0	ug/L	kg/day	ND	ND	1
P-Chloro-M-Cresol (59-50-7)			X							0	ug/L	kg/day	ND	ND	1
Pentachlorophenol (87-86-5)			X							0	ug/L	kg/day	ND	ND	1
Phenol (108-95-2)			X							0	ug/L	kg/day	ND	ND	1
2,4,6-Trichlorophenol (88-06-2)			X							0	ug/L	kg/day	ND	ND	1
Base/Neutral Compounds															
Acenaphthene (83-32-9)			X	NTBA						0	ug/L	kg/day	ND	ND	1
Acenaphtylene (208-96-8)			X							0	ug/L	kg/day	ND	ND	1
Anthracene (120-12-7)			X							0	ug/L	kg/day	ND	ND	1
Benzidine (92-87-5)			X							0	ug/L	kg/day	ND	ND	1
Benzo (a) Anthracene (56-55-3)			X							0	ug/L	kg/day	ND	ND	1
Benzo (a) Pyrene (50-32-8)			X			Not Compulsory		Not Compulsory		0	ug/L	kg/day	ND	ND	1
3,4-Benzo-fluoranthene (205-99-2)			X							0	ug/L	kg/day	ND	ND	1
Benzo (ghi) Perylene (191-24-2)			X	NTBA						0	ug/L	kg/day	ND	ND	1
Benzo (k) Fluoranthene (207-08-9)			X							0	ug/L	kg/day	ND	ND	1
Bis (2-Chloroethoxy) Methane (111-91-1)			X							0	ug/L	kg/day	ND	ND	1
Bis (2-Chloroethyl) Ether (111-44-4)			X							0	ug/L	kg/day	ND	ND	1
Bis (2-Chloroisopropyl) Ether (108-60-1)			X							0	ug/L	kg/day	ND	ND	1
Bis (2-Ethyl-hexyl) Phthalate (117-81-7)			X							0	ug/L	kg/day	ND	ND	1
4-Bromophenyl Phenyl (101-55-3)			X							0	ug/L	kg/day	ND	ND	1

EPA_COOK_INKPR_000328

Part C.

EPA ID. No. 110007920535

Outfall No. 004

1. Pollutant	2. Mark 'X' a. Testing Required	b. Believed Present	c. Believed Absent	3. Effluent a. Maximum Daily Value (1) Conc.	(2) mass	b. Maximum 30-Day Value (1) Conc.	(2) mass	c. Long Term Average Value (1) Conc.	(2) mass	d. No of Analyses	4. Units a. Conc.	b. mass	5. Intake a. Long Term Average Value (1) Conc.	(2) mass	b. No of Analyses
Butyl Benzyl Phthalate (85-68-7)			X							0	ug/L	kg/day	ND	ND	1
2-Chloro-naphthalene (91-58-7)			X							0	ug/L	kg/day	ND	ND	1
4-Chlorophenyl Phenyl Ether (7005-72-3)			X			Not		Not		0	ug/L	kg/day	ND	ND	1
Chrysene (218-01-9)			X							0	ug/L	kg/day	ND	ND	1
Dibenzo (a,h) Anthracene (53-70-3)			X			Compulsory		Compulsory		0	ug/L	kg/day	ND	ND	1
1,2-Dichlorobenzene (95-50-1)			X							0	ug/L	kg/day	ND	ND	1
1,3-Dichlorobenzene (541-73-1)			X							0	ug/L	kg/day	ND	ND	1
1,4-Dichlorobenzene (106-46-7)			X	NTBA						0	ug/L	kg/day	ND	ND	1
3,3'-Dichlorobenzidine (91-94-1)			X							0	ug/L	kg/day	ND	ND	1
Diethyl Phthalate (84-66-2)			X							0	ug/L	kg/day	ND	ND	1
Dimethyl Phthalate (131-11-3)			X							0	ug/L	kg/day	ND	ND	1
Di-N-Butyl Phthalate (84-74-2)			X							0	ug/L	kg/day	1.8	0.00001	1
2,4-Dinitrotoluene (121-14-2)			X							0	ug/L	kg/day	ND	ND	1
2,6-Dinitrotoluene (606-20-2)			X			Not		Not		0	ug/L	kg/day	ND	ND	1
Di-N-Octyl Phthalate (117-84-0)			X							0	ug/L	kg/day	ND	ND	1
1,2-Diphenyl-hydrazine (as Azo-benzene) (122-66-7)			X	NTBA		Compulsory		Compulsory		0	ug/L	kg/day	ND	ND	1
Fluoranthene (206-44-0)			X							0	ug/L	kg/day	ND	ND	1
Fluorene (86-73-7)			X							0	ug/L	kg/day	ND	ND	1
Hexachlorobenzene (118-74-1)			X							0	ug/L	kg/day	ND	ND	1
Hexachlorobutadiene (87-68-3)			X							0	ug/L	kg/day	ND	ND	1
Hexachlorocyclopentadiene (77-47-4)			X							0	ug/L	kg/day	ND	ND	1
Hexachloroethane (67-72-1)			X							0	ug/L	kg/day	ND	ND	1
Indeno (1,2,3-cd) Pyrene (193-39-5)			X							0	ug/L	kg/day	ND	ND	1

EPA_COOK_INKPR_000329

Part C.

EPA ID. No. 110007920535

Outfall No. 004

1. Pollutant	2. Mark "X" a. Testing Required	b. Believed Present	c. Believed Absent	3. Effluent a. Maximum Daily Value (1) Conc.	(2) mass	b. Maximum 30-Day Value (1) Conc.	(2) mass	c. Long Term Average Value (1) Conc.	(2) mass	d. No of Analyses	4. Units a. Conc.	b. mass	5. Intake a. Long Term Average Value (1) Conc.	(2) mass	b. No of Analyses
Isophorone (78-59-1)			X							0	ug/L	kg/day	ND	ND	1
Naphthalene (91-20-3)			X							0	ug/L	kg/day	ND	ND	1
Nitrobenzene (98-95-3)			X							0	ug/L	kg/day	ND	ND	1
N-Nitro-sodimethylamine (62-75-9)			X							0	ug/L	kg/day	ND	ND	1
N-Nitrosodi-N-Propylamine (621-64-7)			X							0	ug/L	kg/day	ND	ND	1
N-Nitrosodiphenylamine (86-30-6)			X							0	ug/L	kg/day	ND	ND	1
Phenanthrene (85-01-8)			X							0	ug/L	kg/day	ND	ND	1
Pyrene (129-00-0)			X							0	ug/L	kg/day	ND	ND	1
1,2,4-Trichlorobenzene (120-82-1)			X							0	ug/L	kg/day	ND	ND	1
Pesticides															
Aldrin (309-00-2)			X							0	ug/L	kg/day	ND	ND	1
α-BHC (319-84-6)			X							0	ug/L	kg/day	ND	ND	1
β-BHC (319-85-7)			X							0	ug/L	kg/day	ND	ND	1
γ-BHC (58-89-9)			X							0	ug/L	kg/day	ND	ND	1
δ-BHC (319-86-8)			X							0	ug/L	kg/day	ND	ND	1
Chlordane (57-74-9)			X							0	ug/L	kg/day	ND	ND	1
4,4'-DDT (50-29-3)			X							0	ug/L	kg/day	ND	ND	1
4,4'-DDE (72-55-9)			X							0	ug/L	kg/day	ND	ND	1
4,4'-DDD (72-54-8)			X							0	ug/L	kg/day	ND	ND	1
Dieldrin (60-57-1)			X							0	ug/L	kg/day	ND	ND	1
α-Endosulfan (115-29-7)			X							0	ug/L	kg/day	ND	ND	1
β-Endosulfan (115-29-7)			X							0	ug/L	kg/day	ND	ND	1
Endosulfan Sulfate (1031-07-8)			X							0	ug/L	kg/day	ND	ND	1
Endrin (72-20-8)			X							0	ug/L	kg/day	ND	ND	1

NTBA — Not Compulsory

EPA_COOK_INKPR_000330

Part C.

EPA ID. No.	110007920535

Outfall No.	004

1. Pollutant	2. Mark 'X' a. Testing Required	b. Believed Present	c. Believed Absent	3. Effluent a. Maximum Daily Value (1) Conc.	(2) mass	b. Maximum 30-Day Value (1) Conc.	(2) mass	c. Long Term Average Value (1) Conc.	(2) mass	d. No of Analyses	4. Units a. Conc.	b. mass	5. Intake a. Long Term Average Value (1) Conc.	(2) mass	b. No of Analyses
Endrin Aldehyde (7421-93-4)			X							0	ug/L	kg/day	ND	ND	1
Heptachlor (76-44-8)			X							0	ug/L	kg/day	ND	ND	1
Heptachlor Epoxide (1024-57-3)			X							0	ug/L	kg/day	ND	ND	1
PCB-1242 (53469-21-9)			X							0	ug/L	kg/day	ND	ND	1
PCB-1254 (11097-69-1)			X							0	ug/L	kg/day	ND	ND	1
PCB-1221 (11104-28-2)			X							0	ug/L	kg/day	ND	ND	1
PCB-1232 (11141-16-5)			X							0	ug/L	kg/day	ND	ND	1
PCB-1248 (12672-29-6)			X							0	ug/L	kg/day	ND	ND	1
PCB-1260 (11096-82-5)			X							0	ug/L	kg/day	ND	ND	1
PCB-1016 (12674-11-2)			X							0	ug/L	kg/day	ND	ND	1
Toxaphene (8001-35-2)			X							0	ug/L	kg/day	ND	ND	1

NTBA

Not Compulsory

Not Compulsory

* Flow rate for intake is either total for all Cook Inlet used at facility or total of fresh water uses excluding drilling which varies widely and therefore cannot be predicted reliably. This is not outfall-specific.

** The Long Term Average mass was calculated from the facility-specific flowrates on the attached Discharge Flow Diagrams.

*** Conversions used for mass (kg/day) are as follows: 3.78 L= 1 gal; 1 g = 1000 mg; 1000g = 1 kg

ND - non-detect

NA - not applicable

NTBA - not tested - believed absent

V. INTAKE AND EFFLUENT CHARACTERISTICS

EPA ID. No	110007920535
Outfall No.	006

Part A. Provide the results of at least one analysis for every pollutant in this table. Complete one table for each outfall.

1. Pollutant	2. Effluent a. Maximum Daily Value (1) Conc.	2. Effluent a. Maximum Daily Value (2) mass	2. Effluent b. Max. 30-Day Value (if available) (1) Conc.	2. Effluent b. Max. 30-Day Value (if available) (2) mass	2. Effluent c. Long Term Avg. Value (if available) (1) Conc.	2. Effluent c. Long Term Avg. Value (if available) (2) mass	2. Effluent d. No of Analyses	3. Units (specify if blank) a.Conc.	3. Units (specify if blank) b. mass	4. Intake (optional) ** a. Long Term Average Value (1) Conc. (mg/L)	4. Intake (optional) ** a. Long Term Average Value (2) mass (kg/day)	4. Intake (optional) ** b. No of Analysis
a. Biochemical Oxygen Demand (BOD)	Not Available		Not Compulsory		Not Compulsory		0	mg/L	kg/day	ND	ND	1
b. Chemical Oxygen Demand (COD)							0	mg/L	kg/day	ND	ND	1
c. Total Organic Carbon (TOC)							0	mg/L	kg/day	ND	ND	1
d. Total Suspended Solids (TSS)							0	mg/L	kg/day	5.30	0.042	1
e. Ammonia (as N)							0	mg/L	kg/day	0.55	0.004	1
f. Flow	30 GPD						NA	GPD		2,100	GPD	not applicable
g. Temperature (winter)	Not Available						0	°C		not available		not available
h. Temperature (summer)							0	°C		not available		not available
i. pH							0	Std Units				

Note: 006 Release of blowout preventer fluid is extremely rare and occurance cannot be predicted. Flowrate estimated.

* Flow rate for intake is either total for all Cook Inlet used at facility or total of fresh water uses excluding drilling which varies widely and therefore cannot be predicted reliably. This is not outfall-specific.

** The Long Term Average mass was calculated from the facility-specific flowrates on the attached Discharge Flow Diagrams.

*** Conversions used for mass (kg/day) are as follows: 3.78 L= 1 gal; 1 g = 1000 mg; 1000g = 1 kg

ND - non-detect

NA - not applicable

NTBA - not tested - believed absent

EPA_COOK_INKPR_000332

NPDES Permit AKG 285000 Renewal

EPA ID. No.	110007920535	Outfall No.	006

Part B. Mark "X" in column 2-a for each pollutant you know or have reason to believe is present. Mark "X" in column 2-b for each pollutant you believe to be absent.

If you mark column 2a for any pollutant which is limited either directly, or indirectly but expressly, in an effluent limitations guideline, you must provide the results of at least one analysis for that pollutant.

For other pollutants for which you mark column 2a, you must provide quantitative data or an explanation of their presence in your discharge. Complete one table for each outfall. See the instructions for additional details and requirements.

1. Pollutant	2. Mark "X"		3. Effluent							4. Units		5. Intake **		
	a. Believed Present	b. Believed Absent	a. Maximum Daily		b. Maximum 30-Day		c. Long Term		d. No of Analyses			a. Long Term		b. No of Analyses
			(1) Conc.	(2) mass	(1) Conc.	(2) mass	(1) Conc.	(2) mass		(1) Conc.	b. mass	(1) Conc.	(2) mass	
Bromide		X	NTBA		Not Compulsory		Not Compulsory		0	mg/L	kg/day	ND	ND	1
Chlorine, Total Residual		X							0	mg/L				0
Color		X							0	ug/L	kg/day	ND	ND	1
Fecal Coliform		X							0	not available				0
Fluoride (16984-48-8)		X							0	mg/L	kg/day	ND	ND	1
Nitrate-Nitrite (as N)		X							0	mg/L	kg/day	ND	ND	1
Nitrogen, Total Organic (as N)		X							0	mg/L	kg/day	Not Available		0
Oil and Grease		X							0	mg/L	kg/day	ND	ND	1
Phosphorus (as P), Total (7723-14-0)		X							0	mg/L	kg/day	0.0600	0.00048	1
Alpha, Total		X							0	analyses in progress				1
Beta, Total		X							0					1
Radium, Total		X							0					1
Radium 226, Total		X							0					1
Sulfate (as SO4) (14808-79-8)		X							0	mg/L	kg/day	6	0.048	1
Sulfide (as S)		X							0	mg/L	kg/day	Not Available		1
Sulfite (as SO3) (14265-45-3)		X							0	mg/L	kg/day			1
Surfactants		X							0	mg/L	kg/day	0.13	0.00103	1
Aluminum, Total (7429-90-5)		X							0	ug/L	kg/day	54.70	0.00043	1
Barium, Total (7440-39-3)		X							0	ug/L	kg/day	43.5	0.00035	1
Boron, Total (7440-42-8)		X							0	ug/L	kg/day	19.7	0.00016	1
Cobalt, Total (7440-48-4)		X							0	ug/L	kg/day	ND	ND	1
Iron, Total (7439-89-6)		X							0	mg/L	kg/day	0.26	0.00206	1
Magnesium, Total (7439-95-4)		X							0	mg/L	kg/day	11	0.087	1
Molybdenum, Total (7439-98-7)		X							0	ug/L	kg/day	0.447	0.000004	1
Manganese, Total (7439-96-5)		X							0	ug/L	kg/day	688	0.00546	1
Tin, Total (7440-31-5)		X							0	ug/L	kg/day	ND	ND	1
Titanium, Total (7440-32-6)		X							0	ug/L	kg/day	5.81	0.00005	1

* Flow rate for intake is either total for all Cook Inlet used at facility or total of fresh water uses excluding drilling which varies widely and therefore cannot be predicted reliably. This is not outfall-specific.

** The Long Term Average mass was calculated from the facility-specific flowrates on the attached Discharge Flow Diagrams.

*** Conversions used for mass (kg/day) are as follows: 3.78 L= 1 gal; 1 g = 1000 mg; 1000g = 1 kg

ND - non-detect

NA - not applicable

NTBA - not tested - believed absent

EPA_COOK_INKPR_000333

Part C.

EPA ID. No. 110007920535 | Outfall No. 006

1. Pollutant	2. Mark 'X' a. Testing Required	b. Believed Present	c. Believed Absent	3. Effluent a. Maximum Daily Value (1) Conc.	(2) mass	b. Maximum 30-Day Value (1) Conc.	(2) mass	c. Long Term Average Value (1) Conc.	(2) mass	d. No of Analyses	4. Units a. Conc.	b. mass	5. Intake a. Long Term Average Value (1) Conc.	(2) mass	b. No of Analyses
Metals, Cyanide, and Total Phenols															1
Antimony, Total (7440-36-0)			X							0	ug/L	kg/day	ND	ND	1
Arsenic, Total (7440-38-2)			X							0	ug/L	kg/day	8.27	0.0001	1
Beryllium, Total (7440-41-7)			X							0	ug/L	kg/day	ND	ND	1
Cadmium, Total (7440-43-9)			X							0	ug/L	kg/day	ND	ND	1
Chromium, Total (7440-47-3)			X							0	ug/L	kg/day	0.165	0.000001	1
Copper, Total (7440-50-8)			X							0	ug/L	kg/day	0.260	0.000002	1
Lead, Total (7439-92-1)			X							0	ug/L	kg/day	ND	ND	1
Mercury, Total (7439-97-6)			X							0	ug/L	kg/day	ND	ND	1
Nickel, Total (7440-02-0)			X							0	ug/L	kg/day	1.84	0.00001	1
Selenium, Total (7782-49-2)			X							0	ug/L	kg/day	0.555	0.000004	1
Silver, Total (7440-22-4)			X							0	ug/L	kg/day	ND	ND	1
Thallium, Total (7440-28-0)			X							0	ug/L	kg/day	ND	ND	1
Zinc, Total (7440-66-6)			X							0	ug/L	kg/day	14.3	0.0001	1
Cyanide, Total (57-12-5)			X							0	mg/L	kg/day	ND	ND	1
Phenols, Total			X							0	mg/L	kg/day	0.055	0.0004	1
Dioxin															
2,3,7,8 - Tetra-chlorodibenzo-P-Dioxin (1764-01-6)			X							0	pg/L	NA	ND	ND	1
Volatile Compounds										0					
Acrolein (107-02-8)			X							0	ug/L	kg/day	ND	ND	1
Acrylonitrile (107-13-1)			X							0	ug/L	kg/day	ND	ND	1
Benzene (71-43-2)			X							0	ug/L	kg/day	ND	ND	1
Bis(Chloromethyl) Ether (542-88-1)			X							0	ug/L	kg/day	Not Available		0
Bromoform (75-25-2)			X							0	ug/L	kg/day	ND	ND	1
Carbon Tetrachloride (56-23-5)			X							0	ug/L	kg/day	ND	ND	1
Chlorobenzene (108-90-7)			X							0	ug/L	kg/day	ND	ND	1
Chlorodibromomethane (124-48-1)			X							0	ug/L	kg/day	ND	ND	1
Chloroethane (75-00-3)			X							0	ug/L	kg/day	ND	ND	1
2-Chloroethylvinyl Ether (110-75-8)			X							0	ug/L	kg/day	ND	ND	1
Chloroform (67-66-3)			X							0	ug/L	kg/day	ND	ND	1
Dichlorobromomethane (75-27-4)			X							0	ug/L	kg/day	ND	ND	1
Dichlorodifluoromethane (75-71-8)			X							0	ug/L	kg/day	ND	ND	1

NTBA — Not Compulsory

EPA_COOK_INKPR_000334

Part C.

EPA ID. No. 110007920535

Outfall No. 006

1. Pollutant	2. Mark 'X' a. Testing Required	b. Believed Present	c. Believed Absent	3. Effluent a. Maximum Daily Value (1) Conc.	(2) mass	b. Maximum 30-Day Value (1) Conc.	(2) mass	c. Long Term Average Value (1) Conc.	(2) mass	d. No of Analyses	4. Units a. Conc.	b. mass	5. Intake a. Long Term Average Value (1) Conc.	(2) mass	b. No of Analyses
1,1-Dichloroethane (75-34-3)			X							0	ug/L	kg/day	ND	ND	1
1,2-Dichloroethane (107-06-2)			X							0	ug/L	kg/day	ND	ND	1
1,1-Dichloroethylene (75-35-4)			X							0	ug/L	kg/day	ND	ND	1
1,2-Dichloropropane (78-87-5)			X							0	ug/L	kg/day	ND	ND	1
1,3-Dichloropropylene (542-75-6)			X							0	ug/L	kg/day	Not Available		0
Ethylbenzene (100-41-4)			X							0	ug/L	kg/day	ND	ND	1
Methyl Bromide (74-83-9)			X							0	ug/L	kg/day	ND	ND	1
Methyl Chloride (74-87-3)			X							0	ug/L	kg/day	ND	ND	1
Methylene Chloride (75-09-2)			X							0	ug/L	kg/day	ND	ND	1
1,1,2,2-Tetrachloroethane (79-34-5)			X							0	ug/L	kg/day	ND	ND	1
Tetrachloroethylene (127-18-4)			X							0	ug/L	kg/day	ND	ND	1
Toluene (108-88-3)			X							0	ug/L	kg/day	ND	ND	1
1,2-Trans-Dichloroethylene (156-60-5)			X							0	ug/L	kg/day	ND	ND	1
1,1,1-Trichloroethane (71-55-6)			X							0	ug/L	kg/day	ND	ND	1
1,1,2-Trichloroethane (79-00-5)			X							0	ug/L	kg/day	ND	ND	1
Trichloroethylene (79-01-6)			X							0	ug/L	kg/day	ND	ND	1
Trichlorofluoromethane (75-69-4)			X							0	ug/L	kg/day	ND	ND	1
Vinyl Chloride (75-01-4)			X							0	ug/L	kg/day	ND	ND	1
Acid Compounds															
2-Chlorophenol (95-57-8)			X							0	ug/L	kg/day	ND	ND	1
2,4-Dichlorophenol (120-83-2)			X							0	ug/L	kg/day	ND	ND	1
2,4-Dimethylephenol (105-67-9)			X							0	ug/L	kg/day	ND	ND	1

NTBA — Not Compulsory

NTBA — Not Compulsory

NTBA — Not Compulsory

EPA_COOK_INKPR_000335

Part C.

EPA ID. No. 110007920535

Outfall No. 006

1. Pollutant	2. Mark "X" a. Testing Required	b. Believed Present	c. Believed Absent	3. Effluent a. Maximum Daily Value (1) Conc.	(2) mass	b. Maximum 30-Day Value (1) Conc.	(2) mass	c. Long Term Average Value (1) Conc.	(2) mass	d. No of Analyses	4. Units a. Conc.	b. mass	5. Intake a. Long Term Average Value (1) Conc.	(2) mass	b. No of Analyses
4,6-Dinitro-O-Cresol (534-52-1)			X							0	ug/L	kg/day	ND	ND	1
2,4-Dinitrophenol (51-28-5)			X							0	ug/L	kg/day	ND	ND	1
2-Nitrophenol (88-75-5)			X							0	ug/L	kg/day	ND	ND	1
4-Nitrophenol (100-02-7)			X							0	ug/L	kg/day	ND	ND	1
P-Chloro-M-Cresol (59-50-7)			X							0	ug/L	kg/day	ND	ND	1
Pentachlorophenol (87-86-5)			X							0	ug/L	kg/day	ND	ND	1
Phenol (108-95-2)			X							0	ug/L	kg/day	ND	ND	1
2,4,6-Trichlorophenol (88-06-2)			X							0	ug/L	kg/day	ND	ND	1
Base/Neutral Compounds										0					
Acenaphthene (83-32-9)			X							0	ug/L	kg/day	ND	ND	1
Acenaphtylene (208-96-8)			X							0	ug/L	kg/day	ND	ND	1
Anthracene (120-12-7)			X							0	ug/L	kg/day	ND	ND	1
Benzidine (92-87-5)			X							0	ug/L	kg/day	ND	ND	1
Benzo (a) Anthracene (56-55-3)			X							0	ug/L	kg/day	ND	ND	1
Benzo (a) Pyrene (50-32-8)			X							0	ug/L	kg/day	ND	ND	1
3,4-Benzo-fluoranthene (205-99-2)			X							0	ug/L	kg/day	ND	ND	1
Benzo (ghi) Perylene (191-24-2)			X							0	ug/L	kg/day	ND	ND	1
Benzo (k) Fluoranthene (207-08-9)			X							0	ug/L	kg/day	ND	ND	1
Bis (2-Chloroethoxy) Methane (111-91-1)			X							0	ug/L	kg/day	ND	ND	1
Bis (2-Chloroethyl) Ether (111-44-4)			X							0	ug/L	kg/day	ND	ND	1
Bis (2-Chloroisopropyl) Ether (108-60-1)			X							0	ug/L	kg/day	ND	ND	1
Bis (2-Ethyl-hexyl) Phthalate (117-81-7)			X							0	ug/L	kg/day	ND	ND	1
4-Bromophenyl Phenyl (101-55-3)			X							0	ug/L	kg/day	ND	ND	1

NTBA

Not Compulsory

EPA_COOK_INKPR_000336

Part C.

EPA ID. No. 110007920535

Outfall No. 006

1. Pollutant	2. Mark 'X' a. Testing Required	b. Believed Present	c. Believed Absent	3. Effluent a. Maximum Daily Value (1) Conc.	(2) mass	b. Maximum 30-Day Value (1) Conc.	(2) mass	c. Long Term Average Value (1) Conc.	(2) mass	d. No of Analyses	4. Units a. Conc.	b. mass	5. Intake a. Long Term Average Value (1) Conc.	(2) mass	b. No of Analyses
Butyl Benzyl Phthalate (85-68-7)			X							0	ug/L	kg/day	ND	ND	1
2-Chloro-naphthalene (91-58-7)			X							0	ug/L	kg/day	ND	ND	1
4-Chlorophenyl Phenyl Ether (7005-72-3)			X							0	ug/L	kg/day	ND	ND	1
Chrysene (218-01-9)			X							0	ug/L	kg/day	ND	ND	1
Dibenzo (a,h) Anthracene (53-70-3)			X							0	ug/L	kg/day	ND	ND	1
1,2-Dichlorobenzene (95-50-1)			X							0	ug/L	kg/day	ND	ND	1
1,3-Dichlorobenzene (541-73-1)			X							0	ug/L	kg/day	ND	ND	1
1,4-Dichlorobenzene (106-46-7)			X							0	ug/L	kg/day	ND	ND	1
3,3-Dichlorobenzidine (91-94-1)			X							0	ug/L	kg/day	ND	ND	1
Diethyl Phthalate (84-66-2)			X							0	ug/L	kg/day	ND	ND	1
Dimethyl Phthalate (131-11-3)			X							0	ug/L	kg/day	ND	ND	1
Di-N-Butyl Phthalate (84-74-2)			X							0	ug/L	kg/day	1.8	0.00001	1
2,4-Dinitrotoluene (121-14-2)			X							0	ug/L	kg/day	ND	ND	1
2,6-Dinitrotoluene (606-20-2)			X							0	ug/L	kg/day	ND	ND	1
Di-N-Octyl Phthalate (117-84-0)			X							0	ug/L	kg/day	ND	ND	1
1,2-Diphenyl-hydrazine (as Azo-benzene) (122-66-7)			X							0	ug/L	kg/day	ND	ND	1
Fluoranthene (206-44-0)			X							0	ug/L	kg/day	ND	ND	1
Fluorene (86-73-7)			X							0	ug/L	kg/day	ND	ND	1
Hexachlorobenzene (118-74-1)			X							0	ug/L	kg/day	ND	ND	1
Hexachlorobutadiene (87-68-3)			X							0	ug/L	kg/day	ND	ND	1
Hexachlorocyclopentadiene (77-47-4)			X							0	ug/L	kg/day	ND	ND	1
Hexachloroethane (67-72-1)			X							0	ug/L	kg/day	ND	ND	1
Indeno (1,2,3-cd) Pyrene (193-39-5)			X							0	ug/L	kg/day	ND	ND	1

NTBA

Not Compulsory

Not Compulsory

NTBA

Not Compulsory

Not Compulsory

EPA_COOK_INKPR_000337

Part C.

EPA ID. No. 110007920535 | Outfall No. 006

1. Pollutant	2. Mark 'X' a. Testing Required	b. Believed Present	c. Believed Absent	3. Effluent a. Maximum Daily Value (1) Conc.	(2) mass	b. Maximum 30-Day Value (1) Conc.	(2) mass	c. Long Term Average Value (1) Conc.	(2) mass	d. No of Analyses	4. Units a. Conc.	b. mass	5. Intake a. Long Term Average Value (1) Conc.	(2) mass	b. No of Analyses
Isophorone (78-59-1)			X							0	ug/L	kg/day	ND	ND	1
Naphthalene (91-20-3)			X							0	ug/L	kg/day	ND	ND	1
Nitrobenzene (98-95-3)			X							0	ug/L	kg/day	ND	ND	1
N-Nitro-sodimethylamine (62-75-9)			X							0	ug/L	kg/day	ND	ND	1
N-Nitrosodi-N-Propylamine (621-64-7)			X							0	ug/L	kg/day	ND	ND	1
N-Nitrosodiphenylamine (86-30-6)			X							0	ug/L	kg/day	ND	ND	1
Phenanthrene (85-01-8)			X							0	ug/L	kg/day	ND	ND	1
Pyrene (129-00-0)			X							0	ug/L	kg/day	ND	ND	1
1,2,4-Trichlorobenzene (120-82-1)			X							0	ug/L	kg/day	ND	ND	1
Pesticides															
Aldrin (309-00-2)			X							0	ug/L	kg/day	ND	ND	1
α-BHC (319-84-6)			X							0	ug/L	kg/day	ND	ND	1
β-BHC (319-85-7)			X							0	ug/L	kg/day	ND	ND	1
γ-BHC (58-89-9)			X							0	ug/L	kg/day	ND	ND	1
δ-BHC (319-86-8)			X							0	ug/L	kg/day	ND	ND	1
Chlordane (57-74-9)			X							0	ug/L	kg/day	ND	ND	1
4,4'-DDT (50-29-3)			X							0	ug/L	kg/day	ND	ND	1
4,4'-DDE (72-55-9)			X							0	ug/L	kg/day	ND	ND	1
4,4'-DDD (72-54-8)			X							0	ug/L	kg/day	ND	ND	1
Dieldrin (60-57-1)			X							0	ug/L	kg/day	ND	ND	1
α-Endosulfan (115-29-7)			X							0	ug/L	kg/day	ND	ND	1
β-Endosulfan (115-29-7)			X							0	ug/L	kg/day	ND	ND	1
Endosulfan Sulfate (1031-07-8)			X							0	ug/L	kg/day	ND	ND	1
Endrin (72-20-8)			X							0	ug/L	kg/day	ND	ND	1

NTBA — Not Compulsory — Not Compulsory

EPA_COOK_INKPR_000338

Part C.

EPA ID. No.	110007920535

Outfall No.	006

1. Pollutant	2. Mark 'X' a. Testing Required	b. Believed Present	c. Believed Absent	3. Effluent a. Maximum Daily Value (1) Conc.	(2) mass	b. Maximum 30-Day Value (1) Conc.	(2) mass	c. Long Term Average Value (1) Conc.	(2) mass	d. No of Analyses	4. Units a. Conc.	b. mass	5. Intake a. Long Term Average Value (1) Conc.	(2) mass	b. No of Analyses
Endrin Aldehyde (7421-93-4)			X	NTBA		Not Compulsory		Not Compulsory		0	ug/L	kg/day	ND	ND	1
Heptachlor (76-44-8)			X							0	ug/L	kg/day	ND	ND	1
Heptachlor Epoxide (1024-57-3)			X							0	ug/L	kg/day	ND	ND	1
PCB-1242 (53469-21-9)			X							0	ug/L	kg/day	ND	ND	1
PCB-1254 (11097-69-1)			X							0	ug/L	kg/day	ND	ND	1
PCB-1221 (11104-28-2)			X							0	ug/L	kg/day	ND	ND	1
PCB-1232 (11141-16-5)			X							0	ug/L	kg/day	ND	ND	1
PCB-1248 (12672-29-6)			X							0	ug/L	kg/day	ND	ND	1
PCB-1260 (11096-82-5)			X							0	ug/L	kg/day	ND	ND	1
PCB-1016 (12674-11-2)			X							0	ug/L	kg/day	ND	ND	1
Toxaphene (8001-35-2)			X							0	ug/L	kg/day	ND	ND	1

* Flow rate for intake is either total for all Cook Inlet used at facility or total of fresh water uses excluding drilling which varies widely and therefore cannot be predicted reliably. This is not outfall-specific.

** The Long Term Average mass was calculated from the facility-specific flowrates on the attached Discharge Flow Diagrams.

*** Conversions used for mass (kg/day) are as follows: 3.78 L= 1 gal; 1 g = 1000 mg; 1000g = 1 kg

ND - non-detect

NA - not applicable

NTBA - not tested - believed absent

EPA_COOK_INKPR_000339

V. INTAKE AND EFFLUENT CHARACTERISTICS

EPA ID. No. 110007920535

Part A. Provide the results of at least one analysis for every pollutant in this table. Complete one table for each outfall.

Outfall No. 007

1. Pollutant	2. Effluent a. Maximum Daily Value (1) Conc. (mg/L)	2. Effluent a. Maximum Daily Value (2) mass (kg/day)	2. Effluent b. Max. 30-Day Value (if available) (1) Conc.	2. Effluent b. Max. 30-Day Value (if available) (2) mass	2. Effluent c. Long Term Avg. Value (if available) (1) Conc.	2. Effluent c. Long Term Avg. Value (if available) (2) mass	2. Effluent d. No of Analyses	3. Units (specify if blank) a. Conc.	3. Units (specify if blank) b. mass	4. Intake (optional) ** a. Long Term Average Value (1) Conc. (mg/L)	4. Intake (optional) ** a. Long Term Average Value (2) mass (kg/day)	4. Intake (optional) ** b. No of Analysis
a. Biochemical Oxygen Demand (BOD)	ND	ND	Not Compulsory		Not Compulsory		1	mg/L	kg/day	ND	ND	1
b. Chemical Oxygen Demand (COD)	57	0.0215					1	mg/L	kg/day	ND	ND	1
c. Total Organic Carbon (TOC)	27.4	0.0104					1	mg/L	kg/day	ND	ND	1
d. Total Suspended Solids (TSS)	21.6	0.0082					1	mg/L	kg/day	5.30	0.042	1
e. Ammonia (as N)	0.19	0.0001					1	mg/L	kg/day	0.55	0.004	1
f. Flow	100						NA	GPD		2,100	GPD	not applicable
g. Temperature (winter)	not available						0	not available		not available		not available
h. Temperature (summer)	96						1	°C		not available		not available
i. pH	Minimum 7.92	Maximum 7.92					1	Std Units				

* Flow rate for intake is either total for all Cook Inlet used at facility or total of fresh water uses excluding drilling which varies widely and therefore cannot be predicted reliably. This is not outfall-specific.

** The Long Term Average mass was calculated from the facility-specific flowrates on the attached Discharge Flow Diagrams.

*** Conversions used for mass (kg/day) are as follows: 3.78 L= 1 gal; 1 g = 1000 mg; 1000g = 1 kg

ND - non-detect

NA - not applicable

NTBA - not tested - believed absent

EPA_COOK_INKPR_000340

EPA ID. No.	110007920535	Outfall No.	007

Part B. Mark "X" in column 2-a for each pollutant you know or have reason to believe is present. Mark "X" in column 2-b for each pollutant you believe to be absent.

If you mark column 2a for any pollutant which is limited either directly, or indirectly but expressly, in an effluent limitations guideline, you must provide the results of at least one analysis for that pollutant.

For other pollutants for which you mark column 2a, you must provide quantitative data or an explanation of their presence in your discharge. Complete one table for each outfall. See the instructions for additional details and requirements.

1. Pollutant	2. Mark 'X'		3. Effluent							4. Units		5. Intake **		
	a. Believed Present	b. Believed Absent	a. Maximum Daily		b. Maximum 30-Day		c. Long Term		d. No of Analyses			a. Long Term		b. No of Analyses
			(1) Conc.	(2) mass	(1) Conc.	(2) mass	(1) Conc.	(2) mass		(1) Conc.	b. mass	(1) Conc.	(2) mass	
Bromide		X	NTBA		Not Compulsory		Not Compulsory		0	mg/L	kg/day	ND	ND	1
Chlorine, Total Residual		X							0	mg/L				0
Color		X							0	ug/L	kg/day	ND	ND	1
Fecal Coliform		X							0	not available				0
Fluoride (16984-48-8)		X							0	mg/L	kg/day	ND	ND	1
Nitrate-Nitrite (as N)		X							0	mg/L	kg/day	ND	ND	1
Nitrogen, Total Organic (as N)		X							0	mg/L	kg/day	Not Available		0
Oil and Grease		X							0	mg/L	kg/day	ND	ND	1
Phosphorus (as P), Total (7723-14-0)		X							0	mg/L	kg/day	0.0600	0.00048	1
Alpha, Total		X							0	analyses in progress				1
Beta, Total		X							0					1
Radium, Total		X							0					1
Radium 226, Total		X							0					1
Sulfate (as SO4) (14808-79-8)		X							0	mg/L	kg/day	6	0.048	1
Sulfide (as S)		X							0	mg/L	kg/day	Not Available		1
Sulfite (as SO3) (14265-45-3)		X							0	mg/L	kg/day			1
Surfactants		X							0	mg/L	kg/day	0.13	0.00103	1
Aluminum, Total (7429-90-5)		X							0	ug/L	kg/day	54.70	0.00043	1
Barium, Total (7440-39-3)		X							0	ug/L	kg/day	43.5	0.00035	1
Boron, Total (7440-42-8)		X							0	ug/L	kg/day	19.7	0.00016	1
Cobalt, Total (7440-48-4)		X							0	ug/L	kg/day	ND	ND	1
Iron, Total (7439-89-6)		X							0	mg/L	kg/day	0.26	0.00206	1
Magnesium, Total (7439-95-4)		X							0	mg/L	kg/day	11	0.087	1
Molybdenum, Total (7439-98-7)		X							0	ug/L	kg/day	0.447	0.000004	1
Manganese, Total (7439-96-5)		X							0	ug/L	kg/day	688	0.00546	1
Tin, Total (7440-31-5)		X							0	ug/L	kg/day	ND	ND	1
Titanium, Total (7440-32-6)		X							0	ug/L	kg/day	5.81	0.00005	1

* Flow rate for intake is either total for all Cook Inlet used at facility or total of fresh water uses excluding drilling which varies widely and therefore cannot be predicted reliably. This is not outfall-specific.

** The Long Term Average mass was calculated from the facility-specific flowrates on the attached Discharge Flow Diagrams.

*** Conversions used for mass (kg/day) are as follows: 3.78 L= 1 gal; 1 g = 1000 mg; 1000g = 1 kg

ND - non-detect

NA - not applicable

NTBA - not tested - believed absent

EPA_COOK_INKPR_000341

Part C.

EPA ID. No. 110007920535

Outfall No. 007

1. Pollutant	2. Mark 'X' a. Testing Required	b. Believed Present	c. Believed Absent	3. Effluent a. Maximum Daily Value (1) Conc.	(2) mass	b. Maximum 30-Day Value (1) Conc.	(2) mass	c. Long Term Average Value (1) Conc.	(2) mass	d. No of Analyses	4. Units a. Conc.	b. mass	5. Intake a. Long Term Average Value (1) Conc.	(2) mass	b. No of Analyses
Metals, Cyanide, and Total Phenols															
Antimony, Total (7440-36-0)			X							0	ug/L	kg/day	ND	ND	1
Arsenic, Total (7440-38-2)			X							0	ug/L	kg/day	8.27	0.0001	1
Beryllium, Total (7440-41-7)			X							0	ug/L	kg/day	ND	ND	1
Cadmium, Total (7440-43-9)			X							0	ug/L	kg/day	ND	ND	1
Chromium, Total (7440-47-3)			X							0	ug/L	kg/day	0.165	0.000001	1
Copper, Total (7440-50-8)			X							0	ug/L	kg/day	0.260	0.000002	1
Lead, Total (7439-92-1)			X							0	ug/L	kg/day	ND	ND	1
Mercury, Total (7439-97-6)			X							0	ug/L	kg/day	ND	ND	1
Nickel, Total (7440-02-0)			X							0	ug/L	kg/day	1.84	0.00001	1
Selenium, Total (7782-49-2)			X							0	ug/L	kg/day	0.555	0.000004	1
Silver, Total (7440-22-4)			X							0	ug/L	kg/day	ND	ND	1
Thallium, Total (7440-28-0)			X							0	ug/L	kg/day	ND	ND	1
Zinc, Total (7440-66-6)			X							0	ug/L	kg/day	14.3	0.0001	1
Cyanide, Total (57-12-5)			X							0	mg/L	kg/day	ND	ND	1
Phenols, Total			X							0	mg/L	kg/day	0.055	0.0004	1
Dioxin															
2,3,7,8 - Tetra-chlorodibenzo-P-Dioxin (1764-01-6)			X	NTBA		Not Compulsory		Not Compulsory		0	pg/L	NA	ND	ND	1
Volatile Compounds															
Acrolein (107-02-8)			X							0	ug/L	kg/day	ND	ND	1
Acrylonitrile (107-13-1)			X							0	ug/L	kg/day	ND	ND	1
Benzene (71-43-2)			X							0	ug/L	kg/day	ND	ND	1
Bis(Chloromethyl) Ether (542-88-1)			X							0	ug/L	kg/day	Not Available		0
Bromoform (75-25-2)			X							0	ug/L	kg/day	ND	ND	1
Carbon Tetrachloride (56-23-5)			X							0	ug/L	kg/day	ND	ND	1
Chlorobenzene (108-90-7)			X							0	ug/L	kg/day	ND	ND	1
Chlorodibromomethane (124-48-1)			X							0	ug/L	kg/day	ND	ND	1
Chloroethane (75-00-3)			X							0	ug/L	kg/day	ND	ND	1
2-Chloroethylvinyl Ether (110-75-8)			X							0	ug/L	kg/day	ND	ND	1
Chloroform (67-66-3)			X							0	ug/L	kg/day	ND	ND	1
Dichlorobromomethane (75-27-4)			X							0	ug/L	kg/day	ND	ND	1
Dichlorodifluoromethane (75-71-8)			X							0	ug/L	kg/day	ND	ND	1

EPA_COOK_INKPR_000342

Part C.

EPA ID. No.	110007920535

Outfall No.	007

1. Pollutant	2. Mark X: a. Testing Required	b. Believed Present	c. Believed Absent	3. Effluent: a. Maximum Daily Value (1) Conc.	(2) mass	b. Maximum 30-Day Value (1) Conc.	(2) mass	c. Long Term Average Value (1) Conc.	(2) mass	d. No of Analyses	4. Units: a. Conc.	b. mass	5. Intake: a. Long Term Average Value (1) Conc.	(2) mass	b. No of Analyses
1,1-Dichloroethane (75-34-3)			X							0	ug/L	kg/day	ND	ND	1
1,2-Dichloroethane (107-06-2)			X							0	ug/L	kg/day	ND	ND	1
1,1-Dichloroethylene (75-35-4)			X							0	ug/L	kg/day	ND	ND	1
1,2-Dichloropropane (78-87-5)			X							0	ug/L	kg/day	ND	ND	1
1,3-Dichloropropylene (542-75-6)			X							0	ug/L	kg/day	Not Available		0
Ethylbenzene (100-41-4)			X							0	ug/L	kg/day	ND	ND	1
Methyl Bromide (74-83-9)			X							0	ug/L	kg/day	ND	ND	1
Methyl Chloride (74-87-3)			X							0	ug/L	kg/day	ND	ND	1
Methylene Chloride (75-09-2)			X							0	ug/L	kg/day	ND	ND	1
1,1,2,2-Tetrachloroethane (79-34-5)			X							0	ug/L	kg/day	ND	ND	1
Tetrachloroethylene (127-18-4)			X							0	ug/L	kg/day	ND	ND	1
Toluene (108-88-3)			X							0	ug/L	kg/day	ND	ND	1
1,2-Trans-Dichloroethylene (156-60-5)			X							0	ug/L	kg/day	ND	ND	1
1,1,1-Trichloroethane (71-55-6)			X							0	ug/L	kg/day	ND	ND	1
1,1,2-Trichloroethane (79-00-5)			X							0	ug/L	kg/day	ND	ND	1
Trichloroethylene (79-01-6)			X							0	ug/L	kg/day	ND	ND	1
Trichlorofluoromethane (75-69-4)			X							0	ug/L	kg/day	ND	ND	1
Vinyl Chloride (75-01-4)			X							0	ug/L	kg/day	ND	ND	1
Acid Compounds															
2-Chlorophenol (95-57-8)			X							0	ug/L	kg/day	ND	ND	1
2,4-Dichlorophenol (120-83-2)			X							0	ug/L	kg/day	ND	ND	1
2,4-Dimethylephenol (105-67-9)			X							0	ug/L	kg/day	ND	ND	1

NTBA — Not Compulsory

EPA_COOK_INKPR_000343

Part C.

EPA ID. No. 110007920535 | Outfall No. 007

1. Pollutant	2. Mark 'X' a. Testing Required	b. Believed Present	c. Believed Absent	3. Effluent a. Maximum Daily Value (1) Conc.	(2) mass	b. Maximum 30-Day Value (1) Conc.	(2) mass	c. Long Term Average Value (1) Conc.	(2) mass	d. No of Analyses	4. Units a. Conc.	b. mass	5. Intake a. Long Term Average Value (1) Conc.	(2) mass	b. No of Analyses
4,6-Dinitro-O-Cresol (534-52-1)			X							0	ug/L	kg/day	ND	ND	1
2,4-Dinitrophenol (51-28-5)			X							0	ug/L	kg/day	ND	ND	1
2-Nitrophenol (88-75-5)			X							0	ug/L	kg/day	ND	ND	1
4-Nitrophenol (100-02-7)			X							0	ug/L	kg/day	ND	ND	1
P-Chloro-M-Cresol (59-50-7)			X							0	ug/L	kg/day	ND	ND	1
Pentachlorophenol (87-86-5)			X							0	ug/L	kg/day	ND	ND	1
Phenol (108-95-2)			X							0	ug/L	kg/day	ND	ND	1
2,4,6-Trichlorophenol (88-06-2)			X							0	ug/L	kg/day	ND	ND	1
Base/Neutral Compounds															
Acenaphthene (83-32-9)			X							0	ug/L	kg/day	ND	ND	1
Acenaphtylene (208-96-8)			X							0	ug/L	kg/day	ND	ND	1
Anthracene (120-12-7)			X							0	ug/L	kg/day	ND	ND	1
Benzidine (92-87-5)			X							0	ug/L	kg/day	ND	ND	1
Benzo (a) Anthracene (56-55-3)			X							0	ug/L	kg/day	ND	ND	1
Benzo (a) Pyrene (50-32-8)			X							0	ug/L	kg/day	ND	ND	1
3,4-Benzo-fluoranthene (205-99-2)			X							0	ug/L	kg/day	ND	ND	1
Benzo (ghi) Perylene (191-24-2)			X							0	ug/L	kg/day	ND	ND	1
Benzo (k) Fluoranthene (207-08-9)			X							0	ug/L	kg/day	ND	ND	1
Bis (2-Chloroethoxy) Methane (111-91-1)			X							0	ug/L	kg/day	ND	ND	1
Bis (2-Chloroethyl) Ether (111-44-4)			X							0	ug/L	kg/day	ND	ND	1
Bis (2-Chloroisopropyl) Ether (108-60-1)			X							0	ug/L	kg/day	ND	ND	1
Bis (2-Ethyl-hexyl) Phthalate (117-81-7)			X							0	ug/L	kg/day	ND	ND	1
4-Bromophenyl Phenyl (101-55-3)			X							0	ug/L	kg/day	ND	ND	1

NTBA — Not Compulsory

NTBA — Not Compulsory

NTBA — Not Compulsory

EPA_COOK_INKPR_000344

Part C.

EPA ID. No. 110007920535

Outfall No. 007

1. Pollutant	2. Mark 'X' a. Testing Required	b. Believed Present	c. Believed Absent	3. Effluent a. Maximum Daily Value (1) Conc.	(2) mass	b. Maximum 30-Day Value (1) Conc.	(2) mass	c. Long Term Average Value (1) Conc.	(2) mass	d. No. of Analyses	4. Units a. Conc.	b. mass	5. Intake a. Long Term Average Value (1) Conc.	(2) mass	b. No. of Analyses
Butyl Benzyl Phthalate (85-68-7)			X							0	ug/L	kg/day	ND	ND	1
2-Chloro-naphthalene (91-58-7)			X							0	ug/L	kg/day	ND	ND	1
4-Chlorophenyl Phenyl Ether (7005-72-3)			X							0	ug/L	kg/day	ND	ND	1
Chrysene (218-01-9)			X							0	ug/L	kg/day	ND	ND	1
Dibenzo (a,h) Anthracene (53-70-3)			X							0	ug/L	kg/day	ND	ND	1
1,2-Dichlorobenzene (95-50-1)			X							0	ug/L	kg/day	ND	ND	1
1,3-Dichlorobenzene (541-73-1)			X							0	ug/L	kg/day	ND	ND	1
1,4-Dichlorobenzene (106-46-7)			X							0	ug/L	kg/day	ND	ND	1
3,3'-Dichlorobenzidine (91-94-1)			X							0	ug/L	kg/day	ND	ND	1
Diethyl Phthalate (84-66-2)			X							0	ug/L	kg/day	ND	ND	1
Dimethyl Phthalate (131-11-3)			X							0	ug/L	kg/day	ND	ND	1
Di-N-Butyl Phthalate (84-74-2)			X							0	ug/L	kg/day	1.8	0.00001	1
2,4-Dinitrotoluene (121-14-2)			X							0	ug/L	kg/day	ND	ND	1
2,6-Dinitrotoluene (606-20-2)			X							0	ug/L	kg/day	ND	ND	1
Di-N-Octyl Phthalate (117-84-0)			X							0	ug/L	kg/day	ND	ND	1
1,2-Diphenyl-hydrazine (as Azo-benzene) (122-66-7)			X							0	ug/L	kg/day	ND	ND	1
Fluoranthene (206-44-0)			X							0	ug/L	kg/day	ND	ND	1
Fluorene (86-73-7)			X							0	ug/L	kg/day	ND	ND	1
Hexachlorobenzene (118-74-1)			X							0	ug/L	kg/day	ND	ND	1
Hexachlorobutadiene (87-68-3)			X							0	ug/L	kg/day	ND	ND	1
Hexachlorocyclopentadiene (77-47-4)			X							0	ug/L	kg/day	ND	ND	1
Hexachloroethane (67-72-1)			X							0	ug/L	kg/day	ND	ND	1
Indeno (1,2,3-cd) Pyrene (193-39-5)			X							0	ug/L	kg/day	ND	ND	1

NTBA

Not Compulsory

Not Compulsory

NTBA

Not Compulsory

Not Compulsory

EPA_COOK_INKPR_000345

Part C.

EPA ID. No. 110007920535

Outfall No. 007

1. Pollutant	2. Mark 'X' a. Testing Required	b. Believed Present	c. Believed Absent	3. Effluent a. Maximum Daily Value (1) Conc.	(2) mass	b. Maximum 30-Day Value (1) Conc.	(2) mass	c. Long Term Average Value (1) Conc.	(2) mass	d. No of Analyses	4. Units a. Conc.	b. mass	5. Intake a. Long Term Average Value (1) Conc.	(2) mass	b. No of Analyses
Isophorone (78-59-1)			X							0	ug/L	kg/day	ND	ND	1
Naphthalene (91-20-3)			X							0	ug/L	kg/day	ND	ND	1
Nitrobenzene (98-95-3)			X							0	ug/L	kg/day	ND	ND	1
N-Nitro-sodimethylamine (62-75-9)			X							0	ug/L	kg/day	ND	ND	1
N-Nitrosodi-N-Propylamine (621-64-7)			X							0	ug/L	kg/day	ND	ND	1
N-Nitrosodiphenylamine (86-30-6)			X							0	ug/L	kg/day	ND	ND	1
Phenanthrene (85-01-8)			X							0	ug/L	kg/day	ND	ND	1
Pyrene (129-00-0)			X							0	ug/L	kg/day	ND	ND	1
1,2,4-Trichlorobenzene (120-82-1)			X							0	ug/L	kg/day	ND	ND	1
Pesticides															
Aldrin (309-00-2)			X							0	ug/L	kg/day	ND	ND	1
α-BHC (319-84-6)			X							0	ug/L	kg/day	ND	ND	1
β-BHC (319-85-7)			X							0	ug/L	kg/day	ND	ND	1
γ-BHC (58-89-9)			X							0	ug/L	kg/day	ND	ND	1
δ-BHC (319-86-8)			X							0	ug/L	kg/day	ND	ND	1
Chlordane (57-74-9)			X							0	ug/L	kg/day	ND	ND	1
4,4'-DDT (50-29-3)			X							0	ug/L	kg/day	ND	ND	1
4,4'-DDE (72-55-9)			X							0	ug/L	kg/day	ND	ND	1
4,4'-DDD (72-54-8)			X							0	ug/L	kg/day	ND	ND	1
Dieldrin (60-57-1)			X							0	ug/L	kg/day	ND	ND	1
α-Endosulfan (115-29-7)			X							0	ug/L	kg/day	ND	ND	1
β-Endosulfan (115-29-7)			X							0	ug/L	kg/day	ND	ND	1
Endosulfan Sulfate (1031-07-8)			X							0	ug/L	kg/day	ND	ND	1
Endrin (72-20-8)			X							0	ug/L	kg/day	ND	ND	1

NTBA — Not Compulsory

EPA_COOK_INKPR_000346

Part C.

EPA ID. No.	110007920535

Outfall No.	007

1. Pollutant	2. Mark 'X'			3. Effluent						4. Units		5. Intake		
	a. Testing Required	b. Believed Present	c. Believed Absent	a. Maximum Daily Value		b. Maximum 30-Day Value		c. Long Term Average Value		d. No of Analyses	a. Conc.	b. mass	a. Long Term Average Value		b. No of Analyses
				(1) Conc.	(2) mass	(1) Conc.	(2) mass	(1) Conc.	(2) mass				(1) Conc.	(2) mass	
Endrin Aldehyde (7421-93-4)			X	NTBA		Not Compulsory		Not Compulsory		0	ug/L	kg/day	ND	ND	1
Heptachlor (76-44-8)			X							0	ug/L	kg/day	ND	ND	1
Heptachlor Epoxide (1024-57-3)			X							0	ug/L	kg/day	ND	ND	1
PCB-1242 (53469-21-9)			X							0	ug/L	kg/day	ND	ND	1
PCB-1254 (11097-69-1)			X							0	ug/L	kg/day	ND	ND	1
PCB-1221 (11104-28-2)			X							0	ug/L	kg/day	ND	ND	1
PCB-1232 (11141-16-5)			X							0	ug/L	kg/day	ND	ND	1
PCB-1248 (12672-29-6)			X							0	ug/L	kg/day	ND	ND	1
PCB-1260 (11096-82-5)			X							0	ug/L	kg/day	ND	ND	1
PCB-1016 (12674-11-2)			X							0	ug/L	kg/day	ND	ND	1
Toxaphene (8001-35-2)			X							0	ug/L	kg/day	ND	ND	1

* Flow rate for intake is either total for all Cook Inlet used at facility or total of fresh water uses excluding drilling which varies widely and therefore cannot be predicted reliably. This is not outfall-specific.

** The Long Term Average mass was calculated from the facility-specific flowrates on the attached Discharge Flow Diagrams.

*** Conversions used for mass (kg/day) are as follows: 3.78 L= 1 gal; 1 g = 1000 mg; 1000g = 1 kg

ND - non-detect

NA - not applicable

NTBA - not tested - believed absent

EPA_COOK_INKPR_000347

V. INTAKE AND EFFLUENT CHARACTERISTICS

EPA ID. No.	110007920535

Part A. Provide the results of at least one analysis for every pollutant in this table. Complete one table for each outfall.

Outfall No.	008

1. Pollutant	2. Effluent							3. Units (specify if blank)		4. Intake (optional) **		
	a. Maximum Daily Value		b. Max. 30-Day Value (if available)		c. Long Term Avg. Value (if available)		d. No of Analyses	a.Conc.	b. mass	a. Long Term Average Value		b. No of Analysis
	(1) Conc. (mg/L)	(2) mass (kg/day)	(1) Conc.	(2) mass	(1) Conc.	(2) mass				(1) Conc. (mg/L)	(2) mass (kg/day)	
a. Biochemical Oxygen Demand (BOD)	ND	ND	Not Compulsory		Not Compulsory		1	mg/L	kg/day	ND	ND	1
b. Chemical Oxygen Demand (COD)	832	0.31					1	mg/L	kg/day	1,970	38,276	1
c. Total Organic Carbon (TOC)	ND	ND					1	mg/L	kg/day	1.56	30	1
d. Total Suspended Solids (TSS)	468	0.18					1	mg/L	kg/day	81.5	1,583	1
e. Ammonia (as N)	ND	ND					1	mg/L	kg/day	ND	ND	1
f. Flow	100						NA	GPD		5,140,000	GPD	not applicable
g. Temperature (winter)	not available						0	not available		not available		not available
h. Temperature (summer)	not available						0	not available		not available		not available
i. pH	Minimum	Maximum										
	not available	not available					0	Std Units				

* Flow rate for intake is either total for all Cook Inlet used at facility or total of fresh water uses excluding drilling which varies widely and therefore cannot be predicted reliably. This is not outfall-specific.
** The Long Term Average mass was calculated from the facility-specific flowrates on the attached Discharge Flow Diagrams.
*** Conversions used for mass (kg/day) are as follows: 3.78 L= 1 gal; 1 g = 1000 mg; 1000g = 1 kg
ND - non-detect
NA - not applicable
NTBA - not tested - believed absent

EPA_COOK_INKPR_000348

EPA ID. No.	110007920535	Outfall No.	008

Part B. Mark "X" in column 2-a for each pollutant you know or have reason to believe is present. Mark "X" in column 2-b for each pollutant you believe to be absent.

If you mark column 2a for any pollutant which is limited either directly, or indirectly but expressly, in an effluent limitations guideline, you must provide the results of at least one analysis for that pollutant.

For other pollutants for which you mark column 2a, you must provide quantitative data or an explanation of their presence in your discharge. Complete one table for each outfall. See the instructions for additional details and requirements.

1. Pollutant	2. Mark 'X'		3. Effluent							4. Units		5. Intake **		
	a. Believed Present	b. Believed Absent	a. Maximum Daily		b. Maximum 30-Day		c. Long Term		d. No of Analyses			a. Long Term		b. No of Analyses
			(1) Conc.	(2) mass	(1) Conc.	(2) mass	(1) Conc.	(2) mass		(1) Conc.	b. mass	(1) Conc.	(2) mass	
Bromide		X	NTBA		Not Compulsory		Not Compulsory		0	mg/L	kg/day	87	1,690	1
Chlorine, Total Residual		X							0	not available				0
Color		X							0	ug/L	kg/day	5.0	0.10	1
Fecal Coliform		X							0	not available				0
Fluoride (16984-48-8)		X							0	mg/L	kg/day	ND	ND	1
Nitrate-Nitrite (as N)		X							0	mg/L	kg/day	ND	ND	1
Nitrogen, Total Organic (as N)		X							0	mg/L	kg/day	Not Available		
Oil and Grease		X							0	mg/L	kg/day	ND	ND	1
Phosphorus (as P), Total (7723-14-0)		X							0	mg/L	kg/day	0.110	2.14	1
Alpha, Total		X							0	analyses in progress				1
Beta, Total		X							0					1
Radium, Total		X							0					1
Radium 226, Total		X							0					1
Sulfate (as SO4) (14808-79-8)		X							0	mg/L	kg/day	1,610	31,281	1
Sulfide (as S)		X							0	mg/L	kg/day	ND	ND	1
Sulfite (as SO3) (14265-45-3)		X							0	mg/L	kg/day	ND	ND	1
Surfactants		X							0	mg/L	kg/day	1.38	26.81	1
Aluminum, Total (7429-90-5)		X							0	ug/L	kg/day	1,920	37.30	1
Barium, Total (7440-39-3)		X							0	ug/L	kg/day	36.1	0.70	1
Boron, Total (7440-42-8)		X							0	ug/L	kg/day	3220	62.56	1
Cobalt, Total (7440-48-4)		X							0	ug/L	kg/day	2.06	0.04	1
Iron, Total (7439-89-6)		X							0	mg/L	kg/day	0.33	6.41	1
Magnesium, Total (7439-95-4)		X							0	mg/L	kg/day	800	15,543	1
Molybdenum, Total (7439-98-7)		X							0	ug/L	kg/day	8.38	0.16	1
Manganese, Total (7439-96-5)		X							0	ug/L	kg/day	86.1	1.67	1
Tin, Total (7440-31-5)		X							0	ug/L	kg/day	ND	ND	1
Titanium, Total (7440-32-6)		X							0	ug/L	kg/day	149	2.89	1

* Flow rate for intake is either total for all Cook Inlet used at facility or total of fresh water uses excluding drilling which varies widely and therefore cannot be predicted reliably. This is not outfall-specific.

** The Long Term Average mass was calculated from the facility-specific flowrates on the attached Discharge Flow Diagrams.

*** Conversions used for mass (kg/day) are as follows: 3.78 L = 1 gal; 1 g = 1000 mg; 1000g = 1 kg

ND - non-detect

NA - not applicable

NTBA - not tested - believed absent

Part C.

EPA ID. No. 110007920535

Outfall No. 008

1. Pollutant	2. Mark 'X' a. Testing Required	b. Believed Present	c. Believed Absent	3. Effluent a. Maximum Daily Value (1) Conc.	(2) mass	b. Maximum 30-Day Value (1) Conc.	(2) mass	c. Long Term Average Value (1) Conc.	(2) mass	d. No of Analyses	4. Units a. Conc.	b. mass	5. Intake a. Long Term Average Value (1) Conc.	(2) mass	b. No of Analyses
Metals, Cyanide, and Total Phenols															
Antimony, Total (7440-36-0)			X							0	ug/L	kg/day	1.97	0.04	1
Arsenic, Total (7440-38-2)			X							0	ug/L	kg/day	60.5	1.18	1
Beryllium, Total (7440-41-7)			X							0	ug/L	kg/day	ND	ND	1
Cadmium, Total (7440-43-9)			X							0	ug/L	kg/day	ND	ND	1
Chromium, Total (7440-47-3)			X							0	ug/L	kg/day	10.3	0.20	1
Copper, Total (7440-50-8)			X							0	ug/L	kg/day	12.8	0.25	1
Lead, Total (7439-92-1)			X							0	ug/L	kg/day	1.71	0.03	1
Mercury, Total (7439-97-6)			X							0	ug/L	kg/day	0.0896	0.002	1
Nickel, Total (7440-02-0)			X							0	ug/L	kg/day	16.7	0.32	1
Selenium, Total (7782-49-2)			X							0	ug/L	kg/day	175	3.40	1
Silver, Total (7440-22-4)			X							0	ug/L	kg/day	ND	ND	1
Thallium, Total (7440-28-0)			X							0	ug/L	kg/day	ND	ND	1
Zinc, Total (7440-66-6)			X							0	ug/L	kg/day	11.7	0.23	1
Cyanide, Total (57-12-5)			X							0	mg/L	kg/day	ND	ND	1
Phenols, Total			X							0	mg/L	kg/day	ND	ND	1
Dioxin															
2,3,7,8 - Tetra-chlorodibenzo-P-Dioxin (1764-01-6)			X							0	pg/L	NA	ND	ND	1
Volatile Compounds															
Acrolein (107-02-8)			X							0	ug/L	kg/day	ND	ND	1
Acrylonitrile (107-13-1)			X							0	ug/L	kg/day	ND	ND	1
Benzene (71-43-2)			X							0	ug/L	kg/day	ND	ND	1
Bis(Chloromethyl) Ether (542-88-1)			X							0	ug/L	kg/day	Not Available		0
Bromoform (75-25-2)			X							0	ug/L	kg/day	ND	ND	1
Carbon Tetrachloride (56-23-5)			X							0	ug/L	kg/day	ND	ND	1
Chlorobenzene (108-90-7)			X							0	ug/L	kg/day	ND	ND	1
Chlorodibromomethane (124-48-1)			X							0	ug/L	kg/day	ND	ND	1
Chloroethane (75-00-3)			X							0	ug/L	kg/day	ND	ND	1
2-Chloroethylvinyl Ether (110-75-8)			X							0	ug/L	kg/day	ND	ND	1
Chloroform (67-66-3)			X							0	ug/L	kg/day	ND	ND	1
Dichlorobromomethane (75-27-4)			X							0	ug/L	kg/day	ND	ND	1
Dichlorodifluoromethane (75-71-8)			X							0	ug/L	kg/day	ND	ND	1

NTBA — Not Compulsory

NTBA — Not Compulsory

NTBA — Not Compulsory

EPA_COOK_INKPR_000350

Part C.

EPA ID. No.	110007920535

Outfall No.	008

1. Pollutant	2. Mark X			3. Effluent							4. Units		5. Intake		
	a. Testing Required	b. Believed Present	c. Believed Absent	a. Maximum Daily Value		b. Maximum 30-Day Value		c. Long Term Average Value		d. No of Analyses	a. Conc.	b. mass	a. Long Term Average Value		b. No of Analyses
				(1) Conc.	(2) mass	(1) Conc.	(2) mass	(1) Conc.	(2) mass				(1) Conc.	(2) mass	
1,1-Dichloroethane (75-34-3)			X							0	ug/L	kg/day	ND	ND	1
1,2-Dichloroethane (107-06-2)			X							0	ug/L	kg/day	ND	ND	1
1,1-Dichloroethylene (75-35-4)			X							0	ug/L	kg/day	ND	ND	1
1,2-Dichloropropane (78-87-5)			X	NTBA		Not Compulsory		Not Compulsory		0	ug/L	kg/day	ND	ND	1
1,3-Dichloropropylene (542-75-6)			X							0	ug/L	kg/day	Not Available		0
Ethylbenzene (100-41-4)			X							0	ug/L	kg/day	ND	ND	1
Methyl Bromide (74-83-9)			X							0	ug/L	kg/day	ND	ND	1
Methyl Chloride (74-87-3)			X							0	ug/L	kg/day	ND	ND	1
Methylene Chloride (75-09-2)			X							0	ug/L	kg/day	ND	ND	1
1,1,2,2-Tetrachloroethane (79-34-5)			X							0	ug/L	kg/day	ND	ND	1
Tetrachloroethylene (127-18-4)			X							0	ug/L	kg/day	ND	ND	1
Toluene (108-88-3)			X	NTBA						0	ug/L	kg/day	ND	ND	1
1,2-Trans-Dichloroethylene (156-60-5)			X							0	ug/L	kg/day	ND	ND	1
1,1,1-Trichloroethane (71-55-6)			X							0	ug/L	kg/day	ND	ND	1
1,1,2-Trichloroethane (79-00-5)			X							0	ug/L	kg/day	ND	ND	1
Trichloroethylene (79-01-6)			X							0	ug/L	kg/day	ND	ND	1
Trichlorofluoromethane (75-69-4)			X							0	ug/L	kg/day	ND	ND	1
Vinyl Chloride (75-01-4)			X							0	ug/L	kg/day	ND	ND	1
				NTBA											
Acid Compounds															
2-Chlorophenol (95-57-8)			X							0	ug/L	kg/day	ND	ND	1
2,4-Dichlorophenol (120-83-2)			X							0	ug/L	kg/day	ND	ND	1
2,4-Dimethylephenol (105-67-9)			X							0	ug/L	kg/day	ND	ND	1
4,6-Dinitro-O-Cresol (534-52-1)			X							0	ug/L	kg/day	ND	ND	1

EPA_COOK_INKPR_000351

Part C.

EPA ID. No. 110007920535

Outfall No. 008

1. Pollutant	2. Mark 'X' a. Testing Required	b. Believed Present	c. Believed Absent	3. Effluent a. Maximum Daily Value (1) Conc.	(2) mass	b. Maximum 30-Day Value (1) Conc.	(2) mass	c. Long Term Average Value (1) Conc.	(2) mass	d. No of Analyses	4. Units a. Conc.	b. mass	5. Intake a. Long Term Average Value (1) Conc.	(2) mass	b. No of Analyses
2,4-Dinitrophenol (51-28-5)			X							0	ug/L	kg/day	ND	ND	1
2-Nitrophenol (88-75-5)			X							0	ug/L	kg/day	ND	ND	1
4-Nitrophenol (100-02-7)			X							0	ug/L	kg/day	ND	ND	1
P-Chloro-M-Cresol (59-50-7)			X							0	ug/L	kg/day	ND	ND	1
Pentachlorophenol (87-86-5)			X							0	ug/L	kg/day	ND	ND	1
Phenol (108-95-2)			X							0	ug/L	kg/day	ND	ND	1
2,4,6-Trichlorophenol (88-06-2)			X							0	ug/L	kg/day	ND	ND	1
Base/Neutral Compounds															
Acenaphthene (83-32-9)			X							0	ug/L	kg/day	ND	ND	1
Acenaphtylene (208-96-8)			X							0	ug/L	kg/day	ND	ND	1
Anthracene (120-12-7)			X							0	ug/L	kg/day	ND	ND	1
Benzidine (92-87-5)			X							0	ug/L	kg/day	ND	ND	1
Benzo (a) Anthracene (56-55-3)			X							0	ug/L	kg/day	ND	ND	1
Benzo (a) Pyrene (50-32-8)			X							0	ug/L	kg/day	ND	ND	1
3,4-Benzo-fluoranthene (205-99-2)			X							0	ug/L	kg/day	ND	ND	1
Benzo (ghi) Perylene (191-24-2)			X							0	ug/L	kg/day	ND	ND	1
Benzo (k) Fluoranthene (207-08-9)			X							0	ug/L	kg/day	ND	ND	1
Bis (2-Chloroethoxy) Methane (111-91-1)			X							0	ug/L	kg/day	ND	ND	1
Bis (2-Chloroethyl) Ether (111-44-4)			X							0	ug/L	kg/day	ND	ND	1
Bis (2-Chloroisopropyl) Ether (108-60-1)			X							0	ug/L	kg/day	ND	ND	1
Bis (2-Ethyl-hexyl) Phthalate (117-81-7)			X							0	ug/L	kg/day	ND	ND	1
4-Bromophenyl Phenyl (101-55-3)			X							0	ug/L	kg/day	ND	ND	1
Butyl Benzyl Phthalate (85-68-7)			X							0	ug/L	kg/day	ND	ND	1

NTBA — Not Compulsory

NTBA — Not Compulsory

NTBA — Not Compulsory

EPA_COOK_INKPR_000352

Part C.

EPA ID. No.	110007920535

Outfall No.	008

1. Pollutant	2. Mark 'X' a. Testing Required	b. Believed Present	c. Believed Absent	3. Effluent a. Maximum Daily Value (1) Conc.	(2) mass	b. Maximum 30-Day Value (1) Conc.	(2) mass	c. Long Term Average Value (1) Conc.	(2) mass	d. No of Analyses	4. Units a. Conc.	b. mass	5. Intake a. Long Term Average Value (1) Conc.	(2) mass	b. No of Analyses
2-Chloro-naphthalene (91-58-7)			X							0	ug/L	kg/day	ND	ND	1
4-Chlorophenyl Phenyl Ether (7005-72-3)			X							0	ug/L	kg/day	ND	ND	1
Chrysene (218-01-9)			X							0	ug/L	kg/day	ND	ND	1
Dibenzo (a,h) Anthracene (53-70-3)			X							0	ug/L	kg/day	ND	ND	1
1,2-Dichlorobenzene (95-50-1)			X							0	ug/L	kg/day	ND	ND	1
1,3-Dichlorobenzene (541-73-1)			X							0	ug/L	kg/day	ND	ND	1
1,4-Dichlorobenzene (106-46-7)			X							0	ug/L	kg/day	ND	ND	1
3,3'-Dichlorobenzidine (91-94-1)			X							0	ug/L	kg/day	ND	ND	1
Diethyl Phthalate (84-66-2)			X							0	ug/L	kg/day	ND	ND	1
Dimethyl Phthalate (131-11-3)			X							0	ug/L	kg/day	ND	ND	1
Di-N-Butyl Phthalate (84-74-2)			X							0	ug/L	kg/day	1.2	0.02	1
2,4-Dinitrotoluene (121-14-2)			X							0	ug/L	kg/day	ND	ND	1
2,6-Dinitrotoluene (606-20-2)			X							0	ug/L	kg/day	ND	ND	1
Di-N-Octyl Phthalate (117-84-0)			X							0	ug/L	kg/day	ND	ND	1
1,2-Diphenyl-hydrazine (as Azo-benzene) (122-66-7)			X							0	ug/L	kg/day	ND	ND	1
Fluoranthene (206-44-0)			X							0	ug/L	kg/day	ND	ND	1
Fluorene (86-73-7)			X							0	ug/L	kg/day	ND	ND	1
Hexachlorobenzene (118-74-1)			X							0	ug/L	kg/day	ND	ND	1
Hexachlorobutadiene (87-68-3)			X							0	ug/L	kg/day	ND	ND	1
Hexachlorocyclopentadiene (77-47-4)			X							0	ug/L	kg/day	ND	ND	1
Hexachloroethane (67-72-1)			X							0	ug/L	kg/day	ND	ND	1
Indeno (1,2,3-cd) Pyrene (193-39-5)			X							0	ug/L	kg/day	ND	ND	1
Isophorone (78-59-1)			X							0	ug/L	kg/day	ND	ND	1

NTBA — Not Compulsory

EPA_COOK_INKPR_000353

Part C.

EPA ID. No. 110007920535

Outfall No. 008

1. Pollutant	2. Mark 'X' a. Testing Required	b. Believed Present	c. Believed Absent	3. Effluent a. Maximum Daily Value (1) Conc.	(2) mass	b. Maximum 30-Day Value (1) Conc.	(2) mass	c. Long Term Average Value (1) Conc.	(2) mass	d. No of Analyses	4. Units a. Conc.	b. mass	5. Intake a. Long Term Average Value (1) Conc.	(2) mass	b. No of Analyses
Naphthalene (91-20-3)			X	NTBA		Not Compulsory		Not Compulsory		0	ug/L	kg/day	ND	ND	1
Nitrobenzene (98-95-3)			X							0	ug/L	kg/day	ND	ND	1
N-Nitro-sodimethylamine (62-75-9)			X							0	ug/L	kg/day	ND	ND	1
N-Nitrosodi-N-Propylamine (621-64-7)			X							0	ug/L	kg/day	ND	ND	1
N-Nitrosodiphenylamine (86-30-6)			X							0	ug/L	kg/day	ND	ND	1
Phenanthrene (85-01-8)			X							0	ug/L	kg/day	ND	ND	1
Pyrene (129-00-0)			X							0	ug/L	kg/day	ND	ND	1
1,2,4-Trichlorobenzene (120-82-1)			X							0	ug/L	kg/day	ND	ND	1
Pesticides															
Aldrin (309-00-2)			X	NTBA		Not Compulsory		Not Compulsory		0	ug/L	kg/day	ND	ND	1
α-BHC (319-84-6)			X							0	ug/L	kg/day	ND	ND	1
β-BHC (319-85-7)			X							0	ug/L	kg/day	ND	ND	1
γ-BHC (58-89-9)			X							0	ug/L	kg/day	ND	ND	1
δ-BHC (319-86-8)			X							0	ug/L	kg/day	ND	ND	1
Chlordane (57-74-9)			X							0	ug/L	kg/day	ND	ND	1
4,4'-DDT (50-29-3)			X							0	ug/L	kg/day	ND	ND	1
4,4'-DDE (72-55-9)			X							0	ug/L	kg/day	ND	ND	1
4,4'-DDD (72-54-8)			X							0	ug/L	kg/day	ND	ND	1
Dieldrin (60-57-1)			X							0	ug/L	kg/day	ND	ND	1
α-Endosulfan (115-29-7)			X	NTBA						0	ug/L	kg/day	ND	ND	1
β-Endosulfan (115-29-7)			X							0	ug/L	kg/day	ND	ND	1
Endosulfan Sulfate (1031-07-8)			X							0	ug/L	kg/day	ND	ND	1
Endrin (72-20-8)			X							0	ug/L	kg/day	ND	ND	1
Endrin Aldehyde (7421-93-4)			X			N		N		0	ug/L	kg/day	ND	ND	1

EPA_COOK_INKPR_000354

Part C.

EPA ID. No.	110007920535

Outfall No.	008

1. Pollutant	2. Mark 'X' a. Testing Required	b. Believed Present	c. Believed Absent	3. Effluent a. Maximum Daily Value (1) Conc.	(2) mass	b. Maximum 30-Day Value (1) Conc.	(2) mass	c. Long Term Average Value (1) Conc.	(2) mass	d. No of Analyses	4. Units a. Conc.	b. mass	5. Intake a. Long Term Average Value (1) Conc.	(2) mass	b. No of Analyses
Heptachlor (76-44-8)			X	NTBA		Not Compulsory		Not Compulsory		0	ug/L	kg/day	ND	ND	1
Heptachlor Epoxide (1024-57-3)			X							0	ug/L	kg/day	ND	ND	1
PCB-1242 (53469-21-9)			X							0	ug/L	kg/day	ND	ND	1
PCB-1254 (11097-69-1)			X							0	ug/L	kg/day	ND	ND	1
PCB-1221 (11104-28-2)			X							0	ug/L	kg/day	ND	ND	1
PCB-1232 (11141-16-5)			X							0	ug/L	kg/day	ND	ND	1
PCB-1248 (12672-29-6)			X							0	ug/L	kg/day	ND	ND	1
PCB-1260 (11096-82-5)			X							0	ug/L	kg/day	ND	ND	1
PCB-1016 (12674-11-2)			X							0	ug/L	kg/day	ND	ND	1
Toxaphene (8001-35-2)			X							0	ug/L	kg/day	ND	ND	1

* Flow rate for intake is either total for all Cook Inlet used at facility or total of fresh water uses excluding drilling which varies widely and therefore cannot be predicted reliably. This is not outfall-specific.
** The Long Term Average mass was calculated from the facility-specific flowrates on the attached Discharge Flow Diagrams.
*** Conversions used for mass (kg/day) are as follows: 3.78 L= 1 gal; 1 g = 1000 mg; 1000g = 1 kg
ND - non-detect
NA - not applicable
NTBA - not tested - believed absent

EPA_COOK_INKPR_000355

V. INTAKE AND EFFLUENT CHARACTERISTICS

EPA ID. No	110007920535
Outfall No.	009

Part A. Provide the results of at least one analysis for every pollutant in this table. Complete one table for each outfall.

1. Pollutant	2. Effluent							3. Units (specify if blank)		4. Intake (optional) **		
	a. Maximum Daily Value		b. Max. 30-Day Value (if available)		c. Long Term Avg. Value (if available)		d. No of Analyses			a. Long Term Average Value		b. No of Analysis
	(1) Conc. (mg/L)	(2) mass (kg/day) ***	(1) Conc.	(2) mass	(1) Conc.	(2) mass		a.Conc.	b. mass	(1) Conc. (mg/L)	(2) mass (kg/day)	
a. Biochemical Oxygen Demand (BOD)	ND	ND	Not Compulsory		Not Compulsory		2	mg/L	not available	ND	ND	1
b. Chemical Oxygen Demand (COD)	574	738					2	mg/L	kg/day	1,970	38,276	1
c. Total Organic Carbon (TOC)	1.59	2					2	mg/L	kg/day	1.56	30	1
d. Total Suspended Solids (TSS)	135	174					2	mg/L	kg/day	81.5	1,583	1
e. Ammonia (as N)	ND	ND					2	mg/L	kg/day	ND	ND	1
f. Flow	340,000						NA	GPD		5,140,000	GPD	not applicable
g. Temperature (winter)	not available						0	not available		not available		not available
h. Temperature (summer)	25						8	°C		not available		not available
i. pH	Minimum 7.21	Maximum 8.06					4	Std Units				

Two samples were collected for 009 (non contact cooling water); one sample and one duplicate. The results in this table are maximum value of the two samples.

* Flow rate for intake is either total for all Cook Inlet used at facility or total of fresh water uses excluding drilling which varies widely and therefore cannot be predicted reliably. This is not outfall-specific.

** The Long Term Average mass was calculated from the facility-specific flowrates on the attached Discharge Flow Diagrams.

*** Conversions used for mass (kg/day) are as follows: 3.78 L= 1 gal; 1 g = 1000 mg; 1000g = 1 kg

ND - non-detect

NA - not applicable

NTBA - not tested - believed absent

EPA_COOK_INKPR_000356

EPA ID. No.	110007920535	Outfall No.	009

Part B. Mark "X" in column 2-a for each pollutant you know or have reason to believe is present. Mark "X" in column 2-b for each pollutant you believe to be absent.

If you mark column 2a for any pollutant which is limited either directly, or indirectly but expressly, in an effluent limitations guideline, you must provide the results of at least one analysis for that pollutant.

For other pollutants for which you mark column 2a, you must provide quantitative data or an explanation of their presence in your discharge. Complete one table for each outfall. See the instructions for additional details and requirements.

1. Pollutant	2. Mark 'X'		3. Effluent							4. Units		5. Intake **		
	a. Believed Present	b. Believed Absent	a. Maximum Daily		b. Maximum 30-Day		c. Long Term		d. No of Analyses			a. Long Term		b. No of Analyses
			(1) Conc.	(2) mass	(1) Conc.	(2) mass	(1) Conc.	(2) mass		(1) Conc.	b. mass	(1) Conc.	(2) mass	
Bromide		X	NTBA		Not Compulsory		Not Compulsory		0	mg/L	kg/day	87	1,690	1
Chlorine, Total Residual		X							0	not available				0
Color		X							0	ug/L	kg/day	5.0	0.10	1
Fecal Coliform		X							0	not available				0
Fluoride (16984-48-8)		X							0	mg/L	kg/day	ND	ND	1
Nitrate-Nitrite (as N)		X							0	mg/L	kg/day	ND	ND	1
Nitrogen, Total Organic (as N)		X							0	mg/L	kg/day	Not Available		0
Oil and Grease		X							0	mg/L	kg/day	ND	ND	1
Phosphorus (as P), Total (7723-14-0)		X							0	mg/L	kg/day	0.110	2.14	1
Alpha, Total		X							0	analyses in progress				1
Beta, Total		X							0					1
Radium, Total		X							0					1
Radium 226, Total		X							0					1
Sulfate (as SO4) (14808-79-8)		X							0	mg/L	kg/day	1,610	31,281	1
Sulfide (as S)		X							0	mg/L	kg/day	ND	ND	1
Sulfite (as SO3) (14265-45-3)		X							0	mg/L	kg/day	ND	ND	1
Surfactants		X							0	mg/L	kg/day	1.38	26.81	1
Aluminum, Total (7429-90-5)		X							0	ug/L	kg/day	1,920	37.30	1
Barium, Total (7440-39-3)		X							0	ug/L	kg/day	36.1	0.70	1
Boron, Total (7440-42-8)		X							0	ug/L	kg/day	3220	62.56	1
Cobalt, Total (7440-48-4)		X							0	ug/L	kg/day	2.06	0.04	1
Iron, Total (7439-89-6)		X							0	mg/L	kg/day	0.33	6.41	1
Magnesium, Total (7439-95-4)		X							0	mg/L	kg/day	800	15,543	1
Molybdenum, Total (7439-98-7)		X							0	ug/L	kg/day	8.38	0.16	1
Manganese, Total (7439-96-5)		X							0	ug/L	kg/day	86.1	1.67	1
Tin, Total (7440-31-5)		X							0	ug/L	kg/day	ND	ND	1
Titanium, Total (7440-32-6)		X							0	ug/L	kg/day	149	2.89	1

* Flow rate for intake is either total for all Cook Inlet used at facility or total of fresh water uses excluding drilling which varies widely and therefore cannot be predicted reliably. This is not outfall-specific.

** The Long Term Average mass was calculated from the facility-specific flowrates on the attached Discharge Flow Diagrams.

*** Conversions used for mass (kg/day) are as follows: 3.78 L= 1 gal; 1 g = 1000 mg; 1000g = 1 kg

ND - non-detect

NA - not applicable

NTBA - not tested - believed absent

EPA_COOK_INKPR_000357

Part C.

EPA ID. No.	110007920535	Outfall No.	009

1. Pollutant	2. Mark 'X' a. Testing Required	b. Believed Present	c. Believed Absent	3. Effluent a. Maximum Daily Value (1) Conc.	(2) mass	b. Maximum 30-Day Value (1) Conc.	(2) mass	c. Long Term Average Value (1) Conc.	(2) mass	d. No of Analyses	4. Units a. Conc.	b. mass	5. Intake a. Long Term Average Value (1) Conc.	(2) mass	b. No of Analyses
Metals, Cyanide, and Total Phenols															1
Antimony, Total (7440-36-0)			X							0	ug/L	kg/day	1.97	0.04	1
Arsenic, Total (7440-38-2)			X							0	ug/L	kg/day	60.5	1.18	1
Beryllium, Total (7440-41-7)			X							0	ug/L	kg/day	ND	ND	1
Cadmium, Total (7440-43-9)			X							0	ug/L	kg/day	ND	ND	1
Chromium, Total (7440-47-3)			X							0	ug/L	kg/day	10.3	0.20	1
Copper, Total (7440-50-8)			X							0	ug/L	kg/day	12.8	0.25	1
Lead, Total (7439-92-1)			X							0	ug/L	kg/day	1.71	0.03	1
Mercury, Total (7439-97-6)			X							0	ug/L	kg/day	0.0896	0.002	1
Nickel, Total (7440-02-0)			X							0	ug/L	kg/day	16.7	0.32	1
Selenium, Total (7782-49-2)			X							0	ug/L	kg/day	175	3.40	1
Silver, Total (7440-22-4)			X							0	ug/L	kg/day	ND	ND	1
Thallium, Total (7440-28-0)			X							0	ug/L	kg/day	ND	ND	1
Zinc, Total (7440-66-6)			X							0	ug/L	kg/day	11.7	0.23	1
Cyanide, Total (57-12-5)			X							0	mg/L	kg/day	ND	ND	1
Phenols, Total			X							0	mg/L	kg/day	ND	ND	1
Dioxin															
2,3,7,8 - Tetra-chlorodibenzo-P-Dioxin (1764-01-6)			X							0	pg/L	NA	ND	ND	1
Volatile Compounds															
Acrolein (107-02-8)			X							0	ug/L	kg/day	ND	ND	1
Acrylonitrile (107-13-1)			X							0	ug/L	kg/day	ND	ND	1
Benzene (71-43-2)			X							0	ug/L	kg/day	ND	ND	1
Bis(Chloromethyl) Ether (542-88-1)			X							0	ug/L	kg/day	Not Available		0
Bromoform (75-25-2)			X							0	ug/L	kg/day	ND	ND	1
Carbon Tetrachloride (56-23-5)			X							0	ug/L	kg/day	ND	ND	1
Chlorobenzene (108-90-7)			X							0	ug/L	kg/day	ND	ND	1
Chlorodibromomethane (124-48-1)			X							0	ug/L	kg/day	ND	ND	1
Chloroethane (75-00-3)			X							0	ug/L	kg/day	ND	ND	1
2-Chloroethylvinyl Ether (110-75-8)			X							0	ug/L	kg/day	ND	ND	1
Chloroform (67-66-3)			X							0	ug/L	kg/day	ND	ND	1
Dichlorobromomethane (75-27-4)			X							0	ug/L	kg/day	ND	ND	1
Dichlorodifluoromethane (75-71-8)			X							0	ug/L	kg/day	ND	ND	1

NTBA — Not Compulsory

EPA_COOK_INKPR_000358

Part C.

EPA ID. No. 110007920535 | Outfall No. 009

1. Pollutant	2. Mark 'X' a. Testing Required	b. Believed Present	c. Believed Absent	3. Effluent a. Maximum Daily Value (1) Conc.	(2) mass	b. Maximum 30-Day Value (1) Conc.	(2) mass	c. Long Term Average Value (1) Conc.	(2) mass	d. No of Analyses	4. Units a. Conc.	b. mass	5. Intake a. Long Term Average Value (1) Conc.	(2) mass	b. No of Analyses
1,1-Dichloroethane (75-34-3)			X							0	ug/L	kg/day	ND	ND	1
1,2-Dichloroethane (107-06-2)			X							0	ug/L	kg/day	ND	ND	1
1,1-Dichloroethylene (75-35-4)			X							0	ug/L	kg/day	ND	ND	1
1,2-Dichloropropane (78-87-5)			X	NTBA		Not Compulsory		Not Compulsory		0	ug/L	kg/day	ND	ND	1
1,3-Dichloropropylene (542-75-6)			X							0	ug/L	kg/day	Not Available		0
Ethylbenzene (100-41-4)			X							0	ug/L	kg/day	ND	ND	1
Methyl Bromide (74-83-9)			X							0	ug/L	kg/day	ND	ND	1
Methyl Chloride (74-87-3)			X							0	ug/L	kg/day	ND	ND	1
Methylene Chloride (75-09-2)			X							0	ug/L	kg/day	ND	ND	1
1,1,2,2-Tetrachloroethane (79-34-5)			X							0	ug/L	kg/day	ND	ND	1
Tetrachloroethylene (127-18-4)			X							0	ug/L	kg/day	ND	ND	1
Toluene (108-88-3)			X	NTBA						0	ug/L	kg/day	ND	ND	1
1,2-Trans-Dichloroethylene (156-60-5)			X							0	ug/L	kg/day	ND	ND	1
1,1,1-Trichloroethane (71-55-6)			X							0	ug/L	kg/day	ND	ND	1
1,1,2-Trichloroethane (79-00-5)			X							0	ug/L	kg/day	ND	ND	1
Trichloroethylene (79-01-6)			X			Not Compulsory		Not Compulsory		0	ug/L	kg/day	ND	ND	1
Trichlorofluoromethane (75-69-4)			X							0	ug/L	kg/day	ND	ND	1
Vinyl Chloride (75-01-4)			X							0	ug/L	kg/day	ND	ND	1
				NTBA											
Acid Compounds															
2-Chlorophenol (95-57-8)			X							0	ug/L	kg/day	ND	ND	1
2,4-Dichlorophenol (120-83-2)			X							0	ug/L	kg/day	ND	ND	1
2,4-Dimethylephenol (105-67-9)			X							0	ug/L	kg/day	ND	ND	1

EPA_COOK_INKPR_000359

Part C.

EPA ID. No. 110007920535

Outfall No. 009

1. Pollutant	2. Mark 'X' a. Testing Required	b. Believed Present	c. Believed Absent	3. Effluent a. Maximum Daily Value (1) Conc.	(2) mass	b. Maximum 30-Day Value (1) Conc.	(2) mass	c. Long Term Average Value (1) Conc.	(2) mass	d. No of Analyses	4. Units a. Conc.	b. mass	5. Intake a. Long Term Average Value (1) Conc.	(2) mass	b. No of Analyses
4,6-Dinitro-O-Cresol (534-52-1)			X							0	ug/L	kg/day	ND	ND	1
2,4-Dinitrophenol (51-28-5)			X							0	ug/L	kg/day	ND	ND	1
2-Nitrophenol (88-75-5)			X							0	ug/L	kg/day	ND	ND	1
4-Nitrophenol (100-02-7)			X							0	ug/L	kg/day	ND	ND	1
P-Chloro-M-Cresol (59-50-7)			X							0	ug/L	kg/day	ND	ND	1
Pentachlorophenol (87-86-5)			X							0	ug/L	kg/day	ND	ND	1
Phenol (108-95-2)			X							0	ug/L	kg/day	ND	ND	1
2,4,6-Trichlorophenol (88-06-2)			X							0	ug/L	kg/day	ND	ND	1
Base/Neutral Compounds															
Acenaphthene (83-32-9)			X							0	ug/L	kg/day	ND	ND	1
Acenaphtylene (208-96-8)			X							0	ug/L	kg/day	ND	ND	1
Anthracene (120-12-7)			X							0	ug/L	kg/day	ND	ND	1
Benzidine (92-87-5)			X							0	ug/L	kg/day	ND	ND	1
Benzo (a) Anthracene (56-55-3)			X							0	ug/L	kg/day	ND	ND	1
Benzo (a) Pyrene (50-32-8)			X							0	ug/L	kg/day	ND	ND	1
3,4-Benzo-fluoranthene (205-99-2)			X							0	ug/L	kg/day	ND	ND	1
Benzo (ghi) Perylene (191-24-2)			X							0	ug/L	kg/day	ND	ND	1
Benzo (k) Fluoranthene (207-08-9)			X							0	ug/L	kg/day	ND	ND	1
Bis (2-Chloroethoxy) Methane (111-91-1)			X							0	ug/L	kg/day	ND	ND	1
Bis (2-Chloroethyl) Ether (111-44-4)			X							0	ug/L	kg/day	ND	ND	1
Bis (2-Chloroisopropyl) Ether (108-60-1)			X							0	ug/L	kg/day	ND	ND	1
Bis (2-Ethyl-hexyl) Phthalate (117-81-7)			X							0	ug/L	kg/day	ND	ND	1

NTBA

Not Compulsory

EPA_COOK_INKPR_000360

Part C.

EPA ID. No.	110007920535

Outfall No.	009

1. Pollutant	2. Mark 'X' a. Testing Required	b. Believed Present	c. Believed Absent	3. Effluent a. Maximum Daily Value (1) Conc.	(2) mass	b. Maximum 30-Day Value (1) Conc.	(2) mass	c. Long Term Average Value (1) Conc.	(2) mass	d. No of Analyses	4. Units a. Conc.	b. mass	5. Intake a. Long Term Average Value (1) Conc.	(2) mass	b. No of Analyses
4-Bromophenyl Phenyl (101-55-3)			X							0	ug/L	kg/day	ND	ND	1
Butyl Benzyl Phthalate (85-68-7)			X							0	ug/L	kg/day	ND	ND	1
2-Chloro-naphthalene (91-58-7)			X							0	ug/L	kg/day	ND	ND	1
4-Chlorophenyl Phenyl Ether (7005-72-3)			X			Not		Not		0	ug/L	kg/day	ND	ND	1
Chrysene (218-01-9)			X							0	ug/L	kg/day	ND	ND	1
Dibenzo (a,h) Anthracene (53-70-3)			X			Compulsory		Compulsory		0	ug/L	kg/day	ND	ND	1
1,2-Dichlorobenzene (95-50-1)			X							0	ug/L	kg/day	ND	ND	1
1,3-Dichlorobenzene (541-73-1)			X							0	ug/L	kg/day	ND	ND	1
1,4-Dichlorobenzene (106-46-7)			X	NTBA						0	ug/L	kg/day	ND	ND	1
3,3'-Dichlorobenzidine (91-94-1)			X							0	ug/L	kg/day	ND	ND	1
Diethyl Phthalate (84-66-2)			X							0	ug/L	kg/day	ND	ND	1
Dimethyl Phthalate (131-11-3)			X							0	ug/L	kg/day	ND	ND	1
Di-N-Butyl Phthalate (84-74-2)			X							0	ug/L	kg/day	1.2	0.02	1
2,4-Dinitrotoluene (121-14-2)			X							0	ug/L	kg/day	ND	ND	1
2,6-Dinitrotoluene (606-20-2)			X			Not		Not		0	ug/L	kg/day	ND	ND	1
Di-N-Octyl Phthalate (117-84-0)			X							0	ug/L	kg/day	ND	ND	1
1,2-Diphenyl-hydrazine (as Azo-benzene) (122-66-7)			X	NTBA		Compulsory		Compulsory		0	ug/L	kg/day	ND	ND	1
Fluoranthene (206-44-0)			X							0	ug/L	kg/day	ND	ND	1
Fluorene (86-73-7)			X							0	ug/L	kg/day	ND	ND	1
Hexachlorobenzene (118-74-1)			X							0	ug/L	kg/day	ND	ND	1
Hexachlorobutadiene (87-68-3)			X							0	ug/L	kg/day	ND	ND	1
Hexachlorocyclopentadiene (77-47-4)			X							0	ug/L	kg/day	ND	ND	1
Hexachloroethane (67-72-1)			X							0	ug/L	kg/day	ND	ND	1

EPA_COOK_INKPR_000361

Part C.

EPA ID. No. 110007920535 | Outfall No. 009

1. Pollutant	2. Mark 'X' a. Testing Required	b. Believed Present	c. Believed Absent	3. Effluent a. Maximum Daily Value (1) Conc.	(2) mass	b. Maximum 30-Day Value (1) Conc.	(2) mass	c. Long Term Average Value (1) Conc.	(2) mass	d. No of Analyses	4. Units a. Conc.	b. mass	5. Intake a. Long Term Average Value (1) Conc.	(2) mass	b. No of Analyses
Indeno (1,2,3-cd) Pyrene (193-39-5)			X							0	ug/L	kg/day	ND	ND	1
Isophorone (78-59-1)			X							0	ug/L	kg/day	ND	ND	1
Naphthalene (91-20-3)			X							0	ug/L	kg/day	ND	ND	1
Nitrobenzene (98-95-3)			X							0	ug/L	kg/day	ND	ND	1
N-Nitro-sodimethylamine (62-75-9)			X							0	ug/L	kg/day	ND	ND	1
N-Nitrosodi-N-Propylamine (621-64-7)			X							0	ug/L	kg/day	ND	ND	1
N-Nitrosodiphenylamine (86-30-6)			X							0	ug/L	kg/day	ND	ND	1
Phenanthrene (85-01-8)			X							0	ug/L	kg/day	ND	ND	1
Pyrene (129-00-0)			X							0	ug/L	kg/day	ND	ND	1
1,2,4-Trichlorobenzene (120-82-1)			X							0	ug/L	kg/day	ND	ND	1
Pesticides															
Aldrin (309-00-2)			X							0	ug/L	kg/day	ND	ND	1
α-BHC (319-84-6)			X							0	ug/L	kg/day	ND	ND	1
β-BHC (319-85-7)			X							0	ug/L	kg/day	ND	ND	1
γ-BHC (58-89-9)			X							0	ug/L	kg/day	ND	ND	1
δ-BHC (319-86-8)			X							0	ug/L	kg/day	ND	ND	1
Chlordane (57-74-9)			X							0	ug/L	kg/day	ND	ND	1
4,4'-DDT (50-29-3)			X							0	ug/L	kg/day	ND	ND	1
4,4'-DDE (72-55-9)			X							0	ug/L	kg/day	ND	ND	1
4,4'-DDD (72-54-8)			X							0	ug/L	kg/day	ND	ND	1
Dieldrin (60-57-1)			X							0	ug/L	kg/day	ND	ND	1
α-Endosulfan (115-29-7)			X							0	ug/L	kg/day	ND	ND	1
β-Endosulfan (115-29-7)			X							0	ug/L	kg/day	ND	ND	1
Endosulfan Sulfate (1031-07-8)			X							0	ug/L	kg/day	ND	ND	1

NTBA — Not Compulsory

Part C.

EPA ID. No.	110007920535

Outfall No.	009

1. Pollutant	2. Mark 'X' a. Testing Required	b. Believed Present	c. Believed Absent	3. Effluent a. Maximum Daily Value (1) Conc.	(2) mass	b. Maximum 30-Day Value (1) Conc	(2) mass	c. Long Term Average Value (1) Conc.	(2) mass	d. No of Analyses	4. Units a. Conc.	b. mass	5. Intake a. Long Term Average Value (1) Conc	(2) mass	b. No of Analyses
Endrin (72-20-8)			X	NTBA		Not Compulsory		Not Compulsory		0	ug/L	kg/day	ND	ND	1
Endrin Aldehyde (7421-93-4)			X							0	ug/L	kg/day	ND	ND	1
Heptachlor (76-44-8)			X							0	ug/L	kg/day	ND	ND	1
Heptachlor Epoxide (1024-57-3)			X							0	ug/L	kg/day	ND	ND	1
PCB-1242 (53469-21-9)			X							0	ug/L	kg/day	ND	ND	1
PCB-1254 (11097-69-1)			X							0	ug/L	kg/day	ND	ND	1
PCB-1221 (11104-28-2)			X							0	ug/L	kg/day	ND	ND	1
PCB-1232 (11141-16-5)			X							0	ug/L	kg/day	ND	ND	1
PCB-1248 (12672-29-6)			X							0	ug/L	kg/day	ND	ND	1
PCB-1260 (11096-82-5)			X							0	ug/L	kg/day	ND	ND	1
PCB-1016 (12674-11-2)			X							0	ug/L	kg/day	ND	ND	1
Toxaphene (8001-35-2)			X							0	ug/L	kg/day	ND	ND	1

* Flow rate for intake is either total for all Cook Inlet used at facility or total of fresh water uses excluding drilling which varies widely and therefore cannot be predicted reliably. This is not outfall-specific.
** The Long Term Average mass was calculated from the facility-specific flowrates on the attached Discharge Flow Diagrams.
*** Conversions used for mass (kg/day) are as follows: 3.78 L= 1 gal; 1 g = 1000 mg; 1000g = 1 kg
ND - non-detect
NA - not applicable
NTBA - not tested - believed absent

EPA_COOK_INKPR_000363

V. INTAKE AND EFFLUENT CHARACTERISTICS

EPA ID. No	110007920535
Outfall No.	012

Part A. Provide the results of at least one analysis for every pollutant in this table. Complete one table for each outfall.

1. Pollutant	2. Effluent							3. Units (specify if blank)		4. Intake (optional) **		
	a. Maximum Daily Value		b. Max. 30-Day Value (if available)		c. Long Term Avg. Value (if available)		d. No of Analyses			a. Long Term Average Value		b. No of Analysis
	(1) Conc.	(2) mass	(1) Conc.	(2) mass	(1) Conc.	(2) mass		a.Conc.	b. mass	(1) Conc. (mg/L)	(2) mass (kg/day)	
a. Biochemical Oxygen Demand (BOD)	Not Available		Not Compulsory		Not Compulsory		0	mg/L	kg/day	ND	ND	1
b. Chemical Oxygen Demand (COD)							0	mg/L	kg/day	ND	ND	1
c. Total Organic Carbon (TOC)							0	mg/L	kg/day	ND	ND	1
d. Total Suspended Solids (TSS)							0	mg/L	kg/day	5.30	0.042	1
e. Ammonia (as N)							0	mg/L	kg/day	0.55	0.004	1
f. Flow	2100 GPD						NA	GPD		2,100	GPD	not applicable
g. Temperature (winter)	Not Available						0	°C		not available		not available
h. Temperature (summer)							0	°C		not available		not available
i. pH							0	Std Units				

* Flow rate for intake is either total for all Cook Inlet used at facility or total of fresh water uses excluding drilling which varies widely and therefore cannot be predicted reliably. This is not outfall-specific.
** The Long Term Average mass was calculated from the facility-specific flowrates on the attached Discharge Flow Diagrams.
*** Conversions used for mass (kg/day) are as follows: 3.78 L= 1 gal; 1 g = 1000 mg; 1000g = 1 kg
ND - non-detect
NA - not applicable
NTBA - not tested - believed absent

EPA_COOK_INKPR_000364

NPDES Permit AKG 285000 Renewal

EPA ID. No.	110007920535	Outfall No.	012

Part B. Mark "X" in column 2-a for each pollutant you know or have reason to believe is present. Mark "X" in column 2-b for each pollutant you believe to be absent.

If you mark column 2a for any pollutant which is limited either directly, or indirectly but expressly, in an effluent limitations guideline, you must provide the results of at least one analysis for that pollutant.

For other pollutants for which you mark column 2a, you must provide quantitative data or an explanation of their presence in your discharge. Complete one table for each outfall. See the instructions for additional details and requirements.

1. Pollutant	2. Mark "X"		3. Effluent							4. Units		5. Intake **		
	a. Believed Present	b. Believed Absent	a. Maximum Daily		b. Maximum 30-Day		c. Long Term		d. No of Analyses			a. Long Term		b. No of Analyses
			(1) Conc.	(2) mass	(1) Conc.	(2) mass	(1) Conc.	(2) mass		(1) Conc.	b. mass	(1) Conc.	(2) mass	
Bromide		X	NTBA		Not Compulsory		Not Compulsory		0	mg/L	kg/day	ND	ND	1
Chlorine, Total Residual		X							0	mg/L				0
Color		X							0	ug/L	kg/day	ND	ND	1
Fecal Coliform		X							0	not available				0
Fluoride (16984-48-8)		X							0	mg/L	kg/day	ND	ND	1
Nitrate-Nitrite (as N)		X							0	mg/L	kg/day	ND	ND	1
Nitrogen, Total Organic (as N)		X							0	mg/L	kg/day	Not Available		0
Oil and Grease		X							0	mg/L	kg/day	ND	ND	1
Phosphorus (as P), Total (7723-14-0)		X							0	mg/L	kg/day	0.0600	0.00048	1
Alpha, Total		X							0	analyses in progress				1
Beta, Total		X							0					1
Radium, Total		X							0					1
Radium 226, Total		X							0					1
Sulfate (as SO4) (14808-79-8)		X							0	mg/L	kg/day	6	0.048	1
Sulfide (as S)		X							0	mg/L	kg/day	Not Available		1
Sulfite (as SO3) (14265-45-3)		X							0	mg/L	kg/day			1
Surfactants		X							0	mg/L	kg/day	0.13	0.00103	1
Aluminum, Total (7429-90-5)		X							0	ug/L	kg/day	54.70	0.00043	1
Barium, Total (7440-39-3)		X							0	ug/L	kg/day	43.5	0.00035	1
Boron, Total (7440-42-8)		X							0	ug/L	kg/day	19.7	0.00016	1
Cobalt, Total (7440-48-4)		X							0	ug/L	kg/day	ND	ND	1
Iron, Total (7439-89-6)		X							0	mg/L	kg/day	0.26	0.00206	1
Magnesium, Total (7439-95-4)		X							0	mg/L	kg/day	11	0.087	1
Molybdenum, Total (7439-98-7)		X							0	ug/L	kg/day	0.447	0.000004	1
Manganese, Total (7439-96-5)		X							0	ug/L	kg/day	688	0.00546	1
Tin, Total (7440-31-5)		X							0	ug/L	kg/day	ND	ND	1
Titanium, Total (7440-32-6)		X							0	ug/L	kg/day	5.81	0.00005	1

* Flow rate for intake is either total for all Cook Inlet used at facility or total of fresh water uses excluding drilling which varies widely and therefore cannot be predicted reliably. This is not outfall-specific.
** The Long Term Average mass was calculated from the facility-specific flowrates on the attached Discharge Flow Diagrams.
*** Conversions used for mass (kg/day) are as follows: 3.78 L= 1 gal; 1 g = 1000 mg; 1000g = 1 kg
ND - non-detect
NA - not applicable
NTBA - not tested - believed absent

EPA_COOK_INKPR_000365

Part C.

EPA ID. No. 110007920535

Outfall No. 012

1. Pollutant	2. Mark 'X' a. Testing Required	b. Believed Present	c. Believed Absent	3. Effluent a. Maximum Daily Value (1) Conc.	(2) mass	b. Maximum 30-Day Value (1) Conc.	(2) mass	c. Long Term Average Value (1) Conc.	(2) mass	d. No of Analyses	4. Units a. Conc.	b. mass	5. Intake a. Long Term Average Value (1) Conc.	(2) mass	b. No of Analyses
Metals, Cyanide, and Total Phenols															1
Antimony, Total (7440-36-0)			X							0	ug/L	kg/day	ND	ND	1
Arsenic, Total (7440-38-2)			X							0	ug/L	kg/day	8.27	0.0001	1
Beryllium, Total (7440-41-7)			X							0	ug/L	kg/day	ND	ND	1
Cadmium, Total (7440-43-9)			X							0	ug/L	kg/day	ND	ND	1
Chromium, Total (7440-47-3)			X							0	ug/L	kg/day	0.165	0.000001	1
Copper, Total (7440-50-8)			X							0	ug/L	kg/day	0.260	0.000002	1
Lead, Total (7439-92-1)			X							0	ug/L	kg/day	ND	ND	1
Mercury, Total (7439-97-6)			X							0	ug/L	kg/day	ND	ND	1
Nickel, Total (7440-02-0)			X							0	ug/L	kg/day	1.84	0.00001	1
Selenium, Total (7782-49-2)			X							0	ug/L	kg/day	0.555	0.000004	1
Silver, Total (7440-22-4)			X							0	ug/L	kg/day	ND	ND	1
Thallium, Total (7440-28-0)			X							0	ug/L	kg/day	ND	ND	1
Zinc, Total (7440-66-6)			X							0	ug/L	kg/day	14.3	0.0001	1
Cyanide, Total (57-12-5)			X							0	mg/L	kg/day	ND	ND	1
Phenols, Total			X							0	mg/L	kg/day	0.055	0.0004	1
Dioxin															
2,3,7,8 - Tetra-chlorodibenzo-P-Dioxin (1764-01-6)			X							0	pg/L	NA	ND	ND	1
Volatile Compounds															
Acrolein (107-02-8)			X							0	ug/L	kg/day	ND	ND	1
Acrylonitrile (107-13-1)			X							0	ug/L	kg/day	ND	ND	1
Benzene (71-43-2)			X							0	ug/L	kg/day	ND	ND	1
Bis(Chloromethyl) Ether (542-88-1)			X							0	ug/L	kg/day	Not Available		0
Bromoform (75-25-2)			X							0	ug/L	kg/day	ND	ND	1
Carbon Tetrachloride (56-23-5)			X							0	ug/L	kg/day	ND	ND	1
Chlorobenzene (108-90-7)			X							0	ug/L	kg/day	ND	ND	1
Chlorodibromomethane (124-48-1)			X							0	ug/L	kg/day	ND	ND	1
Chloroethane (75-00-3)			X							0	ug/L	kg/day	ND	ND	1
2-Chloroethylvinyl Ether (110-75-8)			X							0	ug/L	kg/day	ND	ND	1
Chloroform (67-66-3)			X							0	ug/L	kg/day	ND	ND	1
Dichlorobromomethane (75-27-4)			X							0	ug/L	kg/day	ND	ND	1
Dichlorodifluoromethane (75-71-8)			X							0	ug/L	kg/day	ND	ND	1

NTBA — Not Compulsory

EPA_COOK_INKPR_000366

Part C.

EPA ID. No. 110007920535

Outfall No. 012

1. Pollutant	2. Mark "X" a. Testing Required	b. Believed Present	c. Believed Absent	3. Effluent a. Maximum Daily Value (1) Conc.	(2) mass	b. Maximum 30-Day Value (1) Conc.	(2) mass	c. Long Term Average Value (1) Conc.	(2) mass	d. No of Analyses	4. Units a. Conc.	b. mass	5. Intake a. Long Term Average Value (1) Conc.	(2) mass	b. No of Analyses
1,1-Dichloroethane (75-34-3)			X							0	ug/L	kg/day	ND	ND	1
1,2-Dichloroethane (107-06-2)			X							0	ug/L	kg/day	ND	ND	1
1,1-Dichloroethylene (75-35-4)			X							0	ug/L	kg/day	ND	ND	1
1,2-Dichloropropane (78-87-5)			X							0	ug/L	kg/day	ND	ND	1
1,3-Dichloropropylene (542-75-6)			X							0	ug/L	kg/day	Not Available		0
Ethylbenzene (100-41-4)			X							0	ug/L	kg/day	ND	ND	1
Methyl Bromide (74-83-9)			X							0	ug/L	kg/day	ND	ND	1
Methyl Chloride (74-87-3)			X							0	ug/L	kg/day	ND	ND	1
Methylene Chloride (75-09-2)			X							0	ug/L	kg/day	ND	ND	1
1,1,2,2-Tetrachloroethane (79-34-5)			X							0	ug/L	kg/day	ND	ND	1
Tetrachloroethylene (127-18-4)			X							0	ug/L	kg/day	ND	ND	1
Toluene (108-88-3)			X							0	ug/L	kg/day	ND	ND	1
1,2-Trans-Dichloroethylene (156-60-5)			X							0	ug/L	kg/day	ND	ND	1
1,1,1-Trichloroethane (71-55-6)			X							0	ug/L	kg/day	ND	ND	1
1,1,2-Trichloroethane (79-00-5)			X							0	ug/L	kg/day	ND	ND	1
Trichloroethylene (79-01-6)			X							0	ug/L	kg/day	ND	ND	1
Trichlorofluoromethane (75-69-4)			X							0	ug/L	kg/day	ND	ND	1
Vinyl Chloride (75-01-4)			X							0	ug/L	kg/day	ND	ND	1
Acid Compounds															
2-Chlorophenol (95-57-8)			X							0	ug/L	kg/day	ND	ND	1
2,4-Dichlorophenol (120-83-2)			X							0	ug/L	kg/day	ND	ND	1
2,4-Dimethylephenol (105-67-9)			X							0	ug/L	kg/day	ND	ND	1

NTBA

Not Compulsory

NTBA

Not Compulsory

NTBA

Not Compulsory

NTBA

Not Compulsory

EPA_COOK_INKPR_000367

Part C.

EPA ID. No. 110007920535

Outfall No. 012

1. Pollutant	2. Mark 'X' a. Testing Required	b. Believed Present	c. Believed Absent	3. Effluent a. Maximum Daily Value (1) Conc.	(2) mass	b. Maximum 30-Day Value (1) Conc.	(2) mass	c. Long Term Average Value (1) Conc.	(2) mass	d. No of Analyses	4. Units a. Conc.	b. mass	5. Intake a. Long Term Average Value (1) Conc.	(2) mass	b. No of Analyses
4,6-Dinitro-O-Cresol (534-52-1)			X							0	ug/L	kg/day	ND	ND	1
2,4-Dinitrophenol (51-28-5)			X							0	ug/L	kg/day	ND	ND	1
2-Nitrophenol (88-75-5)			X							0	ug/L	kg/day	ND	ND	1
4-Nitrophenol (100-02-7)			X							0	ug/L	kg/day	ND	ND	1
P-Chloro-M-Cresol (59-50-7)			X							0	ug/L	kg/day	ND	ND	1
Pentachlorophenol (87-86-5)			X							0	ug/L	kg/day	ND	ND	1
Phenol (108-95-2)			X							0	ug/L	kg/day	ND	ND	1
2,4,6-Trichlorophenol (88-06-2)			X							0	ug/L	kg/day	ND	ND	1
Base/Neutral Compounds															
Acenaphthene (83-32-9)			X							0	ug/L	kg/day	ND	ND	1
Acenaphtylene (208-96-8)			X							0	ug/L	kg/day	ND	ND	1
Anthracene (120-12-7)			X							0	ug/L	kg/day	ND	ND	1
Benzidine (92-87-5)			X							0	ug/L	kg/day	ND	ND	1
Benzo (a) Anthracene (56-55-3)			X							0	ug/L	kg/day	ND	ND	1
Benzo (a) Pyrene (50-32-8)			X							0	ug/L	kg/day	ND	ND	1
3,4-Benzo-fluoranthene (205-99-2)			X							0	ug/L	kg/day	ND	ND	1
Benzo (ghi) Perylene (191-24-2)			X							0	ug/L	kg/day	ND	ND	1
Benzo (k) Fluoranthene (207-08-9)			X							0	ug/L	kg/day	ND	ND	1
Bis (2-Chloroethoxy) Methane (111-91-1)			X							0	ug/L	kg/day	ND	ND	1
Bis (2-Chloroethyl) Ether (111-44-4)			X							0	ug/L	kg/day	ND	ND	1
Bis (2-Chloroisopropyl) Ether (108-60-1)			X							0	ug/L	kg/day	ND	ND	1
Bis (2-Ethyl-hexyl) Phthalate (117-81-7)			X							0	ug/L	kg/day	ND	ND	1
4-Bromophenyl Phenyl (101-55-3)			X							0	ug/L	kg/day	ND	ND	1

NTBA

Not Compulsory

EPA_COOK_INKPR_000368

Part C.

EPA ID. No. 110007920535

Outfall No. 012

1. Pollutant	2. Mark 'X' a. Testing Required	b. Believed Present	c. Believed Absent	3. Effluent a. Maximum Daily Value (1) Conc.	(2) mass	b. Maximum 30-Day Value (1) Conc.	(2) mass	c. Long Term Average Value (1) Conc.	(2) mass	d. No of Analyses	4. Units a. Conc.	b. mass	5. Intake a. Long Term Average Value (1) Conc.	(2) mass	b. No of Analyses
Butyl Benzyl Phthalate (85-68-7)			X							0	ug/L	kg/day	ND	ND	1
2-Chloro-naphthalene (91-58-7)			X							0	ug/L	kg/day	ND	ND	1
4-Chlorophenyl Phenyl Ether (7005-72-3)			X							0	ug/L	kg/day	ND	ND	1
Chrysene (218-01-9)			X							0	ug/L	kg/day	ND	ND	1
Dibenzo (a,h) Anthracene (53-70-3)			X							0	ug/L	kg/day	ND	ND	1
1,2-Dichlorobenzene (95-50-1)			X							0	ug/L	kg/day	ND	ND	1
1,3-Dichlorobenzene (541-73-1)			X							0	ug/L	kg/day	ND	ND	1
1,4-Dichlorobenzene (106-46-7)			X							0	ug/L	kg/day	ND	ND	1
3,3'-Dichlorobenzidine (91-94-1)			X							0	ug/L	kg/day	ND	ND	1
Diethyl Phthalate (84-66-2)			X							0	ug/L	kg/day	ND	ND	1
Dimethyl Phthalate (131-11-3)			X							0	ug/L	kg/day	ND	ND	1
Di-N-Butyl Phthalate (84-74-2)			X							0	ug/L	kg/day	1.8	0.00001	1
2,4-Dinitrotoluene (121-14-2)			X							0	ug/L	kg/day	ND	ND	1
2,6-Dinitrotoluene (606-20-2)			X							0	ug/L	kg/day	ND	ND	1
Di-N-Octyl Phthalate (117-84-0)			X							0	ug/L	kg/day	ND	ND	1
1,2-Diphenyl-hydrazine (as Azo-benzene) (122-66-7)			X							0	ug/L	kg/day	ND	ND	1
Fluoranthene (206-44-0)			X							0	ug/L	kg/day	ND	ND	1
Fluorene (86-73-7)			X							0	ug/L	kg/day	ND	ND	1
Hexachlorobenzene (118-74-1)			X							0	ug/L	kg/day	ND	ND	1
Hexachlorobutadiene (87-68-3)			X							0	ug/L	kg/day	ND	ND	1
Hexachlorocyclopentadiene (77-47-4)			X							0	ug/L	kg/day	ND	ND	1
Hexachloroethane (67-72-1)			X							0	ug/L	kg/day	ND	ND	1

NTBA

Not Compulsory

NTBA

Not Compulsory

EPA_COOK_INKPR_000369

Part C.

EPA ID. No. 110007920535

Outfall No. 012

1. Pollutant	2. Mark "X" a. Testing Required	b. Believed Present	c. Believed Absent	3. Effluent a. Maximum Daily Value (1) Conc.	(2) mass	b. Maximum 30-Day Value (1) Conc.	(2) mass	c. Long Term Average Value (1) Conc.	(2) mass	d. No of Analyses	4. Units a. Conc.	b. mass	5. Intake a. Long Term Average Value (1) Conc.	(2) mass	b. No of Analyses
Indeno (1,2,3-cd) Pyrene (193-39-5)			X							0	ug/L	kg/day	ND	ND	1
Isophorone (78-59-1)			X							0	ug/L	kg/day	ND	ND	1
Naphthalene (91-20-3)			X							0	ug/L	kg/day	ND	ND	1
Nitrobenzene (98-95-3)			X							0	ug/L	kg/day	ND	ND	1
N-Nitro-sodimethylamine (62-75-9)			X							0	ug/L	kg/day	ND	ND	1
N-Nitrosodi-N-Propylamine (621-64-7)			X							0	ug/L	kg/day	ND	ND	1
N-Nitrosodiphenylamine (86-30-6)			X							0	ug/L	kg/day	ND	ND	1
Phenanthrene (85-01-8)			X							0	ug/L	kg/day	ND	ND	1
Pyrene (129-00-0)			X							0	ug/L	kg/day	ND	ND	1
1,2,4-Trichlorobenzene (120-82-1)			X							0	ug/L	kg/day	ND	ND	1
Pesticides															
Aldrin (309-00-2)			X							0	ug/L	kg/day	ND	ND	1
α-BHC (319-84-6)			X							0	ug/L	kg/day	ND	ND	1
β-BHC (319-85-7)			X							0	ug/L	kg/day	ND	ND	1
γ-BHC (58-89-9)			X							0	ug/L	kg/day	ND	ND	1
δ-BHC (319-86-8)			X							0	ug/L	kg/day	ND	ND	1
Chlordane (57-74-9)			X							0	ug/L	kg/day	ND	ND	1
4,4'-DDT (50-29-3)			X							0	ug/L	kg/day	ND	ND	1
4,4'-DDE (72-55-9)			X							0	ug/L	kg/day	ND	ND	1
4,4'-DDD (72-54-8)			X							0	ug/L	kg/day	ND	ND	1
Dieldrin (60-57-1)			X							0	ug/L	kg/day	ND	ND	1
α-Endosulfan (115-29-7)			X							0	ug/L	kg/day	ND	ND	1
β-Endosulfan (115-29-7)			X							0	ug/L	kg/day	ND	ND	1

NTBA

Not Compulsory

Not Compulsory

EPA_COOK_INKPR_000370

Part C.

EPA ID. No.	110007920535

Outfall No.	012

1. Pollutant	2. Mark "X"			3. Effluent						4. Units		5. Intake		
	a. Testing Required	b. Believed Present	c. Believed Absent	a. Maximum Daily Value		b. Maximum 30-Day Value		c. Long Term Average Value		d. No of Analyses	a. Conc.	b. mass	a. Long Term Average Value		b. No of Analyses
				(1) Conc.	(2) mass	(1) Conc.	(2) mass	(1) Conc.	(2) mass				(1) Conc.	(2) mass	
Endosulfan Sulfate (1031-07-8)			X	NTBA		Not Compulsory		Not Compulsory		0	ug/L	kg/day	ND	ND	1
Endrin (72-20-8)			X							0	ug/L	kg/day	ND	ND	1
Endrin Aldehyde (7421-93-4)			X							0	ug/L	kg/day	ND	ND	1
Heptachlor (76-44-8)			X							0	ug/L	kg/day	ND	ND	1
Heptachlor Epoxide (1024-57-3)			X							0	ug/L	kg/day	ND	ND	1
PCB-1242 (53469-21-9)			X							0	ug/L	kg/day	ND	ND	1
PCB-1254 (11097-69-1)			X							0	ug/L	kg/day	ND	ND	1
PCB-1221 (11104-28-2)			X							0	ug/L	kg/day	ND	ND	1
PCB-1232 (11141-16-5)			X	NTBA						0	ug/L	kg/day	ND	ND	1
PCB-1248 (12672-29-6)			X							0	ug/L	kg/day	ND	ND	1
PCB-1260 (11096-82-5)			X							0	ug/L	kg/day	ND	ND	1
PCB-1016 (12674-11-2)			X							0	ug/L	kg/day	ND	ND	1
Toxaphene (8001-35-2)			X							0	ug/L	kg/day	ND	ND	1

* Flow rate for intake is either total for all Cook Inlet used at facility or total of fresh water uses excluding drilling which varies widely and therefore cannot be predicted reliably. This is not outfall-specific.
** The Long Term Average mass was calculated from the facility-specific flowrates on the attached Discharge Flow Diagrams.
*** Conversions used for mass (kg/day) are as follows: 3.78 L= 1 gal; 1 g = 1000 mg; 1000g = 1 kg
ND - non-detect
NA - not applicable
NTBA - not tested - believed absent

EPA_COOK_INKPR_000371

V. INTAKE AND EFFLUENT CHARACTERISTICS

EPA ID. No	110007920535
Outfall No.	013

Part A. Provide the results of at least one analysis for every pollutant in this table. Complete one table for each outfall.

1. Pollutant	2. Effluent							3. Units (specify if blank)		4. Intake (optional) **		
	a. Maximum Daily Value		b. Max. 30-Day Value (if available)		c. Long Term Avg. Value (if available)		d. No of Analyses			a. Long Term Average Value		b. No of Analysis
	(1) Conc.	(2) mass	(1) Conc.	(2) mass	(1) Conc.	(2) mass		a.Conc.	b. mass	(1) Conc. (mg/L)	(2) mass (kg/day)	
a. Biochemical Oxygen Demand (BOD)	Not Available		Not Compulsory		Not Compulsory		0	mg/L	kg/day	ND	ND	1
b. Chemical Oxygen Demand (COD)							0	mg/L	kg/day	ND	ND	1
c. Total Organic Carbon (TOC)							0	mg/L	kg/day	ND	ND	1
d. Total Suspended Solids (TSS)							0	mg/L	kg/day	5.30	0.042	1
e. Ammonia (as N)							0	mg/L	kg/day	0.55	0.004	1
f. Flow	no history/ not available						NA	GPD		2,100	GPD	not applicable
g. Temperature (winter)	Not Available						0	°C		not available		not available
h. Temperature (summer)							0	°C		not available		not available
i. pH							0	Std Units				

* Flow rate for intake is either total for all Cook Inlet used at facility or total of fresh water uses excluding drilling which varies widely and therefore cannot be predicted reliably. This is not outfall-specific.
** The Long Term Average mass was calculated from the facility-specific flowrates on the attached Discharge Flow Diagrams.
*** Conversions used for mass (kg/day) are as follows: 3.78 L= 1 gal; 1 g = 1000 mg; 1000g = 1 kg
ND - non-detect
NA - not applicable
NTBA - not tested - believed absent

EPA_COOK_INKPR_000372

EPA ID. No.	110007920535	Outfall No.	013

Part B. Mark "X" in column 2-a for each pollutant you know or have reason to believe is present. Mark "X" in column 2-b for each pollutant you believe to be absent.

If you mark column 2a for any pollutant which is limited either directly, or indirectly but expressly, in an effluent limitations guideline, you must provide the results of at least one analysis for that pollutant.

For other pollutants for which you mark column 2a, you must provide quantitative data or an explanation of their presence in your discharge. Complete one table for each outfall. See the instructions for additional details and requirements.

1. Pollutant	2. Mark 'X'		3. Effluent							4. Units		5. Intake **		
	a. Believed Present	b. Believed Absent	a. Maximum Daily		b. Maximum 30-Day		c. Long Term		d. No of Analyses			a. Long Term		b. No of Analyses
			(1) Conc.	(2) mass	(1) Conc.	(2) mass	(1) Conc.	(2) mass		(1) Conc.	b. mass	(1) Conc.	(2) mass	
Bromide		X	NTBA		Not Compulsory		Not Compulsory		0	mg/L	kg/day	ND	ND	1
Chlorine, Total Residual		X							0	mg/L				0
Color		X							0	ug/L	kg/day	ND	ND	1
Fecal Coliform		X							0	not available				0
Fluoride (16984-48-8)		X							0	mg/L	kg/day	ND	ND	1
Nitrate-Nitrite (as N)		X							0	mg/L	kg/day	ND	ND	1
Nitrogen, Total Organic (as N)		X							0	mg/L	kg/day	Not Available		0
Oil and Grease		X							0	mg/L	kg/day	ND	ND	1
Phosphorus (as P), Total (7723-14-0)		X							0	mg/L	kg/day	0.0600	0.00048	1
Alpha, Total		X							0	analyses in progress				1
Beta, Total		X							0					1
Radium, Total		X							0					1
Radium 226, Total		X							0					1
Sulfate (as SO4) (14808-79-8)		X							0	mg/L	kg/day	6	0.048	1
Sulfide (as S)		X							0	mg/L	kg/day	Not Available		1
Sulfite (as SO3) (14265-45-3)		X							0	mg/L	kg/day			1
Surfactants		X							0	mg/L	kg/day	0.13	0.00103	1
Aluminum, Total (7429-90-5)		X							0	ug/L	kg/day	54.70	0.00043	1
Barium, Total (7440-39-3)		X							0	ug/L	kg/day	43.5	0.00035	1
Boron, Total (7440-42-8)		X							0	ug/L	kg/day	19.7	0.00016	1
Cobalt, Total (7440-48-4)		X							0	ug/L	kg/day	ND	ND	1
Iron, Total (7439-89-6)		X							0	mg/L	kg/day	0.26	0.00206	1
Magnesium, Total (7439-95-4)		X							0	mg/L	kg/day	11	0.087	1
Molybdenum, Total (7439-98-7)		X							0	ug/L	kg/day	0.447	0.000004	1
Manganese, Total (7439-96-5)		X							0	ug/L	kg/day	688	0.00546	1
Tin, Total (7440-31-5)		X							0	ug/L	kg/day	ND	ND	1
Titanium, Total (7440-32-6)		X							0	ug/L	kg/day	5.81	0.00005	1

* Flow rate for intake is either total for all Cook Inlet used at facility or total of fresh water uses excluding drilling which varies widely and therefore cannot be predicted reliably. This is not outfall-specific.

** The Long Term Average mass was calculated from the facility-specific flowrates on the attached Discharge Flow Diagrams.

*** Conversions used for mass (kg/day) are as follows: 3.78 L= 1 gal; 1 g = 1000 mg; 1000g = 1 kg

ND - non-detect

NA - not applicable

NTBA - not tested - believed absent

EPA_COOK_INKPR_000373

Part C.

EPA ID. No. 110007920535

Outfall No. 013

1. Pollutant	2. Mark 'X' a. Testing Required	b. Believed Present	c. Believed Absent	3. Effluent a. Maximum Daily Value (1) Conc.	(2) mass	b. Maximum 30-Day Value (1) Conc.	(2) mass	c. Long Term Average Value (1) Conc.	(2) mass	d. No of Analyses	4. Units a. Conc.	b. mass	5. Intake a. Long Term Average Value (1) Conc.	(2) mass	b. No of Analyses
Metals, Cyanide, and Total Phenols															
Antimony, Total (7440-36-0)			X							0	ug/L	kg/day	ND	ND	1
Arsenic, Total (7440-38-2)			X							0	ug/L	kg/day	8.27	0.0001	1
Beryllium, Total (7440-41-7)			X							0	ug/L	kg/day	ND	ND	1
Cadmium, Total (7440-43-9)			X							0	ug/L	kg/day	ND	ND	1
Chromium, Total (7440-47-3)			X							0	ug/L	kg/day	0.165	0.000001	1
Copper, Total (7440-50-8)			X							0	ug/L	kg/day	0.260	0.000002	1
Lead, Total (7439-92-1)			X							0	ug/L	kg/day	ND	ND	1
Mercury, Total (7439-97-6)			X							0	ug/L	kg/day	ND	ND	1
Nickel, Total (7440-02-0)			X							0	ug/L	kg/day	1.84	0.00001	1
Selenium, Total (7782-49-2)			X							0	ug/L	kg/day	0.555	0.000004	1
Silver, Total (7440-22-4)			X							0	ug/L	kg/day	ND	ND	1
Thallium, Total (7440-28-0)			X							0	ug/L	kg/day	ND	ND	1
Zinc, Total (7440-66-6)			X							0	ug/L	kg/day	14.3	0.0001	1
Cyanide, Total (57-12-5)			X							0	mg/L	kg/day	ND	ND	1
Phenols, Total			X							0	mg/L	kg/day	0.055	0.0004	1
Dioxin										0					
2,3,7,8 - Tetra-chlorodibenzo-P-Dioxin (1764-01-6)			X							0	pg/L	NA	ND	ND	1
Volatile Compounds										0					
Acrolein (107-02-8)			X							0	ug/L	kg/day	ND	ND	1
Acrylonitrile (107-13-1)			X							0	ug/L	kg/day	ND	ND	1
Benzene (71-43-2)			X							0	ug/L	kg/day	ND	ND	1
Bis(Chloromethyl) Ether (542-88-1)			X							0	ug/L	kg/day	Not Available		0
Bromoform (75-25-2)			X							0	ug/L	kg/day	ND	ND	1
Carbon Tetrachloride (56-23-5)			X							0	ug/L	kg/day	ND	ND	1
Chlorobenzene (108-90-7)			X							0	ug/L	kg/day	ND	ND	1
Chlorodibromomethane (124-48-1)			X							0	ug/L	kg/day	ND	ND	1
Chloroethane (75-00-3)			X							0	ug/L	kg/day	ND	ND	1
2-Chloroethylvinyl Ether (110-75-8)			X							0	ug/L	kg/day	ND	ND	1
Chloroform (67-66-3)			X							0	ug/L	kg/day	ND	ND	1
Dichlorobromomethane (75-27-4)			X							0	ug/L	kg/day	ND	ND	1

NTBA — Not Compulsory

Part C.

EPA ID. No. 110007920535

Outfall No. 013

1. Pollutant	2. Mark "X" a. Testing Required	b. Believed Present	c. Believed Absent	3. Effluent a. Maximum Daily Value (1) Conc.	(2) mass	b. Maximum 30-Day Value (1) Conc.	(2) mass	c. Long Term Average Value (1) Conc.	(2) mass	d. No of Analyses	4. Units a. Conc.	b. mass	5. Intake a. Long Term Average Value (1) Conc.	(2) mass	b. No of Analyses
Dichlorodifluoromethane (75-71-8)			X							0	ug/L	kg/day	ND	ND	1
1,1-Dichloroethane (75-34-3)			X							0	ug/L	kg/day	ND	ND	1
1,2-Dichloroethane (107-06-2)			X							0	ug/L	kg/day	ND	ND	1
1,1-Dichloroethylene (75-35-4)			X							0	ug/L	kg/day	ND	ND	1
1,2-Dichloropropane (78-87-5)			X							0	ug/L	kg/day	ND	ND	1
1,3-Dichloropropylene (542-75-6)			X							0	ug/L	kg/day	Not Available		0
Ethylbenzene (100-41-4)			X							0	ug/L	kg/day	ND	ND	1
Methyl Bromide (74-83-9)			X							0	ug/L	kg/day	ND	ND	1
Methyl Chloride (74-87-3)			X							0	ug/L	kg/day	ND	ND	1
Methylene Chloride (75-09-2)			X							0	ug/L	kg/day	ND	ND	1
1,1,2,2-Tetrachloroethane (79-34-5)			X							0	ug/L	kg/day	ND	ND	1
Tetrachloroethylene (127-18-4)			X							0	ug/L	kg/day	ND	ND	1
Toluene (108-88-3)			X							0	ug/L	kg/day	ND	ND	1
1,2-Trans-Dichloroethylene (156-60-5)			X							0	ug/L	kg/day	ND	ND	1
1,1,1-Trichloroethane (71-55-6)			X							0	ug/L	kg/day	ND	ND	1
1,1,2-Trichloroethane (79-00-5)			X							0	ug/L	kg/day	ND	ND	1
Trichloroethylene (79-01-6)			X							0	ug/L	kg/day	ND	ND	1
Trichlorofluoromethane (75-69-4)			X							0	ug/L	kg/day	ND	ND	1
Vinyl Chloride (75-01-4)			X							0	ug/L	kg/day	ND	ND	1
Acid Compounds															
2-Chlorophenol (95-57-8)			X							0	ug/L	kg/day	ND	ND	1
2,4-Dichlorophenol (120-83-2)			X							0	ug/L	kg/day	ND	ND	1

NTBA Not Compulsory

NTBA Not Compulsory

NTBA Not Compulsory

EPA_COOK_INKPR_000375

Part C.

EPA ID. No.	110007920535

Outfall No.	013

1. Pollutant	2. Mark 'X' a. Testing Required	b. Believed Present	c. Believed Absent	3. Effluent a. Maximum Daily Value (1) Conc.	(2) mass	b. Maximum 30-Day Value (1) Conc.	(2) mass	c. Long Term Average Value (1) Conc.	(2) mass	d. No of Analyses	4. Units a. Conc.	b. mass	5. Intake a. Long Term Average Value (1) Conc.	(2) mass	b. No of Analyses
2,4-Dimethylephenol (105-67-9)			X	NTBA		Not Compulsory		Not Compulsory		0	ug/L	kg/day	ND	ND	1
4,6-Dinitro-O-Cresol (534-52-1)			X							0	ug/L	kg/day	ND	ND	1
2,4-Dinitrophenol (51-28-5)			X							0	ug/L	kg/day	ND	ND	1
2-Nitrophenol (88-75-5)			X							0	ug/L	kg/day	ND	ND	1
4-Nitrophenol (100-02-7)			X							0	ug/L	kg/day	ND	ND	1
P-Chloro-M-Cresol (59-50-7)			X							0	ug/L	kg/day	ND	ND	1
Pentachlorophenol (87-86-5)			X							0	ug/L	kg/day	ND	ND	1
Phenol (108-95-2)			X							0	ug/L	kg/day	ND	ND	1
2,4,6-Trichlorophenol (88-06-2)			X							0	ug/L	kg/day	ND	ND	1
Base/Neutral Compounds															
Acenaphthene (83-32-9)			X	NTBA		Not Compulsory		Not Compulsory		0	ug/L	kg/day	ND	ND	1
Acenaphtylene (208-96-8)			X							0	ug/L	kg/day	ND	ND	1
Anthracene (120-12-7)			X							0	ug/L	kg/day	ND	ND	1
Benzidine (92-87-5)			X							0	ug/L	kg/day	ND	ND	1
Benzo (a) Anthracene (56-55-3)			X							0	ug/L	kg/day	ND	ND	1
Benzo (a) Pyrene (50-32-8)			X							0	ug/L	kg/day	ND	ND	1
3,4-Benzo-fluoranthene (205-99-2)			X							0	ug/L	kg/day	ND	ND	1
Benzo (ghi) Perylene (191-24-2)			X							0	ug/L	kg/day	ND	ND	1
Benzo (k) Fluoranthene (207-08-9)			X	NTBA		Not Compulsory		Not Compulsory		0	ug/L	kg/day	ND	ND	1
Bis (2-Chloroethoxy) Methane (111-91-1)			X							0	ug/L	kg/day	ND	ND	1
Bis (2-Chloroethyl) Ether (111-44-4)			X							0	ug/L	kg/day	ND	ND	1
Bis (2-Chloroisopropyl) Ether (108-60-1)			X							0	ug/L	kg/day	ND	ND	1

EPA_COOK_INKPR_000376

Part C.

EPA ID. No. 110007920535

Outfall No. 013

1. Pollutant	2. Mark X: a. Testing Required	b. Believed Present	c. Believed Absent	3. Effluent: a. Maximum Daily Value (1) Conc.	(2) mass	b. Maximum 30-Day Value (1) Conc.	(2) mass	c. Long Term Average Value (1) Conc.	(2) mass	d. No of Analyses	4. Units: a. Conc.	b. mass	5. Intake: a. Long Term Average Value (1) Conc.	(2) mass	b. No of Analyses
Bis (2-Ethyl-hexyl) Phthalate (117-81-7)			X	NTBA		Not Compulsory		Not Compulsory		0	ug/L	kg/day	ND	ND	1
4-Bromophenyl Phenyl (101-55-3)			X							0	ug/L	kg/day	ND	ND	1
Butyl Benzyl Phthalate (85-68-7)			X							0	ug/L	kg/day	ND	ND	1
2-Chloro-naphthalene (91-58-7)			X							0	ug/L	kg/day	ND	ND	1
4-Chlorophenyl Phenyl Ether (7005-72-3)			X							0	ug/L	kg/day	ND	ND	1
Chrysene (218-01-9)			X							0	ug/L	kg/day	ND	ND	1
Dibenzo (a,h) Anthracene (53-70-3)			X							0	ug/L	kg/day	ND	ND	1
1,2-Dichlorobenzene (95-50-1)			X							0	ug/L	kg/day	ND	ND	1
1,3-Dichlorobenzene (541-73-1)			X							0	ug/L	kg/day	ND	ND	1
1,4-Dichlorobenzene (106-46-7)			X							0	ug/L	kg/day	ND	ND	1
3,3'-Dichlorobenzidine (91-94-1)			X							0	ug/L	kg/day	ND	ND	1
Diethyl Phthalate (84-66-2)			X							0	ug/L	kg/day	ND	ND	1
Dimethyl Phthalate (131-11-3)			X							0	ug/L	kg/day	ND	ND	1
Di-N-Butyl Phthalate (84-74-2)			X							0	ug/L	kg/day	1.8	0.00001	1
2,4-Dinitrotoluene (121-14-2)			X							0	ug/L	kg/day	ND	ND	1
2,6-Dinitrotoluene (606-20-2)			X							0	ug/L	kg/day	ND	ND	1
Di-N-Octyl Phthalate (117-84-0)			X							0	ug/L	kg/day	ND	ND	1
1,2-Diphenyl-hydrazine (as Azo-benzene) (122-66-7)			X							0	ug/L	kg/day	ND	ND	1
Fluoranthene (206-44-0)			X							0	ug/L	kg/day	ND	ND	1
Fluorene (86-73-7)			X							0	ug/L	kg/day	ND	ND	1
Hexachlorobenzene (118-74-1)			X							0	ug/L	kg/day	ND	ND	1
Hexachlorobutadiene (87-68-3)			X							0	ug/L	kg/day	ND	ND	1

EPA_COOK_INKPR_000377

Part C.

EPA ID. No. 110007920535

Outfall No. 013

1. Pollutant	2. Mark 'X' a. Testing Required	b. Believed Present	c. Believed Absent	3. Effluent a. Maximum Daily Value (1) Conc.	(2) mass	b. Maximum 30-Day Value (1) Conc.	(2) mass	c. Long Term Average Value (1) Conc.	(2) mass	d. No of Analyses	4. Units a. Conc.	b. mass	5. Intake a. Long Term Average Value (1) Conc.	(2) mass	b. No of Analyses
Hexachlorocyclopentadiene (77-47-4)			X							0	ug/L	kg/day	ND	ND	1
Hexachloroethane (67-72-1)			X							0	ug/L	kg/day	ND	ND	1
Indeno (1,2,3-cd) Pyrene (193-39-5)			X							0	ug/L	kg/day	ND	ND	1
Isophorone (78-59-1)			X							0	ug/L	kg/day	ND	ND	1
Naphthalene (91-20-3)			X							0	ug/L	kg/day	ND	ND	1
Nitrobenzene (98-95-3)			X							0	ug/L	kg/day	ND	ND	1
N-Nitro-sodimethylamine (62-75-9)			X							0	ug/L	kg/day	ND	ND	1
N-Nitrosodi-N-Propylamine (621-64-7)			X							0	ug/L	kg/day	ND	ND	1
N-Nitrosodiphenylamine (86-30-6)			X							0	ug/L	kg/day	ND	ND	1
Phenanthrene (85-01-8)			X	NTBA		Not Compulsory		Not Compulsory		0	ug/L	kg/day	ND	ND	1
Pyrene (129-00-0)			X							0	ug/L	kg/day	ND	ND	1
1,2,4-Trichlorobenzene (120-82-1)			X							0	ug/L	kg/day	ND	ND	1
Pesticides										0					
Aldrin (309-00-2)			X							0	ug/L	kg/day	ND	ND	1
α-BHC (319-84-6)			X							0	ug/L	kg/day	ND	ND	1
β-BHC (319-85-7)			X							0	ug/L	kg/day	ND	ND	1
γ-BHC (58-89-9)			X							0	ug/L	kg/day	ND	ND	1
δ-BHC (319-86-8)			X							0	ug/L	kg/day	ND	ND	1
Chlordane (57-74-9)			X							0	ug/L	kg/day	ND	ND	1
4,4'-DDT (50-29-3)			X							0	ug/L	kg/day	ND	ND	1
4,4'-DDE (72-55-9)			X							0	ug/L	kg/day	ND	ND	1
4,4'-DDD (72-54-8)			X							0	ug/L	kg/day	ND	ND	1
Dieldrin (60-57-1)			X							0	ug/L	kg/day	ND	ND	1
α-Endosulfan (115-29-7)			X							0	ug/L	kg/day	ND	ND	1

EPA_COOK_INKPR_000378

Part C.

EPA ID. No.	110007920535

Outfall No.	013

1. Pollutant	2. Mark 'X' a. Testing Required	b. Believed Present	c. Believed Absent	3. Effluent a. Maximum Daily Value (1) Conc.	(2) mass	b. Maximum 30-Day Value (1) Conc.	(2) mass	c. Long Term Average Value (1) Conc.	(2) mass	d. No of Analyses	4. Units a. Conc.	b. mass	5. Intake a. Long Term Average Value (1) Conc.	(2) mass	b. No of Analyses
β-Endosulfan (115-29-7)			X	NTBA		Not Compulsory		Not Compulsory		0	ug/L	kg/day	ND	ND	1
Endosulfan Sulfate (1031-07-8)			X							0	ug/L	kg/day	ND	ND	1
Endrin (72-20-8)			X							0	ug/L	kg/day	ND	ND	1
Endrin Aldehyde (7421-93-4)			X							0	ug/L	kg/day	ND	ND	1
Heptachlor (76-44-8)			X							0	ug/L	kg/day	ND	ND	1
Heptachlor Epoxide (1024-57-3)			X							0	ug/L	kg/day	ND	ND	1
PCB-1242 (53469-21-9)			X							0	ug/L	kg/day	ND	ND	1
PCB-1254 (11097-69-1)			X							0	ug/L	kg/day	ND	ND	1
PCB-1221 (11104-28-2)			X	NTBA						0	ug/L	kg/day	ND	ND	1
PCB-1232 (11141-16-5)			X							0	ug/L	kg/day	ND	ND	1
PCB-1248 (12672-29-6)			X							0	ug/L	kg/day	ND	ND	1
PCB-1260 (11096-82-5)			X							0	ug/L	kg/day	ND	ND	1
PCB-1016 (12674-11-2)			X							0	ug/L	kg/day	ND	ND	1
Toxaphene (8001-35-2)			X							0	ug/L	kg/day	ND	ND	1

* Flow rate for intake is either total for all Cook Inlet used at facility or total of fresh water uses excluding drilling which varies widely and therefore cannot be predicted reliably. This is not outfall-specific.
** The Long Term Average mass was calculated from the facility-specific flowrates on the attached Discharge Flow Diagrams.
*** Conversions used for mass (kg/day) are as follows: 3.78 L= 1 gal; 1 g = 1000 mg; 1000g = 1 kg
ND - non-detect
NA - not applicable
NTBA - not tested - believed absent

EPA_COOK_INKPR_000379

V. INTAKE AND EFFLUENT CHARACTERISTICS

EPA ID. No	110007920535
Outfall No.	014

Part A. Provide the results of at least one analysis for every pollutant in this table. Complete one table for each outfall.

1. Pollutant	2. Effluent							3. Units (specify if blank)		4. Intake (optional) **		
	a. Maximum Daily Value		b. Max. 30-Day Value (if available)		c. Long Term Avg. Value (if available)		d. No of Analyses			a. Long Term Average Value		b. No of Analysis
	(1) Conc. (mg/L)	(2) mass (kg/day) ***	(1) Conc.	(2) mass	(1) Conc.	(2) mass		a.Conc.	b. mass	(1) Conc. (mg/L)	(2) mass (kg/day)	
a. Biochemical Oxygen Demand (BOD)	ND	ND	Not Compulsory		Not Compulsory		1	mg/L	kg/day	ND	ND	1
b. Chemical Oxygen Demand (COD)	100	779.44					1	mg/L	kg/day	1,970	38,276	1
c. Total Organic Carbon (TOC)	1.01	7.87					1	mg/L	kg/day	1.56	30	1
d. Total Suspended Solids (TSS)	32.4	252.54					1	mg/L	kg/day	81.5	1,583	1
e. Ammonia (as N)	0.50	3.90					1	mg/L	kg/day	ND	ND	1
f. Flow	2,062,000						NA	GPD		5,140,000	GPD	not applicable
g. Temperature (winter)	not available						0	°C		not available		not available
h. Temperature (summer)	27						8	°C		not available		not available
i. pH	Minimum 7.1	Maximum 7.4					8	Std Units				

* Flow rate for intake is either total for all Cook Inlet used at facility or total of fresh water uses excluding drilling which varies widely and therefore cannot be predicted reliably. This is not outfall-specific.
** The Long Term Average mass was calculated from the facility-specific flowrates on the attached Discharge Flow Diagrams.
*** Conversions used for mass (kg/day) are as follows: 3.78 L= 1 gal; 1 g = 1000 mg; 1000g = 1 kg
ND - non-detect
NA - not applicable

EPA_COOK_INKPR_000380

EPA ID. No.	110007920535	Outfall No.	014

Part B. Mark "X" in column 2-a for each pollutant you know or have reason to believe is present. Mark "X" in column 2-b for each pollutant you believe to be absent.

If you mark column 2a for any pollutant which is limited either directly, or indirectly but expressly, in an effluent limitations guideline, you must provide the results of at least one analysis for that pollutant.

For other pollutants for which you mark column 2a, you must provide quantitative data or an explanation of their presence in your discharge. Complete one table for each outfall. See the instructions for additional details and requirements.

1. Pollutant	2. Mark "X"		3. Effluent							4. Units		5. Intake **		
	a. Believed Present	b. Believed Absent	a. Maximum Daily		b. Maximum 30-Day		c. Long Term		d. No of Analyses			a. Long Term		b. No of Analyses
			(1) Conc.	(2) mass	(1) Conc.	(2) mass	(1) Conc.	(2) mass		(1) Conc.	b. mass	(1) Conc.	(2) mass	
Bromide		X	NTBA		Not Compulsory		Not Compulsory		0	mg/L	kg/day	87	1,690	1
Chlorine, Total Residual		X							0	not available				0
Color		X							0	ug/L	kg/day	5.0	0.10	1
Fecal Coliform		X							0	not available				0
Fluoride (16984-48-8)		X							0	mg/L	kg/day	ND	ND	1
Nitrate-Nitrite (as N)		X							0	mg/L	kg/day	ND	ND	1
Nitrogen, Total Organic (as N)		X							0	mg/L	kg/day	Not Available		0
Oil and Grease		X							0	mg/L	kg/day	ND	ND	1
Phosphorus (as P), Total (7723-14-0)	X		ND	ND					1	mg/L	kg/day	0.110	2.14	1
Alpha, Total		X	NTBA						0	analyses in progress				1
Beta, Total		X							0					1
Radium, Total		X							0					1
Radium 226, Total		X							0					1
Sulfate (as SO4) (14808-79-8)		X							0	mg/L	kg/day	1,610	31,281	1
Sulfide (as S)		X							0	mg/L	kg/day	ND	ND	1
Sulfite (as SO3) (14265-45-3)		X							0	mg/L	kg/day	ND	ND	1
Surfactants		X							0	mg/L	kg/day	1.38	26.81	1
Aluminum, Total (7429-90-5)		X							0	ug/L	kg/day	1,920	37.30	1
Barium, Total (7440-39-3)		X							0	ug/L	kg/day	36.1	0.70	1
Boron, Total (7440-42-8)		X							0	ug/L	kg/day	3220	62.56	1
Cobalt, Total (7440-48-4)		X							0	ug/L	kg/day	2.06	0.04	1
Iron, Total (7439-89-6)		X							0	mg/L	kg/day	0.33	6.41	1
Magnesium, Total (7439-95-4)		X							0	mg/L	kg/day	800	15,543	1
Molybdenum, Total (7439-98-7)		X							0	ug/L	kg/day	8.38	0.16	1
Manganese, Total (7439-96-5)		X							0	ug/L	kg/day	86.1	1.67	1
Tin, Total (7440-31-5)		X							0	ug/L	kg/day	ND	ND	1
Titanium, Total (7440-32-6)		X							0	ug/L	kg/day	149	2.89	1

* Flow rate for intake is either total for all Cook Inlet used at facility or total of fresh water uses excluding drilling which varies widely and therefore cannot be predicted reliably. This is not outfall-specific.
** The Long Term Average mass was calculated from the facility-specific flowrates on the attached Discharge Flow Diagrams.
*** Conversions used for mass (kg/day) are as follows: 3.78 L= 1 gal; 1 g = 1000 mg; 1000g = 1 kg
ND - non-detect
NA - not applicable
NTBA - not tested believed absent

EPA_COOK_INKPR_000381

Part C.

EPA ID. No. 110007920535

Outfall No. 014

1. Pollutant	2. Mark X: a. Testing Required	b. Believed Present	c. Believed Absent	3. Effluent: a. Maximum Daily Value (1) Conc.	(2) mass	b. Maximum 30-Day Value (1) Conc.	(2) mass	c. Long Term Average Value (1) Conc.	(2) mass	d. No of Analyses	4. Units: a. Conc.	b. mass	5. Intake: a. Long Term Average Value (1) Conc.	(2) mass	b. No of Analyses
Metals, Cyanide, and Total Phenols															1
Antimony, Total (7440-36-0)			X							0	ug/L	kg/day	1.97	0.04	1
Arsenic, Total (7440-38-2)			X							0	ug/L	kg/day	60.5	1.18	1
Beryllium, Total (7440-41-7)			X							0	ug/L	kg/day	ND	ND	1
Cadmium, Total (7440-43-9)			X							0	ug/L	kg/day	ND	ND	1
Chromium, Total (7440-47-3)			X							0	ug/L	kg/day	10.3	0.20	1
Copper, Total (7440-50-8)			X							0	ug/L	kg/day	12.8	0.25	1
Lead, Total (7439-92-1)			X							0	ug/L	kg/day	1.71	0.03	1
Mercury, Total (7439-97-6)			X							0	ug/L	kg/day	0.0896	0.002	1
Nickel, Total (7440-02-0)			X							0	ug/L	kg/day	16.7	0.32	1
Selenium, Total (7782-49-2)			X							0	ug/L	kg/day	175	3.40	1
Silver, Total (7440-22-4)			X							0	ug/L	kg/day	ND	ND	1
Thallium, Total (7440-28-0)			X							0	ug/L	kg/day	ND	ND	1
Zinc, Total (7440-66-6)			X							0	ug/L	kg/day	11.7	0.23	1
Cyanide, Total (57-12-5)			X							0	mg/L	kg/day	ND	ND	1
Phenols, Total			X							0	mg/L	kg/day	ND	ND	1
Dioxin															
2,3,7,8 - Tetra-chlorodibenzo-P-Dioxin (1764-01-6)			X							0	pg/L	NA	ND	ND	1
Volatile Compounds															
Acrolein (107-02-8)			X							0	ug/L	kg/day	ND	ND	1
Acrylonitrile (107-13-1)			X							0	ug/L	kg/day	ND	ND	1
Benzene (71-43-2)			X							0	ug/L	kg/day	ND	ND	1
Bis(Chloromethyl) Ether (542-88-1)			X							0	ug/L	kg/day	Not Available		0
Bromoform (75-25-2)			X							0	ug/L	kg/day	ND	ND	1
Carbon Tetrachloride (56-23-5)			X							0	ug/L	kg/day	ND	ND	1
Chlorobenzene (108-90-7)			X							0	ug/L	kg/day	ND	ND	1
Chlorodibromomethane (124-48-1)			X							0	ug/L	kg/day	ND	ND	1
Chloroethane (75-00-3)			X							0	ug/L	kg/day	ND	ND	1
2-Chloroethylvinyl Ether (110-75-8)			X							0	ug/L	kg/day	ND	ND	1
Chloroform (67-66-3)			X							0	ug/L	kg/day	ND	ND	1
Dichlorobromomethane (75-27-4)			X							0	ug/L	kg/day	ND	ND	1
Dichlorodifluoromethane (75-71-8)			X							0	ug/L	kg/day	ND	ND	1

NTBA — Not Compulsory

EPA_COOK_INKPR_000382

Part C.

EPA ID. No. 110007920535 | Outfall No. 014

1. Pollutant	2. Mark X: a. Testing Required	b. Believed Present	c. Believed Absent	3. Effluent: a. Maximum Daily Value (1) Conc.	(2) mass	b. Maximum 30-Day Value (1) Conc.	(2) mass	c. Long Term Average Value (1) Conc.	(2) mass	d. No of Analyses	4. Units: a. Conc.	b. mass	5. Intake: a. Long Term Average Value (1) Conc.	(2) mass	b. No of Analyses
1,1-Dichloroethane (75-34-3)			X							0	ug/L	kg/day	ND	ND	1
1,2-Dichloroethane (107-06-2)			X							0	ug/L	kg/day	ND	ND	1
1,1-Dichloroethylene (75-35-4)			X							0	ug/L	kg/day	ND	ND	1
1,2-Dichloropropane (78-87-5)			X	NTBA		Not Compulsory		Not Compulsory		0	ug/L	kg/day	ND	ND	1
1,3-Dichloropropylene (542-75-6)			X							0	ug/L	kg/day	Not Available		0
Ethylbenzene (100-41-4)			X							0	ug/L	kg/day	ND	ND	1
Methyl Bromide (74-83-9)			X							0	ug/L	kg/day	ND	ND	1
Methyl Chloride (74-87-3)			X							0	ug/L	kg/day	ND	ND	1
Methylene Chloride (75-09-2)			X							0	ug/L	kg/day	ND	ND	1
1,1,2,2-Tetrachloroethane (79-34-5)			X							0	ug/L	kg/day	ND	ND	1
Tetrachloroethylene (127-18-4)			X							0	ug/L	kg/day	ND	ND	1
Toluene (108-88-3)			X	NTBA						0	ug/L	kg/day	ND	ND	1
1,2-Trans-Dichloroethylene (156-60-5)			X							0	ug/L	kg/day	ND	ND	1
1,1,1-Trichloroethane (71-55-6)			X							0	ug/L	kg/day	ND	ND	1
1,1,2-Trichloroethane (79-00-5)			X							0	ug/L	kg/day	ND	ND	1
Trichloroethylene (79-01-6)			X							0	ug/L	kg/day	ND	ND	1
Trichlorofluoromethane (75-69-4)			X							0	ug/L	kg/day	ND	ND	1
Vinyl Chloride (75-01-4)			X							0	ug/L	kg/day	ND	ND	1
				NTBA		Not Compulsory		Not Compulsory							
Acid Compounds															
2-Chlorophenol (95-57-8)			X							0	ug/L	kg/day	ND	ND	1
2,4-Dichlorophenol (120-83-2)			X							0	ug/L	kg/day	ND	ND	1
2,4-Dimethylephenol (105-67-9)			X							0	ug/L	kg/day	ND	ND	1
4,6-Dinitro-O-Cresol (534-52-1)			X							0	ug/L	kg/day	ND	ND	1

EPA_COOK_INKPR_000383

Part C.

EPA ID. No. 110007920535

Outfall No. 014

1. Pollutant	2. Mark 'X' a. Testing Required	b. Believed Present	c. Believed Absent	3. Effluent a. Maximum Daily Value (1) Conc.	(2) mass	b. Maximum 30 Day Value (1) Conc.	(2) mass	c. Long Term Average Value (1) Conc.	(2) mass	d. No of Analyses	4. Units a. Conc.	b. mass	5. Intake a. Long Term Average Value (1) Conc.	(2) mass	b. No of Analyses
2,4-Dinitrophenol (51-28-5)			X							0	ug/L	kg/day	ND	ND	1
2-Nitrophenol (88-75-5)			X							0	ug/L	kg/day	ND	ND	1
4-Nitrophenol (100-02-7)			X							0	ug/L	kg/day	ND	ND	1
P-Chloro-M-Cresol (59-50-7)			X							0	ug/L	kg/day	ND	ND	1
Pentachlorophenol (87-86-5)			X							0	ug/L	kg/day	ND	ND	1
Phenol (108-95-2)			X							0	ug/L	kg/day	ND	ND	1
2,4,6-Trichlorophenol (88-06-2)			X							0	ug/L	kg/day	ND	ND	1
Base/Neutral Compounds															
Acenaphthene (83-32-9)			X							0	ug/L	kg/day	ND	ND	1
Acenaphtylene (208-96-8)			X							0	ug/L	kg/day	ND	ND	1
Anthracene (120-12-7)			X							0	ug/L	kg/day	ND	ND	1
Benzidine (92-87-5)			X							0	ug/L	kg/day	ND	ND	1
Benzo (a) Anthracene (56-55-3)			X							0	ug/L	kg/day	ND	ND	1
Benzo (a) Pyrene (50-32-8)			X							0	ug/L	kg/day	ND	ND	1
3,4-Benzo-fluoranthene (205-99-2)			X							0	ug/L	kg/day	ND	ND	1
Benzo (ghi) Perylene (191-24-2)			X							0	ug/L	kg/day	ND	ND	1
Benzo (k) Fluoranthene (207-08-9)			X							0	ug/L	kg/day	ND	ND	1
Bis (2-Chloroethoxy) Methane (111-91-1)			X							0	ug/L	kg/day	ND	ND	1
Bis (2-Chloroethyl) Ether (111-44-4)			X							0	ug/L	kg/day	ND	ND	1
Bis (2-Chloroisopropyl) Ether (108-60-1)			X							0	ug/L	kg/day	ND	ND	1
Bis (2-Ethyl-hexyl) Phthalate (117-81-7)			X							0	ug/L	kg/day	ND	ND	1
4-Bromophenyl Phenyl (101-55-3)			X							0	ug/L	kg/day	ND	ND	1
Butyl Benzyl Phthalate (85-68-7)			X							0	ug/L	kg/day	ND	ND	1

NTBA

Not Compulsory

NTBA

Not Compulsory

NTBA

Not Compulsory

EPA_COOK_INKPR_000384

Part C.

EPA ID. No.	110007920535

Outfall No.	014

1. Pollutant	2. Mark "X" a. Testing Required	b. Believed Present	c. Believed Absent	3. Effluent a. Maximum Daily Value (1) Conc.	(2) mass	b. Maximum 30-Day Value (1) Conc.	(2) mass	c. Long Term Average Value (1) Conc.	(2) mass	d. No of Analyses	4. Units a. Conc.	b. mass	5. Intake a. Long Term Average Value (1) Conc.	(2) mass	b. No of Analyses
2-Chloro-naphthalene (91-58-7)			X							0	ug/L	kg/day	ND	ND	1
4-Chlorophenyl Phenyl Ether (7005-72-3)			X							0	ug/L	kg/day	ND	ND	1
Chrysene (218-01-9)			X							0	ug/L	kg/day	ND	ND	1
Dibenzo (a,h) Anthracene (53-70-3)			X							0	ug/L	kg/day	ND	ND	1
1,2-Dichlorobenzene (95-50-1)			X							0	ug/L	kg/day	ND	ND	1
1,3-Dichlorobenzene (541-73-1)			X							0	ug/L	kg/day	ND	ND	1
1,4-Dichlorobenzene (106-46-7)			X							0	ug/L	kg/day	ND	ND	1
3,3'-Dichlorobenzidine (91-94-1)			X							0	ug/L	kg/day	ND	ND	1
Diethyl Phthalate (84-66-2)			X							0	ug/L	kg/day	ND	ND	1
Dimethyl Phthalate (131-11-3)			X							0	ug/L	kg/day	ND	ND	1
Di-N-Butyl Phthalate (84-74-2)			X							0	ug/L	kg/day	1.2	0.02	1
2,4-Dinitrotoluene (121-14-2)			X							0	ug/L	kg/day	ND	ND	1
2,6-Dinitrotoluene (606-20-2)			X							0	ug/L	kg/day	ND	ND	1
Di-N-Octyl Phthalate (117-84-0)			X							0	ug/L	kg/day	ND	ND	1
1,2-Diphenyl-hydrazine (as Azo-benzene) (122-66-7)			X							0	ug/L	kg/day	ND	ND	1
Fluoranthene (206-44-0)			X							0	ug/L	kg/day	ND	ND	1
Fluorene (86-73-7)			X							0	ug/L	kg/day	ND	ND	1
Hexachlorobenzene (118-74-1)			X							0	ug/L	kg/day	ND	ND	1
Hexachlorobutadiene (87-68-3)			X							0	ug/L	kg/day	ND	ND	1
Hexachlorocyclopentadiene (77-47-4)			X							0	ug/L	kg/day	ND	ND	1
Hexachloroethane (67-72-1)			X							0	ug/L	kg/day	ND	ND	1
Indeno (1,2,3-cd) Pyrene (193-39-5)			X							0	ug/L	kg/day	ND	ND	1
Isophorone (78-59-1)			X							0	ug/L	kg/day	ND	ND	1

NTBA — Not Compulsory

EPA_COOK_INKPR_000385

Part C.

EPA ID. No. 110007920535 | Outfall No. 014

1. Pollutant	2. Mark X			3. Effluent							4. Units		5. Intake		
	a. Testing Required	b. Believed Present	c. Believed Absent	a. Maximum Daily Value		b. Maximum 30-Day Value		c. Long Term Average Value		d. No of Analyses	a. Conc.	b. mass	a. Long Term Average Value		b. No of Analyses
				(1) Conc.	(2) mass	(1) Conc.	(2) mass	(1) Conc.	(2) mass				(1) Conc.	(2) mass	
Naphthalene (91-20-3)			X	NTBA		Not Compulsory		Not Compulsory		0	ug/L	kg/day	ND	ND	1
Nitrobenzene (98-95-3)			X							0	ug/L	kg/day	ND	ND	1
N-Nitro-sodimethylamine (62-75-9)			X							0	ug/L	kg/day	ND	ND	1
N-Nitrosodi-N-Propylamine (621-64-7)			X							0	ug/L	kg/day	ND	ND	1
N-Nitrosodiphenylamine (86-30-6)			X							0	ug/L	kg/day	ND	ND	1
Phenanthrene (85-01-8)			X							0	ug/L	kg/day	ND	ND	1
Pyrene (129-00-0)			X							0	ug/L	kg/day	ND	ND	1
1,2,4-Trichlorobenzene (120-82-1)			X							0	ug/L	kg/day	ND	ND	1
Pesticides															
Aldrin (309-00-2)			X	NTBA		Not Compulsory		Not Compulsory		0	ug/L	kg/day	ND	ND	1
α-BHC (319-84-6)			X							0	ug/L	kg/day	ND	ND	1
β-BHC (319-85-7)			X							0	ug/L	kg/day	ND	ND	1
γ-BHC (58-89-9)			X							0	ug/L	kg/day	ND	ND	1
δ-BHC (319-86-8)			X							0	ug/L	kg/day	ND	ND	1
Chlordane (57-74-9)			X							0	ug/L	kg/day	ND	ND	1
4,4'-DDT (50-29-3)			X							0	ug/L	kg/day	ND	ND	1
4,4'-DDE (72-55-9)			X							0	ug/L	kg/day	ND	ND	1
4,4'-DDD (72-54-8)			X							0	ug/L	kg/day	ND	ND	1
Dieldrin (60-57-1)			X							0	ug/L	kg/day	ND	ND	1
α-Endosulfan (115-29-7)			X							0	ug/L	kg/day	ND	ND	1
β-Endosulfan (115-29-7)			X	NTBA						0	ug/L	kg/day	ND	ND	1
Endosulfan Sulfate (1031-07-8)			X							0	ug/L	kg/day	ND	ND	1
Endrin (72-20-8)			X							0	ug/L	kg/day	ND	ND	1
Endrin Aldehyde (7421-93-4)			X			N		N		0	ug/L	kg/day	ND	ND	1

EPA_COOK_INKPR_000386

Part C.

EPA ID. No.	110007920535

Outfall No.	014

1. Pollutant	2. Mark 'X'			3. Effluent							4. Units		5. Intake		
	a. Testing Required	b. Believed Present	c. Believed Absent	a. Maximum Daily Value		b. Maximum 30-Day Value		c. Long Term Average Value		d. No of Analyses	a. Conc.	b. mass	a. Long Term Average Value		b. No of Analyses
				(1) Conc.	(2) mass	(1) Conc.	(2) mass	(1) Conc.	(2) mass				(1) Conc.	(2) mass	
Heptachlor (76-44-8)			X	NTBA		Not Compulsory		Not Compulsory		0	ug/L	kg/day	ND	ND	1
Heptachlor Epoxide (1024-57-3)			X							0	ug/L	kg/day	ND	ND	1
PCB-1242 (58469-21-9)			X							0	ug/L	kg/day	ND	ND	1
PCB-1254 (11097-69-1)			X							0	ug/L	kg/day	ND	ND	1
PCB-1221 (11104-28-2)			X							0	ug/L	kg/day	ND	ND	1
PCB-1232 (11141-16-5)			X							0	ug/L	kg/day	ND	ND	1
PCB-1248 (12672-29-6)			X							0	ug/L	kg/day	ND	ND	1
PCB-1260 (11096-82-5)			X							0	ug/L	kg/day	ND	ND	1
PCB-1016 (12674-11-2)			X							0	ug/L	kg/day	ND	ND	1
Toxaphene (8001-35-2)			X							0	ug/L	kg/day	ND	ND	1

*Flow rate for intake is either total for all Cook Inlet used at facility or total of fresh water uses excluding drilling which varies widely and therefore cannot be predicted reliably. This is not outfall-specific.
** The Long Term Average mass was calculated from the facility-specific flowrates on the attached Discharge Flow Diagrams.
*** Conversions used for mass (kg/day) are as follows: 3.78 L= 1 gal; 1 g = 1000 mg; 1000g = 1 kg
ND - non-detect
NA - not applicable
NTBA - not tested - believed absent

EPA_COOK_INKPR_000387

V. INTAKE AND EFFLUENT CHARACTERISTICS

EPA ID. No	110007920535
Outfall No.	002, 015

Part A. Provide the results of at least one analysis for every pollutant in this table. Complete one table for each outfall.

1. Pollutant	2. Effluent							3. Units (specify if blank)		4. Intake (optional)**		
	a. Maximum Daily Value		b. Max. 30-Day Value (if available)		c. Long Term Avg. Value (if available)		d. No of Analyses			a. Long Term Average Value		b. No of Analysis
	(1) Conc. (mg/L)	(2) mass (kg/day) ***	(1) Conc.	(2) mass	(1) Conc.	(2) mass		a. Conc.	b. mass	(1) Conc. (mg/L)	(2) mass (kg/day)	
a. Biochemical Oxygen Demand (BOD)	404	3,011	Not Compulsory		Not Compulsory		1	mg/L	kg/day	NA		
b. Chemical Oxygen Demand (COD)	660	4,920					1	mg/L	kg/day			
c. Total Organic Carbon (TOC)	20.0	149					1	mg/L	kg/day			
d. Total Suspended Solids (TSS)	38.1	284					1	mg/L	kg/day			
e. Ammonia (as N)	12	89					1	mg/L	kg/day			
f. Flow	1,972,000						NA	GPD				
g. Temperature (winter)	not available						0	not available				
h. Temperature (summer)	27						8	°C				
	Minimum	Maximum										
i. pH	6.7	7.6	6.4	7.0	6.3	8.2	101	Std Units				

* Flow rate for intake is either total for all Cook Inlet used at facility or total of fresh water uses excluding drilling which varies widely and therefore cannot be predicted reliably. This is not outfall-specific.

** The Long Term Average mass was calculated from the facility-specific flowrates on the attached Discharge Flow Diagrams.

*** Conversions used for mass (kg/day) are as follows: 3.78 L= 1 gal; 1 g = 1000 mg; 1000g = 1 kg

ND - non-detect

NA - not applicable

NTBA - not tested - believed absent

EPA_COOK_INKPR_000388

NPDES Permit AKG 285000 Renewal

EPA ID. No.	110007920535	Outfall No.	002, '015

Part B. Mark "X" in column 2-a for each pollutant you know or have reason to believe is present. Mark "X" in column 2-b for each pollutant you believe to be absent.

If you mark column 2a for any pollutant which is limited either directly, or indirectly but expressly, in an effluent limitations guideline, you must provide the results of at least one analysis for that pollutant. For other pollutants for which you mark column 2a, you must provide quantitative data or an explanation of their presence in your discharge. Complete one table for each outfall. See the instructions for additional details and requirements.

1. Pollutant	2. Mark "X"		3. Effluent							4. Units		5. Intake*		
	a. Believed Present	b. Believed Absent	a. Maximum Daily Value		b. Maximum 30-Day		c. Long Term		d. No of Analyses			a. Long Term		b. No of Analyses
			(1) Conc.	(2) mass	(1) Conc.	(2) mass	(1) Conc.	(2) mass		(1) Conc.	b. mass	(1) Conc.	(2) mass	
Bromide		X	NTBA		Not Compulsory		Not Compulsory		0	mg/L	kg/day	NA		
Chlorine, Total Residual		X							0	not available				
Color		X							0	ug/L	kg/day			
Fecal Coliform		X							0	not available				
Fluoride (16984-48-8)		X							0	mg/L	kg/day			
Nitrate-Nitrite (as N)		X							0	mg/L	kg/day			
Nitrogen, Total Organic (as N)		X							0	mg/L	kg/day			
Oil and Grease	X		19	141.63	25	186.35	35	260.90	52	mg/L	kg/day			
Phosphorus (as P), Total (7723-14-0)	X		1.24	9.24	Not Compulsory		Not Compulsory		1	mg/L	kg/day			
Alpha, Total	X		Analyses Pending						1	analyses in progress				
Beta, Total	X								1					
Radium, Total	X								1					
Radium 226, Total	X								1					
Sulfate (as SO4) (14808-79-8)		X	NTBA						0	mg/L	kg/day			
Sulfide (as S)		X							0	mg/L	kg/day			
Sulfite (as SO3) (14265-45-3)		X							0	mg/L	kg/day			
Surfactants		X							0	mg/L	kg/day			
Aluminum, Total (7429-90-5)	X		52	0.39					1	ug/L	kg/day			
Barium, Total (7440-39-3)	X		2180	16.25					1	ug/L	kg/day			
Boron, Total (7440-42-8)	X		9660	72.01					1	ug/L	kg/day			
Cobalt, Total (7440-48-4)	X		4.28	0.03					1	ug/L	kg/day			
Iron, Total (7439-89-6)	X		0.34	2.53					1	mg/L	kg/day			
Magnesium, Total (7439-95-4)	X		130	969.04					1	mg/L	kg/day			
Molybdenum, Total (7439-98-7)	X		ND	ND					1	ug/L	kg/day			
Manganese, Total (7439-96-5)	X		1,890	14.09					1	ug/L	kg/day			
Tin, Total (7440-31-5)	X		ND	ND					1	ug/L	kg/day			
Titanium, Total (7440-32-6)	X		17.0	0.13					1	ug/L	kg/day			

* Flow rate for intake is either total for all Cook Inlet used at facility or total of fresh water uses excluding drilling which varies widely and therefore cannot be predicted reliably. This is not outfall-specific.

** The Long Term Average mass was calculated from the facility-specific flowrates on the attached Discharge Flow Diagrams.

*** Conversions used for mass (kg/day) are as follows: 3.78 L= 1 gal; 1 g = 1000 mg; 1000g = 1 kg

ND - non-detect

NA - not applicable

NTBA - not tested - believed absent

015 Flowrate: 1,972,000 GPD

EPA_COOK_INKPR_000389

Part C.

EPA ID. No. 110007920535

Outfall No. 002, 015

1. Pollutant	2. Mark 'X' a. Testing Required	b. Believed Present	c. Believed Absent	3. Effluent a. Maximum Daily Value (1) Conc.	(2) mass	b. Maximum 30-Day Value (1) Conc.	(2) mass	c. Long Term Average Value (1) Conc.	(2) mass	d. No of Analyses	4. Units a. Conc.	b. mass	5. Intake a. Long Term Average Value (1) Conc.	(2) mass	b. No of Analyses
Metals, Cyanide, and Total Phenols															
Antimony, Total (7440-36-0)		X		ND	ND					1	ug/L	kg/day			
Arsenic, Total (7440-38-2)		X		71.6	0.53					1	ug/L	kg/day			
Beryllium, Total (7440-41-7)			X	ND	ND					1	ug/L	kg/day			
Cadmium, Total (7440-43-9)		X		ND	ND					1	ug/L	kg/day			
Chromium, Total (7440-47-3)		X		6.10	0.05					1	ug/L	kg/day			
Copper, Total (7440-50-8)		X		4.39	0.03					1	ug/L	kg/day			
Lead, Total (7439-92-1)		X		1.12	0.01					1	ug/L	kg/day			
Mercury, Total (7439-97-6)		X		ND	ND					1	ug/L	kg/day			
Nickel, Total (7440-02-0)		X		115	0.86					1	ug/L	kg/day			
Selenium, Total (7782-49-2)		X		276	2.06					1	ug/L	kg/day			
Silver, Total (7440-22-4)		X		1.44	0.01					1	ug/L	kg/day			
Thallium, Total (7440-28-0)		X		ND	ND					1	ug/L	kg/day			
Zinc, Total (7440-66-6)		X		6.90	0.05					1	ug/L	kg/day			
Cyanide, Total (57-12-5)			X	NTBA						0	mg/L	kg/day			
Phenols, Total		X		2.6	19.38					1	mg/L	kg/day			
Dioxin															
2,3,7,8 - Tetra-chlorodibenzo-P-Dioxin (1764-01-6)			X	NTBA						0	pg/L	NA			
Volatile Compounds															
Acrolein (107-02-8)			X	ND	ND					1	ug/L	kg/day			
Acrylonitrile (107-13-1)			X	ND	ND					1	ug/L	kg/day			
Benzene (71-43-2)		X		1,500	11.18					1	ug/L	kg/day			
Bis(Chloromethyl) Ether (542-88-1)			X	NTBA						0	ug/L	kg/day			
Bromoform (75-25-2)			X	ND	ND					1	ug/L	kg/day			
Carbon Tetrachloride (56-23-5)			X	ND	ND					1	ug/L	kg/day			
Chlorobenzene (108-90-7)		X		ND	ND					1	ug/L	kg/day			
Chlorodibromomethane (124-48-1)			X	ND	ND					1	ug/L	kg/day			
Chloroethane (75-00-3)			X	ND	ND					1	ug/L	kg/day			
2-Chloroethylvinyl Ether (110-75-8)			X	ND	ND					1	ug/L	kg/day			
Chloroform (67-66-3)			X	ND	ND					1	ug/L	kg/day			
Dichlorobromomethane (75-27-4)			X	ND	ND					1	ug/L	kg/day			
Dichlorodifluoromethane (75-71-8)			X	ND	ND					1	ug/L	kg/day			

Not Compulsory

Not Compulsory

NA

NA

EPA_COOK_INKPR_000390

Part C.

EPA ID. No. 110007920535

Outfall No. 002, 015

1. Pollutant	2. Mark 'X' a. Testing Required	b. Believed Present	c. Believed Absent	3. Effluent a. Maximum Daily Value (1) Conc.	(2) mass	b. Maximum 30-Day Value (1) Conc.	(2) mass	c. Long Term Average Value (1) Conc.	(2) mass	d. No of Analyses	4. Units a. Conc.	b. mass	5. Intake a. Long Term Average Value (1) Conc.	(2) mass	b. No of Analyses
1,1-Dichloroethane (75-34-3)			X	ND	ND					1	ug/L	kg/day			
1,2-Dichloroethane (107-06-2)			X	ND	ND					1	ug/L	kg/day			
1,1-Dichloroethylene (75-35-4)			X	ND	ND					1	ug/L	kg/day			
1,2-Dichloropropane (78-87-5)			X	ND	ND	Not Compulsory		Not Compulsory		1	ug/L	kg/day			
1,3-Dichloropropylene (542-75-6)			X	NTBA						0	ug/L	kg/day			
Ethylbenzene (100-41-4)		X		170	1.27					1	ug/L	kg/day			
Methyl Bromide (74-83-9)			X	ND	ND					1	ug/L	kg/day			
Methyl Chloride (74-87-3)			X	ND	ND					1	ug/L	kg/day			
Methylene Chloride (75-09-2)		X		1.2	0.01					1	ug/L	kg/day			
1,1,2,2-Tetrachloroethane (79-34-5)			X	ND	ND					1	ug/L	kg/day			
Tetrachloroethylene (127-18-4)			X	ND	ND					1	ug/L	kg/day			
Toluene (108-88-3)		X		740	5.52					1	ug/L	kg/day	NA		
1,2-Trans-Dichloroethylene (156-60-5)			X	ND	ND					1	ug/L	kg/day			
1,1,1-Trichloroethane (71-55-6)			X	ND	ND					1	ug/L	kg/day			
1,1,2-Trichloroethane (79-00-5)			X	ND	ND	Not Compulsory		Not Compulsory		1	ug/L	kg/day			
Trichloroethylene (79-01-6)			X	ND	ND					1	ug/L	kg/day			
Trichlorofluoromethane (75-69-4)		X		ND	ND					1	ug/L	kg/day			
Vinyl Chloride (75-01-4)			X	ND	ND					1	ug/L	kg/day			
													NA		
Acid Compounds															
2-Chlorophenol (95-57-8)			X	ND	ND					1	ug/L	kg/day			
2,4-Dichlorophenol (120-83-2)			X	ND	ND					1	ug/L	kg/day			
2,4-Dimethylephenol (105-67-9)		X		140	1.04					1	ug/L	kg/day			

EPA_COOK_INKPR_000391

Part C.

EPA ID. No. 110007920535

Outfall No. 002, 015

1. Pollutant	2. Mark 'X' a. Testing Required	b. Believed Present	c. Believed Absent	3. Effluent a. Maximum Daily Value (1) Conc.	(2) mass	b. Maximum 30-Day Value (1) Conc.	(2) mass	c. Long Term Average Value (1) Conc.	(2) mass	d. No of Analyses	4. Units a. Conc.	b. mass	5. Intake a. Long Term Average Value (1) Conc.	(2) mass	b. No of Analyses
4,6-Dinitro-O-Cresol (534-52-1)			X	ND	ND					1	ug/L	kg/day			
2,4-Dinitrophenol (51-28-5)			X	ND	ND					1	ug/L	kg/day			
2-Nitrophenol (88-75-5)			X	ND	ND					1	ug/L	kg/day			
4-Nitrophenol (100-02-7)			X	ND	ND					1	ug/L	kg/day			
P-Chloro-M-Cresol (59-50-7)		X		ND	ND					1	ug/L	kg/day			
Pentachlorophenol (87-86-5)			X	ND	ND					1	ug/L	kg/day			
Phenol (108-95-2)		X		280	2.09					1	ug/L	kg/day			
2,4,6-Trichlorophenol (88-06-2)			X	ND	ND					1	ug/L	kg/day			
Base/Neutral Compounds															
Acenaphthene (83-32-9)		X		ND	ND					1	ug/L	kg/day			
Acenaphtylene (208-96-8)		X		ND	ND					1	ug/L	kg/day			
Anthracene (120-12-7)		X		ND	ND					1	ug/L	kg/day			
Benzidine (92-87-5)		X		ND	ND					1	ug/L	kg/day			
Benzo (a) Anthracene (56-55-3)		X		ND	ND					1	ug/L	kg/day			
Benzo (a) Pyrene (50-32-8)		X		ND	ND					1	ug/L	kg/day			
3,4-Benzo-fluoranthene (205-99-2)		X		ND	ND					1	ug/L	kg/day			
Benzo (ghi) Perylene (191-24-2)		X		ND	ND					1	ug/L	kg/day			
Benzo (k) Fluoranthene (207-08-9)		X		ND	ND					1	ug/L	kg/day			
Bis (2-Chloroethoxy) Methane (111-91-1)			X	ND	ND					1	ug/L	kg/day			
Bis (2-Chloroethyl) Ether (111-44-4)			X	ND	ND					1	ug/L	kg/day			
Bis (2-Chloroisopropyl) Ether (108-60-1)			X	ND	ND					1	ug/L	kg/day			
Bis (2-Ethyl-hexyl) Phthalate (117-81-7)		X		ND	ND					1	ug/L	kg/day			

Not Compulsory

Not Compulsory

NA

NA

NA

NA

A

EPA_COOK_INKPR_000392

Part C.

EPA ID. No. 110007920535

Outfall No. 002, 015

1. Pollutant	2. Mark 'X' a. Testing Required	b. Believed Present	c. Believed Absent	3. Effluent a. Maximum Daily Value (1) Conc.	(2) mass	b. Maximum 30-Day Value (1) Conc.	(2) mass	c. Long Term Average Value (1) Conc.	(2) mass	d. No of Analyses	4. Units a. Conc.	b. mass	5. Intake a. Long Term Average Value (1) Conc.	(2) mass	b. No of Analyses
4-Bromophenyl Phenyl (101-55-3)			X	ND	ND					1	ug/L	kg/day			
Butyl Benzyl Phthalate (85-68-7)			X	ND	ND					1	ug/L	kg/day			
2-Chloro-naphthalene (91-58-7)			X	ND	ND					1	ug/L	kg/day			
4-Chlorophenyl Phenyl Ether (7005-72-3)		X	X	ND	ND					1	ug/L	kg/day			
Chrysene (218-01-9)		X		ND	ND					1	ug/L	kg/day			
Dibenzo (a,h) Anthracene (53-70-3)		X		ND	ND					1	ug/L	kg/day			
1,2-Dichlorobenzene (95-50-1)		X		ND	ND					1	ug/L	kg/day			
1,3-Dichlorobenzene (541-73-1)		X		ND	ND					1	ug/L	kg/day			
1,4-Dichlorobenzene (106-46-7)		X		ND	ND					1	ug/L	kg/day			
3,3'-Dichlorobenzidine (91-94-1)			X	ND	ND					1	ug/L	kg/day			
Diethyl Phthalate (84-66-2)			X	ND	ND					1	ug/L	kg/day			
Dimethyl Phthalate (131-11-3)		X		ND	ND					1	ug/L	kg/day			
Di-N-Butyl Phthalate (84-74-2)			X	ND	ND					1	ug/L	kg/day			
2,4-Dinitrotoluene (121-14-2)			X	ND	ND					1	ug/L	kg/day			
2,6-Dinitrotoluene (606-20-2)			X	ND	ND					1	ug/L	kg/day			
Di-N-Octyl Phthalate (117-84-0)			X	ND	ND					1	ug/L	kg/day			
1,2-Diphenyl-hydrazine (as Azo-benzene) (122-66-7)			X	ND	ND					1	ug/L	kg/day			
Fluoranthene (206-44-0)		X		ND	ND					1	ug/L	kg/day			
Fluorene (86-73-7)		X		2.1	0.02					1	ug/L	kg/day			
Hexachlorobenzene (118-74-1)			X	ND	ND					1	ug/L	kg/day			
Hexachlorobutadiene (87-68-3)			X	ND	ND					1	ug/L	kg/day			
Hexachlorocyclopentadiene (77-47-4)			X	ND	ND					1	ug/L	kg/day			
Hexachloroethane (67-72-1)			X	ND	ND					1	ug/L	kg/day			

Not Compulsory

Not Compulsory

NA

NA

EPA_COOK_INKPR_000393

Part C.

EPA ID. No. 110007920535

Outfall No. 002, 015

1. Pollutant	2. Mark "X" a. Testing Required	b. Believed Present	c. Believed Absent	3. Effluent a. Maximum Daily Value (1) Conc.	(2) mass	b. Maximum 30-Day Value (1) Conc.	(2) mass	c. Long Term Average Value (1) Conc.	(2) mass	d. No of Analyses	4. Units a. Conc.	b. mass	5. Intake a. Long Term Average Value (1) Conc.	(2) mass	b. No of Analyses
Indeno (1,2,3-cd) Pyrene (193-39-5)		X		ND	ND					1	ug/L	kg/day			
Isophorone (78-59-1)		X		ND	ND					1	ug/L	kg/day			
Naphthalene (91-20-3)		X		53	0.40					1	ug/L	kg/day			
Nitrobenzene (98-95-3)			X	ND	ND					1	ug/L	kg/day			
N-Nitro-sodimethylamine (62-75-9)			X	ND	ND					1	ug/L	kg/day			
N-Nitrosodi-N-Propylamine (621-64-7)			X	ND	ND					1	ug/L	kg/day			
N-Nitrosodiphenylamine (86-30-6)			X	ND	ND					1	ug/L	kg/day			
Phenanthrene (85-01-8)		X		3.4	0.03					1	ug/L	kg/day			
Pyrene (129-00-0)		X		ND	ND					1	ug/L	kg/day			
1,2,4-Trichlorobenzene (120-82-1)			X	ND	ND					1	ug/L	kg/day			
Pesticides															
Aldrin (309-00-2)			X	ND	ND					1	ug/L	kg/day			
α-BHC (319-84-6)			X	ND	ND					1	ug/L	kg/day			
β-BHC (319-85-7)			X	ND	ND					1	ug/L	kg/day			
γ-BHC (58-89-9)			X	ND	ND					1	ug/L	kg/day			
δ-BHC (319-86-8)			X	ND	ND					1	ug/L	kg/day			
Chlordane (57-74-9)			X	ND	ND					1	ug/L	kg/day			
4,4'-DDT (50-29-3)			X	ND	ND					1	ug/L	kg/day			
4,4'-DDE (72-55-9)			X	ND	ND					1	ug/L	kg/day			
4,4'-DDD (72-54-8)			X	ND	ND					1	ug/L	kg/day			
Dieldrin (60-57-1)			X	ND	ND					1	ug/L	kg/day			
α-Endosulfan (115-29-7)			X	ND	ND					1	ug/L	kg/day			
β-Endosulfan (115-29-7)			X	ND	ND					1	ug/L	kg/day			
Endosulfan Sulfate (1031-07-8)			X	ND	ND					1	ug/L	kg/day			

Not Compulsory

Not Compulsory

NA

NA

EPA_COOK_INKPR_000394

Part C.

EPA ID. No.	110007920535

Outfall No.	002, 015

1. Pollutant	2. Mark 'X' a. Testing Required	b. Believed Present	c. Believed Absent	3. Effluent a. Maximum Daily Value (1) Conc.	(2) mass	b. Maximum 30-Day Value (1) Conc.	(2) mass	c. Long Term Average Value (1) Conc.	(2) mass	d. No of Analyses	4. Units a. Conc.	b. mass	5. Intake a. Long Term Average Value (1) Conc.	(2) mass	b. No of Analyses
Endrin (72-20-8)			X	ND	ND	Not Compulsory		Not Compulsory		1	ug/L	kg/day	NA		
Endrin Aldehyde (7421-93-4)			X	ND	ND					1	ug/L	kg/day			
Heptachlor (76-44-8)			X	ND	ND					1	ug/L	kg/day			
Heptachlor Epoxide (1024-57-3)			X	ND	ND					1	ug/L	kg/day			
PCB-1242 (53469-21-9)			X	ND	ND					1	ug/L	kg/day			
PCB-1254 (11097-69-1)			X	ND	ND					1	ug/L	kg/day			
PCB-1221 (11104-28-2)			X	ND	ND					1	ug/L	kg/day			
PCB-1232 (11141-16-5)			X	ND	ND					1	ug/L	kg/day			
PCB-1248 (12672-29-6)			X	ND	ND					1	ug/L	kg/day			
PCB-1260 (11096-82-5)			X	ND	ND					1	ug/L	kg/day	NA		
PCB-1016 (12674-11-2)			X	ND	ND					1	ug/L	kg/day			
Toxaphene (8001-35-2)			X	ND	ND					1	ug/L	kg/day			

* Flow rate for intake is either total for all Cook Inlet used at facility or total of fresh water uses excluding drilling which varies widely and therefore cannot be predicted reliably. This is not outfall-specific.
** The Long Term Average mass was calculated from the facility-specific flowrates on the attached Discharge Flow Diagrams.
*** Conversions used for mass (kg/day) are as follows: 3.78 L = 1 gal; 1 g = 1000 mg; 1000g = 1 kg
ND - non-detect
NA - not applicable
NTBA - not tested - believed absent
015 Flowrate: 1,972,000 GPD

EPA_COOK_INKPR_000395

V. INTAKE AND EFFLUENT CHARACTERISTICS

EPA ID. No 110007920535

Part A. Provide the results of at least one analysis for every pollutant in this table. Complete one table for each outfall.

Outfall No. 016, 017, 018, 019

1. Pollutant	2. Effluent a. Maximum Daily Value (1) Conc.	2. Effluent a. Maximum Daily Value (2) mass	2. Effluent b. Max. 30-Day Value (if available) (1) Conc.	2. Effluent b. Max. 30-Day Value (if available) (2) mass	2. Effluent c. Long Term Avg. Value (if available) (1) Conc.	2. Effluent c. Long Term Avg. Value (if available) (2) mass	2. Effluent d. No of Analyses	3. Units (specify if blank) a.Conc.	3. Units (specify if blank) b. mass	4. Intake (optional) ** a. Long Term Average Value (1) Conc. (mg/L)	4. Intake (optional) ** a. Long Term Average Value (2) mass (kg/day)	4. Intake (optional) ** b. No of Analysis
a. Biochemical Oxygen Demand (BOD)	Not Available		Not Compulsory		Not Compulsory		0	mg/L	kg/day	ND	ND	1
b. Chemical Oxygen Demand (COD)							0	mg/L	kg/day	ND	ND	1
c. Total Organic Carbon (TOC)							0	mg/L	kg/day	ND	ND	1
d. Total Suspended Solids (TSS)							0	mg/L	kg/day	5.30	0.042	1
e. Ammonia (as N)							0	mg/L	kg/day	0.55	0.004	1
f. Flow	50,297						NA	GPD		2,100	GPD	not applicable
g. Temperature (winter)	Not Available						0	°C		not available		not available
h. Temperature (summer)							0	°C		not available		not available
i. pH							0	Std Units				

* Flow rate for intake is either total for all Cook Inlet used at facility or total of fresh water uses excluding drilling which varies widely and therefore cannot be predicted reliably. This is not outfall-specific.
** The Long Term Average mass was calculated from the facility-specific flowrates on the attached Discharge Flow Diagrams.
*** Conversions used for mass (kg/day) are as follows: 3.78 L= 1 gal; 1 g = 1000 mg; 1000g = 1 kg
**** 016, 017, 018, 019 long term average includes drilling wastes at 8400 gal/day (historical drilling activity) and 41,897 gal/day (well treatment from 2002 annual non-produced water report-Trading Bay)
ND - non-detect
NA - not applicable
NTBA - not tested - believed absent

EPA_COOK_INKPR_000396

NPDES Permit AKG 285000 Renewal

EPA ID. No. 110007920535 **Outfall No** 016, 017, 018, 019

Part B. Mark "X" in column 2-a for each pollutant you know or have reason to believe is present. Mark "X" in column 2-b for each pollutant you believe to be absent.

If you mark column 2a for any pollutant which is limited either directly, or indirectly but expressly, in an effluent limitations guideline, you must provide the results of at least one analysis for that pollutant. For other pollutants for which you mark column 2a, you must provide quantitative data or an explanation of their presence in your discharge. Complete one table for each outfall. See the instructions for additional details and requirements.

1. Pollutant	2. Mark "X"		3. Effluent							4. Units		5. Intake **		
	a. Believed Present	b. Believed Absent	a. Maximum Daily		b. Maximum 30-Day		c. Long Term		d. No of Analyses			a. Long Term		b. No of Analyses
			(1) Conc.	(2) mass	(1) Conc.	(2) mass	(1) Conc.	(2) mass		(1) Conc.	b. mass	(1) Conc.	(2) mass	
Bromide	X		Not Available		Not Compulsory		Not Compulsory		0	mg/L	kg/day	ND	ND	1
Chlorine, Total Residual		X	NTBA						0	mg/L				0
Color	X		Not Available						0	ug/L	kg/day	ND	ND	1
Fecal Coliform		X	NTBA						0	not available				0
Fluoride (16984-48-8)	X		Not Available						0	mg/L	kg/day	ND	ND	1
Nitrate-Nitrite (as N)	X								0	mg/L	kg/day	ND	ND	1
Nitrogen, Total Organic (as N)	X								0	mg/L	kg/day	Not Available		0
Oil and Grease	X								0	mg/L	kg/day	ND	ND	1
Phosphorus (as P), Total (7723-14-0)	X								0	mg/L	kg/day	0.0600	0.00048	1
Alpha, Total		X	NTBA						0	analyses in progress				1
Beta, Total		X							0					1
Radium, Total		X							0					1
Radium 226, Total	X		Not Available						0					1
Sulfate (as SO4) (14808-79-8)	X								0	mg/L	kg/day	6	0.048	1
Sulfide (as S)	X								0	mg/L	kg/day	Not Available		1
Sulfite (as SO3) (14265-45-3)	X								0	mg/L	kg/day			1
Surfactants	X								0	mg/L	kg/day	0.13	0.00103	1
Aluminum, Total (7429-90-5)		X	NTBA						0	ug/L	kg/day	54.70	0.00043	1
Barium, Total (7440-39-3)		X							0	ug/L	kg/day	43.5	0.00035	1
Boron, Total (7440-42-8)		X							0	ug/L	kg/day	19.7	0.00016	1
Cobalt, Total (7440-48-4)		X							0	ug/L	kg/day	ND	ND	1
Iron, Total (7439-89-6)		X							0	mg/L	kg/day	0.26	0.00206	1
Magnesium, Total (7439-95-4)	X		Not Available						0	mg/L	kg/day	11	0.087	1
Molybdenum, Total (7439-98-7)	X								0	ug/L	kg/day	0.447	0.000004	1
Manganese, Total (7439-96-5)		X	NTBA						0	ug/L	kg/day	688	0.00546	1
Tin, Total (7440-31-5)		X							0	ug/L	kg/day	ND	ND	1
Titanium, Total (7440-32-6)		X							0	ug/L	kg/day	5.81	0.00005	1

* Flow rate for intake is either total for all Cook Inlet used at facility or total of fresh water uses excluding drilling which varies widely and therefore cannot be predicted reliably. This is not outfall-specific.
** The Long Term Average mass was calculated from the facility-specific flowrates on the attached Discharge Flow Diagrams.
*** Conversions used for mass (kg/day) are as follows: 3.78 L= 1 gal; 1 g = 1000 mg; 1000g = 1 kg
ND - non-detect
NA - not applicable
NTBA - not tested - believed absent

EPA_COOK_INKPR_000397

Part C.

EPA ID. No. 110007920535

Outfall No. 016, 017, 018, 019

1. Pollutant	2. Mark "X" a. Testing Required	b. Believed Present	c. Believed Absent	3. Effluent a. Maximum Daily Value (1) Conc.	(2) mass	b. Maximum 30-Day Value (1) Conc.	(2) mass	c. Long Term Average Value (1) Conc.	(2) mass	d. No of Analyses	4. Units a. Conc.	b. mass	5. Intake a. Long Term Average Value (1) Conc.	(2) mass	b. No of Analyses
Metals, Cyanide, and Total Phenols															1
Antimony, Total (7440-36-0)			X	NTBA		Not Compulsory		Not Compulsory		0	ug/L	kg/day	ND	ND	1
Arsenic, Total (7440-38-2)			X							0	ug/L	kg/day	8.27	0.0001	1
Beryllium, Total (7440-41-7)			X							0	ug/L	kg/day	ND	ND	1
Cadmium, Total (7440-43-9)			X							0	ug/L	kg/day	ND	ND	1
Chromium, Total (7440-47-3)			X							0	ug/L	kg/day	0.165	0.000001	1
Copper, Total (7440-50-8)			X							0	ug/L	kg/day	0.260	0.000002	1
Lead, Total (7439-92-1)			X							0	ug/L	kg/day	ND	ND	1
Mercury, Total (7439-97-6)			X							0	ug/L	kg/day	ND	ND	1
Nickel, Total (7440-02-0)			X							0	ug/L	kg/day	1.84	0.00001	1
Selenium, Total (7782-49-2)			X							0	ug/L	kg/day	0.555	0.000004	1
Silver, Total (7440-22-4)			X							0	ug/L	kg/day	ND	ND	1
Thallium, Total (7440-28-0)			X							0	ug/L	kg/day	ND	ND	1
Zinc, Total (7440-66-6)			X							0	ug/L	kg/day	14.3	0.0001	1
Cyanide, Total (57-12-5)			X							0	mg/L	kg/day	ND	ND	1
Phenols, Total			X							0	mg/L	kg/day	0.055	0.0004	1
Dioxin															
2,3,7,8 - Tetra-chlorodibenzo-P-Dioxin (1764-01-6)			X	NTBA						0	pg/L	NA	ND	ND	1
Volatile Compounds										0					
Acrolein (107-02-8)			X	NTBA						0	ug/L	kg/day	ND	ND	1
Acrylonitrile (107-13-1)		X		Not Available						0	ug/L	kg/day	ND	ND	1
Benzene (71-43-2)		X								0	ug/L	kg/day	ND	ND	1
Bis(Chloromethyl) Ether (542-88-1)			X	NTBA						0	ug/L	kg/day	Not Available		0
Bromoform (75-25-2)			X							0	ug/L	kg/day	ND	ND	1
Carbon Tetrachloride (56-23-5)			X							0	ug/L	kg/day	ND	ND	1
Chlorobenzene (108-90-7)			X							0	ug/L	kg/day	ND	ND	1
Chlorodibromomethane (124-48-1)			X							0	ug/L	kg/day	ND	ND	1
Chloroethane (75-00-3)			X							0	ug/L	kg/day	ND	ND	1
2-Chloroethylvinyl Ether (110-75-8)			X							0	ug/L	kg/day	ND	ND	1
Chloroform (67-66-3)			X							0	ug/L	kg/day	ND	ND	1
Dichlorobromomethane (75-27-4)			X							0	ug/L	kg/day	ND	ND	1
Dichlorodifluoromethane (75-71-8)			X							0	ug/L	kg/day	ND	ND	1

EPA_COOK_INKPR_000398

Part C.

EPA ID. No.	110007920535

Outfall No.	016, 017, 018, 019

1. Pollutant	2. Mark "X" a. Testing Required	b. Believed Present	c. Believed Absent	3. Effluent a. Maximum Daily Value (1) Conc.	(2) mass	b. Maximum 30-Day Value (1) Conc.	(2) mass	c. Long Term Average Value (1) Conc.	(2) mass	d. No of Analyses	4. Units a. Conc.	b. mass	5. Intake a. Long Term Average Value (1) Conc.	(2) mass	b. No of Analyses
1,1-Dichloroethane (75-34-3)			X	NTBA		Not Compulsory		Not Compulsory		0	ug/L	kg/day	ND	ND	1
1,2-Dichloroethane (107-06-2)			X							0	ug/L	kg/day	ND	ND	1
1,1-Dichloroethylene (75-35-4)			X							0	ug/L	kg/day	ND	ND	1
1,2-Dichloropropane (78-87-5)			X							0	ug/L	kg/day	ND	ND	1
1,3-Dichloropropylene (542-75-6)			X							0	ug/L	kg/day	Not Available		0
Ethylbenzene (100-41-4)		X		Not Available						0	ug/L	kg/day	ND	ND	1
Methyl Bromide (74-83-9)			X	NTBA						0	ug/L	kg/day	ND	ND	1
Methyl Chloride (74-87-3)			X							0	ug/L	kg/day	ND	ND	1
Methylene Chloride (75-09-2)			X							0	ug/L	kg/day	ND	ND	1
1,1,2,2-Tetrachloroethane (79-34-5)			X							0	ug/L	kg/day	ND	ND	1
Tetrachloroethylene (127-18-4)			X							0	ug/L	kg/day	ND	ND	1
Toluene (106-88-3)		X		Not Available						0	ug/L	kg/day	ND	ND	1
1,2-Trans-Dichloroethylene (156-60-5)			X	NTBA						0	ug/L	kg/day	ND	ND	1
1,1,1-Trichloroethane (71-55-6)			X							0	ug/L	kg/day	ND	ND	1
1,1,2-Trichloroethane (79-00-5)			X							0	ug/L	kg/day	ND	ND	1
Trichloroethylene (79-01-6)			X							0	ug/L	kg/day	ND	ND	1
Trichlorofluoromethane (75-69-4)			X							0	ug/L	kg/day	ND	ND	1
Vinyl Chloride (75-01-4)			X							0	ug/L	kg/day	ND	ND	1
Acid Compounds															
2-Chlorophenol (95-57-8)			X	NTBA						0	ug/L	kg/day	ND	ND	1
2,4-Dichlorophenol (120-83-2)			X							0	ug/L	kg/day	ND	ND	1
2,4-Dimethylephenol (105-67-9)			X							0	ug/L	kg/day	ND	ND	1

EPA_COOK_INKPR_000399

Part C.

EPA ID. No.	110007920535

Outfall No.	016, 017, 018, 019

1. Pollutant	2. Mark 'X' a. Testing Required	b. Believed Present	c. Believed Absent	3. Effluent a. Maximum Daily Value (1) Conc.	(2) mass	b. Maximum 30-Day Value (1) Conc.	(2) mass	c. Long Term Average Value (1) Conc.	(2) mass	d. No of Analyses	4. Units a. Conc.	b. mass	5. Intake a. Long Term Average Value (1) Conc.	(2) mass	b. No of Analyses
4,6-Dinitro-O-Cresol (534-52-1)			X	NTBA		Not Compulsory		Not Compulsory		0	ug/L	kg/day	ND	ND	1
2,4-Dinitrophenol (51-28-5)			X							0	ug/L	kg/day	ND	ND	1
2-Nitrophenol (88-75-5)			X							0	ug/L	kg/day	ND	ND	1
4-Nitrophenol (100-02-7)			X							0	ug/L	kg/day	ND	ND	1
P-Chloro-M-Cresol (59-50-7)			X							0	ug/L	kg/day	ND	ND	1
Pentachlorophenol (87-86-5)			X							0	ug/L	kg/day	ND	ND	1
Phenol (108-95-2)		X		Not Available						0	ug/L	kg/day	ND	ND	1
2,4,6-Trichlorophenol			X	NTBA						0	ug/L	kg/day	ND	ND	1
Base/Neutral Compounds										0					
Acenaphthene (83-32-9)		X		Not Available		Not Compulsory		Not Compulsory		0	ug/L	kg/day	ND	ND	1
Acenaphtylene (208-96-8)		X								0	ug/L	kg/day	ND	ND	1
Anthracene (120-12-7)		X								0	ug/L	kg/day	ND	ND	1
Benzidine (92-87-5)		X								0	ug/L	kg/day	ND	ND	1
Benzo (a) Anthracene (56-55-3)		X								0	ug/L	kg/day	ND	ND	1
Benzo (a) Pyrene (50-32-8)		X								0	ug/L	kg/day	ND	ND	1
3,4-Benzo-fluoranthene (205-99-2)		X								0	ug/L	kg/day	ND	ND	1
Benzo (ghi) Perylene (191-24-2)		X								0	ug/L	kg/day	ND	ND	1
Benzo (k) Fluoranthene (207-08-9)		X								0	ug/L	kg/day	ND	ND	1
Bis (2-Chloroethoxy) Methane (111-91-1)			X	NTBA						0	ug/L	kg/day	ND	ND	1
Bis (2-Chloroethyl) Ether (111-44-4)			X							0	ug/L	kg/day	ND	ND	1
Bis (2-Chloroisopropyl) Ether (102-60-1)			X							0	ug/L	kg/day	ND	ND	1
Bis (2-Ethyl-hexyl) Phthalate (117-81-7)			X							0	ug/L	kg/day	ND	ND	1
4-Bromophenyl Phenyl (101-55-3)			X							0	ug/L	kg/day	ND	ND	1

EPA_COOK_INKPR_000400

Part C.

EPA ID. No.	110007920535

Outfall No.	016, 017, 018, 019

1. Pollutant	2. Mark 'X'			3. Effluent							4. Units		5. Intake		
	a. Testing Required	b. Believed Present	c. Believed Absent	a. Maximum Daily Value		b. Maximum 30-Day Value		c. Long Term Average Value		d. No of Analyses	a. Conc.	b. mass	a. Long Term Average Value		b. No of Analyses
				(1) Conc.	(2) mass	(1) Conc.	(2) mass	(1) Conc.	(2) mass				(1) Conc.	(2) mass	
Butyl Benzyl Phthalate (85-68-7)			X	NTBA		Not Compulsory		Not Compulsory		0	ug/L	kg/day	ND	ND	1
2-Chloro-naphthalene (91-58-7)			X							0	ug/L	kg/day	ND	ND	1
4-Chlorophenyl Phenyl Ether (7005-72-3)			X							0	ug/L	kg/day	ND	ND	1
Chrysene (218-01-9)		X		Not Available						0	ug/L	kg/day	ND	ND	1
Dibenzo (a,h) Anthracene (53-70-3)		X								0	ug/L	kg/day	ND	ND	1
1,2-Dichlorobenzene (95-50-1)			X	NTBA						0	ug/L	kg/day	ND	ND	1
1,3-Dichlorobenzene (541-73-1)			X							0	ug/L	kg/day	ND	ND	1
1,4-Dichlorobenzene (106-46-7)			X							0	ug/L	kg/day	ND	ND	1
3,3'-Dichlorobenzidine (91-94-1)			X							0	ug/L	kg/day	ND	ND	1
Diethyl Phthalate (84-66-2)			X							0	ug/L	kg/day	ND	ND	1
Dimethyl Phthalate (131-11-3)			X							0	ug/L	kg/day	ND	ND	1
Di-N-Butyl Phthalate (84-74-2)			X							0	ug/L	kg/day	1.8	0.00001	1
2,4-Dinitrotoluene (121-14-2)			X							0	ug/L	kg/day	ND	ND	1
2,6-Dinitrotoluene (606-20-2)			X							0	ug/L	kg/day	ND	ND	1
Di-N-Octyl Phthalate (117-84-0)			X							0	ug/L	kg/day	ND	ND	1
1,2-Diphenyl-hydrazine (as Azo-benzene) (122-66-7)			X							0	ug/L	kg/day	ND	ND	1
Fluoranthene (206-44-0)		X		Not Available						0	ug/L	kg/day	ND	ND	1
Fluorene (86-73-7)		X								0	ug/L	kg/day	ND	ND	1
Hexachlorobenzene (118-74-1)			X	NTBA						0	ug/L	kg/day	ND	ND	1
Hexachlorobutadiene (87-68-3)			X							0	ug/L	kg/day	ND	ND	1
Hexachlorocyclopentadiene (77-47-4)			X							0	ug/L	kg/day	ND	ND	1
Hexachloroethane (67-72-1)			X	NTBA						0	ug/L	kg/day	ND	ND	1

EPA_COOK_INKPR_000401

Part C.

EPA ID. No. 110007920535

Outfall No. 016, 017, 018, 019

1. Pollutant	2. Mark "X" a. Testing Required	b. Believed Present	c. Believed Absent	3. Effluent a. Maximum Daily Value (1) Conc.	(2) mass	b. Maximum 30-Day Value (1) Conc.	(2) mass	c. Long Term Average Value (1) Conc.	(2) mass	d. No of Analyses	4. Units a. Conc.	b. mass	5. Intake a. Long Term Average Value (1) Conc.	(2) mass	b. No of Analyses
Indeno (1,2,3-cd) Pyrene (193-39-5)		X		Not Available		Not Compulsory		Not Compulsory		0	ug/L	kg/day	ND	ND	1
Isophorone (78-59-1)		X								0	ug/L	kg/day	ND	ND	1
Naphthalene (91-20-3)		X								0	ug/L	kg/day	ND	ND	1
Nitrobenzene (98-95-3)			X[1]	NTBA						0	ug/L	kg/day	ND	ND	1
N-Nitro-sodimethylamine (62-75-9)			X							0	ug/L	kg/day	ND	ND	1
N-Nitrosodi-N-Propylamine (621-64-7)			X							0	ug/L	kg/day	ND	ND	1
N-Nitrosodiphenylamine (86-30-6)			X							0	ug/L	kg/day	ND	ND	1
Phenanthrene (85-01-8)		X		Not Available						0	ug/L	kg/day	ND	ND	1
Pyrene (129-00-0)		X								0	ug/L	kg/day	ND	ND	1
1,2,4-Trichlorobenzene (120-02-1)			X	NTBA						0	ug/L	kg/day	ND	ND	1
Pesticides															
Aldrin (309-00-2)			X	NTBA		Not Compulsory		Not Compulsory		0	ug/L	kg/day	ND	ND	1
α-BHC (319-84-6)			X							0	ug/L	kg/day	ND	ND	1
β-BHC (319-85-7)			X							0	ug/L	kg/day	ND	ND	1
γ-BHC (58-89-9)			X							0	ug/L	kg/day	ND	ND	1
δ-BHC (319-86-8)			X							0	ug/L	kg/day	ND	ND	1
Chlordane (57-74-9)			X							0	ug/L	kg/day	ND	ND	1
4,4'-DDT (50-29-3)			X							0	ug/L	kg/day	ND	ND	1
4,4'-DDE (72-55-9)			X							0	ug/L	kg/day	ND	ND	1
4,4'-DDD (72-54-8)			X							0	ug/L	kg/day	ND	ND	1
Dieldrin (60-57-1)			X							0	ug/L	kg/day	ND	ND	1
α-Endosulfan (115-29-7)			X							0	ug/L	kg/day	ND	ND	1
β-Endosulfan (115-29-7)			X							0	ug/L	kg/day	ND	ND	1
Endosulfan Sulfate (1031-07-8)			X							0	ug/L	kg/day	ND	ND	1

EPA_COOK_INKPR_000402

Part C.

EPA ID. No.	110007920535

Outfall No.	016, 017, 018, 019

1. Pollutant	2. Mark 'X'			3. Effluent							4. Units		5. Intake		
	a. Testing Required	b. Believed Present	c. Believed Absent	a. Maximum Daily Value		b. Maximum 30-Day Value		c. Long Term Average Value		d. No of Analyses	a. Conc.	b. mass	a. Long Term Average Value		b. No of Analyses
				(1) Conc.	(2) mass	(1) Conc.	(2) mass	(1) Conc.	(2) mass				(1) Conc.	(2) mass	
Endrin (72-20-8)			X	NTBA		Not Compulsory		Not Compulsory		0	ug/L	kg/day	ND	ND	1
Endrin Aldehyde (7421-93-4)			X							0	ug/L	kg/day	ND	ND	1
Heptachlor (76-44-8)			X							0	ug/L	kg/day	ND	ND	1
Heptachlor Epoxide (1024-57-3)			X							0	ug/L	kg/day	ND	ND	1
PCB-1242 (53469-21-9)			X							0	ug/L	kg/day	ND	ND	1
PCB-1254 (11097-69-1)			X							0	ug/L	kg/day	ND	ND	1
PCB-1221 (11104-28-2)			X							0	ug/L	kg/day	ND	ND	1
PCB-1232 (11141-16-5)			X							0	ug/L	kg/day	ND	ND	1
PCB-1248 (12672-29-6)			X							0	ug/L	kg/day	ND	ND	1
PCB-1260 (11096-82-5)			X							0	ug/L	kg/day	ND	ND	1
PCB-1016 (12674-11-2)			X							0	ug/L	kg/day	ND	ND	1
Toxaphene (8001-35-2)			X							0	ug/L	kg/day	ND	ND	1

* Flow rate for intake is either total for all Cook Inlet used at facility or total of fresh water uses excluding drilling which varies widely and therefore cannot be predicted reliably. This is not outfall-specific.
** The Long Term Average mass was calculated from the facility-specific flowrates on the attached Discharge Flow Diagrams.
*** Conversions used for mass (kg/day) are as follows: 3.78 L= 1 gal; 1 g = 1000 mg; 1000g = 1 kg
ND - non-detect
NA - not applicable
NTBA - not tested - believed absent

EPA_COOK_INKPR_000403