TABLE 3-1
SUMMARY OF ACTUAL AIR EMISSION RATES

GEORGE WEST CENTRAL FACILITY 1 January 1st 2013 through January 1st 2014

BURLINGTON RESOURCES OIL & GAS COMPANY LP

			Proposed Allowable Hourly and Annual Emission Rates															
			VOC		NO_X		CO		$PM/PM_{10}/PM_{2.5}$		SO_2		H_2S		CH_2O		Benzene	
EPN	**FIN**	**Description**	**(lb/hr)**	**(T/yr)**	**(lb/hr)**	**(T/yr)**	**(lb/hr)**	**(T/yr)**	**(lb/hr)**	**(T/yr)**	**(lb/hr)**	**(T/yr)**	**(lb/hr)**	**(T/yr)**	**(lb/hr)**	**(T/yr)**	**(lb/hr)**	**(T/yr)**
Normal Operations																		
COMP-01	COMP-01	Compressor Engine 1	0.46	0.95	0.76	1.57	0.27	0.56	0.05	0.10	0.01	0.02	--	--	0.27	0.56	0.002	0.004
FUG	FUG	Site Fugitives	0.81	3.62	--	--	--	--	--	--	--	--	0.001	0.004	--	--	0.01	0.04
REB-1	REB-1	Glycol Reboiler No. 1	0.003	0.01	0.05	0.22	0.04	0.18	0.004	0.02	0.001	0.004	--	--	0.00004	0.0002	0.000001	0.000004
REB-1	DEHY-SV	Glycol Dehy Still Vent	0.06	0.25	--	--	--	--	--	--	--	--	0.001	0.002	--	--	0.001	0.003
FL-1	TK-01 TK-02	Controlled Condensate Tank Emissions	0.39	0.39	--	--	--	--	--	--	--	--	0.00002	0.0001	--	--	0.005	0.001
FL-1	TK-03	Controlled Slop Tank Emissions	0.31	0.05	--	--	--	--	--	--	--	--	--	--	--	--	0.005	0.001
FL-1	TK-04	Controlled PW Tank Emissions	0.07	0.29	--	--	--	--	--	--	--	--	0.00002	0.0001	--	--	0.0002	0.001
FL-1	TRUCK1	Controlled Condensate Truck Loading	2.74	0.05	--	--	--	--	--	--	--	--	--	--	--	--	0.04	0.001
FL-1	TRUCK2	Controlled Produced Water Truck Loading	0.03	0.01	--	--	--	--	--	--	--	--	--	--	--	--	0.0002	0.0001
FL-1	FL-1	Flare Combustion (normal operations waste gas, assist, and pilot)	0.01	0.04	0.97	2.72	1.96	5.46	--	--	0.11	0.46	0.0001	0.0003	--	--	0.000003	0.00001
TK-AF	TK-AF	Antifreeze Liquid Storage	0.50	0.01	--	--	--	--	--	--	--	--	--	--	--	--	--	--
TK-LO	TK-LO	Lube Oil Liquid Storage	0.0002	0.000002	--	--	--	--	--	--	--	--	--	--	--	--	--	--
TK-SCAV	TK-SCAV	H_2S Scavenger Liquid Storage	<0.01	<0.01	--	--	--	--	--	--	--	--	--	--	--	--	--	--
Scheduled Maintenance, Startup and Shutdown Events																		
COMP-01-SV	COMP-01-SV	Compressor Engine 1 Starter Vent	29.40	0.24	--	--	--	--	--	--	--	--	0.06	0.001	--	--	0.05	0.0004
FL-1-SMSS	COMP-01-BD	Compressor Engine 1 Blowdown	0.69	0.01	--	--	--	--	--	--	--	--	0.001	0.00002	--	--	0.001	0.00001
FL-1-SMSS	FL-1-SMSS	Flare Combustion (Blowdowns waste gas)	--	--	0.22	0.002	0.45	0.004	--	--	0.13	0.002	0.001	0.00002	--	--	--	--
TK-01 TK-02	TK-01 TK-02	Uncontrolled Condensate Tank Standing Loss Emissions (during flare downtime)	0.00	0.00	--	--	--	--	--	--	--	--	--	--	--	--	0.00	0.00
TK-03	TK-03	Uncontrolled Slop Tank Standing Loss Emissions (during flare downtime)	0.00	0.00	--	--	--	--	--	--	--	--	--	--	--	--	0.00	0.00
TK-04	TK-04	Uncontrolled PW Tank Standing Loss Emissions (during flare downtime)	0.002	0.0001	--	--	--	--	--	--	--	--	--	--	--	--	0.00002	0.000001
		Site-Wide Emissions:	**35.48**	**5.92**	**2.00**	**4.51**	**2.72**	**6.20**	**0.05**	**0.12**	**0.25**	**0.49**	**0.06**	**0.01**	**0.27**	**0.56**	**0.11**	**0.05**

CALCULATION OF COMPRESSOR ENGINE POTENTIAL TO EMIT

GEORGE WEST CENTRAL FACILITY 1 January 1st 2013 through January 1st 2014

BURLINGTON RESOURCES OIL & GAS COMPANY LP

			Engine Ratings			Annual Operating					Potential to Emit (PTE)	
EPN	FIN	Description	Type	Rated Horsepower (hp)	Fuel Consumption (Btu/hp-hr)	Hours (hr/yr)	Pollutant	Emission Factors [a]	Units	Hourly [a] (lb/hr)	Annual [b] (T/yr)
COMP-01	COMP-01	Compressor Engine 1	Caterpillar G3508TALE	690	7,395	4,132	CO	0.18	g/hp-hr	0.27	0.56
			Lean Burn				NO_X	0.50	g/hp-hr	0.76	1.57
			Catalyst				$PM/PM_{10}/PM_{2.5}$	0.0099871	lb/MMBtu	0.05	0.10
			AFR Controller				SO_2	10	ppm S	0.01	0.02
							VOC	0.30	g/hp-hr	0.46	0.95
							CH_2O	0.0528	lb/MMBtu	0.27	0.56
							Benzene[c]	0.001	g/hp-hr	0.002	0.004

[a] The Emission Factors for engines COMP-01 for CO, NO_X and VOC are based on vendor data and conservatively represented. The VOC emission factor includes the CH_2O emission factor from AP-42 because the vendor provided information does not include formaldehyde. An example calculation for hourly CO emissions for EPN COMP-01 follows:

CO (lb/hr) = (Rated Horsepower, hp)*(Emission Factor, g/hp-hr)*(1 lb/453.59 g)

CO (lb/hr) = (690 hp)*(0.18 g/hp-hr)*(1 lb/453.59 g)

= 0.27 lb/hr CO

The PM/PM_{10} and CH_20 Emission Factors for EPN COMP-01 and COMP-02 are from AP-42 Chapter 3. An example calculation for hourly PM emissions for EPN COMP-01 follows:

PM (lb/hr) = (Fuel Consumption, Btu/hp-hr)*(Rated Horsepower, hp)*(1 MMBtu/10^6 Btu)*(Emission Factor, lb/MMBtu)

PM (lb/hr) = (7,395 Btu/hp-hr)*(690 hp)*(1 MMBtu/10^6 Btu)*(0.009987 lb/MMBtu)

= 0.05 lb/hr PM

A material balance approach was used to estimate the SO_2 emission rates using the maximum sulfur concentration in the natural gas. H_2S Scavenger liquids are used to bring the fuel gas H_2S concentration below 10 ppm S. An example calculation for hourly SO_2 emissions for EPN COMP-01 follows:

SO_2 (lb/hr) = (Fuel Consumption, Btu/hp-hr)*(Rated Horsepower, hp)/(Lower Fuel Heating Value, Btu/scf)*(Sulfur Content, ppmv)*(1 lb-mol/379 scf)*(32.06 lb S/lb-mol)*(64.06 lb SO_2/32.06 lb S)

SO_2 (lb/hr) = (7,418 Btu/hp-hr)*(276 hp)/(1,235 Btu/scf)*(10 scf S/10^6 scf gas)*(1 lb-mol/379 scf)*(32.06 lb S/lb-mol)*(64.06 lb SO2/32.06 lb S)

= 0.01 lb/hr SO_2

[b] An example calculation for annual CO emissions for EPN COMP-01 follows:

CO (T/yr) = (Hourly PTE, lb/hr)*(Annual Operating Hours, hr/yr)*(1 T/2,000 lb)

CO (T/yr) = (0.27 lb/hr)*(4,132 hr/yr)*(1 T/2,000 lb)

= 0.56 T/yr CO

[c] An example calculation for benzene emission factor (EF) for EPN COMP-01 follows:

Benzene EF (g/hp-hr) = (VOC emission factor, g/hp-hr)*(Benzene AP-42 Emission Factor, lb/MMBtu) / (VOC AP-42 Emission Factor, lb/MMBtu)

Benzene EF (g/hp-hr) = (0.30) * (0.00044 lb/MMBtu) / (0.118 lb/MMBtu)

= 0.001 g/hp-hr

CALCULATION OF SITE FUGITIVES (FIN FUG) POTENTIAL TO EMIT

GEORGE WEST CENTRAL FACILITY 1 January 1st 2013 through January 1st 2014

BURLINGTON RESOURCES OIL & GAS COMPANY LP

Component	Number of Components	Emission Factors [a] (lb/hr-component)	Annual Operating Hours (hr/yr)	Maximum VOC[a] (wt%)	Maximum Benzene[a] (wt%)	Maximum H_2S (wt%)	Reduction Credit [a] (%)	PTE VOC Hourly [b] (lb/hr)	PTE VOC Annual [c] (T/yr)	PTE Benzene Hourly [b] (lb/hr)	PTE Benzene Annual [c] (T/yr)	PTE H_2S Hourly [b] (lb/hr)	PTE H_2S Annual [c] (T/yr)
Valves													
Gas Streams	75	0.00992	8,760	45%	0.16%	0.09%	0%	0.33	1.47	0.001	0.01	0.001	0.003
Light Oil	54	0.0055	8,760	100%	1.64%	--	0%	0.30	1.30	0.005	0.02	--	--
Water/Light Oil	55	0.000216	8,760	--	0.80%	--	0%	0.01	0.05	0.0001	0.0004	--	--
Pumps seals													
Water/Light Oil	3	0.000052	8,760	--	0.80%	--	0%	0.0002	0.001	0.000001	0.000005	--	--
Compressors seals													
Gas Streams	4	0.0194	8,760	45%	0.16%	0.09%	0%	0.03	0.15	0.0001	0.001	0.0001	0.0003
Flanges													
Gas Streams	88	0.00086	8,760	45%	0.16%	0.09%	0%	0.03	0.15	0.0001	0.001	0.0001	0.0003
Light Oil	29	0.000243	8,760	100%	1.64%	--	0%	0.01	0.03	0.0001	0.0005	--	--
Water/Light Oil	10	0.000006	8,760	--	0.80%	--	0%	0.0001	0.0003	0.0000005	0.000002	--	--
Connectors													
Gas Streams	123	0.00044	8,760	45%	0.16%	0.09%	0%	0.02	0.11	0.0001	0.0004	0.00005	0.0002
Light Oil	113	0.000463	8,760	100%	1.64%	--	0%	0.05	0.23	0.001	0.004	--	--
Water/Light Oil	124	0.000243	8,760	--	0.80%	--	0%	0.03	0.13	0.0002	0.001	--	--
							TOTAL:	**0.81**	**3.62**	**0.01**	**0.04**	**0.001**	**0.004**

[a] Fugitive Emission Factors and Reduction Credits are per TCEQ Technical Guidance Document for Equipment Leak Fugitives, dated October 2000. The emission factors are for total hydrocarbon, except for the emission factors associated with Water/Light Oil. As indicated on page 6 of 55 in the mentioned Guidance document, these factors are based off of a known stream constituency of 50%-99% water, and remainder VOC. Therefore, applying a VOC wt % would be double counting for the reduction due to water.

[b] Hourly VOC emission rates are calculated as follows:

(75 components) * (0.00992 lb/hr-component) * (45% VOC) * (100% - 0% reduction credit) = 0.33 lb/hr

[c] Annual VOC emission rates are calculated as follows:

(75 components) * (0.00992 lb/hr-component) * (8,760 hr/yr) * (45% VOC) * (100% - 0% reduction credit) / (2,000 lb/T) = 1.47 T/yr

CALCULATION OF HEATERS POTENTIAL TO EMIT

GEORGE WEST CENTRAL FACILITY 1 January 1st 2013 through January 1st 2014

BURLINGTON RESOURCES OIL & GAS COMPANY LP

EPN	FIN	Description	Rated Duty (MMBtu/hr)	Operating Annual (hr/yr)	Pollutant	Emission Factor [a]	Unit	Potential To Emit[b] Hourly (lb/hr)	Potential To Emit[b] Annual (T/yr)
REB-1	REB-1	Glycol Reboiler No. 1	0.50	8,760	CO	84	lb/MMscf	0.04	0.18
					NO_X	100	lb/MMscf	0.05	0.22
					$PM/PM_{10}/PM_{2.5}$ [d]	7.6	lb/MMscf	0.004	0.02
					SO_2 [c]	10.0	ppm H2S	0.001	0.004
					VOC	5.5	lb/MMscf	0.003	0.01
					Benzene	0.0021	lb/MMscf	0.000001	0.000004
					CH_2O	0.075	lb/MMscf	0.00004	0.0002

[a] Unless otherwise noted, emission factors are from AP-42 Tables 1.4-1, 1.4-2, and 1.4-3 (dated 7/98) and are based on a fuel HHV of 1020 Btu/scf.

[b] Example calculations for EPN REB-1 follows:

CO (lb/hr) = (Rated Duty, MMBtu/hr)/(Higher Heating Value, Btu/scf)*(Emission Factor, lb/MMscf)

CO (lb/hr) = (0.50 MMBtu/hr)*) / (1020 Btu/scf) * (84 lb/MMscf)

= 0.04 lb/hr CO

CO (T/yr) = (Hourly Emissions, lb/hr)*(Annual Operating Hours, hr/yr)/(2,000 lb/T)

CO (T/yr) = (0.04 lb/hr)*(8,760 hr/yr)/(2,000 lb/T)

= 0.18 T/yr CO

[c] A material balance approach was used to estimate the SO_2 emission rates using the maximum sulfur concentration in the natural gas. H_2S Scavenger liquids are used to bring the fuel gas H_2S concentration below 10 ppm S.

SO_2 (lb/hr) = (Rated Duty, MMBtu/hr)/(Fuel Heating Value, Btu/scf)*(Sulfure, scf H2S/MMscf gas)*(1 lb-mol/379 scf)*(64.06 lb SO_2/lb-mol S)

SO_2 (lb/hr) = (0.50 MMBtu/hr)/(1544 Btu/scf)*(10.0 scf S/MMscf gas)*(1 lb-mol/379 scf)*(34.065 lb H2S/lb-mol)*(64.06 lb SO2/34.065 lb H2S)

= 0.001 lb/hr SO_2

[d] All PM is assumed to be less than 2.5 microns in diameter per footnote "c" of AP-42 Table 1.4-2.

GLYCOL DEHYDRATOR STILL VENT POTENTIAL TO EMIT

GEORGE WEST CENTRAL FACILITY 1 January 1st 2013 through January 1st 2014

BURLINGTON RESOURCES OIL & GAS COMPANY LP

	Potential to Emit FIN DEHY-SV/EPN REB-1	
Component	**Hourly (lb/hr)**	**Annual (T/yr)**
Hydrogen Sulfide	0.0005	0.0016
Methane	0.0378	0.1656
Ethane	0.0286	0.1251
Propane	0.0277	0.1212
Isobutane	0.0072	0.0320
n-Butane	0.0121	0.0532
Isopentane	0.0034	0.0148
n-Pentane	0.0026	0.0115
n-Hexane	0.0006	0.0024
Cyclohexane	0.0003	0.0012
Other Hexanes	0.0012	0.0050
Heptanes	0.0004	0.0015
Benzene	0.0006	0.0028
Toluene	0.0007	0.0030
Ethylbenzene	0.0002	0.0002
Xylenes	0.0003	0.0010
C8+ Heavies	0.0002	0.0007
Total VOC	**0.0575**	**0.2505**

Note: The emissions from the pressurized flash tank and the condenser vent are routed to the reboiler, which will be running continuously with a 98% combustion efficiency. In the event that the reboiler can not handle the total volume of recycled gas to it, the remainder will be re-directed to flare with a 98% combustion efficiency. Accounting for both the max heater combustion and the max waste gas flare combustions is a built in conservative assumption such that both would not be running at max at the same time.

GRI-GLYCalc VERSION 4.0 - SUMMARY OF INPUT VALUES

Case Name: Sugarloaf CF
File Name: T:\ConocoPhillips - 507\507-104 EPA 114 Response\14 George West CF 1\Geroge West D
Date: August 06, 2014

DESCRIPTION:

Description: Burlington Resources Dehy Unit

Annual Hours of Operation: 8760.0 hours/yr

WET GAS:

Temperature: 100.00 deg. F
Pressure: 1000.00 psig
Wet Gas Water Content: Saturated

Component	Conc. (vol %)
Carbon Dioxide	2.1520
Hydrogen Sulfide	0.0500
Nitrogen	0.0690
Methane	55.2230
Ethane	20.6690
Propane	12.9830
Isobutane	2.5780
n-Butane	4.0950
Isopentane	0.9690
n-Pentane	0.7180
n-Hexane	0.1210
Cyclohexane	0.0350
Other Hexanes	0.2710
Heptanes	0.0610
Benzene	0.0160
Toluene	0.0180
Ethylbenzene	0.0010
Xylenes	0.0060
C8+ Heavies	0.0150

DRY GAS:

Flow Rate: 6.0 MMSCF/day
Water Content: 7.0 lbs. H2O/MMSCF

LEAN GLYCOL:

Glycol Type: TEG
Water Content: 1.0 wt% H2O
Recirculation Ratio: 0.6 gal/lb H2O

PUMP:

Glycol Pump Type: Gas Injection
Gas Injection Pump Volume Ratio: 0.080 acfm gas/gpm glycol

FLASH TANK:

Flash Control: Combustion device
Flash Control Efficiency: 98.00 %
Temperature: 180.0 deg. F
Pressure: 35.0 psig

REGENERATOR OVERHEADS CONTROL DEVICE:

Control Device: Condenser
Temperature: 120.0 deg. F
Pressure: 14.0 psia

Control Device: Combustion Device
Destruction Efficiency: 98.0 %
Excess Oxygen: 0.0 %
Ambient Air Temperature: 80.0 deg. F

GRI-GLYCalc VERSION 4.0 - AGGREGATE CALCULATIONS REPORT

Case Name: Sugarloaf CF
File Name: T:\ConocoPhillips - 507\507-104 EPA 114 Response\14 George West CF 1\Geroge West
Date: August 06, 2014

DESCRIPTION:

Description: Burlington Resources Dehy Unit

Annual Hours of Operation: 8760.0 hours/yr

EMISSIONS REPORTS:

CONTROLLED REGENERATOR EMISSIONS

Component	lbs/hr	lbs/day	tons/yr
Hydrogen Sulfide	<0.0001	0.001	0.0001
Methane	0.0001	0.002	0.0004
Ethane	0.0002	0.004	0.0008
Propane	0.0005	0.011	0.0021
Isobutane	0.0001	0.004	0.0007
n-Butane	0.0003	0.007	0.0013
Isopentane	0.0001	0.002	0.0003
n-Pentane	0.0001	0.002	0.0003
n-Hexane	<0.0001	<0.001	0.0001
Cyclohexane	<0.0001	<0.001	0.0001
Other Hexanes	<0.0001	0.001	0.0001
Heptanes	<0.0001	<0.001	0.0001
Benzene	0.0002	0.005	0.0010
Toluene	0.0002	0.005	0.0009
Ethylbenzene	<0.0001	<0.001	<0.0001
Xylenes	0.0001	0.001	0.0003
C8+ Heavies	<0.0001	<0.001	<0.0001
Total Emissions	0.0020	0.047	0.0086
Total Hydrocarbon Emissions	0.0019	0.046	0.0085
Total VOC Emissions	0.0017	0.040	0.0073
Total HAP Emissions	0.0005	0.013	0.0023
Total BTEX Emissions	0.0005	0.012	0.0022

UNCONTROLLED REGENERATOR EMISSIONS

Component	lbs/hr	lbs/day	tons/yr
Hydrogen Sulfide	0.0021	0.051	0.0093
Methane	0.0050	0.119	0.0218
Ethane	0.0089	0.214	0.0391
Propane	0.0240	0.577	0.1052
Isobutane	0.0077	0.186	0.0339
n-Butane	0.0160	0.383	0.0699
Isopentane	0.0043	0.103	0.0187
n-Pentane	0.0039	0.094	0.0171
n-Hexane	0.0012	0.028	0.0051
Cyclohexane	0.0015	0.036	0.0065
Other Hexanes	0.0019	0.046	0.0084
Heptanes	0.0011	0.027	0.0048
Benzene	0.0225	0.540	0.0986
Toluene	0.0334	0.802	0.1464
Ethylbenzene	0.0024	0.058	0.0106
Xylenes	0.0235	0.565	0.1031
C8+ Heavies	0.0003	0.007	0.0013
Total Emissions	0.1597	3.834	0.6997
Total Hydrocarbon Emissions	0.1576	3.783	0.6904
Total VOC Emissions	0.1437	3.450	0.6296
Total HAP Emissions	0.0830	1.993	0.3637
Total BTEX Emissions	0.0819	1.965	0.3586

FLASH GAS EMISSIONS

Component	lbs/hr	lbs/day	tons/yr
Hydrogen Sulfide	0.0004	0.008	0.0015
Methane	0.0377	0.905	0.1652
Ethane	0.0284	0.681	0.1243
Propane	0.0272	0.653	0.1191
Isobutane	0.0071	0.171	0.0313
n-Butane	0.0118	0.284	0.0519
Isopentane	0.0033	0.080	0.0145
n-Pentane	0.0025	0.061	0.0112
n-Hexane	0.0005	0.012	0.0023
Cyclohexane	0.0002	0.006	0.0011
Other Hexanes	0.0011	0.027	0.0049
Heptanes	0.0003	0.008	0.0014
Benzene	0.0004	0.010	0.0018
Toluene	0.0005	0.012	0.0021
Ethylbenzene	<0.0001	0.001	0.0001
Xylenes	0.0002	0.004	0.0007
C8+ Heavies	0.0001	0.003	0.0006
Total Emissions	0.1219	2.926	0.5340
Total Hydrocarbon Emissions	0.1216	2.917	0.5324
Total VOC Emissions	0.0555	1.331	0.2429
Total HAP Emissions	0.0016	0.038	0.0070
Total BTEX Emissions	0.0011	0.026	0.0047

FLASH TANK OFF GAS

Component	lbs/hr	lbs/day	tons/yr
Hydrogen Sulfide	0.0175	0.421	0.0767
Methane	1.8862	45.268	8.2614
Ethane	1.4184	34.042	6.2126
Propane	1.3594	32.626	5.9543
Isobutane	0.3572	8.573	1.5646
n-Butane	0.5924	14.219	2.5949
Isopentane	0.1657	3.976	0.7256
n-Pentane	0.1274	3.059	0.5582
n-Hexane	0.0260	0.625	0.1140
Cyclohexane	0.0124	0.297	0.0542
Other Hexanes	0.0562	1.349	0.2463
Heptanes	0.0161	0.385	0.0703
Benzene	0.0203	0.488	0.0890
Toluene	0.0245	0.588	0.1073
Ethylbenzene	0.0012	0.030	0.0054
Xylenes	0.0079	0.190	0.0346
C8+ Heavies	0.0065	0.157	0.0286
Total Emissions	6.0955	146.292	26.6982
Total Hydrocarbon Emissions	6.0780	145.871	26.6215
Total VOC Emissions	2.7734	66.561	12.1474
Total HAP Emissions	0.0800	1.920	0.3504
Total BTEX Emissions	0.0540	1.295	0.2364

EQUIPMENT REPORTS:

CONDENSER AND COMBUSTION DEVICE

Condenser Outlet Temperature: 120.00 deg. F
Condenser Pressure: 14.00 psia
Condenser Duty: 3.87e-004 MM BTU/hr
Hydrocarbon Recovery: 0.00 bbls/day
Produced Water: 0.84 bbls/day
Ambient Temperature: 80.00 deg. F
Excess Oxygen: 0.00 %

Combustion Efficiency: 98.00 %
Supplemental Fuel Requirement: 3.87e-004 MM BTU/hr

Component	Emitted	Destroyed
Hydrogen Sulfide	1.52%	98.48%
Methane	1.99%	98.01%
Ethane	1.98%	98.02%
Propane	1.96%	98.04%
Isobutane	1.94%	98.06%
n-Butane	1.92%	98.08%
Isopentane	1.82%	98.18%
n-Pentane	1.73%	98.27%
n-Hexane	1.51%	98.49%
Cyclohexane	1.37%	98.63%
Other Hexanes	1.65%	98.35%
Heptanes	1.05%	98.95%
Benzene	0.99%	99.01%
Toluene	0.65%	99.35%
Ethylbenzene	0.31%	99.69%
Xylenes	0.25%	99.75%
C8+ Heavies	0.01%	99.99%

ABSORBER

Calculated Absorber Stages: 2.10
Specified Dry Gas Dew Point: 7.00 lbs. H2O/MMSCF
Temperature: 100.0 deg. F
Pressure: 1000.0 psig
Dry Gas Flow Rate: 6.0000 MMSCF/day
Glycol Losses with Dry Gas: 0.8804 lb/hr
Wet Gas Water Content: Saturated
Calculated Wet Gas Water Content: 57.04 lbs. H2O/MMSCF
Specified Lean Glycol Recirc. Ratio: 0.60 gal/lb H2O

Component	Remaining in Dry Gas	Absorbed in Glycol
Water	12.26%	87.74%
Carbon Dioxide	99.97%	0.03%
Hydrogen Sulfide	99.86%	0.14%
Nitrogen	100.00%	0.00%
Methane	100.00%	0.00%
Ethane	100.00%	0.00%
Propane	99.99%	0.01%
Isobutane	99.99%	0.01%
n-Butane	99.99%	0.01%
Isopentane	99.99%	0.01%
n-Pentane	99.99%	0.01%
n-Hexane	99.99%	0.01%
Cyclohexane	99.96%	0.04%
Other Hexanes	99.99%	0.01%
Heptanes	99.99%	0.01%
Benzene	99.51%	0.49%
Toluene	99.50%	0.50%
Ethylbenzene	99.51%	0.49%
Xylenes	99.28%	0.72%
C8+ Heavies	99.99%	0.01%

FLASH TANK

Flash Control: Combustion device
Flash Control Efficiency: 98.00 %
Flash Temperature: 180.0 deg. F
Flash Pressure: 35.0 psig

Component	Left in Glycol	Removed in Flash Gas
Water	98.02%	1.98%
Carbon Dioxide	2.47%	97.53%
Hydrogen Sulfide	10.78%	89.22%
Nitrogen	0.23%	99.77%

Methane	0.26%	99.74%
Ethane	0.63%	99.37%
Propane	1.74%	98.26%
Isobutane	2.12%	97.88%
n-Butane	2.62%	97.38%
Isopentane	2.60%	97.40%
n-Pentane	3.08%	96.92%
n-Hexane	4.36%	95.64%
Cyclohexane	12.41%	87.59%
Other Hexanes	3.51%	96.49%
Heptanes	6.57%	93.43%
Benzene	54.78%	45.22%
Toluene	60.88%	39.12%
Ethylbenzene	69.39%	30.61%
Xylenes	77.98%	22.02%
C8+ Heavies	7.54%	92.46%

REGENERATOR

No Stripping Gas used in regenerator.

Component	Remaining in Glycol	Distilled Overhead
Water	5.43%	94.57%
Carbon Dioxide	0.00%	100.00%
Hydrogen Sulfide	0.00%	100.00%
Nitrogen	0.00%	100.00%
Methane	0.00%	100.00%
Ethane	0.00%	100.00%
Propane	0.00%	100.00%
Isobutane	0.00%	100.00%
n-Butane	0.00%	100.00%
Isopentane	3.53%	96.47%
n-Pentane	3.54%	96.46%
n-Hexane	2.75%	97.25%
Cyclohexane	15.13%	84.87%
Other Hexanes	5.83%	94.17%
Heptanes	2.24%	97.76%
Benzene	8.63%	91.37%
Toluene	12.29%	87.71%
Ethylbenzene	14.20%	85.80%
Xylenes	15.92%	84.08%
C8+ Heavies	44.99%	55.01%

STREAM REPORTS:

WET GAS STREAM

Temperature: 100.00 deg. F
Pressure: 1014.70 psia
Flow Rate: 2.50e+005 scfh

Component	Conc. (vol%)	Loading (lb/hr)
Water	1.20e-001	1.43e+001
Carbon Dioxide	2.15e+000	6.24e+002
Hydrogen Sulfide	4.99e-002	1.12e+001
Nitrogen	6.89e-002	1.27e+001
Methane	5.51e+001	5.83e+003
Ethane	2.06e+001	4.09e+003
Propane	1.30e+001	3.77e+003
Isobutane	2.57e+000	9.87e+002
n-Butane	4.09e+000	1.57e+003
Isopentane	9.67e-001	4.60e+002
n-Pentane	7.17e-001	3.41e+002
n-Hexane	1.21e-001	6.87e+001

Cyclohexane	3.49e-002	1.94e+001
Other Hexanes	2.71e-001	1.54e+002
Heptanes	6.09e-002	4.03e+001
Benzene	1.60e-002	8.23e+000
Toluene	1.80e-002	1.09e+001
Ethylbenzene	9.98e-004	6.99e-001
Xylenes	5.99e-003	4.20e+000
C8+ Heavies	1.50e-002	1.68e+001
Total Components	100.00	1.80e+004

DRY GAS STREAM

Temperature: 100.00 deg. F
Pressure: 1014.70 psia
Flow Rate: 2.50e+005 scfh

Component	Conc. (vol%)	Loading (lb/hr)
Water	1.47e-002	1.75e+000
Carbon Dioxide	2.15e+000	6.24e+002
Hydrogen Sulfide	4.99e-002	1.12e+001
Nitrogen	6.90e-002	1.27e+001
Methane	5.52e+001	5.83e+003
Ethane	2.07e+001	4.09e+003
Propane	1.30e+001	3.77e+003
Isobutane	2.58e+000	9.87e+002
n-Butane	4.09e+000	1.57e+003
Isopentane	9.68e-001	4.60e+002
n-Pentane	7.18e-001	3.41e+002
n-Hexane	1.21e-001	6.87e+001
Cyclohexane	3.50e-002	1.94e+001
Other Hexanes	2.71e-001	1.54e+002
Heptanes	6.10e-002	4.03e+001
Benzene	1.59e-002	8.19e+000
Toluene	1.79e-002	1.09e+001
Ethylbenzene	9.94e-004	6.96e-001
Xylenes	5.95e-003	4.17e+000
C8+ Heavies	1.50e-002	1.68e+001
Total Components	100.00	1.80e+004

LEAN GLYCOL STREAM

Temperature: 100.00 deg. F
Flow Rate: 1.25e-001 gpm

Component	Conc. (wt%)	Loading (lb/hr)
TEG	9.90e+001	6.97e+001
Water	1.00e+000	7.05e-001
Carbon Dioxide	2.60e-011	1.83e-011
Hydrogen Sulfide	2.31e-012	1.63e-012
Nitrogen	5.25e-014	3.70e-014
Methane	6.33e-018	4.46e-018
Ethane	1.30e-007	9.14e-008
Propane	1.43e-008	1.01e-008
Isobutane	2.88e-009	2.03e-009
n-Butane	4.79e-009	3.37e-009
Isopentane	2.22e-004	1.57e-004
n-Pentane	2.03e-004	1.43e-004
n-Hexane	4.62e-005	3.26e-005
Cyclohexane	3.77e-004	2.65e-004
Other Hexanes	1.69e-004	1.19e-004
Heptanes	3.59e-005	2.53e-005
Benzene	3.01e-003	2.12e-003
Toluene	6.65e-003	4.69e-003
Ethylbenzene	5.69e-004	4.01e-004
Xylenes	6.32e-003	4.46e-003
C8+ Heavies	3.40e-004	2.40e-004

Total Components 100.00 7.05e+001

RICH GLYCOL AND PUMP GAS STREAM

Temperature: 100.00 deg. F
Pressure: 1014.70 psia
Flow Rate: 1.64e-001 gpm
NOTE: Stream has more than one phase.

Component	Conc. (wt%)	Loading (lb/hr)
TEG	7.78e+001	6.95e+001
Water	1.48e+001	1.32e+001
Carbon Dioxide	4.15e-001	3.71e-001
Hydrogen Sulfide	2.20e-002	1.96e-002
Nitrogen	4.70e-003	4.20e-003
Methane	2.11e+000	1.89e+000
Ethane	1.60e+000	1.43e+000
Propane	1.55e+000	1.38e+000
Isobutane	4.08e-001	3.65e-001
n-Butane	6.80e-001	6.08e-001
Isopentane	1.90e-001	1.70e-001
n-Pentane	1.47e-001	1.31e-001
n-Hexane	3.04e-002	2.72e-002
Cyclohexane	1.58e-002	1.41e-002
Other Hexanes	6.52e-002	5.83e-002
Heptanes	1.92e-002	1.72e-002
Benzene	5.03e-002	4.50e-002
Toluene	7.00e-002	6.26e-002
Ethylbenzene	4.55e-003	4.06e-003
Xylenes	4.01e-002	3.59e-002
C8+ Heavies	7.90e-003	7.07e-003
Total Components	100.00	8.94e+001

FLASH TANK OFF GAS STREAM

Temperature: 180.00 deg. F
Pressure: 49.70 psia
Flow Rate: 9.16e+001 scfh

Component	Conc. (vol%)	Loading (lb/hr)
Water	6.03e+000	2.62e-001
Carbon Dioxide	3.41e+000	3.62e-001
Hydrogen Sulfide	2.13e-001	1.75e-002
Nitrogen	6.20e-002	4.19e-003
Methane	4.87e+001	1.89e+000
Ethane	1.95e+001	1.42e+000
Propane	1.28e+001	1.36e+000
Isobutane	2.55e+000	3.57e-001
n-Butane	4.22e+000	5.92e-001
Isopentane	9.51e-001	1.66e-001
n-Pentane	7.32e-001	1.27e-001
n-Hexane	1.25e-001	2.60e-002
Cyclohexane	6.10e-002	1.24e-002
Other Hexanes	2.70e-001	5.62e-002
Heptanes	6.64e-002	1.61e-002
Benzene	1.08e-001	2.03e-002
Toluene	1.10e-001	2.45e-002
Ethylbenzene	4.85e-003	1.24e-003
Xylenes	3.08e-002	7.90e-003
C8+ Heavies	1.59e-002	6.53e-003
Total Components	100.00	6.72e+000

FLASH TANK GLYCOL STREAM

Temperature: 180.00 deg. F
Flow Rate: 1.49e-001 gpm

Component	Conc. (wt%)	Loading (lb/hr)	(ppm)
TEG	8.41e+001	6.95e+001	840919.
Water	1.57e+001	1.30e+001	156885.
Carbon Dioxide	1.11e-002	9.18e-003	111.
Hydrogen Sulfide	2.56e-003	2.12e-003	26.
Nitrogen	1.16e-005	9.61e-006	0.
Methane	6.01e-003	4.97e-003	60.
Ethane	1.08e-002	8.92e-003	108.
Propane	2.90e-002	2.40e-002	290.
Isobutane	9.35e-003	7.73e-003	94.
n-Butane	1.93e-002	1.60e-002	193.
Isopentane	5.36e-003	4.43e-003	54.
n-Pentane	4.90e-003	4.05e-003	49.
n-Hexane	1.44e-003	1.19e-003	14.
Cyclohexane	2.12e-003	1.75e-003	21.
Other Hexanes	2.47e-003	2.04e-003	25.
Heptanes	1.37e-003	1.13e-003	14.
Benzene	2.98e-002	2.46e-002	298.
Toluene	4.61e-002	3.81e-002	461.
Ethylbenzene	3.41e-003	2.82e-003	34.
Xylenes	3.38e-002	2.80e-002	338.
C8+ Heavies	6.44e-004	5.33e-004	6.
Total Components	100.00	8.27e+001	1000000.

FLASH GAS EMISSIONS

Flow Rate: 3.90e+002 scfh
Control Method: Combustion Device
Control Efficiency: 98.00

Component	Conc. (vol%)	Loading (lb/hr)
Water	6.04e+001	1.12e+001
Carbon Dioxide	3.92e+001	1.77e+001
Hydrogen Sulfide	1.00e-003	3.50e-004
Nitrogen	1.46e-002	4.19e-003
Methane	2.29e-001	3.77e-002
Ethane	9.18e-002	2.84e-002
Propane	6.00e-002	2.72e-002
Isobutane	1.20e-002	7.14e-003
n-Butane	1.98e-002	1.18e-002
Isopentane	4.47e-003	3.31e-003
n-Pentane	3.44e-003	2.55e-003
n-Hexane	5.88e-004	5.21e-004
Cyclohexane	2.86e-004	2.48e-004
Other Hexanes	1.27e-003	1.12e-003
Heptanes	3.12e-004	3.21e-004
Benzene	5.07e-004	4.07e-004
Toluene	5.17e-004	4.90e-004
Ethylbenzene	2.28e-005	2.49e-005
Xylenes	1.45e-004	1.58e-004
C8+ Heavies	7.47e-005	1.31e-004
Total Components	100.00	2.90e+001

REGENERATOR OVERHEADS STREAM

Temperature: 212.00 deg. F
Pressure: 14.70 psia
Flow Rate: 2.60e+002 scfh

Component	Conc. (vol%)	Loading (lb/hr)
Water	9.96e+001	1.23e+001
Carbon Dioxide	3.05e-002	9.18e-003
Hydrogen Sulfide	9.08e-003	2.12e-003
Nitrogen	5.01e-005	9.61e-006
Methane	4.53e-002	4.97e-003

Ethane	4.34e-002	8.92e-003
Propane	7.96e-002	2.40e-002
Isobutane	1.95e-002	7.73e-003
n-Butane	4.01e-002	1.60e-002
Isopentane	8.66e-003	4.27e-003
n-Pentane	7.91e-003	3.91e-003
n-Hexane	1.96e-003	1.15e-003
Cyclohexane	2.59e-003	1.49e-003
Other Hexanes	3.26e-003	1.92e-003
Heptanes	1.61e-003	1.10e-003
Benzene	4.21e-002	2.25e-002
Toluene	5.30e-002	3.34e-002
Ethylbenzene	3.33e-003	2.42e-003
Xylenes	3.24e-002	2.35e-002
C8+ Heavies	2.51e-004	2.93e-004
Total Components	100.00	1.24e+001

CONDENSER PRODUCED WATER STREAM

Temperature: 120.00 deg. F
Flow Rate: 2.45e-002 gpm

Component	Conc. (wt%)	Loading (lb/hr)	(ppm)
Water	9.99e+001	1.23e+001	999137.
Carbon Dioxide	6.34e-003	7.79e-004	63.
Hydrogen Sulfide	4.00e-003	4.91e-004	40.
Nitrogen	1.89e-007	2.32e-008	0.
Methane	1.88e-004	2.31e-005	2.
Ethane	3.83e-004	4.70e-005	4.
Propane	1.05e-003	1.29e-004	11.
Isobutane	1.82e-004	2.24e-005	2.
n-Butane	4.93e-004	6.06e-005	5.
Isopentane	8.82e-005	1.08e-005	1.
n-Pentane	8.23e-005	1.01e-005	1.
n-Hexane	1.76e-005	2.16e-006	0.
Cyclohexane	1.16e-004	1.43e-005	1.
Other Hexanes	2.58e-005	3.16e-006	0.
Heptanes	6.49e-006	7.96e-007	0.
Benzene	3.58e-002	4.39e-003	358.
Toluene	2.86e-002	3.50e-003	286.
Ethylbenzene	7.47e-004	9.17e-005	7.
Xylenes	8.28e-003	1.02e-003	83.
C8+ Heavies	5.42e-009	6.65e-010	0.
Total Components	100.00	1.23e+001	1000000.

CONDENSER RECOVERED OIL STREAM

Temperature: 120.00 deg. F
Flow Rate: 1.21e-004 gpm

Component	Conc. (wt%)	Loading (lb/hr)
Water	5.86e-002	3.02e-005
Carbon Dioxide	2.82e-002	1.45e-005
Hydrogen Sulfide	2.40e-002	1.24e-005
Nitrogen	2.94e-005	1.52e-008
Methane	4.58e-003	2.37e-006
Ethane	4.61e-002	2.38e-005
Propane	6.49e-001	3.35e-004
Isobutane	4.15e-001	2.14e-004
n-Butane	1.16e+000	5.97e-004
Isopentane	7.44e-001	3.84e-004
n-Pentane	1.01e+000	5.20e-004
n-Hexane	5.42e-001	2.80e-004
Cyclohexane	8.80e-001	4.54e-004
Other Hexanes	6.54e-001	3.37e-004
Heptanes	1.02e+000	5.24e-004

Benzene	1.35e+001	6.99e-003
Toluene	3.70e+001	1.91e-002
Ethylbenzene	3.79e+000	1.95e-003
Xylenes	3.78e+001	1.95e-002
C8+ Heavies	5.66e-001	2.92e-004
Total Components	100.00	5.16e-002

CONDENSER VENT STREAM

Temperature: 120.00 deg. F
Pressure: 14.00 psia
Flow Rate: 9.53e-001 scfh

Component	Conc. (vol%)	Loading (lb/hr)
Water	1.22e+001	5.50e-003
Carbon Dioxide	7.58e+000	8.38e-003
Hydrogen Sulfide	1.89e+000	1.61e-003
Nitrogen	1.36e-002	9.57e-006
Methane	1.23e+001	4.94e-003
Ethane	1.17e+001	8.85e-003
Propane	2.13e+001	2.36e-002
Isobutane	5.14e+000	7.50e-003
n-Butane	1.05e+001	1.53e-002
Isopentane	2.14e+000	3.88e-003
n-Pentane	1.86e+000	3.38e-003
n-Hexane	4.03e-001	8.72e-004
Cyclohexane	4.83e-001	1.02e-003
Other Hexanes	7.31e-001	1.58e-003
Heptanes	2.30e-001	5.80e-004
Benzene	5.67e+000	1.11e-002
Toluene	4.67e+000	1.08e-002
Ethylbenzene	1.41e-001	3.75e-004
Xylenes	1.12e+000	3.00e-003
C8+ Heavies	1.79e-004	7.68e-007
Total Components	100.00	1.12e-001

COMBUSTION DEVICE OFF GAS STREAM

Temperature: 1000.00 deg. F
Pressure: 14.70 psia
Flow Rate: 1.53e-002 scfh

Component	Conc. (vol%)	Loading (lb/hr)
Hydrogen Sulfide	2.35e+000	3.23e-005
Methane	1.53e+001	9.88e-005
Ethane	1.46e+001	1.77e-004
Propane	2.65e+001	4.71e-004
Isobutane	6.40e+000	1.50e-004
n-Butane	1.31e+001	3.06e-004
Isopentane	2.67e+000	7.76e-005
n-Pentane	2.32e+000	6.75e-005
n-Hexane	5.02e-001	1.74e-005
Cyclohexane	6.02e-001	2.04e-005
Other Hexanes	9.12e-001	3.17e-005
Heptanes	2.87e-001	1.16e-005
Benzene	7.07e+000	2.23e-004
Toluene	5.82e+000	2.16e-004
Ethylbenzene	1.75e-001	7.51e-006
Xylenes	1.40e+000	6.00e-005
C8+ Heavies	2.24e-004	1.54e-008
Total Components	100.00	1.97e-003
C8+ Heavies	4.82e-004	2.21e-007
Total Components	100.00	1.32e-002

SUMMARY OF TANKS SENT TO FLARE POTENTIAL TO EMIT

GEORGE WEST CENTRAL FACILITY 1 January 1st 2013 through January 1st 2014

BURLINGTON RESOURCES OIL & GAS COMPANY LP

			VOC Emissions								Benzene Emissions								H_2S Emissions[c]			
			Flash Emissions[a]		WB Emissions[b]		Uncontrolled Total		Controlled Total[d]		Flash Emissions[a]		WB Emissions[b]		Uncontrolled Total		Controlled Total[d]		Uncontrolled Total		Controlled Total[d]	
EPN	**FIN**	**Description**	**Hourly (lb/hr)**	**Annual (T/yr)**	**Hourly (lb/hr)**	**Annual (T/yr)**	**Hourly (lb/hr)**	**Annual (T/yr)**	**Hourly (lb/hr)**	**Annual (T/yr)**	**Hourly (lb/hr)**	**Annual (T/yr)**	**Hourly (lb/hr)**	**Annual (T/yr)**	**Hourly (lb/hr)**	**Annual (T/yr)**	**Hourly (lb/hr)**	**Annual (T/yr)**	**Hourly (lb/hr)**	**Annual (T/yr)**	**Hourly (lb/hr)**	**Annual (T/yr)**
FL-1	TK-01 TK-02	500 bbl Condensate Storage Tanks	4.37	19.14	15.29	0.52	19.66	19.66	0.39	0.39	0.01	0.04	0.25	0.01	0.26	0.05	0.005	0.001	0.001	0.004	0.00002	0.0001
FL-1	TK-03	500 bbl Slop Storage Tank	--	--	15.29	2.61	15.29	2.61	0.31	0.05	--	--	0.25	0.04	0.25	0.04	0.005	0.001	--	--	--	--
FL-1	TK-04	500 bbl Produced Water Storage Tank	3.29	14.41	0.15	0.04	3.44	14.45	0.07	0.29	0.01	0.04	0.001	0.0003	0.01	0.04	0.0002	0.001	0.001	0.004	0.00002	0.0001
TK-AF[e]	TK-AF[e]	Antifreeze Liquid Storage	--	--	0.50	0.01	0.50	0.01	--	--	--	--	--	--	--	--	--	--	--	--	--	--
TK-LO[f]	TK-LO[e]	Lube Oil Liquid Storage	--	--	0.0002	0.000002	0.0002	0.000002	--	--	--	--	--	--	--	--	--	--	--	--	--	--
TK-SCAV[f]	TK-SCAV[f]	H_2S Scavenger Liquid Storage	--	--	--	--	<0.01	<0.01	--	--	--	--	--	--	--	--	--	--	--	--	--	--

Notes:

[a] VOC and Benzene Flash Emissions are calculated using the WinSim stream simulation program. Data inputs included the pressurized stream data and throughputs represented in this submittal. See the pages at the end of this attachment for a printout of the data inputs and emissions reports.

[b] The Working/Breathing emissions for tanks TK-01 thourgh TK-04 are calculated using AP 42 Chapter 7 calculations with data inputs from the stream data and throughputs. See the following pages for the represented calculations.

[c] The Ideal Gas Law was used to estimate the H2S emission rates using the maximum sulfur concentration in the gas coming off the tanks (500 ppm). An example calculation for hourly H2S emissions from FIN TK-04 follows:

H_2S (lb/hr) = (% Vol H_2S in stream) * (Total Volumetric Flow of Gas, scf/hr) * (1 atm STP) * (34.0798 lb/lb-mol H2S) / (1.314, atm-scf/lb-mol-K) / (298 K)

H_2S (lb/hr) = (500 ppm /10^6) * (25.65 scf/hr) * (1 atm) * (34.0789 lb/lbmol H2S) / (1.314, atm-scf/lb-mol-K) / (298 K)

H_2S (lb/hr) = 0.001 lb/hr

[d] All VOC tank emissions are routed to the flare control device with a capture and control efficiency of 98%. H_2S emissions are captured at 98% and then 98% converted to SO_2 during combustion.

[e] Working and breathing emissions for the Antifreeze and Lube Oil tanks were determined using Tanks 4.09d simulation software. The size and number of TK-AF and TK-LO tanks may vary, but the total throughput of the liquid and the associated VOC emissions will not exceed the proposed emission rate. Printouts from the software can be found on the following pages. An example calculation of the hourly emissions for FIN TK-AF follows:

VOC(lb/hr)= [((Breathing Loss, lb/yr) / (8,760 hr/yr)) + ((Working Loss, lb/yr) / (Number of turnovers/yr) / (Turnovers per hour))] * No. of tanks

VOC(lb/hr)= ((8.909 lb/yr) / (8,760 hr/yr)) + ((5.9832 lb/yr) / (12 turnovers/yr) / (1 turnover per hour))

VOC(lb/hr)= 0.50 lb/hr

An example calculation of the annual emissions for FIN TK-AF follows:

VOC(T/yr)= ((Working Loss, lb/yr) + (Breathing Loss, lb/yr)) / (2,000 ton/yr)) * No. of Tanks

VOC(T/yr)= ((5.9832 lb/yr) + (8.909 lb/yr)) / (2,000 ton/yr)

VOC(T/yr)= 0.01 lb/hr

[f] The size and number of the H_2S Scavenger Liquid Storage Tanks may vary, but the total throughput of the liquid and the associated VOC emissions will not exceed the proposed negligible emission rate.

CALCULATION OF STORAGE TANK WORKING AND BREATHING POTENTIAL TO EMIT

GEORGE WEST CENTRAL FACILITY 1 January 1st 2013 through January 1st 2014

BURLINGTON RESOURCES OIL & GAS COMPANY LP

Variable	Description	Units	Value
L_T	total loss = Ls + Lw	Ton/yr	See Table
L_S	standing loss = 365 Vv Wv Ke Ks	lb/yr	See Table
L_W	working loss = 0.001 Mv Pv Q Kn Kp	lb/yr	See Table
L_H	working loss = 0.001 Mv Pmax Qh	lb/hr	See Table
	Roof Construction		Cone
RVP	Condensate Reid Vapor Pressure	psia	14.42
ΔPb	Breather vent pressure range	psi	0.06
I	Solar insolation factor	Btu/ft2-day	1521
P_A	Atmospheric Pressure	psia	14.7
Mv	Vapor Molecular Weight	lb/lb-mol	53
T	Annual Average Temperature	°F	72.1
T_{AX}	Daily Maximum Ambient Temperature	°R	541.6
T_{AN}	Daily Minimum Ambient Temperature	°R	522.5
ΔT_A	Daily average ambient temperature range	°R	19.1
Kp	Product factor		1

		Tank Specifications							Material Specifications																	VOC		Benzene	
		V/H	D	H/L	Capacity	Color		α	Mv	P_{MAX}	Q^2		ΔTv	Hvo	Vv	T_{LA}	P_{VA}	Wv	ΔPv	Ke	Ks	Kn	L_S	L_W	L_T	L_H	L_T	L_H
Material	No. of Tanks	Tank Type	Tank Diameter (ft)	Tank Height/ Length (ft)	Tank Capacity (bbl)	Paint Color	Paint Conditions	Paint Solar Absorbance Factor	Vapor Molecular Weight	Reid Vapor Pressure (psia)	Max. Hourly Thruput (bbl/hr)	Annual thruput (bbl)	Daily Vapor Temp. Range °F	Vapor Space Outage (ft)	Vapor Space Volume (ft3)	Daily Average Liquid Surface Temp °R	Average Vapor Pressure (psia)	Vapor Density (lb/ft3)	Daily Vapor Pressure Range	Vapor Space Expan. Factor	Vented Vapor Sat. Factor	Turnover Factor	Standing Loss per tank (lb/yr)	Working Loss per tank (lb/yr)	Total Loss (lb/hr)	Total Loss (T/yr)	Total Loss (lb/hr)	Total Loss (T/yr)
Condensate	2	V	12	25	500	Gray	Good	0.54	53	14.42	20	1,201	36.75	12.63	1428.4	539.8	16.399	0.15004	4.15306	-2.3410	0.08	1.00	0.00	1,043.85	**15.29**	**0.52**	**0.25**	**0.01**
Slop	1	V	12	25	500	Gray	Good	0.54	53	14.42	20	6,000	36.75	12.63	1428.4	539.8	16.399	0.15004	4.15306	-2.3410	0.08	1.00	0.00	5,214.88	**15.29**	**2.61**	**0.25**	**0.04**
PW	1	V	12	25	500	Gray	Good	0.54	53	0.144	20	91,250	36.75	12.63	1428.4	539.8	0.044	0.00040	0.02669	0.0662	0.97	0.33	13.39	70.22	**0.15**	**0.04**	**0.001**	**0.0003**

NOTE: Tank working and breathing emissions are based on the equations found in EPA AP 42 Chapter 7. All factors used are represented in the table on this page. The Condensate Reid Vapor Pressure and Vapor Molecular Weight are determined based on the WinSim condensate stream and Off Gas stream. All other variables are found in AP 42 Chapter 7 or are default unit values.

CALCULATION OF TRUCK LOADING POTENTIAL TO EMIT

GEORGE WEST CENTRAL FACILITY 1 January 1st 2013 through January 1st 2014

BURLINGTON RESOURCES OIL & GAS COMPANY LP

Sample Calculations for condensate and slop:

Loading Loss (lb/Mgal) = 12.46 * S * P * M / T (AP-42 Section 5.2)
Maximum Loading Loss = 12.46 * 0.60 * 14.420 * 53 / 560 = 10.203 lb/Mgal

Hourly Uncollected Emissions PTE = (Hourly Throughput, Mgal/hr) * (Maximum Loading Loss, lb/Mgal) * (1 - Capture Efficiency)
Hourly Uncollected Emissions PTE = (8.19 Mgal/hr) * (10.203 lb/Mgal) * (1 - 0.987) = 1.09 lb/hr

Hourly PTE = ((Hourly Throughput, Mgal/hr) * (Maximum Loading Loss, lb/Mgal) * (Capture Efficiency) * (1 - Control Efficiency)) + (Hourly Uncollected Loading Emissions, (lb/hr))
Hourly PTE = (8.19 Mgal/hr) * (10.203 lb/Mgal) * (0.987) * (1 - 0.98) + (1.09 lb/hr) = 2.74 lb/hr

Annual Emissions = ((Annual Throughput, Mgal/yr) * (Average Loading Loss, lb/Mgal) * (Capture Efficiency) * (1 - Control Efficiency)) + (Annual Uncollected Loading Emissions, lb/yr)) / (2000 lb/T)
Annual Emissions = (302.44 Mgal/yr) * (10.381 lb/Mgal) * (0.987) * (1 - 0.98) + (40.82 lb/yr) / (2000 lb/T) = 0.05 T/yr

															VOC		Benzene	
FIN	EPN	Facility Name	S	P @ 560 °R (psia)	P @531.7 °R (psia)	M	Maximum Loading Loss (lb/Mgal)	Average Loading Loss (lb/Mgal)	Hourly Throughput (Mgal/hr)	Annual Throughput (Mgals/yr)	Capture Efficiency	Hourly Uncollected Loading Emissions (lb/hr)	Annual Uncollected Loading Emissions (lb/yr))	Control Efficiency	Hourly PTE (lb/hr)	Annual PTE (T/yr)	Hourly PTE (lb/hr)	Annual PTE (T/yr)
TRUCK1	FL-1	Condensate and Slop Tank Truck Loading	0.60	14.42	13.930	53	10.203	10.381	8.19	302.44	0.987	1.09	40.82	0.98	2.74	0.05	0.04	0.001
TRUCK2	FL-1	Produced Water Tank Truck Loading	0.60	0.14	0.029	53	0.099	0.104	8.19	3,832.50	0.987	0.01	5.18	0.98	0.03	0.007	0.0002	0.0001

Daily maximum and daily minimum ambient temperature from Tanks 4.09d for this area's annual averages (79.5and 57.725, for average of 68.62).

Annual Average Condensate Vapor Pressure at T_{LA} :

P = exp{ [(2799/(T+459.6) - 2.227]log10(RVP) - 7261/(T+459.6) + 12.82}
exp{ [(2799/(68.62+459.6) - 2.227]log10(14.42) - 7261/(68.62+459.6) + 12.82}
13.930 psia

Annual Average Produced Water Vapor Pressure at T_{LA} :

P = exp{ [(2799/(T+459.6) - 2.227]log10(RVP) - 7261/(T+459.6) + 12.82}
exp{ [(2799/(68.62+459.6) - 2.227]log10(14.42*.01) - 7261/(68.62+459.6) + 12.82}
0.029 psia

NOTE: Capture Efficiency of 98.7% represented based upon TCEQ Guidance regarding trucks that are utlizing NSPS XX Testing.

SUMMARY OF PROCESS FLARE FUEL GAS COMBUSTION AND
WASTE GAS COMBUSTION POTENTIAL TO EMIT- NORMAL OPERATIONS

GEORGE WEST CENTRAL FACILITY 1 January 1st 2013 through January 1st 2014

BURLINGTON RESOURCES OIL & GAS COMPANY LP

			CO		NO_X		SO_2		H_2S		VOC		Benzene	
EPN	**FIN**	**Description**	**(lb/hr)**	**(T/yr)**	**(lb/hr)**	**(T/yr)**	**(lb/hr)**	**(T/yr)**	**(lb/hr)**	**(T/yr)**	**(lb/hr)**	**(T/yr)**	**(lb/hr)**	**(T/yr)**
FL-1	FL-1	Pilot Gas Combustion	0.01	0.04	0.003	0.01	0.001	0.004	0.0000004	0.000002	0.0001	0.0004	0.00000003	0.0000001
FL-1	FL-1	Flare Assist Gas Combustion	0.44	1.93	0.22	0.96	0.10	0.44	0.00003	0.0001	0.01	0.04	0.000003	0.00001
FL-1	FL-1	Waste Gas Combustion	1.51	3.49	0.75	1.75	0.01	0.02	0.0001	0.0002	--	--	--	--
		Totals:	**1.96**	**5.46**	**0.97**	**2.72**	**0.11**	**0.46**	**0.0001**	**0.0003**	**0.01**	**0.04**	**0.000003**	**0.00001**

NOTE: Pilot Gas Combustion and Flare Assist Gas Combustion calculations are shown on the following page. Waste Gas Combustion shown here is the combined sum of the waste gas from the Dehy waste stream, Condensate and Produced Water tanks, and loading operations shown on subsequent pages.

CALCULATION OF FLARE PILOT GAS and FLARE ASSIST GAS POTENTIAL TO EMIT

GEORGE WEST CENTRAL FACILITY 1 January 1st 2013 through January 1st 2014

BURLINGTON RESOURCES OIL & GAS COMPANY LP

EPN	FIN	Description	LHV (Btu/scf)	Heat Release scf/hr	Operating Hours (hr/yr)	Pollutant	Emission Factors	Units	Emission Rates Hourly [a] (lb/hr)	Emission Rates Annual [b] (T/yr)
FL-1	FL-1	Flare 1- Process Pilot Gas Combustion	1,292	15	8,760	CO	0.2755	lb/MMBtu	0.01	0.04
						NO_X	0.138	lb/MMBtu	0.003	0.01
						$PM/PM_{10}/PM_{2.5}$	-- [c]	--	--	--
						SO_2	500	ppm H_2S	0.001	0.004
						H_2S	500	ppm H_2S	0.0000004	0.000002
						VOC	5.5	lb/MMscf	0.0001	0.0004
						Benzene	0.0021	lb/MMscf	0.00000003	0.0000001
FL-1	FL-1	Flare 1- Process Flare Assist Gas Combustion	1,292	1,250	8,760	CO	0.2755	lb/MMBtu	0.44	1.93
						NO_X	0.138	lb/MMBtu	0.22	0.96
						$PM/PM_{10}/PM_{2.5}$	-- [c]	--	--	--
						SO_2	500	ppm H_2S	0.10	0.44
						H_2S	500	ppm H_2S	0.00003	0.0001
						VOC	5.5	lb/MMscf	0.01	0.04
						Benzene	0.0021	lb/MMscf	0.000003	0.00001

[a] Emission Factors for CO and NO_X are based upon the Draft TNRCC Guidance Document for Flares and Vapor Oxidizers (dated 10/00) for other high-Btu flares. An example calculation for hourly CO emissions for EPN FL-1 follows:

CO (lb/hr) = (Heat Release, scf/hr) * (Lower Heating Value, Btu/scf) * ($MM/10^6$)*(Emission Factor, lb/MMBtu)

CO (lb/hr) = (15 scf/hr) * (1,292 Btu/scf) * (MM/10^6)*(0.2755 lb/MMBtu)

= 0.01 lb/hr CO

The Emission Factors for VOC and Benzene were based upon AP-42 Table 1.4-2 and 1.4-3 (dated 7/98). An example calculation for hourly VOC emissions for EPN FL-1 follows:

VOC (lb/hr) = (Heat Release, scf/hr) * ($MM/10^6$) * (Emission Factor, lb/MMscf)

VOC (lb/hr) = (15 scf/hr) * (MM/10^6) * (5.5 lb/MMscf)

= 0.0001 lb/hr VOC

A material balance approach was used to estimate the SO2 and H2S emission rates using the maximum sulfur concentration in the natural gas. As shown in Figure 6-1, H2S concentration at the site is conservatively represented at 500 ppm. When used as a pilot gas or flare assist gas, 98% of this concentration will be converted to SO2, and 2% will remain uncombusted and unconverted. An example calculation for hourly SO2 emissions for the pilot gas of EPN FL-01 follows:

SO_2 (lb/hr) = Heat Release (scf/hr)*(Sulfur Content, ppmv)*(98% conversion to SO_2)*(1 lb-mol/379 scf)*(34.065 lb H2S/lb-mol)*(64.06 lb SO_2/34.065 lb H2S)

SO_2 (lb/hr) = (15 scf/hr)*((500 ppm H2S)/(10^6 scf gas))*(98% converted to SO2)*(1 lb-mol/379 scf)*(34.065 lb H2S/lb-mol)*(64.06 lb SO2/34.065 lb H2S)

= 0.001 lb/hr SO_2

[b] An example calculation for annual CO emissions for EPN FL-1 follows:

CO (T/yr) = (Hourly Emissions, lb/hr)*(Annual Operating Hours, hr/yr)*(1 T/2,000 lb)

CO (T/yr) = (0.01 lb/hr)*(8,760 hr/yr)*(1 T/2,000 lb)

CO (T/yr) = 0.04 T/yr CO

[c] The process flares are smokeless per 40 CFR §60.18 requirements; therefore, PM emissions are negligible.

PROCESS FLARE WASTE GAS COMBUSTION EMISSIONS

GEORGE WEST CENTRAL FACILITY 1 January 1st 2013 through January 1st 2014

BURLINGTON RESOURCES OIL & GAS COMPANY LP

EPN	FIN	Description	LHV[a] (Btu/scf)	Waste Gas Flow Rate Hourly (MMBtu/hr)	Waste Gas Flow Rate Annual (MMBtu/yr)	Pollutant	Emission Factors	Units	Potential to Emit Hourly[b] (lb/hr)	Potential to Emit Annual[c] (T/yr)
FL-1	FL-1	Process Flare	2,749	2.69	1,083.75	CO	0.2755	lb/MMBtu	0.74	0.15
		Condensate Tanks and Loading				NO_X	0.1380	lb/MMBtu	0.37	0.07
						$PM/PM_{10}/PM_{2.5}$	-- [e]	--	--	--
						SO_2	-- [c]	--	0.002	0.01
						H_2S	--	--	0.00002	0.0001
FL-1	FL-1	Process Flare	2,749	0.10	670.26	CO	0.2755	lb/MMBtu	0.03	0.09
		Produced Water Tank and Loading				NO_X	0.1380	lb/MMBtu	0.01	0.05
						$PM/PM_{10}/PM_{2.5}$	-- [e]	--	--	--
						SO_2	-- [c]	--	0.002	0.01
						H_2S	--	--	0.00002	0.0001
FL-1	FL-1	Process Flare	1,436	2.69	23,564.40	CO	0.2755	lb/MMBtu	0.74	3.25
		Dehy Unit Waste Gas				NO_X	0.1380	lb/MMBtu	0.37	1.63
						$PM/PM_{10}/PM_{2.5}$	-- [e]	--	--	--
						SO_2	-- [c]	--	0.001	0.003
						H_2S	--	--	0.00001	0.00003

[a] Waste gas stream lower heating value was taken from WinSim calculated stream value.

[b] Emission Factors for CO and NO_X are based upon the Draft TNRCC Guidance Document for Flares and Vapor Oxidizers (dated 10/00) for other high-Btu flares. An example calculation for hourly CO emissions for EPN Fl-1 follows:

CO (lb/hr) = (Hourly Waste Gas Flow Rate, MMBtu/hr)*(Emission Factor, lb/MMBtu)

CO (lb/hr) = (2.69 MMBtu/hr)*(0.2755 lb/MMBtu)

= 0.74 lb/hr CO

[c] H_2S emissions are routed from the tanks to the flare and from the seperator to the flare and then converted to SO_2. SO_2 emission rates were determined based on the combustion efficiency of 98% H_2S converted to SO_2. H_2S emitted at the flare is 2% of the stream not converted by combustion. An example calculation for hourly SO_2 emissions for EPN FL-1 follows:

SO_2 (lb/hr) = (Source H_2S Emission Rate, lb/hr) * (98% captured H2S stream) * (98% conversion to SO_2 at combustion) * (1 mol H_2S/34.07 lb H_2S) * (64.06 lb SO2/1 mol SO_2)

SO_2 (lb/hr) = (0.00 lb/hr H2S at Condensate Tanks)* (98%) * (98%) * (1 mol H2S/34.07 lb H2S) * (64.06 lb SO2/1 mol SO2)

= 0.002 lb/hr SO_2

[d] An example calculation for annual CO emissions for EPN FL-1 follows:

CO (T/yr) = (Annual Waste Gas Flow Rate, MMBtu/yr) * (Emission Factor, lb/MMBtu) * (1 T / 2,000 lb)

CO (T/yr) = (1,083.75 MMBtu/yr) * (0.2755 lb/MMBtu) * (1 T / 2,000 lb)

= 0.15 T/yr CO

[e] The process flares are smokeless per 40 CFR §60.18 requirements; therefore, PM emissions are negligible.

CALCULATION OF FLARE FEED RATES FROM FINs TK-01 THROUGH TK-03, and TRUCK1

GEORGE WEST CENTRAL FACILITY 1 January 1st 2013 through January 1st 2014

BURLINGTON RESOURCES OIL & GAS COMPANY LP

TK-01 through TK-03 and TRUCK1 Total Emissions:[a]

VOC Emissions (lb/hr):	117.45
VOC Emissions (TPY):	23.75
Hydrocarbon Emissions (lb/hr):	128.83
Hydrocarbon Emissions (TPY):	26.05

Constituent	Heating Value[b] (Btu/lb)	Condensate Tanks Flash Gas Weight (%)	TK-01 through TK-03 and TRUCK1 Emissions [c] Hourly (lb/hr)	TK-01 through TK-03 and TRUCK1 Emissions [c] Annual (T/yr)	Flare Feed Rate [d] Hourly (MMBtu/hr)	Flare Feed Rate [d] Annual (MMBtu/yr)
Methane	23,861	1.27%	1.64	0.33	0.04	15.43
Ethane	22,304	6.95%	8.95	1.81	0.20	79.13
Propane	21,646	22.33%	28.77	5.82	0.61	246.92
I-Butane	21,242	11.73%	15.11	3.06	0.31	127.40
N-Butane	21,293	24.72%	31.85	6.44	0.66	268.77
I-Pentane	21,025	11.79%	15.19	3.07	0.31	126.51
N-Pentane	21,072	10.32%	13.30	2.69	0.27	111.10
Cyclopentane	20,350	0.00%	0.00	0.00	0.00	0.00
n-Hexane	20,928	2.52%	3.25	0.66	0.07	27.07
Cyclohexane	20,195	0.35%	0.45	0.09	0.01	3.56
Other Hexanes	20,928	4.81%	6.20	1.25	0.13	51.27
Heptanes	20,825	1.78%	2.29	0.46	0.05	18.78
Octanes	20,747	0.28%	0.36	0.07	0.01	2.85
Nonanes	20,687	0.05%	0.06	0.013	0.001	0.53
Decanes Plus	20,638	0.01%	0.01	0.003	0.0002	0.12
Benzene	18,172	0.23%	0.30	0.06	0.01	2.14
Toluene	18,422	0.20%	0.26	0.05	0.005	1.81
Ethylbenzene	18,658	0.00%	0.00	0.00	0.00	0.00
Xylene	18,438	0.05%	0.06	0.01	0.001	0.36
	VOC	91.17%				
				Total:	**2.69**	**1,083.75**

[a] Total VOC Emissions were determined by adding the Uncontrolled Streams for FIN TK-01 through TK-03 on the Tank Summary table with the uncontrolled emissions from the Condensate Truck Loading. Total Hydrocarbon Emissions were calculated as follows:

Total HC (lb/hr) = VOC Emissions (lb/hr) * (1/ VOC% of stream)

Total HC (lb/hr) = (117.45 lb/hr) * (1 / 91.17%)

Total HC (lb/hr) = 128.83 lb/hr

[b] Heating values taken from Perry's Chemical Engineers' Handbook , Table 3-207 (pg. 3-155)

[c] Emission Rates were proportioned from the Total Hydrocarbon Emissions using the Condensate Flash Gas stream constituents weight percents, generated by the WinSim program.

[d] An example calculation for the hourly flare feed rate for Methane is demonstrated.

MMBtu/hr Methane = Methane Heating Value (Btu/lb) * Hourly Methane Emissions (lb/hr) * 98% of stream is combusted / 10^6

MMBtu/hr Methane = (23,861 Btu/lb) * (1.64 lb/hr) * 98% / (10^6)

MMBtu/hr Methane = 0.04 MMBtu/hr

An example calculation for the annual flare feed rate for Methane is demonstrated.

MMBtu/yr Methane = Methane Heating Value (Btu/lb) * Annual Methane Emissions (T/yr) * (2,000 lb/T) * 98% of stream is combusted / 10^6

MMBtu/yr Methane = (23,861 Btu/lb) * (0.33 T/yr) * (2,000 lb/T) * 98% / (10^6)

MMBtu/yr Methane = 15.43 MMBtu/yr

CALCULATION OF FLARE FEED RATES FROM FIN TK-04 and TRUCK2

GEORGE WEST CENTRAL FACILITY 1 January 1st 2013 through January 1st 2014

BURLINGTON RESOURCES OIL & GAS COMPANY LP

TK-04 and TRUCK2 Total Emissions:[a]

VOC Emissions (lb/hr):	4.44
VOC Emissions (TPY):	14.67
Hydrocarbon Emissions (lb/hr):	4.87
Hydrocarbon Emissions (TPY):	16.09

Constituent	Heating Value[b] (Btu/lb)	Produced Water Tanks Flash Gas Weight (%)	TK-04 and TRUCK2 Emissions [c] Hourly (lb/hr)	TK-04 and TRUCK2 Emissions [c] Annual (T/yr)	Flare Feed Rate [d] Hourly (MMBtu/hr)	Flare Feed Rate [d] Annual (MMBtu/yr)
Methane	23,861	1.27%	0.06	0.20	0.001	9.35
Ethane	22,304	6.95%	0.34	1.12	0.01	48.96
Propane	21,646	22.33%	1.09	3.59	0.02	152.31
I-Butane	21,242	11.73%	0.57	1.89	0.01	78.69
N-Butane	21,293	24.72%	1.20	3.98	0.03	166.10
I-Pentane	21,025	11.79%	0.57	1.90	0.01	78.30
N-Pentane	21,072	10.32%	0.50	1.66	0.01	68.56
Cyclopentane	20,350	0.00%	0.00	0.00	0.00	0.00
n-Hexane	20,928	2.52%	0.12	0.41	0.002	16.82
Cyclohexane	20,195	0.35%	0.02	0.06	0.0004	2.37
Other Hexanes	20,928	4.81%	0.23	0.77	0.00	31.58
Heptanes	20,825	1.78%	0.09	0.29	0.002	11.84
Octanes	20,747	0.28%	0.01	0.05	0.0002	2.03
Nonanes	20,687	0.05%	0.002	0.01	0.00004	0.41
Decanes Plus	20,638	0.01%	0.0005	0.002	0.00001	0.08
Benzene	18,172	0.23%	0.01	0.04	0.0002	1.42
Toluene	18,422	0.20%	0.01	0.03	0.0002	1.08
Ethylbenzene	18,658	0.00%	0.00	0.00	0.00	0.00
Xylene	18,438	0.05%	0.002	0.01	0.00004	0.36
	VOC	91.17%				
				Total:	**0.10**	**670.26**

[a] Total VOC Emissions were determined by adding the Uncontrolled Streams for FIN TK-04 on the Tank Summary table and the uncontrolled emissions associated with the produced water loading, FIN TRUCK2. Total Hydrocarbon Emissions were calculated as follows:

Total HC (lb/hr) = VOC Emissions (lb/hr) * (1/ VOC% of stream)

Total HC (lb/hr) = (04.44 lb/hr) * (1/ 91.17%)

Total HC (lb/hr) = 4.87 lb/hr

[b] Heating values taken from Perry's Chemical Engineers' Handbook , Table 3-207 (pg. 3-155)

[c] Emission Rates were proportioned from the Total Hydrocarbon Emissions using the Produced Water Flash Gas stream constituents weight percents, generated by the WinSim program.

[d] An example calculation for the hourly flare feed rate for Methane is demonstrated.

MMBtu/hr Methane = Methane Heating Value (Btu/lb) * Hourly Methane Emissions (lb/hr) * 98% of stream is combusted / 10^6

MMBtu/hr Methane = (23,861 Btu/lb) * (0.06 lb/hr) * 98% / (10^6)

MMBtu/hr Methane = 0.00 MMBtu/hr

An example calculation for the annual flare feed rate for Methane is demonstrated.

MMBtu/yr Methane = Methane Heating Value (Btu/lb) * Annual Methane Emissions (T/yr) * (2,000 lb/T) * 98% of stream is combusted / 10^6

MMBtu/yr Methane = (23,861 Btu/lb) * (0.20 T/yr) * (2,000 lb/T) * 98% / (10^6)

MMBtu/yr Methane = 9.35 MMBtu/yr

CALCULATION OF STORAGE TANK WORKING AND BREATHING POTENTIAL TO EMIT DURING FLARE DOWNTIME -SMS

GEORGE WEST CENTRAL FACILITY 1 January 1st 2013 through January 1st 2014

BURLINGTON RESOURCES OIL & GAS COMPANY LP

Variable	Description	Units	Value
L_T	total loss = Ls + Lw	Ton/yr	See Table
L_S	standing loss = 365 Vv Wv Ke Ks	lb/yr	See Table
L_W	working loss = 0.001 Mv Pv Q Kn Kp	lb/yr	See Table
L_H	working loss = 0.001 Mv Pmax Qh	lb/hr	See Table
	Roof Construction		Cone
RVP	Condensate Reid Vapor Pressure	psia	14.42
ΔPb	Breather vent pressure range	psi	0.06
I	Solar insolation factor	Btu/ft2-day	1521
P_A	Atmospheric Pressure	psia	14.7
Mv	Vapor Molecular Weight	lb/lb-mol	53
T	Annual Average Temperature	°F	72.1
T_{AX}	Daily Maximum Ambient Temperature	°R	541.6
T_{AN}	Daily Minimum Ambient Temperature	°R	522.5
ΔT_A	Daily average ambient temperature range	°R	19.1
Kp	Product factor		1

		Tank Specifications							Material Specifications												VOC		Benzene	
		V/H	D	H/L	Capacity	Color		α	Mv	P_{MAX}	Q^2	ΔTv	Hvo	T_{LA}	P_{VA}	Wv	ΔPv	Ke	Ks	L_S	L_T	L_H	L_T	L_H
Material	No. of Tanks	Tank Type	Tank Diameter (ft)	Tank Height/ Length (ft)	Tank Capacity (bbl)	Paint Color	Paint Conditions	Paint Solar Absorbance Factor	Vapor Molecular Weight	Reid Vapor Pressure (psia)	Max. Hourly Storage (bbl/hr)	Daily Vapor Temp. Range °F	Vapor Space Outage (ft)	Daily Average Liquid Surface Temp °R	Average Vapor Pressure (psia)	Vapor Density (lb/ft3)	Daily Vapor Pressure Range	Vapor Space Expan. Factor	Vented Vapor Sat. Factor	Standing Loss per tank (lb/yr)	Total Loss (lb/hr)	Total Loss (T/yr)	Total Loss (lb/hr)	Total Loss (T/yr)
Condensate	2	V	12	25	500	Gray	Good	0.54	53	14.42	500	36.75	12.63	539.8	16.399	0.15004	4.15306	-2.3410	0.08	0.00	**0.00**	**0.00**	**0.00**	**0.00**
Slop	1	V	12	25	500	Gray	Good	0.54	53	14.42	500	36.75	12.63	539.8	16.399	0.15004	4.15306	-2.3410	0.08	0.00	**0.00**	**0.00**	**0.00**	**0.00**
PW	1	V	12	25	500	Gray	Good	0.54	53	0.144	500	36.75	12.63	539.8	0.044	0.00040	0.02669	0.0662	0.97	0.27	**0.002**	**0.0001**	**0.00002**	**0.000001**

NOTE: Tank working and breathing emissions are based on the equations found in EPA AP 42 Chapter 7. All factors used are represented in the table on this page. The Condensate Reid Vapor Pressure and Vapor Molecular Weight are determined based on the WinSim condensate stream and Off Gas stream. All other variables are found in AP 42 Chapter 7 or are default unit values.

The emissions shown are due to flare maintenance occuring 2% of the year. During the flare downtime the wellhead would be shut in. Therefore, there would be no condensate or produced water liquids flowing to the tanks; however, any liquid already in the tanks would remain and have breathing (standing losses) emissions. These emissions would not be controlled, as the flare is down for maintenance. The calculations shown demonstrate this alternative operating scenario regarding flare maintenance and downtime. Based on 2% downtime, this scenario is being shown to occur for 175.2 hours in a year.

As shown on the summary page representing the Tank Emission sent to Flare, H_2S emissions are represented as occuring when the liquid streams flash during the change from a pressurized flow to the atmospheric tank. Due to the chemical properties of H_2S, the most conservative approach is to represent that all H_2S in the liquid will immediately flash, and there will be no H_2S emitted during working and breathing while the liquids are stored. Since there will be no liquid flow during the flare downtime, there are no flash emissions and therefore no H_2S emissions from the standing loss of the tanks.

MSS CALCULATION OF COMPRESSOR ENGINE STARTER VENT POTENTIAL TO EMIT

GEORGE WEST CENTRAL FACILITY 1 January 1st 2013 through January 1st 2014

BURLINGTON RESOURCES OIL & GAS COMPANY LP

Description	Facility Identification Number COMP-01-SV
Number of Engine Starts per Year	16
Number of Engine Starts per Hour	1
Start Volume per Event, scf	900
Fuel Stream Specific Gravity	0.9496
Fuel Stream Density, lb/scf [a]	0.0726
VOC Percentage in Fuel Stream, wt%	45%
Max Benzene Percentage in Gas Stream, wt%	0.07%
Max H_2S Percentage in Fuel Stream, wt%	0.09%
VOC Hourly Emission Rates (lb/hr): [b]	29.40
VOC Annual Emission Rates (T/yr): [c]	0.24
Benzene Hourly Emission Rates (lb/hr):[b]	0.05
Benzene Annual Emission Rates (T/yr): [c]	0.0004
H_2S Hourly Emission Rates (lb/hr): [b]	0.06
H_2S Annual Emission Rates (T/yr): [c]	0.0005

[a] Gas stream density is calculated as follows:

(28.96 lb/mole) / (379 scf/mole) * (0.9496) = 0.073 lb/scf

[b] Hourly starter vent VOC, benzene and H2S emissions are calculated based upon a conservative estimate of the portion of each consituent in the volume known to blow down from the engine source. An example calculation for VOC for COMP-01-SV is as follows:

VOC lb/hr = (1 startup/hr) * (900 scf/startup) * (0.073 lb/scf) * (45.00%) = 29.40 lb/hr

[c] Annual starter VOC emission rates are calculated as follows:

VOC lb/hr = (16 startups/yr) * (900 scf/startup) * (0.073 lb/scf) * (45.00%) / (2,000 lb/T) = 0.24 T/yr

SMSS - CALCULATION OF COMPRESSOR ENGINE BLOWDOWN POTENTIAL TO EMIT

GEORGE WEST CENTRAL FACILITY 1 January 1st 2013 through January 1st 2014

BURLINGTON RESOURCES OIL & GAS COMPANY LP

Description	Facility Identification Number COMP-01-BD
Number of Blowdowns per Year	16
Number of Blowdowns per Hour	1
Blowdown Volume per Event, scf	1,061
Gas Stream Specific Gravity	0.9496
Gas Stream Density, lb/scf [a]	0.0726
Max VOC Percentage in Gas Stream, wt%	45%
Max Benzene Percentage in Gas Stream, wt%	0.07%
Max H_2S Percentage in Gas Stream, wt%	0.09%
VOC Hourly Emission Rates (lb/hr): [b]	34.66
VOC Annual Emission Rates (T/yr): [c]	0.28
Benzene Hourly Emission Rates (lb/hr):[b]	0.05
Benzene Annual Emission Rates (T/yr): [c]	0.0004
H_2S Hourly Emission Rates (lb/hr): [b]	0.07
H_2S Annual Emission Rates (T/yr): [c]	0.001
Controlled VOC Hourly Emission Rates (lb/hr)[d]	0.69
Controlled VOC Annual Emission Rates (T/yr):[e]	0.01
Controlled Benzene Hourly Emission Rates (lb/hr):[d]	0.001
Controlled Benzene Annual Emission Rates (T/yr): [e]	0.00001
Controlled H_2S Hourly Emission Rates (lb/hr)[d]	0.001
Controlled H_2S Annual Emission Rates (T/yr):[e]	0.00002

[a] Gas stream density is calculated as follows:

(28.96 lb/mole) / (379 scf/mole) * (0.9496) = 0.073 lb/scf

[b] Hourly blowdown VOC, Benzene and H_2S emissions rates are calculated. An example calculation for VOC for COMP-01-BD is as follows:
VOC lb/hr = (1 blowdown/hr) * (1,061 scf/blowdown) * (0.073 lb/scf) * (45.00% VOC in Stream) * (100-98% controlled at flare) = 34.66 lb/hr

[c] Annual blowdown VOC, Benzene and H_2S emission rates are calculated as follows:

VOC lb/hr = (16 blowdowns/yr) * (1,061 scf/blowdown) * (0.073 lb/scf) * (45.00%) / (2,000 lb/T) * (100% - 98% controlled

[d] Hourly controlled blowdown VOC, Benzene and H_2S emissions are calculated based upon a conservative estimate of the portion of each consituent in the volume known to blowdown from the engine source. An example calculation for VOC for

VOC lb/hr = (1 blowdown/hr) * (1,061 scf/blowdown) * (0.073 lb/scf) * (45.00% VOC in Stream) * (100-98% controlled at

[e] Annual controlled blowdown VOC emission rates are calculated as follows:

VOC lb/hr = (16 blowdowns/yr) * (1,061 scf/blowdown) * (0.073 lb/scf) * (45.00%) / (2,000 lb/T) * (100% - 98% controlled

SMSS - PROCESS FLARE WASTE GAS COMBUSTION EMISSIONS

GEORGE WEST CENTRAL FACILITY 1 January 1st 2013 through January 1st 2014

BURLINGTON RESOURCES OIL & GAS COMPANY LP

EPN	FIN	Description	LHV[a] (Btu/scf)	Waste Gas Flow Rate Hourly (MMBtu/hr)	Waste Gas Flow Rate Annual (MMBtu/yr)	Pollutant	Emission Factors	Units	Potential to Emit Hourly[b] (lb/hr)	Potential to Emit Annual[c] (T/yr)
FL-1-SMSS	COMP-01-BD	Process Flare	1,544	1.63	26.17	CO	0.2755	lb/MMBtu	0.45	0.004
		Compressor Blowdown Event				NO_X	0.1380	lb/MMBtu	0.22	0.002
						$PM/PM_{10}/PM_{2.5}$	-- [e]	--	--	--
						SO_2	-- [c]	--	0.13	0.002
						H_2S	-- [c]	--	0.001	0.00002

[a] Waste gas stream lower heating value was taken from the inlet gas analysis.

[b] Emission Factors for CO and NO_X are based upon the Draft TNRCC Guidance Document for Flares and Vapor Oxidizers (dated 10/00) for other high-Btu flares. An example calculation for hourly CO emissions for EPN Fl-1-SMSS follows:

CO (lb/hr) = (Hourly Waste Gas Flow Rate, MMBtu/hr)*(Emission Factor, lb/MMBtu)

CO (lb/hr) = (1.63 MMBtu/hr)*(0.2755 lb/MMBtu)

= 0.45 lb/hr CO

[c] H_2S emissions are routed from the separator to the flare and then converted to SO_2. SO_2 emission rates were determined based on the combustion efficiency of 98% H_2S converted to SO_2. H_2S emitted at the flare is 2% of the captured stream not converted by combustion. An example calculation for hourly SO_2 emissions for EPN FL-1-SMSS follows:

SO_2 (lb/hr) = (Source H_2S Emission Rate, lb/hr) * (98% captured H2S stream) * (98% conversion to SO_2 at combustion) * (1 mol H_2S/34.07 lb H_2S) * (64.06 lb SO2/1 mol SO_2)

SO_2 (lb/hr) = (0.07 lb/hr H2S from Blowdown)* (98%) * (98%) * (1 mol H2S/34.07 lb H2S) * (64.06 lb SO2/1 mol SO2)

= 0.13 lb/hr SO_2

[d] An example calculation for annual CO emissions for EPN FL-1-SMSS follows:

CO (T/yr) = (Annual Waste Gas Flow Rate, MMBtu/yr) * (Emission Factor, lb/MMBtu) * (1 T / 2,000 lb)

CO (T/yr) = (26.17 MMBtu/yr) * (0.2755 lb/MMBtu) * (1 T / 2,000 lb)

= 0.00 T/yr CO

[e] The process flares are smokeless per 40 CFR §60.18 requirements; therefore, PM emissions are negligible.

SMSS - CALCULATION OF FLARE FEED RATES FROM BLOWDOWN EVENTS

GEORGE WEST CENTRAL FACILITY 1 January 1st 2013 through January 1st 2014

BURLINGTON RESOURCES OIL & GAS COMPANY LP

Max Engine BD Volume (Mscf/hr)	1.06
Max Engine BD Volume (Mscf/yr)	17
Gas Density (lb/scf)	0.0726

Constituent	Heating Value[a] (Btu/lb)	Inlet Gas Weight (%)	Engine BD Emissions[b] Hourly (lb/hr)	Engine BD Emissions[b] Annual (T/yr)	Flare Feed Rate[c] Hourly (MMBtu/hr)	Flare Feed Rate[c] Annual (MMBtu/yr)
Methane	23,861	32.38%	24.92	0.20	0.58	9.35
Ethane	22,304	22.72%	17.48	0.14	0.38	6.12
Propane	21,646	20.92%	16.10	0.13	0.34	5.52
I-Butane	21,242	5.48%	4.22	0.03	0.09	1.25
N-Butane	21,293	8.70%	6.70	0.05	0.14	2.09
I-Pentane	21,025	2.56%	1.97	0.02	0.04	0.82
N-Pentane	21,072	1.89%	1.45	0.01	0.03	0.41
Cyclopentane	20,350	0.00%	0.00	0.00	0.00	0.00
n-Hexane	20,928	0.38%	0.29	0.002	0.01	0.08
Cyclohexane	20,195	0.11%	0.08	0.001	0.002	0.04
Other Hexanes	20,928	0.85%	0.65	0.01	0.01	0.41
Heptanes	20,825	0.22%	0.17	0.001	0.003	0.04
Octanes	20,747	0.04%	0.03	0.0002	0.001	0.01
Nonanes	20,687	0.03%	0.02	0.0002	0.0004	0.01
Decanes Plus	20,638	0.00%	0.00	0.00	0.00	0.00
Benzene	18,172	0.05%	0.04	0.0003	0.001	0.01
Toluene	18,422	0.06%	0.05	0.0004	0.001	0.01
Ethylbenzene	18,658	0.00%	0.00	0.00	0.00	0.00
Xylene	18,438	0.02%	0.02	0.0001	0.0004	0.004
				Totals:	**1.63**	**26.17**

[a] Heating values taken from Perry's Chemical Engineers' Handbook , Table 3-207 (pg. 3-155)

[b] Constituent Emission Rates were calculated from the known maximum blowdown volumes and density then proportioned using the Inlet Gas stream constituents weight percents. An example calculation for Methane emissions is as follows:

Methane (lb/hr) = Maximum BD Volume (Mscf/hr) * Gas Density (lb/scf) * Inlet Gas Weight % * 1000
Methane (lb/hr) = (1.06 Mscf/hr) * (0.0726 lb/scf) * 32.38% * 1,000
Methane (lb/hr) = 24.92 lb/hr

[c] An example calculation for the hourly flare feed rate for Methane is demonstrated.

MMBtu/hr Methane = Methane Heating Value (Btu/lb) * Hourly Methane Emissions (lb/hr) * 98% of stream is combusted / 10^6
MMBtu/hr Methane = (23,861 Btu/lb) * (0,024.92 lb/hr) * 98% / (10^6)
MMBtu/hr Methane = 0.58 MMBtu/hr

An example calculation for the annual flare feed rate for Methane is demonstrated.

MMBtu/yr Methane = Methane Heating Value (Btu/lb) * Annual Methane Emissions (T/yr) * (2,000 lb/T) * 98% of stream is combusted / 10^6
MMBtu/yr Methane = (23,861 Btu/lb) * (0.20 T/yr) * (2,000 lb/T) * 98% / (10^6)
MMBtu/yr Methane = 9.35 MMBtu/yr

TABLE 3-1
SUMMARY OF ACTUAL AIR EMISSION RATES

GEORGE WEST CENTRAL FACILITY 1 January 1st 2014 through May 1st 2014

BURLINGTON RESOURCES OIL & GAS COMPANY LP

			Proposed Allowable Hourly and Annual Emission Rates															
			VOC		NO_X		CO		$PM/PM_{10}/PM_{2.5}$		SO_2		H_2S		CH_2O		Benzene	
EPN	**FIN**	**Description**	**(lb/hr)**	**(T/yr)**	**(lb/hr)**	**(T/yr)**	**(lb/hr)**	**(T/yr)**	**(lb/hr)**	**(T/yr)**	**(lb/hr)**	**(T/yr)**	**(lb/hr)**	**(T/yr)**	**(lb/hr)**	**(T/yr)**	**(lb/hr)**	**(T/yr)**
Normal Operations																		
COMP-01	COMP-01	Compressor Engine 1	0.46	0.58	0.76	0.96	0.27	0.34	0.05	0.06	0.01	0.01	--	--	0.27	0.34	0.002	0.003
FUG	FUG	Site Fugitives	0.81	1.20	--	--	--	--	--	--	--	--	0.001	0.001	--	--	0.01	0.01
REB-1	REB-1	Glycol Reboiler No. 1	0.003	0.004	0.05	0.07	0.04	0.06	0.004	0.01	0.001	0.001	--	--	0.00004	0.0001	0.000001	0.000001
REB-1	DEHY-SV	Glycol Dehy Still Vent	0.06	0.08	--	--	--	--	--	--	--	--	0.001	0.001	--	--	0.001	0.001
FL-1	TK-01 TK-02	Controlled Condensate Tank Emissions	0.84	0.79	--	--	--	--	--	--	--	--	0.0002	0.0003	--	--	0.01	0.002
FL-1	TK-03	Controlled Slop Tank Emissions	0.31	0.05	--	--	--	--	--	--	--	--	--	--	--	--	0.005	0.001
FL-1	TK-04	Controlled PW Tank Emissions	0.07	0.10	--	--	--	--	--	--	--	--	0.00002	0.00002	--	--	0.0002	0.0002
FL-1	TRUCK1	Controlled Condensate Truck Loading	2.74	0.06	--	--	--	--	--	--	--	--	--	--	--	--	0.04	0.001
FL-1	TRUCK2	Controlled Produced Water Truck Loading	0.03	0.002	--	--	--	--	--	--	--	--	--	--	--	--	0.0002	0.00002
FL-1	FL-1	Flare Combustion (normal operations waste gas, assist, and pilot)	0.01	0.01	1.04	1.01	2.10	2.01	--	--	0.12	0.17	0.0002	0.0003	--	--	0.000003	0.000004
TK-AF	TK-AF	Antifreeze Liquid Storage	0.50	0.01	--	--	--	--	--	--	--	--	--	--	--	--	--	--
TK-LO	TK-LO	Lube Oil Liquid Storage	0.0002	0.000002	--	--	--	--	--	--	--	--	--	--	--	--	--	--
TK-SCAV	TK-SCAV	H_2S Scavenger Liquid Storage	<0.01	<0.01	--	--	--	--	--	--	--	--	--	--	--	--	--	--
Scheduled Maintenance, Startup and Shutdown Events																		
COMP-01-SV	COMP-01-SV	Compressor Engine 1 Starter Vent	29.40	0.43	--	--	--	--	--	--	--	--	0.06	0.001	--	--	0.05	0.001
FL-1-SMSS	COMP-01-BD	Compressor Engine 1 Blowdown	0.69	0.01	--	--	--	--	--	--	--	--	0.001	0.00002	--	--	0.001	0.00002
FL-1-SMSS	FL-1-SMSS	Flare Combustion (Blowdowns waste gas)	--	--	0.22	0.003	0.45	0.01	--	--	0.13	0.002	0.001	0.00002	--	--	--	--
TK-01 TK-02	TK-01 TK-02	Uncontrolled Condensate Tank Standing Loss Emissions (during flare downtime)	0.00	0.00	--	--	--	--	--	--	--	--	--	--	--	--	0.00	0.00
TK-03	TK-03	Uncontrolled Slop Tank Standing Loss Emissions (during flare downtime)	0.00	0.00	--	--	--	--	--	--	--	--	--	--	--	--	0.00	0.00
TK-04	TK-04	Uncontrolled PW Tank Standing Loss Emissions (during flare downtime)	0.005	0.0001	--	--	--	--	--	--	--	--	--	--	--	--	0.00004	0.000001
		Site-Wide Emissions:	**35.93**	**3.33**	**2.07**	**2.04**	**2.86**	**2.42**	**0.05**	**0.07**	**0.26**	**0.18**	**0.06**	**0.00**	**0.27**	**0.34**	**0.12**	**0.02**

CALCULATION OF COMPRESSOR ENGINE POTENTIAL TO EMIT

GEORGE WEST CENTRAL FACILITY 1 January 1st 2014 through May 1st 2014

BURLINGTON RESOURCES OIL & GAS COMPANY LP

EPN	FIN	Description	Engine Ratings: Type	Engine Ratings: Rated Horsepower (hp)	Engine Ratings: Fuel Consumption (Btu/hp-hr)	Annual Operating Hours (hr/yr)	Pollutant	Emission Factors [a]	Units	Potential to Emit (PTE): Hourly [a] (lb/hr)	Potential to Emit (PTE): Annual [b] (T/yr)
COMP-01	COMP-01	Compressor Engine 1	Caterpillar G3508TALE	690	7,405	2,521	CO	0.18	g/hp-hr	0.27	0.34
			Lean Burn				NO_X	0.50	g/hp-hr	0.76	0.96
			Catalyst				$PM/PM_{10}/PM_{2.5}$	0.0099871	lb/MMBtu	0.05	0.06
			AFR Controller				SO_2	10	ppm S	0.01	0.01
							VOC	0.30	g/hp-hr	0.46	0.58
							CH_2O	0.0528	lb/MMBtu	0.27	0.34
							Benzene[c]	0.001	g/hp-hr	0.002	0.003

[a] The Emission Factors for engines COMP-01 for CO, NO_X and VOC are based on vendor data and conservatively represented. The VOC emission factor includes the CH_2O emission factor from AP-42 because the vendor provided information does not include formaldehyde. An example calculation for hourly CO emissions for EPN COMP-01 follows:

CO (lb/hr) = (Rated Horsepower, hp)*(Emission Factor, g/hp-hr)*(1 lb/453.59 g)

CO (lb/hr) = (690 hp)*(0.18 g/hp-hr)*(1 lb/453.59 g)

= 0.27 lb/hr CO

The PM/PM_{10} and CH_20 Emission Factors for EPN COMP-01 and COMP-02 are from AP-42 Chapter 3. An example calculation for hourly PM emissions for EPN COMP-01 follows:

PM (lb/hr) = (Fuel Consumption, Btu/hp-hr)*(Rated Horsepower, hp)*(1 MMBtu/10^6 Btu)*(Emission Factor, lb/MMBtu)

PM (lb/hr) = (7,405 Btu/hp-hr)*(690 hp)*(1 MMBtu/10^6 Btu)*(0.009987 lb/MMBtu)

= 0.05 lb/hr PM

A material balance approach was used to estimate the SO_2 emission rates using the maximum sulfur concentration in the natural gas. H_2S Scavenger liquids are used to bring the fuel gas H_2S concentration below 10 ppm S. An example calculation for hourly SO_2 emissions for EPN COMP-01 follows:

SO_2 (lb/hr) = (Fuel Consumption, Btu/hp-hr)*(Rated Horsepower, hp)/(Lower Fuel Heating Value, Btu/scf)*(Sulfur Content, ppmv)*(1 lb-mol/379 scf)*(32.06 lb S/lb-mol)*(64.06 lb SO_2/32.06 lb S)

SO_2 (lb/hr) = (7,418 Btu/hp-hr)*(276 hp)/(1,235 Btu/scf)*(10 scf S/10^6 scf gas)*(1 lb-mol/379 scf)*(32.06 lb S/lb-mol)*(64.06 lb SO2/32.06 lb S)

= 0.01 lb/hr SO_2

[b] An example calculation for annual CO emissions for EPN COMP-01 follows:

CO (T/yr) = (Hourly PTE, lb/hr)*(Annual Operating Hours, hr/yr)*(1 T/2,000 lb)

CO (T/yr) = (0.27 lb/hr)*(2,521 hr/yr)*(1 T/2,000 lb)

= 0.34 T/yr CO

[c] An example calculation for benzene emission factor (EF) for EPN COMP-01 follows:

Benzene EF (g/hp-hr) = (VOC emission factor, g/hp-hr)*(Benzene AP-42 Emission Factor, lb/MMBtu) / (VOC AP-42 Emission Factor, lb/MMBtu)

Benzene EF (g/hp-hr) = (0.30) * (0.00044 lb/MMBtu) / (0.118 lb/MMBtu)

= 0.001 g/hp-hr

CALCULATION OF SITE FUGITIVES (FIN FUG) POTENTIAL TO EMIT

GEORGE WEST CENTRAL FACILITY 1 January 1st 2014 through May 1st 2014

BURLINGTON RESOURCES OIL & GAS COMPANY LP

Component	Number of Components	Emission Factors [a] (lb/hr-component)	Annual Operating Hours (hr/yr)	Maximum VOC[a] (wt%)	Maximum Benzene[a] (wt%)	Maximum H_2S (wt%)	Reduction Credit [a] (%)	PTE VOC Hourly [b] (lb/hr)	PTE VOC Annual [c] (T/yr)	PTE Benzene Hourly [b] (lb/hr)	PTE Benzene Annual [c] (T/yr)	PTE H_2S Hourly [b] (lb/hr)	PTE H_2S Annual [c] (T/yr)
Valves													
Gas Streams	75	0.00992	2,880	45%	0.16%	0.09%	0%	0.33	0.48	0.001	0.002	0.001	0.001
Light Oil	54	0.0055	2,880	100%	1.64%	--	0%	0.30	0.43	0.005	0.01	--	--
Water/Light Oil	55	0.000216	2,880	--	0.80%	--	0%	0.01	0.02	0.0001	0.0001	--	--
Pumps seals													
Water/Light Oil	3	0.000052	2,880	--	0.80%	--	0%	0.0002	0.000	0.000001	0.000002	--	--
Compressors seals													
Gas Streams	4	0.0194	2,880	45%	0.16%	0.09%	0%	0.03	0.05	0.0001	0.0002	0.0001	0.0001
Flanges													
Gas Streams	88	0.00086	2,880	45%	0.16%	0.09%	0%	0.03	0.05	0.0001	0.0002	0.0001	0.0001
Light Oil	29	0.000243	2,880	100%	1.64%	--	0%	0.01	0.01	0.0001	0.0002	--	--
Water/Light Oil	10	0.000006	2,880	--	0.80%	--	0%	0.0001	0.0001	0.0000005	0.000001	--	--
Connectors													
Gas Streams	123	0.00044	2,880	45%	0.16%	0.09%	0%	0.02	0.04	0.0001	0.0001	0.00005	0.0001
Light Oil	113	0.000463	2,880	100%	1.64%	--	0%	0.05	0.08	0.001	0.001	--	--
Water/Light Oil	124	0.000243	2,880	--	0.80%	--	0%	0.03	0.04	0.0002	0.0003	--	--
							TOTAL:	**0.81**	**1.20**	**0.01**	**0.01**	**0.001**	**0.001**

[a] Fugitive Emission Factors and Reduction Credits are per TCEQ Technical Guidance Document for Equipment Leak Fugitives, dated October 2000. The emission factors are for total hydrocarbon, except for the emission factors associated with Water/Light Oil. As indicated on page 6 of 55 in the mentioned Guidance document, these factors are based off of a known stream constituency of 50%-99% water, and remainder VOC. Therefore, applying a VOC wt % would be double counting for the reduction due to water.

[b] Hourly VOC emission rates are calculated as follows:

(75 components) * (0.00992 lb/hr-component) * (45% VOC) * (100% - 0% reduction credit) = 0.33 lb/hr

[c] Annual VOC emission rates are calculated as follows:

(75 components) * (0.00992 lb/hr-component) * (2,880 hr/yr) * (45% VOC) * (100% - 0% reduction credit) / (2,000 lb/T) = 0.48 T/yr

CALCULATION OF HEATERS POTENTIAL TO EMIT

GEORGE WEST CENTRAL FACILITY 1 January 1st 2014 through May 1st 2014

BURLINGTON RESOURCES OIL & GAS COMPANY LP

EPN	FIN	Description	Rated Duty (MMBtu/hr)	Operating Annual (hr/yr)	Pollutant	Emission Factor [a]	Unit	Potential To Emit[b] Hourly (lb/hr)	Potential To Emit[b] Annual (T/yr)
REB-1	REB-1	Glycol Reboiler No. 1	0.50	2,880	CO	84	lb/MMscf	0.04	0.06
					NO_X	100	lb/MMscf	0.05	0.07
					$PM/PM_{10}/PM_{2.5}$ [d]	7.6	lb/MMscf	0.004	0.01
					SO_2 [c]	10.0	ppm H2S	0.001	0.001
					VOC	5.5	lb/MMscf	0.003	0.004
					Benzene	0.0021	lb/MMscf	0.000001	0.000001
					CH_2O	0.075	lb/MMscf	0.00004	0.0001

[a] Unless otherwise noted, emission factors are from AP-42 Tables 1.4-1, 1.4-2, and 1.4-3 (dated 7/98) and are based on a fuel HHV of 1020 Btu/scf.

[b] Example calculations for EPN REB-1 follows:

CO (lb/hr) = (Rated Duty, MMBtu/hr)/(Higher Heating Value, Btu/scf)*(Emission Factor, lb/MMscf)

CO (lb/hr) = (0.50 MMBtu/hr)*) / (1020 Btu/scf) * (84 lb/MMscf)

= 0.04 lb/hr CO

CO (T/yr) = (Hourly Emissions, lb/hr)*(Annual Operating Hours, hr/yr)/(2,000 lb/T)

CO (T/yr) = (0.04 lb/hr)*(2,880 hr/yr)/(2,000 lb/T)

= 0.06 T/yr CO

[c] A material balance approach was used to estimate the SO_2 emission rates using the maximum sulfur concentration in the natural gas. H_2S Scavenger liquids are used to bring the fuel gas H_2S concentration below 10 ppm S.

SO_2 (lb/hr) = (Rated Duty, MMBtu/hr)/(Fuel Heating Value, Btu/scf)*(Sulfure, scf H2S/MMscf gas)*(1 lb-mol/379 scf)*(64.06 lb SO_2/lb-mol S)

SO_2 (lb/hr) = (0.50 MMBtu/hr)/(1544 Btu/scf)*(10.0 scf S/MMscf gas)*(1 lb-mol/379 scf)*(34.065 lb H2S/lb-mol)*(64.06 lb SO2/34.065 lb H2S)

= 0.001 lb/hr SO_2

[d] All PM is assumed to be less than 2.5 microns in diameter per footnote "c" of AP-42 Table 1.4-2.

GLYCOL DEHYDRATOR STILL VENT POTENTIAL TO EMIT

GEORGE WEST CENTRAL FACILITY 1 January 1st 2014 through May 1st 2014

BURLINGTON RESOURCES OIL & GAS COMPANY LP

	Potential to Emit FIN DEHY-SV/EPN REB-1	
Component	**Hourly (lb/hr)**	**Annual (T/yr)**
Hydrogen Sulfide	0.0005	0.0006
Methane	0.0378	0.0544
Ethane	0.0286	0.0411
Propane	0.0277	0.0398
Isobutane	0.0072	0.0105
n-Butane	0.0121	0.0175
Isopentane	0.0034	0.0049
n-Pentane	0.0026	0.0038
n-Hexane	0.0006	0.0008
Cyclohexane	0.0003	0.0005
Other Hexanes	0.0012	0.0017
Heptanes	0.0004	0.0006
Benzene	0.0006	0.0009
Toluene	0.0007	0.0010
Ethylbenzene	0.0002	0.0002
Xylenes	0.0003	0.0003
C8+ Heavies	0.0002	0.0003
Total VOC	**0.0575**	**0.0828**

Note: The emissions from the pressurized flash tank and the condenser vent are routed to the reboiler, which will be running continuously with a 98% combustion efficiency. In the event that the reboiler can not handle the total volume of recycled gas to it, the remainder will be re-directed to flare with a 98% combustion efficiency. Accounting for both the max heater combustion and the max waste gas flare combustions is a built in conservative assumption such that both would not be running at max at the same time.

GRI-GLYCalc VERSION 4.0 - SUMMARY OF INPUT VALUES

Case Name: Sugarloaf CF
File Name: T:\ConocoPhillips - 507\507-104 EPA 114 Response\14 George West CF 1\Geroge West D
Date: August 06, 2014

DESCRIPTION:

Description: Burlington Resources Dehy Unit

Annual Hours of Operation: 2880.0 hours/yr

WET GAS:

Temperature: 100.00 deg. F
Pressure: 1000.00 psig
Wet Gas Water Content: Saturated

Component	Conc. (vol %)
Carbon Dioxide	2.1520
Hydrogen Sulfide	0.0500
Nitrogen	0.0690
Methane	55.2230
Ethane	20.6690
Propane	12.9830
Isobutane	2.5780
n-Butane	4.0950
Isopentane	0.9690
n-Pentane	0.7180
n-Hexane	0.1210
Cyclohexane	0.0350
Other Hexanes	0.2710
Heptanes	0.0610
Benzene	0.0160
Toluene	0.0180
Ethylbenzene	0.0010
Xylenes	0.0060
C8+ Heavies	0.0150

DRY GAS:

Flow Rate: 6.0 MMSCF/day
Water Content: 7.0 lbs. H2O/MMSCF

LEAN GLYCOL:

Glycol Type: TEG
Water Content: 1.0 wt% H2O
Recirculation Ratio: 0.6 gal/lb H2O

PUMP:

Glycol Pump Type: Gas Injection
Gas Injection Pump Volume Ratio: 0.080 acfm gas/gpm glycol

FLASH TANK:

Flash Control: Combustion device
Flash Control Efficiency: 98.00 %
Temperature: 180.0 deg. F
Pressure: 35.0 psig

REGENERATOR OVERHEADS CONTROL DEVICE:

Control Device: Condenser
Temperature: 120.0 deg. F
Pressure: 14.0 psia

Control Device: Combustion Device
Destruction Efficiency: 98.0 %
Excess Oxygen: 0.0 %
Ambient Air Temperature: 80.0 deg. F

GRI-GLYCalc VERSION 4.0 - AGGREGATE CALCULATIONS REPORT

Case Name: Sugarloaf CF
File Name: T:\ConocoPhillips - 507\507-104 EPA 114 Response\14 George West CF 1\Geroge West
Date: August 06, 2014

DESCRIPTION:

Description: Burlington Resources Dehy Unit

Annual Hours of Operation: 2880.0 hours/yr

EMISSIONS REPORTS:

CONTROLLED REGENERATOR EMISSIONS

Component	lbs/hr	lbs/day	tons/yr
Hydrogen Sulfide	<0.0001	<0.001	<0.0001
Methane	0.0001	0.002	0.0001
Ethane	0.0002	0.004	0.0003
Propane	0.0005	0.011	0.0007
Isobutane	0.0001	0.004	0.0002
n-Butane	0.0003	0.007	0.0004
Isopentane	0.0001	0.002	0.0001
n-Pentane	0.0001	0.002	0.0001
n-Hexane	<0.0001	<0.001	<0.0001
Cyclohexane	<0.0001	<0.001	<0.0001
Other Hexanes	<0.0001	<0.001	<0.0001
Heptanes	<0.0001	<0.001	<0.0001
Benzene	0.0002	0.005	0.0003
Toluene	0.0002	0.005	0.0003
Ethylbenzene	<0.0001	<0.001	<0.0001
Xylenes	0.0001	0.001	0.0001
C8+ Heavies	<0.0001	<0.001	<0.0001
Total Emissions	0.0020	0.047	0.0028
Total Hydrocarbon Emissions	0.0019	0.046	0.0028
Total VOC Emissions	0.0017	0.040	0.0024
Total HAP Emissions	0.0005	0.013	0.0008
Total BTEX Emissions	0.0005	0.012	0.0007

UNCONTROLLED REGENERATOR EMISSIONS

Component	lbs/hr	lbs/day	tons/yr
Hydrogen Sulfide	0.0021	0.051	0.0030
Methane	0.0050	0.119	0.0072
Ethane	0.0089	0.214	0.0128
Propane	0.0240	0.577	0.0346
Isobutane	0.0077	0.186	0.0111
n-Butane	0.0160	0.383	0.0230
Isopentane	0.0043	0.103	0.0062
n-Pentane	0.0039	0.094	0.0056
n-Hexane	0.0012	0.028	0.0017
Cyclohexane	0.0015	0.036	0.0021
Other Hexanes	0.0019	0.046	0.0028
Heptanes	0.0011	0.027	0.0016
Benzene	0.0225	0.540	0.0324
Toluene	0.0334	0.802	0.0481
Ethylbenzene	0.0024	0.058	0.0035
Xylenes	0.0235	0.565	0.0339
C8+ Heavies	0.0003	0.007	0.0004
Total Emissions	0.1597	3.834	0.2300
Total Hydrocarbon Emissions	0.1576	3.783	0.2270
Total VOC Emissions	0.1437	3.450	0.2070
Total HAP Emissions	0.0830	1.993	0.1196
Total BTEX Emissions	0.0819	1.965	0.1179

FLASH GAS EMISSIONS

Component	lbs/hr	lbs/day	tons/yr
Hydrogen Sulfide	0.0004	0.008	0.0005
Methane	0.0377	0.905	0.0543
Ethane	0.0284	0.681	0.0408
Propane	0.0272	0.652	0.0391
Isobutane	0.0071	0.171	0.0103
n-Butane	0.0118	0.284	0.0171
Isopentane	0.0033	0.080	0.0048
n-Pentane	0.0025	0.061	0.0037
n-Hexane	0.0005	0.012	0.0007
Cyclohexane	0.0002	0.006	0.0004
Other Hexanes	0.0011	0.027	0.0016
Heptanes	0.0003	0.008	0.0005
Benzene	0.0004	0.010	0.0006
Toluene	0.0005	0.012	0.0007
Ethylbenzene	<0.0001	<0.001	<0.0001
Xylenes	0.0002	0.004	0.0002
C8+ Heavies	0.0001	0.003	0.0002
Total Emissions	0.1219	2.926	0.1755
Total Hydrocarbon Emissions	0.1216	2.917	0.1750
Total VOC Emissions	0.0555	1.331	0.0799
Total HAP Emissions	0.0016	0.038	0.0023
Total BTEX Emissions	0.0011	0.026	0.0016

FLASH TANK OFF GAS

Component	lbs/hr	lbs/day	tons/yr
Hydrogen Sulfide	0.0175	0.421	0.0252
Methane	1.8861	45.266	2.7160
Ethane	1.4184	34.041	2.0424
Propane	1.3594	32.625	1.9575
Isobutane	0.3572	8.573	0.5144
n-Butane	0.5924	14.218	0.8531
Isopentane	0.1657	3.976	0.2385
n-Pentane	0.1274	3.059	0.1835
n-Hexane	0.0260	0.625	0.0375
Cyclohexane	0.0124	0.297	0.0178
Other Hexanes	0.0562	1.349	0.0810
Heptanes	0.0161	0.385	0.0231
Benzene	0.0203	0.488	0.0293
Toluene	0.0245	0.588	0.0353
Ethylbenzene	0.0012	0.030	0.0018
Xylenes	0.0079	0.190	0.0114
C8+ Heavies	0.0065	0.157	0.0094
Total Emissions	6.0953	146.286	8.7772
Total Hydrocarbon Emissions	6.0777	145.866	8.7519
Total VOC Emissions	2.7733	66.559	3.9935
Total HAP Emissions	0.0800	1.920	0.1152
Total BTEX Emissions	0.0540	1.295	0.0777

EQUIPMENT REPORTS:

CONDENSER AND COMBUSTION DEVICE

Condenser Outlet Temperature: 120.00 deg. F
Condenser Pressure: 14.00 psia
Condenser Duty: 3.87e-004 MM BTU/hr
Hydrocarbon Recovery: 0.00 bbls/day
Produced Water: 0.84 bbls/day
Ambient Temperature: 80.00 deg. F
Excess Oxygen: 0.00 %

Combustion Efficiency: 98.00 %
Supplemental Fuel Requirement: 3.87e-004 MM BTU/hr

Component	Emitted	Destroyed
Hydrogen Sulfide	1.52%	98.48%
Methane	1.99%	98.01%
Ethane	1.98%	98.02%
Propane	1.96%	98.04%
Isobutane	1.94%	98.06%
n-Butane	1.92%	98.08%
Isopentane	1.82%	98.18%
n-Pentane	1.73%	98.27%
n-Hexane	1.51%	98.49%
Cyclohexane	1.37%	98.63%
Other Hexanes	1.65%	98.35%
Heptanes	1.05%	98.95%
Benzene	0.99%	99.01%
Toluene	0.65%	99.35%
Ethylbenzene	0.31%	99.69%
Xylenes	0.25%	99.75%
C8+ Heavies	0.01%	99.99%

ABSORBER

Calculated Absorber Stages: 2.10
Specified Dry Gas Dew Point: 7.00 lbs. H2O/MMSCF
Temperature: 100.0 deg. F
Pressure: 1000.0 psig
Dry Gas Flow Rate: 6.0000 MMSCF/day
Glycol Losses with Dry Gas: 0.8804 lb/hr
Wet Gas Water Content: Saturated
Calculated Wet Gas Water Content: 57.04 lbs. H2O/MMSCF
Specified Lean Glycol Recirc. Ratio: 0.60 gal/lb H2O

Component	Remaining in Dry Gas	Absorbed in Glycol
Water	12.26%	87.74%
Carbon Dioxide	99.97%	0.03%
Hydrogen Sulfide	99.86%	0.14%
Nitrogen	100.00%	0.00%
Methane	100.00%	0.00%
Ethane	100.00%	0.00%
Propane	99.99%	0.01%
Isobutane	99.99%	0.01%
n-Butane	99.99%	0.01%
Isopentane	99.99%	0.01%
n-Pentane	99.99%	0.01%
n-Hexane	99.99%	0.01%
Cyclohexane	99.96%	0.04%
Other Hexanes	99.99%	0.01%
Heptanes	99.99%	0.01%
Benzene	99.51%	0.49%
Toluene	99.50%	0.50%
Ethylbenzene	99.51%	0.49%
Xylenes	99.28%	0.72%
C8+ Heavies	99.99%	0.01%

FLASH TANK

Flash Control: Combustion device
Flash Control Efficiency: 98.00 %
Flash Temperature: 180.0 deg. F
Flash Pressure: 35.0 psig

Component	Left in Glycol	Removed in Flash Gas
Water	98.02%	1.98%
Carbon Dioxide	2.47%	97.53%
Hydrogen Sulfide	10.78%	89.22%
Nitrogen	0.23%	99.77%

Methane	0.26%	99.74%
Ethane	0.63%	99.37%
Propane	1.74%	98.26%
Isobutane	2.12%	97.88%
n-Butane	2.62%	97.38%
Isopentane	2.60%	97.40%
n-Pentane	3.08%	96.92%
n-Hexane	4.36%	95.64%
Cyclohexane	12.41%	87.59%
Other Hexanes	3.51%	96.49%
Heptanes	6.57%	93.43%
Benzene	54.78%	45.22%
Toluene	60.88%	39.12%
Ethylbenzene	69.39%	30.61%
Xylenes	77.98%	22.02%
C8+ Heavies	7.54%	92.46%

REGENERATOR

No Stripping Gas used in regenerator.

Component	Remaining in Glycol	Distilled Overhead
Water	5.43%	94.57%
Carbon Dioxide	0.00%	100.00%
Hydrogen Sulfide	0.00%	100.00%
Nitrogen	0.00%	100.00%
Methane	0.00%	100.00%
Ethane	0.00%	100.00%
Propane	0.00%	100.00%
Isobutane	0.00%	100.00%
n-Butane	0.00%	100.00%
Isopentane	3.53%	96.47%
n-Pentane	3.54%	96.46%
n-Hexane	2.75%	97.25%
Cyclohexane	15.13%	84.87%
Other Hexanes	5.83%	94.17%
Heptanes	2.24%	97.76%
Benzene	8.63%	91.37%
Toluene	12.29%	87.71%
Ethylbenzene	14.20%	85.80%
Xylenes	15.92%	84.08%
C8+ Heavies	44.99%	55.01%

STREAM REPORTS:

WET GAS STREAM

Temperature: 100.00 deg. F
Pressure: 1014.70 psia
Flow Rate: 2.50e+005 scfh

Component	Conc. (vol%)	Loading (lb/hr)
Water	1.20e-001	1.43e+001
Carbon Dioxide	2.15e+000	6.24e+002
Hydrogen Sulfide	4.99e-002	1.12e+001
Nitrogen	6.89e-002	1.27e+001
Methane	5.51e+001	5.83e+003
Ethane	2.06e+001	4.09e+003
Propane	1.30e+001	3.77e+003
Isobutane	2.57e+000	9.87e+002
n-Butane	4.09e+000	1.57e+003
Isopentane	9.67e-001	4.60e+002
n-Pentane	7.17e-001	3.41e+002
n-Hexane	1.21e-001	6.87e+001

Cyclohexane	3.49e-002	1.94e+001
Other Hexanes	2.71e-001	1.54e+002
Heptanes	6.09e-002	4.03e+001
Benzene	1.60e-002	8.23e+000
Toluene	1.80e-002	1.09e+001
Ethylbenzene	9.98e-004	6.99e-001
Xylenes	5.99e-003	4.20e+000
C8+ Heavies	1.50e-002	1.68e+001
Total Components	100.00	1.80e+004

DRY GAS STREAM

Temperature: 100.00 deg. F
Pressure: 1014.70 psia
Flow Rate: 2.50e+005 scfh

Component	Conc. (vol%)	Loading (lb/hr)
Water	1.47e-002	1.75e+000
Carbon Dioxide	2.15e+000	6.24e+002
Hydrogen Sulfide	4.99e-002	1.12e+001
Nitrogen	6.90e-002	1.27e+001
Methane	5.52e+001	5.83e+003
Ethane	2.07e+001	4.09e+003
Propane	1.30e+001	3.77e+003
Isobutane	2.58e+000	9.87e+002
n-Butane	4.09e+000	1.57e+003
Isopentane	9.68e-001	4.60e+002
n-Pentane	7.18e-001	3.41e+002
n-Hexane	1.21e-001	6.87e+001
Cyclohexane	3.50e-002	1.94e+001
Other Hexanes	2.71e-001	1.54e+002
Heptanes	6.10e-002	4.03e+001
Benzene	1.59e-002	8.19e+000
Toluene	1.79e-002	1.09e+001
Ethylbenzene	9.94e-004	6.96e-001
Xylenes	5.95e-003	4.17e+000
C8+ Heavies	1.50e-002	1.68e+001
Total Components	100.00	1.80e+004

LEAN GLYCOL STREAM

Temperature: 100.00 deg. F
Flow Rate: 1.25e-001 gpm

Component	Conc. (wt%)	Loading (lb/hr)
TEG	9.90e+001	6.97e+001
Water	1.00e+000	7.05e-001
Carbon Dioxide	2.60e-011	1.83e-011
Hydrogen Sulfide	2.31e-012	1.63e-012
Nitrogen	5.25e-014	3.70e-014
Methane	6.33e-018	4.46e-018
Ethane	1.30e-007	9.14e-008
Propane	1.43e-008	1.01e-008
Isobutane	2.88e-009	2.03e-009
n-Butane	4.79e-009	3.37e-009
Isopentane	2.22e-004	1.57e-004
n-Pentane	2.03e-004	1.43e-004
n-Hexane	4.62e-005	3.26e-005
Cyclohexane	3.77e-004	2.65e-004
Other Hexanes	1.69e-004	1.19e-004
Heptanes	3.59e-005	2.53e-005
Benzene	3.01e-003	2.12e-003
Toluene	6.65e-003	4.69e-003
Ethylbenzene	5.69e-004	4.01e-004
Xylenes	6.32e-003	4.46e-003
C8+ Heavies	3.40e-004	2.40e-004

Total Components 100.00 7.05e+001

RICH GLYCOL AND PUMP GAS STREAM

Temperature: 100.00 deg. F
Pressure: 1014.70 psia
Flow Rate: 1.64e-001 gpm
NOTE: Stream has more than one phase.

Component	Conc. (wt%)	Loading (lb/hr)
TEG	7.78e+001	6.95e+001
Water	1.48e+001	1.32e+001
Carbon Dioxide	4.15e-001	3.71e-001
Hydrogen Sulfide	2.20e-002	1.96e-002
Nitrogen	4.70e-003	4.20e-003
Methane	2.11e+000	1.89e+000
Ethane	1.60e+000	1.43e+000
Propane	1.55e+000	1.38e+000
Isobutane	4.08e-001	3.65e-001
n-Butane	6.80e-001	6.08e-001
Isopentane	1.90e-001	1.70e-001
n-Pentane	1.47e-001	1.31e-001
n-Hexane	3.04e-002	2.72e-002
Cyclohexane	1.58e-002	1.41e-002
Other Hexanes	6.52e-002	5.83e-002
Heptanes	1.92e-002	1.72e-002
Benzene	5.03e-002	4.50e-002
Toluene	7.00e-002	6.26e-002
Ethylbenzene	4.55e-003	4.06e-003
Xylenes	4.01e-002	3.59e-002
C8+ Heavies	7.90e-003	7.06e-003
Total Components	100.00	8.94e+001

FLASH TANK OFF GAS STREAM

Temperature: 180.00 deg. F
Pressure: 49.70 psia
Flow Rate: 9.16e+001 scfh

Component	Conc. (vol%)	Loading (lb/hr)
Water	6.03e+000	2.62e-001
Carbon Dioxide	3.41e+000	3.62e-001
Hydrogen Sulfide	2.13e-001	1.75e-002
Nitrogen	6.20e-002	4.19e-003
Methane	4.87e+001	1.89e+000
Ethane	1.95e+001	1.42e+000
Propane	1.28e+001	1.36e+000
Isobutane	2.55e+000	3.57e-001
n-Butane	4.22e+000	5.92e-001
Isopentane	9.51e-001	1.66e-001
n-Pentane	7.32e-001	1.27e-001
n-Hexane	1.25e-001	2.60e-002
Cyclohexane	6.10e-002	1.24e-002
Other Hexanes	2.70e-001	5.62e-002
Heptanes	6.64e-002	1.61e-002
Benzene	1.08e-001	2.03e-002
Toluene	1.10e-001	2.45e-002
Ethylbenzene	4.85e-003	1.24e-003
Xylenes	3.08e-002	7.90e-003
C8+ Heavies	1.59e-002	6.53e-003
Total Components	100.00	6.72e+000

FLASH TANK GLYCOL STREAM

Temperature: 180.00 deg. F
Flow Rate: 1.49e-001 gpm

Component	Conc. (wt%)	Loading (lb/hr)	(ppm)
TEG	8.41e+001	6.95e+001	840914.
Water	1.57e+001	1.30e+001	156890.
Carbon Dioxide	1.11e-002	9.18e-003	111.
Hydrogen Sulfide	2.56e-003	2.12e-003	26.
Nitrogen	1.16e-005	9.61e-006	0.
Methane	6.01e-003	4.97e-003	60.
Ethane	1.08e-002	8.92e-003	108.
Propane	2.90e-002	2.40e-002	290.
Isobutane	9.35e-003	7.73e-003	94.
n-Butane	1.93e-002	1.60e-002	193.
Isopentane	5.36e-003	4.43e-003	54.
n-Pentane	4.90e-003	4.05e-003	49.
n-Hexane	1.44e-003	1.19e-003	14.
Cyclohexane	2.12e-003	1.75e-003	21.
Other Hexanes	2.47e-003	2.04e-003	25.
Heptanes	1.37e-003	1.13e-003	14.
Benzene	2.98e-002	2.46e-002	298.
Toluene	4.61e-002	3.81e-002	461.
Ethylbenzene	3.41e-003	2.82e-003	34.
Xylenes	3.38e-002	2.80e-002	338.
C8+ Heavies	6.44e-004	5.32e-004	6.
Total Components	100.00	8.27e+001	1000000.

FLASH GAS EMISSIONS

Flow Rate: 3.90e+002 scfh
Control Method: Combustion Device
Control Efficiency: 98.00

Component	Conc. (vol%)	Loading (lb/hr)
Water	6.04e+001	1.12e+001
Carbon Dioxide	3.92e+001	1.77e+001
Hydrogen Sulfide	1.00e-003	3.50e-004
Nitrogen	1.46e-002	4.19e-003
Methane	2.29e-001	3.77e-002
Ethane	9.18e-002	2.84e-002
Propane	6.00e-002	2.72e-002
Isobutane	1.20e-002	7.14e-003
n-Butane	1.98e-002	1.18e-002
Isopentane	4.47e-003	3.31e-003
n-Pentane	3.44e-003	2.55e-003
n-Hexane	5.88e-004	5.21e-004
Cyclohexane	2.86e-004	2.48e-004
Other Hexanes	1.27e-003	1.12e-003
Heptanes	3.12e-004	3.21e-004
Benzene	5.07e-004	4.07e-004
Toluene	5.17e-004	4.90e-004
Ethylbenzene	2.28e-005	2.49e-005
Xylenes	1.45e-004	1.58e-004
C8+ Heavies	7.47e-005	1.31e-004
Total Components	100.00	2.90e+001

REGENERATOR OVERHEADS STREAM

Temperature: 212.00 deg. F
Pressure: 14.70 psia
Flow Rate: 2.60e+002 scfh

Component	Conc. (vol%)	Loading (lb/hr)
Water	9.96e+001	1.23e+001
Carbon Dioxide	3.05e-002	9.18e-003
Hydrogen Sulfide	9.08e-003	2.12e-003
Nitrogen	5.01e-005	9.61e-006
Methane	4.53e-002	4.97e-003

Ethane	4.34e-002	8.92e-003	
Propane	7.96e-002	2.40e-002	
Isobutane	1.94e-002	7.73e-003	
n-Butane	4.01e-002	1.60e-002	
Isopentane	8.66e-003	4.27e-003	
n-Pentane	7.91e-003	3.90e-003	
n-Hexane	1.96e-003	1.15e-003	
Cyclohexane	2.58e-003	1.49e-003	
Other Hexanes	3.26e-003	1.92e-003	
Heptanes	1.61e-003	1.10e-003	
Benzene	4.21e-002	2.25e-002	
Toluene	5.30e-002	3.34e-002	
Ethylbenzene	3.33e-003	2.42e-003	
Xylenes	3.24e-002	2.35e-002	
C8+ Heavies	2.51e-004	2.93e-004	
Total Components	100.00	1.24e+001	

CONDENSER PRODUCED WATER STREAM

Temperature: 120.00 deg. F
Flow Rate: 2.45e-002 gpm

Component	Conc. (wt%)	Loading (lb/hr)	(ppm)
Water	9.99e+001	1.23e+001	999137.
Carbon Dioxide	6.34e-003	7.79e-004	63.
Hydrogen Sulfide	4.00e-003	4.91e-004	40.
Nitrogen	1.89e-007	2.32e-008	0.
Methane	1.88e-004	2.31e-005	2.
Ethane	3.83e-004	4.70e-005	4.
Propane	1.05e-003	1.29e-004	11.
Isobutane	1.82e-004	2.24e-005	2.
n-Butane	4.93e-004	6.06e-005	5.
Isopentane	8.82e-005	1.08e-005	1.
n-Pentane	8.23e-005	1.01e-005	1.
n-Hexane	1.76e-005	2.16e-006	0.
Cyclohexane	1.16e-004	1.43e-005	1.
Other Hexanes	2.58e-005	3.16e-006	0.
Heptanes	6.49e-006	7.96e-007	0.
Benzene	3.58e-002	4.39e-003	358.
Toluene	2.86e-002	3.50e-003	286.
Ethylbenzene	7.47e-004	9.17e-005	7.
Xylenes	8.28e-003	1.02e-003	83.
C8+ Heavies	5.42e-009	6.65e-010	0.
Total Components	100.00	1.23e+001	1000000.

CONDENSER RECOVERED OIL STREAM

Temperature: 120.00 deg. F
Flow Rate: 1.21e-004 gpm

Component	Conc. (wt%)	Loading (lb/hr)
Water	5.86e-002	3.02e-005
Carbon Dioxide	2.82e-002	1.45e-005
Hydrogen Sulfide	2.40e-002	1.24e-005
Nitrogen	2.94e-005	1.52e-008
Methane	4.58e-003	2.36e-006
Ethane	4.61e-002	2.38e-005
Propane	6.49e-001	3.35e-004
Isobutane	4.15e-001	2.14e-004
n-Butane	1.16e+000	5.97e-004
Isopentane	7.44e-001	3.84e-004
n-Pentane	1.01e+000	5.20e-004
n-Hexane	5.42e-001	2.80e-004
Cyclohexane	8.80e-001	4.54e-004
Other Hexanes	6.54e-001	3.37e-004
Heptanes	1.02e+000	5.24e-004

Benzene	1.35e+001	6.98e-003
Toluene	3.70e+001	1.91e-002
Ethylbenzene	3.79e+000	1.95e-003
Xylenes	3.78e+001	1.95e-002
C8+ Heavies	5.66e-001	2.92e-004
Total Components	100.00	5.16e-002

CONDENSER VENT STREAM

Temperature: 120.00 deg. F
Pressure: 14.00 psia
Flow Rate: 9.53e-001 scfh

Component	Conc. (vol%)	Loading (lb/hr)
Water	1.22e+001	5.50e-003
Carbon Dioxide	7.58e+000	8.38e-003
Hydrogen Sulfide	1.89e+000	1.61e-003
Nitrogen	1.36e-002	9.57e-006
Methane	1.23e+001	4.94e-003
Ethane	1.17e+001	8.85e-003
Propane	2.13e+001	2.36e-002
Isobutane	5.14e+000	7.50e-003
n-Butane	1.05e+001	1.53e-002
Isopentane	2.14e+000	3.88e-003
n-Pentane	1.86e+000	3.38e-003
n-Hexane	4.03e-001	8.72e-004
Cyclohexane	4.83e-001	1.02e-003
Other Hexanes	7.31e-001	1.58e-003
Heptanes	2.30e-001	5.80e-004
Benzene	5.67e+000	1.11e-002
Toluene	4.67e+000	1.08e-002
Ethylbenzene	1.41e-001	3.75e-004
Xylenes	1.12e+000	3.00e-003
C8+ Heavies	1.79e-004	7.68e-007
Total Components	100.00	1.12e-001

COMBUSTION DEVICE OFF GAS STREAM

Temperature: 1000.00 deg. F
Pressure: 14.70 psia
Flow Rate: 1.53e-002 scfh

Component	Conc. (vol%)	Loading (lb/hr)
Hydrogen Sulfide	2.35e+000	3.23e-005
Methane	1.53e+001	9.88e-005
Ethane	1.46e+001	1.77e-004
Propane	2.65e+001	4.71e-004
Isobutane	6.40e+000	1.50e-004
n-Butane	1.31e+001	3.06e-004
Isopentane	2.67e+000	7.76e-005
n-Pentane	2.32e+000	6.75e-005
n-Hexane	5.02e-001	1.74e-005
Cyclohexane	6.02e-001	2.04e-005
Other Hexanes	9.12e-001	3.17e-005
Heptanes	2.87e-001	1.16e-005
Benzene	7.07e+000	2.23e-004
Toluene	5.82e+000	2.16e-004
Ethylbenzene	1.75e-001	7.51e-006
Xylenes	1.40e+000	6.00e-005
C8+ Heavies	2.24e-004	1.54e-008
Total Components	100.00	1.97e-003
Xylenes	1.19e+000	3.42e-004
C8+ Heavies	4.82e-004	2.21e-007
Total Components	100.00	1.32e-002

SUMMARY OF TANKS SENT TO FLARE POTENTIAL TO EMIT

GEORGE WEST CENTRAL FACILITY 1 January 1st 2014 through May 1st 2014

BURLINGTON RESOURCES OIL & GAS COMPANY LP

			VOC Emissions								Benzene Emissions								H_2S Emissions[c]			
			Flash Emissions[a]		WB Emissions[b]		Uncontrolled Total		Controlled Total[d]		Flash Emissions[a]		WB Emissions[b]		Uncontrolled Total		Controlled Total[d]		Uncontrolled Total		Controlled Total[d]	
EPN	**FIN**	**Description**	**Hourly (lb/hr)**	**Annual (T/yr)**	**Hourly (lb/hr)**	**Annual (T/yr)**	**Hourly (lb/hr)**	**Annual (T/yr)**	**Hourly (lb/hr)**	**Annual (T/yr)**	**Hourly (lb/hr)**	**Annual (T/yr)**	**Hourly (lb/hr)**	**Annual (T/yr)**	**Hourly (lb/hr)**	**Annual (T/yr)**	**Hourly (lb/hr)**	**Annual (T/yr)**	**Hourly (lb/hr)**	**Annual (T/yr)**	**Hourly (lb/hr)**	**Annual (T/yr)**
FL-1	TK-01 TK-02	500 bbl Condensate Storage Tanks	26.56	38.25	15.29	1.04	41.85	39.29	0.84	0.79	0.07	0.10	0.25	0.02	0.32	0.12	0.01	0.002	0.01	0.014	0.0002	0.0003
FL-1	TK-03	500 bbl Slop Storage Tank	--	--	15.29	2.61	15.29	2.61	0.31	0.05	--	--	0.25	0.04	0.25	0.04	0.005	0.001	--	--	--	--
FL-1	TK-04	500 bbl Produced Water Storage Tank	3.29	4.74	0.15	0.03	3.44	4.77	0.07	0.10	0.01	0.01	0.001	0.0002	0.01	0.01	0.0002	0.0002	0.001	0.001	0.00002	0.00002
TK-AF[e]	TK-AF[e]	Antifreeze Liquid Storage	--	--	0.50	0.01	0.50	0.01	--	--	--	--	--	--	--	--	--	--	--	--	--	--
TK-LO[f]	TK-LO[e]	Lube Oil Liquid Storage	--	--	0.0002	0.000002	0.0002	0.000002	--	--	--	--	--	--	--	--	--	--	--	--	--	--
TK-SCAV[f]	TK-SCAV[f]	H_2S Scavenger Liquid Storage	--	--	--	--	<0.01	<0.01	--	--	--	--	--	--	--	--	--	--	--	--	--	--

Notes:

[a] VOC and Benzene Flash Emissions are calculated using the WinSim stream simulation program. Data inputs included the pressurized stream data and throughputs represented in this submittal. See the pages at the end of this attachment for a printout of the data inputs and emissions reports.

[b] The Working/Breathing emissions for tanks TK-01 thourgh TK-04 are calculated using AP 42 Chapter 7 calculations with data inputs from the stream data and throughputs. See the following pages for the represented calculations.

[c] The Ideal Gas Law was used to estimate the H2S emission rates using the maximum sulfur concentration in the gas coming off the tanks (500 ppm). An example calculation for hourly H2S emissions from FIN TK-04 follows:

H_2S (lb/hr) = (% Vol H_2S in stream) * (Total Volumetric Flow of Gas, scf/hr) * (1 atm STP) * (34.0798 lb/lb-mol H2S) / (1.314, atm-scf/lb-mol-K) / (298 K)

H_2S (lb/hr) = (500 ppm /10^6) * (25.65 scf/hr) * (1 atm) * (34.0789 lb/lbmol H2S) / (1.314, atm-scf/lb-mol-K) / (298 K)

H_2S (lb/hr) = 0.001 lb/hr

[d] All VOC tank emissions are routed to the flare control device with a capture and control efficiency of 98%. H_2S emissions are captured at 98% and then 98% converted to SO_2 during combustion.

[e] Working and breathing emissions for the Antifreeze and Lube Oil tanks were determined using Tanks 4.09d simulation software. The size and number of TK-AF and TK-LO tanks may vary, but the total throughput of the liquid and the associated VOC emissions will not exceed the proposed emission rate. Printouts from the software can be found on the following pages. An example calculation of the hourly emissions for FIN TK-AF follows:

VOC(lb/hr)= [((Breathing Loss, lb/yr) / (8,760 hr/yr)) + ((Working Loss, lb/yr) / (Number of turnovers/yr) / (Turnovers per hour))] * No. of tanks

VOC(lb/hr)= ((8.909 lb/yr) / (8,760 hr/yr)) + ((5.9832 lb/yr) / (12 turnovers/yr) / (1 turnover per hour))

VOC(lb/hr)= 0.50 lb/hr

An example calculation of the annual emissions for FIN TK-AF follows:

VOC(T/yr)= ((Working Loss, lb/yr) + (Breathing Loss, lb/yr)) / (2,000 ton/yr)) * No. of Tanks

VOC(T/yr)= ((5.9832 lb/yr) + (8.909 lb/yr)) / (2,000 ton/yr)

VOC(T/yr)= 0.01 lb/hr

[f] The size and number of the H_2S Scavenger Liquid Storage Tanks may vary, but the total throughput of the liquid and the associated VOC emissions will not exceed the proposed negligible emission rate.

CALCULATION OF STORAGE TANK WORKING AND BREATHING POTENTIAL TO EMIT

GEORGE WEST CENTRAL FACILITY 1 January 1st 2014 through May 1st 2014

BURLINGTON RESOURCES OIL & GAS COMPANY LP

Variable	Description	Units	Value
L_T	total loss = Ls + Lw	Ton/yr	See Table
L_S	standing loss = 365 Vv Wv Ke Ks	lb/yr	See Table
L_W	working loss = 0.001 Mv Pv Q Kn Kp	lb/yr	See Table
L_H	working loss = 0.001 Mv Pmax Qh	lb/hr	See Table
	Roof Construction		Cone
RVP	Condensate Reid Vapor Pressure	psia	14.42
ΔPb	Breather vent pressure range	psi	0.06
I	Solar insolation factor	Btu/ft2-day	1521
P_A	Atmospheric Pressure	psia	14.7
Mv	Vapor Molecular Weight	lb/lb-mol	53
T	Annual Average Temperature	°F	72.1
T_{AX}	Daily Maximum Ambient Temperature	°R	541.6
T_{AN}	Daily Minimum Ambient Temperature	°R	522.5
ΔT_A	Daily average ambient temperature range	°R	19.1
Kp	Product factor		1

		Tank Specifications							Material Specifications																	VOC		Benzene	
		V/H	D	H/L	Capacity	Color		α	Mv	P_{MAX}	Q^2		ΔTv	Hvo	Vv	T_{LA}	P_{VA}	Wv	ΔPv	Ke	Ks	Kn	L_S	L_W	L_T	L_H	L_T	L_H
Material	No. of Tanks	Tank Type	Tank Diameter (ft)	Tank Height/ Length (ft)	Tank Capacity (bbl)	Paint Color	Paint Conditions	Paint Solar Absorbance Factor	Vapor Molecular Weight	Reid Vapor Pressure (psia)	Max. Hourly Thruput (bbl/hr)	Annual thruput (bbl)	Daily Vapor Temp. Range °F	Vapor Space Outage (ft)	Vapor Space Volume (ft3)	Daily Average Liquid Surface Temp °R	Average Vapor Pressure (psia)	Vapor Density (lb/ft3)	Daily Vapor Pressure Range	Vapor Space Expan. Factor	Vented Vapor Sat. Factor	Turnover Factor	Standing Loss per tank (lb/yr)	Working Loss per tank (lb/yr)	Total Loss (lb/hr)	Total Loss (T/yr)	Total Loss (lb/hr)	Total Loss (T/yr)
Condensate	2	V	12	25	500	Gray	Good	0.54	53	14.42	20	2,400	36.75	12.63	1428.4	539.8	16.399	0.15004	4.15306	-2.3410	0.08	1.00	0.00	2,085.95	**15.29**	**1.04**	**0.25**	**0.02**
Slop	1	V	12	25	500	Gray	Good	0.54	53	14.42	20	6,000	36.75	12.63	1428.4	539.8	16.399	0.15004	4.15306	-2.3410	0.08	1.00	0.00	5,214.88	**15.29**	**2.61**	**0.25**	**0.04**
PW	1	V	12	25	500	Gray	Good	0.54	53	0.144	20	30,000	36.75	12.63	1428.4	539.8	0.044	0.00040	0.02669	0.0662	0.97	0.67	4.40	46.87	**0.15**	**0.03**	**0.001**	**0.0002**

NOTE: Tank working and breathing emissions are based on the equations found in EPA AP 42 Chapter 7. All factors used are represented in the table on this page. The Condensate Reid Vapor Pressure and Vapor Molecular Weight are determined based on the WinSim condensate stream and Off Gas stream. All other variables are found in AP 42 Chapter 7 or are default unit values.

CALCULATION OF TRUCK LOADING POTENTIAL TO EMIT

GEORGE WEST CENTRAL FACILITY 1 January 1st 2014 through May 1st 2014

BURLINGTON RESOURCES OIL & GAS COMPANY LP

Sample Calculations for condensate and slop:

Loading Loss (lb/Mgal) = 12.46 * S * P * M / T (AP-42 Section 5.2)
Maximum Loading Loss = 12.46 * 0.60 * 14.420 * 53 / 560 = 10.203 lb/Mgal

Hourly Uncollected Emissions PTE = (Hourly Throughput, Mgal/hr) * (Maximum Loading Loss, lb/Mgal) * (1 - Capture Efficiency)
Hourly Uncollected Emissions PTE = (8.19 Mgal/hr) * (10.203 lb/Mgal) * (1 - 0.987) = 1.09 lb/hr

Hourly PTE = ((Hourly Throughput, Mgal/hr) * (Maximum Loading Loss, lb/Mgal) * (Capture Efficiency) * (1 - Control Efficiency)) + (Hourly Uncollected Loading Emissions, (lb/hr))
Hourly PTE = (8.19 Mgal/hr) * (10.203 lb/Mgal) * (0.987) * (1 - 0.98) + (1.09 lb/hr) = 2.74 lb/hr

Annual Emissions = ((Annual Throughput, Mgal/yr) * (Average Loading Loss, lb/Mgal) * (Capture Efficiency) * (1 - Control Efficiency)) + (Annual Uncollected Loading Emissions, lb/yr)) / (2000 lb/T)
Annual Emissions = (352.80 Mgal/yr) * (10.381 lb/Mgal) * (0.987) * (1 - 0.98) + (47.61 lb/yr) / (2000 lb/T) = 0.06 T/yr

															VOC		Benzene	
FIN	EPN	Facility Name	S	P @ 560 °R (psia)	P @531.7 °R (psia)	M	Maximum Loading Loss (lb/Mgal)	Average Loading Loss (lb/Mgal)	Hourly Throughput (Mgal/hr)	Annual Throughput (Mgals/yr)	Capture Efficiency	Hourly Uncollected Loading Emissions (lb/hr)	Annual Uncollected Loading Emissions (lb/yr))	Control Efficiency	Hourly PTE (lb/hr)	Annual PTE (T/yr)	Hourly PTE (lb/hr)	Annual PTE (T/yr)
TRUCK1	FL-1	Condensate and Slop Tank Truck Loading	0.60	14.42	13.930	53	10.203	10.381	8.19	352.80	0.987	1.09	47.61	0.98	2.74	0.06	0.04	0.001
TRUCK2	FL-1	Produced Water Tank Truck Loading	0.60	0.14	0.029	53	0.099	0.104	8.19	1,260.00	0.987	0.01	1.70	0.98	0.03	0.002	0.0002	0.00002

Daily maximum and daily minimum ambient temperature from Tanks 4.09d for this area's annual averages (79.5and 57.725, for average of 68.62).

Annual Average Condensate Vapor Pressure at T_{LA} :

P = exp{ [(2799/(T+459.6) - 2.227]log10(RVP) - 7261/(T+459.6) + 12.82}
exp{ [(2799/(68.62+459.6) - 2.227]log10(14.42) - 7261/(68.62+459.6) + 12.82}
13.930 psia

Annual Average Produced Water Vapor Pressure at T_{LA} :

P = exp{ [(2799/(T+459.6) - 2.227]log10(RVP) - 7261/(T+459.6) + 12.82}
exp{ [(2799/(68.62+459.6) - 2.227]log10(14.42*.01) - 7261/(68.62+459.6) + 12.82}
0.029 psia

NOTE: Capture Efficiency of 98.7% represented based upon TCEQ Guidance regarding trucks that are utlizing NSPS XX Testing.

SUMMARY OF PROCESS FLARE FUEL GAS COMBUSTION AND
WASTE GAS COMBUSTION POTENTIAL TO EMIT- NORMAL OPERATIONS

GEORGE WEST CENTRAL FACILITY 1 January 1st 2014 through May 1st 2014

BURLINGTON RESOURCES OIL & GAS COMPANY LP

EPN	FIN	Description	CO		NO_X		SO_2		H_2S		VOC		Benzene	
			(lb/hr)	(T/yr)	(lb/hr)	(T/yr)	(lb/hr)	(T/yr)	(lb/hr)	(T/yr)	(lb/hr)	(T/yr)	(lb/hr)	(T/yr)
FL-1	FL-1	Pilot Gas Combustion	0.01	0.01	0.003	0.00	0.001	0.001	0.0000004	0.000001	0.0001	0.0001	0.00000003	0.00000004
FL-1	FL-1	Flare Assist Gas Combustion	0.44	0.63	0.22	0.32	0.10	0.14	0.00003	0.00004	0.01	0.01	0.000003	0.000004
FL-1	FL-1	Waste Gas Combustion	1.65	1.37	0.82	0.69	0.02	0.03	0.0002	0.0003	--	--	--	--
		Totals:	**2.10**	**2.01**	**1.04**	**1.01**	**0.12**	**0.17**	**0.0002**	**0.0003**	**0.01**	**0.01**	**0.000003**	**0.000004**

NOTE: Pilot Gas Combustion and Flare Assist Gas Combustion calculations are shown on the following page. Waste Gas Combustion shown here is the combined sum of the waste gas from the Dehy waste stream, Condensate and Produced Water tanks, and loading operations shown on subsequent pages.

CALCULATION OF FLARE PILOT GAS and FLARE ASSIST GAS POTENTIAL TO EMIT

GEORGE WEST CENTRAL FACILITY 1 January 1st 2014 through May 1st 2014

BURLINGTON RESOURCES OIL & GAS COMPANY LP

EPN	FIN	Description	LHV (Btu/scf)	Heat Release scf/hr	Operating Hours (hr/yr)	Pollutant	Emission Factors	Units	Emission Rates Hourly [a] (lb/hr)	Emission Rates Annual [b] (T/yr)
FL-1	FL-1	Flare 1- Process Pilot Gas Combustion	1,292	15	2,880	CO	0.2755	lb/MMBtu	0.01	0.01
						NO_X	0.138	lb/MMBtu	0.003	0.004
						$PM/PM_{10}/PM_{2.5}$	-- [c]	--	--	--
						SO_2	500	ppm H_2S	0.001	0.001
						H_2S	500	ppm H_2S	0.0000004	0.000001
						VOC	5.5	lb/MMscf	0.0001	0.0001
						Benzene	0.0021	lb/MMscf	0.00000003	0.00000004
FL-1	FL-1	Flare 1- Process Flare Assist Gas Combustion	1,292	1,250	2,880	CO	0.2755	lb/MMBtu	0.44	0.63
						NO_X	0.138	lb/MMBtu	0.22	0.32
						$PM/PM_{10}/PM_{2.5}$	-- [c]	--	--	--
						SO_2	500	ppm H_2S	0.10	0.14
						H_2S	500	ppm H_2S	0.00003	0.00004
						VOC	5.5	lb/MMscf	0.01	0.01
						Benzene	0.0021	lb/MMscf	0.000003	0.000004

[a] Emission Factors for CO and NO_X are based upon the Draft TNRCC Guidance Document for Flares and Vapor Oxidizers (dated 10/00) for other high-Btu flares. An example calculation for hourly CO emissions for EPN FL-1 follows:

CO (lb/hr) = (Heat Release, scf/hr) * (Lower Heating Value, Btu/scf) * ($MM/10^6$)*(Emission Factor, lb/MMBtu)

CO (lb/hr) = (15 scf/hr) * (1,292 Btu/scf) * (MM/10^6)*(0.2755 lb/MMBtu)

= 0.01 lb/hr CO

The Emission Factors for VOC and Benzene were based upon AP-42 Table 1.4-2 and 1.4-3 (dated 7/98). An example calculation for hourly VOC emissions for EPN FL-1 follows:

VOC (lb/hr) = (Heat Release, scf/hr) * ($MM/10^6$) * (Emission Factor, lb/MMscf)

VOC (lb/hr) = (15 scf/hr) * (MM/10^6) * (5.5 lb/MMscf)

= 0.0001 lb/hr VOC

A material balance approach was used to estimate the SO2 and H2S emission rates using the maximum sulfur concentration in the natural gas. As shown in Figure 6-1, H2S concentration at the site is conservatively represented at 500 ppm. When used as a pilot gas or flare assist gas, 98% of this concentration will be converted to SO2, and 2% will remain uncombusted and unconverted. An example calculation for hourly SO2 emissions for the pilot gas of EPN FL-01 follows:

SO_2 (lb/hr) = Heat Release (scf/hr)*(Sulfur Content, ppmv)*(98% conversion to SO_2)*(1 lb-mol/379 scf)*(34.065 lb H2S/lb-mol)*(64.06 lb SO_2/34.065 lb H2S)

SO_2 (lb/hr) = (15 scf/hr)*((500 ppm H2S)/(10^6 scf gas))*(98% converted to SO2)*(1 lb-mol/379 scf)*(34.065 lb H2S/lb-mol)*(64.06 lb SO2/34.065 lb H2S)

= 0.001 lb/hr SO_2

[b] An example calculation for annual CO emissions for EPN FL-1 follows:

CO (T/yr) = (Hourly Emissions, lb/hr)*(Annual Operating Hours, hr/yr)*(1 T/2,000 lb)

CO (T/yr) = (0.01 lb/hr)*(2,880 hr/yr)*(1 T/2,000 lb)

CO (T/yr) = 0.01 T/yr CO

[c] The process flares are smokeless per 40 CFR §60.18 requirements; therefore, PM emissions are negligible.

PROCESS FLARE WASTE GAS COMBUSTION EMISSIONS

GEORGE WEST CENTRAL FACILITY 1 January 1st 2014 through May 1st 2014

BURLINGTON RESOURCES OIL & GAS COMPANY LP

EPN	FIN	Description	LHV[a] (Btu/scf)	Waste Gas Flow Rate Hourly (MMBtu/hr)	Waste Gas Flow Rate Annual (MMBtu/yr)	Pollutant	Emission Factors	Units	Potential to Emit Hourly[b] (lb/hr)	Potential to Emit Annual[c] (T/yr)
FL-1	FL-1	Process Flare	2,749	3.20	1,994.63	CO	0.2755	lb/MMBtu	0.88	0.27
		Condensate Tanks and Loading				NO_X	0.1380	lb/MMBtu	0.44	0.14
						$PM/PM_{10}/PM_{2.5}$	-- [e]	--	--	--
						SO_2	-- [c]	--	0.02	0.03
						H_2S	--	--	0.0002	0.0003
FL-1	FL-1	Process Flare	2,749	0.10	219.69	CO	0.2755	lb/MMBtu	0.03	0.03
		Produced Water Tank and Loading				NO_X	0.1380	lb/MMBtu	0.01	0.02
						$PM/PM_{10}/PM_{2.5}$	-- [e]	--	--	--
						SO_2	-- [c]	--	0.002	0.002
						H_2S	--	--	0.00002	0.00002
FL-1	FL-1	Process Flare	1,436	2.69	7,747.20	CO	0.2755	lb/MMBtu	0.74	1.07
		Dehy Unit Waste Gas				NO_X	0.1380	lb/MMBtu	0.37	0.53
						$PM/PM_{10}/PM_{2.5}$	-- [e]	--	--	--
						SO_2	-- [c]	--	0.001	0.001
						H_2S	--	--	0.00001	0.00001

[a] Waste gas stream lower heating value was taken from WinSim calculated stream value.

[b] Emission Factors for CO and NO_X are based upon the Draft TNRCC Guidance Document for Flares and Vapor Oxidizers (dated 10/00) for other high-Btu flares. An example calculation for hourly CO emissions for EPN Fl-1 follows:

CO (lb/hr) = (Hourly Waste Gas Flow Rate, MMBtu/hr)*(Emission Factor, lb/MMBtu)

CO (lb/hr) = (3.20 MMBtu/hr)*(0.2755 lb/MMBtu)

= 0.88 lb/hr CO

[c] H_2S emissions are routed from the tanks to the flare and from the seperator to the flare and then converted to SO_2. SO_2 emission rates were determined based on the combustion efficiency of 98% H_2S converted to SO_2. H_2S emitted at the flare is 2% of the stream not converted by combustion. An example calculation for hourly SO_2 emissions for EPN FL-1 follows:

SO_2 (lb/hr) = (Source H_2S Emission Rate, lb/hr) * (98% captured H2S stream) * (98% conversion to SO_2 at combustion) * (1 mol H_2S/34.07 lb H_2S) * (64.06 lb SO2/1 mol SO_2)

SO_2 (lb/hr) = (0.01 lb/hr H2S at Condensate Tanks)* (98%) * (98%) * (1 mol H2S/34.07 lb H2S) * (64.06 lb SO2/1 mol SO2)

= 0.020 lb/hr SO_2

[d] An example calculation for annual CO emissions for EPN FL-1 follows:

CO (T/yr) = (Annual Waste Gas Flow Rate, MMBtu/yr) * (Emission Factor, lb/MMBtu) * (1 T / 2,000 lb)

CO (T/yr) = (1,994.63 MMBtu/yr) * (0.2755 lb/MMBtu) * (1 T / 2,000 lb)

= 0.27 T/yr CO

[e] The process flares are smokeless per 40 CFR §60.18 requirements; therefore, PM emissions are negligible.

CALCULATION OF FLARE FEED RATES FROM FINs TK-01 THROUGH TK-03, and TRUCK1

GEORGE WEST CENTRAL FACILITY 1 January 1st 2014 through May 1st 2014

BURLINGTON RESOURCES OIL & GAS COMPANY LP

TK-01 through TK-03 and TRUCK1 Total Emissions:[a]

VOC Emissions (lb/hr):	139.64
VOC Emissions (TPY):	43.71
Hydrocarbon Emissions (lb/hr):	153.16
Hydrocarbon Emissions (TPY):	47.94

Constituent	Heating Value[b] (Btu/lb)	Condensate Tanks Flash Gas Weight (%)	TK-01 through TK-03 and TRUCK1 Emissions [c] Hourly (lb/hr)	Annual (T/yr)	Flare Feed Rate [d] Hourly (MMBtu/hr)	Annual (MMBtu/yr)
Methane	23,861	1.27%	1.95	0.61	0.05	28.53
Ethane	22,304	6.95%	10.64	3.33	0.23	145.57
Propane	21,646	22.33%	34.20	10.71	0.73	454.38
I-Butane	21,242	11.73%	17.97	5.62	0.37	233.98
N-Butane	21,293	24.72%	37.86	11.85	0.79	494.55
I-Pentane	21,025	11.79%	18.06	5.65	0.37	232.83
N-Pentane	21,072	10.32%	15.81	4.95	0.33	204.44
Cyclopentane	20,350	0.00%	0.00	0.00	0.00	0.00
n-Hexane	20,928	2.52%	3.86	1.21	0.08	49.63
Cyclohexane	20,195	0.35%	0.54	0.17	0.01	6.73
Other Hexanes	20,928	4.81%	7.37	2.31	0.15	94.75
Heptanes	20,825	1.78%	2.73	0.85	0.06	34.69
Octanes	20,747	0.28%	0.43	0.13	0.01	5.29
Nonanes	20,687	0.05%	0.08	0.02	0.002	0.81
Decanes Plus	20,638	0.01%	0.02	0.005	0.0004	0.20
Benzene	18,172	0.23%	0.35	0.11	0.01	3.92
Toluene	18,422	0.20%	0.31	0.10	0.01	3.61
Ethylbenzene	18,658	0.00%	0.00	0.00	0.00	0.00
Xylene	18,438	0.05%	0.08	0.02	0.001	0.72
	VOC	91.17%				
				Total:	**3.20**	**1,994.63**

[a] Total VOC Emissions were determined by adding the Uncontrolled Streams for FIN TK-01 through TK-03 on the Tank Summary table with the uncontrolled emissions from the Condensate Truck Loading. Total Hydrocarbon Emissions were calculated as follows:

Total HC (lb/hr) = VOC Emissions (lb/hr) * (1/ VOC% of stream)

Total HC (lb/hr) = (139.64 lb/hr) * (1 / 91.17%)

Total HC (lb/hr) = 153.16 lb/hr

[b] Heating values taken from Perry's Chemical Engineers' Handbook , Table 3-207 (pg. 3-155)

[c] Emission Rates were proportioned from the Total Hydrocarbon Emissions using the Condensate Flash Gas stream constituents weight percents, generated by the WinSim program.

[d] An example calculation for the hourly flare feed rate for Methane is demonstrated.

MMBtu/hr Methane = Methane Heating Value (Btu/lb) * Hourly Methane Emissions (lb/hr) * 98% of stream is combusted / 10^6

MMBtu/hr Methane = (23,861 Btu/lb) * (1.95 lb/hr) * 98% / (10^6)

MMBtu/hr Methane = 0.05 MMBtu/hr

An example calculation for the annual flare feed rate for Methane is demonstrated.

MMBtu/yr Methane = Methane Heating Value (Btu/lb) * Annual Methane Emissions (T/yr) * (2,000 lb/T) * 98% of stream is combusted / 10^6

MMBtu/yr Methane = (23,861 Btu/lb) * (0.61 T/yr) * (2,000 lb/T) * 98% / (10^6)

MMBtu/yr Methane = 28.53 MMBtu/yr

CALCULATION OF FLARE FEED RATES FROM FIN TK-04 and TRUCK2

GEORGE WEST CENTRAL FACILITY 1 January 1st 2014 through May 1st 2014

BURLINGTON RESOURCES OIL & GAS COMPANY LP

TK-04 and TRUCK2 Total Emissions:[a]

VOC Emissions (lb/hr):	4.44
VOC Emissions (TPY):	4.83
Hydrocarbon Emissions (lb/hr):	4.87
Hydrocarbon Emissions (TPY):	5.30

Constituent	Heating Value[b] (Btu/lb)	Produced Water Tanks Flash Gas Weight (%)	TK-04 and TRUCK2 Emissions [c] Hourly (lb/hr)	TK-04 and TRUCK2 Emissions [c] Annual (T/yr)	Flare Feed Rate [d] Hourly (MMBtu/hr)	Flare Feed Rate [d] Annual (MMBtu/yr)
Methane	23,861	1.27%	0.06	0.07	0.001	3.27
Ethane	22,304	6.95%	0.34	0.37	0.01	16.17
Propane	21,646	22.33%	1.09	1.18	0.02	50.06
I-Butane	21,242	11.73%	0.57	0.62	0.01	25.81
N-Butane	21,293	24.72%	1.20	1.31	0.03	54.67
I-Pentane	21,025	11.79%	0.57	0.62	0.01	25.55
N-Pentane	21,072	10.32%	0.50	0.55	0.01	22.72
Cyclopentane	20,350	0.00%	0.00	0.00	0.00	0.00
n-Hexane	20,928	2.52%	0.12	0.13	0.002	5.33
Cyclohexane	20,195	0.35%	0.02	0.02	0.0004	0.79
Other Hexanes	20,928	4.81%	0.23	0.25	0.005	10.25
Heptanes	20,825	1.78%	0.09	0.09	0.002	3.67
Octanes	20,747	0.28%	0.01	0.01	0.0002	0.41
Nonanes	20,687	0.05%	0.002	0.003	0.00004	0.12
Decanes Plus	20,638	0.01%	0.0005	0.001	0.00001	0.04
Benzene	18,172	0.23%	0.01	0.01	0.0002	0.36
Toluene	18,422	0.20%	0.01	0.01	0.0002	0.36
Ethylbenzene	18,658	0.00%	0.00	0.00	0.00	0.00
Xylene	18,438	0.05%	0.002	0.003	0.00004	0.11
	VOC	91.17%				
				Total:	**0.10**	**219.69**

[a] Total VOC Emissions were determined by adding the Uncontrolled Streams for FIN TK-04 on the Tank Summary table and the uncontrolled emissions associated with the produced water loading, FIN TRUCK2. Total Hydrocarbon Emissions were calculated as follows:

Total HC (lb/hr) = VOC Emissions (lb/hr) * (1/ VOC% of stream)

Total HC (lb/hr) = (04.44 lb/hr) * (1/ 91.17%)

Total HC (lb/hr) = 4.87 lb/hr

[b] Heating values taken from Perry's Chemical Engineers' Handbook , Table 3-207 (pg. 3-155)

[c] Emission Rates were proportioned from the Total Hydrocarbon Emissions using the Produced Water Flash Gas stream constituents weight percents, generated by the WinSim program.

[d] An example calculation for the hourly flare feed rate for Methane is demonstrated.

MMBtu/hr Methane = Methane Heating Value (Btu/lb) * Hourly Methane Emissions (lb/hr) * 98% of stream is combusted / 10^6

MMBtu/hr Methane = (23,861 Btu/lb) * (0.06 lb/hr) * 98% / (10^6)

MMBtu/hr Methane = 0.00 MMBtu/hr

An example calculation for the annual flare feed rate for Methane is demonstrated.

MMBtu/yr Methane = Methane Heating Value (Btu/lb) * Annual Methane Emissions (T/yr) * (2,000 lb/T) * 98% of stream is combusted / 10^6

MMBtu/yr Methane = (23,861 Btu/lb) * (0.07 T/yr) * (2,000 lb/T) * 98% / (10^6)

MMBtu/yr Methane = 3.27 MMBtu/yr

CALCULATION OF STORAGE TANK WORKING AND BREATHING POTENTIAL TO EMIT DURING FLARE DOWNTIME -SMS

GEORGE WEST CENTRAL FACILITY 1 January 1st 2014 through May 1st 2014

BURLINGTON RESOURCES OIL & GAS COMPANY LP

Variable	Description	Units	Value
L_T	total loss = Ls + Lw	Ton/yr	See Table
L_S	standing loss = 365 Vv Wv Ke Ks	lb/yr	See Table
L_W	working loss = 0.001 Mv Pv Q Kn Kp	lb/yr	See Table
L_H	working loss = 0.001 Mv Pmax Qh	lb/hr	See Table
	Roof Construction		Cone
RVP	Condensate Reid Vapor Pressure	psia	14.42
ΔPb	Breather vent pressure range	psi	0.06
I	Solar insolation factor	Btu/ft2-day	1521
P_A	Atmospheric Pressure	psia	14.7
Mv	Vapor Molecular Weight	lb/lb-mol	53
T	Annual Average Temperature	°F	72.1
T_{AX}	Daily Maximum Ambient Temperature	°R	541.6
T_{AN}	Daily Minimum Ambient Temperature	°R	522.5
ΔT_A	Daily average ambient temperature range	°R	19.1
Kp	Product factor		1

		Tank Specifications							Material Specifications													VOC		Benzene	
		V/H	D	H/L	Capacity	Color		α	Mv	P_{MAX}	Q'	ΔTv	Hvo	T_{LA}	P_{VA}	Wv	ΔPv	Ke	Ks	L_S	L_T	L_H	L_T	L_H
Material	No. of Tanks	Tank Type	Tank Diameter (ft)	Tank Height/ Length (ft)	Tank Capacity (bbl)	Paint Color	Paint Conditions	Paint Solar Absorbance Factor	Vapor Molecular Weight	Reid Vapor Pressure (psia)	Max. Hourly Storage (bbl/hr)	Daily Vapor Temp. Range °F	Vapor Space Outage (ft)	Daily Average Liquid Surface Temp °R	Average Vapor Pressure (psia)	Vapor Density (lb/ft3)	Daily Vapor Pressure Range	Vapor Space Expan. Factor	Vented Vapor Sat. Factor	Standing Loss per tank (lb/yr)	Total Loss (lb/hr)	Total Loss (T/yr)	Total Loss (lb/hr)	Total Loss (T/yr)
Condensate	2	V	12	25	500	Gray	Good	0.54	53	14.42	500	36.75	12.63	539.8	16.399	0.15004	4.15306	-2.3410	0.08	0.00	**0.00**	**0.00**	**0.00**	**0.00**
Slop	1	V	12	25	500	Gray	Good	0.54	53	14.42	500	36.75	12.63	539.8	16.399	0.15004	4.15306	-2.3410	0.08	0.00	**0.00**	**0.00**	**0.00**	**0.00**
PW	1	V	12	25	500	Gray	Good	0.54	53	0.144	500	36.75	12.63	539.8	0.044	0.00040	0.02669	0.0662	0.97	0.27	**0.005**	**0.0001**	**0.00004**	**0.000001**

NOTE: Tank working and breathing emissions are based on the equations found in EPA AP 42 Chapter 7. All factors used are represented in the table on this page. The Condensate Reid Vapor Pressure and Vapor Molecular Weight are determined based on the WinSim condensate stream and Off Gas stream. All other variables are found in AP 42 Chapter 7 or are default unit values.

The emissions shown are due to flare maintenance occuring 2% of the year. During the flare downtime the wellhead would be shut in. Therefore, there would be no condensate or produced water liquids flowing to the tanks; however, any liquid already in the tanks would remain and have breathing (standing losses) emissions. These emissions would not be controlled, as the flare is down for maintenance. The calculations shown demonstrate this alternative operating scenario regarding flare maintenance and downtime. Based on 2% downtime, this scenario is being shown to occur for 175.2 hours in a year.

As shown on the summary page representing the Tank Emission sent to Flare, H_2S emissions are represented as occuring when the liquid streams flash during the change from a pressurized flow to the atmospheric tank. Due to the chemical properties of H_2S the most conservative approach is to represent that all H_2S in the liquid will immediately flash, and there will be no H_2S emitted during working and breathing while the liquids are stored. Since there will be no liquid flow during the flare downtime, there are no flash emissions and therefore no H_2S emissions from the standing loss of the tanks.

MSS CALCULATION OF COMPRESSOR ENGINE STARTER VENT POTENTIAL TO EMIT

GEORGE WEST CENTRAL FACILITY 1 January 1st 2014 through May 1st 2014

BURLINGTON RESOURCES OIL & GAS COMPANY LP

Description	Facility Identification Number COMP-01-SV
Number of Engine Starts per Year	29
Number of Engine Starts per Hour	1
Start Volume per Event, scf	900
Fuel Stream Specific Gravity	0.9496
Fuel Stream Density, lb/scf [a]	0.0726
VOC Percentage in Fuel Stream, wt%	45%
Max Benzene Percentage in Gas Stream, wt%	0.07%
Max H_2S Percentage in Fuel Stream, wt%	0.09%
VOC Hourly Emission Rates (lb/hr): [b]	29.40
VOC Annual Emission Rates (T/yr): [c]	0.43
Benzene Hourly Emission Rates (lb/hr):[b]	0.05
Benzene Annual Emission Rates (T/yr): [c]	0.001
H_2S Hourly Emission Rates (lb/hr): [b]	0.06
H_2S Annual Emission Rates (T/yr): [c]	0.001

[a] Gas stream density is calculated as follows:

(28.96 lb/mole) / (379 scf/mole) * (0.9496) = 0.073 lb/scf

[b] Hourly starter vent VOC, benzene and H2S emissions are calculated based upon a conservative estimate of the portion of each consituent in the volume known to blow down from the engine source. An example calculation for VOC for COMP-01-

VOC lb/hr = (1 startup/hr) * (900 scf/startup) * (0.073 lb/scf) * (45.00%) = 29.40 lb/hr

[c] Annual starter VOC emission rates are calculated as follows:

VOC lb/hr = (29 startups/yr) * (900 scf/startup) * (0.073 lb/scf) * (45.00%) / (2,000 lb/T) = 0.43 T/yr

SMSS - CALCULATION OF COMPRESSOR ENGINE BLOWDOWN POTENTIAL TO EMIT

GEORGE WEST CENTRAL FACILITY 1 January 1st 2014 through May 1st 2014

BURLINGTON RESOURCES OIL & GAS COMPANY LP

Description	Facility Identification Number COMP-01-BD
Number of Blowdowns per Year	29
Number of Blowdowns per Hour	1
Blowdown Volume per Event, scf	1,061
Gas Stream Specific Gravity	0.9496
Gas Stream Density, lb/scf [a]	0.0726
Max VOC Percentage in Gas Stream, wt%	45%
Max Benzene Percentage in Gas Stream, wt%	0.07%
Max H_2S Percentage in Gas Stream, wt%	0.09%
VOC Hourly Emission Rates (lb/hr): [b]	34.66
VOC Annual Emission Rates (T/yr): [c]	0.50
Benzene Hourly Emission Rates (lb/hr):[b]	0.05
Benzene Annual Emission Rates (T/yr): [c]	0.001
H_2S Hourly Emission Rates (lb/hr): [b]	0.07
H_2S Annual Emission Rates (T/yr): [c]	0.001
Controlled VOC Hourly Emission Rates (lb/hr)[d]	0.69
Controlled VOC Annual Emission Rates (T/yr):[e]	0.01
Controlled Benzene Hourly Emission Rates (lb/hr):[d]	0.001
Controlled Benzene Annual Emission Rates (T/yr): [e]	0.00002
Controlled H_2S Hourly Emission Rates (lb/hr)[d]	0.001
Controlled H_2S Annual Emission Rates (T/yr):[e]	0.00002

[a] Gas stream density is calculated as follows:

(28.96 lb/mole) / (379 scf/mole) * (0.9496) = 0.073 lb/scf

[b] Hourly blowdown VOC, Benzene and H_2S emissions rates are calculated. An example calculation for VOC for COMP-01-BD is as follows:
VOC lb/hr = (1 blowdown/hr) * (1,061 scf/blowdown) * (0.073 lb/scf) * (45.00% VOC in Stream) * (100-98% controlled at flare) = 34.66 lb/hr

[c] Annual blowdown VOC, Benzene and H_2S emission rates are calculated as follows:

VOC lb/hr = (29 blowdowns/yr) * (1,061 scf/blowdown) * (0.073 lb/scf) * (45.00%) / (2,000 lb/T) * (100% - 98% controlled

[d] Hourly controlled blowdown VOC, Benzene and H_2S emissions are calculated based upon a conservative estimate of the portion of each consituent in the volume known to blowdown from the engine source. An example calculation for VOC for

VOC lb/hr = (1 blowdown/hr) * (1,061 scf/blowdown) * (0.073 lb/scf) * (45.00% VOC in Stream) * (100-98% controlled at

[e] Annual controlled blowdown VOC emission rates are calculated as follows:

VOC lb/hr = (29 blowdowns/yr) * (1,061 scf/blowdown) * (0.073 lb/scf) * (45.00%) / (2,000 lb/T) * (100% - 98% controlled

SMSS - PROCESS FLARE WASTE GAS COMBUSTION EMISSIONS

GEORGE WEST CENTRAL FACILITY 1 January 1st 2014 through May 1st 2014

BURLINGTON RESOURCES OIL & GAS COMPANY LP

EPN	FIN	Description	LHV[a] (Btu/scf)	Waste Gas Flow Rate Hourly (MMBtu/hr)	Waste Gas Flow Rate Annual (MMBtu/yr)	Pollutant	Emission Factors	Units	Potential to Emit Hourly[b] (lb/hr)	Potential to Emit Annual[c] (T/yr)
FL-1-SMSS	COMP-01-BD	Process Flare	1,544	1.63	47.93	CO	0.2755	lb/MMBtu	0.45	0.01
		Compressor Blowdown Event				NO_X	0.1380	lb/MMBtu	0.22	0.003
						$PM/PM_{10}/PM_{2.5}$	-- [e]	--	--	--
						SO_2	-- [c]	--	0.13	0.002
						H_2S	-- [c]	--	0.001	0.00002

[a] Waste gas stream lower heating value was taken from the inlet gas analysis.

[b] Emission Factors for CO and NO_X are based upon the Draft TNRCC Guidance Document for Flares and Vapor Oxidizers (dated 10/00) for other high-Btu flares. An example calculation for hourly CO emissions for EPN Fl-1-SMSS follows:

CO (lb/hr) = (Hourly Waste Gas Flow Rate, MMBtu/hr)*(Emission Factor, lb/MMBtu)

CO (lb/hr) = (1.63 MMBtu/hr)*(0.2755 lb/MMBtu)

= 0.45 lb/hr CO

[c] H_2S emissions are routed from the separator to the flare and then converted to SO_2. SO_2 emission rates were determined based on the combustion efficiency of 98% H_2S converted to SO_2. H_2S emitted at the flare is 2% of the captured stream not converted by combustion. An example calculation for hourly SO_2 emissions for EPN FL-1-SMSS follows:

SO_2 (lb/hr) = (Source H_2S Emission Rate, lb/hr) * (98% captured H2S stream) * (98% conversion to SO_2 at combustion) * (1 mol H_2S/34.07 lb H_2S) * (64.06 lb SO2/1 mol SO_2)

SO_2 (lb/hr) = (0.07 lb/hr H2S from Blowdown)* (98%) * (98%) * (1 mol H2S/34.07 lb H2S) * (64.06 lb SO2/1 mol SO2)

= 0.13 lb/hr SO_2

[d] An example calculation for annual CO emissions for EPN FL-1-SMSS follows:

CO (T/yr) = (Annual Waste Gas Flow Rate, MMBtu/yr) * (Emission Factor, lb/MMBtu) * (1 T / 2,000 lb)

CO (T/yr) = (47.93 MMBtu/yr) * (0.2755 lb/MMBtu) * (1 T / 2,000 lb)

= 0.01 T/yr CO

[e] The process flares are smokeless per 40 CFR §60.18 requirements; therefore, PM emissions are negligible.

SMSS - CALCULATION OF FLARE FEED RATES FROM BLOWDOWN EVENTS

GEORGE WEST CENTRAL FACILITY 1 January 1st 2014 through May 1st 2014

BURLINGTON RESOURCES OIL & GAS COMPANY LP

Max Engine BD Volume (Mscf/hr)	1.06
Max Engine BD Volume (Mscf/yr)	31
Gas Density (lb/scf)	0.0726

Constituent	Heating Value[a] (Btu/lb)	Inlet Gas Weight (%)	Engine BD Emissions[b] Hourly (lb/hr)	Engine BD Emissions[b] Annual (T/yr)	Flare Feed Rate[c] Hourly (MMBtu/hr)	Flare Feed Rate[c] Annual (MMBtu/yr)
Methane	23,861	32.38%	24.92	0.36	0.58	16.84
Ethane	22,304	22.72%	17.48	0.26	0.38	11.37
Propane	21,646	20.92%	16.10	0.24	0.34	10.18
I-Butane	21,242	5.48%	4.22	0.06	0.09	2.50
N-Butane	21,293	8.70%	6.70	0.10	0.14	4.17
I-Pentane	21,025	2.56%	1.97	0.03	0.04	1.24
N-Pentane	21,072	1.89%	1.45	0.02	0.03	0.83
Cyclopentane	20,350	0.00%	0.00	0.00	0.00	0.00
n-Hexane	20,928	0.38%	0.29	0.004	0.01	0.16
Cyclohexane	20,195	0.11%	0.08	0.001	0.002	0.04
Other Hexanes	20,928	0.85%	0.65	0.01	0.01	0.41
Heptanes	20,825	0.22%	0.17	0.002	0.003	0.08
Octanes	20,747	0.04%	0.03	0.0005	0.001	0.02
Nonanes	20,687	0.03%	0.02	0.0003	0.0004	0.01
Decanes Plus	20,638	0.00%	0.00	0.00	0.00	0.00
Benzene	18,172	0.05%	0.04	0.001	0.001	0.04
Toluene	18,422	0.06%	0.05	0.001	0.001	0.04
Ethylbenzene	18,658	0.00%	0.00	0.00	0.00	0.00
Xylene	18,438	0.02%	0.02	0.00	0.0004	0.00
				Totals:	**1.63**	**47.93**

[a] Heating values taken from Perry's Chemical Engineers' Handbook , Table 3-207 (pg. 3-155)

[b] Constituent Emission Rates were calculated from the known maximum blowdown volumes and density then proportioned using the Inlet Gas stream constituents weight percents. An example calculation for Methane emissions is as follows:

Methane (lb/hr) = Maximum BD Volume (Mscf/hr) * Gas Density (lb/scf) * Inlet Gas Weight % * 1000
Methane (lb/hr) = (1.06 Mscf/hr) * (0.0726 lb/scf) * 32.38% * 1,000
Methane (lb/hr) = 24.92 lb/hr

[c] An example calculation for the hourly flare feed rate for Methane is demonstrated.

MMBtu/hr Methane = Methane Heating Value (Btu/lb) * Hourly Methane Emissions (lb/hr) * 98% of stream is combusted / 10^6
MMBtu/hr Methane = (23,861 Btu/lb) * (0,024.92 lb/hr) * 98% / (10^6)
MMBtu/hr Methane = 0.58 MMBtu/hr

An example calculation for the annual flare feed rate for Methane is demonstrated.

MMBtu/yr Methane = Methane Heating Value (Btu/lb) * Annual Methane Emissions (T/yr) * (2,000 lb/T) * 98% of stream is combusted / 10^6
MMBtu/yr Methane = (23,861 Btu/lb) * (0.36 T/yr) * (2,000 lb/T) * 98% / (10^6)
MMBtu/yr Methane = 16.84 MMBtu/yr

G3508B LE Gas Petroleum Engine

515 bkW (690 bhp)
1400 rpm

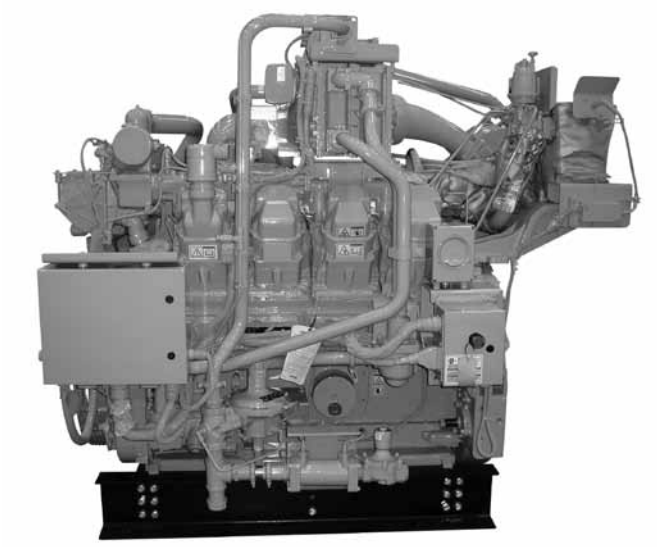

0.5 g/bhp-hr NOx or 1.0 g/bhp-hr NOx (NTE)

CAT® ENGINE SPECIFICATIONS

V-8, 4-Stroke-Cycle

Bore	170 mm (6.7 in.)
Stroke	190 mm (7.5 in.)
Displacement	34.6 L (2115 cu. in.)
Aspiration	Turbocharged-2 Stage Aftercooled
Digital Engine Management Governor and Protection	Electronic (ADEM™ A3)
Combustion	Low Emissions (Lean Burn)
Engine Weight net dry (approx)	3941 kg (8688 lb)
Power Density	7.7 kg/kW (12.6 lb/hp)
Power per Displacement	19.9 bhp/L
Total Cooling System Capacity	130.5 L (34.4 gal)
Jacket Water	119 L (31.4 gal)
Aftercooler Circuit	11.5 L (3 gal)
Lube Oil System (refill)	220 L (58 gal)
Oil Change Interval	1000 hours
Rotation (from flywheel end)	Counterclockwise
Flywheel and Flywheel Housing	SAE No. 00
Flywheel Teeth	183

FEATURES

Engine Design
- Built on G3500 LE proven reliability and durability
- Ability to burn a wide spectrum of gaseous fuels
- Robust diesel strength design prolongs life and lowers owning and operating costs
- Broad operating speed range at lower site air densities (high altitude/hot ambient temperatures)
- Higher power density improves fleet management
- Quality engine diagnostics
- Detonation-sensitive timing control for individual cylinders

Ultra Lean Burn Technology (ULB)
ULB technology uses an advanced control system, a better turbo match, improved air and fuel mixing, and a more sophisticated combustion recipe to provide:
- Lowest engine-out emissions
- Highest fuel efficiency
- Improved altitude and speed turndown
- Stable load acceptance and load rejection

Emissions
- Meets U.S. EPA Spark Ignited Stationary NSPS emissions for 2010 and some non-attainment areas
- Lean air/fuel mixture provides best available emissions and fuel efficiency for engines of this bore size

Advanced Digital Engine Management
ADEM A3 engine management system integrates speed control, air/fuel ratio control, and ignition/detonation controls into a complete engine management system. ADEM A3 has improved: user interface, display system, shutdown controls, and system diagnostics.

Full Range of Attachments
Large variety of factory-installed engine attachments reduces packaging time.

Testing
Every engine is full-load tested to ensure proper engine performance.

Gas Engine Rating Pro
GERP is a PC-based program designed to provide site performance capabilities for Cat® natural gas engines for the gas compression industry. GERP provides engine data for your site's altitude, ambient temperature, fuel, engine coolant heat rejection, performance data, installation drawings, spec sheets, and pump curves.

Product Support Offered Through Global Cat Dealer Network
More than 2,200 dealer outlets

Cat factory-trained dealer technicians service every aspect of your petroleum engine

Cat parts and labor warranty

Preventive maintenance agreements available for repair-before-failure options

S•O•S℠ program matches your oil and coolant samples against Caterpillar set standards to determine:
- Internal engine component condition
- Presence of unwanted fluids
- Presence of combustion by-products
- Site-specific oil change interval

Over 80 Years of Engine Manufacturing Experience
Over 60 years of natural gas engine production

Ownership of these manufacturing processes enables Caterpillar to produce high quality, dependable products
- Cast engine blocks, heads, cylinder liners, and flywheel housings
- Machine critical components
- Assemble complete engine

Web Site
For all your petroleum power requirements, visit www.catoilandgas.cat.com.

STANDARD EQUIPMENT

Air Inlet System
Axial Flow Air cleaner
Cleanable
Single element canister type with service indicator

Control System
ADEM A3 with integrated electronic throttle control
CSA certified

Cooling System
Two-stage charge air cooling
First Stage — JW + OC + 1st Stage AC
Second Stage — 2nd Stage AC
Thermostats and housing
Gear-driven jacket and aftercooler water pump
Stainless steel aftercooler cores

Exhaust System
Dry exhaust manifolds
Exhaust outlet: 200 mm I.D.

Flywheels and Flywheel Housings
SAE No. 00 flywheel
SAE No. 00 flywheel housing
SAE standard rotation

Fuel System
7-50 psi gas supply
Electronic fuel metering valve
Gas pressure regulator, pivot valve operated

Ignition System
ADEM A3
Outdoor CSA certified

Lubrication System
Crankcase breather — top mounted
Oil cooler
Oil filter — RH
Oil pan
Oil sampling valve
Turbo oil accumulator

Power Take-Offs
Front housing — two-sided
Front lower — LH accessory drive

Torsional Vibration Analysis
Provided through Caterpillar, required through Q1 2010

General
Paint — Cat yellow
Crankshaft vibration damper and guard

OPTIONAL EQUIPMENT

Air Inlet System
Round air inlet adaptors

Charging System
Battery chargers
CSA certified version available with
Charging system
CSA alternator (24V, 65A)

Cooling System
Mechanical joint assembly connections

Exhaust System
Flexible fittings
Elbows
Flanges

Fuel System
Gas filter

Instrumentation
Advisor display panel
Communications module

Lubrication System
Lubricating oil
Oil bypass filter
Air prelube pump

Power Take-Offs
Front stub shaft
Pulleys

General
Special paint

EU Certification
EEC DOI certification

Support
Factory commissioning

TECHNICAL DATA

G3508B Gas Petroleum Engine — 1400 rpm

Fuel System		0.5 g NOx NTE Rating DM8826-00	1.0 g NOx NTE Rating DM8827-00
Engine Power			
@ 100% Load	bkW (bhp)	514.53 (690)	514.53 (690)
Engine Speed	rpm	**1400**	**1400**
Max Altitude @ Rated Torque and 38°C (100°F)	m (ft)	1524 (5000)	1828.8 (6000)
Speed Turndown @ Max Altitude, Rated Torque, and 38°C (100°F)	%	36	36
Aftercooler Temperature			
Stage 1 (JW)	°C (°F)	95.0 (203)	95.0 (203)
Stage 2 (SCAC)	°C (°F)	54.44 (130)	54.44 (130)
Compression Ratio		8.0:1	8.0:1
Emissions*			
NOx	g/bkW-hr (g/bhp-hr)	0.67 (0.50)	1.34 (1.00)
CO	g/bkW-hr (g/bhp-hr)	3.46 (2.58)	4.01 (2.99)
CO_2	g/bkW-hr (g/bhp-hr)	639.67 (477)	610.17 (455)
VOC**	g/bkW-hr (g/bhp-hr)	0.74 (0.55)	0.58 (0.43)
Fuel Consumption***			
@ 100% Load	MJ/bkW-hr (Btu/bhp-hr)	10.26 (7254)	10.00 (7068)
@ 75% Load	MJ/bkW-hr (Btu/bhp-hr)	10.89 (7700)	10.68 (7549)
Heat Balance			
Heat Rejection to Jacket Water @ 100% Load			
JW	bkW (Btu/min)	190.24 (10,819)	1953.81 (111,111)
OC	bkW (Btu/min)	46.16 (2625)	46.16 (2625)
Heat Rejection to Aftercooler @ 100% Load			
1st Stage AC	bkW (Btu/min)	88.13 (5012)	74.28 (4224)
2nd Stage AC	bkW (Btu/min)	53.63 (3050)	48.62 (2765)
Heat Rejection to Exhaust @ 100% Load	bkW (Btu/min)	526.70 (29,953)	502.00 (28,548)
Heat Rejection to Atmosphere @ 100% Load	bkW (Btu/min)	61.51 (3498)	61.51 (3498)
Exhaust System			
Exhaust Gas Flow Rate @ 100% Load	m^3/min (cfm)	126.15 (4455)	120.37 (4251)
Exhaust Stack Temperature @ 100% Load	°C (°F)	499.44 (931)	512.78 (955)
Intake System			
Air Inlet Flow Rate @ 100% Load	m^3/min (scfm)	45.17 (1595)	42.28 (1493)
Gas Pressure	kPag (psig)	48-345 (7-50)	48-345 (7-50)

*at 100% load and speed, all values are listed as not to exceed
**Volatile organic compounds as defined in U.S. EPA 40 CFR 60, subpart JJJJ
***ISO 3046/1

G3508B — RIGHT SIDE VIEW & FRONT VIEW

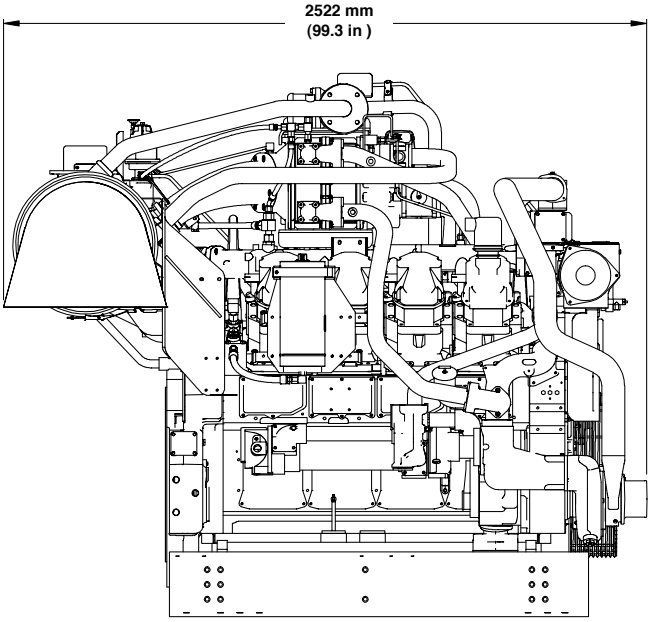

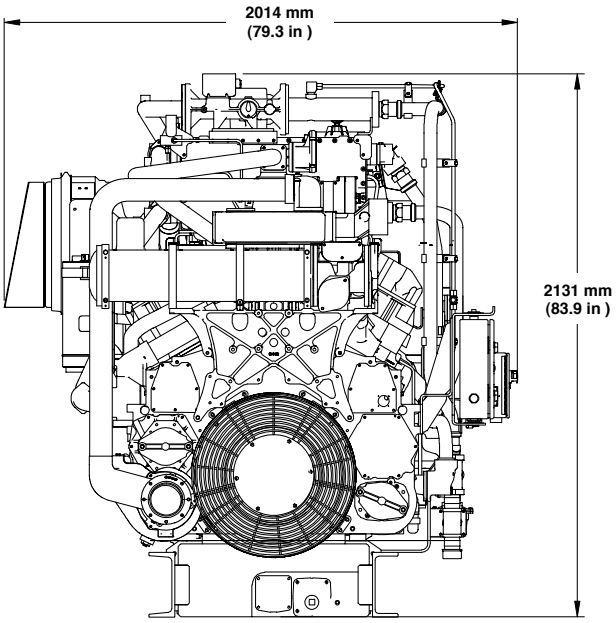

DIMENSIONS		
Length	mm (in)	2522 (99.3)
Width	mm (in)	2014 (79.3)
Height	mm (in)	2131 (83.9)
Shipping Weight	kg (lb)	3941 (8688)

Note: General configuration not to be used for installation. See general dimension drawing number LA5250.

RATING DEFINITIONS AND CONDITIONS

Engine performance is obtained in accordance with SAE J1995, ISO3046/1, BS5514/1, and DIN6271/1 standards.

Transient response data is acquired from an engine/generator combination at normal operating temperature and in accordance with ISO3046/1 standard ambient conditions. Also in accordance with SAE J1995, BS5514/1, and DIN6271/1 standard reference conditions.

Conditions: Power for gas engines is based on fuel having an LHV of 33.74 kJ/L (905 Btu/cu ft) at 101 kPa (29.91 in. Hg) and 15° C (59° F). Fuel rate is based on a cubic meter at 100 kPa (29.61 in. Hg) and 15.6° C (60.1° F). Air flow is based on a cubic foot at 100 kPa (29.61 in. Hg) and 25° C (77° F). Exhaust flow is based on a cubic foot at 100 kPa (29.61 in. Hg) and stack temperature.

Materials and specifications are subject to change without notice. The International System of Units (SI) is used in this publication.
CAT, CATERPILLAR, their respective logos, ADEM, S•O•S, “Caterpillar Yellow” and the “Power Edge” trade dress, as well as corporate and product identity used herein, are trademarks of Caterpillar and may not be used without permission.

©2010 Caterpillar
All rights reserved.

Ignition Systems & Controls, L.P.

August 24, 2010

Compressor Systems Inc
Attention: Jerry Brown
PO Box 60760
Midland, TX 79711

RE: CATALYTIC CONVERTER FOR CSI STANDARD FLEET – CAT G3508B LE
Quote #: 7284

Dear Mr. Brown:

Thank you for your inquiry for the DCL catalytic silencer(s). The following is what you will need per your request.

ENGINE DATA

Engine model	**CAT G3508B LE**
Power	690 hp @ 1400 rpm
Fuel	Pipeline Quality Natural Gas
Exhaust Flow	4455 acfm
Exhaust Temperature	931 deg. F

CATALYST SYSTEM DATA

Catalyst Model	**DC63Q-10 CC**
Catalyst Type	Oxidation, Q
Number of Elements	1
Cell Density	300 cpsi
Approx. Dimensions	See Attached Drawing
Connection Size	10"
Approx Weight	225 lbs
Approx. Pressure Drop	3.2" w.c

SILENCER SYSTEM DATA

Silencer Grade	N/A
Approx. Attenuation	N/A

EMISSION REQUIREMENTS

Exhaust Gas Component	% Reduction
CO	93
VOCs	45