Waukesha Water Utility
SERVING WAUKESHA SINCE 1886

GREAT WATER
ALLIANCE

Specifications

FOR

CONTRACT PACKAGE 6 – RETURN FLOW PIPELINE, 18-INCH SANITARY SEWER, AND OUTFALL FACILITIES

Volume II of II

Greeley and Hansen LLC
741 North Grand Avenue, Suite 308
Waukesha, Wisconsin 53186

May 2019
90% Submittal Documents

(NO TEXT FOR THIS PAGE)

WAUKESHA WATER UTILITY
GREAT LAKES WATER SUPPLY PROGRAM

TABLE OF CONTENTS

VOLUME I OF II

PROCUREMENT AND CONTRACTING REQUIREMENTS

NOTICE TO BIDDERS	00 11 13
INSTRUCTIONS TO BIDDERS	00 21 13
CERTIFICATION OF DEBARMENT	00 32 00
BID FORM	00 41 00
BID BOND	00 43 00
NOTICE OF AWARD	00 51 00
AGREEMENT	00 52 00
NOTICE TO PROCEED	00 55 00
PERFORMANCE BOND	00 61 13
PAYMENT BOND	00 61 16
GENERAL CONDITIONS	00 72 00
SUPPLEMENTARY CONDITIONS	00 73 00
U.S. ENVIRONMENTAL PROTECTION AGENCY CERTIFICATION OF NONSEGREGATED FACILITIES	00 82 30
NOTICE TO LABOR OR UNIONS OR OTHER ORGANIZATIONS OF WORKERS NONDISCRIMINATION IN EMPLOYMENT	00 82 40
DISADVANTAGED BUSINESS ENTERPRISE (DBE) PARTICIPATION	00 82 50
SIGNATURES AND SEALS	00 90 00

TECHNICAL SPECIFICATIONS

DIVISION 1 - GENERAL REQUIREMENTS

Summary of Work	01 11 00
Change Order, Work Change Directive and Field Order Procedures	01 26 00
Measurement and Payment	01 29 00
Coordination and Meetings	01 31 00

Progress Schedule	01 32 17
Submittals	01 33 00
References	01 42 00
Preconstruction Videos	01 44 00
Quality Control	01 45 00
Leakage Tests	01 45 50
Construction Facilities and Temporary Controls	01 50 00
Material and Equipment	01 60 00
Lines and Grades	01 71 23
Cutting and Patching	01 73 29
Cleaning	01 74 00
Contract Close Out	01 78 00
Operation and Maintenance Manuals	01 78 23
Training	01 79 00

VOLUME II OF II

DIVISION 2 - EXISTING CONDITIONS

Impacted Soil and Groundwater Management	02 50 00

DIVISION 3 - CONCRETE

Structural Concrete	03 30 10

DIVISION 4 - MASONRY

Concrete Unit Masonry	04 22 00

DIVISION 5 - METALS

Post-Installed Anchors	05 05 19
Welding	05 05 23
Open Web Steel Joist Framing	05 21 19
Steel Decking	05 31 00
Metal Fabrications	05 50 00
Aluminum Railings	05 52 16
Metal Gratings	05 53 00

DIVISION 7 – THERMAL AND MOISTURE PROTECTION

Standing Seam Metal Roof Panel	07 61 13
Sheet Metal Flashing and Trim	07 62 00

Snow Guards	07 72 53
Joint Sealers	07 90 00

DIVISION 8 - OPENINGS

Aluminum Doors and Frames	08 11 16
Finish Hardware	08 71 00
Metal Louvers	08 91 00

DIVISION 9 - FINISHES

High Performance Coatings	09 96 00

DIVISION 23 – HEATING, VENTILATING, AND AIR CONDITIONING

HVAC Power Ventilators	23 34 23

DIVISION 26 - ELECTRICAL

Basic Electrical Materials and Methods	26 05 00
Electric Utility Coordination and Requirements	26 05 10
Wires and Cables - 600 Volts and Below	26 05 19
Grounding	26 05 26
Electrical Raceway Systems	26 05 33
Underground Electrical Distribution System	26 05 43
Electrical Identification	26 05 53
Electric Motors	26 05 80
Panelboards	26 24 16
Wiring Devices	26 27 26
Disconnect Switches	26 28 16
Control Components and Devices	26 29 53
Lighting	26 50 00

DIVISION 28 – ELECTRICAL SAFETY AND SECURITY

Access Control	28 10 00
Signaling and Alarm	28 31 00

DIVISION 31 - EARTHWORK

Site Clearing	31 10 00
Excavation	31 23 16
Dewatering	31 23 19

Backfilling	31 23 23
Erosion and Sediment Controls	31 25 13
Tree Protection and Root Pruning (Outfall Facilities)	31 32 10
Shoring, Sheeting And Bracing	31 41 00

DIVISION 32 - EXTERIOR IMPROVEMENTS

Base Courses	32 11 23
Asphalt Paving	32 12 00
Concrete Paving	32 13 00
Concrete Curbs	32 16 13
Concrete Sidewalks	32 16 23
Permanent Pavement Marking	32 17 23
Landscaping Work	32 90 00
Soil Preparation (Outfall Facilities)	32 91 13
Restoration Wildflowers and Grasses (Outfall Facilities)	32 92 00
Exterior Plants (Outfall Facilities)	32 93 01
Traffic Control	32 95 00

DIVISION 33 - UTILITIES

Horizontal Directional Drilling	33 05 22
Jacking, Augering and Mining	33 05 23
Laying and Jointing Buried Pipelines	33 05 50
Buried Fiberglass Reinforced Plastic Pipe and Fittings	33 05 52
Buried High Density Polyethylene Pipe and Fittings	33 05 53
Polyethylene Encasement	33 05 54
Buried Ductile Iron Pipe and Fittings	33 05 55
Stainless Steel Pipe and Fittings	33 05 56
Buried Polyvinyl Chloride Pipe and Fittings	33 05 57
Cathodic Protection	33 05 58
Sewer Manholes	33 05 60
Pipeline Vaults	33 05 61
Locating Buried Pipelines	33 05 70

DIVISION 40 - PROCESS INTEGRATION

Supports and Anchors	40 05 01
Erecting and Jointing Interior and Exposed Exterior Piping	40 05 10
Steel Pipe and Fittings	40 05 17
Miscellaneous Pipe and Fittings	40 05 18
Valves	40 05 20
Process Control System Commissioning	40 80 50
Process Control System General Requirements	40 90 00
Process Control System Instruments	40 91 00

Special Systems	40 91 12
Programmable Logic Controller Systems	40 94 43
Process Control System Panel Enclosures and Equipment	40 95 13
Telemetry System	40 95 60
Process Control System Factory Acceptance Testing	40 98 50

DIVISION 44 – POLLUTION AND WASTE CONTROL EQUIPMENT

Submersible Pumps	44 42 56

DIVISION 46 – WATER AND WASTEWATER EQUIPMENT

Cascade Aerator	46 51 53

APPENDIX BOOK

APPENDICES

Appendix I	4-230 D5 Phase II Environmental Site Assessment Report – Site 3.29/3.30 – 7521 & 7520 West Ryan Road, Franklin, Wisconsin
Appendix II	4-220 D11 Geotechnical Report, Contract Package 6, Return Flow Pipeline Stations 3000+00 to 4000+00
Appendix III	West Shore Pipe Line Crossing Criteria
Appendix IV	Pothole Information*
Appendix V	WE Energies*
Appendix VI	Easement Documentation*

* Not included in the 90% submittal.

(NO TEXT FOR THIS PAGE)

SECTION 02 50 00

IMPACTED SOIL AND GROUNDWATER MANAGEMENT

PART 1 GENERAL

1.1 SUMMARY

A. Section Includes: Requirements for providing the management and disposal of impacted soil and groundwater that may be encountered in excavations.

B. Related Work Specified In Other Sections Includes, but is Not Limited to, the Following:

1. Section 01 29 00 - Measurement and Payment
2. Section 31 23 19 - Dewatering
3. Section 31 23 23 - Backfilling
4. Section 31 25 13 - Erosion and Sediment Controls

1.2 REFERENCES

A. Codes and standards referred to in this Section are:

1. City of New Berlin Municipal Code

2. City of Franklin Municipal Code

3. City of Muskego Municipal Code

4. Milwaukee County Code of Ordinances

5. United States Code of Federal Regulations, Title 29: Labor, Part 1910 – Occupational Safety and Health Standards, Subpart H – Hazardous Materials, Chapter 120 – Hazardous Waste Operations and Emergency Response (29 CFR 1910.120)

6. United States Code of Federal Regulations, Title 29: Labor, Part 1910 – Occupational Safety and Health Standards, Subpart I – Personal Protective Equipment (29 CFR 1910 Subpart I)

7. United States Code of Federal Regulations, Title 49: Transportation (49 CFR)

8. Waukesha County Code of Ordinances

9. Wisconsin Administrative Code, Department of Natural Resources, Chapter 500; Environmental Protection – Solid Waste Management (WAC NR 500)

10. Wisconsin Administrative Code, Department of Natural Resources, Chapter 718; Environmental Protection – Investigation and Remediation of Environmental Contamination: Management of Contaminated Soil or Solid Wastes Excavated During Response Actions (WAC NR 718)

11. Wisconsin Administrative Code, Department of Natural Resources, Chapter 718; Environmental Protection – Investigation and Remediation of Environmental Contamination: Management of Contaminated Soil or Solid Wastes Excavated During Response Actions: Storage of Excavated Contaminated Soil, Requirements for Temporary Stockpiles (WAC NR 718.05(3))

12. Wisconsin Administrative Code, Department of Transportation (WAC TRANS)

1.3 DEFINITIONS

A. Impacted Soil: Impacted soil is defined as, but not limited to, soil with distinguishable odor (e.g., petroleum) or non-natural fill material (e.g., foundry sand/slag, municipal trash, or other similar material) or as identified in this Section.

B. Impacted Groundwater: Impacted groundwater is defined as, but not limited to, groundwater with distinguishable odor (e.g., petroleum) or groundwater with sheen or non-aqueous liquid (e.g., petroleum product) or as identified in this Section.

1.4 SUBMITTALS

A. General: Furnish submittals, including the following, as specified in Division 1.

B. Quality Control:

1. Impacted Soil:

   a. Landfill approval documentation.

   b. Soil disposal manifests.

   c. Waste characterization documentation, complete waste manifests, and tabulation of landfill weigh tickets with disposal tonnage.

2. Impacted Groundwater:

   a. Discharge approvals from authorities having jurisdiction that will be accepting the impacted groundwater.

   b. Tabulation of groundwater discharge quantities.

PART 2 PRODUCTS

Not Used

PART 3 EXECUTION

3.1 GENERAL

A. Comply with the following requirements in areas with suspected or encountered impacted soil or groundwater:

1. Federal, State, and local laws and regulations for excavating, transporting, and disposing of contaminated soil and groundwater, including the following:

   a. 29 CFR 1910.120
   b. 29 CFR 1910 Subpart I
   c. 49 CFR
   d. City of Franklin Municipal Code
   e. City of Muskego Municipal Code
   f. City of New Berlin Municipal Code
   g. Milwaukee County Code of Ordinances
   h. WAC NR 500
   i. WAC NR 718
   j. WAC TRANS
   k. Waukesha County Code of Ordinances

B. Coordinate with and provide access for the ENGINEER, ENGINEER's Consultant, or RESIDENT PROJECT REPRESENTATIVE who may observe excavation, conduct sampling, or conduct monitoring of soil, groundwater, soil vapor, dust or ambient air during the Work.

C. Identify off-site licensed solid waste landfill appropriate for disposal of impacted soil and take sole responsibility for meeting the requirements of the landfill.

3.2 IMPACTED SOIL

A. If, during the course of excavation, impacted soil in excavations is suspected or encountered, immediately take the steps necessary to ensure worker health and safety, stop Work in the area with suspected or encountered impacted soil, safely secure the site, and notify the RESIDENT PROJECT REPRESENTATIVE in writing. Upon notification, the RESIDENT PROJECT REPRESENTATIVE will coordinate with the ENGINEER's Consultant to investigate and confirm the nature and extent of the apparent impacted soil or groundwater. Handle or dispose of impacted soil to such depth and along such extents as authorized in writing. Furnish submittals and proceed with the Work as specified in this Section and Division 1.

B. Notify the RESIDENT PROJECT REPRESENTATIVE in writing if stockpiling of impacted soil is required. Properly and temporarily stockpile impacted soil in accordance with the requirements of Section 31 25 13 and WAC NR 718.05(3). Place excavated impacted soil in polyethylene-lined container with a waterproof tarpaulin cover. If container is not immediately available, place excavated material on six mil plastic sheeting, covered and secured to prevent wind or weather from damaging the cover. Within 48 hours, place stockpiled impacted soil into appropriate container with waterproof tarpaulin cover.

C. If required, sample excavated material in the container for appropriate waste characterization required by the landfill at which the impacted soil will be disposed. Transport container containing excavated material to a designated location for stockpiling and disposal in accordance with the requirements of this Section. Otherwise, use impacted soil as common fill if suitable in accordance with the requirements of Section 31 23 23, as shown on the Drawings, and as authorized in writing.

D. Furnish submittals for impacted soil as follows:

1. Landfill acceptance documentation prior to disposal of impacted soil.

2. Soil disposal manifests within 24 hours after disposal at a landfill.

3. Waste characterization documentation, complete waste manifests, and tabulation of landfill weigh tickets with disposal tonnage no more than two weeks after disposal of impacted soil at a landfill at each site with impacted soil.

E. Payment: Handling and disposal of impacted soil so authorized will be paid for under the appropriate Allowance Items in accordance with the requirements of Section 01 29 00.

3.3 IMPACTED GROUNDWATER

A. If, during the course of excavation, impacted groundwater in excavations is suspected or encountered, immediately take the steps necessary to ensure worker health and safety, stop Work in the area with suspected or encountered impacted groundwater, safely secure the site, and notify the RESIDENT PROJECT REPRESENTATIVE in writing. Upon notification, the RESIDENT PROJECT REPRESENTATIVE will coordinate with the ENGINEER's Consultant to investigate and confirm the nature and extent of the apparent impacted soil or groundwater. Handle or dispose of impacted groundwater to such depth and along such extents as authorized in writing. Furnish submittals and proceed with the Work as specified in this Section and Division 1.

B. If authorized, perform dewatering in accordance with the approved Water Control Plan and the requirements of Section 31 23 19, and the Milwaukee Metropolitan

Sewerage District, the City of Waukesha's Clean Water Plant, or other authority having jurisdiction that has approved discharge of impacted groundwater to their collection system. At a minimum, containerize impacted groundwater in an appropriately sized and enclosed double wall tank and discharge impacted groundwater in accordance with the requirements of the Milwaukee Metropolitan Sewerage District, the City of Waukesha's Clean Water Plant, or other authority having jurisdiction that has approved discharge of impacted groundwater to their collection system.

C. Separately characterize impacted groundwater at each site based on the requirements of the authority having jurisdiction that has approved discharge of impacted groundwater. If discharge approval is not approved or causes delay, temporarily store impacted groundwater prior to characterization and approval for discharge in accordance with the requirements of this Section. Notify the RESIDENT PROJECT REPRESENTATIVE in writing if storage of impacted groundwater is required.

D. Furnish submittals for impacted groundwater as follows:

1. Discharge approvals from authorities having jurisdiction that will be accepting the impacted groundwater prior to discharging impacted groundwater.

2. Tabulation of groundwater discharge quantities no more than two weeks after completion of dewatering at each site with impacted groundwater.

E. Payment: Handling and disposal of impacted groundwater so authorized will be paid for under the appropriate Allowance Items in accordance with the requirements of Section 01 29 00.

END OF SECTION

(NO TEXT FOR THIS PAGE)

SECTION 03 30 10

STRUCTURAL CONCRETE

PART 1 GENERAL

1.1 GENERAL

A. Work shall conform to requirements of ACI 301-10, Specifications for Structural Concrete, unless otherwise specified.

B. Related work specified in other sections includes, but is not limited to, the following:

1. Section 32 01 15 - Pavement Repair and Restoration

2. Section 32 13 00 - Concrete Paving

3. Section 32 16 13 - Concrete Curbs

4. Section 32 16 23 - Concrete Sidewalks

1.2 AMERICAN IRON AND STEEL

A. Comply with the "American Iron and Steel (AIS)" requirements as contained in Section 436 of the Consolidated Appropriations Act, 2014, further described in the Bid Form

1.3 REFERENCES

A. The following is a list of standards which may be referenced in this section:

1. American Concrete Institute (ACI):

a. 117, Specifications for Tolerances for Concrete Construction and Materials.

b. 301-10, Specifications for Structural Concrete.

c. 305.1, Specification for Hot Weather Concreting.

d. 306.1, Specification for Cold Weather Concreting.

e. 308.1-11, Specification for Curing Concrete.

f. 350.1, Specification for Tightness Testing of Environmental Engineering Concrete Containment Structures.

g. SP-66, Detailing Manual.

2. ASTM International (ASTM):

a. A1064/A1064M, Standard Specification for Carbon-Steel and Welded Wire Reinforcement, Plain and Deformed, for Concrete.

b. A497/A497M, Standard Specification for Steel Welded Reinforcement, Deformed, for Concrete.

c. A615/A615M, Standard Specification for Deformed and Plain Carbon-Steel Bars for Concrete Reinforcement.

d. C31/C31M, Standard Practice for Making and Curing Concrete Test Specimens in the Field.

e. C33/C33M, Standard Specification for Concrete Aggregates.

f. C39/C39M, Standard Test Method for Compressive Strength of Cylindrical Concrete Specimens.

g. C94/C94M, Standard Specification for Ready-Mixed Concrete.

h. C143/C143M, Standard Test Method for Slump of Hydraulic-Cement Concrete.

i. C150/C150M, Standard Specification for Portland Cement.

j. C231/C231M, Standard Test Method for Air Content of Freshly Mixed Concrete by the Pressure Method.

k. C260/C260M, Standard Specification for Air-Entraining Admixtures for Concrete.

l. C309, Standard Specification for Liquid Membrane-Forming Compounds for Curing Concrete.

m. C494/C494M, Standard Specification for Chemical Admixtures for Concrete.

n. C595/C595M, Standard Specification for Blended Hydraulic Cements.

o. C618, Standard Specification for Coal Fly Ash and Raw or Calcined Natural Pozzolan for Use in Concrete.

p. C881/C881M, Standard Specification for Epoxy-Resin-Base Bonding Systems for Concrete.

q. C920, Specification for Elastomeric Joint Sealants.

r. C989, Standard Specification for Slag Cement for Use in Concrete and Mortars.

s. C1012/C1012M, Standard Test Method for Length Change of Hydraulic-Cement Mortars Exposed to a Sulfate Solution.

t. C1017/C1017M, Standard Specification for Chemical Admixtures for Use in Producing Flowing Concrete.

u. C1077, Standard Practice for Agencies Testing Concrete and Concrete Aggregates for Use in Construction and Criteria for Testing Agency Evaluation.

v. C1218/C1218M, Standard Test Method for Water-Soluble Chloride in Mortar and Concrete.

w. C1260, Standard Test Method for Potential Alkali Reactivity of Aggregates (Mortar-Bar Method).

x. C1293, Standard Test Method for Determination of Length Change of Concrete Due to Alkali-Silica Reaction.

y. C 1315, Standard Specification for Liquid Membrane-Forming Compounds Having Special Properties for Curing and Sealing Concrete.

z. C1567, Standard Test Method for Determining the Potential Alkali-Silica Reactivity of Combinations of Cementitious Materials and Aggregate (Accelerated Mortar-Bar Method).

aa. C1602/C1602M, Standard Specification for Mixing Water Used in the Production of Hydraulic Cement Concrete.

bb. D226, Specification for Asphalt-Saturated Organic Felt Used in Roofing and Waterproofing.

cc. D227, Specification for Coal-Tar Saturated Organic Felt Used in Roofing and Waterproofing.

dd. D994, Standard Specification for Preformed Expansion Joint Filler for Concrete (Bituminous Type).

ee. D1056, Specification for Flexible Cellular Materials—Sponge or Expanded Rubber.

ff. D1751, Specification for Preformed Expansion Joint Filler for Concrete Paving and Structural Construction (Nonextruding and Resilient Bituminous Types).

gg. D1752, Specification for Preformed Sponge Rubber and Cork Expansion Joint Fillers for Concrete Paving and Structural Construction.

hh. D2240, Standard Test Method for Rubber Property – Durometer Hardness.

ii. E329, Standard Specification for Agencies Engaged in Construction Inspection, Special Inspection, or Testing Materials Used in Construction.

3. Concrete Reinforcing Steel Institute (CRSI):

   a. Manual of Standard Practice.

   b. Recommended Practice for Placing Reinforcing Bars.

4. Corps of Engineers (COE): CRD-C-572, Corps of Engineers Specifications for Polyvinylchloride Waterstop.

5. National Ready Mixed Concrete Association (NRMCA).

6. NSF International (NSF): 61, Drinking Water System Components - Health Effects.

1.4 DEFINITIONS

A. Cold Weather: When ambient temperature is below 40 degrees F or is approaching 40 degrees F and falling.

B. Contractor's Licensed Design Engineer: Individual representing Contractor who is licensed to practice engineering as defined by statutory requirements of professional licensing laws in state or jurisdiction in which Project is to be constructed.

C. Defective Area: Surface defects that include honeycomb, rock pockets, indentations, and surface voids greater than 3/16-inch deep, surface voids greater than 3/4 inch in diameter, cracks in liquid containment structures and below grade habitable spaces that are 0.005-inch wide and wider, and cracks in other structures that are 0.010-inch wide and wider, spalls, chips, embedded debris, sand streaks, mortar leakage from form joints, deviations in formed surface that exceed specified tolerances and include but are not limited to fins, form pop-outs, and other projections. At exposed concrete, defective areas also include texture irregularities, stains, and other color variations that cannot be removed by cleaning.

D. Exposed Concrete: Concrete surface that can be seen inside or outside of structure regardless of whether concrete is above water, dry at all times, or can be seen when structure is drained.

E. Hot Weather: As defined in ACI 305.1.

F. Hydraulic Structure: Liquid containment structure.

G. New Concrete: Concrete less than 60 days old.

H. Top Bars: Horizontal bars placed such that 12 inches of fresh concrete is cast below in single placement.

1.5 DESIGN REQUIREMENTS

A. Design formwork to provide specified concrete finishes.

1.6 SUBMITTALS

A. Action Submittals:

1. Shop Drawings:

a. Formwork and Formwork Accessories: Unless otherwise specified, conform to requirements of ACI 301.

b. Reinforcing steel prepared in accordance with CRSI Manual of Standard Practice and ACI SP-66 Detailing Manual:

1) Bending lists.

2) Placing drawings.

c. Waterstop: Details of splices, method of securing and supporting waterstop in forms to maintain proper orientation and location during concrete placement.

d. Construction Joints, Expansion Joints and Control Joints: Layout and location for each type.

2. Mix Design:

a. Contain proportions of materials and admixtures to be used on Project, signed by mix designer.

b. Documentation of average strength for each proposed mix design in accordance with ACI 301.

c. Manufacturer's Certificate of Compliance for the following:

1) Portland cement.

2) Fly ash.

3) Slag cement.

4) Aggregates, including specified class designation for coarse aggregate.

5) Admixtures.

6) Concrete producer has verified compatibility of constituent materials in design mix.

d. Test Reports:

1) Cement: Chemical analysis report.

2) Supplementary Cementitious Materials: Chemical analysis report and report of other specified test analyses.

3) Water-Soluble Chloride-Ion Content in Hardened Concrete: Unless otherwise permitted, in accordance with ASTM C1218/C1218M at an age between 28 days and 42 days.

e. Aggregates:

1) Percent of fine aggregate weight to total aggregate weight.

2) Deleterious substances in fine aggregate per ASTM C33/C33M, Table 2.

3) Deleterious substances in coarse aggregate per ASTM C33/C33M, Table 4.

4) Test Reports:

a) Alkali Aggregate Reactivity: Aggregate shall be classified as nonpotentially reactive in accordance with Article Concrete Mix Design. Include documentation of test results per applicable standards.

f. Admixtures: Manufacturer's product data sheets for each admixture used in proposed mix designs.

3. Product Data: Specified ancillary materials.

4. Samples: PVC waterstop splice, joint, and fabricated cross of each size, shape, and fitting of waterstop.

5. Detailed plan for curing and protection of concrete placed and cured in cold weather. Details shall include, but not be limited to, the following:

a. Procedures for protecting subgrade from frost and accumulation of ice or snow on reinforcement, other metallic embeds, and forms prior to placement.

b. Procedures for measuring and recording temperatures of reinforcement and other embedded items prior to concrete placement.

c. Methods for temperature protection during placement.

d. Types of covering, insulation, housing, or heating to be provided.

e. Curing methods to be used during and following protection period.

f. Use of strength accelerating admixtures.

g. Methods for verification of in-place strength.

h. Documentation of embeds that must be at a temperature above freezing prior to placement of concrete.

i. Procedures for measuring and recording concrete temperatures.

j. Procedures for preventing drying during dry, windy conditions.

6. Detailed plan for hot weather placements including curing and protection for concrete placed in ambient temperatures over 80 degrees F. Plan shall include, but not be limited to, the following:

a. Procedures for measuring, and recording temperatures of reinforcement and other embedded items prior to concrete placement.

b. Use of retarding admixture.

c. Methods for controlling temperature of reinforcement and other embedded items and concrete materials before and during placement.

d. Types of shading and wind protection to be provided.

e. Curing methods, including use of evaporation retardant.

f. Procedures for measuring and recording concrete temperatures.

g. Procedures for preventing drying during dry, windy conditions.

7. Concrete repair techniques.

B. Informational Submittals:

1. Preinstallation Conference minutes.

2. Manufacturer's application instructions for bonding agent and bond breaker.

3. Manufacturer's Certificate of Compliance to specified standards:

a. Bonding agent.

b. Bond breaker.

c. Repair materials.

4. Statement of Qualification:

    a. Batch Plant: Certification as specified herein.

    b. Mix designer.

    c. Installer.

    d. Mix designer.

    e. Testing agency.

5. Manufacturer's written instructions for product shipment, storage, handling, installation/application, and repair for:

    a. Waterstop.

6. Field Test Reports: Tightness test results.

7. Concrete Delivery Tickets:

    a. For each batch of concrete before unloading at Site.

    b. In accordance with ASTM C94/C94M, including requirements 14.2.1. through 14.2.10.

    c. Indicate amount of mixing water withheld and maximum amount that may be permitted to be added at Site.

1.7 QUALITY ASSURANCE

A. Qualifications:

1. Batch Plant: NRMCA Program for Certification of Ready-Mixed Concrete Production Facilities or approved equivalent program.

2. Mix Designer: Person responsible for developing concrete mixture proportions certified as NRMCA Concrete Technologist Level 2 or DOT certified mix designer in jurisdiction of the Work. Requirement may be waived if individual is Contractor's Licensed Design Engineer.

3. Flatwork Finisher: Unless otherwise permitted, at least one person on finishing crew shall be certified as an ACI Flatwork Finisher, or equivalent.

4. Testing Agency: Unless otherwise permitted, an independent agency, acceptable to authorities having jurisdiction, qualified according to ASTM C1077 and ASTM E329 for testing indicated.

a. Where field testing is required of Contractor, personnel conducting field tests shall be qualified as ACI Concrete Field Testing Technician, Grade 1, according to ACI CP-1 or an equivalent certification program.

b. Personnel performing laboratory tests shall be ACI-certified Concrete Strength Testing Technician and Concrete Laboratory Testing Technician - Grade I. Testing Agency laboratory supervisor shall be an ACI-certified Concrete Laboratory Testing Technician - Grade II.

B. Preinstallation Conference:

1. Required Meeting Attendees:

a. Contractor, including pumping, placing and finishing, and curing subcontractors.

b. Ready-mix producer.

c. Admixture representative.

d. Testing and sampling personnel.

2. Schedule and conduct prior to incorporation of respective products into Project. Notify ENGINEER and RESIDENT PROJECT REPRESENTATIVE of location and time.

3. Agenda shall include:

a. Admixture types, dosage, performance, and redosing at Site.

b. Mix designs, test of mixes, and Submittals.

c. Placement methods, techniques, equipment, consolidation, and form pressures.

d. Slump and placement time to maintain slump.

e. Finish, curing, and water retention.

f. Protection procedures for weather conditions.

g. Other specified requirements requiring coordination.

1.8 DELIVERY, STORAGE, AND HANDLING

A. Deliver, store and handle products and materials as specified in Division 1.

B. Unload, store, and handle bars in accordance with CRSI publication “Placing Reinforcing Bars.”

PART 2 PRODUCTS

2.1 FORMWORK

A. Form Materials:

1. For exposed areas, use hard plastic finished plywood, overlaid waterproof particle board, or steel in “new and undamaged” condition, of sufficient strength and surface smoothness to produce specified finish.

2. For unexposed areas, use new shiplap or plywood.

3. Earth cuts may be used for forming footings.

B. Beveled Edge Corner Strips: Nonabsorbent material, compatible with form surface, fully sealed on all sides prohibiting loss of paste or water between the two surfaces.

C. Form Ties:

1. Material: Steel.

2. Spreader Inserts:

a. Conical or spherical type.

b. Design to maintain positive contact with forming material.

c. Furnish units that will leave no metal closer than 1.5 inches to concrete surface when forms, inserts, and tie ends are removed.

3. Wire ties not permitted.

2.2 CONCRETE

A. Materials:

1. Cementitious Materials:

a. Cement:

1) Portland Cement: Unless otherwise specified, conform to requirements of ASTM C150/C150M.

2) Blended Hydraulic Cement:

a) Unless otherwise specified, conform to requirements of ASTM C595/C595M.

b) Portland cement used in blended hydraulic cement; conform to requirements of ASTM C150/C150M.

3) Furnish from one source.

b. Supplementary Cementitious Materials (SCM):

1) Fly Ash (Pozzolan): Class F fly ash in accordance with ASTM C618, except as modified herein:

a) ASTM C618, Table 1, Loss on Ignition: Unless permitted otherwise, maximum 3 percent.

2) Slag Cement: In accordance with ASTM C989, Grades 100 or 120.

2. Aggregates: Unless otherwise permitted, furnish from one source for each aggregate type used in a mix design.

a. Aggregates:

1) In accordance with ASTM C33/C33M, except as modified herein.

a) Class Designation: 4S unless otherwise specified.

b) Free of materials and aggregate types causing popouts, discoloration, staining, or other defects on surface of concrete.

c) Alkali Silica Reactivity: See Article Concrete Mix Design.

2) Fine Aggregates:

a) Clean, sharp, natural sand.

b) ASTM C33/C33M.

c) Limit deleterious substances in accordance with ASTM C33/C33M, Table 2 and as follows:

(1) Limit material finer than 75-µm (No. 200) sieve to 3 percent mass of total sample.

(2) Limit coal and lignite to 0.5 percent.

3) Coarse Aggregate:

a) Natural gravels, combination of gravels and crushed gravels, crushed stone, or combination of these materials containing no more than 15 percent flat or elongated particles (long dimension more than five times the short dimension).

b) Limit deleterious substances in accordance with ASTM C33/C33M, Table 4 for specified class designation.

3. Admixtures: Unless otherwise permitted, furnish from one manufacturer.

   a. Characteristics:

      1) Compatible with other constituents in mix.

      2) Contain at most, only trace amount chlorides in solution.

      3) Furnish type of admixture as recommended by manufacturer for anticipated temperature ranges.

   b. Air-Entraining Admixture: ASTM C260/C260M.

   c. Water-Reducing Admixture: ASTM C494/C494M, Type A or Type D.

   d. Retarding Admixture: ASTM C 494/C 494M, Type B.

   e. Accelerating Admixture: ASTM C 494/C 494M, Type C.

   f. High-Range, Water-Reducing Admixture: ASTM C494/C494M, Type F or Type G.

   g. Plasticizing Admixture: ASTM C1017/C1017M, Type I or Type II.

   h. Do not use calcium chloride as an admixture.

   i. Admixtures with no standard, ASTM or other, designation may be used where permitted.

4. Water and Ice: Mixing water for concrete and water used to make ice shall be potable water, unless alternative sources of water are permitted.

   a. Water from alternative sources shall comply with requirements of ASTM C1602/C1602M, and concentration of chemicals in combined mixing water shall be less than:

      1) Chloride Content: 1,000 ppm.

      2) Sulfate Content as SO_4: 3,000 ppm.

      3) Alkalis as (Na_2O + 0.658 K_2O): 600 ppm.

      4) Total Solids by Mass: Less than 50,000 ppm.

B. Concrete Mix Design:

1. General:

    a. See Supplement at the end of this section for mix design requirements for each class of concrete used on Project.

    b. Prepare design mixtures for each type and strength of concrete, selecting and proportioning ingredients in accordance with requirements of ACI 301, unless otherwise specified.

    c. Selection of constituent materials and products in mix design are optional, unless specified otherwise.

    d. Unless otherwise permitted, use water-reducing admixture or water-reducing admixture and high-range, water-reducing admixture, or plasticizing admixture in pumped concrete, in concrete with a water-cementitious materials ratio below 0.50, and in concrete that is part of a liquid-containment structure.

    e. Unless otherwise permitted, use water-reducing admixture and high-range, water-reducing admixture, or plasticizing admixture in columns, piers, pilasters, and walls.

    f. Use water-reducing admixture or high-range, water-reducing admixture, or plasticizing admixture to achieve fresh properties that facilitate handling, placing, and consolidating of concrete, and specified hardened properties.

    g. Use water-reducing and retarding admixture when anticipated high temperatures, low humidity, or other adverse placement conditions can adversely affect fresh properties of concrete.

    h. Unless otherwise specified, desired fresh properties of concrete shall be determined by Contractor, and coordinated with concrete producer. Fresh properties of concrete shall remain stable to satisfaction of Contractor, for duration of placement and consolidation, and shall remain in conformance with requirements of Contract Documents.

    i. Contractor is encouraged to consider using environmentally sustainable concrete mix design technologies such as use of supplementary cementitious materials, aggregate packing, and self-consolidating concrete.

2. Potential alkali-aggregate reactivity of concrete:

    a. Do not use aggregates known to be susceptible to alkali-carbonate reaction (ACR).

    b. Aggregates shall have been tested to determine potential alkali-aggregate reactivity in concrete in accordance with ASTM C1260/C1260M or ASTM C1567.

1) Aggregates that indicate expansion greater than 0.10 percent at 16 days after casting shall not be used unless they have been shown to be nondeleteriously reactive in accordance with ASTM C1293, with less than 0.04 percent expansion at 1 year for cement-aggregate combinations or less than 0.04 percent expansion at 2 years for combinations with pozzolan or slag.

2) Alkali content of cement used in proposed concrete mixture shall not be greater than alkali content of cement used in test for potential alkali-aggregate reactivity.

c. Use low alkali cement and incorporate pozzolans into the concrete mixture as necessary to satisfy testing for potential alkali reactivity.

3. Proportions:

a. Design mix to meet aesthetic, durability, and strength requirements.

b. Where fly ash is included in mix, minimum fly ash content shall be a minimum of 15 percent of weight of total cementitious materials.

4. Slump :

a. Unless otherwise specified, Contractor shall select a target slump at the point of delivery of concrete mixtures for each application.

b. Concrete shall show no signs of visible segregation.

c. The target slump value shall be enforced for the duration of Project.

d. Determine the slump by ASTM C143/C143M.

e. Slump tolerances shall meet the requirements of ACI 117.

f. Unless otherwise permitted, target slump value is 4 inches at point of delivery, for concrete without high-range, water-reducing admixture.

g. Design mixes that include a high-range, water-reducing or a plasticizing admixture shall have a minimum slump of 2 inches prior to addition of admixture. Unless otherwise permitted, slump shall be 8 inches maximum at point of delivery, for concrete with a high-range, water-reducing admixture.

h. Slump tolerance shall meet requirements of ACI 117.

C. Concrete Mixing:

1. General: In accordance with ACI 301, except as modified herein.

2. Truck Mixers:

a. For every truck, test slump of samples taken per ASTM C94/C94M, paragraph 12.5.1.

b. Where specified slump is more than 4 inches, and if slump tests differ by more than 2 inches, discontinue use of truck mixer, unless causing condition is corrected and satisfactory performance is verified by additional slump tests.

2.3 REINFORCING STEEL

A. Deformed Steel Reinforcing Bars: ASTM A615/A615M, Grade 60. Welding of reinforcing bars is not permitted.

B. Fabrication: Follow CRSI Manual of Standard Practice.

2.4 ANCILLARY MATERIALS

A. Bonding Agent: Unless otherwise specified, in accordance with the following:

1. ASTM C881/C881M, Type V.

2. Two-component, moisture insensitive, 100 percent solids epoxy.

3. Consult manufacturer for surface finish, pot life, set time, vertical or horizontal application, and forming restrictions.

4. Manufacturers and Products:

a. BASF Building Systems Inc., Shakopee, MN; Masterinject 1500.

b. Euclid Chemical Co., Cleveland, OH; Euco # 352 Epoxy System LV.

c. Prime Resins, Conyers, GA; Prime Bond 3000 to 3900 Series.

d. Sika Chemical Corp., Lyndhurst, NJ; Sikadur 32 Hi-Mod.

B. Bond Breaker:

1. Nonstaining type, providing positive bond prevention.

2. Manufacturers and Products:

a. Dayton Superior Corporation, Kansas City, KS; EDOCO Clean Lift Bond Breaker.

b. Nox-Crete Products Group, Omaha, NE; Silcoseal Select.

C. Tie Wire:

1. Black, soft-annealed 16-gauge wire.

2. Nylon-, epoxy-, or plastic-coated wire.

D. Bar Supports and Spacers:

1. Use precast concrete bar supports and side form spacers, unless noted otherwise. Do not use other types of supports or spacers.

2. Bar supports shall have sufficient strength and stiffness to carry loads without failure, displacement, or significant deformation. Space bar supports so minimum concrete cover is maintained for reinforcing between supports.

E. Plastic Waterstop:

1. Extruded from elastomeric plastic compound of which basic resin shall be prime virgin polyvinyl chloride (PVC). Compound shall not contain scrapped material, reclaimed material, or pigment.

2. Specific Gravity: Approximately 1.37.

3. Shore Durometer Type A Hardness: Approximately 80.

4. Performance Requirements: COE Specification CRD-C-572.

5. Type Required in Contraction and Control Joints: 6 inches wide and parallel longitudinal ribs or protrusions on each side of strip center, as indicated on Drawings.

6. Type Required in Construction Joints: Flat ribbed with same dimensional properties as described above.

7. Corrugated or tapered type waterstops are not acceptable.

8. Thickness: Constant from center bulb (or center of waterstop), to outside stop edge.

9. Waterstop Weight: 1.60 pounds for 3/8 inch by 6 inches, minimum per foot.

10. Factory Fabrications: Use only factory fabrications for intersections, transitions, and changes of direction.

11. Manufacturers and Products:

a. Center Bulb Type:

1) Vinylex Corp., Knoxville, TN; Catalog No. 03250/VIN: No. RB6-38H (6 inches by 3/8 inch).

2) Greenstreak Plastic Products, St. Louis, MO; Catalog No. 03150/GRD: Style 732 (6 inches by 3/8 inch).

3) Four Seasons Industries Durajoint, Garrettsville, OH; Catalog No. CSP-162: Type 9 (6 inches by 3/8 inch).

4) BoMetals, Carrollton, GA; Catalog No. RCB-638LB (6 inches by 3/8 inch).

5) Dacon Plastics LLC, Portland, OR, (903) 245-0048; Catalog No. DR004 (6 inches by 3/8 inch).

b. Flat Ribbed Profile: Use same manufacturers as bulb type.

F. Premolded Joint Filler:

1. Bituminous Type: ASTM D994 or ASTM D1751.

2. Sponge Rubber:

a. Neoprene, closed-cell, expanded; ASTM D1056, Type 2C5, with compression deflection, 25 percent deflection (limits), 119 kPa to 168 kPa (17 psi to 24 psi) minimum.

b. Manufacturer and Product: Monmouth Rubber and Plastics Corporation, Long Branch, NJ; Durafoam DK515IHD.

G. Curing Compound:

1. Water-based, high-solids content, nonyellowing, curing compound meeting requirements of ASTM C1315 Type I, Class A.

2. Manufacturers and Products:

a. BASF Construction Chemicals, Shakopee, MN; Kure 1315.

b. Euclid Chemical Co., Cleveland, OH; Super Diamond Clear VOX.

c. WR Meadows, Inc., Hampshire, IL; VOCOMP-30.

d. Vexcon Chemical, Inc.; Philadelphia, PA; Starseal 1315.

e. Dayton Superior; Safe Cure and Seal 1315 EF.

H. Evaporation Retardant:

1. Optional: Fluorescent fugitive dye color tint that disappears completely upon drying.

2. Manufacturers and Products:

    a. BASF Construction Chemicals, Shakopee, MN; Confilm.

    b. Euclid Chemical Co., Cleveland, OH; Eucobar.

I. Nonshrink Grout:

1. Nonmetallic, nongas-liberating.

2. Prepackaged natural aggregate grout requiring only the addition of water.

3. Aggregate shall show no segregation or settlement at fluid consistency at specified times or temperatures.

4. Test in accordance with ASTM C1107/C1107M:

    a. Fluid consistency 20 seconds to 30 seconds in accordance with ASTM C939.

    b. Temperatures of 40 degrees F, 80 degrees F, and 100 degrees F.

5. One (1) hour after mixing, pass fluid grout through flow cone with continuous flow.

6. Minimum strength of fluid grout, 3,500 psi at 1 day, 4,500 psi at 3 days, and 7,500 psi at 28 days.

7. Maintain fluid consistency when mixed in 1 yard to 9 yard loads in ready-mix truck.

8. Manufacturers and Products:

    a. BASF Building Systems, Inc., Shakopee, MN; Master Flow 928.

    b. Five Star Products Inc., Fairfield, CT; Five Star Fluid Grout 100.

    c. Euclid Chemical Co., Cleveland, OH; Hi Flow Grout.

    d. Dayton Superior Corp., Kansas City, KS; Sure Grip High Performance Grout.

    e. L & M Construction Chemicals, Inc., Omaha, NE; Crystex.

J. Repair Material:

1. Contain only trace amounts of chlorides and other chemicals that can potentially cause steel to oxidize.

2. Where repairs of exposed concrete are required, prepare mockup using proposed repair materials and methods, for confirmation of appearance compatibility prior to use.

3. Obtain Manufacturer's Certificate of Compliance that products selected are appropriate for specific applications.

4. Repair mortar shall be Site mixed.

5. Prepare concrete substrate and mix, place, and cure repair material in accordance with manufacturer's written recommendations.

6. Manufacturers and Products:

   a. BASF Building Systems Inc., Shakopee, MN; EMACO S-Series products.

   b. Sika Chemical Corp., Lyndhurst, NJ; SikaTop-Series.

K. Crack Repair:

1. Obtain Letter of Certification from manufacturer's technical representative, that products selected are appropriate for the specific applications.

2. Prepare concrete substrate and mix, place, and cure repair material in accordance with manufacturer's written recommendations.

3. When crack repair is deemed by RESIDENT PROJECT REPRESENTATIVE as requiring a structural repair, use epoxy injection resin.

   a. Manufacturers:

      1) BASF Building Systems, Inc., Shakopee, MN.

      2) Euclid Chemical Co., Cleveland, OH.

      3) Prime Resins, Conyer, GA.

      4) Sika Chemical Corp., Lyndhurst, NJ.

4. Unless otherwise specified, use hydrophilic polyurethane resin.

   a. Manufacturers:

      1) Prime Resins, Conyer, GA.

      2) Sika Chemical Corp., Lyndhurst, NJ.

2.5 SOURCE QUALITY CONTROL

A. Source Quality Control Inspection: RESIDENT PROJECT REPRESENTATIVE shall have access to and have right to inspect batch plants, cement mills, and supply facilities of suppliers, manufacturers, and Subcontractors, providing products included in this section.

PART 3 EXECUTION

3.1 FORMWORK

A. Form Construction:

1. Construct forms and provide smooth-form finish.

2. Form 3/4-inch bevels at concrete edges, unless otherwise shown.

3. Make joints tight to prevent escape of mortar and to avoid formation of fins.

4. Brace as required to prevent distortion during concrete placement.

5. On exposed surfaces, locate form ties in uniform pattern or as shown.

6. Construct so ties remain embedded in the member with no metal within 1 inch of concrete surface when forms, inserts, and tie ends are removed.

B. Form Removal:

1. Nonsupporting forms (walls and similar parts of Work) may be removed after cumulatively curing at not less than 50 degrees F for 24 hours from time of concrete placement if:

a. Concrete is sufficiently hard so as not to sustain damage by form removal operations.

b. Curing and protection operations are maintained.

2. Remove forms with care to prevent scarring and damaging the surface.

3. Prior to form removal, provide thermal protection for concrete being placed under the requirements of cold weather concreting.

3.2 PLACING REINFORCING STEEL

A. Unless otherwise specified, place reinforcing steel in accordance with CRSI Recommended Practice for Placing Reinforcing Bars.

B. Splices and Laps:

1. Lap splice reinforcing: Refer to Structural General Notes in Drawings for additional information.

2. Tie splices with 18-gauge annealed wire as specified in CRSI Standard.

3.3 INSTALLATION OF WATERSTOPS

A. General:

1. Continuous waterstop (as specified) shall be installed in all construction joints in walls and slabs of water holding basins and channels and in walls of belowgrade structures, unless specifically noted otherwise.

2. Join waterstop at intersections to provide continuous seal.

3. Center waterstop on joint.

4. Secure waterstop in correct position. Tie waterstop to reinforcing steel using grommets, “Hog Rings,” or tie wire at maximum spacing of 12 inches. Do not displace waterstop during concrete placement.

5. Repair or replace damaged waterstop.

6. Place concrete and vibrate to obtain impervious concrete in vicinity of joints.

7. Joints in Footings and Slabs:

   a. Ensure that space beneath plastic waterstop is completely filled with concrete.

   b. During concrete placement, make visual inspection of waterstop area.

   c. Limit concrete placement to elevation of waterstop in first pass, vibrate concrete under waterstop, lift waterstop to confirm full consolidation without voids, then place remaining concrete to full height of slab.

8. Plastic Waterstop:

   a. Install in accordance with manufacturer’s written instructions.

   b. Splice in accordance with waterstop manufacturer’s written instructions using Teflon-coated thermostatically controlled heating iron at approximately 380 degrees F.

      1) Allow at least 10 minutes before new splice is pulled or strained in any way.

2) Finished splices shall provide cross section that is dense and free of porosity with tensile strength of not less than 80 percent of unspliced materials.

3) Use only factory made waterstop fabrications for all intersections, changes of directions and transitions.

4) Field splice permitted only for straight butt welds.

c. Wire looped plastic waterstop may be substituted for plastic waterstop.

3.4 CONCRETE PLACEMENT INTO FORMWORK

A. Inspection: Notify RESIDENT PROJECT REPRESENTATIVE at least one work day in advance before starting to place concrete.

B. Placement into Formwork:

1. Reinforcement: Secure in position before placing concrete.

2. Place concrete as soon as possible after leaving mixer, without segregation or loss of ingredients, without splashing forms or steel above, and in layers not over 1.5 feet deep, except for slabs that shall be placed full depth. Place and consolidate successive layers prior to initial set of first layer to prevent cold joints.

3. Placement frequency shall be such that lift lines will not be visible in exposed and architectural concrete finishes.

4. Use placement devices, for example, chutes, pouring spouts, and pumps as required to prevent segregation.

5. Vertical Free Fall Drop to Final Placement:

a. Forms 8 Inches or Less Wide: 5 feet.

b. Forms Wider than 8 Inches: 8 feet, except as specified.

6. For placements where drops are greater than specified, use placement device such that free fall below placement device conforms to required value.

a. Limit free fall to prevent segregation caused by aggregates hitting steel reinforcement.

7. Provide sufficient illumination in the interior of forms so concrete deposition is visible, permitting confirmation of consolidation quality.

8. Joints in Footings and Slabs:

a. Ensure space beneath plastic waterstop completely fills with concrete.

b. During concrete placement, make visual inspection of entire waterstop area.

c. Limit concrete placement to elevation of waterstop in first pass, vibrate concrete under waterstop, lift waterstop to confirm full consolidation without voids, and place remaining concrete to full height of slab.

d. Apply procedure to full length of waterstop.

9. Trowel and round off top exposed edges of walls with 1/4-inch radius steel edging tool.

C. Conveyor Belts and Chutes:

1. Design and arrange ends of chutes, hopper gates, and other points of concrete discharge throughout conveying, hoisting, and placing system for concrete to pass without becoming segregated.

2. Do not use chutes longer than 50 feet.

3. Wipe clean with device that does not allow mortar to adhere to belt.

4. Cover conveyor belts and chutes.

D. Retempering: Not permitted for concrete where cement has partially hydrated.

E. Pumping of Concrete:

1. Provide standby pump, conveyor system, crane and concrete bucket, or other system onsite during pumping, for adequate redundancy to ensure completion of concrete placement without cold joints in case of primary placing equipment breakdown.

2. Minimum Pump Hose (Conduit) Diameter: 4 inches.

3. Replace pumping equipment and hoses (conduits) that are not functioning properly.

F. Retempering: Not permitted for concrete where cement has partially hydrated.

G. Maximum Size of Concrete Placements:

1. Limit size of each placement to allow for strength gain and volume change as a result of shrinkage.

2. Locate expansion, control, and contraction, joints where shown.

3. Construction Joints: Unless otherwise shown or permitted, locate construction joints as follows:

    a. Locate construction joints as shown on Drawings or where approved in the joint location submittal.

    b. Locate expansion, control, and contraction joints where shown on Drawings.

    c. Provide vertical construction joints at maximum spacing of 40 feet unless shown or approved otherwise.

    d. When vertical expansion, contraction or control joint spacing does not exceed 60 feet, intermediate construction joints are not required.

    e. Uniformly space vertical construction joints within straight sections of walls, avoiding penetrations.

4. Consider beams, girders, brackets, column capitals, and haunches as part of floor or roof system and place monolithically with floor or roof system.

5. Should placement sequence result in cold joint located below finished water surface, install waterstop in joint.

H. Minimum Time between Adjacent Placements:

1. Construction or Control Joints: 7 days.

2. Construction joint between top of footing or slab, and column or wall: As soon as can safely be done without damaging previously cast concrete or interrupting curing thereof, but not less than 24 hours.

3. Expansion or Contraction Joints: 1 day.

4. For columns and walls with a height in excess of 10 feet, wait at least 2 hours before depositing concrete in beams, girders, or slabs supported thereon.

5. For columns and walls 10 feet in height or less, wait at least 1 hour prior to depositing concrete in beams, girders, brackets, column capitals, or slabs supported thereon.

3.5 CONSOLIDATION AND VISUAL OBSERVATION

A. Provide at least one standby vibrator in operable condition at placement Site prior to placing concrete.

3.6 COLD WEATHER PLACEMENT

A. Unless otherwise permitted, shall be in accordance with requirements of ACI 301, ACI 306.1 and as follows:

1. Cold weather requirements shall apply when ambient temperature is below 40 degrees F or approaching 40 degrees F and falling.

2. Do not place concrete over frozen earth or against surfaces with frost or ice present. Frozen earth shall be thawed to acceptance of RESIDENT PROJECT REPRESENTATIVE.

3. Unless otherwise permitted, do not place concrete in contact with surfaces less than 35 degrees F; requirement is applicable to all surfaces including reinforcement and other embedded items.

4. Provide supplemental external heat as needed when other means of thermal protection are unable to maintain minimum surface temperature of concrete as specified in ACI 306.1.

5. Maintain minimum surface temperature of concrete as specified in ACI 306.1 for no less than 3 days during cold weather conditions.

6. Protect concrete from freezing until end of curing period and until concrete has attained a compressive strength of 3,500 psi or design compressive strength if less than 3,500 psi.

B. Provide maximum and minimum temperature sensors placed on concrete surfaces spaced throughout Work to allow monitoring of concrete surface temperatures representative of Work. Unless otherwise permitted, record surface temperature of concrete at least once every 12 hours during specified curing period.

C. External Heating Units: Do not exhaust heater flue gases directly into enclosed area as it causes concrete carbonation as a result of concentrated carbon dioxide.

D. Cure as specified.

3.7 HOT WEATHER PLACEMENT

A. Prepare ingredients, mix, place, cure, and protect in accordance with ACI 301, ACI 305.1, and as follows:

1. Maintain concrete temperature below 95 degrees F at time of placement, or furnish test data or other proof that admixtures and mix ingredients do not produce flash set plastic shrinkage, or cracking as a result of heat of hydration. Cool ingredients before mixing to maintain fresh concrete temperatures as specified or less.

2. Internal concrete temperature in structure shall not exceed 158 degrees F, and maximum temperature differential between center of section and external surfaces of concrete shall not exceed 35 degrees F.

3. Provide for windbreaks, shading, fog spraying, sprinkling, ice, wet cover, or other means as necessary to maintain concrete at or below specified temperature.

4. Cure as specified.

3.8 CONCRETE BONDING

A. Construction Joints at Existing Concrete:

1. Thoroughly clean and roughen existing concrete surfaces to roughness profile of 1/4 inch.

2. Saturate surface with water for 24 hours prior to placing new concrete.

3.9 PREMOLDED JOINT FILLER INSTALLATION

A. Sufficient in width to completely fill joint space where shown.

B. Drive nails approximately 1 foot 6 inches on center through filler, prior to installing, to provide anchorage embedment into concrete during concrete placement.

C. Secure premolded joint filler in forms before concrete is placed.

3.10 FINISHING FORMED SURFACES

A. Provide surface finish 2.0 (SF-2.0) in accordance with ACI 301 and as herein specified.

B. Tie Holes: Unless otherwise specified, fill with specified repair material.

1. Prepare substrate and mix, place, and cure repair material per manufacturer's written recommendations.

C. Alternate Form Ties, Through-Bolts:

1. Mechanically roughen entire interior surface of through hole.

2. Apply bonding agent to roughened surface and drive elastic vinyl plug to half depth.

3. Dry pack entire hole from both sides of plug with nonshrink grout.

4. Use only enough water to dry pack grout.

5. Dry pack while bonding agent is still tacky.

6. If bonding agent has dried, remove bonding agent by mechanical means and reapply new coat of bonding agent.

7. Compact grout using steel hammer and steel tool to drive grout to high density.

8. Cure grout per grout manufacturer's written recommendations.

D. Repair defective areas of concrete.

1. Cut edges perpendicular to surface at least 1/2 inch deep. Do not feather edges. Soak area with water for 24 hours.

2. Patch with specified repair material.

3. Repair concrete surfaces using specified materials. Select system, submit for review, and obtain approval from RESIDENT PROJECT REPRESENTATIVE prior to use.

4. Develop repair techniques with material manufacturer on surface that will not be visible in final construction prior to starting actual repair work and show how finish color will blend with adjacent surfaces. Obtain approval from RESIDENT PROJECT REPRESENTATIVE.

5. Obtain quantities of repair material and manufacturer's detailed instructions for use to provide repair with finish to match adjacent surface or apply sufficient repair material adjacent to repair to blend finish appearance.

6. Repair of concrete shall provide structurally sound surface finish, uniform in appearance or upgrade finish by other means until acceptable to RESIDENT PROJECT REPRESENTATIVE.

E. Inject cracks that leak.

3.11 FINISHING UNFORMED SURFACES

A. General:

1. Use manual screeds, vibrating screeds, or roller compacting screeds to place concrete level and smooth.

2. Do not use "jitterbugs" or other special tools designed for purpose of forcing coarse aggregate away from surface and allowing layer of mortar, which will be weak and cause surface cracks or delamination, to accumulate.

3. Do not dust surfaces with dry materials nor add water to surfaces.

4. Cure concrete as specified.

B. Slab Tolerances:

1. Exposed Slab Surfaces: Comprise of flat planes as required within tolerances specified.

2. Slab Finish Tolerances and Slope Tolerances: Crowns on floor surface not too high as to prevent 10-foot straightedge from resting on end blocks, nor low spots that allow block of twice the tolerance in thickness to pass under supported 10-foot straightedge.

3. Steel gauge block 5/16 inch thick.

4. Finish Slab Elevation: Slope slabs to floor drain and gutter, and shall adequately drain regardless of tolerances.

5. Thickness: Maximum 1/4 inch minus or 1/2 inch plus from thickness shown. Where thickness tolerance will not affect slope, drainage, or slab elevation, thickness tolerance may exceed 1/2 inch plus.

C. Interior Slab Finish: Provide trowel finish unless specified otherwise.

D. Exterior Slab Finish:

1. Provide broom finish unless specified otherwise.

2. Finish exposed edges with steel edging tool.

3. Mark sidewalks transversely at 5-foot intervals with jointing tool.

3.12 EXPOSED METAL OBJECTS

A. Remove metal objects not intended to be exposed in as-built condition of structure including wire, nails, and bolts, by chipping back concrete to depth of 1 inch and then cutting or removing metal object.

B. Repair area of chipped-out concrete as specified for defective areas.

3.13 BLOCKOUTS AT PIPES OR OTHER PENETRATIONS

A. Where shown, install in accordance with requirements of Drawings.

3.14 PROTECTION AND CURING

A. Protect and cure concrete in accordance with requirements of ACI 301, ACI 308.1, and as follows:

1. Protect fresh concrete from direct rays of sunlight, drying winds, and wash by rain.

2. Keep concrete slabs continuously wet for a 7-day period. Intermittent wetting is not acceptable.

3. Use curing compound only where approved by RESIDENT PROJECT REPRESENTATIVE.

4. Cure formed surfaces with curing compound applied in accordance with manufacturer's written instructions as soon as forms are removed and finishing is completed.

5. Remove and replace concrete damaged by freezing.

6. Repair areas damaged by construction, using specified repair materials and approved repair methods.

3.15 NONSHRINK GROUT

A. General: Mix, place, and cure nonshrink grout in accordance with grout manufacturer's written instructions.

B. Grouting Machinery Foundations:

1. Block out original concrete or finish off at distance shown below bottom of machinery base with grout. Prepare concrete surface by sandblasting, chipping, or by mechanical means to remove any soft material.

2. Set machinery in position and wedge to elevation with steel wedges, or use cast-in leveling bolts.

3. Form with watertight forms at least 2 inches higher than bottom of plate.

4. Fill space between bottom of machinery base and original concrete in accordance with manufacturer's written instructions.

3.16 BACKFILL AGAINST STRUCTURES

A. Do not backfill against walls until concrete has obtained specified 28-day compressive strength.

B. Refer to General Structural Notes on the Drawings for additional requirements, including elevated slab and diaphragm completion prior to backfill.

C. Unless otherwise permitted, place backfill simultaneously on both sides of structure, where such fill is required, to prevent differential pressures.

3.17 FIELD QUALITY CONTROL

A. General:

1. Provide adequate facilities for safe storage and proper curing of concrete test specimens onsite for first 24 hours, and for additional time as may be required before transporting to test lab.

2. Unless otherwise specified, sample concrete for testing for making test specimens, from point of delivery.

3. When concrete is pumped, sample and test air content at point of delivery and at point of placement.

4. Evaluation will be in accordance with ACI 301 and Specifications.

5. Test specimens shall be made, cured, and tested in accordance with ASTM C31/C31M and ASTM C39/C39M.

6. Frequency of testing may be changed at discretion of RESIDENT PROJECT REPRESENTATIVE.

7. Pumped Concrete: Take concrete samples for slump, ASTM C143/C143M, and test specimens, ASTM C31/C31M and ASTM C39/C39M, at placement (discharge) end of line.

8. If measured air content at delivery is greater than specified limit, check test of air content will be performed immediately on a new sample from delivery unit. If check test fails, concrete has failed to meet requirements of Contract Documents. If measured air content is less than lower specified limit, adjustments will be permitted in accordance with ASTM C94/C94M, unless otherwise specified. If check test of adjusted mixture fails, concrete has failed to meet requirements of Contract Documents. Concrete that has failed to meet requirements of Contract Documents shall be rejected.

B. Concrete Strength Test:

1. Unless otherwise specified, one specimen at age of 7 days for information, and two 6-inch diameter or when permitted three 4-inch diameter test specimens at age of 28 days for acceptance.

2. If result of 7-day concrete strength test is less than 50 percent of specified 28-day strength, extend period of moist curing by 7 additional days.

3. Provide a minimum of one spare test specimen per sample. Test spare cylinder as directed by RESIDENT PROJECT REPRESENTATIVE.

C. High Range Water Reducer (Superplasticizer) Admixture Segregation Test: Test each truck prior to use on Job.

1. Segregation Test Objective: Concrete shall stay together when slumped. Segregation is assumed to cause mortar to flow out of mix even though aggregate may stay piled enough to meet slump test.

2. Test Procedure: Make slump test and check for excessive slump and observe to see if mortar or moisture flows from slumped concrete.

3. Reject concrete if mortar or moisture separates and flows out of mix.

D. Cold Weather Placement Tests:

1. During cold weather concreting, cast cylinders for field curing as follows. Use method that will produce greater number of specimens:

   a. Six extra test cylinders from last 100 cubic yards of concrete.

   b. Minimum three specimens for each 2 hours of placing time or for each 100 cubic yards.

2. These specimens shall be in addition to those cast for lab testing.

3. Protect test cylinders from weather until they can be placed under same protection provided for concrete of structure that they represent.

4. Keep field test cylinders in same protective environment as parts of structure they represent to determine if specified strength has been obtained.

5. Test cylinders in accordance with applicable sections of ASTM C31/C31M and ASTM C39/C39M.

6. Use test results to determine specified strength gain prior to falsework removal.

E. Slab Finish Tolerances and Slope Tolerances:

1. Support 10-foot long straightedge at each end with steel gauge blocks of thicknesses equal to specified tolerance.

2. Compliance with designated limits in four of five consecutive measurements is satisfactory, unless defective conditions are observed.

F. Liquid Tightness Tests (influent and effluent chambers):

1. Purpose: To determine integrity and liquid-tightness of finished exterior and interior concrete surfaces of liquid containment structures.

2. Water for initial tightness test shall be provided by Contractor.

3. Provide means to transport water to structure to be tested.

4. If additional tightness tests are required because of failure to meet criteria, provide water for subsequent tests.

5. After testing has been completed, dispose of test water in a manner approved by Owner.

6. Liquid-Tightness Test Requirement:

a. Perform tightness tests in accordance with ACI 350.1 and as specified herein.

b. Each chamber shall be filled to the high-water surface elevation indicated on the drawings.

c. Do not place backfill or install brick facing, grout topping slab, coatings, or other work that will cover concrete surfaces until tightness testing has been completed and approved.

d. Measure evaporation, precipitation, and temperature as specified.

e. Measure water surface at two points 180 degrees apart when possible where attachments, such as ladders exist, at 24-hour intervals.

f. Acceptance Criteria:

1) Volume loss shall not exceed 0.050 percent of contained liquid volume per 24-hour period, adjusted for evaporation, precipitation, and temperature.

2) Acceptance that structure has passed tightness test shall be based on total volume loss at end of specified test period.

g. Repairs When Test Fails:

1) Dewater structure; repair leaking cracks.

2) Patch areas of damp spots previously recorded, and repeat water leakage test in its entirety until structure successfully passes test.

3.18 MANUFACTURER'S SERVICES

A. Concrete Producer Representative:

1. Concrete Producer Representative:

a. Observe how concrete mixes are performing.

b. Assist with concrete mix design, performance, placement, weather problems, and problems as may occur with concrete mix throughout Project, including instructions for redosing.

c. Establish control limits on concrete mix designs.

d. Provide equipment for control of concrete redosing for air entrainment or high-range, water-reducing admixture, superplasticizers, at Site to maintain proper slump , and air content when specified.

2. Admixture Manufacturer's Representative: Available for consultations as required to ensure proper installation and performance of specified products.

3. Bonding Agent Manufacturer's Representative: Available for consultations as required to ensure proper installation and performance of specified products.

3.19 SUPPLEMENTS

A. Requirements of concrete mix designs following "End of Section," are a part of this Specification and supplement requirements of Part 1 through Part 3 of this Section:

1. Concrete Mix Design, Class 5000F3S1P2C2.

PART 4 Concrete Mix Design, Class 5000F3S1P2C2

A. Mix Locations: Typical, unless otherwise specified.

B. Exposure Categories and Classifications: F3S1P2C2.

C. Mix Properties:

1. Limit water to cementitious materials ratio (W/Cm) in mix design to maximum value of 0.40.

2. Minimum concrete compressive strength (f'c) shall be 5,000 psi at 28 days.

3. Air-entraining admixtures are prohibited in concrete mixtures and total air content shall not be greater than 3 percent, for the following:

a. Slabs to receive hard-troweled finish.

b. Slabs to receive dry shake floor hardener.

c. Slabs to receive topping placed monolithically as two-course floor on top of plastic concrete.

4. Unless otherwise specified, provide air content based on nominal maximum size of aggregate as follows:

Nominal Maximum Aggregate Size in.‡	Air Content (%)*
3/8	7.5
1/2	7.0
3/4	6.0
1	6.0

Nominal Maximum Aggregate Size in.‡	Air Content (%)*
1-1/2	5.5
2§	5.0
3§	4.5
‡See ASTM C33/C33M for tolerance on oversize for various nominal maximum size designations. *Tolerance of air content is ±1-1/2 percent. §Air contents apply to total mixture. When testing concretes, however, aggregate particles larger than 1-1/2 inches are to be removed by sieving and air content will be measured on sieved fraction (tolerance on air content as delivered applies to this value). Air content of total mixture is computed from value measured on the sieved fraction passing the 1-1/2-inch sieve in accordance with ASTM C231/C231M.	

5. Limit supplementary cementitious materials measured as a percent of weight of total cementitious materials in mix design, as follows:

   a. Fly Ash and other Pozzolans: 25 percent.

   b. Slag Cement: 50 percent.

   c. Combined Fly Ash and other Pozzolans and Slag Cement: 50 percent, with fly ash and other pozzolans not exceeding 25 percent .

   d. Total cementitious materials include ASTM C150/C150M and ASTM C595/C595M cement.

      1) Fly ash and other pozzolans in Type IP, blended cement, ASTM C595/C595M.

      2) Slag used in the manufacture of an IS blended cement, ASTM C595/C595M.

6. Provide cementitious materials in accordance with one of the following:

   a. ASTM C150/C150M Type II; inclusion of supplementary cementitious materials in design mix is optional.

   b. ASTM C150/C150M types other than Type II, plus supplementary cementitious materials in accordance with one of the following:

      1) Tricalcium Aluminate Content of Total Cementitious Materials: Maximum 8 percent by weight.

      2) Provide documentation of test results in accordance with ASTM C1012/C1012M, for combinations of cementitious materials

providing sulfate resistance with expansion less than 0.10 percent at 6 months.

c. ASTM C595/C595M Type IP or Type IS (less than 70), tested to comply with moderate sulfate resistance option (MS).

1) Provide documentation of test results in accordance with ASTM C1012/C1012M, for combinations of cementitious materials providing sulfate resistance with expansion less than 0.10 percent at 6 months.

7. Unless otherwise permitted, minimum cementitious materials content in mix design shall be as follows:

a. 515 pounds per cubic yard for concrete with 1-1/2-inch nominal maximum size aggregate.

b. 535 pounds per cubic yard for 1-inch nominal maximum size aggregate.

c. 560 pounds per cubic yard for 3/4-inch nominal maximum size aggregate.

d. 580 pounds per cubic yard for 1/2-inch nominal maximum size aggregate.

e. 600 pounds per cubic yard for 3/8-inch nominal maximum size aggregate.

f. Unless otherwise permitted, limit cementitious materials content to 100 pounds per cubic yard greater than specified minimum cementitious materials content in mix design.

8. Limit water-soluble, chloride-ion content in hardened concrete to 0.10 percent, unless otherwise specified.

a. Limits are stated in terms of chloride ions in percent by weight of cement.

b. Unless otherwise permitted, provide documentation from concrete tested in accordance with ASTM C1218/C1218M at an age between 28 days and 42 days.

Refer to PART 1 through PART 3 of this section for additional requirements.

END OF SECTION

SECTION 04 22 00

CONCRETE UNIT MASONRY

PART 1 GENERAL

1.1 SUMMARY

A. This Section includes concrete unit masonry and accessories.

B. Related Work Specified in Other Sections Includes, but is Not Limited to, the Following:

1. Section 07 62 00 - Sheet Metal Flashing and Trim.

2. Section 07 90 00 - Joint Sealers.

1.2 REFERENCES

A. Codes and standards referred to in this Section are:

1. ASTM A82-Standard Specification for Steel Wire, Plain, for Concrete Reinforcement.

2. ASTM A153-Standard Specification for Zinc Coating (Hot-Dip) on Iron and Steel Hardware.

3. ASTM C33-Standard Specification for Concrete Aggregates.

4. ASTM C90-Standard Specification for Loadbearing Concrete Masonry Units.

5. ASTM C140-Standard Test Methods for Sampling and Testing Concrete Masonry Units and Related Units.

6. ASTM C144-Standard Specification for Aggregate for Masonry Mortar.

7. ASTM C150-Standard Specification for Portland Cement.

8. ASTM C207-Standard Specification for Hydrated Lime for Masonry Purposes.

9. ASTM C270-Standard Specification for Mortar for Unit Masonry.

10. ASTM C404-Standard Specification for Aggregates for Masonry Grout.

11. ASTM C476-Standard Specification for Grout for Masonry.

12. ASTM C618-Standard Specification for Coal Fly Ash and Raw or Calcined Natural Pozzolan for Use in Concrete.

13. ASTM C979-Pigments for Integrally Colored Concrete.

14. ASTM C989-Standard Specification for Ground Granulated Blast-Furnace Slag for Use in Concrete and Mortars.

15. ASTM C1403-Standard Test Method for Rate of Water Absorption of Masonry Mortars.

16. ASTM E514-Standard Test Method for Water Penetration and Leakage through Masonry.

17. TMS 402-Building Code Requirements for Masonry Structures and Companion Commentaries. (MSJC Code and Commentary).

18. TMS 602-Specification for Masonry Structures.

19. ACI 530.1-Specification for Masonry Structures and Companion Commentaries. (Masonry Standards Joint Committee Specifications and Commentary).

20. ICC IBC-International Building Code.

21. ICC-ES-Evaluation Service Reports.

1.3 AMERICAN IRON AND STEEL

A. Comply with the "American Iron and Steel (AIS)" requirements as contained in Section 436 of the Consolidated Appropriations Act, 2014, further described in the Bid Form.

1.4 SUBMITTALS

A. Shop Drawings.

B. Data Sheets:

1. Horizontal joint reinforcement.

2. Preformed control joint materials.

3. Water repellant masonry sealer.

4. Grout mix design.

5. Mortar mix design or prebagged mortar properties and data sheets.

6. Grout sand gradation in accordance with ASTM C404.

C. Samples:

1. Burnished CMU colors for color selection

2. Mortar colors for color selection.

D. Method and Location of Placing Grout: High lift or low lift.

E. Mix design test results.

F. Certifications:

1. Units comply with ASTM C55 and ASTM C90.

2. Grout test results conform to ASTM C1019.

3. Grout aggregates conform to requirements of ASTM C33, including nonreactivity.

4. Mortar sand conform to requirements of ASTM C144.

G. Test results of Project samples from masonry unit manufacturer stating that units comply with ASTM C90. Documentation of material testing shall be one less than 1 year old.

H. Test results of proposed grout mix deign stating that units comply with ASTM C1019. Documentation of material testing shall be 1 year old or less.

I. Test reports stating aggregates for mortar meet requirements of ASTM C144.

J. Test reports or letter of certification stating aggregates for grout meet requirements of ASTM C404.

K. Letter from water repellent admixture manufacturer verifying masonry unit manufacturer's proper use of product.

L. Method and materials for removal of efflorescence.

M. Field test results to qualify materials.

N. Grout tests in accordance with ASTM C1019.

1.5 QUALITY ASSURANCE

A. Mockups:

1. Lay up Sample panel for each type of masonry at Site.

2. Dimensions: Minimum 4 feet high by 4 feet long.

3. Use approved materials and procedures.

4. Leave intact after approval until acceptance of permanent masonry work and then remove at the end of the project.

5. Approved panels shall serve as basis of color, texture, bond, quality of finished joints, surface applied finishes, and for acceptance of permanent construction.

6. Demonstrate ability to keep grout isolated and in certain cells during any sequence of placement, and to demonstrate materials will be restricted to cells and bond beams intended to receive grout.

7. Construction shall show areas required to receive mortar, including webs on each side of each grouted cell to prevent grout from entering adjacent cells or courses.

8. Where bond beams are to be used, demonstrate proper placement of grout to bond beam level, and proper placement of bond beam prior to placement of grout above bond beam level.

9. Demonstrate proper use of running bond.

10. Compliance Requirements: For masonry finish and appearance, dimension tolerances, tolerances of construction, joint tolerances, and wall plumb tolerances, comply with the requirements and criteria of NCMA, ASTM C90, and TMS 602.1.

B. Masonry Unit Manufacturer: Qualified by manufacturer of water repellent admixture to use product.

1.6 DELIVERY, STORAGE, AND HANDLING

A. Deliver, store and handle products and materials as specified in Division 1.

B. Storage and Protection: Keep units and mortar/grout cementitious ingredients, including lime, dry.

PART 2 PRODUCTS

2.1 COMPRESSIVE STRENGTH OF MASONRY ASSEMBLAGE

A. Minimum 28-Day Specified Compressive Strength (f'm) of Masonry: 1,900 psi.

2.2 burnished CONCRETE MASONRY UNITS (CMU)

A. ASTM C90: Normal weight.

B. Net Area Compressive Strength: 1,900 psi minimum, in accordance with TMS 602, Table 2.

C. Water Repellent Admixture:
1. Structural concrete masonry units in weather exposed exterior wall shall be manufactured with integral liquid polymeric admixture to provide resistance to water penetration.
2. Manufacturers and Products:

a. W.R. Grace & Co.; Dry-Block Block Admixture.

b. BASF Construction Chemicals; Rheopel Plus.

D. Nominal Size: 16 inches long by 8 inches high by thickness shown on Drawings.

E. Color of Units: As selected from manufacturer's standard range.

F. Surface Texture on Exposed Surfaces: Ground face (burnished).

G. Surface Texture: Smooth on interior, concealed exterior, and surface 1 foot below finished grade.

H. Furnish or cut special shapes for corners, jambs, lintels, and other areas shown or required.

I. Special units shall match color and texture of standard units.

J. Where units are placed so end of unit is exposed, such as at a corner or intersection, exposed end of that block shall have surface to match color and texture of sides of other units.

K. Furnish sound, dry, clean units free of cracks, prior to placing in structure.

L. Vertical Cells to be Grouted: Capable of alignment sufficient to maintain clear, unobstructed continuous vertical cell dimensions in accordance with TMS 602, Table 7.

M. Masonry unit size and shape shall allow for all placement patterns. Use vertical grout dams to prevent materials, such as grout, from escaping from cell being filled to adjacent cells where material is not intended to be placed.

2.3 MORTAR MATERIALS

A. Portland Cement-Lime Mortar: ASTM C270.

B. Cement: ASTM C150, Type I or II portland cement.

C. Lime: ASTM C207, Type S hydrated.

D. Aggregates:

1. Non-reactive in accordance with ASTM C33, Appendix X1.

2. Mortar: ASTM C144, sand.

E. Water: Fresh, clean, and potable.

F. Water Repellent Admixture:

1. ASTM C1403.

2. Mortar for concrete masonry units in weather exposed exterior walls shall include an integral liquid polymeric admixture to provide resistance to water penetration.

3. Manufacturers and Products:

a. W.R. Grace; DRY-BLOCK.

b. Harris Specialty Chemicals.

c. Axim Italcementi Group; Intrapel.

d. BASF Chemical Co.; Rheopel Admixture.

G. Mortar Color Admixture:

1. Meet the requirements of ASTM C979.

2. Manufacturer and Product: Davis Colors, Los Angeles, CA; True Tone Mortar Color.

3. Mortar Color: As selected from manufacturer's standard range.

2.4 GROUT MATERIALS

A. Cement: ASTM C150, Type I and Type II portland cement.

B. Fly Ash: Fly Ash (Pozzolan): Class F and Class C fly ash in accordance with ASTM C618.

C. Slag Cement: In accordance with ASTM C989, Grade 100 or Grade 120.

D. Lime: ASTM C207, Type S hydrated.

E. Aggregates:

1. ASTM C404, fine and coarse.

2. Non-reactive in accordance with ASTM C33, Appendix X1.

F. Water: Fresh, clean, and potable.

2.5 REINFORCEMENT

A. Reinforcement: Clean and free from loose rust, scale, and coatings that reduce bond.

B. Deformed Bars: As specified in Section 03 30 10 - Structural Concrete.

C. Horizontal Joint Reinforcement:

1. Two parallel, ASTM A82, No. 9 wires, galvanized in accordance with ASTM A153, weld connected to No. 9 perpendicular cross wire at 16 inches, maximum, center.

2. Furnish special manufactured corner and wall intersection pieces.

3. Manufacturer: Dayton Superior/Dur-O-Wal, Dayton, OH.

2.6 PREFORMED CONTROL JOINTS

A. Solid rubber cross-shape extrusions as manufactured by:

1. Dayton Superior/Dur-O-WalDayton, OH; DA 2001 Control Joint Regular Rubber.

2. Hohmann and Barnard, Inc, Hauppauge, NY; #RS-Standard.

2.7 MORTAR MIXES

A. In accordance with ASTM C270, Type S and MSJC Specifications.

B. Property Mix Method: Minimum average mortar 28-day compressive strength 2,000 psi.

C. Mixing: Machine mix in approved mixers in accordance with ASTM C270.

1. Time addition of approved admixtures in accordance with manufacturer's instructions. Procedure used for adding it to mix shall provide good dispersion.

2. Follow manufacturer's instructions for mortar color admixture.

3. Follow manufacturer's instructions for water repellent admixture.

4. Review compatibility with other mortar admixture.

D. Where colored masonry units are used, color mortar to match. Inert coloring pigments may be added, but shall not exceed 6 percent by weight of cement.

2.8 GROUT MIXES

A. Compressive Strength Property: Minimum 2,000 psi at 28 days. Grout strength shall not exceed two times the minimum specified strength.

B. Mix Design:

1. Proportions:

a. Design mix to meet property/strength requirements.

b. Where fly ash or slag is included in mix, fly ash or slag content shall be a minimum of 25 percent and a maximum of 40 percent of weight of total cementitious materials.

2. Slump: 8-inch minimum, 11-inch maximum.

C. Mixing:

1. Do not use water reducers, air entrainment, plasticizing, high-range water reducers, or other non-specified admixtures in grout mixes.

2. Transit-Mixed Grout: Meet requirements of ASTM C476.

3. For high lift grouting, add approved grout expansion admixture in accordance with manufacturer's recommendations.

4. Fluid consistency suitable for placing without segregation with a slump of 8 inches to 11 inches.

2.9 WATER REPELLENT MASONRY SEALER

A. Characteristics:

1. Water-based blend of silanes and siloxanes.

2. VOC compliant.

B. Performance Requirements:

1. Water Absorption: 95 percent reduction in weight gain when tested in accordance with ASTM C140.

2. Water Repellency: 99 percent reduction in weight gain when tested in accordance with ASTM E514.

C. Manufacturers and Products:

1. W. R. Grace & Co.; Infiniseal DB Sealer.

2. BASF Construction Chemicals; Enviroseal PBT.

PART 3 EXECUTION

3.1 GENERAL

A. Meet requirements of 2015 IBC, Chapter 21 and 2011 The Masonry Society (TMS) 602/American Concrete Institute (ACI)530.1/ASCE 6, Specification for Masonry Structures and Companion Commentaries (MSJC), Part 3, Execution, except as modified in this section.

B. Moisture Protection:

1. Keep units dry while stored on Site.

2. Do not wet units prior to laying.

C. Provide measures to prevent moisture from entering incomplete walls and open cells.

D. Cold Weather: Meet requirements of MSJC Specification Section “Cold Weather Construction”.

E. Hot Weather: Meet requirements of MSJC Specification Section “Hot Weather Construction”.

F. After construction during cold weather, maintain newly constructed masonry temperature above 32 degrees F for a minimum of 24 hours using MSJC or other approved cold weather methods.

G. After construction and during hot weather, fog spray newly constructed masonry in accordance with MSJC hot weather construction requirements.

3.2 PREPARATION

A. Concrete Foundations: Meet tolerance requirements of ACI 117 prior to starting any masonry work.

B. Prepare surface contact area of foundation concrete for initial mortar placement by removing laitance, loose aggregate, and other materials, and anything that would prevent mortar from bonding to foundation.

C. Patch or grind out-of-tolerance foundation surfaces to receive mortar prior to starting masonry work.

D. Clean reinforcement dowels and projecting embeds by removing laitance, spillage, or items that will adversely affect grout bond.

E. Prevent surface damage to foundation concrete that will be exposed to view outside of contact area.

3.3 LAYING MASONRY UNITS

A. General:

1. Finish Tolerances (Measured on Interior Surfaces): Meet requirements of “Site Tolerance” requirements of Part 3, Execution, of the MSJC Specifications.

2. Place units with chipped edges or corners such that chipped area is not exposed to view.

B. Wall Units:

1. General:

a. If necessary to move a unit after once set in-place, remove from wall, clean, and set in fresh mortar.

b. Toothing of masonry units is not permitted.

2. Running Bond:

   a. Unless otherwise shown, lay up walls in straight, level, and uniform courses using a running bond pattern.

   b. Place units for continuous vertical cells and mortar joints to prevent materials, such as grout, from escaping from cell being filled to adjacent cells where material is not intended to be placed.

   c. Corners: Lay standard masonry bond for overlapping units and grout solid.

   d. Intersecting Walls: Half unit appearance shall not extend and be visible on exterior side of intersecting wall. Provide hooked corner bars in bond beam units and joint reinforcement as shown on Drawings.

3. Special Shapes:

   a. Provide and place such special units as corner block, doorjamb block, lintel block fillers, and similar blocks as may be required.

   b. Use required shapes and sizes to work to corners and openings, maintaining proper bond throughout wall.

3.4 BUILT-IN ITEMS

A. Position door frames, windows, vents, louvers, and other items to be built in wall, and construct wall around them.

B. Install masonry anchors to secure items to wall.

C. Fill spaces around items with grout except use mortar at mortar joints.

D. Do not place electrical, instrumentation, or water conduits in a cell containing parallel reinforcement, unless approved in writing by ENGINEER. Additionally, pipes, sleeves, and conduits shall meet requirements of TMS 402/ACI 530/ASCE 5, Building Code Requirements for Masonry Structures (MSJC Code) and MSJC specification construction requirements.

3.5 MORTAR JOINTS

A. General:

   1. Meet masonry erection requirements of MSJC, Part 3, Execution, 3.3B.

   2. As units are laid, remove excess mortar from grout space of cells to be filled. Final grout space, including any remaining mortar projections, shall be as required by MSJC Table “Grout Space Requirements”.

   3. Place mortar before initial setting of cement takes place. Retemper only as required for it to remain plastic. Retempering of colored mortar is not allowed.

4. Remove mortar containing water repellent admixture from face of masonry before it sets.

B. Exposed Joints:

1. Tool joints exposed to view after final construction, unless otherwise noted or shown.

2. Cut joints flush and as mortar takes its initial set; tool to provide a concave joint.

3. Perform tooling with tool that compacts mortar, pressing excess mortar out.

4. Perform tooling when mortar is partially set, but still sufficiently plastic to bond rather than dragging it out.

5. Rake out joints that are not tight at time of tooling, point, and then tool.

6. Rake and tool joints at split-face surfaces, interior and exterior.

C. Concealed Joints: Strike flush with no further treatment required.

3.6 CONTROL JOINTS

A. Preformed Control Joints:

1. Omit mortar from vertical joints.

2. Place in units fabricated to receive rubber control joint material as wall is built.

3. After wall is grouted, cured, and cleaned, install backing rod and sealant as specified in Section 07 90 00 - Joint Sealers.

4. Place and tool sealant to match depth of typical joint.

3.7 REINFORCING

A. Foundation Dowels:

1. Locate first foundation dowel at end of wall in center of first cell; typically 4 inches from end of wall.

2. Locate at each side of control joints and openings and below beam and joist seats, and then locate at maximum required spacing between these bars.

3. Size, number, and location of foundation dowels shall match all typical and additional vertical wall reinforcing, unless otherwise noted.

4. When foundation dowel does not line up with vertical core, do not slope more than 1 horizontal to 6 vertical to bring it into alignment.

B. Vertical Reinforcing:

1. Use deformed bars.

2. Hold in position near ends of bars by wire ties to dowels or by reinforcing positioners.

3. For high lift grouting, hold in position at maximum intervals of 160 bar diameters by reinforcing positioners.

4. Lap reinforcing bars as shown or approved.

5. Wire tie splices together.

6. Minimum Bar Clearance: 1/2-inch from masonry for coarse grout, from formed surfaces, and from parallel bars in same grout space.

C. Horizontal Reinforcing:

1. Use deformed bars.

2. Lay on webs of bond beam units and place as wall is built. Increase web depth to ensure 1/2-inch cover over top of rebar.

3. Lap reinforcing bars where spliced and wire tie together.

4. Minimum Bar Clearance: 1/2 inch from masonry for coarse grout, from formed surfaces, and from parallel bars in same grout space.

5. Terminate reinforcing bars 2 inches clear from control joints except horizontal bars at roof and floor courses shall be continuous through joints.

D. Horizontal Joint Reinforcement:

1. Use where indicated on Drawings.

2. Provide in addition to typical, deformed horizontal reinforcing steel.

3. Space maximum 16 inches apart, vertically.

4. Lap ends 16 inches minimum.

5. Terminate reinforcing 2 inches clear from control joints except reinforcement at roof and floor courses shall be continuous through joints.

6. Use manufactured corner and other wall intersection pieces.

3.8 MORTAR PRODUCTION

A. Mix bulk materials in accordance with MSJC Specification.

B. Mix prebagged materials with water to produce a workable consistency.

C. Remix or retemper to maintain workability. Discard mortar that has begun to stiffen or is not used within 2-1/2 hours after initial mixing.

3.9 GROUT PLACEMENT

A. Do not mix, convey, or place with equipment constructed of aluminum.

B. Secure vertical and horizontal reinforcement, ties, bolts, anchors, and other required embedments in place; inspect and verify before placing grout.

C. Grout beams over openings in one continuous operation.

D. Maintain vertical alignment in accordance with ACI 530.1, Table 7:

1. Place grout within 1-1/2 hours of addition of water to mix.

2. Use reinforcing positioners to secure vertical reinforcement.

E. Grouting Requirements:

1. Partial grout all walls as shown.

2. Fully embed horizontal steel with grout in an uninterrupted pour.

3. Do not construct wall more than one course above top of grout pour prior to placing grout.

4. Partial Grouting Requirements:

a. Fill cells containing reinforcing steel, anchor bolts, and other embedded items as shown with grout.

b. Construct cells to be filled to confine grout within cell.

c. Cover tops of unfilled vertical cells under a bond beam with metal lath to confine grout fill to bond beam section.

d. Form horizontal construction joints between pours by stopping grout pour 1-1/2 inches below a mortar joint, except at a bond beam; stop pour 1/2 inch below top of masonry unit.

F. Vibration:

1. Use internal “pencil” type, low energy vibrator to thoroughly consolidate grout and reduce amount of air voids. Do not use concrete vibrators.

2. After initial water loss and settlement has occurred, but before it has taken any set, reconsolidate grout.

3. Waiting period for reconsolidation will vary depending upon weather conditions and block absorption rates, but under “normal” weather conditions with average masonry units the waiting period should be between 30 minutes and 60 minutes.

G. Cleanouts:
1. Construct in accordance with MSJC specification.

2. Provide for grout pours heights over 5 feet 4 inches in accordance with the 2015 IBC.

3. Provide of sufficient size to permit cleaning of cell, positioning of reinforcing, and inspection at bottom of every vertical cell containing reinforcing and maximum of 32 inches on center.

4. Location: Concealed from view after final construction, unless otherwise approved by RESIDENT PROJECT REPRESENTATIVE.

5. After wall has been inspected and approved and prior to grouting, cap cleanouts in a manner that will seal them from grout leakage and provide a flush finish.

3.10 WATER REPELLENT MASONRY SEALER

A. Remove efflorescence prior to applying water repellents. Dispose of waste generated.

B. Apply to exposed exterior concrete masonry walls.

C. Repoint loose, cracked, or disintegrating mortar at least 7 days prior to application. Ensure joint sealants and caulking are fully cured and wall surfaces are clean, dry, and free of chemical cleaners, efflorescence, dirt, oils, mortar smears, and other surface contaminants.

D. Follow manufacturer’s recommendations for weather conditions during application.

E. Test a 5-foot by 5-foot wall area to ensure proper coverage, desired water repellency properties, and desired surface appearance when sealer is fully dried.

F. Apply with spray, brush, or roller following manufacturer’s recommendations, at a coverage rate of 50 square feet to 150 square feet per gallon, as determined by testing. Use two-coat application where recommended by manufacturer.

3.11 FIELD QUALITY CONTROL

A. Contractor-Furnished Quality Control: Inspection and testing as required in Section 01 45 00 - Quality Control.

B. Masonry shall be tested by independent testing agency, retained by Contractor and approved by RESIDENT PROJECT REPRESENTATIVE.

C. Provide adequate facilities for safe storage and proper curing of masonry prisms, mortar samples, and grout samples, as applicable, onsite for first 24 hours, and for additional time as may be required before transporting to test lab.

D. Masonry Testing:

1. Masonry strength shall be determined using unit strength method as shown.

2. Unit Strength Method:

a. Method and frequency for mortar, grout, and masonry unit sampling and testing shall be as shown.

b. Provide masonry units for test samples required.

E. Corrective Action:

1. If compressive strength tests made prior to construction of permanent structure fail to meet Specifications, adjustments shall be made to mix designs for mortar, or grout, or both, as needed to produce specified strength.

2. If strength tests performed on materials representative of in-place construction fail to meet Specifications, prisms or cores shall be cut from constructed walls in sufficient locations to adequately determine strength in accordance with IBC 2105.3.

F. Water Repellent Performance Test: Masonry using concrete masonry units and mortar with integral water repellent additives, and water repellent masonry sealer, shall achieve a Class E rating when evaluated in accordance with ASTM E514, with the test extended to 72 hours.

3.12 CLEANING

A. Immediately after completion of grouting, clean masonry surfaces of excess mortar, grout spillage, scum, stains, dirt, and other foreign substances using clean water and fiber brushes.

B. Clean walls not requiring painting or sealing so there are no visible stains.

3.13 PROTECTION OF INSTALLED WORK

A. Do not allow grout and mortar stains to dry on face of exposed masonry.

B. Protect tops of walls at all times. Cover tops of walls with waterproof paper when rain or snow is imminent and when the Work is discontinued.

C. Adequately brace walls until walls and roof are completed.

D. Provide sufficient bracing to protect walls against damage from elements, including wind and snow.

E. Protect masonry against freezing for minimum 72 hours after being laid.

F. Protect masonry from damage until final acceptance of the Work. Damaged units will not be accepted.

END OF SECTION

SECTION 05 05 19

POST-INSTALLED ANCHORS

PART 1 GENERAL

1.1 GENERAL

A. Related Work Specified In Other Sections Includes, But is Not Limited to, the Following:

B. Section 05 52 16 - Aluminum Railings

1.2 REFERENCES

A. The following is a list of standards which may be referenced in this section:

1. American Concrete Institute (ACI):

a. 318, Building Code Requirements for Structural Concrete.

b. 355.2, Qualification of Post-Installed Mechanical Anchors in Concrete.

c. 355.4, Qualification of Post-Installed Adhesive Anchors in Concrete.

2. American Iron and Steel Institute (AISI): Stainless Steel Type 316.

3. American National Standards Institute (ANSI).

4. ASTM International (ASTM):

a. A123/A123M, Specification for Zinc (Hot-Dip Galvanized) Coatings on Iron and Steel Products.

b. A143, Practice for Safeguarding Against Embrittlement of Hot-Dip Galvanized Structural Steel Products and Procedure for Detecting Embrittlement.

c. A153/A153M, Specification for Zinc Coating (Hot-Dip) on Iron and Steel Hardware.

d. A193/A193M, Specification for Alloy-Steel and Stainless Steel Bolting Materials for High-Temperature Service.

e. A194/A194M, Specification for Carbon and Alloy Steel Nuts for Bolts for High-Pressure or High-Temperature Service, or Both.

f. A380, Practice for Cleaning, Descaling, and Passivation of Stainless Steel Parts, Equipment, and Systems.

g. A385, Practice for Providing High-Quality Zinc Coatings (Hot-Dip).

h. A563, Specification for Carbon and Alloy Steel Nuts.

i. A780, Practice for Repair of Damaged and Uncoated Areas of Hot-Dip Galvanized Coatings.

j. A967, Specification for Chemical Passivation Treatments for Stainless Steel Parts.

k. E488, Standard Test Methods for Strength of Anchors in Concrete Elements.

l. F436, Specification for Hardened Steel Washers.

m. F468, Specification for Nonferrous Bolts, Hex Cap Screws, and Studs for General Use.

n. F568M, Specification for Carbon and Alloy Steel Externally Threaded Metric Fasteners.

o. F593, Specification for Stainless Steel Bolts, Hex Cap Screws, and Studs.

p. F594, Specification for Stainless Steel Nuts.

q. F1554, Specification for Anchor Bolts, Steel, 36, 55, and 105-ksi Yield Strength.

5. International Association of Plumbing and Mechanical Officials Uniform ES (IAPMO-UES): Evaluation Reports for Concrete and Masonry Anchors.

6. International Code Council Evaluation Service (ICC-ES):

a. Evaluation Reports for Concrete and Masonry Anchors.

b. AC01, Acceptance Criteria for Expansion Anchors in Masonry Elements.

c. AC70, Acceptance Criteria for Fasteners Power-driven into Concrete, Steel and Masonry Elements.

d. AC106, Acceptance Criteria for Predrilled Fasteners (Screw Anchors) in Masonry Elements.

e. AC193, Acceptance Criteria for Mechanical Anchors in Concrete Elements.

f. AC308, Acceptance Criteria for Post-Installed Adhesive Anchors in Concrete Elements. Evaluation Reports for Concrete and Masonry Anchors.

7. NSF International (NSF): 61, Drinking Water System Components - Health Effects.

8. Specialty Steel Industry of North America (SSINA):

   a. Specifications for Stainless Steel.

   b. Design Guidelines for the Selection and Use of Stainless Steel.

   c. Stainless Steel Fabrication.

   d. Stainless Steel Fasteners.

1.3 AMERICAN IRON AND STEEL

A. Comply with the "American Iron and Steel (AIS)" requirements as contained in Section 436 of the Consolidated Appropriations Act, 2014, further described in the Bid Form.

1.4 DEFINITIONS

A. Corrosive Area: Containment area or area exposed to delivery, storage, transfer, or use of chemicals.

B. Exterior Area: Location not protected from weather by a building or other enclosed structure to include buried roof structures.

C. Interior Dry Area: Location inside building or structure where floor is not subject to liquid spills or wash down, and where wall or roof slab is not common to a water-holding or earth-retaining structure.

D. Interior Wet Area: Location inside building or structure where floor is sloped to floor drains or gutters and is subject to liquid spills or wash down, or where wall, floor, or roof slab is common to a water-holding or earth-retaining structure.

E. Submerged: Location at or below top of wall of open water-holding structure, such as a basin or channel, or wall, ceiling, or floor surface inside a covered water-holding structure, or exterior belowgrade wall or roof surface of water-holding structure, open or covered.

1.5 SUBMITTALS

A. Action Submittals:

   1. Shop Drawings: Specific instructions for concrete anchor installation, including drilled hole size and depth, preparation, placement, procedures, and instructions for safe handling of anchoring systems.

B. Informational Submittals:

1. Concrete and Masonry Anchors:

a. Manufacturer's product description and installation instructions.

b. Current ICC-ES or IAPMO-UES Report for each type of post-installed anchor to be used.

2. Passivation method for stainless steel members.

1.6 QUALITY ASSURANCE

A. Qualifications:

1. Installers of adhesive anchors horizontally or upwardly inclined to support sustained tension loads shall be certified by an applicable certification program. Certification shall include written and performance tests in accordance with the ACI/CRSI Adhesive Installer Certification Program or equivalent.

2. Galvanized Coating Applicator: Company specializing in hot-dip galvanizing after fabrication and following procedures of Quality Assurance Manual of the American Galvanizers Association.

1.7 DELIVERY, STORAGE, AND HANDLING

A. Deliver, store and handle products and materials as specified in Division 1.

B. Package stainless steel items in a manner to provide protection from carbon impregnation.

C. Protect hot-dip galvanized finishes from damage as a result of metal banding and rough handling.

PART 2 PRODUCTS

2.1 GENERAL

A. Unless otherwise indicated, meet the following requirements:

Item	**ASTM Reference**
Stainless Steel:	
Threaded Rods	F593, AISI Type 316, Condition CW
Nuts*	F594, AISI Type 316, Condition CW

Item	ASTM Reference
Carbon Steel:	
Threaded Rods	F1554, Grade 36 or F568M Class 5.8
Flat and Beveled Washers (Hardened)	F436
Nuts*	A194/A194M, Grade 2H
Galvanized Steel:	
All	A153/A153M
*Nuts of other grades and styles having specified proof load stresses greater than specified grade and style are also suitable. Nuts must have specified proof load stresses equal to or greater than minimum tensile strength of specified threaded rod.	

B. Bolts, Washers, and Nuts: Use stainless steel, hot-dip galvanized steel, and zinc-plated steel material types as indicated in Fastener Schedule at end of this section.

2.2 POST-INSTALLED CONCRETE ANCHORS

A. General:

1. AISI Type 316 stainless, hot-dip galvanized or zinc-plated steel, as shown in Fastener Schedule at end of this section.

2. Post-installed anchor systems used in concrete shall be approved by ICC Evaluation Services Report or equivalent for use in cracked concrete and for short-term and long-term loads including wind and earthquake.

3. Mechanical Anchors: Comply with the requirements of ICC-ES AC193 or ACI 355.2.

4. Adhesive Anchors: Comply with the requirements of ICC-ES AC308 or ACI 355.4.

5. Acceptable for use in potable water structures by EPA and local health agencies or NSF 61.

B. Torque-Controlled Expansion Anchors (Wedge Anchors):

1. Manufacturers and Products:

a. Hilti, Inc., Tulsa, OK; Kwik-Bolt –TZ (KB-TZ) Anchors (ESR-1917).

b. DeWalt/Powers Fasteners, Brewster, NY; Power-Stud +SD1 , +SD2, +SD4, or +SD6 Anchors (ESR-2502 and ESR-2818).

c. Simpson Strong-Tie Co., Inc., Pleasanton, CA; Strong-Bolt 2 Anchors (ESR-1771 and ESR-3037).

C. Self-Tapping Concrete Screw Anchors:

1. Manufacturers and Products:

a. DeWalt/Powers Fasteners, Brewster, NY; Wedge-Bolt+ (ESR-2526).

b. DeWalt/Powers Fasteners, Brewster, NY; Vertigo+ Rod Hanger Screw Anchor (ESR-2989).

c. DeWalt/Powers Fasteners, Brewster, NY; Snake+ Flush Mount Screw Anchor (ESR-2272).

d. Hilti, Inc., Tulsa, OK; HUS-EZ Screw Anchor (ESR-3027).

e. Simpson Strong-Tie Co., Inc., Pleasanton, CA; Titen HD Screw Anchor (ESR-2713).

D. Adhesive Anchors:

1. Threaded Rod:

a. Diameter as shown on Drawings.

b. Length as required to provide minimum depth of embedment indicated and thread projection required.

c. Clean and free of grease, oil, or other deleterious material.

2. Adhesive:

a. Two-component, insensitive to moisture, designed to be used in adverse freeze/thaw environments.

b. Cure Temperature, Pot Life, and Workability: Compatible for intended use and anticipated environmental conditions.

3. Packaging and Storage:

a. Disposable, self-contained system capable of dispensing both components in proper mixing ratio and fitting into a manually or pneumatically operated caulking gun.

b. Store adhesive on pallets or shelving in a covered storage area.

c. Package Markings: Include manufacturer's name, product name, batch number, product expiration date, ANSI hazard classification, and appropriate ANSI handling precautions.

d. Dispose of When:

1) Shelf life has expired.

2) Stored other than in accordance with manufacturer's instructions.

4. Manufacturers and Products:

a. Hilti, Inc., Tulsa, OK; HIT Doweling Anchor System, HIT RE 500 V3 (ESR-3814), or HIT-HY 200 (ESR-3187).

b. Simpson Strong-Tie Co., Inc., Pleasanton, CA; SET-XP Epoxy Adhesive Anchors (ESR-2508), or AT-XP Adhesive Anchors (IAPMO UES-263).

c. DeWalt/Powers Fasteners, Brewster NY; Pure 110+ Epoxy adhesive anchor system (ESR-3298).

E. Adhesive Threaded Inserts:

1. Type 316 stainless steel, internally threaded inserts.

2. Manufacturer and Product: Hilti, Inc., Tulsa, OK; HIS-RN Insert with HIT-RE 500-V3 or HIT-HY 200 adhesive.

2.3 POST-INSTALLED MASONRY ANCHORS

A. General: AISI Type 316 stainless, hot-dip galvanized, or zinc-plated steel, as shown in Fastener Schedule at end of section.

B. Current ICC Evaluation Report indicating acceptance for anchors at structural applications in masonry.

C. Manufacturers and Products:

1. Hilti, Inc., Tulsa, OK; Kwik-Bolt-3 (KB-3) (ESR-1385), for grout-filled masonry, HIT-HY 70 (ESR-2682) for grout filled CMU, hollow CMU, or unreinforced masonry.

2. Simpson Strong-Tie Co., Inc., Pleasanton, CA; Strong-Bolt 2 (IAPMO ER 240) for grout filled CMU, Titen-HD (ESR-1056) for grout filled or hollow CMU, AT-XP (IAPMO ER-281) for grout filled CMU.

3. DeWalt/Powers Fasteners, Brewster NY; Power-Stud+ SD1 (ESR-2966) for grout-filled masonry, Wedgebolt+ (ESR-1678) for grout-filled masonry.

PART 3 EXECUTION

3.1 CONCRETE AND MASONRY ANCHORS

A. Begin installation only after concrete or masonry to receive anchors has attained design strength.

B. Locate existing reinforcing with Ground Penetrating Radar or other method approved by RESIDENT PROJECT REPRESENTATIVE prior to drilling. Coordinate with RESIDENT PROJECT REPRESENTATIVE to adjust anchor locations where installation would result in hitting reinforcing.

C. Install in accordance with written manufacturer's instructions.

D. Provide minimum embedment, edge distance, and spacing as indicated on Drawings.

E. Use only drill type and bit type and diameter recommended by anchor manufacturer.

F. Clean hole of debris and dust per manufacturer's requirements.

G. When unidentified embedded steel, rebar, or other obstruction is encountered in drill path, slant drill to clear obstruction. If drill must be slanted more than indicated in manufacturer's installation instructions to clear obstruction, notify Engineer for direction on how to proceed.

H. Adhesive Anchors:

1. Unless otherwise approved by RESIDENT PROJECT REPRESENTATIVE and adhesive manufacturer:

a. Do not install adhesive anchors when temperature of concrete or masonry is below 40 degrees F or above 100 degrees F.

b. Do not install prior to concrete attaining an age of 21 days.

c. Remove any standing water from hole with oil-free compressed air. Inside surface of hole shall be dry.

d. Do not disturb anchor during recommended curing time.

e. Do not exceed maximum torque as specified in manufacturer's instructions.

2. For hollow-unit masonry, install screen tube in accordance with manufacturer's instructions.

I. Prestressed Concrete: Do not use drilled-in anchors in prestressed or post-tensioned concrete members without ENGINEER'S prior approval unless specifically shown on Drawings.

3.2 FASTENER SCHEDULE

A. Unless indicated otherwise on Drawings, provide fasteners as follows:

Service Use and Location	Product	Remarks
1. Post-Installed Anchors for Metal Components to Cast-in-Place Concrete (such as, Ladders, Handrail Posts, Electrical Panels, Platforms, and Equipment)		
Interior Dry Areas	Anchor material type to match material being anchored (for example, stainless steel anchors to anchor stainless steel equipment, zinc-plated anchors to anchor painted equipment, galvanized anchors to anchor galvanized equipment).	Verify product acceptability and manufacturer's requirements if anchor installation will occur in an overhead application
Submerged, Exterior, Interior Wet, and Corrosive Areas	Stainless steel adhesive anchors	Verify product acceptability and manufacturer's requirements if anchor installation will occur in an overhead application
2. Anchors in Grout-Filled Concrete Masonry Units		
Interior Dry Areas	Anchor material type to match material being anchored (for example, stainless steel anchors to anchor stainless steel equipment, zinc-plated anchors to anchor painted equipment, galvanized anchors to anchor galvanized equipment).	
Submerged, Exterior, Interior Wet, and Corrosive Areas	Stainless steel adhesive anchors	

Service Use and Location	Product	Remarks
3. Anchors in Hollow Concrete Masonry Units		
Interior Dry Areas	Anchor material type to match material being anchored (for example, stainless steel anchors to anchor stainless steel equipment, zinc-plated anchors to anchor painted equipment, galvanized anchors to anchor galvanized equipment).	Adhesive anchors shall be installed with screen tubes.
Exterior, Interior Wet, and Corrosive Areas	Stainless steel adhesive anchors	Adhesive anchors shall be installed with screen tubes.
4. All Others		
All service uses and locations	Stainless steel fasteners	

B. Antiseizing Lubricant: Use on all stainless steel threads.

C. Do not use adhesive anchors to support fire-resistive construction or where ambient temperature will exceed 120 degrees F.

END OF SECTION

SECTION 05 05 23

WELDING

PART 1 GENERAL

1.1 GENERAL

A. Related Work Specified In Other Sections Includes, But is Not Limited to, the Following:

1. Section 05 21 19 - Open Web Steel Joist Framing

2. Section 05 50 00 - Metal Fabrications

1.2 REFERENCES

A. The following is a list of standards that may be referenced in this section:

1. American Society of Mechanical Engineers (ASME):

a. BPVC SEC V, Nondestructive Examination.

b. BPVC SEC IX, Welding and Brazing Qualifications.

2. American Society of Nondestructive Testing (ASNT): SNT-TC-1A, Personnel Qualification and Certification in Nondestructive Testing.

3. ASTM International (ASTM): A370, Standard Test Methods and Definitions for Mechanical Testing of Steel Products.

4. American Welding Society (AWS):

a. A2.4, Standard Symbols for Welding, Brazing, and Nondestructive Examination.

b. A3.0, Standard Welding Terms and Definitions.

c. D1.1/D1.1M, Structural Welding Code - Steel.

d. D1.2/D1.2M, Structural Welding Code - Aluminum.

e. QC1, Standard for AWS Certification of Welding Inspectors.

1.3 DEFINITIONS

A. CJP: Complete Joint Penetration.

B. CWI: Certified Welding Inspector.

1. Contractor's Welding Inspector: Contractor's CWI acts for, and on behalf of, the Contractor for all inspection and quality matters within the scope of the Contract Documents. Contractor is required to provide a welding inspector to oversee welding operations and be responsible for visual inspection and necessary correction of all deficiencies in materials and workmanship required to meet referenced welding codes. This type of Quality Control Inspection is not classified as Special Inspection.

2. Verification Inspector: CWI who acts on behalf of the Owner. This type of independent inspection and testing is the prerogative of the Owner, who may perform this function, or waive independent verification inspection if it is not required by the building official and building code.

C. MT: Magnetic Particle Testing.

D. NDE: Nondestructive Examination.

E. NDT: Nondestructive Testing.

F. PJP: Partial Joint Penetration.

G. PQR: Procedure Qualification Record.

H. PT: Liquid Penetrant Testing.

I. RT: Radiographic Testing.

J. UT: Ultrasonic Testing.

K. VT: Visual Inspection/Testing.

L. WPQ: Welder/Welding Operator Performance Qualification Record.

M. WPS: Welding Procedure Specification.

1.4 SUBMITTALS

A. Action Submittals:

1. Shop Drawings:

a. Shop and field WPSs and PQRs.

b. NDT procedure specifications prepared in accordance with ASME BPVC SEC V.

c. Welding Data (Shop and Field): Submit welding data together with Shop Drawings as a complete package.

1) Show on Shop Drawings, or on a weld map, complete information regarding base metal specification designation, location, type, size, and extent of welds with reference called out for WPS and NDE numbers in tails of combined welding and NDE symbols as indicated in AWS A2.4.

2) Clearly distinguish between shop and field welds.

3) Indicate, by welding symbols or sketches, details of welded joints and preparation of base metal. Provide complete joint welding details showing bevels, groove angles, and root openings for welds.

4) Welding and NDE Symbols: In accordance with AWS A2.4.

5) Welding Terms and Definitions: In accordance with AWS A3.0.

B. Informational Submittals:

1. WPQs.

2. CWI credentials.

3. Testing agency personnel credentials.

4. CWI visual inspection (VT) reports.

5. Welding Documentation: Submit on forms in referenced welding codes.

1.5 QUALIFICATIONS

A. WPSs: In accordance with AWS D1.1/D1.1M (Annex M Forms) for shop or field welding; or ASME BPVC SEC IX (Forms QW-482 and QW-483) for shop welding only.

B. WPQs: In accordance with AWS D1.1/D1.1M (Annex M Forms); or ASME BPVC SEC IX (Form QW-484).

C. CWI: Certified in accordance with AWS QC1, and having prior experience with specified welding codes. Alternate welding inspector qualifications require prior approval by ENGINEER.

D. Testing Agency: Personnel performing tests shall be NDT Level II certified in accordance with ASNT SNT-TC-1A.

1.6 SEQUENCING AND SCHEDULING

A. Unless otherwise specified, Submittals required in this section shall be submitted and approved prior to commencement of welding operations.

PART 2 PRODUCTS

2.1 SOURCE QUALITY CONTROL

A. Fabricator's CWI shall be present whenever shop welding is performed. CWI shall perform inspection at suitable intervals, prior to assembly, during assembly, during welding, and after welding. CWI shall perform inspections as required in AWS D1.1/D1.1M or referenced welding code and as follows:

1. Verifying conformance of specified job material and proper storage.

2. Monitoring conformance with approved WPS.

3. Monitoring conformance of WPQ.

4. Inspecting weld joint fit-up and performing in-process inspection.

5. Providing 100 percent visual inspection of welds.

6. Coordinating with nondestructive testing personnel and reviewing NDE test results.

7. Maintaining records and preparing reports documenting that results of CWI VT and subsequent NDE testing comply with the Work and referenced welding codes.

PART 3 EXECUTION

3.1 GENERAL

A. Welding and Fabrication by Welding: Conform to governing welding codes referenced in attached Welding and Nondestructive Testing Table.

3.2 NONDESTRUCTIVE WELD TESTING REQUIREMENTS

A. Quality Control Inspection:

1. All Welds: 100 percent VT by Contractor's CWI.

2. Acceptance Criteria:

a. Structural Pipe and Tubing: AWS D1.1/D1.1M, Paragraph 9.25.

b. All Other Structural Steel: AWS D1.1/D1.1M, Paragraph 6.9, Visual Inspection, Statically Loaded Nontubular Connections.

3.3 FIELD QUALITY CONTROL

A. Contractor's CWI shall be present whenever field welding is performed. CWI shall perform inspection, at suitable intervals, prior to assembly, during assembly, during welding, and after welding. CWI shall perform inspections as required in AWS D1.1/D1.1M or referenced welding code and as follows:

1. Verify conformance of specified job material and proper storage.

2. Monitor conformance with approved WPS.

3. Monitor conformance of WPQ.

4. Inspect weld joint fit-up and perform in-process inspection.

5. Provide 100 percent visual inspection of all welds in accordance with Subparagraph Quality Control Inspection.

6. Maintain records and prepare report confirming results of inspection and testing comply with the Work.

3.4 WELD DEFECT REPAIR

A. Repair and retest rejectable weld defects until sound weld metal has been deposited in accordance with appropriate welding codes.

3.5 SUPPLEMENTS

A. The supplement listed below, following "End of Section," is a part of this specification.

1. Welding and Nondestructive Testing Table.

END OF SECTION

Welding and Nondestructive Testing						
Specification Section	**Governing Welding Codes or Standards**	**Submit WPS**	**Submit WPQ**	**Onsite CWI Req'd**	**Submit Written NDT Procedure Specifications**	**NDT Requirements**
05 21 19 Open Web Steel Joists Framing	AWS D1.1/D1.1 M, Structural Welding Code - Steel	No	Yes	Yes	No	100% VT; also see Section 05 21 19, Open-Web Steel Joist Framing
05 50 00 Metal Fabrications	AWS D1.1/D1.1 M, Structural Welding Code– Steel or AWS D1.2/D1.2 M, Structural Welding Code - Aluminum or AWS D1.6/D1.6 M, Structural Welding Code - Stainless Steel	Yes	Yes	Yes	No	100% VT; also see Section 05 50 00, Metal Fabrications

SECTION 05 21 19

OPEN WEB STEEL JOIST FRAMING

PART 1 GENERAL

1.1 GENERAL

A. Related work specified in other sections includes, but is not limited to, the following:

1. Section 05 05 23 - Welding

2. Section 05 50 00 - Metal Fabrications

3. Section 09 96 00 - High Performance Coatings

1.2 REFERENCES

A. The following is a list of standards which may be referenced in this section:

1. American Institute of Steel Construction (AISC):

a. Specification for Structural Steel Buildings-Allowable Stress Design and Plastic Design.

b. Allowable Stress Design Specification for Structural Joints using ASTM A325 or A490 Bolts.

c. Code of Standard Practice for Steel Buildings and Bridges.

2. American Welding Society (AWS): D1.1, Structural Welding Code - Steel.

3. Steel Joist Institute (SJI):

a. Standard Specifications and Load Tables:

1) Special Profile Steel Joists, SP-Series

b. Recommended Code of Standard Practice for Steel Joists and Joist Girders.

1.3 AMERICAN IRON AND STEEL

A. Comply with the "American Iron and Steel (AIS)" requirements as contained in Section 436 of the Consolidated Appropriations Act, 2014, further described in the Bid Form.

1.4 SUBMITTALS

A. Action Submittals:

1. Plan view layout of joists and bridging.

2. Elevation view of each type of joist showing configuration, chord and web member sizes, panel point dimensions, and chord extensions.

3. Connection and bearing details.

4. Special joist reinforcing and connections for supported items, such as mechanical equipment.

5. Bridging member sizes and connection details.

6. Complete design, including stress and deflection calculations, for joists, joist members, and connections for design load and equipment weight as indicated, plus any construction loads applied by Contractor's operations.

7. Calculations shall include check of joist chord bending stresses for concentrated loads applied between panel points.

8. Registered Professional Engineer's stamp, valid in same state as Project, on structural calculations.

9. Procedure for handling, erection, and bracing of steel joists.

B. Informational Submittals:

1. Joist manufacturer's installation requirements.

2. Welding Procedures, Qualifications, and Inspection Report: As specified in Section 05 05 23 - Welding.

1.5 QUALITY ASSURANCE

A. General: Design and fabricate steel joists and bridging to meet requirements of SJI Standard Specifications and Load Tables.

B. Certification: SJI Membership, with certification for joist types as indicated on Drawings.

C. Qualifications for Field Welding: As specified in Section 05 05 23 - Welding.

1.6 DELIVERY, STORAGE, AND HANDLING

A. Deliver, store and handle products and materials as specified in Division 1.

B. Protect from corrosion, deformation, and other damage during delivery, storage, and handling.

C. Protect joist paint system from abrasion at steel bands and other joists.

D. Store joists and bridging off ground on wood sleepers.

E. Support joists so there is no danger of tipping, sliding, rolling, shifting or material damage.

PART 2 PRODUCTS

2.1 STEEL JOISTS AND BRIDGING

A. Provide type of joist, chord configuration, and depth as indicated on Drawings.

B. Design and Manufacture:

1. In accordance with the applicable SJI Standard Specifications.

2. Chord Members: Rolled double angle sections only.

3. Provide the following where indicated, in accordance with SJI Standard Specifications and Load Tables:

a. Bottom chord bracing and end anchorage for uplift design criteria.

b. Full camber, unless otherwise indicated.

C. Joist Bridging:

1. In accordance with applicable SJI Standard Specifications for type of joist.

2. Furnish bridging of minimum size and type as indicated.

3. Provide anchorage connection to walls and girders at bridging lines as indicated.

2.2 SHOP PRIMER

A. Surface Preparation and Primer: As specified in Section 09 96 00 - High Performance Coatings.

PART 3 EXECUTION

3.1 EXAMINATION

A. Examine supporting framing and field conditions for compliance with requirements for installation tolerances and other conditions affecting performance of steel joists.

3.2 INSTALLATION

A. Erection: SJI Standard Specifications and approved shop drawings.

B. Welded Connections: As specified in Section 05 05 23 - Welding.

3.3 TOUCHUP PAINTING

A. Immediately following erection, remove debris from completed installation.

B. Clean field welds, bolted connections, rust spots, and abraded areas.

C. Repair damaged painted and galvanized surfaces as specified in Section 09 96 00 - High Performance Coatings.

3.4 FIELD QUALITY CONTROL

A. Welding:

1. Visually inspect field welds in accordance with AWS D1.1, Section 6 and Table 6.1, Visual Inspection Acceptance Criteria.

2. An independent testing agency shall be retained by Contractor and approved by RESIDENT PROJECT REPRESENTATIVE to visually inspect field welded connections in accordance with AWS D1.1, Table 6.1, and as specified in Section 05 05 23 - Welding.

3. Repair defective welds as specified in Section 05 05 23 - Welding.

END OF SECTION

SECTION 05 31 00

STEEL DECKING

PART 1 GENERAL

1.1 GENERAL

A. Related Work Specified In Other Sections Includes, But is Not Limited to, the Following:

1. Section 09 96 00 – High Performance Coatings

1.2 REFERENCES

A. The following is a list of standards which may be referenced in this section:

1. American Iron and Steel Institute (AISI): Specifications for the Design of Cold Formed Steel Structural Members.

2. American Welding Society (AWS): D1.3, Structural Welding Code - Sheet Steel.

3. ASTM International (ASTM):

a. A611, Standard Specification for Structural Steel (SS), Sheet, Carbon, Cold-Rolled.

b. A653, Standard Specification for Steel Sheet, Zinc-Coated (Galvanized) or Zinc-Iron Alloy-Coated (Galvannealed) by the Hot-Dip Process.

c. A780, Standard Practice for Repair of Damaged and Uncoated Areas of Hot-Dip Galvanized Coatings.

d. A924, Standard Specification for General Requirements for Steel Sheet, Metallic-Coated by the Hot-Dip Process.

4. Steel Deck Institute (SDI):

a. Design Manual for Composite Decks, Form Decks and Roof Decks.

b. Diaphragm Design Manual.

5. Factory Mutual (FM):

a. Factory Mutual Approval Guide.

b. FM Research Corporation (FMRC): Approval Requirements for Steel Roof Deck Construction.

6. International Code Council Evaluation Service, Inc. (ICC-ES): Evaluation Reports for Deck Fasteners.

7. Underwriters Laboratories, Inc. (UL): Fire Resistance Directory.

1.3 AMERICAN IRON AND STEEL

A. Comply with the "American Iron and Steel (AIS)" requirements as contained in Section 436 of the Consolidated Appropriations Act, 2014, further described in the Bid Form.

1.4 SUBMITTALS

A. Action Submittals:

1. Plan view layout of decking showing type and section properties of deck panels, reinforcing channels, pans, special jointing, and accessories.

2. Location of openings, deck laps, and deck attachment details.

B. Informational Submittals:

1. Decking manufacturer's installation requirements.

2. Operation manuals for mechanical fastener installation tools.

1.5 QUALITY ASSURANCE

A. General: For metal decking section properties, meet requirements of AISI Specifications for Design of Cold-Formed Steel Structural Members.

B. FM Requirements:

1. Steel Roof Deck: Listed in Factory Mutual "Approval Guide" for Class 1 fire rating and Class 1-90 wind uplift rating.

2. Mechanical Fasteners: Packing containers shall show name of manufacturer and product and FMRC approval mark.

1.6 DELIVERY, STORAGE, AND HANDLING

A. Deliver, store and handle products and materials as specified in Division 1.

B. Protect steel deck from corrosion, deformation, and other damage during delivery, storage, and handling.

C. Store deck bundles on platforms or pallets, with one end elevated to provide drainage.

D. Protect bundles against condensation with a ventilated waterproof covering.

E. Stack bundles so there is no danger of tipping, sliding, rolling, shifting or material damage.

PART 2 PRODUCTS

2.1 METAL DECKING

A. Provide metal deck as shown in the following schedule:

STEEL DECK SCHEDULE								
Type	**Depth (in)**	**Panel Width (in)**	**Design Thickness (in)**	**Min. Yield Strength Fy (ksi)**	**Min. (+) S (in^3/ft)**	**Min. I (in^4/ft)**	**Minimum Diaphragm Shear Capacity (lbs/ft)**	**Finish**
Roof Deck	1-1/2	36	0.0358	33	0.23	0.21	240	Galv, G-90

B. Materials and Finishes:

1. Galvanized and Painted Deck:

   a. Sheet steel for galvanized deck and accessories shall conform to ASTM A653 Structural Quality Grade 33 or higher, as shown in Steel Deck Schedule.

   b. Galvanizing shall conform to ASTM A924 with coating class of G60 or G90 as defined in ASTM A653 and as shown in Steel Deck Schedule.

   c. Bottom of decking shall be painted as specified in Section 09 96 00 - High Performance Coatings.

C. Manufacturers:

1. Vulcraft Division of Nucor Co., Brigham City, UT.

2. BHP Steel Building Products, USA, Inc., West Sacramento, CA.

3. Verco Manufacturing, Inc., Phoenix, AZ.

4. United Steel Deck, Inc., Summit, NJ.

2.2 SHOP PRIMER

A. Surface Preparation and Primer: As specified in Section 09 96 00 - High Performance Coatings.

2.3 ACCESSORIES

A. Provide end closures, cover plates, ridge and valley plates, finish strips, reinforcing channels, and other accessories as required for complete installation.

B. Accessories shall be minimum 22-gauge, except edge forms shall be sized as required by the deck manufacturer, unless shown otherwise on the Drawings.

2.4 MECHANICAL FASTENERS

A. Self-Drilling Screws:

1. Self-drilling, self-tapping screws with hexagonal washer head and corrosion-resistant finish.

2. Manufacturers and Products:

a. ITW Buildex, Itasca, IL; ICH Traxx Self-Drilling Fasteners with Climaseal Coating and Autotraxx Standup Installation Tool.

b. Hilti, Inc., Tulsa, OK; Kwik-Pro HWH Self-Drilling Screws with Kwik-Cote Treatment and Kwik-Tapper Screwdriver.

B. Powder Driven Fasteners:

1. Knurled shank, minimum 1/2-inch diameter steel washer, corrosion-resistant coating.

2. Pin diameter and length to suit deck type and flange thickness of steel support member.

3. Manufacturers and Products:

a. ITW Buildex, Itasca, IL; Buildex BX14 pins with yellow dichromate galvanizing and BX900 Installation Tool.

b. Hilti, Inc., Tulsa, OK; ENP-series fasteners with electroplated zinc coating and DX-750 Installation Tool.

PART 3 EXECUTION

3.1 EXAMINATION

A. Examine supporting framing and field conditions for compliance with requirements for installation tolerances and other conditions affecting performance of steel deck.

3.2 INSTALLATION

A. Locate deck bundles to prevent overloading of support framing members.

B. Install at right angles to supporting members in a three span minimum lay-up, unless shown otherwise, and in accordance with Specification and manufacturer's installation recommendation.

C. Bearing: 1-1/2 inches, minimum.

D. Endlaps: Minimum of 2 inches and located over supports.

E. Do not stretch sidelaps.

F. Holes and Openings

1. Cut and fit around roof openings and other work projecting through or adjacent to decking.

2. Locate holes and openings as shown to clear structural framing and bracing members.

3. Reinforcement around openings:

a. Roof Deck: For hole sizes of at least 6 inches across, but not more than 12 inches across in roof deck, reinforce with 0.0474-inch design thickness steel plate, painted or galvanized to match deck coating. Extend plate at least 12 inches beyond opening in all directions and attach to top of roof deck with No. 10 self-drilling screws at 6-inch spacing and at all corners. For openings larger than 12 inches across, reinforce roof deck with framing as shown on Drawings.

G. Protect deck areas from heavy concentrated loads or wheel traffic with planking or other approved means.

H. Completed Deck: Free from buckles and irregularities, and in accordance with FM and UL requirements.

3.3 DECK ATTACHMENT

A. Fasten panels as shown in the following schedule:

STEEL DECK ATTACHMENT SCHEDULE							
		At Perpendicular Supports		**At Parallel Supports**		**At Sidelaps**	
Type	**Depth (in.)**	**Type**	**No. Per Sheet**	**Type**	**Spacing (in.)**	**Type**	**Spacing**
Roof Deck	1 1/2	#12 Self-drilling screws Power driven fasteners	4	#12 Self-drilling screws Power driven fasteners	12	#10 Self-drilling screws	24”

B. Mechanical Fasteners:

1. Self-Drilling Screws:

a. Install screws in accordance with manufacturer’s written instructions and with special installation tool. Do not over-torque.

b. Remove and redrive screws at sidelaps where upper sheet is not drawn tightly against lower sheet.

2. Powder Driven Fasteners:

a. Install fasteners in accordance with manufacturer's written instructions and with special installation tool.

b. Minimum Sidelap Edge Distance: 3/8 inch.

c. Minimum End/End Lap Distance: 1 inch.

d. Head Projection: As specified by manufacturer for correct penetration into flange of steel support member.

3.4 TOUCHUP PAINTING

A. Immediately following erection, remove unused deck edge trimmings, screws, fasteners, welding washers, butt ends of welding rods, and debris from completed installation.

B. Clean field welds, bolted connections, rust spots, and abraded areas.

C. Repair damaged painted surfaces as specified in Section 09 96 00 - High Performance Coatings.

D. Repair damaged galvanized surfaces with zinc-rich spray paint in accordance with ASTM A780; color to match galvanized deck.

E. Use magnetic gauge to determine that thickness of repair is equal to or greater than base painted or galvanized coating.

3.5 FIELD QUALITY CONTROL

A. An independent testing agency shall be retained by Contractor and approved by RESIDENT PROJECT REPRESENTATIVE to perform following inspections.

1. Mechanical Fasteners: Visually inspect, in accordance with manufacturer's instructions, for each type of fastener.

B. Repair or replace defective fasteners.

END OF SECTION

SECTION 05 50 00

METAL FABRICATIONS

PART 1 GENERAL

1.1 GENERAL

A. Related Work Specified In Other Sections Includes, But is Not Limited to, the Following:

1. Section 05 05 23 - Welding

2. Section 05 21 19 - Open Web Steel Joist Framing

B. Comply with the "American Iron and Steel (AIS)" requirements as contained in Section 436 of the Consolidated Appropriations Act, 2014, further described in the Bid Form.

1.2 REFERENCES

A. The following is a list of standards which may be referenced in this section:

1. The Aluminum Association, Inc. (AA): The Aluminum Design Manual.

2. American Galvanizers Association (AGA):

a. Inspection of Hot-Dip Galvanized Steel Products.

b. Quality Assurance Manual.

3. American Iron and Steel Institute (AISI): Stainless Steel Types.

4. American Ladder Institute (ALI): A14.3, Ladders - Fixed - Safety Requirements.

5. American National Standards Institute (ANSI).

6. American Welding Society (AWS):

a. D1.1/D1.1M, Structural Welding Code - Steel.

b. D1.2/D1.2M, Structural Welding Code - Aluminum.

c. D1.6/D1.6M, Structural Welding Code - Stainless Steel.

7. ASTM International (ASTM):

a. A36/A36M, Standard Specification for Carbon Structural Steel.

b. A108, Standard Specification for Steel Bar, Carbon and Alloy, Cold-Finished.

c. A123/A123M, Standard Specification for Zinc (Hot-Dip Galvanized) Coatings on Iron and Steel Products.

d. A143/A143M, Standard for Safeguarding Against Embrittlement of Hot-Dip Galvanized Structural Steel Products and Procedure for Detecting Embrittlement.

e. A153/A153M, Standard Specification for Zinc Coating (Hot-Dip) on Iron and Steel Hardware.

f. A193/A193M, Standard Specification for Alloy-Steel and Stainless Steel Bolting for High Temperature or High Pressure Service and Other Special Purpose Applications.

g. A194/A194M, Standard Specification for Carbon and Alloy Steel Nuts for Bolts for High Pressure or High Temperature Service, or Both.

h. A240/A240M, Standard Specification for Chromium and Chromium-Nickel Stainless Steel Plate, Sheet, and Strip for Pressure Vessels and for General Applications.

i. A276, Standard Specification for Stainless Steel Bars and Shapes.

j. A283/A283M, Standard Specification for Low and Intermediate Tensile Strength Carbon Steel Plates.

k. A307, Standard Specification for Carbon Steel Bolts and Studs, 60,000 PSI Tensile Strength.

l. A325, Standard Specification for Structural Bolts, Steel, Heat Treated 120/105 ksi Minimum Tensile Strength.

m. A380, Standard Practice for Cleaning, Descaling, and Passivation of Stainless Steel Parts, Equipment, and Systems.

n. A384/A384M, Standard Practice for Safeguarding Against Warpage and Distortion During Hot-Dip Galvanizing of Steel Assemblies.

o. A385/A385M, Standard Practice for Providing High-Quality Zinc Coatings (Hot-Dip).

p. A500/A500M, Standard Specification for Cold-Formed Welded and Seamless Carbon Steel Structural Tubing in Rounds and Shapes.

q. A501, Standard Specification for Hot-Formed Welded and Seamless Carbon Steel Structural Tubing.

r. A563, Standard Specification for Carbon and Alloy Steel Nuts.

s. A653/A653M, Standard Specification for Steel Sheet, Zinc-Coated (Galvanized) or Zinc-Iron Alloy-Coated (Galvannealed) by the Hot-Dip Process.

t. A780/A780, Standard Practice for Repair of Damaged and Uncoated Areas of Hot-Dip Galvanized Coatings.

u. A786/A786M, Standard Specification for Hot-Rolled Carbon, Low-Alloy, High-Strength Low-Alloy, and Alloy Steel Floor Plates.

v. A793, Standard Specification for Rolled Floor Plate, Stainless Steel.

w. A967, Standard Specification for Chemical Passivation Treatments for Stainless Steel Parts.

x. A992/A992M, Standard Specification for Structural Steel Shapes.

y. A1085, Standard Specification for Cold-Formed Welded Carbon Steel Hollow Structural Sections (HSS).

z. B209, Standard Specification for Aluminum and Aluminum-Alloy Sheet and Plate.

aa. B308/B308M, Standard Specification for Aluminum-Alloy 6061-T6 Standard Structural Profiles.

bb. B429/B429M, Standard Specification for Aluminum-Alloy Extruded Structural Pipe and Tube.

cc. D1056, Standard Specification for Flexible Cellular Materials - Sponge or Expanded Rubber.

dd. F436, Standard Specification for Hardened Steel Washers.

ee. F468, Standard Specification for Nonferrous Bolts, Hex Cap Screws, and Studs for General Use.

ff. F593, Standard Specification for Stainless Steel Bolts, Hex Cap Screws, and Studs.

gg. F594, Standard Specification for Stainless Steel Nuts.

hh. F844, Standard Specification for Washers, Steel, Plain (Flat), Unhardened for General Use.

ii. F1554, Standard Specification for Anchor Bolts, Steel, 36, 55, and 105-ksi Yield Strength.

8. NSF International (NSF): 61, Drinking Water System Components—Health Effects.

9. Occupational Safety and Health Administration (OSHA):

    a. 29 CFR 1910.27, Fixed Ladders.

10. Specialty Steel Industry of North America (SSINA):

    a. Specifications for Stainless Steel.

    b. Design Guidelines for the Selection and Use of Stainless Steel.

    c. Stainless Steel Fabrication.

    d. Stainless Steel Fasteners.

1.3 AMERICAN IRON AND STEEL

A. Comply with the "American Iron and Steel (AIS)" requirements as contained in Section 436 of the Consolidated Appropriations Act, 2014, further described in the Bid Form.

1.4 DEFINITIONS

A. Anchor Bolt: Cast-in-place anchor; concrete or masonry.

B. Corrosive Area: Containment area or area exposed to delivery, storage, transfer, or use of chemicals.

C. Exterior Area: Location not protected from weather by building or other enclosed structure.

D. Interior Dry Area: Location inside building or structure where floor is not subject to liquid spills or washdown, nor where wall or roof slab is common to a water-holding or earth-retaining structure.

E. Interior Wet Area: Location inside building or structure where floor is sloped to floor drains or gutters and is subject to liquid spills or washdown, or where wall, floor, or roof slab is common to a water-holding or earth-retaining structure.

F. Submerged: Location at or below top of wall of open water-holding structure, such as basin or channel, or wall, ceiling or floor surface inside a covered water-holding structure, or exterior belowgrade wall or roof surface of water-holding structure, open or covered.

1.5 SUBMITTALS

A. Action Submittals:

    1. Shop Drawings: Metal fabrications, including welding and fastener information.

    2. Samples: Color samples of abrasive stair nosings.

B. Informational Submittals:

1. Pre-engineered Ladders: Letter of certification that ladder meets OSHA 29 CFR 1910.27 requirements.

1.6 DELIVERY, STORAGE, AND HANDLING

A. Deliver, store and handle products and materials as specified in Division 1.

B. Insofar as practical, factory assemble specified items. Package assemblies, which have to be shipped unassembled to protect materials from damage and tag to facilitate identification and field assembly.

C. Package stainless steel items to provide protection from carbon impregnation.

D. Protect painted coatings and hot-dip galvanized finishes from damage as a result of metal banding and rough handling. Use padded slings and straps.

E. Store fabricated items in dry area, not in direct contact with ground.

PART 2 PRODUCTS

2.1 GENERAL

A. Unless otherwise indicated, meet the following requirements:

Item	**ASTM Reference**
Steel Wide Flange Shapes	A992/992M
Other Steel Shapes and Plates	A36/A36M or A572/A572M, Grade 50 or A992/A992M for other steel shapes
Steel Pipe	A500, Grade B
Hollow Structural Sections (HSS)	A500/A500M, Grade C
Aluminum:	
Aluminum Plates	B209, Alloy y6061-T6
Aluminum Structural Shapes	B308/B308M, Alloy 6061-T6
Stainless Steel:	
Bars and Angles	A276, AISI Type 316 (316L for welded connections)
Shapes	A276, AISI Type 304 (304L for welded connections)
Steel Plate, Sheet, and Strip	A240/A240M, AISI Type 316 (316L for welded connections)

Item	ASTM Reference
Bolts, Threaded Rods, Anchor Bolts, and Anchor Studs	F593, AISI Type 316, Group 2, Condition SH
Nuts	F594, AISI Type 316, Condition CW
Steel Bolts and Nuts:	
Carbon Steel	A307 bolts, with A563 nuts
High-Strength	A325, Type 1 bolts, with A563 nuts
Anchor Bolts and Rods	F1554, Grade 36, with weldability supplement S1.
Threaded Rods	A36/A36M
Flat Washers (Unhardened)	F844
Flat and Beveled Washers (Hardened)	F436
Aluminum Bolts and Nuts	F468, Alloy 2024-T4

B. Bolts, Washers, and Nuts: Use stainless steel, hot-dip galvanized steel, zinc-plated steel, and aluminum material types as indicated in Fastener Schedule at end of this section.

2.2 ANCHOR BOLTS AND ANCHOR BOLT SLEEVES

A. Cast-In-Place Anchor Bolts:

1. Headed type, unless otherwise shown on Drawings.

2. Material type and protective coating as shown in Fastener Schedule at end of this section.

2.3 POST-INSTALLED CONCRETE AND MASONRY ANCHORS

A. See Section 05 05 19 - Post-Installed Anchors.

2.4 PIPE SLEEVES

A. ASTM A53/A53M, Schedule 40 steel pipe sleeves with continuously welded 3/16-inch-thick seep ring with outside diameter 3 inches greater than sleeve outside diameter. Hot-dip galvanize in accordance with ASTM A123/A123M.

2.5 STEEL LINTELS AND SHELF ANGLES

A. ASTM A36/A36M, hot-dip galvanize after fabrication in accordance with ASTM A123/A123M.

2.6 ABRASIVE NOSING FOR STAIRS

A. Unless otherwise shown on Drawings, furnish flush type abrasive nosings on stairs.

B. Nosing Components:

1. Homogeneous epoxy abrasive, with minimum 50 percent aluminum oxide content, formed and cured upon an extruded aluminum base.

2. Epoxy abrasive shall extend over and form curved front edge of nosing.

3. Base of Nosing: Extruded aluminum alloy, 6063-T5, heat-treated.

C. Anchoring System: Double-set anchors consisting of two rows of integrally extruded anchors.

D. Size: 3 inches wide by 1/4 inch to 3/8 inch thick by length as shown.

E. Color: Selected by RESIDENT PROJECT REPRESENTATIVE from manufacturer's standard color range.

F. Manufacturers and Products:

1. Wooster Products, Inc., Wooster, OH; Spectra Type WP3C.

2. American Safety Tread Co., Inc., Helena, AL; Type FA-311D.

2.7 LADDERS

A. Fabricate ladders with rails, rungs, landings, and cages to meet applicable requirements of OSHA, CFR Part 1910.27, and ALI A14.3.

1. Design ladder for concentrated load of 200 pounds imposed by user concentrated at points that will cause maximum stress in structural member being considered.

2. Include weight of ladder and attached appurtenances together with live load in design of rails and fastenings.

3. Self-closing gates at landings.

B. Aluminum Pre-engineered Pipe Ladder:

1. Rungs:

a. Aluminum extrusions of Alloy 6063-T6.

b. Nonslip grip surface, 1-inch wide flat top, and semicircular bottom with mill finish.

2. Side Rails: ASTM B429/B429M, Alloy 6063-T6, 1-1/2 inches, Schedule 40 pipe with anodized finish, AA M32-C22-A41.

3. Ladder Attachments and Cage Assembly Fasteners: Stainless steel.

4. Welded, pop riveted, or glued construction is not acceptable.

5. Fabricate to longest length as practical but not to exceed 24 feet.

6. Furnish support attachments to side rails at 6 feet maximum spacing.

7. Manufacturer: Thompson Fabricating Co. Inc., Tarrant, AL.

2.8 ACCESSORIES

A. Antiseizing Lubricant for Stainless Steel Threaded Connections:

1. Suitable for potable water supply.

2. Resists washout.

3. Manufacturers and Products:

a. Bostik, Middleton, MA; Neverseez.

b. Saf-T-Eze Div., STL Corp., Lombard, IL; Anti-Seize.

B. Neoprene Gasket:

1. ASTM D1056, 2C1, soft, closed-cell neoprene gasket material, suitable for exposure to sewage and sewage gases, unless otherwise shown on Drawings.

2. Thickness: Minimum 1/4 inch.

3. Furnish without skin coat.

4. Manufacturer and Product: Monmouth Rubber and Plastics Corporation, Long Branch, NJ; Durafoam DK1111LD.

2.9 FABRICATION

A. General:

1. Finish exposed surfaces smooth, sharp, and to well-defined lines.

2. Furnish necessary rabbets, lugs, and brackets so work can be assembled in neat, substantial manner.

3. Conceal fastenings where practical; where exposed, flush countersink.

4. Drill metalwork and countersink holes as required for attaching hardware or other materials.

5. Grind cut edges smooth and straight. Round sharp edges to small uniform radius. Grind burrs, jagged edges, and surface defects smooth.

6. Fit and assemble in largest practical sections for delivery to Site.

B. Materials:

1. Use steel shapes, unless otherwise noted.

2. Steel to be hot-dip galvanized: Limit silicon content to less than 0.04 percent or to between 0.15 percent and 0.25 percent.

3. Fabricate aluminum in accordance with AA Specifications for Aluminum Structures–Allowable Stress Design.

C. Welding:

1. Weld connections and grind exposed welds smooth. When required to be watertight, make welds continuous.

2. Welded fabrications shall be free from twisting or distortion caused by improper welding techniques.

3. Steel: Meet fabrication requirements of AWS D1.1/D1.1M, Section 5.

4. Aluminum: Meet requirements of AWS D1.2/D1.2M.

5. Stainless Steel: Meet requirements of AWS D1.6/D1.6M.

6. Complete welding before applying finish.

D. Painting:

1. Shop prime with rust-inhibitive primer as specified in Section 09 96 00 - High Performance Coatings, unless otherwise indicated.

2. Coat surfaces of galvanized steel and aluminum fabricated items to be in direct contact with concrete, grout, masonry, or dissimilar metals, as specified in Section 09 96 00 - High Performance Coatings, unless indicated otherwise.

3. Do not apply protective coating to galvanized steel anchor bolts or galvanized steel welded anchor studs, unless indicated otherwise.

E. Galvanizing:

1. Fabricate steel to be galvanized in accordance with ASTM A143/A143M, ASTM A384/A384M, and ASTM A385/A385M. Avoid fabrication techniques that could cause distortion or embrittlement of the steel.

2. Provide venting and drain holes for tubular members and fabricated assemblies in accordance with ASTM A385/A385M.

3. Remove welding slag, splatter, burrs, grease, oil, paint, lacquer, and other deleterious material prior to delivery for galvanizing.

4. Remove by blast cleaning or other methods surface contaminants and coatings not removable by normal chemical cleaning process in the galvanizing operation.

5. Hot-dip galvanize steel members, fabrications, and assemblies after fabrication in accordance with ASTM A123/A123M.

6. Hot-dip galvanize bolts, nuts, washers, and hardware components in accordance with ASTM A153/A153M. Oversize holes to allow for zinc alloy growth. Shop assemble bolts and nuts.

7. Galvanized steel sheets in accordance with ASTM A653/A653M.

8. Galvanize components of bolted assemblies separately before assembly. Galvanizing of tapped holes is not required.

F. Electrolytic Protection: Coat surfaces of galvanized steel and aluminum fabricated items to be in direct contact with concrete, grout, masonry, or dissimilar metals, as specified in Section 09 96 00 - High Performance Coatings, unless indicated otherwise.

G. Fitting: Where movement of fabrications is required or shown, cut, fit, and align items for smooth operation. Make corners square and opposite sides parallel.

H. Accessories: Furnish as required for a complete installation. Fasten by welding or with stainless steel bolts or screws.

2.10 SOURCE QUALITY CONTROL

A. Visually inspect all fabrication welds and correct deficiencies.

1. Steel: AWS D1.1/D1.1M, Section 6 and Table 6.1, Visual Inspection Acceptance Criteria.

2. Aluminum: AWS D1.2/D1.2M.

3. Stainless Steel: AWS D1.6/D1.6M.

PART 3 EXECUTION

3.1 INSTALLATION OF METAL FABRICATIONS

A. General:

1. Install metal fabrications plumb and level, accurately fitted, free from distortion or defects.

2. Install rigid, substantial, and neat in appearance.

3. Install manufactured products in accordance with manufacturer's recommendations.

4. Obtain RESIDENT PROJECT REPRESENTATIVE approval prior to field cutting steel members or making adjustments not scheduled.

B. Aluminum:

1. Do not remove mill markings from concealed surfaces.

2. Remove inked or painted identification marks on exposed surfaces not otherwise coated after installed material has been inspected and approved.

3. Fabrication, mechanical connections, and welded construction shall be in accordance with the AA Aluminum Design Manual.

C. Pipe Sleeves:

1. Provide where pipes pass through concrete or masonry.

2. Holes drilled with a rotary drill may be provided in lieu of sleeves in existing walls.

3. Provide center flange for water stoppage on sleeves in exterior or water-bearing walls.

4. Provide rubber caulking sealant or a modular mechanical unit to form watertight seal in annular space between pipes and sleeves.

D. Steel Lintels and Shelf Angles: Provide as required for support of masonry and other construction not attached to structural steel framing, unless otherwise shown on Drawings.

3.2 CAST-IN-PLACE ANCHOR BOLTS

A. Locate and hold anchor bolts in place with templates at time concrete is placed.

B. Minimum Bolt Size: 1/2-inch diameter by 12 inches long, unless otherwise shown.

3.3 ABRASIVE NOSINGS

A. Provide abrasive nosings on concrete steps not being supplied or coated with another type of nosing or nonskid material.

3.4 ELECTROLYTIC PROTECTION

A. Aluminum and Galvanized Steel:

1. Coat surfaces of galvanized steel and aluminum fabricated items to be in direct contact with concrete, grout, masonry, or dissimilar metals, as specified in Section 09 96 00 - High Performance Coatings, unless indicated otherwise.

2. Do not apply protective coating to galvanized steel anchor bolts or galvanized steel welded anchor studs, unless indicated otherwise.

3. Allow coating to dry before installation of the material.

4. Protect coated surfaces during installation.

5. Should coating become marred, prepare and touch up in accordance with paint manufacturer's written instructions.

B. Stainless Steel:

1. During handling and installation, take necessary precautions to prevent carbon impregnation of stainless steel members.

2. After installation, visually inspect stainless steel surfaces for evidence of iron rust, oil, paint, and other forms of contamination.

3. Remove contamination using cleaning and passivation methods in accordance with requirements of ASTM A380 and ASTM A967.

4. Brushes used to remove foreign substances shall utilize only stainless steel or nonmetallic bristles.

5. After treatment, visually inspect surfaces for compliance.

3.5 PAINTING

A. Painted Galvanized Surfaces: Prepare as specified in Section 09 90 00, Painting and Coating.

B. Repair of Damaged Hot-Dip Galvanized Coating:

1. Conform to ASTM A780/A780M.

2. For minor repairs at abraded areas, use sprayed zinc conforming to ASTM A780/A780M.

3. For flame cut or welded areas, use zinc-based solder, or zinc sticks, conforming to ASTM A780/A780M.

4. Use magnetic gauge to determine thickness is equal to or greater than base galvanized coating.

C. Field Painting of Shop Primed Surfaces: Prepare surfaces and field finish in accordance with Section 09 96 00 - High Performance Coatings.

3.6 FASTENER SCHEDULE

A. Unless indicated otherwise on Drawings, provide fasteners as follows:

Service Use and Location	Product	Remarks
1. Anchor Bolts Cast Into Concrete for Structural Steel, Metal Fabrications and Castings		
Interior Dry Areas	Hot-dip galvanized steel headed anchor bolts, unless indicated otherwise	
Exterior and Interior Wet Areas	Stainless steel headed anchor bolts	
Submerged and Corrosive Areas	Stainless steel headed anchor bolts	
2. Anchor Bolts Cast Into Concrete for Equipment Bases		
Interior Dry Areas	Hot-dip galvanized steel headed anchor bolts, unless otherwise specified with equipment	
Submerged, Exterior, Interior Wet, and Corrosive Areas	Stainless steel headed anchor bolts	
3. Post-Installed Anchors: See Section 05 05 19 - Post-Installed Anchors		
4. Anchors Cast in Grout-Filled Concrete Masonry Units		
Dry Areas	Hot-dip galvanized steel headed anchor bolts or zinc-plated steel sleeve anchors	
Exterior and Interior Wet Areas	Hot-dip galvanized steel headed anchor bolts, zinc-plated or stainless steel sleeve anchors	
5. Connections of Aluminum Components		
Submerged, Exterior and Interior Wet and Dry Areas	Stainless steel bolted connections, unless otherwise specified with equipment	
6. All Others		
Exterior and Interior Wet and Dry Areas	Stainless steel fasteners	

B. Antiseizing Lubricant: Use on stainless steel threads.

END OF SECTION

(NO TEXT FOR THIS PAGE)

SECTION 05 52 16

ALUMINUM RAILINGS

PART 1 GENERAL

1.1 GENERAL

A. Related Work Specified In Other Sections Includes, But is Not Limited to, the Following:

1. Section 05 05 19 - Post-Installed Anchors

2. Section 09 96 00 - High Performance Coatings

1.2 REFERENCES

A. The following is a list of standards which may be referenced in this section:

1. Aluminum Association, Incorporated (AA): DAF45, Designation System for Aluminum Finishes.

2. American Concrete Institute (ACI) 318, Building Code Requirements for Structural Concrete.

3. American Iron and Steel Institute (AISI).

4. ASTM International (ASTM):

a. A193/A193M, Standard Specification for Alloy-Steel and Stainless Steel Bolting for High Temperature or High Pressure Service and Other Special Purpose Applications.

b. A194/A194M, Standard Specification for Carbon and Alloy Steel Nuts for Bolts for High Pressure or High Temperature Service, or Both.

c. E894, Standard Test Method for Anchorage of Permanent Metal Railing Systems and Rails for Buildings.

d. E935, Standard Test Methods for Performance of Permanent Metal Railing Systems and Rails for Buildings.

e. E985, Standard Specification for Permanent Metal Railing Systems and Rails for Buildings.

5. International Code Council (ICC): International Building Code (IBC).

6. Occupational Safety and Health Act (OSHA): 29 CFR 1910, Code of Federal Regulations.

1.3 DEFINITIONS

A. ICC Evaluation Services Report: ICC report on evaluation of manufactured concrete anchor systems.

B. Railings: This term includes guardrail systems, handrail systems, platform railing systems, ramp-rail systems, and stair-rail systems. Railings may be comprised of a framework of vertical, horizontal, or inclined members, grillwork or panels, accessories, or combination thereof.

C. Toeboards: Vertical barrier at floor level usually erected on railings along exposed edges of floor or wall openings, platforms, or ramps to prevent miscellaneous items from falling through.

1.4 DESIGN REQUIREMENTS

A. Structural Performance of Railing Systems: Design, test, fabricate, and install railings to withstand the following structural loads without exceeding allowable design working stress or allowable deflection. Apply each load to produce maximum stress and deflection in railing system components.

1. Railing System: Capable of withstanding the following load cases applied:

a. Concentrated load of 200 pounds applied at any point and in any direction in accordance with ICC IBC and OSHA.

b. Uniform load of 50 pounds per linear foot applied in any direction in accordance with ICC IBC.

c. Concentrated load need not be assumed to act concurrently with uniform loads in accordance with ICC IBC.

2. Calculated lateral deflection at top of posts shall not exceed 1 inch.

1.5 SUBMITTALS

A. Action Submittals:

1. Shop Drawings:

a. Project-specific scaled plans and elevations of railings and detail drawings. Include railing profiles, sizes, connections, anchorage, size and type of fasteners, and accessories.

b. Manufacturer’s literature and catalog data of railing and components.

c. Design Data: Calculations or test data using specified design performance loads and including the following:

1) Bending stress in, and deflection of, posts in accordance with ASTM E985 as modified herein.

2) Design of post base connection.

3) Documentation that concrete anchors have been designed in accordance with one of the following:

a) ACI 318, Appendix D.

b) ICC Evaluation Services Report for selected anchor.

2. Samples:

a. Rail sections, 6 inches long showing each type of proposed connection, proposed finish, and workmanship.

b. Each fitting including wall brackets, castings, toeboard, and rail expansion joints.

B. Informational Submittals:

1. Manufacturer's assembly and installation instructions.

2. Test Reports: Test data may supplement load calculations providing data covers complete railing system, including anchorage:

a. Test data for railing and components showing load and deflection as a result of load, in enough detail to prove railing is strong enough and satisfies national, state, local standards, regulations, code requirements, and OSHA 29 CFR 1910, using design loads specified. Include test data for the following:

1) Railing and post connections.

2) Railing wall connections.

3) Railing expansion joint connections.

4) Railing system gate assembly, including latch, gate stop, and hinges. Both gate latch and stop to support required loads applied independent of each other.

b. Testing of anchorages shall be in accordance with ASTM E894 and ASTM E935 using applied loads in accordance with ICC IBC.

c. Deflection Criteria: In accordance with ASTM E985 and design loads specified, except as follows: maximum calculated lateral deflection at top of posts shall not exceed 1 inch.

d. Aluminum Rail Piping: Test data showing yield strength of pipe as delivered equals or exceeds specified values.

3. Manufacturer's written recommendations describing procedures for maintaining railings including cleaning materials, application methods, and precautions to be taken in use of cleaning materials.

1.6 QUALITY ASSURANCE

A. Qualifications: Calculations required for design data shall be stamped by a registered civil or structural engineer licensed in state where Project will be constructed.

1.7 DELIVERY, STORAGE, AND HANDLING

A. Deliver, store and handle products and materials as specified in Division 1.

B. Package and wrap railings to prevent scratching and denting during shipment, storage, and installation. Maintain protective wrapping to the extent possible until railing is completely installed.

C. Delivery:

1. Shop assemble into practical modules of lengths not exceeding 24 feet for shipment.

2. Deliver toeboards loose for field assembly.

3. Deliver clear anodized railing pipe and posts with protective plastic wrap.

1.8 ENVIRONMENTAL REQUIREMENTS

A. Thermal Movements: Allow for thermal movement resulting from the following maximum range in ambient temperature in design, fabrication, and installation of railings to prevent buckling, opening up of joints, over stressing of components, connections and other detrimental effects. Base design calculation on actual surface temperature of material as a result of both solar heat gain and night time sky heat loss. Temperature change is difference between high or low temperature and installation temperature.

1. Temperature Change Range: 70 degrees F, ambient; 100 degrees F, material surfaces.

PART 2 PRODUCTS

2.1 ALUMINUM RAILINGS

A. General:

1. Furnish pre-engineered and prefabricated railing systems as shown on Drawings.

2. Railing systems using pop rivets or glued railing construction are not permitted.

3. Sand cast accessories and components are not permitted.

4. Fasteners shall be AISI Type 316 stainless steel, unless otherwise noted.

B. Rails, Posts, and Formed Elbows:

1. Extruded Alloy 6105-T5, 6061-T6, or equivalent.

2. Tensile Strength: 38,000 psi, minimum.

3. Yield Strength: 35,000 psi, minimum.

4. Wall Thickness: 0.145 inch, minimum.

5. Posts and railings shall be nominal 1-1/2-inch diameter (1.90-inch outside diameter).

C. Accessories:

1. Fittings and Accessories:

a. Extruded, machined bar stock, permanent mold castings, or die castings of sufficient strength to meet load requirements.

b. Gauge metal components are not acceptable for load-resisting components.

c. Fittings shall match color of pipe in railings.

2. Miscellaneous Extruded Aluminum Parts: Alloys 6063-T6, 6061-T6, or 6105 T5 aluminum, or equivalent, and of adequate strength for all loads.

3. Castings for Railings:

a. Cast Al-mag with sufficient strength to meet load and test requirements.

b. Anodizable grade finish with excellent resistance to corrosion when subjected to exposure of sodium chloride solution intermittent spray and immersion.

4. Post Anchorages:

a. Refer to standard details for types of post anchorages and minimum requirements.

b. Bolts at anchorages shall be minimum 1/2-inch diameter.

5. Wall Brackets: Adjustable wall fitting, with provision for minimum three 3/8-inch diameter AISI Type 316 stainless steel bolts or concrete anchors.

6. Rail Terminals (including Wall Returns): Aluminum wall fitting with provision for three 3/8-inch Type 304 fasteners.

7. Railing System Gate:

   a. Extruded aluminum rail components.

   b. Hardware Manufacturers and Products:

      1) Julius Blum & Co., Inc., Carlstadt, NJ; No. 782/3 gate hinges with springs, and No. 784 gate latch and stop.

      2) CraneVeyor Corp., South El Monte, CA; No. C4370b gate hinges with spring, No. C4369 gate latch, and No. C4368 gate stop.

      3) Moultrie Manufacturing Co., Moultrie, GA; Part No. W60006.

8. Railing Picket Panels and Clamps:

   a. 1/2-inch Schedule 40 aluminum pipe (picket).

   b. Extruded aluminum 1-1/2-inch by 7/8-inch by 1/8-inch channel.

   c. Furnish neoprene plug for each end of picket.

   d. Fasteners: Stainless steel.

9. Toeboards:

   a. Molded or extruded Alloy 6063-T6 or 6061-T6 aluminum.

   b. Provide slotted holes for expansion and contraction where required.

10. Fasteners: Stainless steel.

D. Finishes:

1. Pipe and Post: In accordance with AA DAF45, designation AA-M32-C22-A41.

2. Cast Fittings and Toeboards: In accordance with AA DAF45, designation AA-M10-C22-A41.

2.2 ANCHOR BOLTS, FASTENERS, AND CONCRETE ANCHORS

A. Locknuts, Washers, and Screws:

1. Elastic Locknuts, Steel Flat Washers, Round Head Machine Screws (RHMS): AISI Type 316 stainless steel.

2. Flat Washers: Molded nylon.

B. Bolts and Nuts for Bolting Railing to Metal Beams: ASTM A193/A193M and ASTM A194/A194M, Type 316 stainless steel.

C. Concrete Anchors:

1. Stainless steel, AISI Type 316.

2. Post-installed anchors in accordance with Section 05 05 19 - Post-Installed Anchors, unless otherwise specified herein.

3. Bolt Diameter: 1/2-inch, minimum.

2.3 FABRICATION

A. Shop Assembly:

1. Post Spacing: Maximum 6-foot horizontal spacing.

2. Railing Posts Bolted to Metal or Concrete:

a. In lieu of field cutting, provide approved fitting with sufficient post overlap, containing provisions for vertical adjustment.

b. Field fit-up is required.

3. Free of burrs, nicks, and sharp edges when fabrication is complete.

4. Welding is not permitted.

B. Shop/Factory Finishing:

1. Use same alloy for uniform appearance throughout fabrication for railings.

2. Railing and Post Fittings: Match fittings with color of pipe in railing.

C. Shop Assembly:

1. Shop assemble rails, posts, and formed elbows with a close tolerance for tight fit.

2. Fit dowels tightly inside posts.

D. Repair of Defective Work: Remove stains and replace defective Work.

PART 3 EXECUTION

3.1 GENERAL

A. Field fabrication of aluminum railing systems is not permitted.

B. Where required, provide railing posts longer than needed and field cut to exact dimensions required in order to satisfy vertical variations on actual structure.

C. Install railing with base that provides plus or minus 1/4-inch vertical adjustment inside base fitting. If adjustment is required in field and exceeds plus or minus 1/4-inch, reduce post length not to exceed beyond bottom of lowest set-screw or bolt in base fitting.

D. Modification to supporting structure is not permitted where railing is to be attached.

E. Protection from Entrapped Water:

1. Make provisions in exterior and interior installations subject to high humidity to drain water from railing system.

2. For posts mounted in concrete, bends, and elbows occurring at low points, drill weep holes of 1/4-inch diameter at lowest possible elevations, one hole per post or rail. Drill hole in plane of rail.

3.2 RAILING INSTALLATION

A. Assembly and Installation: Perform in accordance with manufacturer's written recommendations for installation.

B. Expansion Joints:

1. Maximum intervals of 54 feet on center and at structural joints.

2. Slip joint with internal sleeve extending 2 inches beyond each side of joint. Provide 1/2-inch slip joint gap to allow for expansion.

3. Fasten to one side using 3/8-inch diameter set-screw. Place set-screw at bottom of pipe.

4. Locate joints within 12 inches of posts. Locate expansion joints in rails that span expansion joints in structural walls and floors supporting the posts.

C. Posts and Rails:

1. Surface Mounted Posts:

a. Bolt post baseplate connectors firmly in place.

b. Shims, wedges, grout, and similar devices for railing post alignment not permitted.

2. Set posts plumb and aligned to within 1/8 inch in 12 feet.

3. Set rails horizontal or parallel to slope of steps to within 1/8 inch in 12 feet.

4. Install posts and rails in same plane.

5. Remove projections or irregularities and provide a smooth surface for sliding hands continuously along top rail.

6. Use offset rail for use on stairs and platforms if post is attached to web of stringers or structural platform supports.

7. Support 1-1/2-inch rails directly above stairway stringers with offset fittings.

D. Wall Brackets: Support wall rails on brackets spaced maximum 5 feet on centers as measured on the horizontal projection.

E. Toeboard:

1. Provide at railings, except where 4-inch or higher concrete curbs are installed, at gates, or at stairways unless shown otherwise.

2. Accurately measure in field for correct length; after railing post installation cut and secure to posts.

3. Dimension between bottom of toeboard and walking surface not to exceed 1/4 inch.

4. Install plumb and aligned to within 1/8 inch in 12 feet.

F. Railing System Gate: Install in accordance with manufacturer's installation instructions.

3.3 FIELD FINISHING

A. Corrosion Protection: Prevent galvanic action and other forms of corrosion caused from direct contact with concrete and dissimilar metals by coating metal surfaces as specified in Section 09 96 00 - High Performance Coatings.

3.4 CLEANING

A. Wash railing system thoroughly using clean water and soap. Rinse with clean water.

B. Do not use acid solution, steel wool, or other harsh abrasive.

C. If stain remains after washing, restore in accordance with railing manufacturer's recommendations or replace stained railings.

END OF SECTION

SECTION 05 53 00

METAL GRATINGS

PART 1 GENERAL

1.1 GENERAL

A. Related Work Specified In Other Sections Includes, But is Not Limited to, the Following:

1. Section 09 96 00 - High Performance Coatings

1.2 REFERENCES

A. The following is a list of standards which may be referenced in this section:

1. ASTM International (ASTM):

a. A36/A36M, Standard Specification for Carbon Structural Steel.

b. A666, Standard Specification for Annealed or Cold-Worked Austenitic Stainless Steel Sheet, Strip, Plate, and Flat Bar.

c. A1011/A1011M, Standard Specification for Steel, Sheet and Strip, Hot-Rolled, Carbon, Structural, High-Strength Low-Alloy, High-Strength Low-Alloy with Improved Formability, and Ultra-High Strength.

d. B221, Standard Specification for Aluminum and Aluminum-Alloy Extruded Bars, Rods, Wire, Profiles, and Tubes.

2. National Association of Architectural Metal Manufacturers (NAAMM):

a. MBG 531, Metal Bar Grating Manual.

1.3 AMERICAN IRON AND STEEL

A. Comply with the "American Iron and Steel (AIS)" requirements as contained in Section 436 of the Consolidated Appropriations Act, 2014, further described in the Bid Form.

1.4 SUBMITTALS

A. Action Submittals:

1. Shop Drawings:

a. Grating: Show dimensions, weight, size, and location of connections to adjacent grating, supports, and other Work.

b. Grating Anchorage: Show details of anchorage to supports to prevent displacement from traffic impact.

c. Product data for grating, grating clips, anchors, accessories, and other manufactured products specified herein.

d. Manufacturer's specifications, including coatings, surface treatment, and finishes.

B. Informational Submittals:

1. Special handling and storage requirements.

2. Installation instructions.

1.5 DELIVERY, STORAGE, AND HANDLING

A. Deliver, store and handle products and materials as specified in Division 1.

B. Insofar as is practical, factory assemble items.

C. Package and clearly tag parts and assemblies that are, due to necessity, shipped unassembled.

PART 2 PRODUCTS

2.1 MANUFACTURERS

A. Materials, equipment, and accessories specified in this section shall be products of:

1. Alabama Metal Industries Corporation (AMICO), Birmingham, AL.

2. HARSCO Industrial IKG, Houston, TX.

3. Ohio Gratings, Inc., Canton, OH.

2.2 GRATING MATERIALS

A. Aluminum: Provide alloy and temper as designated below.

1. Bearing Bars and Banding: ASTM B221 alloy 6061-T6 or 6063-T6.

2. Swaged Crossbar Rods: ASTM B221 alloy 6061 or 6063, or ASTM B210 alloy 3003.

3. Finish: Mill.

2.3 METAL BAR GRATING

A. General Requirements:

1. Maximum Service Load:

   a. Light Duty (Type A): 100 psf uniformly distributed load.

2. Maximum Deflection: Span/240 or 1/4 inch, whichever is less.

3. Bearing Bar Spacing:

   a. Light Duty: 1-3/16 inch maximum, center-to-center.

4. Cross Bar Spacing: 4 inches maximum, center-to-center.

5. Bearing Bars, Cross Bars and Banding: Minimum thickness as specified in NAAMM MBG 531 or as shown on Drawings.

B. Grating Materials: Aluminum, pressure-locked rectangular bar grating fabricated by pressing crossbars between rectangular bearing bars.

C. Surface: Slip resistant, consisting of an applied abrasive finish of aluminum-oxide aggregate.

2.4 ACCESSORIES

A. Embedded Frames:

1. As indicated on Drawings and as specified in Section 05 50 00, Metal Fabrications.

B. Grating Clamps:

1. Use at flanged beam and bolted angle frame supports.

2. Removable from above grating walkway surface.

3. Provide hat bracket, recessed bolt, and bottom clamp of same material as grating.

4. Manufacturers and Products:

   a. Direct Metals Company, LLC, Kennesaw, GA; Grating Clamp.

   b. Grating Fasteners, Inc., Harvey, LA; G-Clip.

2.5 FABRICATION

A. General:

1. In accordance with NAAMM MBG 531 or NAAMM MBG 532.

2. Do not weld aluminum grating.

3. Conceal fastenings where practical.

4. Drill metalwork and countersink holes as required for attaching hardware or other materials.

5. Cutouts:

   a. Fabricate in grating sections for penetrations indicated.

   b. Arrange to permit grating removal without disturbing items penetrating grating.

   c. Edge band openings in grating that interrupt four or more bearing bars with bars of same size and material as bearing bars.

6. Do not notch bearing bars at supports to maintain elevation.

7. Field measure areas to receive grating. Verify dimensions of new fabricated supports, and fabricate to dimension required for specified clearances.

8. Section Length: Sufficient to prevent section from falling through clear opening when oriented in the span direction and one end is touching either the concrete or the vertical leg of grating support.

9. Minimum Bearing: 1 inch for grating depth up to 2-1/4 inches and 2 inches for grating depth greater than 2-1/4 inches.

10. Banding and Toe Plates: Same material as grating and welded to bearing bars in accordance with requirements of NAAMM MBG 531 and NAAMM MBG 532.

B. Metal Bar Grating: A single grating section shall be not less than 1.5 feet or greater than 3 feet in width, or weigh more than 150 pounds.

C. Heavy Duty Metal Bar Grating: Minimum width of grating sections shall be 2 feet regardless of length and weight.

D. Supports:

   1. Same material as grating, except that supports which are to be embedded in concrete shall be Type 316 stainless steel, unless part of an extruded aluminum system.

   2. Coordinate dimensions and fabrication with grating to be supported.

PART 3 EXECUTION

3.1 PREPARATION

A. Electrolytic Protection:

1. Protect aluminum surfaces in contact with dissimilar metals, or embedded or in contact with masonry, grout, or concrete as specified in Section 09 96 00 - High Performance Coatings.

2. Allow paint to dry before installation of material.

3.2 INSTALLATION

A. Until grating sections are securely fastened in place, area shall be appropriately barricaded or flagged to alert people working in the area of potential fall hazard.

B. Install manufactured products in accordance with manufacturer's recommendations.

C. Install supports such that grating sections have a solid bearing on both ends, and that grating sections will not rock or wobble under design loads.

D. Install grating supports plumb and level as applicable.

E. Install sections of welded frames with anchors to straight plane without offsets.

F. Field locate and install fasteners to fit grating layout.

G. Anchor grating securely to supports using minimum of four fastener clips and bolts per grating section.

H. Each grating or plank section shall be easily removable and replaceable.

I. Completed installation shall be rigid and neat in appearance.

J. Protect painted and galvanized surfaces during installation.

K. Repair damaged coatings as specified in Section 09 96 00 - High Performance Coatings.

END OF SECTION

(NO TEXT FOR THIS PAGE)

SECTION 07 61 13

STANDING SEAM METAL ROOF PANEL

PART 1 GENERAL

1.1 SUMMARY

A. Section Includes: Metal roof panels with concealed attachment, and accessories necessary for a complete watertight installation.

B. Related work specified in other sections includes, but is not limited to, the following:

1. Section 07 90 00 - Joint Sealers

1.2 REFERENCES

A. Codes and standards referred to in this Section among others are:

1.	AA ADM1	-	Aluminum Design Manual
2.	AAMA 620	-	Voluntary Specifications for High Performance Organic Coatings on Coil Coated Architectural Aluminum Substrates.
3.	AAMA 621	-	Voluntary Specifications for High Performance Organic Coatings on Coil Coated Architectural Hot Dipped Galvanized (HDG) & Zinc-Aluminum Coated Steel Substrates.
4.	ASTM A 653	-	Standard Specification for Steel Sheet, Zinc-Coated (Galvanized) or Zinc-Iron Alloy-Coated (Galvannealed) by the Hot-Dip Process.
5.	ASTM A 666	-	Standard Specification for Annealed or Cold-Worked Austenitic Stainless Steel Sheet, Strip, Plate and Flat Bar.
6.	ASTM E 1592	-	Structural Performance of Sheet Metal Roof and Siding Systems by Uniform Static Air Pressure Difference.
7.	ASTM E 1637	-	Standard Specification for Structural Standing Seam Aluminum Roof Panel Systems.

8. ASTM E 1646 - Standard Test Method for Water Penetration of Exterior Metal Roof Panel Systems by Uniform Air Pressure Difference

9. UL 580 - Tests for Uplift Resistance of Roof Assemblies.

1.3 AMERICAN IRON AND STEEL

A. Comply with the "American Iron and Steel (AIS)" requirements as contained in Section 436 of the Consolidated Appropriations Act, 2014, further described in the Bid Form.

1.4 SYSTEM PERFORMANCE

A. General: Provide metal roof panel system meeting performance requirements as determined by application of specified tests by a qualified testing agency on manufacturer's standard assemblies.

B. Design Requirement: See Structural General Notes for additional load requirements

C. Air Infiltration: Maximum 0.03 cfm/sq. ft. per ASTM E 1680 at a static-air-pressure difference of 4 lbf/sq. ft.

D. Water Penetration: No uncontrolled water penetration at a static pressure of 6.4 lbf/sq. ft. when tested per ASTM E 1646.

E. Wind Uplift Resistance: UL 580 wind uplift rating of UL 90

F. Seismic Performance: Comply with ASCE 7-05 Sections 9, "Earthquake Loads"

G. Structural Performance : Provide metal roof panel system capable of withstanding the effects of indicated loads and stresses within limits and under conditions indicated, per ASTM based on testing according to ASTM E 1592:

H. FM approvals: Comply with FM 4471. Provide metal roof panel assembly listed in FM Approvals RoofNav.

1. Fire and Windstorm Classification: Class 1A-90.

2. Hail Resistance: SH.

I. Wind Loads: Determine loads based on uniform pressure, importance factor, exposure category, and basic wind speed indicated on drawings.

J. Snow Loads: As indicated on Drawings.

K. Deflection Limits: Metal roof panel system shall withstand wind and snow loads with vertical deflections no greater than 1/180 of the span.

L. Concentrated Load Performance: Provide metal roof panel system that withstand a concentrated load of 250 lbs. applied to a 4 sq. in. at midspan and center of the panel halfway between supports without causing deformation, buckling or side lap separation.

M. Thermal Movement: Allow for thermal movements from variations in both ambient and internal temperatures. Accommodate movement of support structure caused by thermal expansion and contraction.

1. Thermal Cycle test: Provide metal roof panel system that show no wear when subject to 100,000 cycles of 1 inch movement in the plane of the panel face relative to the clip anchor.

N. Solar Reflectance Index: Minimum 78 for roof slopes of 2:12 or less and 29 for roof slopes greater than 2:12 per ASTM E 1980.

1.5 SUBMITTALS

A. Provide all submittals, including the following, and as specified in Division 1.

B. Coordination drawings: Provide drawings of metal roof panel system coordinating the installation with structural framing secondary framing, roof deck, penetrations, openings, and mechanical attachments.

C. Product Data:

1. Roof panels

2. Manufacturers' instructions.

3. Factory applied color finish:

a. Provide representative color charts of manufacturer's full range of colors.

4. Accessories.

D. Shop Drawings: Show layouts of metal roof panels. Include details of each condition of installation, panel profiles, and attachment to building. Provide details at a minimum scale 1-1/2-inch per foot of edge conditions, joints, fastener and sealant placement, flashings, penetrations, and special details. Make distinctions between factory and field assembled work.

1. Include data indicating compliance with performance requirements.

2. Indicate points of supporting structure that must coordinate with standing seam metal roof system installation.

3. Include structural data indicating compliance with performance requirements and requirements of local authorities having jurisdiction.

E. Samples: Provide 12-inch long, full width section of roof panel showing finishes, vertical joint return, and anchoring details. Provide 12-inch long pieces of trim.

F. Product Test Reports:

1. Air infiltration: Indicating compliance of products with requirements, from a qualified independent testing agency.

2. Water penetration: Indicating compliance of products with requirements, from a qualified independent testing agency.

3. Structural performance: Indicating compliance of products with requirements, from a qualified independent testing agency.

4. Wind loads: Indicating compliance of products with requirements, from a qualified independent testing agency.

5. Fire performance characteristics: Indicating compliance of products with requirements from a qualified independent testing agency.

6. Thermal movement: Indicating compliance of products with requirements, from a qualified independent testing agency.

G. Qualification Data: For firms and persons specified in "Quality Assurance" Article to demonstrate their capabilities and experience. Include lists of completed projects with project names and addresses, names and addresses of architects and OWNERs, and other information specified.

1.6 AMERICAN IRON AND STEEL

A. Comply with the “American Iron and Steel (AIS)” requirements as contained in Section 436 of the Consolidated Appropriations Act, 2014, further described in the Bid Form.

1.7 QUALITY ASSURANCE

A. Source Limitations: Obtain metal roof panel system through one source from a single manufacturer.

B. Manufacturer Qualifications: Approved manufacturer listed in this Section with minimum 5 years’ experience in manufacture of similar products in successful use in similar applications.

C. Installer Qualifications: Experienced Installer with minimum of 5 years' experience with successfully completed projects of a similar nature and scope.

D. Fire Performance Characteristics: Provide metal roof panel system with the following fire-test characteristics:

1. Surface-Burning Characteristics: Provide metal roof panel system panels with the following characteristics when tested per ASTM E 84.

a. Flame spread index: 25 or less

b. Smoke developed index: 450 or less

1.8 DELIVERY, STORAGE, AND HANDLING

A. Deliver, store and handle products and materials as specified in Division 1.

B. Protect products of metal roof panel system during shipping, handling, and storage to prevent staining, denting, deterioration of components or other damage. Protect panels and trim bundles during shipping with water resistant paper. Protect painted surfaces with a strippable protective covering before shipping.

1. Deliver, unload, store, and erect metal roof panel system and accessory items without misshaping panels or exposing panels to surface damage from weather or construction operations.

2. Store in accordance with Manufacturer's written instruction. Provide wood collars for stacking and handling in the field.

1.9 WARRANTY

A. Special Manufacturer's Warranty:

1. On Manufacturer's standard form, in which Manufacturer agrees to repair or replace components of metal roof panel system that fail in materials and workmanship within two years from date of Substantial Completion.

B. Metal Panel Warranty:

1. On Manufacturer's standard form, in which Manufacturer agrees to repair or replace metal panels that rupture or perforate due to corrosion within 20 years from the date of Substantial Completion.

C. Special Weathertight Performance Warranty:

1. On Manufacturer's standard form, in which Manufacturer and Installer agree to pay the cost of repair or replacement of components of metal roof panel system that fail to remain weathertight for a period of five years from date of Substantial Completion, up to the cost of the initial material purchase order and initial installation labor cost.

D. Special Panel Finish Warranty:

1. On Manufacturer's standard form, in which Manufacturer agrees to repair or replace metal roof panels that evidence deterioration of factory-applied finish within 20 years from date of Substantial Completion, including:

a. Color fading in excess of 5 Hunter units per ASTM D 2244.

b. Chalking in excess of No. 8 rating per ASTM D 4214.

c. Failure of adhesion, peeling, checking, or cracking.

PART 2 PRODUCTS

2.1 PRODUCT AND MANUFACTURER

A. Products: Subject to compliance with requirements, provide the following as a basis of design and quality:

1. Product and Manufacturer: SRS3 Structural Standing Seam Metal Roof Panel System; CENTRIA Architectural Systems; Moon Township, PA

2.2 MATERIALS

A. Aluminum Face Sheet. Smooth surface coil-coated, ASTM B 209, 3003-H14 or 5052-H32 alloy.

1. Face Sheet: 0.040 inch nominal thickness.

2. Surface: Smooth.

2.3 ROOF PANELS

A. Structural Standing Seam Metal Roof Panels: Formed with 2 inch high vertical ribs at panel edges and, manufactured for sequential installation by attaching panels to supports using concealed clips and engaging edges of adjacent panels and mechanically seaming panel ribs together, sealed with factory-applied sealant.

1. Basis of Design Product: CENTRIA, SRS3 Structural Standing Seam Metal Roof Panel.

2. Panel Coverage: 18 inch.

3. Anchor Clips: Stainless steel, 2-piece, 16 ga. movement allowance 3 inch.

2.4 FACTORY APPLIED COLOR FINISH

A. Fluoropolymer Two-Coat System: 0.80 mil primer with 0.8 mil 70 percent PVDF fluoropolymer color coat, AAMA 621.

1. Basis of Design: CENTRIA Duraguard.

B. Color:

1. Exterior Surface: As selected by RESIDENT PROJECT REPRESENTATIVE from manufacturer's full range color palette.

2. Interior Surface: Manufacturer's standard primer color

2.5 ROOF VENTILATION SYSTEMS

A. Ridge vents: Provide premanufactured Polypropylene panels equipped with snow screen.

1. Width: 11-inch or 8 1/2-inch wide as required for ventilation

2. Net Free Vent Area (NFVA): 20 sq. inches per ft.

3. Basis of design: COR-A-Vent V600TE

2.6 ACCESSORIES

A. Provide complete metal roof panel assembly incorporating trim, copings, fasciae, soffits, downspouts, gutters and miscellaneous flashings. Provide required fasteners, gaskets, closure strips, and sealants. Fabricate and install accessories in accordance with SMACNA 1793 Manual.

1. Aluminum Roof Panels Systems: Comply with ASTM E 1637 and AA ADM1 "Specification for Aluminum Structures"

2. Flashing and Trim: Match material, thickness, and finish of metal roof panels.

2.7 FASTENERS

A. Provide self-tapping screws, bolts, nuts, and other acceptable fasteners recommended by metal roof panel system manufacturer. Where exposed fasteners cannot be avoided, supply corrosion-resistant fasteners with heads matching color of metal panels by means of factory-applied coating.

B. Exposed Screws: Manufacturer's recommended stainless steel screws with bonded neoprene and stainless steel washers, coated to match panel color.

1. Concealed Screws: Manufacturer's recommended corrosion resistant carbon steel with corrosion resistant coating.

2.8 PANEL SEALANTS

A. Side Lap Sealant: One part, non-skinning, non-drying, synthetic butyl elastomer sealant.

B. Field Applied Unexposed Sealant: Side Laps, end laps, and flashing details: Gun grade, nonskinning, butyl elastomer or polymeric non-skinning butyl tape.

C. Exposed Sealant: ASTM C 920; elastomeric polyurethane, polysulfide, or silicone sealant; of type, grade, class, and use classifications required to seal joints in metal roof panels and remain weathertight; as recommended by metal roof panel manufacturer colored to match panel color.

PART 3 EXECUTION

3.1 EXAMINATION

A. Examine metal roof panel system substrate with Installer present. Inspect for erection tolerances and other conditions that would adversely affect installation of metal roof panel system installation. Do not install roof panels until panel substrate meets roof panel manufacturer's requirements.

B. Inspect framing that will support metal roof panel system to determine if support components are installed as indicated on approved shop drawings.

C. Confirm presence of acceptable framing members at recommended spacing to match installation requirements of metal roof panel system.

D. Panel Support Tolerances: Install metal roof panels on substrate within tolerances acceptable to metal roof panel manufacturer:

1. 1/4 inch in any 20 foot in any direction.

2. 1/2 inch over any single roof plane.

3.2 INSTALLATION

A. General: Install metal roof panel system in accordance with approved shop drawings, installation manual, and manufacturer's instructions and recommendations. Install metal roof panels in orientation, sizes, and locations indicated. Install metal roof panels in one piece lengths from the ridge to eave unless otherwise indicated on approved shop drawings. Anchor panels and other components securely in place. Provide for thermal and structural movement.

B. Attach panels to metal framing using recommended clips, screws, fasteners, sealants, and adhesives indicated on approved shop drawings.

1. Fasten metal roof panels to supports with concealed clips at each joint at location, spacing, and with fasteners recommended by manufacturer.

2. Install clips to supports with self-tapping fasteners approved by manufacturer.

3. Provide weatherproof escutcheons for pipe and conduit penetrating roof.

4. Dissimilar Materials: Where elements of metal wall panel system will come into contact with dissimilar materials, treat faces and edges in contact with dissimilar materials as recommended by manufacturer.

C. Joint Sealers: Install joint sealers where indicated and where required for weatherproof performance of metal roof panel assemblies.

1. Prepare joints and apply sealants per requirements of Section 07 90 00 - Joint Sealers.

3.3 ACCESSORY INSTALLATION

A. General: Install metal roof panel accessories with positive anchorage to building and weather tight mounting and provide for thermal expansion. Coordinate installation with flashings and other components.

B. Install related flashings and sheet metal trim per requirements of Section 07 62 00 - Sheet Metal Flashing and Trim.

C. Install components required for a complete metal roof panel assembly, including trim, flashings, sealants, gaskets, fillers, closure strips, and similar items.

D. Comply with performance requirements, requirements of authorities having jurisdiction, and manufacturer's written installation

E. Provide concealed fasteners except where noted on approved shop drawings.

F. Set units true to line and level as indicated. Install work with laps, joints, and seams that will be permanently watertight and weather resistant.

3.4 FIELD QUALITY CONTROL

A. Manufacturer's Field Inspection Reports: Engage a service representative authorized by metal wall panel manufacturer to inspect completed installation. Submit written report. Correct deficiencies noted in report.

3.5 CLEANING AND PROTECTION

A. Remove temporary protective films when directed by ENGINEER. Clean finished surfaces as recommended by metal roof panel manufacturer.

B. Replace damaged panels and accessories that cannot be repaired to the satisfaction of the ENGINEER.

END OF SECTION

SECTION 07 62 00

SHEET METAL FLASHING AND TRIM

PART 1 GENERAL

1.1 SUMMARY

Section Includes: Manufactured and formed flashing and other sheet metal fabrications and roof accessories.

A. Related Work Specified In Other Sections Includes, But is Not Limited to, the Following:

1. Section 07 90 00 - Joint Sealers

1.2 REFERENCES

A. Codes and standards referred to in this Section are:

1. ASTM A 167 - Stainless and Heat-Resisting Chromium-Nickel Steel Plate, Sheet, and Strip

2. ASTM D1970 - Standard Specification for Self-Adhering Polymer Modified Bituminous Sheet Materials Used as Steep Roofing Underlayment for Ice Dam Protection

3. ASTM D 2822 - Specification for Asphalt Roof Cement

4. AWPA C2 - Lumber, Timbers, Bridge Ties, and Mine Ties-Preservative Treatment by Pressure Processes

5. SMACNA - Architectural Sheet Metal Manual

6. NRCA - Roofing and Waterproofing Manual

1.3 AMERICAN IRON AND STEEL

A. Comply with the "American Iron and Steel (AIS)" requirements as contained in Section 436 of the Consolidated Appropriations Act, 2014, further described in the Bid Form.

1.4 PERFORMANCE REQUIREMENTS

A. General: Provide sheet metal flashing and trim assemblies as indicated to withstand wind loads, structural movement, thermally induced movement, and exposure to weather without failure due to defective manufacture, fabrication, installation, or other defects in construction. Completed sheet metal flashing and trim shall not rattle, leak, or loosen, and shall remain watertight.

B. Thermal Movements: Provide sheet metal flashing and trim that allows for thermal movements from ambient and surface temperature changes.

C. Temperature Change (Range): 120 deg F, ambient; 180 deg F material surfaces.

1.5 ACTION SUBMITTALS

A. Product Data: For each type of product indicated. Include construction details, material descriptions, dimensions of individual components and profiles, and finishes for each manufactured product and accessory.

B. Shop Drawings: Show fabrication and installation layouts of sheet metal flashing and trim, including plans, elevations, and keyed details. Distinguish between shop- and field-assembled work.

C. Shop Drawings: For sheet metal flashing and trim.

1. Include plans, elevations, sections, and attachment details.

2. Detail fabrication and installation layouts, expansion-joint locations, and keyed details. Distinguish between shop- and field-assembled work.

3. Include identification of material, thickness, weight, and finish for each item and location in Project.

4. Include details for forming, including profiles, shapes, seams, and dimensions.

5. Include details for joining, supporting, and securing, including layout and spacing of fasteners, cleats, clips, and other attachments. Include pattern of seams.

6. Include details of termination points and assemblies.

7. Include details of expansion joints and expansion-joint covers, including showing direction of expansion and contraction from fixed points.

8. Include details of roof-penetration flashing.

9. Include details of edge conditions, including eaves, ridges, valleys, rakes, crickets, and counter-flashings as applicable.

10. Include details of special conditions.

11. Include details of connections to adjoining work.

12. Detail custom formed flashing and trim at scale of not less than 1-1/2 inches per 12 inches.

D. INFORMATIONAL SUBMITTALS

1. Qualification Data: For qualified fabricator.

1.6 QUALITY ASSURANCE

A. Fabricator Qualifications: Shop that employs skilled workers who custom fabricate sheet metal flashing and trim similar to that required for this Project and whose products have a record of successful in-service performance.

B. Sheet Metal Flashing and Trim Standard: Comply with SMACNA's "Architectural Sheet Metal Manual" unless more stringent requirements are specified or shown on Drawings.

1.7 DELIVERY, STORAGE AND HANDLING

A. Deliver, store and handle products and materials as specified in Division 1.

B. Do not store sheet metal flashing and trim materials in contact with other materials that might cause staining, denting, or other surface damage. Store sheet metal flashing and trim materials away from uncured concrete and masonry.

C. Protect strippable protective covering on sheet metal flashing and trim from exposure to sunlight and high humidity, except to the extent necessary for the period of sheet metal flashing and trim installation.

1.8 WARRANTY

A. Special Warranty: Manufacturer and Installer agree to repair or replace components of sheet metal flashing and trim systems that fail in materials or workmanship within specified warranty period and to repair or replace other building components impacted by failure.

1. Failures include, but are not limited to, the following:

a. Leaks.

b. Displacement.

c. Separated joints.

2. Warranty Period: 5 years from date of Substantial Completion.

B. Special Warranty on Finishes: Manufacturer agrees to repair finish or replace sheet metal flashing and trim that shows evidence of deterioration of factory-applied finishes within specified warranty period.

1. Exposed Panel Finish: Deterioration includes, but is not limited to, the following:

a. Color fading more than 5 Hunter units when tested according to ASTM D 24.

b. Chalking in excess of a No. 8 rating when tested according to ASTM D 4214.

c. Cracking, checking, peeling, or failure of paint to adhere to bare metal.

2. Finish Warranty Period: 20 years from date of Substantial Completion.

PART 2 PRODUCTS

2.1 SHEET METALS

A. General: Protect mechanical and other finishes on exposed surfaces from damage by applying a strippable, temporary protective film before shipping.

B. Aluminum Sheet: ASTM B 209, alloy as standard with manufacturer for finish required, with temper as required to suit forming operations and performance required with smooth, flat surface.

1. Exposed Coil-Coated Finish: Two-Coat Fluoropolymer: AMA 2605. Fluoropolymer finish containing not less than 70 percent PVDF resin by weight in color coat. Prepare, pretreat, and apply coating to exposed metal surfaces to comply with coating and resin manufacturers' written instructions.

a. Color: As selected by RESIDENT PROJECT REPRESENTATIVE from manufacturer's full range.

2. Concealed Finish: Pretreat with manufacturer's standard white or light-colored acrylic or polyester backer finish, consisting of prime coat and wash coat with minimum total dry film thickness of 0.5 mil.

3. Stainless-Steel Sheet: ASTM A 240 or ASTM A 666, Type 304, dead soft, fully annealed.

a. Finish: 2D dull, cold rolled.

b. Surface: Smooth, flat.

2.2 UNDERLAYMENT MATERIALS

A. Ice and Water Shield: Cold applied, self-adhering, polyethylene-faced sheet, consisting of slip-resisting polyethylene-film reinforcing top surface laminated to SBS-modified asphalt adhesive with release-paper backing, 40 mil minimum thickness meeting ASTM D1970.

B. Coated-glass fiber fire-resistant slip sheet as recommended by sheet metal roofing manufacturer.

2.3 MISCELLANEOUS MATERIALS

A. General: Provide materials and types of fasteners, solder, welding rods, protective coatings, separators, sealants, and other miscellaneous items as required for complete installation and recommended by manufacturer of primary manufactured item unless otherwise indicated.

B. Fasteners: Wood screws, annular threaded nails, self-tapping screws, self-locking rivets and bolts, and other suitable fasteners designed to withstand design loads and recommended by manufacturer of primary sheet metal or manufactured item.

1. General: Blind fasteners or self-drilling screws, gasketed, with hex-washer head.

a. Exposed Fasteners: Heads matching color of sheet metal using plastic caps or factory-applied coating. Provide metal-backed EPDM or PVC sealing washers under heads of exposed fasteners bearing on weather side of metal.

b. Blind Fasteners: High-strength aluminum or stainless-steel rivets suitable for metal being fastened.

c. Spikes and Ferrules: Same material as gutter; with spike with ferrule matching internal gutter width.

2. Fasteners for Aluminum Sheet: Aluminum or Series 30 stainless steel.

3. Fasteners for Stainless-Steel Sheet: Series 300 stainless steel.

4. Fasteners for Zinc-Coated (Galvanized) and Aluminum-Zinc Alloy-Coated Steel Sheet: Series 300 stainless steel or hot-dip galvanized steel according to ASTM A 153 or ASTM F 2329.

C. Solder:

1. For Stainless Steel: ASTM B 32, Grade Sn60, with an acid flux of type recommended by stainless-steel sheet manufacturer.

D. Elastomeric Sealant: ASTM C 920, elastomeric polymer sealant; of type, grade, class, and use classifications required to seal joints in sheet metal flashing and trim and remain watertight.

E. Treated Wood Nailers:

1. Waterborne salt preservatives; AWPA C2.

2. Apply two brush coats of same preservative used in original treatment to all sawed or cut surfaces of treated lumber.

3. Minimum Grade: Standard or Better, or Stud Grade.

4. Conforms to FM Global Loss Prevention Data 1-49.

5. Creosote and asphaltic preservatives are not acceptable.

F. Nail Base Roof Insulation:

1. Polyisocyanurate Foam Core faced on upper side with 5/8 inch CDX plywood and on reverse side with foil or asphalt-coated fiberglass.

2. R Value: 6 minimum.

3. Manufacturers and Products:

a. Atlas Roofing Corp.; AC Foam Nail Base Insulation.

b. Dow Chemical Co.; Hy-Therm Nail-Line Roof Insulation.

c. Rmax, Inc.; Nailable Base 3.

4. Nail Base Fasteners: Type, size and spacing of fasteners by nail base roof insulation manufacturer.

2.4 FABRICATION

A. General: Custom fabricate sheet metal flashing and trim to comply with details shown and recommendations in SMACNA's "Architectural Sheet Metal Manual" that apply to design, dimensions, geometry, metal thickness, and other characteristics of item required. Fabricate items at the shop to greatest extent possible.

1. Fabricate sheet metal flashing and trim in thickness or weight needed to comply with performance requirements, but not less than that specified for each application and metal.

2. Obtain field measurements for accurate fit before shop fabrication.

3. Form sheet metal flashing and trim without excessive oil canning, buckling, and tool marks and true to line and levels indicated, with exposed edges folded back to form hems.

4. Conceal fasteners and expansion provisions where possible. Exposed fasteners are not allowed on faces exposed to view.

B. Fabrication Tolerances: Fabricate sheet metal flashing and trim that is capable of installation to a tolerance of 1/4 inch in 20 feet on slope and location lines as indicated and within 1/8-inch offset of adjoining faces and of alignment of matching profiles.

C. Sealed Joints: Where moveable, non-expansion-type joints are required, form metal to provide for proper installation of elastomeric sealant according to cited sheet metal standard.

D. Expansion Provisions: Form metal for thermal expansion of exposed flashing and trim.

1. Form expansion joints of intermeshing hooked flanges, not less than 1 inch deep, filled with butyl sealant concealed within joints.

2. Form lapped expansion joints only where indicated on the drawings.

E. Fabricate cleats and attachment devices from same material as accessory being anchored or from compatible, noncorrosive metal.

2.5 ROOF SHEET METAL FABRICATIONS

A. Fascias: Fabricate in minimum 96-inch- long, but not exceeding 12-foot- long, sections.

2.6 PREFABRICATED FLASHING SYSTEM

A. Stainless Steel Drainage Flashing:

1. 28-gauge minimum stainless steel drainage flashing that collects moisture in singe wythe masonry walls and channels it to the exterior of the building through integral weeps at 8-inches on center.

2. System includes vertical drainage mesh that is inserted into each open masonry cell.

3. Manufacturer and Model: Mortar Net Solutions; Block Net or approved equal.

2.7 WALL SHEET METAL FABRICATIONS

A. Through-Wall Flashing: Fabricate continuous flashings in minimum 96-inch-long, but not exceeding 12-foot- long, sections, under copings, at shelf angles, and where indicated. Fabricate discontinuous lintel, sill, and similar flashings to extend 6 inches minimum beyond each side of wall openings, unless otherwise indicated, and form with 1-inch-high end dams. Fabricate from stainless steel, 0.019 inch thick.

1. Masonry Walls: Fabricate discontinuous flashings to extend beyond minimum dimension above if required to completely cover steel lintels and so that end dams are formed in next brick joint.

B. Opening Flashings: Fabricate head, sill, jamb, and similar flashings to extend beyond wall openings as detailed. Form head and sill flashing with 1-inch-high end dams. Fabricate from the following materials:

1. Sill Pans: Stainless steel, 0.019 inch thick.

2. Head and Jamb Flashing: Aluminum, 0.032 inch thick.

2.8 MISCELLANEOUS SHEET METAL FABRICATIONS

A. Equipment Support Flashing: Fabricate from the following materials:

1. Stainless Steel: 0.019 inch thick.

B. Counterflashing: Fabricate from the following materials:

1. Stainless Steel: 0.019 inch thick.

PART 3 EXECUTION

3.1 EXAMINTATION

A. Examine substrates, areas, and conditions, with Installer present, for compliance with requirements for installation tolerances, substrate, and other conditions affecting performance of the Work.

1. Verify compliance with requirements for installation tolerances of substrates.

2. Verify that substrate is sound, dry, smooth, clean, sloped for drainage, and securely anchored.

3. Verify that weather-resistant barriers have been installed over sheathing or backing substrate to prevent air infiltration or water penetration.

B. Proceed with installation only after unsatisfactory conditions have been corrected.

3.2 UNDERLAYMENT INSTALLATION

A. Self-Adhering Sheet Underlayment: Install self-adhering sheet underlayment, wrinkle free. Prime substrate if recommended by underlayment manufacturer. Comply with temperature restrictions of underlayment manufacturer for installation; use primer for installing underlayment at low temperatures. Apply in shingle fashion to shed water, with end laps of not less than 6 inches staggered 24 inches between courses. Overlap side edges not less than 3-1/2 inches. Roll laps and edges with roller. Cover underlayment within 14 days.

B. Apply slip sheet where required, wrinkle free, before installing sheet metal flashing and trim.

3.3 INSTALLATION

A. General: Install sheet metal wall flashing to intercept and exclude penetrating moisture according to SMACNA recommendations and as indicated. Coordinate installation of wall flashing with installation of wall-opening components such as windows, doors, and louvers.

B. General: Anchor sheet metal flashing and trim and other components of the Work securely in place, with provisions for thermal and structural movement. Use fasteners, solder, protective coatings, separators, sealants, and other miscellaneous items as required to complete sheet metal flashing and trim system.

1. Install sheet metal flashing and trim true to line, levels, and slopes. Provide uniform, neat seams with minimum exposure of solder, welds, and sealant.

2. Install sheet metal flashing and trim to fit substrates and to result in watertight performance. Verify shapes and dimensions of surfaces to be covered before fabricating sheet metal.

3. Space cleats not more than 12 inches apart. Attach each cleat with at least two fasteners. Bend tabs over fasteners.

4. Install exposed sheet metal flashing and trim with limited oil canning, and free of buckling and tool marks.

5. Torch cutting of sheet metal flashing and trim is not permitted.

6. Do not use graphite pencils to mark aluminum or aluminum-zinc alloy-coated steel surfaces.

C. Metal Protection: Where dissimilar metals contact each other, or where metal contacts pressure-treated wood or other corrosive substrates, protect against galvanic action or corrosion by painting contact surfaces with bituminous coating or by other permanent separation as recommended by sheet metal manufacturer or cited sheet metal standard.

1. Coat concealed side of uncoated aluminum and stainless-steel sheet metal flashing and trim with bituminous coating where flashing and trim contact wood, ferrous metal, or cementitious construction.

2. Underlayment: Where installing sheet metal flashing and trim directly on cementitious or wood substrates, install underlayment and cover with slip sheet.

D. Expansion Provisions: Provide for thermal expansion of exposed flashing and trim. Space movement joints at maximum of 10 feet with no joints within 24 inches of corner or intersection.

1. Form expansion joints of intermeshing hooked flanges, not less than 1 inch deep, filled with sealant concealed within joints.

2. Use lapped expansion joints only where indicated on Drawings.

E. Fasteners: Use fastener sizes that penetrate substrate not less than recommended by fastener manufacturer to achieve maximum pull-out resistance.

F. Conceal fasteners and expansion provisions where possible in exposed work and locate to minimize.

G. Possibility of leakage. Cover and seal fasteners and anchors as required for tight installation.

H. Seal joints as required for watertight construction.

1. Use sealant-filled joints unless otherwise indicated. Embed hooked flanges of joint members not less than 1 inch into sealant. Form joints to completely conceal sealant. When ambient temperature at time of installation is between 40 and 70 deg F, set joint members for 50 percent movement each way. Adjust setting proportionately for installation at higher ambient temperatures. Do not install sealant-type joints at temperatures below 40 deg F.

2. Prepare joints and apply sealants to comply with requirements in Section 07 90 00 - Joint Sealants.

I. Soldered Joints: Clean surfaces to be soldered, removing oils and foreign matter. Pre-tin edges of sheets with solder to width of 1-1/2 inches; however, reduce pre-tinning where pre-tinned surface would show in completed Work.

1. Do not solder metallic-coated steel and aluminum sheet.

2. Do not use torches for soldering.

3. Heat surfaces to receive solder and flow solder into joint. Fill joint completely. Completely remove flux and spatter from exposed surfaces.

4. Stainless-Steel Soldering: Tin edges of uncoated sheets using solder for stainless steel and acid flux. Promptly remove acid flux residue from metal after tinning and soldering. Comply with solder manufacturer's recommended methods for cleaning and neutralization.

3.4 ROOF FLASHING INSTALLATION

A. General: Install sheet metal flashing and trim to comply with performance requirements, sheet metal manufacturer's written installation instructions, and cited sheet metal standard. Provide concealed fasteners where possible, and set units true to line, levels, and slopes. Install work with laps, joints, and seams that are permanently watertight and weather resistant.

B. Roof Edge Flashing: Anchor to resist uplift and outward forces according to recommendations in cited sheet metal standard unless otherwise indicated. Interlock bottom edge of roof edge flashing with continuous cleat anchored to substrate at staggered 3-inch centers.

C. Pipe or Post Counterflashing: Install counterflashing umbrella with close-fitting collar with top edge flared for elastomeric sealant, extending a minimum of 4 inches over base flashing. Install stainless-steel draw band and tighten.

D. Counterflashing: Coordinate installation of counterflashing with installation of base flashing. Insert counterflashing in reglets or receivers and fit tightly to base flashing. Extend counterflashing 4 inches over base flashing. Lap counterflashing joints minimum of 4 inches and bed with sealant. Secure in waterproof manner by means of interlocking folded seam or blind rivets and sealant.

E. Roof-Penetration Flashing: Coordinate installation of roof-penetration flashing with installation of roofing and other items penetrating roof. Seal with elastomeric or butyl sealant and clamp flashing to pipes that penetrate roof.

3.5 WALL FLASHING INSTALLATION

A. General: Install sheet metal wall flashing to intercept and exclude penetrating moisture according to cited sheet metal standard unless otherwise indicated. Coordinate installation of wall flashing with installation of wall-opening components such as windows, doors, and louvers.

B. Opening Flashings: Install continuous flashings as detailed.

3.6 MISCELLANEOUS FLASHING INSTALLATION

A. Equipment Support Flashing: Coordinate installation of equipment support flashing with installation of roofing and equipment. Weld or seal flashing with elastomeric sealant to equipment support member.

3.7 ERECTION TOLERANCES

A. Installation Tolerances: Shim and align sheet metal flashing and trim within installed tolerance of 1/4 inch in 20 feet on slope and location lines indicated on Drawings and within 1/8-inch offset of adjoining faces and of alignment of matching profiles.

3.8 CLEANING AND PROTECTION

A. Clean exposed metal surfaces of substances that interfere with uniform oxidation and weathering.

B. Clean and neutralize flux materials. Clean off excess solder.

C. Clean off excess sealants.

D. Remove temporary protective coverings and strippable films as sheet metal flashing and trim are installed unless otherwise indicated in manufacturer's written installation instructions. On completion of installation, remove unused materials and clean finished surfaces. Maintain in a clean condition during construction.

E. Replace sheet metal flashing and trim that have been damaged or that have deteriorated beyond successful repair by finish touchup or similar minor repair procedures.

END OF SECTION

SECTION 07 72 53

SNOW GUARDS

PART 1 - GENERAL

1.1 SUMMARY

A. Section Includes:

1. Snow guards for standing seam metal roofs.

2. Non-penetrating attachment system.

B. Related Section:

1. Section 07 61 13 - Standing Seam Metal Roof Panel

1.2 SYSTEM DESCRIPTION

A. Snow guard system that attaches to standing seam metal roofs vertical legs without penetrations through roof seams or panels, causing only minor dimpling of panel, without voiding roof warranty.

1.3 AMERICAN IRON AND STEEL

A. Comply with the "American Iron and Steel (AIS)" requirements as contained in Section 436 of the Consolidated Appropriations Act, 2014, further described in the Bid Form.

1.4 SUBMITTALS

A. Action Submittals:

1. Product Data: Include construction details, material descriptions, dimensions of individual components and profiles, and installation instructions.

2. Engineering Calculations: For snow bracket system anchoring and roof system stamped and sealed by an Engineer licensed to practice in the State of Wisconsin.

3. Shop Drawings: Include roof plans showing layouts and attachment details of snow guard brackets and standing seam clamp-on snow fences.

a. Include details of snow guard brackets and standing seam clamp-on snow fences.

b. Include calculation of number and location of snow guard brackets and standing seam clamp-on snow fences, based on ground snow load, roof slope, roof type, components, spacing, and sheathing type.

c. Include drawing showing location and spacing of snow guards on roof.

4. Samples: Base, bracket, and 12-inch- long fence.

B. Informational Submittals

1. Product Test Reports: For each type of snow guard bracket and standing seam clamp-on snow fence, for tests performed by manufacturer and reviewed by a qualified testing agency.

C. Closeout Submittals

1. Certification: Installer's certification that snow guard system was installed in accordance with manufacturer's instructions and approved Shop Drawings.

1.5 DELIVERY, STORAGE AND HANDLING

A. Deliver, store and handle products and materials as specified in Division 1.

1.6 WARRANTY

A. Special Warranty on Snow Guard System: Manufacturer's standard form in which manufacturer agrees to replace and ship snow guard components that fail to meet engineered design loads within specified warranty period.

1. Warranty Period: 20 years from date of Substantial Completion.

PART 2 - PRODUCTS

2.1 PERFORMANCE REQUIREMENTS

A. Performance Requirements: Provide snow guard brackets and standing seam clamp-on snow fences that withstand exposure to weather and resist thermally induced movement without failure, rattling, or fastener disengagement due to defective manufacture, fabrication, installation, or other defects in construction.

1. Space and locate snow guards per manufacturer’s recommendations.

2. Temperature Change: 120 deg F, ambient; 180 deg F, material surfaces.

B. Structural Performance:

1. Snow Loads: As indicated on Drawings.

2.2 FENCE-TYPE SNOW GUARDS

A. Seam-Mounted, Fence-Type Snow Guards:

1. Basis-of-Design Product: Subject to compliance with requirements, provide LM Curbs.; ColorGard snow guard with SnoClip or a comparable product by one of the following:

   a. Alpine Snow Guards.

   b. TRA Snow and Sun, Inc.

2. Finish: Manufacturers standard aluminum mill finish.

   a. Fence Color Insert: As selected by Architect from manufacturer's full range to match standing seam roof color.

2.3 COMPONENTS

A. Clamps:

1. Manufactured from 6061-T6 aluminum extrusions conforming to ASTM B221 or aluminum castings conforming to ASTM B85 and to AA Aluminum Standards and Data.

2. Clamp model: LM Clamp.

3. Set screws: 300 Series stainless steel, 18-8 alloy, 3/8 inch diameter, with round nose point.

4. Attachment bolts: 300 Series stainless steel, 18-8 alloy, 10 mm diameter, flanged head.

B. Snow Straps: Lower / Upper:

1. Manufactured from 6061-T6 alloy and temper aluminum extrusions con-forming to ASTM B221 and AA Aluminum Standards and Data.

C. Stop Collar:

1. Manufactured from Type 303 stainless steel conforming to ASTM A581 or ASTM A 582.

D. Cross Members:

1. Manufactured from 6061-T6 alloy and temper aluminum extrusions con-forming to ASTM B221 and AA Aluminum Standards and Data.

E. Provide coupler ensuring alignment and structural continuity at end joints.

F. SnoClips: Aluminum, with rubber foot, minimum 3 inches wide.

PART 3 - EXECUTION

3.1 EXAMINATION

A. Examine substrates and conditions, with Installer present, for compliance with requirements for installation tolerances of snow guard brackets and standing seam clamp-on snow fence, and other conditions affecting performance of the Work.

1. Verify compatibility with and suitability of substrates including compatibility with existing finishes or primers.

2. Verify that roofing materials, framing, decking, and fastenings are capable of resisting design forces in accordance with authorities having jurisdiction.

B. Proceed with installation only after unsatisfactory conditions have been corrected.

3.2 INSTALLATION

A. Install snow guard brackets and standing seam clamp-on snow fence according to manufacturer's written instructions.

B. Do not use fasteners that will penetrate metal roofing or fastening methods that void metal roofing finish warranty.

C. Place clamps at maximum 24 inches on center or as required by in-service loads.

D. Place clamps in straight, aligned rows.

E. Do not cantilever cross members more than 3 inches beyond last clamp at ends.

END OF SECTION

SECTION 07 90 00

JOINT SEALERS

PART 1 GENERAL

1.1 SUMMARY

A. Section Includes: Sealing and caulking for perimeter joints around all doors, louvers and frames, control joints, expansion and contraction joints, pressure relieving joints, masonry joints, and joints at the perimeter of conduits at walls and partitions and at all joints requiring weathertight sealing.

B. Related Work Specified in Other Sections Includes, But is Not Limited to, the Following:

1. Section 04 22 00 - Concrete Unit Masonry

2. Section 08 11 16 - Aluminum Doors and Frames

3. Section 08 91 00 - Metal Louvers

1.2 REFERENCES

A. Codes and standards referred to in this Section are:

1. ASTM C 920 - Elastomeric Joint Sealants

1.3 PERFORMANCE REQUIREMENTS

A. Provide joint sealants that establish and maintain watertight and airtight continuous joint seals without staining or deteriorating joint substrates.

1.4 PRECONSTRUCTION TESTING

A. Preconstruction Field-Adhesion Testing: Before installing sealants, field test their adhesion to Project joint substrates as follows:

1. Locate test joints where indicated on Project or, if not indicated, as directed by RESIDENT PROJECT REPRESENTATIVE.

2. Conduct field tests for each application indicated below:

3. Each kind of sealant and joint substrate indicated.

4. Notify RESIDENT PROJECT REPRESENTATIVE seven days in advance of dates and times when test joints will be erected.

a. Test Method: Test joint sealants according to Method A, Field-Applied Sealant Joint Hand Pull Tab, in Appendix X1 in ASTM C 1193 or Method A, Tail Procedure, in ASTM C 1521.

(1) For joints with dissimilar substrates, verify adhesion to each substrate separately; extend cut along one side, verifying adhesion to opposite side. Repeat procedure for opposite side.

5. Report whether sealant failed to adhere to joint substrates or tore cohesively. Include data on pull distance used to test each kind of product and joint substrate. For sealants that fail adhesively, re-test until satisfactory adhesion is obtained.

6. Evaluation of Preconstruction Field-Adhesion-Test Results: Sealants not evidencing adhesive failure from testing, in absence of other indications of noncompliance with requirements, will be considered satisfactory. Do not use sealants that fail to adhere to joint substrates during testing.

1.5 SUBMITTALS

A. General: Provide all submittals, including the following, as specified in Division 1.

B. Product Data: For each joint-sealant product indicated.

C. Samples for Initial Selection: Manufacturer's color charts consisting of strips of cured sealants showing the full range of colors available for each product exposed to view.

D. Product Data and Information: Submit manufacturer's installation instructions. Indicate special procedures, surface preparation, perimeter conditions requiring special attention, and written recommendations for primer, backup materials and solvents.

E. Joint-Sealant Schedule: Include the following information:

1. Joint-sealant application, joint location, and designation.

2. Joint-sealant manufacturer and product name.

3. Joint-sealant formulation.

4. Joint-sealant color.

F. Product Certificates: For each type of joint sealant and accessory, signed by product manufacturer.

G. Product Test Reports: Based on evaluation of comprehensive tests performed by a qualified testing agency, indicating that sealants comply with requirements.

H. Qualification Data: For qualified Installer.

I. Preconstruction Compatibility and Adhesion Test Reports: From sealant manufacturer, indicating the following:

1. Materials forming joint substrates and joint-sealant backings have been tested for compatibility and adhesion with joint sealants.

2. Interpretation of test results and written recommendations for primers and substrate preparation needed for adhesion.

J. Preconstruction Field-Adhesion Test Reports: Indicate which sealants and joint preparation methods resulted in optimum adhesion to joint substrates based on testing specified in "Preconstruction Testing" Article.

K. Field-Adhesion Test Reports: For each sealant application tested.

L. Warranties: Sample of special warranties.

1.6 QUALITY ASSURANCE

A. Installer Qualifications: Manufacturer's authorized Installer who is approved or licensed for installation of elastomeric sealants required for this Project.

B. Source Limitations: Obtain each type of joint sealant through one source from a single manufacturer.

C. Product Testing: Test joint sealants using a qualified testing agency.

1. Testing Agency Qualifications: An independent testing agency qualified according to ASTM C 1021 to conduct the testing indicated.

2. Test according to SWRI's Sealant Validation Program for compliance with requirements specified by reference to ASTM C 920 for adhesion and cohesion under cyclic movement, adhesion-in-peel, and indentation hardness.

D. Mockups: Install sealants in mockups, to verify selections made under sample submittals and to demonstrate aesthetic effects and set quality standards for materials and execution. Use materials and installation methods specified in this Section.

1.7 PROJECT CONDITIONS

A. Do not proceed with installation of joint sealants under the following conditions:

1. When ambient and substrate temperature conditions are outside limits permitted by joint-sealant manufacturer or are below 40 degrees F.

2. When joint substrates are wet.

3. Where joint widths are less than those allowed by joint-sealant manufacturer for applications indicated.

4. Contaminants capable of interfering with adhesion have not yet been removed from joint substrates.

1.8 DELIVERY, STORAGE AND HANDLING

A. Deliver, store and handle products and materials as specified in Division 1.

1.9 WARRANTY

A. Special Installer's Warranty: Manufacturer's standard form in which Installer agrees to repair or replace joint sealants that do not comply with performance and other requirements specified in this Section within specified warranty period.

1. Warranty Period: Two years from date of Substantial Completion.

B. Special Manufacturer's Warranty: Manufacturer's standard form in which joint-sealant manufacturer agrees to furnish joint sealants to repair or replace those that do not comply with performance and other requirements specified in this Section within specified warranty period.

1. Warranty Period: Five years from date of Substantial Completion.

C. Special warranties specified in this article exclude deterioration or failure of joint sealants from the following:

1. Movement of the structure caused by structural settlement or errors attributable to design or construction resulting in stresses on the sealant exceeding sealant manufacturer's written specifications for sealant elongation and compression.

2. Disintegration of joint substrates from natural causes exceeding design specifications.

3. Mechanical damage caused by individuals, tools, or other outside agents.

4. Changes in sealant appearance caused by accumulation of dirt or other atmospheric contaminants.

PART 2 PRODUCTS

2.1 MATERIALS, GENERAL

A. Compatibility: Provide joint sealants, backings, and other related materials that are compatible with one another and with joint substrates under conditions of service and application, as demonstrated by sealant manufacturer, based on testing and field experience.

B. Liquid-Applied Joint Sealants: Comply with ASTM C 920 and other requirements indicated for each liquid-applied joint sealant specified, including those referencing ASTM C 920 classifications for type, grade, class, and uses related to exposure and joint substrates.

C. Stain-Test-Response Characteristics: Where sealants are specified to be non-staining to porous substrates, provide products that have undergone testing according to ASTM C 1248 and have not stained porous joint substrates indicated for Project.

D. Colors of Exposed Joint Sealants: As selected by ENGINEER from manufacturer's full range.

E. VOC Content of Interior Sealants: Provide sealants and sealant primers for use inside the weatherproofing system that comply with the following limits for VOC content when calculated according to 40 CFR 59, Part 59, Subpart D (EPA Method 24):

1. Architectural Sealants: 250 g/L.

2. Sealant Primers for Nonporous Substrates: 250 g/L.

3. Sealant Primers for Porous Substrates: 775 g/L.

2.2 JOINT DESIGN

A. Joint width should be 4 times anticipated movement, but not less than 1/4-inch wide.

B. Expansion Joints:

1. Minimum width and depth of any sealant application: 1/4-inch x 1/4-inch.

2. For joints less than 1/2-inch wide the depth of sealant may be equal to the width.

3. For joints from 1/2-inch to 1-inch wide: sealant depth should be approximately one-half of the joint width.

4. Maximum depth of any sealant application: 1/2-inch.

5. Follow manufacturer instructions for joints wider than 1-inch.

C. Perimeter joints:

1. Fillet beads, angle beads around windows and doors: Provide a minimum surface contact area of 1/4-inch onto each substrate.

2. Provide proper joint backing or bond breaking to allow for anticipated movement.

2.3 SILICONE JOINT SEALANTS

A. Single-Component, Nonsag, Neutral-Curing Silicone Joint Sealant: ASTM C 920, Type S, Grade NS, Class 100/50, for Use NT.

1. Products: Subject to compliance with requirements, provide one of the following:

a. Dow Corning Corporation; 790.

b. GE Advanced Materials - Silicones; SilPruf LM SCS2700.

c. Pecora Corporation; 301 NS.

d. Sika Corporation, Construction Products Division; SikaSil-C990.

e. Tremco Incorporated; Spectrem 1.

2.4 JOINT-SEALANT BACKING

A. General: Provide sealant backings of material and type that are non-staining; are compatible with joint substrates, sealants, primers, and other joint fillers; and are approved for applications indicated by sealant manufacturer based on field experience and laboratory testing.

B. Cylindrical Sealant Backings: ASTM C 1330, Type C (closed-cell material with a surface skin), and of size and density to control sealant depth and otherwise contribute to producing optimum sealant performance.

C. Bond-Breaker Tape: Polyethylene tape or other plastic tape recommended by sealant manufacturer for preventing sealant from adhering to rigid, inflexible joint-filler materials or joint surfaces at back of joint where such adhesion would result in sealant failure. Provide self-adhesive tape where applicable.

2.5 MISCELLANEOUS MATERIALS

A. Primer: Material recommended by joint-sealant manufacturer where required for adhesion of sealant to joint substrates indicated, as determined from preconstruction joint-sealant-substrate tests and field tests.

B. Cleaners for Nonporous Surfaces: Chemical cleaners acceptable to manufacturers of sealants and sealant backing materials, free of oily residues or other substances capable of staining or harming joint substrates and adjacent nonporous surfaces in any way, and formulated to promote optimum adhesion of sealants to joint substrates.

C. Masking Tape: Non staining, nonabsorbent material compatible with joint sealants and surfaces adjacent to joints.

PART 3 EXECUTION

3.1 EXAMINATION

A. Examine joints indicated to receive joint sealants, with Installer present, for compliance with requirements for joint configuration, installation tolerances, and other conditions affecting joint-sealant performance.

B. Proceed with installation only after unsatisfactory conditions have been corrected.

3.2 PREPARATION

A. Surface Cleaning of Joints: Clean out joints immediately before installing joint sealants to comply with joint-sealant manufacturer's written instructions and the following requirements:

1. Remove all foreign material from joint substrates that could interfere with adhesion of joint sealant, including dust, paints (except for permanent, protective coatings tested and approved for sealant adhesion and compatibility by sealant manufacturer), old joint sealants, oil, grease, waterproofing, water repellents, water, surface dirt, and frost.

2. Clean porous joint substrate surfaces by brushing, grinding, blast cleaning, mechanical abrading, or a combination of these methods to produce a clean, sound substrate capable of developing optimum bond with joint sealants. Remove loose particles remaining after cleaning operations above by vacuuming or blowing out joints with oil-free compressed air. Porous joint substrates include the following:

   a. Concrete

   b. Masonry

3. Remove laitance and form-release agents from concrete.

4. Clean nonporous surfaces with chemical cleaners or other means that do not stain, harm substrates, or leave residues capable of interfering with adhesion of joint sealants. Nonporous joint substrates include the following: Metal.

5. Joint Priming: Prime joint substrates, where recommended in writing by joint-sealant manufacturer, based on preconstruction joint-sealant-substrate tests or prior experience. Apply primer to comply with joint-sealant manufacturer's written instructions. Confine primers to areas of joint-sealant bond; do not allow spillage or migration onto adjoining surfaces.

6. Masking Tape: Use masking tape where required to prevent contact of sealant with adjoining surfaces that otherwise would be permanently stained or damaged by such contact or by cleaning methods required to remove sealant smears. Remove tape immediately after tooling without disturbing joint seal.

3.3 INSTALLATION OF JOINT SEALANTS

A. General: Comply with joint-sealant manufacturer's written installation instructions for products and applications indicated, unless more stringent requirements apply.

B. Sealant Installation Standard: Comply with recommendations in ASTM C 1193 for use of joint sealants as applicable to materials, applications, and conditions indicated.

C. Install sealant backings of type indicated to support sealants during application and at position required to produce cross-sectional shapes and depths of installed sealants relative to joint widths that allow optimum sealant movement capability.

1. Do not leave gaps between ends of sealant backings.

2. Do not stretch, twist, puncture, or tear sealant backings.

3. Remove absorbent sealant backings that have become wet before sealant application and replace them with dry materials.

D. Install bond-breaker tape behind sealants where sealant backings are not used between sealants and backs of joints.

E. Install sealants using proven techniques that comply with the following and at the same time backings are installed:

1. Place sealants so they directly contact and fully wet joint substrates.

2. Completely fill recesses in each joint configuration.

3. Produce uniform, cross-sectional shapes and depths relative to joint widths that allow optimum sealant movement capability.

F. Tooling of Nonsag Sealants: Immediately after sealant application and before skinning or curing begins, tool sealants according to requirements specified in subparagraphs below to form smooth, uniform beads of configuration indicated; to eliminate air pockets; and to ensure contact and adhesion of sealant with sides of joint.

1. Remove excess sealant from surfaces adjacent to joints.

2. Use tooling agents that are approved in writing by sealant manufacturer and that do not discolor sealants or adjacent surfaces.

3. Provide concave joint profile per Figure 8A in ASTM C 1193, unless otherwise indicated.

4. Provide flush joint profile where indicated per Figure 8B in ASTM C 1193.

5. Provide recessed joint configuration of recess depth and at locations indicated per Figure 8C in ASTM C 1193.

a. Use masking tape to protect surfaces adjacent to recessed tooled joints.

3.4 CLEANING

A. Clean off excess sealant or sealant smears adjacent to joints as the Work progresses by methods and with cleaning materials approved in writing by manufacturers of joint sealants and of products in which joints occur.

3.5 PROTECTION

A. Protect joint sealants during and after curing period from contact with contaminating substances and from damage resulting from construction operations or other causes so sealants are without deterioration or damage at time of Substantial Completion. If, despite such protection, damage or deterioration occurs, cut out and remove damaged or deteriorated joint sealants immediately so installations with repaired areas are indistinguishable from original work.

3.6 JOINT-SEALANT SCHEDULE

A. Joint-Sealant Application: Joints in vertical surfaces and horizontal nontraffic surfaces JS-2.

1. Joint Locations:

a. Control joints in unit masonry.

b. Joints between different materials.

c. Perimeter joints between materials and frames of doors and louvers.

d. Other joints as indicated.

2. Silicone Joint Sealant: Single component, non-sag, neutral curing, Class 100/50.

3. Joint-Sealant Color: As selected by ENGINEER from manufacturer's full range of colors.

END OF SECTION

SECTION 08 11 16

ALUMINUM DOORS AND FRAMES

PART 1 GENERAL

1.1 SUMMARY

A. This Section includes aluminum doors and frames.

B. Related Work Specified in Other Sections Includes, but is Not Limited to, the following:

1. Section 08 71 00 - Finish Hardware.

1.2 REFERENCES

A. Codes and standards referred to in this Section are:

1. AA - Designation System for Aluminum Finishes.

2. ASTM B209 - Specification for Aluminum and Aluminum-Alloy Sheet and Plate.

1.3 AMERICAN IRON AND STEEL

A. Comply with the "American Iron and Steel (AIS)" requirements as contained in Section 436 of the Consolidated Appropriations Act, 2014, further described in the Bid Form.

1.4 SUBMITTALS

A. Applicable information for each type of door and frame, including:

1. Frame conditions and complete anchorage details, supplemented by suitable schedules covering doors and frames.

2. Connections of door frames to masonry concealed in frames.

1.5 DELIVERY, STORAGE, AND HANDLING

A. Deliver, store and handle products and materials as specified in Division 1.

B. Properly identify each item with number used in Contract Drawings.

C. Store doors upright, in protected dry area, at least 1 inch off ground or floor and at least 1/4 inch between individual pieces.

PART 2 PRODUCTS

2.1 MANUFACTURERS

A. Cline Aluminum Doors, Inc., Bradenton, FL; Series 100BE with specified rigid insulation.

B. Kawneer Company, Inc.; Flushline.

C. Special Lite; SL-16.

2.2 MATERIALS

A. Design Requirement: Complete assembly, each component and anchorage to building to withstand a wind load of 30 pounds per square foot. See Structural General Notes for additional load requirements

B. Aluminum Frames:

1. Extruded from 6063-T5 aluminum alloy meeting ASTM B209.

2. Minimum Wall Thickness: 0.125 inch.

3. Mechanically fastened corners.

4. Reinforcements: 6061-T6 aluminum of 1/4-inch minimum thickness.

5. Size and Profile: 5 inches by 1-3/4 inches, with open or closed back and applied stop with integral weatherstripping.

6. Concealed fasteners or welding are preferred to through-the-face fasteners.

C. Flush Aluminum Doors: 6063-T5 extrusions and 5005-H14, smooth face sheets.

1. Minimum component thicknesses as follows:

a. Base Sheets: 0.090 inch.

b. Beveled Lock Rail Edge: 0.125 inch.

c. Hinge Rail Edge: 0.190 inch.

d. Internal Grid Sections: 0.080 inch.

2. R-Value: 9 minimum.

2.3 MISCELLANEOUS ITEMS

A. Furnish manufacturer's standard anchors, fasteners, and other ancillary items.

2.4 FACTORY FINISHING REQUIREMENTS

A. Aluminum Door and Frame Finish: Clear anodized AA-M12C22A41.

PART 3 EXECUTION

3.1 INSTALLATION

A. Frames:

1. Installation: Maintain scheduled dimensions, hold head level, and maintain jambs plumb and square.

2. Secure anchorages and connections to adjacent construction.

3. Wherever possible, leave frame spreader bars intact until frames are set perfectly square and plumb and anchors are securely attached.

4. Install following manufacturer's recommendations.

B. Doors: Follow manufacturer's recommendations.

C. Hardware:

1. In accordance with manufacturer's templates and instructions.

2. Adjust operable parts for correct function.

3. Remove hardware, with exception of prime coated items, tag, box, and reinstall after finish paint work is completed.

3.2 PROTECTION

A. Protect installed doors and frames against damage from other construction work.

3.3 SCHEDULES

A. For tabulation of door and frame characteristics, such as size, type, and detail, see Drawings.

END OF SECTION

(NO TEXT FOR THIS PAGE)

SECTION 08 71 00

FINISH HARDWARE

PART 1 GENERAL

1.1 SUMMARY

A. This Section includes commercial door hardware for swinging doors and integration of magnetic access control with OWNER's existing system.

B. Related Work Specified in Other Sections Includes, but is Not Limited to, the Following:

1. Section 08 11 16 - Aluminum Doors and Frames.

1.2 REFERENCES

A. Codes and standards referred to in this Section are:

1. BHMA A156.1 - Butts and Hinges

2. BHMA A156.2 - Bored and Preassembled Locks and Latches

3. BHMA A156.4 - Door Controls and Closers

4. NFPA80 - Fire Doors and Windows

5. NFPA101 - Life Safety Code

6. UL10B - Fire Tests of Door Assemblies

7. UL305 - Panic Hardware

1.3 DEFINITIONS

A. Fire-Rated Opening: Fire-rated doors, frames and hardware that conform to all applicable requirements of a governing authority and bear the inspecting authority's identification label.

B. Fire-Rated Opening: Fire-rated doors, frames and hardware that conform to all applicable requirements of a governing authority and bear the inspecting authority's identification label.

1.4 AMERICAN IRON AND STEEL

A. Comply with the "American Iron and Steel (AIS)" requirements as contained in Section 436 of the Consolidated Appropriations Act, 2014, further described in the Bid Form.

1.5 SUBMITTALS

A. General: Provide all submittals, including the following, as specified in Division 1.

B. Product Data: Include construction and installation details, material descriptions, dimensions of individual components and profiles, and finishes.

C. Product Test Reports: Based on evaluation of comprehensive tests performed by manufacturer and witnessed by a qualified testing agency, for locks, exit device and closers.

D. Maintenance Data: For each type of door hardware to include in maintenance manuals. Include final hardware and keying schedule.

E. Warranty: Special warranty specified in this Section.

F. Other Action Submittals:

1. Door Hardware Sets: Prepared by or under the supervision of the manufacturer's Architectural Hardware Consultant, detailing fabrication and assembly of door hardware, as well as procedures and diagrams. Coordinate the final door hardware sets with doors, frames, and related work to ensure proper size, thickness, hand, function, and finish of door hardware.

a. Format: Use same scheduling sequence and vertical format and use same door numbers as in the Contract Documents.

b. Content: Include the following information:

(1) Identification number, location, hand, fire rating, and material of each door and frame.

(2) Type, style, function, size, quantity, and finish of each door hardware item.

(3) Complete designations of every item required for each door or opening including name and manufacturer.

(4) Fastenings and other pertinent information.

(5) Location of each door hardware set, cross-referenced to Drawings, both on floor plans and in door and frame schedule.

(6) Explanation of abbreviations, symbols, and codes contained in schedule.

(7) Mounting locations for door hardware.

(8) Door and frame sizes and materials.

c. Submittal Sequence: Submit the final door hardware sets at earliest possible date, particularly where approval of the door hardware sets must precede fabrication of other work that is critical in Project construction schedule. Include Product Data, Samples, Shop Drawings of other work affected by door hardware, and other information essential to the coordinated review of the door hardware sets.

2. Keying Schedule: Prepared by or under the supervision of Architectural Hardware Consultant, detailing OWNER's final keying instructions for locks. Include schematic keying diagram and index each key set to unique door designations.

1.6 QUALITY ASSURANCE

A. Installer Qualifications: Substantial documented experience required for company specializing in performing the Work of this Section.

B. Hardware Consultant Qualifications: A person who is currently certified by the Door and Hardware Institute as an Architectural Hardware Consultant and who is experienced in providing consulting services for door hardware installations that are comparable in material, design, and extent to that indicated for this Project.

C. Source Limitations: Obtain each type and variety of door hardware from a single manufacturer, unless otherwise indicated.

D. Fire-Rated Door Assemblies: Assemblies complying with NFPA 80 that are listed and labeled by a testing and inspecting agency acceptable to authorities having jurisdiction, for fire ratings indicated, based on testing according to NFPA 252.

E. Pre-installation Conference: Conduct conference at Project site.

F. Regulatory Requirements: Conform to NFPA 80, NFPA 101 and UL 10B requirements applicable to fire-rated doors and frames.

1.7 DELIVERY, STORAGE AND HANDLING

A. General: Deliver, store and handle products and materials as specified in Division 1 and as follows.

B. Identification: Have the hardware supplier package and label each item of hardware separately. Tag each item in accordance with the approved final hardware schedule. Have each package contain the appropriate fastenings, instructions and installation templates.

C. Schedule: Furnish a complete hardware supplier's schedule when the hardware is delivered. Direct supplier to deliver applicable items of hardware to door fabricators for factory installation.

D. Storage: When received, properly store the hardware in a safe place.

E. Keys: Deliver the keys to the OWNER, tagged and plainly marked on the face of the envelope with the key change number, door designation, and all other required identifying information.

1.8 COORDINATION

A. Coordinate all Work involving manufacture or fabrication of internal reinforcement for door hardware.

B. Templates: Distribute door hardware templates for doors, frames, and other work specified to be factory prepared for installing door hardware. Check Shop Drawings of other work to confirm that adequate provisions are made for locating and installing door hardware to comply with indicated requirements.

1.9 WARRANTY

A. Five-year warranty or manufacturer’s standard warranty, whichever is longer from date of Substantial Completion.

1.10 MAINTENANCE MATERIALS

A. Provide the following maintenance materials: Provide special wrenches, tools and accessories applicable to each different or special hardware component.

PART 2 PRODUCTS

2.1 MANUFACTURERS

A. In other Part 2 articles where titles below introduce lists, the following requirements apply to product selection:

1. Available Manufacturers: Subject to compliance with requirements, manufacturers offering products that may be incorporated into the Work include, but are not limited to, manufacturers specified.

2.2 MATERIALS

A. General: Provide hardware needed for the Work as shown, meeting or exceeding the following standards of quality.

2.3 HINGES, GENERAL

A. Quantity: Provide the following, unless otherwise indicated:

1. Three Hinges: For doors with heights 61 to 90 inches.
2. Four Hinges: For doors with heights 91 to 120 inches.

B. Template Requirements: Provide only template-produced units.

C. Hinge Weight: Unless otherwise indicated, provide the following:

1. Entrance Doors: Concealed Anti-friction Bearing Heavy-weight hinges.

2. Doors with Closers: Concealed Anti-friction Bearing Heavy-weight hinges.

3. Interior Doors: Concealed Anti-friction Bearing Heavy-weight hinges.

D. Hinge Base Metal: Stainless steel, with stainless-steel pin.

E. Non-removable Pins (NRP): Provide set screw in hinge barrel that, when tightened into a groove in hinge pin, prevents removal of pin while door is closed; for out-swinging exterior doors and out-swinging corridor doors with locks.

F. Fasteners: Comply with the following:

1. Machine Screws: For metal doors and frames. Install into drilled and tapped holes.

2.4 HINGES

A. Butts and Hinges: BHMA A156.1

B. Template Hinge Dimensions: BHMA A156.7.

C. Available Manufacturers:

1. Bommer Industries, Inc. (BI).

2. Hager Companies (HAG).

3. McKinney Products Company; an ASSA ABLOY Group company (MCK).

2.5 LOCKS AND LATCHES, GENERAL

A. Provide operating devices that do not require tight grasping, pinching, or twisting of the wrist and that operate with a force of not more than 5 lbf.

B. Latches and Locks for Means of Egress Doors: Comply with NFPA 101. Provide Latches that require no more than 15 lbf to release the latch. Locks must not require use of a key, tool, or special knowledge for operation.

C. Lock Trim:

1. Levers: Cast.

a. Dorma – LTA

b. Schlage – 03A

c. Sargent – LNJ

D. Lock Throw: Comply with testing requirements for length of bolts required for labeled fire doors, and as follows:

1. Mortise Locks: Minimum 3/4-inch latchbolt throw.

E. Backset: 2-3/4 inches, unless otherwise indicated.

F. Strikes: Manufacturer's standard strike with strike box for each latchbolt or lock bolt, with curved lip extended to protect frame, finished to match door hardware set, and as follows:

1. Strikes for Mortise Locks and Latches: BHMA A156.13.

2. Aluminum-Frame Strike Box: Manufacturer's special strike box fabricated for aluminum framing

2.6 EXIT DEVICES

A. Exit Devices: BHMA A156.3, Grade 1

B. Exit Devices for Means of Egress Doors: Comply with NFPA 101. Provide exit devices that require no more than 15 lbf to release the latch and locks that do not require use of a key, tool, or special knowledge for operation.

C. Available Manufacturers:

1. Dorma Americas (DA).

2. Precision Hardware Inc.

3. SARGENT Manufacturing Company; an ASSA ABLOY Group company (SGT).

4. Schlage Commercial Lock Division; an Ingersoll-Rand Company (SCH).

2.7 LOCK CYLINDERS

A. Standard Lock Cylinders: BHMA A156.5**,** Grade 1

1. Provide final cores that are keyed alike and conform to the existing system with standard 6 pin tumbler cylinders.

2. Manufacturer: Best Lock Company

3. Provide locks with cylinders equipped for interchangeable-core pin tumbler inserts.

4. Furnish and install final cores and provide keys, including construction keys, to the OWNER after final acceptance, unless otherwise directed.

5. Furnish only temporary inserts for the construction period, and remove when directed.

2.8 KEYING

A. Key System:

1. Comply with OWNER's instructions for master keying and, except as otherwise indicated, provide individual change key for each lock that is not designated to be keyed alike. Permanently inscribe each key with the number of the lock that identifies the cylinder manufacturer's key symbol, and notate each key "DO NOT DUPLICATE."

B. Quantities: Furnish 3 change keys for each lock, 5 master keys for each master system, and 5 grandmaster keys for each grandmaster system.

1. Furnish one extra blank for each lock.

2. Deliver keys to the OWNER.

C. Key Numbering: Provide keys stamped with factory key numbers.

D. Provide keys of nickel silver only.

2.9 OPERATING TRIM

A. Standard: BHMA A156.6

B. Materials: Fabricate from stainless steel, unless otherwise indicated.

C. Available Manufacturers:

1. Burns Manufacturing Incorporated (BM).

2. Hager Companies (HAG).

3. Hiawatha, Inc. (HI).

4. IVES Hardware; an Ingersoll-Rand Company (IVS).

2.10 CLOSERS

A. Comply with the following maximum opening-force requirements:

1. Interior, Non-Fire-Rated Hinged Doors: 5 lbf applied perpendicular to door.

2. Fire Doors: Minimum opening force allowable by authorities having jurisdiction.

B. Door Closers for Means of Egress Doors: Comply with NFPA 101. Provide door closers that require no more than 30 lbf to set door in motion and not more than 15 lbf to open door to minimum required width.

C. Size of Units: Unless otherwise indicated, comply with manufacturer's written recommendations for size of door closers depending on size of door, exposure to weather, and anticipated frequency of use. Provide factory-sized closers, adjustable to meet field conditions and requirements for opening force.

D. Surface Closers: BHMA A156.4**,** Grade 1 Provide type of arm required for closer to be located on non-public side of door, unless otherwise indicated.

1. Available Manufacturers:

a. Dorma Americas (DA).

b. LCN Closers; an Ingersoll-Rand Company (LCN).

c. SARGENT Manufacturing Company; an ASSA ABLOY Group company (SGT).

2.11 STOPS AND HOLDERS

A. Stops and Bumpers: BHMA A156.16, Grade 1

1. Provide wall stops for doors unless other type stops are scheduled or indicated.

2. Where floor or wall stops are not appropriate, provide overhead stops or holders.

B. Combination Overhead, Floor and Wall Stops and Holders:
BHMA A156.8, Grade 1

2.12 DOOR GASKETING

A. Standard: BHMA A156.22

B. General: Provide continuous weather-strip gasketing on exterior doors and provide smoke, light, or sound gasketing on interior doors where indicated or scheduled. Provide noncorrosive fasteners for exterior applications and elsewhere as indicated.

1. Perimeter Gasketing: Apply to head and jamb, forming seal between door and frame.

2. Meeting Stile Gasketing: Fasten to meeting stiles, forming seal when doors are closed.

3. Door Bottoms: Apply to bottom of door, forming seal with threshold when door is closed.

C. Air Leakage: Not to exceed 0.50 cfm per foot of crack length for gasketing other than for smoke control, as tested according to ASTM E 283.

D. Replaceable Seal Strips: Provide only those units where resilient or flexible seal strips are easily replaceable and readily available from stocks maintained by manufacturer.

E. Gasketing Materials: ASTM D 2000 and AAMA 701/702.

1. Available Manufacturers:

a. Hager Companies (HAG).

b. Pemko Manufacturing Co. (PEM).

c. Reese Enterprise (REE).

d. Zero International (ZRO).

e. K.N. Crowder (KNC).

2.13 THRESHOLDS

A. Standard: BHMA A156.21

B. Bevel raised thresholds with a slope of not more than 1:2.

C. Thresholds for Means of Egress Doors: Comply with NFPA 101. Maximum 1/2 inch high.

D. Available Manufacturers:

1. Hager Companies (HAG).

2. Pemko Manufacturing Co. (PEM).

3. Reese Enterprise (REE).

4. Zero International (ZRO).

5. K.N. Crowder (KNC).

2.14 FABRICATION

A. Manufacturer's Nameplate: Do not provide products that have manufacturer's name or trade name displayed in a visible location except in conjunction with required fire-rated labels and as otherwise approved by OWNER.

1. Manufacturer's identification is permitted on rim of lock cylinders only.

B. Base Metals: Produce door hardware units of base metal, fabricated by forming method indicated, using manufacturer's standard metal alloy, composition, temper, and hardness. Furnish metals of a quality equal to or greater than that of specified door hardware units and BHMA A156.18. Do not furnish manufacturer's standard materials or forming methods if different from specified standard.

C. Fasteners: Provide door hardware manufactured to comply with published templates generally prepared for machine, wood, and sheet metal screws. Provide screws according to commercially recognized industry standards for application intended, except aluminum fasteners are not permitted. Provide Phillips flat-head screws with finished heads to match surface of door hardware, unless otherwise indicated.

1. Concealed Fasteners: For door hardware units that are exposed when door is closed, except for units already specified with concealed fasteners. Do not use through bolts for installation where bolt head or nut on opposite face is exposed unless it is the only means of securely attaching the door hardware. Where through bolts are used on hollow door and frame construction, provide sleeves for each through bolt.

2.15 FINISHES

A. Standard: BHMA A156.18, as indicated in door hardware sets.

B. Protect mechanical finishes on exposed surfaces from damage by applying a strippable, temporary protective covering before shipping.

C. Appearance of Finished Work: Variations in appearance of abutting or adjacent pieces are acceptable if they are within one-half of the range of approved Samples. Noticeable variations in the same piece are not acceptable. Variations in appearance of other components are acceptable if they are within the range of approved Samples and are assembled or installed to minimize contrast.

PART 3 EXECUTION

3.1 EXAMINATION

A. Examine doors and frames, with Installer present, for compliance with requirements for installation tolerances, labeled fire door assembly construction, wall and floor construction, and other conditions affecting performance.

B. Examine roughing-in for electrical power systems to verify actual locations of wiring connections before electrified door hardware installation.

C. Proceed with installation only after unsatisfactory conditions have been corrected

3.2 INSTALLATION

A. Install each door hardware item to comply with manufacturer's written instructions. Where cutting and fitting are required to install door hardware onto or into surfaces that are later to be painted or finished in another way, coordinate removal, storage, and reinstallation of surface protective trim units with finishing work specified in Division 9. Do not install surface-mounted items until finishes have been completed on substrates involved.

B. Set units level, plumb, and true to line and location. Adjust and reinforce attachment substrates as necessary for proper installation and operation.

1. Drill and countersink units that are not factory prepared for anchorage fasteners. Space fasteners and anchors according to industry standards.

3.3 ADJUSTING

A. Initial Adjustment: Adjust and check each operating item of door hardware and each door to ensure proper operation or function of every unit. Replace units that cannot be adjusted to operate as intended. Adjust door control devices to compensate for final operation of heating and ventilating equipment and to comply with referenced accessibility requirements.

1. Door Closers: Unless otherwise required by authorities having jurisdiction, adjust sweep period so that, from an open position of 70 degrees, the door will take at least 3 seconds to move to a point 3 inches from the latch, measured to the leading edge of the door.

B. Occupancy Adjustment: Approximately six months after date of Substantial Completion, Installer's Architectural Hardware Consultant will examine and readjust, including adjusting operating forces, each item of door hardware as necessary to ensure function of doors, door hardware, and electrified door hardware.

3.4 CLEANING AND PROTECTION

A. Clean adjacent surfaces soiled by door hardware installation.

B. Clean operating items as necessary to restore proper function and finish.

C. Provide final protection and maintain conditions that ensure that door hardware is without damage or deterioration at time of Substantial Completion.

3.5 DEMONSTRATION

A. Engage a factory-authorized service representative to train maintenance personnel to adjust, operate, and maintain door hardware and door hardware finishes.

3.6 DOOR HARDWARE SETS

A. Furnish products as listed in the following hardware sets:

B. Manufacturers, finish and their abbreviations used in the schedule:

BOM	Bommer Industries, Inc.
DOR	Dorma Americas.
HIA	Hiawatha, Inc.
REE	Reese Enterprise.
LUN	Lund Equipment Co., Inc.

600	Primed Coat
626	Brass/Satin Chrome
628	Anodized Aluminum
630	Satin Stainless Steel
652	Steel/Satin Chrome
689	Aluminum
Blu-Wht	Blue & White
Gry	Gray
Wht	White

AMS	All Machine Screws
AWS	All Wood Screws
F	Fire Rated
FSV	Field Selectable Voltage
LM	Latch Monitor
MS	Machine Screws
MS/ES	Machine Screws/Expansion Shields
WS	Wood Screws

SMS	Sheet Metal Screws
SNB	Sex Nuts & Bolts
SSMS/ES25	¼" – 20 Stainless Steel Machine Screws/Expansion Shields
STK	Strike Plate
STMS	Strike Template Machine Screws
T	Temporary Construction Core
T.B.	Toggle Bolt
.050	16 Gauge

3.7 SCHEDULE

A. General: Provide hardware for each door in accordance with the Hardware Schedule. In the event of a discrepancy between the hardware items and the Hardware Schedule, the Hardware Schedule governs.

B. Listing: The items of hardware listed in the following schedule are as required for each door or each pair of doors as indicated. Where the symbol "NF" is used after a lockset number, provide a case with nonferrous parts.

C. Completeness of Schedule: Do not construe the schedule of hardware included to be complete. Provide all hardware required for the intended operation and for all doors unless otherwise specified. Provide hardware for doors not scheduled similar in type and quality to that provided for scheduled doors that are to be used for similar purposes.

D. Intent of Schedule: Provide hardware of the type, materials, strength, design, quality, weight, mechanical construction and operation of hardware as described by the catalog numbers specified, or equal.

E. The numbers and descriptions shown in the following Hardware Schedule refer to the following manufacturers:

1.	Hinges:	Hager Hinge Company (HH), Bommer Industries (BO), Inc. Stanley (ST) or equal.
2.	Locksets and Latchsets:	Dorma Architectural Hardware (DOR), or equal.
3.	Closers:	Dorma Architectural Hardware (DOR), or equal
4.	Overhead Holders and and Stops:	Glynn-Johnson (G-J)
5.	Exit Devices:	Dorma Architectural Hardware (DOR), or equal.
6.	Flush Bolts and Dustproof Strikes:	H.B. Ives (I), and Glynn-Johnson (G-J), or equal

7. Kickplates: H.B. Ives (I), and Brookline Industries, Inc. (BL), or equal

8. Door Stops and Holders: H.B. Ives (I), Brookline Industries, Inc. (BL), and Hager Hinge Company (HH), or equal

9. Door Coordinators: H.B. Ives (I), and Glynn-Johnson (G-J), or equal

10. Door weatherproofing PEMKO or equal.

11. Electric Strike: Dorma Americas, Hess or equal.

F. Schedule: Provide products as listed in the following schedule:

Set No. 1 **Pair of Aluminum Doors**

DOOR	FROM	TO	HANDING
101	Exterior	Return Flow Pipeline Reaction Structure	RHRA / LHR

QTY	LEAF	DESCRIPTION	FINISH	MFR
8 EA	--	Hinges - BB5006, 4.5”X4.5” NRP AMS	630	BOM
1 EA	I	Mortise Lock, two sided dummy func. - M9004	626	DOR
1 EA	A	Mortise Exit Device – F9800 x ZR09	626	DOR
1 EA	--	Lock Guard – LG10, 13 Gauge S.Stl	US32D	I
1 EA	--	Coordinator - GSR/T	--	DOR
2 EA	--	Closer, 8916 FHP	689	DOR
2 EA	--	Crash Stop - CS115-25 W/ Sex bolt mounting	B26D	I
1 EA	--	Head and Jamb Seals – by door MFR	--	--
2 EA	--	Sweep w/ Drip Edge – by door MFR	--	--
1 EA	--	Threshold - THRS-6 flat 1/2” X 5” min., by door MFR	--	--
2 EA	I	Surface Bolts - SD 1630 TB	US26D	I
4 EA	--	Protection Plate – 12” AL – by door MFR	--	--
1 EA	A	Adjustable Brush Astragal, by door MFR	--	--

END OF SECTION

SECTION 08 91 00

METAL LOUVERS

PART 1 GENERAL

1.1 SUMMARY

A. Section Includes:

1. Fixed, extruded-aluminum louvers.

2. Insect screening and frames.

B. Related Work Specified in Other Sections Includes, But is Not Limited to, the Following:

1. Section 07 90 00 - Joint Sealers.

1.2 REFERENCES

A. Codes and standards referred to in this Section are:

1. AMCA 500 - Test Method for Louvers, Dampers, and Shutters

2. ASTM B 221 - Specification for Aluminum-Alloy Extruded Bars, Rods, Wire Shapes and Tubes

1.3 AMERICAN IRON AND STEEL

A. Comply with the "American Iron and Steel (AIS)" requirements as contained in Section 436 of the Consolidated Appropriations Act, 2014, further described in the Bid Form.

1.4 SYSTEM PERFORMANCE

A. Provide louvers bearing the AMCA rating seal for air performance and water penetration ratings and meeting the following criteria:

B. Structural Performance: Provide exterior metal louvers capable of withstanding the effects of loads and stresses from wind and normal thermal movement without evidencing permanent deformation of louver components including blades, frames, and supports; noise or metal fatigue caused by louver blade rattle or flutter; or permanent damage to fasteners and anchors.

1. Wind Load: Uniform pressure (velocity pressure) of 25 lbf/sq. ft acting inward or outward.

2. Thermal Movements: Provide louvers that allow for thermal movements resulting from the following maximum change (range) in ambient and surface temperatures by preventing buckling, opening of joints, overstressing of components, and other detrimental effects:

   a. Temperature Change (Range): 120 deg F, ambient; 180 deg F, material surfaces.

C. Air-Performance, Water-Penetration, and Air-Leakage Ratings: Provide louvers complying with performance requirements indicated, as demonstrated by testing manufacturer's stock units 48 inches wide by 48 inches high. Test units according to AMCA 500.

1. Minimum free area: 50 percent.

2. Free outside air intake velocity pressure drop at 1,000 feet per minute not exceeding 0.15-inch H_2O.

3. Water penetration not exceeding 0.01 ounces of water per square foot of free area at an air flow of 1000 FPM when tested for 15 minutes in accordance with AMCA Standard 500.

1.5 SUBMITTALS

A. Provide all submittals, including the following, and as specified in Division 1.

B. Product Data: For each type of product specified.

C. Shop Drawings: For louver units and accessories. Include plans; elevations; sections; and details showing profiles, angles, and spacing of louver blades. Show unit dimensions related to wall openings and construction; free area for each size indicated; profiles of frames at jambs, heads, and sills; and anchorage details and locations.

D. Samples: For each type of metal finish required, prepared on Samples of same thickness and material indicated for final Work. Where finishes involve normal color and texture variations, include Sample sets showing the full range of variations expected.

E. Product Certificates: Signed by manufacturers of louvers certifying that the products furnished comply with requirements and are licensed to bear the AMCA seal based on tests made according to AMCA 500 and complying with AMCA's Certified Ratings Program.

F. Product Test Reports: Indicate compliance of products with requirements based on comprehensive testing of current products.

G. Qualification Data: For firms and persons specified in "Quality Assurance" Article to demonstrate their capabilities and experience. Include lists of completed projects with project names and addresses, names and addresses of architects and OWNERs, and other information specified.

1.6 QUALITY ASSURANCE

A. Source Limitations: Obtain louvers and vents through one source from a single manufacturer where alike in one or more respects regarding type, design, or factory-applied color finish.

B. Welding Standards: As follows:

1. Comply with AWS D1.2, "Structural Welding Code--Aluminum."

2. Certify that each welder has satisfactorily passed AWS qualification tests for welding processes involved and, if pertinent, has undergone recertification.

C. SMACNA Standard: Comply with SMACNA's "Architectural Sheet Metal Manual" recommendations for fabrication, construction details, and installation procedures.

1.7 PROJECT CONDITIONS

A. Field Measurements: Verify louver openings by field measurements before fabrication and indicate measurements on Shop Drawings. Coordinate fabrication schedule with construction progress to avoid delaying the Work.

1. Established Dimensions: Where field measurements cannot be made without delaying the Work, establish opening dimensions and proceed with fabricating louvers without field measurements. Coordinate construction to ensure that actual opening dimensions correspond to established dimensions.

1.8 DELIVERY, STORAGE AND HANDLING

A. Deliver, store and handle products and materials as specified in Division 1.

PART 2 PRODUCTS

2.1 MANUFACTURERS

A. Manufacturers: Subject to compliance with requirements, provide products by one of the following:

1. Airolite Co. - use as basis of design and quality.

2. Construction Specialties, Inc.

3. Industrial Louvers, Inc.

4. The Greenheck Company

B. Products: Subject to compliance with requirements, provide the following as a basis of design and quality:

1. Airolite Co.; Horizontal Louver K 6774

2. Louver frame width: 4-inch

2.2 MATERIALS

A. Aluminum Extrusions: ASTM B 221, alloy 6063-T5 or T-52.

B. Aluminum Sheet: ASTM B 209, alloy 3003 or 5005 with temper as required for forming, or as otherwise recommended by metal producer for required finish.

C. Fasteners: Of same basic metal and alloy as fastened metal or 300 series stainless steel, unless otherwise indicated. Do not use metals that are incompatible with joined materials.

1. Use types and sizes to suit unit installation conditions.

2. Use Phillips flat-head screws for exposed fasteners, unless otherwise indicated.

D. Anchors and Inserts: Of type, size, and material required for loading and installation indicated. Use nonferrous metal or hot-dip galvanized anchors and inserts for exterior installations and elsewhere as needed for corrosion resistance. Use toothed steel or expansion bolt devices for drilled-in-place anchors.

E. Bituminous Paint: Cold-applied asphalt mastic complying with SSPC-Paint 12 but containing no asbestos fibers, or cold-applied asphalt emulsion complying with ASTM D 1187.

2.3 FABRICATION, GENERAL

A. Assemble louvers in factory to minimize field splicing and assembly. Disassemble units as necessary for shipping and handling limitations. Clearly mark units for reassembly and coordinated installation.

1. Continuous Vertical Assemblies: Where height of louver units exceeds fabrication and handling limitations, fabricate units to permit field-bolted assembly with close-fitting joints in jambs and mullions, reinforced with splice plates and without interrupting blade spacing pattern.

B. Maintain equal louver blade spacing, including separation between blades and frames at head and sill, to produce uniform appearance.

C. Fabricate frames, including integral sills, to fit in openings of sizes indicated, with allowances made for fabrication and installation tolerances, adjoining materials' tolerances, and perimeter sealant joints.

1. Frame Type: Channel type, unless otherwise indicated.

D. Include supports, anchorages, and accessories required for complete assembly.

E. Provide sill extensions and loose sills made of same material as louvers where indicated or required for drainage to exterior and to prevent water penetrating to interior.

F. Join frame members to one another and to fixed louver blades with fillet welds, threaded fasteners, or both, as standard with louver manufacturer, concealed from view; unless otherwise indicated or size of louver assembly makes bolted connections between frame members necessary.

2.4 LOUVER SCREENS

A. General: Provide each exterior louver with louver screens complying with the following requirements:

1. Insect Screens: Provide insect screens of 18 x 16 aluminum mesh, set in rewireable extruded aluminum frame.

a. Provide insect screens at intake air louvers of non-filtered HVAC systems.

b. Provide manufacturer’s recommended accessories and mounting to facilitate removal of screens without any tools. Refer to HVAC drawings and specifications for filtration requirements and additional information.

B. Secure screens to louver frames with stainless-steel machine screws.

C. Louver Screen Frames: Fabricate screen frames with mitered corners to louver sizes indicated

D. Miter louver blades at corners by welding mitered joint.

E. Reinforce extruded-aluminum screen frames at corners with clips.

F. Finish: integral color to match louvers.

G. Separate dissimilar material to avoid galvanic corrosion.

2.5 FINISHES, GENERAL

A. Comply with NAAMM's "Metal Finishes Manual for Architectural and Metal Products" for recommendations for applying and designating finishes.

B. Finish louvers after assembly.

2.6 ALUMINUM FINISHES FOR LOUVERS

A. Finish designations prefixed by AA comply with system established by the Aluminum Association for designating aluminum finishes.

B. Class I, Clear Anodic Finish: AA-M12C22A42 (Mechanical Finish: non-specular as fabricated; Chemical Finish: etched, medium matte.

PART 3 EXECUTION

3.1 INSTALLATION

A. General: Install the louver assembly in accordance with the manufacturer's recommendations and approved shop drawings and as specified in Division 1.

B. Locate and place louver units level, plumb, and at indicated alignment with adjacent work.

C. Use concealed anchorages where possible. Provide brass or lead washers fitted to screws where required to protect metal surfaces and to make a weathertight connection.

D. Form closely fitted joints with exposed connections accurately located and secured.

E. Provide perimeter reveals and openings of uniform width for sealants and joint fillers, as indicated.

F. Repair finishes damaged by cutting, welding, soldering, and grinding. Restore finishes so no evidence remains of corrective work. Return items that cannot be refinished in the field to the factory, make required alterations, and refinish entire unit or provide new units.

G. Protect galvanized and nonferrous-metal surfaces from corrosion or galvanic action by applying a heavy coating of bituminous paint on surfaces that will be in contact with concrete, masonry, or dissimilar metals.

H. Install concealed gaskets, flashings, joint fillers, and insulation, as louver installation progresses, where weathertight louver joints are required. Comply with Section 07 90 00 - Joint Sealants for sealants applied during louver installation.

3.2 CLEANING, AND PROTECTING

A. Protect louvers and vents from damage during construction. Use temporary protective coverings where needed and approved by louver manufacturer. Remove protective covering at the time of Substantial Completion.

B. Restore louvers and vents damaged during installation and construction so no evidence remains of corrective work. If results of restoration are unsuccessful, as determined by Architect, remove damaged units and replace with new units.

1. Clean and touch up minor abrasions in finishes with air-dried coating that matches color and gloss of, and is compatible with, factory-applied finish coating.

END OF SECTION

(NO TEXT FOR THIS PAGE)

SECTION 09 96 00

HIGH PERFORMANCE COATINGS

PART 1 GENERAL

1.1 SUMMARY

A. Section Includes: Preparation of surfaces, shop painting of items furnished, field painting of new structures, piping, conduit, equipment, concrete, and masonry.

1.2 REFERENCES

A. Codes and standards referred to in this Section are:

1.	SSPC	-	The Society for Protective Coatings
	SSPC-SP 1	-	Hand Tool Cleaning
	SSPC-SP 3	-	Power Tool Cleaning
	SSPC-SP 6	-	Commercial Blast Cleaning
	SSPC-SP 10	-	Near-White Blast Cleaning
	SSPC-SP 13	-	Surface Preparation of Concrete
	SSPC-SP 16	-	Brush-off Blast Cleaning of Non-Ferrous Metals
2.	FS-TT-V-51F	-	Asphalt Varnish
3.	ASTM D4263	-	Standard Test Method for Indicating Moisture in Concrete by the Plastic Sheet Method

1.3 SUBMITTALS

A. Provide all submittals, including the following, as specified in Division 1.

1. Submit manufacturer's standard color chart for color selection.

2. Where equipment is customarily shipped with a standard finish, submit samples of the proposed color and finish for approval prior to shipping.

3. Furnish affidavits from the manufacturer certifying that materials furnished conform to the requirements specified and that paint products have been checked for compatibility.

4. Submit a supplementary schedule of paint products with mil thickness and solids by volume, including all paint applied in the shop and in the field. Provide a schedule that is in accordance with the recommendations of the paint manufacturer.

5. Furnish affidavits from the manufacturer certifying that coatings in immersion service contain no water soluble solvents or corrosion inhibitive (active) pigments with slight water solubility.

1.4 PAINTING REQUIREMENTS

A. Shop Primed and Finished Items: Furnish the following items with the manufacturer's standard prime and finish coats applied in the shop: pumps, motors, gears, gear housings, air compressors, wall fans, temperature control and instrument panels, process air blowers, engines, filters, strainers, air dryers, meters, gas boosters, gas turbines, generators, switchgears, switchboards, motor control centers, panelboards, transformers, industrial control panels (except stainless steel or fiberglass), boilers, condensing units, water chillers, cooling towers, condensers, heat exchangers, humidifiers, air handling units, sound attenuators, air conditioning and dehumidification units, convector cabinets, unit heaters, enclosures for finned tube radiators, cabinet heaters, hoisting equipment. Coat steel reinforcing bars for concrete in accordance with Section 03 30 10.

B. Shop Primed and Field Painted Items: Furnish the following items shop primed and field painted: Structural steel and wrought metals, composite metal floor deck, pipelines, hangers and supports, sluice gates, valves, valve and sluice gate operators and stands, guard housings, air filter equipment, effluent strainers, heat exchangers, air receivers, tanks, air silencing equipment, storage tanks, gas domes, sediment tanks, steel stair framing, steel lintels, hollow metal doors and frames.

C. Field Primed and Finished Items: Field prime and finish, where exposed to view, all items not shop primed or shop finished. This Work generally includes, but is not limited to, the following: gypsum wallboard, interior concrete block, interior concrete walls, columns, beams and ceilings, covering over insulation on piping, galvanized steel electrical conduit systems, cast iron electrical boxes, small piping and copper tubing, ducts, covering over ducts, exterior PVC piping valves, and fittings, drain piping.

D. Unpainted Items: Do not paint the following items, unless otherwise specified: interior structural steel not exposed to view, registers, grilles, dampers and linkage, fire sprinklers, name and identification plates and tags, floor gratings, brass pipe and fittings, brass valves, stainless steel, fiberglass and fiber reinforced polymer enclosures, wood, cast-iron piping installed underground, stop log panels, spray-on fireproofing steel to receive spray-on fireproofing, surfaces to receive field welding, faying surfaces of high strength bolted connections, steel to be embedded or in contact with cast-in-place concrete, fiberglass doors and railings.

1.5 DELIVERY, STORAGE AND HANDLING

A. Deliver, store and handle products and materials as specified in Division 1.

B. Delivery and Storage: Deliver and store paint at the site from the approved manufacturer only.

C. Packaging and Labeling: Prepare, pack and label paints, stains, varnish or ingredients of paints to be used on the job. Deliver all material to the site in original, unbroken containers.

D. Storage: Store the painting materials at the site in accordance with applicable codes and regulations and in accordance with manufacturer's instructions. Keep the storage space clean at all times. Take every precaution to eliminate fire hazards.

PART 2 PRODUCTS

2.1 MANUFACTURERS

A. Acceptable manufacturers are listed below. Other manufacturers of equivalent products may be submitted.

1. Paint - General:

   a. AkzoNobel (Ceilcote, Devoe, Enviroline, International)

   b. TNEMEC Incorporated.

   c. PPG Industries, Inc.

2.2 MATERIALS

A. General: Furnish paint and other materials of the type and quality of the manufacturer on which the painting schedule specified herein is based.

1. Provide compatible shop and field coats.

2. Provide all coats of paint for any particular surface from the same manufacturer.

3. Provide paint of approved color as selected from the manufacturer's standard range of colors.

B. Paint Schedule: Provide all painting in accordance with the following schedule with the number of coats not less than the number shown on the schedule.

Class of Work	Surface Preparation	Field Coats 1st	2nd	3rd	Total DFT
Steel-Structural, Pipe, and Equipment:					
Interior	SSPC-SP 6	F	F		8.0-16.0
Immersion	SSPC SP 10	B	B	B	12.0
Nonferrous Metal and Galvanized Steel:					
Interior	SSPC-SP 16	G	F		6.0-11.0
Concrete Walls (Cast in place):					
Interior Exposed	SSPC-SP 13	M	F	F	8.0-16.0
CMU Walls:					
Interior Exposed (High Humidity & Moisture)	SSPC-SP 13	J	F	F	8.0-16.0
Concrete Floors:					
Light Traffic/Low Impact (Epoxy Finish)	SSPC-SP 13	D	F	F	9.0-17.5

C. Schedule of Paints: Alphabetical designations in the following list are given solely for the purpose of indicating the type and quality of materials desired. Equivalent material from other approved manufacturers may be submitted for approval.

Symbol	Product Name and Number	Volume Solids %	Dry Film Thickness Mils Per Coat	VOCs (g/L)
A	International Paint-Devoe Coatings Bar-Rust 233H	80	4.0-6.0	170
B	International Paint-Devoe Coatings Pre-Prime 167	100	1.0-1.5	95
C	International Paint-Devoe Coatings Devran 224V	77	4.0-8.0	28
D	International Paint-Devoe Coatings Devran 201H	58	2.0-3.0	327
E	International Paint-Devoe Coatings Tru-Glaze 4015	53	9.0-11.0	99

Symbol	Product Name and Number	Volume Solids %	Dry Film Thickness Mils Per Coat	VOCs (g/L)
F	International Paint-Devoe Coatings Devran 203	45	3.0-4.0	91

2.3 BITUMINOUS PAINT

A. Cold-applied asphalt mastic complying with SSPC-Paint 12 but containing no asbestos fibers, or cold-applied asphalt emulsion complying with ASTM D 1187.

PART 3 EXECUTION

3.1 REPAIR

A. Fill all pits in concrete having a depth in excess of 1/8 of an inch with a 100 percent solids epoxy repair compound.

B. Notify the Resident Project Representative of all pits with a depth greater than 1/4 inch to determine whether structural repairs are necessary. Repair such pits in a manner approved by Resident Project Representative.

3.2 PREPARATION

A. Inspection: Prior to surface preparation perform the following:

1. Verify that surface substrate conditions are ready to receive Work as instructed by the product manufacturer.

2. Examine specifications for all Work and become thoroughly familiar with all provisions regarding painting.

3. Document conditions of substrate prior to beginning work. Indicate any damaged or deficient substrates requiring repair and report findings to the Resident Project Representative.

B. Surface Preparation: After inspection and prior to painting, perform the following:

1. Inspect all Work prior to application of any paint or finishing material.

2. Brush and wash concrete and masonry surfaces. Remove all loose dirt, free lime, form oil, curing compounds and other foreign matter by approved methods such as SSPC-SP 13. Patch concrete surfaces requiring repair and spackle and repair surfaces to receive paint. Acid etch concrete surfaces to be painted as recommended by the manufacturer of the coating to be applied, to produce a slightly granular surface required for adherence of the

paint to the concrete unless otherwise indicated. Determine that concrete and concrete masonry is thoroughly dry prior to painting per ASTM D4263.

3. Thoroughly clean surfaces to be given protective coatings.

4. Refinish shop-coated equipment that has scratches and abrasions.

5. Do not begin field painting prior to approval of the surface preparation.

6. Thoroughly clean wood surfaces to remove all foreign matter. Properly fill and smooth cracks and nail holes. Finish exposed wood with sandpaper to a fine finish and wipe clean of dust.

7. Prepare and clean all surfaces prior to painting, as specified and required. Verify that surfaces are dry before any paint is applied. Perform special surface preparation work as directed by the manufacturer of the paint specified to be applied to the surface.

8. Clean the surface of structural steel, steel encased in concrete or masonry by removing all rust, mill scale, oil, grease or dirt in accordance with SSPC-SP 6.

9. Prior to painting metals other than steel, grind smooth all welds, beads, blisters of protuberances, other than identification markings, and remove other imperfections. Solvent clean all nonferrous metals, galvanized steel and stainless steel whether shop primed or field primed, in accordance with SSPC-SP 1 prior to the application of the primer.

10. Prime cleaned metal the same day immediately after sandblasting to prevent rusting.

11. Remove all adhering debris on pipe and duct covering and smooth out indentations or unsightly spots and brush clean.

12. Remove all bituminous or asphaltic coating from cast iron drain and soil pipe prior to painting.

3.3 INSTALLATION

A. General: Install all painting and coatings in accordance with the manufacturer's recommendations and approved shop drawings and as specified in Division 1.

1. Refer to manufacturer’s guidelines as it relates to minimum/maximum allowable temperatures for application.

2. The surface temperature of the steel shall be at least 5 degrees F above the dew point.

3. Paint surfaces in accordance with the material painting schedule included in this Section.

4. Completely cover all surfaces to be painted. Cover by additional coats when color on undercoats shows through the final coat of paint, until paint is of uniform color and appearance and coverage is complete.

5. Do not apply exterior coatings during rain or snow, or when relative humidity is outside the humidity ranges required by the paint product manufacturer.

6. Provide sufficient temporary ventilation during painting operations in enclosed areas to remove moisture and solvents, and to keep the atmosphere safe from harmful or dangerous fumes and dust levels for personnel.

B. Touch-Up Shop-Primed and Finished Items: Touch-up all damaged portions and imperfections in shop-primed and finished items. Use the same paint as used for the shop prime and finish. Prepare the surface prior to touch-up by wire brushing and sanding to remove rust, scale and loose paint per SSPC-SP 2, 3, or 11, as determined by each situation.

C. Aluminum and Incompatible Surfaces: Where aluminum surfaces come in contact with incompatible metals, lime, mortar, concrete or other masonry materials, apply one field coat of International Paint-Devoe Coatings Bar-Rust 231 Epoxy or two coats of asphalt varnish conforming to FS-TT-V-51F. The aluminum surface should be abraded to a 1.5-2.0 mil profile before coatings application is done to ensure maximum adhesion to the surface.

D. Steel Pipe: Applicable to insulated and uninsulated steel pipe. Immediately after installation, prime pipe not furnished with a shop coat.

E. Field Painting: Perform field painting at the job site as follows:

1. Mix all paints and similar materials in approved containers of adequate capacity.

2. Mix all paint thoroughly before being taken from the containers. Keep mixed while painting. Apply all ready-mixed paint exactly as received from the manufacturer without addition of any kind of drier or thinner, except as specified, to mix colors to conform to approved color schedule. Tint successive coats of paint to make various coats easily distinguishable. Tint undercoats of paint to the approximate shade of the final coat of paint.

3. Use only skilled painters on the Work, and employ specialists where required. Apply paint by brush, roller or sprayer in accordance with the manufacturer's recommendation.

4. Paint top and bottom edges of doors. Thoroughly and uniformly sand undercoats on hollow metal Work with No. 240 grit sandpaper or equal abrasive to remove all surface defects and provide a smooth, even surface. Do not allow brush marks or other irregularities on finished surfaces.

5. Perform painting as a continuous and orderly operation to facilitate adequate inspection. Prime coat and paint materials subject to weathering or corrosion before erection. Perform all paint application methods in accordance with the instructions of the paint manufacturer and as approved.

6. Do not field paint equipment, such as electrical control cabinets, motors, unit heaters and similar items which are shipped with a final baked enamel finish and having received prior approval unless the finish is damaged in transit or installation.

7. Paint access panels, pipe, pipe covering, ducts and other building appurtenances built into adjoining walls the same color as adjacent walls, unless color coding applies. Remove or protect hardware and accessories, fixtures and similar items placed prior to painting during painting and replace them upon completion of painting.

8. Paint piping up to and including the flanges attached to mechanical equipment. Paint electrical conduit up to and including the flexible conduit connected to equipment.

9. Paint all wall surfaces which will be concealed by equipment before equipment installation.

10. Paint all existing wall surfaces newly exposed to view due to removal of existing equipment or other demolition work. Paint to match adjacent surfaces.

11. Fully protect areas under and adjacent to painted work at all times and promptly remove dripped or spattered paint.

12. Repair, refinish and repaint any adjacent surfaces that have been damaged or discolored by overspray.

13. Do not paint when the air or surface temperature is below that recommended by the manufacturer, or in dust-laden air, or until moisture on the surface has completely disappeared. If necessary, provide sufficient heating and ventilation to keep the atmosphere and all surfaces to be painted dry and warm until each coat of paint has hardened.

14. Remove any painting found defective. Touch-up and provide remedial painting as directed and as required until completion and acceptance of final work.

F. Color Coding: For colors to be used for identification of mechanical and electrical piping, tubing and conduit see the following:

Table 09 96 00-1	
Pipe Service	**Pipe Color**
Potable Water	Dark Blue
Ammonia	White
Caustic (pH Control)	Yellow with Green Band
Chlorine	Yellow
Fluoride	Light Blue with Red Band
Phosphate or Sodium Silicate	Light Green with Red Band
Natural Gas	Orange
Sanitary	Dark Grey
Fire Protection	Red

1. For items not covered by table 09 96 00-1, see the following:

   a. Section 26 05 53, Electrical Identification.

G. Equipment Colors: Furnish the following equipment in their respective groups to be shop or field painted.

Equipment Description (Groups)	Color
Hoisting Equipment	Medium Yellow 339
Instrumentation and Control	White 311

H. Colors herein specified.

1. Provide chart of standard colors offered by each equipment manufacturer. Coordinate color selection.

2. Furnish all electrical equipment shop painted in a color selected from the manufacturer's standard colors.

3.4 HEALTH AND SAFETY

A. Introduction

1. Products listed in this specification and used in high-performance coatings situations contain high volume solids; the aerosol droplets/particulates produced during airless spray of some of these materials may form an explosive mixture with air and additionally may contain materials which may necessitate personal protection against potential health hazards. A summary of the main precautions to be taken includes:

   a. Danger of explosion or fire

b. Provision of a suitable breathing environment for workers.

c. Prevention of skin irritation problems.

d. Use of paints which have been specially formulated for use in tanks.

B. Consult with manufacturer prior to commencing work to review recommended Health and Safety procedures.

3.5 QUALITY CONTROL

A. General Coatings:

1. At least daily, check temperature, humidity, and Dew Point as to time and readings obtained. Submit "Paint Inspection: Daily Coating Inspection Report" to Resident Project Representative on a daily basis. See Supplement below.

2. Perform daily wet film thickness readings or spreading rate checks to make certain that proper film thickness is being achieved. If proper film thickness is not being achieved more frequent checks may be required by the Resident Project Representative at their discretion. Provide daily written report to Resident Project Representative. Correct any deficiencies in film thickness by application of additional paint. See Supplement below.

3.6 CLEANING AND FINAL TOUCH UP PAINTING

A. Touch up and restore any damaged finish. Remove paint or other finishes spilled, splashed or splattered from all surfaces taking care not to mar any surface or item being cleaned.

3.7 SUPPLEMENT

A. The supplement listed below is a part of this Specification:

1. Paint Inspection: Daily Coating Inspection Report.

.

Paint Inspection:

Daily Coating Inspection Report

Date: / / M T W Th F S Su		Pg. Of
Project #:		COPY To: ☐ QC Mgr ☐ Owner ☐ Contr ☐ _____
Inspector:		
Project/Client:		
Location:		Attachments: ☐ DFT Sheet ☐ NCR/CAR ☐ _____
Description:		
Requirements:		
Contractor:	Spec #	Revision #

Description of Areas & Work Performed

Hold Point Inspections Performed

- ☐ 1 Pre Surface Pep/Condition & Cleanliness
- ☐ 2 Surface Preparation Monitoring
- ☐ 3 Post Surface Preparation/Cleanliness & Profile
- ☐ 4 Pre Application Prep/Surface Cleanliness
- ☐ 5 Application Monitoring/Wet Film Thickness (WFT)
- ☐ 6 Post Application/Application Defects
- ☐ 7 Post Cure/Dry Film Thickness (DFT)
- ☐ 8 Nonconformance/Corrective Actions Follow-up
- ☐ 9 Final Inspection

Approved By: _____

Surface Conditions

☐ New ☐ Maint ☐ Primer/Paint ☐ Age/Dry/Cure_____
☐ Steel ☐ Galvanize ☐ Concrete ☐ Other_____
☐ Hazard _____ ☐ Sample Report # _____
☐ Degree of contamination: _____
Test: ☐ Cl_____ µg/cm² / ppm ☐ Fe ____ppm ☐ pH _____
☐ Degree of Corrosion: _____
☐ Scale ☐ Pitting/Holes ☐ Crevices ☐ Sharp Edges
☐ Weld_____ ☐ Moisture ☐ Oils ☐ Other_____
☐ Painted Surface Condition: _____
Dry to: ☐ Touch ☐ Handle ☐ Recoat
☐ Dry/Over Spray ☐ Runs/Sags ☐ Pinholes ☐ Holidays
☐ Abrasion ☐ Fall Out ☐ Other _____

Ambient Conditions

Time (Indicate AM or PM)	:	:	:	:
Dry Bulb Temp° (C/F)	°	°	°	°
Wet Bulb Temp° (C/F)	°	°	°	°
% Relative Humidity	%	%	%	%
Surface Temp° (C/F) Min/Max	/ °	/ °	/ °	/ °
Dew Point Temp° (C/F)	°	°	°	°
Wind Direction/Speed				
Weather Conditions:				

Surface Preparation

Start Time: Finish Time: Est Sq/ft:
☐ Solvent Clean ☐ Hand Tool ☐ Power Tool
☐ HP Wash PSI_____ ☐ Other _____
☐ Abrasive Blast ☐ Abrasive Type _____ ☐ Sample
☐ Blast Hose Size _____ ☐ Nozzle Size / PSI _____
☐ Air Supply CFM _____ ☐ Air Supply Cleanliness
☐ Water/Oil Trap Check ☐ Equipment Condition Check

Application

Start Time : Finish Time : Est. Sq/ft.
☐ Primer ☐ Intermediate ☐ Topcoat ☐ Touch-up

Generic Type:	Qty Mixed:
Manuf.:	Mix Ratio:
Prod Name:	Mix Method:
Prod #:	Strain/Screen:
Color:	Material Temp: °F
Kit Sz/Cond.:	Sweat-in Time: Min/Hrs
Shelf Life:	Pot Life: Min/Hrs
Batch #'s	Reducer #:
(A)	Qty Added: Pt/Qt/Gal
(B)	% by Vol: %
(C)	Specified WFT Avg: Mils
Reducer:	Achieved WFT Avg: Mils

☐ Airless/Conv. Spray ☐ Brush ☐ Roller ☐ Other _____

Pump Pot	Hose Dia.	Air Check
Ratio/Size	Hose Lng.	SEP/Trap
GPM/CFM	Spray Gun	Filter
PSI	Tip Sz.	Agitator

Surface Cleanliness & Profile Measurement

☐ Job Specification ☐ SSPC/NACE - SP- _____
☐ SSPC/NACE Spec / Visual Stds ☐ _____
Profile Check: _____ ☐ Disc ☐ Tape ☐ Gauge
☐ Specified_____mils avg. / Achieved _____mils
☐ Surface effect on DFT Gauge/BMR_____mils

Dry Film Thickness

Gage Type / Model	Gage Serial #	Gage Calib. Verified	Spec Avg. DFT	Total Avg DFT	DFT Last Coat	DFT This Coat

Inspector's Signature Date

END OF SECTION

(NO TEXT FOR THIS PAGE)

SECTION 23 34 23

HVAC POWER VENTILATORS

PART 1 - GENERAL

1.1 RELATED DOCUMENTS

A. Drawings and general provisions of the Contract, including General and Supplementary Conditions and Division 1 Specification Sections, apply to this Section.

1.2 SUMMARY

A. This Section includes the following: Propeller fans.

1.3 PERFORMANCE REQUIREMENTS

A. Project Altitude: Base fan-performance ratings on actual Project site elevation of 702 feet.

B. Operating Limits: Classify according to AMCA 99.

1.4 SUBMITTALS

A. Product Data: Include rated capacities, furnished specialties, and accessories for each type of product indicated and include the following:

1. Certified fan performance curves with system operating conditions indicated.

2. Certified fan sound-power ratings.

3. Motor ratings and electrical characteristics, plus motor and electrical accessories.

4. Material thickness and finishes.

B. Shop Drawings: Detail equipment assemblies and indicate dimensions, weights, loads, required clearances, method of field assembly, components, and location and size of each field connection.

1. Wiring Diagrams: Power, signal, and control wiring.

C. Operation and Maintenance Data: For power ventilators to include operation, and maintenance manuals.

1.5 QUALITY ASSURANCE

A. Electrical Components, Devices, and Accessories: Listed and labeled as defined in NFPA 70, Article 100, by a testing agency acceptable to authorities having jurisdiction, and marked for intended use.

B. AMCA Compliance: Products shall comply with performance requirements and shall be licensed to use the AMCA-Certified Ratings Seal.

C. NEMA Compliance: Motors and electrical accessories shall comply with NEMA standards.

D. UL Standard: Power ventilators shall comply with UL 705.

1.6 DELIVERY, STORAGE, AND HANDLING

A. Deliver, store and handle products and materials as specified in Division 1.

B. Deliver fans as factory-assembled unit, to the extent allowable by shipping limitations, with protective crating and covering.

C. Disassemble and reassemble units, as required for moving to final location, according to manufacturer's written instructions.

D. Lift and support units with manufacturer's designated lifting or supporting points.

1.7 COORDINATION

A. Coordinate size and location of structural support members.

PART 2 - PRODUCTS

2.1 PROPELLER FANS: EF-1

A. Basis-of-Design Product: Subject to compliance with requirements, provide Greenheck Sidewall Direct Drive Fan Model AER-E24C-310-VG or a comparable product by one of the following:

1. Acme Engineering & Mfg. Corp.

2. Aerovent; a Twin City Fan Company.

3. Carnes Company HVAC.

4. Chicago Blower Corporation.

5. Hartzell Fan, Inc.

6. Industrial Air; a division of Lau Industries, Inc.

7. Loren Cook Company.

8. Penn Ventilation.

B. Description: Direct-driven propeller fans consisting of fan blades, hub, orifice ring, motor, drive assembly, and accessories.

C. Housing: Galvanized-steel sheet with flanged edges and integral orifice ring with baked-enamel finish coat applied after assembly.

D. Fan Wheel: Cast aluminum, airfoil blades fastened to cast-aluminum hub; factory set pitch angle of blades.

E. Accessories:

1. Variable-Speed Controller: Solid-state control to reduce speed from 100 to less than 50 percent.

2. Disconnect Switch: Nonfusible type, with thermal-overload protection mounted inside fan housing, factory wired through an internal aluminum conduit.

F. Capacities and Characteristics:

1. Airflow: 2,800 cfm.

2. External Static Pressure: 0.625 inches wg.

3. Wheel Type: Airfoil.

4. Brake Horsepower: 0.52.

5. Fan Rpm: 1,673.

6. Motor Size: 3/4 hp.

7. Electrical Characteristics:

a. Volts: 115.

b. Phase: 1.

c. Hertz: 60.

d. FLA (Amps): 10.1.

8. Vibration Isolators:

a. Type: Elastomeric hangers.

2.2 MOTORS

A. Enclosure Type: ODP.

2.3 SOURCE QUALITY CONTROL

A. Sound-Power Level Ratings: Comply with AMCA 301, "Methods for Calculating Fan Sound Ratings from Laboratory Test Data." Factory test fans according to AMCA 300, "Reverberant Room Method for Sound Testing of Fans." Label fans with the AMCA-Certified Ratings Seal.

B. Fan Performance Ratings: Establish flow rate, pressure, power, air density, speed of rotation, and efficiency by factory tests and ratings according to AMCA 210, "Laboratory Methods of Testing Fans for Rating."

PART 3 - EXECUTION

3.1 INSTALLATION

A. Install power ventilators level and plumb.

B. Support suspended units from structure using threaded steel rods and elastomeric hangers.

C. Install units with clearances for service and maintenance.

D. Install galvanized sheet metal housing with wire guard for safety.

E. Label units according to owner's requirements.

3.2 CONNECTIONS

A. Drawings indicate general arrangement of ducts and duct accessories.

B. Install connecting duct transition rectangle to round fitting between fan and exterior wall louver.

3.3 FIELD QUALITY CONTROL

A. Perform the following field tests and inspections and prepare test reports:

1. Verify that shipping, blocking, and bracing are removed.

2. Verify that unit is secure on mountings and supporting devices and that connections to ducts and electrical components are complete. Verify that proper thermal-overload protection is installed in motors, starters, and disconnect switches.

3. Verify that cleaning and adjusting are complete.

4. Verify lubrication for bearings and other moving parts.

5. Remove and replace malfunctioning units and retest as specified above.

B. Test and adjust controls and safeties. Replace damaged and malfunctioning controls and equipment.

END OF SECTION

(NO TEXT FOR THIS PAGE)

SECTION 26 05 00

BASIC ELECTRICAL MATERIALS AND METHODS

PART 1 GENERAL

1.1 SUMMARY

A. Section Includes: General requirements for providing basic electrical materials and methods.

B. Related Work Specified in Other Sections Includes, But is Not Limited to, the Following:

1. Certain equipment, monitoring devices, conduit and wiring are shown on electrical drawings, but are specified in other sections pertaining to, monitoring devices and instrumentation. Install and connect these items to the electrical system as indicated or required in accordance with the Contract Documents.

C. Overall Application of Specifications: This Section applies to all Division 26 sections and to other sections that include requirements for electrical equipment. Irrespective of where the electrical requirements are specified, provide and install all materials necessary for a complete operational system.

D. Temporary Requirements: This Section applies to any temporary circuits, overcurrent devices, conduit, wiring, and other equipment required during changeover from the existing electrical system to a new electrical system. This Section also applies to temporary rewiring of lighting circuits, power circuits, instruments and devices.

1.2 REFERENCES:

A. Codes and standards referred to in this Section are:

1. NFPA 70 –National Electrical Code (NEC)

2. NECA 1 – Standard for Good Workmanship in Electrical Construction

1.3 SYSTEM DESCRIPTION

A. Design Requirements: Design requirements are specified in the applicable sections.

B. Performance Requirements: Performance requirements are specified in the applicable sections.

1.4 SUBMITTALS

A. General: Furnish all submittals, including the following, as specified in Division 1.

B. Product Data and Information: Furnish a complete list of electrical equipment and materials to be furnished that shows the manufacturer, catalog number, size, type, capacity, voltage rating and other pertinent information related to each item on the list.

1. Furnish catalog data for the manufacturer's standard equipment and materials. Clearly identify the equipment and devices specifically being proposed on manufacturers' catalog data sheets.

2. Identification: Furnish a complete schedule or listing of system and equipment identification labels with legends.

C. CONTRACTOR's Shop Drawings: Furnish shop drawings on items manufactured for the Contract.

1. Furnish connection and schematic diagrams for each piece of electrical equipment where applicable. A manufacturer's standard connection or schematic diagram showing more than one method of wiring is not acceptable unless, the intended method is clearly marked.

2. Furnish diagrams that show connections to field equipment. Clearly differentiate between manufacturers and field wiring.

D. Record Documents: Furnish record documents, and in addition to the requirements specified in Division 1, indicate installed conditions for:

1. Major raceway systems' sizes and locations; locations of control devices; distribution and branch electrical circuitry including panelboard schedules; and fuse and circuit breaker sizes and arrangements.

2. Approved substitutions, and actual equipment and materials installed.

E. Maintenance Manuals: Furnish maintenance manuals, and in addition to the requirements specified in Division 1, include the following information for equipment items:

1. Functional description, normal operating characteristics and limitations, performance curves, engineering data and tests, and complete nomenclature and catalog numbers of replacement parts. Where a Bill of Materials is provided, include a manufacturers' data sheet for each component and device listed therein.

2. Manufacturer's printed operating procedures to include start-up, break-in, and routine and normal operating instructions; regulation, control, stopping, shutdown, and emergency instructions; and summer and winter operating instructions.

3. Maintenance procedures for routine preventative maintenance and troubleshooting; disassembly, repair, and reassembly; aligning and adjusting instructions.

4. Servicing instructions and lubrication charts and schedules.

1.5 QUALITY ASSURANCE

A. Codes: Provide all electrical Work in accordance with NEC and applicable local codes, regulations and ordinances. If there is a conflict between the requirements specified in the Contract Documents and the codes, follow the more stringent requirements as determined and approved.

B. Testing: As a minimum, provide standard factory and field tests for each type of equipment. Other tests may be specified in the applicable equipment section.

C. Labeling: Provide electrical equipment and materials that are listed and approved by Underwriters Laboratories or other OSHA recognized testing laboratories with the testing agency's label attached.

D. Standard Products: Unless otherwise indicated, provide electrical materials and equipment which are the standard products of manufacturers regularly engaged in the production of such materials and equipment. Provide the manufacturer's latest standard design that conforms to these Specifications. Provide the products of the same manufacturer when two or more units of the same class of material and equipment are required.

1.6 DELIVERY, STORAGE AND HANDLING

A. Deliver, store and handle all products and materials as specified in Division 1.

B. Shipping and Packing: Provide materials and equipment suitably boxed, crated or otherwise completely enclosed and protected during shipment, handling, and storage. Clearly label such boxes, crates or enclosures with manufacturer's name, and name of material or equipment enclosed.

C. Acceptance at Site: Conform to acceptance requirements as required in Division 1.

1. Repair or replace all materials and equipment damaged by handling and storage as directed at no additional Contract cost.

D. Storage and Protection: Protect materials and equipment from exposure to the elements and keep them dry at all times. Handle and store to prevent damage and deterioration in accordance with manufacturer's recommendations. Provide temporary power to space heaters where provided with equipment to prevent condensation from developing.

1.7 PROJECT CONDITIONS

A. General: The Drawings indicate the extent and general arrangement of the principal electrical elements, outlets, devices and circuit layouts. Install and connect all electrical elements and devices to form a complete workable system as required by the Contract Documents, regardless of whether all system components are specifically stated in the Specifications or shown. Provide necessary materials and installation wherever required to conform to the specific requirements of the furnished equipment and for proper installation of the Work.

B. Physical Layouts: In general, the routing of feeders show general arrangement and are not intended to show exact routing and locations of raceways. Verify actual and final arrangement, equipment locations, and prepare circuit and raceway layouts before ordering materials and equipment. Equipment locations are approximate and are subject to modifications as determined by approved equipment dimensions.

C. Coordination of Work: Coordinate the Work so that the electrical equipment may be installed without altering building components, other equipment or installations.

D. Departure from Design: If departures from the design are deemed necessary due to structural conditions, obstructions or other problems, provide details of such departures and the reasons for requesting approval. Submit variations as soon as practical. Do not depart from the design without written approval.

PART 2 PRODUCTS

Not Used

PART 3 EXECUTION

3.1 ROUGH-IN

A. Final Location: Verify final locations for rough-ins with field measurements and with the requirements of the actual equipment to be connected.

3.2 ELECTRICAL INSTALLATIONS

A. Install all electrical work in a neat and workmanlike manner, as defined in NECA 1.

B. General: Sequence, coordinate, and integrate the various elements of electrical systems, materials, and equipment. Comply with the following requirements:

1. Coordinate electrical systems, equipment, and materials installation with other building components.

2. Verify all dimensions by taking field measurements.

3. Arrange for chases, slots, and openings in other structure components as construction progresses to provide for electrical installations.

4. Coordinate the installation of required supporting devices and sleeves to be set in cast-in-place concrete and other structural components, as they are constructed.

5. Sequence, coordinate, and integrate installations of electrical materials and equipment for efficient flow of the Work.

6. Where mounting heights are not detailed or dimensioned, install systems, materials, and equipment to provide the maximum possible headroom.

7. Coordinate connection of electrical systems with exterior underground and overhead utilities and services. Comply with requirements of governing regulations, franchised service companies, and controlling agencies. Provide all required connections for each service.

8. Install systems, materials, and equipment to conform with approved submittal data, including coordination drawings, to greatest extent possible. Conform to arrangements indicated by the Contract Documents, recognizing that portions of the Work are shown only in diagrammatic form. Where coordination requirements conflict with individual system requirements, refer conflict to the ENGINEER for resolution.

9. Where installed exposed in finished spaces, install systems, materials, and equipment level and plumb, parallel and perpendicular to other building systems and components.

10. Provide electrical equipment to facilitate servicing, maintenance, and repair or replacement of equipment components. As much as practical, connect equipment for ease of disconnecting, with minimum of interference with other installations.

11. Provide access panels or doors where units are concealed behind finished surfaces.

12. Install systems, materials, and equipment providing right-of-way priority to systems required to be installed at a specified slope.

13. All wiring specified, scheduled, noted or shown is to be installed in conduit unless identified otherwise.

3.3 CUTTING AND PATCHING

A. General: Perform cutting and patching as specified in Division 1. In addition to the requirements specified in Division 1, the following requirements apply:

1. Perform cutting, fitting, and patching of electrical equipment and materials required to:

   a. Uncover Work to provide for installation of ill-timed Work.

   b. Remove and replace defective Work.

   c. Remove and replace Work not conforming to requirements of the Contract Documents.

   d. Remove samples of installed Work as specified for testing.

   e. Install equipment and materials in existing structures.

   f. Locate existing structural reinforcing with a pachometer where core drilled penetrations are required so as not to cut the steel reinforcing.

2. Protect the structure, furnishings, finishes, and adjacent materials not required to be removed.

3. Provide and maintain adequate temporary partitions or dust barriers that prevent the spread of dust and dirt to adjacent areas.

4. Protection of Installed Work: During cutting and patching operations, protect adjacent installations.

5. Patch finished surfaces and building components using new materials that are compatible with the installation and applied by experienced installers.

END OF SECTION

SECTION 26 05 10

ELECTRICAL UTILITY COORDINATION AND REQUIREMENTS

PART 1 GENERAL

1.1 SUMMARY

A. Section Includes: Requirements for arranging and coordinating with the Utility Company for permanent electrical power service.

B. Related Work Specified in Other Sections Includes, but is Not Limited to, the Following:

1. Section 03 30 10 - Structural Concrete

1.2 SYSTEM DESCRIPTION

A. Utility Company: We Energies
1830 S West Ave, Waukesha, WI 53189

B. Utility Company Contact: Michael C. Johnson
262-574-3051
Michael-C.Johnson@we-energies.com

C. Requested Service Characteristics:

1. 120/240 Volts

2. Single Phase

3. 3 Wire

4. 100 Ampere

5. Ungrounded

1.3 SUBMITTALS

A. General: Provide all submittals, including the following, as specified in Division 1.

B. Correspondence: Furnish copies of all correspondence with the Utility Company including available short circuit currents and X/R ratings for each feeder.

C. Utility Company Drawings: Furnish Utility Company prepared drawings.

D. Layout Drawings: Furnish the following drawings:

1. Equipment pad details

2. Equipment mounting details.

1.4 QUALITY ASSURANCE

A. General: Perform Work in accordance with Utility Company's written requirements and standards.

1.5 PROJECT CONDITIONS

A. Field Measurements: Verify that field measurements are as indicated on Utility Company drawings.

PART 2 PRODUCTS

2.1 UTILITY METERING

A. Revenue Meters: Meters will be furnished by Utility Company.

B. Meter Base: Provide meter base in accordance with the requirements of the Utility Company.

C. Metering Transformer Cabinet: Provide a metering transformer cabinet in accordance with the requirements of the Utility Company.

PART 3 EXECUTION

3.1 EXAMINATION

A. General: Verify that service equipment is ready to be connected and energized.

3.2 PREPARATION

A. Utility Company Arrangements: Make arrangements with Utility Company to obtain permanent electric service to the Project.

B. Utility Engineering and Facility Charges: Pay all charges and fees associated with securing both temporary and permanent electrical service for the project.

C. Utility Company Access: Coordinate location of Utility Company's facilities to provide proper access.

D. Coordination: Coordinate schedule of Utility Company's facilities with all other work.

E. Utility Company System Information: Obtain short circuit current available at power meter from Utility Company.

3.3 INSTALLATION

A. General: Install Electrical Power Service in accordance with the Utility Company's recommendations and approved shop drawings.

B. Metering Transformer Cabinet and Meter Base: Install metering transformer cabinet and meter base in accordance with the Utility Company requirements and as shown.

C. Concrete Pads: Provide cast-in-place concrete pads for Utility Company transformers and other equipment.

END OF SECTION

(NO TEXT FOR THIS PAGE)

SECTION 26 05 19

WIRES AND CABLES - 600 VOLTS AND BELOW

PART 1 GENERAL

1.1 SUMMARY

A. Section Includes: Requirements for providing all wires and cables rated at 600 volts and below for complete electrical systems as shown.

B. Related Work Specified in Other Sections Includes, But is Not Limited to, the Following:

1. Section 26 05 00 - Basic Electrical Materials and Methods

2. Section 26 05 53 - Electrical Identification

3. Section 28 23 00 - Video Surveillance

4. Section 28 31 00 - Signaling and Alarm

1.2 REFERENCES

A. Codes and standards referred to in this Section are:

1.	ASTM B3	Standard Specifications for Soft or Annealed Copper Wire
2.	ASTM B8	Standard Specification for Concentric-Lay-Stranded Copper Conductors, Hard, Medium-Hard, or Soft
3.	UL 44	Thermoset-Insulated Wires and Cables
4.	UL 83	Thermoplastic-insulated Wires and Cables
5.	NEMA WC-70/	
6.	ICEA S-95-658	Power Cables Rated 2000 Volts Or Less For The Distribution Of Electrical Energy
7.	NFPA 70	National Electrical Code (NEC)
8.	TIA/EIA 568-C.2	Balanced Twisted-Pair Telecommunication Cabling and Components Standard

1.3 SUBMITTALS

A. General: Furnish all submittals, including the following, as specified in Division 1 and Section 26 05 00 – Basic Electrical Materials and Methods.

B. Product Data and Information: Furnish manufacturer's catalog data for each type of wire and cable furnished.

1.4 QUALITY ASSURANCE

A. General: Furnish wire and cable in accordance with applicable IEEE and NEMA standards and meeting the applicable requirements of the NEC and UL.

B. Tests: Furnish factory tested cables prior to shipment in accordance with ICEA standards for the insulation specified.

1.5 DELIVERY, STORAGE AND HANDLING

A. Deliver, store and handle products and materials as specified in Division 1.

B. Storage: Store cable reels on concrete, 2 x 4 wood lagging, or other hard surface. Do not store reels flat.

PART 2 PRODUCTS

2.1 MANUFACTURERS

A. Acceptable Manufacturers: Acceptable manufacturers are listed below. Other manufacturers of equivalent products may be submitted for review.

1. Wire and Cable

a. Southwire Company

b. The Okonite Company

c. General Cable Corporation

2. Instrumentation Cable

a. Belden

b. Dekoron Wire and Cable

c. The Okonite Company

3. Data (Local Area Network)

    a. Belden

    b. Mohawk Cable

    c. General Cable Corporation

4. Data Highway Cable

    a. Belden

    b. Alpha Wire

    c. General Cable Corporation

5. Multiconductor Cable

    a. The Okonite Company

    b. Southwire Company

6. Closed Circuit Television Cable

    a. Optical Cable Corporation

    b. Alpha Wire

    c. Belden

7. Wire Connectors

    a. Thomas & Betts/ABB Group

    b. 3 M/Electrical Products Division

    c. Ideal Industries

8. Color Coding Marker

    a. W. H. Brady Company

    b. Thomas & Betts/ABB Group

2.2 MATERIALS

A. Conductors: Provide soft drawn or annealed copper stranded conductors with 98 percent minimum conductivity, meeting requirements of ASTM B 8. Solid No. 12 and No. 10 AWG meeting requirements of ASTM B 3 may be used in lighting fixture and convenience outlet wiring.

B. Insulation: Provide wires and cables with insulation as follows:

1. Power, control and lighting wiring

a. Single Conductor: Provide insulation as follows:

NEC Type Letter	Insulation Material
XHHW/XHHW-2	Cross-linked Polyethylene (XLPE)

b. Multiconductor Cables: Insulate individual conductors with 15 mils of polyethylene or PVC and 4-mil nylon jacket. Wrap the conductors with type binder and an outer jacket not less than 45 mils of PVC. Use ICEA Method 1 for color coding wires.

2. Instrumentation Wiring: The manufacturers' name and catalog number shown below are for the purpose of establishing quality and general configuration.

a. Two conductor or single pair: Stranded No. 16 AWG wire, 600 volt polyethylene insulation, twisted conductors, tinned copper drain wire, overlapped metalized tape overall shield providing 100 percent shield coverage and outer jacket of PVC. Dekoron Cat. No. 2X52-69610.

b. Three Conductor: Stranded No. 16 wire, 600 volt polyethylene insulation, twisted conductors, tinned copper drain wire, overlapped metalized tape overall shield providing 100 percent shield coverage and outer jacket of PVC. Okonite Cat. No. 267-38-3401.

c. Multiple Pairs or Triads: Provide individually shielded pairs or triad of stranded No. 16 AWG wire with overall shield. Insulate each wire for 600 volts with 15 mils of PVC and a 4-mil nylon jacket. Assemble pairs or triads with tinned copper drain wire and metalized tape shield providing 100 percent shield coverage. Cable pairs or triads together with tinned copper drain wire and overall metalized tape shield.

3. Closed Circuit Television Cables: Provide cables compatible with the television security system specified in Section 28 23 00 - Video Surveillance. The manufacturers' name and catalog numbers shown herein are for the purpose of establishing quality and general configuration.

   a. Twelve /Twenty-Four Volt Power Cable: Provide stranded two conductor No. 16 AWG wire, 600 volt PVC insulation, twisted conductors and outer jacket of PVC. Belden Cat. No. 9487.

4. Intrusion Alarm System Cables: Provide cables compatible with the intrusion alarm system specified in Section 28 31 00 – Signaling and Alarm.

C. Printed Data on Covering: Provide the following information printed on the surface of all wires and cables at regular intervals throughout the entire length.

1. Manufacturer or trade name.

2. Size of conductor.

3. Type of insulation.

4. Voltage classification.

2.3 WIRE CONNECTIONS AND CONNECTING DEVICES

A. Connectors for No. 10 AWG and Smaller: Provide insulated compression type butt connectors.

B. Connectors for No. 8 AWG and Larger: Provide UL, Inc. listed compression type tube connectors for parallel or butt splices. Provide companion preformed plastic insulating covers or tape to provide insulation equal to conductor insulation.

C. Miscellaneous Connectors: Provide pre-insulated spring connectors for lighting and receptacle splices and pigtails.

D. Solderless Lugs: Provide solderless terminal lugs for stranded and multiple solid conductors at connection to terminals or use UL listed crimp tool compression style lugs.

E. Control Wire Terminations: Provide spade lug or pressure type control conductor connection terminations for control wiring terminations. Provide lug bolting at devices or bus bars with a flat washer, a Belleville washer and a locknut.

2.4 COLOR CODING

A. General: Use a vinyl impregnated cloth tape resistant to oil, dirt and heat for conductor color coding.

PART 3 EXECUTION

3.1 INSTALLATION

A. General: Swab new and existing conduits to be used to clear debris and remove moisture before conductor installation. Install conductors in raceways with no splices in conduits and no splices between boxes.

B. Pulling Equipment: Pull conductors using proper equipment without exceeding manufacturer's recommendation for maximum pulling tension. Protect conductor insulation jacket at all times from twists, kinks, scrapes, punctures and other damage. Replace damaged conductors. Pull wires and cables into ducts and conduit without the use of lubricants, except where such use is necessary and approved. Use UL listed lubricating compound compatible with the conductor insulated jacket and raceway.

Use lines of nylon or polypropylene, propelled by carbon dioxide, or compressed air, to snake or pull wire and cable into conduits. Do not use flat steel tapes or steel cables.

C. Conductor Support: Support conductors in vertical risers with woven grips to prevent loading on conductor connectors.

D. Seals: Provide a seal between the conductor and conduit for conduits entering buildings or from areas where the temperature change may cause condensation or moisture. Seal the conduits after the conductors are in place.

E. Identification: Identify all cables as specified in Section 26 05 53 – Electrical Idendification.

F. Color Coded Tape: Apply color coding tape at all terminations and splices with overlapping turns for a minimum length of two inches, starting two inches back from the termination point. Provide color code tape in all boxes and manholes.

G. Provide color coding throughout the entire network for service, feeder, branch, control and low energy signal circuit conductors. Use the following color code for conductors.

COLOR CODING

SYSTEM	PHASE A	PHASE B	NEUTRAL	GROUND
240/120 single phase	Black	Red	White	Green

COLOR CODING

SYSTEM	PHASE A	PHASE B	NEUTRAL	GROUND
Control and low-energy signal	Red	---	White	Green
Gas and Fire Detection Systems	Pink	---	---	---
Instrumentation	Gray	---	---	---
dc circuits	Blue	---	---	White with blue stripes

H. Terminations: Leave a minimum of six inches of free conductor at each connected outlet and a minimum of nine inches at unconnected outlets.

I. NEC Requirements: Install wiring in accordance with applicable provisions of National Electrical Code, local codes having jurisdiction, and as indicated.

J. Conductor Sizing: Size conductors in accordance with the NEC, local codes having jurisdiction and the following:

1. Size for branch lighting circuits so that the greatest voltage drop between lighting panel and center of load does not exceed two percent at rated load.

2. Size conductors to limit the maximum conductor temperature to less than 75 degrees C, except where specifically stated otherwise.

3. Use minimum conductor sizes as follows:

   a. Power and lighting branch circuits, No. 12 AWG.

   b. 120-volt control circuits, No. 14 AWG.

   c. Instrumentation and signal wiring, 2 or 3 conductors No. 16 AWG stranded shielded.

4. Conductor Ampacity Adjustment Factors: Adjust the conductor ampacity for installation in an ambient temperature of (40) degrees C.

5. Size conductors as shown or as required by the actual load to be served, whichever is larger.

K. Splicing: Install continuous cables without splices in all duct systems.

L. Instrumentation wiring:

Install instrumentation wiring as follows:

1. Wherever possible provide continuous instrumentation wiring without splices from field device to instrument. Where connections are required, make all connections in terminal boxes.

2. Terminate instrumentation wiring at terminal blocks only.

3. Where instrumentation wire is required to be connected in a terminal box, provide an isolated terminal for each shield.

4. Ground instrumentation shields and drain wires only at the panel end of loop only.

5. Install clear, heat-shrink, seamless tubing over exposed shields and drain wires in all terminal boxes, junction boxes, panels and field devices.

M. Accuracy of Information: The number and sizes of wires and conduits indicated are for guidance only and are not necessarily the correct number and sizes necessary for actual equipment installed. Install as many wires and conduits of the required size as necessary for a complete electrical system, and provide adequately for the equipment actually installed.

3.2 CONDUCTOR IDENTIFICATION

A. Labeling: Label each wire at both termination points and at each splice point in junction boxes. Carry individual conductor or circuit identification throughout, with circuit numbers or other identification clearly stamped on terminal boards and printed on directory cards in distribution cabinets and panelboards.

B. Identification: Identify each wire in junction boxes and cabinets by means of plastic slip-on wire marker.

C. Plastic Tags: In manholes, identify each wire by laminated plastic tag located so it can be easily seen.

D. Color Coordination: Connect circuit conductors of the same color to the same phase throughout the installation.

3.3 WIRE AND CABLE CONNECTIONS TO EQUIPMENT

A. General: Provide electrical connections to all equipment in strict accordance with the manufacturer's approved wiring diagrams, the Plans, or as approved. Repair or replace any damaged equipment resulting from erroneous connections.

3.4 CONNECTOR AND TERMINAL LUG INSTALLATION

A. UL Requirements: Install all connectors and terminal lugs in accordance with UL requirements and manufacturer's recommendations.

3.5 FIELD QUALITY CONTROL

A. Insulation Tests: Test all feeders after installation but before final connections are made.

B. Continuity Tests: Test all power conductors and 20 percent of all control conductors to demonstrate proper cable connection.

C. Test Results: Perform all tests and submit certified test results. Replace and retest any conductors that fail the tests.

END OF SECTION

SECTION 26 05 26

GROUNDING

PART 1 GENERAL

1.1 SUMMARY

A. Section Includes: Requirements for providing a complete grounding system as specified and shown. Grounding includes but is not limited to: electric equipment enclosures, raceway systems, transformers, panelboards, ground grid systems, grounding rods, grounding conductors, bonding jumpers, water pipe connections, and structure metal frames as required.

B. Related Work Specified in Other Sections Includes, But is Not Limited to, the Following:

1. Section 26 05 00 - Basic Electrical Materials and Methods

2. Section 26 05 19 - Wires and Cables - 600 Volts and Below

3. Section 26 05 33 - Electrical Raceway Systems

1.2 REFERENCES

A. Codes and Standards: The following codes and standards are referred to in this Section:

1. NFPA 70 - National Electrical Code (NEC)

1.3 SUBMITTALS

A. General: Furnish all submittals, including the following, as specified in Division 1.

B. Product Data and Information: Furnish manufacturer's catalog data for the following:

1. Grounding and grounded conductors

2. Grounding connectors, clamps and bushings

3. Grounding rods

4. Bonding jumpers

C. Shop Drawings: Furnish shop drawings showing the locations and length of grounding rods. Denote the size and material used for grounding rods. Furnish details pertaining to the installation of grounding electrode conductors, grounding and grounded conductors, grounding connections, grounding enhancement materials and the ground grid for buildings, structures, lighting units, manholes and handholes.

D. Quality Control: Furnish a field report stating the results of the system ground impedance test.

1.4 QUALITY ASSURANCE

A. Codes and Standards: Construct a complete grounding system in accordance with applicable ANSI, IEEE Standards, the NEC and local codes.

1.5 DELIVERY, STORAGE AND HANDLING

A. Deliver, store and handle all products and materials as specified in Division 1.

PART 2 PRODUCTS

2.1 MANUFACTURERS

A. Acceptable Manufacturers: Acceptable manufacturers are listed below. Other manufacturers of equivalent products may be submitted for review.

1. Grounding and Grounded Conductors

a. Okonite Company

b. Southwire Company

2. Ground Plates

a. Burndy/ Hubbell IncorporatedO-Z Gedney/Emerson Industrial Automation

b. Eritech Grounding Products

c. Thomas & Betts/ABB Group

3. Grounding Rods

a. Harger Lightning Protection, Inc.

b. Thompson Lightning Protection, Inc.

c. Carolina Galvanizing Utility Products Division

d. Eritech Grounding Products

e. Superior Grounding Systems

4. Ground Rod Access and Test Well Box

a. Hubbell Power Systems – Quazite

b. Oldcast Precast, Inc.

c. Thompson Lightning Protection

d. Eritech Grounding Products

2.2 MATERIALS

A. General: Provide conductor sizes as shown or required.

B. Materials: Provide conductors in accordance with the requirements specified in Section 26 05 19 – Wires and Cables – 600 Volts and Below.

C. Bare conductors: Provide bare copper conductor where buried in earth, embedded in concrete or exposed.

D. Insulated Conductors: Provide copper conductor with green color insulation rated at 600 volts where installed in conduits or other enclosed raceways.

2.3 CONNECTORS

A. Grounding Clamps and Bolted Connectors: Provide grounding clamps and bolted connectors suitable for devices or cables being connected.

B. Ground Plates: Provide two-hole, cast, copper alloy, ground plates suitable for installation in concrete. Fabricate the ground plates with two ½-inch diameter threaded holes and a 4/0 stud for connection to the grounding system.

C. Welding: Provide the exothermic welding process for buried, concealed and accessible connections to structural members, ground rods, and case grounds. Clean and paint welds embedded in the ground or encased in concrete with asphalt base paint.

D. Bolted Connectors: Provide bolted connectors for grounding to ground buses and equipment.

E. Pipe Grounding: Provide copper, brass, or bronze grounding clamps for grounding pipes. Do not provide strap type clamps.

F. Grounding Bushings: Provide grounding bushings for conduits where conduits are not effectively grounded by firm contact to the grounded enclosure.

2.4 GROUNDING RODS

A. Length and Size: Provide grounding rods 3/4-inch in diameter and 10 feet long.

B. Grounding Rod Material: Stainless steel.

2.5 GROUND ROD ACCESS AND TEST WELL BOXES

A. Interior Locations: Cast iron box with open bottom set in concrete floor measuring a minimum of 12 inches in diameter by 18 inches deep with engraved/stamped cover reading "GROUND ELECTRODE".

B. Exterior Locations: Precast concrete or polymer concrete junction box with open bottom, UL listed, Tier 22 in accordance with ANSI/SCTE 77, with engraved/stamped cover reading "GROUND ELECTRODE".

PART 3 EXECUTION

3.1 INSTALLATION

A. General:

1. Install conductors to preclude exposure to physical damage.

2. Install connections firm and tight.

3. Arrange conductors and connectors without placing strain on the connections.

4. Bury equipment grounding conductors as shown, or at a minimum of 12 inches below grade.

5. Bring loops or taps up for connection to equipment or other items to be grounded.

6. Install an insulated grounding conductor in all conduits.

7. When raceways are used to contain and protect grounding conductors, install in accordance with Section 26 05 33 and NEC.

8. Where conductors are installed in nonmetallic raceway, provide the grounding conductor in addition to the neutral wire, sized in accordance with NEC or as scheduled.

9. Perform exothermic welding with properly sized molds.

B. Grounding Rod Installation:

1. Install grounding rods as shown with the top of the rod a minimum of 12 inches below grade.

2. Drive grounding rods into permanently moist soil.

3. Provide additional ground rod sections as required to reach permanently moist soil.

4. Provide junction box without bottom for access to grounding rod and conductor where shown.

C. Equipment Grounding: Ground each piece of electrical equipment using a conductor in the raceway feeding the equipment in accordance with NEC.

1. Unless specified otherwise, connect transformer enclosures and neutrals to the grounding system. Connect the neutral ground connection at the transformer terminal. Make the connection from the ground grid to the ground bus and enclosures of switchboards, switchgears and motor control centers, lighting and distribution panelboards, and control, relay and instrumentation panels.

2. Provide two separate, independent, diagonally opposite connections for power transformers so removal of one connection will not impair continuity of the ground system. Provide ground plates that are imbedded in the concrete pad so that transformers can be removed without damaging grounding system. Install a copper ground connect between ground plates and the transformers.

D. Grounding Conductors: Connect the grounding conductor between the equipment and the grounding system. Where a ground bar is furnished with the panelboard, connect the grounding conductor to the bar.

E. Miscellaneous Grounding: Provide grounding for the following:

1. Ground receptacles and switches and their metal plates through positive ground connection to the yoke/strap, outlet box and grounding system grounding wire installed in the conduit.

2. Ground racks, supports, frames, covers and metal parts in manholes or handholes, controllers, motor frames, surge capacitors, arrestors, lighting fixtures, metal structures, exposed noncurrent carrying metal, mechanical equipment, hoist beams, cranes and similar items.

3. Provide ground connections to equipment using ground plates imbedded in the concrete pad so that the equipment can be removed without damaging grounding system. Provide a copper ground connection between ground plates and the equipment.

3.2 FIELD QUALITY CONTROL

A. Tests: Conduct a witnessed test to determine the ground impedance for the entire system using a ground loop impedance tester. Provide a maximum impedance of 2 ohms at any point of the test. Add additional grounding rods if necessary to meet this requirement.

END OF SECTION

SECTION 26 05 33

ELECTRICAL RACEWAY SYSTEMS

PART 1 GENERAL

1.1 SUMMARY

A. Section Includes: Requirements for providing electrical raceway systems as indicated, in accordance with the Contract Documents.

B. Related Work Specified in Other Sections Includes, But is Not Limited to, the Following:

1. Section 26 05 00 - Basic Electrical Materials and Methods

1.2 REFERENCES

A. Codes and standards referred to in this Section are:

1.	ANSI C80.1	-	Rigid Steel Conduit
2.	ANSI C80.3	-	Electrical Metallic Tubing,
3.	ANSI C80.5	-	Specifications for Aluminum Rigid Conduit
4.	ANSI/NFPA 70	-	National Electrical Code
5.	ANSI/TIA-569-D	-	Telecommunications Pathways and Spaces
6.	NEMA RN1	-	Polyvinyl Chloride (PVC) Externally Coated Galvanized Rigid Steel Conduit and Intermediate Metal Conduit.
7.	NEMA TC2	-	Electrical Polyvinyl Chloride (PVC) Conduit
8.	UL 1	-	Standard for Flexible Metal Conduit
9.	UL 6	-	Standard for Rigid Metal Conduit-Steel
10.	UL 94	-	Standard for Safety of Flammability of Plastic Materials for Parts in Devices and Appliances Testing
11.	UL 360	-	Standard for Liquid-Tight Flexible Steel Conduit

12. UL 651 - Standard for Schedule 40 and 80 Rigid PVC Conduit

13. UL 797 - Standard for Electrical Metallic Tubing-Steel

14. UL 2024 - Standard for Cable Routing Assemblies and Communications Raceways

15. NFPA 70 - National Electrical Code (NEC)

16. Federal Specification WW-C-540C - Conduits, Metal, Rigid (Electrical, Aluminum)

17. Intertek ETL SEMKO PVC-001 - High Temperature H2O PVC Coating Adhesion Test Procedure

1.3 SUBMITTALS

A. General: Furnish all submittals, including the following, as specified in Division 01 and Section 26 05 00 - Basic Electrical Material and Methods.

1.4 QUALITY ASSURANCE

A. Codes: Provide all materials and workmanship in accordance with the requirements of the National Electrical Code and local codes having jurisdiction.

B. Regulatory Requirements: Provide UL listed components.

C. Installers of PVC coated rigid steel conduit are to be factory certified.

1.5 DELIVERY, STORAGE AND HANDLING

A. General: Deliver, store and handle all products and materials as specified in Division 01.

PART 2 PRODUCTS

2.1 MANUFACTURERS

A. Acceptable Manufacturers: Acceptable manufacturers are listed below. Other manufacturers of equivalent products may be submitted for review.

1. Rigid steel conduits and electrical metallic tubing:

a. Allied Tube and Conduit

b. Wheatland Tube Company/JMC Steel Group

c. Republic Conduit Manufacturing

2. PVC coated steel conduits fitting and boxes:

a. Plasti-Bond/Perma-Cote/KorKap-Robroy Industries

b. Ocal – Thomas & Betts Corp.

c. Perma-Cote Industries

3. Rigid nonmetallic conduits:

a. Carlon– Thomas & Betts /ABB Group

b. Cantex Inc.

c. National Pipe & Plastics, Inc.

4. Aluminum Conduits:

a. Allied Tube and Conduit

b. Wheatland Tube Company/JMC Steel Group

c. Sapa Extrusions North America

5. Liquidtight and flexible steel conduit:

a. Electri-Flex Company

b. The International Metal Hose Co.

c. Southwire

d. Anamet Electrical, Inc.

e. Thomas & Betts /ABB Group

6. Conduit Fitting and Connectors:

a. Appleton /Emerson Industrial Automation

b. Thomas & Betts/ABB Group

c. Eaton's Cooper Crouse-Hinds

d. O-Z Gedney/Emerson Industrial Automation

e. Hubbell - Killark

f. AdaletPLM/Scott Fetzer Company

7. Boxes and Enclosures:

a. Appleton /Emerson Industrial Automation

b. Raco/A Hubbell Company

c. Eaton's Cooper Crouse-Hinds

d. Thomas & Betts/ABB Group

e. Hoffman

f. Hope Electrical Products Company

g. O-Z Gedney/Emerson Industrial Automation

8. Strut Channel and Fittings

a. Allied Tube and Conduit

b. Eaton's Cooper B-Line Systems, Inc.

c. Thomas & Betts /ABB Group-SuperstrutEnduro Composites Inc.

d. Strut Tech Systems

e. Unistrut

9. Terminal Blocks

a. Phoenix Contact

b. ABB - Entrelec

c. Weidmuller

2.2 RACEWAYS

A. General: Provide minimum 3/4-inch raceways.

B. Raceway Requirements: Provide raceways meeting the following requirements:

1. Provide rigid steel, heavy wall, hot-dip galvanized in accordance with the requirements of UL-6 and ANSI C80.1.

2. Provide electrical metallic tubing hot dip galvanized conduit in accordance with the requirements of UL 797 and ANSI C80.3.

3. Provide PVC coated rigid steel in accordance with the requirements for rigid steel raceway herein and with 40 mils bonded PVC exterior coating meeting requirements of UL-6 and NEMA RN1. Provide PVC coated rigid steel conduit that is listed and performance verified to ETL PVC-001 for 200 hours. Provide a nominal 2 mil urethane interior coating and a clear urethane coating over the galvanized threads.

4. Provide rigid heavy wall aluminum alloy 6063T-1 conduit in accordance with the requirements of UL 6, Federal Specification WW-C-540C and ANSI C80.5.

5. Provide rigid nonmetallic Schedule 40 PVC in accordance with requirements of NEMA TC2 and UL 651 with solvent cement joints.

6. Provide rigid nonmetallic Schedule 80 PVC electrical conduit in accordance with the requirements of UL Standard 651 and NEMA Standard TC2 with solvent cement joints.

7. Provide liquid-tight flexible single strip steel, hot-dip galvanized conduit with PVC jacket in accordance with requirements of UL 1. Provide a continuous copper bonding conductor wound spirally between convolutions on the inside of the conduit meeting requirements of UL 360 for conduit sizes 1-1/4-inch and smaller.

8. Provide flexible steel conduit constructed of continuous interlocked, zinc coated steel strip in accordance with the requirements of UL 1. Provide in a minimum 3/4 inch electrical trade size.

2.3 FITTINGS

A. General: Provide fittings of similar material as raceways.

B. Fittings Requirements: Provide fittings meeting the following requirements:

1. Set screw or indenter type fittings are not acceptable. Provide threaded connectors for all rigid conduits.

2. Provide solvent cement connections for all rigid nonmetallic conduits.

3. Provide gland compression type fittings for all electrical metallic tubing. Provide insulated type connectors.

4. Provide insulated connectors for liquid-tight flexible conduit.

5. Expansion/Deflection Fittings:

   a. Provide a deflection and expansion coupling for rigid conduits that have a 3/4 inch movement in all directions from normal and a 30 degree angular deflection. Provide coupling that includes internal bonding jumper.

   b. Provide a nonmetallic expansion coupling for nonmetallic conduits that have a 4-inch maximum expansion.

6. Bushings

   a. Provide insulated nonmetallic bushing rated 105 degrees C for all installations where bonding is not required.

   b. Provide insulated metallic grounding and bonding bushing rated 150 degrees C where bonding is required.

2.4 WALL AND FLOOR PENETRATIONS

A. Watertight:

1. For conduit penetrations in new exterior walls or floors provide watertight sealing sleeves consisting of a steel sleeve with pressure ring and clamps.

2. For conduit penetrations in existing walls or floors, provide watertight sealing bushing consisting of a neoprene sealing ring between two PVC coated steel pressure discs. Provide stainless steel captive screws for sealing ring compression.

2.5 BOXES AND CABINETS

A. Outlet Box Requirements:

1. Provide cast aluminum boxes for aluminum conduit systems.

2. Provide galvanized cast iron boxes for galvanized rigid steel conduit systems.

3. Provide nonmetallic boxes and covers in PVC conduit systems.

4. Provide PVC coated boxes and covers in PVC coated conduit systems.

5. Provide pressed steel boxes and covers in electrical metallic tubing conduit systems.

6. Provide watertight gasketed covers held with nonferrous screws for all cast metal boxes.

B. Junction and Pull Box Requirements:

1. Provide cast aluminum boxes with mounting lugs, threaded hubs and gasket covers for surface mounted boxes

2. Provide fabricated sheet metal boxes when cast metal box weight exceeds 50 pounds. Construct box from 1/8-inch thick galvanized sheet steel or aluminum with sides return channel flanged around cover opening. Provide angle or channel supporting frame. Provide continuously welded and ground smooth seams. Provide mounting lugs and threaded conduit hubs.

3. Provide cast steel or fabricated 10-gauge Type 316 stainless steel for boxes either partially or fully encased in concrete. For partially encased boxes provide sides return channel flanged around cover opening. For fully encased boxes provide flush covers. Provide continuously welded and ground smooth seams. Provide mounting lugs and threaded conduit hubs.

4. Provide watertight gasketed covers held with stainless-steel captive screw slot bolts.

5. Provide two padlocking hasps for boxes containing medium voltage cables.

6. Provide steel barriers in all boxes that isolates instrumentation wiring from all other wiring systems

7. Provide all boxes located outdoors or where otherwise indicated, meeting NEMA 4X, 316 stainless steel requirements.

C. Terminal Box Requirements:

1. Provide minimum 12 gauge stainless steel fabricated box with mounting lugs, floor stand, and hinged doors.

2. Provide the door with continuous piano hinge and 3 point lockable latch. Provide print pocket on inside of door.

3. Provide back plate fabricated from 12 gauge minimum steel with white enamel finish for mounting terminals and wire troughs.

4. Provide wire troughs consisting of plastic ducts with snap slot design and removable covers. Run all wiring within wire troughs.

5. Furnish a schedule of terminals with the following information

   a. Source

   b. Type of Signal

   c. Function

6. Provide removable jumpers to allow operation of the equipment.

7. Separate analog terminals from all other terminals.

8. Provide number of terminals shown. Where the number of terminals are not shown, provide sufficient terminals for each wire entering the terminal box plus 20 percent but not less than 10 spare terminals.

9. Terminals:

   a. All catalog numbers refer to Phoenix Contact Type for the purpose of establishing the standard of quality and general configuration desired.

   b. Provide symmetrical type steel mounting rails, NS-35.

   c. Analog Signals: Provide terminals in enclosed housing suitable for wires from 22 to 12 AWG rated 600 volts with gray body, knife disconnect and test connection socket on both sides of disconnect, Phoenix Contact Type UK 5-MTK-P/P.

   d. Control and Alarm Signals: Provide terminals suitable for wires from 24 to 10 AWG rated 18 amperes at 600 volts, blue body, Phoenix Contact Type UK5N BU.

   e. 120-Volt Power Wiring: Provide terminals suitable for wires from 18 to 10 AWG rated 30 amperes at 600 volts, hot (black body), neutral (white body), ground (green body), Phoenix Contact Type UK5N BK, UK5N WH & UK5N GN, respectively.

10. Enclosures: Provide enclosures meeting the same NEMA designation for the various areas as specified under Junction and Pullboxes.

2.6 SUPPORTING DEVICES

A. Raceway Supports: Provide raceway supports meeting the following requirements:

   1. Do not use perforated straps or plumbers tape for conduit supports.

   2. Provide expansion bolts or inserts for fasteners in concrete, toggle bolts for hollow masonry or frame construction, and preset inserts for prestressed concrete.

3. Conduit Straps and Backs:

a. For metallic conduits, provide steel or malleable iron.

b. For nonmetallic and PVC coated conduits, provide PVC coated malleable iron with stainless steel anchors and bolts.

PART 3 EXECUTION

3.1 PREPARATION

A. General: Install electrical equipment and material of the size, type and general routing as shown or required.

B. Coordination with Reinforcing: Install raceway, fittings, boxes and cabinets free from direct contact with reinforcing steel.

C. Alignment: Provide fasteners, anchor bolts, anchorage items and supports as required to insure proper and rigid alignment. Attach equipment with fasteners sized according to size and weight of the equipment and the thickness of the supporting surface.

D. Aluminum Coating: Where aluminum is placed in contact with dissimilar metal or concrete, separate contact surfaces with gasket, non-absorptive tape or coating as specified in Section 09 96 00 to prevent corrosion.

E. Grounding: Make metallic raceways electrically and mechanically continuous and ground as required. Install conduits continuous between outlets, boxes, cabinets and panels.

3.2 INSTALLATION

A. General: Unless otherwise indicated, install conduits exposed, parallel or perpendicular to building floors, ceilings and walls, to avoid interference with other work. In architecturally finished areas, conceal conduits within finished walls, ceilings and floors. Cut conduits square and deburr the cuts to the same degree as the conduit manufacturer. Fasten conduit securely to outlets, junction, pull and terminal boxes. Provide caps and seals to prevent the entrance of foreign material and moisture during installation and before pulling wire.

1. Where conduit size is not shown, provide conduits one size larger than indicated in Table 4, Chapter 9 of the NEC.

2. Saw cut aluminum conduit to prevent reduction in internal area.

3. Keep conduit at least six inches away from high temperature piping, ducts, flues and surfaces. For mounting on concrete and masonry surfaces provide a minimum of 1/4 inch air space between conduit and mounting surface. Support and fasten conduit to building structural members spaced in accordance with electrical codes. Support conduit at least every eight feet or less in accordance with NEC requirements.

4. When two or more exposed conduits are in the same general routing, provide parallel installation with symmetrical bends.

5. Make changes in direction with bends or fittings. Use factory-made bends or elbows wherever possible. Make field bends and offsets with a hand bender or conduit-bending machine.

6. Run conduit with no more than the equivalent of three 90 degree bends between pull points. Provide no more than 125 feet of conduit runs between pull points. Provide pull boxes where shown, specified or wherever required to install conductors and to meet the above requirement.

7. Install pull and junction boxes in accessible locations with working space in front of and around the installation. Obtain approval to locate boxes in finished areas.

8. Install an expansion fitting when a conduit crosses a structural expansion joint.

9. Unless otherwise approved, install conduits to cross at right angles to building structural expansion joints.

10. Where approved for encased installation, install conduits in slabs as close to the middle of concrete slabs as practicable without disturbing reinforcement. Do not use conduit with an outside diameter exceeding one-third of the slab thickness. Do not place conduits closer than three diameters on centers, except at cabinet locations where the slab thickness is increased.

11. Pitch conduits to outlet boxes to avoid trapping moisture. Where dips are unavoidable in exposed conduit runs, install drain fitting at low point.

B. Conduit Material Types: Provide conduit as follows:

1. Provide aluminum conduit in all exposed indoor and outdoor installations, except as described below.

2. Provide rigid steel conduits in all installations concealed in structures, concrete encased within structures or under structures.

3. Provide electrical metallic tubing in all installations above suspended ceilings and in partition constructed walls.

4. Provide rigid steel conduits for all instrumentation, and electronic equipment signal wiring in all exposed or concealed noncorrosive installations.

5. Provide rigid nonmetallic Schedule 40 conduits underground, concrete encased or direct buried, unless specifically detailed otherwise.

6. Horizontal conduit shall be installed to allow at least 7 feet of headroom, except along structures, piping, and equipment or in other areas where headroom cannot be maintained.

7. Conduit shall not be routed across the surface of a floor, roof, or walkway unless approved by Engineer.

8. PVC-coated rigid steel conduit shall be threaded and installed as recommended by the conduit manufacturer's installation procedure using appropriate tools.

9. Corrosive Locations:

    a. Corrosive locations are defined in Section 26 05 00, Basic Materials and Methods or as shown.

    b. Provide PVC coated rigid steel conduit in all installations in corrosive locations.

C. Connections to Equipment:

1. Provide double locknuts and bushings for all boxes, enclosures and cabinets located in dry areas.

2. Provide watertight hub fittings for all boxes, enclosures and cabinets located below grade or in wet, damp or corrosive areas.

3. Provide rigid conduit connection where equipment is fixed and not subject to adjustment, mechanical movement or vibration. Provide union fittings to permit removal of equipment without cutting or breaking conduit.

4. Provide liquid-tight flexible conduit connection where equipment is subject to adjustment, mechanical movement or vibration.

5. Coat all threads in steel conduit runs with zinc dust in oil or other corrosion-preventive compound before making connections.

6. Coat all threads in aluminum conduit runs with graphite or other corrosion preventive compound.

D. Underground Conduits: Provide underground conduits meeting the requirements of Section 26 05 43.

E. Penetrations: Make concealed penetrations for single conduits not more than 1/4-inch larger than the diameter of the conduit. Make penetrations through walls, ceilings and floors other than concrete for exposed conduits not more than 1/4-inch larger than the diameter of the conduit. Fill the voids around conduit with caulking compound and finish the surface the same as the wall, ceiling or floor.

1. Where a conduit enters through a membrane waterproofed wall or floor, provide a watertight sealing sleeve that can be tightened from one or both sides. If the sealing sleeve is not placed with the concrete, core drill the proper size hole to provide a mechanically watertight installation.

2. Where a conduit enters through a concrete non-waterproofed wall or floor, provide a galvanized steel sleeve and fill the space between the conduit and sleeve with a plastic expandable compound. If the sleeve is not placed with the concrete, drill the hole not less than 1/2-inch and not more than one inch larger than the sleeve, center the sleeve and grout the sleeve for the total depth of penetrated concrete with non-shrink grout, polyurethane or silicone sealant.

F. Spare Conduit: Provide spare conduits for future use as shown or required. Provide a minimum 200 pound strength nylon pull line in each spare conduit and identify the origin and termination of the conduit at each end. Terminate spare conduits in equipment, boxes or by couplings plugged flush with the inside of building surfaces.

G. Boxes: Provide boxes of the proper dimensions for the size and quantity of conductors enclosed.

1. For boxes mounted on steel, concrete and masonry surface, provide a minimum 1/4-inch non-metallic spacer to hold the box away from the surface.

2. Provide pressed metal boxes in all partition constructed walls.

3. Provide separate support for boxes and bolt units to buildings with expansion anchors, toggle bolts or appropriate screws. For lighting fixture outlet boxes, provide supports adequate to support the weight of the fixture to be mounted on the box.

4. Remove debris including dust, dirt, wire clippings and insulation from the interior of boxes. Replace boxes with open conduit holes. Repair or replace damaged boxes as directed.

5. Unless otherwise indicated, mount outlet boxes flush with the finished wall or ceiling with the long axis vertical. Unless otherwise shown or specified, provide mounting heights measured from the finished floor to centerline of the outlet box as follows:

   a. For switches: 3'-2". Mount the box for lighting switches on the strike side of the door.

   b. For duplex convenience outlets: Finished areas 12 inches and unfinished areas 2 feet.

   c. For fixtures and equipment: As shown.

3.3 CLEANING AND PAINTING

A. Touch Ups: Touch up all PVC coatings on conduit, fittings and boxes where scratched, marred or otherwise compromised during handling and installation per the manufacturer's instructions.

END OF SECTION

(NO TEXT FOR THIS PAGE)

SECTION 26 05 43

UNDERGROUND ELECTRICAL DISTRIBUTION SYSTEM

PART 1 GENERAL

1.1 SUMMARY

A. Section Includes: Requirements for providing underground electrical raceway system consisting of direct buried conduits and outdoor electrical equipment pads as shown.

B. Related Work Specified in Other Sections Includes, But is Not Limited to, the Following:

1. Section 03 30 10 – Structural Concrete
2. Section 26 05 00 - Basic Electrical Materials and Methods
3. Section 26 05 33 - Electrical Raceway Systems
4. Section 26 05 19 - Wire and Cable - 600 Volts and Below
5. Section 26 05 26 - Grounding
6. Section 31 23 16 - Excavation
7. Section 31 23 23 - Backfilling
8. Section 32 90 00 - Landscaping Work

1.2 REFERENCES

A. Codes and standards referred to in this Section are:

1. NEMA TCB 2-2017 – Guidelines for the Selection and Installation of Underground Nonmetallic Raceways

1.3 SYSTEM DESCRIPTION

A. Performance Requirements: Arrange and route conduits as shown to allow pulling-in of conductors without exceeding the conductor's tension limits.

1.4 SUBMITTALS

A. General: Furnish all submittals, including the following, as specified in Division 1.

B. Product Data and Information: Furnish manufacturer's data for conduits, and all accessories.

C. CONTRACTORS' Shop Drawings: Furnish working drawings for underground electrical raceway system showing conduits. Indicate the designation, type, size, location, elevations and slopes of the system.

1.5 DELIVERY, STORAGE AND HANDLING

A. Deliver, store and handle all products and materials as specified in Division 1.

1.6 PROJECT CONDITIONS

A. Existing Conditions: Examine record drawings to determine the location of all obstructions along the conduit route and at the sites of outdoor electrical equipment. Contact the local underground utility locator service and confirm the location of all existing utilities prior to excavating for new work.

B. Field Measurements: Field survey, and in critical areas, excavate test pits to verify locations of probable obstacles along the conduit route and at the sites of outdoor electrical equipment.

PART 2 PRODUCTS

2.1 MANUFACTURERS

A. Acceptable Manufacturers: Acceptable manufacturers are listed below. Other manufacturers of equivalent products may be submitted for review.

1. Conduit Spacers

a. Carlon -Thomas & Betts/ABB Group

b. Underground Devices, Inc.

c. FRE Composites

d. United Fiberglass of America

2. Buried warning tape

a. Ezcode - Thomas & Betts/ABB Group

b. W. H. Brady Company

2.2 MATERIALS

A. Conduit: Provide conduits meeting the requirements of Section 26 05 33 – Electrical Raceway Systems.

B. Cable: Provide cables meeting the requirements of Section 26 05 19 – Wires and Cables – 600 Volts and Below.

C. Spacers: Provide rigid conduit spacers as recommended by the Manufacturer of conduits. Maintain conduit separation as shown, specified and as required. Provide rigid plastic, conduit spacers to maintain conduit separation as indicated.

D. Grounding: Provide grounding meeting the requirements of Section 26 05 26 - Grounding.

E. Underground Warning Tape: Provide 6-inch wide detectable type plastic tape in red (electric), yellow (utility) and orange (communications) colors with suitable warning describing the type of buried electrical lines.

PART 3 EXECUTION

3.1 CONDUIT INSTALLATION

A. General: Install underground, direct buried conduits as indicated.

B. Handle and install nonmetallic raceways in accordance with NEMA TCB 2.

C. Conduit Route: Establish and mark exact conduit or cable routing. Resolve routing near existing obstacles and coordinate with other sitework. Maintain a 12-inch minimum longitudinal clearance from the conduit bank encasement or direct buried conduit to adjacent utility lines. Maintain a 6-inch minimum vertical clearance from the conduit bank encasement or direct buried conduit to utility lines at crossovers. Adhere to lines, grades, elevations and dimensions as shown.

D. Trench Excavation: Perform excavation work in accordance with the requirements of Section 31 23 16 - Excavation.

E. Bedding: Provide a sand cover on trench bottoms to create a firm and smooth surface for direct buried conduits.

F. Spacers: Locate spacers at intervals of approximately four feet and stagger locations at each conduit tier to provide not less than 12-inches of longitudinal separation.

G. Conduit: Place conduit in straight lines and with a minimum slope of 0.25 percent (3 inches per 100 feet). Slope conduit down to structures. Install expansion fittings in straight runs exceeding 100-feet. Secure conduits in place to prevent floating and movement.

H. Bends: Install elbows with 3-foot minimum radius.

I. Inside Cleaning: Pull a standard flexible mandrel not less than 12-inches long, having a diameter approximately 1/4-inch less than the inside diameter of the conduit, through each conduit, then pull a brush with stiff bristles through each conduit. Replace conduit runs that do not allow the passage of the mandrel at no increase in Contract Price. Use the pneumatic method to draw into conduit the nylon or polypropylene pull line. Plug and seal all conduits after cleaning.

J. Connections to Structures: Install as shown.

K. Backfilling: Backfill meeting the requirements of Section 31 23 23 - Backfilling. Provide a cover layer of sand that is 6 inches deep above direct buried conduits. or cables.

L. Underground Warning Tape: Provide one underground warning tape for each trench up to 18 inches wide. For trenches wider than 18 inches provide two underground warning tapes installed at each edge of the trench. Place the tape or tapes 12 inches below the finished grade.

M. Markers: Provide 4-inch round, 6-inch thick, concrete markers identified with the letter "E" and directional arrows. Place these markers approximately every 200 feet along straight portions of conduit and cable runs, at each change in direction and at the conduit run end. Install markers to protrude 1-inch above adjacent ground. Allow markers to protrude 1/2-inch in finished lawns. Do not place conduit markers at structures and at conduit risers.

N. Surface Finish: Restore existing pavements and curbs with materials and construction to match existing. Restore landscaped areas meeting the requirements of Section 32 90 00. – Landscaping Work.

3.2 OUTDOOR ELECTRICAL EQUIPMENT

A. See drawings for outdoor electrical equipment installation details.

B. Location: Establish and mark pad locations exactly. Resolve locations near existing obstacles and coordinate with other sitework under this Contract. Adhere to orientation, elevations and dimensions as shown.

C. Site Excavation: Provide site excavation meeting the requirements of Section 31 23 16 - Excavation.

D. Grounding: Install grounding conductors through pads meeting the requirements of Section 26 05 26. – Grounding.

END OF SECTION

(NO TEXT FOR THIS PAGE)

SECTION 26 05 53

ELECTRICAL IDENTIFICATION

PART 1 GENERAL

1.1 SUMMARY

A. Section Includes: Requirements for providing materials for the identification of electrical equipment, components, conduits, cables and wiring, and furnishing and installing safety signs.

B. Related Work Specified in Other Sections Includes, But is Not Limited to, the Following:

1. Section 26 05 00 - Basic Electrical Materials and Methods

1.2 REFERENCES

A. Codes and standards referred to in this Section are:

1. ANSI C2 - National Electrical Safety Code (NESC)
2. ANSI Z535.1 - Safety Color Code
3. ANSI Z535.2 - Environmental and Facility Safety Signs
4. ANSI Z535.3 - Criteria for Safety Symbols
5. OSHA - Occupational Safety and Health Act

1.3 SUBMITTALS

A. General: Furnish all submittals, including the following, as specified in Division 1.

B. Product Data and Information: Furnish manufacturers' catalog data for safety signs, nameplates, labels and markers.

1. Furnish manufacturers' instructions indicating applicable conditions and limitations of use, storage, handling, protection, examination and installation of product.

C. CONTRACTOR's Record Drawings: Furnish CONTRACTOR's record drawings accurately showing the actual location and elevation of underground ducts, handholes and manholes at the completion of the Project.

1.4 DELIVERY, STORAGE AND HANDLING

A. Deliver, store and handle all products and materials as specified in Division 1.

1.5 SPARE PARTS

A. General: Furnish the following spare parts.

1. Ten safety signs of each size and wording.

B. Packaging: Package spare parts in containers bearing labels clearly identifiying the contents. Provide all spare parts with information needed for reordering. Deliver spare parts in original factory packaging.

PART 2 PRODUCTS

2.1 MANUFACTURERS

A. Acceptable Manufacturers: Acceptable manufacturers are listed below. Other manufacturers of equivalent products may be submitted for review.

1. W. H. Brady Company

2. Seton

3. Thomas & Betts/ABB Group

2.2 MATERIALS AND COMPONENTS

A. General: Provide identification materials listed and classified by UL or tested by an acceptable Electrical Testing Company certifying the equivalence of the materials to UL listing requirements and OSHA approved.

B. Laminated Plastic Nameplates: Provide engraved three layer laminated plastic nameplates with black letters on white background and fastened with corrosion-resistant screws. Do not use mounting cement for fastening nameplates.

1. Provide nameplates with 1-inch high lettering for switchgears, switchboards, motor control centers, control panels, relay panels, contactor panels, panelboards, and similarly grouped equipment, transformers and disconnect switches.

2. Provide nameplates with 1/2-inch high lettering for individual components of a group such as main breakers, switchgear units, switchboard units, motor control center units and similar devices.

3. Provide nameplates with 1/4-inch high lettering for remote motor controllers, control stations, relays and similar equipment.

4. Provide nameplates for each motor identifying service or function and lettering of an appropriate size to suit each motor.

5. Provide approved laminated directories of circuits with typewritten designations of each branch circuit in each panelboard.

6. Provide smaller lettering for a neat, legible nameplate where the amount of lettering causes excessively large nameplates.

C. Wire Markers: Identify wire bundles and each individual wire.

1. Wire bundles: Provide a brass or rigid fiber identifying tag attached with UV-resistant nylon self-locking cable ties listed to UL 62275, Type 21 or 21S.

2. Wire identification markers: Provide a printed white, heat-shrink, seamless tubing type with black bold lettering for wires size No. 10 AWG and smaller. Provide a printed self-laminating white, vinyl type with black bold lettering for wires No. 8 AWG and larger.

D. Conduit Marking Paint: Provide conduit marking paint meeting the requirements of Section 09 96 00 - High Performance Coating.

E. Safety Signs: Provide safety signs in accordance with OSHA standard meeting the requirements of ANSI C2, ANSI Z535.1, ANSI Z535.2 and ANSI Z535.3.

1. Provide safety signs manufactured from vinyl having a minimum thickness of 60 mils with red and black letters and graphics on a white background.

2. Size: 10 inches by 14 inches except signs 7-inch by 10-inch may be provided where the larger size cannot be applied.

3. Mount safety signs using corrosion-resistant screws. Do not use mounting cement.

F. Underground Warning Tape:

1. Provide underground warning tape for underground cables, conduits and duct banks.

2. Use 6 inch wide, 0.004 inch thick, polyethylene underground warning tape with black lettering and background colors as follows:

   a. Electric: Red.

   b. Telephone/Data: Orange.

3. Provide lettering that indicates the type of buried service.

   a. Electric: "CAUTION ELECTRIC LINE BURIED BELOW"

   b. Telephone/data: "CAUTION TELEPHONE LINE BURIED BELOW"

4. Manufacturer: Utility Safeguard, LLC.

PART 3 EXECUTION

3.1 PREPARATION

A. Surface Preparation: Degrease and clean surfaces to receive nameplates, labels and marking paint.

3.2 INSTALLATION

A. General: Install nameplates on the front of equipment, parallel to the equipment lines and secured with corrosion resistant screws. Caulk all screw holes with clear silicone caulk prior to attaching nameplates on NEMA 4X enclosures.

   1. Install laminated nameplates identifying:

      a. Each electrical equipment enclosure

      b. Individual equipment and devices

B. Wire Markers: Identify wire bundles and each individual wire with identification tags as follows:

   1. Wire Bundles: Install an identifying tag engraved with the conduit number where conduits enter motor control centers, switchgear, switchboards, control panels, terminal boxes and the like.

   2. Wire identification markers: Provide wire identification markers on each wire at all termination points.
      a. On power and lighting circuits: The branch circuit or feeder number as indicated on Drawings.

b. On control circuits terminated in motor control centers, switchgears, control panels and alike: The field device and terminal number of the opposite end connection.

c. On control circuits at each field device: The panel or compartment number and terminal number of the opposite end connection.

3. Oversize wire markers so that after heat shrinking the wire marker can be rotated on the wire. Rotate wire markers so that wire identification number is visible.

C. Safety Signs: Provide safety signs as follows or as shown including existing locations and equipment not signed per current industry standards and being modified or reused under this Contract:

1. Type DS-2

a. Wording: "DANGER - ELECTRICAL EQUIPMENT, AUTHORIZED PERSONNEL ONLY"

b. Location: At each entrance to electrical rooms, and enclosed outdoor electrical equipment.

2. Type DS-5

a. Wording: "DANGER - POWERED FROM MORE THAN ONE SOURCE"

b. Location: Outside all equipment that operates from more than one power source.

3. Type DS-6

a. Wording: "NOTICE - KEEP DOOR CLOSED"

b. Location: On all doors with another safety sign installed.

4. Type DS-7

D. Underground Warning Tape

1. Install underground warning tape in the trench above underground conduit(s), 1 foot below the finished grade.

END OF SECTION

(NO TEXT FOR THIS PAGE)

SECTION 26 05 80

ELECTRIC MOTORS

PART 1 GENERAL

1.1 SUMMARY

A. Section Includes: Requirements for low-voltage, electric induction motors as specified.

B. Related Work Specified in Other Sections Includes, But is Not Limited to, the Following:

1. Section 09 96 00 – High Performance Coatings

2. Section 26 05 00 - Basic Electrical Materials and Methods

3. Section 26 05 26 - Grounding

4. Section 26 05 33 - Electrical Raceway Systems

5. Section 26 05 53 - Electrical Identification

1.2 REFERENCES

A. Codes and standards referred to in this Section are:

1. AFBMA 10 - Metal Balls

2. NEMA CP1 - Shunt Capacitors

3. NEMA MG1 - Motors and Generators

4. NFPA 70 - National Electrical Code (NEC)

1.3 AMERICAN IRON AND STEEL

A. Comply with the “American Iron and Steel (AIS)” requirements as contained in Section 436 of the Consolidated Appropriations Act, 2014, further described in the Bid Form.

1.4 SUBMITTALS

A. General: Furnish all submittals, including the following, as specified in Division 1 and Section 26 05 00 - Basic Electrical Materials and Methods.

B. Product Data and Information: Furnish manufacturer's catalog data for each motor.

C. Shop Drawings: Furnish shop drawings for each motor detailing arrangement, wiring, conduit boxes, and motor application.

D. Operations and Maintenance Manuals: Furnish operation and maintenance manuals for all motors as specified in Division 1.

1.5 QUALITY ASSURANCE

A. Codes: Comply with all local and applicable codes.
B. Regulatory Requirements: Comply with the requirements of the Regulatory Agencies having jurisdiction over this Project.

1.6 DELIVERY, STORAGE AND HANDLING

A. Deliver, store and handle all products and materials as specified in Division 1.

PART 2 PRODUCTS

2.1 MANUFACTURERS

A. Acceptable Manufacturers: Acceptable manufacturers are listed below. Other manufacturers of equivalent products may be submitted for review.

1. Motors:

a. U.S. Motors, a Nidec Brand

b. GE Power Conversion

c. ABB

d. Siemens Industry

e. TECO-Westinghouse Motor Company

f. Ideal Electric Co.

2. Bearing Protection Ring:

a. Aegis/ElectroStatic Technology Inc.

2.2 MATERIALS

A. General: Provide motors and accessories with the equipment as specified under the equipment sections.

B. Motor Requirements: Unless otherwise specified, provide motors as follows:

1. Motor nameplate horsepower as specified for the driven equipment.

2. Motors that operate continuously over the entire load range of the driven equipment without loading motor in excess of nameplate rating and its specified temperature limit.

3. Provide 115-volt or 230-volt, single phase, 60-hertz type, as defined in the driven equipment specifications.

4. Motors that are suitable for continuous operation with a line voltage variation within ± 10-percent of rated voltage.

5. Motors that operate continuously in a 40 degrees C ambient.

2.3 MECHANICAL PROTECTION

A. Indoor Locations:

1. For motors located in dry, clean and well-ventilated areas provide open drip-proof type.

2. For motors located in wet, damp or dusty areas, provide totally-enclosed, fan-cooled type with removable drain plug.

3. In corrosive areas as defined in Section 26 05 00 - Basic Electrical Materials and Methods or as shown, provide totally-enclosed, fan-cooled type with removable drain plug.

B. Submersible Locations: For motors that operate submerged or operation in a location for the potential to be submerged, provide a completely sealed submersible motor.

2.4 BOXES

A. General: Provide oversized conduit boxes on motors to facilitate conductor installation and auxiliary components as required.

1. Provide separate boxes for motor power leads, accessory terminals and RTD leads.

2. Make conduit box NEMA enclosure ratings compatible with motor enclosures.

3. Where shown, provide additional space in the power terminal box for the mounting and wiring of the current transformers furnished under the motor protection system.

2.5 NEMA DESIGN AND INSULATION

A. Design Classification: Provide NEMA Design B, unless otherwise specified with NEMA Class F moisture resistant insulation and NEMA Class B, 80 degrees C temperature rise at rated nameplate load.

2.6 WINDINGS

A. General: Provide copper windings unless otherwise specified.

2.7 BEARINGS

A. Ball and Roller Bearings: Use antifriction ball or roller type bearings at manufacturer's option, unless otherwise specified.

B. Regreasable Bearings: Use regreasable bearings with support side thrust loadings, with an AFBMA B-10 bearing life rated at least 100,000 hours, based on a reliability of 90 percent.

2.8 SERVICE FACTOR AND LOADINGS

A. Service Factor: Provide 1.15 service factor unless otherwise specified. Where motors with a 1.0 service factor are furnished, provide motors rated at least 15 percent greater than required brake horsepower.

B. Shaft Loading: Provide steady state shaft loading not to exceed 100 percent of full load rating under maximum load, excluding the service factor, unless otherwise specified.

2.9 SPEED

A. General: Provide motor speed as specified or as shown for the driven equipment.

2.10 TORQUE

A. General: Provide breakdown torque of 200 percent or more of motor full load torque.

B. Locked Rotor: Provide locked rotor torque of 80 percent or more of motor full load torque.

C. Inertia: Provide necessary WK^2 data for special loads to coordinate with motors.

D. Special Motors: Supply special motors where torque requirements exceed standard design.

2.11 SLIDE RAILS AND SOLE PLATES

A. General: Provide slide rails and sole plates as required for proper installation.

2.12 SINGLE PHASE MOTORS

A. Provide capacitor or open split phase start motors unless otherwise specified.

2.13 EFFICIENCY

A. General: Provide motors one horsepower and larger meeting the requirements as stated in Table 12-11, Full Load Efficiency of Energy Efficient Motors, in NEMA MG 1, Part 12.

B. General: Provide motors one horsepower and larger meeting the requirements as stated in Table 12-12, Full Load Efficiency for NEMA Premium Efficiency Electric Motors, in NEMA MG 1, Part 12.

2.14 POWER FACTOR

A. General: Provide motors having the following minimum power factor ratings:

Motor Power Factor - Minimum		
	Percent	
Horsepower	At 1800 RPM Power Factor	At 1200 RPM Power Factor
3/4	71.5	65.0
3	79.9	73.7

2.15 NOISE

A. General: Limit motor machine noise to sound power levels listed in NEMA MG 1-12.

2.16 ACCESSORIES

A. Identification: Provide identification meeting the requirements with Section 26 05 53 – Electrical Identification.

2.17 SOURCE QUALITY CONTROL

A. Standard Commercial Tests: Perform the following tests in accordance with NEMA standards.

1. No load running current and speed.
2. Locked rotor current

3. Dielectric routine tests

4. Motor efficiency tests

5. Motor power factor tests

B. Additional Testing: Perform the following additional tests in accordance with NEMA standards.

1. Winding resistance

2. Bearing inspection
3. Power factor at full, 3/4 and 1/2 load

4. Efficiency at full, 3/4 and 1/2 load

5. Motor starting torque

6. Bearing currents testing per manufacturer’s specifications

7. Motor frame grounding

PART 3 EXECUTION

3.1 INSTALLATION

A. General: Install motors in accordance with the manufacturer's recommendations and approved shop drawings and as specified in Division 1. Make all necessary adjustments to equipment to provide a complete operational system.

B. Install additional grounding connections where shaft grounding protection is applied.

3.2 FIELD QUALITY CONTROL

A. Inspections and Tests: Perform field preliminary and final inspection and testing for motors as follows:

1. Preliminary Inspection:

a. Demonstrate that each motor has been properly connected.

b. Check for proper rotation by bumping prior to connecting motor to driven equipment.

2. Final Test:

a. Measure motor applied voltage and current with equipment operating at full load.

b. Operate equipment as specified.

3.3 CLEANING AND PAINTING

A. Shop Painting: Paint the motors in accordance with the requirements of Section 09 96 00 – High Performance Coatings.

B. Field Painting: Clean and touch up marred surfaces to match the original finish.

END OF SECTION

SECTION 26 24 16

PANELBOARDS

PART 1 GENERAL

1.1 SUMMARY

A. Section Includes: Requirements for providing lighting and distribution panelboards including circuit breakers and cabinets.

B. Related Work Specified in Other Sections Includes, But is Not Limited to, the Following:

1. Section 26 05 00 - Basic Electrical Materials and Methods

2. Section 26 05 53 - Electrical Identification

3. Section 26 05 26 - Grounding

1.2 REFERENCES

A. Codes and standards referred to in this Section are:

1. NEMA PB 1 - Panelboards

2. UL 67 - Panelboards

3. Fed. Spec. W-P-115 - Power Distribution Panel

4. UL 486A - Wire Connectors and Soldering Lugs for Use With Copper Conductors

5. NFPA 70 - National Electrical Code (NEC)

1.3 SUBMITTALS

A. General: Provide all submittals, including the following, as specified in Division 01 and Section 26 05 00.

B. Product Data and Information: Provide the manufacturer's catalog data for panelboards, circuit breakers and accessories.

C. Shop Drawings: Provide drawings of all the different type of panels and cabinets to be provided. Clearly indicate all gutter sizes, bus locations, main breaker or lug locations and any special construction required. Provide individual breaker layouts and schematics for each panel.

D. Operations and Maintenance Manuals: Furnish operation and maintenance manuals for the panelboards as specified in Division 01.

1.4 QUALITY ASSURANCE

A. Codes: Provide all materials and workmanship meeting the requirements of the NFPA, the National Electrical Code and local codes.

1. Design, fabricate and test the panelboards in accordance with applicable ANSI, IEEE and NEMA and UL standards.

2. Provide panelboards suitable for operation at their standard nameplate ratings in accordance with ANSI standards.

1.5 DELIVERY, STORAGE AND HANDLING

A. General: Deliver, store and handle all products and materials as specified in Division 01.

PART 2 PRODUCTS

2.1 MANUFACTURERS

A. Acceptable Manufacturers: Acceptable manufacturers are listed below. Other manufacturers of equivalent products may be submitted for review.

1. Panelboards

a. General Electric Company

b. Square D/Schneider Electric

c. Eaton/Cutler-Hammer

d. Siemens

2.2 MATERIALS

A. General: Provide factory-assembled fully rated dead-front type, panelboards, suitable for surface or flush mounting with branch circuit breakers and a main circuit breaker or main lugs as indicated.

1. Provide panelboards with a full capacity separate ground bus and connected to a single-phase three-wire service with insulated neutral buses as indicated.

2. Provide panelboards with the voltage, frequency and current ratings as indicated conforming to NEMA Standard PB 1, Fed. Spec. W-P-115, UL 67, the NEC and local codes.

3. Provide panelboards with copper main, neutral and ground buses as indicated.

4. Where required, label panelboards suitable for use as service entrance equipment.

B. Bracing: Provide main bus bracing exceeding the lowest interrupting rating of any circuit breaker installed.

C. Fabrication: Fabricate panelboards using galvanized steel, continuously welded. Provide cabinet fronts with doors over the circuit breakers. Provide doors fastened with concealed hinges and equipped with flush type catches.

1. Provide panelboards at least 20 inches wide, 5-3/4 inches deep, with wiring gutters on both sides.

2. Provide all panelboard trims exceeding five square feet in area with an inside permanently secured angle to support the trim during fastening.

3. Panelboards shall be suitable for industrial service and for the environment where they are located.

2.3 COMPONENTS

A. Circuit Breakers: Provide bolt-on type branch and main circuit breakers.

1. Furnish the frame sizes, trip settings and number of poles as indicated. Clearly identify the ampere trip rating on the circuit breakers.

a. For all panelboards, provide 20-ampere, single-pole, 120 volt circuit breakers unless otherwise shown or scheduled.

2. Provide all breakers with quick-make, quick-break, toggle mechanisms with automatic thermal-magnetic, inverse time-limit overload and instantaneous short circuit protection on all poles, unless otherwise indicated. Indicate automatic tripping by the breaker handle assuming a clearly distinctive position from the manual ON and OFF position. Design the breaker handle to be trip-free on overloads.

3. Interrupting Rating: 22,000 rms symmetrical amperes for circuit breakers on 240 volt systems or less, and 65,000 rms symmetrical amperes for circuit breakers on 277 or 480 volt systems.

4. Provide multipole breakers that utilize a common tripping bar.

5. Provide ground fault interrupter circuit breakers for all circuits serving receptacles located below grade and outdoors and as scheduled.

6. Provide full module size single-pole breakers. Do not install two-pole breakers in a single-pole module.

7. Provide all 20 ampere, one pole circuit breakers with a lug wire range suitable for the termination of #14AWG through #8AWG. For circuit breakers with higher current ratings, provide lugs adequate for the wire sizes indicated on the Contract drawings.

8. Provide circuit breakers 100 amperes and smaller with a 60/75 degree C cable temperature rating.

B. Surge Protection Devices (SPD): Provide each panelboard with a surge protection device meeting the requirements of Section 26 29 53.

2.4 ACCESSORIES

A. Directories: Provide directories in accordance with Section 26 05 53.

B. Circuit Breaker Handle Lock: Where shown, provide circuit breakers with handle clamp that holds the circuit breaker handle in the ON position.

C. Keying: Key all panelboards alike.

PART 3 EXECUTION

3.1 INSTALLATION

A. General: Install all panelboards in accordance with manufacturer's recommendations and approved shop drawings and as specified in Division 1 and in compliance with the requirements of NEMA standards, NEC, and applicable ANSI Publications.

B. Mounting Height: Mount all panelboards either surface or flush mounted as shown such that the height of the top operating handle does not exceed 6 feet 6 inches from the floor.

C. Coordination: Coordinate with other Work including cabling and wiring work to interface the installation of the panelboards.

D. Torque Requirements: Tighten electrical connectors and terminals, including screws and bolts, in accordance with the equipment manufacturer's published torque tightening values for the equipment connectors. Where manufacturer's torque requirements are not indicated, tighten connectors and terminals in accordance with UL 486A.

E. Circuit Breaker Handle Lock: Install circuit breaker handle clamp on each circuit breaker as shown.

F. Directory: Provide a laminated typewritten directory with the following information:

1. Circuit number

2. Area served

3. Utilizing equipment

4. Name and location of panelboard power source.

3.2 CLEANING AND PAINTING

A. Shop Painting: Provide manufacturer’s standard paint.

B. Field Painting: Touch up scratched and marred surfaces to match the original finish.

END OF SECTION

(NO TEXT FOR THIS PAGE)

SECTION 26 27 26

WIRING DEVICES

PART 1 GENERAL

1.1 SUMMARY

A. Section Includes: Requirements for providing wiring devices and appurtenances as indicated, in accordance with the Contract Documents.

B. Related Work Specified in Other Sections Includes, But is Not Limited to, the Following:

1. Section 26 05 00 - Basic Electrical Materials and Methods

2. Section 26 05 26 - Grounding

3. Section 26 05 33 - Electrical Raceway System

1.2 REFERENCES

A. Codes and standards referred to in this Section are:

1. Fed Spec WC 596 - Electrical Power Connector, Plug, Receptacle and Cable Outlet

2. Fed Spec WS 896 - Toggle and Lock, Flush Mounted Switches

3. CSA C22.2-182.1 - Industrial-type, Special-Use Attachment Plugs, Receptacles and Connectors

4. UL 20 - General - Use Snap Switches

5. UL 498 - Attachment Plugs and Receptacles

6. UL 508 - Industrial Control Equipment

7. UL 894 - Switches for Use in Hazardous (Classified) Locations

8. UL943 - Ground Fault Circuit Interrupters

9. UL 1010 - Receptacle-Plug Combinations for Use in Hazardous (Classified) Locations

10. UL 1682 - Plugs, Receptacles, and Cable Connectors of the Pin and Sleeve Type

11. UL 1686 - Standard for Pin and Sleeve Configurations

1.3 SUBMITTALS

A. General: Provide all submittals, including the following, as specified in Division 1 and Section 26 05 00 – Basic Electrical Materials and Methods.

B. Product Data and Information: Provide manufacturers' catalog data for each device type, plate and cover type.

1.4 DELIVERY, STORAGE AND HANDLING

A. Deliver, store, and handle all products and materials as specified in Division 1.

PART 2 PRODUCTS

2.1 MANUFACTURERS

A. Standard of Quality and General Configuration: Use of manufacturer's name and model or catalog number is for the purpose of establishing the desired.

B. Configuration and Rating: Provide NEMA specification grade wiring devices in the type, color, configuration and electrical rating for the service indicated.

C. Symbols: See the electrical symbol list shown for identification of all device types.

D. Acceptable Manufacturers: Acceptable manufacturers are listed below. Other manufacturers of equivalent products may be submitted for review.

1. Hubbell Wiring Device-Kellems

2. Hubbell/Bryant

3. Pass & Seymour/Legrand

4. Cooper Wiring Devices by Eaton

5. Leviton

6. Emerson Industrial Automation/Appleton

7. Crouse-Hinds by Eaton

8. Meltric Corporation

9. Lutron

10. NSI Industries/Tork

11. Hubbell/Tay Mac

12. Thomas & Betts/ABB Group

2.2 LIGHTING TOGGLE SWITCHES

A. General: Provide toggle switches of specification grade rated 20- amperes, 120-277 volts ac conforming to Fed. Spec. WS 896 and UL Standard 20. Manufacture switches with back and side wired binding screw type terminals, one piece spring contact arm and terminal plate with silver alloy contacts, one piece steel mounting strap with an assured grounding clip, thermoset body color coded for identification by amperage and a brown toggle. Provide ivory toggles in finished areas.

B. Types:

DESCRIPTION	HUBBELL CAT. NO.
Single pole, brn/ivory	HBL1221/HBL1221I
Two pole, brn/ivory	HBL1222/HBL1222I
Three way, brn/ivory	HBL1223/HBL1223I
SPDT center off momentary contact	HBL1557
Keyed single pole	HBL1221L
Keyed three way	HBL1223L

C. Accessories: Provide a flush neon "ON" pilot light in conjunction with switches controlling equipment whose operation is not evident at the switch location. Provide an engraved nameplate to identify equipment controlled.

2.3 CONVENIENCE RECEPTACLES

A. General: Provide specification grade convenience receptacles conforming to Fed. Spec. WC 596 UL listed, with nylon impact resistant face, one piece metal wrap around mounting strap with assured grounding clip, back and side wired binding screw type terminals, brass power contacts and a heavy duty heat stabilized thermoset plastic base. Provide brown devices in unfinished areas and ivory devices in finished areas unless otherwise specified.

B. Types:

DESCRIPTION	RATING	COLOR	HUBBELL CAT. NO.
Single	NEMA 5-20R 20A, 125V, 2P, 3W	Brown/ Ivory	HBL5361/ HBL5361I
Duplex	NEMA 5-20R 20A, 125V, 2P, 3W	Brown/ Ivory	HBL5362/ HBL5362I
Single-corrosion-resistant	NEMA 5-20R 20A, 125V, 2P, 3W	Yellow	HBL53CM61
Duplex-corrosion-resistant	NEMA 5-20R 20A, 125V, 2P, 3W	Yellow	HBL53CM62
Single	NEMA 6-20R 20A, 250V, 2P, 3W	Brown/ Ivory	HBL5461/ HBL5461I
Duplex	NEMA 6-20R 20A, 250V, 2P, 3W	Brown/ Ivory	HBL5462/ HBL5462I
Quadraplex	NEMA 5-20R 20A, 125V, 2P, 3W	Brown/ Ivory	HBL420H/ HBL420HI

2.4 SPECIAL USE RECEPTACLES

A. General: Provide special use receptacles of specification grade in accordance with applicable Fed. Specs., UL, ANSI and CSA Standards.

B. Types:

DESCRIPTION	RATING	COLOR	HUBBELL CAT. NO.
Duplex-ground fault circuit interrupter	NEMA 5-20R 20A, 125V, 2P, 3W	Brown/ Ivory	GF20L GF20IL
Single	NEMA 5-30R 30A, 125V, 2P, 3W	Black	HBL9308
Single	NEMA 6-30R 30A, 125V, 2P, 3W	Black	HBL9330

2.5 TELEPHONE/DATA COMMUNICATIONS OUTLETS

A. General: Provide non-metallic single gang telephone/data communication outlets consisting of a two or three hole straps for mounting modular telephone jacks or Category 6 data jacks.

B. Types:

DESCRIPTION	COLOR	HUBBELL CAT. NO.
Two hole strap	Ivory	FCX244I
Three hole strap	Ivory	FCX344I
Category 6 Modular Jack (T568B Wired)	Ivory	HBL6EI

2.6 PIN AND SLEEVE RECEPTACLES

A. General: Pin and sleeve receptacles conforming to UL 498, CSA Specification C22.2-182.1 No. 42 with Style 2 shell and extra pole grounding, malleable iron weatherproof enclosure, threaded spring door, brass contacts, and capable of breaking full rated loads in 30 through 200 ampere units.

B. Types:

DESCRIPTION	RATING	APPLETON CAT. NO.
Single with Mtg. Box	30A, 600V, 3W, 4P	ADRE3034-75
Single with Mtg. Box	60A, 600V, 3W, 4P	ADRE6034-150
Single with Mtg. Box	100A, 600V, 3W, 4P	ADJA1034-200
Single with Mtg. Box	200A, 600V, 3W, 4P	ADJA20034-250

2.7 BOXES

A. Outlet Boxes: Provide outlet boxes in accordance with the requirements specified in Section 26 05 33 – Electrical Raceway Systems.

2.8 PLATES AND COVERS

A. General: Provide covers and plates for the various areas as follows:

1. Areas Below Grade, Corrosive and Wet Areas:

   a. For switches provide weatherproof, gasketed, covers with external operating handle.

b. For receptacles provide a weatherproof, gasketed, clear, flame-retardant, jumbo, polycarbonate cover a minimum of 5.4-inches deep, suitable for use with a 10-3 cord that allows the cover to be closed even when the receptacle is in use.

PART 3 EXECUTION

3.1 INSTALLATION

A. General: Install all wiring devices in accordance with manufacturer's recommendations and approved shop drawings as specified in Division 1.

B. Toggle Switches: Install toggle switches applicable for the area environment for switching lighting or other branch circuit loads.

C. Receptacles: Install receptacles applicable for the area environment.

D. Grounding: Ground all devices in accordance with the requirements specified in Section 26 05 26 - Grounding.

END OF SECTION

SECTION 26 28 16

DISCONNECT SWITCHES

PART 1 GENERAL

1.1 SUMMARY

A. Section Includes: Requirements for providing and installing enclosed fused and non-fused safety switches for use as feeder and branch circuit switching and disconnect devices for motors and equipment.

B. Related Work Specified in Other Sections Includes, But is Not Limited to, the Following:

1. Section 26 05 00 - Basic Electrical Materials and Methods

2. Section 26 05 26 – Grounding

3. Section 26 05 53 - Electrical Identification

1.2 REFERENCES

A. Codes and standards referred to in this Section are:

1. NFPA 70 - National Electrical Code (NEC)

2. NEMA KS1 - Enclosed Switches

3. UL 248 - Class RK1 Fuses

4. UL 486A - Wire Connectors and Soldering Lugs for Use With Copper Conductors

1.3 SUBMITTALS

A. General: Provide all submittals, including the following, as specified in Division 1 and Section 26 05 00 – Basic Electrical Materials and Methods.

B. Product Data and Information: Provide manufacturers' data indicating disconnect switch ratings and dimensions. Provide manufacturer's data on fuses including time-current curves.

1.4 QUALITY ASSURANCE

A. Codes: Provide disconnect switches meeting the requirements of NFPA, the National Electrical Code and local codes.

B. Regulatory Requirements: Provide all disconnect switches designed, manufactured and tested in accordance with latest ANSI, IEEE and NEMA Standards, and UL listed.

1.5 DELIVERY, STORAGE AND HANDLING

A. Deliver, store and handle all products and materials as specified in Division 1.

B. Packaging: Pack spare parts in containers bearing labels clearly identifying the contents. Deliver spare parts in original factory packages. Identify all spare parts with information needed for reordering.

1.6 SPARE PARTS

A. General: Furnish the following spare parts:

1. Twelve of each size and type fuse installed.

PART 2 PRODUCTS

2.1 MANUFACTURERS

A. Acceptable Manufacturers: Acceptable manufacturers are as listed below. Other manufacturers of equivalent products may be submitted for review.

1. Disconnect Switches

a. Square D /Schneider Electric

b. Eaton/CutlerHammer

c. Hubbell/Killark

2. Fuses

a. Eaton/Bussmann

b. Littelfuse

2.2 DISCONNECT SWITCHES

A. General: Provide disconnect switches of the NEMA KS-1, heavy-duty, load-interrupter, enclosed-knife switch type with externally operating handle interlocked to prevent opening of the front cover with the switch in the ON position. Provide an interlock that is defeatable and operable from the front of the switch. Provide handle lockable in the OFF position.

B. Disconnect Switch Ratings: Provide disconnect switches rated for 600-volts as applicable and horsepower rated when used in motor circuits. Current ratings are as indicated.

C. Interrupting Rating: If the approved short circuit and coordination study indicates that the available fault current at any disconnect switch exceeds the interrupting rating of the switch, provide a fused disconnect switch with rejection feature. Size the fuses for the load served.

D. Service Entrance: Where shown, provide disconnect switches suitable for service entrance.

E. Fusible Switches: Provide switches with rejection feature to allow only Class R fuses to be installed.

F. Disconnect Switch Housings: Provide disconnect switches housed in NEMA rated enclosures as follows:

AREA	ENCLOSURE
Outdoor	NEMA 4 – Watertight
Where shown	NEMA 4X- Corrosion-resistant fiberglass reinforced thermal setting polyester formulation with stainless steel external hardware. Provide external operators of the same material as that of the enclosures

2.3 FUSES

A. Characteristics: Provide UL 248-12 listed Class RK1 dual element, time-delay fuse with an interrupting rating of 200,000 rms symmetrical amperes.

PART 3 EXECUTION

3.1 INSTALLATION

A. General: Install disconnect switches in accordance with the manufacturer's recommendations and approved shop drawings and as specified in Division 01. Comply with requirements of NEC and local electrical codes.

B. Provide fuses in the fusible disconnect switches sized to protect the associated motor in accordance with the NEC and per the nameplate rating of the approved equipment. Provide an adhesive label attached to the inside of the switch cover indicating the replacement fuses type and size.

C. Coordination: Coordinate with other work including cabling and wiring work.

D. Torque Requirements: Tighten electrical connectors and terminals including screws and bolts in accordance with equipment manufacturers' published torque tightening recommendations. Where manufacturers' torquing requirement are not available, tighten connectors and terminals in accordance with UL Standard 486A.

3.2 CLEANING AND PAINTING

A. Switches shall be coated with manufacturer's standard gray paint when not stainless steel.

END OF SECTION

SECTION 26 29 53

CONTROL COMPONENTS AND DEVICES

PART 1 GENERAL

1.1 SUMMARY

A. Section Includes: Requirements for providing manual starters, motor controllers and remote-control stations. In addition, the requirements for control components and devices for use in equipment provided under various other sections.

B. Related Work Specified in Other Sections Includes, but is Not Limited to, the Following:

1. Section 09 96 00 - High Performance Coatings

2. Section 26 05 00 - Basic Electrical Materials and Methods

3. Section 26 05 19 - Wires and Cables - 600 Volts and Below

4. Section 26 05 26 - Grounding

5. Section 26 05 53 - Electrical Identification

6. Section 26 50 00 - Lighting

1.2 REFERENCES

A. Codes and standards referred to in this Section are:

1. NEMA ICS 2 - Industrial Control Devices, Controllers and Assemblies

2. NEMA 250 - Enclosures for Electrical Equipment (1000 Volts Maximum)

3. UL 486A - Wire Connectors and Soldering Lugs for Use With Copper Conductors

1.3 SYSTEM DESCRIPTION

A. Design Requirements: Provide equipment capable of operating in an ambient temperature range of 0 to 40 degrees C and humidity of up to 90 percent noncondensing.

B. Motor Controllers: Provide motor controllers suitable for 240-volt or 120-volt, single-phase, 60-hertz operation.

C. Control Devices: Provide control devices suitable for operation at 120-volts, 60-hertz, unless specifically noted otherwise.

D. Insulation Class: Provide control equipment and devices that meet the requirements of the 600-volt insulation class.

1.4 SUBMITTALS

A. General: Furnish all submittals, including the following, as specified in Division 1 and Section 26 05 00 – Basic Electrical Materials and Methods.

B. Product Data and Information: Furnish catalog data for all associated equipment and devices.

C. Shop Drawings: Furnish shop drawings customized to the project for manual starters, motor controllers and remote-control stations that include the following:

1. Outline drawings showing dimensions, identification of components and a nameplate schedule for all units.

2. Bill of materials including manufacturers' name and catalog number.

3. Individual schematic and wiring diagrams for each motor controller

D. Equipment Ratings: Obtain and enter full performance details on all motors and other equipment being served on the above drawings.

1.5 QUALITY ASSURANCE

A. Codes: Provide manual starters, motor controllers and remote-control stations that are in accordance with NEMA ICS 2.

1. Provide manual starters, motor controllers and remote-control stations that are in accordance with the NEC and local codes.

B. UL Listing: Provide UL-listed manual starters, motor controllers and remote-control stations.

1.6 DELIVERY, STORAGE AND HANDLING

A. Deliver, store, and handle all products and materials as specified in Division 1.

B. Storage and Protection: Store all equipment and materials in a dry, covered, heated and ventilated location. Provide any additional measures in accordance with manufacturer's instructions.

1.7 SPARE PARTS

A. General: Furnish the following spare parts:

1. Two control stations of each type provided.

2. Three of each type of manual starter.

3. One of each type of motor controllers.

B. Packaging: Pack spare parts in containers bearing labels clearly designating contents and related pieces of equipment. Deliver spare parts in original factory packages. Identify all spare parts with information needed for reordering.

PART 2 PRODUCTS

2.1 MANUFACTURERS

A. Acceptable Manufacturers: Acceptable manufacturers are listed below. Other manufacturers of equivalent products may be submitted for review.

1. Manual Starters, Motor Controllers and Remote Control Stations:

a. Eaton/Cutler-Hammer

b. General Electric Company

c. Square D/Schneider Electric

d. Rockwell Automation/Allen-Bradley

2. Control Relays:

a. Eaton/Cutler-Hammer

b. Square D/Schneider Electric

c. General Electric Company

d. Rockwell Automation/Allen-Bradley

3. Surge Protection Devices (SPD)

a. Thomas & Betts/Current Technologies, Inc.

b. Eaton/Cutler-Hammer

2.2 MANUAL MOTOR STARTERS

A. Manual Motor Starters: Provide toggle-type, thermal-switch, manual, motor starters with pilot lights for all 120-volt, single-phase motors rated less than ½ hp.

1. Where shown or required, provide starters complete with a HAND/OFF/AUTO selector switch.

2. Provide starter enclosures as specified under the section Remote Control Stations.

B. Control Components: Provide push buttons, switches, indicating lights, transformers, relays and timers as specified herein under paragraph 2.5.

C. Enclosures: Provide motor controllers installed in NEMA 250 rated enclosures as follows:

AREA	ENCLOSURE
Outdoor and below grade elevation indoors	(NEMA 4 – Watertight), NEMA 4X 316 Stainless Steel)
Corrosive areas as defined in Section 26 05 00 or as shown	(NEMA 4X- Corrosion-resistant fiberglass reinforced thermal setting polyester formulation with stainless steel external hardware. Provide external operators of the same material as that of the enclosures), (NEMA 4X 316 Stainless Steel)
Above grade indoor	NEMA 12 – Industrial

2.3 REMOTE CONTROL STATIONS

A. General: Provide heavy-duty, oiltight remote control stations, consisting of push buttons, indicating lights, and selector switches with double-break silver contacts meeting the requirements specified under the section Control Components.

B. Enclosures: Provide motor controllers installed in NEMA 250 rated enclosures as follows:

AREA	ENCLOSURE
Outdoor and below grade elevation indoors	(NEMA 4 – Watertight), (NEMA 4X 316 Stainless Steel)
Corrosive areas as defined in Section 26 05 00 or as shown	(NEMA 4X- Corrosion-resistant fiberglass reinforced thermal setting polyester formulation with stainless steel external hardware. Provide external operators of the same material as that of the enclosures), (NEMA 4X 316 Stainless Steel)
Above grade indoor	NEMA 12 – Industrial

C. Lockout Attachments: Where shown, provide lockout attachments as follows:

1. Push buttons with padlockable attachment that holds the button depressed.

2. Selector switch with a padlockable attachment that covers the selector switch operators and allows the switch to be set in any position. Selector switch operators that use a removable key are not acceptable.

2.4 CONTROL COMPONENTS

A. Push Buttons, Selector Switches and Indicating Lights:

1. Provide heavy-duty, oiltight, 30.5 mm, push-button or selector switch control stations arranged for flush-panel mounting.

2. Provide the additional switches, relays, and other electrical accessories necessary to control and safeguard the operation of the associated equipment.

3. Provide 30.5 mm, low-voltage, push-to-test, LED type indicating lights suitable for operation at 120-volt, 60-hertz ac control circuit voltages.

4. Color code indicating lights as follows:

Red - Motor running or valve open
Green - Motor off or valve closed
Amber - Capable of operation from this point
Blue - Alarm or trouble condition

B. Phase Failure and Undervoltage Relay: Provide a 3-phase, power monitor to detect phase failure, phase reversal, phase unbalance and undervoltage, suitable for operation at 480 volts. Provide an adjustable, drop-out voltage range of 380 to 500 volts and an adjustable time delay from 0.2 to 20 seconds. Provide a normally-open and normally-closed alarm contact rated 10 amperes at 120 volts with automatic reset.

C. Ground Fault Protection Relay: Provide a manually-reset, ground-sensing relay suitable for use with a window-type current transformer. Provide an adjustable time delay and pickup settings. Provide single-pole, double-throw, alarm contacts rated 10 amperes at 120 volts.

2.5 SURGE PROTECTION DEVICES (SPD):

A. Provide SPD equipment that complies with UL 1449 and UL 1283.

B. Provided units with a maximum continuous operating voltage that exceeds 115 percent of the nominal system operating voltage.

C. Provide SPD equipment suitable for wye configured systems.

D. Provide SPD equipment having directly connected suppression elements between line-neutral (L-N), line-ground (L-G) and neutral-ground (N-G).

E. Provide SPD equipment that distributes the surge current to all MOV components to ensure equal stressing and maximum performance and provides equal impedance paths to each match MOV.

F. Provide high-performance EMI/RFI noise rejection filters that attenuate the electric line noise at least 55dB at 100 kHz using MIL-STD-220A insertion loss test method.

G. Wire internal components with connections utilizing low impedance conductors and compression fittings.

H. Provide a monitoring panel for each system that incorporates the following features:

1. Green/Red solid-state indicator lights to indicate which phase(s) have been damaged.

2. A flashing trouble light to indicate fault detection.

3. Transient event counter.

4. Audible alarm.

5. Form C contacts for remote monitoring of the unit status.

I. Provide SPD suitable for location application and minimum surge current per mode as follows:

1. 120/240V Panelboard: UL 1449, Type 2, 80kA

J. Location: Install SPD as follows:

1. Panelboard: Mount SPD internally or externally to minimize lead length. Provide a branch circuit breaker disconnect sized in accordance with the manufacturer’s recommendations. Locate the SPD unit branch circuit breaker immediately downstream of the main circuit breaker or main lugs, unless otherwise indicated on the contract drawings.

PART 3 EXECUTION

3.1 INSTALLATION

A. General: Install all equipment in accordance with the manufacturer's recommendations and approved shop drawings and as specified in Division 1.

B. Mounting: Mount manual starters, motor controllers and remote control stations 4 feet 6 inches from the finished floor up to their centerlines, unless otherwise shown. Mount all devices at least 1/2 inch away from concrete wall surfaces.

C. Adjustments: Set all motor circuit protectors and circuit breakers based on the approved short circuit and coordination study.

D. Overloads: Adjust the thermal overloads on each phase of each starter unit for the actual motor installed.

E. Cable Connections: Terminate and label all field wiring per the approved diagrams.

F. Torque Requirements: Tighten electrical connectors and terminals, including screws and bolts, in accordance with equipment manufacturers' published torque tightening recommendations. Where manufacturers' torquing requirements are not available, tighten connectors and terminals in accordance with UL Standard 486 A.

3.2 FIELD QUALITY CONTROL

A. Inspections: Inspect, adjust and check the installation for physical alignment, cable terminations and ventilation.

B. Operation and Maintenance: Furnish operation and maintenance instructions as specified in Division 1.

END OF SECTION

SECTION 26 50 00

LIGHTING

PART 1 GENERAL

1.1 SUMMARY

A. Section Includes: Requirements for providing complete lighting systems as specified and as shown.

B. Related Work Specified in Other Sections Includes, But is Not Limited to, the Following:

1. Section 26 05 00 - Basic Electrical Materials and Methods

2. Section 26 05 33 - Electrical Raceway Systems

3. Section 26 05 53 - Electrical Identification

4. Section 26 27 26 - Wiring Devices

1.2 REFERENCES

A. Codes and standards referred to in this Section are:

1. NFPA 70 - National Electrical Code (NEC)

2. UL 924 - Emergency Lighting and Power Equipment

3. ANSI C78.62717-2018 - American National Standard for Electric Lamps—LED Modules for General Lighting—Performance Requirements

1.3 SYSTEM DESCRIPTION

A. System Components: Provide all interior and exterior lighting fixtures including all supports, plaster frames, trim rings, outlet boxes, light standards, concrete bases, ground rods, and all accessories and appurtenances required for complete functioning lighting systems, as shown and as specified.

B. Performance Requirements: Provide lighting systems that adhere to code and are in accordance with manufacturers' recommendations.

1.4 SUBMITTALS

A. General: Furnish all submittals, including the following, as specified in Division 1.

B. Manufacturer's Data and Information:

1. Furnish catalog data for all equipment provided under this section including the total input wattage for each type of lighting fixture specified.

2. Furnish complete photometric data reports from an independent testing laboratory with shop drawings for each luminaire. Luminaires submitted without photometric data will not be reviewed.

C. Shop Drawings: Furnish layout drawings showing arrangement, circuiting, erection requirements of equipment and details of construction and assembly.

D. Quality Control: Furnish the following:

1. Manufacturers' certificates for equipment performance.

2. Manufacturers' test reports.

3. Manufacturers' installation instructions.

E. Operation and Maintenance Manuals: Furnish two copies of the operation and maintenance manuals for lighting equipment as specified in Division 01.

1.5 QUALITY ASSURANCE

A. Codes: Provide materials and workmanship that meet the requirements of the NFPA Standards and the National Electrical Code.

B. Regulatory Requirements: Provide UL and FMS listed and labeled lighting equipment.

1.6 DELIVERY, STORAGE AND HANDLING

A. Deliver, store and handle all products and materials as specified in Division 1.

B. Storage and Protection: Store and protect equipment, components and accessories in accordance with the manufacturer's instructions and in accordance with the requirements of Division 1.

PART 2 PRODUCTS

2.1 MANUFACTURERS

A. General: The lighting fixture descriptions and catalog numbers listed in the Lighting Fixture Schedule are used to indicate the acceptable quality, design and distribution characteristics of approved lighting fixtures.

B. Acceptable Manufacturers: Acceptable manufacturers are listed below. Other manufacturers of equivalent products may be submitted for review.

1. Lamps:

   a. General Electric Company Lamp Division

   b. Philips Lighting Company

   c. Osram Sylvania

2. Ballasts:

   a. Philips Advance

   b. Universal Lighting Technologies

   c. Osram Sylvania

3. Emergency Battery Systems:

   a. Emerson Network Power/Chloride Industrial Power

   b. Hubbell/Dual-Lite

   c. Teledyne/Big Beam

4. Time Switches:

   a. Intermatic

   b. NSI Industries/Tork

   c. Paragon

5. Photocells:

   a. NSI Industries/Tork

   b. Intermatic

2.2 MATERIALS

A. General: Provide lighting fixtures complete with all required lamps, ballasts, fittings, receptacles, gaskets, globes and diffusers, as shown and scheduled.

B. Wiring Channel Construction: Construct the wiring channels to permit access to the auxiliaries and sockets for repair or replacement of components without removal of the fixture.

C. Lamp Holders: Rigidly support screw-type, lamp holders, secure them against turning, and install them in a manner that allows for easy replacement. In general, fixtures designed to accept lamps of different wattages shall have adjustable sockets to allow for variations in lamp light centers. Provide brass, shell-type lamp holders. Aluminum shells will not be accepted.

D. Insulation: Provide a wire insulation systems and components that are capable of withstanding the temperatures to which they will be subjected in the fixture, while maintaining normal expected ballast life.

2.3 COMPONENTS

A. LED Drivers

1. Provide LED drivers meeting the following requirements:

a. Minimum Efficiency: 85 percent.

b. Starting Temperature: - 40 degrees F.

c. Input Voltage: 120 – 480 volts.

d. Power Supplies: Class I or II output.

e. Power Factor: .90 or greater.

f. Total Harmonic Distortion: 20 percent or less.

g. Comply with FCC Title 47, CFR Part 18 Non-consumer RFI/EMI Standards.

h. Drivers shall be reduction of hazardous substance (ROHS) compliant.

i. Surge Protection: Survive 250 repetitive strikes of "C Low" waveforms at 1 minute intervals with less than 10 percent degradation in clamping voltage. "C Low" waveforms are as defined in IEEE/ANSI C62.41.2-2002, Scenario 1 Location Category C.

B. LED Sources

1. Provide LED sources meeting the following requirements:

a. Operating Temperature Range: - 40 degrees F and 120 degrees F.

b. Correlated Color Temperature: 4500K

c. Color Rendering Index: 65 and greater.

2.4 OUTDOOR LIGHTING

A. General: Provide outdoor lighting luminaires and standards as listed in the Lighting Fixture Schedule.

B. Mounting: Mount outdoor lighting on concrete bases or structures as shown.

C. Wind Design: Provide outdoor lighting standards and luminaires that can withstand the force caused by a 100 mile-per-hour wind with a gust factor of 1.3.

D. Lighting Standards: Provide lighting standards complete with mast arm subbase, anchor bolts and handholes.

E. Receptacles: Provide receptacles in light standards where shown.

PART 3 EXECUTION

3.1 PREPARATION

A. Packing: Suitably pack and rigidly brace all equipment and protect it against weather, damage and undue strain during shipment.

3.2 INSTALLATION

A. General: Install lighting fixtures and lamps in accordance with the manufacturer's recommendations and approved shop drawings and as specified in Division 1. Coordinate placement with the details indicated on the architectural reflected ceiling drawings or architectural elevations. Install lamps of proper type, wattage and voltage rating in fixtures prior to completion of project. Install all fixtures to comply with applicable provisions of the NEC.

B. Accessories: Provide straps, mounting plates, nipples, plaster rings, brackets and all accessories necessary for proper installation.

C. Emergency Lighting: Connect emergency light fixtures and exit signs to separate unswitched circuits in the lighting panelboard. Lock these circuit breakers in the closed position.

D. Concrete Bases: Provide concrete bases for outdoor lighting standards including underground ducts and conduits and required grounding as shown and as specified. Install receptacles where shown as specified in Section 26 27 26 – Wiring Devices. Provide steel reinforcing bars, anchor bolts, and bolt circle for concrete bases as shown and specified and provide leveling shims as required.

E. Photocells: Install photocells in an upright position, 6-inches above the highest obstruction with the lens facing north.

F. Nameplates: Install nameplates as specified in Section 26 05 53 – Electrical Identification.

3.3 FIELD QUALITY CONTROL

A. Testing: Test the entire lighting system for continuity and balance after installation and prior to acceptance.

3.4 ADJUSTING

A. Fixtures: Aim and adjust fixtures as shown.

B. Relamping: Relamp fixtures that have failed lamps at substantial completion.

3.5 CLEANING AND PAINTING

A. Steel Surfaces: Prior to final completion of the Work, thoroughly clean all steel surfaces and retouch all scratches and abrasions. Use the same paint as used for shop finishing coats.

B. Photometric Control Surfaces: Clean photometric control surfaces as recommended by the manufacturer.

END OF SECTION

SECTION 28 10 00

ACCESS CONTROL

PART 1 GENERAL

1.1 SECTION INCLUDES

A. Furnish a complete access control system. The system shall include all necessary workstations, software, card reader, power supplies, door position switches, conduit, cable and accessories for a complete operational access control system.

B. Coordination With other WWU and CWP Facilities: The access control system provided under this Contract must be compatible with the proximity cards, RFID key fobs, and card readers in use at existing WWU Facilities.

C. Related Specifications

1. Section 01 33 00 – Submittals

2. Section 01 79 00 – Training

3. Section 08 71 00 – Finish Hardware

4. Section 26 05 00 − Basic Electrical Materials and Methods

5. Section 26 05 19 − Wires and Cables - 600 Volts and Below

6. Section 26 05 33 − Electrical Raceway Systems

7. Section 28 31 00 – Signaling and Alarm

1.2 REFERENCES

A. Codes and standards referred to in this Section are:

1. NEC - National Electrical Code

2. UL 294 - Standard for Access Control System Units

1.3 SUBMITTALS

A. General: Furnish all submittals, including the following, as specified in Section 01 33 00 – Submittals and Section 26 05 00 – Basic Electrical Materials and Methods.

B. Product Data and Information: Furnish manufacturer's data on all equipment and devices in the assembly, including voltages, number of phases, current ratings, capacities and other relevant data.

C. Shop Drawings: Furnish shop drawings for the access control system including the following:

1. Furnish wiring diagrams for assemblies that show connections to electrical power. Clearly differentiate between shop-installed portions of wiring and field installed portions.

2. A manufacturer's standard connection diagram or schematic showing more than one method of connection is not acceptable unless the intended method is clearly identified.

1.4 REFERENCE ABBREVIATIONS

A. This specifications references abbreviations in accordance with the following list:

1. ACS - Access Control System
2. ODBC - Open Database Connectivity
3. RDBMS - Relational Database Management System
4. ICS - Intelligent System Controller
5. ICM - Input Control Module
6. OCM - Output Control Module
7. SRI - Single Reader Interface Module (SRI)

1.5 SYSTEM DESCRIPTION

A. General: The access control system (ACS) shall provide a number of functions including the ability to regulate access through specific doors and gates to secured areas of the Utility's facility and provide computer generated color employee credentials for that use. The ACS shall utilize a single seamlessly integrated relational database for all functionality. This integration shall be provided with one operating environment. The ACS software shall integrate all functions (access control, alarm monitoring, ID Management, etc.) into a single program.

B. The Intelligent Access Control System shall allow the configuration an alarm monitoring workstation, and an integrated workstation, which can control all functions. The System shall be expandable to support up to 5 individual module or integrated workstations. All access control field hardware shall be connected to the integrated workstation.

C. The alarm monitoring client workstation shall be able to connect to, and monitor, field hardware devices. Administrative tasks including defining access groups, time zones, generating reports, creating floor plans, etc. shall be provided from any workstation on the network that is licensed to do so. The integrated workstation shall allow for any combination of functions of the ACS to be available from the single client workstation. All ACS data shall reside on a single database on the network and shall be accessible in real time to every / any ACS workstation connected to the network. This shall allow for automatic change propagation to all client workstations on the ACS as well as a common database to consolidate all information and allow for better disaster recovery.

D. System shall be capable of incorporating existing proximity access control cards and key fobs from other WWU facilities provided from such manufacturers as HID Corporation, Lenel Systems International, Inc., Bosch Security Systems, Tyco Software House and AMAG Technology

E. The System shall be designed to perform a wide variety of feature rich functions as part of a Total Security Knowledge Management Solution. These ACS functions are categorized into primary "system modules" which shall include, but not be limited to:

1. Access Control: The ACS shall grant or deny access, define access levels, and set time zones and holidays. The ACS shall support features such as area control (two man control, hard, soft, and timed anti-passback), database segmentation, and time zone/holiday overrides.

2. Alarm Monitoring: The ACS shall be used for alarm monitoring. Alarms are to be prioritized and displayed on the main alarm monitoring window which provides information about the time, location of the alarm and priority. The main alarm monitoring window shall allow sorting of any field. The ACS shall allow unique emergency instructions to be specified for each type of alarm such as automatic sending of alphanumeric pages or e-mail messages upon alarm arrival.

3. Credential Management: The ACS shall include a seamlessly integrated ID management module. The ID management functionality shall allow the enrollment of cardholders into the database, capturing of images and signatures, and import/export of employee data. This functionality shall also allow the System Operator to assign and/or modify the access rights of a cardholder.

4. System Administrative tasks such as defining permissions set-up, access groups, time zones, reports, etc. shall be provided from any workstation on the network.

5. Badge Layout Creation and Editing: The access control system shall provide a badge layout creation and editing module to allow for the creation of custom badge designs to be created by the CWP. The system shall support credit card, government, and custom ID card sizes in either a landscape or portrait format and shall support double sided and edge to edge printing.

6. Screens/Forms Creation: Provide a forms designing and editing module that gives WWU and CWP the ability to modify any standard field to customize the cardholder forms as desired.

7. Graphical Floor Plan Creation: The system shall provide graphical floor plan creation and editing software that allows the System Administrators to import or customized floor plans of the facility and to attach custom icons to those plans.

8. Data Import: Provide an import utility that will allow the WWU and CWP to import cardholder information into the ACS database.

   a. Bi-Directional Data Exchange

      (1) The system shall support a real time, bi-directional data interface to external databases. The interface shall allow data to be imported into or exported out of the system in real time or in a batch mode basis. Data used for import shall be retrieved directly from an external database or through an import file. Data provided for export shall be applied directly to an external database or through an export file. Any data shall be imported or exported including image data. The file used for import or created by export shall have the ability to be structured in a wide variety of ways, but shall always be in ASCII text format.

      (2) The system shall also support a one-step download and distribution process of cardholder and security information from the external database to the system database, all the way down to the Intelligent Field Controller (ISC) database. This shall be a guaranteed process, even if the communication path between the system database server and the ISC is broken. If the communication path is broken, the data shall be stored in a temporary queue and shall be automatically downloaded once the communication path is restored.

1.6 QUALIFICATIONS

A. Manufacturer: Company specializing in manufacturing the Products specified in this section with minimum three years documented experience with service facilities within 100 miles of Project.

B. Supplier: Authorized distributor of specified manufacturer with minimum three years documented experience.

1.7 REGULATORY REQUIREMENTS

A. Furnish products listed and classified by UL or testing firm acceptable to authority having jurisdiction as suitable for purpose specified and indicated.

1.8 WARRANTY

A. Furnish a written 2-year minimum warranty for software, programming parts and labor from the access control system manufacturer.

1.9 SPARE PARTS

A. Furnish the following spare parts:

1. Twenty percent but not less than four, of each type of proximity card reader

2. Twenty percent but not less than two, of each type of power supply

3. Two hundred blank proximity access cards

B. Packaging: Plainly tag and mark spare parts for identification and for reordering and properly box and wrap spare parts to prevent deterioration. Completely identify the box on the outside.

PART 2 PRODUCTS

2.1 MANUFACTURERS

A. Standard of Quality and General Configuration: Use of manufacturer's name and model or catalog number is for the purpose of establishing the desired characteristics.

B. Acceptable manufacturers are listed below. Other manufacturers of equivalent products may be submitted for approval.

1. Access Control System:

a. Bosch Security Systems

b. Lenel Systems International, Inc.

c. HID Corporation

d. Tyco Software House

e. AMAG Technology

2.2 ACCESS SYSTEM

A. General Requirements:

1. Source Code Set: All application modules, features, and functions from a single source code set using object-oriented software development techniques and compiled applications. The software has to be the product of a single manufacturer.

2. All system features and functionality listed herein shall ship with each system and be provided on a CD.

3. Licensing: The WWU and CWP shall be provided with as many a software licenses as required to allow full use of the access control system.

4. Open Architecture: The access control system shall have an open architecture design and support industry standards for databases, networks, ID card printers, and video cameras. No customized or proprietary ID badge creation software or hardware shall be required to operate the access control system.

5. Open Database Connectivity Compliance (ODBC): The access control system shall support a relational database management system with the proper drivers. The database shall be equal to MSDE 2000 and Microsoft SQL Server 2000.

6. Network Support: The access control system shall be designed to support, without limitation, the following industry standard network protocol and topology:

   a. TCP/IP

   b. Microsoft LAN Manager (NerBUI)

   c. NFS Networks

7. Video Input Support

   a. The system shall support any industry standard video input source that utilizes a Red/Green/Blue (RGB), Composite, or S-Video signal. The system shall allow cardholder photos to be taken from any one of the live video signals listed above or to be scanned in using any industry standard scanning device that utilizes an industry standard TWAIN interface.

   b. System support for other methods of inputting a cardholder's photo, such as through the use of an industry standard digital camera with an industry standard TWAIN interface, or by importing a photo from any industry standard image file format, shall also be available.

8. The system shall be designed to support any industry standard thermal dye transfer ID card printer.

9. Easy to Use, Graphical User Interface: The access control system shall support a user friendly, Windows graphical user interface and shall be intuitive. All messages and interface text shall be in English prose. All functions shall be either keyboard or mouse driven to allow the System Operators to choose the method of navigating through the screens

10. Application Installation: The access control system shall support a simplified installation procedure using Installation Wizards. The access control system shall automatically detect previous versions installed on the client workstations for fast and efficient upgrade installations.

11. Multimedia Integration: The access control system shall extensively integrate and utilize multimedia.

12. Remote Access Services (RAS): The operating system shall support full remote diagnostics abilities through its remote access services. Full network functionality shall be available over remote links using TCP/IP protocols.

13. Security: Local security shall be available through User ID and required password log-on. The operating system shall also offer government C-2 level certifiable security.

14. Remote Intrusion and Trouble Alarms: Provide the following intrusion and trouble alarms for remote indication:

    a. Provide a normally open dry contact that closes when any system failure alarm occurs to activate a “Trouble Alarm” at SCADA.

    b. Provide a normally open dry contact that closes when the any system intrusion alarm occurs to activate an “Intrusion Alarm” at SCADA.

B. Client/Server Relational Database Management Systems:

1. Open Database Connectivity (ODBC), shall be true client/server, high performance, and ANSI standard capable of handling high transaction rates and multiple users concurrently accessing and modifying the database. The access control system’s RDBMS shall preserve data integrity in the following ways:

2. Transaction Processing: Transaction processing guarantees the consistency and recoverability of the RDBMS. Transaction processing shall assure that all transactions are performed as a single unit of work, even in the presence of a hardware or general failure.

3. Enforced Data Integrity: The RDBMS shall enforce data integrity within the database itself, guaranteeing that complex business policies will be followed. “Referential Integrity” maintains consistency between multiple tables of a database. The RDBMS shall use data integrity features such as data types, defaults, and rules to enforce data integrity. Stored procedures and triggers shall also be used to insure the integrity and security of data.

4. User-Defined Data Types: The RDBMS shall utilize data types, which provide the simplest form of data integrity by restricting what kinds of information stored.

5. Defaults: The RDBMS shall utilize defaults, which allow specify values to be inserted, if no explicit field value is entered.

6. Rules: The RDBMS shall enforce rules, which are integrity constraints. The RDBMS shall check the value against any rule that has been created for the specified field. The RDBMS shall also provide stored procedures and triggers as follows.

   a. Stored Procedures: Stored procedures increase data integrity by checking command syntax to see if it makes sense and checking to see if the requester has the permissions necessary to execute the command.

   b. Triggers: Triggers are associated with particular pieces of data and are automatically initiated whenever attempts to modify that data are made.

   c. Alarm Routing: Provide capability of routing any alarm in the system to any workstation.

C. Functional And Operational Requirements:

1. General: The design of the access control system shall include devices and equipment to monitor and control access of cardholders to restricted areas, detect and deny unauthorized attempted entries within specific areas, annunciate alarms, and generate reports. The access control system shall also include devices and equipment to detect ‘changes of state’ of dry contacts for alarm points. The access control system shall also include ID management and badging capabilities for generating and managing ID badges for cardholders.

2. Customer Responsibilities: The system suppliers shall configure access control system, as well as creating floor plans.

3. Operational Concept: The access control system shall consist of equipment and devices placed at predetermined locations to ensure that only cardholders authorized to enter secured areas through certain doors or gates can do so. This shall be accomplished by means of a computer(s) and electronic devices used in conjunction with door locks, gate operators, card readers.

4. The employee data screen shall contain at a minimum 20 data entry fields of information that will include, but not be limited to, the following:

   a. Name: Last Name, First Name, Middle Initial

   b. Address

   c. Home Phone

   d. Employee ID Number

   e. Title

   f. Cardholder Number

   g. Department

5. As a fundamental operation, the system shall provide a seamlessly integrated link between the ID Management and Access Control & Alarm Monitoring functionality. This will allow specific information concerning cardholders to be automatically downloaded to all Intelligent System Controllers and to be shared by both the access control and ID management modules utilizing a single database, thus enabling the system to grant or deny access to card reader controlled access points. This is to be provided under a single operating environment.

D. System Capacities: The access control system shall support up to 64 card readers. The database shall support an unlimited number of cardholders. The database server shall also support an unlimited number of access events and system operator transactions in the history file. The access control system shall support up to five (5) client workstations. A fully loaded system shall guarantee a one half-second response time for access granted/denied decisions from the time that a cardholder swipes their badge.

E. Access Control and Time Zones:

1. Time Zones: The system shall be capable of creating and storing up to two hundred fifty five (255) time zones. Each time zone shall have a minimum of six (6) intervals. Each interval shall be assignable to any day of the week and capable of being restricted on a minimum of eight (8) types of holidays. Time zones shall be assigned an alphanumeric name using up to

32 characters and shall act as templates to be applied to access levels, card reader modes, alarm inputs, alarm outputs, and alarm masking and logging functions.

2. Access Levels: Standard and temporary access levels shall be as follows:

   a. All cardholders shall have a minimum of 255 standard and temporary access levels based on facility, card reader, time, and day.

   b. The access control system shall define access levels which shall be assigned an alphanumeric name which combine card readers and time zones. Card readers shall have the ability to be assigned to any or all access levels defined in the access control system. As such, an access level can consist of any or all card readers in the system. Time zones shall be allowed to belong to any or all access levels so that the time zone only has to be defined once.

   c. Access levels shall be able to consist of multiple card reader assignments; each card reader shall be capable of having a distinct time zone assigned.

3. Temporary Access Levels: The ACS shall allow temporary access levels to be defined that combine card readers, activation date, deactivation date and time zones. Card readers shall have the ability to be assigned to all temporary access levels and a temporary access level can consist of all card readers in the ACS.

4. Access Groups: Access Groups shall be assigned an alphanumeric name and shall allow grouping of access levels together for ease of assignment of access levels to cardholders.

5. Precision Access Levels: Provide precision access levels in addition to the 255 standard and temporary access levels.

6. Inclusion Access Levels: Provide inclusion access levels to offer the ability to assign unique inclusion access level groups (card reader/time zone combinations) for each individual cardholder, in addition to the cardholder's thirty-two standard access levels.

7. Holidays and Daylight Savings Time: The access control system shall include a calendar that includes the standard holidays and daylight savings times shall automatically take effect without user intervention. The calendar shall support a minimum of one hundred (100) years beyond the current date. The designation of additional holidays shall be definable. In addition, there shall be support for holiday ranges that allow a single holiday to span across multiple calendar days.

8. Field Hardware Communications:

   a. The access control system shall communicate with the field devices by either RS-485 or RS-232 EIA standard.

   b. The ACS software shall take full advantage of its multi-tasking capabilities, allowing downloads of cardholder data and any ISC information to take place while monitoring and receiving alarms from the field hardware. Downloading database changes shall not interfere with any output control, access decisions, alarm monitoring, traces, or any other required function of the field hardware and alarm monitoring client workstation.

   c. Upon losing and then restoring communications between the ISC and the ACS database and the local database in each ISC shall be fast and efficient. Every change made to the ISC database shall establish a time/date stamp for the change. When communications are restored, database synchronization shall occur immediately and without System Operator intervention.

9. Multi-Drop Panel Support: The access control system shall support a multi-drop architecture whereby up to eight field devices can be connected on a single RS-485 communications line and all eight panels communicate back to a single serial communications port via a RS232 to RS-485 converter attached to the workstation. The multi-drop panel support shall be used in conjunction with other wiring support such as the star wiring configuration, home-run wire architecture, and advanced distributed network architecture.

10. Field Hardware Configuration: All field hardware configuration windows shall be accessed from either icon toolbar or from menu options in the menu bar within the configuration module of the software. When a field hardware device is configured, it shall appear in the graphical system overview tree and in all appropriate forms.

11. Alarm Masking Groups: The group alarm masking feature allows creation of groups of alarm inputs to mask or unmask multiple input control module inputs and card reader inputs simultaneously. The following events shall have the ability to be part of an alarm masking group:

    a. Input Control Module Events

       (1) Alarm Input Active

    b. Card Reader Events

       (1) Auxiliary Input Active

(2) Denied Count Exceeded

(3) Door Contact Tamper

(4) Door Forced Open

(5) Door Held Open

(6) Card Reader Input Tamper

12. Cardholder Use Limits: A cardholder use limit feature shall be provided to set the maximum number of times that a cardholder may use their ID card at card readers.

13. Extended Individual Strike Times: The extended individual strike times allows a card reader's strike to be active for an extended period of time beyond the pre-determined standard strike time on a per cardholder basis. The extended strike time shall be user definable up to 255 seconds.

14. Extended Individual Door Held Open Times: The extended individual door held open times that allows a card reader's door to be held open for an extended period of time beyond the pre-determined standard held open time on a per cardholder basis. The extended held open time shall be user definable up to 255 seconds.

15. Graphical System Overview Tree: A graphical system overview tree shall be available to depict a graphical representation of all access control field hardware, access levels, time zones, access groups, holidays, and card formats that have been configured in the access control system.

16. Pre-Alarm: A pre-alarm at the card readers in the field will sound a tone at the card reader after a valid access has been granted and then the door contact opens. If the door does not close within an adjustable 255 seconds after the pre-alarm sounds, a 'door held open' alarm shall be generated and sent to the appropriate alarm monitoring workstations

17. Alarm/Event Logging: All alarms and events in the access control system shall by default log to the database that shall be used for reporting and back-up capabilities.

18. Scheduling Utility: The scheduling utility shall allow scheduling actions to occur on a one-time or a recurring basis. Recurring schedules shall be configured to begin immediately, last indefinitely, or have optional start and end dates.

19. On-Line Contact Sensitive Help: Provide on-line contact sensitive help files to guide in the configuration and operation of the access control system. The help menu shall be available from any window in the access control system by pressing the F1 function key or clicking on the Help icon in the toolbar. Help windows shall be contact sensitive so you can move from form to form without leaving the help window. Standard Windows help commands for Contents, Search, Back, and Print shall also be available. The system shall also come with complete on-line documentation on CD.

20. Monitor Zones: The access control system shall provide the ability to segment access control system field hardware devices into various zones or areas of which alarm monitoring workstations will monitor. These zones shall be assigned an alphanumeric name and shall consist of one or more access panels, card readers, alarm panels, alarm inputs, alarm outputs, along with any associated alarm/event/time zone associations. These zones shall then be assigned to the alarm monitoring workstations that will monitor the assigned areas.

21. Alarm/Event Routing: The access control system shall be capable of routing alarms and events to various alarm monitoring workstations on the network.

22. Text Instructions: A set of text instructions to be associated with each alarm that arrives into the access control system shall be provided.

23. Alarm Attributes: The access control system shall have the capability to configure how it handles the annunciation of alarms on an individual basis. Each alarm and/or event shall have the following options:

    a. Display at one or more alarm monitoring workstation.

    b. Allow higher priority alarms to be displayed on the alarm monitoring workstation ahead of lower priority alarms.

    c. Require the field device, which generated the alarm to be restored to its normal state before the alarm, shall be cleared from the alarm monitoring window.

    d. Have the alarm breakthrough to the alarm monitoring window when another application on the alarm monitoring workstation becomes active.

    e. Require that the alarm not be deleted from the alarm monitoring window upon acknowledgment.

    f. Display text outlining the procedures to follow when responding to the alarm.

g. Require a password to be entered to acknowledge the alarm.

h. Require acknowledgment to clear.

i. Allow mandatory journal entry upon acknowledgment.

j. Have pre-defined “canned” journal entries for alarms in the access control system.

k. Have the alarm appear on the alarm monitoring window with a flashing colored bar across the alarm for high priority alarms. Each priority shall have its own unique color assigned to it. A minimum of 255 colors shall be available for assignment to a minimum of 255 priority levels.

l. Have the alarm, when acknowledged, display a different flashing colored bar across the alarm than for the original alarm color. Each acknowledged priority shall have its own unique color assigned to it. A minimum of 255 colors shall be available for assignment to a minimum of 255 priority levels.

24. System Downloads: After configuring field hardware devices, all the database information shall be downloadable.

25. Card Reader Options: The access control system shall have the ability to set the following options for each card reader:

a. Allow User Commands: This feature shall allow keypad functions to be performed at the card reader’s keypad.

b. Rename Auxiliary Inputs: This feature shall allow renaming the card reader’s auxiliary inputs.

c. Rename Auxiliary Outputs: This feature shall allow renaming the card reader’s auxiliary outputs.

d. Activate Outputs: - This feature will allow activation of auxiliary outputs attached to the card reader on a time zone basis.

26. Input Control Module Options: The access control system shall have the ability to set the options for each input or output configured on the Input Control Modules.

27. Alarm Handling: The System Operator shall be able to select alarm/events by clicking on it with the mouse.

28. Current Status Indication: The alarm monitoring window shall display the current status of alarms, card readers, ISCs and ICMs.

29. Cardholder Record Call-up: The System Operator shall be able to display a cardholder record with the stored cardholder's image. This feature shall be user configurable to be automatic.

30. Cardholder, Card Reader, or any Field Hardware Device Trace: The access control system shall be able to initiate several traces of cardholders, and/or field hardware devices while monitoring alarms.

31. 'On the Fly' New Login of System Operators: The access control system shall allow a new operator to login over another operator who is already logged into the same workstation.

32. Test Mode: The access control system shall support a Test Mode. The access control system shall be able to perform tests on input device groups, door forced open and access grants to verify that all equipment and programming are operational.

33. Manual Control: From the alarm monitoring window, the access control system shall have the ability to dictate manual control of all output points or input points connected to the access control system. Control points are defined as any door strike, auxiliary card reader output, or any other relay output points.

34. Real-Time, Dynamic Floor Plans: The ASC shall support real time floor plans that shall be appear in the alarm monitoring workstation either on command or when specified alarms are selected for acknowledgment.

35. Manual Override of Card Readers: The ACS shall allow the System Operator to override card readers and shall be able to manually open a door from the alarm monitoring window, the floor plan. In addition, the System Operator or based on schedule can set a door to be left unlocked to allow easier access during normal working hours.

36. Hardware Update Timer: A hardware update timer sets how often system status updates take place. These updates are reflected in the status bar and the real-time graphical system status tree. This frequency shall be defined in one-minute increments and shall be changed 'on the fly'.

F. Enrollment and Badge Creation

1. Enrollment: The access control system shall be able to enroll cardholders on a one by one basis. The enrollment system shall include the following attributes:

   a. Name

b. Badge Type

c. Image

d. Deactivation Date

e. Access Levels

f. Badge Design Layout

g. Information to be Encoded onto the Magnetic Stripe on the back of the badge.

2. Image Capture from a Live Video Source: The Enrollment & Badging workstation shall include all equipment required to capture a high quality image with flash lighting at a minimum resolution of 1024 x 968.

3. Image Import: The access control system shall have the ability to import and modify a cardholder's image from, but not limited to the following image formats:

   a. Bitmaps (.bmp, .dib)

   b. JPEG (.jpg)

   c. TIFF (.tif)

   d. Windows Metafile (.wmf)

   e. Adobe Photoshop (.psd)

   f. Kodak Photo CD (.pcd)

4. Chromakey: The access control system shall support an advanced chromakey feature, which has the ability to remove the color that resides in the top left corner of the crop window or remove the color. A tolerance setting shall be available for fine tuning images of cardholders whose shirt, hair, etc. is close to the color of the background.

5. Signature Capture: The access control system shall have the ability to capture a cardholder's signature.

6. In-line Magnetic Stripe Encoding: Utilizing a magnetic stripe encoding device, the access control system shall allow for magnetic stripe encoding of all its permanent credentials. This magnetic stripe shall conform to ABA Track II and ANSI specifications.

7. Access Control Reports: The ACS shall provide standard ACS reports that are stored in the ACS database.

2.3 SYSTEM WORKSTATION & PERIPHERAL REQUIREMENTS

A. Provide a dedicated server for hosting access control system and workstations for WWU PC's. Access control systems servers and workstations having the following minimum features:

B. Dedicated Server

1. Processor: Dual Core Intel Xeon 5110 (1.60GHz, 1066MHz FSB 4MB Cache)

2. Memory: 2GB of SDRAM

3. Monitor: 17-inch Rack mountable LCD

4. Hard Drive: 73GB 15K RPS SCSI hard drive

5. Network Card: Dual 10/ 100/ 1000 Ethernet Communication

6. 48X IDE CD-RW/DVD

7. Digital Tape Backup System

8. Pullout Keyboard and trackball

9. Graphics accelerator Card

10. Documentation: Provide all documentation, manuals and licenses

11. Safety/Regulatory: UL, FCC B, approved

12. Latest revision of software at time of bid required:

    a. Windows XP Professional or approved equal

    b. Microsoft Office Professional or approved equal

    c. McAfee Virus Scan or approved equal

13. Operator's Software: Provide access control system operator's software.

C. WorkStation:

1. Processor: Intel Core 2 Duo Processor E6300 (1.86GHz, 2M, 1066MHz FSB)

2. Memory: 2GB of SDRAM

3. Monitor:

    a. LCD Type: 19-inch TFT active matrix

    b. Video Input Signal: Analog RGB and digital DVI-D

    c. Pixel Pitch: No greater than 0.294 mm

    d. Viewing Angle: 85 degrees nominal

    e. Contract Ratio: 600:1

    f. Brightness: 250 nits

    g. Prime Mode: 1280 x 1024 (SXGA)

    h. Mounting: VESA-compliant adapter plate)

4. Graphics accelerator card

5. Hard Drive: 80 GB minimum

6. CDRW: 40X

7. Digital Tape Backup System

8. Mouse: Microsoft System Intellimouse

9. Network Card: 3 Com 3C905 Fast Etherlink XL 10/100 PCI Network Interface

10. Keyboard: 104+ keys

11. Documentation: Provide all documentation, manuals and licenses

12. Safety/Regulatory: UL, FCC B, approved

13. Latest revision of software at time of bid required:

    a. Windows XP Professional or approved equal

    b. Microsoft Office Professional or approved equal

    c. McAfee Virus Scan or approved equal

14. Operator's Software: Provide access control system operator's software.

D. Provide an ID badge printer which supports double-sided full color printing. The printer shall also support edge to edge printing.

E. RAID Level 5: The access control system shall offer a Fault Tolerant Redundant Array of Independent Disks Level 5 (RAID Level 5). RAID 5 stripes both data and parity information across three or more drives. It exchanges the dedicated parity drive for a distributed parity algorithm, writing data and parity blocks across all the drives in the array.

2.4 ACCESS CONTROL FIELD HARDWARE DEVICES

A. General: The ACS shall be equipped with the access control field hardware required to receive alarms and administer all access granted/denied decisions. All field hardware shall be designed to meet UL requirements. Depending upon the configuration, the ACS field hardware shall be able to include any or all of the following components:

1. Intelligent System Controller (ISC): An Intelligent System Controller (ISC) shall link the Total Security Knowledge Management Solutions Software to all other field hardware components (Card Readers and Input Control Modules). The ISC shall provide full distributed processing of access control & alarm monitoring operations. Access levels, hardware configurations, and programmed alarm outputs assigned at the administration workstation shall be downloaded to the ISC, which shall store this information and function. All access granted/denied decisions shall be made at the ISC to provide fast responses to card reader transactions. A fully configured ISC with 32 card readers shall require less than one-half (0.5) seconds to grant access to an authorized cardholder or deny access to an unauthorized cardholder. The ISC shall contain the following features:

a. UL 294 and CE Certified

b. Support for Direct Connect, Remote Dial Up, or Local Area Network (LAN) Connection

c. Support for up to 512K of On-Board Memory

d. LAN Support shall utilize RJ45 (10/100baseT) Ethernet Interface

e. Flash Memory for real time program updates and overall host communications

f. Memory storage of up to 5,000 cardholders/100,000 events

g. Downstream ports shall be for connecting card readers and data gathering panels via RS-485 multi-drop wiring configuration

h. Support of multiple card technologies

i. Supervised Communications between ISC and access control system Software

j. Support of up to eight card formats and facility codes

k. RS-485 Full Duplex, communication channel to the access control system head-end

l. Integration to other manufacturer's card readers

m. Uninterruptible Power Supply (UPS) with battery backup (20 Minute Minimum)

n. 12 VAC or 12 VDC input power

o. Issue Code Support for Wiegand Card Format

p. Individual Shunt Times (ADA Requirement)

q. Up to Nine Digit PIN Codes

r. Downstream serial RS-232 device support

s. Status LEDs for normal component and communication status

2. Input Control Module (ICM): The Input Control Module shall monitor all Grades A, B and AA alarm inputs.

a. The Input Control Modules shall also be able to operate independently and in conjunction with Output Control Modules (OCM), which will send an output signal to a corresponding output device upon alarm input activation. Once an alarm has been received, the Input Control Module shall activate any or all alarm outputs within the Output Control Module. The Output Control Module shall provide 16 Form C outputs rated at 5 A @ 30 VDC. Upon an alarm input from the Input Control Module, the Output Control Module shall transmit an activating signal to a corresponding output device.

b. Up to 8 ICMs shall be connected to an available ISC using RS-485 cabling. Diagnostic LEDs shall indicate ISC communication, input zone scanning, and Input Control Module heartbeat.

c. The ICM shall contain the following features:

(1) UL 294 and CE Certified

(2) Alarm contact status scanning at up to 180 times per second for each zone

(3) Configuration DIP switches to assign unit addresses and communications speed.

(4) A low power CMOS microprocessor

(5) Filtered data for noise rejection to prevent false alarms

(6) Up to 16 Grade B, A, or AA Supervised Inputs in any Combination

(7) 12 VAC or 12 VDC Input Power

(8) 2 Form C Contacts for load switching

(9) 2 dedicated inputs for tamper and power status

3. Output Control Module (OCM)

a. The Output Control Module shall incorporate 16 Output Relays that are capable of controlling a corresponding output device upon any input activation or on command from the system.

b. Output relays shall be capable of responding to:

(1) Input alarms from a within the same ISC

(2) Commands from a System Operator

(3) Time zone control commands for automatic operation

c. Output relays shall be capable of:

(1) Pulsing for a predetermined duration. Duration shall be programmable for each relay individually.

(2) "Following" any input point an ICM attached to the same ISC (on with alarm, off when clear, or as required).

(3) Responding on command from the System Operator to pulse, command on, command off, or reset to normal state.

(4) Each OCM shall provide 16 Form C relays rated at 5A @ 30 VDC. The OCM shall control the relays by digital communication. Upon an input from the ICM or command from the System Operator, the ICM will transmit an activating signal to a corresponding relay. The OCM shall be UL 294 and CE Certified.

4. Proximity Card Readers:

a. Provide proximity door and man-gate card reader and vehicle gate card readers as shown and shall have the following common features:

(1) Each card reader shall contain read head electronics, a micro ISC, and a sender to encode digital door control signals. A bi-color LED (s) (red and green) shall be used to indicate card reader status and access status. A solid green LED shall indicate the card reader has defaulted to an unlocked mode of operation. The green LED shall illuminate upon a valid card swipe/PIN entry for the duration of the door strike time.

(2) Card Readers shall be able to support a user defined downloadable off-line mode of operation (locked, unlocked, or facility code), which will go in effect during loss of communication with the ISC.

(3) All card readers shall provide audible feedback to indicate access granted/denied decisions. All keypad buttons shall provide tactile audible feedback.

(4) All card readers shall provide audible feedback to indicate access granted/denied decisions.

(5) The card reader shall read the encoded data from the access card and/or transponder and transmit the data back to the host panel in Wiegand Protocol interface.

(6) The card reader shall be listed under UL 294 as an access control system unit accessory.

(7) The card reader shall have separate terminal control points for the green LED, the red LED, and the audible indicator.

(8) The card reader shall have a hold line that will buffer a card read until the panel has asserted that the information can be sent up line.

(9) The card reader shall have a re-present mode in which the card shall be taken from the reader field for one second before being read again. This feature is required to prevent multiple reads from a single card presentation.

(10) The card reader shall be fully weatherized and shall have an operating temperature of -22 to 150 degrees Fahrenheit (-30 to 65 degrees Celsius) and shall have an operating humidity of 5-95 percent noncondensing. The reader shall have a lifetime warranty.

(11) The card reader shall be made from polycarbonate material, and shall be charcoal grey.

(12) The card reader shall transmit at a 125 kHz frequency. The voltage requirements of the card reader shall be 12 VDC.

b. Door and Man-Gate Proximity Card Readers: The door and man-gate proximity card readers shall have the following additional features:

(1) The card reader shall be a ThinLine II proximity designer series card reader, HID Corporation Model No. 5395 or approved equal

(2) The card reader shall be no larger than 4.65” x 3.00" x 0.68" (11.9 X 7.6 X 1.7 cm).

(3) The card reader shall have a read range of 4" to 5.5" (10 - 14 cm), when used with the specified proximity card.

(4) The card reader shall be a single unit with a two-piece housing, with an epoxy-potted enclosure and a snap-on cover, and with properly sized mounting holes that allow it to be attached to a US single gang electrical box.

c. Vehicle Gate Proximity Control Readers The vehicle gate proximity card readers shall have the following additional features:

(1) The card reader shall be a MaxiProx proximity card reader, HID Corporation Model No. 5375 or approved equal.

(2) The card reader shall be no larger than 12.0" x 12.0" x 1.0" (30.5 X 30.5 X 2.54 cm).

(3) The card reader shall have a read range of 16 - 24" (40 - 61 cm), when used with the specified proximity card.

(4) The card reader shall be provided with an internal tamper switch that will indicate an alarm condition if an unauthorized attempt is made to disassemble the unit.

5. Single Reader Interface Module (SRI)

a. The Single Reader Interface Module shall provide an interface between the ISC and card readers. The Single Reader Interface Module shall operate with any card reader that produces a standard Wiegand (Data 1 / Data 0) communication output. As with other card reader types listed above, a single ISC shall be able to multi-drop as many as 16 Single Reader Interface Modules.

b. Up to sixteen (16) SRIs shall be connected to each ISC. The SRI shall monitor on a per door basis, door position, exit push button, and two auxiliary alarm inputs. It shall also control the electric strike and provide two auxiliary relay outputs.

c. The SRI shall support up to eight unique card formats.

d. The SRI shall support an integrated card reader and shall support three access modes upon loss of communication with the ISC; locked, unlocked, and facility code.

e. The SRI shall offer the following features:

(1) UL 294 and CE Certified

(2) 12 VDC Power

(3) Support for up to eight Magnetic and Wiegand Card formats

(4) Support for Data1/Data0 Wiegand Communications

(5) Programmable Inputs and 2 Programmable Relay Outputs

6. Power Supplies for field hardware shall be designed specifically for the system equipment installed. These power supplies shall be regulated, isolated versions for the ISC, ICM, Card Readers and other equipment. Each version shall be available in UPS with battery back-up and non-UPS models. All power supplies shall be housed in locked enclosures that also allow mounting space for the ISC, ICM, SRI, DRI or other device/panel required.

7. The system shall support a star configuration splitter that shall expand a single ISC communications port into eight 2 wire or four 4 wire RS-485 communications ports to be used in a star configuration. All outgoing data shall be broadcast on all eight ports.

2.5 PROXIMITY CARDS

A. Provide proximity card that offer the following features:

1. The proximity access cards shall be a ProxCard II proximity access control card, HID Corporation Model No. 1326 or approved equal.

2. The access card shall have a lifetime warranty.

3. The access card shall have up to 84 programmable bits of Wiegand formatted information for universal compatibility with all HID Wiegand interface reader applications.

4. The access card shall be "Passive" (non-battery operated) proximity technology.

5. The access card shall have a permanent ink jet or laser engraved identification number printed onto it. The card shall have an internal identification numbers that matches the external number.

6. The access card shall be slot punched on the short edge of the card for a vertical portrait-oriented photo, shall be offered with multicolor custom graphics, and be compatible with PVC labels for use with a direct print printer.

7. The access card shall be no larger than 3.375" x 2.125" (8.57 X 5.40 cm), with a maximum thickness of 0.070" (0.18 cm).

8. The access card shall have an operating temperature of -50 to 160 degrees Fahrenheit (-45 to 70 degrees Celsius) and shall have an operating relative humidity of 5-95 percent noncondensing.

9. The read range of the access card shall be extremely consistent, and not be affected by body shielding or variable environmental conditions.

2.6 CONDUIT AND CABLES

A. Conduit and boxes: Provide conduit and boxes that meet the requirements of Section 26 05 33 – Electrical Raceway Systems.

B. Cable: Provide cables meeting the requirements of Section 26 05 19 – Wire and Cable - 600 Volts and Below.

PART 3 EXECUTION

3.1 EXAMINATION

A. Examine areas and conditions under which access control system conduit systems and plywood mounting panels are to be installed. Correct conditions detrimental to proper completion of the work. Do not proceed with work until unsatisfactory conditions have been corrected in a manner acceptable to the Resident Engineer.

3.2 INSTALLATION

A. General: Install access control system as shown or required. Comply with requirements of the NEC and local electrical codes.

B. All equipment shall be installed as per manufacturer's requirements.

C. All equipment shall be installed by qualified personnel in accordance with NEC and local codes.

3.3 FIELD SERVICES

A. Manufacturer's Representative: Provide the services of a factory-trained experienced, competent, and authorized representative of the access control system manufacturer to visit the site of the Work and inspect, check, adjust if necessary, approve the equipment installation and provide training as specified in Section 01 79 00, Training. Furnish all instruments and equipment necessary to conduct required tests, adjustments and training. Submit copies of these documents executed and signed by the manufacturer's representative. Have the representative present when each equipment item is placed in operation. Provide representative service as often as necessary until all problems are corrected and each equipment item is installed and operating satisfactorily.

B. All equipment shall be tested for proper operation. Testing shall be observed by WWU for general compliance with the intended use.

C. Training: Following completion of installation and field testing provide training for 12 employees of the WWU in the proper operation, troubleshooting and maintenance of the equipment as outlined below. All training will be at the WWU's facilities at a time agreeable to the Utility:

1. Operational Training: A minimum of two 4-hour sessions combining both classroom and hands-on instruction, excluding travel time.

2. Maintenance Training: A minimum of two 4-hour sessions combining both classroom and hands-on instruction, excluding travel time.

3.4 CLEANING AND REPAIR

A. Contractor shall clean out and discard all materials used in the construction of the system.

B. All damage caused by the Contractor shall be repaired to the original state by the Contractor.

C. All repairs shall meet the WWU and CWP's satisfaction to be acceptable.

END OF SECTION

(NO TEXT FOR THIS PAGE)

SECTION 28 31 00

SIGNALING AND ALARM

PART 1 GENERAL

1.1 SUMMARY

A. Section Includes: Requirements for providing a fire alarm system complete with alarm initiating devices, alarm notification appliances, control panel(s), auxiliary control devices, annunciators, power supplies and all required wiring. Provide all labor, equipment, materials and the performing of all operations relating to the installation.

B. Related Work Specified in Other Sections Includes, But is Not Limited to, the Following:

1. Section 26 05 00 - Basic Electrical Materials and Methods

2. Section 26 05 19 - Wires and Cables - 600 Volts and Below

3. Section 26 05 33 - Electrical Raceway Systems

4. Section 26 05 53 - Electrical Identification

1.2 REFERENCES:

A. Codes and standards referred to in this Section are:

1. NFPA 70-National Electrical Code (NEC)

2. NFPA 72-National Fire Alarm and Signaling Code

3. NFPA 101-Life Safety Code

1.3 DEFINITIONS

A. E.M.I.: Electromagnetic interference

B. R.F.I.: Radio frequency interference

1.4 SYSTEM DESCRIPTION

A. Location: Provide fire alarm and smoke detection system for each of the following buildings:

1. Booster Pump Station

2. Water Supply Control Building

B. System Type: Provide an addressable, non-coded, continuous sounding, electrically supervised fire alarm and smoke detection system with provisions for remote transmission of all alarm and trouble signals.

C. Standby Mode Operation: Display a "SYSTEM IS NORMAL" message on the front panel and the current time and date. Flash the appropriate LED (Alarm, Supervisory, or Trouble) when an abnormal condition is detected. Pulse the panel audible signal for alarm conditions and sound steadily for trouble and supervisory conditions.

D. Alarm Sequence Operation: Provide the following system alarm operation resulting from the alarm activation of any manual station, automatic detection device, or sprinkler flow switch:

1. Sound audible and audio/visual alarm indicating appliances until silenced by the alarm silence switch at the control panel.

2. Release all doors normally held open by door control devices.

3. Provide a supervised signal to notify the fire department or an approved central station.

4. Display the alarm on an 80 character LCD display with 40 characters used to represent the point label, and 40 characters used to represent the device type identification.

5. Flash the system alarm red LED on the control panel.

6. Sound the remote annunciator and an alarm tone until acknowledged at the control panel or the remote annunciator.

7. Flash subsequent alarms received from other zones on the control panel and remote annunciator.

8. Show the new alarm information on the LCD display.

E. Smoke Detection Operation: Initiate an alarm verification operation upon the activation of any system smoke detector as follows:

1. Reset the activated detector and wait for a second alarm activation.

2. If, within one (1) minute after resetting, a second alarm is reported from the same or any other smoke detector, process the alarm as described previously.

3. If no second alarm occurs within one minute resume normal operation.

4. Design the alarm verification system to operate only on smoke detector alarms.

5. Process other activated initiating devices immediately.

F. Acknowledgment of System Activity: Design the system to have an alarm list key that allows the operator to display all alarms, troubles, and supervisory service conditions with the time of occurrence.

G. Alarm Silencing: Design the system alarm silencing as follows:

1. Pressing the "Alarm Silence" button causes all alarm signals to cease operation.

2. Signals cannot be silenced during alarm silence inhibit mode.

H. System Reset: Design the system reset operation as follows:

1. The "System Reset" button returns the system to its normal state after an alarm condition has been remedied. Provide LCD display to step the user through the reset process with simple English language messages.

2. Should an alarm condition continue to exist, and the system remains in the abnormal state, do not reset the system control relays.

3. Display the message, "SYSTEM RESET INHIBITED" when the alarm silence inhibit function is active.

I. Circuit Supervision: Provide independently supervised initiation circuits so that a fault in any one zone does not affect any other zone.

1. Provide independently supervised and independently fused indicating appliance circuits for alarm devices.

J. Alarm Initiating Devices: Furnish alarm initiating devices in zones that automatically cause the following operations with activation of any device:

1. Activate audio and visual alarms continuously.

2. Indicate the alarm zone at the Control Panel and Annunciator Panel.

3. Addressable devices are to be continuously interrogated by the fire alarm control panel CPU to determine whether normal, alarm or trouble conditions exist for each device.

K. Power Supply: Power the system from the building's 120-volt a-c power system. Provide the control panel, the annunciators, and all system communication devices with a minimum of 36-hours of battery standby with 10-minutes of alarm operation at the end of this period. Supervise and annunciate all normal operating, supervisory, and battery power and fault conditions.

L. Control Panel: Provide all circuits requiring 24-volt d-c system operating power with individual fusing at the control panel. Provide a minimum of five amps auxiliary fused power at the control panel.

1.5 SUBMITTALS

A. General: Provide all submittals, including the following, as specified in Division 1 and Section 26 05 00 – Basic Electrical Materials and Methods.

B. Product Data Information: Provide manufacturer's original catalog data and descriptive information for all components of the equipment to be supplied. Include a complete list of current drain requirements during normal supervisory, trouble and alarm conditions and battery standby calculations showing total standby power required to meet the specified system requirements.

C. CONTRACTOR's Shop Drawings: Furnish a riser diagram and wiring diagram of the complete fire alarm system.

D. Operations and Maintenance Manuals: Submit, prior to field testing of the system, operation and maintenance manuals including a list of spare parts for the fire alarm and smoke detection system as specified in Division 1.

E. Testing Instructions: Submit five complete, comprehensive, step-by-step, testing instructions giving recommended and required testing frequency of all equipment, methods for testing each individual piece of equipment, and a complete trouble-shooting manual explaining what might be wrong if a certain malfunction occurs and explaining how to test primary internal parts of each piece of equipment.

F. Quality Control: Submit six copies of the certified final checkout report as attested to by the manufacturer's representative.

G. Record Drawings: Upon completion of the system installation and testing, submit five complete sets of reproducible Record Drawings, showing installed wiring and color coding and wire tag notations for exact locations of all installed equipment, specific interconnections between all equipment and internal wiring of the equipment.

1.6 QUALITY ASSURANCE

A. Codes: Furnish a system conforming to the following codes and standards:

1. NFPA 70 - National Electrical Code (NEC)

2. NFPA 72 - National Fire Alarm and Signaling Code

3. NFPA 101 - Life Safety Code

4. Wisconsin Administrative Code Public Service Commission (PSC)

5. Wisconsin Administrative Code, Department of Safety and Professional Services (SPS)

6. Underwriters Laboratories Inc. (UL)

7. National Electrical Manufacturer's Association (NEMA)

8. Waukesha County Code of Ordinances

9. Municipal Code of the City of New Berlin

B. UL Label: Provide UL Listed equipment.

C. Compatibility of Components: Furnish control panels, detectors and all other components that are the product of the same manufacturer.

D. Manufacturers Experience:

1. Furnish equipment manufactured by a firm with a minimum of 10 years' experience manufacturing fire alarm systems.

2. Furnish products similar to those the manufacturer has used satisfactorily in installations for not less than five years.

1.7 DELIVERY, STORAGE AND HANDLING

A. General: Deliver, store and handle all products and materials as specified in Division 1 (and as follows:)

1. Store and handle all components in accordance with the manufacturer's instructions.

2. Receive equipment at site; verify applicable components and quantity delivered.

3. Handle equipment to prevent internal components' damage and breakage, as well as denting and scoring of enclosure finish.

B. Acceptance: Do not install damaged equipment.

C. Storage and Protection: Store equipment in a clean, dry space and protect from dirt, fumes, water, construction debris and physical damage. After installation, protect equipment from damage and from environmental conditions.

1.8 SPARE PARTS

A. Provide the following spare parts:

1. Two smoke detectors of each type

2. Two heat detectors of each type

3. One manual pull station

4. One audible/visible device of each type

5. One visible device of each type

6. Two complete replacements for each indicator lamp.

7. Two complete replacements for each fuse.

B. Pack spare parts in containers bearing labels clearly designating contents and related pieces of equipment. Deliver spare parts in original factory packages. Identify all spare parts with information needed for reordering.

PART 2 PRODUCTS

2.1 MANUFACTURERS

A. Acceptable manufacturers are listed below. Other manufacturers of equivalent products may be submitted.

1. The fire alarm system specified is manufactured by Tyco Simplex Grinnell and other manufacturers of specialty devices. Catalog and model numbers are intended to establish the type and quality of equipment and system design as well as exact operating features required. The manufacturer's Specification sheets of each item so listed is considered to be part of the specification and binding therein.

2. Other acceptable manufacturers:

a. Cerberus PRO by Siemens

b. Edwards by UTC Climate Controls and Security

c. Notifier by Honeywell

d. Simplex by Johnson Controls International.

2.2 COMPONENTS

A. Control Panel: Furnish Simplex 4010ES Series Fire Alarm Control Panels, modular with solid state, microprocessor based electronics. Display on each panel at all times controls and visual indicators essential to operation during an alarm condition. Provide a keypad for control and maintenance behind a locked door. Design each control panel with the following features:

1. Indications: Activate audible and visual indicators during alarm, trouble or supervisory conditions. Provide a different audible sound for each condition. Provide audible acknowledgment of all keypad entries.

2. Controls: Provide the following controls and indicators visible through a front access panel:

a. Eighty character backlit liquid crystal display.

b. Individual red system alarm LED.

c. Individual amber supervisory service LED.

d. Individual yellow trouble LED.

e. Green "power on" LED.

f. Alarm acknowledge key.

g. Supervisory acknowledge key.

h. Trouble acknowledge key.

i. Alarm silence key.

j. System reset key.

3. System Power Supply: Provide system power supply(s) sized to power all system devices and component loads.

4. Additional Controls: Provide provisions for a power disconnect, manual evacuation, elevator recall bypass, and door holder release bypass.

5. Contact Outputs: Provide auxiliary Form C contact outputs for each zone and each trouble conditions for remote monitoring.

6. Control Relays: Provide control relays as required for the shutdown of ventilation system fans.

7. Listings: Provide the following listings available from the point lists menu:

   a. All points list by address.

   b. Monitor point list.

   c. Signal list.

   d. Auxiliary control list.

   e. Feedback point list.

   f. Pseudo point list.

   g. LED switch status list.

8. Historic Logging: Design each control panel with the ability to store 300 events in an alarm log plus 300-events in a trouble log along with time and date of occurrence. Store these events in a battery protected random access memory.

a. The historic alarm log events consists of: System Reset, Alarm Silence, Alarm Acknowledgment, Alarm Conditions, and Alarm Historic Log Cleared.

b. The historic trouble log events consists of: Trouble Conditions, Trouble Acknowledgment, Supervisory Acknowledgment, Alarm Verification Tallies, Walk Test Results, and Trouble Historic Log Cleared.

9. Walk Test with Historic Logging: Design the system with the capability of being tested by one person.

a. While in the testing mode, silently log the alarm activation of an initiating device circuit as an alarm condition in the historical data file. Provide an automatic reset feature on the panel after logging of the alarm.

b. Silently log the momentary disconnection of an initiating or indicating device circuit as a trouble condition in the historical data file. Provide an automatic reset feature on the panel after logging of the trouble condition.

c. During an alarm condition occurring when in the walk test mode, perform all specified standard programmed alarm sequences.

10. Standby Power: Furnish sealed rechargeable lead calcium batteries capable of providing 36-hours of complete fire alarm operation upon loss of primary power.

a. Provide an automatic, current limiting, combination high rate/float maintenance rate battery charger capable of returning fully discharged batteries to 70-percent of charge within 12-hours. Provide a battery voltmeter and charging current ammeter module.

11. Equipment Enclosures: Furnish each Control Panel in a locked cabinet of sufficient size to accommodate the specified equipment. Furnish the panel with transparent door panels for full view of visual indicators and controls.

B. Control Panel - Small: Conventional Zoned Small) Furnish Simplex 4006 Series Fire Alarm Control Panels (Addressable Small) Furnish a Simplex Model 4008 Fire Alarm Control Panels with key operated locked door and shatter-resistant viewing window. Design each control panel with the following features:

1. Indicating Light Type: Use light emitting diodes (LED) throughout.

2. Switches: Provide operator interface switches for alarm acknowledge/silence (with resound), trouble acknowledge/silence (with resound), system reset, manual evacuation, power disconnect, auxiliary one bypass (master fan disconnect), and auxiliary two bypass.

3. Indications: Furnish LED indicators for ac power-on (green), power trouble (yellow), remote annunciator trouble (yellow), alarm for each zone (red), trouble for each zone (yellow), and signal circuit trouble for each circuit (yellow).

4. Programmable Features: Provide a panel having the following programmable operating features that are dipswitch selectable in nonvolatile memory:

    a. Desired signal circuit type of operation, alarm silence inhibit (to prevent silencing of signals before the selected minimum time has expired), signal circuit cut out, and manual evacuation.

    b. Waterflow/sprinkler supervisory operation on two designated and distinct zones of the system.

    c. Remote monitoring output capability for all alarms.

    d. Separate alarm verification for smoke detectors, heat detectors, and manual stations.

    e. Functional system test capability that will enable any activated initiating device to report its individual resident zone at the control panel and audibly over the signal circuit.

5. Transient Protection: Provide metal oxide varistors (MOV's) on the system power supply for transient suppression protection to the control panel.

6. Remote Outputs: Provide each zone and trouble condition with a Form C contact output for remote monitoring.

7. Control Relays: Provide control relays as required for the shutdown of ventilation system fans.

8. Standby Power: Furnish sealed rechargeable lead calcium batteries capable of providing 60 hours of complete fire alarm operation upon loss of primary power for standby power.

    a. Provide an automatic, current limiting, combination high rate/float maintenance rate battery charger capable of returning fully discharged batteries to 70-percent of charge within 12-hours. Provide a battery voltmeter and charging current ammeter module.

2.3 ACCESSORIES

A. Annunciator: Provide Simplex 4602 Series LED annunciators to indicate alarm, trouble or status of any system operation or condition. Design each annunciator with the following features:

1. Enclosure: Mount each annunciator in a NEMA 12 enclosure.

2. Communications: Design each annunciator to communicate with a control panel over one twisted shielded pair of wires.

3. Power Supply: Provide 24-volt d-c operating power for each panel, fused at the panel.

4. Provide each annunciator with a common alarm and trouble circuit consisting of:

   a. Control push button switches for alarm silence, trouble silence, system reset and manual evacuation duplicating the control panel switches.

   b. Key "enable" switch to activate or deactivate the control switches.

   c. System trouble LED.

   d. Power on LED.

B. Graphic Annunciator: Provide graphic annunciators where shown with the following features:

1. Graphics: Furnish a graphic panel front showing the building floor plan with a "you are here" designation. Provide an LED indicating light located on the floor plan in each zone. Mark zone boundaries on the annunciator floor plan. Provide lights that indicate the floor on which a signal was actuated if this differs from the zone. Engrave zone and floor designations on the face of the annunciator.

2. Indicating Lights: Furnish individual LED indicating lights for each type of alarm and supervisory device. Provide an LED to indicate trouble. The actuation of any alarm or supervisory signal shall cause the illumination of a zone light, floor light, and device light. Illuminate all of these lights with system trouble. Provide normal power and emergency power indicating lights. Provide a test switch.

3. Material and Legend: Furnish a satin finish stainless steel annunciator face plate. Provide at least 1/4-inch wide, black engraved floor plan boundary lines in the face plate surface. Provide zone boundary lines at least 1/8-inch wide, red engraved in the face plate. Engrave legends for the various LED indicating lights in the annunciator face plate with minimum 1/4-inch-high, red letters.

C. Initiating Devices: Provide the following signal initiating devices:

1. Non-Coded, Non-Addressable Manual Pull Stations

a. Manual Pull Stations, Simplex Series 2099. Single action manual pull stations with raised white lettering and a smooth high gloss red finish. Key the stations alike with the fire alarm control panel. When a station is operated, lock the handle in a protruding manner to facilitate quick visual identification of the activated station. Provide with annunciator contacts and back box suitable for the installation location.

b. Explosionproof Manual Pull Stations, Simplex Model 2099-9136. Double action manual pull stations with lift cover and pull down ring, copper-free, cast aluminum alloy enclosure with red powder epoxy paint finish suitable for use in a Class 1, Divisions 1&2, Group D hazardous locations.

c. Weatherproof Manual Pull Stations, Simplex Model 2099-9144. Similar to the model described in Para. a. except of cast metal construction with back box suitable for weatherproof applications.

2. Addressable Manual Pull Stations

a. Manual Pull Stations, Simplex Model 4099-9003. Double action manual pull stations with raised white lettering and a smooth high gloss red finish. Key the stations alike with the fire alarm control panel. When a station is operated, lock the handle in a protruding manner to facilitate quick visual identification of the activated station. Provide with individual addressable communications module for constant monitoring of status and communication changes to the connected fire alarm control panel.

3. Conventional Detectors

a. Smoke Detectors, Simplex Model 4098-9601 w/4098-9788 compatible base. Photoelectric smoke detectors designed to restrict entry of dust and air turbulence with drift compensation software filtering that compensates for environmental factors and component aging while establishing an accurate reference for evaluating new

activity. Shield the electronics of the unit to protect against false alarms from electro-magnetic interference and radio-frequency. Furnish units with a red LED that pulses to indicate power on and glows continuously to indicate alarm. Provide detectors having a magnetic functional test feature and capable of being supplied with a remote alarm LED indicator. Provide units having a separate mounting base with terminal strip and adapter plate where required for specific mountings.

b. Heat Detectors, Simplex Model 4098-9613(9615) w/4098—9684 compatible base. Electronic heat detectors rated at 135 degrees (200 degrees) F fixed temperature and rate-of-rise. Provide detectors capable of being supplied with a remote alarm LED indicator. Provide units having a separate mounting base with terminal strip and adapter plate where required for specific mountings.

c. Explosionproof Heat Detectors, Fenwal Model 28021. Explosionproof heat detectors suitable for Class 1, Division 1&2 locations, vertical or horizontal mounting, rated at 140 degrees F fixed temperature and rate-of-rise installed on a listed explosionproof enclosure with a minimum thread engagement of five full turns.

d. Project Beam Type Smoke Detectors, Simplex/Fire Fighting Enterprises (Fireray) Model 50RU (100RU) w/LLC Remote Test Station and 0893 Extended Alignment Bracket. Reflective beam smoke detectors with photoelectric transmitter and receiver combined in a single compact housing with the infrared beam reflected from a matching prism reflector. Provide model with 15-160 ft range (160-330 ft range), remote test station and alarm and trouble LED status indicators.

4. Addressable Detectors

a. Smoke Detectors, Simplex Model 4098-9714 w/4098-9789 compatible base. Photoelectric smoke detectors designed to restrict entry of dust and air turbulence with drift compensation software filtering that compensates for environmental factors and component aging while establishing an accurate reference for evaluating new activity. Provide with digital communication of analog sensing which analyzes and stores an average value at the fire alarm control panel for comparison to the sensors present value for determining alarm or abnormal conditions. Shield the electronics of the unit to protect against false alarms from electro-magnetic interference and radio-frequency. Furnish units with a red LED that pulses to indicate power on and glows continuously to indicate alarm. Provide detectors having a magnetic functional test feature and capable of being

supplied with a remote alarm LED indicator. Provide units having a separate mounting base with terminal strip and adapter plate where required for specific mountings.

b. Heat Detectors, Simplex Model 4098-9733 w/4098-9789 compatible base. Self-storing heat sensors with individual programmable rate compensated, fixed temperature sensing and rate-of-rise temperature sensing addressed via integral addressable electronics that constantly monitors the status of the sensor. Adjust fixed temperature setting to 135 degrees F and rate-of –rise setting to 15 degrees F per minute. Furnish units with a red LED that pulses to indicate power on and glows continuously to indicate alarm. Provide detectors capable of being supplied with a remote alarm LED indicator. Provide units having a separate mounting base with terminal strip and adapter plate where required for specific mountings.

5. Remote LED Alarm Indicator, Simplex Model 2098-9808: Provide a remote alarm indicator with red LED suitable for mounting on a single gang box for remote monitoring of detectors where status cannot be readily observed on the detector.

D. Miscellaneous Components and Devices: Provide the following miscellaneous components and devices:

1. Isolator Base, Simplex Model 4098-9793. Isolator base for use with an addressable sensor for isolating a short circuit occurring on the output of the base to downstream devices.

2. Supervised Relay, Simplex Model 2098-9737. DPDT supervised relay for use with non-addressable initiating devices used with addressable systems.

E. Audible/Visible Notification Appliances: Provide notification appliances as follows:

1. Non-Addressable Audible/Visible Appliance, Simplex Model 4906-9139. Design the unit's enclosure to contain a horn and high intensity Xenon strobe flashing light with a clear translucent lens. Imprint with the word "FIRE" in white on a red enclosure. Provide both audible and visible units on the same supervised circuit.

2. Addressable Audible/Visible Appliance, Simplex Model 4906-9227(4906-9231 Weatherproof) Design the unit's enclosure to contain a horn and high intensity, multi-candela Xenon strobe flashing light with a clear translucent lens. Imprint with the word "FIRE" in white on a red enclosure. Provide with individual electronic notification circuitry for programming adjustable features, addressable notification and magnet test diagnostics.

PART 3 EXECUTION

3.1 INSTALLATION

A. General: Install all fire alarm and smoke detection system in accordance with the manufacturer's recommendations and approved shop drawings and as specified in Division 1.

B. Supervision: Supervise the installation by a UL Inc. certified service technician from the manufacturer of the fire alarm equipment covering the following:

1. Pre-installation visit to the job site to review equipment submittals and verify the system wiring method.

2. Periodic visits to the job site to verify installation and wiring of the system.

3. Verify final connections, final checkout and certification of the system.

4. Date and document all job site visits in writing and submit reports. Note any discrepancies on this Document.

C. Adjustments: For signaling devices and notification appliances with adjustable settings, communicate with each via the fire alarm control panel and set to the specified preferred settings or those otherwise recommended for the installation.

D. Power: Provide 120-volt, 1-phase, 2-wire 60-hertz primary power to each Fire Alarm Control Panel.

E. Conduits: Install the entire system in conduit with raceways, boxes, fittings and the like, sized to accommodate the manufacturer's equipment as specified in Section 26 05 33 – Electrical Raceway Systems.

F. Color Code: Color code all system wiring in accordance with local codes and as recommended by the manufacturer. Provide wiring as specified in Section 26 05 19 – Wires and Cables – 600 Volts and Below.

G. Pull Station Installation Height: Install manual pull stations 42 inches above the finished floor.

H. Audible/Visible Device Installation Height: Install audible/visible devices 80-inches above the finished floor or 6 inches below ceiling whichever is lower.

I. Adjustments: If detectors are found to interfere with other equipment or locations interfere with proper operation of the detectors, adjust their locations as required.

3.2 FIELD QUALITY CONTROL

A. Tests: Perform testing of the system in accordance with the procedures outlined in NFPA Standard 72A and as follows:

1. Operate every fire alarm device to demonstrate proper operation and correct annunciation at the Fire Alarm Control Panel and Remote Annunciator.

2. Perform one half of all tests on battery standby power. Where applying heat would destroy any detector, devices may be manually operated. Open at least two locations per zone in each initiating circuit and each signaling circuit to check for the presence of correct supervisory circuitry.

B. Confirmation: After satisfactory completion of all testing, provide certification attesting to the satisfactory completion of the fire alarm equipment installation.

3.3 OPERATION DEMONSTRATION

A. Perform an operational demonstration of the system.

B. Give a minimum of 8 hours of operational instructions and training to the OWNER and/or their representative on the system.

3.4 CLEANING AND PAINTING

A. Shop Painting: Shop paint meeting the requirements of Section 09 96 00 – High Performance Coatings.

B. Field Painting: Paint "RED" all conduit, electrical boxes, covers and wireways associated with the fire alarm systems meeting with the approval of the authority having jurisdiction.

C. Touch Ups and Finish Repairs: Upon completion of the installation, inspect the entire system for scratched or marred surfaces. Repair, clean and touch up to match the original finish.

END OF SECTION

SECTION 31 10 00

SITE CLEARING

PART 1 GENERAL

1.1 SUMMARY

A. Section Includes: Requirements for clearing of areas within the Contract limits and other areas shown, including Work designated in permits and other agreements, in accordance with the requirements of Division 1.

B. Related Work Specified in Other Sections Includes, but is Not Limited to, the Following:

1. Section 31 23 16 - Excavation
2. Section 31 23 23 - Backfilling
3. Section 31 25 13 - Erosion and Sediment Controls
4. Section 32 90 00 - Landscape Work

1.2 REFERENCES

A. Codes and standards referred to in this Section are:

1. State of Wisconsin Department of Transportation (WisDOT), Standard Specifications for Highway and Structure Construction, including the supplemental specifications and recurring special provisions, referred to as the “State Specifications”

1.3 DEFINITIONS

A. Clearing: Clearing is the removal from the ground surface and disposal, within the designated areas, of trees, brush, shrubs, down timber, decayed wood, other vegetation, rubbish and debris as well as the removal of fences.

B. Grubbing: Grubbing is the removal and disposal of stumps, buried logs, roots larger than 2 inches, matted roots and organic materials.

PART 2 MATERIALS

Not Used

PART 3 EXECUTION

3.1 PROTECTION

A. Provide erosion control prior to start of Work in accordance with Section 31 25 13. Maintain and repair damaged erosion control items throughout Work.

B. Do not divert or relocate surface water without written approval from the RESIDENT PROJECT REPRESENTATIVE.

C. Protect benchmarks, survey control points, and existing structures from damage or displacement.

D. Keep entrances and exits, and adjacent roadways affected, free from debris from clearing operations.

3.2 TREE REMOVAL

A. Tree Removal Within Work Limits: Remove only those trees and shrubs shown to be removed and within the Work limits shown.

1. Remove trees and shrubs to avoid damage to trees and shrubs designated to remain.

2. Grub and remove tree stumps and shrubs felled to an authorized disposal site. Fill depressions created by such removal with material suitable for backfill as specified in Section 31 23 23 unless excavation in that area is imminent.

3. Fell trees in accordance with Section 201 of the State Specifications.

B. Tree Removal Outside Work Limits: Do not cut or damage trees outside the Work limits unless shown to be removed or unless written permission has been obtained from the RESIDENT PROJECT REPRESENTATIVE and the property owner or the authority having jurisdiction. Furnish three copies of the written permission before removal operations commence.

3.3 TREES AND SHRUBS TO BE SAVED

A. Protection: Protect trees and shrubs within the Work limits that are so delineated or are marked in the field to be saved from defacement, injury and destruction.

1. Work within the limits of the tree drip line with extreme care using either hand tools or equipment that will not cause damage to trees.

a. Do not disturb or cut roots unnecessarily. Do not cut roots 2 inches and larger unless approved.

b. Immediately backfill around tree roots after completion of construction in the vicinity of trees.

c. Do not operate any wheeled or tracked equipment within drip line.

2. Protect vegetation from damage caused by emissions from engine-powered equipment.

3. During working operations, protect the trunk, foliage and root system of trees to be saved with boards or other guards as required to prevent damage, injury and defacement.

   a. Do not pile excavated materials within the drip line or adjacent to the trunk of trees.

   b. Do not allow runoff to accumulate around trunk of trees.

   c. Do not fasten or attach ropes, cables, or guy wires to trees without permission. When such permission is granted, protect the tree before making fastening or attachments by providing burlap wrapping and softwood cleats.

   d. The use of axes or climbing spurs for trimming will not be permitted.

   e. Provide climbing ropes during trimming.

4. Remove shrubs to be saved, taking a sufficient earth ball with the roots to maintain the shrub.

   a. Temporarily replant if required, and replace at the completion of construction in a condition equaling that which existed prior to removal.

   b. Replace in kind if the transplant fails. Provide transplanting, planting, and watering and guarantee as specified in Section 32 90 00.

5. Have any tree and shrub repair performed by a tree surgeon properly licensed in the State of Wisconsin and within 24 hours after damage occurred.

6. Between April 1 and September 30 paint the cut surfaces of the stumps of healthy oak trees and saplings in accordance with Section 201 of the State Specifications.

3.4 CLEARING AND GRUBBING

A. Clearing: Clear items specified to the limits shown and remove cleared and grubbed materials from the site.

1. Do not start earthwork operations in areas where clearing and grubbing is not complete, except that stumps and large roots may be removed concurrent with excavation.

2. Comply with erosion, sediment control and storm management measures as specified in Division 1.

B. Grubbing: Clear and grub areas to be excavated, areas receiving less than 3 feet of fill and areas upon which structures are to be constructed.

1. Remove stumps and root mats in these areas to a depth of not less than 1 foot below the subgrade of sloped surfaces.

2. Fill depressions made by the removal of stumps or roots with material suitable for backfill as specified in Section 31 23 23 unless excavation in that area is imminent.

C. Limited Clearing: Clear areas receiving more than 3 feet of fill by cutting trees and shrubs as close as practical to the existing ground. Grubbing will not be required.

D. Disposal: Dispose of cleared and grubbed materials off-site in accordance with Section 201 of the State Specifications.

E. Burning: Burning of cleared and grubbed materials is not allowed

3.5 TOPSOIL

A. Stripping: Strip existing topsoil from areas that will be excavated or graded prior to commencement of excavating or grading and place in well-drained stockpiles in approved locations.

END OF SECTION

SECTION 31 23 16

EXCAVATION

PART 1 GENERAL

1.1 SUMMARY

A. Section Includes: Requirements for performing open-cut excavations to the widths and depths necessary for constructing structures, pipelines and conduits including excavation of any material necessary for any purpose pertinent to the construction of the Work.

B. Related Work Specified In Other Sections Includes, But is Not Limited to, the Following:

1. Section 02 50 00 - Impacted Soil and Groundwater Management
2. Section 31 10 00 - Site Clearing
3. Section 31 23 19 - Dewatering
4. Section 31 23 23 - Backfilling
5. Section 31 41 00 - Shoring, Sheeting and Bracing

1.2 DEFINITIONS

A. Earth: "Earth" includes materials which, in the opinion of the RESIDENT PROJECT REPRESENTATIVE, do not require blasting, barring, or wedging for their removal from their original beds. Specifically excluded are ledge and bedrock, boulders larger than 3-feet in diameter, or pieces of masonry larger than one cubic yard in volume.

B. Rock: "Rock" includes materials which, in the opinion of the RESIDENT PROJECT REPRESENTATIVE, require blasting, ramming, barring or wedging for removal from their original beds and which have compressive strengths in their natural undisturbed state in excess of 300 psi. Boulders larger than 3-feet in diameter and masonry larger than one cubic yard in volume are classed as rock excavation.

1.3 SUBMITTALS

A. General: Furnish submittals, including the following, as specified in Division 1 and Section 31 41 00.

B. Shop Drawings:

1. An Excavation Dewatering Plan in accordance with Section 31 23 19.

a. Obtain approval before beginning excavations below groundwater.

b. Maintain one copy of the dewatering plan at the project site to be available for inspection while dewatering operations are underway.

1.4 SITE CONDITIONS

A. Geotechnical Investigation: A geotechnical investigation and report was prepared by Professional Service Industries, Inc. (PSI) and GESTRA Engineering, Inc. and is intended only for use by the OWNER and ENGINEER in preparing the Contract Documents.

1. The geotechnical report is included as an appendix for reference only. However, this information is not guaranteed as to its accuracy or completeness.

2. The geotechnical report is for information purposes only and is not part of the Contract Documents.

B. Actual Conditions: Make any geotechnical investigations deemed necessary to determine actual site conditions.

C. Underground Utilities: Locate and identify existing underground utilities prior to the commencement of Work a minimum of 2,000 linear feet ahead of pipe laying operations.

D. Quality and Quantity: Make any other investigations and determinations necessary to determine the quality and quantities of earth and rock and the methods to be used to excavate these materials.

PART 2 PRODUCTS

Not Used

PART 3 EXECUTION

3.1 GENERAL

A. Clearing: Clear open-cut excavation sites of obstructions preparatory to excavation. Clearing in accordance with Section 31 10 00, includes removal and disposal of vegetation, trees, stumps, roots and bushes, except those specified to be protected during trench excavation.

B. Banks: Shore or slope banks to the angle of repose to prevent slides or cave-ins in accordance with Section 31 41 00.

C. Hazardous Materials: If hazardous materials not specifically shown or noted are encountered, proceed in accordance with General Conditions Article 5.06, Hazardous Environmental Conditions at Site and Section 02 50 00.

D. Remove material from excavations including fragments of brick, cinders, concrete, gravel, rock fragments, lumped subsoil, boulders and rock and miscellaneous loose fill.

E. Where required or directed by the RESIDENT PROJECT REPRESENTATIVE, furnish and install trench bridging, sufficient to support live load surcharge and wheel loading, over open trenches crossing roadways. Bridging may consist of either steel plates, composite timber construction, or prefabricated structural steel members. Secure bridging against the possibility of shifting or dropping into the open trench. Bridging is not to be left in the roadway overnight during winter months unless specifically required by the RESIDENT PROJECT REPRESENTATIVE.

F. Excess Materials: Dispose of excess unsuitable materials, such as fragments of brick, cinders, concrete, and other materials and debris in accordance with applicable laws and regulations.

3.2 EXCAVATION FOR PAVEMENT

A. Cut exposed concrete or bituminous concrete pavement, including concrete pavement, asphaltic pavement, concrete sidewalk, concrete curb, concrete curb and gutter and asphaltic recreation trails, with pavement saw prior to breaking. Saw a straight joint.

B. Use equipment and methods for removing pavement, curbs and sidewalk to prevent cracking, shattering or spalling of the pavement remaining in place.

C. For concrete pavements, saw cut at the nearest joint and remove the entire slab after approval by the RESIDENT PROJECT REPRESENTATIVE.

D. Handle, transport, and dispose of removed pavement at an off-site disposal location. Obtain the off-site disposal location in a timely manner as to not inhibit progress of the Work.

E. Other Requirements: Follow, where applicable, the requirements of the subsections of this Section on “Trench Excavation”, “Short Tunnel Excavation” and “Excavation for Jacking and Augering”.

F. Drainage Structures: Unless shown or specified otherwise, preserve pipes, vaults, manholes and inlets for any stormwater drainage system. Minimize damage to the structures.

3.3 STRUCTURE EXCAVATION

A. Excavation Size: Provide excavations of sufficient size and only of sufficient size to permit the Work to be economically and properly constructed in the manner and of the size specified.

B. Excavation Shape: Shape and dimension the bottom of the excavation in earth or rock to the shape and dimensions of the underside of the structure or drainage blanket wherever the nature of the excavated material permits.

C. Compaction: Before placing foundation slabs, footings or backfill, proof roll the bottom of the excavations to detect soft spots.

1. For accessible areas, proof roll with a ten wheel tandem axle dump truck loaded to at least 15 tons or similarly loaded construction equipment.

2. For small areas, proof roll with a smooth-faced steel roller filled with water or sand, or compact with a mechanical tamper.

3. Make one complete coverage, with overlap, of the area.

4. Over-excavate soft zones and replace with compacted select fill in accordance with Section 31 23 23.

3.4 TRENCH EXCAVATION

A. Preparation: Properly brace and protect trees, shrubs, poles and other structures which are to be preserved. Unless shown or specified otherwise, preserve trees and large shrubs. Hold damage to the root structure to a minimum. Small shrubs may be preserved or replaced with equivalent specimens.

B. Adequate Space: Keep the width of trenches to a minimum, however provide adequate space for workers to place, joint and backfill the pipe properly.

1. Do not allow the clear width of the trench at the level of the top of the pipe to exceed the sum of the outside diameter of the pipe barrel plus 2 feet, unless otherwise approved.

2. In sheeted trenches or when trench boxes are used, measure the clear width of the trench at the level of the top of the pipe to the inside of the sheeting or trench box.

3. Should the maximum trench widths specified above be exceeded without written approval, provide concrete cradle or encasement for the pipe as directed. No separate payment will be made for such concrete cradle or encasement.

C. Depth: Excavate trenches to a minimum depth of 6 inches below the bottom of the pipe or the bottom of encasement for electrical conduits, unless otherwise shown, specified or directed, so that pipe bedding material can be placed in the bottom of the trench and shaped to provide a continuous, firm bearing for conduit encasement, pipe barrels, and bells.

1. If, without direction from the RESIDENT PROJECT REPRESENTATIVE, the trench has been excavated below the required depth for pipe bedding material placement, fill the excess depth with pipe bedding material as specified herein to the proper sub-grade.

D. Unstable Materials: If soft, low strength, wet, loose, organic, or otherwise unsuitable material is exposed at the level of the bottom of the trench excavation, excavate the material in accordance with the subsection headed "Authorized Additional Excavation".

1. When, in the judgment of the RESIDENT PROJECT REPRESENTATIVE, the unstable material extends to an excessive depth, the RESIDENT PROJECT REPRESENTATIVE may advise, in writing, the need for stabilization of the trench bottom with additional pipe bedding material, crushed stone, or gravel mat or the need to provide firm support for the pipe or electrical conduit by other suitable methods.

2. Payment for such trench stabilization will be made under the appropriate Contract Items or where no such items exist, as a change in the Work.

E. Length of Excavation: Backfill trenches at the end of each day, or in lieu thereof, cover trenches by heavy steel plates adequately braced and capable of supporting vehicular traffic in those locations where it is impractical to backfill at the end of the day. If steel plates are used, limit the length of trench covered by the steel plate to 40 feet.

F. Provide ladders for a means of exit from the trench as required by applicable safety and health regulations.

G. Water: Allow no water to rise in the trench excavation until sufficient backfill has been placed to prevent pipe or conduit flotation.

3.5 SHORT TUNNEL EXCAVATION

A. Short Tunnel Requirements: In some instances, trees, shrubs, utilities, sidewalks and other obstructions may be encountered, the proximity of which may be a hindrance to open-cut trench excavation. In such cases, excavate by means of short tunnels in order to protect such obstructions against damage.

1. Construct the short tunnel by hand, auger or other approved method approximately 6 inches larger than the diameter of pipe bells or outer electrical conduit encasement.

2. Consider such short tunnel Work incidental to the construction of pipelines or conduits and appurtenances. The need for short tunnels will not be grounds for additional payment.

3.6 EXCAVATION FOR JACKING AND AUGERING

A. Jacking and Augering Requirements: Allow adequate length in jacking pits to provide room for the jacking frame, the jacking head, the reaction blocks, the jacks, auger rig, and the jacking pipe. Provide sufficient pit width to allow ample working space on each side of the jacking frame. Allow sufficient pit depth such that the invert of the pipe, when placed on the guide frame, will be at the elevation desired for the completed line. Tightly sheet the pit and keep it dry.

3.7 ROCK EXCAVATION

A. Rock Excavation: Excavate rock within the boundary lines and grades as shown, specified or required.

1. Rock removed from the excavation becomes the property of the CONTRACTOR. Handle, transport, and dispose of excavated rock at an off-site disposal location. Obtain the off-site disposal location.

2. Remove shattered rock and loose pieces.

B. Structure Depths: For cast-in-place structures, excavate the rock only to the bottom of the structure, foundation slab, or drainage blanket.

C. Trench Depth: For trench excavation in which pipelines or electrical ducts are to be placed, excavate the rock to a minimum depth of 6 inches below the bottom of the pipe or duct encasement and refill the excavated space with pipe bedding material. Include placing, compacting and shaping pipe bedding material in the appropriate Contract Items.

D. Vault and Manhole Depths: For vault and manhole excavation, excavate the rock to a minimum depth of 8 inches below the bottom of the vault or manhole base for pipelines 24 inches in diameter and larger and 6 inches below the bottom vault or manhole base for pipelines less than 24 inches in diameter. Backfill the excavated space with select fill material. Include placing, compacting and shaping select fill material for vault and manhole bases in the appropriate Contract Items.

E. Over-Excavated Space: Backfill the excavated space in rock below structures, pipelines, conduits, vaults, and manholes, which exceeds the specified depths as shown, as specified, and with Class D concrete, pipe bedding, flowable fill,

flowable fill with cement, select fill, or other material as directed by the RESIDENT PROJECT REPRESENTATIVE.

F. Other Requirements: Follow, where applicable, the requirements of the subsections on “Trench Excavation” and “Substructure Excavation”.

G. Payment: Rock excavation, including ramming, removing from trench, handling, stockpiling, and hauling off-site will be paid for under the appropriate Contract Item. Placing, compacting and shaping of the additional pipe bedding or fill material, will be paid for under the appropriate Contract Items or where no such items exist, as a change in the Work.

H. Blasting: Blasting will not be permitted.

3.8 FINISHED EXCAVATION

A. Finish: Provide a reasonably smooth finished surface for excavations, which is uniformly compacted and free from irregular surface changes.

B. Finish Methods: Provide a degree of finish which is ordinarily obtainable from blade-grade operations, except as otherwise specified in Section 31 23 23.

3.9 PROTECTION

A. Traffic and Erosion: Protect newly graded areas from traffic and from erosion.

B. Barriers: Provide adequate fencing / barriers for fall protection around open excavations. Where excavations are to be left open overnight, cover the entire excavation with a steel road plate or in accordance with the requirements of the authority having jurisdiction and as specified.

C. Repair: Repair any settlement or washing away that may occur from any cause, prior to acceptance. Re-establish grades to the required elevations and slopes.

D. Other Requirements: Conduct Work in accordance with the environmental protection requirements specified in Division 1.

3.10 AUTHORIZED ADDITIONAL EXCAVATION

A. Additional Excavation: Carry the excavation to such additional depth and width as authorized in writing, for the following reasons:

1. In case the materials encountered at the elevations shown are not suitable.

2. In case it is found desirable or necessary to go to an additional depth, or to an additional depth and width.

B. Backfill Materials: Backfill such excavated space with either authorized Class D concrete, pipe bedding, flowable fill, flowable fill with cement, or select fill material, as shown and directed.

C. Compaction: Where directed or specified for the material, compact fill materials to avoid future settlement.

D. Payment: Additional earth excavations so authorized and concrete, pipe bedding, flowable fill, flowable fill with cement, or select fill materials authorized for filling such additional excavation and compaction of fill materials will be paid for under the appropriate Contract Items or where no such items exist, as a change in the Work.

3.11 UNAUTHORIZED EXCAVATION

A. Stability: Backfill any excavation carried beyond or below the lines and grades shown, except as specified in the subsection headed "Authorized Additional Excavation", with such material and in such manner as may be approved in order to provide for the stability of the various structures.

B. Backfill Materials: Backfill spaces beneath vaults, manholes, structures, pipelines, or conduits excavated without authority with Class D concrete, pipe bedding, flowable fill, flowable fill with cement, or select fill material, as approved.

C. Payment: Backfill for unauthorized excavation will not be measured and no payment will be made therefor.

3.12 SEGREGATION STORAGE AND DISPOSAL OF MATERIAL

A. Stockpiling Suitable Materials: Stockpile topsoil suitable for final grading and landscaping and excavated material suitable for backfilling or embankments separately on the site in approved locations.

B. Stockpile Locations: Store excavated and other material a sufficient distance away from the edge of any excavation to prevent its falling or sliding back into the excavation and to prevent collapse of the wall of the excavation. Provide not less than 2 feet clear space between the bottom of any stockpile and other material and the top edge of any excavation. Do not stockpile materials where it will cause interference with the Work or prevent proper drainage of surface water. Prevent erosion and sediment run-off.

C. Excess Materials: Stockpile sufficient excess suitable material for utilization as backfill material for authorized additional excavation. Transport and dispose of surplus excavated material and excavated material unsuitable for backfilling or embankments at an off-site disposal location. Obtain the off-site disposal location in a timely manner so as to not inhibit progress of the Work.

3.13 REMOVAL OF WATER

A. During excavation and until completion and acceptance of the Work at final inspection, provide ample means and equipment with which to remove promptly and dispose of properly water entering any excavation or other parts of the Work in accordance with the requirements of Section 31 23 19.

END OF SECTION

(NO TEXT FOR THIS PAGE)

SECTION 31 23 19

DEWATERING

PART 1 GENERAL

1.1 SUMMARY

A. Section Includes: Requirements for controlling, handling, and disposing of groundwater and surface water encountered on site.

B. Related Work Specified In Other Sections Includes, but is Not Limited to, the Following:

1. Section 31 23 16 - Excavation
2. Section 31 23 23 - Backfilling
3. Section 31 25 13 - Erosion and Sediment Controls
4. Section 33 05 50 - Laying and Jointing Buried Pipelines

1.2 REFERENCES

A. Codes and standards referred to in this Section are:

1. State of Wisconsin Department of Natural Resources, Storm Water Construction and Post-Construction Technical Standards, Conservative Practice Code No. 1061, Dewatering, referred to as "Technical Standard 1061"

1.3 SYSTEM DESCRIPTION

A. Identify and obtain permits required for dewatering and disposal by state and local authorities have jurisdiction. Comply with permit requirements.

B. Take sole responsibility for the design and adequacy of the dewatering system necessary to accomplish the Work as shown or specified.

C. Design dewatering system capable of relieving hydrostatic pressure against the height of the excavation walls and of lowering the hydrostatic level to a minimum of 12 inches below the bottom of the required excavations.

1.4 SUBMITTALS

A. General: Furnish submittals, including the following, as specified in Division 1.

B. Quality Control:

1. An Excavation Dewatering Plan that addresses site surface water and groundwater conditions, the type and arrangement of the equipment to be used, and the proper method of groundwater disposal. Prepare the Excavation Dewatering Plan before beginning excavations below groundwater. Maintain one copy of the Excavation Dewatering Plan at the project site to be available for inspection while dewatering operations are underway. Resubmit revised or amended Excavation Dewatering Plan if system is modified during installation or operation. ENGINEER's review of Excavation Dewatering Plan will be limited to confirming that the design was prepared by a Licensed Professional Engineer registered in the State of Wisconsin. Include the following in the Excavation Dewatering Plan:

    a. A certificate signed and sealed by a Licensed Professional Engineer experienced in dewatering and registered in the State of Wisconsin that certifies that the Licensed Professional Engineer has evaluated and approved the CONTRACTOR's Excavation Dewatering Plan and has prepared complete design calculations and working drawings.

    b. Evidence of written approval from state and local authorities having jurisdiction over dewatering and stormwater control.

    c. Descriptions, methods, and working drawings showing locations and dimensions of proposed subsurface and surface water control facilities, including equipment, power supply, excavations, existing and new utilities and structures, siltation pond, means of measuring inflow to excavations, observation wells, pollution control facilities, screens and filter media, discharge locations to be utilized, and standby equipment. Note locations of generators and other noise producing equipment and anticipated decibel levels.

    d. Template of well record forms to be maintained during dewatering operations.

    e. Emergency plans to be put into operation during failure of the dewatering system.

2. Monthly Dewatering System Monitoring Reports containing the following information:

    a. For observation wells, include daily piezometric levels identified by date, time, well number and system pumping rate. For piezometric levels, include feet of drawdown and groundwater elevation.

    b. For dewatering wells, include suspended material test results by date, time, well number, well pumping rate and system pumping rate.

c. Installation records for new wells.

3. Timing and records of maintenance tests for primary and standby dewatering systems including the following:

a. Maintenance tests and water quality tests for suspended matter at the discharge point including date, time of day, elapsed times of tests procedures, components tested, suspended particles, general observations and well readings.

b. Daily discharge rates.

c. Dewatering well installation and removal records.

d. Observation well installation and removal records.

e. General observations of the system such as equipment running times and failures.

1.5 SITE CONDITIONS

A. Subsurface Investigation: Subsurface geotechnical and environmental investigations and reports were prepared by the Engineer's Consultants and are intended only for use by the OWNER and ENGINEER in preparing the Contract Documents.

1. The subsurface investigation reports may be examined for whatever value they may be considered to be worth. However, this information is not guaranteed as to its accuracy or completeness.

2. The subsurface investigation reports are for information purposes only and are not part of the Contract Documents.

B. Actual Conditions: Make any subsurface investigations deemed necessary to determine actual site conditions.

C. Quality and Quantity: Make any other investigations and determinations necessary to determine the qualities and quantities of groundwater and the methods to be used to provide for the removal of water.

PART 2 PRODUCTS

Not Used

PART 3 EXECUTION

3.1 INSTALLATION

A. Water Removal: During excavation and until completion and acceptance of the Work at final inspection, provide ample means and equipment with which to remove promptly and dispose of properly the water in and entering any excavation or other parts of the Work.

1. Dewater in accordance with Technical Standard 1061, permits required for dewatering and disposal by State and local authorities having jurisdiction, and the approved Excavation Dewatering Plan.

2. Coordinate dewatering operations with the requirements of Section 31 23 16, Section 31 23 23, Section 31 25 13, and Section 33 05 50.

3. Perform dewatering using pipes, wells, well points, pumps, electrical generators, filters, plastic sheeting, sedimentation tanks, drain tiles, sumps, flow control devices, sand bags, surface water controls, and other appurtenances with adequate capacity and in satisfactory working condition for accomplishing the Work. Provide standby power and pumps to ensure continuous operations.

4. Install dewatering system from the existing ground surface or from the bottom of an excavation which is located above the natural groundwater level.

5. Place the dewatering system into operation and lower the water level prior to excavation.

6. Keep the excavation dry.

7. Allow no water to rise over or come in contact with masonry and concrete until the concrete and mortar have attained a set and, in any event, not sooner than 12 hours after placing the masonry or concrete.

8. If well points or wells are used, adequately space them to provide the dewatering and sandpack the wells or use other means to prevent pumping of fine sands or silts from the subsurface. Maintain a continual check to ensure that the subsurface soil is not being removed by the dewatering operation.

9. Open-sump pumping that leads to loss of fines, soil piping, subgrade softening, or slope instability is not acceptable.

10. Prevent surface water and subsurface water from entering excavations, from ponding on prepared subgrades, and from flooding site and surrounding

areas. Construct temporary water conveyance systems such as ditches, dams, berms, siltation ponds, site grading, sumps, and similar items to divert, collect, treat, or remove surface water from excavations and Work areas on-site.

11. At no time during construction affect existing surface or subsurface drainage patterns of adjacent property, or constrict or interrupt existing drainage courses.

12. Prevent destabilization, heaving, and shear failure of bottom of excavation. Prevent the loss of fines, seepage, boils, quick conditions or softening of the foundation strata while maintaining stability of the sides and bottom of the excavation.

13. Operate the dewatering system continuously 24 hours per day, 7 days per week, including holidays and during periods of work stoppages, until backfilling to final grade has been completed in the dewatering area. Provide standby equipment on-site, installed and available for immediate operation, to maintain dewatering on a continuous basis if part of the system becomes inadequate or fails. Observe and maintain the dewatering operation to ensure satisfactory performance. When required by State or local authorities having jurisdiction, provide continuous, 24-hour per day, 7-day per week on-site monitoring by a competent person.

14. Conduct the dewatering operations in a manner which will protect adjacent structures, utilities, and other facilities and avoid settlement or subsidence. Where structures or facilities exist adjacent to areas of proposed dewatering, establish reference points and observe such at frequent intervals to detect settlement.

B. Discharge of Water: Dispose of water pumped or drained from the Work in a safe and suitable manner and in accordance with applicable State and local laws and regulations without damage to adjacent property or streets or to other Work under construction.

1. Do not discharge water through the pipeline under construction.

2. If required as a condition of applicable permit or by applicable law, ordinance or code, provide meters to measure the flow discharged. If required, analyze or treat the water to meet regulations prior to discharge. Routinely remove solids from treatment facilities and perform other maintenance.

3. Discharge water in a manner that will not cause erosion or flooding, or worsen flooding during storm events.

4. Water Courses: If discharging to water course, prevent erosion of banks.

5. Protection: Provide adequate protection for water discharged onto streets. Protect the street surface at the point of discharge.

6. Sanitary Sewers: Discharge no water into sanitary sewers unless required by the applicable State and local laws and regulations. If required, discharge water in accordance with applicable State and local laws and regulations.

7. Storm Sewers: Discharge water in accordance with applicable State and local laws and regulations. Discharge no water containing settleable solids into storm sewers.

C. Backfilling and Restoration: Remove dewatering system from site upon completion of dewatering. Plug or fill well holes or cut off and cap wells a minimum of 36 inches below grade. Backfill excavations made as part of dewatering operations in accordance with Section 31 23 23, and provide surface restoration in accordance with Division 32 and as shown.

D. Repair: Promptly repair any damage caused by dewatering the Work.

END OF SECTION

SECTION 31 23 23

BACKFILLING

PART 1 GENERAL

1.1 SUMMARY

A. Section Includes: Backfilling excavation to the original surface of the ground or to such other grades as may be shown or required. For areas to be covered by topsoil, leave or stop backfill 12 inches below the finished grade or as shown. Obtain approval before backfilling against masonry structures. Remove from backfill, any compressible, putrescible, or destructible rubbish and refuse and lumber and braces from the excavated space before backfilling is started. Leave a portion of the sheeting in place as shown.

B. Equipment Limitations: Do not permit construction equipment used to backfill to travel against and over cast-in-place concrete structures until the specified concrete strength has been obtained, as verified by concrete test cylinders. In special cases where conditions warrant, the above restriction may be modified providing the concrete has gained sufficient strength, as determined from test cylinders, to satisfy design requirements for the removal of forms and the application of load.

C. Related Work Specified In Other Sections Includes, but is Not Limited to, the Following:

1. Section 31 10 00 - Site Clearing
2. Section 31 23 16 - Excavation
3. Section 31 40 00 - Shoring, Sheeting and Bracing

1.2 REFERENCES

A. Codes and standards referred to in this Section are:

1. ACI 305R - Hot Weather Concreting

2. ACI 306R - Cold Weather Concreting

3. ASTM C42 - Standard Test Method for Obtaining and Testing Drilled Cores and Sawed Beams of Concrete

4. ASTM C94 - Standard Specification for Ready-Mixed Concrete

5. ASTM C143 - Standard Test Method for Slump of Hydraulic-Cement Concrete

6. ASTM C150 - Standard Specification for Portland Cement

7. ASTM D1557 - Standard Test Methods for Laboratory Compaction Characteristics of Soil Using Modified Effort (56,000 ft-lbf/ft^3 (2,700 kN-m/m^3))

8. ASTM D2487 - Standard Practice for Classification of Soils for Engineering Purposes (Unified Soil Classification System)

9. ASTM D4832 - Standard Test Method for Preparation and Testing of Controlled Low Strength (CLSM) Test Cylinders

10. State of Wisconsin Department of Transportation (WisDOT), Standard Specifications for Highway and Structure Construction, including the supplemental specifications and recurring special provisions, referred to as the "State Specifications"

11. Standard Specifications for Sewer and Water Construction in Wisconsin, referred to as the "Standard Specifications"

1.3 SUBMITTALS

A. General: Furnish submittals, including the following, as specified in Division 1.

B. Product Data and Information:

1. Source of backfill material.

2. Flowable fill and flowable fill with cement mix design.

3. Geotextile fabric product data.

4. Class D concrete mix design.

C. Quality Control:

1. Certified laboratory reports of proposed pipe bedding and backfill material, including unit weight, specific gravity, soundness and gradations of proposed granular backfill material.

2. Class D concrete testing results.

1.4 FIELD CONDITIONS

A. Reconstruct riprap damaged by pipeline construction in accordance with the requirements of the authority having jurisdiction and Section 606 of the State Specifications.

PART 2 PRODUCTS

2.1 BACKFILL MATERIAL - GENERAL

A. General: Backfill with sound materials, free from waste, organic matter, rubbish, boggy or other unsuitable materials.

B. General Materials Requirements: Conform materials used for backfilling to the requirements specified. Follow common fill requirements whenever other fill is not specified. Determine and obtain the approval of the appropriate test method where more than one compaction test method is specified.

C. Frozen Materials: Do not use frozen material for backfilling.

2.2 SELECT FILL

A. Materials for Select Fill: Provide select fill in accordance with the authority having jurisdiction. Use gravel, crushed stone, limestone screenings or other granular or similar material as approved which can be readily and thoroughly compacted to not less than 95 percent of the maximum dry density obtainable by ASTM D1557.

1. Suitable Materials for Select Fill:

a. Grade select fill between the following limits:

U.S. Standard Sieve	Percent Passing by Weight
2 inch	100
1-1/2 inch	90-100
1 inch	75-95
1/2 inch	45-70
#4	25-50
#10	15-40
#200	5-15

b. Select fill conforming to 1 1/4-inch aggregate defined in Section 305.2.2 of the State Specifications may be used.

2. Unsuitable Materials for Select Fill: Very fine sand, uniformly graded sands and gravels, or other materials that have a tendency to flow under pressure when wet are unacceptable as select fill.

2.3 PIPE BEDDING

A. Material for Pipe Bedding: Use of crushed stone chips made from crushing sound limestone, dolomite ledge rock, or other materials of regional significance, which can be readily and thoroughly compacted to 95 percent of the maximum dry density obtainable by ASTM D1557. The material is to be hard, tough, and durable.

1. Gradation for Small Piping: For pipe 18 inches and smaller in diameter, grade pipe bedding between the following limits:

Gradation Requirements for 3/8-inch Crushed Stone
(Standard Specifications, Table 32)

U.S. Standard Sieve	Percent Passing by Weight
1/2 inch	100
3/8 inch	90-100
#8	0-15
#30	0-3

2. Gradation for Large Piping: For pipe larger than 18 inches in diameter, grade pipe bedding between the following limits:

Gradation Requirements for 3/4-inch Crushed Stone
(Standard Specifications, Table 28, Coarse Aggregate Size No. 1, and Table 33)

U.S. Standard Sieve	Percent Passing by Weight
1 inch	100
3/4 inch	90-100
3/8 inch	20-55
#4	0-10
#8	0-5

2.4 FLOWABLE FILL

A. Materials for Flowable Fill: Provide flowable fill in accordance with the authority having jurisdiction. Use a mixture of aggregate, cement (only for flowable fill with cement), and water that is workable, flowable, compacted to 95 percent of the maximum dry density obtainable by ASTM D1557, and self-leveling meeting the

requirements of Sections 8.43.8 and 8.43.9 of the Standard Specifications and ASTM D4832.

B. Thoroughly mix the materials in a clean concrete mixer truck in the following quantities per cubic yard in damp weight.

1. Sand: 1,350 lbs of sand.

2. Coarse Aggregate Size No. 1: 750 lbs of Course Aggregate Size No. 1, except provide 775 lbs of Course Aggregate Size No. 1 in Milwaukee County Department of Transportation jurisdiction.

3. Coarse Aggregate Size No. 2: 1,150 lbs of Coarse Aggregate Size No. 2 graded between the following limits:

Gradation Requirements for 1 1/2-inch Crushed Stone
(Standard Specifications, Table 28, Coarse Aggregate Size No. 2)

U.S. Standard Sieve	Percent Passing by Weight
2 inch	100
1 1/2 inch	90-100
1 inch	20-55
3/4 inch	0-15
1/2 inch	0-5

4. Water: 25 gallons of water. Additional water is not permitted

5. Where flowable fill with cement is shown or required, provide an additional minimum 1 bag per cubic yard of air-entraining Portland Cement meeting the requirements of ASTM C150 and Section 8.32.2 of the Standard Specifications.

a. Admixtures: Approved chemical admixtures and fly ash that do not contain calcium chloride may be used to obtain the required properties of the flowable fill with cement mix upon approval. Provide admixtures compatible with the cement and other admixtures in the batch.

b. Air Content: Provide an air content by volume of between 4 and 7 percent.

c. Slump: Provide a slump of approximately 3 to 4 inches when tested in accordance with ASTM C143.

d. Compressive Strength: Provide flowable fill with cement with a minimum 28 day compressive strength of 100 psi meeting the requirements of ASTM D4832 and based on tests of cylinders made and cured.

C. Water: Provide batch mixing water and mixer washout water meeting the requirements of ASTM C94.

D. Consistency: Provide fill with a consistency such that the material flows easily into voids and openings.

2.5 COMMON FILL

A. Materials for Common Fill:

1. Material used as common fill is subject to approval.

2. Material from on-site excavation may be used as common fill provided that it can be readily compacted to 90 percent of the maximum dry density obtainable by ASTM D1557, and does not contain unsuitable material as defined below.

3. If there is insufficient suitable material from on-site excavation, then import additional off-site material from sources other than the excavations in this contract conforming to the specifications and at no additional cost. Select fill may be used as common fill at no change in the Contract Price.

B. Suitable Soils for Common Fill: ASTM D2487 soil classification group (Unified Soil Classification System) GW, GP, GM, GC, SW, SP, SM, SC, CL, ML, or a combination of these groups; free of rock or gravel larger than 3 inches in any dimension, debris, waste, frozen materials, vegetation, and other deleterious matter.

C. Unsuitable Soils for Common Fill: ASTM D2487 soil classification group CH, MH, OH, OL and PT; soils which contain rock or gravel larger than 3 inches in any dimension, debris, waste, frozen materials, vegetation or other organic matter, pieces or fragments of concrete larger than 3 inches in any dimension, clumps of clay larger than 6 inches in any dimension, and other deleterious matter.

2.6 CLASS D CONCRETE

A. Use Class D concrete at existing utility crossing, pipe encasement, blow-off outlet, and valve pad as shown.

B. Provide Class D concrete in accordance with Table 29 of the Standard Specifications and meeting the requirements of Section 8.35.0 of the Standard Specifications.

2.7 GEOTEXTILE FABRIC

A. Provide non-woven, permeable, synthetic fiber material designed to prevent fine soil particles from migrating through the material. Provide geotextile filter fabric in accordance with Section 645 of the State Specifications.

PART 3 EXECUTION

3.1 ELECTRICAL CONDUIT, VAULT AND MANHOLE BEDDING

A. Bedding Compaction: Bed electrical conduits, vaults, and manholes in well graded, compacted, select fill conforming to the requirements of this Section except as otherwise shown, specified, or required. Where conduit is installed in dedicated trenches, extend electrical conduit bedding a minimum of 6 inches below the bottom of the conduit and above the top of the conduit for the full trench width. Compact bedding thickness no less than 6 inches for vault and manhole bases.

B. Concrete Work Mats: Cast cast-in-place vault and manhole bases and other foundations for structures against a Class D concrete work mat in clean and dry excavations, unless otherwise shown, specified or required.

C. Bedding Placement: Place select fill used for bedding beneath electrical conduits, vault bases, and manhole bases, in uniform layers not greater than 9 inches in loose thickness on native, undisturbed soil. Thoroughly compact in place with suitable mechanical or pneumatic tools to not less than 95 percent of the maximum dry density as determined by ASTM D1557.

3.2 PIPE BEDDING

A. General: Provide pipe bedding material as specified and shown to proper grade and elevation and for the full width of the trench.

B. Hand Placement: Place pipe bedding by hand from the bottom of the excavation on native, undisturbed soil to 1 foot over the top outside surface of the pipe in uniform layers not greater than 6 inches in loose thickness. Tamp under pipe haunches and thoroughly compact pipe bedding in place with suitable mechanical or pneumatic tools to not less than 95 percent of the maximum dry density as measured by ASTM D1557.

C. Stone Placement: Do not place stone fragments 3 inches or larger in any dimension in the backfill nearer than 2 feet at any point from any pipe, conduit or concrete wall.

D. Unallowed Materials: Pipe bedding containing very fine sand, uniformly graded sands and gravels, or other materials that have a tendency to flow under pressure when wet is unacceptable.

3.3 GEOTEXTILE FABRIC

A. Provide geotextile fabric as shown and as follows:

1. Anywhere loose silt, soft clay, or organic soils are encountered.

2. If trench excavation is in unsuitable soils that extend to and above the trench bottom.

3. Where directed by the RESIDENT PROJECT REPRESENTATIVE.

B. Protect geotextile fabric during storage from becoming wet, coming in contact with soil, cement, or other foreign materials, and from exposure to sunlight.

C. Where geotextile fabric is required to envelop pipe bedding:

1. Lay geotextile fabric along the bottom of the trench and pull up along the side walls of the trench prior to placement of pipe bedding material. Take care to allow the geotextile fabric to conform to the full extent of the trench opening so as to prevent tearing of the geotextile fabric during pipe bedding placement.

2. Keep sufficient geotextile fabric on each side of the trench to allow the geotextile fabric to be folded over and placed on top of the fully installed pipe bedding material and overlapped linearly along the pipeline as shown.

3. Place small quantities of the flowable fill, flowable fill with cement, select fill, or common fill material as shown on the geotextile fabric to keep the fabric and overlap in place.

3.4 EXISTING UNDERGROUND STRUCTURES AND UTILITIES

A. Bed and backfill existing underground structures, tunnels, conduit, or pipe crossing the excavation as shown. Place bedding material under and around each existing underground structure, tunnel, conduit, or pipe and extend underneath to native, undisturbed soil and on each side to a distance equal to the depth of the trench below the structure, conduit or pipe or width of the trench, whichever is greater.

3.5 BEDDING PLACEMENT AND BACKFILL FOR PIPE IN SHORT TUNNEL

A. Bed pipelines or electrical conduits placed in short tunnels in select fill or Class D concrete. Completely fill the remainder of the annular space between the outside of the pipe wall and the tunnel wall with select fill, suitable job-excavated material,

or Class D concrete, as approved. Suitably support pipelines or conduits in short tunnels to permit placing of backfill suitably tamped in place.

3.6 TRENCH BACKFILL

A. General: Backfill trenches from 1 foot over the top of the pipe, from the top of electrical conduit bedding or as shown to the bottom of pavement base course, subgrade for lawns or lawn replacement, to the top of the existing ground surface or to such other grades as may be shown or required.

B. Backfill simultaneously and evenly on each side of free-standing structures and pipe.

C. Materials: Provide flowable fill, flowable fill with cement, select fill, or common fill, as shown, specified and approved for trench backfill.

D. Depth of Placement - General: Except under pavements, walkways, railroad tracks, and street or highway appurtenances, or as otherwise shown or specified, place trench backfill in uniform layers not greater than 9 inches in loose thickness and thoroughly compact in place using suitable mechanical or pneumatic equipment. Compact backfill to not less than 90 percent of the maximum dry density as determined by ASTM D1557.

E. Depth of Placement - Traffic Areas and Under Utilities: Where pavements, walkways, railroad tracks, and street or highway appurtenances are to be placed over trenches (except in tunnels) and under utilities or utility services crossing the trench, provide trench backfill as shown. Compact backfill to not less than 95 percent of the maximum dry density as determined by ASTM D1557. Place select fill, flowable fill with cement, and flowable fill as follows.

1. Placing Select Fill:

   a. Provide select fill in uniform layers not greater than 9 inches in loose thickness and thoroughly compacted in place with equipment as specified in this Section.

2. Placing Flowable Fill and Flowable Fill with Cement:

   a. Just prior to mixing, run the mixer at full mixing speed for one full minute to provide an even mixture.

   b. Place fill directly from the concrete transit mix truck over the pipe bedding material to an elevation equal to the bottom of pavement base course as shown.

   c. Use rodding, mechanical vibration, and compaction to assist in consolidating the fill to fill voids and openings.

d. When required to prevent uplift, place fill in 2 stages, allowing sufficient time for the initial set of the first stage before the remainder is placed.

e. Do not place backfill over the flowable fill with cement until it has reached the initial set. If backfill is not to be placed over the flowable fill with cement within 8 hours, place a 6-inch cover of select fill over the flowable fill with cement.

f. At air temperatures lower than 45 degrees Fahrenheit, deliver and place fill at a minimum temperature of 50 degrees Fahrenheit. Maintain a temperature of flowable fill and flowable fill with cement during production and transportation equal to or less than 90 degrees Fahrenheit.

g. Do not place fill when:

(1) The trench walls are frozen or contain frozen materials.

(2) The air temperature is below 40 degrees Fahrenheit, unless the air temperature is 35 degrees Fahrenheit or more and the temperature is rising.

(3) Weather conditions are otherwise unsuitable.

(4) Directed by the RESIDENT PROJECT REPRESENTATIVE.

F. Depth of Placement: Undeveloped Areas: In undeveloped areas where flowable or select fill material or hand-placed backfill are not specified, shown, or required, place common fill, or other approved backfill in lifts not exceeding 12 inches in loose thickness. When the trench is full, consolidate the backfill by jetting, spading, tamping or puddling to ensure complete filling of the excavation. Mound the top of the trench approximately 12 inches to allow for consolidation of backfill.

G. Dropping of Material on Work: Do trench backfilling Work in such a way as to prevent dropping material directly on top of any conduit or pipe through any great vertical distance that would cause damage to the pipe, coating, polyethylene encasement, any other aspect of the Work, or existing utility or structure. Do not allow backfilling material from a bucket or other source to fall directly on a structure or pipe and lower the bucket or other source so that the shock of falling earth will not cause damage.

H. Distribution of Large Materials: Break lumps up and distribute any stones, pieces of crushed rock or lumps which cannot be readily broken up, throughout the mass so that interstices are solidly filled with fine material.

3.7 STRUCTURE BACKFILL

A. Use of Select Fill: Use select fill underneath structures, and adjacent to structures where pipes, connections, electrical ducts and conduits, and structural foundations are to be located within this fill. Use flowable fill, flowable fill with cement, or select fill beneath pavements, walkways, and railroad tracks (except in tunnels) as shown and extend up to the bottom of pavement base course or ballast.

1. Place backfill in uniform layers not greater than 8 inches in loose thickness and thoroughly compact in place with suitable approved mechanical or pneumatic equipment.

2. Compact backfill to not less than 95 percent of the maximum dry density as determined by ASTM D1557.

B. Use of Common Fill: Use common fill adjacent to structures in areas not specified above, unless otherwise shown or specified. Select fill may be used in place of common fill at no additional cost.

1. Extend such backfill from the bottom of the excavation or top of bedding to the bottom of subgrade for lawns or lawn replacement, the top of previously existing ground surface or to such other grades as may be shown or required.

2. Place backfill in uniform layers not greater than 8 inches in loose thickness and thoroughly compact in place with suitable equipment, as specified above.

3. Compact backfill to not less than 90 percent of the maximum dry density as determined by ASTM D1557.

C. Use of Clay: In unpaved areas adjacent to structures for the top 1 foot of fill directly under lawn subgrades use clay backfill placed in 6-inch lifts. Compact clay backfill to not less than 90 percent of the maximum dry density as determined by ASTM D1557.

1. Use clay having a liquid limit less than or equal to 40 and a plasticity index less than or equal to 20.

3.8 CLASS D CONCRETE

A. Placement:

1. Place Class D concrete only in the presence of the RESIDENT PROJECT REPRESENTATIVE.

2. Continuous Operation: Place no concrete after its initial set has occurred, and do not use re-tempered concrete under any condition.

3. Minimum Handling: Convey and place concrete with minimum handling and deposit the concrete in the forms as close as possible to its final position and in no case more than 5 feet in a horizontal direction therefrom. Do not re-handle concrete.

4. Horizontal Layers: Place concrete in horizontal layers shallow enough so that the previous layer is still soft when the next layer is added and the two layers can be vibrated together. Do not exceed 18 inches in depth for each layer.

5. Protection Against Elements: Protect freshly placed exposed concrete against damage from the elements or other sources.

6. Hot Weather Placement: For placement of concrete during hot weather, follow the recommendations of ACI 305R.

7. Cold Weather Placement: For placement of concrete during cold weather, follow the recommendations of ACI 306R, except that set-accelerators will not be permitted.

B. Testing: Perform testing of Class D concrete in accordance with Section 8.35.2 of the Standard Specifications.

C. Low Concrete Strength Test Results:

1. Compressive Strength: Designate the 28-day strength as f'_c.

2. Test Cores: If it is determined that the serviceability of the concrete is significantly reduced by low concrete strength test results, take test cores from the area in question. Drill and test cores in accordance with ASTM C42 except as otherwise noted. Take three cores for each strength test more than 500 psi below the specified f'_c.

3. Acceptable Levels of Strength: Concrete in the area represented by core tests will be accepted if the average of three cores is equal to or greater than 0.85 f'_c and no single core is less than 0.75 f'_c.

4. Unacceptable Concrete: Remove and replace concrete which does not meet the core test requirements or strengthen the concrete to the satisfaction of the RESIDENT PROJECT REPRESENTATIVE.

3.9 COMPACTION EQUIPMENT

A. Equipment and Methods: Carry out compaction with suitable approved equipment and methods.

1. Compact clay and other cohesive material with sheep's-foot rollers or similar equipment where practicable. Use hand held pneumatic tampers elsewhere for compaction of cohesive fill material.

2. Compact low cohesive soils with pneumatic-tire rollers or large vibratory equipment where practicable. Use small vibratory equipment elsewhere for compaction of cohesionless fill material.

3. Do not use heavy compaction equipment over pipelines or other structures, unless the depth of fill is sufficient to adequately distribute the load.

3.10 FINISH GRADING

A. Final Contours: Perform finish grading in accordance with the completed contour elevations and grades shown and blend into conformation with remaining natural ground surfaces.

1. Leave finished grading surfaces smooth and firm to drain.

2. Bring finish grades to elevations within plus or minus 0.10 foot of elevations or contours shown.

B. Surface Drainage: Perform grading outside of building or structure lines in a manner to prevent accumulation of water within the area. Where necessary or where shown, extend finish grading to ensure that water will be carried to drainage ditches, and the site area left smooth and free from depressions holding water.

3.11 RESPONSIBILITY FOR AFTERSETTLEMENT

A. Aftersettlement Responsibility: Take responsibility for correcting any depression which may develop in backfilled areas from settlement within one years after the Work is fully completed. Provide as needed, backfill material, pavement base replacement, permanent pavement, sidewalk, curb and driveway repair or replacement, and lawn replacement, and perform the necessary reconditioning and restoration Work to bring such depressed areas to proper grade as approved.

3.12 INSPECTION AND TESTING OF BACKFILLING

A. Sampling and Testing: Sampling and testing of in-place backfill and concrete will be provided by the OWNER as specified in Division 1. If initial testing reveals non-compliance with Contract requirements, additional testing will be made at the Contractor’s expense.

B. Coordinate required backfill and concrete tests with the OWNER’s testing agency including providing the testing agency a 24-hour notice prior to any required testing.

C. Correction of Work: Correct any areas of unsatisfactory compaction by removal and replacement, or by scarifying, aerating or sprinkling as needed and recompaction and retesting in place prior to placement of a new lift at no cost to OWNER.

END OF SECTION

SECTION 31 25 13

EROSION AND SEDIMENT CONTROLS

PART 1 GENERAL

1.1 SUMMARY

A. Section Includes: The requirements for providing slope protection and erosion and control practices for all areas within the contract limits and other areas indicated, including work designated in permits and other agreements, as shown, and as specified. Provide additional erosion and sediment control materials and methods required by state or local ordinances, whichever is more stringent.

B. Related Work Specified in Other Sections Includes, but is Not Limited to, the Following:

1. Section 31 10 00 - Site Clearing
2. Section 31 23 16 - Excavation
3. Section 31 23 23 - Backfilling
4. Section 32 90 00 - Landscaping Work
5. Section 33 05 23 - Jacking, Augering and Mining

1.2 REFERENCES

A. Codes and standards referred to in this Section are:

1. ASTM D4355 – Standard Test Method for Deterioration of Geotextiles by Exposure to Light, Moisture and Heat in a Xenon Arc Type Apparatus

2. ASTM D4491 – Standard Test Methods for Water Permeability of Geotextiles by Permittivity

3. ASTM D4632 – Standard Test Method for Grab Breaking Load and Elongation of Geotextiles

4. ASTM D4751 – Standard Test Method for Determining Apparent Opening Size of a Geotextile

5. ASTM D4833 – Standard Test Method for Index Puncture Resistance of Geomembranes and Related Products

6. State of Wisconsin Department of Natural Resources – Conservation Practice Standards (WDNR - CPS):

a. Non-Channel Erosion Mat: WDNR – CPS 1052

b. Channel Erosion Mat: WDNR – CPS 1053

c. Sediment Bale Barrier (Non-Channel): WDNR – CPS 1055

d. Silt Fence: WDNR – CPS 1056

e. Trackout Control Practices: WDNR – CPS 1057

f. Mulching for Construction Sites: WDNR – CPS 1058

g. Seeding for Construction Site Erosion Control: WDNR – CPS 1059

h. Storm Drain Inlet Protection for Construction Sites: WDNR – CPS 1060

i. Ditch Check (Channel): WDNR – CPS 1062

j. Sediment Trap: WDNR – CPS 1063

k. Sediment Basin: WDNR – CPS 1064

l. Construction Site Diversion: WDNR – CPS 1066

m. Temporary Grading Practices for Erosion Control (Surface Roughening and Temporary Ditch Sumps): WDNR – CPS 1067.

n. Dust Control on Construction Sites: WDNR – CPS 1068

7. State of Wisconsin Department of Transportation (WisDOT):

a. State of Wisconsin Department of Transportation (WisDOT), Standard Specifications for Highway and Structure Construction, including the supplemental specifications and recurring special provisions, referred to as the "State Specifications"

b. Erosion Control Product Acceptability Lists for Multi–Modal Applications (PAL), referred to as the "WisDOT PAL"

8. Federal, State and local laws and regulations applying to the design and construction of slope protection and erosion and sediment control.

9. U.S. Environmental Protection Agency (USEPA):

a. Developing Your Stormwater Pollution Prevention Plan: A Guide for Construction Sites.
http://www.epa.gov/npdes/pubs/sw_swppp_guide.pdf

1.3 SUBMITTALS

A. General: Provide all submittals, including the following, as specified in Division 1.

1. Shop Drawings:

a. Erosion and Sediment Control Plan: An Erosion and Sediment Control Plan conforming to the requirements of the Federal, State and local authority having jurisdiction indicating proposed methods, materials, and schedule for effecting erosion and siltation control to prevent erosion damage to site and adjacent areas.

b. Inlet protection fiber material.

2. Quality Control:

a. For Non-Channel and Channel Erosion Matting, provide documentation of materials used, monitoring logs, project diary, and weekly inspection forms including erosion and stormwater management plans.

B. Submit copies of all required permits to the RESIDENT PROJECT REPRESENTATIVE before performing any work.

1.4 REGULATORY REQUIREMENTS

A. Comply with Federal, State and local laws and regulations governing slope protection and erosion and siltation on construction sites.

B. Permit

1. Apply for, pay fee, and obtain State stormwater discharge permits.

2. Prepare construction site erosion control plan, Consolidated Permit form, and submit form and current fee to Wisconsin Department of Natural Resources at least 14 working days prior to commencing land disturbing construction activities.

3. At completion of construction activity, file a Notice of Termination.

PART 2 PRODUCTS

2.1 MATERIALS

A. Non-Channel and Channel Erosion Matting: Provide Non-Channel and Channel Erosion Matting meeting the requirements of WDNR CPS 1052 and 1053.

1. Provide erosion mat products identified on the WisDOT PAL.

    a. Select the appropriate erosion mat based on site specific slope and slope length conditions in accordance with the WisDOT Facilities Development Manual (FDM Section 10-5) Slope Erosion Control Matrix and Channel Erosion Control Matrix.

2. Provide mats with specific qualities for environmentally sensitive areas:

    a. Select mats composed exclusively of organic materials for work in or near waterways or other sensitive areas.

    b. Select mats that contain biodegradable thread with the “leno” or “gauze” weave that contains strands that can move independently for work in or near areas where endangered species or endangered habitats are known to be present.

B. Sediment Bale Barrier (Non-Channel): Provide Sediment Bale Barriers (Non-Channel) meeting the requirements of WDNR – CPS 1055.

1. Erosion Bales: Tightly compacted bales of grain straw, hay, or other suitable material with approximate dimensions of 14 inches high, 18 inches deep, and 36 inches long, secured by a minimum of two strings.

C. Silt Fence: Provide Silt Fences meeting the requirements of WDNR – CPS 1056.

1. Provide temporary silt fencing designed to intercept and slow the flow of sediment-laden sheet flow runoff from areas of disturbed soil.

D. Stone Tracking Pad, Manufactured Trackout Control Devices, and Tire Washing: Provide Stone Tracking Pads, Manufactured Trackout Devices, and Tire Wash Racks meeting the requirements of WDNR – CPS 1057.

E. Soil Stabilizers: Provide Soil Stabilization meeting the requirements of the WisDOT PAL.

F. Mulching for Construction Sites: Provide Mulching for Construction Sites meeting the requirements of WDNR – CPS 1058.

G. Seeding for Construction Site Erosion Control: Provide Seeding for Construction Site Erosion Control meeting the requirements of WDNR – CPS 1059.

1. Seed Selection:

    a. Select seed meeting the requirements of WDNR - CPS 1059.

2. Seed Rates:

a. Temporary Seeding (Cover Crop):

(1) Provide seed rates for temporary seeding meeting the requirements of WDNR - CPS 1059.

b. Permanent Seeding:

(1) Refer to Section 32 90 00 for permanent seeding.

H. Storm Drain Inlet Protection for Construction Sites: Provide Storm Drain Inlet Protection for Construction Sites meeting the requirements of WDNR – CPS 1060.

1. Materials:

a. Fabric Material: Provide Type FF, woven polypropylene as specified in the WisDOT PAL.

2. Provide inlet protection systems as follows:

a. Type A around field inlets until permanent stabilization methods have been established. Use Type A inlet protection on pavement inlets prior to installation of curb and gutter or pavement.

b. Type B on street inlets without curb head, once surrounding surfaces are in place.

c. Type C on street inlets with curb heads. Provide a 2 inch x 4 inch minimum, piece of wood and wrap and attach fabric to wood. Place wood blocking and fabric over inlet with wood straddling inlet opening a minimum of 8 inches in each direction. Secure 2 x 4 inch board to grate with wire or plastic ties. Verify and secure wood blocking to rest on inlet grate and that fabric covers remaining curb head opening. Do not block entire inlet curb opening with wood blocking.

d. Type D in areas where other types of inlet protection are identified as incompatible with roadway and traffic conditions causing possible safety hazards when water ponding occurs at the inlet. Provide inlet protection as shown.

3. Use manufactured bags, such as sand bags used as inlet protection devices conforming to the following minimum criteria:

a. Minimum Size: 14 x 26 inches.

b. Grab Tensile Strength of Fabric: 95 pounds minimum in accordance with ASTM D4632.

c. UV Stability: 70 percent minimum in accordance with ASTM D4355.

d. Sew fabric together with double stitching to provide sufficient strength where necessary.

I. Ditch Check - Channel: Provide Ditch Checks in Channels meeting the requirements of WDNR – CPS 1062.

1. Provide temporary swale or ditch dam to reduce velocity of flowing water at locations shown.

2. Stone Ditch Checks:

a. Provide additional stability, recess rock into soil to a depth of 6 inches. Place geotextile fabric in recess and set rock into place.

b. Constructed of well-graded angular rock, a mass medium diameter, or D50, of 3 inch or greater, sometimes referred to as breaker run or shot rock.

3. Sediment Logs:

a. Provide sediment logs fabricated from compacted geotextiles, wood excelsior, coconut fibers, hardwood mulch or a mixture of these materials within flexible tubular netting and accessories related to sediment log fabrication.

b. Manufacturers: Manufacturers of equivalent products may be submitted.

(1) American Excelsior Company.

(2) Tensar International – North American Green.

(3) Ro Lanka International.

(4) Western Excelsior Corporation.

(5) Approved Equal.

4. Sediment Wattles:

a. Provide sediment wattles fabricated from seed-free straw or coconut husk fiber encased in flexible tubular netting with required accessories.

b. Manufacturers: Manufacturers of equivalent products may be submitted.

(1) American Excelsior Company.

(2) Tensar International – North American Green.

(3) Ro Lanka International.

5. Provide non-woven geotextile fabric under ditch check materials for easy installation and removal.

J. Sediment Basin (Temporary): Provide Temporary Sediment Basins meeting the requirements of WDNR – CPS 1064.

1. Provide a temporary sediment basin in areas of concentrated flow or points of discharge during construction.

2. Determine the sediment pond size based upon anticipated runoff amounts and sediment type.

3. Size surface treatment area of the sediment basin based on the texture of the soil entering the basin and the peak outflow during the 1-year, 24-hour design storm.

4. Construct the sediment basin so that the depth below the treatment surface area as measured from the invert of the lowest outlet of the sediment basin to be a minimum of 5 feet deep, (2 feet for sediment storage plus 3 feet to protect against scour/resuspension and a maximum of 10 feet deep to limit the potential for thermal stratification.

5. Construct the interior side slopes below the lowest invert to be 2:1 (horizontal: vertical) or flatter to maintain soil stability.

6. Determine the active storage volume above the treatment surface area.

7. Design the earthen embankments to address potential risk and structural integrity issues such as seepage and saturation.

K. Sediment Trap: Provide Sediment Traps meeting the requirements of WDNR – CPS 1063.

L. Construction Site Diversion: Provide Construction Site Diversions meeting the requirements of WDNR – CPS 1066.

1. Provide temporary berms and channels as shown and specified.

M. Temporary Grading Practices for Erosion Control: Provide Temporary Grading Practices for Erosion Control meeting the requirements of WDNR – CPS 1067.

N. Dust Control on Construction Sites: Provide Dust Control on Construction Sites meeting requirements of WDNR – CPS 1068.

O. Cofferdam:

1. Provide cofferdams as a temporary work measure when work is conducted in a waterway (stream, river, or other linear feature that conveys water). Intercept water upstream and discharge it downstream or divert it around the job site. Provide the appropriate cofferdam for the temporary stream diversion as follows:

a. Bladderdam: In conditions where there is a relatively flat base material.

b. A-frame: In conditions where there is a relatively flat base material.

c. Stone and Impermeable Barriers: In intermittent streams of lower flow velocity and in the presence of uneven, stone, or bedrock base material. The impermeable barrier should consist of one of the following materials:

(1) Rubber liner with a thickness of at least 45 millimeters and a solvent weld to affix the material into larger sections.

(2) Polypropylene liner with a thickness of at least 40 millimeters and a heat gun to weld pieces together.

(3) Polyvinyl chloride (PVC) liner with a thickness of at least 40 millimeters and a solvent weld to affix material into larger sections.

d. Steel Sheet: Do not use in areas where underground utility service lines may be present.

2. Provide cofferdams of nonerodible materials such as stone, metal, geosynthetics, or other products as approved by the RESIDENT PROJECT REPRESENTATIVE, free of potential pollutants such as soil, silt, sand, clay, grease, or oil. Provide materials that are nontoxic and non-hazardous.

Provide material used to minimize seepage underneath diversion structures as close to neutral pH (7) as possible.

3. Any alternative cofferdam must be approved by the RESIDENT PROJECT REPRESENTATIVE.

PART 3 EXECUTION

3.1 EROSION AND SEDIMENT CONTROL PLAN

A. General: Prepare an Erosion and Sediment Control Plan to include erosion control practices conforming to the requirements of the Federal, State and local authority having jurisdiction. Include the following in the plan:

1. Total square area disturbed by excavation.

2. Proposed method and quantity of erosion control practices to be provided. For instance, feet of vegetative control, feet of interceptor ditches, feet of berms, cubic feet of silt traps. Include an erosion plan scale of 1 inch equals 40 feet, indicating location of erosion control materials, siltation basins, etc.

3. Approximate square feet of area controlled by the erosion control practices as specified in the Erosion and Sediment Control Plan, and the type of erosion control practices, whether permanent or temporary.

4. Topographical or plan maps of construction area with areas marked to indicate erosion control practices used.

5. Drainage area, including construction site.

6. Area of construction site in acres that fall in the following slope categories:

   a. 0-2 percent slope

   b. 3-4 percent slope

   c. 4-6 percent slope

   d. 6 percent and storm slope

7. A summary of the disposition of the collected sediment from the slope areas listed in Item 6.

8. Schedule for implementation of plan.

9. Provision for maintenance and upkeep of erosion control and siltation materials, identifying persons responsible for said maintenance.

B. Availability: Keep the Erosion and Sediment Control Plan at the construction site at all times available for inspection for the entire construction period.

C. Ordinances: Comply with all erosion and siltation control ordinances in effect and required by governing bodies having jurisdiction over the construction site and provide appropriate control measures as required.

3.2 GENERAL

A. Provide necessary precautions and facilities to protect indicated areas within the Contract limits from discharges resulting from construction operations, excessive erosion runoff of the construction site, silting and any other contamination resulting from construction work. Provide erosion control practices conforming to the specified requirements and to include but not limited to the following provisions:

1. Place erosion and siltation control measures prior to or as the first step in grading.

2. Keep disturbed area small.

3. Stabilize disturbed areas with mechanical or structural and vegetative methods.

4. Keep runoff low through use of short slopes, low gradients, and the preservation of natural vegetative cover.

5. Protect disturbed areas from stormwater runoff.

6. Retain sediment within site boundaries.

7. Restore surfaces at trenches not in streets within 15 days after backfill.

8. Place excavated material on the uphill side of trenches where possible. Do not place materials in stream beds. Seed any stockpiled material which remains in place longer than thirty days with temporary vegetation and mulch.

9. Mulch and seed temporary earth berms, diversions, erosion barriers and temporary stockpiles with temporary vegetative cover within 10 days after grading.

10. Do not stockpile or otherwise place dredged, excavated or other material, at any time, in or near a stream bed which may increase the turbidity of the

water. If turbidity producing materials are present, hold surface drainage from cuts and fills within the construction limits and from borrow and waste disposal areas in suitable sedimentation ponds or grade surface drainage to control erosion within acceptable limits. Provide and maintain temporary erosion and sediment control measures such as berms, dikes, drains, or sedimentation basins, if required to meet the above standards, until permanent drainage and erosion control facilities are completed and operative. Hold to a minimum the area of bare soil exposed at any one time by construction operations.

11. Drain wet dredged material for a minimum of 7 days. Store the material for drainage to a maximum height of 4 feet.

12. Provide temporary erosion and sediment control measures to include but not be limited to the following:

    a. Installation (and ultimate removal) of silt screens.

    b. Straw bales and silt traps around construction areas for all required structures.

    c. Diked area with earth berm and silt trap for draining dredged material.

    d. Straw bales with silt traps along top of slope of fill area plus seeding and mulching of entire fill area not otherwise protected.

3.3 INSTALLATION

A. Non-Channel and Channel Erosion Matting: Provide Non-Channel and Channel Erosion Matting meeting the requirements of WDNR CPS 1052 and 1053.

B. Sediment Bale Barrier (Non-Channel): Provide Sediment Bale Barriers (Non-Channel) meeting the requirements of WDNR – CPS 1055.

1. Sediment Bale Barrier; (Hay or Straw)

    a. Place bales end to end across ditches or other location as shown.

    b. Place bales at right angles to direction of water flow with bandings oriented around sides.

    c. Tightly abut ends of bales and fill gaps between bales with bale material wedged in.

    d. Embed straw bales a minimum 4 inches into ground.

e. Securely anchor bales with at least two wood or steel stakes driven a minimum 12 inches into ground.

f. Place bales such that one full bale length on either side of drainage way is above anticipated flow line.

g. Where heavy flows are anticipated, supplement bales with a filter fabric fence installed on downstream side of bales.

C. Silt Fence: Provide Silt Fences meeting the requirements of WDNR – CPS 1056.

D. Trackout Control Practices: Prevent, reduce, or mitigate trackout of sediment in accordance with WDNR – CPS 1057.

1. Install one of the following practices, or a combination of practices, in accordance with WDNR – CPS 1057. Trackout is best managed by implementing controls in the order below. These controls may be implemented in series where conditions warrant.

a. Prevent trackout with stabilized work surfaces and reduced vehicle contact with soil

b. Reduce trackout with stone tracking pad, manufactured trackout control devices, or tire washing

c. Mitigate trackout with street cleaning

E. Soil Stabilizers: Provide Soil Stabilizers meeting the requirements of the WisDOT PAL.

F. Mulching for Construction Sites: Provide Mulching for Construction Sites meeting the requirements of WDNR – CPS 1058.

G. Seeding for Construction Site Erosion Control: Provide the Seeding for Construction Site Erosion Control meeting the requirements of WDNR – CPS 1059.

1. Perform site assessment to evaluate soil characteristics, topography, exposure to sunlight, proximity to natural plant communities, proximity to nuisance, noxious and invasive species, site history, moisture regime, climatic patterns, soil fertility, and previous herbicide applications prior to commencing any seeding operations. Establish seeding schedule including adjustment to existing soils in regards to preparation, fertility and seeding operations.

2. Use newly introduced seed species only in places where they will not spread into existing natural areas.

3. Seed grasses and legumes no more than 1/4 inch deep. Distribute seed uniformly.

4. Mixture with low seeding rates requires special care in sowing to achieve proper seed distribution.

5. Seed may be broadcast, drilled, or hydroseeded depending on site conditions.

6. Seed in two equal passes in opposite directions to provide adequate coverage.

7. Use chisel plowing or other approved method as required for soils that are compacted to loosen compacted soil in preparation for seeding.

8. After seeding operations, lightly roll and compact the seeded area. Water and fertilize.

9. Do not over water seeded areas to prevent runoff, erosion and loss of seed.

10. Seed when soil temperatures remain consistently above 53 degrees F.

11. Dormant seed when the soil temperatures consistently below 53 degrees F, typically November 1st until snow cover.

12. Do not mow turf seedlings until the stand is at least 6 inches tall. Leave cut turf at a minimum of 3 inches tall after mowing during the first year of turf establishment.

H. Storm Drain Inlet Protection for Construction Sites: Provide Storm Drain Inlet Protection meeting the requirements of WDNR – CPS 1060.

1. Inlet protection devices are for drainage areas of one acre or less. Route runoff from areas larger than one acre through a designed sediment trapping or settling practice upstream of the inlet.

2. For inlet protection devices, ponding water to settle sediment is permitted, however, do not allow ponding to interfere with the flow of traffic, create a safety hazard, or cause property damage.

3. Provide inlet protection devices with provisions such as weep holes or emergency spillways to safely pass water if inlet protection device becomes clogged.

4. Other than the Type D inlet protection device, do not allow gaps to be left in the material used that would allow the flow of water to bypass the inlet protection device.

5. Install manufactured bags used for inlet protection along a level contour. Turn ends of sandbag row up slope to prevent flow around ends.

6. Stack sandbags to required height. Overlap upper rows of sandbags joints in lower rows.

7. Construct sandbag barriers with a setback of at least 3 feet from toe of slope. Where it is determined to be not practicable due to specific site conditions, sandbag barrier may be constructed at toe of slope, but construct as far from toe of slope as practicable.

I. Ditch Check - Channel: Provide Ditch Checks in Channels meeting the requirements of WDNR – CPS 1062.

1. Install ditch checks so that the minimum height is 10 inches and does not exceed a maximum height of 16 inches for manufactured or biodegradable materials and 36 inches for stone.

2. Install ditch checks with the center lower than the sides forming a weir.

3. Install stone ditch checks to have a minimum top width of 2 feet measured in the direction of flow with maximum slopes of 2:1 (horizontal:vertical) on the upslope side and 2:1 on the down slope side.

4. Install at a minimum, one ditch check for every two feet of drop in the channel.

5. Place ditch checks such that the resultant ponding will not cause inconvenience or damage to adjacent areas.

6. Remove sediment deposits when deposits reach one-half of the height of the ditch check. Replace underlain fabric and stone removed during sediment removal.

7. Establish ditch checks upon commencing rough grading operations and remove ditch checks upon completion of final grading and channel stabilization is established.

8. Install sediment logs and wattles as directed by manufacturer's written instructions.

J. Sediment Basin (Temporary): Provide Temporary Sediment Basins meeting the requirements of WDNR – CPS 1064.

1. Install earthen embankments of sediment basins meeting the following criteria:

    a. Strip the base of the embankment of vegetation, stumps, topsoil and other organic matter.

    b. Construct side slopes to be 3:1 or flatter. Construct the minimum embankment top width to be adequate to provide structural stability. Where applicable, construct the top width to be wide enough to provide maintenance access.

    c. Install a core trench or keyway along the embankment.

    d. Bed and backfill any pipes extending through the embankment with equivalent soils used to construct the embankment.

    e. Compact bedding and backfill in lifts and to the same standard as the embankment.

    f. Excavate a completed embankment to have a minimum side slope of 1:1 or flatter.

2. Install sediment basin to have both a principal outlet and an overflow spillway.

3. Construct outlets in conjunction with the remainder of the basin and prior to the basin receiving runoff.

4. Design principal water quality outlet to pass the 1-year, 24-hour storm without use of the emergency overflow spillway or other basin outlets.

5. Construct emergency overflow spillway to consist of an open channel constructed adjacent to the embankment and built over a stabilized area.

6. Design emergency overflow spillway to carry the peak rate of runoff expected from a 10-year, 24-hour design storm.

7. Incorporate preventive measures for ice damage, trash accumulation and erosion at the outfall of outlets.

8. Install protective measures to prevent clogging on outlet sizes 8 inches in diameter and smaller.

K. Sediment Trap: Provide Sediment Traps meeting the requirements of WDNR – CPS 1063.

L. Construction Site Diversion: Provide Construction Site Diversions meeting the requirements of WDNR – CPS 1066.

1. Upon completion of construction activities, fill, grade and compact temporary berms and channels to designed elevations.

M. Temporary Grading Practices for Erosion Control: Provide Temporary Grading Practices meeting the requirements of WDNR – CPS 1067.

N. Dust Control on Construction Sites: Provide Dust Control on Construction Sites meeting requirements of WDNR – CPS 1068.

O. Cofferdam:

1. Install appropriate soil and erosion and sediment control measures prior to the commencement of instream activities.

2. Provide for emergency overflow at the center of the cofferdam to prevent erosion along the banks. Include an energy dissipating surface on the overflow system.

3. Size the diversion or bypass flow to safely convey the 2-year peak flow, at a minimum. Design the cofferdam to overtop for any events greater than the 2-year peak elevation, unless higher peak flows are being bypassed.

a. If waterway information is not available, the ordinary high water mark can be used as an indicator.

4. Construct cofferdams in accordance with manufacturer specifications, where applicable.

3.4 MAINTENANCE

A. Inspect erosion control devices within 24 hours after each rainfall or daily during periods of prolonged rainfall.

B. Repair or replace damaged or defective materials or installations immediately.

C. Install more staples or more frequent anchoring trenches if there are signs of rilling under the mat. Remove the section of mat where the damage has occurred if rilling becomes severe enough to prevent establishment of vegetation. Fill the eroded area with topsoil, compact, reseed and replace the section of mat, trenching and overlapping ends per manufacturer’s recommendations.

D. Remove sediment deposits within 24 hours after each storm event or when deposits reach one-half height of fence or barrier, whichever occurs first.

E. Apply replacement bales or additional mulch, netting, or matting immediately to maintain suitable cover.

F. Where vegetative cover has been placed, inspect until vegetative cover is established and functioning as intended.

3.5 REMOVAL OF EROSION CONTROL DEVICES

A. Maintain erosion control measures until disturbed earth has been paved or vegetated.

B. Remove erosion control devices prior to final completion.

C. Restore or replace areas disturbed or damaged by removal of erosion control devices to satisfaction of the RESIDENT PROJECT REPRESENTATIVE.

END OF SECTION

(NO TEXT FOR THIS PAGE)

SECTION 31 32 10

TREE PROTECTION AND ROOT PRUNING (OUTFALL FACILITIES)

PART 1 GENERAL

1.1 SUMMARY

A. This item shall consist of furnishing all labor, materials, tools and equipment required to protect those trees designated to remain on the site. Protection of designated trees shall include directing heavy construction work activity away from the protected trees. Section includes the protection, trimming, and pruning of trees that interfere with, or are affected by, execution of the Work, whether demolition and temporary or new construction.

B. Related Sections:

1. Section 31 10 00 - Site Clearing, for removal of trees and other vegetation affected by new construction.

2. Sections 31 23 23 - Backfilling and for utility trench excavation, backfilling, compacting and grading requirements, and soil materials.

3. Section 32 92 00 - Restoration Wildflower and Grasses

4. Section 32 93 01 - Exterior Plants.

5. Section 32 91 13 - Soil Preparation.

1.2 SUBMITTALS

A. Product Data: For each type of product indicated.

B. Tree Pruning Schedule: Written schedule from certified arborist detailing scope and extent of pruning of trees to remain that interfere with or are affected by construction.

C. Qualification Data: For tree service firm and arborist, ISA certification required.

D. Certification: From arborist, certifying that trees indicated to remain have been protected during construction according to recognized standards and that trees were promptly and properly pruned and repaired when damaged.

E. Maintenance Recommendations: From certified arborist, for care and protection of trees affected by construction during and after completion of the Work.

F. Provide final log of work performed including any damage that occurred during construction and subsequent repairs or equal replacements, if deemed necessary.

1.3 QUALITY ASSURANCE

A. Tree Service Qualifications: An experienced tree service firm that has successfully completed tree protection and trimming work similar to that required for this Project and that will assign an experienced, qualified arborist to Project site on a full-time basis during execution of the Work.

B. Arborist Qualifications: An arborist certified by the International Society of Arboriculture.

C. Tree Pruning Standards: Comply with ANSI A300 (Part 1), "Trees, Shrubs, and other Woody Plant Maintenance—Standard Practices (Pruning)."

D. Pre-installation Conference: Before starting tree protection and trimming, meet with representatives of authorities having jurisdiction, Owner, Architect, consultants, and other concerned entities to review tree protection and trimming procedures and responsibilities.

PART 2 PRODUCTS

2.1 MATERIALS

A. Materials for tree/vegetation protection barriers shall conform to the following requirements and AOBE:

1. Mesh Construction Fencing by Conwed or Approved Equal (orange or green color).

2. Cedar Posts (minimum length 6.0 feet).

3. No. 14 gauge steel wire.

B. Temporary Signs: White or yellow weatherproof material, 8-inch by 40-inch minimum, with 3-inch black letter: text – "Tree Protection Area – Do Not Enter".

PART 3 EXECUTION

3.1 PREPARATION

A. Temporary Fencing: Install temporary fencing around the tree protection zones designated on the Drawings or where directed by the Engineer to protect remaining vegetation from construction damage. Maintain temporary fence and remove when construction is complete.

B. Temporary Signs: Install temporary signs 60 feet apart, or two per protected tree, whichever is greater, on posts of temporary fencing. Maintain temporary signs and remove when construction is complete.

C. Tree Trunk Protection: The Contractor shall provide 2 inches by 8 inches by 8-foot boards, banded continuously around each trunk to prevent scarring of trees shown on the plans or designated by the Certified Arborist. For multi-stem trees, saplings, and shrubs to be protected within the area of construction, temporary fencing may be used for trunk protection.

   1. The Contractor shall repair or replace any and all damaged plant material determined by the Certified Arborist to any existing or newly installed plant material at its own expense. Unnecessary damage to ground cover or turf shall be repaired or replaced as specified for restoration of similar areas within the plans, or as directed by the Certified Arborist, and shall be at the Contractor's expense.

D. Root Zone Protection: During the entire construction period all reasonable efforts shall be made to protect from damage those trees and their root system designated to remain. Around the trees to be protected, the Contractor shall avoid excessive excavation or compaction and damage during the removal of trees and shrubs designated to be removed. All plant material designated to be saved, or outside of the limits of construction, shall be protected during subsequent construction work. Work under these items will include construction and maintenance of temporary fencing to protect the root zones of existing trees and other plantings, construction and maintenance of tree trunk protection.

   1. A protection barrier or temporary fence of at least 4 feet in height shall be installed around each tree to be protected and preserved. The tree protection shall be installed prior to the actual construction start and maintained for the duration of the project.

   2. Within this protection zone, construction materials shall not be stored, equipment operated, and/or temporary storage buildings or work trailers placed.

   3. The protection barrier shall be constructed of orange snow fencing securely fastened to fence posts spaced a maximum of 5 feet on center. Posts are 6 feet in length with 2 feet set into the ground and 4 feet extending above ground. The fencing shall be attached to the post with a minimum of 44 nylon-locking ties evenly placed at each post.

E. Placement of all protection fencing shall be located per the Drawings. If protection fencing cannot be placed per Drawings, the Landscape Architect shall be notified in writing, and a solution must be executed prior to any demolition or other construction work commences.

F. Left over materials shall be disposed of in accordance with specifications.

G. Protect tree root systems from damage caused by runoff or spillage of noxious materials while mixing, placing, or storing construction materials. Protect root systems from ponding, eroding, or excessive wetting caused by dewatering operations.

H. Do not store construction materials, debris, or excavated material inside tree protection zones. Do not permit vehicles or foot traffic within tree protection zones; prevent soil compaction over root systems.

I. Do not allow fires under or adjacent to remaining trees or other plants.

3.2 EXCAVATION

A. Install shoring or other protective support systems to minimize shoring or benching of excavations.

B. Do not excavate within tree protection zones, unless otherwise indicated.

C. Where excavation for new construction is required within drip line of trees, hand clear and excavate to minimize damage to root systems. Use narrow-tine spading forks and comb soil to expose roots.

1. Relocate roots in backfill areas where possible. If encountering large, main lateral roots, expose roots beyond excavation limits as required to bend and relocate them without breaking. If encountered immediately adjacent to location of new construction and relocation is not practical; cut roots approximately 3 inches back from new construction.

2. Do not allow exposed roots to dry out before placing permanent backfill. Provide temporary earth cover or pack with peat moss and wrap with burlap. Water and maintain in a moist condition. Temporarily support and protect

3. Do not allow heavy equipment in tree protection areas. All excavation work is to be performed by hand.

D. Root Pruning: Do not cut main lateral roots; cut only smaller roots that interfere with installation of utilities or construction. Cut roots with sharp pruning instruments; do not break or chop.

E. When excavating, place excavated soil on opposite side of trench from tree.

3.3 ROOT PRUNING

A. Root pruning shall take place only where the roots of existing trees have been damaged by the Contractor during construction of the Project, as directed by the Certified Arborist.

B. If construction is to occur within the root zone of existing plant material, root pruning and special plant care including fertilizing and watering will be required, as directed by the Certified Arborist and hereinafter specified. Prior to root pruning, remove all weeds growing in existing tree mulch rings. Root pruning using an approved mechanical root pruning saw shall be performed prior to digging where noted on the plans, or directed by the Certified Arborist. Air Spading excavation consisting of hand and/or pneumatic excavation may be required if indicated on plans or as directed by Certified Arborist. Whenever roots of plant material to remain are exposed during construction, the damaged root ends are to be removed by cutting them off cleanly.

C. Initial watering shall be performed on all trees, which are designated for root pruning. Water trees immediately by thoroughly saturating root balls and provide a horticultural watering bag, such as a Gator Bag or equivalent, filled with water to keep root balls thoroughly saturated during first three weeks following root pruning. Thereafter refill bags as required, according to weather conditions, to keep root balls in a moist condition during growing seasons, through the duration of the Project. Test root balls for optimal moisture once a week using a soil auger.

D. Contractor shall be responsible for location of all utilities prior to installation of trees. Notification of the local Utilities Alert Network is required for all planting sites.

E. All pruning shall be overseen by a professional arborist (someone whose principal occupation is the care and maintenance of trees). All pruning shall be done according to the National Arborist Association's Pruning Standards for Shade Trees Class 11 - Standard Pruning Specifications.

F. Any damage to the root zone, as determined by the Certified Arborist, will be compensated by pruning an equivalent amount of the top vegetative growth of the material within 1 week following root damage, fertilization and supplemental watering.

G. Fertilize damaged trees with fertilizer that promotes root growth. Fertilizer nutrients shall be applied within 48 hours after root damage occurs. Fertilizer nutrients shall be applied within 48 hours after root damage occurs. A fertilizer with a 1: 1: 1 ratio shall be applied at the rate of .5 pounds of nutrients per 1,000 square feet (2 kg per 90 square meters).

H. Application shall be accomplished by placing dry fertilizer in holes in the soil. The holes shall be 8 inches to 12 inches deep and spaced 24 inches apart in an area beginning 30 inches from the base of the plant. Holes can be punched with a punch bar, dug with a spade, drilled with an auger or any other method approved by the Certified Arborist.

I. Approximately 0.02 pounds of fertilizer nutrients shall be placed in each hole, 250 holes per 1,000 square feet. Fertilizer Nutrients shall not be measured for payment but considered incidental to root pruning. If the Certified Arborist determines that the whole method of fertilizer placement is not practical or desirable, an approved method of uniform surface application will be allowed. Neither separate measurement nor payment will be made for fertilization, but will be considered incidental to the cost of Tree Protection.

J. Supplemental water shall be applied within 48 hours of any root damage. The water shall be applied at the rate of 7 quarts per square yard of surface area within the root zone of plant material having sustained damage to the root zone. Root zone shall be calculated as the areas, which extend three meters beyond the limits of the crown's branches. Subsequent weekly watering shall be applied if deemed necessary by the Certified Arborist. Neither separate measurement nor payment will be made for supplemental watering but will be considered incidental to the cost of Tree Protection.

K. The Contractor shall repair or replace any and all damage determined by the Certified Arborist to any existing or newly installed plant material at its own expense. Unnecessary damage to ground cover or turf shall be repaired or replaced as specified for restoration of similar areas within the plans, or as directed by the Certified Arborist, and shall be at the Contractor's expense.

L. Materials shall be disposed of in accordance with Specifications.

3.4 REGRADING

A. Do not fill within tree protection zones, unless otherwise indicated.

B. Where filling for new construction is required within drip line of trees, perform work by hand to minimize damage to root systems.

1. Where existing grade is below elevation of finish grade, fill with topsoil. Place topsoil by hand in a single uncompacted layer and hand grade to required finish elevations.

3.5 TREE PRUNING

A. Prune trees to remain that are affected by temporary and permanent construction.

B. Pruning Standards: Prune trees according to ANSI A300 (Part 1).

C. Cut branches with sharp pruning instruments; do not break or chop.

1. Clean all pruning instruments with antimicrobial solution between performing work on separate trees to avoid the potential spread of pathogens.

D. Chip removed tree branches and uses as organic mulch or dispose of offsite.

3.6 TREE REPAIR AND REPLACEMENT

A. Promptly repair trees damaged by construction operations within 24 hours. Treat damaged trunks, limbs, and roots according to arborist’s written instructions.

B. Remove and replace dead and damaged trees that arborist determines to be incapable of restoring to a normal growth pattern.

1. Provide new trees of a 6-inch caliber size and of a species selected by Landscape Architect when damaged trees more than 6-inch caliber size, measured at breast height, are required to be replaced.

a. Planting New Trees: Comply with Details in Drawings.

b. Warranty and Maintenance Period: One year.

C. Aerate surface soil, compacted during construction, 10 feet (3 m) beyond drip line. Drill 2-inch diameter holes a minimum of 12 inches (300 mm) deep at 24 inches o.c. Backfill holes with an equal mix of augered soil and sand.

3.7 DISPOSAL OF WASTE MATERIALS

A. Burning is not permitted.

B. Disposal: Remove excess excavated material, displaced trees, and excess chips from Owner's property. Disposal shall be in a legal manner.

END OF SECTION

(NO TEXT FOR THIS PAGE)

SECTION 31 41 00

SHORING, SHEETING AND BRACING

PART 1 GENERAL

1.1 SUMMARY

A. Section Includes: Work required for protection of all excavations and structures including those that may employ shoring, sheeting, bracing, trench boxes, and other means of earth retention systems whether temporary or permanent.

B. Related Work Specified In Other Sections Includes, but is Not Limited to, the Following:

1. Section 31 23 16 - Excavation
2. Section 31 23 23 - Backfilling
3. Section 33 05 23 - Jacking, Augering and Mining

1.2 SUBMITTALS

A. General: Furnish submittals, including the following, as specified in Division 1.

B. Quality Control:

1. A certificate (only), signed and sealed by a Licensed Professional Engineer experienced in Structural Engineering and registered in the State of Wisconsin, that certifies that the Licensed Professional Engineer has evaluated and approved the CONTRACTOR's excavation plan and has prepared complete design calculations and working drawings for the shoring, sheeting and bracing, not specifically shown on the Drawings, which will be used for excavation support. Provide a separate certificate for each excavation before starting the excavation. Where commercially manufactured trench boxes are to be used, provide a certificate from the CONTRACTOR'S Licensed Wisconsin Professional Engineer stating the conditions under which the trench boxes will be used.

C. Comply with the "American Iron and Steel (AIS)" requirements as contained in Section 436 of the Consolidated Appropriations Act, 2014, further described in the Bid Form.

1.3 REFERENCES

A. Codes and standards referred to in this Section are:

1. Federal, State and local laws and regulations applying to the design and construction of shoring, sheeting and bracing.

2. National Bureau of Standards Building Science Series 127 "Recommended Technical Provisions for Construction Practice in Shoring and Sloping Trenches and Excavations."

PART 2 PRODUCTS

2.1 MANUFACTURERS AND MATERIALS

A. Use manufacturers and materials for shoring, sheeting and bracing as recommended by the CONTRACTOR's Licensed Wisconsin Professional Engineer who designed the shoring, sheeting, and bracing. Where wood lagging is to be left in place, use oak or treated fir or treated pine. Use only environmentally safe treatment for wood lagging.

PART 3 EXECUTION

3.1 SHORING, SHEETING AND BRACING INSTALLATION

A. General: Provide safe working conditions, prevent shifting of material, prevent damage to structures or other Work, and avoid delay to the Work, in accordance with applicable laws and regulations. Properly shore, sheet, and brace excavations that are not cut back to the proper slope, as determined by the CONTRACTOR's Licensed Professional Engineer.

1. Take sole responsibility for the design and adequacy of shoring, sheeting and bracing not shown on the Drawings.

2. Take sole responsibility for the methods of installation of the shoring, sheeting and bracing.

3. Provide trench excavation support systems such that the live load surcharge from railroad track(s), road(s), structures, utilities, or other items adjacent to the excavation system is accounted for in accordance with the requirements of the local authority having jurisdiction. The local authorities having jurisdiction include, but is not limited to, the following:

   a. City of Franklin
   b. City of Muskego
   c. City of New Berlin
   d. Milwaukee County
   e. Waukesha County
   f. Wisconsin Department of Transportation

B. Arrange shoring, sheeting and bracing so as not to place any strain on portions of completed Work until the general construction has proceeded far enough to provide ample strength.

C. If the CONTRACTOR or its Licensed Professional Engineer is of the opinion that at any time the CONTRACTOR's excavation plan, shoring, sheeting or bracing is inadequate or unsuited for the purpose, take immediate and appropriate action. Provide a new design certificate if the CONTRACTOR's excavation plans, shoring, sheeting or bracing require modifications.

D. Monitoring: Periodically monitor horizontal and vertical deflections of sheeting, shoring and bracing.

E. Accurately locate underground utilities and take the required measures necessary to protect them from damage. Keep underground utilities in service.

F. Remove shoring, sheeting and bracing as the excavation is refilled in a manner to avoid the caving in of the bank or disturbance to adjacent areas or structures or pipe bedding.

1. Carefully fill voids left by the withdrawal of the shore, sheeting and bracing. No separate payment will be made for the filling of such voids.

2. If pipe bedding is disturbed, re-compact it to meet specified density requirements.

G. Permission for Removal: Obtain permission from the CONTRACTOR's Licensed Professional Engineer before the removal of any shoring, sheeting or bracing. Retain the responsibility for injury to structures or to other property or persons for failure to leave such shoring, sheeting and bracing in place even though permission for removal has been obtained.

END OF SECTION

(NO TEXT FOR THIS PAGE)

SECTION 32 11 23

BASE COURSES

PART 1 GENERAL

1.1 SUMMARY

A. Section Includes: Requirements for material and installation of Aggregate Base Course and Granular Subbase Course for asphalt pavement, concrete pavement, concrete sidewalk, asphalt trails, or for the use as temporary roadways, in accordance with the State Specifications.

B. The Work includes, but is not limited to the following items, as shown and specified herein:

1. Subgrade preparation in accordance with Section 301 of the State Specifications.

2. Providing aggregate materials from offsite sources, including transportation to the site and handling and stockpiling of material.

3. Placement of aggregate base and granular subbase course constructed in lifts as specified by the State Specifications.

4. Compaction of granular materials in accordance with Sections 301 and 350 of the State Specifications.

5. Final finish and completion of aggregate base and granular subbase courses, smoothed and conformed to the alignment, grades, and cross sections shown.

6. Protection and repair of completed aggregate base and granular subbase courses as necessary or required.

C. Related Work specified in Other Sections Includes, But is Not Limited to, the Following:

1. Section 01 33 00 - Submittals

2. Section 01 73 29 - Cutting and Patching

3. Section 31 10 00 - Site Clearing

4. Section 31 23 16 - Excavation

5. Section 31 23 23 - Backfilling

6. Section 32 12 00 - Asphalt Paving

7. Section 32 13 00 - Concrete Paving

8. Section 32 16 13 - Concrete Curbs

9. Section 32 16 23 - Concrete Sidewalks

1.2 REFERENCES

A. Codes and standards referred to in this Section are:

1. ASTM (American Society of Testing and Materials)

a. C88 – Standard Test Method for Soundness of Aggregates by Use of Sodium Sulfate or Magnesium Sulfate

b. C127 – Standard Test Method for Relative Density (Specific Gravity) and Absorption of Course Aggregate

c. C131 – Standard Test Method for Resistance to Degradation of Small-Size Coarse Aggregate by Abrasion and Impact in the Los Angeles Machine

d. C136 – Standard Test Method for Sieve Analysis of Fine and Coarse Aggregates

e. C142 – Standard Test Method for Clay Lumps and Friable Particles in Aggregates

f. D1140 – Standard Test Methods for Amount of Material in Soils Finer than the No. 200 (75-um) Sieve

g. D1557 – Standard Test Methods for Laboratory Compaction Characteristics of Soil Using Modified Effort

h. D4318 – Standard Test Methods for Liquid Limit, Plastic Limit, and Plasticity Index of Soils

i. D6938 – Standard Test Methods for In-Place Density and Water Content of Soil and Soil-Aggregate by Nuclear Methods (Shallow Depth)

2. State of Wisconsin Department of Transportation (WisDOT), Standard Specifications for Highway and Structure Construction, including the supplemental specifications and recurring special provisions, referred to as the "State Specifications"

1.3 SUBMITTALS

A. General: Furnish submittals, including the following, as specified in Division 1.

B. Shop Drawings:

1. Submit the gradation data, unit weight, moisture-density and other important data as specified in Section 31 23 23 - Backfilling and in Section 301 of the State Specifications.

C. Samples:

1. Submit a 50-pound sample of each grade of material when requested by the RESIDENT PROJECT REPRESENTATIVE.

D. Quality Control: Submit the following not less than 15 days before material is to be delivered.

1. Material certificates signed by the material producer certifying that the following items comply or exceed specifications:

Property	ASTM Test	Data Required
Sieve Analysis for fine and course aggregates	C136	Percent passing selected sieves
Soundness of aggregates by use of sodium sulfate or magnesium sulfate	C88	Percent Loss
Atterberg limits	D4318	Plasticity Index and Liquid Limit
Resistance to degradation of large size coarse aggregate by abrasion and impact in the Los Angeles machine	C131	Percent Loss
Clay lumps and friable particles in aggregates	C142	Percent
Crushed faces	--	Percent with one crushed face
Specific gravity	C127	Specific gravity
Amount of soil finer than No. 200 sieve	D1140	Percent

PART 2 PRODUCTS

2.1 MATERIALS

A. General Aggregate Requirements: Adhere to Sections 301, 305, 310 and 350 of the State Specifications and to the following general and specific aggregate requirements:

1. Use crushed stone material for the base and subbase courses produced from oversized quarried aggregate, sized by crushing and produced from a naturally occurring single source.

2. Provide rocks that are clean, hard, sound, durable, uniform in quality, and free of any detrimental quantities of soft, friable, thin, elongated or laminated pieces, disintegrated material, organic matter, oil, alkali, or any other deleterious material.

3. Process and blend materials to meet the gradation requirements at the crushing plant or material source.

4. Percentages specified herein are determined by weight.

B. Dense Graded Base Course: Provide dense graded base courses in accordance with Section 305 of the State Specifications.

1. Provide dense graded base of 1 1/4-inch gradation crushed stone in the top 4 inches of base. A 3-inch crushed stone may be substituted for 1 1/4-inch in lower base zones including material underlying the shoulder in accordance with Section 305.2 of the State Specifications.

2. Provide 3/4-inch gradation crushed stone in shoulders. Use 3/4-inch to match the thickness of the paved shoulder in the unpaved portion of the shoulder and on exposed shoulder fore slopes. A 1 1/4-inch crushed stone may be substituted for 3/4-inch elsewhere in shoulders and shoulder fore slopes. If using 1 1/4-inch, limit the allowable reclaimed asphalt content to 50 percent or less in accordance with Section 305.2 of the State Specifications.

3. Provide dense graded base as the base course for concrete pavement concrete curb, concrete sidewalk and permanent asphalt pavement at the locations and of the thicknesses shown.

4. Provide the thickness of the dense graded base as shown.

5. Provide crushed stone, crushed gravel, or crushed concrete meeting the specified gradations. Reclaimed asphalt, reprocessed material, or blended material is not acceptable.

C. Open Graded Base Course: Provide open graded base courses in accordance with Section 310 of the State Specifications.

1. Provide open graded base of crushed stone with gradation in accordance with Section 310.2 of the State Specifications.

2. Provide open graded base as the base course for concrete pavement at the locations and of the thicknesses shown.

D. Geotextile Fabric Type SAS

1. Provide Geotextile Fabric Type SAS (Subgrade Aggregate Separation) in accordance with Section 645.2.2 of the State Specifications.

E. Granular Subbase Course

1. Provide subbase materials of a mixture of either sand sized particles or sand sized particles mixed with gravel, crushed gravel, or crushed stone with gradation in accordance with Section 209.2 of the State Specifications.

PART 3 EXECUTION

3.1 PREPARATION OF SUBGRADE

A. General: Prepare subgrade according to Section 350 of the State Specifications and as summarized below.

1. Excavate or fill the subgrade, as required and then grade and compact to provide a firm foundation of uniform density throughout as shown. Compact the upper 12 inches or greater depth, if shown, to 95% of the maximum dry density as determined by ASTM D1557 at optimum moisture content + or – 3 percent. Confirm that the completed subgrade is true to alignment, grade and cross section, including required crown.

2. Prior to placement of any fill required to bring subgrade to proper level, strip areas to be covered of any loose or otherwise unapproved fill materials, organic materials, or any foreign or deleterious matter.

3. Fill holes, ruts, and similar defects. Cut out unstable areas, stone or rock, and similar defects and fill with compacted soil.

4. Rework areas that do not appear to provide proper drainage.

B. If the subgrade subsequently loses its density due to exposure to severe weather conditions after having been previously compacted to the required density, scarify, wet or dry, the subgrade as required, and compact to the required density.

C. When a sheepsfoot roller is used to compact the subgrade, finish the compaction by either a 3-wheel roller or multiple-wheel rubber-tired roller of sufficient weight to smooth out and compact the indentations made by the sheepsfoot roller.

D. Proof rolling: Confirm that the following proof rolling requirements are met:

1. Proof roll the top surface of the compacted subgrade by making a minimum of two complete coverages with a heavy rubber tired roller at not less than 2 1/2 mph or more than 5 mph. Two coverages are defined by two applications of one wheel load over each point of the subgrade. Witnessed proof rolling.

2. Use roller with a gross weight of not less than 25 tons and not less than 4 pneumatic tire wheels that delivers a compression of not less than 650 pounds per inch width of tire tread.

3. If under the action of proof rolling the subgrade yields, pumps or otherwise fails, remove the failed area to a minimum depth of 2 feet and replace with suitable fill compacted as specified in Section 31 23 23 - Backfilling and as shown. The subgrade is considered failed if under the operation of the roller, the surface shows yielding or rutting of more than 2 inches measured from the top of the construction grade to the bottom of the rut.

3.2 PLACEMENT OF SUBBASE COURSE

A. Placement and Compaction: Adhere to Section 350 of the State Specifications and to the following general and specific placement requirements:

1. General: Place and compact the granular subbase course in accordance with Section 350 of the State Specifications.

2. Special compaction testing may be required dependent on site conditions in accordance with Section 301.3.4.3 of the State Specifications.

3. Place the subbase course to the thicknesses shown.

4. Verify that the material deposited contains the amount of moisture required for compaction prior to placement uniformly distributed throughout the material. Mix water and granular material at a central mixing plant equipped with a mechanical mixing device and granular material and water measuring devices. Wetting the aggregate by jetting in cars, bins, stockpiles or trucks is not permitted. Add moisture to the material during compaction, only when it is necessary to increase the percentage of moisture to obtain satisfactory compaction.

5. Place the subbase in layers not more than 6 inches compacted thickness. Spread and compact each layer in a similar manner.

6. Deposit the subbase material full-width with a mechanical spreader or spreader box in a manner which will not cause segregation, and which will require minimum blading or manipulation. The equipment and method used is subject to approval by the RESIDENT PROJECT REPRESENTATIVE.

7. Compact each layer immediately after placement to a density of not less than 95 percent of the maximum dry density as determined by ASTM D1557 at an optimum moisture content + or – 2 percent.

8. Commence rolling along the edge of the road or area to be compacted and gradually advance toward the center of the area to be compacted.

9. Operate rollers along lines parallel with the centerline of the road being constructed.

10. If any earth is worked into the granular material during the compacting or finishing operations, remove and replace granular material within the affected area with new granular material. The RESIDENT PROJECT REPRESENTATIVE may restrict hauling over the completed or partially completed Work after inclement weather or at any time when the earth subgrade is soft and there is a tendency for the earth to work into the granular material.

11. If compaction tests indicate that the compacted aggregate does not comply with density requirements, provide additional wetting or drying, if necessary, and rolling until the specified density is obtained.

12. Place and compact the subbase course a maximum of three days prior to placement of the base course.

B. Protection and Repair: Perform any Work necessary to protect the completed subbase course prior to placement of the base course and to perform any Work and furnish any materials necessary to repair or restore a completed subbase course damaged by traffic or weather.

3.3 PLACEMENT OF BASE COURSE

A. Placement and Compaction. Adhere to the following general and specific placement requirements:

1. General:

a. Place and compact the dense graded base course in accordance with Section 305.3 of the State Specifications.

b. Place and compact the open graded base course in accordance with Section 310.3 of the State Specifications.

2. Place the base course to the thicknesses shown.

3. Verify that the aggregate deposited on the subgrade or the subbase contains the amount of moisture required for compaction prior to placement uniformly distributed throughout the material. Mix water and granular material at a central mixing plant equipped with a mechanical mixing device and granular material and water measuring devices. Wetting the aggregate by jetting in cars, bins, stockpiles or trucks is not permitted. Add moisture to the material during compaction, only when it is necessary to increase the percentage of moisture to obtain satisfactory compaction.

4. Place the base course in layers not more than 6 inches compacted thickness. Spread and compact each layer in a similar manner.

5. Deposit the aggregate full-width, directly on the prepared subgrade or subbase, or on the preceding layer of compacted aggregate with a spreader. When placed, ensure aggregate is free from segregation and requires minimum blading or manipulation.

6. Immediately after the material has been placed, compact with a tampering roller, or with a pneumatic-tired roller, or with a vibratory machine, or with a combination of any of the three. Give the top layer a final rolling with a three-wheel or tandem roller. Commence rolling along the edge of the road or area to be compacted and gradually advances toward the center of the area to be compacted. The manner of compaction is subject to approval by the RESIDENT PROJECT REPRESENTATIVE.

7. Compact each layer immediately after placing to a density of not less than 95% of the maximum dry density as determined by ASTM D1557 at an optimum moisture content + or – 2 percent.

8. If any subgrade material is worked into the base material during the compacting or finishing operations, remove granular material within the affected area and replaced with new aggregate. The RESIDENT PROJECT REPRESENTATIVE may restrict hauling over the completed or partially completed Work after inclement weather or at any time when the subgrade is soft and there is tendency for the subgrade material to work into the base material.

9. Perform compaction tests on each layer of material. If compaction tests indicate that the compacted aggregate does not comply with density requirements, provide additional wetting or drying, if necessary, and rolling until the specified density is obtained.

B. Protection and Repair:

1. Protect the completed base course as required or directed by the RESIDENT PROJECT REPRESENTATIVE and perform any Work and furnish any materials necessary to repair or restore a completed base course damaged by traffic or weather.

3.4 THICKNESS TOLERANCES

A. Thickness determinations will be made at points selected by the RESIDENT PROJECT REPRESENTATIVE. When the average constructed thickness is less than 95 percent of the thickness shown, add additional aggregate to obtain the required thickness.

3.5 SURFACE TOLERANCES

A. Check for deviations from grades.

B. Confirm that the surface of the top of the base course is smooth on top and within 0.05 feet of the elevations shown, or the elevations of the existing roads that were removed as a part this contract. Document and submit existing roadway elevations to the RESIDENT PROJECT REPRESENTATIVE prior to removal during demolition.

3.6 INSPECTION AND TESTING

A. Sampling and Testing: Provide sampling and laboratory methods in accordance with Section 301 of the State Specifications and in accordance with the appropriate ASTM Standard Specification. Subject base and subbase courses to these tests. Furnish and perform compaction testing by an approved independent testing agency. Perform nuclear density testing in accordance with ASTM D6938. The RESIDENT PROJECT REPRESENTATIVE reserves the right to double check compaction, moisture content, gradation, and proctor values and reject unsatisfactory Work.

B. Correction of Work: Correct any areas of unsatisfactory compaction by removal and replacement or by scarifying, aerating, or sprinkling as needed and recompaction and retesting in place prior to placement of a new lift at no cost to the OWNER.

END OF SECTION

(NO TEXT FOR THIS PAGE)

SECTION 32 12 00

ASPHALT PAVING

PART 1 GENERAL

1.1 SUMMARY

A. Section Includes: Requirements for material and installing permanent and temporary asphalt pavements and asphaltic flumes in accordance with Sections 450, 455, 460 and 465 of the State Specifications and as shown.

B. Related Work Specified In Other Sections Includes, But is Not Limited to, the Following:

1. Section 01 11 00 - Summary of Work

2. Section 01 33 00 - Submittals

3. Section 32 11 23 - Base Courses

4. Section 32 13 00 - Concrete Paving

5. Section 32 16 13 - Concrete Curbs

1.2 REFERENCES

A. Codes and standards referred to in this Section are:

1. State of Wisconsin Department of Transportation (WisDOT), Standard Specifications for Highway and Structure Construction, including the supplemental specifications and recurring special provisions, referred to as the "State Specifications"

1.3 SUBMITTALS

A. General: Furnish submittals, including the following, as specified in Division 1.

B. Shop Drawings:

1. Proposed mix design in accordance with Sections 450, 455, 460 and 465 of the State Specifications.

C. Quality Control:

1. Test Reports

a. Submit test reports necessary to show compliance with the Contract Documents and with Sections 701, 710 and 715 of the State Specifications.

b. Provide tests and perform inspections by Quality Control (QC) Certified Technicians in accordance with these Specifications, at no cost to the OWNER including:

(1) Laboratory Test Report.

(2) Batch Plant Inspection Report.

2. Submit material certificates signed by material producer and CONTRACTOR, certifying that each material item is from a WisDOT approved source and per Sections 701, 710 and 715 of the State Specifications.

1.4 QUALITY CONTROL AND QUALITY ASSURANCE (QC/QA)

A. Provide QC of bituminous production and paving including providing testing laboratory at the plant, QC tests and inspections at the plant and in the field, corrective actions, maintenance of QC plan and control charts and other quality control activities in accordance with Section 460 of the State Specifications. The cost for QC testing will be borne by the CONTRACTOR and incidental to the price for the asphalt pavements.

B. Provide QA of bituminous paving inspections and tests specified herein, or deemed required by the RESIDENT PROJECT REPRESENTATIVE, by a testing laboratory. Patch cuts made for test samples. The cost for QA testing will be borne by the CONTRACTOR and incidental to the price for the bituminous concrete pavements.

C. Include analysis and determination of the quality of various bituminous compositions, base material, and compaction of bituminous paving, verifying design as indicated or required.

PART 2 PRODUCTS

2.1 HOT MIX ASPHALT (HMA) PAVEMENT

A. Provide HMA pavements in accordance with Sections 450, 455, 460 and 465 of the State Specifications.

B. Provide asphaltic pavement used for roadway pavement of HMA Pavement Type MT. Provide asphaltic material for the lower layer and upper layer of asphaltic material PG58-28.

C. Provide asphaltic pavement used for temporary pavement, driveways and asphaltic flumes of HMA Pavement Type LT. Provide asphaltic material of asphaltic material PG58-28

D. Provide asphaltic pavement used for recreation trails of HMA Pavement Type 5 LT 58-28 to the dimensions and thickness shown in the plans.

E. Provide aggregate conforming to the requirements of Section 460.2.2 of the Standard Specifications with the lower layer comprised of a nominal size of 19.0 mm and the upper layer comprised of a nominal size of 12.5 mm.

F. Where existing pavement is replaced, provide a minimum pavement thickness of 4 inches or existing thickness, whichever is greater. Provide lower layer with a thickness of 2 ¼ inches minimum.

G. Provide materials for tack coat conforming to the requirements of Section 455.2.5 and of MS-2, SS-1, SS-1h, CSS-1 or CSS-1h.

PART 3 EXECUTION

3.1 INSPECTION

A. Before placing asphalt pavement, RESIDENT PROJECT REPRESENTATIVE will examine substrate surfaces to determine that they are free of conditions which might be detrimental to proper and timely completion of the work. Acceptance of the substrate by the RESIDENT PROJECT REPRESENTATIVE must be prior to the start of work.

3.2 SURFACE PREPARATION

A. Install bituminous concrete pavement in accordance with Sections 450 and 455 of the State Specifications.

B. When required, remove existing pavement by saw, pneumatic hammer or wheel, cutting edges of the existing roadway. After the Aggregate Base Course is shaped and compacted, place the type of pavement as required in this Section to match existing pavement as shown.

C. Extend pavement removal to a seam or joint if seam or joint is within 3 feet of damaged or cut pavement.

3.3 PLACING MIX

A. Install bituminous concrete pavement in accordance with Sections 460 and 465 of the State Specifications.

B. Place hot-mixed asphalt mixture on prepared surface, spread, and strike off. Spread mixture at minimum temperature of 250 degrees Fahrenheit. Place areas inaccessible to equipment by hand. Place each course to required grade, cross-section, and compacted thickness.

C. Complete placement and compaction in accordance with Section 450, 455, 460 and 465 of the State Specifications. The paving must be maintained until overlaid with a wearing course, thickness as shown. Compacted surface course must be a minimum of 1-1/2 inches in depth. This minimum thickness must also apply to areas requiring resurfacing. Place in strips not less than 10 feet wide, unless otherwise acceptable to the RESIDENT PROJECT REPRESENTATIVE. After first strip has been placed and rolled, place succeeding strips and extend rolling to overlap previous strips. Complete base course for a section before placing surface course.

D. Immediately correct surface irregularities in finish course behind paver. Remove excess material forming high spots with shovel or lute.

E. Make joints between old and new pavements, or between successive day's Work, to ensure continuous bond between adjoining Work. Construct joints to have same texture, density, and smoothness as other sections of HMA course. Clean contact surfaces and apply tack coat.

3.4 ROLLING

A. Complete work in accordance with Sections 460 and 465 of the State Specifications.

B. Begin rolling when mixture will bear roller weight without excessive displacement.

C. Compact mixture with hot hand tampers or vibrating plate compactors in areas inaccessible to rollers.

D. Accomplish breakdown or initial rolling immediately following rolling of joints and outside edge. Check surface after breakdown rolling and repair displaced areas by loosening and filling, if required, with hot material.

E. Perform breakdown rolling as soon as possible, while mixture is hot. Continue second rolling until mixture has been evenly compacted.

F. Perform finish rolling while mixture is still warm enough for removal of roller marks. Continue rolling until roller marks are eliminated and course has attained density.

G. Remove and replace paving areas mixed with foreign materials and defective areas. Cut out such areas and fill with fresh, hot HMA. Compact by rolling to specified surface density and smoothness.

H. After final rolling, do not permit vehicular traffic on pavement until it has cooled and hardened.

I. Erect barricades to protect paving from traffic until mixture has cooled enough to not become marked.

3.5 TACK COAT

A. Complete work in accordance with the State Specifications.

B. If asphaltic upper layer is applied to an existing street or is not applied the same day as lower layer, tack coat the existing street or lower layer prior to surface paving. Prior to placement of tack coat, thoroughly clean and broom the streets. Apply tack coat at a rate of 0.10 gallons per square yard immediately prior to placement of asphaltic upper layer.

C. In situations where traffic must be maintained, do not place tack coat on the traveled half of the street until traffic can be switched to the new pavement.

3.6 JOINTS

A. Complete work in accordance with the State Specifications.

B. Construct and treat joints between old and new pavements or between successive day's work to ensure thorough and continuous bond between the old and new mixtures. Construct transverse construction joints by cutting the material back for its full depth so as to expose the full depth of the course. Where a header is used, the cutting may be omitted provided the joint conforms to the specified thickness. Treat these joints with tack coat material applied with a hose and spray nozzle attachment to fully coat the joint surface.

C. Make the longitudinal joint by overlapping the screed on the previously laid material for a width of not more than 2 inches and depositing a sufficient amount of asphaltic mixture so that the finished joint will be smooth and tight. Do not place longitudinal joints in the upper layer immediately over similar joints in the lower layer beneath. Provide a minimum distance of 12 inches between the location of the joints in the lower layer and the location of similar joints in the upper layer above.

3.7 FINISHING ROADWAY

A. Fine-grade the finished base course in preparation for HMA paving. Remove base course ramps at existing pavement to provide a full depth butt joint. Hand-trim base course around manhole castings and valve boxes and compacted with a vibratory plate compactor.

B. Include all following preparatory and finishing items and any other incidental items of work required for construction. Remove asphaltic ramps around manholes on existing lower layer to receive upper layer. Install asphaltic ramps on manholes and at butt joints in areas to receive lower layer only.

3.8 FIELD QUALITY CONTROL

A. Comply with Sections 460.3 and 465.3 of the State Specifications.

B. Comply with the requirements of the Americans with Disabilities Act, including but not limited to slopes, smoothness and changes in elevation.

C. Testing in-place HMA courses for compliance with requirements for thickness and surface smoothness will be done by the CONTRACTOR's testing laboratory per Section 460 of the State Specifications. Repair or remove and replace unacceptable paving as directed by RESIDENT PROJECT REPRESENTATIVE.

D. In-place compacted thickness tested in accordance with ASTM D3549 will not be acceptable if exceeding following allowable variations:

   1. Base course within plus or minus 1/2 inch.

   2. Surface course within plus or minus 1/4 inch.

E. Test finished surface of each HMA course for smoothness, using a 10-foot straightedge applied parallel with and at right angles to centerline of paved area. Surfaces will not be acceptable if exceeding the following tolerances for smoothness.

   1. Base course surface within 1/4 inch.

   2. Wearing course surface within 3/16 inch.

F. Check surface areas at intervals as directed by RESIDENT PROJECT REPRESENTATIVE.

G. No vehicular traffic or loads must be permitted on the newly completed pavement until adequate stability has been attained and the material has cooled sufficiently to prevent distortion or loss of fines. If the climatic or other conditions warrant it, the period of time before opening to traffic may be extended at the discretion of the RESIDENT PROJECT REPRESENTATIVE. Repair any damaged pavement and unsatisfactory Work revealed by testing as specified and as shown, to the satisfaction of the RESIDENT PROJECT REPRESENTATIVE, at no additional cost to the OWNER.

END OF SECTION

(NO TEXT FOR THIS PAGE)

SECTION 32 13 00

CONCRETE PAVING

PART 1 GENERAL

1.1 SUMMARY

A. Section Includes: Requirements for material and installation of concrete pavement in accordance with Section 415 of the State Specifications and as shown.

B. Related Work Specified In Other Sections Includes, But is Not Limited to, the Following:

1. Section 03 30 10 - Structural Concrete

2. Section 31 23 16 - Excavation

3. Section 32 11 23 - Base Courses

4. Section 32 12 00 - Asphalt Paving

C. Comply with the "American Iron and Steel (AIS)" requirements as contained in Section 436 of the Consolidated Appropriations Act, 2014, further described in the Bid Form.

1.2 REFERENCES

A. Codes and standards referred to in this Section are:

1. American Association of State Highway Transportation Officials (AASHTO):

a. AASHTO M235 – Standard Specifications for Epoxy Resin Adhesives

2. American Concrete Institute (ACI):

a. ACI 304R – Guide for Measuring, Mixing, Transporting and Placing Concrete

b. ACI 305R – Guide for Hot Weather Concreting

c. ACI 306R – Guide for Cold Weather Concreting

d. ACI 308R – Guide for Curing Concrete

e. ACI 309R – Guide to Consolidation of Concrete

f. ACI 311.1R – ACI Manual of Concrete Inspection

g. ACI 318 – Building Code Requirements for Structural Concrete

h. ACI 347 – Guide to Formwork for Concrete

3. American Society for Testing and Materials (ASTM):

a. ASTM C94 – Standard Specification for Ready-Mix Concrete

b. ASTM D695 – Standard Specification for Standard Test Method for Compressive Properties of Rigid Plastics

4. State of Wisconsin Department of Transportation (WisDOT), Standard Specifications for Highway and Structure Construction, including the supplemental specifications and recurring special provisions, referred to as the "State Specifications"

1.3 SUBMITTALS

A. General: Furnish submittals, including the following, as specified in Division 1.

B. Shop drawings:

1. Proposed mix design in accordance with Sections 701, 710 and 715 of the State Specifications.

C. Quality Control

1. Test Reports

a. Submit test reports necessary to show compliance with the Contract Documents and with Sections 701, 710 and 715 of the State Specifications.

b. Submit laboratory test reports and batch plant inspection reports. Perform testing and inspection by Quality Control (QC) Certified Technicians in accordance with this Section, at no cost to the OWNER.

1.4 QUALITY CONTROL

A. Provide quality control for concrete in accordance with Sections 701, 710 and 715 of the State Specifications.

B. Perform Work in accordance with the latest edition, of the appropriate divisions, of the following:

1. ACI 311.1R "ACI Manual of Concrete Inspection".

2. ACI 304R "Guide for Measuring, Mixing, Transporting and Placing Concrete", except minimum cement content must be herein specified.

3. CSI "Manual of Standard Practice"

4. ACI 318 "Building Code Requirements for Structural Concrete".

5. ASTM C94 "Specifications for Ready Mixed Concrete".

6. ACI 305R "Hot Weather Concreting".

7. ACI 306R "Cold Weather Concreting".

8. ACI 308R “Guide to Curing Concrete”.

9. ACI 309R “Guide to Consolidation of Concrete”.

10. ACI 347 “Guide to Formwork for Concrete”.

11. AASHTO M235 “Epoxy Resin Adhesives”

12. ASTM D695 “Standard Test Method for Compressive Properties of Rigid Plastics”

PART 2 PRODUCTS

2.1 MATERIALS:

A. Provide concrete in accordance with Section 415.2 of the State Specifications.

B. Tie Bars and Dowell Bars

1. Provide tie bars and dowel bars conforming to 505.2.6 of the State Specifications.

2. Epoxy for Anchoring Dowel Bars and Tie Bars

(1) Furnish epoxy consisting of a 2-component epoxy material of contrasting colors and conforming to AASHTO M235, grade 3 - non-sagging consistency, type IV epoxy, except as modified below: 1. Use class B material for mid-depth slab temperatures between 40 and 60 degrees Fahrenheit. Use class C material for mid-depth slab

temperatures between 60 degrees Fahrenheit and the highest temperature allowed by the manufacturer of the product.

(2) Bond strength, tensile strength, and elongation testing is not required.

(3) Achieve a minimum compressive yield strength of 5000 psi at 8 hours for special high early strength concrete, or at 3 days for grades A, C, and E concrete. Test according to AASHTO M235 and ASTM D695, with the following restrictions: 1. Mold and cure compressive test specimens in cylinders with a one-inch nominal diameter. 2. Machine specimen ends square to produce a final specimen length of 2 inches.

(4) Submit a manufacturer's certificate of compliance, and a certified report of test or analysis from a qualified independent laboratory prior to using, to the RESIDENT PROJECT REPRESENTATIVE certifying that the epoxy conforms to these specifications. Identify the temperature classes and compressive strength cure times for which the product is certified.

(5) The CONTRACTOR may furnish an acrylic adhesive approved by the RESIDENT PROJECT REPRESENTATIVE that meets the same physical requirements specified for epoxy.

2.2 MIXING CONCRETE:

A. Provide concrete mix in accordance with Sections 701, 710 and 715 of the State Specifications.

B. Submit duplicate delivery tickets by the ready-mixed concrete producer, one (1) for the CONTRACTOR and one (1) for the RESIDENT PROJECT REPRESENTATIVE, with each load of concrete delivered to the job with the following information:

1. Date.

2. Name of ready-mix concrete plant.

3. CONTRACTOR.

4. Job Location.

5. Type (Standard or High Early Strength) and brand of cement.

6. Cement content in bags per cubic yard of cement

7. Truck number.

8. Time dispatched and time unloaded.

9. Admixtures in concrete, if any.

10. Type and maximum size of aggregate.

11. Water added at job, if any.

12. Name of person who authorized addition of water.

C. Maintain close control of mixing time for air-entrained concrete.

D. Provide continuous access to the mixer so that the CONTRACTOR'S Quality Control (QC) personnel can periodically check batch proportions and yield strength.

PART 3 EXECUTION

3.1 GENERAL

A. Install materials in accordance with the State Specifications unless otherwise noted.

3.2 INSPECTION

A. Before pouring concrete, RESIDENT PROJECT REPRESENTATIVE will examine substrate surfaces to determine that they are free of conditions which might be detrimental to proper and timely completion of the work. Acceptance of the substrate by the RESIDENT PROJECT REPRESENTATIVE must be prior to the start of work.

3.3 PREPARATION

A. Complete preparation in accordance with Section 415.3 of the State Specifications.

B. Sub-Grade and Subbase: Before proceeding with the installation of paving or concrete work, carefully examine the subbase and must perform any minor grading, shaping, filling or other preparatory work required in the opinion of the testing laboratory or the RESIDENT PROJECT REPRESENTATIVE prior to placing the base course. Building up of sub-grade under forms after they are in place will not be permitted.

C. Place tie bars in existing concrete in accordance with Section 416.3.4 of the State Specifications. Tie bars are considered incidental to the Concrete Pavement.

3.4 PLACING CONCRETE

A. Place concrete in accordance with Section 415.3 of the State Specifications.

B. Do not place concrete upon frozen base course or subgrade material. Discontinue concrete operations when the air temperature is expected to fall below 40 degrees Fahrenheit during the 24 hour period after placing concrete or when the air temperature is likely to remain below 30 degrees Fahrenheit during the succeeding 6 days; unless provisions for heating aggregates, sand and water have been made, the CONTRACTOR has submitted a Cold Weather Paving Plan, and the methods proposed for protecting the concrete has been approved by the RESIDENT PROJECT REPRESENTATIVE.

C. Use of accelerating or antifreeze admixtures is not permitted. The CONTRACTOR is responsible for the protection of finished concrete against damage or injury, including freezing until the work has been completed and accepted. Repair and replace any defective work resulting from freezing or damage during placing and curing at no additional cost to the OWNER.

D. Perform concrete consolidation in accordance with Section 415.3 of the State Specifications.

3.5 CONCRETE PAVEMENT

A. Construct concrete pavements, including tie bars and dowel bars, in accordance with Section 415.3 of the State Specifications and as shown, to the lines, grades and Sections indicated.

B. Unless otherwise indicated or shown, lay out pavements into Sections in accordance with Section 415.3 of the State Specifications, separated by expansion joints extending full depth of slab. Unless otherwise shown, expansion filler must be 3/4 inch thick, of material as specified.

C. Traffic, loading or backfilling must not be allowed on concrete surfaces for 7 days after the concrete has been placed or until 75 percent of design strength is achieved. If the CONTRACTOR seeks permission from the RESIDENT PROJECT REPRESENTATIVE to place traffic, loads, or to backfill before 7 days, the CONTRACTOR QC and their laboratory must make and break additional cylinders for this purpose in the CONTRACTOR'S approved laboratory, subject to verification by the RESIDENT PROJECT REPRESENTATIVE. Repair any damaged areas as shown and specified and to the satisfaction of the RESIDENT PROJECT REPRESENTATIVE, at no additional cost to the OWNER.

3.6 CURING AND PROTECTION

A. Protect freshly placed concrete from defacement, premature drying and excessive cold or hot temperature, and maintain without drying at a relatively constant temperature for a period of time necessary for hydration of cement and proper hardening.

B. Protect concrete in accordance with Section 415.3 of the State Specifications.

C. Start initial curing as soon as free water has disappeared from concrete surface after placing and finishing.

D. Cure concrete in accordance with Section 415.3 of the State Specifications.

3.7 SURFACE SEALER

A. Cure concrete pavements in accordance with Section 415 and 501 of the State Specifications.

B. Concrete pavement poured before October 1 will not require a linseed oil sealer.

3.8 HOT AND COLD WEATHER CONCRETING

A. Submit a Hot or Cold Weather Paving Plan detailing procedures for production, transportation, placement, protection, curing, testing and temperature monitoring of concrete during hot or cold weather. Include procedures to be implemented upon abrupt changes in weather conditions or equipment failures.

3.9 CLEAN-UP

A. Collect, remove, and legally dispose of rubbish and debris resulting from the Work.

END OF SECTION

(NO TEXT FOR THIS PAGE)

SECTION 32 16 13

CONCRETE CURBS

PART 1 GENERAL

1.1 SUMMARY

A. Section Includes: Requirements for providing concrete curb, concrete curb and gutter, concrete median slope noses, concrete surface drains and trench grates, in accordance with Sections 416.1, 416.2 and 416.3 and 601.1, 601.2 and 601.3 of the State Specifications and as shown.

B. Related Work Specified in Other Section Includes, But is Not Limited to, the Following:

1. Section 01 33 00 - Submittals

2. Section 03 30 10 - Structural Concrete

3. Section 32 11 23 - Base Courses

4. Section 32 13 00 - Concrete Paving

C. Comply with the "American Iron and Steel (AIS)" requirements as contained in Section 436 of the Consolidated Appropriations Act, 2014, further described in the Bid Form.

1.2 REFERENCES

A. Codes and standards referred to in this Section are:

1. American Society for Testing and Materials (ASTM):

a. ASTM C94 – Standard Specification for Ready-Mix Concrete

b. ASTM C309 – Standard Specification for Liquid-Forming Compounds for Curing Concrete

c. ASTM D994 – Standard Specification for Preformed Expansion Joint Filler for Concrete (Bituminous Type)

2. State of Wisconsin Department of Transportation (WisDOT), Standard Specifications for Highway and Structure Construction, including the supplemental specifications and recurring special provisions, referred to as the "State Specifications"

1.3 SUBMITTALS

A. General: Provide submittals, including the following, as specified in Division 1.

B. Shop drawings:

1. Proposed mix design in accordance with Sections 701, 710 and 716 of the State Specifications.

C. Quality Control

1. Test Reports

a. Submit test reports necessary to show compliance with the Contract Documents and with Sections 701, 710 and 716 of the State Specifications.

b. Submit laboratory test reports and batch plant inspection reports. Perform testing and inspection by Quality Control (QC) Certified Technicians in accordance with this Section, at no cost to the OWNER.

1.4 QUALITY ASSURANCE

A. Perform work in conformance with Sections 716, 416.2 and 601.2 of the State Specifications, except as modified herein.

B. Obtain materials from the same source throughout the duration of the work.

PART 2 PRODUCTS

2.1 MATERIALS

A. Concrete Curb, Concrete Curb and Gutter and Concrete Median Slope Noses

1. Provide concrete curb or curb and gutter or concrete median noses conforming to Section 601.2 of the State Specifications.

2. Match thickness, width and shape of the concrete curb or curb and gutter to the existing concrete curb or curb and gutter thickness, width and shape, and the details shown.

B. Trench Drain

1. Provide concrete curb for the trench drain conforming to Section 601.2 of the State Specifications.

2. Match thickness, width and shape of the concrete curb to the existing concrete curb thickness, width and shape, and to the details shown.

3. Provide solid steel plate to match thickness, width and shape of the existing solid steel plate thickness, width and shape, and to the details shown.

C. Concrete Surface Drains: Provide concrete conforming to Section 416.2 of the State Specifications.

D. Preformed Expansion Joint Filler: Conform to Section 415.2.3 of the State Specifications.

E. Reinforcing: Conform to Section 505 of the State Specifications.

F. Curing and Protective Coat: Conform to Section 601 of the State Specifications.

G. Base Course: Conform to Section 601 of the State Specifications

H. Joints: Conform to Section 601 of the State Specifications

I. Tie Bars and Dowell Bars

1. Furnish tie bars and dowel bars conforming to Section 505.2.6 of the State Specifications.

2. Epoxy for Anchoring Dowel Bars and Tie Bars

a. Furnish epoxy consisting of a 2-component epoxy material of contrasting colors and conforming to AASHTO M235, grade 3 - non-sagging consistency, type IV epoxy, except as modified below: 1. Use class B material for mid-depth slab temperatures between 40 and 60 degrees Fahrenheit. 2. Use class C material for mid-depth slab temperatures between 60 degrees Fahrenheit and the highest temperature allowed by the manufacturer of the product.

b. Bond strength, tensile strength, and elongation testing is not required.

c. Achieve a minimum compressive yield strength of 5000 psi at 8 hours for special high early strength concrete, or at 3 days for grades A, C, and E concrete. Test according to AASHTO M235 and ASTM D695, with the following restrictions: 1. Mold and cure compressive test specimens in cylinders with a one-inch nominal diameter. 2. Machine specimen ends square to produce a final specimen length of 2 inches.

d. Submit a manufacturer's certificate of compliance, and a certified report of test or analysis from a qualified independent laboratory prior to using, to the RESIDENT PROJECT REPRESENTATIVE certifying that the epoxy conforms to these specifications. Identify the temperature classes and compressive strength cure times for which the product is certified.

e. The RESIDENT PROJECT REPRESENTATIVE may furnish acrylic adhesive approved by the ENGINEER that meets the same physical requirements specified for epoxy

PART 3 EXECUTION

3.1 PREPARATION OF SUBGRADE AND AGGREGATE BASE

A. Conform to Section 601 of the State Specifications.

B. Place materials when ambient temperature above 40 degrees Fahrenheit.

C. Moisten aggregate base course prior to placing concrete.

3.2 FORMWORK

A. Conform to Section 601 of the State Specifications.

3.3 TIE BARS AND DOWEL BARS

A. Place tie bars in existing concrete in accordance with Section 416.3.4 of the State Specifications. Tie bars are considered incidental to the concrete curb or concrete curb and gutter.

3.4 CURB, CURB AND GUTTER, MEDIAN NOSE AND TRENCH DRAIN CONSTRUCTION

A. ADA Ramps: Construct wheelchair ramps in conformance with regulatory requirements and as indicated.

B. Foundation and forms will be checked by RESIDENT PROJECT REPRESENTATIVE before concrete is placed.

C. Place concrete in accordance with Section 601.3 of the State Specifications.

D. Expansion Joints: Place joints in accordance with Section 601.3 of the State Specifications.

E. Contraction Joints: Place joints in accordance with Section 601.3 of the State Specifications.

F. Finishing: Finish concrete in accordance with Section 601.3 of the State Specifications.

3.5 CONCRETE SURFACE DRAINS CONSTRUCTION

A. Foundation and forms will be checked by RESIDENT PROJECT REPRESENTATIVE before concrete is placed.

B. Place concrete in accordance with Section 416.3 of the State Specifications.

C. Reinforcement: Place reinforcement in accordance with Section 416.3 of the State Specifications.

D. Finishing: Finish concrete in accordance with Section 601.3 of the State Specifications.

3.6 CURING

A. Erect and maintain suitable barricades as may be necessary to exclude traffic from newly constructed curb or curb and gutter. Repair or replace curb or curb and gutter damaged by traffic or otherwise damaged prior to acceptance at no cost to the OWNER.

B. After finishing, cure and protect concrete in accordance with Section 601 of the State Specifications.

3.7 BACKFILL

A. Upon completion of curing period, backfill behind curb with earth fill, free from rocks 2 inches and larger and other foreign material.

B. Tamp backfill firmly in place.

3.8 TOLERANCES

A. Provide finished curb or curb and gutter with a uniform appearance for both grade and alignment.

B. Remove any section of curb or curb and gutter showing abrupt changes in alignment or grade or which is more than 1/4 inch away from section indicated.

3.9 TESTING AND ACCEPTANCE

A. Compressive Strength: In accordance with Section 601 of the State Specifications.

B. Smoothness Tolerance: In accordance with Section 601 of the State Specifications.

C. Acceptance Criteria:

1. General:

a. Remove and replace curb or curb and gutter that are broken or have weakened surfaces caused by over rich cement, rain damage, over finishing, excessive voids, or deleterious material.

b. Develop and submit a Work Plan for items failing to meet criteria specified in this section.

2. Spalled or Broken Edges:

a. Greater the 1/2 Inch Length:

(1) Saw cut to remove broken concrete back to nearest joint.

(2) Pressure wash to remove debris. Provide clean surface.

(3) Apply epoxy bonding agent.

(4) Replace curb or curb and gutter to indicated section.

3. Slabs with Cracks:

a. Cracks Greater Than 25 Percent Pavement Thickness: Remove and replace pavements. Remove entire panel, full depth and width.

b. Cracks Less Than 25 Percent Pavement Thickness: Pressure inject with epoxy resin, Type IV, Grade 1. Completely fill crack. Troweling to fill crack not allowed.

3.10 CLEAN-UP

A. Remove equipment, forms, and debris from site. Collect, remove and legally dispose of rubbish and debris resulting from the Work.

END OF SECTION

SECTION 32 16 23

CONCRETE SIDEWALKS

PART 1 GENERAL

1.1 SUMMARY

A. Section Includes: Requirements for providing concrete sidewalk, in accordance with Section 602 of the State Specifications and as shown.

B. Related Work Specified in Other Section Includes, But is Not Limited to, the Following:

1. Section 01 33 00 - Submittals

2. Section 03 30 10 - Structural Concrete

3. Section 32 11 23 - Base Courses

4. Section 32 13 00 - Concrete Paving

C. Comply with the "American Iron and Steel (AIS)" requirements as contained in Section 436 of the Consolidated Appropriations Act, 2014, further described in the Bid Form.

1.2 REFERENCES

A. Codes and standards referred to in this Section are:

1. ASTM (American Society of Testing and Materials):
   a. ASTM C94 – Standard Specification for Ready-Mix Concrete

   b. ASTM C309 – Standard Specification for Liquid-Forming Compounds for Curing Concrete

   c. ASTM D994 – Standard Specification for Preformed Expansion Joint Filler for Concrete (Bituminous Type)

2. State of Wisconsin Department of Transportation (WisDOT), Standard Specifications for Highway and Structure Construction, including the supplemental specifications and recurring special provisions, referred to as the "State Specifications"

1.3 SUBMITTALS

A. General: Provide submittals, including the following, as specified in Division 1.

B. Shop drawings: Proposed mix design in accordance with Sections 701, 710 and 716 of the State Specifications.

C. Quality Control

1. Test Reports

a. Submit test reports necessary to show compliance with the Contract Documents and with Sections 701, 710 and 716 of the State Specifications.

b. Submit laboratory test reports and batch plant inspection reports. Perform testing and inspection by Quality Control (QC) Certified Technicians in accordance with this Section, at no cost to the OWNER.

1.4 QUALITY ASSURANCE

A. Perform work in conformance with Sections 716, 416.2 and 602.2 of the State Specifications, except as modified herein.

B. Obtain materials from the same source throughout the duration of the work.

PART 2 PRODUCTS

2.1 MATERIALS

A. Concrete Sidewalk:

1. Provide concrete sidewalk in accordance with Section 602.2 of the State Specifications.

2. Match thickness and width of the concrete sidewalk to the existing concrete sidewalk thickness and width, and the details shown.

B. Preformed Expansion Joint Filler: Conform to Section 415.2.3 of the State Specifications.

C. Reinforcing: Conform to Section 505 of the State Specifications.

D. Curing and Protective Coat: Conform to Section 602.2 of the State Specifications.

E. Base Course: Conform to Section 602.2 of the State Specifications

F. Joints: Conform to Section 602.2 of the State Specifications

G. Detectable Warning Fields: Furnish cast iron detectable warning fields for curb ramps from the Wisconsin Department of Transportation's Approved Product List for the color as shown.

PART 3 EXECUTION

3.1 PREPARATION

A. Conform to Section 602 of the State Specifications.

B. Place materials when ambient temperature above 40 degrees Fahrenheit.

C. Moisten aggregate base course prior to placing concrete.

3.2 FORMING

A. Conform to Section 602 of the State Specifications.

3.3 INSTALLATION

A. Foundation and forms will be checked by RESIDENT PROJECT REPRESENTATIVE before concrete is placed.

B. Place concrete in accordance with Section 602.3 of the State Specifications.

C. Embed detectable warning field arrays in plastic concrete conforming to manufacturer-recommended procedures. Do not install on hardened concrete. Do not field cut plates except where the ends of radial arrays abut ramp edges. Smooth the edges of field cuts.

3.4 JOINTS

A. Contraction Joints: Place joints in accordance with Section 602 of the State Specifications.

B. Expansion Joints: Place joints in accordance with Section 602 of the State Specifications.

3.5 PROTECTION AND CURING

A. Erect and maintain suitable barricades as may be necessary to exclude traffic from newly constructed sidewalk. Repair or replace sidewalk damaged by traffic or otherwise damaged prior to acceptance at no cost to the OWNER.

B. After finishing, cure and protect concrete in accordance with Section 602 of the State Specifications.

3.6 BACKFILL

A. Upon completion of curing period, backfill behind curb with earth fill, free from rocks 2 inches and larger and other foreign material.

B. Tamp backfill firmly in place.

3.7 TOLERANCES

A. Provide finished sidewalk with a uniform appearance for both grade and alignment.

B. Remove any section of curb or sidewalk showing abrupt changes in alignment or grade or which is more than 1/4 inch away from section indicated.

3.8 TESTING AND ACCEPTANCE

A. Compressive Strength: In accordance with Sections 602 and 716 of the State Specifications.

B. Smoothness Tolerance: In accordance with Section 602 of the State Specifications.

C. Acceptance Criteria:

1. General:

a. Remove and replace sidewalks that are broken or have weakened surfaces caused by over rich cement, rain damage, over finishing, excessive voids, or deleterious material.

b. Develop and submit a Work Plan for items failing to meet criteria specified in this section.

2. Spalled or Broken Edges:

a. Greater the 1/2 Inch Length:

(1) Saw cut to remove broken concrete back to nearest joint.

(2) Pressure wash to remove debris. Provide clean surface.

(3) Apply epoxy bonding agent.

(4) Replace sidewalk to indicated section.

3. Slabs with Cracks:

a. Cracks Greater Than 25 Percent Pavement Thickness: Remove and replace pavements. Remove entire panel, full depth and width.

b. Cracks Less Than 25 Percent Pavement Thickness: Pressure inject with epoxy resin, Type IV, Grade 1. Completely fill crack. Troweling to fill crack not allowed.

3.9 CLEAN-UP

A. Remove equipment, forms, and debris from site. Collect, remove and legally dispose of rubbish and debris resulting from the Work.

END OF SECTION

(NO TEXT FOR THIS PAGE)

SECTION 32 17 23

PERMANENT PAVEMENT MARKINGS

PART 1 GENERAL

1.1 SUMMARY

A. Section Includes: Requirements for providing painted pavement markings on pavements in accordance with Sections 646.1, 646.2 and 646.3 of the State Specifications, as shown, as specified herein, and as directed by the RESIDENT PROJECT REPRESENTATIVE.

B. Related Work Specified in Other Sections Includes, but is Not Limited to, the Following:

1. Section 01 33 00 - Submittals

2. Section 32 12 00 - Asphalt Paving

3. Section 32 13 00 - Concrete Paving

1.2 REFERENCES

A. Codes and standards referred to in this Section are:

1. State of Wisconsin Department of Transportation (WisDOT), Standard Specifications for Highway and Structure Construction, including the supplemental specifications and recurring special provisions, referred to as the "State Specifications"

1.3 SUBMITTALS

A. General: Furnish submittals, including the following, as specified in Division 1.

B. Shop Drawings:

1. Product Data: Product data on manufactured products that are not included on the Wisconsin Department of Transportation Approved Product List (APL).

1.4 QUALITY ASSURANCE

A. Sampling and Testing of products not on the APL:

1. Take a quart sample of each batch of paint by random selection from sealed containers in presence of the RESIDENT PROJECT REPRESENTATIVE.

2. Identify by designated name, specification number, batch number, manufacturer's formulation number, project contract number, intended use, and quality involved.

3. At discretion of the RESIDENT PROJECT REPRESENTATIVE, samples may be tested by the RESIDENT PROJECT REPRESENTATIVE before approval or material may be approved for use based on either of the following data furnished by the CONTRACTOR:

   a. Test report showing proposed batch meets specified requirements.

   b. Test report showing previous batch manufactured using same formulation as that used in manufacturing proposed batch met specified requirements, and report showing test results on proposed batch for the following properties required in material specification: weight per gallon, viscosity, fineness of grind, drying time, and gradation.

   c. If materials are approved based on reports furnished by the CONTRACTOR, samples will be retained by the RESIDENT PROJECT REPRESENTATIVE for possible future testing should material appear defective during or after application. When tested by the RESIDENT PROJECT REPRESENTATIVE and samples fail to meet specification requirements, the materials represented by samples to be replaced and the cost of testing will be deducted from payments due to the CONTRACTOR.

B. Codes and Standards: Meet the State Specifications at a minimum.

1.5 WARRANTIES AND GUARANTEES

A. Follow the Proving Period guidelines in Section 646.3.1.5 of the State Specifications.

1.6 DELIVERY, STORAGE AND HANDLING

A. Furnish paint in sealed containers that legibly indicate at time of use designated name, formula or specification number, batch number, color, date of manufacturer, manufacturer's name, formulation number, and directions.

PART 2 PRODUCTS

2.1 EPOXY

A. Provide permanent pavement markings of yellow or white epoxy conforming to Section 646 of the State Specifications and as shown.

PART 3 EXECUTION

3.1 APPLICATION

A. Clean surfaces to be marked before application of paint. Remove dust, dirt, and other granular surface deposits by sweeping, blowing with compressed air, rinsing with water or combination of these methods as required.

B. Remove existing pavement markings from the existing pavement and curbs where new pavement markings are to be placed in accordance with Section 646 of the State Specifications. Remove the pavement markings in areas of permanent pavement with water blasting or air blasting. Do not perform grinding on permanent pavement.

C. Use machines, tools, and equipment used in performance of the Work capable of applying stripe widths indicated, at paint coverage rate required, and of even uniform thickness with clear-cut edges conforming to Section 646 of the State Specifications.

D. Provide stencils for symbols and letters.

E. Prior to application of the pavement marking, make certain the pavement surface is dry and free of dirt or grease and clean to the satisfaction of the RESIDENT PROJECT REPRESENTATIVE.

F. Provide pavement markings at the locations shown and in accordance with Section 646 of the State Specifications.

G. Protect markings from traffic until dry to prevent tracking.

END OF SECTION

(NO TEXT FOR THIS PAGE)

SECTION 32 90 00

LANDSCAPING WORK

PART 1 GENERAL

1.1 SUMMARY

A. Section Includes: Requirements for providing surface restoration, including soil, seeding, sodding, planting, fertilizing, maintenance, and accessories in areas beyond roadway, sidewalk, and driveway pavement disturbed by construction.

B. Related Work Specified in Other Sections Includes, But is Not Limited to, the Following:

1. Section 31 23 16 - Excavation
2. Section 31 23 23 - Backfilling

1.2 REFERENCES

A. Codes and standards referred to in this Section are:

1. ASTM C33 – Standard Specification for Concrete Aggregates

2. State of Wisconsin Department of Transportation (WisDOT), Standard Specifications for Highway and Structure Construction, referred to as the "State Specifications"

1.3 SYSTEM DESCRIPTION

A. Provide surface restoration in areas beyond roadway, sidewalk, and driveway pavement disturbed by construction, including soil, seeding, sodding, planting, fertilizing, maintenance, and accessories in accordance with the requirements of the authority having jurisdiction. The authorities having jurisdiction include, but is not limited to, the following:

1. City of Franklin
2. City of Muskego
3. City of New Berlin
4. Milwaukee County
5. Waukesha County
6. Wisconsin Department of Transportation

B. Unless required otherwise by the authority having jurisdiction, provide surface restoration in accordance with the State Specifications and as specified in this Section.

1.4 SUBMITTALS

A. General: Furnish submittals, including the following, as specified in Division 1.

B. Shop Drawings, Product Data, and Information:

1. Mixtures and product label information for products specified herein.

C. Quality Control:

1. Soil test results.

D. Operation and Maintenance Manuals:

1. Maintenance Instruction Manual: A landscaping maintenance manual furnished upon completion of the landscaping work. Include complete and detailed instructions on the recommended maintenance procedure to be followed for maintaining lawns and each species of plant material. Include a schedule of planted and seeded materials and pertinent growing and maintenance information and requirements for watering, fertilizing, agricultural limestone applications, spraying, cultivating, pruning and weed control.

1.5 DELIVERY, STORAGE AND HANDLING

A. General: Deliver, store and handle products and materials as specified in Division 1 and as follows.

B. Topsoil: Separate existing topsoil from excavated material and store on the job site. If imported topsoil is required to supplement job-excavated topsoil, deliver topsoil in a dry state without enough moisture to allow it to be packed or squeezed into a ball.

C. Balled and Burlapped Stock: Immediately after delivery, set balled plants on the ground with the balls well protected with soil. Water and properly maintain plants in a shaded location until planting. Plant the plants at the project site in accordance with Section 632 of the State Specifications.

D. Grass Seed: Deliver grass seed in accordance with Section 630 of the State Specifications. Deliver grass seed in standard size bags of the vendor, showing weight, analysis and name of vendor. Store the seed so as not to impair its effectiveness.

E. Sod: Deliver sod to the site in fresh condition and within 24 hours of the time it has been dug.

F. Fertilizer: Deliver fertilizer in accordance with Section 629 of the State Specifications in standard size bags, showing weight, analysis and the name of the manufacturer. Store the fertilizer in a weatherproof storage place in a manner that will keep it dry without affecting its effectiveness.

1.6 ENVIRONMENTAL REQUIREMENTS

A. Seeding and Sodding: Sow grass seed between August 15th and October 15th unless sowing between March 15th and June 1st is approved. Sow seed when the wind velocity is below 15 mph. Place sod between August 15th and October 15th or between March 15th and June 1st, or during the season or seasons which are normal for such work as determined by weather conditions and accepted practice in the locality and as approved.

B. Planting: Unless otherwise directed, plant deciduous material between March 1st and June 1st or between September 1st and December 1st. Plant evergreen material between April 1st and June 1st or between September 1st and October 1st.

1.7 WARRANTY

A. General: Warranty seeded, sodded and planted areas for the specified period commencing upon final acceptance of landscaping work.

B. Plant Material: Warranty plant materials for a period of one year.

C. Seeded Areas: Warranty seeded lawn areas to the time of establishment of an acceptable uniform stand of grass.

D. Sod: Warranty sod for 30 days following the first cutting.

1.8 MAINTENANCE

A. General: Maintain landscape work as follows and in accordance with the authority having jurisdiction during the warranty period. During this period, continue watering, seeding, cultivating, mowing and trimming of grass, protection from insects and diseases, fertilizing, repairing damage from erosion, washouts, drought, and similar operations as needed to support normal growth and good health for live plant material. Maintain grades and slopes until plantings are established. Repair and re-establish grades in settled areas.

B. Grass Areas: Maintain seeded and sodded areas to establish a uniform stand of weed-free grass. Reseed or resod areas failing to develop a uniform stand.

1. Protect seeded areas against traffic or other use by warning signs or barricades, as approved by the RESIDENT PROJECT REPRESENTATIVE. Repair surfaces gullied or otherwise damaged following seeding by regrading and reseeding as directed. Water, seed, cultivate, mow, trim, and

otherwise maintain seeded areas in a satisfactory condition until final inspection and acceptance of the landscaping work. Treat areas with excessive weed growth with an application of a select herbicide, as approved by the RESIDENT PROJECT REPRESENTATIVE, and reseed as necessary to establish a satisfactory stand of grass. Water only at night or as approved by the RESIDENT PROJECT REPRESENTATIVE.

2. When the seed application method is used out of season, establish a good stand of grass of uniform color and density to the satisfaction of the RESIDENT PROJECT REPRESENTATIVE. If at the time when the Contract has been otherwise completed it is not possible to make an adequate determination of the color, density, and uniformity of such stand of grass, payment for the unaccepted portions of the areas seeded out of season will be withheld until such time as these requirements have been met.

C. Trees, Shrubs and Ground Covers: Maintain plant material to be alive, in good growing condition and free of weeds. Cultivate trees, shrubs and ground covers and weed and water when necessary, but not less than twice a month, to prevent plant material from dying. Replace any plant material which is found to be dead or dying during the warranty period to original specifications upon request at no additional cost to the OWNER.

D. Replacement: Replace plant material and resod or reseed only during the specified planting seasons and warranty the replacement material for the same period of time as the original material.

PART 2 PRODUCTS

2.1 SOIL

A. Topsoil: Provide a natural, friable, pulverized (completely broken down to remove clods and lumps) topsoil in accordance with Section 625 of the State Specifications of a grade meeting the following limits and free of large roots, sticks, hard clay, weeds, brush, stones over 1-inch in maximum dimension, material toxic to plant growth, or litter or waste products.

U.S. Standard Sieve	Percent Passing by Weight
1 inch	100
No. 10	90

B. Planting Mixture: Provide planting mixture by mixing topsoil, sand, and peat moss in accordance with Section 632 of the State Specifications.

C. pH Adjustment: Adjust the soil pH pursuant to soil test results to achieve a slightly acid soil. Provide agricultural limestone (calcium carbonate), if required, in accordance with Section 629 of the State Specifications.

2.2 GRASS SEED AND SOD

A. Grass Seed: Provide a fresh, clean, new crop of grass seed free of noxious weed seeds in accordance with Section 630 of the State Specifications.

B. Tag: Tag each sack in accordance with the agricultural seed laws of the United States and the State of Wisconsin. Show on each tag the producer's warranty as to the year grown, percentage of purity, percentage of germination and tests by which the percentages were determine. Provide seed for this project having a test date within 1 year of the date of sowing.

C. Sod: Provide sod in accordance with Section 631 of the State Specifications. Sod which has been grown on peat or which has been dug more than 24 hours prior to delivery or which has been allowed to have the roots dry out or on which the grass has turned brown will not be accepted.

2.3 PLANT MATERIALS

A. General: Provide plant materials as follows and in accordance with the authority having jurisdiction. Provide plant materials that are true to species or variety, sound, healthy, vigorously acclimated and free from defects, disfiguring knots, sun-scaled injuries, abrasions of the bark, plant diseases and insect eggs, borers and other forms of infestations. Provide material that has normal, well-developed branch systems and vigorous root systems and that is freshly dug, nursery-grown stock. Provide material grown under climatic conditions similar to those in the locality of the project for at least 2 years and transplanted or root pruned at least in the last 3 years.

B. Plant Size: Dimension a plant as it stands in its natural position. Measure trees under 4 inches in caliper at a point 6 inches above the ground and trees more than 4 inches in caliper at a point 12 inches above ground. Provide the stock of an average of the minimum and maximum sizes specified. Do not cut back large shrubs to sizes specified.

C. Balled, Burlapped and Platformed Plants: Dig balled and burlapped, as well as balled and platformed, plants with sufficient roots and a solid ball of earth securely held in place by burlap and stout natural fiber rope. Manufactured balls are not acceptable. Provide balled and platformed plants with sturdy platforms of a size equal to the diameter of the horizontal midsection of the ball of earth.

D. Bare-Rooted Plants: Dig bare-rooted plants with sufficient root spread and depth to ensure full recovery and development of the plants. Cover roots for these plants with a uniformly thick coating of mud immediately after they are dug.

E. Inspection: Submit plants to inspection for approval at the place of growth, for conformity to specification requirements as to quality, size and variety. In addition to the place of growth inspection, submit plants to inspection for approval upon delivery at the job site or during the progress of the work, for size and condition of balls or roots, diseases, insects, and latent defects or injuries. Remove rejected plants immediately from the site. Do not substitute plants for those specified unless approved.

2.4 FERTILIZER

A. Provide fertilizer in accordance with Section 629 of the State Specifications uniform in composition, free flowing, and suitable for application with equipment designed for that purpose.

2.5 WATER

A. Use water obtained from fresh water sources free from deleterious chemicals and other toxic substances harmful to plant life. Do not use brackish water. Identify to the RESIDENT PROJECT REPRESENTATIVE sources of water at least 2 weeks prior to use. The RESIDENT PROJECT REPRESENTATIVE may take samples of the water at the source or from the tank at any time and have a laboratory test the samples for chemical and saline content. Do not use water from a source which is not approved by the RESIDENT PROJECT REPRESENTATIVE following such tests.

B. If temporary water from a hydrant is required, obtain necessary permits from the authority having jurisdiction. Provide hoses, meters, backflow preventers, and other connections necessary to perform watering needs and provide water at no additional cost to the OWNER.

2.6 ACCESSORIES

A. Tree Wrap: Provide new, clean, plain materials in accordance with Section 632 of the State Specifications for wrapping tree trunks.

B. Weed Barrier Fabric: Provide Pro-5 fabric as manufactured by the DeWitt Co., or equal weed barrier fabric in accordance with Section 632 of the State Specifications.

C. Gravel: Provide smooth river bed gravel of solid or mixed color range to be as selected and in accordance with ASTM C33 and graded according to Size No. 467, Table II.

D. Mulch: Provide mulch in accordance with Sections 627 and 632 of the State Specifications.

E. Bracing and Guying Materials: Provide bracing and guying materials in accordance with Section 632 of the State Specifications.

F. Edging: Provide commercial hot-rolled steel edging plate, 4 inches wide and 1/8-inch thick. Fabricate edging in sections with loops pressed from or welded to the face of sections at 30-inch centers to receive 16-inch long tapered steel stakes. Provide edging finished with the manufacturer's standard paint.

2.7 TESTS

A. Sample: Provide an approved independent laboratory testing facility and submit 10-ounce samples of the proposed topsoil to the approved independent laboratory testing facility in a sealed container for pH value.

B. Analysis: Analyze topsoil samples as necessary to determine the amount of agricultural limestone, elemental sulfur or gypsum necessary and the appropriate fertilizer mix and quantity required for planting, seeding and sodding.

C. Upon request by the RESIDENT PROJECT REPRESENTATIVE, submit samples of materials for inspection and acceptance.

PART 3 EXECUTION

3.1 GRADES

A. General: Existing and final contours shown depict finished grades after completion of landscaping work after planting.

B. Lawn Grades: Grade lawns to meet walks, curbs and adjoining surfaces after uniform settlement of surfaces. Correct water pockets or ridges which appear after surface settlement takes place on or before the end of the guarantee period.

3.2 EXCAVATION FOR PLANTING

A. General: Obtain approval from the RESIDENT PROJECT REPRESENTATIVE for plant locations before excavation. Remove from site material that is surplus or unsuitable for backfill.

B. Ground Cover and Grass Areas: Remove foreign materials, weeds and undesirable plants and their roots. Remove contaminated subsoil. Excavate for ground cover and grass areas to the required depths in accordance with the authority having jurisdiction or for grass to receive 6 inches of topsoil and for groundcover to receive 6 inches of planting soil. Remove debris and stones larger than one inch in dimension remaining on surface after tillage. Immediately prior to placing topsoil, scarify subgrade to a 3-inch depth for bonding of topsoil with subsoil.

C. Plant Pits: Excavate plant pits or holes in accordance with Section 632 of the State Specifications.

D. Drain: Install french drains for trees, ornamental trees, and evergreens planted on berms and other locations where the grade permits, from the bottom of the planting pit to the discharge at finished grade with a trench 9 inches wide and filled with a 6-inch thick layer of 3/4-inch washed gravel. Cover the gravel layer with a filter mat before backfilling the trench with soil.

E. Over Drainage Courses: Place planting soil over drainage courses shown. Where subgrades pitch, vary bed depth of planting soil mix. Where tree pits are located in plant beds, excavate beds deep enough to accommodate not only the drainage course, but also the tree pit, including a layer of soil between bottom of the root ball and top of the drainage course.

F. Water Retention and Dewatering: Excavation conditions causing water to be retained for more than 24 hours are not permitted. During excavation and until soil mix is placed and Work is complete, provide ample means and equipment with which to remove promptly and properly dispose of water entering an excavation or other part of the Work. Dispose of water pumped or drained from the Work in a suitable manner without damage to adjacent property or to other Work under construction. Do not place soil mix on areas where free water is standing on frozen subsoil areas.

3.3 SOIL CONDITIONING

A. Disking: Before the application of topsoil, sodding or seeding, disk the area to be seeded, sodded or planted with groundcover to a depth of 6 inches. Continue the disking until the subsoil surface is sufficiently broken to provide a sufficient bond between subsoil and topsoil. Spread 6 inches of planting soil over the disked area to a uniform depth and density.

B. Agricultural Limestone: Incorporate agricultural limestone, if required by the results of the soil test report, in accordance with Section 629 of the State Specifications into the upper 3 inches of planting soil. Uniformly spread fertilizer and mix into the soil to a depth of 1-1/2 inches or as recommended by the manufacturer.

3.4 SEEDING AND SODDING

A. Seeding: Sow seed in accordance with Section 630 of the State Specifications and at the rate recommended by the seed producer and at a minimum rate of 2 pounds of seed per 1,000 square feet of area. Evenly rake the surface after seeding with a fine-tooth rake. Mulch newly seeded areas in accordance with Section 627 of the State Specifications. Place seed within 1 day of topsoil placement.

B. Sodding: Lay sod in accordance with Section 631 of the State Specifications in such a manner that the surface is smooth and even and all edges abut one another tightly. Water and roll sod so that a bond is produced between the prepared topsoil and the sod. On slopes greater than 4 to 1, stake installed sod with approved wooden sod stakes.

3.5 PLANTING

A. Layout: Outline and stake locations for trees, shrubs, evergreens and bed for approval. Obtain approval for location from RESIDENT PROJECT REPRESENTATIVE prior to commencing planting operations.

B. Setting Plants: Set plants in accordance with Section 632 of the State Specifications. Set plants plumb and straight with the crown at finished grade. Compact soil around the base of the ball, and fill the void 2/3 of the way up from the bottom. Water each plant immediately. After the water has completely drained, fill the plant pits to finished grade. Properly spread out roots of bare root plants and carefully work topsoil among them. Cut off broken or frayed roots with a clean cut. Form a narrow basin, the size of the ball with a ridge of soil to facilitate watering. After that operation is completed, apply a second watering immediately. Finish planting pits and beds within a period of 3 days following start of installation. Construct tree saucers, and cultivate and outline planting pits with a neat edge.

C. Mulching: Provide mulching on plantings in accordance with Section 632 of the State Specifications. Immediately after planting operations are completed, cover all tree and shrub pits with mulch to a minimum depth of 3 inches. Limit mulch for trees to saucer diameter and, for shrubs, the entire shrub bed.

D. Pruning: Provide pruning in accordance with Section 632 of the State Specifications. Prune each tree and evergreen with clean, sharp tools in accordance with standard horticultural practice to preserve the natural character of the plant. Remove suckers and dead, broken or badly bruised branches.

E. Wrapping: Wrap trees in accordance with Section 632 of the State Specifications. Wrap the tree trunks with wrapping material securely tied with biodegradable tie or tape at top and bottom and at 2-foot intervals along the trunk but no less than a minimum of three places, including the top, middle, and bottom. Overlap the wrapping 2 inches top and bottom and entirely cover the trunk from the ground to the height of the second branch, neat and snug.

F. Bracing: Brace trees in accordance with Section 632 of the State Specifications.

G. Guying: Guy trees as necessary to be plumb and straight through final inspection in accordance with Section 632 of the State Specifications. Remove guy wires at completion and acceptance of landscaping.

H. Watering: Thoroughly saturate the soil around each plant with water during planting and as many times later as seasonal conditions require until the end of the guarantee period.

I. Weed Barrier Fabric: Provide weed barrier fabric before placing mulch and in accordance with Section 632 of the State Specifications.

3.6 EDGING

A. General: Establish a neat edge where planting areas meet grass areas, with spade or edging tools, immediately after planting and seeding is completed. Establish flowing curves as shown. Maintain edging until the end of the guarantee period.

3.7 GRAVELED AREAS

A. General: Lay a weed barrier in accordance with the manufacturer's recommendations and top with a 4-inch layer of gravel. Edge graveled areas with metal edging.

3.8 CLEANING

A. Disposal of Materials: Remove and legally dispose off-site excavated material and fill material in excess of required volumes, including excess topsoil, supplemental topsoil, and soil mix materials.

END OF SECTION

SECTION 32 91 13

SOIL PREPARATION (OUTFALL FACILITIES)

PART 1 GENERAL

1.1 SUMMARY

A. Section Includes: Furnishing all materials and labor required to complete all soil preparation Work; Excavate all planted areas, and all plant and tree pits required for placing soil mix and plants; Provide, place and spread amended topsoil for turf and planting soil mix for plantings including any berms or mounds shown; Establish rough grade in both areas prior to planting; Rake smooth and meet required finished grades within tolerances specified herein as shown on the Drawings and as required in this Specification Section.

B. Related Work Specified In Other Sections Includes, But is Not Limited to, the Following:

1. Section 31 23 16 – Excavation

2. Section 32 92 00 - Restoration Wildflowers and Grasses

3. Section 32 93 00 – Exterior Plants

1.2 SUBMITTALS

A. Manufacturer's Data: Submit descriptions of organic fertilizer, commercial fertilizer, burlap, and each source of supply prior to the beginning of Work under this Specification Section. Delivery of materials may begin only after descriptions or samples have been approved.

B. Samples to be submitted:

1. Samples:

a. Mulch - One (1) cubic foot of each type specified.

b. Edging materials and accessories – One (1) linear foot of each type to verify material and color selected.

c. Soil Mix – One (1) quart sample of soil mix materials.

2. Material Test Reports

a. Submit test reports necessary to show compliance with the Contract Documents.

(1) Analysis of existing surface soil

(2) Analysis of imported topsoil.

3. Product Certification: Submit certification that products meet or exceed the specified requirements.

1.3 QUALITY ASSURANCE

A. CONTRACTOR Qualifications: Substantial documented experience required for company specializing in performing the Work of this Section.

B. The pesticides, herbicides, and fungicide applicator must be state certified, using procedures, materials and equipment of type required for Work. The applicator specializing in performing Work on this Specification SECTION must have documented experience. The applicator must conform to applicable requirements of the Environmental Protection Agency Region 5.

C. Codes and Standards: Perform the excavation, removal and grading in compliance with the requirements of the governing authorities having jurisdiction, except to the extent more stringent requirements are shown on the Drawings or specified herein.

D. Soil Testing: As soon as possible upon award of contract, employ at no additional expense a soil testing agency acceptable to the ENGINEER. Using methods approved by the Association of Agricultural Chemists, conduct all tests, interpret results and prepare reports specified herein for topsoil to be provided. Each report must state whether or not the test specimens conform to all requirements of the Contract Documents, and must specifically note any deviations therefrom. On the basis of the above tests, soil amendments other than those specified herein may be authorized.

1.4 PRODUCT HANDLING

A. Delivery Handling and Storage of Soil Mix Materials: Do not deliver, amend, place, spread, or grade topsoil while in a frozen or muddy condition. Coordinate staging areas for soil mix materials with general CONTRACTOR.

B. Deliver materials to job site in unopened containers bearing manufacturer's name and content identification, Environmental Protection Agency (EPA) registration number and manufacturer's registered uses. Material must be stored as recommended by the manufacturer.

C. Waterproofing Agent: Follow manufacturer`s recommendations for handling and storage.

D. Vegetation Mat: Handle and store per manufacturer`s recommendation out of sun in wrapper until use.

1.5 JOB CONDITIONS

A. Availability of On-Site Topsoil: There is little or no availability of on-site topsoil, so all topsoil must be supplemental topsoil imported to site.

1. If any on-site topsoil from the site is used, it must be amended with sand, pH adjusters, fertilizer, gypsum and organic matter, or other such amendments as the ENGINEER advises.

2. Remove excess topsoil in stockpile from site and legally dispose.

3. Provide for subgrade elevations to within 1/10 foot tolerance, as follows:

Trees:	24" below finished grade.
Sod Areas:	6" below finished grade.
Seeded Areas:	4" below finished grade.

4. Place topsoil in plant areas to depths, spread topsoil and planting soil mixes, provide rough grade to within 1/10 foot of finished grade, and finish grade

B. Topography: Refer to existing grades, new grades for adjacent pavements, and new landscape grades shown on the Drawings. Data on existing elevations, grades, structures or other topographic features of the site were determined by topographic survey. The data are not intended as representations or warranties of exact conditions that may be encountered at the time of construction. It is expressly understood that the OWNER will not be responsible for interpretations or conclusions drawn therefrom by the CONTRACTOR. The CONTRACTOR must examine the construction site, coordinate their Work, and determine, to their own satisfaction, the existing conditions under which construction must proceed.

1. Construction Survey Staking: Provide field surveys for landscape finish grading at appropriate intervals to meet required grades.

C. Review of Subgrade: Subgrade acceptance is subject to depths described herein, and the following conditions. Inspect subgrade and all embankments to depth of 12", checking composition and stability. Fill material encountered within planting areas must be "Suitable Subgrade Fill Material". Confirm compaction at subgrade, as follows, and

1. Under plant beds: 85 percent.

2. Under paved areas: 95 percent.

Notify ENGINEER of any discrepancies before proceeding with Work.

D. Protection of the Drainage Courses: Prevent damage to drainage courses including soil separator fabric during topsoiling and grading operations.

E. Protection of Adjacent Property and Dust Control: Prevent any substances from blowing, spilling, dropping, or depositing on adjacent property. Keep the construction area sufficiently dampened to control dust caused by operations.

F. Utilities: Prior to opening an excavation, determine whether underground installations; i.e., sewer, telephone, water, fuel, electricity lines, etc., will be encountered, and if so, where such utilities are located. Stake the exact location with the Utility Owner. When uncovered, provide proper supports for the existing installation. Contact and advise Utility companies of proposed, Work prior to the start of actual excavation.

G. Excavation Around Existing Utilities: Data on the location and nature of existing and proposed utilities, as shown on the Drawings, are made available solely for the convenience of the CONTRACTOR. The OWNER does not guarantee the accuracy or completeness of the data. CONTRACTOR must investigate the location, size, depth and nature of all utilities which may interfere with their Work. Stake locations with Utility Owner, report discrepancies and consult with Utility Owner and ENGINEER immediately prior to proceeding with Work.

1. Utilities to Remain: If utilities are to remain in place, protect them from damage, and repair them if damaged to a condition satisfactory to the Utility Owner and ENGINEER, at no additional cost to the OWNER.

2. Excavation in Gas Easements: Notify ENGINEER immediately if plants are designated for locations on or near gas easements. All excavation located on or near gas easements must be hand-dug only after utility is staked and depth known. Exercise all caution according to utility owner recommendations and industry standards necessary to insure safe operations.

H. Apply pesticides, herbicides, and fungicides so damage will not result to personnel or property from wither direct spray of drifting of chemicals both on and off site. Disposal of excess chemicals and containers must be in accordance with Federal, State, laws and local rules and regulations.

I. Permits: Obtain all necessary permits for the performance of Work.

PART 2 PRODUCTS

2.1 MATERIALS

A. Supplemental Topsoil: A sandy loam, fertile, friable natural topsoil, from A Horizon or Stratum 1, per ASTM D 5268, typical of the locality and without mixture of subsoil, having a pH of 5.5 to 7.0. Clay soils must not be acceptable. Soil must be free of lumps, stones, debris and noxious weeds. "Supplemental topsoil" means all topsoil imported to the site which is required to meet finish grades shown. Supplemental Topsoil must be pulverized prior to spreading.

1. If soil test results for supplemental topsoil do not meet the above requirements, provide test results for alternate soils.

2. If soil test results for accepted soil do not meet the above requirements, provide all amendments specified by ENGINEER, including sand, pH adjusters, fertilizer, gypsum, organic matter and all other amendments according to the ENGINEER's recommendations.

B. Stockpiled and On-site Topsoil: Soil must be free of lumps, stones, debris and noxious weeds. Meet above requirements for Supplemental Topsoil by amending soil prior to placement and as directed by ENGINEER. For topsoil which is in place, amend as directed by ENGINEER.

1. Stockpiled topsoil, if accepted, must be used for turf areas only.

2. Stockpiled topsoil is not acceptable for planting soil mix. Provide supplemental topsoil for all trees, shrubs and plant beds.

C. Subgrade Fill Material: Suitable subgrade fill material must be used only if required to fill in voids.

1. Suitable Subgrade Fill Material: A clean, debris-free mineral material with sandy brown clay content and granular material, and no stones measuring larger than one inch diameter. Gray clay is not acceptable. It should have a pH of 5.5 to 6.5 and contain no limestone. Subgrade must be compacted to 85 percent maximum density. Material from the site may be used provided it conforms to the above specification.

2. Supplemental topsoil as defined above is also be acceptable as Suitable Fill but only in plant areas, not in paved areas, and above drainage courses, not below. On-site topsoil may be used only in these same circumstances and only with acceptance of the ENGINEER.

D. Sand: Clean, sharp, well-graded, coarse sand passing 1/4-inch mesh screen, free of foreign and organic matter, with a pH of 6.0 to 6.5.

1. If clay/silt content is more than 75 percent, amend soil with sand to achieve sandy loam texture.

E. Organic Matter: One of the following soil amendments, mixed in according to ENGINEER's direction so that the finished soil mix, after the addition of sand, contains organic matter of at least 5 percent and no more than 10 percent. In most instances, the added organic matter must be pine bark fines.

1. Pine Bark Fines: Horticultural grade, finely shredded southern pine bark fines with particle size varying between 3/8" to 3/4" with cambium and wood fiber removed.

2. Sedge Peat: Shredded, available from local sources, suitable for horticultural purposes, and free of harmful residues, lumps, roots, stones and other foreign matter. Peat must be measured in air dry condition, containing not more than 35 percent moisture by weight.

3. Sphagnum Peat Moss: Finely shredded, homogenous, partially decomposed fibrous or cellular stem and leaves, consisting of 90 percent organic peat moss, brown in color and suitable for horticultural purposes; free of decomposed colloidal residue lumps, roots, stones and other foreign matter. Shredded particles must not exceed 1/4" in diameter. Peat must be measured in air dry condition, containing not more than 35 percent moisture by weight. Ash content must not exceed 10 percent.

F. Topsoil for Turf Areas: Topsoil amended for texture, pH and fertility after analysis by ENGINEER of soil test result and laboratory recommendations.

G. Planting Soil Mix: All tree pits and planting beds must be backfilled with one of the planting soil mixes specified herein. All the specified soil mixes must be adjusted with soil amendments to adjust pH and thoroughly mixed by hand or by mechanical means prior to placement.

1. Soil Mix #1: For plants which have no underdrainage system, use a soil mix of three parts Supplemental Topsoil, and one part coarse sand. Add 1 inch pine bark organic matter after placement, and rake into top layer of soil.

2. Soil Mix #2: For plants with underdrainage systems, use a soil mix of two part Supplemental Topsoil, and one part coarse sand. Add 1 inch pine bark organic matter after placement, and rake into top layer of soil.

H. pH Adjustment: Adjustments to soil pH must be pursuant to soil test results to achieve a slightly acid soil. Multiple applications may be required.

1. Elemental Sulfur: Wettable, granular sulfur as specified by the ENGINEER, according to the soil test results and to the types of plantings in the area

requiring amendments. If soil pH is above 7.5, four separate applications at 5 pounds per 1,000 square feet may be required.

a. Do not apply more than 5 pounds per 1,000 square feet in any one application.

b. Follow manufacturer's instructions, including for temperature at time of application.

c. When applying to turf which is in place, provide core aeration prior to treatment.

2. Limestone: Ground limestone (calcium carbonate) if required, must have the following analysis:

a. At least 50 percent must pass a No. 200 USS mesh sieve.

b. At least 90 percent must pass a No. 100 USS mesh sieve.

c. 100 percent must pass a No. 10 USS mesh sieve.

d. Total carbonates must not be less than 80 percent or 44.8 percent calcium oxide equivalent; for purposes of calculation total carbonates must be considered as calcium carbonates.

e. Do not apply limestone without ENGINEER's approval.

I. Gypsum: Calcium sulphate, manufactured for horticultural purposes as a soil amendment. Per the direction of the ENGINEER, gypsum may be required for heavy clay soils or those with high sodium content and low organic matter. The minimum application must be 40 pounds per 1,000 square feet, and the maximum application allowed is 175 pounds per thousand square feet. If possible, apply gypsum to subgrade surface and lower lifts of topsoil and mix with topsoil as it is being placed.

J. Fertilizer: Fertilizer used for the Project must be that fertilizer required in Section 32 90 00 – Landscaping Work.

PART 3 EXECUTION

3.1 PREPARATION

A. Protection of Existing Facilities: Protect all existing service lines and related structures encountered in excavation Work. Where such lines and structures have been undermined due to excavation Work, restore to original conditions including supports. If damaged, repair such lines or structures or arrange for their repair with

the proper authorities or companies. Report any uncharted or incorrectly charted lines to the ENGINEER for further direction.

B. Strip and stockpile topsoil for use. On site topsoil, provided that it contains no subsoil or debris may be used to meet a portion of the required topsoil.

C. Excavate and provide subgrade elevations to within 1/10 foot tolerance. All excess subsoil must be removed and legally disposed of offsite.

D. Preparation of Turf and Planting Areas: Clean turf and planting areas of all trash and debris before placement of soil mix. Loosen subgrade by ripping up surface of subgrade. Remove and dispose of debris off site. Remove all limestone pieces over 1-inch in diameter from turf and planting areas to a depth of 12 inches.

E. After areas required to be landscaped have been brought to required subgrade, thoroughly till to minimum depth of 6 inches by scarifying, disking, harrowing, or other approved methods. Remove debris and stones larger than one inch in any dimension remaining on surface after tillage. Immediately prior to placing topsoil, scarify subgrade to a two inch depth for bonding of topsoil with subsoil.

F. For lawns, spread topsoil evenly to minimum depth of six inches. Do not spread topsoil when frozen or excessively wet or dry. Correct all irregularities in finished surfaces to eliminate depressions. Protect finished topsoil areas from damage by vehicular or pedestrian traffic.

G. Apply fertilizer at rates and analysis determined by laboratory soil test of soils at job site and topsoil supplied. Apply fertilizer at rate of 3 pounds per 1,000 square feet.

H. Incorporate fertilizer, pH adjuster, and soil conditioners into soil to minimum depth of 6 inches. This may be done as part of the subgrade tillage operation specified above.

3.2 OPERATIONS

A. Mix Topsoil and Sand: Prior to mixing, confirm soil mix and amendments with ENGINEER. Provide and mix approved topsoil, coarse sand, and amendments as described herein, in an offsite location. Do not mix frozen, muddy or unworkable soil, sand or amendments.

B. Verification of Depths of Planters: CONTRACTOR must verify that the elevations, configurations, and dimensions of the landscaped area planters match those shown on the Drawings. If the onsite conditions do not match what is shown on the Drawings, the CONTRACTOR must notify the ENGINEER immediately and do not install soil mix in the affected area.

C. Confirmation of Grades: Confirm grades prior to the start of Work, and at each interval requiring a change of operation. Excavation depth and depth of soil mix must be set according to the Drawings. Rough grades must be within 1/10 foot of specified finish grades.

D. Install Soil: See Drawings. See Job Conditions for division of responsibility.

1. Install amended topsoil to the following depths:

Landscaped areas:	9 inches minimum
Parking Islands:	9 inches minimum with additional 6 inches Minimum above top of curb.
Sod, Seed or Turf:	9 inches minimum

2. Install amended Planting Soil Mix to the following depths:

Groundcover Beds:	12 inches minimum
Perennial Beds:	12 inches minimum
Shrub Beds:	24 inches minimum
Tree Pits:	4 inches below bottom of root ball and expanded root balls

3. Alternatively, the CONTRACTOR may amend topsoil and/or prepare soil mix, prior to placement.

4. Do not install topsoil over crushed limestone. If crushed limestone is encountered in the substrate, immediately contact the ENGINEER for determination of procedure.

5. Where tree pits are installed over crushed limestone base, enlarge tree pit to 5 times the soil volume shown in the Drawings.

6. Where accepted soil is more than 75 percent clay-silt prior to amendment, enlarge tree pit to ten foot diameter. Mulch ring may be installed to 6 foot diameter. Tree Pits: Excavate individual tree pits to a depth necessary to accommodate plantings as specified and shown on the Drawings. Backfill with specified planting soil mix. Where tree pits occur in plant beds, beds must be excavated deep enough to accommodate the tree pit, including soil area between bottom of the root ball and top of the drainage course.

E. Over Drainage Courses: Planting soil must be placed over drainage courses as shown on the Drawings. Where subgrades pitch, beds vary as to depth of planting soil mix. Where tree pits occur in plant beds, beds must be excavated deep enough to accommodate not only the drainage course, but also the tree pit, including soil area between bottom of the root ball and top of the drainage course.

F. Landscape Excavation: CONTRACTOR must excavate topsoil placed in all planting areas, and all individual plant and tree pits for the purpose of preparing soil mix. Alternatively, the CONTRACTOR may spread amendments on the surface of the topsoil and prepare soil by thoroughly mixing in soil amendments, carried to the proposed subgrade elevations or dimensioned depths below finished grade shown on the Drawings and as specified herein.

G. Water Retention and Dewatering: Excavation conditions permitting retention of water for more than 24 hours must not occur. At all times during the excavation period and until all soil mix is placed and Work is complete, provide ample means and equipment with which to remove promptly and dispose of properly all water entering any excavation or other part of the Work. Water pumped or drained from the Work herein must be disposed of in a suitable manner without damage to adjacent property or to other Work under construction. Do not place soil mix on areas where free water is standing on frozen subsoil areas.

H. Soil Preparation for Turf: Evenly distribute, and thoroughly and uniformly mix pH adjusters and fertilizer into the top layer of dry topsoil by disking or harrowing. Apply pH adjustment per soil test recommendations.

1. Seeded Turf: Incorporate 6-24-24 (NPK) commercial fertilizer, applied at rate of 180 pounds per acre.

2. Hydroseeded Turf: Incorporate 6-24-24 (NPK) fertilizer at rate of 180 pounds per acre into hydroseed slurry, not topsoil.

I. Prepare Planting Soil Mixes: Topsoil must be dry prior to amending. Clean topsoil of lumps, stones, debris and noxious weeds before mixing. Mix specified soil amendments at rates according to soil test recommendations. Mix pH adjusters with dry soil prior to adding any fertilizers. Fertilize according to soil test results, and with superphosphate as specified. For pit and trench backfill, excavate plant beds and mix planting soil prior to backfilling. For planting beds, mix planting soil either prior to planting or apply to surface of topsoil and mix thoroughly before planting. Provide amended Supplemental Topsoil to achieve soil mix volumes and ratios required to meet finish grades.

1. Do not excavate individual plant pits for shrub planting unless they are drawn as individual shrubs surrounded by turf. All shrub plantings must be in planting beds or in planting trenches, completely backfilled with planting soil mix.

J. Placing Planting Soil: Provide, place, spread and rough grade specified planting soil mixes to depths specified in all areas to be planted. Place no planting soil above the foundation line of any adjacent structure. Notify ENGINEER immediately if such conditions exist, including conditions that would not allow enough space for required drainage courses and planting soils to be installed below the top of foundation. Place enough soil mix to meet finish grades within specified tolerances, including any berms or rolls to grades as described on the Drawings. Promptly plant and mulch all areas which have had topsoil amended to alleviate clay conditions (to avoid a cement or adobe crust formation).

K. Finish Grading: Rake smooth and finish grade all planted areas. Crown of berms must be raked smooth so that they form a convex curve, not a point. Any undulations or irregularities on the surface must be raked to smooth planes prior to planting. All areas must slope to drain as indicated on Drawings. Elevations in landscape areas after planting must be +/- .10 foot of the finished grades shown on the Drawings.

L. Final Grades: Final finish grades of all planting areas, including beds and pits, after settling, must be as shown on the Drawings. Required final grades and elevations, must be as shown by figured elevations or dimensioned depths; or where none are indicated, final grades and elevations must be even lines or planes between such figured elevations, or between figured elevations and tops of paving or curbs. Verify grades established during final grading as being true to finish contours shown, and maintain such areas until the effective date to begin any operations.

3.3 REPAIR AND CLEANING

A. Disposal of Materials: All unclassified excavated cut material and any fill material in excess of required volumes, including excess topsoil, supplemental topsoil, and soil mix materials, must be removed and legally disposed of off the site with consent of the ENGINEER

B. Repair: Maintain grades and slopes until plantings are established. Repair and re-establish grades in settled areas. Repair any washouts, eroded areas or areas damaged otherwise immediately to specified requirements.

C. Clean-Up: Remove and properly dispose of any resultant dirt and debris. Sidewalks and other paved areas must be kept clean. Upon completion of Work, promptly remove all equipment and unused materials provided for Work, and put the premises in a neat and clean condition.

D. Review: Review required grades with ENGINEER prior to planting operations, and again after planting operations.

END OF SECTION

(NO TEXT FOR THIS PAGE)

SECTION 32 92 00

RESTORATION WILDFLOWERS AND GRASSES (OUTFALL FACILITIES)

PART 1 - GENERAL

1.1 RELATED DOCUMENTS

A. Drawings and general provisions of the Contract, including General and Supplementary Conditions and Division 1 Specification Sections, apply to this Section.

1.2 SUMMARY

A. Section Includes:

1. Turf Seeding.
2. Meadow grasses and wildflowers.
3. Turf renovation.
4. Erosion-control material(s).

B. Related Requirements:

1. Section 32 91 13, Soil Preparation for planting soil.
2. Section 32 93 00, Exterior Plants for trees, shrubs, ground covers, and other plants

1.3 DEFINITIONS

A. Finish Grade: Elevation of finished surface of planting soil.

B. Maintenance Period: Begin maintenance immediately after each area is planted and continue for a period of one full growing season after all planting under this section is completed

C. Pesticide: A substance or mixture intended for preventing, destroying, repelling, or mitigating a pest. Pesticides include insecticides, miticides, herbicides, fungicides, rodenticides, and molluscicides. They also include substances or mixtures intended for use as a plant regulator, defoliant, or desiccant.

D. Pests: Living organisms that occur where they are not desired or that cause damage to plants, animals, or people. Pests include insects, mites, grubs, mollusks (snails and slugs), rodents (gophers, moles, and mice), unwanted plants (weeds), fungi, bacteria, and viruses.

1. Planting Soil: Existing, on-site soil; imported soil; or manufactured soil that has been modified with soil amendments and perhaps fertilizers to produce a soil mixture best for plant growth. See Section 32 91 13, Soil Preparation and drawing designations for planting soils.

E. Subgrade: The surface or elevation of subsoil remaining after excavation is complete, or the top surface of a fill or backfill before planting soil is placed.

1.4 PREINSTALLATION MEETINGS

A. Preinstallation Conference: Conduct conference at Project site prior to Work commencement.

1.5 INFORMATIONAL SUBMITTALS

A. Qualification Data: For landscape Installer.

B. Certification of Grass Seed: Certification of seed analysis, germination rate, and inoculation:

1. Certify that each lot of seed has been tested by a testing laboratory certified in seed testing, within 6 months of date of delivery. Include with certification:

a. Name and address of laboratory.

b. Date of test.

c. Lot number for each seed specified.

d. Test results: (i) name, (ii) percentages of purity and of germination, and (iii) weed content for each kind of seed furnished.

2. Mixtures: Proportions of each kind of seed.

C. Seed Inoculant Certification: Bacteria prepared specifically for legume species to be inoculated.

D. Product Certificates: For fertilizers, from manufacturer.

E. Pesticides and Herbicides: Product label and manufacturer's application instructions specific to Project.

1.6 CLOSEOUT SUBMITTALS

A. Maintenance Data: Recommended procedures to be established by OWNER for maintenance of turf and grassland meadows during a calendar year. Submit before expiration of required maintenance periods.

1.7 QUALITY ASSURANCE

A. Installer Qualifications: A qualified landscape installer whose work has resulted in successful turf and grassland meadow establishment.

1. Professional Membership: Installer shall be a member in good standing of either the Professional Landcare Network or the American Nursery and Landscape Association.
2. Experience: Five years' experience in conservation seed installation in addition to requirements in Section 01 40 45, Quality Control.

3. Installer's Field Supervision: Require Installer to maintain an experienced full-time supervisor on Project site when work is in progress.

4. Personnel Certifications: Installer's field supervisor shall have certification in one of the following categories from the Professional Landcare Network:

   a. Landscape Industry Certified Technician - Exterior.

   b. Landscape Industry Certified Lawncare Manager.

   c. Landscape Industry Certified Lawncare Technician.

5. Pesticide Applicator: State licensed, commercial.

1.8 DELIVERY, STORAGE, AND HANDLING

A. Seed and Other Packaged Materials: Deliver packaged materials in original, unopened containers showing weight, certified analysis, name and address of manufacturer, and indication of compliance with state and Federal laws, as applicable.

B. Bulk Materials:

1. Do not dump or store bulk materials near structures, utilities, walkways and pavements, or on existing vegetated areas or plants.

2. Provide erosion-control measures to prevent erosion or displacement of bulk materials; discharge of soil-bearing water runoff; and airborne dust reaching adjacent properties, water conveyance systems, or walkways.

3. Accompany each delivery of bulk materials with appropriate certificates.

1.9 FIELD CONDITIONS

A. Planting Restrictions: Plant during one of the following periods. Coordinate planting periods with initial maintenance periods to provide required maintenance from date of planting completion.

1. Spring Planting: April 15 to June 15.

2. Fall Planting: September 15 to November 15.

B. Weather Limitations: Proceed with planting only when existing and forecasted weather conditions permit planting to be performed when beneficial and optimum results may be obtained. Apply products during favorable weather conditions according to manufacturer's written instructions.

PART 2 - PRODUCTS

2.1 SEED

A. Grass Seed: Fresh, clean, dry, new-crop seed complying with AOSA's "Rules for Testing Seeds" for purity and germination tolerances.

B. Seed Species:

1. Quality: State-certified seed of grass species as listed below for solar exposure.

2. Quality: Seed of grass species as listed below for solar exposure, with not less than 85 percent germination, not less than 95 percent pure seed, and not more than 0.5 percent weed seed.

a. See Drawings for seed species, percentages by weight, and recommended application rates.

2.2 MEADOW GRASSES AND WILDFLOWERS

A. Wildflower and Grass Seed: Fresh, clean, and dry new seed, of mixed species.

1. See Drawings for seed species, percentage by weight, and application rates.

B. Seed Carrier: Inert material, sharp clean sand or perlite.

2.3 FERTILIZERS

A. Commercial Fertilizer: Commercial-grade complete fertilizer of neutral character, consisting of fast- and slow-release nitrogen, 50 percent derived from natural organic sources of urea formaldehyde, phosphorous, and potassium in the following composition:

1. Composition: Nitrogen, phosphorous, and potassium in amounts recommended in soil reports from a qualified soil-testing laboratory.

B. Slow-Release Fertilizer: Granular or pelleted fertilizer consisting of 50 percent water-insoluble nitrogen, phosphorus, and potassium in the following composition:

1. Composition: Nitrogen, phosphorous, and potassium in amounts recommended in soil reports from a qualified soil-testing laboratory.

2.4 MULCHES

A. Straw Mulch: Provide air-dry, clean, mildew- and seed-free, salt hay or threshed straw of wheat, rye, oats, or barley.

1. Apply on slopes less than 25 percent.

2.5 PESTICIDES

A. General: Pesticide, registered and approved by the EPA, acceptable to authorities having jurisdiction, and of type recommended by manufacturer for each specific problem and as required for Project conditions and application. Do not use restricted pesticides unless authorized in writing by authorities having jurisdiction.

B. Pre-Emergent Herbicide (Selective and Nonselective): Effective for controlling the germination or growth of weeds within planted areas at the soil level directly below the mulch layer.

C. Post-Emergent Herbicide (Selective and Nonselective): Effective for controlling weed growth that has already germinated.

2.6 EROSION-CONTROL MATERIALS

A. Erosion-Control Blankets: Biodegradable, after minimum of 18 months, wood excelsior, straw, or coconut-fiber mat enclosed in a photodegradable plastic mesh. Include manufacturer's recommended biodegradable staples, minimum 6 inches long.

1. Apply on slopes greater than 25 percent.

PART 3 - EXECUTION

3.1 EXAMINATION

A. Examine areas to be planted for compliance with requirements and other conditions affecting installation and performance of the Work.

1. Verify that no foreign or deleterious material or liquid such as paint, paint washout, concrete slurry, concrete layers or chunks, cement, plaster, oils, gasoline, diesel fuel, paint thinner, turpentine, tar, roofing compound, or acid has been deposited in soil within a planting area.

2. Suspend planting operations during periods of excessive soil moisture until the moisture content reaches acceptable levels to attain the required results.

3. Uniformly moisten excessively dry soil that is not workable or which is dusty.

B. Proceed with installation only after unsatisfactory conditions have been corrected.

C. If contamination by foreign or deleterious material or liquid is present in soil within a planting area, remove the soil and contamination as directed by Architect and replace with new planting soil.

3.2 PREPARATION

A. Protect structures; utilities; sidewalks; pavements; and other facilities, trees, shrubs, and plantings from damage caused by planting operations.

1. Seeding shall occur after the installation of trees, shrubs, and perennials, and finished grading is complete.

2. Disturbances in finished grading, such as tire runnels, shall be smoothed and finely graded prior to any erosion control fabric, mulch, or seed installation.

3. Protect grade stakes set by others until directed to remove them.

B. Install erosion-control measures to prevent erosion or displacement of soils and discharge of soil-bearing water runoff or airborne dust to adjacent properties and walkways.

3.3 SEED AREA PREPARATION

A. General: Prepare planting area for soil placement and mix planting soil according to Section 32 91 13, Soil Preparation.

B. Placing Planting Soil: Place stockpiled topsoil in all areas to be seeded. Imported soils shall be placed. Soil amendments, if required and added at recommended rates per site soil analysis, shall be blended with soil in place prior to seed installation.

C. Moisten prepared area before planting if soil is dry. Water thoroughly and allow surface to dry before planting. Do not create muddy soil.

D. Before planting, obtain RESIDENT PROJECT REPRESENTATIVE acceptance of finish grading; restore planting areas if eroded or otherwise disturbed after finish grading.

3.4 PREPARATION FOR EROSION-CONTROL MATERIALS

A. For erosion-control blanket or mesh, install from top of slope, working downward, and as recommended by material manufacturer for site conditions. Fasten as recommended by material manufacturer.

B. Moisten prepared area before planting if surface is dry. Water thoroughly and allow surface to dry before planting. Do not create muddy soil.

3.5 SEEDING

A. Sow seed with spreader or seeding machine. Do not broadcast or drop seed when wind velocity exceeds 5 mph.

1. Evenly distribute seed by sowing equal quantities in two directions at right angles to each other.

2. Do not use wet seed or seed that is moldy or otherwise damaged.

3. Do not seed against existing trees. Limit extent of seed to outside edge of planting saucer.

B. See Drawings for recommended application of general seed mix rates.

C. See Drawings for recommended cover crop species based on time of planting and recommended application rates

D. Rake seed lightly into top 1/8 inch of soil, roll lightly, and water with fine spray.

E. Protect seeded areas with slopes at or exceeding 25 percent with erosion-control blankets installed and stabilized according to manufacturer's written instructions.

F. Protect seeded areas with slopes less than 25 percent by spreading straw mulch. Spread uniformly at a minimum rate of 2 tons/acre to form a continuous blanket 1-1/2 inches in loose thickness over seeded areas. Spread by hand, blower, or other suitable equipment.

G. Anchor straw mulch by crimping into soil with suitable mechanical equipment.

H. Protection in paragraph below is usually required in warm, dry climates.

I. Time limit and option in first paragraph below are requirements of TPI's "Guideline Specifications to Turfgrass Sodding."

J. Retain subparagraph below if required. Steel staple anchors are commonly used.

3.6 WILDFLOWER AND GRASSES RENOVATION

A. Renovate existing or newly established groundcover damaged by CONTRACTOR'S operations, such as storage of materials or equipment and movement of vehicles.

1. Reestablish groundcover where settlement or washouts occur or where minor regrading is required.

2. Install new planting soil as required.

B. Remove existing vegetation from diseased or unsatisfactory groundcover areas; do not bury in soil.

C. Remove topsoil containing foreign materials, such as oil drippings, fuel spills, stones, gravel, and other construction materials resulting from CONTRACTOR'S operations, and replace with new planting soil.

D. Remove weeds before seeding. Where weeds are extensive, apply selective herbicides as required. Do not use pre-emergence herbicides.

E. Remove waste and foreign materials, including weeds, soil cores, grass, vegetation, and turf, and legally dispose of them off OWNER'S property.

F. Till stripped, bare, and compacted areas thoroughly to a soil depth of 6 inches.

G. Apply soil amendments, per site soil analysis recommendations, and initial fertilizer required per site soil analysis recommendations for establishing new seed stand and mix thoroughly into top 4 inches of existing soil. Install new planting soil or stockpiled topsoil to fill low spots and meet finish grades.

1. Soil Amendment(s): According to requirements of Section 32 91 13, Soil Preparation.

2. Initial Fertilizer: Commercial fertilizer shall be used during a fall planting. Slow-release fertilizer shall be used in a spring planting. A Slow-release fertilizer shall be applied in the spring after a fall planting during the establishment period. All fertilizers shall be applied according to manufacturer's recommendations.

H. Apply seed and protect with straw mulch or erosion control blanket as required for newly seeded areas.

I. Water newly planted areas and keep moist until seed stand is established.

3.7 WILDFLOWER AND GRASSES EXECUTION

A. Sow seed with spreader or seeding machine. Do not broadcast or drop seed when wind velocity exceeds 5 mph.

1. Before sowing, mix seed with seed carrier at a ratio of not less than three parts seed carrier to one part seed.

2. Evenly distribute seed by sowing equal quantities in two directions at right angles to each other.

3. Do not use wet seed or seed that is moldy or otherwise damaged.

B. Sow seed at a total application rate as recommended in Drawings.

C. Brush seed into top 1/16 inch of soil, roll lightly, and water with fine spray.

D. Protect seeded areas from hot, dry weather or drying winds by applying compost mulch within 24 hours after completing seeding operations. Soak areas, scatter mulch uniformly to a thickness of 3/16 inch, and roll surface smooth.

E. Water newly planted areas and keep moist until stand is established.

3.8 WILDFLOWER AND GRASSES MAINTENANCE

A. Maintain and establish meadow by watering, weeding, mowing, trimming, replanting, and performing other operations as required to establish a healthy, viable meadow. Roll, regrade, and replant bare or eroded areas and re-mulch. Provide materials and installation the same as those used in the original installation.

1. Fill in as necessary soil subsidence that may occur because of settling or other processes. Replace materials and meadow damaged or lost in areas of subsidence.

2. In areas where mulch has been disturbed by wind or maintenance operations, add new mulch and anchor as required to prevent displacement.

3. Apply treatments as required to keep meadow and soil free of pests and pathogens or disease. Use integrated pest management practices whenever possible to minimize the use of pesticides and reduce hazards.

B. Watering: Install and maintain temporary piping, hoses, and meadow-watering equipment to convey water from sources and to keep meadow uniformly moist.

1. Moist soil conditions will exhibit fines which stick together when pinched, however soils that are too saturated will release water when squeezed. Do not saturate soils, and adjust watering frequency to rain events at site.

2. Schedule watering to prevent wilting, puddling, erosion, and displacement of seed or mulch. Lay out temporary watering system to avoid walking over muddy or newly planted areas.

3. Water meadow with fine spray at a minimum rate of 1/2 inch per week for eight weeks after planting unless rainfall precipitation is adequate.

3.9 SATISFACTORY WILDFLOWERS AND GRASSES STAND

A. Meadow or grasslands that use wildflower seed installations shall meet the following criteria as determined by Architect:

1. Satisfactory Seeded Stand: At least 50 percent of the species shall occur at a 10 percent frequency or greater within upland and basin areas at the end of maintenance period, with an overall coverage a minimum of 90 percent over any 10 square feet. area, and bare spots not exceeding two by two feet.

2. None of the three most dominant plant species within the upland and basin areas may be non-native species or weedy species. These dominant species shall not cumulatively comprise more than 5 percent of the total percent cover of seeded areas.

B. Use specified materials to reestablish meadow or grassland stand that does not comply with requirements and continue maintenance until meadow and grassland areas are satisfactory.

3.10 PESTICIDE APPLICATION

A. Apply pesticides and other chemical products and biological control agents according to requirements of authorities having jurisdiction and manufacturer's written recommendations. Coordinate applications with OWNER'S operations and others in proximity to the Work. Notify OWNER before each application is performed.

B. Post-Emergent Herbicides (Selective and Nonselective): Apply only as necessary to treat already-germinated weeds and according to manufacturer's written recommendations.

3.11 CLEANUP AND PROTECTION

A. Promptly remove soil and debris created by turf work from paved areas. Clean wheels of vehicles before leaving site to avoid tracking soil onto roads, walks, or other paved areas.

B. Remove surplus soil and waste material, including excess subsoil, unsuitable soil, trash, and debris, and legally dispose of them off OWNER'S property.

C. Erect temporary fencing or barricades and warning signs as required to protect newly planted areas from traffic. Maintain fencing and barricades throughout initial maintenance period and remove after plantings are established.

D. Remove nondegradable erosion-control measures after grass establishment period.

3.12 MAINTENANCE SERVICE

A. Meadow Maintenance Service: Provide full maintenance by skilled employees of landscape Installer. Maintain as required in "Meadow Maintenance" Article. Begin maintenance immediately after each area is planted and continue until acceptable meadow is established, but for not less than maintenance period below.

1. Maintenance Period: One full growing season from date of Substantial Completion

END OF SECTION

SECTION 32 93 01

EXTERIOR PLANTS (OUTFALL FACILITIES)

PART 1 GENERAL

1.1 REFERENCES

A. The following is a list of standards which may be referenced in this section:

1. American Association of Nurserymen (AAN): Z60.1, Nursery Stock.

2. Federal Housing Administration (FHA), Section 1103-103.

3. Hortus Third, Liberty Hyde Bailey, Hortorium, 1976.

1.2 DEFINITIONS

A. Measurement:

1. In size grading Balled and Burlapped (B & B), caliper takes precedence over height.

2. Take trunk caliper at Diameter at Breast Height (DBH) or 48 inches above the ground level (up to and including 4-inch caliper size specified trees).

3. Container Trees: Measure size of container-grown stock by height and width of plant.

4. Container Shrubs and Herbaceous Perennials: Measure pot size, not top growth.

1.3 SUBMITTALS

A. Action Submittals:

1. Plant materials source list with supplier name, address, number of plants procured from each nursery, and order date.

2. Photographs showing a minimum of one plant specimen per species which generally represents overall size, health, and quality of all plants to be installed. Photographs shall be of specific plants to be installed. Stock photos will not be accepted.

3. Product data on manufactured products specified.

4. Subsoil Drainage Plan: For plant pits and beds if soil percolation testing results in standing water after 24 hours.

5. Mulch: For any off-site mulch sources provide a 1-quart (1-liter) volume of each organic mulch required; in sealed plastic bags labeled with composition of materials by percentage of weight and source of mulch. Each Sample shall be typical of the lot of material to be furnished, provide an accurate representation of color, texture, and organic makeup.

B. Informational Submittals:

1. Soil percolation test results.

2. Operation and Maintenance Data:

a. As specified in Section 01 78 23 - Operation and Maintenance Data.

b. Maintenance Plan for storage, planting, care, and general maintenance of each type of plant for 1 growing season.

3. Special guarantee.

1.4 Quality assurance

A. Installer Qualifications: A qualified landscape Installer whose work has resulted in successful establishment of plants.

1. Professional Membership: Installer shall be a member in good standing of either the Professional Landcare Network or the American Nursery and Landscape Association

2. Experience: Five years' experience in landscape installation.

3. Installer's Field Supervision: Require Installer to maintain an experienced full-time supervisor on Project site when work is in progress.

4. Personnel Certifications: Installer's field supervisor shall have certification in the following categories from the Professional Landcare Network: Certified Landscape Technician – Exterior, with installation and maintenance specialty area(s).

5. Pesticide Applicator: State licensed, commercial.

B. Soil Analysis: For each unamended soil type, furnish soil analysis and a written report by a qualified soil-testing laboratory.

1. The soil-testing laboratory shall oversee soil sampling.

2. Report suitability of tested soil for plant growth.

   a. State recommendations for nitrogen, phosphorus, and potash nutrients and soil amendments to be added to produce satisfactory planting soil suitable for healthy, viable plants.

   b. Report presence of problem salts, minerals, or heavy metals; if present, provide additional recommendations for corrective action.

C. Provide quality, size, genus, species, and variety of plants indicated, complying with applicable requirements in ANSI Z60.1.

D. Measurements: Measure according to ANSI Z60.1. Do not prune to obtain sizes.

   1. Shrubs: Measure with branches and trunks in their normal position. Take height measurements from or near the top of the root flare for field-grown stock and container grown stock. Measure main body of shrub for height and spread; do not measure branches or roots tip to tip.

   2. Other Plants: Measure with stems, petioles, and foliage in their normal position.

E. Preinstallation Conference: Conduct conference at project site.

1.5 DELIVERY, STORAGE, AND HANDLING

A. Cover plants during shipment with a tarpaulin or other suitable covering to minimize drying.

B. Balled and Burlapped Plants: Wrap each ball firmly with burlap and securely bind with twine, cord, or wire for shipment and handling. Drum-lace balls with a diameter of 30 inches or more.

C. Packaged Materials: Deliver packaged materials in original, unopened containers showing weight, certified analysis, name and address of manufacturer, and indication of conformance with state and federal laws if applicable.

D. Bulk Materials:

   1. Do not dump or store bulk materials near structures or utilities. Materials shall not be stored on walkways and pavements, or on existing turf areas or plants that are to remain, be protected, and are not designated within construction staging limits.

   2. Provide erosion-control measures to prevent erosion or displacement of bulk materials, discharge of soil-bearing water runoff, and airborne dust reaching adjacent properties, water conveyance systems, or walkways.

3. Accompany each delivery of bulk soil amendments with appropriate certificates.

E. Do not prune plants prior to delivery. Protect bark, branches, and root systems from sun scald, drying, wind burn, sweating, whipping, and other handling and tying damage. Do not bend or bind-tie plants in such a manner as to destroy their natural shape. Provide protective covering of plants during shipping and delivery. Do not drop plants during delivery and handling.

F. Handle planting stock by root ball, not trunk or branches.

G. Deliver plants after preparations for planting have been completed, and install immediately. If planting is delayed more than six hours after delivery, set plants in their appropriate aspect (sun, filtered sun, or shade), protect from weather and mechanical damage, and keep roots moist.

1.6 PROJECT CONDITIONS

A. Field Measurements: Verify actual grade elevations, service and utility locations, and dimensions of plantings and construction contiguous with new plantings by field measurements before proceeding with planting work.

B. Interruption of Existing Services or Utilities: Do not interrupt services or utilities to facilities occupied by Owner or others unless permitted under the following conditions and then only after arranging to provide temporary services or utilities according to requirements indicated:

1. Notify Owner no fewer than three days in advance of proposed interruption of any service or utility.

2. Do not proceed with interruption of services or utilities without Owner’s written permission.

C. Weather Limitations: Proceed with planting only when existing and forecasted weather conditions permit planting to be performed when beneficial and optimum results may be obtained. Apply products during favorable weather conditions according to manufacturer's written instructions and warranty requirements.

1.7 SPECIAL GUARANTEE

A. Provide extended guarantee or warranty, with Owner named as beneficiary, in writing, as special guarantee. Special guarantee shall provide for removal and replacement with new plants those transplanted or newly planted plants found defective or to be dead or not in a vigorous, thriving condition during a period of one full growing season after the date of Substantial Completion. Duties and obligations for correction or removal and replacement of defective Work as specified in the General Conditions.

B. Replace defective plants with new plants free of dead or dying branches and branch tips, and bearing foliage of a normal density, size, and color. Closely match new plants to adjacent specimens of the same species and meet requirements of this Specification.

C. Plant replacement plants that die during a season unfavorable for planting during first month of next favorable planting season.

1. Replace plants that are more than 25 percent dead or in an unhealthy condition at the end of warranty period.

2. A limit of one replacement of each plant will be required except for losses or replacements due to failure to comply with requirements.

3. Provide extended warranty for period equal to original warranty period for replacement plant material.

4. Plants, planting areas, or planting accessories that have migrated or washed away shall be returned to conditions accepted at Substantial Completion, which may include replacement and/or relocation, for a period of 2 growing seasons after Substantial Completion.

D. Plants damaged or lost due to Project (or any part thereof) occupancy, vandalism, or acts of neglect by others are not subject to this special guarantee.

1.8 MAINTENANCE

A. Commence to maintain plant life immediately after planting and maintain for a minimum of one year, and until plants are well established and exhibit a vigorous growing condition through special guarantee period.

B. In accordance with accepted Submittal on care and maintenance of plants and as follows:

1. Maintain by watering, pruning, cultivating, and weeding as required for healthy growth.

2. Tighten and repair stake and guy supports and reset trees and shrubs to proper grades or vertical position as required.

3. Remove guys, stakes, and other supports at end of hurricane season after the full year of maintenance service.

4. Maintenance includes temporary protection fences, barriers, and signs as required for protection.

5. Coordinate watering to provide deep root watering to newly installed trees.

1.9 SCHEDULING AND SEQUENCING

A. Plant Deliveries: Notify Engineer at least 1 day in advance of each delivery.

B. Plant trees and shrubs after final grades are established and before planting of lawns or grasses.

PART 2 PRODUCTS

2.1 PLANT MATERIALS

A. Provide quantity, size, genus, species, and variety of trees and shrubs indicated; comply with applicable requirements of AAN Z60.1.

B. Nomenclature (Names of Plants): In accordance with “Hortus Third”.

C. Quality and Size:

1. Nursery-grown, habit of growth normal for species. Florida grade #1 or better.

2. Sound, healthy, vigorous, and free from insects, diseases, and injuries.

3. Equal to or exceeding measurements specified in plant list. Measure plants before pruning with branches in normal position. Plants shall not be pruned to meet size specifications or form

4. Root System of Container-Grown Plants: Well developed and well distributed throughout the container, such that the roots visibly extend to the inside face of the growing container.

5. Perform necessary pruning at time of planting.

6. Sizes: Dimensional relationship requirements of AAN Z60.1 for kind and type of plants required.

7. Balled and Burlapped Plants: Firm, intact ball of earth encompassing enough of the fibrous and feeding root system to enable full plant recovery.

   a. Ball Size: AAN Z60.1.

8. Container-Grown Plants: Self-established root systems, sufficient to hold earth together after removal from container, without being root bound.

   a. Stock: Grown in delivery containers for at least 6 months but not over 2 years. Roots shall not be root bound and not comprise more than 50 percent of root ball volume.

9. Label at least one tree and shrub of each variety with securely attached waterproof tag bearing legible designation of botanical and common name.

D. Plant List: On Drawings.

E. Replacement Shrubs and Trees: Same species, size, and quality as specified for plant being replaced, except existing trees larger than 4-inch caliper may be replaced with 4-inch caliper trees.

2.2 ANTIDESICCANT

A. Provide transpiration retarding material to be used where any plant material is moved during the growing season.

B. Products:

1. Foliguard.

2. Wiltpruf.

3. Or approved equal.

2.3 GUYING, STAKING, AND WRAPPING MATERIALS

A. Wood Stake: Minimum 2 inches by 2 inches by 8 feet.

B. Tree Ties: No. 4 chainlock tree ties as manufactured by Green Brothers, Ltd.

C. Guy Wires: Galvanized, 12-gauge, ductile steel.

D. Flags:

1. Wood: 1/2 inch by 3 inches by 12 inches, with 3/8-inch hole centered 1-1/2 inches from each end, painted white.

2. Sheet Metal: 1-1/2 inch with clipped corners and both ends punched, painted white.

E. Hose: Two-ply, reinforced rubber garden hose, not less than 1/2-inch diameter, new or used.

F. Wrapping Material: Heavy crepe paper.

1. Burlap: Of first quality, minimum 8 ounces in weight, not less than 6 inches nor more than 10 inches in width.

G. Deadmen: 6 inches by 6 inches by 3 feet long pressure treated pine timbers.

2.4 MULCH

A. Shredded Recycled Hardwood Mulch: Well composted, stable, and weed free organic matter, pH range of 5.5 to 8; moisture content 35 to 55 percent by weight, 100 percent passing through 1-inch (25 mm) sieve; soluble salt content of 2 to 5 decisiemens/m; not exceeding 0.5 percent inert contaminants and free of substances toxic to plantings.

B. See Drawings for depth

C. Free from noxious weed seed and foreign material harmful to plant growth.

2.5 PEAT MOSS

A. Sphagnum peat moss, fibrous type with neutral pH.

2.6 HERBICIDE

A. Selective, pre-emergent, surface-applied.

B. Manufacturers and Products:

1. Eli Lilly and Co.; Surflan.

2. Thompson-Hayward Chemical Co.; Casoron.

3. Or approved equal.

2.7 PLANTING SOIL MIX

A. Top soil shall be stockpiled and used as planting soil.

B. Proportion by Weight: 3/4 approved top soil with 1/4 approved organic matter.

2.8 FERTILIZER

A. Commercial, complete, of neutral character; in granular, packet, or pellet form, 35 to 80 percent of nitrogen slow release.

1. Minimum: 10 percent available nitrogen, 3 percent to 5 percent phosphoric acid, and 3 percent to 5 percent soluble potash.

2.9 SOURCE QUALITY CONTROL

A. Top Soil Analysis/Testing: As specified in Section 32 91 13 - Soil Preparation.

PART 3 EXECUTION

3.1 PERCOLATION TESTS

A. Perform to determine subsoil drainage in planting areas by licensed engineer according to method specified in Minimum Property Standards For One- and Two-Unit Dwellings, FHA Section 1103-103.

B. Test Hole Depth: 30 inches.

3.2 LOCATION OF PLANTS

A. Locate new planting or stake positions as shown, unless obstructions are encountered, in which case notify Engineer.

B. See plant spacing detail on Drawings for required planting setbacks from pavement and structures.

C. Request Engineer observe locations and adjust as necessary before planting begins.

3.3 PREPARATION

A. Subsoil Drainage: Furnish for plant pits and beds after percolation test results are received. Areas within the stormwater basins will not require subsoil drainage.

B. Planting Soil: Delay mixing of amendments and fertilizer if planting will not follow preparation of planting soil within 2 days. For pit and trench type backfill, mix planting soil prior to backfilling and stockpile at Site.

C. Plants: Place on undisturbed existing soil or well-compacted backfill.

D. Trees and Shrubs:

1. Pits, Beds, and Trenches: Excavate with vertical and scarified sides.

2. B & B Trees and Shrubs: Make excavations at least twice as wide as root ball.

3. Container-Grown Stock: Excavate as specified for B & B stock, adjust for size of container width and depth.

4. Fill excavations with water and allow to percolate out prior to planting.

E. Ground Cover Beds:

1. Mix amendments and fertilizer with top soil prior to placing or apply on surface of top soil and mix thoroughly before planting.

2. Scarify top soil to a depth of 4 to 6 inches.

3. Establish finish grading of soil. Rake areas to smooth and create uniform texture and fill depressions.

4. Moisten.

3.4 PLANTING

A. Plant trees before planting surrounding smaller shrubs and ground covers. Adjust plants with most desirable side facing toward the prominent view.

B. Remove stem girdling roots and kinked roots. Remove injured roots by cutting cleanly; do not break.

C. Place in pit by lifting and carrying by its ball (do not lift by branches or trunk). Lower into pit. Set straight and in pit center with top of rootball 1 to 2 inches above adjacent finish grade. Do not cover root flare with soil.

D. Container-Grown Plants: Remove containers, slash edges of rootballs from top to bottom at least 1-inch deep. Lower into pit. Set straight and in pit center with top of rootball 1 to 2 inches above adjacent finish grade. Do not cover root flare with soil.

E. Shrubs and Ground Covers: Set out and space ground covers and shrubs, as indicated on plans, in even rows with triangular spacing. Soldiering lines or grid spacing of plants will not be accepted.

F. Ground Covers: Dig planting holes through mulch with one of the following: hand trowel, shovel, bulb planter, or hoe. Split biodegradable pots or remove nonbiodegradable pots. Root systems of all potted plants shall be split or crumbled. Plant so roots are surrounded by soil below the mulch. Set potted plants so top of root ball is even with existing grade. Do not cover root flare with soil.

G. Water thoroughly after planting, taking care not to cover plant crowns with wet soil.

3.5 BACKFILLING

A. Backfill with planting soil, except where existing soil is suitable according to top soil analysis.

B. B & B Plants:

1. Partially backfill pit to support plant. Remove burlap and binding from sides and tops of B & B plants, do not pull burlap from under balls.

2. When excavation is approximately 2/3 full, water thoroughly before placing remainder of backfill to eliminate air pockets even if it is raining. Finish backfilling pit sides.

3. Never cover top of root ball or root flare with soil.

3.6 GUYING, STAKING, AND WRAPPING

A. Support trees, only if they will not stand on their own, immediately after planting to maintain plumb position. Trees which can stand unassisted shall not be supported with guying and staking.

B. Guying: Support deciduous trees over 4 inches in caliper and all coniferous trees with four guys equally.

C. Staking: Support deciduous trees 4 inches in caliper or less with stakes spaced equally about each tree. Small trees shall have a minimum of three stakes. Large trees shall have a minimum of four stakes.

D. Wrapping: Spirally wrap palm tree trunks with a minimum of five layers palm trees under wood battens Wrap neatly and snug. Hold battens in place with a minimum two rows of bands or straps at top and bottom.

3.7 FERTILIZER

A. Add as top dressing depending on plant size and manufacturer's recommendation.

B. Commercial:

1. Trees: 1/2 pound of 10:6:4 fertilizer per-inch of trunk diameter.

2. Shrubs: 1/4 pound of 10:6:4 fertilizer per foot of height or spread per plant, or 3 to 5 pounds of 10:6:4 fertilizer per 100 square feet of bed area.

3. Ground Cover: 3 pounds of 10:6:4 fertilizer per 100 square feet of bed area.

3.8 MULCHING

A. Cover planting beds and area of saucer around each plant with 2-inch thick layer of Recycled Hardwood mulch within 2 days after planting. Saturate planting area with water.

B. Mulch backfilled surfaces of planting areas and other areas indicated.

1. Trees in Turf Areas: Apply mulch throughout plant bed to an average thickness of 2 inches. Do not place mulch within 6 inches of trunks.

2. Mulch in Planting Areas and Masses: Apply 2-inch thickness of mulch over whole surface of planting area, and finish level with adjacent finish grades. Do not cover root flares with mulch.

3.9 PRUNING AND REPAIR

A. Prune only after planting and in accordance with standard horticultural practice to preserve natural character of the plant. Perform in presence of Engineer. Remove all dead wood, suckers, and broken or badly bruised branches. Use only clean, sharp tools. Do not cut lead shoot.

3.10 WEED CONTROL

A. Maintain a weed-free condition within planting areas. Apply pre-emergent selective herbicide to mulched beds at manufacturer's recommended rate of application.

B. Undesirable plant removal will be completed by hand whenever practical or as specified in the specifications and permits. If herbicides will be required within 50-feet of the Root River, only herbicides labeled for application in aquatic sites shall be applied. Proper selective herbicide procedures shall be performed by a trained and registered aquatic applicator, licensed in accordance with the applicable commercial laws/regulations of the State of Wisconsin. No sooner than two weeks from the date of application the herbicide the Contractor shall completely remove the dead vegetation of the undesirable species and properly dispose of the dead vegetation off-site. Herbicide shall not be applied during dormancy of the target plant.

3.11 PROTECTION AND MAINTENANCE OF INSTALLED WORK

A. Maintain plantings by pruning, cultivating, watering, weeding, fertilizing, mulching, restoring planting saucers, resetting to proper grades or vertical position, and performing other operations as required to establish healthy, viable plantings. Spray or treat as required to keep trees and shrubs free of insects and disease.

B. Protect plants from damage due to landscape operations and operations of other contractors and trades. Maintain protection during installation and maintenance periods. Treat, repair, or replace damaged plantings.

3.12 CLEAN UP

A. During planting, keep adjacent paving and construction clean and work area in an orderly condition.

B. After installation and before Substantial Completion, remove nursery tags, nursery stakes, tie tape, labels, wire, burlap, and other debris from plant material, planting areas, and Project site.

END OF SECTION

SECTION 32 95 00

TRAFFIC CONTROL

PART 1 GENERAL

1.1 SUMMARY

A. Section includes: Providing labor, materials, tools, and equipment required to control traffic in accordance with Section 643 of the State Specifications, MUTCD, as shown and as specified. The Work includes, but is not limited to the following items:

1. Designate an individual responsible for traffic control maintenance including access of local traffic, and 24-hour emergency traffic control repair. Provide the name and telephone number of this individual to the RESIDENT PROJECT REPRESENTATIVE.

2. Comply with Laws and Regulations regarding closing or restricting use of public streets or highways. Do not close any public or private road, except by written permission of proper authority. Ensure the least possible obstruction to traffic and normal commercial pursuits.

3. Conduct the Work to interfere as little as possible with public travel, whether vehicular or pedestrian.

4. Whenever it is necessary to cross, close, or obstruct roads, driveways, and walks, whether public or private, provide and maintain suitable and safe bridges, detours, or other temporary expedients for accommodation of public and private travel.

5. Maintenance of traffic is not required if CONTRACTOR obtains written permission from property owner or tenant of private property, or from authority having jurisdiction over public property involved, to obstruct traffic at designated point.

6. Maintain top of backfilled trenches before they are paved to allow normal vehicular traffic to pass over. Provide temporary access driveways where required. Provide cleanup operations following immediately behind backfilling.

7. Flagging operations may be permitted on Westridge Drive, South 60th Street and Oakwood Street, with prior approval from the authority having jurisdiction over the road. The work zone is limited to 1,000 feet when flagging is utilized for traffic control.

8. When flaggers and guards are required by regulation or when deemed necessary for safety, furnish flaggers and guards with approved orange wearing apparel and other regulation traffic control devices.

9. Provide temporary pavement marking in accordance with Section 649 of the State Specifications. Consider temporary pavement marking incidental to traffic control.

10. Provide snow removal to facilitate normal vehicular traffic on public or private roads affected by construction. Perform snow removal promptly and efficiently by means of suitable equipment whenever necessary for safety, and as may be directed by proper authority.

11. Notify fire department and police department before closing streets or portion thereof. Notify said departments when streets are again passable for emergency vehicles. Do not block off emergency vehicle access to consecutive arterial crossings or dead-end streets, without written permission from fire department. Conduct operations with the least interference to fire equipment access, and at no time prevent such access.

12. Provide up to 1,250 days of Portable Changeable Message Signs (PCMS) to be located as directed by the RESIDENT PROJECT REPRESENTATIVE.

13. Road Closures:

    a. No closures are allowed on active detour routes. No closures are allowed on roads that are not physically affected by the pipe installation.

    b. The following roads can be closed at South Moorland Road for up to 2 consecutive calendar days:

        (1) Sandalwood Drive

        (2) Candlewood Lane

    c. The following roads can be closed at Durham Drive for up to 2 consecutive calendar days:

        (1) Belle Chasse Parkway

        (2) Hi View Drive

        (3) Hawks Trail

        (4) Priegel Drive

        (5) Pilgrim Drive

(6) Easy Street

(7) McShane Drive

d. The following roads can be closed at North Cape Road/CTH OO for up to 2 consecutive calendar days:

(1) Boxhorn Drive

e. The following roads can be closed at Ryan Road/CTH H for up to 2 consecutive calendar days:

(1) South 92nd Street

f. The following roads can be closed at South 60th Street for up to 2 consecutive calendar days:

(1) West Airways Avenue

(2) West Franklin Drive

g. Access must be maintained for the following roads:

(1) Schaefer Court

(2) Rausch Court

(3) West College Avenue/CTH HH

(4) Commerce Center Parkway

(5) West Janesville Road/CTH L

(6) Princeton Drive

(7) Woods Road

(8) Shultz Lane

(9) Holtz Drive

(10) Prairie Meadows Drive

(11) Weatherwood Circle

(12) South 116th Street

(13) West Loomis Road/USH 45/WIS 36

(14) South 112th Street

(15) South 96th Street

(16) South 94th Street

(17) South 80th Street

(18) South 76th Street/CTH U

(19) South 68th Street

h. The following closures to thru traffic, detours and duration limitations apply:

(1) South Westridge Drive full closure utilizing detour for 2 consecutive calendar days

(2) South Westridge Drive full closure utilizing detour for an additional 4 consecutive calendar days

(3) Moorland Road southbound closure utilizing Detour for 10 consecutive calendar days

(4) Durham Drive full closure utilizing Detour for 6 consecutive calendar days

(5) Durham Drive full closure utilizing Detour for an additional 41 consecutive calendar days

(6) North Cape Road/CTH OO full closure utilizing Detour for 50 consecutive calendar days

(7) West Ryan Road full closure utilizing Detour for 17 consecutive calendar days

(8) West Ryan Road/CTH H full closure utilizing Detour for 7 consecutive calendar days

(9) South 60th Street full closure utilizing Detour for 200 consecutive calendar days

(10) West Oakwood Road full closure utilizing detour for 2 consecutive calendar days

i. The following lane closure and durations limitations apply:

(1) Moorland Road may be restricted to one southbound lane for 90 consecutive calendar days

j. Maintain access to at least one of Pilgrim Drive, Easy Street, McShane Drive. Do not close all three concurrently but one must remain open.

k. Priegel Drive and Boxhorn Drive cannot be closed concurrently.

l. West Airways Avenue and West Franklin Drive cannot be closed concurrently.

B. Related Work Specified in Other Sections Includes, but is Not Limited to, the Following:

1. Section 01 33 00 - Submittals

2. Section 01 73 29 - Cutting and Patching

3. Section 32 12 00 - Asphalt Paving

4. Section 32 13 00 - Concrete Paving

1.2 REFERENCES

A. Codes and standards referred to in this Section are:

1. Federal Highway Administration (FHWA), Manual of Uniform Traffic Control Devices (MUTCD)

2. State of Wisconsin Department of Transportation (WisDOT), Standard Specifications for Highway and Structure Construction, including the supplemental specifications and recurring special provisions, referred to as the "State Specifications"

1.3 SUBMITTALS

A. General: Furnish submittals, including the following, as specified in Division 1.

B. Shop Drawings

1. Name and telephone number of the individual responsible for traffic control maintenance, including access of local traffic and 24-hour emergency traffic control repair.

2. A look-ahead schedule, 3 weeks in advance for anticipated closures.

PART 2 PRODUCTS

2.1 MATERIALS

A. Provide traffic control items adhering to MUTCD and the State Specifications.

PART 3 EXECUTION

Not Used

END OF SECTION

SECTION 33 05 22

HORIZONTAL DIRECTIONAL DRILLING

PART 1 GENERAL

1.1 SUMMARY

A. Section Includes: Requirements for construction of pipelines under bodies of water, wetlands, or other obstructions using horizontal directional drilling (also referred to as "HDD").

B. Related Work Specified In Other Sections Includes, but is Not Limited to, the Following:

1. Section 01 45 50 - Leakage Tests
2. Section 31 23 16 - Excavation
3. Section 31 41 00 - Shoring, Sheeting and Bracing
4. Section 33 05 23 - Jacking, Augering and Mining
5. Section 33 05 50 - Laying and Jointing Buried Pipelines
6. Section 33 05 53 - Buried High Density Polyethylene Pipe and Fittings
7. Section 33 05 70 - Locating Buried Pipelines

1.2 REFERENCES

A. Codes and standards referred to in this Section are:

1. ANSI S1.4 - Specification for Sound Level Meters

2. API Specification 13A - Specification for Oil Well Drilling Fluids Material

3. ASTM F1962 - Standard Guide for Use of Maxi-Horizontal Directional Drilling Placement of Polyethylene Pipe or Conduit Under Obstacles, Including River Crossings

4. HDD Consortium - Horizontal Directional Drilling, Good Practices Guidelines

5. ISO 3740 - Acoustics – Determination of South Power Levels of Noise Sources – Guidelines for the Use of Basic Standards

6. ISO 3744 - Acoustics – Determination of South Power Levels and Sound Energy Levels of Noise Sources Using Sound

Pressure – Engineering Methods for an Essentially Free Field Over a Reflecting Plane

1.3 SYSTEM DESCRIPTION

A. Provide pipe installed via HDD to the line and grade and within the right-of-way or easements as shown or specified.

1. Take responsibility for the design and adequacy of HDD installation details and methods not shown or specified.

2. Assure the practicality and feasibility of the HDD installation method based on the available soil and subsurface data. Take responsibility for obtaining additional borings along the pipe alignment necessary to design the proposed HDD installation.

3. Determine zone of influence, safe burial depth, and offset from existing utilities while considering drilling fluid pressure, drilling equipment, existing utility materials, and soil conditions. Assure that alignment shown provides sufficient burial depth and offset to prevent leakage to adjacent utilities or surface, or propose modifications to alignment in submittals.

1.4 SUBMITTALS

A. General: Furnish submittals, including the following, as specified in Division 1.

B. Shop Drawings, Product Data, and Information:

1. Working drawings and technical specifications of the following items:

a. Equipment and materials, including truck, drilling and pulling equipment, mud-mixing and recycle units, drilling fluid, power unit, drill pipe or sections, boring head, water pumps, slurry tanks, slurry pumps, holding and separation tanks, and filtration systems. Include size, capacity, and any modifications in technical specifications of equipment.

b. Layout of pipe and staging areas and spacing of support rollers.

c. Plan and profile of the proposed pilot drilling hole alignment, including entry and exit points and angles, and radius of curvature.

d. Grouting techniques, including equipment, pumping procedures, pressure grout types, mixtures and plug systems.

e. Muck removal, including equipment type, number, and disposal location.

f. Procedures for controlling and checking line and grade.

g. Method for detecting surface movement.

h. Hazardous chemical list and Material Safety Data Sheets (MSDS) for drilling fluid compounds and other such items.

i. Method of construction, schedule, and the sequence of operations.

2. Supplemental subsurface soil condition investigations, including additional borings and soil analysis, if applicable.

3. Notification 48 hours in advance of each phase of Work for HDD.

C. Quality Control:

1. A certificate signed and sealed by a Licensed Professional Engineer experienced in HDD and registered in the State of Wisconsin that certifies that the Licensed Professional Engineer has evaluated and approved the CONTRACTOR's HDD plan and has prepared complete design calculations and working drawings for the HDD, not specifically shown on the Drawings. Attest that the pipe wall thickness proposed is adequate for the HDD installation proposed. Provide a separate certificate for each HDD.

2. An affidavit indicating experience in accordance with the requirements of this Section.

3. Plan and profile of the actual pilot hole installed. Obtain approval prior to beginning reaming and pullback of the joined pipe string.

4. Field forms or bore logs for establishing and checking line and grade and pullback pressures.

5. Mitigation plan for critical phases and areas of HDD and potential operation induced damages to adjacent utilities or structures, including settlement, frac out, heave, and fluid leak and spills. Include provisions for containment of fluids and slurries from entering wetland jurisdictional limits shown during and after rainfall events.

6. Letters of notification to other utilities within the limits of construction.

7. Evidence of OSHA certification for the Site Safety Representative.

8. Daily logs of construction events and observations that include job, date, time, pipe length installed, location and elevation of significant soil strata boundaries and brief soil descriptions, and the following parameters every 15 minutes throughout each drill pass, back ream pass, or pipe installation

pass: drilling fluid pressure, drilling fluid flow rate, drill thrust pressure, drill pullback pressure, drill head torque, mud flow rate, and pulling forces.

9. A Boring Path Report within 14 days of the completion of the bore path in accordance with the requirements of this Section.

1.5 QUALITY ASSURANCE

A. Experience Requirements: Utilize a HDD contractor with a minimum of 5 years' experience and at least 5 projects with similar diameters, installation lengths, and ground and groundwater conditions for HDD construction with at least 3 projects where high density polyethylene (HDPE) pipe was installed with HDD techniques. Operate HDD equipment using workers experienced in HDD operations.

B. Safety Requirements: Whenever there is an emergency or stoppage of Work which is likely to endanger the excavation or adjacent structures, utilize a full work crew non-stop for 24 hours per day, 7 days per week, including weekends and holidays, until the emergency or hazardous conditions no longer jeopardize the Work and the health and safety of the general public and personnel involved in the HDD Work.

C. Environmental Protection:

1. Comply with Federal, State and local laws and regulations.

2. Make adequate provisions for handling the drilling fluids, water, mud, slurry, and cuttings at the entry and exit pits. Do not discharge these fluids to waterways, wetlands, water bodies or to the land areas involved during the construction process. When provisions for storage of drilling fluids, water, mud, slurry, or cuttings on site are exceeded, haul and dispose of these materials off-site. Do not discharge spoils to sewers or storm drains.

3. Take responsibility for environmental damage and cleanup due to discharges of slurry or other causes.

4. Place a silt fence between drilling operations and drainage, wetland, waterway or other area designated for such protection as shown or specified or required by Federal, State and local laws and regulations. Provide additional environmental protection necessary to contain any hydraulic or drilling fluids spills, including berms, liners, turbidity curtains, floating silt barriers and other measures.

1.6 DELIVERY, STORAGE AND HANDLING

A. Deliver, store and handle products and materials as specified in Division 1 and Section 33 05 50.

PART 2 PRODUCTS

2.1 MATERIALS

A. High Density Polyethylene Pipe and Fittings: Provide HDPE pipe and fittings as shown and in accordance with Section 33 05 53.

1. Provide thicker wall than shown or specified if required as determined by the CONTRACTOR's Licensed Professional Engineer registered in the State of Wisconsin for the HDD installation at no additional cost to the OWNER, considering design criteria for the installation, including the following items, and as recommended by the manufacturer. Supplement the following design criteria for factors of safety, friction factors, and other items to determine wall thickness as necessary. Consider pre-installation, installation, and post-installation loading conditions.

a. Proposed radius of curvature and resulting pull stress.

b. Buckling, considering dead load equivalent to the depth of cover shown, internal vacuum, HS-20 loading, and hydrostatic load over top of pipe to grade.

c. Working pressure equivalent to the test pressure specified in Section 33 05 50.

d. Surge pressure equivalent to the working pressure with the addition of 100 psi.

B. Tracer Wire: Provide tracer wire in accordance with Section 33 05 70.

2.2 EQUIPMENT

A. General: Use equipment in sound operation with adequate capacity, stability, and safety features in satisfactory working condition required for accomplishing the Work without evidence of undue stress or failure.

1. Use equipment in conformance with applicable Federal, State and local laws and regulations and safety requirements.

2. Employ equipment that is capable of handling the various anticipated ground conditions and is capable of:

a. Minimizing loss of earth material ahead of and around the machine and providing satisfactory support of the excavated face at times.

b. Indicating whether the amount of earth material removed is equivalent to that displaced by the advance of the machine such that the advance rate may be controlled accordingly.

3. Provide adequate secondary containment for portable storage tanks.

4. Use grips, pulling heads, and swivels compatible with the pipe material and designed to transmit the maximum rated pullback force of the equipment used without distortion. Use grips, pulling heads, and swivels designed for HDD applications.

B. Directional Drilling System:

1. General: Accomplish drilling with fluid-assist mechanical cutting. Use a mobile directional drilling system with small diameter fluid jets to fracture the soil and mechanical cutters to cut and excavate the soil as the head advances forward consisting of a road transportable field power unit, mud-mixing and recycling unit, a trailer or carriage mounted drill unit, and other appurtenant equipment necessary and capable of drilling the length as shown or specified in a single bore.

a. Use drilling equipment with a maximum sound power level of 72 decibels as defined in ANSI S1.4 at 10 feet from the equipment. Measure sound power level in accordance with ISO 3740 and ISO 3744. Diesel, electrical, or air-powered equipment is acceptable, subject to applicable Federal, State and local laws and regulations.

b. Ground, protect, and operate drilling equipment in accordance with the manufacturer's requirements for electric strike safety.

c. Water sluicing methods, jetting with compressed air, or boring and tunneling devices with vibrating type heads, and other methods that do not provide positive control of line and grade are not allowed for use on this Project.

2. Mud-Mixing and Recycling Units: Use a self-contained mud-mixing and recycle unit with a fluid storage tank, high pressure cutting fluid pumping system, and a complete bentonite and drilling fluid additive mixing system designed to provide a supply of high-pressure bentonite based cutting fluid to the drill unit capable of making changes to bentonite and drilling fluid additive concentrations during drilling in response to changing soil conditions. Use recycle unit designed to minimize the production of new cutting fluid and maximize reuse and recirculation of original cutting fluid produced to minimize spillage.

3. Drilling Fluid: Use drilling fluid consisting of a mixture of bentonite slurry with formula designed for conditions anticipated for each HDD meeting the

requirements of API Specification 13A with polymers and additives as required mixed on-site that are inert and pose no environmental risk. Use bentonite sealants and water to lubricate and seal the mini-tunnel. Obtain, transport, and store water required for drilling fluids.

4. Drill Unit: Use a drill unit of either the trailer or carriage mounted type designed to rotate and push hollow drill pipe or sections into the tunnel being created by the boring head.

5. Drill Pipe or Sections: Use drill pipe or sections of high strength S-grade steel with sufficient strength to withstand the maximum rated pullback and pushing load of the drilling equipment that permits bending to the radius of curvature required without yielding. Use drill pipe joints and end fittings that are flush and capable of transmitting the maximum rated torque, pressure, and lineal load requirement of the drilling system.

6. Boring Head: Use a boring head capable of housing a probe used by the Magnetic Guidance System.

7. Tracking Equipment: Use a Magnetic Guidance System, including probe, accelerometers, magnetometers, connector wire, interface, computer, printer, software, and power source capable of determining boring head face depth and location from surface, azimuth, and inclination and to orient the head for steering to an accuracy within 2 percent of the vertical depth and within 1 percent of the horizontal bore length such that the difference between the actual depth and machine calculated depth is not more than 1 foot per 100 feet.

8. Steering: Use instrumentation and mechanical and hydraulic deviation equipment to change the boring course capable of exiting the ground within 1 foot of the design location. Provide steering by an offset section of drill stem that causes the cutterhead to turn eccentrically about its centerline when rotating. When steering adjustments are required, rotate the cutterhead offset section toward the desired direction of travel and advance the drill stem forward without rotation. A walkover tracking system is not permitted.

9. Alarm System: Fit drilling equipment with permanent alarm system capable of detecting electric current that produces an audible alarm when the drill head nears electrified cables.

10. Control Console: Use a control console with a calibrated display to monitor the location and orientation of the boring head assembly with a wire line tracking system along a predetermined course that displays inclination, azimuth, tool face location, mud pump rates, and torque pressures.

11. Spoils Equipment: Use cutting removal system with self-contained vacuum truck of sufficient capacity to dispose of excess fluid cutting mixture and cuttings off-site.

PART 3 EXECUTION

3.1 INSTALLATION

A. General: Perform HDD as determined by the CONTRACTOR's Licensed Professional Engineer registered in the State of Wisconsin, as recommended by the pipe and equipment manufacturers, and in conformance with the Horizontal Directional Drilling, Good Practices Guidelines by the HDD Consortium and ASTM F1962.

1. Obtain authorization in writing to begin HDD from RESIDENT PROJECT REPRESENTATIVE.

2. Identify and verify location, depth, and size of existing underground utilities, structures, and facilities in the vicinity of the HDD installation that may interfere with the Work. Repair or replace utilities, structures, or facilities damaged by construction in accordance with the requirements of Section 33 05 50.

3. Do not cause leakage to adjacent utilities due to any cause, including drilling fluid pressure in the borehole. Maintain minimum pressures and flow rates during the drilling operation so as not to fracture the sub-grade material around or above the bore. Repair related damages.

4. Monitor ground surface or waterway crossing within vicinity of HDD for evidence of fluid fracture. In the event of fluid fracture, inadvertent returns, or loss during pilot hole drilling operations, stop drilling, wait 30 minutes, inject a quantity of drilling fluid with a viscosity exceeding 120 seconds as measured by a Marsh funnel and then wait another 30 minutes. If mud fracture return loss continues, do not proceed drilling operations and notify the RESIDENT PROJECT REPRESENTATIVE in writing. Proceed with the Work as authorized by the RESIDENT PROJECT REPRESENTATIVE in writing.

5. Monitor and maintain line and grade using techniques of creating or directing a borehole along a predetermined path to a specified target location.

6. Monitor nearby utilities within the zone of influence of construction (depending on the depth and diameter of the HDD hole) prior to construction to establish baseline conditions and during construction to adjust the operation and avoid damages.

7. Install the pipe in a manner that does not cause upheaval, settlement, cracking, movement, or distortion of structures or surface features, including bridge walls, rock and concrete retaining walls, channel bottoms, and other structural improvements.

8. If during an installation an obstruction is encountered which prevents installation of the pipe in accordance with the requirements of this Section, the pipe may be withdrawn by the CONTRACTOR upon the approval of the RESIDENT PROJECT REPRESENTATIVE in writing, and the bore path immediately filled with an approved material. Furnish submittals for a new installation and obtain approval before resuming the Work.

9. Protect new pipe and fittings to prevent scarring or gouging of the pipe or components. Take appropriate steps during pullback to install the HDPE pipe without damage. If the pipe is buckled or otherwise damaged, remove and replace the damaged section at no additional cost to the OWNER. Replace or repair rejected pipe, fittings, or joints in accordance with the requirements of Section 33 05 53.

B. Pilot Bore:

1. Drill pilot hole along the alignment shown and as follows:

   a. Construct a pilot bore at least 6 inches in diameter at the centerline alignment and grade as shown. Drill pilot hole vertically and horizontally as follows:

      (1) Vertical: Provide cover or clearance below channels or between existing utilities as shown or approved.

      (2) Horizontal: Within 2 feet of the centerline shown.

      (3) Obtain authorization in writing from RESIDENT PROJECT REPRESENTATIVE for deviation beyond these tolerances and revise and resubmit certificate signed and sealed by a Licensed Professional Engineer experienced in HDD and registered in the State of Wisconsin in accordance with the requirements of this Section.

2. Control the pilot bore and reaming procedure by a Magnetic Guidance System, while circulating drilling fluids to maintain an open bore.

3. If the path of the pilot bore is successfully completed, then proceed with reaming and installing pipe. If the pilot bore is not successfully completed, then do not proceed with the reaming procedure until so authorized in writing.

4. Utilize a full tail pipe upon completion of the initial pilot hole when back reaming. Protect the pilot hole from loss or collapse by the presence of the drill stem and tail pipe along the entire length of the pilot hole until installation of final HDPE pipe.

C. Pipework and Joining:

1. Provide alignment survey and layout HDPE pipe as specified in Division 1 and Section 33 05 53.

2. Haul, string, and join pipe in accordance with the requirements of Section 33 05 53 and as follows:

a. Use adequate support rollers as recommended by the pipe manufacturer to prevent overstressing the pipe while maintaining a free stress arc along the string of joined suspended pipe during pullback of the string within the manufacturer's limits. Use support rollers comprised of a non-abrasive material that will not damage the pipe or tracer wire.

b. Join pipe in a manner that does not obstruct adjacent roads, or public activities adjacent to the laydown areas.

c. If sufficient laydown area is available, join the entire length of pipe to be pulled through bore prior to commencement of pullback operation. Test joined pipe for leaks in accordance with Section 01 45 50 prior to pullback.

d. If sufficient laydown area is not available, assemble finished pipeline in as few sections as possible. Test each joined pipe sections for leaks in accordance with Section 01 45 50 and join each pipe section to the previous section prior to pullback. Take responsibility for using a drill rig with adequate pullback capacity to overcome increased frictional resistance resulting from stoppage of pipe pullback required to join pipe sections.

3. Close off lines when pipe laying is not in progress in accordance with the requirements of Section 33 05 50.

D. Reaming and Pipe Installation:

1. Enlarge pilot hole as necessary to a minimum of 1.5 times the nominal diameter of the pipe and pullback the joined pipe string.

a. Use the type of hole opener or back reamer adequate for the types of subsurface soil conditions encountered during the pilot hole drilling operation. An undersized reamer is not permitted.

b. Supply portable mud tanks and construct temporary mud pits to contain excess drill fluids and slurry material displaced during reaming and pipe installation. Do not allow unauthorized access to mud pits. Secure or stabilize mud pits against surface water runoff and containment berm failure. Dispose of drill cuttings and excess fluids off-site.

c. Keep the lead end of the pipe closed during the pullback operation.

d. Use swivel to connect the HDPE pipe and tracer wires to the drill pipe to minimize rotation of the pipe during pullback and prevent torsional stresses from occurring in the pipe. Utilize lubricated internal bearings for swivel without external contamination or over lubrication.

e. Pullback pipe in one continuous installation at a smooth and constant speed until the pipe is in final position.

f. During pullback, continuously measure the maximum pull (axial tension force) exerted on the HDPE pipe and limit to within the manufacturer's maximum recommended value so that the pipe or joints are not overstressed. Monitor support roller operation and sidebooms to assist movement of the HDPE pipe.

g. Do not exceed five percent strain on HDPE pipe during pullback.

2. Use potable water for countering pipe flotation.

3. Not less than 24 hours after the installation is complete, inject approved low strength cement slurry or flowable fill with cement into the annular space around the installed pipe approximately 50 feet at each end of the drilled pipe. Allow the fill to overflow into a containment area. Where cement slurry cannot be used, provide restraint at both ends of pipe to hold pipe in place as approved or authorized in writing by the RESIDENT PROJECT REPRESENTATIVE.

4. Following installation, backfill excavations and provide surface restoration as shown or specified.

5. Provide excavation in accordance with Section 31 23 16. Provide sheeting, underpinning, cribbing, and other related items necessary to support any structure or facility affected by the HDD operations or as otherwise required and in accordance with Section 31 41 00.

6. Use a sufficient relaxation period, as recommended by the pipe manufacturer, after the pipe is completely pulled through the bore hole and prior to the final pipe tie-in.

E. Boring Path Report: Maintain a Boring Path Report during installation recording alignment reading every 5 feet showing horizontal position (x, y) referenced to the drilled entry point, which accurately describes the location of the pilot hole, the drilled exit point, the transition points between pipe material changes, and the lowest point of the pilot hole. Show data on a dimensionally correct copy of the Drawings indicating horizontal and vertical locations at each end of the bore and at intervals of 50-foot maximum in between. Provide azimuth reading where direct overhead readings are not possible. Include project name, project location, crossing name, station, identification of drilling method used, and name, title, and company name of person collecting the data in the report.

3.2 FIELD QUALITY CONTROL

A. Cleaning: Use cleaning pigs to remove residual water and debris. After the cleaning operation, provide and run a sizing pig to check for abnormalities in the form of buckles, dents, excessive out-of-roundness, and any other deformations in the presence of the RESIDENT PROJECT REPRESENTATIVE. Confirm that no sharp anomalies exist (e.g. dents, buckles, gouges, and internal obstructions) greater than 2 percent of the nominal pipe diameter, or excessive out-of-roundness greater than 5 percent of the nominal pipe diameter. Dent locations for gauging purposes are those defined above which occur within a span of 5 feet or less. Measure pipe out-of-roundness as the percent ovality as specified in Section 33 05 23. For gauging purposes, out-of-roundness locations are those defined above which exceed a span of 5 feet. Replace or repair rejected pipe.

B. Testing: Test the installed in place pipe for leaks prior to final acceptance in accordance with Section 01 45 50.

1. If the pipe does not pass the pressure test after installation, then remove the entire pipe from the bore hole, repair the pipe, and perform pressure testing prior to reinstalling the pipe and again after reinstallation, at no additional cost to the OWNER.

END OF SECTION

SECTION 33 05 23

JACKING, AUGERING AND MINING

PART 1 GENERAL

1.1 SUMMARY

A. Section Includes: Requirements for providing carrier and casing pipes located beneath roads, highways, railroads and other structures and installed by jacking and augering or by jacking and mining.

B. Related Work Specified in Other Sections Includes, but is Not Limited to, the Following:

1. Section 31 23 16 - Excavation
2. Section 31 23 23 - Backfilling
3. Section 31 41 00 - Shoring, Sheeting and Bracing
4. Section 33 05 55 - Buried Ductile Iron Pipe and Fittings
5. Section 33 05 58 - Cathodic Protection

C. Comply with the "American Iron and Steel (AIS)" requirements as contained in Section 436 of the Consolidated Appropriations Act, 2014, further described in the Bid Form.

1.2 REFERENCES

A. Codes and standards referred to in this Section are:

1. ANSI/AWS D1.1 - Structural Welding Code – Steel

2. ASTM A139 - Standard Specification for Electric-Fusion (Arc) - Welded Steel Pipe (NPS 4 and Over)

3. ASTM A380 - Standard Practice for Cleaning, Descaling, and Passivation of Stainless Steel Parts, Equipment, and Systems

4. ASTM C495 - Standard Test Method for Compressive Strength of Lightweight Insulating Concrete

5. OSHA PL-91-596 - Occupational Safety Health Act of 1970 Public Law 91-596

1.3 SUBMITTALS

A. Furnish submittals, including the following, as specified in Division 1.

B. Shop Drawings, Product Data, and Information:

1. Working drawings of the general arrangement, procedures, and equipment for completing the jacking installation, including the jacking and receiving pits, jacking pipe, jacking frame, jacking head, reaction blocks, casing and carrier pipes, backfill operations, and other required appurtenances, and material lists, including diameter, thickness, and class of the steel casing, end seals, and other materials for each complete jacking installation.

2. Information: Grout mix design.

C. Quality Control:

1. A certificate signed and sealed by a Licensed Professional Engineer and registered in the State of Wisconsin that certifies that the Licensed Professional Engineer has evaluated and approved the CONTRACTOR's complete jacking installation and has prepared complete design calculations and working drawings for the jacking installation not specifically shown on the Drawings. Provide a separate certificate for each jacking installation.

2. Approved permits associated with the jacking operations. It is the responsibility of the CONTRACTOR to submit the necessary permit documents and data to the appropriate authority and receive approval associated with the jacking operations.

3. Letters of notification to other utilities within the limits of construction.

4. Welders qualifications per ANSI/AWS D1.1.

5. Grout test results.

1.4 DELIVERY, STORAGE AND HANDLING

A. Deliver, store and handle products and materials as specified in Division 1 and as follows.

B. Transportation and Delivery: Take every precaution to prevent damage to the casing pipe during transportation and delivery to the site.

C. Loading and Unloading:

1. Take care in loading and unloading the casing pipe.

2. Work slowly with skids or suitable power equipment, and keep casing pipe under control.

3. Under no condition is the casing pipe to be dropped, bumped, dragged, pushed, or moved in any way that will cause damage to the pipe.

D. Sling: When handling the casing pipe with a crane or other lifting equipment, use a suitable sling around the casing pipe to prevent damage to the pipe.

1. Under no condition pass the sling through the casing pipe.

2. Use a nylon canvas type sling or other material designed to prevent damage to the casing pipe.

3. Steel cables, chain or like slings will not be acceptable.

E. Damaged Casing Piping: If, in the process of transportation, handling, or laying, any casing pipe is damaged, replace or repair such pipe.

F. Blocking and Stakes: Provide suitable blocking and stakes installed to prevent casing pipe from rolling.

G. Storage:

1. Stulling:

a. Provide stulling in accordance with the manufacturer's recommendations to maintain roundness of 1 percent measured in ovality by outer diameter (OD) and determined as follows and to avoid damage to the casing pipe during handling, storage, and hauling.

$$\text{Ovality\%} = \frac{(\text{Maximum OD} - \text{Minimum OD})}{\text{Nominal OD}} \times 100$$

b. Leave stulls in place until after the casing pipe has been installed. After the casing pipe is installed, remove stulls. Removed stulls will remain the property of the CONTRACTOR.

2. Protect casing pipe that will be stored during periods of adverse environmental conditions from the effects of drying.

3. Arrange casing pipe that is placed in storage so as not to cause inconvenience to traffic.

1.5 QUALITY CONTROL

A. Complete boring and jacking operations by qualified personnel with sufficient experience involving Work of a similar nature.

B. Provide a minimum of 3 days advance notice of the start of excavation and boring operations to RESIDENT PROJECT REPRESENTATIVE.

C. Welding Requirements: Complete welding by skilled welders, welding operators, and tackers who have adequate experience in the type of materials to be used. Use only welders qualified under the provisions of ANSI/AWS D1.1 by an independent local agency prior to commencing Work on the casing or carrier pipe. In qualification tests, use machines and electrodes similar to those used in the Work.

PART 2 PRODUCTS

2.1 MANUFACTURERS

A. Acceptable manufacturers are listed below. Other manufacturers of equivalent products may be submitted.

1. Casing Spacers:

   a. Advance Products and Systems, Inc.
   b. Cascade Waterworks Manufacturing Co.
   c. The BWM Company

2. Casing End Seals:

   a. Advance Products and Systems, Inc.
   b. Cascade Waterworks Manufacturing Co.
   c. GPT, Inc.
   d. The BWM Company

2.2 MATERIALS

A. Casing Pipe: Use welded steel pipe with length, diameter, and wall thickness as shown, meeting the requirements of ASTM A139, Grade B. A greater diameter or thickness than that shown may be used at no additional cost to the OWNER if suitable for the method of Work and loadings involved, site conditions, and possible interferences. Provide full penetration butt welded pipe joints.

B. Fill Material: Use fill material consisting of 1-1/4 pounds of Bentonite per gallon of water during jacking to fill any voids between casing pipe and the earth.

C. Casing Spacers:

1. Provide casing spacers as recommended by the manufacturer.

2. Band Sections: Provide casing spacers comprised of a two-piece shell of 14-gauge (minimum) Type 304 stainless steel. Provide shells lined with 0.090-inch thick, ribbed PVC extrusion with an 85-90 durometer hardness and a retaining section that overlaps the edges of the shell and prevents slippage.

3. Risers: Provide risers of maximum 10 gauge Type 304 stainless steel with bolt heads welded to the inside of the risers for strength. Reinforce risers 6-inches and over in height. Provide reinforced plates that are 10 gauge Type 304 stainless steel. Provide risers that are metal inert gas (MIG) welded to the mating parts where applicable. All weldments are to be fully chemically passivated in accordance with ASTM A380.

4. Runners: Provide runners of ultra-high molecular weight, abrasion resistant polyethylene with a low 0.12 coefficient of friction. Attached runners to the support risers at appropriate positions to properly support the carrier pipes with the casing pipe. Provide the number of runners as recommended by the manufacturer.

D. Casing End Seals:

1. Style: Provide casing end seals of the wrap-around style.

2. Annulus Wrapping: Provide annulus wrapping of 1/8-inch thick neoprene rubber.

3. Hold-Down Banding: Provide 1/2-inch wide Type 304 stainless steel worm gear banding.

PART 3 EXECUTION

3.1 INSTALLATION

A. General: Install casing pipe, carrier pipe, casing spacers, fill materials, and appurtenances in accordance with the manufacturer's recommendations and approved shop drawings, as specified, and as shown.

1. Design and carefully construct shafts so as to safeguard existing substructures and surface improvements, to preclude the loss or movement of ground that may damage nearby utilities and structures, and to comply with the requirements of the U.S. Department of Labor Safety and Health Regulations for Construction promulgated under OSHA PL-91-596 and Federal, State and local laws and regulations applying to the Work.

2. Install casing pipe to proper lines and grades to allow for installation of the carrier pipe to the lines and grades shown.

3. Complete boring and jacking operations simultaneously with continuous installation until the casing pipe is in final position. Carefully maintain correct line and grade. Provide full-ring add-on sections of casing pipe welded to the preceding length, developing water-tight total pipe strength joints. Provide the casing so as to produce no upheaval, settlement, cracking, movement or distortion of the existing roadbed or other facilities.

4. Restrain carrier pipe joints within the casing pipe and outside of the casing pipe as shown.

5. Repair and restore any damage or settlement to utilities or structures resulting from the boring and jacking operations.

B. Permit Requirements: Conform operations and materials to the regulations of the highway department, railroad, or other agency having jurisdiction over the crossing. Obtain the approval, including permits, of materials and methods from the agency having jurisdiction over the crossing prior to submitting the required submittals. Adhere to the requirements of the permits.

C. Augering: Conduct augering with the proper equipment and procedure such that the carrier pipe and the casing pipe are installed to the grades specified without disturbing the adjacent earth.

D. Hand Mining: Conduct hand mining only in casings that are sufficiently large enough to permit such operation. Provide adequate fresh air supply within the casing pipe and conduct operations in accordance with the requirements of the U.S. Department of Labor Safety and Health Regulations for Construction promulgated under OSHA PL-91-596.

E. Jacking Pit: Construct the jacking pit in accordance with OSHA requirements. Provide the jacking pit of adequate length to provide room for the jacking frame, the jacking head, the reaction blocks, the jacks, auger rig, and the jacking pipe. Make the pit sufficiently wide to allow ample working space on each side of the jacking frame and sufficiently deep so that the invert of the pipe, when placed on the guide frame, is at the elevation desired for the completed line. Provide excavation in conformance with Section 31 23 16.

1. Sheeting: Sheet the jacking pit tightly and keep it dry. Conform sheeting to Section 31 41 00.

2. Jacking Frame: Use a jacking frame that applies a uniform pressure over the entire pipe wall area of the pipe to be jacked.

3. Reaction Blocks: Use reaction blocks that carry the thrust of the jacks to the soil without excessive soil deflection and in such a manner as to avoid any disturbance of adjacent structures or utilities.

4. Operation: Use hydraulic jacks in the jacking operation. Use care to hold the carrier pipe to specified line and grade. Advance the excavation at the heading manually or with an auger. Do not allow the advance to exceed more than one foot ahead of the casing pipe. Make every effort to avoid loss of earth outside the casing.

5. Safety Railing: Provide a safety railing with a toeboard around the top of the pit.

6. Cover approach trenches, jacking pits, and other open excavations in public streets at night and other non-working hours. Comply excavations in public streets with the applicable Maintenance of Traffic and permit requirements.

F. Control of Alignment and Grade: Control the application of jacking pressure and excavation of materials ahead of the casing as it advances to prevent the casing from becoming earthbound or deviating from the required line and grade. Restrict the excavation of the materials to the least clearance necessary to prevent binding in order to avoid loss of ground and consequent settlement or possible damage to overlying structures. Grade deviations in horizontal and vertical alignments greater than 0.2 feet per 100 feet in any direction over the length of the jacking or boring or greater than a maximum deviation of 0.5 feet at any point are not permitted.

G. Casing Spacers: Install casing spacers in accordance with the manufacturer's recommendations and approved shop drawings. Use of rails is not permitted.

1. Secure polymer casing spacers to the carrier pipe at 6-foot intervals inside the casing pipe. Arrange the spacers to provide 360-degree support for and to prevent floatation or shifting of the carrier pipe. Provide one casing spacer within 1 to 2 feet either side of a restrained push-on joint.

H. Carrier Pipe:

1. Install carrier pipe in accordance with the recommendations of the pipe spacer manufacturer and as shown.

2. After jacking equipment and excavated materials from the boring or jacking operations have been removed from the jacking pit, prepare the bottom of the jacking pit as a pipe foundation. Remove loose and disturbed materials below pipe grade down to undisturbed earth and re-compact the material in accordance with Section 31 23 23.

3. Bulkhead the ends of the casings, backfill the approach trenches, place temporary resurfacing, and reopen the affected portion of the street to traffic

if the carrier pipe in the casing pipe at the time of completion of the boring and jacking operations is not ready to be placed.

I. Electrical Isolation: After casing spacers are installed but prior to grouting of the casing annulus, perform electrical isolation test to verify that casing and carrier pipes are electrically separated as follows:

1. Measure and record the DC voltage difference between the casing and the carrier pipes using a digital voltmeter having at least 10 mega-ohm input impedance.

2. If the DC voltage difference is not greater than zero DC millivolts, remove electrical connection between the casing and carrier pipes to provide electrical separation and repeat the electrical isolation test. Do not grout the casing annulus until a DC voltage difference of greater than zero DC millivolts is measured and recorded.

J. Grout Annular Space:

1. After carrier pipe is placed, fill the annular space between the carrier pipe the casing pipe with cellular grout having a minimum compressive strength of 500 psi.

2. Perform grouting operations in accordance with the pipe manufacturer's recommendations.

3. Testing:

a. Perform field control tests, including unit weight (wet density), flow consistency, and compressive strength.

b. Mold a minimum of four 3 inch x 6 inch cylinders for each shift of operation.

c. Grout may be tested at any age after three days of compressive strength. At least two specimens from each set should be tested at 28 days in accordance with ASTM C495.

d. Measure flow consistency and unit weight (wet density) at the point of placement from first batch mixed, every hour during the pour, and from each batch of grout from which compressive strength test cylinders are made.

K. Casing End Seals: After the jacking is complete and the carrier pipe has been installed, seal the ends of the casing pipe as shown.

L. Backfill: Upon the completion of the jacking, augering and mining Work, provide backfill as shown and as specified in Section 31 23 23.

END OF SECTION

(NO TEXT FOR THIS PAGE)

SECTION 33 05 50

LAYING AND JOINTING BURIED PIPELINES

PART 1 GENERAL

1.1 SUMMARY

A. Section Includes:

1. Installation of buried pipelines and appurtenance piping. Provide pipeline materials, coatings and linings as specified and pipe of the types, sizes and classes shown or specified.

2. Furnishing of supports and hangers and installation of interior and exposed exterior piping and supports in vaults. Furnish, support, hang and install piping of the materials shown or specified at locations as specified or where shown.

B. Related Work Specified in Other Sections Includes, but is Not Limited to, the Following:

1. Section 01 45 50 - Leakage Tests
2. Section 31 23 16 - Excavation
3. Section 31 23 19 - Dewatering
4. Section 31 23 23 - Backfilling
5. Section 33 05 52 - Buried Fiberglass Reinforced Plastic Pipe and Fittings
6. Section 33 05 55 - Buried Ductile Iron Pipe and Fittings
7. Section 33 05 57 - Buried Polyvinyl Chloride Pipe and Fittings
8. Section 33 05 70 - Locating Buried Pipelines
9. Section 40 05 01 - Supports and Anchors

C. Comply with the “American Iron and Steel (AIS)” requirements as contained in Section 436 of the Consolidated Appropriations Act, 2014, further described in the Bid Form.

1.2 REFERENCES

A. Codes and standards referred to in this Section are:

1. ASME B1.20.1 - Pipe Threads, General Purpose, Inch

2. ASME B31.1 - Power Piping with Addenda

3. ASTM D2774 - Standard Practice for Underground Installation of Thermoplastic Pressure Piping

4. AWWA C115/A21.15 - Flanged Ductile-Iron Pipe With Ductile-Iron or Grey-Iron Threaded Flanges

5. AWWA C600 - Installation of Ductile-Iron Mains and Their Appurtenances

6. AWWA Manual M11 - Steel Pipe: A Guide for Design and Installation

1.3 DELIVERY, STORAGE AND HANDLING

A. General: Deliver, store and handle products and materials as specified in Division 1 and as follows.

B. Transportation and Delivery: Take every precaution to prevent damage or wear to the pipe during transportation and delivery to the site.

1. Cover pipe bell and spigot ends to keep the inside of the pipe clean of exhaust fumes, films, and other residue during transportation and delivery in accordance with the manufacturer's recommendations.

C. Loading and Unloading: Take care in loading and unloading the pipe and fittings to prevent injury to the pipe and fittings.

1. Work slowly with skids or suitable power equipment, and keep pipe under perfect control.

2. Under no condition is the pipe to be dropped, bumped, dragged, pushed, or moved in any way that will cause damage to the pipe or coating.

3. Protect the pipe from drying effects and possible contamination.

D. Sling: Handle the pipe and fittings using belt slings, padded cradles, or other devices, designed and constructed to prevent damage to the pipe, coating or lining. When handling the pipe with a crane or other lifting equipment, use a suitable sling around the pipe.

1. Under no condition pass the sling through the pipe.

2. Use a nylon canvas type sling or other material designed to prevent damage to the pipe and coating.

3. The use of steel cables, chains, hooks, or other like equipment that might injure the pipe, coating or lining will not be permitted, unless specifically required by authorities having jurisdiction and approved by the RESIDENT PROJECT REPRESENTATIVE.

E. Damaged Piping: If in the process of transportation, handling, or laying, any pipe or fitting is damaged, replace or repair such pipe or pipes.

F. Blocking and Stakes: Provide suitable blocking and stakes installed to prevent pipe from rolling.

1. Obtain approval for the type of blocking and stakes, and the method of installation.

G. Storage:

1. Storage for Pipe: Store stockpiled pipe on pallets, skids, sand or rock free berms, sand bags, old tires or other suitable means so that the pipe and coating is not damaged and as recommended by the manufacturer.

a. Do not roll, push, or slide the pipe into place.

b. Protect pipe that will be stored during periods of adverse environmental conditions from the effects of drying.

c. Arrange pipe that is placed in storage so as not to cause inconvenience to traffic.

d. Do not stack pipes higher than the limits recommended by the manufacturer. Keep the bottom tier off the ground on timbers, rails, or concrete. Confirm stacking to the manufacturer's recommendations.

2. Storage for Gaskets: Store gaskets for pipe joints in a cool place and protect gaskets from light, sunlight, heat, oil, or grease until installed.

a. Do not use any gaskets showing signs of checking, weathering or other deterioration.

b. Do not use gasket material stored in excess of six months without approval.

1.4 FIELD CONDITIONS

A. Encase or rebed utilities that cross over or under new pipe in flowable fill or pipe bedding as shown. Reconstruct utilities damaged by pipeline construction in accordance with the requirements of the authority having jurisdiction.

1. Furnish and install materials and do Work necessary for the reconstruction or repair of sanitary sewers and services and other utilities.

2. Provide pipe for reconstruction of sanitary sewers and services and other utilities matching the existing pipe. If the requirements of the authority

having jurisdiction are more stringent than the existing pipe, provide pipe meeting the requirements of the authority having jurisdiction and obtain approval for the new pipe.

3. Provide pipe of the same size as the existing sewer or when the same size is not available, use the next larger size of pipe. Obtain approval of joints made between new pipe and existing pipe.

4. Where possible utilities are indicated or expected to exist in the pipe trench, hand-excavate to locate and expose utility.

PART 2 PRODUCTS

2.1 MATERIALS

A. Provide pipe, fittings, and appurtenant materials as shown and specified.

B. Provide hangers and supports and necessary appurtenances as specified in Section 40 05 01.

2.2 FABRICATION

A. Coating: Provide threads coated with a suitable pipe dope, Masters Metallic Compound, graphite and engine oil, or equal, before jointing.

PART 3 EXECUTION

3.1 PREPARATION

A. Dry Trench Bottoms: Lay pipe only in dry trenches having a stable bottom.

1. Where groundwater is encountered, make every effort to obtain a dry trench bottom.

2. If a dry trench bottom has not been obtained due to improper or insufficient use of known methods of trench dewatering, then the order to excavate below grade and place sufficient bedding material, crushed stone, or Class D concrete over the trench bottom may be given.

3. If efforts fail to obtain a stable dry trench bottom and it is determined that the trench bottom is unsuitable for pipe foundation, obtain an order, in writing, for the kind of stabilization to be constructed.

4. Prevent water from entering the trench to the extent required to properly grade and allow for proper compaction of pipe bedding and backfill. Provide

dewatering of surface water that enters the excavation for proper completion of the Work.

5. Perform trench excavation and backfill in accordance with Sections 31 23 16 and 31 23 23.

3.2 INSTALLATION

A. General: Install piping in accordance with the manufacturer's recommendations, approved shop drawings and as specified. Refer to the specification specific to the pipe material being installed.

1. Arrange miscellaneous pipelines shown in diagram form on the Drawings clear of other pipelines and equipment.

2. Use suitable fittings where shown and at connections or where grade or alignment changes require offsets greater than those recommended and approved.

3. Use proper and suitable tools and appliances for the safe cutting, handling, and laying of the pipe and fittings.

4. Provide factory prepared pipe ends unless a field cut is required for connections.

5. Cutting Pipe and Dressing Cut Ends:

a. Cut pipe with a portable abrasive cut-off saw, a rotary wheel cutter, a guillotine pipe saw, a chain saw made to cut the pipe material, or a milling saw. The use of flame cutting or hydraulic squeeze type cutters is not acceptable. Field-cut holes for saddles with mechanical cutters; flame cutting is not acceptable. The use of equipment for cutting pipe contrary to the pipe manufacturer’s recommendations is not acceptable.

b. Cut pipe smooth, straight, and at right angles to the pipe axis in a neat manner, without damage to the pipe lining.

c. After cutting, dress the ends of the pipe with a file or a power grinder to remove roughness and sharp edges. Dress the ends of pipe in accordance with the type of joint to be made and as recommended by the manufacturer. Bevel cut ends of push-on joint pipe as recommended by the manufacturer.

B. Code Requirements: Provide pipeline installations complying with AWWA C600 for ductile iron pipe, AWWA Manual M11 for steel pipe, and as modified or supplemented by the Specifications.

C. Pipe Laying - General:

1. Thoroughly clean the interior of pipe and fittings of foreign matter prior to installation. Cut away any lumps or projections on the face of the spigot end or the shoulder.

2. For pipelines intended for gravity flow, begin pipeline laying at the low end of a run and proceed upgrade.

3. Generally, lay pipe with bells pointing ahead.

4. Do not lay pipe until the trench has been excavated as specified, shown, or as directed to provide a firm bed for supporting the pipe. Do not lay pipe upon a material in which frost exists nor at any time when the RESIDENT PROJECT REPRESENTATIVE deems that there is a possibility of the formation of ice or the penetration of frost at the bottom of the excavation.

5. Carefully lay pipelines accurately to line and grade. Do not drop or dump pipe or accessories into trench. Lay pipelines in trench excavations on pipe bedding material or other foundations as shown, specified or ordered in writing. Rest no part of the pipe upon or against rock.

6. Lay pipelines not supported on piles, concrete cradle, or other structural support in pipe bedding material. Carefully grade and compact pipe bedding. Install the barrel of the pipe so that it is in contact on the sides and the bottom of the pipe with the shaped, compacted pipe bedding so as to provide full bearing on and uniform support by the pipe bedding throughout the entire length of pipe. Make adjustments by scraping away or filling in pipe bedding material under the body of the pipe. Hand tamping under the end of the pipe to bring it to grade or wedging or blocking up the pipe barrel is not permitted.

7. Properly secure the pipe against movement and make the pipe joints in the excavation as required. Bring the faces of the spigot ends and the bells of pipes into contact and firmly and completely shove the pipe home. Do not bring succeeding pipe into position until the preceding length is covered with backfill and secured in place.

8. Bell Holes:

   a. Cut out bell holes for each joint as required to permit the joint to be properly made and allow the barrel of the pipe to have full bearing throughout its length.

   b. Thoroughly tamp bell holes full of pipe bedding material following the making of each joint.

9. Take care to secure water tightness and to prevent damage to or disturbing of the joints during backfilling and after the pipes have been laid and the joints have been made.

10. Take every precaution to prevent the floating of the pipe due to water accumulation in the trench, or the collapse of the pipeline from any cause. Should floating or collapse occur, inspect for damage. Replace any damaged pipe at no expense to the OWNER.

11. Keep the interior of pipelines clean and free of dirt and other deleterious material during construction. Maintain a clean pipe interior clear of sand, dirt, mortar splatter, and any other deleterious material prior to testing the completed pipeline.

D. Interior and Exposed Exterior Piping:

1. Install exposed piping at right angles or parallel to structure, vault, or manhole walls. Diagonal runs are not permitted, unless expressly indicated.

2. Install piping free of sags or bends.

3. Place pipe runs to minimize obstruction to other Work.

4. Install piping to allow for expansion and contraction without stressing pipe, joints or connected equipment.

5. Slope piping as shown and arrange systems to drain at low points.

6. Do not penetrate structural members unless shown.

7. Locate groups of piping parallel to each other and at common elevations whenever practical, spaced to permit servicing of valves.

8. Fit and install pipelines in a neat and workmanlike manner in accordance with approved shop drawings.

9. Provide an adequate number of unions in main pipe and branch pipe runs to facilitate dismantling or removal of pipeline sections without disturbing adjacent branch or connecting lines.

10. Install suitable sleeves at points where pipes pass through walls or floors of structures and where wall castings are not provided.

11. Include proper pipe protection saddles on pipes.

E. Other Foundations: Install pipelines laid on other types of foundations as specified for such other foundations or as ordered in writing.

F. Ductile Iron Pipe Mechanical Joints:

1. Assembly:

a. In making up mechanical joints, center the spigot in the bell.

b. Thoroughly brush the surfaces with which the rubber gasket comes in contact with a wire brush just prior to assembly of the joint.

c. Brush lubricant over the gasket just prior to installation.

d. Place the gasket and gland in position, bolts inserted, and the nuts tightened fingertight.

e. Tighten the nuts with a torque wrench so that the gland is brought up toward the pipe evenly.

2. Torques: Apply bolt torques complying with AWWA C600.

3. Remaking of Joints: If effective sealing is not obtained at the maximum torque listed above, disassemble and reassemble the joint after thorough cleaning.

G. Ductile Iron Pipe Rubber Gasket Joints:

1. When installing in colder temperatures, keep rubber gasket at or above 40 degrees Fahrenheit by suitable means prior to installation.

2. Assembly:

a. In making up the rubber gasket joint, brush the gasket seat in the socket thoroughly with a wire brush and wipe the gasket with a cloth.

b. Place the gasket in the socket with the large round end entering first so that the groove fits over the bead in the seat.

c. Apply a thin film of lubricant to gasket that will come in contact with the entering pipe. Utilize the furnished pipe manufacturer's gasket lubricant. Substitute lubricants are not permitted.

d. Thoroughly brush the plain end of the pipe to be entered with a wire brush and place it in alignment with the bell of the pipe to which it is to be joined. Apply a thin film of lubricant to the plain end of the pipe from the end of the spigot to the first home line of the spigot.

e. Take care to keep the bell, spigot and the gaskets free of dirt and other deleterious materials during the jointing process.

f. Exert sufficient force on the entering pipe so that its plain end is moved past the gasket until it makes contact with the base of the socket to make the joint. Ensure both pipes are properly aligned with each other during connection.

g. Fully extend push-on restrained joint piping to remove the slack in the locking segment cavity.

3. Positioning: Before proceeding with backfilling, feel completely around the joint using a feeler gauge to confirm that the gasket is in its proper position. Confirm the gasket is uniformly distributed around the pipe circumference.

a. If the gasket can be felt out of position, replace it with a new one.

b. If the gasket has been damaged, replace it with a new one before re-installing the pipe.

4. Optional Mechanical Joints: Use mechanical joint fittings that meet the requirements of Section 33 05 55 with the rubber gasket joint pipe when specified or when rubber gasket fittings are not available. Non-restrained mechanical joints are not acceptable.

H. PVC Pipe Rubber Gasket Joints:

1. When installing in colder temperatures, keep rubber gasket at or above 40 degrees Fahrenheit by suitable means prior to installation.

2. Assembly:

a. In making up the rubber gasket joint, clean the gasket seat in the socket and the gasket thoroughly with a cloth.

b. Place the gasket in the socket with the large round end entering first so that the groove fits over the bead in the seat.

c. Apply a thin film of lubricant to gasket that will come in contact with the entering pipe. Utilize the furnished pipe manufacturer's gasket lubricant. Substitute lubricants are not permitted.

d. Thoroughly clean the plain end of the pipe to be entered with a cloth and place it in alignment with the bell of the pipe to which it is to be joined. Apply a thin film of lubricant to the plain end of the pipe from the end of the spigot to the first home line of the spigot.

e. Take care to keep the bell, spigot and the gaskets free of dirt and other deleterious materials during the jointing process.

f. Exert sufficient force on the entering pipe so that its plain end is moved past the gasket until it makes contact with the base of the socket to make the joint. Ensure both pipes are properly aligned with each other during connection.

3. Positioning: Before proceeding with backfilling, feel completely around the joint using a feeler gauge to confirm that the gasket is in its proper position. Confirm the gasket is uniformly distributed around the pipe circumference.

a. If the gasket can be felt out of position, replace it with a new one.

b. If the gasket has been damaged, replace it with a new one before re-installing the pipe.

I. FRP Filament Wound Coupling:

1. When installing in colder temperatures, keep rubber gasket at or above 40 degrees Fahrenheit by suitable means prior to installation.

2. Assembly:

a. FRP pipes are generally supplied with one coupling pre-mounted. Prior to joining pipes, check that the pre-mounted parts are correctly and securely in place.

b. In making up the rubber gasket joint, clean the gasket seat in the socket and the gasket thoroughly with a cloth.

c. Remove any dirt from the surfaces to be jointed and in particular, the sealing elements in the area of the grooves.

d. Apply a thin film of lubricant to gasket that will come in contact with the entering pipe. Utilize the furnished pipe manufacturer's gasket lubricant. Substitute lubricants or oil based lubricants are not permitted.

e. Thoroughly clean the spigot end of the pipe to be entered with a cloth and place it in alignment with the coupling of the pipe to which it is to be joined. Apply a thin film of lubricant to the spigot end of the pipe.

f. Take care to keep the coupling, spigot and the gaskets free of dirt and other deleterious materials during the jointing process.

g. Exert sufficient force on the entering pipe so that its spigot end is fully seated. Ensure both pipes are properly aligned with each other during connection.

J. Threaded Joints: Conform threaded joints to ASME B1.20.1, tapered pipe threads for field cut threads unless otherwise specified. Join pipe, fittings, and valves as follows:

1. Note internal length of threads in fittings or valve ends, and proximity of internal seat or wall, to determine how far pipe should be threaded into joint.

2. Align threads at point of assembly.

3. Apply appropriate tape or thread compound to the external pipe threads.

4. Assemble joint to appropriate thread depth. Assemble joint to produce a tight joint without evidence of heat in the threaded portion. When using a pipe wrench on valves, place wrench on valve end into which pipe is being threaded.

5. Damaged Threads: Do not use pipe with threads which are corroded, or damaged. If weld opens during cutting or threading operations, do not use that portion of pipe.

6. Retightening: Once a threaded joint has been assembled, it is not to be backed off unless the threads are recleaned and new compound or tape applied before rejointing.

K. Flanged Joints:

1. Fabricate flanged pipe in the shop, not in the field, and deliver to the jobsite with flanges in place and properly faced. Individually fit and machine tighten threaded flanges on matching threaded pipe by the manufacturer.

2. Face flanges after fabrication in accordance with AWWA C115/A21.15.

3. Assembly:

a. Clean oil, grease, and other foreign material from the faces of the flanges before connecting flanged pipe.

b. Take care to keep the gaskets free of dirt and other deleterious materials before, during, and after the jointing process.

c. Take care to provide proper fit and seating of the flange gasket.

d. Tighten bolts so that the pressure on the gasket is uniform.

e. Use torque-limiting wrenches to provide uniform bearing.

f. Remove and reset gasket and retighten bolts at joints that leak during retightening.

L. Welding: Comply welding of pipe joints with the requirements of ASME B31.1 unless otherwise specified. Do off site welding of stainless steel pipe conforming to the appropriate requirements.

1. Procedures: Confirm that pipe and fittings with wall thickness of 3/16 inch and larger have ends beveled for welding, and that the parts to be welded are securely held in place and are in proper alignment during welding.

a. Separate the abutting pipe ends before welding to permit complete fusion to the inside wall of the pipe without overlapping.

b. Provide welding continuous around the joint and completed without interruption.

c. Provide welds of the single vee butt type, of sound weld metal thoroughly fused into the ends of the pipe and into the bottom of the vee.

d. Provide welds free from cold shuts, pinholes, oxide inclusions or other defects.

M. Ductile Iron Pipe and Steel Pipe Joint Lining:

1. Ductile Iron Pipe: For cement mortar lined ductile iron pipe greater than 30 inches in diameter, fill all interior joint recesses with mortar and make recesses smooth and flush with adjacent pipe interior walls in accordance with AWWA C205, Appendix A.2.

2. Steel Pipe: Do not line steel pipe joints.

N. Temporary Bulkheads: Close off lines with bulkheads, tight-fitting “night cap”, or equal temporary stopper when pipe laying is not in progress to keep out sand, earth, and other deleterious material from entering the pipe. Provide perforations near the center of the stopper to admit water into the pipe to prevent flotation in the event the trench is flooded. Provide temporary bulkheads at the ends of sections where adjoining pipelines have not been completed, and in connections built into pipelines where adjoining pipelines or structures have not been completed and are not ready to be connected.

1. Remove bulkheads encountered in connecting pipes or structures included in this Contract, or in pipes or structures previously built, when they are no

longer needed or when ordered. Remove any standing water from the trench before the stopper is removed.

O. Sleeve Type Couplings: For sleeve type couplings, equally tighten diametrically opposite bolts on the connection so that the gaskets will be brought up evenly around the pipe.

1. Torque Wrenches: Do the final tightening with torque wrenches set for the torque recommended by the coupling manufacturer.

P. Concrete Cradle

1. General: When a concrete cradle is shown, specified, or ordered in writing, lay the pipe to grade by supporting each section on concrete blocks located near each end.

a. Shape the tops of the blocks to fit the outside diameter of the pipe.

b. Set the blocks approximately 3/8 inch low.

c. Place the pipe on the blocks on a layer of stiff mortar of sufficient thickness to bring the pipes to exact grade.

d. Timber blocking is not acceptable.

2. Cradle: Place Class D concrete cradle, on one side only, until it has risen above the invert on the other side, after which deposit the remainder of the concrete on both sides to the pipe spring line.

a. Prevent movement of the pipe during concrete placement.

Q. Concrete Encasement: When concrete encasement is to be provided as shown, specified, or ordered in writing, lay and block the pipeline and place concrete as specified for concrete cradle.

1. Continue the placing of concrete to provide complete encasement to the dimensions shown, specified, or ordered.

R. Valve Box Setting: Install valve boxes vertical and concentric with the valve stem.

1. Satisfactorily reset any valve box which is moved from its original position, preventing the operation of the extension valve stem.

2. Replace any extension valve stem which has been damaged.

S. Erection:

1. Thrust Restraint: Provide thrust restraint of pipelines and appurtenances as shown or as ordered.

   a. Provide restrained joints as specified in Section 33 05 55 for thrust restraint. Install pipe with restrained joints for the distance (both upstream and downstream of pipeline appurtenances) as shown.

   b. Thrust blocks are not allowed for use on this project, except as ordered in writing.

2. Valve Setting: Erect valves carefully in their proper positions, free from distortion and strain, with flanged, mechanical or push-on joints restrained joints as shown, specified, or required, and pack and leave in satisfactory operating condition.

3. Short Tunnel Construction:

   a. Joint pipes to be placed in short tunnels prior to being placed into position.

   b. Place the pipe into position in a manner which keeps joints tight.

T. Anchors and Stands: Furnish and install anchors and stands when specified, shown, or required for holding the pipelines and equipment in position or alignment.

1. Small Piping Supports: Where adjustable supporting devices are not required, support pipelines 3 inches in diameter and smaller on stainless steel hooks, hook plates, rings or ring plates.

U. Hangers and Supports

1. Direction Changes: Provide pipe hangers at each change in pipe direction, on both sides of pipe mounted valves and equipment and on both sides of pipe loops and expansion absorbing devices.

2. Brackets: Use brackets for the support of piping from vertical surfaces.

3. Anchors: Furnish and install anchors when specified, shown, or required for holding the pipelines and equipment in position or alignment.

4. Inserts: Install inserts in concrete structures where required for fastening supporting devices.

5. Controlled Movements: Install hangers and supports to allow controlled movement of piping systems, to permit freedom of movement between pipe anchors, and to facilitate action of expansion joints, expansion loops, expansion bends and similar units.

6. Load Distribution: Adjust hangers to distribute loads equally on the attachment and to achieve any indicated slope of the pipe.

3.3 FIELD QUALITY CONTROL

A. Testing: Test pipelines in accordance with Section 01 45 50.

1. Test valves in place, as far as practicable, and correct any defects in valves or connections.

B. Inspection: Clean, inspect, and examine each piece of pipe and each fitting and special for defects before it is installed.

1. Do not use any cracked, broken, or defective pieces in the Work.

2. If any defective piece is discovered after having been installed, remove and replace this piece with a sound piece in a satisfactory manner at no increase in Contract Amount.

3.4 CLEANING

A. General: Thoroughly clean interior of pipe before it is laid and keep it clean until final acceptance of the work.

B. Thoroughly clean threads for threaded joints after reaming.

C. Removal of Materials: Exercise special care to avoid leaving bits of wood, dirt, and other deleterious material in the pipe except water when pipe laying is stopped. If any material is discovered before the final acceptance of the Work, remove deleterious material.

3.5 FLUSHING

A. Assume the expense for providing water to flush the pipelines.

B. For mains smaller than 24-inches in diameter, flush installed pipe and fittings in accordance with AWWA C651, Section 4.4.2. Continue flushing until turbidity is consistently below 1 NTU, demonstrated with a calibrated on-line analyzer.

C. For 24-inch or larger diameter mains and connecting fittings, broom-sweep connected mains and fittings as being installed carefully removing all sweepings during construction.

3.6 SCHEDULE

A. Definitions: Abbreviations used in the schedule are:

1. Pipe Materials:

a.	Al	Aluminum
b.	Br	Brass
c.	DI	Ductile Iron
d.	FRP	Fiberglass Reinforced Plastic
e.	HDPE	High Density Polyethylene
f.	PVC	Polyvinyl Chloride
g.	SS	Stainless Steel
h.	St	Steel

2. Joints:

a.	F	Flanged
b.	FW	Fusion Welded
c.	FWC	Filament Wound Coupling
d.	CM	Camlock
e.	PO	Push-on Joint, Unrestrained
f.	POR	Push-on Joint, Restrained
g.	RMJ	Restrained Mechanical Joint
h.	Sc	Screwed
i.	SW	Solvent Welded
j.	W	Welded

3. Coatings and Linings:

a.	BC	Bituminous – Cold Applications
b.	CL	Cement-Mortar Lined
c.	PEW	Polyethylene Wrapped

4. Other:

a.	DIPS	Ductile Iron Pipe Size
b.	DR	Dimension Ratio
c.	Ext.	Exterior
d.	HDD	Horizontal Directional Drilling
e.	HGL	Hydraulic Grade Line
f.	Int.	Interior
g.	SCH	Schedule
h.	SN	Standard Stiffness

B. Schedule: Provide products as listed in the following schedule.

BURIED PIPING SCHEDULE

Service	Size (Inches)	Pipe Material	Protective Coatings Int.	Protective Coatings Ext.	Joints	Test Pressure HGL (feet) or Pressure (psig)	Pipe Class or Thickness (inches)	Notes
RETURN FLOW PIPELINE								
Pipeline								
Trenched (Open Cut)	30	DI	CL	BC, PEW	F, PO, POR, RMJ	1,060 feet	150, 200	1, 2
Carrier Pipe	30	DI	CL	BC, PEW	POR	1,060 feet	150, 200	1, 2, 3
Casing Pipe, Road	48	St	--	--	W	--	0.625 inches	3
HDD	36	HDPE	--	--	FW	1,060 feet	DIPS DR 11	1
Blow-Off Assemblies								
Blow-Off Pipe	8	DI	CL	BC, PEW	POR, RMJ	1,060 feet	350	1, 2
Blow-Off Extension	6	Al	--	--	CM	--	--	--
Air Valve Assemblies								
Outlet Pipe	2	Br	--	--	Sc	1,060 feet	250	1
Outlet Pipe	4, 6, 8, 10	DI	CL	BC	F	1,060 feet	350	1, 2
Vent Riser Pipe	6, 8, 10	SS	--	--	W	30 psig	SCH 80	1
Vent Pipe	2	SS	--	--	Sc	30 psig	SCH 10	1

Notes:

1. Refer to Section 01 45 50 for test pressure requirements.
2. Continuity bond joints as shown and specified.
3. Provide carrier pipe in casing pipe as shown and specified. Do not provide continuity bond between casing and carrier pipes.

BURIED PIPING SCHEDULE

Service	Size (Inches)	Pipe Material	Protective Coatings Int.	Protective Coatings Ext.	Joints	Test Pressure HGL (feet) or Pressure (psig)	Pipe Class or Thickness (inches)	Notes
18-INCH GRAVITY SEWER								
Trenched (Open Cut)	18	FRP	--	--	FWC	686 feet	SN 90 psi	1
Trenched (Open Cut)	18	PVC	--	--	PO	686 feet	DR 18	1
OUTFALL DISCHARGE PIPELINE								
Trenched (Open Cut)	30	DI	CL	BC, PEW	PO	683 feet	150	1

Notes:

1. Refer to Section 01 45 50 for test pressure requirements.

END OF SECTION

SECTION 33 05 52

BURIED FIBERGLASS REINFORCED PLASTIC PIPE AND FITTINGS

PART 1 GENERAL

1.1 SUMMARY

A. Section Includes: Requirements for providing buried fiberglass reinforced plastic (FRP) pipe, fittings and appurtenances.

1. For gravity sewer applications, provide FRP pipe and fittings complete with all necessary jointing facilities and materials, specials, adapters and other appurtenances required for installation in and completion of the pipelines to be constructed.

B. Related Work Specified In Other Sections Includes:

1. Section 01 45 50 - Leakage Test
2. Section 33 05 50 - Laying and Jointing Buried Pipelines

1.2 REFERENCES

A. Codes and standards referred to in this Section are:

1. ASTM D 3262 - Standard Specification for “Fiberglass” (Glass-Fiber Reinforced Thermosetting-Resin) Sewer Pipe

2. ASTM D 4161 - Standard Specification for “Fiberglass” (Glass-Fiber-Reinforced Thermosetting-Resin) Pipe Joints Using Flexible Elastomeric Seals

3. ASTM D 2412 - Standard Test Method for Determination of External Loading Characteristics of Plastic Pipe by Parallel-Plate Loading

4. ASTM D 3681 - Standard Test Method for Chemical Resistance of “Fiberglass” (Glass-Fiber-Reinforced Thermosetting-Resin) Pipe in a Deflected Condition

5. ASTM D 638 - Test Method for Tensile Properties of Plastics

6. ASTM D 2583 – Standard Test Method for Indention Hardness of Rigid Plastics by Means of a Barcol Impressor

1.3 SYSTEM DESCRIPTION

A. Design Standards: Provide 18-inch and larger FRP gravity sewer pipe and fittings meeting the requirements of ASTM D 3262 rated for the depth of burial as shown.

1.4 SUBMITTALS

A. General: Provide all submittals as specified in Division 1.

B. Submit the following shop drawings:

1. Catalog data for sewer pipe, joints, fittings, sleeves, harnessing, and all appurtenances.
2. Manufacturer's installation instructions.

C. Quality Control: Submit certificate of compliance for pipe, fittings, gaskets, and specials in accordance with this Section.

1.5 DELIVERY, STORAGE AND HANDLING

A. Deliver, store and handle all pipe, fittings, and appurtenances as specified in Division 1 and Section 33 05 50.

PART 2 PRODUCTS

2.1 MANUFACTURER

A. Acceptable manufacturers are listed below. Other manufacturers of equivalent products may be submitted.

1. FRP Pipe for gravity sewers:

a. Hobas Pipe USA
b. Flowtite

2.2 MATERIALS

A. Resin Systems: Use only epoxy, polyester or vinyl ester resin systems with a proven history of performance in this particular application. Acquire historical data that have been from a composite material of similar construction and composition as the proposed product.

B. Glass Reinforcements: Use reinforcing glass fibers of highest quality commercial grade E-glass filaments with binder and sizing compatible with impregnating resins to manufacture the components. Provide pipe wall constructed with chopped glass fibers not exceeding four (4) inches in length or continuous glass roving or a combination of both.

C. Silica Sand: Use sand with minimum 98% silica with a maximum moisture content of 0.2%.

D. Additives: Use resin additives, such as curing agents, pigments, dyes, fillers, thixotropic agents, etc. that do not detrimentally affect the performance of the product.

E. Elastomeric Gaskets: Provide gaskets supplied by qualified gasket manufacturers that are manufactured in accordance to ASTM F 477 and suitable for the service intended.

2.3 MANUFACTURE

A. Pipes: Manufacture pipe in accordance with ASTM D 3262 to result in a dense, non-porous, corrosion-resistant, consistent composite structure.

B. Provide pipe designed for gravity sewer service at the slope and depths of cover as shown. Nominal pipe stiffness of 92 psi. Design pipe installation for an initial maximum vertical deflection of 2.5%.

C. Corrosion Resistance: Complete long-term 50-year corrosion resistance testing on pipe in accordance with ASTM D 3681 and ASTM D 3262. The interior surface of the pipe exposed to sewer flow shall have a minimum liner thickness of 30 mils. Certification from the resin supplier shall be included with submittals.

D. All pipes and fittings shall be inspected for visual defects prior to shipment. Pipes and fittings shall be free from all defects including indentation, delaminations, bubbles, pinholes, foreign inclusions and resin starved areas, which due to their nature degree or extent, detrimentally affect the strength and serviceability of pipes and fittings. Pipes and fittings shall be uniform in color, density and other physical properties.

E. Dimensions: All relevant dimensions of all pipes and fittings shall be inspected and shall be in accordance with the requirements of ASTM D 3567 and ASTM D 3262.

F. Provide pipe suitable for use as “Field Cut Adjustment Pipe”. The manufacturer shall identify the dimensionally suitable pipe and mark it as “Adjustment Pipe” or "Gauged Pipe" with permanent markings.

G. Abrasion Resistance: Use liner resin that is abrasion resistant to normal sanitary sewage flows.

H. Pipe Marking: Provide mark on each pipe to designate compliance with applicable ASTM specification including nominal diameter, stiffness class and production date.

I. Date of Manufacture: Provide pipe and fittings manufactured within 12 months of the date of the Agreement.

J. Joints: Provide FRP coupling joints with two rubber seals. The joint used shall allow at least 0.5 degree horizontal deflection while remaining watertight for nominal pipe sizes of up to and including 60 inches. The pipe manufacturer shall provide a statement with shop drawing submittals stipulating the maximum allowable deflection. The joints shall meet the performance requirements of ASTM D 4161 at a test pressure of at least 10 psig. A test report showing compliance of the joint design shall be submitted for approval.

K. Fittings: Provide laterals and other fittings capable of withstanding all operating conditions when installed. They may be contact molded or manufactured from mitered sections of pipe joined by glass-fiber-reinforced overlays.

L. Tensile Strength: Complete tensile strength testing in accordance with ASTM D 638.

M. Acceptable Manufacturer: Manufacturer shall demonstrate a minimum of five (5) years experience in the manufacturing of pipe and provide references for a minimum of 50,000 feet of pipe produced for installation in similar “direct bury” sanitary sewer projects.

2.4 DIMENSIONS/DESIGN REQUIREMENTS

A. Conveyance Capacity: Provide pipe with tolerances in diameters in accordance with the requirements of ASTM D 3262 and ASTM D 3567.

B. End Squareness: Provide pipe ends that are square to the pipe axis with a maximum tolerance of 1/4-inch.

C. Wall Thickness: Wall thickness shall be uniform throughout the entire pipe length. External surface shall be consistent in density, smoothness, texture and color throughout the entire length.

PART 3 EXECUTION

3.1 DELIVERY

A. The manufacturer shall recommend means, supports, and appurtenances needed for appropriate storage of the pipe on the site in a safe and appropriate manner suitable for outdoor storage for up to 12 months.

3.2 INSTALLATION

A. Install all buried FRP pipe in accordance with the manufacturer's recommendations and approved shop drawings and as specified in Division 1 and Section 33 05 50.

3.3 LEAKAGE TESTING

A. Cleaning: Flush clean and test all pipes after installation.

B. Testing: Testing shall be in accordance with Section 01 45 50.

END OF SECTION

(NO TEXT FOR THIS PAGE)

SECTION 33 05 53

BURIED HIGH DENSITY POLYETHYLENE PIPE AND FITTINGS

PART 1 GENERAL

1.1 SUMMARY

Section Includes: Requirements for providing buried High Density Polyethylene (HDPE) pipe, fittings and appurtenances.

A. Related Work Specified In Other Sections Includes, But is Not Limited to, the Following:

1. Section 01 45 50 - Leakage Test
2. Section 33 05 22 - Horizontal Directional Drilling
3. Section 33 05 50 - Laying and Jointing Buried Pipelines
4. Section 33 05 55 - Buried Ductile Iron Pipe and Fittings
5. Section 33 05 70 - Locating Buried Pipelines

B. Comply with the “American Iron and Steel (AIS)” requirements as contained in Section 436 of the Consolidated Appropriations Act, 2014, further described in the Bid Form.

1.2 REFERENCES

A. Codes and standards referred to in this Section are:

1. ASTM D638 - Standard Test Method for Tensile Properties of Plastics

2. ASTM D1238 - Standard Test method for Melt Flow Rates of Thermoplastics by Extrusion Plastometer

3. ASTM D1505 - Standard Test Method for Density of Plastics by the Density-Gradient Technique

4. ASTM D1603 - Standard Test Method for Carbon Black Content in Olefin Plastics

5. ASTM D2122 - Standard Test Method for Determining Dimensions of Thermoplastic Pipe and Fittings

6. ASTM D2290 - Standard Test Method for Apparent Hoop Tensile Strength of Plastic or Reinforced Plastic Pipe

7. ASTM D2837 - Standard Test Method for Obtaining Hydrostatic Design Basis for Thermoplastic Pipe Materials or Pressure Design Basis for Thermoplastic Pipe Products

8. ASTM D3261 - Standard Specification for Butt Heat Fusion Polyethylene (PE) Plastic Fittings for Polyethylene (PE) Plastic Pipe and Tubing

9. ASTM D3350 - Standard Specification for Polyethylene Plastics Pipe and Fittings Materials

10. AWWA C906 - Polyethylene (PE) Pressure Pipe and Fittings, 4-In. Through 66-In (100 mm Through 1,650 mm) for Waterworks

11. AWWA M55 - PE Pipe – Design and Installation

12. Plastic Pipe Institute (PPI) - Handbook of Polyethylene Pipe, Pipeline Joining Procedures

13. PPI TR-4 - Plastic Pipe Institute Listing of Hydrostatic Design Basis (HDB), Strength Design Basis (SDB), Pressure Design Basis (PDB) and Minimum Required Strength (MRS) Ratings for Thermoplastic Piping Materials or Pipe

14. United States Code of Federal Regulations, Title 49: Transportation, Part 192 – Transportation of Natural and Other Gas by Pipeline: Minimum Federal Safety Standards, Subpart F – Joining of Materials Other Than by Welding (49 CFR 192 Subpart F)

1.3 SYSTEM DESCRIPTION

A. Design Standards: Provide HDPE pipe and fittings complete with necessary materials, specials, adapters, and other appurtenances meeting the requirements of AWWA C906 for the construction of the pipeline complete in place as shown and specified.

1. Provide HDPE pipe and fittings of Ductile Iron Pipe Size (DIPS), Dimension Ratio 11 (DR 11) minimum as specified in the schedule or shown. If required, provide thicker wall as approved for the HDD installation in accordance with the requirements of Section 33 05 22.

2. Manufacture and fabricate pipe at a single plant location by the approved pipe supplier. Fittings and specials may be fabricated at a site other than where the pipe is manufactured.

1.4 SUBMITTALS

A. General: Furnish submittals, including the following, as specified in Division 1.

B. Shop Drawings, Product Data, and Information:

1. Pipe joints, fittings, adapters, and appurtenances. Where special designs or fittings are required, provide a drawing to show the Work in large detail and completely describe and dimension items.

2. Maximum safe pull force and minimum bending radius for horizontal directional drilling.

3. Alignment survey signed and sealed by a land surveyor registered in the State of Wisconsin and a laying schedule. Cross reference the laying schedule to identification marks on the pipeline pieces.

4. Catalog data for pipe, fittings, adapters, and other appurtenances.

5. Installation method, fusion method, adapter system, quality control procedures, and specialized equipment.

C. Quality Control:

1. A certificate of compliance for pipe, fittings, appurtenances, and other products attesting that the items are in compliance with the Contract Documents, referenced standards, and "American Iron and Steel (AIS)" requirements.

2. An affidavit from the pipe supplier that plant and equipment capacity is sufficient to perform the required pipe production, testing, and fabrication within the specified Contract Time in accordance with the CONTRACTOR's approved Progress Schedule.

3. Premanufacture notification for HDPE pipe, fittings, specials, adapters, and other appurtenances.

4. Current welder certifications for welders performing fusion welds. Expired certifications are not acceptable.

5. Fusion data for each field-welded joint, including pipe size and thickness, machine size, fusion welder identification, job identification, fusion joint number, fusion, heating, and drag pressure settings, graph of fusion cycle, heat plate temperature, time stamp, heating and cool down time of fusion, and ambient temperature. Cross reference fusion data to identification marks on each joint.

6. A certificate by the pipe manufacturer that CONTRACTOR has been trained in the proper method of handling, joining, and installing new HDPE pipe and fittings, including installation by horizontal directional drilling.

1.5 QUALITY ASSURANCE

A. Work under this Section including the production and testing of the pipe, fittings, specials, adapters, and other appurtenances is subject to inspection by the OWNER or the ENGINEER in the pipe supplier's or pipe manufacturer's plant.

B. Materials and butt fusion joints are subject to inspection and rejection for failure to meet requirements of this Section, including any of following. Replace or repair rejected pipe, fittings, or joints.

1. Pipe, fittings, or joints with a gash, blister, abrasion, nick, scar, or other deleterious fault with a depth greater than 10 percent of the wall thickness.

2. Pipe, fittings, or joints concentrated ridges, discoloration, excessive spot roughness, pitting, or insufficient or variable wall thickness.

3. Damage from bending, crushing, stretching, or other stress.

4. Damage that impacts pipe strength, internal diameter, or internal roughness characteristics.

5. Pipe, fittings, or joints damaged in a manner described in the HDPE pipe manufacturer's guidelines.

1.6 DELIVERY, STORAGE AND HANDLING

A. Deliver, store and handle products and materials as specified in Division 1 and Section 33 05 50.

PART 2 PRODUCTS

2.1 MANUFACTURERS

A. Acceptable manufacturers are listed below. Manufacturers of equivalent products may be submitted unless specified otherwise.

1. HDPE Pipe and Fittings: Equivalent products may not be submitted.

a. Chevron Phillips Chemical Company LP, Performance Pipe
b. JM Eagle, Inc.

2. HDPE Mechanical Joint Adapters

a. Improved Piping Products, Inc.

2.2 MATERIALS

A. Pipe and Fittings:

1. Provide HDPE pipe and fittings meeting the requirements of AWWA C906 made from virgin resin meeting the requirements of PPI PE4710 with ASTM D3350 minimum cell classification of PE 445574C and having a Hydrostatic Design Basis of 1,600 psi at 73 degrees Fahrenheit in accordance with ASTM D2837 and PPI TR-4. An approved higher cell classification may be provided at no additional cost to the OWNER as recommended by the manufacturer or necessary for the construction of the pipeline crossings installed via horizontal directional drilling.

2. Provide pipe and fittings homogenous throughout and free of visible cracks, holes, voids, foreign inclusions, or other defects with no recycled compounds except for rework material generated from the manufacturer's plant that has the same cell classification as the pipe or fitting to which it is being added.

3. HDPE elbows, bends, tees, reducers, and crosses are not acceptable for use on this project.

B. Color Identification:

1. Provide black HDPE pipe and fittings with minimum 2 percent carbon black for ultraviolet protection and at least three equally spaced longitudinal colored marking stripes so at least one stripe is visible from any angle. Color code longitudinal marking stripes for the intended use as follows.

a. Return Flow Pipeline: Green.

2. Provide striping made of the same material as the pipe except for color. Printed or painted stripes on the outside surface are not acceptable.

C. Molded Fittings: Provide and mark molded fittings in accordance with ASTM D3261. Provide molded fittings with a pressure rating meeting or exceeding that of the pipe.

D. Fabricated Fittings: Provide fabricated fittings made by heat fusion joining specially machined shapes cut from pipe, polyethylene sheet stock, or molded fittings. Provide fabricated fittings with a pressure rating meeting or exceeding that of the pipe. Provide butt fusion outlets with the same outside diameter, wall thickness, and tolerances as the mating pipe.

E. HDPE Mechanical Joint Adapters: Buried HDPE pipe may be joined by means of mechanical joint adapters designed for joining HDPE pipe or for joining HDPE pipe to another material. Provide HDPE mechanical joint adapters in accordance with the manufacturer's recommendations made from the same resin as the pipe and having a pressure rating meeting or exceeding that of the pipe and with Type 316 stainless steel stiffener. Provide mechanical joint adapters with sufficient through-bore length to be clamped in a butt fusion joining machine without the use of a stub-end holder. Provide the sealing surface of the adapters machined with a series of small v-shaped grooves to provide gasketless sealing. Fit mechanical joint adapters with ductile iron gland rings and provide bolts and nuts as specified in Section 33 05 55.

2.3 SOURCE QUALITY CONTROL

A. Provide established quality control program through the pipe and fitting manufacturer for inspecting incoming and outgoing materials and assuring the quality of the pipe and fittings required by these specifications. Inspected incoming polyethylene materials for density, melt flow rate, and contamination. Certify the cell classification properties of the material and approve quality control before processing into finished goods. Check outgoing materials for the following:

1. Outside diameter, wall thickness, and eccentricity as per ASTM D2122 at a frequency of at least once per hour or once per coil, whichever is less frequent.

2. Visually inspect end cuts as per AWWA C906 on every length of pipe.

B. Complete production and quality control checks for:

1. Density as per ASTM D1505 at a frequency of at least once per extrusion lot.

2. Melt Index as per ASTM D1238 at a frequency of at least once per extrusion lot.

3. Carbon content as per ASTM D1603 at a frequency of at least once per day per extrusion line.

4. Ring tensile strength size as per ASTM D2290 at a frequency of at least once per production run as per AWWA C906.

C. Use x-ray inspection to inspect molded fittings for voids. Test knit line strength.

D. Inspect fabricated fittings for joint quality and alignment.

PART 3 EXECUTION

3.1 INSTALLATION

A. General:

1. Install HDPE pipe and fittings in accordance with the manufacturer's recommendations and approved shop drawings, AWWA Manual M55, and as specified in Division 1, Section 33 05 22, and Section 33 05 50.

2. Install HDPE pipe, fittings and appurtenances in soils free of petroleum products or organic solvents. If, during the course of excavation, impacted soil or groundwater is suspected or encountered, immediately take the steps necessary to ensure worker health and safety, stop Work in the area with suspected or encountered impacted soil or groundwater, safely secure the site, and notify the RESIDENT PROJECT REPRESENTATIVE in writing. Proceed with the Work as authorized in writing and in accordance with Section 02 50 00.

B. Joining Pipe and Fittings:

1. Join pipe and fittings by butt fusion welding unless authorized otherwise in writing. Perform butt fusion welding of HDPE pipe and fittings by certified fusion welders in the presence of the RESIDENT PROJECT REPRESENTATIVE and in accordance with the manufacturer’s recommendations, the PPI Handbook of Polyethylene Pipe, Polyethylene Joining Procedures, and 49 CFR 192, Subpart F.

2. Inspect each length of pipe and clean and dry as necessary to remove debris and other deleterious material immediately prior to joining. Clean and dry HDPE pipe and fittings prior to joining.

3. Join HDPE pipe and fittings such that the interior surface is smooth and watertight and the wall thickness at the point of fusion is the same as the adjoining pipe. Remove internal bead projections greater than 3/16-inch.

4. Use fusion equipment appropriately sized and outfitted as recommended by the pipe manufacturer and as follows:

a. Heat Plate: Use heat plates capable of maintaining a uniform, consistent heat profile and temperature for the pipe or fitting being fused in good condition with no deep gouges or scratches, clean of debris or contamination. Assure temperature uniformity a minimum of two times every eight hours.

b. Data Logger: Use a fusion machine connected to a data logger equipped with the current version of the pipe manufacturer's recommended and compatible software.

c. Canopy: Use a weather protection canopy that follows the motion of the heat plate and fusion assembly in inclement or windy weather.

d. Facing Blades: Use facing blades appropriate for cutting HDPE pipe.

5. Pipe Rollers: Use pipe rollers as specified in Section 33 05 22.

6. Provide each butt-welded joint with an identification number marked on the pipe joint.

7. Log and record fusion data for each joint with a data logger capable of recording the parameters in accordance with the requirements of this Section and as recommended by the pipe manufacturer. Use a data logger capable of field printed reports and of providing the field operator a graphical representation of the previously completed joint. Manually record data not logged by data logger. Cross reference fusion data to identification marks on each joint.

8. Provide a tensile strength at yield for butt-fusion joints not less than that of the pipe.

9. Fused joints will be subject to inspection prior to installation by the RESIDENT PROJECT REPRESENTATIVE.

C. Service Connections and Tapping: No mechanical service saddles or taps are permitted on HDPE pipe or fittings unless authorized otherwise in writing.

D. Tracer Wire: Provide tracer wire in accordance with Section 33 05 70.

3.2 FIELD QUALITY CONTROL

A. Butt Fusion Testing: Use the first fusion of each day butt fusions are made as the trial fusion. Allow the trial fusion to cool completely, then cut out fusion test straps 12 inches minimum or 30 times the wall thickness in length with the fusion in the center, and 1 inch minimum or 1.5 times the wall thickness in width. Bend the test strap until the two ends of the strap touch. If the fusion fails at the joint, complete a new trial fusion and test. Do not provide butt fusion of pipe until a trial fusion has passed the bent strap test. Test a specimen of pipe cut across the butt-fusion joint in accordance with ASTM D638.

B. Hydrostatic Pressure Testing: Flush, clean, and test HDPE pipe and fittings in accordance with Section 01 45 50 and Section 33 05 22.

3.3 SCHEDULES

A. Refer to the schedule contained in Section 33 05 50 Laying and Jointing Buried Pipelines for information on the piping that is to be constructed using the pipe materials and methods specified herein.

END OF SECTION

(NO TEXT FOR THIS PAGE)

SECTION 33 05 54

POLYETHYLENE ENCASEMENT

PART 1 GENERAL

1.1 SUMMARY

A. Section Includes: Installation of polyethylene encasement around ductile iron pipe and fittings, valves, and appurtenances that require polyethylene encasement.

B. Related Work Specified in Other Sections Includes, but is Not Limited to, the Following:

1. Section 33 05 50 - Laying and Jointing Buried Pipelines
2. Section 33 05 55 - Buried Ductile Iron Pipe and Fittings
3. Section 33 05 58 - Cathodic Protection
4. Section 40 05 20 - Valves

C. Comply with the "American Iron and Steel (AIS)" requirements as contained in Section 436 of the Consolidated Appropriations Act, 2014, further described in the Bid Form.

1.2 REFERENCES

A. Codes and standards referred to in this Section are:

1. AWWA C105 - Polyethylene Encasement for Ductile-Iron Pipe Systems

2. AWWA C600 - Installation of Ductile-Iron Mains and Their Appurtenances

3. AWWA M41 - Ductile-Iron Pipe and Fittings, Third Edition

4. DIPRA - Installation Guide for Ductile Iron Pipe

1.3 SYSTEM DESCRIPTION

A. Design Standards: Provide polyethylene pipe wrap meeting the requirements of AWWA C105.

B. Provide labor, materials, equipment and services required to furnish and install polyethylene encasement of ductile iron pipe and associated appurtenances such as fittings, valves, closure pieces, and appurtenances.

1.4 SUBMITTALS

A. General: Furnish submittals, including the following, as specified in Division 1.

B. Shop Drawings:

1. Polyethylene encasement descriptive literature and catalog cuts indicating materials, markings, and color.
2. Thermoplastic tape descriptive literature and catalog cuts.

1.5 DELIVERY, STORAGE AND HANDLING

A. General: Deliver, store and handle products and materials as specified in Division 1 and as follows.

B. Transportation and Delivery: Take every precaution to prevent damage to the polyethylene during transportation and delivery to the site.

C. Storage: Store polyethylene encasement and thermoplastic tape out of the sunlight.

D. Handling: Never subject polyethylene-encased pipe to a point load during installation. Move the polyethylene encasement away from the timbers or hoisting device while on the pipe to prevent point loads and potential pin holes.

PART 2 PRODUCTS

2.1 MANUFACTURERS

A. Acceptable manufacturers are listed below.

1. Polyethylene Encasement:

a. Inner Layer: 8 mil of V-Bio® Enhanced Polyethylene Encasement. Equivalent products may not be submitted:

(1) Balcan Plastics Limited First Film Extruding
(2) Crayex Corporation

b. Outer Layer: 8 mil of generic polyethylene encasement

2.2 MATERIAL

A. Polyethylene Encasement: Provide double-wrapped polyethylene encasement, one layer of V-Bio® Enhanced Polyethylene Encasement and one layer of generic polyethylene encasement, meeting the requirements of and in accordance with the recommendation and practices of AWWA C105, AWWA C600, AWWA M41, and the Ductile Iron Pipe Research Association (DIPRA) Installation Guide for

Ductile Iron Pipe around ductile iron pipe and fittings, valves, and other pipeline appurtenances.

1. Provide V-Bio® Polyethylene Encasement sheet constructed of three layers of co-extruded linear low density polyethylene (LLDPE), fused into a single thickness of not less than 8 mils, where the inside surface of the polyethylene encasement to be in contact with the pipe exterior is infused with a blend of anti-microbial biocide to mitigate microbiologically influenced corrosion and a volatile corrosion inhibitor to control galvanic corrosion.

2. Provide generic polyethylene encasement sheet manufactured of 8 mil LLDPE film.

3. Provide tube-form polyethylene encasement for pipe and pipe-shaped appurtenances.

4. Provide flat sheet or split-tube polyethylene encasement for odd-shaped appurtenances.

5. Provide polyethylene film envelope that is free of gels, streaks, pinholes, particles of foreign matter and undispersed raw materials as is commercially possible and with no other visible defects such as holes, tears, blisters or thinning out at folds.

6. Provide polyethylene film that is distinctly marked at minimum 2 foot intervals with the following information:

    a. Manufacturer's name or trademark

    b. Year manufactured

    c. Minimum film thickness and material type (i.e. LLDPE)

    d. Range of nominal pipe diameter size

    e. ANSI/AWWA C105/A21.5 compliance

    f. Warning: "WARNING - CORROSION PROTECTION REPAIR ANY DAMAGE"

B. Polyethylene Tape: Provide thermoplastic material with a pressure sensitive adhesive face capable of bonding to metal, bituminous coating, and polyethylene with a minimum thickness of 8 mils, and a minimum width of 1.5 inches.

PART 3 EXECUTION

3.1 INSTALLATION

A. General: Install polyethylene encasement in accordance with manufacturer's recommendations and approved shop drawings and as specified in Division 1.

B. Encase ductile iron pipe, valves, and metallic appurtenances in polyethylene encasement to prevent contact with surrounding backfill and bedding material, unless shown or specified otherwise.

C. Install polyethylene encasement on the pipe directly prior to the installation of the piece of pipe. Install the polyethylene material in accordance with the DIPRA Installation Guide for Ductile Iron Pipe and AWWA C105. Install tube-form polyethylene encasement per Modified Method A as described in AWWA C105. In wet conditions, or where the pipe will be at or below the water table, use Modified Method A - Wet Conditions. Install polyethylene snugly and not tightly stretched.

D. Repair holes or tears with tape. Repair large holes or tears by taping another piece of polyethylene over the hole with continuous tape around the entire perimeter of the patch piece. Extend the patch over the hole by a minimum of 6 inches in every dimension.

E. Dig bell holes and slide polyethylene encasement over the adjacent pipe providing a minimum of 1 foot of overlap of the spigot side of the joint from the bell side.

F. Where polyethylene-encased pipe being installed connects to a pipe that is not wrapped (including existing pipe), extend the wrap a minimum of 3 feet onto the previously uncovered pipe for both layers of polyethylene encasement. This includes lines which may be wrapped in polyethylene or dielectric PVC tape or plastic pipe.

G. Tape joint overlaps and at 3-foot intervals along the barrel of the pipe (2-foot intervals when installed below the water table). Tightly secure polyethylene encasement using two to three circumferential passes of adhesive tape on the pipe to polyethylene encasement connection and the overlap polyethylene encasement to polyethylene encasement connection for both layers of polyethylene encasement.

H. Install polyethylene encasement up to the operating nut level on valves, leaving the operating nut of the valve exposed and free to be operated. Install polyethylene encasement so as to not impede valve operation.

I. Secure polyethylene encasement in place prior to forming or pouring any concrete encasement.

J. Provide openings in the polyethylene encasement for branches, air valves, blow-off assemblies, and similar appurtenances by making an X-shaped cut in the encasement and temporarily folding back the film. After installation of the appurtenance, tape the slack securely to the appurtenance and repair the cut and any other damaged areas with tape. Continue installation of polyethylene encasement on pipe branches, overlapping and taping the first piece of polyethylene encasement to the adjacent installation for both layers of polyethylene encasement.

K. When making direct taps, use the DIPRA preferred method of wrapping tape around the pipe two or three times and tap directly through the tape and polyethylene encasement.

L. Remove and replace, or satisfactorily repair, any defective or inferior Work that is found on polyethylene encasement with proper material and workmanship and without extra compensation from the OWNER.

END OF SECTION

(NO TEXT FOR THIS PAGE)

SECTION 33 05 55

BURIED DUCTILE IRON PIPE AND FITTINGS

PART 1 GENERAL

1.1 SUMMARY

A. Section Includes: Requirements for providing buried ductile iron pipe, fittings and appurtenances.

1. Provide ductile iron pipe and fittings complete with necessary jointing and materials, specials, adapters and other appurtenances required for installation in and completion of the pipelines to be constructed.

2. Provide plain end or rubber gaskets (push-on or mechanical joint) of the types, sizes and classes shown or specified.

B. Related Work Specified In Other Sections Includes, but is Not Limited to, the Following:

1. Section 01 45 50 - Leakage Test
2. Section 31 23 16 - Excavation
3. Section 31 23 23 - Backfilling
4. Section 33 05 50 - Laying and Jointing Buried Pipelines
5. Section 33 05 54 - Polyethylene Encasement
6. Section 33 05 58 - Cathodic Protection

C. Comply with the “American Iron and Steel (AIS)” requirements as contained in Section 436 of the Consolidated Appropriations Act, 2014, further described in the Bid Form.

1.2 REFERENCES

A. Codes and standards referred to in this Section are:

1. ASME B1.1 - Uniform Inch Screw Threads (UN and UNR Thread Form)

2. ASME B18.2 - Square, Hex, Heavy Hex, and Askew Head Bolts and Hex, Heavy Hex, Hex Flange, Lobed Head, and Lag Screws (Inch Series)

3. ASME B16.1 - Grey Iron Pipe Flanges and Flanged Fittings: Classes 25, 125, and 250

4. ASTM F593 - Standard Specifications for Stainless Steel Bolts, Hex Cap Screws, and Studs

5. AWWA C104/A21.4 - Cement-Mortar Lining for Ductile-Iron Pipe and Fittings for Water

6. AWWA C105/A21.5 - Polyethylene Encasement for Ductile-Iron Pipe Systems

7. AWWA C110/A21.10 - Ductile-Iron and Gray-Iron Fittings

8. AWWA C111/A21.11 - Rubber-Gasket Joints for Ductile-Iron Pressure Pipe and Fittings

9. AWWA C115/A21.15 - Flanged Ductile-Iron Pipe With Ductile-Iron or Grey-Iron Threaded Flanges

10. AWWA C150/A21.50 - Thickness Design of Ductile-Iron Pipe

11. AWWA C151/A21.51 - Ductile-Iron Pipe, Centrifugally Cast

12. AWWA C153/A21.53 - Ductile-Iron Compact Fittings

13. AWWA C600 - Installation of Ductile-Iron Mains and Their Appurtenances

1.3 SYSTEM DESCRIPTION

A. Design Standards: Provide ductile iron pipe meeting the requirements of AWWA C150/A21.50 and C151/A21.51.

1. Provide pipe of the various sizes and classes as specified in the schedule or shown. Provide buried ductile iron pipe encased in polyethylene sheet as specified. Provide restrained joints and various beddings as shown.

2. Provide pipe laying lengths in 18 or 20 feet nominal lengths with allowable trim pipe lengths in accordance with AWWA C151 and special shorter lengths as required by the Drawings.

3. Manufacture, fabricate, coat, and line pipe at a single plant location by the approved pipe supplier. Fittings and specials may be fabricated at a site other than where the pipe is manufactured. Conduct testing and application of linings and coatings where the pipe, fitting, or special is manufactured.

4. Provide concrete encasements where shown.

1.4 SUBMITTALS

A. General: Furnish submittals, including the following, as specified in Division 1.

B. Shop Drawings, Product Data, and Information:

1. For Site Yard Piping at the Outfall Facility, excluding piping at and north of the north wall of the new Reaeration Building:

   a. Pipe joints, fittings, and appurtenances. Where special designs or fittings are required, provide a drawing to show the Work in large detail and completely describe and dimension items.

   b. Catalog data for pipe, joints, fittings, coatings, lining, gaskets, and other appurtenances.

   c. Fully dimensioned drawings of piping layout including pipes, fittings, adapters, appurtenances, valves, supports and anchors. Label pipe size, materials, type, and class on drawings and include limits of restrained joints. Show cross sections with the elevations of appurtenances, pipes, fittings, and valves.

   d. Laying schedule cross referenced to identification marks on the pipeline pieces.

   e. Alignment survey signed and sealed by a land surveyor registered in the State of Wisconsin.

2. For Pipelines (exclusive of yard piping):

   a. Pipe joints, fittings, and appurtenances. Where special designs or fittings are required, provide a drawing to show the Work in large detail and completely describe and dimension items.

   b. Catalog data for pipe, joints, fittings, coatings, lining, gaskets, and other appurtenances.

   c. Laying schedule cross referenced to identification marks on the pipeline pieces.

   d. Alignment survey signed and sealed by a land surveyor registered in the State of Wisconsin.

C. Quality Control:

1. A certificate of compliance for pipe, fittings, gaskets, lining, polyethylene encasement, coatings, specials, appurtenances, and other products attesting

that the items are in compliance with the Contract Documents, referenced standards, and "American Iron and Steel (AIS)" requirements.

2. An affidavit from the pipe supplier attesting that plant and equipment capacity is sufficient to perform the required pipe production, testing, fabrication, lining, and coating within the specified Contract Time in accordance with the CONTRACTOR's approved Progress Schedule.

3. Premanufacture notification for ductile iron pipe, fittings, and appurtenances.

1.5 SOURCE QUALITY CONTROL

A. Work under this Section including the production and testing of pipe, fittings and appurtenances is subject to inspection by the OWNER or the ENGINEER in the pipe supplier's or pipe manufacturer's plant.

1.6 DELIVERY, STORAGE AND HANDLING

A. Deliver, store and handle products and materials as specified in Division 1 and Section 33 05 50.

PART 2 PRODUCTS

2.1 MANUFACTURERS

A. Acceptable manufacturers are listed below. Manufacturers of equivalent products may be submitted unless specified otherwise.

1. Ductile iron pipe and fittings: Equivalent products may not be submitted.

   a. AMERICAN
   b. McWane, Inc.
   c. United States Pipe and Foundry Company

2. Ductile iron retainer glands:

   a. EBAA Iron, Inc. MEGALUG Series 1100

3. Restrained push-on joints: Equivalent products may not be submitted.

   a. AMERICAN Flex-Ring
   b. McWane, Inc. TR Flex
   c. United States Pipe and Foundry Company
      (1) TR Flex
      (2) HDSS

4. Gaskets:

   a. AMERICAN
   b. Garlock Packing Company
   c. John Crane, Inc.
   d. McWane, Inc.
   e. Specification Rubber Products, Inc.
   f. United States Pipe and Foundry Company
   g. U.S. Rubber Company

5. Coatings and Linings:

   a. Carboline
   b. Fulton Enterprises, Inc.
   c. Madison Chemical Industries
   d. Tnemec
   e. Vulcan Coatings

2.2 MATERIALS

A. Fittings: Provide fittings meeting the requirements of AWWA C153/A21.53, or AWWA C110/A21.10 where required, unless shown or specified otherwise. Provide fittings having a pressure rating meeting or exceeding that shown. Match fitting coating and lining to the pipe coating and lining.

   1. Flanged: Provide flanged fittings as shown. Flanges installed in a buried condition are not acceptable. Where long radius flanged fittings and other flanged fittings not covered in AWWA C110/A21.10 are shown or specified, provide items meeting the requirements of AWWA C110/A21.10 and having laying lengths conforming to ASME B16.1 for 250-pound American Standard fittings.

   2. Compact Mechanical Joint and Rubber Gasket Joint: Provide restrained joints at fittings as specified in this Section. Unless shown otherwise, provide items meeting the requirements of AWWA C153/A21.53.

B. Flanged Joints: Provide flanged joints as shown. Flanged joints installed in a buried condition are not acceptable for use on this project.

   1. Threaded Flanges: Provided threaded, ductile iron long hub flanges meeting the requirements of AWWA C115/A21.15.

      a. Screw flanges on the threaded end of the pipe in the shop.

      b. Reface the face of the flange and the end of the pipe together.

      c. Design flanges to prevent corrosion of the threads from the outside and to provide leakage through the pipe threads.

2. Facing and Drilling: Provide flanges plain faced and drilled to the requirements of AWWA C115/A21.15, unless special drilling is called for or required. Face flange accurately at right angles to the pipe axis. Drill flanges smooth and true, and cover machined faces with zinc dust and tallow or equivalent material.

3. Fasteners: Provide bolts, stud bolts, and nuts as specified. Provide bolts with American Standard Heavy unfinished hexagonal heads and nut dimensions meeting the requirements of ASME B18.2. Provide bolts and nuts threaded in accordance with ASME B1.1, Unified Inch Screw Threads (UN and UNR Thread Form) class 2A external and class 2B internal. Provide material for bolts and nuts conforming to Type 304L stainless steel, annealed, ASTM F593, minimum 60,000 psi tensile strength, unless otherwise specified.

4. Taps: Tap flanges where tap or stud bolts are required.

5. Gaskets: Provide full-face gaskets for flanged joints on 12-inch diameter and smaller pipe and gaskets of the ring type for flanged joints on larger pipe. Provide flange gaskets meeting the requirements of AWWA C115/A21.15.

C. Gasket Joints: Provided mechanical joints and push-on joints meeting the requirements of AWWA C110/A21.10, AWWA C111/A21.11, and AWWA C153/A21.53 as applicable.

1. Pipe-to-Pipe Non-Restrained Joints: Provide standard push-on joints for pipe-to-pipe connections as shown in accordance with manufacturer recommendations at non-restrained pipe-to-pipe connections. Provide push-on joints of a type which employs a single elongated groove gasket to effect the joint seal. Mechanical joints are not acceptable for pipe-to-pipe non-restrained joints.

2. Pipe-to-Pipe Restrained Joints: Provide restrained joints for pipe-to-pipe connections as shown in accordance with manufacturer recommendations of factory-welded retainer bead or ring on the pipe spigot, and either factory manufactured ductile iron locking segments held in place by rubber retainers or ductile iron retaining rings that lock over the bell of the joint and are secured to prevent rotation. Restraining joints by using restrained joint gaskets with integral stainless steel locking segments (including MJ Field-Lok gaskets) are not acceptable for use on the project.

3. Pipe-to-Fitting Joints and Pipe-to-Valve Joints: Provide restrained mechanical joints using retainer glands for connections to fittings and valves. When restrained joint pipe (with factory-welded retainer bead or ring on the pipe spigot) is used, fittings and valves manufactured with restrained joints compatible with the restrained joint pipe may be used in lieu of

fittings and valves with restrained mechanical joints. Non-restrained mechanical joints and non-restrained push-on joints are not allowed for connections to valves or fittings. Restraining joints by using restrained joint gaskets with integral stainless steel locking segments (including MJ Field-Lok gaskets) are not acceptable for use on the project.

4. Fasteners: Provide anti-rotational T-bolts and nuts on mechanical joints, except where special bolts are supplied with the approved restraint device, that are high-strength, corrosion resistant, Type 304L stainless steel, annealed, minimum 60,000 psi tensile strength, in accordance with the manufacturers recommendations meeting the requirements of AWWA C111 and ASTM F593. Nuts are to be Xylan or FluoroKote #1 (corrosion resistant) coated.

D. Special Gaskets: Provide Nitrile gaskets for pipeline joints, blow-off assembly joints, valve joints, and joints of other appurtenances along pipeline reaches as shown.

E. Connecting Pieces and Special Fittings

1. General: Provide connecting pieces, such as bell and bell, and bell and spigot meeting the requirements of AWWA C110/A21.10, or AWWA C153/A21.53.

2. Design: Provide special fittings, where required, of an approved design that have the same diameters and thicknesses as standard fittings, unless otherwise required, but their laying lengths and other functional dimensions are determined by their positions in the pipeline and by the particular piping materials to which they connect.

F. Temporary Bulkheads: Provide temporary bulkheads at the ends of sections where adjoining pipelines have not been completed and are not ready to connect.

1. Remove temporary bulkheads when they are no longer needed.

G. Linings and Coatings

1. Cement Lining: Provide ductile iron pipe and fittings having a cement-mortar lining not less than standard thickness meeting the requirements of AWWA C104/A21.4, unless shown or specified otherwise. Finish interior of the pipe so that the Hazen-Williams friction factor will not be less than 140.

a. Repair: Repair cement mortar lining damaged during handling, hauling, storage or installation.

2. Asphaltic Coating: Shop coat pipe which is to be buried with the standard asphaltic outside coating meeting the requirements of AWWA C151/A21.51.

3. Polyethylene Encasement: Provide double-wrapped polyethylene encasement for buried ductile iron pipe and fittings as specified in Section 33 05 54 and meeting the requirements of AWWA C105/A21.5.

4. Labels: Label the supplier’s name or trademark, size, pressure class, manufacture date, bend angle turned and locations of short and long sides, and control number cross referenced to the laying schedule conspicuously in white on the outside of each pipe, fitting, and special casting after the shop coat has hardened. Provide cast marks and other marks in accordance with applicable standards.

5. Flange Joints: Immediately after facing and drilling, coat the back of the flanges and bolt holes with asphaltic coating meeting the requirements of AWWA C151/A21.51.

H. Cathodic Protection: Provide cathodic protection as specified in Section 33 05 58.

PART 3 EXECUTION

3.1 INSTALLATION

A. Install buried ductile iron pipe and fittings in accordance with the manufacturer's recommendations and approved shop drawings and as specified in Division 1 and Section 33 05 50.

B. Load, transport, install, and test ductile iron pipe per AWWA C600.

C. Calibrate test equipment used in activities affecting quality control in accordance with the requirements of the test equipment manufacturer prior to use.

3.2 FIELD QUALITY CONTROL

A. Cleaning: Flush, clean, and test pipes after installation.

B. Testing: Test pipes for leaks and repair or tighten as required.

C. Procedures: Conduct tests in accordance with Section 01 45 50.

3.3 SCHEDULES

A. Refer to the Schedule contained in Section 33 05 50 Laying and Jointing Buried Pipelines for information on the piping that is to be constructed using the pipe materials and methods specified herein.

END OF SECTION

(NO TEXT FOR THIS PAGE)

SECTION 33 05 56

STAINLESS STEEL PIPE AND FITTINGS

PART 1 GENERAL

1.1 SUMMARY

A. Section Includes: Requirements for providing stainless steel pipe, fittings and appurtenances. The Work includes furnishing and installing stainless steel pipe, fittings, and specials buried below grade, in vaults, and above grade of the screwed, welded, or plain end type of the sizes and thicknesses as shown or specified.

B. Related Work Specified In Other Sections Includes, But is Not Limited to, the Following:

1. Section 01 45 50 - Leakage Test
2. Section 31 23 16 - Excavation
3. Section 31 23 23 - Backfilling
4. Section 33 05 50 - Laying and Jointing Buried Pipelines

C. Comply with the "American Iron and Steel (AIS)" requirements as contained in Section 436 of the Consolidated Appropriations Act, 2014, further described in the Bid Form.

1.2 REFERENCES

A. Codes and standards referred to in this Section are:

1. ANSI B36.19 - Stainless Steel Pipe
2. ASME B16.3 - Malleable Iron Threaded Fittings: Classes 150 and 300
3. ASME B16.9 - Factory-Made Wrought Buttwelding Fittings
4. ASME Section IX - BPVC Section IX-Welding, Brazing, and Fusing Qualifications
5. ASTM A197 - Standard Specification for Cupola Malleable Iron
6. ASTM A380 - Standard Practice for Cleaning, Descaling, and Passivation of Stainless Steel Parts, Equipment, and Systems

7. ASTM A530 - Standard Specification for General Requirements for Specialized Carbon and Alloy Steel Pipe

8. ASTM A778 - Standard Specification for Welded, Unannealed Austenitic Stainless Steel Tubular Products

9. ASTM A967 - Specification for Chemical Passivation Treatments for Stainless Steel Parts

10. AWWA C208 - Dimensions for Fabricated Steel Water Pipe Fittings

11. AWWA M11 - Steel Pipe: A Guide for Design and Installation

1.3 SYSTEM DESCRIPTION

A. Provide stainless steel pipe and fittings of the various sizes, thicknesses, materials, and locations as shown.

B. Design stainless steel piping for the services and conditions listed in Section 33 05 50 in the Buried Piping Schedule for the purpose of conveying air to and from air valves.

C. Manufacture pipe so the inside diameter of the pipe is equal to the nominal diameter shown, unless specified otherwise.

1.4 SUBMITTALS

A. General: Furnish submittals, including the following, as specified in Division 1.

B. Shop Drawings, Product Data, and Information:

1. Screwed and welded fittings and pipe. When special designs or fittings are required, show the Work in large detail and completely describe and dimension the special or fitting.

2. Fully dimensioned layout of pipe, fittings, wall sleeves, wall sleeve seals, supports, anchors, and equipment. Label pipe size, type and materials on drawing and include schedule. Show types and locations of pipe hangers or supports on the piping layouts for each submittal.

3. Cross sections showing elevation of pipe, fittings, wall sleeves, wall sleeve seals, supports, anchors, and equipment.

4. Catalog data for pipe, fittings, wall sleeves, and wall sleeve seals.

C. Quality Control:

1. A certificate of compliance for pipe, fittings, and sleeves that the items are in compliance with the Contract Documents, referenced standards, and "American Iron and Steel (AIS)" requirements.

2. Welder qualification certificates prior to fabrication of pipe.

3. Proposed cleaning method, including precleaning, descaling, chemicals to be used, or mechanical descaling method and final cleaning and passivation.

1.5 QUALITY ASSURANCE

A. Utilize certified welders, having current certificates conforming to the requirements of the ASME code to perform welding on stainless steel pipe.

B. Furnish stainless steel pipe by a single manufacturer experienced, reputable, qualified, and regularly engaged for the last 5 years in the manufacturer of the materials to be furnished. Design, construct, and install in accordance with the best practices and methods and in accordance with this Section.

1.6 DELIVERY, STORAGE AND HANDLING

A. General: Deliver, store and handle products and materials as specified in Division 1 and Section 33 05 50.

PART 2 PRODUCTS

2.1 MATERIALS

A. Fabricate stainless steel pipe and fittings from stainless steel sheet conforming to ASTM A778 Type 316L with carbon content of 0.03 percent maximum and No. 1 or No. 2B finish.

B. Furnish pipe die-formed or rolled true to dimension and round with tolerances for length, inside and outside diameter and straightness conforming to ASTM A530. Fabricate the two edges of the sheet brought to line so as not to leave a shoulder on the inside of the pipe. Furnish pipe with ends of the pipe perpendicular to the longitudinal axis. Weld longitudinal seams on pipe and fittings by either tungsten gas or the metallic-gas method with interior welds smooth, even, and without an internal bead higher than 1/16 inches. Mark each piece with gauge and type of stainless steel. Mark the initials of the inspector on the inside of each pipe at each end.

C. Furnish pipe and fittings with wall thicknesses based on schedule as shown and in accordance with ANSI B36.19.

D. Pickle, scrub, and wash stainless steel pipe and fittings until discoloration is removed in accordance with ASTM A380 at the point of manufacture. Provide

passivation of stainless steel member in accordance with the requirements set forth in ASTM A380 and ASTM A967.

E. Prepare pipe ends for unions or other type ends where required by transport and handling limitations, where required to support the pipe, and where shown. Assure rigidity of joints where required.

F. Shop weld fabrications according to the procedures and by welders certified per ASME Section IX. Complete welding by an inert gas shielding process using only extra low carbon filler metals. Provide welds with a bead height of no more than 1/16 inches. Provide butt welds of 100 percent penetration to the interior of backside of the weld joint. Provide cross-sectional thickness of welds equal to or greater than that of the parent metal. Provide welds pickled or passivated on the interior and exterior of the pipe.

G. Fittings:

1. Manufacture fittings for stainless steel pipe to standard dimensions, suitable for the pressures specified of the smooth curve type conforming to ANSI B16.9. Provide stainless steel fittings of the same or heavier wall thickness and type as the pipe of which they are a part.

a. Screwed Fittings:

(1) Provide fittings used in pipes 2-inch diameter or smaller of the screwed pattern.

(2) Provide malleable iron ASME B16.3 screwed fittings where shown or specified for stainless steel pipe meeting the requirements of ASTM A197.

(3) Unions: Where shown, join pipe with unions. Use screwed unions on stainless steel pipe 2-inch diameter and smaller.

(a) Provide an adequate number of unions of the screwed type in each main pipe and each branch to facilitate the dismantling or removal of any branch line or any part thereof or the section of the main pipe to which it connects, without disturbing adjacent branch lines or their related main pipe.

b. Welded Fittings:

(1) Provide fittings used in pipe 2.5-inch diameter or larger of the seamless stainless steel welded type, except as shown or specified otherwise.

(2) Provide butt welding fittings meeting the requirements of ASME B16.9.

2. Fabricate stainless steel fittings from the same plates as the pipeline of which they are a part and meeting the requirements of AWWA C208, unless otherwise shown or specified.

3. Provide fittings and elbows that are made of pipe segments of preformed plates.

4. Provide reducers and increasers with the same laying length as American Standard Class 125.

5. Provide tees, wyes, laterals, and outlets reinforced in accordance with AWWA M11.

H. Expansion:

1. General: Make ample provisions for flexibility in pipelines to compensate for expansion.

2. Expansion Device: Provide adequate expansion devices to allow the lines to expand and contract freely without damage to any part of the piping system.

a. Provide expansion devices in the form of expansion joints, expansion couplings, swivel or swing joints or pipe bends, and include such anchors as may be shown, specified or required to make the devices effective.

b. Provide expansion devices designed for the specified test pressures.

c. If expansion devices are not required, fabricate runs of pipe subject to expansion shorter than their theoretical length to the extent that there is freedom to expand without increasing the stresses imposed when cold.

I. Wall Sleeves and Sleeve Seals:

1. Where pipes pass through exterior walls or floors of structures, vaults, and manholes and where wall pipes are not to be provided, provide Type 316 stainless steel pipe sleeves constructed of heavy gauge seamless stainless steel pipe with a full circle continuously welded water stop plate to provide positive sealing and to prevent any thrust movement meeting the requirements of this Section or as shown or specified otherwise. Provide sleeves with ends that are flush with the wall or floor surfaces.

2. Provide sleeves having large enough diameters to accommodate the passage of pipe joints, if required.

3. Provide sleeves to mate with modular, mechanical sleeve seals, consisting of interlocking synthetic rubber links shaped to continuously fill the annular space between the pipe and the wall sleeve. Provide an elastomeric element that is of the size, quantity, type and material that the manufacturer recommends for the intended service and that will provide an effective hydrostatic seal.

J. Coatings and Linings: Do not line, coat, or wrap stainless steel pipe and fittings.

PART 3 EXECUTION

3.1 INSTALLATION

A. Install stainless steel pipe and fittings in accordance with the manufacturer's recommendations and approved shop drawings and as specified in Division 1 and Section 33 05 50.

B. During handling and installation, take necessary precautions to prevent carbon impregnation of stainless steel members.

C. Install pipe and fittings true to grade and alignment and pipe anchorage or restraint provided where required.

D. Keep pipe and fittings free of dirt, dust, oil, grease, and other foreign matter during installation to prevent damage to pipe and to assure no foreign matter is left in the piping.

E. To assemble joints in the field, thoroughly clean joint surfaces with soapy water before assembly.

F. Provide fittings, in addition to those shown, where required considering thermal expansion / contraction over a temperature range of 200 degrees Fahrenheit.

G. Make field welds as approved by the RESIDENT PROJECT REPRESENTATIVE by welders certified under ASME Section IX. After field welding has been completed, thoroughly clean and buff using deburring and finishing wheels.

H. Install sleeves of proper size for pipes passing through walls as shown.

I. When cutting of pipe is required, cut by machine neatly, without damage to pipe. Cut ends smooth and at right angles to the axis of the pipe.

3.2 CLEANUP

A. After installation, visually inspect stainless steel surfaces for evidence of iron rust, oil, paint, and other forms of contamination.

B. Remove foreign substances using brushes with stainless steel or nonmetallic bristles.

C. Clean completed lines with Oakite deoxidizer or similar deoxidizer as recommended by the manufacturer to remove foreign matter, construction stains, or shop markings. Rinse cleaned lines clear with steam or hot water.

D. After treatment, visually inspect surfaces for compliance.

3.3 FIELD QUALITY CONTROL

A. Cleaning: Flush clean and test pipes after installation with steam or hot water to remove any foreign material.

B. Testing: Repair or tighten leaks as required.

C. Procedures: Conduct leakage tests in accordance with Section 01 45 50.

3.4 SCHEDULES

A. Refer to the schedule contained in Section 33 05 50 Laying and Jointing Buried Pipelines for information on the piping that is to be constructed using the pipe materials and methods specified herein.

END OF SECTION

(NO TEXT FOR THIS PAGE)

SECTION 33 05 57

BURIED POLYVINYL CHLORIDE PIPE AND FITTINGS

PART 1 GENERAL

1.1 SUMMARY

A. Section Includes: Requirements for providing buried polyvinyl chloride (PVC) pipe, fittings and appurtenances.

1. For gravity sewer applications, provide PVC pipe and fittings complete with all necessary jointing facilities and materials, specials, adapters and other appurtenances required for installation in and completion of the pipelines to be constructed.

B. Related Work Specified In Other Sections Includes:

1. Section 01 45 50 - Leakage Test
2. Section 33 05 50 - Laying and Jointing Buried Pipelines

1.2 REFERENCES

A. Codes and standards referred to in this Section are:

1.	ASTM D 1785	-	Specification for Poly (Vinyl Chloride) (PVC) Plastic Pipe, Schedules 40, 80 and 120.
2.	ASTM D 2467	-	Specification for Poly (Vinyl Chloride) (PVC) Plastic Pipe Fittings, Schedule 80
3.	ASTM D 3034	-	Type PSM PVC Sewer Pipe and Fittings
4.	ASTM F 679	-	Poly(Vinyl Chloride) (PVC) Large Diameter Plastic Gravity Sewer Pipe and Fittings
5.	ASTM D 2321	-	Underground Installation of Flexible Thermoplastic Sewer Pipe
6.	ASTM F 477	-	Elastomeric Seals (Gaskets) for Joining Plastic Pipe
7.	ASTM D 3139	-	Joints for Plastic Pressure Pipe Using Flexible Elastomeric Seals

1.3 SYSTEM DESCRIPTION

A. Design Standards: Provide 18-inch and larger PVC gravity sewer pipe and fittings meeting the requirements of ASTM F 679.

1. Provide SDR 18 (C900) PVC.

1.4 SUBMITTALS

A. General: Provide all submittals, including the following, as specified in Division 1.

B. Submit the following shop drawings:

1. Catalog data for sewer pipe, joints, fittings, sleeves, harnessing, and all appurtenances.
P:\15310-Waukesha Great Lakes Water Supply PM-CM\22 Specs\22.03 Final Design\CP6\Div 01
2. Manufacturer's installation instructions.

C. Quality Control: Submit certificate of compliance for pipe, fittings, gaskets, and specials in accordance with this Section.

1.5 DELIVERY, STORAGE AND HANDLING

A. Deliver, store and handle all pipe, fittings, and appurtenances as specified in Division 1 and Section 33 05 50.

PART 2 PRODUCTS

2.1 MANUFACTURERS

A. Acceptable manufacturers are listed below. Manufacturers of equivalent products may be submitted.

1. Diamond Pipe
2. JM Eagle
3. Northern Pipe Products, Inc.

2.2 MATERIALS

A. Gravity Sewer Pipe and Joints: Provide gravity sewer pipe with joints that are a molded integral part of the pipe section. Provide joints with elastomeric gasket joints in accordance with ASTM F 477. Provide fittings matching the pipe type for all depths of bury. Do not use joints or couplings furnished loose or solvent cement joints.

B. Joints and Gaskets for Open-Cut Installations: Joints shall be composed of elastomeric gasket joints and shall be in accordance with the requirements of ASTM D3139. Joints shall be bell and spigot end, mechanical joint, or coupling push-on type. Joints shall be designed so as to provide for the thermal expansion and contraction experienced with a total temperature change of 75 degrees F° at each joint. Details of the joint design and assembly shall be in accordance with joint manufacturer's standard practice. Gaskets shall be in accordance with the requirements of ASTM F477 and ANSI A-21.11. Joint lubricant shall have no deteriorating effects on the gasket nor the pipe. The lubricant shall be labeled with the manufacturer's name.

C. Rubber Gasket Joints: Provide mechanical joints meeting the requirements of AWWA C111/A21.11.

D. Pipe Marking: Provide mark on each pipe segment to designate compliance with applicable ASTM specification.

E. Date of Manufacturer: Provide pipe and fittings manufactured no earlier than 12 month period preceding the date of the agreement.

PART 3 EXECUTION

3.1 INSTALLATION

A. Install all buried PVC pipe in accordance with the manufacturer's recommendations and approved shop drawings and as specified in Division 1 and Section 33 05 50.

3.2 LEAKAGE TESTING

A. Cleaning: Flush clean and test all pipes after installation.

B. Testing: Testing shall be in accordance with Section 01 45 50.

END OF SECTION

(NO TEXT FOR THIS PAGE)

SECTION 33 05 58

CATHODIC PROTECTION

PART 1 GENERAL

1.1 SUMMARY

A. Section Includes: Requirements for providing a cathodic protection system for pipeline comprised of ductile iron pipe, valves, blow-off assemblies, and other appurtenances, including pipe installed using trench excavations and driven and bored casings. Pipeline installed via horizontal directional drilling are not included.

B. Related Work Specified in Other Sections Includes, but is Not Limited to, the Following:

1. Section 31 23 23 - Backfilling
2. Section 33 05 23 - Jacking, Augering and Mining
3. Section 33 05 50 - Laying and Jointing Buried Pipelines
4. Section 33 05 54 - Polyethylene Encasement
5. Section 33 05 55 - Buried Ductile Iron Pipe and Fittings

C. Comply with the “American Iron and Steel (AIS)” requirements as contained in Section 436 of the Consolidated Appropriations Act, 2014, further described in the Bid Form.

1.2 REFERENCES

A. Codes and standards referred to in this Section are:

1. ANSI/SCTE 77 - Specification for Underground Enclosure Integrity

2. ASTM D1248 - Standard Specification for Polyethylene Plastics Extrusion Materials for Wire and Cable

3. ASTM G97 - Standard Test Method for Laboratory Evaluation of Magnesium Sacrificial Anode Test Specimens for Underground Applications

4. NACE SP0169 - Control of External Corrosion on Underground or Submerged Metallic Piping Systems

5. NACE TM0497 - Measurement Techniques Related to Criteria for Cathodic Protection on Underground or Submerged Metallic Piping Systems

6. NFPA 70 - National Electrical Code (NEC)

7. UL 44 - Thermoset-Insulated Wires and Cables

8. UL 854 - Standard for Service-Entrance Cables

1.3 SUBMITTALS

A. General: Furnish submittals, including the following, as specified in Division 1. Incorporate manufacturer's product submittals into a single document to demonstrate that the items have been properly coordinated.

B. Shop Drawings, Product Data, and Information:

1. Manufacturer's physical and chemical specifications or product data for the following items:

a. Electrical continuity provisions for ferrous pipe (materials and testing procedure)

b. Corrosion monitoring test stations, buried reference electrodes and calibrated wire shunts

c. Electrical isolation devices

d. Galvanic magnesium anodes

e. Wire, cable, and splices

f. Exothermic welds and coating materials

g. Flange isolating kits, including flange size, rating, outside diameter, inside diameter, quantity of bolt holes, flange thicknesses, and bolt circle, flange bolt, and bolt hole diameters.

C. Quality Control:

1. The CONTRACTOR's Cathodic Protection (CP) Technician's qualifications and prior experience before installation of any cathodic protection components.

2. Spectrographic analysis and electro-chemical properties on samples from each heat or batch of galvanic magnesium anodes supplied for this project in accordance with ASTM G97.

3. Post-installation continuity testing results.

4. Post-Installation Cathodic Protection Testing Report, including a description of the structures intended for protection, a description of the cathodic protection systems, and a tabulation and analysis of the data versus NACE International® performance standards.

D. Operation and Maintenance:

1. Training course curriculum with the proposed training date at least 14 days prior to the date of the training course.

1.4 QUALITY ASSURANCE

A. Experience Requirements: Furnish the services of an individual certified by NACE International as a Level CP2 Corrosion Technician (CP Technician) to monitor compliance with this Section and to ensure that the cathodic protection system components conform to the applicable plans and specifications established by the Contract Documents.

B. Technical Assistance: Utilize technical assistance as needed (via telephone) from cathodic protection system material suppliers throughout the duration of the Work.

1.5 DELIVERY, STORAGE, AND HANDLING

A. Deliver, store and handle products and materials as specified in Division 1, Section 33 05 50, and as follows. Provide adequate care to protect cathodic protection materials from damage during handling, storage, hauling, and installation.

1.6 WARRANTY

A. Provide a two-year warranty for cathodic protection materials, commencing at the time of the final installation after the system has been tested by the CONTRACTOR and approved by the ENGINEER'S CP Specialist.

PART 2 PRODUCTS

2.1 MANUFACTURERS

A. Acceptable manufacturers are listed below. Manufacturers of equivalent products may be submitted unless specified otherwise.

1. Cathodic protection materials:

a. Mesa Products, Inc., (918-627-3188)
b. BK Corrosion, LLC, (713-225-0349)
c. T. Christy Enterprises, (800-258-4583)

2. Insulated stranded copper cable:

   a. Continental Industries, thermOweld® Jumper Bonds
   b. ERICO Products, Inc., Cadweld® Bonds – Formed Terminal

3. Corrosion monitoring test stations:

   a. Non-metallic posts:

      (1) Tinker & Rasor Company, Model T-3

   b. Flush-mounted test station enclosures:

      (1) Oldcastle Polymer, Model 1324-12
      (2) New Basis, Inc., Model PCA132412S

   c. Prepackaged Cu-$CuSO_4$ buried reference electrodes:

      (1) Borin Manufacturing, Inc., Model SRE-007-CUY
      (2) GMC Electrical, Inc., Model CU-1-UGPC

   d. Calibrated wire shunts:

      (1) Tinker & Rasor Company, 0.01-ohm wire shunt with yellow mounting plate rated at 8 amps

4. Electric isolation devices:

   a. Flange isolation kits (FIK):

      (1) GPT, Inc., Model LineBacker®
      (2) Lamons®, Model IsoGuard™

   b. Petrolatum tape-wrap encapsulation of buried FIK:

      (1) Denso NA, Inc., Denso Paste S105/Profiling Mastic/LT Tape

5. Galvanic magnesium anodes:

   a. Mesa Products, Inc.
   b. BK Corrosion, LLC
   c. T. Christy Enterprises

6. Wire, cable and splices:

   a. Test wires:

(1) Graybar Electric Company
(2) Omni Cable Corp
(3) Kris-Tech Wire

b. Compression crimp splice connectors:

(1) Burndy LLC-US

c. Splice encapsulation:

(1) 3M Electrical Products - Scotch™ Brand 23 Rubber Splicing Tape

(2) 3M Electrical Products - Scotch™ Brand 33+ Vinyl Electrical Tape

(3) 3M Electrical Products - Scotchkote™ Electrical Coating

7. Exothermic welds and connection devices:

a. Exothermic welds:

(1) Continental Industries, Model thermOweld®
(2) ERICO Products, Inc., Model Cadweld®

b. Covering welds:

(1) Continental Industries, Model thermOcap® PC
(2) Chase Corporation, Model Royston Handy Cap® IP

2.2 MATERIALS

A. Electrical Continuity Provisions – Ferrous Pipe:

1. Insulated Stranded Copper Bond Cable:

a. Provide the quantity and gauge of bond cables as shown. The largest gauge of bond cable for pipe sizes shown may be provided if the weld shots do not damage the pipe wall or its interior lining.

b. Provide factory-made bond cables with formed copper sleeves installed at both ends of the bond cable using hammer dies as recommended by the manufacturer.

c. Fabricate bond cables by the same manufacturer as the exothermic weld equipment used to connect the cable to the pipe or structure.

d. Provide cable constructed of stranded copper equipped with a high molecular weight polyethylene insulation conforming to ASTM D1248, Type 1, Class C, Grade 5 and be configured as follows:

(1) No. of Strands: 7

(2) Outer Jacket Thickness: 0.110 inches

(3) Length: 18 inches minimum. Additional length may be required to bypass valves.

B. Corrosion Monitoring Test Stations:

1. Non-Metallic Posts:

a. Provide non-metallic conduit posts. Furnish test stations with a capped terminal board equipped with wire or cable binding posts to permit ready access constructed as follows:

(1) Terminal Board: Polycarbonate plastic (clear).

(2) Test Station Cap: Polycarbonate plastic (color coded by test station type as shown).

(3) Conduit Post: UV stabilized polyethylene (white).

(4) Binding Posts: Nickel-plated marine brass (6 minimum).

2. Flush-Mounted Test Station Enclosures:

a. Provide test stations contained in heavy-duty, polymer concrete, flush-to-grade utility enclosures able to withstand incidental traffic and constructed as follows:

(1) The open bottom body constructed of polymer concrete having a minimum compressive strength of 87 MPa.

(2) The cover constructed of polymer concrete having a non-skid surface covering the body of the enclosure. Provide cover capable of withstanding a minimum of 20,000 pounds without failure in accordance with the requirements ANSI/SCTE 77 Tier 15.

(3) Provide cover with a minimum of two hex-capped Type 304 stainless steel hold-down bolts placed at opposite corners and embossed as shown.

3. Prepackaged Cu-$CuSO_4$ Buried Reference Electrodes:

a. Description: Use Cu-$CuSO_4$ electrodes in soil environments to provide a stable electrical benchmark from which to measure the cathodic protection system's effectiveness. Provide electrodes as follows:

(1) Element: Copper rod encapsulated in a proprietary backfill electrolyte containing high purity copper sulfate crystals and a chloride ion trap to prevent contamination of the electrolyte.

(2) Service life of the reference electrode no less than 20 years.

(3) Lead Wire: No. 14 RHH-RHW (yellow) stranded copper wire sufficiently long to reach its termination point without splicing.

4. Calibrated Wire Shunts:

a. Description: Use color-coded calibrated wire shunts to connect the cathodic protection system's anode header cable and structure return connection circuits.

C. Electrical Isolation Devices:

1. Flange Isolation Kit (FIK) Assemblies: In soils not known to be contaminated with hydrocarbons, provide FIK as shown and specified. Provide FIK assemblies matching the pressure rating of the pipe.

a. Provide FIK assemblies certified by an independent certification agency consisting of the following components:

(1) Flange Gasket Retainer: Full-faced (Type E) G-10 Epoxy Glass.

(2) Sealing Elements: Ethylene propylene diene monomer (EPDM) quad O-Rings.

(3) Isolation Sleeves: 1/32-inch thick G-10 Epoxy Glass.

(4) Isolation Washers: Double 1/8-inch thick G-10 Epoxy Glass.

(5) Backup Washers: Double 1/8-inch thick Type 304 Stainless Steel minimum.

2. Petrolatum Tape-Wrap Encapsulation of FIK:

a. Encapsulate FIK in a three-part cold-applied petrolatum tape coating consisting of a primer, profiling mastic, and a low-temperature petrolatum tape.

(1) Primer:

(a) Solids Content: 100%

(b) Specific Gravity: 1.08

(c) Specific Volume: 26 cubic inches/pound

(d) Flash Point: > 356 ºF

(e) Coverage: 10-22 sq. ft./pound

(2) Profiling Mastic:

(a) Solids Content: 100%

(b) Specific Gravity: 0.605

(c) Specific Volume: 46 cubic inches/pound

(d) Flash Point: 356 ºF

(e) Coverage: Varies by application

(3) Low-Temperature Petrolatum Tape:

(a) Thickness: 46 mils

(b) Maximum Service Temperature: 122 ºF

(c) Roll Width: 2 inches to 12 inches

(d) Roll Length: 33 feet

(e) Coverage with 55% Overlap: 87 sq. ft. of tape per 100 sq. ft. of pipe

D. Galvanic Magnesium Anodes:

1. Description: Provide magnesium anodes capable of delivering a minimum efficiency of 500 amp-hours per pound of magnesium with the following metallurgical analysis:

a. Aluminum: 0.01% (max.)

b. Manganese: 0.50% - 1.3%

c. Copper: 0.02% (max.)

d. Nickel: 0.001% (max.)

e. Iron: 0.03% (max.)

f. Other (each): 0.05% (max.)

g. Other (total): 0.30% (max.)

h. Magnesium: Balance

2. Packaged Magnesium Anode Backfill: Completely surround the anode ingot in backfill without voids. Provide magnesium anodes packaged within a cotton sack in a special chemical backfill having the following proportions:

   a. Ground Hydrated Gypsum: 75%

   b. Powdered Bentonite: 20%

   c. Anhydrous Sodium Sulfate: 5%

   d. Provide backfill with a grain size such that 100% is capable of passing a 20-mesh screen and 50% is retained by the 100-mesh screen.

3. Anode Lead Wire:

   a. Provide standard lead wire for a magnesium anode at least 10 feet in length of No. 12 AWG solid copper wire with Type TW (red) thermoplastic insulation.

   b. Lead Wire Connection to Anode Core:

      (1) Cast magnesium anodes with a minimum 20-gauge galvanized steel core.

      (2) Provide one end of the anode recessed to expose the core for silver-soldering the lead wire.

      (3) Fill the silver-soldered lead wire connection and anode recess with an electrical potting compound before packaging.

4. Magnesium Anode Physical Parameters:

Anode Weight (#)		Nominal Package Dimensions (in.)	
Bare Anode	Packaged Anode	Length	Diameter
48	98	38	8.0

E. Wire, Cable and Splices:

1. Anode Header Cable and Structure Return Connection (Direct Burial):

a. Use high molecular weight polyethylene insulated stranded copper cable for underground portions of the cathodic protection system's anode header cable and structure return connection circuits. Provide insulation conforming to ASTM D1248, Type 1, Class C, Grade 5.

b. Provide DC cables sized as follows:

(1) No. of Strands: 7

(2) Outer Jacket: 0.110-inch thickness

(3) Anode Header Cable: No. 8 AWG (red)

(4) Structure Return Connection: No. 8 AWG (blue)

2. Test Wires for Cathodic Protection System Monitoring (Direct Burial):

a. Use cross-linked polyethylene (XLPE) Type RHW-2 and USE-2 for use at 600 volts or less for underground structure connections as part of the cathodic protection system's monitoring circuit. Provide wire insulation conforming to NEC for direct burial, general-purpose applications at a maximum continuous operating temperature of 90 degrees C in either wet or dry locations.

b. Provide test wires as follows:

(1) Provide conductors that are Class B stranded annealed uncoated copper per UL 854 and UL 44.

(2) Primary Insulation: 0.045-inch thickness

(3) Gauge and Structure Color Code: #12 AWG (colors as shown)

3. Compression Crimp Splice Connectors:

a. Make underground spliced connections used within the DC cathodic protection circuit with copper compression crimp connectors.

(1) Provide connectors with the proper size in accordance with the manufacturer's recommendations. Do not mix different manufacturers' products.

(2) Crimp connectors with a hand tool capable of delivering a minimum of 9,000 pounds of compressive force.

4. Splice Encapsulation:

a. Seal underground spliced connections used within the DC cathodic protection circuit with rubber and plastic tape contained within a waterproof coating.

F. Exothermic Welds and Connection Devices:

1. Make connections used within the DC cathodic protection system circuit by exothermic welds.

a. Provide the proper size welders, metal charges, and wire sleeves in accordance with the manufacturer's recommendations. Do not mix different manufacturers' products.

(1) When connecting to horizontal ductile iron or cast iron structures, use a maximum of 32-gram weld metal charge and furnaces designated specifically for cast iron.

(2) When connecting to horizontal carbon steel structures, use a maximum of 25-gram weld metal charge and furnaces designated specifically for carbon steel.

2. Covering of Welds: Provided pre-fabricated plastic sheet with an igloo-shaped dome and entry tunnel filled with an oil-and gas-resistant elastomeric rubber.

PART 3 EXECUTION

3.1 PREPARATION

A. Examine the areas and conditions under which cathodic protection materials are to be installed and notify RESIDENT PROJECT REPRESENTATIVE in writing of conditions detrimental to the proper and timely completion of the Work as needed. Do not proceed with the Work until unsatisfactory conditions have been corrected.

3.2 INSTALLATION

A. General: Provide cathodic protection components and equipment as shown.

B. Electrical Continuity Provisions – Ferrous Pipe:

1. General: Install factory-made bond cables across non-welded ferrous pipe joints except as follows:

a. Pipe joints that are specifically required to be electrically isolated.

b. Bond around valves - do not connect bond cables to valve housing.

2. Method:

   a. Inspect each bond cable to ensure a continuous electrical conductor with no cuts or tears in the cable insulation.

   b. Attach bond cable to pipeline by the exothermic welding process in accordance with the manufacturer's instructions.

   c. Do not use any exothermic weld equipment that is either damp or wet.

   d. Cover exothermic welds with a pre-fabricated, igloo-shaped, domed-plastic elastomeric rubber cover in accordance with the requirements of this Section.

3. Post-Installation Visual Inspection: Inspect electrical continuity bond cable connections by visually examining each exothermic weld connection for strength and suitable coating prior to backfilling.

4. Post-Installation Continuity Testing: Verify bonded pipe joints are electrically continuous prior to backfilling as follows and shown.

   a. Measure the electrical potential at each side of selected bonded connections with a portable copper/copper-sulfate reference electrode (CSE) and a digital voltmeter having at least 10 mega-ohm input impedance.

   b. Place the CSE, connect the leads, measure and record the DC voltage, and verify an acceptable connection as shown.

   c. Document data and furnish post-installation continuity testing results each day to the RESIDENT PROJECT REPRESENTATIVE. Summarize and furnish post-installation continuity testing results to the ENGINEER at the completion of the project.

5. Acceptance Criterion: Remove and replace deficient welded connections at no expense to the OWNER that are not acceptable in accordance with the requirements of this Section or as directed by the RESIDENT PROJECT REPRESENTATIVE.

6. Backfilling of Bond Cables:

   a. Prevent damage to the bond cables and connections to the pipeline during backfilling.

   b. If construction activity damages bond cable, remove and replace the bond cable at no expense to the OWNER.

C. Corrosion Monitoring Test Stations:

1. General: Install the required number of test stations as shown or as directed by the RESIDENT PROJECT REPRESENTATIVE.

2. Buried Reference Electrode:

    a. Keep buried reference electrodes dry and protect from freezing before installation.

    b. Remove plastic or paper shipping bags from around the reference electrode prior to installation.

    c. Place reference electrode in native soil as shown.

3. Test Wires:

    a. Provide test station lead wires that are continuous with no cuts or tears in the insulation covering the conductor.

    b. Attach test leads to the pipeline by the exothermic welding process.

    c. Connect test station wires to one side of the terminal board using the test station manufacturer's standard binding posts at the locations shown.

    d. Install wire shunt plate and shorting bars to the opposite side of terminal board from the incoming wires.

    e. Install wire shunt plate last to permit easy removal from terminal board without having to disassemble other test station wire and cable connections.

4. Terminal Board and Test Stations within Flush-Mounted Enclosure:

    a. Route test station wires through the mounting pipe and run to an area along the pipeline that will not accumulate standing water or allow the test station to be silted over.

    b. Install the test station terminal board on top of the mounting pipe and extend the pipe vertically to allow at least 24 inches below bottom of the enclosure.

    c. Install the top of test station head and color-coded cap to allow a minimum separation of 1 inch from the underside of the enclosure cover. Permanently mark pipeline stationing number on test station cap or mounting post.

    d. Set the top of the enclosure flush to final grade outside of vehicular traffic areas and support with gravel base as shown to support and drain the inside of the enclosure.

e. Fasten the two hold-down bolts of the enclosure lid but do not over tighten.

f. Thoroughly backfill and compact the soil surrounding the enclosure to prevent settling and voids.

g. Drive a vertical 12-inch long steel rebar flush into the ground and immediately alongside the enclosure to facilitate locating with a magnetic sensing device.

h. Furnish and install reinforced concrete pad as shown.

5. Terminal Board and Test Stations on Mounting Post:

a. Route test station wires through the mounting pipe and run to an area along the pipeline that will not accumulate standing water.

b. Install the test station terminal board on top of the mounting pipe.

c. Install the top of test station head and color-coded cap. Permanently mark pipeline stationing number on test station cap or mounting post.

d. Thoroughly backfill and compact the soil surrounding the mounting post to prevent settling and voids.

6. Post-Installation Backfilling:

a. Protect test leads during the backfilling operation to avoid damage to the wire insulation and integrity of the conductor.

b. Protect buried reference electrode during backfilling to avoid damage to the electrode and its lead wire.

c. If, in the opinion of the RESIDENT PROJECT REPRESENTATIVE, the installation of the test station wires or the reference electrode is deficient, remove and replace these components at no expense to the OWNER.

D. Electrical Isolation Devices:

1. General: Install the required number of electrical isolation devices as shown or as directed by the RESIDENT PROJECT REPRESENTATIVE. Isolate the pipeline intended for cathodic protection as shown and as follows:

a. At steel casings beneath road or rail crossings.

b. At connections to existing metallic pipeline, at connections to other contract packages, or at connections to new pipeline that are not intended for cathodic protection.

E. Galvanic Magnesium Anodes:

1. General: Install anodes as shown or as directed by the RESIDENT PROJECT REPRESENTATIVE.

2. Method:

a. Remove plastic or paper shipping bags from around prepackaged anodes prior to installation.

b. Install in the manner and at the dimensions from the pipeline as shown. Make field modifications only with the approval of the RESIDENT PROJECT REPRESENTATIVE.

c. Handle galvanic anodes in such a manner to avoid damaging anode materials and wire connections.

d. Attach anode lead wire to insulated header cable or route lead wire directly to pipe or test station as shown.

e. Splices are not permitted within the length of a factory-fabricated anode lead wire.

f. Install prepackaged anodes with compacted backfill material, such that no voids exist between the anode material and the backfill.

g. In soils that do not exhibit any signs of moisture content or granular soils that have no cohesive strength, pour 5 gallons of water over the anode after backfilling and tamping have been completed to a point about 6 inches above the anode. After the water has been absorbed by the earth, backfill to finished grade.

F. Wire, Cable and Splices:

1. Install underground wires, cables, and connections at least 36 inches below finished grade and at least of 6 inches from other underground structures.

a. Crimp Connectors: Use for spliced connections.

2. Use only hand tools compatible with the manufacturer's copper compression taps.

3. Provide waterproof sealing of butt and wye splices as shown.

G. Exothermic Welds and Connection Devices:

1. Exothermic Welds:

a. Provide exothermic welds as shown.

b. Follow manufacturer's instructions for proper use of welding equipment, weld metal charge size, and applicability to the structure.

c. Do not use exothermic weld equipment if the graphite mold is wet.

d. Use proper personnel protective equipment when handling and performing exothermic welding.

2. Elastomeric Cover over Exothermic Welds:

a. Provide elastomeric cover over exothermic welds as shown.

b. Follow manufacturer's instructions for proper storage and handling.

c. Do not apply to pipe surface without proper surface preparation.

3.3 FIELD QUALITY CONTROL

A. Post-Installation Testing of Cathodic Protection Systems:

1. General: ENGINEER will provide services of a NACE-CP Specialist for periodic field inspections and technical oversight of the CONTRACTOR's commissioning services of the cathodic protection system in accordance with the NACE SP0169 (latest edition) and NACE TM0497.

2. After installation of the cathodic protection system, perform the following field tests by the CP Technician furnished by the CONTRACTOR:

a. Take photographs of each test station, both of the terminal board and also the surrounding landscape, for future identification and locating.

b. Verify that each test station wire is attached to the appropriate structure using the proper color code.

c. Measure cathodic protection data at each test station as follows:

(1) Red Cap Anode Test Station: ON S/S potentials of the pipeline using the buried reference electrode and a portable Cu-$CuSO_4$ reference cell. Momentarily disconnect the anode(s) from the circuit and record Instant-Off S/S potentials of the pipeline using the buried reference electrode and a portable Cu-$CuSO_4$ reference cell. Measure the total current through the anode circuit via the TS shunt.

(2) Orange Cap Isolation Test Station: Structure-to-soil potentials of the pipeline and the foreign structure (across the FIK) using the buried Cu-$CuSO_4$ reference electrode and a portable reference cell.

(3) Blue Cap Casing Test Station: Structure-to-soil potentials of the pipeline and the casing using the buried reference electrode and a portable Cu-$CuSO_4$ reference cell.

(4) Green Cap Potential Test Station: Structure-to-soil potentials of the pipeline using the buried reference electrode and a portable Cu-$CuSO_4$ reference cell.

(5) White Cap Foreign Test Station: Structure-to-soil potentials of the pipeline and the foreign structure using the buried reference electrode and a portable Cu-$CuSO_4$ reference cell. Note any DC interference to the pipeline.

d. Determine the effectiveness of each accessible electrical isolation device.

e. Furnish a Post-Installation Cathodic Protection Testing Report in accordance with the requirements of this Section.

3. Training Session: Provide a field training session to the OWNER for the operation and maintenance of the cathodic protection system as specified in Division 1 and as follows.

a. Start training after the system is functionally completed but prior to final acceptance tests.

b. Provide training consisting of a demonstration of routine maintenance operations, including testing procedures, standard test equipment, data collection forms, and the minimum performance standards used to indicate that the cathodic protection system is functioning properly.

4. Final Acceptance: Assist the ENGINEER's CP Specialist after energizing and commissioning of the cathodic protection system to ensure that deficiencies are corrected prior to acceptance by the RESIDENT PROJECT REPRESENTATIVE.

a. The costs for any additional field tests or inspections by the ENGINEER's CP Specialist that result from either material or installation deficiencies will be charged to the CONTRACTOR at direct cost with no mark-up and deducted from the CONTRACTOR's final pay application for the project.

b. The cathodic protection system installation will be deemed acceptable for full payment only after being tested by the CONTRACTOR's CP Technician and determined to meet the minimum performance criterion established in this Section by the ENGINEER'S CP Specialist.

END OF SECTION

SECTION 33 05 60

SEWER MANHOLES

PART 1 GENERAL

1.1 SUMMARY

A. Section Includes: Requirements for providing sewer manholes and all other appurtenances for a complete installation. Provide manholes built in accordance with the details shown. Except as otherwise specified, construct sewer manholes of precast reinforced concrete sections conforming to ASTM C 478 and Part III of the Wisconsin Sewer and Water Specifications except as otherwise indicated.

1. Where reinforced concrete pipe tee base sections are shown, provide the run of the tee and the riser on the branch of the tee conforming to ASTM C 76, Class V.

B. Related Work Specified in Other Sections Include, But is Not Limited to, the Following:

1. Section 03 20 00 - Concrete Reinforcing
2. Section 03 31 00 - Cast-in-Place Concrete
3. Section 31 23 16 - Excavation
4. Section 31 23 23 - Backfilling
5. Section 31 41 00 - Shoring, Sheeting and Bracing

1.2 REFERENCE

A. Codes and standards referred to in this Section are:

1. ASTM A 48 - Specifications for Gray Cast Iron Castings

2. ASTM C 443 - Specification for Joints for Circular Concrete Sewer and Culvert Pipe, Using Rubber Gaskets

3. ASTM C 478 - Specification for Precast Reinforced Concrete Manhole Sections

4. ASTM C497 - Testing Concrete Pipe

5. ASTM A185 - Wire Fabric Reinforcement

6. ASTM C 76 - Specification for Reinforced Concrete Culvert, Storm Drain and Sewer Pipe.

7. ASTM C 877 - Specification for External Sealing Wrap at all Joints Between Pre-Cast Manhole Sections

8. ASTM C890 - Standard Practice for Minimum Structural Design Loading for Monolithic or Sectional Precast Concrete Water and Wastewater Structures

9. ASTM C 923 - Specification for Resilient Connectors Between Reinforced Concrete Manhole Structures and Pipes

10. ASTM C 990 - Standard Specifications for Joints for Concrete Pipe, Manholes and Precast Box Sections Using Preformed Flexible Joint Sealants, Section 6.2 Butyl Rubber Sealants

11. Wisconsin Sewer and Water Specifications, latest edition

1.3 SUBMITTALS

A. General: Provide all submittals, including the following, as specified in Division 1.

B. Shop Drawings: Submit shop drawings of sewer manholes as specified in Division 1.

C. Quality Control: Submit shop and field test reports of concrete samples tested in an approved laboratory.

1.4 DELIVERY, STORAGE AND HANDLING

A. General: Take every precaution to prevent injury to the manhole sections during transportation and unloading. Unload manhole sections using skids, pipe hooks, rope slings, or suitable power equipment, if necessary, and keep the sections under control at all times. Do not allow the manhole sections to be dropped, dumped or dragged under any conditions. Follow applicable requirements specified in Division 1.

B. Damaged Section: If any manhole section is damaged in the process of transportation or handling, reject and immediately remove such sections from the site, and replace the damaged manhole sections at no increase in Contract Amount.

PART 2 PRODUCTS

2.1 PRECAST MANHOLES

A. Precast concrete manhole sections, including bottom and top shall meet the requirements of ASTM C478 and Part III of the Wisconsin Sewer and Water Specifications except as otherwise indicated.

B. Manhole Base Section: Unless otherwise shown, provide manhole base sections consisting of a base riser section with an integral floor. When benches are made at the manufacturing site, provide concrete used for benched inverts conforming to the requirements for concrete used for precast sections. When benches are made in the field, use Class D concrete.

C. Joints: All precast manhole barrel joints shall be made with preformed butyl rubber gasket material. The gasket shall be of the size necessary to fill the annular space of the joint and be placed firmly against lower third of the vertical slope of the joint. The butyl rubber gasket joint shall meet the requirements of Section 8.41.6 of Wisconsin Sewer and Water Specifications.

D. Preformed Joints: Join riser, cone and flat slab top sections with joints filled with preformed joint sealing compound in accordance with the sealing compound manufacturer's recommendations, except that install sufficient sealing compound so as to completely fill the joint and show a "squeeze-out" on the inside and outside of the joint. Clean off all excess joint sealing compound from the inside surfaces.

E. Manhole top sections shall be precast reinforced eccentric cones unless precast reinforced flat slabs are specifically required or shown on the drawings or are necessary because of shallow depth. Flat slabs shall have opening offset unless otherwise required or shown. Flat slabs shall be designed for HS20 loadings.

F. Nominal diameter of manholes shall be 5 feet - 0 inches.

G. The wall thickness of manholes shall be designed by the manufacturer to account for the depth of backfill around each manhole but no less than 6 inches.

H. Openings for Pipes in Sanitary Manhole Riser Sections (either pre cast or core drilled): crown of opening shall be 12 inches from the top of the section and the invert of the opening shall be 12 inches from the bottom of the section.

I. No through wall lifting holes are permitted in base section, riser sections, and eccentric cone section for sanitary manholes.

J. Seal lifting holes with rubber plug or equal and cover with non-shrink grout on interior face of wall.

2.2 MANHOLE FRAMES AND COVERS:

A. Manhole frame and cover shall be as shown on the Drawings.

B. All manhole frames and covers shall be Neenah R-1661 or R1661-2001 or equal with machined horizontal bearing surfaces. Manhole frames and covers installed outside of the street right of way or within 100 year flood plain shall be Neenah R 1916-C2 or equal. Stainless steel bolts shall be furnished with this cover. No vent holes will be allowed in the cover, and a rubber tee gasket seal under the cover is required.

C. All castings shall be heavy duty iron conforming to ASTM A48, Class 20 and rated for HS20 loading. Provide non-rocking or machined castings with concealed pickhole.

D. Frames and Covers furnished shall provide hydraulic capacity, interior clearance dimensions, approximate vertical height, and as shown on the drawing.

2.3 MANHOLE JOINT MATERIALS

A. Flexible Joint Sealant: The joints and/or joint surfaces of the manhole sections shall be sealed with a butyl-rubber-based performed flexible sealant conforming to ASTM C-990, paragraph 6-2. The sealant shall be sized such that the joint is filled to 50% (minimum) of its annular volume when fully assembled. Butt the ends of the sealant together. Primer and/or adhesive as recommended by the sealant supplier. Each joint shall have a double layer of sealant.

1. Butyl Rubber (Hydrocarbon Content %): Minimum 58%

2. Manufacturer: EZ Stick, Press-Seal Gasket Corporation, or equal.

B. External Joint Seals: All manhole section joints shall be installed with an exterior joint collar. The joint collar shall consist of a band 9 inches wide. The band shall have an outer layer of polyethylene with an under layer of rubberized mastic that is reinforced with a woven polypropylene fabric. There shall be a peelable protective paper against the mastic that is removed when the collar is applied to the joint. The collar shall contain two heavy 5/8 inch stainless steel straps. The straps shall be in strap sheathing that isolate them from the mastic sealer and allow them to slide freely when tightened around the sections. The collar shall be designed so that when it is applied around the joint the ends shall overlap at least 6 inches. After removing the protective paper, the band shall be placed around the sections. The steel straps shall be secured with the proper tools. The ends shall cover the remaining exposed straps.

1. Manufacturers: Cretex Wrap, Mac Wrap.

2. Mac Wrap by Mar-Mac Manufacturing Co.

3. E-Z- WRAP by Press-Seal Corporation.

2.4 MANHOLE CONNECTORS:

A. Provide resilient connectors conforming to ASTM C 923 for joining sewers to manhole riser sections.

B. Provide a flexible pipe-to-manhole connector integrally cast into the structure. The connector shall assure a flexible watertight seal between the pipe and the manhole. The connector shall consist of an EPDM or synthetic or natural rubber gasket and two (2) external 304 stainless steel take-up clamps.

C. For Penetrations Core Drilled through Manhole Wall: A flexible pipe-to-manhole connector shall be installed perpendicular to the core drilled hole. The connector assembly shall assure a flexible watertight seal between the pipe and the manhole. The connector shall consist of a rubber gasket, an expansion sleeve or band, and two external take-up clamps. The gasket shall be EPDM or synthetic or natural rubber. The band, sleeve, clamps and hardware shall be Series 300 stainless steel. The connector shall meet or exceed the requirements of ASTM C- 923

2.5 ADJUSTING RINGS

A. Pre-cast concrete with steel reinforcement sufficient to prevent cracking in normal handling and use.

B. Mating Faces:

1. Smooth, parallel, and free of cracks, chips, spalls, or casting irregularities which would interfere with watertight mating to structure top or casting.

2. Provide grooves in faces to contain flexible joint sealant when possible.

3. Thickness:

a. 2 inch minimum.
b. 8 inch maximum.

2.6 EXTERNAL CHIMNEY SEAL FOR SANITARY MANHOLES

A. A chimney seal is required for all frames, adjusting rings and integrally cast lip of manhole.

B. Manufacturer:

1. WrapidSeal, Canusa (CCI Pipeline Systems)

2. Cretex Classic External Manhole Chimney Seal

3. FlexRib Manhole Frame-ChimneySeal, Trelleborg Pipe Seals

4. Infi-Shield, S.S.I Sealing Systems

5. External Adaptor Seal, Adaptor Inc.

6. Substitutions: Specified in Section 01 60 00 - Product Requirements

2.7 COATINGS

A. Sewer manholes shall have an interior coating with two coats of epoxy polymer.

1. Tnemec:

a. One coat Series 218 Mortar Clad, application rate as recommended.
b. One coat Perma-Shield H2S Series 434, trowel- or spray-applied, 1/8-inch MDFT.

2. Or approved equal.

2.6 SOURCE QUALITY CONTROL

A. Acceptance: Base acceptance of flat slab tops passing a proof-of-design test in accordance with ASTM C 478.

PART 3 EXECUTION

3.1 MANHOLE TYPES

A. Sectional Pre-cast Concrete Manholes:

1. Manholes 8 feet and deeper: Pre-cast concrete cone tops.

2. Manholes less than 8 feet deep: Pre-cast flat tops.

3. Use eccentric cone section or eccentric manhole flat top for manholes.

4. Install frames and covers as follows:

a. Sanitary manholes: Water resistant frame and covers, except where waterproof frames and covers are indicated on drawings.

3.2 EXCAVATION AND PREPARATION OF SUBGRADE

A. Excavate and prepare sub-grade in accordance with requirements of Section 31 23 16.

B. Make excavation diameter at least 6 in. greater than diameter of structure to permit joints to be sealed and to permit compaction of backfill material.

3.3 EXECUTION

A. When lifting manhole bases, base sections and/or riser sections, make sure the chain or cable lengths are long enough to prevent contact with the tongue and groove area, and are kept at appropriate lifting angles.

3.4 BASES

A. Pre-cast Manholes, and Inlets with Integral Base:

1. Excavate deep enough so that bottom of manhole base section rests on 6 inches minimum of Select Fill Material.

3.5 BACKFILL

A. Backfill as specified in Section 31 23 23.

3.6 MANHOLE INVERT

A. Do not pour until manhole is in place and backfilled.

B. Invert shall be same cross section as larger of connecting piping.

C. Shape flow channel for branch piping as shown on drawings.

D. Use Class D concrete.

3.7 EXTERNAL CHIMNEY SEAL FOR SANITARY MANHOLES

A. The chimney shall be a maximum of (one) 1 foot as measured from the base of the casting to the top of the corbel precast section. A minimum of 4 inches of chimney section shall be allowed on manholes.

B. Install the seal in accordance with the manufacturer's recommendations.

C. Where sewer manholes are located in the City of Franklin, install each seal in the presence of an authorized representative of the City of Franklin.

3.8 PIPE CONNECTION

A. Pipe to Sanitary Manhole Connection:

1. Connect sanitary piping to pre-cast concrete manhole sections using flexible pipe-to-manhole connectors.

a. Lay pipe entering manhole through this connector.

b. Grouting or placing mortar in and around flexible connectors may inhibit the design and flexibility of the connector and should be avoided. To maintain seal flexibility, plug that portion of annular space between pipe and manhole wall which falls within area of poured invert with extrudable, preformed, plastic gasket prior to pouring manhole invert.

3.9 SETTING FRAMES AND CASTINGS

A. Set at elevation shown on Drawings.

B. Where noted on the drawings and sewer manholes located in the City of Franklin, manholes placed inside sidewalks, driveways, etc. shall be set a minimum of 2 ¼ inches lower than final grade to allow for frost movement. Install a two inch cast iron riser ring by Neenah Foundry or equal at the time of final surface.

C. Adjust frame to grade with pre-cast, reinforced concrete ring, 2 inches to 8 inches thick. Use no more than two rings total.

D. Install manhole frames and adjustment rings with butyl rope.

E. Sanitary manhole shall have an external chimney seal installed over frames and castings.

F. Bolt waterproof frames to top of manhole and cast in place structures using minimum of six l-inch diameter bolts. Bolts shall pass through adjusting rings into manhole or structure.

3.10 FIELD QUALITY CONTROL

A. Pre-cast reinforced concrete base sections, risers, transitions, cones and tops shall be subject to rejection on account of failure to conform to any of the specification requirements.

B. All lift holes and all joints between pre-cast elements shall be thoroughly wetted and then be completely filled with mortar, smoothed and pointed both inside and outside, to ensure water-tightness.

C. Pre-cast sections shall be placed and aligned to provide vertical sides and vertical alignment of the manhole steps. The completed manhole shall be rigid, true to dimensions, and be watertight.

D. Where the bitumastic coating has been damaged, it should be repaired using the same materials used at the precaster.

3.11 CLEAN MANHOLE

A. All newly constructed manholes shall be cleaned of any accumulation of silt, debris, or foreign matter of any kind, and shall be free from such accumulations at the time of final inspection.

3.12 MANHOLE TESTING

A. All newly constructed sanitary manholes shall be tested for leakage by the vacuum testing method.

B. The vacuum testing shall conform to the following:

1. Isolate the manhole to be tested by plugging the inlet and outlet pipes with an inflatable stopper or other suitable test plugs. The plugs and end stubs shall be securely braced to avoid them from being drawn into the manhole. Plug lift holes with a non-shrink cementitious grout mix.

2. Vacuum test equipment shall be placed at the top of rim after chimney is built with external seal in place, in accordance with the manufacturer's recommendations. Inflate the seal to 40 psi to affect a seal between the base and the manhole. Run vacuum pump until a vacuum of 10 inches of mercury is obtained.

3. With vacuum pump shut off and the valve on the vacuum line of the test head closed, measure the time for the vacuum to drop to 9 inches of mercury. The manhole test is acceptable if the time exceeds the values listed in the table below. If the test fails after three attempts, contractor must pursue a different corrective measure. Exterior grouting will not be accepted. Retest until an acceptable test is obtained.

Minimum Test Times in Seconds for Manhole Testing

Manhole Depth Feet	Time Seconds
8	26
10	33
12	39
14	45
16	52
18	59
20	65
22	72
24	78
26	85
26	91
28	98

Minimum Test Times in Seconds
for Manhole Testing

Manhole Depth Feet	Time Seconds
30	105
32	112
34	119
36	126
38	133
40	140
42	147
44	154
46	161
48	168

END OF SECTION

SECTION 33 05 61

PIPELINE VAULTS

PART 1 GENERAL

1.1 SUMMARY

A. Section Includes: Requirements for providing precast reinforced concrete vaults and other appurtenances for a complete installation. Provide vaults built without steps and as shown. Except as otherwise specified, construct vaults of precast reinforced concrete sections conforming to ASTM C890 and C913.

B. Related Work Specified In Other Sections Includes, but is Not Limited to, the Following:

1. Section 31 23 16 - Excavation
2. Section 31 23 23 - Backfilling
3. Section 33 05 50 - Laying and Jointing Buried Pipelines
4. Section 40 05 01 - Supports and Anchors

C. Comply with the "American Iron and Steel (AIS)" requirements as contained in Section 436 of the Consolidated Appropriations Act, 2014, further described in the Bid Form.

1.2 REFERENCE

A. Codes and standards referred to in this Section are:

1. AASTHO - Standard Specifications for Highway Bridges

2. ACI 318 - Building Code Requirements for Structural Concrete and Commentary

3. ASTM A48 - Standard Specification for Gray Iron Castings

4. ASTM A615 - Standard Specification for Deformed and Plain Billet Steel Bars for Concrete Reinforcement

5. ASTM C836 - Standard Specification for High Solids Content, Cold Liquid-Applied Elastomeric Waterproofing Membrane for Use with Separate Wearing Course

6. ASTM C857 - Standard Practice for Minimum Structural Design Loading for Underground Precast Reinforced Concrete Utility Structures

7. ASTM C890 - Standard Practices for Minimum Structural Design Loading for Monolithic or Sectional Precast Concrete Water and Wastewater Structures

8. ASTM C913 - Standard Specification for Precast Concrete Water and Wastewater Structures

9. ASTM C923 - Standard Specification for Resilient Connectors Between Reinforced Concrete Manhole Structures, Pipes, and Laterals

10. ASTM C990 - Standard Specification for Joints for Concrete Pipe, Manholes, and Precast Box Sections Using Preformed Flexible Joint Sealants

11. ASTM D412 - Standard Test Method for Vulcanized Rubber and Thermoplastic Elastomers – Tension

12. ASTM D903 - Standard Test Method for Peel or Stripping Strength of Adhesive Bonds

13. ASTM D3574 - Standard Test Methods for Flexible Cellular Materials – Slab, Bonded, and Molded Urethane Foams

14. ASTM E96 - Standard Test Methods for Water Vapor Transmission of Materials

1.3 SUBMITTALS

A. General: Furnish submittals, including the following, as specified in Division 1.

B. Shop Drawings, Product Data and Information:

1. Vaults, reinforcing, joints, preformed joint sealant, resilient connectors, concrete admixture, internal chimney seal, rubber manhole adjusting rings, manhole frames and covers, and waterproofing system.

2. A table or chart showing the specific sections and the orientation of vault penetrations for each vault supplied.

C. Quality Control:

1. A certificate signed and sealed by a Licensed Professional Engineer experienced in Structural Engineering and registered in the State of Wisconsin that certifies that the Licensed Professional Engineer has evaluated and approved the CONTRACTOR's design of the vaults as

detailed on the submittal drawings and has prepared complete design calculations confirming the adequacy of the vaults. Provide a separate certificate for each vault size and type.

2. A certificate of compliance for vaults and appurtenances attesting that the items are in compliance with the Contract Documents, referenced standards, including proof-of-design testing, and "American Iron and Steel (AIS)" requirements.

3. Mix data and test reports from an approved testing laboratory certifying that concrete used in precast structures conforms to specified requirements.

1.4 QUALITY ASSURANCE

A. Provide vaults that are produced by an experienced manufacturer regularly engaged in the production of such items and free of defects, spalls, and cracks. Take care in the mixing of materials, casting, curing and shipping to avoid defects, spalls, and cracks. The OWNER's representative may elect to examine the units at the casting yard or upon arrival at the project site.

B. Materials are subject to rejection for failure to meet requirements of this Section or may be rejected due to any of following:

1. Fractures or cracks passing through wall, except for a single end crack that does not exceed depth of joint.

2. Defects indicating mixing and molding not in compliance with ASTM C913, surface defects indicating honey-combed or open texture.

3. Plane of ends of section are not perpendicular to longitudinal axis within tolerances.

4. Damaged or cracked ends that prevent making a satisfactory joint.

5. Any continuous crack having a surface width of 0.01 inch or more and extending for a length of 12 inches or more regardless of position in section wall.

1.5 DELIVERY, STORAGE AND HANDLING

A. General: Deliver, store and handle products as specified in Division 1 and as follows. Take care to prevent damage to the vault sections during transportation and unloading. Unload vault sections using skids, pipe hooks, rope slings, or suitable power equipment, and keep the sections under control. Do not allow the vault sections to be dropped, dumped or dragged.

B. Do not transport vaults away from the casting yard until the concrete has reached the minimum required 28-day compressive strength and a period of at least 5 days has elapsed since casting.

C. Do not transport precast members from the manufacturing plant to the project site prior to approval of that member by the plant inspector. Apply a stamp on the member indicating approval by the plant inspector.

D. Damaged Section: If any vault section is damaged in the process of transportation or handling, reject and immediately remove such sections and structures from the site, and replace the damaged vault sections.

PART 2 PRODUCTS

2.1 MANUFACTURERS

A. Acceptable manufacturers are listed below. Other manufacturers of equivalent products may be submitted.

1. Precast Reinforced Concrete Vaults:

   a. Concrete Specialties, Inc.
   b. County Materials Corporation
   c. Crest Precast Concrete, Inc.
   d. Oldcastle Infrastructure, Inc.

2. Concrete Admixture:

   a. IPA Systems, Inc., IPANEX
   b. W.R. Grace & Co., Force 10,000 D

3. Preformed Joint Sealing Compound:

   a. Hamilton-Kent, Kent-Seal
   b. Henry Company, Ram-Nek

4. Resilient Connectors:

   a. Press-Seal Corporation, PSX: Positive Seal
   b. Trelleborg Pipe Seals, Kor-N-Seal

5. Waterproofing System:

   a. Grace Construction Products, Procor Fluid Applied Membrane (Below Grade)
   b. Carlisle Coatings & Waterproofing, Inc., Barricoat-S.

c. BASF Building Systems Chemicals – Sonneborn Products, HLM 5000.

6. Manhole Frame and Cover:

a. Neenah, Type R-1562 (for 30-inch)

7. Wall Sleeve Annular Seals
a. Thunderline Corp. (Link-Seal), Belleville, MI

2.2 MATERIALS

A. General: Provide vaults as determined by the CONTRACTOR's Licensed Professional Engineer registered in the State of Wisconsin, as recommended by the manufacturer and conforming to ASTM C890 and C913.

1. Take sole responsibility for the design and adequacy of vaults, including vault details not shown on the Drawings.

2. Provide vaults such that the live load surcharge from railroads, roads, structures, utilities, or other items adjacent to the vaults are accounted for and in accordance with the requirements of the local authority having jurisdiction. At a minimum, design vaults to support own weight and live load equivalent to HS-20 Highway Loading.

3. Design vaults to prevent flotation without benefit of skin friction when ground water level is at finished grade. Provide concrete pad if required to prevent flotation.

4. Design vaults with precast or cast-in-place vault base as shown.

B. Concrete, Steel Reinforcement and Aggregates:

1. Provide reinforced concrete, cementitious materials, aggregates and steel reinforcement conforming to the requirements of ASTM C890 and C913. Provide minimum compressive strength of 4,000 psi at 28 days where concrete mix proportion is in accordance with ACI 318.

2. Provide reinforcing bars that are billet steel grade (60,000 psi minimum yield) conforming to the requirements of ASTM A615, Grade 60 or as determined to be required for the application. Provide reinforcing bars that are new stock, free from rust, scale, or other coatings that tend to destroy or reduce bonding.

C. Concrete Admixture: Provide vaults with waterproofing admixtures to provide water-tight construction. Use minimum dosage requirement for IPANEX

waterproofing admixture of 14 oz. per 100 lb. of cement. Use minimum dosage requirement for Force 10,000 D microsilica of 10 percent by weight of cement.

D. Preformed Mastic Joint Sealing Compound: Provide preformed mastic joint sealing compound for joining vault base and wall sections in accordance with the requirements of ASTM C990.

E. Butyl Rubber Backplaster: Provide trowelable grade butyl rubber base backplaster material to seal exterior vault joints and adjusting rings.

F. Resilient Connectors: Provide resilient connectors conforming to ASTM C923 for joining pipelines to vault riser sections. Provide resilient connectors that are either casted integrally into the wall of the vault section or installed by mechanical means in openings cut into the vault wall per ASTM C923. Provide each resilient connector of a size specifically designed for the opening size, pipeline outside diameter and pipeline material and allow for up to 7 degrees deflection in pipe alignment.

G. Grout: Provide cement grout composed of Portland cement and sand. Provide grout proportions consisting of one part Portland cement to three parts sand. Provide water amount as required to achieve desired consistency without compromising strength requirements. Mix white Portland cement with the Portland cement as required to match color of precast concrete. Provide cement grout for joint grout having a minimum compressive strength at 28 days of 4,000 psi.

H. Rubber Manhole Adjusting Rings: Provide HS-20 rated rubber manhole adjusting rings conforming to ASTM D3574 for adjusting frame and cover elevation.

I. Waterproofing: Provide self-curing, synthetic rubber based, fluid applied waterproofing membranes meeting or exceeding the performance requirements of ASTM C836 and as follows:

Property Value	Test Method	Typical Value
Hardness, Shore OO:	ASTM C836	85
Tensile Strength	ASTM D412	150 psi
Moisture-Vapor Permeability (dry perms)	ASTM E96	0.10 perms maximum
Crack Bridging Test	ASTM C836	Passed 1/16-inch
Elongation	ASTM D412	500 percent minimum
Peel Adhesion to Concrete	ASTM D903[(1)]	5 lbs/inch

a. Notes:

(1) Apply waterproofing membrane to concrete and allow to cure. Measure membrane peel adhesion at rate of 2 inches per minute with peel angle of 90 degrees at room temperature.

2. Prefabricated Drainage Composite: Design drainage composite to promote positive drainage while serving as a protection course.

3. Miscellaneous Materials: Provide tape and other accessories specified or as recommended by the manufacturer of fluid applied waterproofing membrane.

J. Manhole Frames and Covers: Provide HS-20 rated frames and covers conforming to ASTM A48, Class 35B for vaults. For installations in roadways or where required, provide heavy duty manhole frame and cover. Provide flush mounted covers unless otherwise indicated. Emboss manhole covers as shown.

K. Sump: Provide sump in the vault floor as shown.

L. Pipe, Fittings, Valves, and Supports: Provide pipe, fittings, valves, and supports as shown or specified.

M. Modular, Mechanical Sleeve Seals: Provide modular, mechanical type seals consisting of interlocking, synthetic-rubber links shaped to continuously fill the annular space between the pipe and the sleeve. Provide an elastomeric sealing element that is of the size, quantity, type and material that the manufacturer recommends for the intended service and that will provide an effective hydraulic seal. Provide stainless steel bolts and nuts.

2.3 CONSTRUCTION

A. Precast Reinforced Concrete Vaults: Provide vaults that are watertight and conform to the requirements of ASTM C857.

B. Vault Base Section: Unless otherwise shown, provide vault base sections consisting of a base riser section with an integral floor. Form and cast pipeline opening with integral base and riser section, or as recommended by the manufacturer. Provide cast-in-place concrete vault base sections for vaults intended to house air valves as shown.

C. Vault Tops: Provide flattops as shown.

D. Rubber Manhole Adjusting Rings: Provide rubber manhole adjusting rings of a nominal thickness not less than 2 inches.

E. Identification: Clearly mark the following information inside each precast section and the top and bottom surfaces of slabs.

1. ASTM designation
2. Utility structure size
3. Date of manufacture
4. Name or trademark of manufacturer

2.4 SOURCE QUALITY CONTROL

A. Carefully inspect each vault prior to installation. Replace those not meeting the specifications.

B. Acceptance: Base acceptance of vaults on passing a proof-of-design test in accordance with ASTM C890 and C913.

PART 3 EXECUTION

3.1 INSTALLATION

A. Excavation and Backfill: Excavate area for vault structure in accordance with Section 31 23 16 and to depth required as shown.

1. Limit horizontal excavation to outside diameter of vault structure plus sufficient exterior clearance to allow a safe work area.

2. Where groundwater is present in bottom of vault excavation, remove water by pumping, maintain free of water.

3. Place select fill as specified in Section 31 23 23 under vault base.

4. Allow joints to set for a minimum 24-hour period before backfilling.

5. Perform backfilling carefully, bringing fill up evenly on all sides.

6. Compact fill around vault with a mechanical hand operated wacker.

B. Lift Holes: Provide lift holes that are formed, tapered, or drilled. Repair lift holes using a conical shaped precast plug, properly sealed in place using non-shrink cement grout or an expanding Portland cement mixture such as Octocrete.

C. Openings: If required, locate openings or “knockouts” in vaults as shown and size sufficiently to permit passage of the largest dimension of pipe. Make the diameter of such openings to be not more than 4 inches larger than the outside diameter of the pipe to be connected. Unless otherwise shown or approved, provide 6 inches minimum distance between a joint in a vault section and the nearest edge of an opening for a connecting pipeline.

D. Vault:

1. Manufacture riser sections with openings properly located for making connections as recommended by the manufacturer.

2. Set base section, align pipe sleeve openings to provide straight alignment of pipe through vault, and level and plumb section.

3. Set vault and flattop at a grade so that no more than the maximum height of mechanically mounted rubber internal chimney seals shown are required to bring manhole frame and cover to finished grade.

4. Place sections vertical and in true alignment with a maximum 1/4-inch tolerance per section.

5. Plug holes in sections required for handling or other purposes with a non-shrink grout, finished flush on inside.

E. Joints:

1. Join sections with preformed joint sealing compound in accordance with the sealing compound manufacturer's recommendations.

2. Install sufficient sealing compound to show a "squeeze-out" on the outside of the joint.

3. Apply trowelable grade butyl rubber backplaster material 1/4-inch minimum thickness, when dry, on the outside of the vault at each joint, extending 6 inches above and below the joint.

4. Apply butyl rubber backplaster on the outside of the flattop from 3 inches below the bottom adjustment ring on the flattop section to, and covering, the adjustment rings just below the casting.

5. Apply shrink wrap or visquine to the outside of each joint to further seal the vault after applying butyl rubber backplaster.

6. Clean off all excess joint sealing compound from the inside surfaces.

F. Resilient Connectors:

1. If an additional pipe sleeve is required in base section due to changed conditions, provide hole in section prior to setting that section. Code hole in section of sufficient diameter to accommodate pipe and pipe sleeve, using care not to crack or splay concrete.

2. After installation of resilient connectors, grout pipe connections inside vault in accordance with manufacturer's recommendations.

G. Rubber Manhole Adjusting Rings and Flattop Seal:

1. Provide a water tight seal between the vault and adjusting ring, between each adjoining adjusting ring, and between the adjusting ring and casting by the use of two rows of 1/2-inch extrudable preformed gasket material, trowelable grade butyl rubber, or an approved manufacturer's recommendation.

2. Provide an internal chimney seal, based on the manufacturer's recommendation, after extrudable preformed gasket material or trowelable grade butyl rubber is installed.

H. Waterproofing:

1. Provide substrate surfaces free of frozen matter, dampness, loose particles, cracks, pits, projections, penetrations, or foreign matter detrimental to adhesion or application of waterproofing system.

2. Provide substrate surfaces that are smooth, free of honeycomb or pitting, and not detrimental to full contact bond of waterproofing materials.

3. Ensure items penetrating surfaces to receive waterproofing are securely installed.

4. Verify substrate surface slopes to drain for horizontal waterproofing applications.

5. Install waterproofing in accordance with the manufacturer's recommendations, including the following:

a. Apply minimum 60 mils DFT in areas to be waterproofed. Apply minimum 120 mils DFT in detail areas.

b. If area to be waterproofed is in direct sunlight and temperature is rising, apply "scratch coat" (a thin application of fluid applied waterproofing) prior to full application of waterproofing membrane.

c. In applications where a minimum slope of 0.13 inch/foot cannot be achieved, two coat application of membrane may be needed to achieve total thickness.

d. Apply protection board and related materials in accordance with manufacturer's recommendations.

I. Manhole Frame and Cover:

1. Set manhole frame on 1/2-inch extrudable preformed gasket material, trowelable grade butyl rubber, or an approved manufacturer's recommendation.

2. In paved areas, match top of casting with finished grade; in unpaved/grassy areas, install casting so that the top extends at least 3 inches above finished grade, and grade surface to provide positive surface drainage away from vault.

3. Firmly embed manhole frames in mortar.

J. Pipe, Fittings, Valves, and Supports:

1. Install pipe, fittings, valves, and supports as shown, specified, or recommended by the manufacturer.

2. Place valves plumb and level valve, and assure adequate bearing of valve and pipe on supports.

3.1 LEAKAGE TESTING

A. Exfiltration Test:

1. Prior to and during exfiltration test reduce groundwater level to below vault base. Demonstrate to RESIDENT PROJECT REPRESENTATIVE that water table is below bottom of vault. Suitably plug and brace open pipes and other openings into vault to prevent blowout.

2. Fill vault with water to top of cone section or underside of flat top.

a. If vault has not been backfilled and visual inspection of exterior by RESIDENT PROJECT REPRESENTATIVE reveals no leaks, vault may be considered to be satisfactorily watertight.

b. If vault has been backfilled or visual inspection is not satisfactory, allow water to remain in vault for a period of 4 hours to provide for absorption.

(1) Bring water in vault to top again and allow water to remain for a period of 8 hours minimum.

(2) At end of time period, add water to vault to return level to top. Measure and record quantity added.

(3) Extrapolate amount of water to a 24 hour time period and determine rate of exfiltration per vertical foot and confirm leakage for each structure does not exceed 1 gallon per vertical foot per day.

(a) If vault does not meet leakage requirement but does not exceed 3 gallons per vertical foot per day, RESIDENT PROJECT REPRESENTATIVE may permit repairs to structure to reduce leakage to required value.

(b) Leakage due to defective section or in excess of 3 feet per vertical foot per day will be cause for rejection.

B. Reseal joints found to be unacceptable by RESIDENT PROJECT REPRESENTATIVE.

C. Take responsibility for uncovering, disassembling, reconstructing, or replacing vaults as directed by RESIDENT PROJECT REPRESENTATIVE. Upon reconstruction, retest vault for compliance.

3.2 CLEANING

A. Thoroughly clean vault of silt, debris, and foreign matter of any kind prior to final inspection.

END OF SECTION

SECTION 33 05 70

LOCATING BURIED PIPELINES

PART 1 GENERAL

1.1 SUMMARY

A. Section Includes: Requirements for providing marking tape, tracer wire, tracer boxes, and Electronic Marker System (EMS) markers.

B. Related Work Specified in Other Sections Includes, but is Not Limited to, the Following:

1. Section 31 23 23 - Backfilling
2. Section 33 05 50 - Laying and Jointing Buried Pipelines
3. Section 33 05 53 - Buried HDPE Pipe and Fittings
4. Section 33 05 55 - Buried Ductile Iron Pipe and Fittings

C. Comply with the "American Iron and Steel (AIS)" requirements as contained in Section 436 of the Consolidated Appropriations Act, 2014, further described in the Bid Form.

1.2 REFERENCES

A. Codes and standards referred to in this Section are:

1. APWA - American Public Works Association

2. ASTM A48 - Standard Specification for Grey Iron Casting

3. ASTM D882 - Standard Test Method for Tensile Properties of This Plastic Sheeting

4. ASTM D1248 - Standard Specification for Polyethylene Plastics Extrusion Materials for Wire and Cable

5. ASTM D2103 - Standard Specification for Polyethylene Film and Sheeting

6. ASTM D2578 - Standard Test Method for Wetting Tension of Polyethylene and Polypropylene Films

7. ASTM D2582 - Standard Test Method for Puncture-Propagation Tear Resistance of Plastic Film and Thin Sheeting

1.3 SYSTEM DESCRIPTION

A. Provide marking tape, tracer wire, tracer boxes, EMS markers, and other associated materials complete in place as shown or specified.

1.4 SUBMITTALS

A. General: Furnish submittals, including the following, as specified in Division 1.

B. Shop Drawings, Product Data, and Information:

1. Catalog data, descriptive literature, installation and operation and maintenance instructions for marking tape, tracer wire, tracer boxes, EMS markers, and appurtenances. Label dimensions, materials, type, markings, and color.

2. Notification that EMS markers are in place prior to surface restoration, including permanent paving, seeding, or sodding.

1.5 DELIVERY, STORAGE AND HANDLING

A. Deliver, store and handle products and materials as specified in Division 1 and as follows.

1. Take every precaution to prevent damage to the products during transportation and delivery to the site.

2. EMS Markers:

a. Store EMS markers in their shipping packaging until installation.

b. Do not store EMS markers in direct sunlight or at temperatures beyond the limits of 40 to 158 degrees Fahrenheit.

PART 2 PRODUCTS

2.1 MANUFACTURERS

A. Acceptable manufacturers are listed below. Manufacturers of equivalent products may be submitted.

1. Marking Tape:

a. Proline Safety Products
b. Reef Industries, Inc
c. Seton – A Brady Corporation Company

2. Tracer Wire:

   a. Copperhead Industries
   b. DURAtrace

3. Full Range EMS Markers:

   a. 3M

2.2 MATERIALS

A. Marking Tape: Provide non-detectable marking tape manufactured of polyethylene with chemically inert tape and ink resistant to alkalis, acid and other destructive agents. Furnish marking tape with a background color as listed per APWA color code standards and imprinted with abrasion-resistant black letters using permanent ink, where the imprint repeats itself a minimum of once every 2 feet for the length of the tape. Provide tape conforming to the following requirements:

Property	Method	Value
Width	--	3 inches
Overall Thickness	ASTM D2103	4.0 mil minimum
Weight	ASTM D2103	18.5 lbs./1000 sq. ft.
Tensile Strength	ASTM D882	3200 psi (38 lbf. for 3” tape)
Elongation	ASTM D882	800%
PPT Resistance	ASTM D2582	15.5 lbf.
Printability	ASTM D2578	>= 40 Dynes
Tape Color	APWA	Green
Imprint (black)	--	“CAUTION – SEWER LINE BELOW”

B. Tracer Wire:

1. Open Cut and Jacking Installations: Provide direct burial #10 or #12 AWG, 21% conductivity solid annealed copper-clad, carbon steel core high-strength tracer wire, with at least 430 pounds average tensile break load**,** minimum 10% elongation, with 30 mil high-molecular weight, high-density, polyethylene jacket complying with ASTM D1248, 30 volt rating.

2. Horizontal Directional Drilling (HDD) Installations: Provide direct burial #8 or #10 AWG, 21% conductivity solid annealed copper-clad, high-carbon steel core (HS-CCS) hard drawn extra-high strength HDD tracer wire with at least 1,150 pounds average tensile break load**,** minimum 1% elongation, with 45 mil high-molecular weight, high-density, polyethylene jacket

complying with ASTM D1248, 30 volt rating. No splices are permitted on tracer wire installed by HDD.

3. Provide green wire color per APWA color code.

4. Provide wire insulation made of HDPE and highly resistant to alkalis, acid and other destructive agents found in soil. THHN coating is not acceptable.

5. Provide tracer wire with water-blocking characteristics, corrosion resistance, and UV protection.

6. Encase splices with a waterproof connector rated at 30 volts for direct bury and submersion applications that is recommended by the wire manufacturer for the intended application and installation method. Furnish connectors by the same supplier as the wire.

C. Tracer Boxes:

1. Provide tracer wire boxes in accordance with ASTM A48 Class 30.

2. Provide tracer boxes that are 18-inches long, adjustable-to-grade, 4-inch inside diameter, ABS plastic box flared and squared at base with a 1-inch cast iron flange at top for heavy-duty installation at grade. Provide lids that are one piece locking cast iron with "Test Station" marked on lid and containing 5 screw-type brass terminals (or other quantity as approved) on a non-conductive terminal board, and secure in place beneath the lid.

D. EMS Markers:

1. Provide flat 15-inch diameter full range EMS markers locatable up to 8 feet underground and having unique frequency for signal positive identification.

2. Provide green EMS marker color per APWA color code.

PART 3 EXECUTION

3.1 INSTALLATION

A. Marking Tape: Install non-detectable marking tape directly above pipe bedding enveloping pipeline and appurtenances as shown or specified and in accordance with the manufacturer's recommendations.

B. Tracer Wire:

1. Install tracer wire with pipeline and appurtenances as shown or specified and in accordance with the manufacturer's recommendations.

a. For pipe installed via open cut:

(1) Install the tracer wire directly on top of the buried pipe, but outside the polyethylene encasement as applicable, prior to placing backfill. Tape wire to the pipe or polyethylene encasement with polyethylene tape at a minimum spacing of 10 feet. Do not connect tracer wire to or come into contact with new pipe or other existing conductive pipes.

(2) Perform tracer wire installation in such a manner that allows proper access for connection of line tracing equipment, proper locating of wire without loss or deterioration of low frequency (512Hz) signal, and without distortion of signal caused by multiple wires being installed in close proximity to one another.

(3) Install the wire contiguously except at test stations, valve boxes, and where splicing is permitted as specified herein. Complete splices per the manufacturer's recommendations and make watertight. Do not loop or coil wire.

(4) Install mainline dead-ends to go to ground using an approved waterproof connection to a drive-in magnesium grounding anode rod, buried at the same depth as the trace wire. Bury anode on the opposite side of the pipeline at the furthest most point. Connect the anode wire in the tracer box to the tracer wire utilizing the connection point in the tracer box.

(5) Where it is necessary to join the tracer wire below ground, join the wire in a permanent bond (braising, cad welding, or equivalent) and insulate and render watertight the joined area in order to prevent corrosion. Approved connectors may also be used per the manufacturer's recommendations.

(6) At every valve box, extend the wires (one in each direction) upward along the exterior of the valve box for connection of locating equipment and tape to the valve box approximately 12 inches below grade with polyethylene tape. Provide adequate slack in the wire leads both above and below the tape to reduce breakage from pulling or settlement. Penetrate the valve box with each wire through a drilled hole fitted with a rubber grommet approximately 6 inches below grade. If directed by the RESIDENT PROJECT REPRESENTATIVE, loop the tracer wire into the valve box to maintain continuity of the wire through the valve box installation. Provide wires with at least 3 feet of extra slack on each tracer wire (total of 6 feet extra wire when looped). Neatly coil the extra wire inside the valve box

within easy reach. Do not allow wires to become twisted together.

(7) Provide maximum spacing between accessible test points of 1,250 feet or as recommended by the manufacturer, whichever is less. Where spacing between valve boxes exceeds 1,250 feet, terminate tracer wire at a separate tracer box.

(8) Lay tracer wire continuously, bypassing around the outside of manholes, vaults, and structure on the North or East side.

(9) Properly ground tracer wire per manufacturer's recommendations. Achieve grounding of tracer wire by use of a drive-in magnesium grounding anode rod with a minimum of 20 feet of #14 HDPE copper clad wire connected to anode (minimum 1.0 pound) specifically manufactured for this purpose, and buried at the same elevation as the pipe.

(10) Test continuity of wires upon completion of backfill. Replace any wire that fails the continuity test.

b. For pipe installed via jacking or HDD:

(1) Either wrap wire around the pipe or tape wire with polyethylene tape to the pipe at a minimum spacing of 10 feet before installation.

(2) Install wire contiguously between drill or bore entry and exit with no splices. Install a tracer box at each end.

(3) Regardless of the piping material, affix a minimum of 3 tracer wires to the pipe and install simultaneously with pullback of the pipe (HDD) or jacking of the pipe (casing installations).

(4) When ductile iron pipe is used, install tracer wires outside the polyethylene encasement.

(5) Test continuity of wires upon completion of HDD pipe pullback (or upon sealing the casing ends for casing installations). If wires fail the continuity test, the directional drill or casing installation will be rejected.

C. Tracer Boxes:

1. Unless otherwise indicated or directed by the RESIDENT PROJECT REPRESENTATIVE, install tracer boxes at every dead-end, at the beginning and end of every Contract, at both ends of pipe installed by

jacking and HDD, and at other locations as necessary to provide access to tracer wire at intervals not to exceed 1,250 feet or as recommended by the manufacturer, whichever is less.

2. Install tracer wire boxes flush with grade in non-traffic areas unless otherwise noted.

3. Connect wires to the terminals and provide with at least 3 feet of extra slack on each tracer wire at each box. Do not allow wires to become twisted together.

D. EMS Markers:

1. Install full range EMS markers at the following locations:

   a. Valves
   b. Vaults
   c. Blow-off assembly risers
   d. Casing ends
   e. Directional drilled ends
   f. Cathodic protection test stations
   g. Tracer boxes

2. Bury EMS markers within 7 feet of final grade. Place markers flat and level at 6 inches above metal pipe or tubing and no closer than 6 inches from new or existing pipe, valve box, casing, anode, wire, cable, or other utility and facility.

3. Cover EMS markers with 6 inches of firm soil prior to deployment of mechanical compaction equipment to prevent damage to marker.

4. Place EMS markers of the same frequency at least 6 feet apart to ensure maximum radiated signal and distinction between points of interest.

3.2 FIELD QUALITY CONTROL

A. Tracer Wire Testing:

1. Locate new trace wire installations using typical low frequency (512Hz) line tracing equipment and have it witnessed by the RESIDENT PROJECT REPRESENTATIVE, prior to acceptance of ownership. Provide testing as follows.

   a. Use a standard 5 watt generator to provide an AC current on the wire.

   b. Initially restrict the frequency of the signal from the generator to 33 kHz or less.

c. Use a standard handheld detector to trace the signal.

2. The tracer wire will be deemed to pass the test if:

a. The tracer wire is accessible at access points.

b. The tracer wire can be traced from access point to access point.

c. Widely-spaced access points can be traced out in the worst case from each “end” to a common meeting point between them.

d. Depth readings are consistent and accurate to within a 15:1 depth to diameter ratio.

3. Perform verification upon completion of rough grading and again prior to final acceptance.

4. Continuity testing in lieu of actual line tracing will not be accepted.

B. EMS Markers:

1. Prior to final pavement restoration, seeding, sodding, or substantial completion, whichever comes first, demonstrate to RESIDENT PROJECT REPRESENTATIVE that EMS markers are installed as required and are working properly. Replace missing or non-functioning EMS markers prior to final surface restoration or substantial completion at no additional cost to the OWNER.

END OF SECTION

SECTION 40 05 01

SUPPORTS AND ANCHORS

PART 1 GENERAL

1.1 SUMMARY

A. Section Includes: Requirements for providing hanging and supporting devices shown, specified, or required for pipelines, apparatus, and equipment other than electrical equipment.

B. Comply with the "American Iron and Steel (AIS)" requirements as contained in Section 436 of the Consolidated Appropriations Act, 2014, further described in the Bid Form.

1.2 REFERENCES

A. Codes and standards referred to in this Section are:

1. ASME B31.1 - Power Piping (Includes Revision Service)
2. MSS SP-58 - Pipe Hangers and Supports - Materials, Design, Manufacture, Selection, Application, and Installation
3. MSS SP-69 - Pipe Hangers and Supports - Selection and Application
4. MSS SP-89 - Pipe Hangers and Supports - Fabrication and Installation Practices
5. MSS SP-90 - Guidelines on Terminology for Pipe Hangers and Supports

1.3 SUBMITTALS

A. General: Furnish submittals, including the following, as specified in Division 1.

B. Shop Drawings, Product Data, and Information:

1. The quantity, type, design and location of supports, hangers and anchors required.

C. Quality Control:

1. A certificate signed and sealed by a Licensed Professional Engineer experienced in Structural Engineering and registered in the State of Wisconsin, that certifies that the Licensed Professional Engineer has evaluated and approved the CONTRACTOR's supports and anchors as detailed on the submittal drawings and has prepared complete design calculations confirming the adequacy of supports, hangers, anchors and expansion compensating devices used. Provide a separate certificate for each piping system before starting the installation.

1.4 SYSTEM DESCRIPTION

A. General: System includes supporting devices adequate to maintain the pipelines, apparatus, and equipment in proper position and alignment under operating and testing conditions with due allowance for expansion and contraction.

B. Design Requirements: Design supporting devices in accordance with the best practice and provide supporting devices that are not unnecessarily heavy. Design supporting devices to accommodate loads imposed during leakage tests for the test pressures specified. Base the required strength of supporting devices on the combined weight of the piping and connected equipment, the weight of the denser of the fluids used in operations or testing, and the weight of insulation where applicable. Install supports with a working safety factor of not less than 5.

C. Make hangers and supports of standard design where possible and best suited for the service required. Include proper pipe protection saddles for hangers and supports on pipes which are covered with insulation. Where required, make supports screw adjustable after installation unless approved otherwise.

D. Interference: Design supporting devices so as to minimize interference with access and movement. Eliminate the potential for injuries due to protruding supporting devices.

E. Sizing: Provide base piping support, hanger rod size, brackets and spacing meeting the requirements of ASME B31.1, MSS SP-58, SP-69, SP-89 and SP-90 except as modified herein.

1. Modify hangers for plastic pipes to increase the bearing area by inserting a protective sleeve of medium-gauge aluminum sheet metal between the pipe and the hanger.

a. Align hangers such that no sharp edges come in contact with the pipe.

b. Provide a thermoplastic pad between plastic pipe and any concrete or masonry surface.

c. Use supports for vertical lines of a type which do not exert a compressive strain on the pipe. Riser-type clamps that squeeze the pipe will not be permitted.

1.5 DELIVERY, STORAGE AND HANDLING

A. Deliver, store and handle products and materials as specified in Division 1.

PART 2 PRODUCTS

2.1 MANUFACTURERS

A. Acceptable manufacturers are listed below. Other manufacturers of equivalent products may be submitted.

1. Pipe hangers and supports

a. Grinnell Corporation, Cranston, RI

b. Globe Pipe Hanger Products, Inc., Cleveland, OH

c. Pipeline Products, Inc., San Marcos, CA

2.2 MATERIALS

A. Provide structural and miscellaneous hangers, supports, anchors, and similar devices of Type 304 stainless steel.

B. Support overhead hangers using threaded rods properly fastened in place by suitable screws, clamps, inserts, or bolts, or by welding. Subject hangers to tensile loading only. Where lateral or axial movement may occur, provide suitable linkage to permit sway. Provide bolts and nuts of Type 304L stainless steel. Coat nuts with Xylan or FluoroKote #1 (corrosion resistant).

C. Suspended Piping: Support suspended piping by adjustable ring or clevis hangers and threaded rods from heavy duty concrete inserts or other fastening devices, except as otherwise specified or noted.

D. Brackets: Make brackets of welded 304 stainless steel and designed for the following load classifications.

Load Classification	Maximum Load per Bracket
Light	750 pounds
Medium	1,500 pounds

Load Classification	Maximum Load per Bracket
Heavy	3,000 pounds

1. When medium or heavy brackets are bolted to vertical surfaces, furnish and install backplates of adequate size and thickness to distribute the load against the vertical surfaces.

2. When the use of backplates is not practicable, fasten the brackets to the vertical surfaces in such a manner that the safe bearing strength of the vertical surfaces will not be exceeded.

E. Chairs and Pipe Rolls: Use cast-iron pipe rolls or chairs. Provide pipe rolls with threaded nuts or with sockets to take threaded rods.

F. Saddle Stands: Use adjustable saddle stands.

1. Provide each stand with a length of steel pipe fitted at the base with standard threaded cast-iron flange or steel base plate and at the top with an adjustable saddle or roll. Bolt the base flange or plate to the floor, foundation or concrete base.

2. Use stanchions of construction similar to the saddle stand, except fit them at the top with cast-iron pipe saddle supports or with pipe stanchion saddles with yokes and nuts.

G. Expansion: Connect, support and guide piping to permit and control pipe expansion and contraction and to accommodate building expansion, contraction and settling without damage to the piping or support system.

1. Furnish and install anchors when specified, shown, or required for holding the pipelines and equipment in position or alignment. Design anchors for rigid fastening to the structures, either directly or through brackets.

2. Provide cast-iron chair type anchors for piping with steel straps, except where anchors form an integral part of pipe fittings or where an anchor of special design is required.

3. Inserts: Provide concrete inserts.

a. Design inserts to permit the rods to be adjusted horizontally in one plane and to lock the rod nut or head automatically.

b. Recess inserts near the upper flange to receive reinforcing rods.

c. Design inserts so that they may be held in position during concrete placing operations. Design inserts to carry safely the maximum load that can be imposed by the rod which they engage.

PART 3 EXECUTION

3.1 INSTALLATION

A. Install hanger and supports in accordance with the manufacturer's recommendations and approved shop drawings and as specified in Division 1.

3.2 GALVANIZING AND PAINTING

A. Do not galvanize, paint, or coat stainless steel hangers, supports, anchors, and similar devices, except as specified otherwise.

END OF SECTION

(NO TEXT FOR THIS PAGE)

SECTION 40 05 10

ERECTING AND JOINTING INTERIOR AND EXPOSED EXTERIOR PIPING

PART 1 GENERAL

1.1 SUMMARY

A. Section Includes: Furnishing of supports and hangers and installation of all interior and exposed exterior piping and supports.

1. Furnish, support, hang and install piping of the materials, coatings and linings shown or specified at locations as specified or where shown.

B. Related Work Specified In Other Sections Includes, But is Not Limited to, the Following:

1. Section 01 45 50 - Leakage Tests
2. Section 01 60 00 - Material and Equipment
3. Section 09 96 00 - High Performance Coatings
4. Section 40 05 01 - Supports and Anchors
5. Section 40 05 17 - Steel Pipe and Fittings

1.2 AMERICAN IRON AND STEEL

A. Comply with the "American Iron and Steel (AIS) requirements contained in Section 436 of the Consolidated Appropriations Act, 2014, further described in the Bid Form.

1.3 REFERENCES

A. Codes and standards referred to in this Section are:

1. ASME B1.20.1 - Pipe Threads, General Purpose, Inch
2. ASME B31.1 - Power Piping with Addenda
3. AWWA C110 - Ductile-Iron and Gray-Iron Fittings
4. AWWA C111 - Rubber-Gasket Joints for Ductile-Iron Pressure Pipe and Fittings

5. AWWA C600 - Installation of Ductile-Iron Water Mains and Their Appurtenances

1.4 PIPING SYSTEMS

A. Each piping system shall be constructed using the materials indicated for that system on the Contract Drawings.

B. Furnish and install all necessary guides, inserts, anchors, and assembly bolts, washers, and nuts, hangers, supports, gaskets, couplings and flanges for a complete, operable system as shown on the Contract Drawings, specified or required for the proper installation and operation; devices included in or on the piping; and piping accessories.

1.5 DELIVERY, STORAGE AND HANDLING

A. Deliver, store and handle all products and materials as specified in Division 1 and as follows:

1. Take extreme care in loading and unloading the pipe and fittings. Do the work slowly using skids or suitable power equipment and keep the pipe under control at all times.

2. Handling Procedures: Under no condition is the pipe to be dropped, bumped, dragged, pushed or moved in any way which will cause damage to the pipe, lining or coating.

3. Use of Slings: When handling the pipe with a crane, use a suitable pipe hook or sling around the pipe. Under no condition is the sling to be allowed to pass through the pipe unless adequate measures are taken to prevent damage to the pipe ends, lining and coating.

4. Damage: If any piping or fittings are damaged in the process of delivery, storing, handling, or laying, replace or repair such piping or fittings as approved.

1.6 SUBMITTALS

A. Layouts and Schematics

1. Submit installation drawings for all piping. Schematics may be submitted for pipes 4 inches and smaller. Installation drawings and schematics shall include pipe support locations, fittings, valves, and other appurtenances.

PART 2 PRODUCTS

2.1 MANUFACTURERS

A. Acceptable manufacturers are listed below. Other manufacturers of equivalent products may be submitted.

1. Pipe Dope for Threaded Joints

a. Masters Metallic Compound by Harbinseal Corporation

2.2 MATERIALS

A. Provide hangers and supports and all necessary appurtenances as shown in the Drawings.

2.3 FABRICATION

A. Coating: Provide all threads coated with a suitable pipe dope, Masters Metallic Compound, graphite and engine oil, or equal, before jointing.

PART 3 EXECUTION

3.1 PREPARATION

A. Galvanizing and Painting: Galvanize as specified, in accordance with ASTM A53 and Division 9.

1. Paint hangers, supports, anchors, and similar devices as specified in Section 09 96 00 – High Performance Coatings.

3.2 INSTALLATION

A. General: Install all piping in accordance with the manufacturer's recommendations and approved shop drawings and as specified in Division 1.

1. Install exposed piping at right angles or parallel to building walls. Diagonal runs are not permitted, unless expressly indicated.

2. Install piping free of sags or bends and with ample space between piping to permit proper insulation applications, with 1-inch clearance outside the insulation.

3. Place pipe runs to minimize obstruction to other work.

4. Install piping to allow for expansion and contraction without stressing pipe, joints or connected equipment.

5. Slope piping as shown and arrange systems to drain at low points.

6. Do not penetrate building structural members unless shown.

7. Locate groups of piping parallel to each other and at common elevations whenever practical, spaced to permit applying insulation and servicing of valves.

8. Arrange miscellaneous pipelines, which are shown in diagram form on the Plans, clear of other pipelines and equipment.

9. Fit and install pipelines in a neat and workmanlike manner in accordance with approved shop drawings.

10. Provide an adequate number of unions in main pipe and branch pipe runs to facilitate dismantling or removal of pipeline sections without disturbing adjacent branch or connecting lines.

11. Install suitable sleeves at all points where pipes pass through walls or floors of structures and where wall castings are not provided.

12. Include proper pipe protection saddles on pipes which are covered with insulation.

B. Flanged Joints: Make flanged joints with bolts or bolt studs with a nut on each end.

1. Field Flanges: Shop screw threaded flanges to pipe unless threading in the field is permitted with prior approval.

2. Flange to Pipe Assembly: Assemble pipe to be fitted with threaded flanges as follows:

a. Accurately thread pipe and flanges to the appropriate gauge, screw flanges on by heavy machinery until the end of the pipe projects beyond the face of the flange and a tight metal-to-metal joint is produced without evidence of heat in the threaded portion.

b. Cut the projecting end of the pipe off flush with the face of the flange.

c. Make a light refacing cut across both the end of the pipe and the face of the flange at right angles to the center line of the pipe and then ream the pipe.

d. Flanged to Flange Assembly: Align flange surfaces parallel. Assemble joints by sequencing bolt tightening to make initial contact of flanges and gaskets as flat and parallel as possible. Use suitable lubricants on bolt threads. Tighten bolts gradually and uniformly to appropriate torque specified by bolt manufacturer.

C. Threaded Joints: Conform threaded joints to ASME B1.20.1, tapered pipe threads for field cut threads unless otherwise specified. Join pipe, fittings, and valves as follows:

1. Note internal length of threads in fittings or valve ends, and proximity of internal seat or wall, to determine how far pipe should be threaded into joint.

2. Align threads at point of assembly.

3. Apply appropriate tape or thread compound to the external pipe threads.

4. Assemble joint to appropriate thread depth. Assemble joint to produce a tight joint without evidence of heat in the threaded portion. When using a pipe wrench on valves, place wrench on valve end into which pipe is being threaded.

5. Damaged Threads: Do not use pipe with threads which are corroded, or damaged. If weld opens during cutting or threading operations, do not use that portion of pipe.

6. Retightening: Once a threaded joint has been assembled, it is not to be backed off unless the threads are recleaned and new compound or tape applied before rejointing.

D. Anchors and Stands: Furnish and install anchors and stands when specified, shown, or required for holding the pipelines and equipment in position or alignment.

1. Small Piping Supports: Where adjustable supporting devices are not required, support pipelines 3 inches in diameter and smaller on cast-iron, malleable iron, or steel hooks, hook plates, rings or ring plates.

E. Hangers and Supports

1. Direction Changes: Provide pipe hangers at each change in pipe direction, on both sides of pipe mounted valves and equipment and on both sides of pipe loops and expansion absorbing devices.

2. Brackets: Use brackets for the support of piping from vertical surfaces.

3. Anchors: Furnish and install anchors when specified, shown, or required for holding the pipelines and equipment in position or alignment.

4. Inserts: Install galvanized inserts in concrete structures where required for fastening supporting devices.

5. Controlled Movements: Install hangers and supports to allow controlled movement of piping systems, to permit freedom of movement between pipe anchors, and to facilitate action of expansion joints, expansion loops, expansion bends and similar units.

6. Load Distribution: Adjust hangers to distribute loads equally on the attachment and to achieve any indicated slope of the pipe.

3.3 CATHODIC PROTECTION

A. Isolate, dielectrically, all piping from all other metals.

3.4 FIELD QUALITY CONTROL

A. Tests: After installation of the interior and exposed exterior piping and supports, control equipment and all appurtenances, subject the units to a field running test, as specified in Division 1, under actual operating conditions. Where field welding of pipe joints shown, specified, permitted, or required meet the requirements of ASME B31.1 -Power Piping, Chapter VI Section 137.4 Hydrostatic Testing.

1. Perform testing of pipelines in accordance with the requirements of Section 01 45 50 – Leakage Testing.

3.5 CLEANING

A. General: Clean the interior of pipelines of all dirt and superfluous material of every description in an approved manner.

B. Thoroughly clean threads for threaded joints after reaming.

3.6 SCHEDULE

A. Definitions: Abbreviations used in the schedule are as follows:

1. Pipe Materials:

a. GAL Galvanized Steel

2. Joints:

a. F Flanged
b. Sc Screwed

3. Coatings and Linings:

a.	G	Galvanized
b.	P	Painted

B. Schedule: Provide products as listed in the following schedule.

END OF SECTION

Service	Size (Inches)	Pipe Material	Protective Coatings Int.	Protective Coatings Ext	Joints	Test Pressure (psig)[1]	Remarks
RETURN FLOW REAERATION STRUCTURE							
Water Supply, W2	Less than 3	GAL	G,P	G,P	F,Sc	150	Schedule 40

[1] Measure the test pressures shown in the schedule at the centerline of the pipeline's low point. Adjust test pressures measured at other locations accordingly.

SECTION 40 05 17

STEEL PIPE AND FITTINGS

PART 1 GENERAL

1.1 SUMMARY

A. Section Includes: Requirements for providing steel pipe and fittings, except for steel pipe in buried applications, as follows:

1. Steel pipe and fittings include all fabricated and wrought steel pipe fittings. Use steel pipe only where specifically shown or specified. Provide pipe of the flanged, screwed, welded, or plain end type of the sizes and thicknesses as shown or specified.

B. Related Work Specified in Other Sections Includes, But is Not Limited to, the Following:

1. Section 01 45 50 - Leakage Tests

2. Section 09 96 00 - High Performance Coatings

3. Section 33 05 55 – Buried Ductile Iron Pipe and Fittings

4. Section 40 05 10 - Erecting and Jointing Interior and Exposed Exterior Piping

1.2 AMERICAN IRON AND STEEL

A. Comply with the "American Iron and Steel (AIS)" requirements as contained in Section 436 of the Consolidated Appropriations Act, 2014, further described in the Bid Form.

1.3 REFERENCES

A. Codes and standards referred to in this Section are:

1. AWWA C208 - Dimensions for Fabricated Steel Water Pipe Fittings

2. AWWA M11 - Steel Water Pipe: A Guide for Design and Installation

3. ASTM A 47 - Specification for Ferritic Malleable Iron Castings

4. ASTM A 53 - Specification for Pipe, Steel, Black and Hot-Dipped, Zinc-Coated, Welded and Seamless

5. ASTM A 181/A181M - Specification for Carbon Steel Forgings, for General Purpose Piping

6. ASTM A 197 - Specification for Cupola Malleable Iron

7. ASTM A 283/A283M - Specification for Low and Intermediate Tensile Strength Carbon Steel Plates, Shapes and Bars

8. ASTM A 307 - Specification for Carbon Steel Bolts and Studs, 50,000 psi Tensile

9. ASTM A 536 - Specification for Ductile-Iron Castings

10. ASME B16.1 - Cast Iron Flanges and Flanged Fittings

11. ASME B16.21 - Non-metallic Gaskets for Pipe Flanges

12. ASME B16.3 - Malleable Iron Threaded Fittings

13. ASME B16.5 - Steel Pipe Flanges and Flanged Fittings: NPS 1/2 through 24 with Appendixes

14. ASME B16.9 - Factory-Made Wrought Steel Butt welding Fittings

15. ASME B36.10 - Welded and Seamless Wrought Steel Pipe

16. NSF/ANSI 61 - Drinking Water System Components-Health Effects

1.4 SYSTEM DESCRIPTION

A. Design Standards: Use dimensions for steel pipe in accordance with ASME B36.10, unless specified otherwise.

1. Provide pipe of 6-inch diameter and smaller not less than Schedule 40.

B. Small Steel Pipe: Provide steel pipe less than 30-inches in diameter meeting the requirements of ASTM A 53.

1.5 SUBMITTALS

A. General: Provide all submittals, including the following, as specified in Section 01 33 00 - Submittals.

B. Submit the following Shop Drawings:

1. Flanged, screwed, welding, and mechanical coupling fittings and pipe, couplings, harnessing and special fittings. When special designs or fittings are required, show the Work in large detail and completely describe and dimension the special or fitting.

2. Fully Dimensioned layout of pipe, fittings, couplings, sleeves, expansion joints, supports, anchors, harnessing, valves, and equipment. Label pipe size, type and materials on drawing and include schedule.

3. Cross sections showing elevation of pipe, fittings, sleeves, couplings, supports, anchors, harnessing, valves, and equipment.
4. Catalog data for pipe, couplings, harnessing and fittings.

C. Quality Control: Submit the following certifications:

1. Certificate of compliance for pipe, fittings, couplings, sleeves, cleanouts and harnessing.

1.6 QUALITY ASSURANCE

A. Utilize certified welders, having current certificates conforming to the requirements of the ASME code to perform all welding on steel pipelines.

1.7 DELIVERY, STORAGE AND HANDLING

A. Deliver, store and handle products and materials as specified in Division 1.

PART 2 PRODUCTS

2.1 MANUFACTURERS

A. Acceptable manufacturers are listed below. Other manufacturers of equivalent products may be submitted.

1. Steel pipe and fittings

a. U.S. Steel

b. L.B. Foster

c. Northwest Pipe Company

2. Dielectric insulating fitting

a. Walter Vallett Company

b. EPCO Inc.

3. Seamless steel welded fittings

   a. Taylor Forge and Pipe Works

   b. Tube-Turns

   c. Walworth

4. Gaskets for flanged joints

   a. Garlock Packing Company

   b. Crane Company

   c. U.S. Rubber Company

2.2 MATERIALS

A. Fittings:

1. Manufacture fittings for steel pipe to standard dimensions, suitable for the pressures specified. Provide steel fittings of the same or heavier wall thickness as the pipe of which they are a part.

   a. Provide fittings used in pipelines 2-inch diameter or smaller of the screwed pattern except where flanged fittings are shown in the Drawings.

2. Unions: Use screwed unions on all steel pipelines 2-inch diameter and smaller and flanged unions on pipelines 2.5-inch diameter and larger.

   a. Provide an adequate number of unions of the screwed or flanged type in each main pipeline and each branch to facilitate the dismantling or removal of any branch line or any part thereof or the section of the main pipe to which it connects, without disturbing adjacent branch lines or their related main pipeline.

3. Screwed Fittings: Provide malleable iron ASME B16.3 screwed fittings where shown or specified for steel pipelines meeting the requirements of ASTM A 197. Provide unions with brass or iron seats.

4. Fabricated Steel Fittings: Unless otherwise shown, provide steel flange fittings meeting the requirements of ASME B16.5 for 150-pound standard, except provide flanges that are plain faced.

   a. Fabricate steel fittings from the same plates as the pipeline of which they are a part and meet the requirements of AWWA C208, unless otherwise shown or specified.

b. Provide fittings and elbows that are made of pipe segments or preformed plates.

c. Provide reducers and increasers with the same laying length as American Standard Class 125.

d. Provide fabricated steel fittings with plain ends or welded flanges.

e. Provide tees, wyes, laterals and outlets reinforced in accordance with AWWA M11.

B. Flanges and Flanged Joints

1. Flanges: Unless otherwise shown, provide all flanges for steel pipe, except blind flanges, of the slip-on welding type with hubs meeting the requirements of AWWA C207 Class D and made of metal meeting the requirements of ASTM A 181 Class 60.

a. Attach the flanges to the barrel of the pipe with two continuous fillet welds.

b. Provide plain faced blind flanges in accordance with ASME B16.5 Class 150.

2. Flanged Joints: Make flanged joints with bolts or bolt studs with a nut on each end.

a. Provide bolts, stud bolts, and nuts meeting the requirements of ASTM A 307 Grade B and ASME B16.1.

b. Provide bolts which have a 1/4-inch projection beyond the nut when joint with gasket is assembled.

3. Gaskets: Provide rubber gaskets for flanged joints meeting the requirements of AWWA C207 as modified and supplemented herein. Provide 1/8-inch thick gaskets. Provide full face gaskets for pipe sizes 12-inches in diameter and smaller. Provide ring type gaskets for pipe larger than 12-inches in diameter.

4. Insulation: Provide insulated flanged joints as required. Provide flange insulation kits to include flange insulating gasket, flange bolt insulating sleeves, and flange bolt insulating washers.

C. Expansion

1. General: Make ample provisions for flexibility in all pipelines to compensate for expansion.

2. Expansion Device: Provide adequate expansion devices to allow the lines to expand and contract freely without damage to any part of the piping system.

   a. Provide expansion devices in the form of expansion joints, expansion couplings, swivel or swing joints or pipe bends, and include such anchors as may be shown, specified or required to make the devices effective.

   b. If expansion devices are not required, fabricate all runs of pipe subject to expansion shorter than their theoretical length to the extent that there is freedom to expand without increasing the stresses imposed when cold.

3. Expansion Joints: Provide expansion joints that are of the single short type and are designed for the specified test pressures. Provide expansion joints with adequate tie rods to limit the axial movement at the specified test pressures, except where noted or specified otherwise.

D. Coatings and Linings

1. General: Line and coat steel pipelines in accordance with the piping schedule.

   a. Coat all bolts, nuts, couplings and the like after the joint has been made.

   b. Paint in accordance with Section 09 96 00 – High Performance Coatings.

   c. Do not paint the outside of pipe and fittings that are to be concrete encased.

2. Liquid Epoxy: Where liquid epoxy lining and coating is shown, specified or required, line and coat in accordance with the requirements of AWWA C210.

3. Cement-Mortar Lining: Provide cement and mortar lining in accordance with the requirements of AWWA C205 where shown or specified. Use linings approved by NSF for contact with potable water.

4. Galvanizing: Provide galvanizing in accordance with ASTM A 53 where shown or specified.

5. Sleeve-type Couplings: Shop coat all surfaces with Smith-Blair Standard Blue Shop-coat, or equal nontoxic material compatible with the finish coatings specified. Give the inside coating of the middle ring an additional shop coat of Tnemec Pota-pox. Finish coat as specified in 09 96 00 – High Performance Coatings for the pipeline of which it is a part.

6. Groove-type Couplings: Shop coat couplings as specified in Section 09 96 00 - High Performance Coatings or the pipelines of which the coupling is a part.

E. Drip Pans: Provide drip pans constructed of 16-gauge Type 304 stainless steel.

PART 3 EXECUTION

3.1 INSTALLATION

A. General: Install all steel pipe and fittings in accordance with the manufacturer's recommendations and approved shop drawings and as specified in Division 1 and Section 40 05 10 – Erecting and Jointing Interior and Exposed Exterior Piping.

B. Reducing Fittings: Use ample fittings for all changes in pipe size. Do not use bushings.

C. Drip Pans: Provide drip pans under all steel pipelines installed over electrical equipment and motors and properly connect to the drainage system with 3/4-inch red brass pipe. Make leak tight connection between the drip pan and the drain pipe. Pitch pans uniformly toward the drain pipe not less than 1/8-inch per lineal foot.

3.2 LEAKAGE TESTING

A. Cleaning: Flush clean and test all pipes after installation.

B. Testing: Test pipes for leaks and repair or tighten as required.

C. Procedures: Conduct tests in accordance with Section 01 45 50 – Leakage Testing.

3.3 SCHEDULES

A. Refer to the Schedule contained in Section 40 05 10 - Erecting and Jointing Interior and Exposed Exterior Piping for information on the piping that is to be constructed using the pipe materials and methods specified herein.

END OF SECTION

(NO TEXT FOR THIS PAGE)

SECTION 40 05 18

MISCELLANEOUS PIPE AND FITTINGS

PART 1 GENERAL

1.1 SUMMARY

A. Section Includes: Requirements for providing miscellaneous pipe and fittings as indicated. Miscellaneous pipe and fittings include all aluminum, copper, brass, plastic, cast-iron soil and lined steel pipe and fittings.

B. Related Work Specified In Other Sections Includes, But is Not Limited to, the Following:

1. Section 01 45 50 - Leakage Tests
2. Section 09 96 00 - High Performance Coatings
3. Section 22 10 00 - Plumbing Piping and Fittings
4. Section 23 21 00 - Hydronic Piping Valves and Specialties
5. Section 23 23 00 - Refrigeration Piping and Specialties
6. Section 33 05 50 - Laying and Jointing Buried Pipelines
7. Section 33 13 00 - Disinfection
8. Section 40 05 10 - Erecting and Jointing Interior Piping
9. Section 40 05 16 - Ductile Iron Pipe and Fittings
10. Section 40 05 17 - Steel Pipe and Fittings

C. Comply with the "American Iron and Steel (AIS)" requirements as contained in Section 436 of the Consolidated Appropriations Act, 2014, further described in Section 00 45 49 Bidder Certification Regarding the Use of American Iron and Steel Products.

1.2 REFERENCES

A. Codes and standards referred to in this Section are:

1. ASTM A 74 - Specification for Cast Iron Soil Pipe and Fittings
2. ASTM B 32 - Specification for Solder Metal

3.	ASTM B 42	-	Specification for Seamless Copper Pipe, Standard Sizes
4.	ASTM B 43	-	Specification for Seamless Red Brass Pipe, Standard Sizes
5.	ASTM D 1784	-	Specification for Rigid Poly (Vinyl Chloride) (PVC) Compounds and Chlorinated Poly (Vinyl Chloride) (CPVC) Compounds
6.	ASTM D 1785	-	Specification for Poly (Vinyl Chloride) (PVC) Plastic Pipe, Schedules 40, 80, and 120
7.	ASTM D 2464	-	Specification for Threaded Poly (Vinyl Chloride) (PVC) Plastic Pipe Fittings, Schedule 80
8.	ASTM D 2564	-	Specification for Solvent Cements for Poly (Vinyl Chloride) (PVC) Plastic Piping Systems
9.	ASTM D 2855	-	Recommended Practice for Making Solvent-Cemented Joints with Poly (Vinyl Chloride) (PVC) Pipe and Fittings
10.	ASTM F 491	-	Specification for Poly (Vinylidene Fluoride) (PVDF) Plastic-Lined Ferrous Metal Pipe and Fittings
11.	ASTM F 492	-	Specification for Propylene and Polypropylene (PP) Plastic-Lined Ferrous Metal Pipe and Fittings
12.	ASTM F 599	-	Specification for Poly (Vinylidene Chloride) (PVDC) Plastic-Lined Ferrous Metal Pipe and Fittings
13.	ASME B1.20.1	-	Screw Threads - Pipe Threads, General Purpose (Inch)
14.	ASME B16.18	-	Cast Copper Alloy Solder Joint Pressure Fittings (Includes Revision Service)
15.	ASME B16.22	-	Wrought Copper and Copper Alloy Solder-Joint Pressure Fitting (Includes Revision Service)

16. ASME - Boiler and Pressure Vessel Codes, Section IX - Qualification Standard for Welding and Brazing Procedures, Welders, Brazers, and Welding and Brazing Operators.

17. AWWA C151/A21.51 - Ductile-Iron Pipe Centrifugally Cast in Metal Molds or Sand-Lined Molds, for Water or Other Liquids

1.3 SUBMITTALS

A. General: Provide all submittals, including the following, as specified in Section 01 33 00.

B. Shop Drawings: Submit the following Shop Drawings.

1. Submit complete detailed shop drawings in conformance with the specified requirements.

2. Include drawings that show the piping layouts and schedules of all pipe, fittings, valves, expansion joints, flexible couplings, hangers, supports and other appurtenances.

3. When any work is of special design show in large detail and completely describe and dimension.

1.4 DELIVERY, STORAGE AND HANDLING

A. Deliver, store and handle all products and materials as specified in Section 01 66 00.

PART 2 PRODUCTS

2.1 MANUFACTURERS

A. Acceptable manufacturers are listed below. Other manufacturers of equivalent products may be submitted.

1. Pipe and Fittings:

a. Brass Pipe and Fittings

(1) Metalloy Industries, Inc., Ft. Lauderdale, FL

(2) Nibco, Elkhart, IN

b. Cast-Iron Soil Pipe and Fittings

(1) U.S. Pipe and Foundry Co., Birmingham, AL

(2) Tyler Pipe Industries, Tyler, TX

(3) Charlotte Pipe and Foundry, Charlotte, NC

c. Copper pipe and Fittings

(1) Mueller Industries, Inc., Wichita, KS

(2) Nibco, Elkhart, IN

d. PVC and CPVC Pipe and Fittings

(1) United States Plastic Corp., Lima, Ohio

(2) Harvel Plastics Inc., Easton, Pennsylvania

e. Wall Sleeve Annular Seals

(1) Thunderline Corp. (Link-Seal), Belleville, MI

2. Dielectric Insulating Fittings: Watts

2.2 MATERIALS

A. Brass Pipe and Fittings

1. Pipe: Provide red brass pipe that meets the requirements of ASTM B 43.

a. Provide pipe sizes, wall thicknesses and dimensions that meet the ASTM B 43 Table 2 requirements for regular pipe.

2. Fittings: Provide brass pipe fittings that meet the ASME B16.15 requirements.

a. Provide fittings rated for steam working pressures up to 250 psig.

b. Provide unions made entirely of brass or bronze.

c. Provide screwed type joints with clean cut, tapered and smooth threads that meet ASME B1.20.1 requirements.

3. Finish: Provide piping with a rough finish, unless otherwise specified.

B. Cast-Iron Soil Pipe and Fittings

1. Pipe and Fittings: Provide service weight, hub and spigot, cast-iron soil pipe and fittings meeting the requirements of ASTM A 74 or hubless cast iron soil pipe and fittings meeting the requirements of CISPI 301. Do not use hubless pipe and joints for buried pipe.

2. Protective Coatings: Provide interior protective coatings (linings) and exterior protective coatings for pipe and fittings in the finished work as follows and as indicated in the piping schedules:

   a. For pipe and fittings not exposed in the finished work, provide an interior bituminous lining and an exterior bituminous coating that meet AWWA C151/A21.51 requirements.

   b. For pipe and fittings exposed in the finished work, provide an interior bituminous lining that meets AWWA C151/A21.51 requirements.

      (1) If the pipe schedules indicate that the pipe exterior is to be painted, paint in accordance with the requirements in Section 09 96 00.

      (2) If the pipe schedules indicate that the pipe exterior is to have a bituminous coating, coat the pipe in accordance with the requirements in AWWA C151/A21.51.

3. Joints: Provide lead and oakum joints or neoprene gasket, compression type joints in accordance with ASTM C 564 for hub and spigot pipe. Consult the piping schedules. Provide hubless couplings for hubless pipe. Compose hubless couplings of a stainless steel shield, clamp assembly and an elastomeric sealing sleeve conforming to CISPI 310.

4. Cleanouts: Provide cleanouts where shown or specified, and meeting the requirements of Section 22 10 00, unless otherwise specified.

C. Copper Pipe and Fittings

1. Small Copper Piping: For copper pipe 3-inches in diameter and smaller, provide Type K hard drawn copper tubing that meets ASTM B 88 requirements.

   a. Fittings: Provide ASME B16.18, cast copper alloy or ASME B16.22 wrought copper and copper alloy fittings.

   b. Joints: Threaded or ASTM B 32 lead-free soldered joints.

   c. Joints: Brazed joints, AWS A5.8 BCUP silver/phosphorus/copper alloy with melting range 1190-1480 degrees F.

2. Large Copper Piping: For copper pipe larger than 3-inches in diameter, provide regular seamless copper pipe that meets the ASTM B 42 requirements.

   a. Fittings: Provide solder type fittings of the same material as the pipe.

   b. Joints: Use threaded or brazed joints.

3. Potable Water Piping: Use ASTM B 32 alloy Grade 95TA (95 percent tin and 5 percent antimony) solder for piping carrying potable water.

4. Unacceptable Uses: Do not use copper pipe with soldered joints for transporting fuel oil or other flammable or toxic liquids inside buildings.

D. Polyvinyl Chloride (PVC) and Chlorinated Polyvinyl Chloride (CPVC) Pipe and Fittings

1. Pipe and Fittings: Provide PVC pipe and fittings that are Schedule 80 and meet the requirements of ASTM D 1784 Class 12454-B and ASTM D 1785 unless otherwise shown or specified. Provide CPVC pipe and fittings that are Schedule 80 and meet the requirements of ASTM D 1784 Class 23447-B and ASTM D 1785, unless otherwise shown.

2. Joints: Provide ASTM D 2855 solvent welded joints using ASTM D 2564 solvent cement or ASTM D 2464 threaded joints, as indicated in the piping schedules.

E. Wall Pipes and Sleeves for Miscellaneous Pipe and Fittings

1. Wall Pipes

   a. Where wall pipes are shown or specified, provide ductile iron wall pipes that meet the requirements of AWWA C110/A21.10 with end connections that are 1) of the types shown and 2) flush with the surfaces of the walls or floors. Unless otherwise shown or specified, provide wall pipes with intermediate collars located at the centers of the walls or floors.

2. Sleeves

   a. Where pipes pass through exterior walls or floors or wetted interior walls or floors of structures and where wall pipes are not to be provided, provide ductile-iron sleeves meeting the requirements of AWWA C110/A21.10 with ends that are flush with the wall or floor surfaces and with intermediate collars located at the centers of the walls or floors.

b. Where pipes pass through non-wetted interior walls or floors and where wall pipes are not to be provided, provide ductile-iron sleeves meeting the requirements of AWWA C110/A21.10; steel pipe sleeves meeting the requirements of Section 40 05 17 or as shown or specified otherwise. Provide sleeves with ends flush with the wall or floor surfaces. Where shown or specified, provide intermediate collars located at the centers of the walls or floors.

c. Provide sleeves having large enough diameters to accommodate the passage of pipe joints, if required.

d. HDPE Sleeves: Where shown or specified, provide molded HDPE sleeves as manufactured by the Thunderline Corporation, or approved equal, with integrally formed intermediate collars or waterstops.

e. Where shown or specified, provide modular, mechanical sleeve seals, meeting the requirements of this Section, in the annular spaces between pipes and sleeves. In all other locations, caulk the annular spaces between pipes and sleeves with caulk meeting the requirements in Section 07 90 00.

F. Modular, Mechanical Sleeve Seals: Provide modular, mechanical type seals consisting of interlocking, synthetic-rubber links shaped to continuously fill the annular space between the pipe and the sleeve. Provide an elastomeric sealing element that is of the size, quantity, type and material that the manufacturer recommends for the intended service and that will provide an effective hydraulic seal. Provide stainless steel bolts and nuts.

G. Supports and Anchors: Provide all pipelines with supporting and anchoring devices as specified in Section 40 05 01. Provide drip pan hangers and supports as specified for sheet metal ductwork in Section 23 31 00.

H. Drip Pans: Provide drip pans constructed of 16-gauge Type 304 stainless steel.

PART 3 EXECUTION

3.1 INSTALLATION

A. General: Install all miscellaneous pipe and fittings in accordance with the specifications contained herein and in Sections 33 05 50 and 40 05 10 and in accordance with the manufacturer's recommendations and approved shop drawings and as specified in Division 1.

B. Connections Between Dissimilar Metals: Where connections are to be made between pipelines or equipment of corrosion causing dissimilar metals make the connections using dielectric insulating couplings, unions or other approved dielectric insulating devices.

C. Couplings: Only use couplings to join standard lengths of pipe and as required to complete a straight run of pipe. Do not use couplings to join random lengths of pipe and cuttings from standard lengths.

D. Reducing Fittings: Use reducing fittings for all changes in pipe size. Do not use bushings.

E. Pipe Flexibility: Make ample provisions for flexibility in all pipelines in accordance with Section 33 05 50 for buried pipelines and Section 40 05 10 for interior pipelines.

F. Drip Pans: Provide drip pans under all metallic pipelines installed over electrical equipment and motors and properly connect to the drainage system with 3/4-inch red brass pipe. Make leaktight connection between the drip pan and the drain pipe. Pitch pans uniformly toward the drain pipe not less than 1/8-inch per lineal foot.

3.2 CLEANING AND PAINTING

A. Cleaning: Flush all process and potable water pipelines with clean water.

B. Leakage: Test pipes at the pressures specified in the piping schedules located in Section 33 05 50 and Section 40 05 10.

C. Paint in accordance with Section 09 96 00, unless otherwise specified.

3.3 DISINFECTION

A. Disinfect all potable water pipelines in accordance with Section 33 13 00.

3.4 SCHEDULES

A. Refer to the schedules contained in Section 33 05 50 Laying and Jointing Buried Pipelines and Section 40 05 10 Erecting and Jointing Interior Piping for information on the piping that is to be constructed using the pipe materials and methods specified herein.

END OF SECTION

SECTION 40 05 20

VALVES

PART 1 GENERAL

1.1 SUMMARY

A. Section Includes: Requirements for furnishing and installing valves and operators.

1. Provide valve operators complete, including a suitable enclosure, with appurtenances necessary for the operator to perform its intended function. Such appurtenances include, but are not limited to, anchor bolts and other mounting hardware, gauges, miscellaneous valves, local indicators, operating nuts, direct buried valve boxes and other such items.

2. Provide valves, joints, actuators, operators, and other appurtenances as specified or as shown.

B. Comply with the "American Iron and Steel (AIS)" requirements as contained in Section 436 of the Consolidated Appropriations Act, 2014, further described in the Bid Form.

C. Related Work Specified in Other Sections Includes, But is Not Limited to, the Following:

1. Section 01 45 50 - Leakage Test
2. Section 33 05 50 - Laying and Jointing Buried Pipelines
3. Section 33 05 55 - Buried Ductile Iron Pipe and Fittings

1.2 REFERENCES

A. Codes and standards referred to in this Section are:

1. ASME B16.1 - Cast Iron Pipe Flanges and Flanged Fittings: Classes 25, 125, and 250

2. ASTM A126 - Standard Specification for Gray Iron Castings for Valves, Flanges, and Pipe Fittings

3. ASTM A276 - Standard Specification for Stainless Steel Bars and Shapes

4. ASTM A536 - Standard Specification for Ductile Iron Castings

5. ASTM A564 - Standard Specification for Hot-Rolled and Cold-Finished Age-Hardening Stainless Steel Bars and Shapes

6. ASTM D2000 - Standard Classification for Rubber Products in Automotive Applications

7. AWWA C504 - Rubber-Seated Butterfly Valves

8. AWWA C512 - Air-Release, Air/Vacuum, and Combination Air Valves for Waterworks Service

9. AWWA C515 - Reduced-Wall, Resilient-Seated Gate Valves for Water Supply Service

10. AWWA C550 - Protective Interior Coating for Valves and Hydrants

11. AWWA C800 - Underground Service Line Valves and Fittings

12. AWWA M51 - Air Valves: Air-Release, Air/Vacuum, and Combination Air Valves

1.3 SUBMITTALS

A. General: Furnish submittals, including the following, as specified in Division 1.

B. Product Data and Information:

1. Product specifications of valves, valve operators, and appurtenances.

C. Shop Drawings:

1. Complete detailed and working drawings of valves, valve operators and appurtenances, including arrangement and erection drawings of operators and operating characteristics. Identify the valve number or name as specified in this Section on each drawing.

D. Quality Control:

1. Certificates of compliance for valves attesting that the items are in compliance with the Contract Documents, referenced standards, including proof-of-design testing, and “American Iron and Steel (AIS)” requirements.

2. Manufacturer’s certified performance and material records.

E. Operation and Maintenance Manuals:

1. Operation and maintenance manuals for the valves and operators.

1.4 QUALITY ASSURANCE

A. Furnish valves of the same type from the same manufacturer. Provide parts that are interchangeable for valves of the same type and size.

1.5 DELIVERY, STORAGE AND HANDLING

A. General: Deliver, store and handle products as specified in Division 1 and as follows. Protect against damage and exposure from the elements. Store materials off the ground for protection against oxidation caused by ground contact.

B. Storage and Erection: Pack and store valves in satisfactory operating condition. Carefully erect valves in their respective positions, free from distortion and strain.

1.6 INSPECTION

A. Inspect valves, operators and appurtenances for damage and cleanliness prior to installation. Do not use any material damaged or contaminated in handling on the job unless it is repaired, re-cleaned, or replaced as approved.

PART 2 PRODUCT

2.1 MANUFACTURERS

A. Acceptable manufacturers are listed below. Manufacturers of equivalent products may be submitted unless specified otherwise.

1. Gate Valves: Equivalent products may not be submitted.

a. AMERICAN Flow Control
b. Clow Valve Company
c. Kennedy Valve Company
d. Mueller Water Products, Inc.
e. United States Pipe and Foundry

2. Butterfly Valves: Equivalent products may not be submitted.

a. DeZURIK, Inc.
b. Kennedy Valve Company
c. M&H Valve Company
d. Mueller Water Products, Inc.
e. Val-Matic Valve & Mfg.

3. Corporation Stops:

   a. A.Y. McDonald Mfg. Co.
   b. Ford Meter Box Company, Inc.
   c. Mueller Water Products, Inc.

4. Air Valves:

   a. A.R.I. Flow Control Accessories Ltd.
   b. Cla-Val
   c. Crispin Valves
   d. DeZURIK, Inc./APCO
   e. Val-Matic

5. Valve Box and Cover:

   a. Tyler Union, Series 6860, size “DD” with #6 base

6. Globe and Angle Hose Valves:

   a. Acorn
   b. Crane
   c. NIBCO, Inc.
   d. Stockham

2.2 MATERIALS

A. General:

1. Fabricate valves and operators of materials resistant to corrosion for the required service as recommended by the manufacturer and as specified herein.

2. Fabricate valves with a working pressure rating meeting or exceeding that of the pipeline as shown, exceeding that of the pipeline test pressure in which the valve is installed in accordance with Section 33 05 50, or as specified, whichever is greater.

3. Provide interior passages of valves that are free of obstructions or stops.

B. Valve Joints

1. Fabricate valves 2 inches in diameter and smaller of the threaded end type.

2. Fabricate valves larger than 2 inches in diameter as specified or shown.

a. For metallic flanged joints, provide flanges that are faced accurately at right angles to the axis of the casting. Face and drill flanges and shop coat with a rust-preventive compound before shipment.

b. For flanged joints, provide flanges whose dimensions and drillings meet the requirements of ASME B16.1, 250 pounds as a minimum. Provide flanges with a working pressure rating meeting or exceeding that of the pipe as shown, exceeding that of the pipeline test pressure in which the valve is installed, or as specified, whichever is greater. Furnish special drillings where required. For valves having flanges that do not conform to the thickness requirements of ASME B16.1, test each valve in accordance with the hydrostatic shell test pressure requirements of ASME B16.1.

C. Operating Force: Fabricate valves to limit the maximum force required to operate manual valves to 40 pounds.

D. Handwheel: Mark each valve handwheel with an arrow and the word OPEN.

2.3 GATE VALVES

A. General:

1. Provide resilient-seated gate valves. Manufacture valves and accessories, including operators, to meet the requirements of AWWA C515, except as otherwise specified.

2. Provide valves that are counterclockwise to open marked with a directional arrow and the word OPEN.

B. Materials: Unless otherwise shown or specified, provide gate valves matching the adjoining pipe size shown with joints as shown or specified in Section 33 05 55 meeting the requirements of AWWA C515 and with materials as specified below or as required for the service:

Item	Standard	Material Description
Type	AWWA C515	Resilient-Seated
Body	ASTM A126, Class B ASTM A536	Cast Iron Ductile Iron
Stem	-	Non-Rising, Stainless Steel
Stem O-Ring	ASTM D2000	Buna-N
Bonnet	ASTM A536	Ductile Iron

Item	Standard	Material Description
Bonnet Bolts and Nuts	-	Type 304L or 316 Stainless Steel
Encapsulated Disc	ASTM A536 and ASTM D2000	Ductile Iron Encapsulated in EPDM Rubber
Operating Nut	-	Type 316 Stainless Steel
Coating	AWWA C550	Fusion Bonded Epoxy

C. Actuator: Provide manual actuators of the same manufacturer or brand of the valve with 2-inch standard AWWA operating nuts meeting the requirements of AWWA C515 and in accordance with the pressure class of the valve.

2.4 BUTTERFLY VALVES

A. General:

1. Provide butterfly valves of the rubber-seated, tight-closing, short-body type. Manufacture valves and accessories, including operators, to meet the requirements of AWWA C504, except as otherwise specified. Wafer body type valves without lugs are not acceptable.

2. Provide valves that are counterclockwise to open marked with a directional arrow and the word OPEN.

B. Materials: Unless otherwise shown or specified, provide valves matching the adjoining pipe size shown with joints as shown or specified in Section 33 05 55 meeting the requirements of AWWA C504 and with materials as specified below or as required for the service:

Item	Standard	Material Description
Type	AWWA C504	Rubber-Seated
Body	ASTM A126, Class B ASTM A536	Cast Iron Ductile Iron
Shaft	ASTM A276 or A564	Stainless Steel
Disc	ASTM A536	Ductile Iron
Seat	-	Buna-N

Item	Standard	Material Description
Mating Seat Surface	ASTM A276	Stainless Steel
Bearings	-	Self-Lubricating
Actuator Housing	ASTM A126, Class B ASTM A536	Cast Iron Ductile Iron
Hardware	-	Stainless Steel
Operating Nut	-	Type 316 Stainless Steel
Coating	AWWA C550	Fusion Bonded Epoxy

C. Actuators: Provide traveling nut manual actuators of the same manufacturer or brand of the valve with 2-inch standard AWWA operating nuts meeting the requirements of AWWA C504 and in accordance with the pressure class of the valve.

2.5 HOSE VALVES

A. Angle Type Hose Valve ¾ Inch:

1. 3/4 inch NPT female inlet, 3/4 inch male hose thread outlet, heavy rough brass body rated 125 psi, lockshield bonnet, removable handle, atmospheric vacuum breaker conforming to ASSE 1011 and IAPMO code.

B. Globe Style Hose Valve 1 Inch to 3 Inches:

1. All-bronze, NPT threaded ends, inside screw-type rising stem, TFE disc, brass cap with chain, complies with MSS SP 80, rated 300 WOG.

2.6 CORPORATION STOPS

A. Provide brass corporation stops as shown and meeting the requirements of AWWA C800. Provide brass corporation stops with AWWA/CC threaded inlet compatible with the connection pipe, valve, or appurtenance shown.

2.7 AIR VALVES

A. General:

1. Provide wastewater-type air valves as shown meeting the requirements of AWWA M51 and AWWA C512.

2. Provide vent piping for the exhaust and intake of air as shown.

3. Provide an adequate base for strong support and stability.

B. Materials:

1. Provide valve materials, joints, and shutoff valve as specified below, or as required for wastewater service. The use of thermoplastic components is not acceptable.

a.	Valve bodies:	
	Cast Iron	ASTM A126, Grade B
	Ductile Iron	ASTM A536, Grade 65-45-12
b.	Joints:	Smaller than 3 inches, NPT 3 Inches and Larger, Flanged
c.	Seat:	Buna-N
d.	Other Internal Hardware:	Type 316 Stainless Steel
e.	Shutoff Valve Leading to Air Valve:	Smaller than 3 inches, Corporation Stop 3 Inches and Larger, Butterfly Valve

2. Provide corrosion resistant coating for the application as recommended by the manufacturer and in accordance with AWWA C512.

3. Provide seat and orifice button with durometer as recommended by the manufacturer for the maximum normal operating pressures as shown.

4. Unless specified otherwise, provide combination air valves of the following body types:

Valve Size (inches)	Body Type
Smaller than 3 inches	Single Body
3 inches and Larger	Dual Body

5. Provide dual body combination air valves with a shutoff valve between the air/vacuum valve and the air release valve as shown.

6. Provide isolation valve with air valve as recommended by the manufacturer.

7. Provide surge check valves with combination air valves.

2.8 VALVE BOXES

A. Provide direct buried valves with adjustable type valve boxes to finished grade as shown. Equip each direct buried valve with a street duty rated cast iron three-piece, screw type, 5-1/4” stem valve box. Provide a cover with a stay-put design, with embossed cover as shown. Provide a screw-type riser or long throat riser to accommodate final lift of asphalt if adjustable box cannot be adjusted to match final grade. Use of inserts for matching final grade is not acceptable.

PART 3 EXECUTION

3.1 INSTALLATION

A. General: Install valves, valve operators, and appurtenances in accordance with the manufacturer's recommendations and approved shop drawings and as specified in Division 1. Install valves with sufficient clearance for proper operation of external mechanisms, and with sufficient clearance to dismantle the valve for in-place maintenance.

B. Valve Boxes: Install each valve box directly over the valve it serves, with the top of the box flush with finished grade. Set valve boxes plumb. After each valve box is placed, backfill and thoroughly tamp around valve box.

C. Air Valves: Install air valves in accordance with the manufacturer’s recommendations and with a shutoff valve connection for isolation as shown or specified. Install air valves so that the direction of air flow through the valve is in accordance with the manufacturer’s recommendation and required for the service.

3.2 FIELD QUALITY CONTROL

A. Manufacturer's Field Services: Furnish the services of a qualified representative of each manufacturer to provide instruction on the proper installation of the equipment, inspect the completed installation, make any necessary adjustments, participate in the startup of the equipment, participate in the field testing of the equipment, and place the equipment in trouble-free operation, as specified in Division 1.

B. Tests: After installation of the valves and appurtenances, subject the units to a hydrostatic leakage test meeting the requirements of Section 01 45 50. Repair leaks in accordance with Section 01 45 50 regardless of how the leakage is identified.

3.3 OPERATION DEMONSTRATION

A. Manufacturer's Field Services: Furnish the services of a qualified representative of each manufacturer to demonstrate the proper operation and instruct OWNER personnel in the equipment's operation and maintenance, as specified in Division 1.

3.4 SCHEDULE

A. Abbreviations used in the schedule are as follows:

1. Joints:

a.	F	Flanged
b.	RMJ	Restrained Mechanical Joint
c.	Sc	Screwed

2. Operators:

a.	H	Handwheel
b.	N	Nut

B. Services of each facility are as follows:

1. Return Flow Pipeline Wastewater, Treated Effluent

VALVE SCHEDULE

Facility	Valve Type	Size Inches	Joint Type	Operator Type	Notes
RETURN FLOW PIPELINE					
Blow-Off Assembly	Gate	8	RMJ	N	-
Isolation Valve					
Isolation Valve	Butterfly	30	RMJ	N	-
Isolation Valve	Corporation Stop	1/2	Sc	-	1
Air Valve Assembly					
Air Valve	Combination, Single Body	2	Sc	-	-
Isolation Valve	Corporation Stop	2	Sc	-	-
Air Valve	Combination, Dual Body	4, 6, 8, 10	F	-	2
Isolation Valve	Butterfly	4, 6, 8, 10	F	H	-
REAERATION BUILDING					
Hose Valve	Angle	3/4	Sc	-	-
Hose Valve	Globe	1-1/2	Sc	-	-

Notes:

1. Provide corporation stops in isolation valve vaults as shown.
2. Provide air release valve inlet size of 2 inches.

END OF SECTION

(NO TEXT FOR THIS PAGE)

SECTION 40 80 50

PROCESS CONTROL SYSTEM COMMISSIONING

PART 1 GENERAL

1.1 SUMMARY

A. Furnish all labor, materials, equipment and incidentals as shown, specified, and required to furnish and install all equipment and coordinate all activities necessary to perform check-out and start-up of the equipment installed as part of Contract.

B. CONTRACTOR shall retain the services of a System Integrator, with substantial documented experience, to supervise and perform check-out of all Process Control System components. Furnish the services of an authorized manufacturer's representative to check the equipment installation and place the equipment in operation. The manufacturer's representative shall be thoroughly knowledgeable about the installation, operation, and maintenance of the equipment.

C. Related work specified in other sections includes, but is not limited to, the following:

1. Section 01 33 00 – Submittals

2. Section 01 79 00 - Training

3. Section 40 90 00 - Process Control System General Requirements

4. Section 40 91 00 - Process Control System Instruments

5. Section 40 94 43 - Programmable Logic Controller Systems

6. Section 40 95 13 - Process Control System Panel Enclosure and Equipment

7. Section 40 98 50 - Process Control System Factory Acceptance Testing

8. Section 40 90 12 - Special Systems

9. Section 40 95 60 - Telemetry Systems

1.2 SUBMITTALS

A. General: Furnish all submittals, including the following, as specified in Section 01 33 00 - Submittals.

B. Submit the following, meeting the sequence and schedule established by the CONTRACTOR for facilities impacted by the Contract. Submit to meet requirements per process area and for facility wide commissioning.

1. Test Plan

2. Test Schedule

3. Testing Tools

4. Test results

1.3 SYSTEM CHECKOUT

A. CONTRACTOR shall perform the following:

1. Check and approve the installation of all Process Control System components and all cable and wiring connections between the various system components.

2. Conduct a complete system checkout and adjustment, including checking each component functions, and testing of final process control system instrument, device, computer, and network functions. All problems encountered shall be promptly corrected to prevent any delays in start-up of the process control system network.

B. CONTRACTOR shall furnish all test equipment necessary to perform the testing during system checkout and start-up.

C. CONTRACTOR shall be responsible for initial operation of the process control system and shall make any required changes, adjustment, or replacements necessary to the system to perform the intended functions.

D. CONTRACTOR shall furnish ENGINEER/OWNER an installation inspection report certifying that all equipment has been installed correctly and is operating properly. The report shall be signed by authorized representatives of CONTRACTOR, System Integrator, and Supplier.

1.4 INTEGRATED SYSTEM FIELD TEST

A. Application Programming shall be furnished under this Contract. CONTRACTOR shall furnish a PLC program to test complete IO Functionality of all the instruments. The PLC test program shall demonstrate following tests but shall not be limited to:

1. Calibrate all the instruments indicated on Contract Drawings.

2. Test analog inputs at 0, 4, 12, and 20 mA DC.

3. Test change of state for all discrete inputs.

4. Manipulate PLC data table or use forces to test response of all discrete output signals

1.5 FUNCTIONAL TEST:

A. General:

1. Functional Test. Performed by CONTRACTOR to test and document PIC, instruments are ready for operation. Provide sufficient temporary software configuring to allow testing of these subsystems.

B. Loop/Component Inspections and Tests:

a. Check PICS for proper installation, calibration, and adjustment on a loop-by-loop and component-by-component basis.

b. Use loop status report to organize and track inspection, adjustment, and calibration of each loop and include the following:

(1) Project name.

(2) Loop number.

(3) Tag number for each component.

(4) Checkoffs/Signoffs for Each Component:

(a) Tag/identification.

(b) Installation.

(c) Termination wiring.

(d) Termination tubing.

(e) Calibration/adjustment.

(5) Checkoffs/Signoffs for the Loop:

(a) Panel interface terminations.

(b) I/O interface terminations with PLCs.

(6) I/O Signals for PLC are Operational: Received/sent, processed, and adjusted. Engineer will provide temporary software to allow I/O testing.

(7) Total loop operational.

(8) Space for comments.

C. Component calibration sheet for each active I&C component (except simple hand switches, lights, gauges, and similar items) and each [PLCs,] [RTUs] I/O module and include the following:

1. Project name.

2. Loop number.

3. Component tag number or I/O module number.

4. Component code number for I&C elements.

5. Manufacturer for I&C elements.

6. Model number/serial number for I&C elements.

7. Summary of Functional Requirements; For Example:

a. Indicators and recorders, scale and chart ranges.

b. Transmitters/converters, input and output ranges.

c. Computing elements' function.

d. Controllers, action (direct/reverse) and control modes (P, I, D).

e. Switching elements, unit range, differential (fixed/adjustable), reset (auto/manual).

f. I/O Modules: Input or output.

8. Calibrations, for example, but not limited to:

a. Analog Devices: Actual inputs and outputs at 0, 10, 50, and 100 percent of span, rising and falling.

b. Discrete Devices: Actual trip points and reset points.

c. Controllers: Mode settings (P&ID).

d. I/O Modules: Actual inputs or outputs of 0, 10, 50, and 100 percent of span, rising and falling.

e. Space for comments.

D. Any defects or problems found during the test shall be corrected by CONTRACTOR and then retested to demonstrate proper operation.

E. Refer to Part 2 of this specification for detailed Integrated System Field Test (SAT & Start-up) requirements.

1.6 30-DAY TEST

A. Contractor shall perform 30 Day Test.

1.7 SPARE PARTS

Not Used

PART 2 SITE ACCEPTANCE TESTING

2.1 GENERAL

A. Contractor shall perform Site Acceptance Test for instrumentation.

PART 3 EXECUTION

3.1 GENERAL

A. Part 3 provides an outline of the work to be carried out by the CONTRACTOR/ENGINEER/OWNER/System Integrator/Equipment Mfr. as part of this Project.

3.2 TESTING

A. General:

1. The PICS Subcontractor shall coordinate and test control wiring activities from the field instruments through to the PICS PLC panel termination.

2. The PICS Subcontractor shall promptly notify the Engineer and Owner of any problems, questions, or discrepancies that arise during wiring installation; track status of coordination items, and document final resolution.

3. Each test shall be in the cause and effect format. The person conducting the test shall initiate input (cause). Upon the systems or subsystems producing the correct result (effect), the specific test would be considered successful.

4. The PICS Subcontractor shall conduct tests in accordance with approved procedures, forms, and checklist. Each specific test to be performed shall be described and a space provided after it for signoff by Engineer and Owner after its satisfactory completion.

3.3 DEFECT HANDLING

A. During testing, the need for changes to the system shall be identified. This shall be as a result of a test failure or as a result of an incorrectly specified requirement (test did not fail, but the requirement is incorrectly specified).

B. For test failures, the defect shall be recorded in the test document. All defects shall be immediately reviewed and resolved.

C. Change Requests will be prepared by the ENGINEER/OWNER. Possible implications of not proceeding should also be identified. The OWNER will authorize the work to be done under any change request. The CONTRACTOR shall schedule change request work based on the project priorities.

3.4 TRAINING

A. Provide 2-hour training for each type of instrument installed in accordance with Section 01 79 00 - Training.

3.5 MANUFACTURER'S FIELD SERVICES AND TRAINING

A. The CONTRACTOR shall include the services and training time of factory trained personal, as required, from each manufacturer listed. This time shall be utilized at the discretion of the OWNER. Field services shall be based on an eight (8) hour day, Monday through Friday, during the Facility's normal working hours. All travel and living related costs are the responsibility of the CONTRACTOR.

END OF SECTION

SECTION 40 90 00

PROCESS CONTROL SYSTEM GENERAL REQUIREMENTS

PART 1 GENERAL

1.1 SUMMARY

A. This Section describes the general requirements for furnishing and installing process control system (PCS) including all labor, materials, equipment and incidentals as shown, specified and required to furnish, install, calibrate and place in operation a complete system as illustrated on drawings, and as specified in the following sections.

B. Furnish labor, materials, equipment, and services to store, transport, install, calibrate, and make operational the PCS work for the Outfall Facilities Site. The work includes the design shown on the drawings and specifications including instruments, field devices, networks, programming, integration, testing, and commission for all devices furnished including packaged systems and control. Work shall also include wiring, raceway, fittings, and connections to link and integrate the individual components and packaged control systems into the existing SCADA network.

C. Related work specified in other sections includes, but is not limited to the following:

1. Section 01 33 00 - Submittals
2. Section 40 80 50 - Process Control System Commissioning
3. Section 40 90 12 - Special Systems
4. Section 40 91 00 - Process Control System Instruments
5. Section 40 94 43 - Programmable Logic Controller Systems
6. Section 40 95 13 - Process Control System Panel Enclosure and Equipment
7. Section 40 95 60 - Telemetry Systems

1.2 SYSTEM SUPPLIERS

A. The CONTRACTOR shall furnish all labor, materials, equipment, and incidentals as shown, specified, and required to furnish, install, calibrate, test, start-up, and place in satisfactory operation a complete process control system. The CONTRACTOR shall be responsible for all elements specified and furnished as part of this section and related sections.

1.3 REFERENCES

A. Regulatory Requirements

1. Code Compliance: Comply with National Electrical Code (NFPA 70) and any and all local codes, applicable to construction and installation of electrical wiring, devices, material and equipment.

2. NECA Standards: Comply with applicable portions of National Electrical Contractor's Association's "Standard of Installation".

3. UL Labels: Furnish control panel components, power supplies, relays, etc., which have been listed and labeled by Underwriter's Laboratories.

B. The purpose of Contract drawings and specifications is to convey information required for complete and functioning systems. System Supplier shall be responsible for all details necessary to properly install, adjust, configure, and place in operation the intended systems. Instrument List and Input/Output List, if provided, are for convenience; their accuracy is not guaranteed.

C. Section 01 42 00 – References.

D. Codes and Standards referred to in this Section are:

1. IEEE 802.3 10/100/1G Ethernet networks

2. ISA-S5.4 Instrument Loop Diagrams.

3. NFPA 70 National Electrical Code

4. UL Underwriter's Laboratory

5. NEMA National Electrical Manufacturers Association

1.4 QUALITY ASSURANCE

A. Standard Products: Use standard hardware and software which is fully developed, tested, and supported as a base for the Work. Furnish custom modifications as specified elsewhere. Furnish a fully operational system which meets the functional intent of the Specifications.

B. Software Testing Standards

1. Test programs to ensure that the software to be furnished is consistent with the design parameters and that no errors occur when the programs are executed.

2. Establish testing standards.

C. Revision Level:

1. Update hardware and firmware to the manufacturer's latest revision level. Perform updates periodically until final acceptance, as revisions are issued by the manufacturer.

2. Exceptions will be considered on a case-by-case basis. Exceptions shall not be allowed without certification that the original equipment manufacturer will continue to support and warranty the hardware.

3. Ensure retention of compatibility with all systems before performing any hardware, software, or firmware upgrades.

1.5 ABBREVIATIONS

A. BPS – Booster Pumping Station

B. HMI – Human Machine Interface.

C. OIT – Operator Interface Terminal

D. OWS – Operator Work Station

E. PC – Personal Computer.

F. PCS – Process Control Systems.

G. PLC – Programmable Logic Controller

H. SCADA – Supervisory Control and Data Acquisition

I. WSCB – Water Supply Control Building

1.6 DEFINITIONS

A. Process Instrumentation and Control Equipment: Instrumentation and control and monitoring components such as field elements, panels, process control systems, and associated electromechanical, electrical, and electronic accessories.

B. Process Instrumentation and Control System: Materials, equipment, and work required to implement a complete and operating system of instrumentation and control equipment.

C. PLC (Programmable Logic Controller): System includes power supply, central processing unit (CPU), communication controller, interconnect cables, and input and output interface.

D. SCADA (Supervisory Control and Data Acquisition): Computer system that operates as primary operator interface to the entire PLC network, which includes process visualization and control, data collection and storage, alarm management, and process data link to other office productivity software.

E. OIT (Operator Interface Terminal): Graphical local operator interface terminal at a PLC enclosure or control panel.

F. OWS (Operator Work Station): PC based operator system, including hardware, operating system software, and operator interface HMI system software. This is generally referred to as the SCADA or HMI workstation.

1.7 GENERAL DESCRIPTION OF WORK

A. Furnish all materials and work necessary for complete and fully functional systems.

1. Furnish instrumentation and controls components as well as complete system integration. Furnish all mounting hardware and supports. Work shall include panel mounting and the completion of all wiring terminations within control panels.

2. Work is generally as shown on the drawings and as specified. Configuration of network equipment, including implementation of network security consistent with WWU and CWP requirements is required.

3. Coordinate work with all electrical, mechanical, and structural work furnished in this Contract.

4. Special Systems Integrator shall supply PoE injectors. Coordinate work with Special System integrator. Install and mount PoE injectors inside control panels.

5. Cellular System Integrator shall supply Cellular modem. Coordinate work with Cellular System Integrator. Install and mount Cellular modem inside control panel.

6. Ensure proper interface between SCADA, PLC, and OIT, OWS, RIO systems and equipment furnished in this contract.

7. Install, make final connections, adjust, test, start-up systems per manufacturer's instructions and recommendations.

8. Programming of each PLC/OIT/HMI.

B. Source Code Ownership

1. Any developed ladder logic (along with source code) shall become property of the OWNER. This applies to any logic associated with package control systems as well.

2. Any developed or modified PLC, HMI, OWS, and OIT applications (along w/ source code) shall become property of the OWNER. This applies to any logic associated with package control systems as well.

1.8 SUBMITTALS

A. General: Furnish all submittals, including the following, as specified in Section 01 33 00 - Submittals.

B. Include the following information in the submittal for this section:

1. A system hardware overview that provides an overall description of the PCS equipment being added, including a detailed system configuration diagram.

2. Power and grounding interconnection diagrams. Show the grounding philosophy and implementation. Detail interconnections from the main power source. Show uninterruptible power supplies and power conditioners.

3. Interconnecting wiring and cabling diagrams. Include maximum distance limitation between panels and equipment. Include cable identification.

4. Color schedule with color and samples for panels.

C. Include the following submittal information on each hardware item:

1. General data and description.

2. Engineering specifications and data sheets, annotated as necessary to describe specific hardware.

3. Dimension drawings, including exterior dimensions and clearances required, cable ingress and egress areas, cable routing and terminations.

4. Equipment weights.

5. Power and grounding requirements, wiring diagrams, and electrical schematics.

6. Heat rejections and environmental operating requirements.

7. Spare parts list, special tools and test equipment.

8. Other submittal information as required in individual specification sections.

D. Action Submittals

1. Product Data: Submit manufacturer's official and published product data, specifications, and installation recommendations for each item.

2. Shop Drawings: Submit shop drawings as per Section 01 33 00 - Submittals, and as required below. Include the following information in each submittal:

a. Instrument index, including tag number, description, location, and calibrated range for each instrument.

b. Individual instrument specification sheet, including manufacturer's name and complete catalog number.

c. Panel construction drawings with dimensions, layout and bill of materials.

d. Panel wiring diagrams

e. Loop diagrams

f. Communication and digital networks diagrams

E. Include connections to Ethernet network. Identify cable, termination type, termination location, and drop lengths for each segment.

1. Format: Network schematic for each different type of network.

2. Input and Output drawings, containing, but not limited to, the following information:

a. Line numbers and instrument tag numbers

b. Individual component locations

c. Actual equipment wiring terminal designations, point to point wiring, and cable shield terminations

d. Wire type, size, and identification number

e. Signal types (e.g., 120 VAC, 4-20 mA, pulse frequency, etc.)

f. Contact orientations (e.g., normally open, normally closed, etc.)

g. Equipment grounding requirements.

h. Signal boosters, interposing relays, optical isolators, and shunt resistors.

3. Completely developed process screens.

F. Information Submittals

1. Test Reports: Furnish all loop field calibration reports.

2. Factory and Field Testing: Furnish the following:

a. Test Results:

(1) Pass/fail status of all digital I/O.

(2) Results of analog I/O testing.

b. Miscellaneous:

(1) Detailed step-by-step in-factory and field test procedure at least 6-weeks in advance of scheduled test date. Include sign-off sheets and punch list forms and description of configurations to be tested.

(2) Complete inventory of equipment to be tested including make, model, and serial number. Label each piece of equipment.

(3) Preventive maintenance schedule.

(4) Repair Report Forms.

(5) Spares and Consumables Report.

3. Manufacturer's Instructions: Furnish manufacturer published installation manuals and operations manuals for each instrument, device, or equipment.

G. Submittals for Closeout: Furnish submittals as required below.

1. Project Record Documents: In addition to requirements described in Section 01 78 00 - Contract Close Out, furnish the following:

a. Program documentation: Furnish paper copies of all software development and configuration including listing of all register tables.

b. Include functional narrative description of the developed ladder logic to describe each control system. Ladder logic is to be annotated as specified in Section 40 94 43 - Programmable Logic Controller Systems to include functional alphanumeric description of logic elements to assist OWNER in understanding the ladder logic for troubleshooting and future modification.

c. Program copies: Furnish two digital copies of fully configured systems. Digital copies shall be in CD-ROM format.

d. Operator interface program copies: Furnish hard copy printouts and digital copies of new or modified OWS screens and database listings. Digital copies shall be in CD-ROM format.

2. Operation and Maintenance Data: Furnish operation and maintenance manuals as specified in Division 1. Include the following information:

a. Recommended spare parts list.

b. Manufacturer approved repair and service centers list.

c. Replacements part sources.

d. Recommended maintenance procedures and frequencies.

3. Warranty: Furnish warranty certificate as described in, Section 01 78 00 - Contract Close Out.

1.9 RESPONSIBILITY

A. System Supplier shall furnish application software programming as specified in Section 40 94 43 – Programmable Logic Controller System.

B. Interconnecting Wiring Diagram Drawings for the Process and Instrumentation Control System shall be prepared by the respective System Supplier. Interconnecting wiring and terminations for the System shall be furnished by the electrical CONTRACTOR under Division 26, in accordance with the Interconnecting Wiring Diagram Drawings.

C. CONTRACTOR shall immediately correct incomplete or deficient Work discovered during application software programming, downloading, testing, troubleshooting, and System startup. Interim modifications or patches shall be used as required to maintain 24-hour x 7 day operation.

D. System Suppliers shall be responsible for configuration, coordination, and addressing of Ethernet networks for the devices specified herein and as shown on the Drawings. Where additions to existing plant networks are required, request the range of available addresses from the Owner and coordinate requirements.

E. Minimum Supplier Scope: Furnish the following minimum scope of work:

1. For Process Control System control panels, components, and ancillaries specified under this section.

a. Coordinating to ensure that: The proper size, type, and number of PCS related raceways and conductors are provided and installed.

b. Completing panel fabrication drawings.

c. Furnishing the specified submittals.

d. Furnishing panels, components, and ancillaries.

e. Programming and configuration.

f. Furnishing instructions, details, and advice to and coordinating with, the CONTRACTOR to ensure proper installation.

g. Certifying correctness of installation.

h. Verifying final power and signal connections and labeling (lugging and connecting).

i. Adjusting and calibrating.

j. Starting up

k. Testing

l. Providing the required training.

2. For systems, components, and ancillaries not provided under this Section but that are directly connected to components provided under this Section.

a. Obtaining manufacturers' information regarding installation, interface, function, and adjustment.

b. For operation and control, verifying that installations, interfacing signal terminations, and adjustments have been completed in accordance with manufacture's recommendations.

1.10 APPLICATION SOFTWARE PROGRAMMING

A. The System Suppliers shall furnish application software programming as required in this and related Sections. System Suppliers shall download and test application software programming after successful completion of Process Control System Factory Acceptance Testing specified in Section 40 98 50 and Process Control System Commissioning in Section 40 80 50.

B. Training Services specified in Section 40 80 50 - Process Control System Commissioning shall not begin until System Supplier has successfully completed application software programming, downloading, and testing.

1.11 DELIVERY, STORAGE, AND HANDLING

A. General: Deliver, store, and handle all products and materials as specified in Section 01 60 00 - Material and Equipment.

B. Acceptance at Site: Inspect all materials and equipment against approved shop drawings at time of delivery. Immediately return for replacement or repair any equipment or materials damaged or not meeting requirements of approved shop drawings.

C. Storage and Protection: Label all equipment and materials after they have been inspected. Store all equipment and materials in dry, covered, ventilated location. Protect from harm in accordance with manufacturer's recommendations.

1.12 PROJECT/SITE CONDITIONS

A. Environmental Requirements: Protect all equipment and instruments specified herein from moisture. Site is a pumping station with potential for hazardous, corrosive, and chemical rich vapors. Process control equipment may be located outdoors and subject to temperatures from -20F to +120F, with rain and 100 percent humidity.

1.13 SEQUENCING AND SCHEDULING

A. Prerequisite Activities and Lead Times: Do not start following key Project activities until prerequisite activities and lead times listed below have been completed and satisfied:

1. Shop Drawing Reviews by ENGINEER:

    a. Prerequisite: ENGINEER acceptance of Schedule of Values and Progress Schedule.

2. Training

    a. Prerequisite: Associated training plan Submittal approved.

    b. Prerequisite: Offsite Training plan submittal approved

PART 2 PRODUCTS

2.1 GENERAL

A. Furnish hardware consisting of ruggedized components designed specifically for the site conditions. Refer to other sections for appropriate NEMA requirements.

B. Furnish only new, standard, first-grade materials throughout, conforming to standards established by Underwriter's Laboratories (UL), Inc., and so marked or labeled, together with manufacturer's brand or trademark.

C. Furnish material and equipment in accordance with applicable codes and standards, except as modified by the specifications.

D. Coordinate instrumentation to assure proper interface and system integration. Furnish signal processing equipment, to include, but not be limited to, process sensing and measurement, transducers, signal converters, conditioners, transmitters, receivers, and power supplies. Coordinate the various subcontractors, equipment suppliers, and manufacturers.

2.2 MONITORING AND CONTROL – GENERAL

A. PLC and SCADA application programming to integrate Outfall site functionalities with Waukesha Clean Water Plant shall be furnished under a separate contract.

B. Contractor shall develop a test PLC program to verify complete functionality of all the instruments. The PLC test program shall demonstrate following tests but shall not be limited to:

1. Calibrate all the instruments indicated on contract drawings.

2. Test analog inputs at 0, 4, 12, and 20 mA DC.

3. Test change of state for all discrete inputs.

4. Manipulate PLC data table or use forces to test response of all discrete output signals.

5. Testing shall meet requirements of Section 40 80 50 - Process Control System Commissioning. Including Integrated System Field Test and Functional Test.

C. Functional descriptions of the processes and equipment to be monitored and controlled by (or through) the Process Control System are specified in Section 40 94 43 - Programmable Logic Controller Systems.

SYSTEM HARDWARE

D. Furnish all hardware and ancillary equipment required to provide a fully functional PCS. PCS components, including panel hardware, motor starters, etc. shall be as specified in Division 40 and other Divisions.

2.3 SYSTEM INTEGRATION

A. Furnish system integration of the complete PCS. Complete PCS shall be defined as system integration may require the installation of additional pieces of equipment to make the PCS a reliable, safe, maintainable and fully functional system. Such equipment includes, but is not limited to, Programmable Logic Controller, UPS, Ethernet switch, instruments, communication modules, terminations, wires, cables, connectors, power supplies, transceivers, transducers, signal isolators, power surge suppressers, lights, switches, circuit breakers, fuses, and communication devices.

B. Furnish all additional pieces of equipment as necessary to provide a fully integrated, fully operative PCS with fully functional signal interfaces to field instrumentation, motor controllers, and other control devices as described elsewhere.

C. System integration requires thorough testing of all system equipment and circuits under all probable system conditions to ensure a robust PCS.

2.4 CABLES AND CONNECTORS

A. Provide wiring, connectors and cables to connect the equipment.

B. Size wiring and cables to equipment such as printers, operator workstations, and similar devices to accommodate relocation within the control rooms and operator workstation areas. Add a minimum of 25 percent of the cable length or 15 feet, whichever is greater, to the laying lengths.

C. Clearly label all cables at both ends according to requirements of electrical identification.

PART 3 EXECUTION

3.1 GENERAL

A. Furnish the detailed hardware configuration, integration, construction, testing, startup, installation, and demonstration of all equipment.

B. Install all equipment at the OWNER's facilities in accordance with applicable federal, state and local codes. Supervise the installation and be responsible for the performance of the completed system.

C. Provide for the protection, insurance, and proper storage of equipment. In the event the equipment is damaged, for whatever reason, repair or replace, as required, the damaged equipment at no cost to the OWNER until Final Acceptance.

D. Furnish coordination of the overall PCS for resolution of interface discrepancies between the PCS input/output hardware, panels, equipment, instrumentation, and final control devices. Where interface conflicts exist, provide resolution to the problems and document them in writing to the ENGINEER. Keep Drawings current with all changes.

E. Furnish operations and maintenance manuals, record drawings, documentation and warranty as described elsewhere in the Specifications.

3.2 EXAMINATION

A. Verify equipment locations and delivery routes prior to installation to ensure the equipment will fit in the available space. Investigate and make any field modifications necessary to allocated space for new equipment.

B. Existing raceways which contain space to run wiring may be used with the approval of the ENGINEER. Do not damage existing equipment or wiring. If equipment or wiring is damaged, repair or replace it at no additional cost to the OWNER. Do not interrupt control or monitoring signals or power. Obtain approval from the OWNER before pulling wires.

3.3 PROTECTION

A. Maintain site security.

1. Check in with facility staff each day while on site.

2. Verify that all enclosures, doors, and gates which were opened during the day are locked when leaving.

3. Do not leave unlocked enclosures unattended for longer than 30 minutes.

3.4 INSTALLATION AND WIRING

A. Install wiring to interface the PCS components to field devices for all points on the I/O list. Wiring shall be in accordance with the recommended methods and practices of the manufacturers of the field devices and the manufacturer of the PCS.

B. Resolve all interface problems. Supply all additional hardware, signal isolators, media converters, signal converters, transceivers, relays, and other required components as necessary to properly interface each field I/O point to the PCS.

C. Provide and keep a neatly marked set of record wiring drawings on the job site showing the installed location and routing of all wiring, including spares, and instrumentation cable runs. These Drawings shall also show all terminal connections. These drawings must show as a minimum:

1. All wiring between PCS components and field devices and/or panels, including terminal and wire numbers for all wiring.

2. All PCS communication wiring and interconnection.

3. All interconnections between any PCS components.

4. All power connections to PCS components.

D. Keep drawings current with the work as it progresses, subject to inspection by the ENGINEER at any time.

3.5 FIELD QUALITY CONTROL

A. Tests and Inspection: Furnish tests as required in Section 40 80 50 - Process Control System Commissioning.

B. Inspection: Demonstrate that instruments, panels, programming equipment and network equipment:

1. Has not been damaged by transportation or installation,

2. Has been properly installed,

3. Has no mechanical defects,

4. Is in proper alignment, and

5. Has been properly connected.

C. Testing Process:

1. Test digital inputs and outputs by actual starting and stopping of equipment when possible, or with jumpers at field equipment terminals.

2. Conduct all tests in presence of plant personnel or ENGINEER.

D. Manufacturers Field Service: Provide manufacturer field service for calibration, initial setup, programming, and commissioning of each instrument.

END OF SECTION

SECTION 40 91 00

PROCESS CONTROL SYSTEM INSTRUMENTS

PART 1 GENERAL

1.1 SUMMARY

A. This Section specifies the requirements for furnishing, installing, and placing into operation field-mounted instrumentation.

B. It is the CONTRACTOR'S responsibility to furnish a complete functional system. Furnish all instrument devices that are necessary for a complete system. This includes, but is not necessarily limited to, terminal blocks, fuses, signal conditioners, power supplies, transient and surge protection, special wires/cables and connectors, and any other electronics that may be necessary to properly interface with the instrumentation provided.

C. It is the CONTRACTOR'S responsibility to verify the type, state, and condition of all existing signals required to interface to the PCS. Information concerning these signals given in these Contract Documents is provided for the CONTRACTOR'S reference and is deemed reliable but is not guaranteed to be accurate or true. Acceptance by the CONTRACTOR without field verification of the information contained herein regarding existing instrumentation and associated signals is done at the CONTRACTOR'S risk.

D. Related work specified in other sections includes, but is not limited to, the following:

1. Section 40 90 00 - Process Control System General Requirements

1.2 REFERENCES

A. Instrumentation, Systems, and Automation Society ISA-S50.1, current edition, Compatibility of Analog Signals for Electronic Industrial Process Instruments

B. Underwriters Laboratories, UL508, standards for industrial control equipment.

C. National Electrical Manufacturers Association (NEMA), Pub. No. 1CS-6, enclosures for industrial controls and systems.

D. National Fire Protection Association (NFPA), Std. 70, current edition, National Electric Code (NEC).

1.3 SUBMITTALS

A. General: Furnish all submittals, including the following, as specified in Submittals:

1. Furnish Shop Drawings as required below.

2. Furnish complete and detailed system schematic drawings showing all components with the pneumatic and electrical point to point connections of each system (wiring and piping diagrams). Include a description of the operation of the system and equipment.

3. Furnish instrumentation equipment specifications: Include manufacturer's catalog information showing product data, outlines, dimensional drawings, and instructions for installation, storage, handling, and protection. Duplicate equipment may be covered by one set of literature.

4. Furnish updated Instrument Data Sheets showing actual manufacturer and devices selected, with all fields completed.

5. The submittal shall be organized in a logical manner and have a schematic diagram for each system.

B. Include the following for each model instrument provided under Division 40:

1. Manufacturer's design and performance specification data and descriptive literature (catalog cutsheets)

2. Equipment dimensioning and installation requirements and recommendations.

3. Required and optional accessories lists.

4. Electrical/pneumatic signal and power connection diagrams.

5. Operations and maintenance manuals for each type of instrument after product approval.

6. Calibration certifications from the manufacturer for each calibrated instrument.

C. For each instrument specified in the sections which follow, include the following information in the submittal for that section:

1. Tag number and description

2. Complete model number

3. Data sheets and catalog literature edited to indicate specific items provided

4. Mounting details for all typical installation requirements and special details for non-typical applications

5. Methods and materials required for installation. Include power and signal connection details.

6. List of recommended spare parts and spare parts provided

7. List of optional accessories

8. Other specific submittal information as specified in the particular instrument specification

1.4 SUBMITTALS FOR CLOSEOUT

A. Instruction Manuals:

1. Refer to Section 01 78 00 - Contract Close Out.

2. Operation and maintenance information: furnish complete descriptive literature/shop drawings for each piece of equipment, including a list and description of all parts of each piece of equipment and instructions for calibration, testing, and maintenance requirements.

3. Project Record Documents: furnish revisions from the Approved shop drawings and previous submittals. This includes as built records such as instrument ranges and actual component/instrumentation locations, including sources of control power.

4. Furnish revised or updated Instrument Data Sheets, P&IDs (IC series drawings), and process flow diagrams showing location of instrumentation and equipment including calibration data.

5. Submittals of Data sheets shall be electronic and editable with file naming based on the device tag.

1.5 QUALITY ASSURANCE

A. Furnish instrumentation of rugged construction designed for the site conditions. Furnish only new, standard, first-grade materials throughout, conforming to standards established by Underwriter's Laboratories (UL), Inc., and so marked or labeled, together with manufacturer's brand or trademark.

B. Furnish material and equipment in accordance with applicable codes and standards, except as modified by the specifications. Acknowledge instances where specified requirements deviate from applicable codes and standards.

C. Use single source manufacturer for each instrument type. Use the same manufacturer for different instrument types whenever possible.

D. All instrumentation and components shall be the products of manufacturers who have no less than five (5) years (per manufacturer) of experience in the furnishing of equipment and components similar to that which is to be furnished for this Work.

E. Coordinate instrumentation to assure proper interface and system integration. Furnish signal processing equipment, to include, but not be limited to, process sensing and measurement, transducers, signal converters, conditioners, transmitters, receivers, and power supplies. Coordinate the various subcontractor's, equipment suppliers, and manufacturers.

1.6 DELIVERY, STORAGE, AND HANDLING

A. Each manufacturer or supplier to furnish and securely attach the tag number and instructions for proper field handling and installation to each instrument prior to packaging.

B. Each manufacturer or supplier package instrumentation to provide protection against shipping damage, dust, moisture, and atmospheric contaminants. Include a shipping label which contains the following information:

1. Tag number and description

2. Instructions for unloading, transporting, storing, and handling at the site

C. CONTRACTOR to provide for unloading, transporting, storing, and handling instrumentation at the site. Inspect instrumentation for damage in shipment and return damaged instrumentation to the manufacturer.

D. Do not store instrumentation out-of-doors. Furnish dry, permanent storage facilities.

1.7 WARRANTY

A. Warranty the instrumentation, materials, workmanship and installation to be free from defects for a period of one year from the date of Final Acceptance of the Work. Extend standard manufacturer's warranties as necessary to ensure coverage. Document warranty coverage immediately prior to Final Acceptance.

B. Furnish and install replacement parts during the warranty period for any defective component at no additional cost. Replace spare parts consumed during the warranty period with new equipment at no additional cost, immediately after use, to restore the spare parts inventory. A complete contingent of unused spare parts should exist one year after Final Acceptance.

1.8 MAINTENANCE

A. Furnish spare parts as specified in the individual instrument sections.

B. Furnish special tools necessary for normal operation, maintenance, and calibration.

C. Package spare parts in a manner suitable for long term storage and adequately protected against corrosion, humidity, and temperature.

PART 2 PRODUCTS

2.1 GENERAL INSTRUMENTATION REQUIREMENTS

A. Furnish instruments which operate on 115 VAC, single phase, 60 Hertz electrical service, unless otherwise specified, and which return automatically and immediately to accurate measurement upon restoration of power after a power failure, except where specifically noted.

B. Furnish open and short circuit protection except for two-wire transmitters.

C. Furnish and install two-wire transmitter power supplies in local panels or enclosures with receiver/indicator/transmitter as required. Loop power supplies are to be installed in the PLC cabinets complete with a separate fuse and blown fuse indicator for each analog circuit.

D. Furnish fuses or switches for equipment as recommended by the instrument manufacturer.

E. Furnish instrument transmitters which produce isolated 4-20 mA DC analog signals. Follow ISA-S50.1. Process transmitters shall be smart electronic type devices capable of driving a load of at least 1,000 ohms with non-interacting zero and span adjustments and remote recalibration features.

F. Each transmitter shall be supplied with an integral junction box with terminal strip, integral test jacks, and conduit connection, and shall be complete with all mounting accessories.

G. Furnish signal isolators as necessary to resolve interface problems between field instruments, final control elements, panel instruments, and PCS components. Signal isolation may require the inclusion of one or more isolated signal converters for analog circuits and one or more interposing relays for discrete circuits.

H. Where interposing relays are required to provide proper contact rating from devices interfacing to the PLCs, install the relays in the PLC cabinets. Refer to Section 40 94 43 - Programmable Logic Controller Systems.

I. For each field mounted instrument (transmitter, analyzer, gauge, etc.) requiring 120 VAC, furnish an individual non-fused disconnect switch with auxiliary contact (switch position indication) to allow for remote monitoring and indication functionality. Furnish Pass & Seymour PS30SSAX, Square D Class 2510-Type KW1, or NEMA rated required disconnect as required, or equal. Furnish disconnect switch cover, Crouse Hinds Model DS185 or equal.

J. For instruments that produce a pulse signal, use DC pulse frequency signals whose repetition rate is directly proportional to the process variable over a 10:1 range. Use 24 VDC power source.

K. Furnish instruments with printed circuit boards suitably coated to prevent damage by dust, moisture, fungus, and airborne contaminants. All spare boards shall be conformal coated.

L. Furnish instruments complete with mounting hardware, floor stands, wall brackets, or instrument racks. Furnish all stainless steel mounting hardware for surface, panel or handrail mounting as required by location.

M. Use linear, direct reading indicators unless otherwise specified. Local gauges shall have minimum 4-1/2 inch dials with white scales containing black division marks, and where practical, the divisions shall be based on multiples of 10.

N. Furnish instrument enclosures NEMA rated for the environment. In hazardous areas, meet the NEC Class, Group, and Division as shown or specified. In areas subject to flooding, furnish submergence rated enclosures.

O. Furnish sun shields for all outdoor enclosures and indicators.

P. Furnish all necessary accessories for installation, including mounting brackets, floor stands, hardware, and like items. Mounting hardware shall meet the requirements of the area.

Q. Furnish tool kits and test equipment, as recommended by the manufacturer, necessary for assembling, calibrating and maintaining equipment.

2.2 SIGNAL LINE TRANSIENT PROTECTION

A. All signal lines for solid state electronic equipment shall be equipped with line voltage surge suppressors to protect the equipment from damage due to electrical transients induced in the interconnecting lines from lightning discharges or nearby equipment.

B. This shall include, but is not be limited to digital inputs, analog inputs, analog outputs, flow transmitters, and level transmitters. The signal line transient protection shall be furnished on any signal lines which are outside of the building structure housing the DCS control panel.

C. The signal line transient protection shall include gas discharge tubes, varistors, and suppressor diodes.

D. The unit shall be Phoenix Contact terminal block type consisting of protective plug and base element, with integrated multi-stage status indicator, Model PT-IQ-1X2+F, or approved equal.

E. Terminal block shall be DIN rail type, mounted in the vertical position.

F. Furnish lightning protection termination for all digital and analog signals, plus a minimum of 10 percent spares per panels.

G. Field instruments, for 24V DC analog signals

1. Manufacturers: Phoenix Contact PIPETRAB series.

2. Conduit Mounted: Protection circuit mounted 3/4 inch (19 mm) stainless steel pipe nipple.

3. Furnish surge protection for analog and digital I/O designed to withstand a 10kA test current of a (8/20) microseconds waveform according to IEC 1024 Application Guide A and ANSI/IEEE C62.41 Category C Area.

4. Surge protection shall consist of a multistage hybrid circuit utilizing only diodes and gas discharge tubes but no Metal Oxide Varistors (MOVs).

5. Resistance: Less than 10 ohms of series resistance.

6. Surge protection shall have a response time less than 1 microsecond.

7. Maximum Continuous Operating Voltage: Not to exceed 28V DC.

8. Cutoff Frequency: Less than 400 kHz (for a 600 ohm system) to allow HART protocol and other superimposed smart digital signals to function.

9. Operating Temperature Range: Minus 40 to 65 degrees C, minimum.

2.3 TEMPERATURE SENSOR AND TRANSMITTERS - (**TE/TIT 1-3**)

A. Function:

1. Sensor: Create an electrical resistance proportional to the temperature of a process medium.

2. Transmitter: Condition and convert the resistance to provide a DC analog output signal linearly proportional to the process medium temperature.

B. Performance Requirements:

1. Calibrated Range: 32 to 122 Deg F.

2. Accuracy:

a. Sensor: ± 0.5 degrees F or ± 0.5 percent of actual temperature, whichever is greater from 32 degrees F to 122 degrees F.

b. Transmitter: ± 0.2 percent of calibrated span, including repeatability and linearity.

3. Sensor Stability: Less than 0.1 degrees F shift from initial calibration in one year.

4. Sensor Resistance: 100 ohms at 32 degrees F.

5. Sensor Resistance Change: 0.22 ohms per degree F.

6. Transmitter Outputs:

   a. 4 to 20 mA DC, direct acting and isolated, into 0 to 600 ohms with a 24 VDC power supply.

7. Transmitter Ambient Temperature Effect: Not more than plus or minus 0.5 percent span for a 50 degrees C change in ambient temperature within operative limits.

8. Transmitter Power Supply Effect: Maximum of plus or minus 0.005 percent of span per one VDC change in power supply.

C. Required Features:

1. Standard Length Sensor Assembly:

   a. RTD type sensor assembly consisting of the following components:

      (1) Three lead wire type RTD with primary resistance wire wound in a coil.

      (2) No. 24 AWG minimum insulated leads and resistance wire enclosed in small diameter seamless, closed end sheath.

   b. Sensor mounting: Welded adapter for wall mounting.

   c. RTD assembly shall be of general purpose weatherproof, and waterproof (NEMA 4) design connection head shall be furnished with O-ring gasketed and threaded cover.

2. Transmitter:

   a. Ambient Conditions:

      (1) Temperature: Minus 20 Degrees F to 158 Degrees F, With Display.

      (2) Relative Humidity: 0 to 100 Percent, noncondensing.

   b. Type: Two-wire, powered by remote power supply.

   c. Performance:

      (1) Digital Accuracy: Greater of plus or minus 0.18 Deg F for plus or minus 0.02 percent of span.

(2) Response time: 1.2 second 90 percent response time for 80 percent step input, with minimum damping.

d. Features:

(1) Indicator: Three-line LCD.

(2) Automatic reference junction compensation.

(3) Failsafe mode:

(a) User configurable ON, unless otherwise noted.

(b) Downscale, unless otherwise noted.

(4) Electric damping 1.2 Seconds.

e. Signal interface 4mA - 20mA dc.

f. Solid-state electronics.

g. Input/output isolation.

h. Designed for use with three wire RTDs.

i. Factory calibrated for the operating temperature ranges as 32 degrees F to 122 degrees F.

j. Field adjustable span and zero settings

k. Built-in EMI and RFI protection

l. Enclosure designed and constructed to meet NEMA 4X requirements and equipped with brackets suitable for wall mounting remote from the RTD Sensor assembly

m. Barrier terminal strip wiring connections

n. 3/4-inch internal NPT conduit connections

o. Designed to operate from remote power supply at 12 VDC to 45 VDC.

D. Materials:

1. RTD Element: Platinum

2. Connection head: General Purpose, NEMA 4 weatherproof.

E. Installation: Provide and install wall mount bracket to furnish wall mount installation for instrument installation. Mounting bracket and installation accessories shall be SST. Coordinate with Manufacturer for wall mount installation.

F. Manufacturers:

1. Rosemount 214C Series Platinum RTD sensor with 644 Transmitter.

2. Invensis/Foxboro; RTT20 Series Transmitter with PR Series RTD.

2.4 DISSOLVED OXYGEN ANALYZER, NON-MEMBRANE LUMINESCENT (LDO) (**AE/AIT 1-1**)

A. General:

1. Function: Continuously measure, indicate, and transmit dissolved oxygen content in basin.

2. Type: Luminescent or fluorescence sensor.

3. Parts: Element (sensor), transmitter (analyzer), external power supply, interconnecting cable, mounting hardware, and ancillaries.

B. Service:

1. Measurement Type: Measurement of dissolved oxygen through luminescent or fluorescence sensor.

2. Operating Range: Minus 20 to 50 degrees C, 0 to 99 percent RH noncondensing.

C. Performance:

1. Range:

a. Measurement: 0 to 10.00 ppm.

b. Temperature: 32 to 122 Deg F.

2. Sensitivity: 0.01 ppm.

3. Repeatability: Plus, or minus 0.1 ppm.

4. Linearity: 0.5 percent.

5. Response Time: 90 percent within 40 seconds.

D. Features:

1. Operator Interface:

   a. Display: Alphanumeric LCD with backlight, provides dissolved oxygen concentration, temperature, alarm setpoints, and alarm setpoint value.

   b. Membrane touch keypad.

2. Element: (**AE 1-1**)

   a. Type: Luminescent or Fluorescent type. Metallic components to be type 316 stainless steel or titanium.

   b. Process temperature range: 32 degrees F to 122 degrees F.

   c. Cable length: 33 feet of cable. Provide additional length as required.

   d. Mounting: Provide 1-inch Internal Thread connector for LDO probe, compatible for telescopic tube end mounting.

3. Transmitter: (**AIT 1-1**)

   a. Display:

      (1) Graphic dot matrix LCD to display DO.

      (2) Auxiliary readout:

         (a) Temperature.

         (b) Diagnostic warnings.

         (c) Error messages.

         (d) Other information.

   b. Ambient Conditions:

      (1) Temperature minus 4 degrees F to plus 140 degrees F.

      (2) Humidity: 0 to 95 percent, relative, noncondensing.

   c. Signal Interface:

      (1) Output: Two isolated 4 to 20 mA dc; 600 ohm maximum load.

      (2) Output range: Programmable for any range from 0 to 1 ppm to 0 to 20 ppm.

(3) Control relays: Two SPDT relays, with programmable setpoints, rated 5 amps at 250 V ac resistive.

(4) Control Relay Function: On/Off, Variable dead band (0 to 2 ppm) variable time delay (0 to 60 seconds.)

E. Enclosure:

1. Electronics: NEMA 4X.

2. Mounting: Panel, unless otherwise noted.

3. Dimensions: 10.5H by 14W by 9D inches, nominal, unless otherwise noted.

F. Power Requirements: 120V ac, 60-Hz.

G. Probe Installation:

1. Provide all necessary Telescopic tubing and stainless-steel mounting per Contract Drawings.

2. Furnish Telescopic tubing system with twist lock compression clamps to accumulate 20 foot length to mount LDO probe. Ensure space through telescopic tubing to run LDO probe cable.

3. SST U bolts, SST Hex nuts and shall be used secure SST mounting plate to hand rails.

4. SST U bolts, SST lobe knobs shall be used to mount Telescopic tubing to mounting plate. Further Flange installation at one end shall be used to prevent accidental fall.

5. Provide 1 inch internal thread connector to mount DO probe on Telescopic tubing.

6. Manufacturer and Product: Rock West Composites, Carbonnect tubing.

H. Expendables:

1. Spare membrane: Ten replacement membranes.

2. Sensing Module: Ten interchangeable modules.

3. Manufacturer and Product: Hach LDO Probe Model 2 and sc200 Universal Controller.

2.5 PH ANALYZER (**AE/AIT 1-4)**

A. General.

1. Function: Measure, indicate, and transmit pH of process fluid.

2. Parts: Element, analyzer/transmitter, interconnecting cable, and noted ancillaries.

B. Performance:

1. Element:

a. Range: 0 pH to 14 pH.

b. Operating Temperature: 32 degrees F to 158 degrees F.

2. Service (Liquid): Discharge water.

3. Analyzer/Transmitter:

a. Range: 0 pH to 14 pH units.

b. Accuracy: Plus or minus 0.02 pH units.

c. Repeatability: Plus or minus 0.05 pH units.

d. Stability: Plus or minus 0.01 pH units per month, noncumulative.

e. Operating Temperature: Minus 4 degrees F to plus 104 degrees F.

f. Operating Humidity: 5 percent to 95 percent; relative humidity, noncondensing.

C. Element (**AE 1-4**):

1. Process Connection: 1-inch MNPT.

2. Body Style: Convertible with 1-inch NPT on both ends.

3. Wetted Materials: Compatible with process fluid.

4. No field-replaceable parts, unless otherwise noted.

5. Electrode Type: Flat glass or general purpose, unless otherwise noted.

6. Integral Preamplifier: Required.

7. Mounting: As shown on Contract Drawings:

D. Analyzer/Transmitter (**AIT 1-4**):

1. Display: Graphic LCD, with backlighting.

2. Signal Interface:

   a. Analog Outputs: Two isolated 4 mA to 20 mA dc outputs (pH and temperature).

   b. Discrete Outputs:

      (1) Process Alarms: Two SPSTs minimum, normally open.

      (2) Sensor/Analyzer and Process Fault Alarm: SPDT.

      (3) Contact Rating: 120 volts, 5 amps, resistive.

3. Enclosure.

   a. Type: NEMA 4X.

   b. Suitable for panel, 2-inch pipe, or wall mounting.

4. Power: 115V ac, 50/60-Hz.

5. Interconnecting Cable: Length as required.

E. Expendables:

1. Chemicals: 1 pint each of buffer solution for pH 4, pH 7, and pH 9.

F. Accessories:

1. Junction Box: If noted.

   a. NEMA 4X box for cable extension.

G. Manufacturers and Products:

1. Rosemount Analytical; Model 3900, and Model 1056 pH analyzer.

2. Hach; Digital Differential pH sensor and sc100 controller.

3. Foxboro; 871A series pH sensor and Model 875 pH Intelligent Analyzer.

H. Probe Installation:

1. Provide all necessary Telescopic tubing and stainless-steel mounting per Contract Drawings.

2. Furnish Telescopic tubing system with twist lock compression clamps to accumulate 18 ft length to mount pH sensor. Ensure space through telescopic tubing to run pH sensor cable.

3. SST U bolts, SST Hex nuts and shall be used secure SST mounting plate to hand rails.

4. SST U bolts, SST lobe knobs shall be used to mount Telescopic tubing to mounting plate. Further Flange installation at one end shall be used to prevent accidental fall.

5. Provide 1 inch internal thread connector to mount pH sensor on Telescopic tubing.

6. Ensure pH sensor is always submerged.

7. Manufacturer and Product: Rock West Composites, Carbonnect tubing.

PART 3 EXECUTION

3.1 INTERFACE WITH OTHER PRODUCTS

A. Coordinate installation of analyzers, transmitters, probes, and switches with piping and equipment installers.

3.2 EXAMINATION

A. Examine the Drawings and the site for placement of instrumentation. Investigate the space in the buildings through which the equipment must pass to reach its final location. Make provisions to move the instrumentation into place. Notify the ENGINEER of any clearance problems.

B. The instrument installation details show general intent. They are not to scale. Secure and utilize instrument mounting details from the manufacturer or supplier for installation purposes.

3.3 INSTALLATION

A. Furnish labor, materials, tools, equipment, supplies, and services, and auxiliary devices including, but not limited to, brackets and mounting hardware to install the instrumentation. Install all devices as specified and shown on the Contract Drawings and in accordance with manufacturer's requirements. The CONTRACTOR shall be responsible for any problems resulting from any deviation from manufacturer installation instructions.

B. Unless readily accessible for viewing and calibration from floor elevation, do not mount direct reading or electrical transmitters on process piping. Install all transmitters vertically, with the integral indicators facing front or sides. Install on instrument racks or stands or in enclosures near the sensor at a level that permits

viewing from floor elevation. For pipe mounted instruments, provide sufficient clearance to permit 360° access to the units.

C. Install the instrumentation and auxiliary devices to be accessible for maintenance. Provide space between instruments and other equipment and piping for ease of removal and servicing. Generally, install instrumentation to be accessible from floor level or grade. Permanent ladders or platforms may be required for instrumentation which must be installed in overhead locations. Attach a durable stainless steel tag using stainless steel wire or stainless steel drive screws to each primary element, transmitter, and field mounted readout device. Permanently engrave the tag with the instrument tag number and description as given in the Instrument List for each instrument. Include manufacturer's name and model number if not discernible on the instrument. Furnish tags which are a minimum of 1 x 3-inch size, 1/16-inch thick, with characters 1/4-inch high (minimum).

D. Seal all conduit and wiring entries into all instruments installed below ground or in vaults with non-setting transparent potting material. Seals shall be water tight, suitable for accidental submergence in 30 feet of water.

E. Follow additional installation requirements as specified in the individual instrument sections and as recommended by the manufacturer.

F. pH and DO probe sensors shall be installed for testing with PLC test Program and Contractor shall provide water to test complete functionality of the pH and DO probe sensors. pH sensor and wiring shall be removed. Sensor shall be immersed in tap water or 4 pH buffer solution for storage. Handover sensor to Owner. Reinstall sensor or provide and install a new sensor if existing sensor is non-functional. Reinstall wiring after site is commissioned with flow.

3.4 TRAINING

A. Perform training in accordance with the requirements contained in Section 40 98 00 - Process Control System Training.

B. Furnish comprehensive training by manufacturer's representative for each instrument type to operating and maintenance personnel as specified. Furnish separate single training sessions for operations and maintenance. Generally, each instrumentation training class will be for three or four personnel.

C. Instrumentation training is in addition to any training specified elsewhere. Include the costs for this training in the Bid Price.

3.5 FIELD QUALITY CONTROL

A. Furnish instrument manufacturer services for installation assistance, field calibration, startup, and training as specified in the individual instrument sections.

B. Remove shipping stickers, paint splatters, dirt, grease, and other contaminants to restore the instrumentation to a clean and like new condition prior to Final Acceptance.

3.6 DEMONSTRATION

A. Prepare an instrumentation installation and calibration certification sheet for each primary element sensor and electronic indicator/analyzer/transmitter for each instrument uniquely specified. Use these sheets for documenting installation and testing. Copies of completed instrument certification sheets need to be provided to the OWNER'S Maintenance Group.

B. Calibrate each instrument, including its complete instrument loop. Indication at remote receiving instruments, including any SCADA system operator interface screens, shall be equal to readings at local transmitter indicators.

C. Provide written loop-calibration report for each instrument loop, which shall include, but not limited to the following:

1. Project Name

2. Tag Number and Service Description

3. Manufacturer

4. Model and Serial Number

5. Date, time, and names and signatures of factory personnel performing calibration

6. Weather conditions at the time the final calibration was performed

7. Comparison of readings at the local transmitters with readings at the remote receiving instruments.

8. Verification of operation of all contact outputs, including those at the receiving instruments.

9. Description of method of calibration.

10. Calibration data to include:

    a. Table showing calculated and measured values at 0, 25, 50, 75, and 100 percent.

    b. Input, output, and error at 0, 25, 50, 75, and 100 percent of span for analog instruments.

    c. Switch setting, contact action, and dead-band, if applicable, for discrete elements.

11. Space for comments.

12. Certification by installer and acknowledgment by CONTRACTOR and date.

13. Names and signatures of OWNER representative witnessing calibration process.

END OF SECTION

SECTION 40 91 12

SPECIAL SYSTEMS

PART 1 GENERAL

1.1 REFERENCES

A. The following is a list of standards which may be referenced in this section:

1. Acoustical Society of America (ASA):

a. S1.13, American National Standard Measurement of Sound Pressure Levels In Air.

b. S3.2, Standard for Measuring the Intelligibility of Speech over Communication Systems

2. ASTM International (ASTM):

a. A182, Standard Specification for Forged or Rolled Alloy-Steel Pipe Flanges, Forged Fittings, and Valves and Parts for High-Temperature Service.

b. A276, Standard Specification for Stainless and Heat-Resisting Steel Bars and Shapes.

c. A312, Standard Specification for Seamless and Welded Austenitic Stainless Steel Pipes.

d. B32, Standard Specification for Solder Metal.

e. B88, Standard Specification for Seamless Copper Water Tube.

3. Deutsche Industrie-Norm (DIN), VDE 0611, Specification for modular terminal blocks for connection of copper conductors up to 1,000Vac and up to 1,200Vac.

4. Institute of Electrical and Electronics ENGINEER'S, Inc. (IEEE): 802.3, Standard for Ethernet.

5. National Electrical Manufacturers Association (NEMA):

a. 250, Enclosures for Electrical Equipment (1,000 Volts Maximum).

b. ICS 1, General Standards for Industrial Control and Systems.

6. National Fire Protection Association (NFPA):

    a. 70, National Electric Code (NEC).

    b. 731, Standard for the Installation of Electronic Premises Security Systems

7. National Institute of Standards and Technology (NIST).

8. Occupational Safety & Health Administration (OSHA): 1910.165, Employee alarm systems.

9. Underwriters Laboratory, Inc. (UL):

    a. 50, Enclosures for Electrical Equipment, Non-Environmental Considerations.

    b. 50E, Enclosures for Electrical Equipment, Environmental Considerations.

    c. 508, Industrial Control Equipment.

    d. 508A, Industrial Control Panels.

    e. 634, Standard for Connectors and Switches for Use with Burglar-Alarm Systems.

    f. 639, Standard for Safety for Intrusion-Detection Units.

1.2 SUMMARY

A. A brief description for Special System is included below for additional requirements refer to the requirements contained here-in and as shown on the Contract Drawings.

B. Work Includes:

1. Engineering, furnishing, installing, storing, protecting, unpacking, integrating, calibrating, adjusting, testing, application programming, documenting, starting up, and OWNER training for a Video Surveillance System.

2. Major parts of Video Surveillance System are:

    a. Furnishing, installing, and commissioning new POE Ethernet cameras and PoE injectors at Reaeration Outfall Structure Site.

    b. Coordinate and supply PoE injectors to Control Panel System Integrator for assembly. PoE injectors shall be mounted on the panel.

    c. Providing, installing, and configuring new video surveillance system software at the Waukesha Clean Water Plant.

    d. Provide new software licenses for new cameras.

    e. Other accoutrements as required for a complete and working system.

C. Detailed Design: systems as shown and specified include functional and performance requirements and component specifications. Complete detailed design. The CONTRACTOR shall have the overall responsibility for complete and functional systems, including all primary devices and all ancillary devices described herein.

D. Major System Components are shown on the drawings. Furnish all peripheral equipment that is necessary to achieve a complete and working system.

1.3 DEFINITIONS

A. Abbreviations:

1. DVR: Digital video recorder/server.

2. PoE: Power over Ethernet.

3. SCADA: Supervisory Control and Data Acquisition System.

4. SSI: Special Systems Integrator.

5. VSS: Video Surveillance System.

6. VMS: Video Management Software.

7. SNR: Signal-to-Noise Ratio.

8. TS: Telemetry Subsystem.

B. Enclosure: Control panel, console, cabinet, or instrument housing.

C. Instructor Day: Eight hours of actual instruction time, not including travel time.

D. Software:

1. Programming of digital devices using all types of programming language.

2. Configuring of digital devices using all types of configuring process.

3. Programs or configuration data stored in read only memory, programmable read only memory, read/write memory, disk, or other storage device.

E. Types of Software:

1. Standard Software: Software packages that are independent of project on which they are used. Standard software includes:

a. System Software: Application independent (non-project specific) software developed by digital equipment manufacturers and software companies. Includes, but is not limited to, operating systems; network support,

programming languages (C, C++, Visual C++, BASIC, Visual Basic, etc.); Office Suites (word processor, spreadsheet, database, etc.); e mail; security (firewall, antivirus; spam, spyware, etc.) debugging aids; and diagnostics.

b. Programming Software: Software packages independent of specific process control project on which they are used. Includes, but not limited to, providing capability for, data acquisition, monitoring, alarming, man-machine interface, data collection, data retrieval, trending, report generation, control, and diagnostics.

2. Application Software: Software to provide functions unique to this Project and that are not provided by standard software alone, including but not limited to:

a. Configuring data bases, tables, displays, reports, and parameter lists required to implement functions unique to this Project.

b. Programming in any programming or scripting language.

1.4 SPECIAL SYSTEMS INTEGRATOR (SSI)

A. Use qualified integrators to implement the systems. OWNER acceptance of the SSI does not exempt the SSI or the CONTRACTOR from meeting all Contract Document requirements, nor does it give prior acceptance of subsystems, equipment, materials, or services.

B. Use the following preapproved SSI for the Video Surveillance System,

1. Baycom Inc.

a. Contact: Jason Pederson

b. Phone: 1-800-726-5426

C. A SSI is required for the Video Surveillance System, refer article Submittals and Quality Assurance for additional requirements.

1.5 SYSTEM DESCRIPTION

A. Raceways consisting of conduits systems will be provided and installed under this section. SSI shall coordinate and supervise installation of raceways installed by others under Division 26, Electrical such as conduit systems installed in buried duct banks.

B. Video Surveillance System:

1. Provide and install a new IP based video camera to monitor reaeration structure. Configure VMS to poll low resolution images (640x480 pixels) every 15 minutes, the resolution and time interval shall be adjustable. The VMS shall be configured to allow high resolution images (1280x720 pixels) to be triggered on demand.

2. Provide and install a new IP based video camera to monitor the entrance to the building. Configure VMS to poll low resolution images (640x480 pixels) every 15 minutes, the resolution and time interval shall be adjustable. The VMS shall be configured to allow high resolution images (1280x720 pixels) to be triggered on demand. The camera needs to be configured to capture high resolution images (1280x720 pixels) when motion is detected for an adjustable set period from 10 seconds to 600 seconds.

3. Provide and install Network Video Recorder (NVR) to provide local storage of the feed from both cameras.

4. Summary: New video cameras and Network Video Recorder (NVR) will be installed as shown on the Contract Drawings and configured as stated requirement.

5. Scope of work:

    a. Configure the existing VMS software located at City of Waukesha Clean Water Plant to support the features described herein. Provide and install a new video security software as necessary to support the features required.

    b. Provide and install digital, Ethernet based video cameras as shown on the Drawings.

    c. Provide and install new conduit with Power over Ethernet cabling, as shown on the drawings to connect the new cameras to Power Ethernet Injector and provide Ethernet cabling from PoE injector to Ethernet module.

    d. Provide and install NVRs to store and access camera feed locally using a laptop. Provide and configure NVR application software for a Client laptop. Provide necessary license.

1.6 SUBMITTALS

A. General:

1. Submit proposed Submittal breakdown consisting of sequencing and packaging of information in accordance with Project Schedule.

2. Submittal Variations: In accordance with General Conditions, except that the written notice of variations from the Contract Documents will be submitted with respective Submittals.

3. Resubmittals: Clearly identify new material. Include correction made to text and drawings in earlier versions of that submittal.

4. Incomplete (Partial) Submittals not in accordance with Project Schedule will not be accepted.

5. Submittal Format: All documentation submitted such as shop drawings, full-scaled details, wiring diagrams, catalog cuts, descriptive literature but not limited to shall include the following.

    a. Hard Copy: Required for all submittals.

    b. Electronic Copies: Required for final submittals, unless otherwise noted for specific items.

        1) Manufacturers' Standard Documents: Adobe Acrobat .pdf format.

        2) Documents created specifically for Project:

            a) Text and Graphics: Microsoft Word .doc format.

            b) Lists: Microsoft Excel .xls format, unless otherwise noted for specific items.

            c) Drawings: Autodesk AutoCAD .dwg format.

            d) Configuration Files: native format or documented in a Microsoft Word .doc format.

        3) Three (3) finalized electronic copies of documentation shall be included on a CD or DVD that is labeled, includes an electronic table of contents with live links, dated and virus checked.

6. Identify proposed items, options, installed spares, and other provisions for future work (for example, reserved panel space; unused components, wiring, and terminals).

7. Legends and Abbreviation Lists:

    a. Definition of symbols and abbreviations used; for example, engineering units, flow streams, instruments, structures, and other process items used in nameplates, legends, data sheets, point descriptions, HMI displays, alarm/status logs, and reports.

    b. Use identical abbreviations in PICS subsections.

    c. Submit updated versions as they occur.

8. Activity Completion:

    a. Action Submittals: Completed when reviewed and approved.

    b. Informational Submittals: Completed when reviewed and found to meet conditions of the Contract.

B. Action Submittals:

1. Bill of Materials: Shall be provided for all SSI furnished components, electrical devices, and mechanical devices, including components supplied as part of an enclosure assembly.

   a. Group equipment items as follows:

      1) SSI Assembly: By assembly.

      2) SSI Components: By component identification code.

      3) Other Equipment: By equipment type.

   b. BOM shall be laid out in table format with column headings as follows:

      1) Item: The item identifier is just a number in numerical order assigned to a given component. Additionally, for panel layouts the item shall correlate to balloon callouts on the panel layout drawing.

      2) Description: A brief description of the item. For panels, include panel reference number and name plate inscription.

      3) Manufacturer.

      4) Model Number: Provide a complete model number and all options not defined by model number shall be listed separately.

      5) Characteristics: Physical, electrical, and environmental requirements.

      6) Tag: The instrument tag name or equipment tag name where applicable. For I&C components internal to control panels, a device identifier shall be provided that matches panel layout and schematic drawings.

      7) Quantity: Total supplied.

2. Catalog Cuts: System Components, Electrical Devices and Mechanical Devices as follows:

   a. Catalog information, mark to identify proposed items and options.

   b. Descriptive literature.

   c. External power and signal connections.

   d. Scaled drawings showing exterior dimensions and locations of electrical and mechanical interfaces.

3. Component Data Sheets: Data sheets for System Components, Electrical Devices and Mechanical Devices:

    a. Include component type identification code and tag number on data sheet.

    b. Specific features and configuration data for each component:

        1) Location or service.

        2) Manufacturer and complete model number.

        3) Size and scale range, if applicable.

        4) Set points, if applicable.

        5) Materials of construction.

        6) Options included.

    c. Name, address, and telephone number of manufacturer's local office, representative, distributor, or service facility.

4. Installation Details: Include modifications or further details required to adequately define installation of each component.

5. List of spares, expendables, test equipment and tools.

C. Information Submittals:

1. For new equipment, provide Manufacturer's Certificate of Proper Installation and readiness for operation.

2. OWNER Training Plan. Reference Section 01 79 00 - Training.

3. Operation and Maintenance (O&M) Manuals: In accordance with Section 01 78 23 - Operations and Maintenance Manuals, unless otherwise specified in this section.

    a. Content and Format:

        1) Complete sets O&M manuals.

        2) Enough detail to allow operation, removal, installation, adjustment, calibration, maintenance and purchasing replacements for each component.

        3) Shall contain revised documents reflecting as-built, as-installed design.

        4) Final versions of Legend and Abbreviation Lists

5) Manual format in accordance with Section 01 78 23 - Operations and Maintenance Manuals.

b. Include:

1) Refer to paragraph Shop Drawings for the following items:

a) Bill of Materials.

b) Catalog Cuts.

c) Component Data Sheets.

d) Communications and Digital Networks Diagrams.

e) Interconnecting Wiring Diagrams.

f) Application Software Documentation.

2) Device O&M manuals for System Components, Electrical Devices and Mechanical Devices. Include:

a) Operations procedures.

b) Installation requirements and procedures.

c) Maintenance requirements and procedures.

d) Troubleshooting procedures.

e) Calibration procedures.

f) Internal schematic and wiring diagrams.

g) Component Calibration Sheets from field quality control calibrations.

4. List of spares, expendables, test equipment and tools provided.

5. Additional Equipment Recommended: List of, and descriptive literature for, additional spares, expendables, test equipment and tools recommended. Include unit prices and total costs as specified in Division 1, General Requirements, Section 01 29 00 - Measurement and Payment.

1.7 QUALITY ASSURANCE

A. Coordination Meetings:

1. Location: Project Site.

2. Attended By: ENGINEER, OWNER, Integrator, and Special Systems CONTRACTOR.

3. Minimum of three are required. Specific dates will be established as the Project progresses.

4. Pre-Submittal Meeting:

   a. Frequency: One (1). Allow four (4) hours for this meeting.

   b. Timing: Prior to preparation of any technical submittals.

   c. Purpose: Items discussed may include manufacturer preferences, drawing layout, and reasons behind the contract technical requirements. The intent of the meeting is to transfer information that will be helpful in avoiding re-submittals.

5. Progress Meetings:

   a. Frequency: Monthly. Specific dates will be established in Progress Schedule.

   b. Timing: Within 30 days after Notice to Proceed.

   c. Purpose: To resolve any issues or concerns, review submittal comments and resolve scheduling issues.

6. Testing Meeting:

   a. Frequency: One (1). Allow four (4) hours for this meeting.

   b. Purpose: To discuss testing requirements.

7. Commissioning Meetings:

   a. Frequency: One (1). Allow four (4) hours for this meeting.

   b. Purpose: To resolve any issues or concerns.

1.8 DELIVERY, STORAGE, AND HANDLING

A. Provide Site and warehouse storage facilities for special systems equipment.

B. Prior to shipment, include corrosive-inhibitive vapor capsules in shipping containers, and related equipment as recommended by the capsule manufacturer.

C. Prior to installation, store items in dry indoor locations. Provide heating in storage areas for items subject to corrosion under damp conditions.

D. Cover panels and other elements that are exposed to dusty construction environments.

1.9 ENVIRONMENTAL REQUIREMENTS

A. Standard Environmental Requirements: The following defines certain types of environments. PICS subsystems refer to these definitions by name to specify the environmental requirements for individual equipment units. Design equipment for continuous operation in these locations:

1. Inside:

a. Temperature: 20 degrees F to 104 degrees F.

b. Relative Humidity: 10 percent to 95 percent non-condensing.

c. NEC Classification: Nonhazardous.

B. Component Design Requirements: Unless otherwise noted, design equipment for continuous operation in these environments:

1. Wall-Mount, Smaller Panels, Components and Assemblies (that are not Free-standing):

a. NEMA 4X.

1.10 SEQUENCING AND SCHEDULING

A. Activity Completion: The following is a list of key activities and their completion criteria:

1. Shop Drawings: Reviewed and approved.

2. Submittals: Reviewed and accepted.

3. Hardware Delivery: Hardware delivered to site and inventoried by OWNER.

B. Substantial Completion: When ENGINEER issues Certificate of Substantial Completion for each system.

1. Prerequisites:

a. All System Submittals have been completed.

b. OWNER training plan is on schedule.

c. All spares, expendables, and test equipment have been delivered to OWNER.

C. System Acceptance: When ENGINEER issues a written notice of Final Payment and Acceptance.

1. Prerequisites:

a. Certificate of Substantial Completion issued.

b. Punch-list items completed.

c. Final revisions to O & M manuals accepted.

D. Prerequisite Activities and Lead Times: Do not start the following key Project activities until prerequisite activities and lead times listed below have been completed and satisfied:

1. Submittal Reviews by ENGINEER: ENGINEER acceptance of Submitted Breakdown and Schedule.

2. Hardware Purchasing, Fabrication, and Assembly: Associated Shop Drawing Submittals completed.

3. Tests: Associated test plan Submittal completed.

4. Training: Associated training plan Submittal completed.

E. Partial Payment Limits: Following table gives partial payment limits for certain system work items:

System Work Item	**Limit as a Percent of Lump Sum Item Amount**
Administrative and Shop Drawing Submittals	15 percent, maximum
OWNER Training	5 percent, minimum
O&M Manuals	5 percent, minimum

PART 2 PRODUCTS

2.1 GENERAL

A. Special systems functions as shown on Drawings. Furnish equipment items as required. Furnish all materials, equipment, and software, necessary to effect required system performance.

B. First Named Manufacturer: Special systems design is based on first named manufacturers of equipment and materials.

1. If an item is proposed from other than first named manufacturer, obtain approval from ENGINEER for such changes in accordance with Article Submittals.

2. If using proposed item requires other changes, provide work and equipment to implement these changes. Changes that may be required include, but are not limited to: different installation, wiring, raceway, enclosures, connections, isolators, intrinsically safe barriers, software, and accessories.

C. Like Equipment Items:

1. Use products of one manufacturer and of the same series or family of models to achieve standardization for appearance, operation, maintenance, spare parts, and manufacturer's services.

2. Implement all same or similar functions in same or similar manner. For example, control logic, sequence controls, and display layouts.

2.2 RACEWAYS

A. Products and execution requirements in addition to those contained herein in accordance with Section 26 05 33 - Electrical Raceways and Systems.

2.3 HAND HOLES AND PULL BOXES

A. Products and execution requirements in addition to those contained herein in accordance with Section 26 05 33 - Electrical Raceways and Systems.

2.4 VIDEO SURVEILLANCE SYSTEM

A. Video Cameras:

1. Provide, install, and configure digital video cameras as shown on the Contract Drawings at Reaeration Outfall Structure.

2. IP cameras are to be provided, as shown on the Drawings.

3. Minimum cameras requirements:

a. Low light nighttime capability.

b. Built in Night IR illumination capability.

c. High dynamic range.

d. Image stabilization.

e. Support motion Detection. Image sensor: 2 megapixel minimum.

f. Conformant with ONVIF profile specifications.

g. Video compression supported: H.264 minimum.

h. POE+ capable. Provide high power 60 W mid-span POE injector minimum, DIN rail mount.

i. Operating temperature range: -58 °F to 140 °F.

j. Manufacturers and Products:

1) IndigoVision; Model HD Ultra Bullet Camera with mounting bracket

2) IndigoVision; POE injector.

4. CONTRACTOR shall provide the following services for new cameras:

a. Provide a written plan, recommending resolution and frame rate setting for each camera, to be reviewed by ENGINEER and OWNER. Configure cameras with settings determined in final plan.

b. Before cameras are installed or camera wiring has been run, perform a site review with OWNER and ENGINEER to verify camera locations and areas covered by cameras are acceptable to OWNER. Make minor camera location changes requested as a result of the review.

c. After camera installation, assist OWNER in configuration of cameras for optimal day/night operation taking into account the following conditions:

1) Site lighting.

2) Daytime lighting and reflections.

3) Light from passing vehicle and other traffic.

4) Field of view.

B. Network Video Recorder:

1. Provide, install and configure network video recorder as shown on the contract drawings (Note: Drawings to be updated to reflect NVR installation).

2. Document configuration of server and software. The NVR should record at 30 FPS with full HD color resolution for 2 cameras.

3. Minimum requirements:

   a. Disk Space: 4 TB.

   b. Processor: Intel Celeron N2930 2 GHz

   c. Recording Hard Drive: 3.5 in SATA Seagate Video HDD optimized for 24x7 video storage.

   d. Network interface: 100/1000 BaseT RJ-45

   e. Ports: Minimum of 2 USB required.

   f. Operating Temperature: 32 Deg F to 122 Deg F.

   g. Power Supply: 12V DC power supply.

   h. Installation: Provide DIN mount accessory kit.

   i. Manufacturers and Products:

      1) IndigoVision; Model Compact NVR-AS 4000 Range with DIN mount accessory kit option

C. VMS Software:

1. General:

   a. Provide and install client licenses for new cameras to be installed on existing VMS. Configure VMS for the new cameras at Waukesha Clean Water Plant.

   b. Document configuration of client and software.

   c. The system shall allow the following:

      1) Polling of Low resolution photos at preset regular intervals.

      2) Receive High resolution photos from remote camera when motion is detected.

      3) Polling High resolution photos on demand.

D. Cable:

1. Ethernet Cable:

   a. Provide interconnection cabling of all Ethernet cameras and Network Video Recorder.

b. CAT6 patch cables are to be factory made, ruggedized with a protective connector no-snag boot.

c. Jacket color code shall be:

1) White for POE devices.

2) Blue for non-POE devices.

2.5 NAMEPLATES AND TAGS

A. Panel Nameplates: Enclosure identification located on the enclosure face.

1. Materials: Laminated plastic attached to panel with stainless steel screws.

2. Letters: 1/2-inch white on black background, unless otherwise noted.

B. Service Legends: Component identification nameplate located on face of component.

1. Materials: Adhesive backed, laminated plastic.

2. Letters: 3/16-inch white on black background, unless otherwise noted.

C. Nametags: Component identification for field devices.

1. Inscription: Component tag number.

2. Materials: 16-gauge, Type 304 stainless steel.

3. Letters: 3/16-inch imposed.

4. Mounting: Affix to component with 16- or 18-gauge stainless steel wire or stainless steel screws.

5. Nametags are required for all components, unless otherwise identified in the individual system work descriptions

2.6 ELECTRICAL REQUIREMENTS

A. In accordance with Division 26, Electrical.

B. Electrical components, terminals, wires, and enclosures: UL recognized or listed.

C. The requirements included herein are a supplement to Section 40 90 00 - Process Control Systems General Requirements. Refer to Section 40 90 00 for additional requirements.

2.7 FABRICATION

A. The requirements included herein are a supplement to Section 40 90 00 - Process Control Systems General Requirements. Refer to Section 40 90 00 - Process Control Systems General Requirements for additional requirements.

2.8 SOURCE QUALITY CONTROL

A. Scope: Conduct a factory demonstration test to ensure that the hardware and software is ready for shipment, installation, and operation.

B. Location: Manufacturer's factory or ENGINEER approved staging site. Witnessed by OWNER and ENGINEER. ENGINEER and/or OWNER may waive witness requirement.

C. Test: Exercise and test all functions.

PART 3 EXECUTION

3.1 EXAMINATION / PREPARATION

A. Raceway:

1. Conduit systems, etcetera in accordance with manufacturer's recommendations.

2. Access Holes, Handholes, and Pull Boxes: Location and size, to ensure wires and cables may be installed without exceeding manufacturer's limitations.

3. Wires and cables shall be installed in a raceway in accordance with NFPA 70 (NEC) conduit and tubing fill limitations.

B. Seal all buried or below grade raceways, either filled or spare, to stop ingress of water and grit with fabricated expansion plugs. In spare raceways remove plugs as required to install cables and install new fabricated expansion plugs after cables are installed.

C. Ensure duct bank, raceway, cable tray, and other confined routing is free and clear of debris before cable placement.

D. The overall raceway and cable tray installation shall comply with the requirements stated in NFPA 70 (NEC) and any additional requirements stated here-in or in Division 26, Electrical. The location of cable trays, raceways, hand holes, or pull boxes shall not:

1. Impede access to or the maintenance of electrical, mechanical, or HVAC components and equipment, including but limited to access covers, lighting, unions, valves, and ductwork.

2. Restrict the air flow in and out of return air ducts and supply air ducts.

3. Obstruct lighting.

E. No raceway or cable tray shall be installed until the type of wire or cable supplied has been determined suitable and approved by the ENGINEER. The raceway shall then be sized accordingly for the supplied wire or cable.

F. The overall special systems design shall comply with the requirements stated in NFPA 731 and any additional requirements stated here-in or in Division 26, Electrical.

3.2 INSTALLATION

A. Standard details are typical and show the minimum requirements, refer to manufacturer's installation instructions for any additional requirements for proper installation.

B. Material and Equipment Installation: Retain a copy of manufacturers' instructions at Site, available for review at all times.

C. Video Surveillance System:

1. Wiring shall be consistently color coded and labeled. Cables shall be neatly bundled and managed.

2. Bond the drain wire and the terminal strip to the building grounding system. Refer to Section 26 05 26 - Grounding.

3. Interconnections, cable shield grounds, and component grounds shall be performed such that system shall be free from ground loops, noise, hum, and instability.

4. Wiring shall be installed in raceway or cable tray per Section 26 05 33 - Electrical Raceway Systems. Terminations shall be made in junction boxes or within the equipment enclosure.

5. Coordinate wiring installation with other trades. Provide fire stopping in fire-rated assemblies.

3.3 FIELD QUALITY CONTROL

A. General:

1. Coordinate special systems testing with OWNER and affected Subcontractors.

2. ENGINEER may actively participate in tests.

3. ENGINEER reserves right to test or retest specified functions. If any component, equipment, or wiring is modified or replaced, the related test is invalid and shall be retested.

4. ENGINEER'S decision will be final regarding acceptability and completeness of testing.

B. Startup and Testing Team:

1. Thoroughly inspect installation, termination, and adjustment for components and systems.

2. Complete onsite tests.

3. Complete onsite training.

4. Provide startup assistance.

C. The Telemetry System shall be fully functional before proceeding with Video Surveillance System Testing.

D. Video Surveillance System shall be tested in accordance with an equipment verification test and final acceptance test created and provided by the Subcontractor.

E. All required equipment, hardware and fittings shipped to the construction site shall be the responsibility of the Subcontractor. An inventory list shall be maintained for all equipment in storage and all inventoried equipment shall be available for inspection. Responsibility for the equipment shall not pass to the installation Subcontractor until the system verification test has been executed in accordance with the appropriate specifications.

F. System Final Acceptance Testing: At the completion of installation the Video Surveillance the system shall be tested as follows:

1. All new and existing equipment and components that interface with or are modified as a result of the installation of special systems shall be inspected and tested in accordance with requirements here-in.

2. Provide all documentation for testing required by this specification in advance for review by ENGINEER and OWNER.

a. Record of Completion Report, an example report is included in NFPA 731 Figure A.4.12.2.1(3)(d).

1) The report shall contain the following:

a) Description and details regarding the protected premises.

b) Description and details of the special system type and overall interconnection.

c) Description and details of the system power supplies, primary and secondary.

b. Video Surveillance System Inspection and Testing Report, an example report is included in NFPA 731 Figure A.4.12.2.1(3)(d).

1) The report shall contain the following:

a) Description and details regarding the system type, control unit, and circuit type.

b) Description and details regarding the video devices used.

c) Description and details regarding the signaling devices used.

d) Description and details regarding of the parties notified for the given facility.

e) A visual check and functional check for each system component.

f) A visual check and functional check for each video device.

g) A functional check for the signal component.

3. The final operating configuration shall be tested at every point to show correct operation.

4. The test shall be witnessed by the ENGINEER, the OWNER, manufacturer's factory-trained representative and Subcontractor.

5. Any defects shall be corrected and the test repeated until successfully completed.

3.4 MANUFACTURER'S SERVICES

A. Specialty Equipment: For equipment furnished under Division 40, Instrumentation and Controls for Processes, provide the services of a qualified manufacturer's representative as required to ensure Manufacturer's Certificate of Proper Installation and assistance during installation, startup, demonstration testing, and OWNER training.

B. See Division 1, General Requirements, for field service, equipment testing, and facility startup requirements.

3.5 TRAINING

A. General:

1. Provide an integrated training program to meet specific needs of OWNER'S personnel.

2. Include training sessions, classroom and field, for managers, engineers, operators, and maintenance personnel.

3. Provide instruction on two working shift(s) as needed to accommodate the OWNER'S personnel schedule.

4. OWNER reserves the right to make and reuse video tapes of training sessions.

B. Operations and Maintenance Training:

1. Include a review of O&M manuals and survey of spares, expendables, and test equipment.

2. Use equipment similar to that provided or currently owned by OWNER.

3. Provide training suitable for instrument technicians with at least a 2-year associate engineering or technical degree, or equivalent education and experience in electronics or instrumentation.

C. Operations Training:

1. Training Session Duration: One (1) instructor day.

2. Number of Training Sessions: Two.

3. Location: Project Site.

4. Content: Conduct training on operation of each system and then how each system interacts with each other.

a. Training customized for each system, as recommended by manufacturer and/or manufacturer's representative.

D. Maintenance Training:

1. Training Session Duration: One (1) instructor day.

2. Number of Training Sessions: Two.

3. Location: Project Site.

4. Content: Conduct training on the adjustment and maintenance of each system on a component by component basis. This shall include the following but is not limited to:

a. Component calibration.

b. Troubleshooting and diagnosis for components.

c. Replacing lamps, fuses, etc.

d. Component removal and replacement.

e. Periodic maintenance.

3.6 CLEANING/ADJUSTING

A. Repair affected surfaces to conform to type, quality, and finish of surrounding surface.

B. Cleaning:

1. Prior to closing system using tubing, clear tubing of interior moisture and debris.

2. Upon completion of Work, remove materials, scraps, and debris from interior and exterior of equipment.

3.7 PROTECTION

A. Protect enclosures and other equipment containing electrical, components, including spare parts, from corrosion through the use of corrosion-inhibiting vapor capsules.

B. Periodically replace capsules in accordance with capsule manufacturer's recommendations. Replace capsules just prior to Final Payment and Acceptance.

END OF SECTION

SECTION 40 94 43

PROGRAMMABLE LOGIC CONTROLLER SYSTEMS

PART 1 GENERAL

1.1 SUMMARY

A. This Section covers technical requirements for the furnishing, design, supply, configuration and testing of a Programmable Logic Controller System (PLC) including all work and materials necessary to perform control and monitoring functions as illustrated on Drawings.

B. Work to be furnished as part of this contract shall include all design engineering and the supply of a PLC system with all auxiliary equipment, components, and accessories to ensure an integral, seamless, coordinated system, as is generally described below. The following shall be supplied as a minimum:

1. Design, engineering, manufacture, assembly, configuration, shop testing, factory acceptance test, delivery, and commissioning of PLC system

2. Necessary hardware and software to interface to the OWNER's PCS

C. Programming and Software Configuration

1. All programming and software configuration for the PLC shall be included as part of a separate contract..

2. Contractor shall develop a test PLC program to verify complete functionality of all the instruments. The PLC test program shall demonstrate following tests but shall not be limited to:

a. Calibrate all the instruments indicated on contract drawings.

b. Test analog inputs at 0, 4, 12, and 20 mA DC.

c. Test change of state for all discrete inputs.

d. Manipulate PLC data table or use forces to test response of all discrete output signals.

3. Refer to section 40 80 50 - Process Control System Commissioning for Testing requirements.

D. Related work specified in other sections includes, but is not limited to the following:

1. Section 01 33 00 – Submittals

2. Section 01 78 23 - Operation and Maintenance Manuals

3. Section 26 05 00 - Basic Electrical Material and Methods

4. Section 40 80 50 - Process Control System Commissioning

5. Section 40 90 00 - Process Control System General Requirements

6. Section 40 90 12 - Special Systems

7. Section 40 91 00 - Process Control System Instruments

8. Section 40 95 13 - Process Control System Panel Enclosure and Equipment

9. Section 40 95 60 - Telemetry Systems

1.2 REFERENCES

A. Section 01 45 00 - Quality Control

B. American Society for Testing and Materials (ASTM):

1. ASTM D999 - Standard Test Methods For Vibration Testing Of Shipping Containers

C. Canadian Standards Organization (CSA):

1. CSA Certification Class I, Division 2, Group A, B, C, D Hazardous or nonhazardous locations

2. CSA Standard C22.2 No. 142 for Isolation Voltages

D. Institute of Electrical and Electronics Engineers (IEEE):

1. IEEE C62.41 - Recommended Practice on Surge Voltages in Low-Voltage AC Power Circuits.

2. IEEE Std. 472-1974/ANSI C37.90/90A-1974.

E. National Electrical Manufacturers Association (NEMA):

1. NEMA ICS 1 - General Standards for Industrial Control and Systems.

2. NEMA ICS 2 - Standards for Industrial Control Devices, Controllers and Assemblies.

3. NEMA IA 2.2 - Programmable Controllers - Equipment Requirements and Tests.

4. NEMA IA 2.3 - Programmable Controllers - Programming Languages.

5. NEMA ICS 3 - Industrial Controls and Systems: Factory Built Assemblies.

6. NEMA ICS 6 - Industrial Controls and Systems: Enclosures.

F. International Electrotechnical Commission (IEC):

1. IEC 60068-2.1 - Environmental Testing Part 2: Tests - Tests A: Cold

2. IEC 60068-2.2 - Basic Environmental Testing Procedures - Part 2: Tests - Tests B: Dry Heat.

3. IEC 60068-2.3 - Basic Environmental Testing Procedures Part 2: Tests - Test Ca: Damp Heat, Steady State.

4. IEC 60068-2.6 - Environmental Testing - Part 2: Tests - Test Fc: Vibration.

5. IEC 60068-2.27 - Basic Environmental Testing Procedures Part 2: Tests - Test: Shock.

6. IEC 61000-4.2 - Electromagnetic Compatibility (EMC) - Part 4-2: Testing and Measurement Techniques - Electrostatic Discharge Immunity Test.

7. IEC 61000-4.3 - Electromagnetic Compatibility (EMC) - Part 4-3: Testing and Measurement Techniques -Radiated, Radio-Frequency, Electromagnetic Field Immunity Test.

8. IEC 61000-4.4 - Electromagnetic Compatibility (EMC) - Part 4: Testing and Measurement Techniques - Section 4: Electrical Fast Transient/Burst Immunity Test.

9. IEC 61000-4.5 - Electromagnetic Compatibility (EMC) - Part 4: Testing and Measurement Techniques - Section 5: Surge Immunity Test.

10. IEC 61000-4.6 - Electromagnetic Compatibility (EMC) - Part 4-6: Testing and Measurement Techniques - Immunity To Conducted Disturbances, Induced By Radio-Frequency Fields.

G. International Electrical Testing Association (NETA):

1. NETA ATS - Acceptance Testing Specifications for Electrical Power Distribution Equipment and Systems.

H. National Fire Protection Association (NFPA):

1. ANSI/NFPA 70 - National Electrical Code.

I. Underwriters Laboratories Inc. (UL): Applicable listings.

1. UL 50 - Enclosures for Electrical Equipment.

2. UL 508 - Industrial Control Equipment.

3. UL 870 - Wireways, Auxiliary Gutters, and Associated Fittings.

J. NSTA Project 1A.

K. CISPR 11 (EN 55011).

1.3 SUBMITTALS

A. Furnish all submittals, including the following, as specified in Division 1.

1. Submit data sheets and catalog literature on each type of equipment.

2. Submit programming and installation manuals for each type of equipment.

B. Operation and Maintenance Manuals: Furnish operation and maintenance manuals in accordance with Section 01 78 23 - Operation and Maintenance Manuals and General Conditions.

C. Submittals for Closeout: Furnish submittals as required below:

1. Section 01 78 00 - Contract Close Out: Closeout procedures.

2. As-Built Drawings: Accurately record actual locations of controller cabinets and input and output devices connected to system. Include interconnection wiring and cabling information, and terminal block layouts in controller cabinets. Include copy of manufacturer's certified drawings.

3. Operation and Maintenance Data:

a. Submit bound copies of operating and programming instructions.

b. Submit description of system operation, adjusting, and testing required.

c. Submit card replacement, adjustments, and preventative maintenance procedures and materials.

d. Identify system maintenance requirements, servicing cycles, lubrication types required, and local spare part sources.

4. System Documentation:

a. System Abstract:

(1) Furnish clear statement of task, define function of major hardware and software components.

(2) Design strategy used to implement solution.

(3) Statement of objectives.

b. System Configuration: Pictorial drawing of hardware elements, show physical location of subsystems, designation of I/O rack address assignments, simplified connection.

c. Include complete wiring diagrams inputs and outputs for each PLC module, show point address assignments. If field devices are not wired directly to I/O module show terminal block number.

d. I/O Address Assignments: Identify each field device by address based on rack group and terminal, the type of I/O module, the device and the function the device performs in the field.

e. Internal I/O Address Assignments: Identify used and unused addresses, show type, and description.

f. Register Assignments: Identify each available system register, weather used for user storage register or I/O register.

1.4 SPARE PARTS

A. Furnish the following spare parts:

1. Provide all spare parts in original factory carton

2. One CPU of each type utilized

3. One digital input module of each type utilized including Remote Terminal Block

4. One digital output module of each type utilized including Remote Terminal Block

5. One analog input module of each type utilized including Remote Terminal Block

6. One analog output module of each type utilized including Remote Terminal Block

7. One power supply assembly of each size utilized

8. One dozen fuses of each size furnished

9. One dozen relays of each type utilized

PART 2 PRODUCTS

2.1 PROGRAMMABLE LOGIC CONTROLLER

A. General

1. Furnish PLC hardware in accordance with requirements contained in this Section. System Control shall be Allen Bradley CompactLogix hardware platform. No substitutions.

2. Control strategies: Perform in PLC. Do not perform control strategies and calculations in OIT. Controllers are to be programmed in IEC 61131-3 ladder diagram (LD) or function block diagram (FBD). Instruction list (IL), structured text (ST), and sequential function chart (SFC) programming are not allowed

3. The PLC shall contain internal or external flash memory for backup. The memory shall maintain data for a minimum of one year with no power applied to the processor (power failure event). If using external flash memory, one (1) flash card shall be furnished with each CPU loaded with copy of "as commissioned" logic.

4. The processor shall be capable of maintaining required data for a minimum of one year without requiring power (power failure event).

5. Program scan rate shall be less than one (1) second for low resolution and less than (1) millisecond for high resolution inputs.

6. Diagnostics

   a. The PLC shall have standard, self-diagnostic routines furnished to determine proper hardware and software operation.

   b. Diagnostic LED's shall be furnished on the process front panel to indicate the following: Processor fault, battery low, I/O module fault, memory card missing or faulty, communications error.

7. The CPU shall be equipped with a built-in port(s) for networking and programming.

8. Furnish PLC processor with memory card.

9. Furnish a removable terminal block (RTB) for each I/O module.

10. Each chassis shall accommodate a minimum of two future additional I/O modules as shown in the Controller I/O List.

11. Furnish module slot fillers to reserve module slots for future I/O modules.

12. Each I/O module type used shall accommodate a minimum of 25 percent spare I/O points of the total installed I/O points as shown in the PLC Input and Output List, but no less than two spare I/O of each type of I/O module used.

B. Programmable Logic Controller (**RS-PLC-1**):

1. General:

   a. Function: Multi-loop analog and discrete control.

2. Environmental:

   a. Operator Temperature: 0 to 60 degrees C.

   b. Relative Humidity: 5 to 95 percent relative humidity, non-condensing.

3. Processor:

   a. User Memory:

      (1) 1 MB minimum for CompactLogix 5370 L3.

   b. Memory Card:

      (1) 1 GB Secure Digital (SD) card for CompactLogix 5370 L3.

   c. Resident Functions:

      (1) 32-Bit floating-point math.

      (2) User-defined data types.

      (3) User-defined instructions.

      (4) User-defined tag-based verses data tables.

      (5) Tag names and tag comments are downloadable to processor.

      (6) Online programming and run-time editing.

(7) Online trends.

(8) Built-in key switch.

(9) Built-in real-time clock and calendar microsecond programming.

4. Processor Programming Languages:

a. Relay Ladder.

b. Structured Text.

c. Function Block.

5. Port(s):

a. Two (2) Ethernet and one (1) built-in USB for CompactLogix 5370 L3.

b. One (1) RS232 port for CompactLogix 1768.

6. Manufacturer and Product:

a. Allen Bradley; Model CompactLogix 5370 L3 Controllers, 1769-L30ER or better.

C. Power Supply Modules:

a. One required per chassis.

b. Manufacturer and Product: Allen Bradley; Model 1769-PA4

D. Slot Filler / Address Reserve Module:

1. One required for reserving unused slots.

2. Products: Model 1769-ARM.

E. Interconnecting Cable and Accessories:

1. Ethernet Cable:

a. UTP Category 6 cable with RJ45 end connectors.

b. Required for internal PLC control panel connections.

2. Separate surge suppressors shall be provided for Ethernet signals connected to equipment located outdoors.

2.2 I/O MODULES

A. Each I/O module shall have on-board diagnostics with on-board LEDs indicating card and point status. Digital input cards and digital output cards must have an onboard LED for each input/output showing its current state. These LEDs shall be visible without removing any I/O cards.

B. Output module shall have definable failure modes upon loss of communication with the CPU. The failure modes shall be selectable for each input.

C. All individual I/O channels shall be individually fused and electrically isolated from the main frame CPU.

D. The system shall be furnished with 20 percent spares of each I/O type at each location (per control panel) at the time of shipment to site (after successful factory testing) and 10-percent spares of each I/O type at each location (control panel) at substantial completion (after Commissioning), as a minimum.

E. Digital I/O

1. Digital inputs and outputs shall not require shielded cable.

2. Digital inputs shall monitor dry contact closures, sourced from the PLC enclosure. The normal wetting voltage for the digital inputs shall be 120 VAC or 24 VDC supplied by the PLC from power supply within control panel.

3. Digital inputs shall be optically isolated or galvanically isolated between field contacts and internal logic voltages.

4. Digital outputs shall energize terminal block style interposing relays as specified in Section 40 95 13 - Process Control System Panel Enclosures and Equipment.

5. Digital input/output modules shall have status lights to indicate when each point is active.

6. Discrete Input Modules (Refer Contract Drawings for I/O points):

a. 8 individually isolated points.

b. 120V ac input modules.

c. Points per Common: One, individually isolated.

d. Separate isolation/interposing relays shall be provided for sensing of circuits other than 120V ac.

e. Quantity: As determined by I/O count and spare requirements listed under paragraph General Requirements. One minimum per panel.

f. Manufacturer and Product: Allen Bradley; Model 1769-IA8I.

7. Discrete Output Module (Refer Contract drawings for I/O points):

a. 8 individually isolated points.

b. 120V ac output modules, unless otherwise noted.

c. Normally open contacts, 1.5 amps per point.

d. Points per Common: One, individually isolated.

e. Separate isolation/interposing relays shall be provided for control signals that require higher currents.

f. Quantity: As determined by I/O count and spare requirements listed under paragraph General Requirements. One minimum per panel.

g. Manufacturer and Product: Allen Bradley; Model 1769-OW8I.

F. Analog I/O

1. Analog input modules shall have a minimum of two (2) dedicated solid state analog to digital (A/D) converter per module. Analog Output modules shall have one (1) dedicated solid state digital to analog converter (D/A) per output. The conversion resolution shall be 13 bits plus a sign bit for a total of 14 bits or better.

2. The input analog-to-digital and the output digital-to-analog converters shall have an absolute accuracy of 0.1 percent of full scale of the signal.

3. Current type analog inputs shall furnish 24V DC power to the sending transmitter or accept an isolated current signal from a field powered transmitter. Each analog input shall be individually fused.

4. Analog outputs shall provide 4-20 mA DC current and be capable of driving 750-ohm loads. Analog outputs shall be furnished with current limiting protection.

5. PLC shall provide "bad" quality for each analog input. The system shall have selectable failure modes of 0% signal, 100% signal, or hold last value.

6. The scan rate of all analog inputs shall be once per second average, with provisions for scanning at least 5% of the analog inputs at the rate of once per 0.1 second.

7. Analog Input Module (Refer Contract drawings for I/O points):

   a. 4 individually isolated points.

   b. Channels per Common: One.

   c. Input Current Range: 4 to 20 mA.

   d. Quantity: As determined by I/O count and spare requirements listed under paragraph General Requirements. One minimum per panel.

   e. Separate surge suppressors shall be provided for analog signals connected to equipment located outdoors.

   f. Manufacturer and Product: Allen Bradley; Model 1769-IF4I.

8. Analog Output Module (Refer Contract drawings for I/O points):

   a. 4 individually isolated points.

   b. Channels per Common: One.

   c. Output: 4 to 20 mA.

   d. Quantity: As determined by I/O count and spare requirements listed under paragraph General Requirements. One minimum per panel.

   e. Separate surge suppressors shall be provided for analog signals connected to equipment located outdoors.

   f. Manufacturer and Product: Allen Bradley; Model 1769-OF4CI.

G. Slot Filler / Address Reserve Module:

   1. One required for reserving unused slots.

   2. Products: Model 1769-ARM.

H. Other Hardware and Appurtenances: As required for a complete and functional system. Including end caps and expansion cables.

I. Manufacturers and Products:

   1. Allen-Bradley; Model CompactLogix Processor, Hardware, and I/O.

   2. No “or-equal” or substitute products will be considered.

2.3 DATALINK

A. General

1. Application programming shall be done under a separate contract.

2. Furnish PLC test program to test complete IO functionality. Refer to section 40 80 50 - Process Control System Commissioning for Testing to be performed.

B. Redundancy and Integrity

1. No single failure of any system component (above the I/O level) or power source shall interrupt or disrupt any system function, nor shall any single system failure cause any controlled equipment to change status except as specifically described in this specification.

2. A single PLC component failure shall not cause loss of the interface link to the ENGINEER/OWNER PCS.

PART 3 EXECUTION

3.1 INSPECTION AND TESTING

A. General

1. Test all control and monitoring functions as described in Section 40 90 00 - Process Control System General Requirements. Testing shall meet requirements of Section 40 80 50 - Process Control System Commissioning.

3.2 SCHEDULES

A. Reference drawings and the following table for list of PLCs to be supplied as part of the project. Data presented on the following table is for the convenience of the CONTRACTOR. Furnish all PLCs required by the contract documents and including all components required for the operation of the equipment as described. Packaged system PLCs are not identified below:

PLC SCHEDULE

PLC Name	**Location**	**Comments**
RS-PLC-1	Outfall Facilities Site	Furnish a test PLC program to test complete IO functionality of all instruments being used. Application programming shall be furnished under a separate contract.

END OF SECTION

SECTION 40 95 13

PROCESS CONTROL SYSTEM PANEL ENCLOSURES AND EQUIPMENT

PART 1 GENERAL

1.1 SUMMARY

A. This Section includes technical requirements for fabrication, engineering, wiring, and installation of instrument panels and enclosures, and furnishing the panel mounted instruments and equipment. These include, but are not limited to the following:

1. Panel Construction
2. Panel Wiring
3. Panel Mounted Equipment

B. Related work specified in other sections includes, but is not limited to the following:

1. Section 01 33 00 - Submittals
2. Section 40 80 50 - Process Control System Commissioning
3. Section 40 90 00 - Process Control System General Requirements
4. Section 40 94 43 - Programmable Logic Controller Systems
5. Section 40 98 50 - Process Control System Factory Acceptance Testing
6. Section 40 95 60 - Telemetry Systems
7. Section 40 90 12 - Special Systems

C. Panels furnished by manufacturer as part of package control systems:

1. Certain control panels are furnished by manufacturers of equipment specified under other Sections as part of a packaged control system. In general, those panels shall meet the requirements of this specification section.

D. Furnish all new control panels specified under this contract as indicated. This section is to provide guidelines to the electrical CONTRACTOR for the design and workmanship on any new and/or existing panels to which the CONTRACTOR makes changes or modifications.

1.2 AMERICAN IRON AND STEEL

A. Comply with the "American Iron and Steel (AIS)" requirements as contained in Section 436 of the Consolidated Appropriations Act, 2014, further described in the Bid Form.

1.3 SUBMITTALS

A. General: Provide submittals as specified in Section 01 33 00 - Submittals, and as required in Section 40 90 00 - Process Control System General Requirements.

B. Include the following information in the submittal for this section:

1. Scaled drawings showing the location of mounted devices on face of panel, within panel, and all sides. Include a legend listing and identifying devices by their assigned tag numbers, nameplate inscriptions, service legends, and annunciator inscriptions. Include a legend listing all spec items and manufacturer's part number of each item installed.

2. Panel elementary diagrams. Include switched analog signals, panel power distribution, and ancillary devices such as relays, alarms, fuses, lights, fans, heaters, etc. Show circuits and components individually. Show panel terminal and wire identification numbers. Do not submit typical diagrams for multiple circuits.

3. Power requirement and heat dissipation summary for all panels. State required voltages, currents, and phase(s). State maximum heat dissipation in Btu/hr.

C. Pre-Construction Submittals

1. Product Data: Submit manufacturer's official and published product data, specifications, and installation recommendations for each item. Product data shall include terminal wiring details, specific features such as ranges and options, and manufacturing data.

2. Shop Drawings: Include the following information:

a. Bill of materials

b. Panel construction details and dimensions (front, internal)

c. Internal wiring diagrams, including wire type, size, and identification number

d. PLC card layout and wiring

e. Terminal block layout

f. Nameplate lists

g. Color schedules

h. Elementary control diagrams

i. Equipment weights

3. Furnish loop diagrams conforming to ISA-S5.4 - Instrument Loop Diagrams.

D. Submittals for Closeout: Provide submittals as required below.

1. AS Built Drawings

2. Test Reports

1.4 QUALITY ASSURANCE

A. Comply with the applicable provision of the following codes and standards:

1. Underwriters Laboratory (UL)

a. UL50 Enclosures fore Electrical Equipment

b. UL508 Industrial Control Equipment

c. UL870 Wireways Auxiliary Gutters and Associated Fittings

2. Electrical Testing Laboratory (ETL)

3. National Electrical Code (NEC)

4. National Fire Protection Association (NFPA) 79, Electrical Standard for Industrial Machinery

5. International Society of Automation (ISA)

B. All electrical materials and equipment shall be new and bear the label of the Underwriters' Laboratory (UL), Inc., Factory Mutual (FM) or equivalent where standards have been established and label service regularly applies.

C. All Process Control System Panels furnished as part of Division 40, including PLC panels, shall comply with the requirements of UL-508A, NFPA 79, and NEC Article 409 - Industrial Control Panels.

D. Furnish integrated process control systems. Assign complete responsibility for furnishing, coordination, assembly, and installation supervision of all equipment to one Systems Integrator regularly engaged in the manufacture, assembly, and

production of systems of type specified. Provide complete, satisfactory, and trouble-free operating installation.

E. Furnish like instruments from the same manufacturer. Minimize number of different manufacturers.

F. Furnish safety and regulatory labels required by NEC, NFPA, and UL.

G. Tests and Inspection:

1. Test each panel in conjunction with factory acceptance test as described in Section 40 98 50 - Process Control System Factory Acceptance Testing.

1.5 MAINTENANCE

A. Furnish the following spare parts:

1. One power supply of each type and size provided
2. One surge suppressor for every 10 or fraction thereof
3. One installed terminal block, for every 10 or fraction thereof
4. Ten percent spare corrosion inhibitors, minimum of 1 of each size provided
5. One dozen fuses of each type used
6. One dozen relays of each type used
7. Two breakers of each size provided
8. One convertor module of each type used
9. One switch of each type used
10. One indicating light of each type used
11. One alarm buzzer of each type used
12. One signal isolator of each type used
13. One panel meter/indicator of each type used
14. One filter of each type used
15. One fan of each type used
16. One heater of each type used

1.6 ENVIRONMENTAL REQUIREMENTS

A. Standard Environmental Requirements: The following defines certain types of environments. PICS subsystems refer to these definitions by name to specify the environmental requirements for individual equipment units. Design equipment for continuous operation in these locations:

1. Inside:

a. Temperature: 20 degrees F to 104 degrees F.

b. Relative Humidity: 10 percent to 95 percent non-condensing.

c. NEC Classification: Nonhazardous.

B. Component Design Requirements: Unless otherwise noted, design equipment for continuous operation in these environments:

1. Wall-Mount, Smaller Panels, Components and Assemblies (that are not Free-standing):

a. NEMA 4X.

PART 2 PRODUCTS

2.1 MANUFACTURERS

A. Acceptable manufacturers include the following:

1. Enclosure (non-explosion proof): Hoffman, Rittal, Saginaw Control & Engineering.

2. Explosion Proof Enclosure: Adalet XCE Series

3. Terminal Blocks: Phoenix Contact, Allen-Bradley

4. Power Supplies: Phoenix Contact, IDEC, SOLA

5. Signal Isolators: Moore Industries, Phoenix Contact, Allen-Bradley

6. Pushbuttons, selector switches and pilot lights: IDEC, Allen-Bradley

2.2 GENERAL REQUIREMENTS

A. UL Listing Mark for Enclosures: Mark stating “Listed Enclosed Industrial Control Panel” per UL 508A for standard Industrial Control Panels or per 698A for Industrial Control Panels Relating to Hazardous (Classified) Locations.

B. Panels and enclosures shall meet the NEMA requirements for the type specified.

C. Fabricate panels, install instruments, and wire in the factory. Test wiring prior to shipment. Use numbered terminal blocks for external connections.

D. Furnish instrument loop power supplies, mounting hardware, terminal blocks, control circuit breakers, and other items required for a fully operable panel.

E. Furnish termination panels, if required. Include terminal blocks, interface hardware, wiring, and cabling necessary for a complete operational system.

F. Use panel fabrication techniques that allow for removal and maintenance of all equipment after installation.

G. Sizes shown are estimates. Furnish panels and enclosures amply sized to house all equipment, instruments, front panel mounted devices, power supplies, power distribution panels, wiring, tubing and other components installed within.

H. Panels located inside control or electrical room areas shall be NEMA 12 rated unless specified otherwise.

I. Panels located in process areas or outdoors (except areas classified as hazardous locations) shall be NEMA 4X unless specified otherwise. All panels shall be corrosion resistant.

J. Panels located inside Class 1 Division 1, or Class 1 Division 2 hazardous areas must be NEMA 7 rated.

K. Furnish lifting rings on panels in excess of 100 pounds.

L. Panels shall be sized by the integrator based on the equipment furnished. Minimum panel sizes are shown on the drawings. Panels may be increased in size only upon approval from the ENGINEER based on substantiated request.

M. Panel Mounted Equipment

1. Unless otherwise specified, furnish components to operate on 120 Volts AC single phase 60-Hertz power.

2. Furnish 24Vdc two-wire transmitter power supplies as required.

3. Furnish signal isolators for each analog input and output signal to protect panel mounted equipment from electrical surges induced in field wiring.

4. Furnish engraved laminated nameplates to identify each panel mounted component. The nameplates shall have black lettering on white background. Lettering height shall be 3/16-inch minimum.

N. Furnish enclosures with louvers, forced ventilation, or air conditioners as required to prevent temperature build-up to protect equipment with ambient temperatures of up to 105 degrees F. Except for enclosures mounted with their backs directly adjacent to a wall, place louvers in the rear of the enclosure, top and bottom. For enclosures mounted with their backs directly adjacent to a wall, place louvers on the sides.

O. Any inputs or outputs required for system diagnostics such as analog to digital converter check points, system alarms, cold junction compensation, cabinet temperature indications, and power supply voltage checks shall be provided.

P. Where enclosures are mounted outside or in unheated areas, furnish them with thermostatically controlled heaters that will maintain the inside temperature above 40 degrees F.

2.3 PANEL CONSTRUCTION

A. NEMA 4X Panels

1. Fabricate NEMA 4X enclosures from Type 316 stainless steel.

2. Furnish non-corrodible metal hardware including hinge and cover clamps.

3. Do not paint stainless steel enclosure exterior surface.

4. Sandblast, roughen, or chemically etch stainless steel enclosures to reduce gloss, reflections, and glare.

5. Furnish conduit knock-outs prior to installation of equipment inside enclosure. Furnish water tight conduit hubs. (Double locknuts are not acceptable.)

6. Furnish door clamps on three sides of enclosure door. Clamps shall be quarter-turn or similar tool-less means.

7. Rolled lip around three sides of door and along top of enclosure opening.

8. Hasp and staple for padlocking.

9. Furnish a clear plastic, gasketed lockable hinged door to encompass all non-NEMA 4 front of panel instruments.

10. Manufacturers:

    a. Hoffman Enclosures

    b. Rittal Corporation

c. Saginaw Control & Engineering

d. Or approved equal

2.4 PANEL GROUNDING

A. Furnish 2 ground buses in each cabinet or panel, one for shield and cabinet grounding and one for signal grounding.

B. Furnish grounding lugs for connection to the external grounding system.

C. Furnish ground busbars, which shall be directly wired and connected to facility grounding system.

D. Furnish DC ground bus (for analog cable shield termination) bonded to chassis ground.

E. Furnish nickel-plated copper busbars, with current rating of 100 amperes.

F. Furnish each busbar with at least twenty (20) screw clamp terminal blocks, each capable of accepting #10 AWG conductors.

G. Furnish ground lug on each door and connect lug to the ground bus within panel.

2.5 PANEL WIRING

A. Terminate all wiring, to and from field devices, at panel terminal blocks, not on equipment terminals.

B. Do not terminate more than two wires at the same terminal. Wiring splices and wire nuts shall not be permitted within the enclosure.

C. Use flexible stranded copper wiring. Run wires in continuous lengths from terminal to terminal. Do not splice wires.

D. For analog signal wiring, use uniformly twisted shielded pairs not smaller than 16 AWG with a minimum of six twists per foot. Separate analog signal wiring at least six inches from power wiring. Furnish continuous foil or metalized plastic shields with 100 percent coverage. Include a drain wire in continuous contact with the shield.

E. Use type THHN/THWN power wiring with insulation rated at 600 V. Use 14 AWG or larger for power wiring.

F. Segregate signal wiring from control and power wiring. Group wiring functionally and arrange neatly to facilitate tracing of circuits.

G. Use plastic wiring wraps to bundle wires, outside of wiring ducts. Securely fasten the bundles to the steel structure at intervals not exceeding 12 inches. Use Panduit, or equal wiring ducts and size to provide a minimum of 100 percent spare capacity.

H. Do not intermix signals within the same bundle or duct.

I. Use twisted unshielded wire for other DC signals and segregate from wire conducting AC signals.

J. Furnish wire identification at each wire end. Utilize computer-generated, heat-shrink type wire markers.

K. Install all wiring in plastic wiring ducts, provided with snap-on covers. Size ducts to include at least 100% spare capacity. Restrain all wiring outside of ducts with plastic ties.

L. Group and wrap all wires passing a door hinge in protective wire harness. Furnish abrasion protection for wire bundles passing through holes or across sheet metal edges.

M. Furnish panel wiring of stranded copper with 600-volt rated thermoplastic insulation.

1. Power wiring: No. 14 AWG minimum

2. Control wiring: No. 16 AWG minimum

3. Electronic signal wiring: No. 16 twisted shielded pair minimum

4. Ethernet network wiring: Category 6 minimum

5. Other serial communication cables: As recommended by equipment manufacturer.

N. Wire color convention shall comply with NFPA 79 (2015), part 13:

1. Line, load, and control conductors: black.

2. Neutral: white.

3. Equipment safety ground: green.

4. AC control circuit: red

5. DC control circuit: blue

6. Foreign voltage control wire: yellow

7. Energized when main disconnect it off: orange

O. Physically separate AC wiring from DC wiring.

1. Where AC and DC wiring runs in parallel, furnish at least 2-inch separation.

2. Where AC and DC wiring cross, they shall cross at 90 degrees.

P. Do not daisy-chain neutral wiring and grounding conductors at equipment terminals. Furnish terminal blocks that accept jumper bridges.

2.6 PANEL MOUNTED EQUIPMENT

A. Furnish panel heaters, vapor type corrosion inhibitors and breather drains for condensation and corrosion control inside panel. Furnish panel heaters of the forced air types, complete with thermostatic control.

1. Manufacturers:

a. Cortec

b. Hoffman

c. Or approved equal

B. Furnish one (1) UPS supply receptacle, 120 VAC, 20A duplex type.

C. Furnish one (1) “service receptacle”, 120 VAC, 20A duplex, GFCI grounding type receptacle.

D. Furnish one (1) 120 VAC 24” LED light fixture and protective plastic shield.

E. Furnish one (1) 120 VAC, 20A, snap switch, to turn on the light, mounted in an outlet box with a cover and located so that it is easily accessible from access door.

F. Interposing Relays

1. Furnish interposing relays to interface all PLC discrete outputs with field-mounted equipment.

2. Furnish high density, DIN rail mounted type relays, with coils, contacts, and voltage ratings as required. Contacts shall be rated 10 Amperes at 120 volts minimum. Relays shall have LED indicator to indicate coil status.

3. Relays for control of motor starters larger than NEMA size 1 shall be DPDT, rated 15 Amperes at 250 VAC.

G. Regulated Power Supplies

1. Furnish regulated DC power supply as required for 2-wire analog loops. Size power supplies to include 100% spare capacity. Do not power more than three transmitter loops from the same power supply.

2. Power supplies shall be as follows:

   a. Input power: 120 Volts AC, 60 Hz.

   b. Output power: 24 Volts DC at 200 mA or 500 mA, as required

   c. Output regulation: <1%

   d. Operating temperature: 0 to 50° C

   e. DIN Rail mountable.

3. Manufacturers:

   a. Phoenix Contact

   b. Action Instruments

   c. Sola

   d. Puls

   e. Or approved equal

H. Control Devices and Pilot Lights

1. General: Pushbuttons, selector switches, and indicating lights shall be heavy-duty type, 30.5MM, oil-tight, watertight, and corrosion resistant. Furnish a legend plate at each device.

2. Contact block current rating: 10 amperes at 240 volts AC.

3. Pilot lights shall be LEDs. LED color shall match the lens cover color. Furnish flashing lights where indicated.

4. Pilot light colors shall be as follows:

   a. Red: Running

   b. Green: Off

   c. Amber: Fault Condition

   d. Blue: Indicator

e. White: Power On/Available

5. Manufacturers:

a. Allen Bradley

b. Eaton

c. Square D

d. Or approved equal

I. Signal Isolators

1. Furnish 4-wire type for use as a signal isolator, converter and/or repeater.

2. Input Signal: 4-20 mA DC, field configurable for other signal ranges.

3. Input Impedance: No greater than 50 ohms.

4. Isolation: 1000-volt RMS output from input, power and ground; fully floating

5. Output Signal: 4-20 mA DC into 800 ohms minimum.

6. Accuracy: +/- 0.1 percent of span

7. Power Supply: 120 VAC, 60 hertz or 24 VDC from UPS at DTC

8. Enclosure: designed for high density DIN rail mount

9. Isolators are not scheduled.

a. Furnish isolators on all analog inputs to the PLC (unless the PLC is provided with isolated analog input modules).

b. Furnish as shown and as necessary to eliminate ground loop problems when connecting instruments to other instrument loops.

10. Manufacturers:

a. Phoenix Contact

b. Action Instruments

c. Moore Industries

d. Or approved equal

J. Digital Panel Indicators

1. Type: Electronic, 3-1/2 Digit LED, 0.60-inch high display

2. Input Impedance: no greater than 250 ohms.

3. Power Source: 110 VAC, 60 hertz

4. Input Signal: 4-20 mA DC

5. Input Dampening: Adjustable

6. Enclosure: 1/8 DIN, general purpose for indoor flush panel mount. Indicators for outdoor panels shall have a NEMA 4X bezel rating or be mounted behind a weatherproof gasketed door assembly.

7. Accuracy: +/- 0.05 percent of span +/- 1 count

8. Decimal Point: Selectable via DIP switches or keypad.

9. Input Connections: Compression type screw terminals

10. Range Selection: DIP switches, multi-turn potentiometers, or keypad.

11. Manufacturers:

    a. Precision Digital

    b. Red Lion

    c. Or approved equal

2.7 ENCLOSURE OPTIONS

A. Louvers:

1. Include washable aluminum air filters with louvers used for ventilation.

2. Furnish 1 can of filter spray adhesive for every enclosure.

B. Corrosion Inhibitors:

1. Furnish enclosures with vapor phase protective corrosion inhibitors

2. Furnish adequate corrosion inhibiting devices, tape, or emitters for the individual panel volume

3. Activate the inhibitor upon delivery to the site. Do not store panels with inhibitors inactive. If necessary, cover panels to reduce ventilation and prolong inhibitor life.

4. Manufacturers:

   a. Hoffman A-HCI-5E or -10E

   b. Or approved equal

2.8 ACCESSORIES

A. Folding Shelf:

1. Quantity: One (1) folding shelf required for each free-standing panel with a controller.

2. General:

   a. Provide a folding shelf mounted on exterior of enclosure door for enclosures located indoors.

   b. Shelf shall be located adjacent to OIT, to provide an unobstructed view of OIT during programming or monitoring activities.

3. Construction:

   a. Minimum dimensions are 18 inches by 18 inches.

   b. Inside Wet:

      (1) Material: 316 Stainless-Steel.

      (2) Mounting: Mount on exterior of enclosure door.

      (3) Hardware: Provide Stainless-Steel mounting hardware and gaskets.

4. Manufacturers and Products:

   a. Inside Wet or Outside:

      (1) Pentair/Hoffman; Model similar to ACSHELF1818SS in 316 stainless-steel.

      (2) Or approved equal.

B. Panel Interface Connector:

1. Quantity: One (1) panel interface connector required for any panel with a controller.

2. General: Provide a local interface for programming PLC and OIT without opening enclosure door.

3. Performance:

   a. Exterior Duplex GFCI Receptacle, 120 V ac.

   b. Interior Covered Screw Connection Terminal Block.

   c. Exterior 3 Amp Reset.

   d. Exterior RJ-45/8P8C, Female Ethernet Connector.

   e. Interior RJ-45/8P8C, Female Ethernet Connector.

4. Enclosure:

   a. Type: NEMA 12 and 4X.

   b. Materials: Epoxy coated die cast aluminum housing, aluminum or polycarbonate cover, and stainless-steel hardware.

   c. Mounting: Provide all necessary mounting hardware.

5. Manufacturers and Products:

   a. Mencom Corporation; Model GF-RJ45-R-32.

   b. Grace Engineering Products Incorporated; Model GracePort.

   c. Pentair/Hoffman; Model Intersafe.

   d. Or approved equal.

2.9 TERMINAL BLOCKS FOR ENCLOSURES:

1. General:

   a. Furnish terminals for all field and internal connections as specified on Contract Drawings; as required to accommodate present and spare indicated needs.

b. Spares:

(1) Provide additional terminal blocks for wiring all spare controller I/O points to.

(2) Provide additional terminal blocks to accommodate field termination the addition of each of the following future controller modules: one discrete input, one discrete output, one analog input, and one analog output.

c. Maximum of one wire per screw terminal for field wires entering enclosures.

d. Maximum of two wires per screw terminal for internal enclosure wiring, not to exceed manufacturer's recommendations.

e. Furnish isolated support brackets for mounting din rail when using din rail as a ground bus for isolated ground terminals used to terminate analog circuit shields.

f. Each controller discrete input shall include a minimum of one fused terminal block, one blade disconnect switch terminal block, two general purpose terminal blocks, and one ground terminal block. A single fused terminal block may be used to power up to eight (8) discrete inputs. Example diagram shows worse case input device.

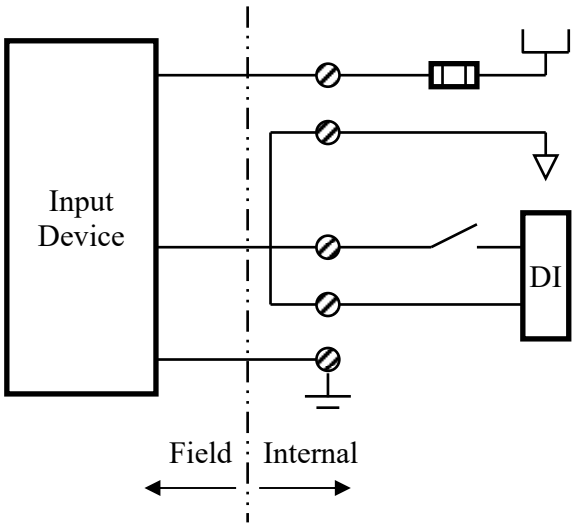

g. Each controller analog input shall include a minimum of one fused terminal block, one blade disconnect switch terminal block, two general purpose terminal blocks, and one ground terminal block. Example diagram shows worse case two-wire transmitter, but can accommodate a 4-wire transmitter.

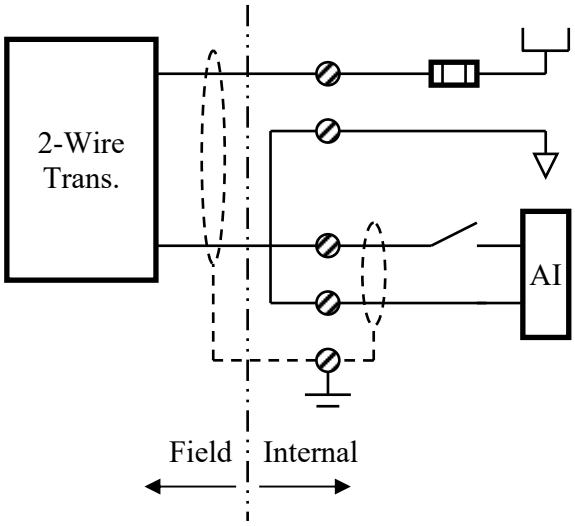

h. Field connections for control circuits not connected to a controller shall use blade disconnect terminal blocks.

i. Terminal jumpers shall be sized accordingly. For example, four common terminals shall use a four (4) pole jumper. Insulated terminal jumpers may not be cut down to size.

j. Connection Type: Screw compression clamp.

k. Compression Clamp:

(1) Complies with DIN-VDE 0611.

(2) Hardened steel clamp with transversal groves that penetrate wire strands providing a vibration-proof connection.

(3) Guides strands of wire into terminal.

l. Screws: Hardened steel, captive and self-locking.

m. Current Bar: Copper or treated brass.

n. Insulation:

(1) Thermoplastic rated for minus 55 to plus 110 degree C.

(2) Two funneled shaped inputs to facilitate wire entry.

o. Mounting:

(1) Standard DIN rail.

(2) Terminal block can be extracted from an assembly without displacing adjacent blocks.

(3) End Stops: Minimum of one at each end of rail.

p. Wire preparation: Stripping only permitted.

q. Jumpers:

(1) Allow jumper installation without loss of space on terminal or rail.

(2) Jumpers shall be finger safe with insulation.

r. Marking System:

(1) Terminal number shown on both sides of terminal block.

(2) Allow use of preprinted and field marked tags.

(3) Terminal strip numbers shown on end stops.

(4) Mark terminal block and terminal strip numbers as shown on Panel Control Diagrams and Loop Diagrams.

(5) Fuse Marking for Fused Terminal Blocks: Fuse voltage and amperage rating shown on top of terminal block.

2. Terminal Block, General-Purpose:

a. Rated Voltage: 600 V ac.

b. Rated Current: 20/30-amp minimum.

c. Minimum Rated Wire Size: 26 AWG.

d. Maximum Rated Wire Size: 12/10 AWG.

e. Color: Grey body.

f. Spacing: 0.21/0.25 inch, maximum.

g. Test Sockets: One screw test socket 0.079-inch diameter.

h. Manufacturer and Product:

(1) Phoenix Contact; Model Clipline UT Series; Type UT 2.5 or UT 4

(2) Allen Bradley; Model IEC Terminal Block; Type 1492-J3 or 1492-J4.

(3) ABB; Model SNK Series; Type ZS4 or ZS6.

3. Terminal Block, Ground:

a. Minimum Rated Wire Size: 26 AWG.

b. Maximum Rated Wire Size: 12/10 AWG.

c. Color: Green and yellow body.

d. Spacing: 0.25 inch, maximum.

e. Grounding: Ground terminal blocks electrically grounded to the mounting rail.

f. Manufacturer and Product:

(1) Phoenix Contact; Model Clipline UT Series; Type UT 2.5-PE or UT 4-PE

(2) Allen Bradley; Model IEC Terminal Block; Type 1492-JG3 or 1492-JG4.

(3) ABB; Model SNK Series; Type ZS4-PE or ZS6-PE.

4. Terminal Block, Knife/Blade Disconnect Switch:

a. Rated Voltage: 600 V ac.

b. Rated Current: 10-amp minimum.

c. Minimum Rated Wire Size: 26 AWG.

d. Maximum Rated Wire Size: 12 AWG.

e. Color: Grey body, orange switch.

f. Spacing: 0.25 inch, maximum.

g. Manufacturer and Product:

(1) Phoenix Contact; Model Clipline UT Series; Type UT 4-MT

(2) Allen Bradley; Model IEC Terminal Block; Type 1492-JKD4.

(3) ABB; Model SNK Series; Type ZS4-S.

5. Terminal Block, Fused, 24 V dc, Supplementary Protection:

a. Rated Voltage: 600 V dc.

b. Rated Current: 10-amp minimum.

c. Minimum Rated Wire Size: 26 AWG.

d. Maximum Rated Wire Size: 8 AWG.

e. Color: Grey body.

f. Fuse: 3AB/3AG, 0.25 inch by 1.25 inches.

g. Indication: LED diode 24 V dc.

h. Spacing: 0.323 inch, maximum.

i. Manufacturer and Product:

(1) Phoenix Contact; Model Clipline UT Series; Type UT 6-HESILED 24.

(2) Allen Bradley; Model IEC Terminal Block; Type 1492-J6FB124.

(3) ABB; Model SNK Series; Type ZS10-SF-R1.

6. Terminal Block, Fused, 120 V ac, Supplementary Protection:

a. Rated Voltage: 600 V ac.

b. Rated Current: 10-amp minimum.

c. Minimum Rated Wire Size: 26 AWG.

d. Maximum Rated Wire Size: 8 AWG.

e. Color: Grey body.

f. Fuse: 3AB/3AG, 0.25 inch by 1.25 inches.

g. Indication: Neon Lamp 110 V ac.

h. Leakage Current: 1.8 mA, maximum.

i. Spacing: 0.323 inch, maximum

j. Manufacturer and Product:

(1) Phoenix Contact; Model Clipline UT Series; Type UT 6-HESILA 250.

(2) Allen Bradley; Model IEC Terminal Block; Type 1492-J6FB1250.

(3) ABB; Model SNK Series; Type ZS4-SF-R3.

2.10 UNINTERRUPTIBLE POWER SUPPLY (**UPS-1-5**):

A. General:

1. Function: Provides isolated, regulated uninterrupted ac output power during a complete or partial interruption of incoming line power.

2. Major Parts: Inverter, battery charger, sealed battery.

B. Performance:

1. Capacity: Provide calculations for sizing and selection of UPS based on complete connected load. Provide estimated runtime curves based on calculated and requirements defined in these specifications and on contract drawings.

2. General:

a. Function: Provides isolated, regulated uninterrupted as output power during a complete or partial interruption of incoming line power.

b. Major Parts: Inverter, battery charger, sealed battery. Control panels powered by a local UPS shall be provided with the following functionality:

(1) In control panels, all components shall be powered by a UPS except for receptacles, lights and heaters to ensure that the

control panel can continue to perform communications, data manipulation, calculations, monitoring, and process data archiving during a complete or partial interruption of incoming line power.

(2) The incoming power to the control panel shall be connected to and monitored by a PLC input to detect a loss of incoming power at which time a "Loss of Power Alarm" will be generated.

(3) The UPS power to the control panel shall be connected in series with the normally-closed UPS common alarm output contact to and monitored by a PLC input to detect a loss of UPS power or UPS common alarm at which time a "UPS Common Alarm" will be generated.

(4) The UPS power to the control panel shall power a failover relay installed in the control panel. The purpose of the relay is to monitor the UPS for output power and if power is not present switch the UPS powered components in the control panel from UPS output power to incoming control panel power.

c. UPS may be installed inside control panel on a dedicated shelf above the bottom of the panel, provided adequate ventilation is provided. If adequate ventilation is not provided, the UPS shall be installed in a separate ventilated enclosure rated for the environment. Provide interconnecting power wiring and control wiring (for status monitoring) in separate conduits between the UPS enclosure and the control panel in accordance with Division 16, Electrical.

3. Input Power:

a. 120 V ac single-phase, 60-Hz.

b. Connections: Manufacturer's standard.

4. Output Power:

a. 120 V ac single-phase, 60-Hz.

b. Connections: Manufacturer's standard.

5. On-line Efficiency: 90 percent minimum.

6. Backup Runtime:

a. Full Load: 15 minutes minimum.

b. Half Load: 30 minutes minimum.

7. Type: true-online, double conversion type. Line-interactive or standby type is not acceptable.

8. Bypass: Internal automatic on overload or UPS failure. Continuous no-break power with no measurable transfer time.

9. Sine-Wave Output Voltage Total Harmonic Distortion (THD): Plus or minus 5 percent or less.

10. Input Voltage Range: Plus 15 percent, minus 20 percent.

11. Output Voltage Regulation: Plus or minus 3 percent nominal.

12. Operating Temperature: 0 degree to 40 degrees C (32 degrees to 104 degrees F).

13. Operating Relative Humidity: 5 percent to 95 percent without condensation.

14. Lightning and Surge Protection:

    a. Pass lightning standard IEEE C62.41 Categories A and B tests.

    b. 2,000 to 1 attenuation of input spike.

15. User replaceable batteries.

C. Enclosure:

1. Tower, unless otherwise noted.

2. Stackable.

3. If rack-mount noted, unit to be suitable for mounting in a 19 inch rack.

D. Accessories:

1. Discrete Output: One SPDT contact, rated at 5 amps, continuous, at 120V ac for Common Alarm.

E. Manufacturers and Products:

1. EATON; 9SX Series UPS.

2. APC: Smart-UPS SRT Series.

3. Emerson/Vertiv/Liebert: GTX4 Series UPS

4. Tripp-Lite: SmartOnline Series UPS

2.11 ETHERNET SYSTEM AND ACCESSORIES

A. Ethernet Switch, Panel-Mount (**RS-SW-1**):

1. Quantity: as indicated on contract drawings.

2. General:

a. Function: Connect 10/100 Ethernet devices via high performance, packet switching technology.

b. Industrial fully managed Ethernet switch is required with the following features:

(1) Simple Network Management Protocol (SNMP) v1, v2, and v3.

(2) Internet Group Management Protocol (IGMP) Snooping and Auto Configuration v1 per RFC 1112 and v2 per RFC 2236

(3) Port Configuration:

(a) Access link: Port based Virtual Local Area Network (VLAN)

(b) Trunk Link: IEEE 802.1q VLAN tagging for Ethernet frames.

(4) Link Aggregation (LAG) per IEEE 802.3ad.

(5) Link Layer Discovery Protocol (LLDP) per IEEE 802.1AB.

(6) Port Mirroring.

(7) Spanning Tree Protocol (STP) per IEEE 802.1D.

(8) Rapid Spanning Tree Protocol (RSTP) per IEEE 802.1d, IEEE 802.1w, IEEE 802.1D.

(9) Quality of Service (QoS)

(a) Port Based

(b) QoS tagging per IEEE 802.1p

(c) Differentiated Services Field (DS Field) and Differentiated Services Code Point (DSCP) per RFC 2474.

(10) Dynamic Host Configuration Protocol (DHCP):

(a) Client.

(b) Relay Agent.

(c) Server with assignments based on:

1) Client MAC address.

2) Relay Agent Connection (Option 82).

3) Client ID (Option 61).

(11) Connectivity: IPv4 and IPv6.

(12) ODVA EtherNet/IP CIP Messaging for monitoring switch status from PLC.

(13) Port Security - MAC Address Based.

c. Interface: Web based.

d. Mounting: 35 mm DIN rail.

3. Performance:

a. Capacity: Provide sufficient ports to meet the system requirements, with a minimum of 25 percent spare ports. No fewer than eight (8) 10/100BaseTX RJ-45 ports. Should Small Form-Factor Pluggable (SFP) Transceivers be required, they shall be of the same manufacturer as the supplied Ethernet switch in which the SFP transceiver is installed.

b. Auto negotiation of duplex mode, speed, and flow control.

(1) Support automatic configuration of Half or Full-Duplex.

(2) Support automatic speed sensing at 10/100 Mbps.

(3) Support priority-based flow control.

c. Auto-MDIX or auto media dependent interface crossover.

(1) Support automatic configuration of straight-through or crossover-cable connection.

d. Electrostatic discharge (ESD) and surge protection diodes on all ports.

e. Enclosure: NEMA 1 in accordance with NEMA 250.

f. Minimum operating temperature range: -40 degrees C to 70 degrees C.

g. Additional: Contractor shall be responsible for providing all cabling to connect devices to switch.

4. Power: 24 V dc external power supply.

5. Manufacturers and Products:

a. N-Tron Corporation, Model 708TX.

b. Phoenix Contact, Model FL SWITCH 3008T.

c. Or approved equal.

B. Ethernet Patch Cables:

1. Provide interconnection cabling of all Ethernet devices internal to the control panels.

a. CAT6 patch cables shall be factory made, ruggedized with a protective connector no-snag boot in accordance with Division 26, Electrical.

2.12 SOURCE QUALITY CONTROL

A. Tests and Inspection

1. Test each panel in conjunction with factory acceptance test as described in Section 40 90 00 - Process Control System General Requirements.

PART 3 EXECUTION

3.1 PREPARATION

A. Sequence enclosure installation as follows:

1. Prior to installation, remove enclosure door, internal panels, and equipment from enclosures.

2. Install enclosures and conduits, and pull field wiring into enclosures.

3. Seal all wire entries with non-setting silicon compound to prevent moisture from entering enclosure.

4. Cover enclosure installation thoroughly with heavy-duty plastic sheet to protect against moisture, paint splatter, and dirt. Cover until 120-volt power is available, and enclosure is ready to receive internal panel.

5. Terminate field wiring on terminal blocks.

6. Energize panel heater and keep enclosure door closed when no work is being performed in enclosure. (Do not energize any other equipment prior to field wiring termination check.)

7. Check accuracy of field wiring termination. Thoroughly test for continuity.

8. Energize panel mounted equipment only after all wiring has been thoroughly checked and tested.

9. Energize panel heater to prevent condensation inside the panel.

3.2 ERECTION, INSTALLATION, AND APPLICATION

A. Do not install control panels or enclosures directly against concrete walls. Furnish stainless steel channels between wall and enclosure. Mount enclosure to stainless steel channels.

B. Install enclosures and panels level and plumb. Touch up all nicks, scratches, etc. with materials recommended by enclosure manufacturer.

C. Vacuum and clean all panel interior surfaces prior to system commissioning.

3.3 FIELD QUALITY CONTROL

A. Tests and Inspection

1. Demonstrate that each enclosure and each panel mounted equipment:

   a. Has not been damaged during transportation or installation

   b. Has been properly installed

   c. Has no mechanical defects

   d. Is in proper alignment

   e. Has been properly wired and connected

3.4 DEMONSTRATION

A. Test all control function as described in Division 1 and Section 40 90 00 - Process Control System General Requirements, and Section 40 98 50 - Process Control System Factory Testing. In addition, perform the following:

1. Calibrate all process variable indications

2. Adjust all alarm setpoints

3. Tune all control function to achieve optimum and stable control

3.5 SCHEDULES

A. Reference Contract drawings and the following table for list of control panels and network racks. Data presented on the following table is for the convenience of the CONTRACTOR. Furnish all control panels and network racks of size and type required by the contract documents and including all components required for the operation of the equipment as described.

CONTROL PANEL SCHEDULE

Panel	Qty	Location	Panel Type	NEMA Rating	Comments
RS-CP-1 Control Panel	1	Reaeration Structure Outfall Site	Wall Mounted	4X	Furnished by Contractor

END OF SECTION

SECTION 40 95 60

TELEMETRY SYSTEM

PART 1 GENERAL

1.1 REFERENCES

A. The following is a list of standards which may be referenced in this section:

1. Alliance for Telecommunications for Industry Solutions (ATIS): O5.1, Specifications and Dimensions (for Wood Poles).

2. American Association of State Highway and Transportation Officials (AASHTO):

a. T99, Standard Method of Test for the Moisture-Density Relations of Soils Using a 2.5-kg (5.5-lb) Rammer and a 305-mm (12-in.) Drop.

b. T310, Standard Specification for In-place Density and Moisture Content of Soil and Soil-Aggregate by Nuclear Methods (Shallow Depth).

3. American Wood Preservers Association (AWPA).

4. ASTM International:

a. D1556, Standard Test Method for Density and Unit Weight of Soil In Place by the Sand-Cone Method.

b. D2167, Standard Test Method for Density and Unit Weight of Soil In Place by the Rubber-Balloon Method.

c. D2937, Standard Test Method for Density of Soil In Place by the Drive-Cylinder Method.

5. Federal Aviation Administration (FAA).

6. Federal Communications Commission (FCC): CFR 47 Part 90, Telecommunication: Private Land Mobile Radio Services.

7. National Fire Protection Association (NFPA):

a. 70, National Electric Code (NEC).

b. 780, Standard for the Installation of Lightning Protection Systems.

8. Rural Utilities Service (RUS): Bulletin 1728F-700, Specification for Wood Poles, Stubs, and Anchor Logs.

9. Telecommunications Industry Association/Electronic Industries Association (TIA/EIA):

    a. 222-G, Structural Standards for Steel Antenna Supporting Structure and Antennas.

    b. 222-G-1, Structural Standards for Steel Antenna Towers and Antenna Supporting Structure.

    c. 232, Interface Between Data Terminal Equipment and Data Circuit-Terminating Equipment Employing Serial Binary Data Interchange.

    d. 603, Land Mobile FM or PM – Communication Equipment – Measurement and Performance Standards.

10. Underwriters Laboratory, Inc. (UL):

    a. 96, Standard for Installation Requirements for Lightning Protection Systems.

    b. 96A, Standard for Lightning Protection Components.

1.2 SUMMARY

A. The facilities affected are both new and existing, a brief description is included below for additional requirements refer to the requirements contained here-in and as shown on the Contract Drawings.

B. Engineering, furnishing, installing, storing, protecting, unpacking, integrating, calibrating, adjusting, testing, application programming, documenting, starting up and OWNER training for a Telemetry system. Telemetry system shall consist of establishing communication link between City of Waukesha Clean Water Plant (CWP) and cellular modem at the Outfall Facilities Site (Remote site).

C. OWNER shall furnish Sim card and set up account with chosen provider.

D. Work includes:

    1. Furnishing and installing cellular modem and antenna at remote site.

    2. Furnishing and installing protective equipment and appurtenances at remote sites.

    3. Furnishing and installing transmission cable, Ethernet Cat-6 Cable, appurtenances at remote sites.

    4. Reviewing site prior to providing and installing any antenna cables and related appurtenances.

    5. Functional Testing of cellular communication links between CWP and remote site.
    6. Configuration of the Telemetry Subsystem as shown on Contract Drawings.

7. Coordinate with Control Panel Systems Integrator to install cellular modem inside Control Panel.

1.3 DEFINITIONS

A. Abbreviations:

1. CS: Computer Subsystem.

2. DTMF: Dual Tone Multiple Frequency.

3. FAA: Federal Aviation Administration.

4. FCC: Federal Communication Commission.

5. LED: Light Omitting Diode.

6. PIC: Process Instrumentation and Control.

7. RSSI: Received Signal Strength Indication.

8. RTU: Remote Telemetry Unit.

9. SCADA: Supervisory Control and Data Acquisition.

10. SNR: Signal-to-Noise Ratio.

11. TS: Telemetry Subsystem.

12. VSWR: Voltage Standing Wave Ratio.

13. WWTP: Waste Water Treatment Plant.

B. Article Definitions in Section 40 90 00 - Process Control System General Requirements, apply to this section.

1.4 CELLULAR SYSTEMS INTEGRATOR (CSI)

A. Use qualified integrators to implement the systems. OWNER acceptance of the CSI does not exempt the CSI or the CONTRACTOR from meeting all Contract Document requirements, nor does it give prior acceptance of subsystems, equipment, materials, or services.

B. A CSI is required for the Telemetry System, refer article Submittals and Quality Assurance for additional requirements

1.5 SYSTEM DESCRIPTION

A. Provide, install and configure cellular modem and antenna to communicate data between CWP and Reaeration Structure Outfall Site. Cellular modem shall communicate over 4G LTE carrier. Cellular modem shall support Sprint, Verizon, AT&T and T-Mobile Wireless networks. Cellular model shall be reconfigurable to change the wireless carrier if required at later stage.

B. Provide Whip less antenna, Transmission cable, protective equipment and required ancillaries to establish fully functional telemetry.

C. Summary: New cellular equipment will be installed as shown on the Contract Drawings.

D. Scope of work:

1. Configure Virtual Private network to secure end to end network link between CWP SCADA system and RIO-RS-1 Outfall Site PLC.

2. Provide, install and configure 4G LTE capable cellular modem that is compatible with Sprint, Verizon, AT&T and T-Mobile wireless carriers.

3. Provide Cat-6 Ethernet cable to connect cellular modem to Ethernet switch.

4. Provide and install Whip less antenna as shown on the drawings.

5. Provide Transmission cable, Ethernet Cat-6 Cable, Jumper cables, Cable hangers, Protective equipment as required.

1.6 SUBMITTALS

A. General:

1. All submittals shall be in accordance with Section 01 33 00 - Submittals, unless otherwise noted in this section.

2. Submit proposed Submittal breakdown consisting of sequencing and packaging of information in accordance with Project Schedule.

3. Submittal Variations: In accordance with Section 01 33 00 - Submittals.

4. Resubmittals: Clearly identify new material. Include correction made to text and drawings in earlier versions of that submittal.

5. Incomplete (Partial) Submittals not in accordance with Project Schedule will not be accepted.

6. Excessive Resubmission of Submittals: See Section 01 33 00 - Submittals.

7. Submittal Format: All documentation submitted such as shop drawings, full-scaled details, wiring diagrams, catalog cuts, descriptive literature but not limited to shall include the following.

a. Hard Copy: Required for all submittals.

b. Electronic Copies: Required for final submittals, unless otherwise noted for specific items.

1) Manufacturers’ Standard Documents: Adobe Acrobat .pdf format.

2) Documents created specifically for Project:

a) Text and Graphics: Microsoft Word .doc format.

b) Lists: Microsoft Excel .xls format, unless otherwise noted for specific items.

c) Drawings: Autodesk AutoCAD .dwg format.

d) HMI Application Software: native format.

e) PLC Application Software: native format.

f) Configuration Files: native format or documented in a Microsoft Word .doc format.

3) Three (3) finalized electronic copies of documentation shall be included on a CD or DVD that is labeled, includes an electronic table of contents with live links, dated and virus checked.

8. Identify proposed items, options, installed spares, and other provisions for future work (for example, reserved panel space; unused components, wiring, and terminals).

9. Activity Completion:

a. Action Submittals: Completed when reviewed and approved.

b. Informational Submittals: Completed when reviewed and found to meet conditions of the Contract.

B. Action Submittals:

1. Overview Block Diagram: Show major assemblies and interrelationships of the TS and CS. Diagram similar in content and format as shown on Drawings. Identify each major assembly with the same name and tag numbers as on Overview Equipment List.

2. Overview Description: Comprehensively describe function, operations, and interrelationship of the TS and CS. Emphasize explanation of overview block diagram in minimum of five 8-1/2-inch by 11-inch pages.

3. Bill of Materials: Shall be provided for all TS furnished Components, Electrical Devices, and Mechanical Devices, including components supplied as part of an enclosure assembly.

a. Group equipment items **as follows:**

1) TS Assembly: By assembly.

2) TS Components: By component identification code.

3) Other Equipment: By equipment type.

b. BOM shall be laid out in table format with column headings as follows:

1) Item: The item identifier is just a number in numerical order assigned to a given component. Additionally, for panel layouts the item shall correlate to balloon callouts on the panel layout drawing.

2) Description: A brief description of the item. For panels, include panel reference number and name plate inscription.

3) Manufacturer:

4) Model Number: A complete model number should be provided, and all options not defined by model number shall be listed separately.

5) Characteristics: Physical, electrical, and environmental requirements.

6) Tag: The instrument tag name or equipment tag name where applicable. For I&C components internal to control panels, a device identifier shall be provided that matches panel layout and schematic drawings.

7) Quantity: Total supplied.

4. Catalog Cuts: I&C Components, Electrical Devices, and Mechanical Devices as follows:

a. Catalog information, mark to identify proposed items and options.

b. Descriptive literature.

c. External power and signal connections.

d. Scaled drawings showing exterior dimensions and locations of electrical and mechanical interfaces.

5. Installation Details: All modifications and details adequately showing the installation of the TS elements and assemblies.

C. Informational Submittals:

1. Telemetry Installation Report for remote site.

2. Installed cellular modem configuration file for each cellular modem.

3. OWNER training plan.

4. Operation and Maintenance Data: As specified in Section 01 78 23 - Operation and Maintenance Data, and the following:

    a. Updated versions of the following items as required under paragraph Shop Drawings.

        1) Overview block diagram.

        2) Overview description.

        3) BOM

        4) Catalog Cuts

        5) Descriptive information.

    b. Maintenance Information, including original equipment manufacturer's part numbers for all component and modules.

    c. List of required and recommended spares, expendables, and test equipment.

5. Statement of Qualification: Maintenance technician.

6. Maintenance service agreement.

1.7 QUALITY ASSURANCE

A. Maintenance Technician Qualifications: Factory training and a minimum of 2 years of experience in the installation and maintenance of the equipment provided here-in.

1.8 DELIVERY, STORAGE, AND HANDLING

A. Provide Site and warehouse storage facilities for TS equipment in accordance with Division 01, General Requirements.

B. Prior to shipment, include corrosive-inhibitive vapor capsules in shipping containers, and related equipment as recommended by the capsule manufacturer.

C. Prior to installation, store items in dry indoor locations. Provide heating in storage areas for items subject to corrosion under damp conditions.

D. Cover equipment that is exposed to dusty construction environments.

1.9 ENVIRONMENTAL REQUIREMENTS

A. Design the following components of the TS for continuous operation in environments listed:

1. Inside (Conditioned): 0 °C to 40 °C.

    a. Temperature: 60 degrees F to 80 degrees F.

b. Relative Humidity: 40 percent to 60 percent.

c. NEC Classification: Nonhazardous.

2. Inside (Unconditioned): 0 °C to 40 °C.

a. Temperature: 20 degrees F to 104 degrees F.

b. Relative Humidity: 10 percent to 95 percent non-condensing.

c. NEC Classification: Nonhazardous.

3. Outside, Underground/Submerged:

a. Temperature: Minus 20 °F to 122 °F.

b. Relative Humidity: 10 percent to 100 percent, rain, snow, and freezing rain.

c. NEC Classification: Nonhazardous.

1.10 SEQUENCING AND SCHEDULING

A. Coordinate the external circuit portion of the Interconnecting Wiring Diagrams required in paragraph Shop Drawings with the electrical requirements of Division 26.

1.11 MAINTENANCE

A. Maintenance Service Agreement:

1. Furnish a draft maintenance agreement, prepared and signed by the Supplier, to provide the necessary preventive maintenance to keep the telemetry system in proper working condition.

2. Fully describe the maintenance work to be performed and estimate cost of the maintenance during the 1-year correction period and the subsequent year.

PART 2 PRODUCTS

2.1 GENERAL

A. Telemetry systems function as shown on Drawings. Furnish equipment items as required. Furnish all materials, equipment, and software, necessary to effect required system performance.

B. First Named Manufacturer: Special systems design is based on first named manufacturers of equipment and materials.

1. If an item is proposed from other than first named manufacturer, obtain approval from ENGINEER for such changes in accordance with Article Submittals.

2. If using proposed item requires other changes, provide work and equipment to implement these changes. Changes that may be required include, but are not limited to: different installation, wiring, raceway, enclosures, connections, isolators, intrinsically safe barriers, software, and accessories.

C. Like Equipment Items: Use products of one manufacturer and of the same series or family of models to achieve standardization for appearance, operation, maintenance, spare parts, and manufacturer's services.

D. Implement all same or similar functions in same or similar manner. For example, control logic, sequence controls, and display layouts.

2.2 EQUIPMENT

A. Cellular Modem

1. General:

a. A cellular modem communicates over 4G carrier network to provide a backup to radio network.

b. Standard technology LTE 700/1900 MHz, with fallback CDMA/EDVO 800/1900 MHz mode.

c. Compatible with Sprint, Verizon, AT&T and T-Mobile Wireless network.

d. Features a built-in router.

e. Coordinate and supply Cellular Modem to Panel Builder CONTRACTOR for installation.

2. Connections:

a. Ethernet ports: Minimum of two (2) RJ-45 ports required.

b. Antenna port: Minimum of one (1) TNC female antenna port required.

c. USB port: Management port required.

d. Alarm output: Minimum of one (1) required for monitoring by controller.

3. Security:

a. VPN Tunneling: IPsec and SSL supported.

4. Interface: Web GUI interface required.

5. Mounting: Furnish 35 mm DIN rail vertical mounting bracket.

6. Power: 24 Vdc or minus 48 Vdc depending on application.

7. Operating Temperature: Minus 40 to 158 °F.

8. Certification Requirements: FCC CFR 47 Part 90.

9. Manufacturer and Products:

   a. GE; Model MDS Orbit Series.

   b. Red Lion Controls; Model RAM-6921-VZ Series.

B. Transmission Cable and Appurtenances

1. Transmission Cable

   a. General:

      1) The antenna cables shall be characterized by a minimum bend radius 10 inches or less and dielectric jacket, riser-rated for inside of buildings, and suitable for direct burial and outdoor design environments. Terminate transmission line only in connectors rated for the required service.

      2) Provide cable for connection between antennas and radio at sites with new and existing radios and antennas.

      3) Cable shall be low-loss type with a maximum allowed loss of 5.0 dB.

      4) Cable shall have a design impedance 50 Ohms.

      5) The maximum allowable losses specified herein may need to adjusted lower in order to meet overall system performance as required by the contract documents.

   b. Manufacturers and Products:

      1) CommScope/Andrew Solutions; Heliax LDF or AVA Series.

         a) LDF1-50, up to 150 ft for 450 MHz, up to 50 ft for 600 - 2700 MHz

      2) Amphenol/Times Microwave; LMR Series.

         a) LMR-400, up to 150 ft for 450 MHz, up to 50 ft for 600 - 2700 MHz

      3) RFS; Cellflex Series.

         a) LCF14-50, up to 150 ft for 450 MHz, up to 50 ft for 600 - 2700 MHz.

2. Ethernet Cable

   a. UTP Category 6 cable with RJ45 end connectors.

   b. Required for Cellular modem and Ethernet switch connections.

3. Connectors

   a. General:

      1) Connectors shall be low-loss type straight or right-angle depending on installation, compatible with installed cable, and by the supplied cable manufacturer.

      2) Connectors shall have a design impedance 50 Ohms.

   b. Manufacturers and Products:

      1) CommScope/Andrew Solutions; Model Heliax or EZfit Series.

      2) Amphenol/Times Microwave; Model X Series.

      3) RFS; Model Omni Fit Series.

4. Cable Hangers

   a. General:

      1) Cable hangers are used to support cable in both the vertical and horizontal and minimize motion due to wind.

      2) Cable hangers shall be butterfly type with screw or clip closure.

      3) Shall be compatible with installed transmission cable.

   b. Material: Stainless-steel.

   c. Accessories: All mounting hardware shall be stainless-steel.

   d. Manufacturers and Products:

      1) CommScope; Model SnapStak Plus.

      2) SitePro 1; Model Bug Series.

      3) RFS; Model Clamp Series.

5. Cable Guards

   a. General: Cable guards are used to protect cables located outdoors on poles from damage and vandalism when not protected by conduit.

   b. Material: Plastic.

   c. Accessories: All mounting hardware shall be stainless-steel.

d. Manufacturers and Products:

1) Electrical Materials Company; Model U-Guard Series.

2) Electriduct, Inc.; Model Wire Guard Series.

3) Harger Lightning & Grounding; Model Cable Guard Series.

C. Antennas:

1. Low Profile, Whip-Less

a. General:

1) A low profile, whip-less dual-band antenna is used for locating a cellular antenna outside at remote sites when cellular signal strength does not the performance requirements specified herein. Antenna shall be compatible with the carrier dual-band frequency range 600 to 2700 MHz (Verizon, Sprint, AT&T and T-Mobile Wireless) and cellular modem specified herein.

2) Antennas suitable for outdoor design environments.

b. Connectors: Shall be N-Type female connectors.

c. Locations as shown on the Contract Drawings.

d. Mounting:

1) Provide stainless-steel mounting hardware and fasteners.

2) Additional requirements as shown on Contract Drawings.

e. Gain: minimum of 3 dBi required.

f. Manufacturer and Products:

1) PCTEL; Model MLPV Series.

2) Laird Technologies; Equivalent Model.

3) Or Equal.

D. Protective Equipment:

1. Lightning Arrestor

a. General:

1) Lightning arrestors are required on all installations where an antenna is mounted outside to minimize damage due to lightning discharges.

2) Shall be DC blocking type.

3) Coordinate lightning arrestor selection with installed antenna.

b. Insertion loss shall be less than or equal to 0.1 dB.

c. Lighting Arrestor shall be compatible with 450 MHz frequency range for radio communication or carrier dual-band frequency range 600 to 2700 MHz (Verizon, Sprint, AT&T and T-Mobile Wireless) for cellular communication.

d. Connectors: Shall be N-Type female connectors.

e. Mounting:

1) Bulkhead mount type with ground screw is required for external mounting to enclosure.

2) Panel mount type with ground screw is required for mounting within a protective equipment enclosure.

f. Manufacturers and Products:

1) PolyPhaser; IS-B50 or IS-50 Series or TSX Series

2) Andrew Corporation; Equivalent Model.

3) Erico; Equivalent Model.

2.3 SPARE PARTS

A. Spare parts as follows:

1. One (1) Cellular Modems.

2. One (1) Antenna.

3. Two (2) Surge Arrestors of each type.

B. All tooling required to insert, extract, and connect any internal or external connector, including edge connectors.

2.4 EXPENDABLES

A. Two-year supply of corrosion-inhibiting vapor capsules in accordance with Section 40 90 01 - Instrumentation and Control for Process Systems.

PART 3 EXECUTION

3.1 EXAMINATION / PREPARATION

A. For equipment that directly interfaces with either the repeater site or remote site, verify the following conditions:

1. Proper installation of equipment (i.e. radio transceiver, cellular modem in industrial control panel).

2. Correct control action (i.e. radio transceiver, cellular modem alarm outputs correctly configured).

3. Input and output signals (i.e. interface between controller and radio transceiver or cellular modem).

B. Raceway:

1. Conduit systems, etcetera in accordance with manufacturer's recommendations.

2. Access Holes, Handholes, and Pull Boxes: Location and size, to ensure wires and cables may be installed without exceeding manufacturer's limitations.

3. Wires and cables shall be installed in a raceway in accordance with NFPA 70 (NEC) conduit and tubing fill limitations.

C. Seal all buried or below grade raceways, either filled or spare, to stop ingress of water and grit with fabricated expansion plugs. In spare raceways remove plugs as required to install cables and install new fabricated expansion plugs after cables are installed.

D. Existing Raceways or Cable Trays: Reuse of existing or spare raceway or cable tray may not be used unless otherwise noted on Contract Drawings or approved by the ENGINEER.

E. Ensure duct bank, conduit, and other confined routing is free and clear of debris before cable placement.

F. The overall raceway and cable tray installation shall comply with the requirements stated in NFPA 70 (NEC) and any additional requirements stated here-in or in Division 26, Electrical. The location of cable trays, raceways, hand holes, or pull boxes shall not:

1. Impede access to or the maintenance of electrical, mechanical, or HVAC components and equipment, including but limited to access covers, lighting, unions, valves, and ductwork.

2. Restrict the air flow in and out of return air ducts and supply air ducts.

3. Obstruct lighting.

G. No raceway or cable tray shall be installed until the type of wire or cable supplied has been determined suitable and approved by the ENGINEER. The raceway shall then be sized accordingly for the supplied wire or cable.

3.2 INSTALLATION

A. General:

1. Installation shall conform to selected manufacturers recommended installation guidelines.

2. The CONTRACTOR will provide all the necessary personnel, tools, equipment, supplies and other expenses to provide for the design, installation, training and optimization of the system defined.

3. Installation sites shall be kept clean and free of tripping or other hazards to personnel.

4. Verify that all installed radio and cellular components, connectors, cables, etcetera have an impedance of 50 Ohms to minimize losses due impedance mismatches.

B. Transmission Cables and Appurtenances

1. Transmission Cables:

a. The CONTRACTOR shall install the transmission line and all associated mounting, connectors, jumpers, and lighting suppression equipment as outlined by the manufacturer.

b. Replace transmission cable jackets cut by cable clamps.

c. Transmission cable shall be installed with appropriate drip loops when entering buildings and/or enclosures.

d. Runs shall have minimal amount slack to minimize loses.

e. No coiled transmission cables or sharp bends allowed.

f. Cables shall enter side or bottom of enclosure, top entry not allowed to for outdoor enclosures.

g. Bends shall have a minimum radius of ten (10) inches.

h. Below grade, enclose transmission cable in a separate conduit and provide conduit seals at structure entry point, vault entry points, and cable exit. Locate conduit a below frost line, a minimum of three (3) feet below grade.

i. Polyethylene cable guard is required from conduit exit up pole or structure a minimum of ten (10) feet. Secure using stainless-steel hardware.

2. Jumper Cables:

   a. For enclosure installations, cables shall have a straight N-Type male connector at one end and a straight SMA-Type male connector at the other end for cellular modems. Provide right-angle adapters for installation at radio transceiver or cellular modem.

   b. For antenna installations, cables shall have straight male connector at one end and a straight female connector at one end. Connector types shall be compatible with the mating antenna connector or transmission cable connector.

   c. Bends shall have a minimum radius of three (3) inches.

3. Connectors: Connectors shall be installed per manufacturers recommendations with manufacturer recommended stripping and crimping tools.

4. Cable Hangers: Transmission cables shall be supported vertically and horizontally every three (3) feet.

C. Antennas:

1. Antenna type, mounting elevation and orientation to achieve overall functional requirements of the system. Antennas shall provide a low resistance, dc path to ground for lightning protection.

2. Minimum separation to follow manufacturers recommendations so as not cause interference with other antennas.

D. Protective Equipment:

1. Lightning Arrestor

   a. The lightning arrester shall be installed with the proper polarity.

   b. The lightning arrestor shall be connected to ground rod with a ground cable.

   c. Keep ground cable horizontal runs to a minimum.

   d. The ground conductor shall be run in a straight path to new or existing grounding electrode system.

   e. Do not use mast, poles, or structures for ground path unless otherwise noted on Contract Drawings.

3.3 FIELD QUALITY CONTROL

A. Provide the services of qualified factory-trained manufacturer's representative to assist the CONTRACTOR in setup of telemetry equipment specified under this section. The

manufacturer's representative shall provide technical direction and assistance to the CONTRACTOR in testing of the assembly and components contained herein.

B. A qualified telemetry equipment factory-trained manufacturer's representative shall certify in writing that the equipment has been installed, adjusted and tested in accordance with the manufacturer's recommendations.

C. Complete telemetry equipment configuration, setup and testing shall be conducted by the CONTRACTOR and witnessed by the ENGINEER and OWNER, and any OWNER directed personnel. CONTRACTOR shall be responsible for setting up all telemetry equipment names, TCP/IP addresses and other parameters required for a complete and operational system. CONTRACTOR shall be responsible for conducting a site operational readiness test (ORT) with all hardware installed and configured. The ORT shall include testing and measurement of the transmission cable insertion loses from the cellular modem to associated antenna.

D. The Telemetry system and Video Surveillance Systems testing shall be carried out under a separate contract.

E. The Telemetry System shall be fully functional before proceeding with Video Surveillance System Testing.

3.4 TRAINING

A. Provide a minimum of 1 instructor day of maintenance training specific to the Telemetry System hardware. Provide training at the Site of Work **after** site is installed.

B. Provide formal classroom instruction and practical laboratory work. Training provides the instruction and experience to enable an instrument technician to properly install, startup, test, troubleshoot, and maintain the Telemetry System equipment. Cover the following areas, as a minimum:

1. Configuration, communication protocol, and interfaces of the Telemetry System.

2. Techniques for installation, interfacing, and starting up of the Telemetry System.

3. Operations and troubleshooting procedures for general-purpose test equipment to diagnose problems of the Telemetry System.

4. Performance verification of Telemetry System.

3.5 CLEANING/ADJUSTING

A. Repair affected surfaces to conform to type, quality, and finish of surrounding surface.

B. Cleaning, upon completion of work, remove materials, scraps, and debris from interior and exterior of equipment and work area.

3.6 PROTECTION

A. Protect enclosures and other equipment containing electrical, instrumentation and control devices, including spare parts, from corrosion through the use of corrosion-inhibiting vapor capsules.

3.7 SUPPLEMENTS

A. The supplements listed below, following "End of Section," are a part of this Specification.

1. Supplement 1, Telemetry Installation Report.

END OF SECTION

TELEMETRY INSTALLATION REPORT

Project Name:		Project No.:	
Panel Number:		Date:	

Item	Description	Initials
1.0	INSTALLATION	
1.2	Cellular Modem Serial Number: _____. Make and Model: _____. Firmware Version: _____.	
1.3	Verify transmission cable, jumper cables, connectors, etcetera have the same impedance, of 50 Ohms.	
1.4	Verify connectors for cellular modem, etcetera are easily accessible.	
1.6	Verify protective equipment is oriented correctly (external/internal connections), located external to panel and properly grounded.	
1.7	Verify all outdoor antenna transmission cable connections are properly water-proofed. Note, insertion loss should be verified prior to sealing antenna connection.	
1.8	Verify antenna transmission cable is properly secured.	
1.9	Verify antenna mounting bracket has a minimum of two yoke style type brackets affixed to a common bracket to maintain mounting position and minimizing rotation and is properly secured.	
1.10	Verify that proper drip loops have been installed.	
1.11	Verify that entry points are properly sealed.	
1.12	Verify that proper bend radius has been followed to minimize losses.	
1.13	Verify insertion loss (attenuation) with cable analyzer: 1. Calculated insertion loss (end to end, for ex. jumper cable + bulkhead connector + protection equipment + transmission cable): _____. 2. Measured insertion loss measurement with antenna disconnected, radio transceiver disconnected, and precision short installed at antenna end: _____. Measured insertion loss within +/- 5 %, if not within range of calculated correct installation.	
1.14	Verify panel layout matches drawing, markup any deviations and update drawings.	
1.15	Verify added components match BOM, markup any deviations and update BOM.	
2.0	ENERGIZED CELLULAR MODEM, ETC.	
2.1	Record Antenna Type: _____.	
2.2	Record Antenna Gain: _____ dB.	
2.8	Document final azimuth (horizontal position side to side): _____°.	
2.9	Document final elevation (vertical position up and down): _____°.	
2.10	Document final tilt (rotation): _____°.	
2.12	Verify radio transceivers, etcetera are loaded with the latest firmware approved by ENGINEER and/or OWNER.	
2.17	Cellular modem IP Address entered: _____.	
2.18	Cellular modem Subnet Mask entered: _____.	

Project Name:		Project No.:	
Panel Number:		Date:	

Item	Description	Initials
2.19	Cellular modem Gateway Address entered: _____.	
3.0	MODIFICATION COMPLETION	
3.1	A copy of the as modified drawing redline markups present in control panel.	

SECTION 40 98 50

PROCESS CONTROL SYSTEM FACTORY ACCEPTANCE TESTING

PART 1 GENERAL

1.1 SUMMARY

A. Section includes technical requirements for fabrication, engineering, wiring, and factory testing of Process Control System (PCS) components and functions installed as part of the GWA project, Contract Package 3 (CP3).

B. The OWNER/ENGINEER will witness test all equipment covered by this Specification Section at any time during manufacturing, assembling, and/or testing. The CONTRACTOR shall furnish the OWNER/ENGINEER with copies of the factory test results. The CONTRACTOR shall furnish the OWNER/ENGINEER with sets of complete factory test procedures. These factory test results and the test procedures will be reviewed and accepted by the OWNER/ENGINEER prior to scheduling the testing date. The CONTRACTOR shall furnish the OWNER/ENGINEER with the factory testing date in writing. A minimum of two weeks advance notice shall be given prior to the factory testing.

C. The CONTRACTOR shall be responsible for scheduling the factory acceptance test.

D. The IT Network and Communication factory witness test shall be scheduled to be completed in one trip. Schedule tests shall be completed within 8 nominal hours per day.

E. The Software factory witness test shall be scheduled to be completed in parallel with each hardware factory test. Schedule tests shall be completed within 8 nominal hours per day.

F. The CONTRACTOR shall pre-pay for living, lodging, and transportation expenses for 4 representatives of GWA while engaged in witness of factory tests. The CONTRACTOR shall reimburse the representatives within 5 business days for any expenses incurred not pre-paid. Living expenses shall include transportation, motel or hotel (similar or equal to Holiday Inn Motels), and a car when inspection facilities are located out of the City of Waukesha, WI. Air travel is required for trips exceeding 150 miles one way from Waukesha, WI.

G. If additional factory testing is required at a later date, the CONTRACTOR shall again furnish all transportation, lodging, and daily subsistence for four individuals to witness these tests.

H. The CONTRACTOR shall arrange all travel between the hours of 7 AM and 7 PM, Monday-Friday, unless previously approved by the OWNER/ENGINEER. Do not arrange travel on City of Waukesha, WI or Federal Holidays.

I. The CONTRACTOR shall submit an itinerary to the OWNER/ENGINEER for review and acceptance 14 days prior to scheduled travel. Schedule direct flights whenever is available. Should layover be unavoidable, limit duration of layover to not more than three (3) hours, but not less than one (1) hour.

J. Related work specified in other sections includes, but is not limited to the following:

1. Section 01 33 00 - Submittals

2. Section 40 80 50 - Process Control System Commissioning

3. Section 40 90 00 - Process Control System General Requirements

4. Section 40 91 00 - Process Control System Instruments

5. Section 40 94 43 - Programmable Logic Controller Systems

6. Section 40 95 13 - Process Control System Panel Enclosure and Equipment

K. Process Control System Factory Acceptance Testing furnished by manufacturer as part of packaged control systems:

1. Certain control panels are furnished by manufacturers of equipment specified under other Sections as part of a packaged system. In general, those panels shall be tested according to the requirements of the manufacturer and this specification section.

1.2 SUBMITTALS

A. General: Furnish all submittals, including the following, as specified in Section 01 33 00 - Submittals.

B. Submit data on the following as required in Section 40 90 00 - Process Control System General Requirements:

1. Test Plan

2. Test Sequence

3. Test Schedule

4. Testing Tools

5. Test results

PART 2 PRODUCTS

Not Used

PART 3 EXECUTION

3.1 QUALITY CONTROL

A. Tests and Inspection

1. Demonstrate for each enclosure and each panel mounted equipment:

a. All installed equipment is terminated and securely mounted

b. All wiring is labeled

c. All equipment is labeled

d. All enclosures are labeled

e. Wiring diagram is installed in cabinet.

3.2 DEMONSTRATION

A. Factory Tests:

1. The factory acceptance test shall be performed by the System Integrator, and is to include hardware and software test verification of all control panels included in CP3, including all network components and associated interfaces.

2. Replicate and simulate the control system network to demonstrate network communication between PLC systems, package control systems, instruments, process control equipment, and all other interfacing devices.

3. System programming shall be complete prior to each factory test.

B. Factory Tests: Perform the following tests:

1. In-Factory Inspection and PLC I/O Testing (See Paragraphs D & E)

2. Graphical Interface and Software Testing (See Paragraph F)

3. Communication Failure Testing (See Paragraph G)

4. Power Failure/System Restart Testing (See Paragraph H)

C. Test Preparation:

1. In-Factory Testing Aids and Equipment:

   a. Furnish the following documents:

      (1) One copy of submittals applicable to equipment to be tested

      (2) One copy of Drawings and Specifications, with Addenda and Change Orders

      (3) One master copy of test procedure

      (4) Complete inventory of equipment to be tested including make, model, and serial number; identify firmware revision

   b. Furnish the following support facilities:

      (1) Desk with keylock or lockable room with table for OWNER/ENGINEER'S use

      (2) Meeting room

      (3) Reproduction facilities for copying test information

2. Meet following criteria prior to start of test:

   a. Complete submittals and resolve disputes, if any

   b. ENGINEER'S review of test procedure

   c. Include all processors, network interfaces, I/O cards, and HMI computer in testing

   d. Set test date agreeable to each party

3. Schedule:

   a. Limit testing to 8 hours of testing to 10 hours maximum on location days

   b. Meet each morning to review day's test schedule

   c. Meet each evening to review day's test results and to review or revise next day's test schedule

   d. At end of test, meet to review list of deficiencies. ENGINEER will indicate those items which must be corrected prior to shipment.

e. Confirm in writing, locations, times, and dates of test 2 weeks before tests.

D. In-Factory Inspection and I/O Testing:

1. Process Control System PLCs are required to pass in-factory inspection and testing prior to shipment to job site

2. In-Factory inspection and testing shall be performed at site of panel fabrication, and will be witnessed by ENGINEER and OWNER

3. In-Factory Inspection:

a. In-Factory inspection shall verify the following in accordance with approved submittals:

(1) Panel dimensions

(2) Equipment layout

(3) Wiring

(4) Wire and terminal identification

b. Verify proper access to equipment for maintenance

c. Verify proper access to field wire termination points

d. Inspect for neatness of wiring and wire harness construction

E. In-Factory Testing and Demonstration:

1. Test shall demonstrate proper wiring and fabrication of Process Control System PLC:

a. Perform initial in-house hardware configuration to assure system is ready to demonstrate prior to arrival of OWNER and ENGINEER

b. After successful initial in-house hardware configuration, notify ENGINEER of test date at least one week in advance

2. Install Designer-configured PLC programming software, furnished as part of the project, to permit the following:

a. Diagnostic test of PLC processor to assure proper run mode operation

b. Diagnostic test of remote I/O to assure proper operation

c. Inspection of PLC data table to allow viewing of discrete input on/off status

d. Inspection of PLC data table to view register contents when inputs are tested at 0, 4, 12, and 20 mA DC

e. Forcing of all digital outputs

f. Generation of 4, 12, and 20 mA DC signals for all analog outputs

3. Test as follows:

a. Verify equipment and manuals against inventory lists

b. Run hardware diagnostics

c. Testing of all input and output (I/O) signals at terminal strip used for field terminations:

(1) Test change of state for all discrete inputs

(2) Test analog inputs at 0, 4, 12, and 20 mA DC

(3) Manipulate PLC data table or use forces to test response of all discrete output signals

(4) Manipulate PLC data table to test response of all analog output signals at 4, 12, and 20 mA DC

4. Correct any deficiencies discovered prior to shipment to job-site.

F. Graphical Interface and Software Testing

1. Test shall demonstrate proper graphical programming for all screens associated with the project:

a. Color Standards shall meet the high performance HMI standards and shall be as follows:

(1) White: On

(2) Grey: Off

(3) Yellow: Fault Condition (Warning)

(4) Red: High Priority (Emergency)

(5) Black: Static Text

(6) Blue: Dynamic Text

(7) Green: Set Points

b. Navigation between equipment screens, overview screens, alarm screens.

G. Communication Failure Testing

1. Test shall demonstrate communication failure alarm when a network connection is lost:

a. Each data highway shall be disconnected

b. Communication alarms and failure modes shall be verified

H. Power Failure / System Restart Testing: Main power to system shall be removed and then reconnected. System shall re-boot and demonstrate start-up services and sequence for use by Operator.

I. Testing of Connection to Packaged System:

1. Test shall demonstrate connection of packaged PLC into PCS system

2. Verify communication gateway from PLC

3. Verify program and point mapping

J. Documentation

1. Prepare in-factory inspection and testing sign-off document. Document shall include following as a minimum:

a. Project description and number

b. Company name for PLC SUPPLIER, OWNER, and ENGINEER

c. Section labeled "In-Factory Inspection", with listing of items to be inspected as described above

(1) For each item, include area for initials of PLC SUPPLIER'S, OWNER'S, and ENGINEER'S representative indicating passing of inspection

(2) Include area for handwritten notes of any corrections required

END OF SECTION

(NO TEXT FOR THIS PAGE)

SECTION 44 42 56

SUBMERSIBLE PUMPS

PART 1 GENERAL

1.1 REFERENCES

A. The following is a list of standards that may be referenced in this section:

1. American Bearing Manufacturers Association (ABMA):

   a. 9, Load Ratings and Fatigue Life for Ball Bearings.

   b. 11, Load Rating and Fatigue Life for Roller Bearings.

2. American Society of Mechanical Engineers (ASME): B16.1, Gray Iron Pipe Flanges and Flanged Fittings, Class 25, 125, and 150.

3. ASTM International (ASTM):

   a. A48, Standard Specification for Gray Iron Castings.

   b. A576, Standard Specification for Steel Bars, Carbon, Hot-Wrought, Special Quality.

4. Hydraulic Institute Standards (HIS):

   a. 11.6, Submersible Pump Test.

   b. 14.6, Rotodynamic Pumps for Hydraulic Performance Acceptance Tests.

5. National Electrical Manufacturers Association (NEMA).

6. National Fire Protection Association (NFPA):

   a. 70, National Electrical Code.

   b. 497, Recommended Practice for the Classification of Flammable Liquids, Gases, or Vapors and of Hazardous (Classified) Locations for Electrical Installations in Chemical Process Areas.

7. Underwriters Laboratories Inc. (UL).

1.2 DEFINITIONS

A. Terminology pertaining to pumping unit performance and construction shall conform to ratings and nomenclature of Hydraulic Institute Standards.

1.3 SUBMITTALS

A. Action Submittals:

1. Make, model, weight, and horsepower of each equipment assembly.

2. Complete catalog information, descriptive literature, specifications, and identification of materials of construction, including cable seal details.

3. Performance data curves showing head, capacity, horsepower demand, and pump efficiency over entire operating range of pump, from shutoff to maximum capacity. Indicate separately head, capacity, horsepower demand, overall efficiency, and minimum submergence required at guarantee point.

4. Power and control wiring diagrams, including terminals and numbers.

5. Motor data.

6. Factory-finish system.

B. Informational Submittals:

1. Special shipping, storage and protection, and handling instructions.

2. Manufacturer's printed installation instructions.

3. Suggested spare parts list to maintain equipment in service for period of 1 year. Include list of special tools required for checking, testing, parts replacement, and maintenance with current price information.

4. List special tools, materials, and supplies furnished with equipment for use prior to and during startup and for future maintenance.

5. Operation and Maintenance Data as specified in Section 01 78 23 - Operation and Maintenance Manuals.

1.4 DELIVERY, STORAGE, AND HANDLING

A. Deliver, store and handle products and materials as specified in Division 1.

1.5 EXTRA MATERIALS

A. Furnish for each pump:

1. One set mechanical seals.

2. One complete set of special tools required to dismantle pump.

PART 2 PRODUCTS

2.1 GENERAL

A. Submersible, vertical shaft, centrifugal nonclog type, for pumping wastewater.

B. Designed for continuous operation under submerged or partially submerged conditions, and intermittent operation when totally dry without damage to pump or motor.

C. Pumps furnished under this section to be provided by a single manufacturer.

2.2 SUPPLEMENTS

A. Specific requirements are attached to this section as supplements.

2.3 COMPONENTS

A. Equipment consists of pump complete with motor, control system, guide rail, anchoring brackets, base elbow, power cable, pump lifting cable, and control panel.

B. Characteristics:

1. Motor and rotating parts shall be removable from motor end of pump.

2. Mating surfaces to be watertight and fitted with nitrile O-rings.

3. Pumps fitted with dynamically balanced nonclog impellers designed to pass course solids and stringy materials.

C. Lifting Arrangement:

1. Stainless steel chain, 2 feet minimum, and one “grip-eye.”

2. Attach chain permanently to pump and access platform with stainless steel wire rope.

3. “Grip-eye” capable of being threaded over and engaging links of stainless steel chain so pump and motor may be lifted with “grip-eye” and independent hoist.

D. Sliding Guide Bracket:

1. Integral part of pump unit.

2. Pump unit to be guided by no less than two guide bars, or equivalent cable system, and pressed tightly against discharge connection elbow with metal-to-metal contact or through use of profile-type gasket, provided gasket is attached to pump’s flange and can be easily accessed for inspection when pump is lifted out of wetwell.

E. Motor nameplate horsepower not to be exceeded at head-capacity point on pump curve.

F. Pump motor and sensor cables shall be suitable for submersible pump application and cable sizing shall conform to NFPA 70 specifications for pump motors. Cables shall be of sufficient length to reach junction boxes without strain or splicing.

G. Motor Protection Module: If required, provide pump with a motor protection module for remote mounting. Contract Drawings are based on first named submersible pump manufacturer and motor protection module. If pump and motor protection module other than first named manufacturer is provided, provide revised wiring for the motor protection module.

H. Cable Entry System:

1. Junction chamber and motor separated by stator lead sealing gland or terminal board that prevents foreign material entering through pump top.

2. Utilize cable with factory-installed sealing gland with nonshrink epoxy seal system.

3. O-ring compression seal between sealing gland and cable entry point shall also be acceptable.

2.4 CONTROL PANEL

A. NEMA 4X enclosure, for outdoor duty.

B. Manufacturer's standard panel.

C. Free standing, post mounted.

D. Features:

1. Main circuit breaker disconnect interlocked with panel door.

2. Combination circuit breaker type, NEMA rated motor starters.

3. Fused main power entrance terminal blocks for each 120 volt ac leg, terminal block for neutral.

4. ON/OFF switches.

5. Running lights.

6. Terminal strip for interfacing with external wiring.

7. Lightning protection.

8. Intrinsically safe relays as required for UL validation.

9. Document pocket located inside panel with pump and panel operation and maintenance manual, and separate laminated pump curve.

10. 110-volt, duplex GFI outlet, weather-protected, and accessible from outside of panel.

11. Run hour meter.

12. 100 watts minimum, condensation heater with thermostat.

13. UL listing mark.

E. Prewired and factory tested.

F. Mount control switches, indicating lights, and switches on hinged front panel.

G. Single Feed: 240 volts, single-phase.

2.5 ACCESSORIES

A. Equipment Identification Plate: 16-gauge stainless steel with 1/4-inch die-stamped equipment tag number securely mounted in readily visible location.

B. Anchor Bolts: Type 316 stainless steel, sized by equipment manufacturer, and as specified in Section 05 50 00 - Metal Fabrications. Coat in accordance with Section 09 96 00 - High Performance Coatings.

2.6 FACTORY FINISHING

A. Manufacturer's standard epoxy system for continuous submergence in corrosive water.

2.7 SOURCE QUALITY CONTROL

A. Control Panel:

1. Factory Inspections: Inspect control panels for required construction, electrical connection, and intended function.

PART 3 EXECUTION

3.1 INSTALLATION

A. Install in accordance with manufacturer's printed instructions.

B. Mount the discharge elbow to the floor of the wetwell floor with stainless steel bolts.

C. Connect piping without imposing strain to flanges.

D. No portion of pump shall bear directly on floor of sump.

3.2 FIELD FINISHING

A. Repair factory applied epoxy coating damaged during shipment and installation with manufacturer supplied coating.

3.3 FIELD QUALITY CONTROL

A. Functional Test: Conduct on each pump.

1. Alignment: Test complete assemblies for correct rotation, proper alignment and connection, and quiet operation.

2. Test for continuous 3-hour period.

3.4 MANUFACTURER'S SERVICES

A. Manufacturer's Representative: Present at Site or classroom designated by Owner, for minimum person-days listed below, travel time excluded:

1. 1/2 person-days for installation assistance and inspection.

2. 1/2 person-days for pre-startup classroom or Site training.

3.5 SUPPLEMENTS

A. The supplement listed below, following "End of Section," are part of this Specification.

1. Data Sheets: Pump and Motor.

END OF SECTION

SUBMERSIBLE PUMP DATA SHEET, 44 42 56-1

Tag Numbers: WW-01

Pump Name: Wash Water Pump

Manufacturer and Model Number: (1) Weil 1621

(2) Goulds 2ED

SERVICE CONDITIONS

Liquid Pumped (Material and Percent Solids): Filtered Effluent, 0% solids

Pumping Temperature (Fahrenheit): Normal: 60 Max 75 Min 45

Specific Gravity at 60 Degrees F: 1.0 Viscosity Range: 0.9-1.4 cP

pH: 6-9

Abrasive (Y/N) No Possible Scale Buildup (Y/N): No

PERFORMANCE REQUIREMENTS

Capacity (US gpm): Rated: 20

Total Dynamic Head (Ft): Rated: 100

Min. Rated Pump Hydraulic Efficiency at Rated Capacity (%): 40

Max. Pump Speed at Rated Capacity (rpm): Constant (Y/N): 3,500
Adjustable (Y/N): No

DESIGN AND MATERIALS

Pump Type: Heavy-Duty Nonclog (Y/N) Yes Other:

Volute Material: Cast Iron ASTM A48
Pump Casing Material: Cast Iron ASTM A48

Motor Housing Material: Cast Iron ASTM A48

SUBMERSIBLE PUMP DATA SHEET, 44 42 56-1

Tag Numbers: WW-01

Pump Name: Wash Water Pump

Elastomers: Nitrile Rubber

Fasteners: Stainless Steel

Impeller: Type:
Double-Shrouded Non-Clog (Y/N): Yes Other: _____
Material: Cast Iron ASTM A48

Shaft Material: Carbon Steel, ASTM A576 with stainless steel sleeve or all stainless steel.

Base Elbow: Cast Iron ASTM A48

Double Mechanical Seal (Y/N): Y Bearing Life (Hrs): 30,000

DRIVE MOTOR

Horsepower: 3 Voltage: 230 Phase: 1 Synchronous Speed (rpm): 3,600

Enclosure: EXP

Other Features: _____

Moisture Detection Switches (Y/N): No

Thermal Protection Embedded in Windings (Y/N): No

REMARKS: _____

SECTION 46 51 53

CASCADE AERATOR

PART 1 GENERAL

1.1 WORK OF THIS SECTION

A. Work of this section includes providing labor, material, equipment, coordination, field testing and training of OWNER personnel for one (1) complete and operational cascade aerator.

1.2 REFERENCES

A. The following is a list of standards which may be referenced in this section:

1. American Society for Testing and Materials (ASTM).

2. ASTM A167 – Type 304L and 316L Stainless Steel.

3. American National Standards Institute (ANSI).

4. American Welding Society (AWS).

1.3 SUBMITTALS

A. Action Submittals:

1. Shop Drawings:

a. Manufacturer's catalog information, descriptive literature, specifications, equipment weight, and identification of materials for construction.

b. Detailed structural and mechanical drawings showing equipment fabrications and interface with other items.

c. Anchorage and bracing drawings and cut sheets, as required by Section 40 05 01 - Supports and Anchors.

d. Dimensions, size, and locations of connections to other work.

B. Informational Submittals:

1. Welder/welding operator qualifications.

2. Welding inspector credentials.

3. Manufacturer's installation instructions.

4. Special shipping, storage and protection, and handling instructions.

5. Field functional test reports.

6. Welding Inspector's Report.

7. Operation and Maintenance Data: As specified in Section 01 78 23 - Operation and Maintenance, including routine maintenance requirements prior to system startup.

8. Manufacturer's Certificate of Proper Installation.

1.4 QUALIFICATIONS

A. Welder/Welding Operator: In accordance with AWS D1.6.

B. Welding Inspector: Certified in accordance with AWS QC 1, and having prior experience with welding codes specified.

1.5 QUALITY ASSURANCE

A. One Manufacturer shall supply all equipment specified in this Section.

B. The equipment shall be the product of a manufacturer engaged in the design and manufacture of similar equipment in successful operation in similar applications.

C. The manufacturer shall have experience with 20 installations of the same type of equipment as specified herein with successful operation for a minimum of 10 years.

D. Manufacturer shall submit a list of at least 10 previous installations, including contact information, of similar size, design, and complying with the requirements as set forth within this specification.

1.6 PRODUCT DELIVERY, STORAGE, AND HANDLING

A. Deliver, store, and handle products and materials as specified in Division 1.

B. Lifting straps in lieu of chains are to be employed when applicable by CONTRACTOR.

C. Equipment shall be stored and protected in accordance with the manufacturer's recommendations.

1.7 WARRANTY

A. The supplier shall guarantee in writing that the equipment furnished is appropriate for the intended service and shall be free of manufacturing and fabrication defects in material and workmanship for a period of one (1) year after the equipment is satisfactorily placed into service.

PART 2 PRODUCTS

2.1 MANUFACTURER

A. Design of the process for aerating Clean Water Plant effluent is based on equipment from first named manufacturer herein listed and as shown on Drawings. Manufacturers other than first named manufacturer will be responsible for coordinating layout changes and interface connections to other work and equipment which are different than that shown on Drawings.

B. The equipment shall be manufactured by:

1. Jim Myers & Sons, Inc. (JMS).

2. ENGINEER approved 'Or Equal'.

C. The equipment described by this specification defines minimum equipment requirements as supplied by the first-listed manufacturer. All unforeseen costs associated with any deviation from this specification shall be the sole responsibility of the CONTRACTOR.

2.2 SERVICE CONDITIONS

A. System shall be designed to aerate filtered effluent from the Clean Water Plant under the following operating conditions:

1. Ambient Temperature Range: Minus 20 degrees to 104 degrees Fahrenheit.

2. Maximum Wastewater Effluent Temperature: 25 degrees Celsius.

3. Minimum Flow: 2 MGD.

4. Average flow: 8.2 MGD.

5. Maximum Flow: 12.6 MGD.

6. Minimum Influent DO Concentration: 0 mg/L.

7. Minimum Target DO Concentration: 7 mg/L.

8. Maximum Headloss: 2.5 feet.

2.3 MATERIALS OF CONSTRUCTION

A. Equipment:

1. Material: 304 stainless steel.

2. Minimum thickness: 0.120 inch (11 gauge).

B. Hardware: All field assembly anchor bolts, bolts, nuts, washers and seal material shall be supplied by Manufacturer:

1. Nuts, fasteners, and anchor bolts (3/8 inch diameter): Type 304 stainless steel.

2. Seal Material: 3M 3/8 inch round ribbon sealant to be provided by Manufacturer.

2.4 CASCADE AERATOR SYSTEM

A. Static system designed and constructed for the minimum flow and maximum flow conditions in the post aeration process to increase the effluent dissolved oxygen content without the use of moving equipment.

B. Designed for installation in concrete basin with dimensions shown on Drawings. Width of aerator shall be 24-foot.

C. Seal equipment under the channel dividers and anchored in the concrete basin to eliminate all gaps and prevent effluent flow from migrating between aeration channels.

D. Influent Dissipation Baffle:

1. Reduces water velocity impact on Influent Chamber.

2. Distributes flow evenly to Influent Control Gates.

E. Influent Control Weir:

1. Diverts flow to individual aeration channels to ensure system performance under design minimum and design maximum influent hydraulic loadings.

2. Stepped in height to distribute flow to additional aeration channels as flow increases.

3. Each weir shall provide supplemental aeration during minimum hydraulic loading.

4. Distributes flow equally to each channel under peak flow conditions.

F. Aeration Channels:

1. Divide cascade aerator into channels with first channel sized for the minimum flow condition.

2. Channels shall consist of a series baffles designed to infuse air into effluent.

3. Factory assemble aeration baffles to channel dividers.

4. Each aeration channel shall be self-draining to prevent pooling when aeration channel is not receiving flow.

5. Structurally reinforce aerator by attaching structural bracing to the top of the channel dividers.

PART 3 EXECUTION

3.1 INSTALLATION

A. Install equipment where indicated on the contract drawings and in strict accordance with the manufacturer's written instruction.

B. Anchor Bolts: Supplied by Manufacturer and accurately place using templates supplied by Manufacturer.

C. CONTRACTOR will provide concrete encasement/basin with the sloped floor and dimensions as specified on Contract Drawings.

1. All smooth concrete surfaces shall be true plane within 1/4 inch in 10 feet 0 inches as determined by a 10 feet 0 inches straight edge placed anywhere on the surface, in any direction.

2. Abrupt irregularities shall not exceed 1/8 inch.

3. CONTRACTOR shall seal between cascade aerator and concrete basin with seal stripping furnished by Manufacturer and anchored in the concrete basin to eliminate short circuiting.

D. Lubricants and Lubricating Equipment: Anti-seize shall be applied to the threads of all stainless steel bolts before assembly at the factory and field assembly.

3.2 MANUFACTURER'S SERVICES

A. Provide manufacturer’s services with the minimum days and trips as follows:

1. A factory trained manufacturer’s representative shall be provided for a minimum of two (2) trips and a minimum of four (4) days to provide installation supervision, start-up and field testing services, and O&M

training services. The installation services shall be coordinated between the Contractor and the Manufacturer. The start-up and field testing services, and the O&M services shall be coordinated with the ENGINEER and RESIDENT PROJECT REPRESENTATIVE.

2. Manufacturer shall make one (1) site visit to provide installation supervision for a period of two (2) days at the start of equipment installation. Manufacturer shall make (1) site visit to provide start-up, field testing services, and O&M training services after equipment installation.

3. After installation supervision and field testing services by the manufacturer, the Contractor shall submit to the ENGINEER, a Manufacturer's Certificate of Proper Installation on the manufacturer's letterhead and signed by the Manufacturer certifying that the equipment was installed per the manufacturer's instructions.

4. The manufacturer shall provide start-up reports covering installation inspection and start up activities.

5. The manufacturer shall provide operator training to all required OWNER personnel. Training shall be for a minimum of 4 hours.

B. All costs, including travel, lodging, meals and incidentals for Manufacturer service shall be included in the CONTRACTOR'S bid.

END OF SECTION