# WAUKESHA WATER UTILITY
# GREAT LAKES WATER SUPPLY PROGRAM

GREAT WATER ALLIANCE™

## CONTRACT DRAWINGS:

# CONTRACT PACKAGE 3

## BOOSTER PUMPING STATION AND WATER SUPPLY CONTROL BUILDING

Waukesha Water Utility
SERVING WAUKESHA SINCE 1886

**MAYOR**
SHAWN N. REILLY

**WATER UTILITY COMMISSION**

| | |
|---|---|
| JOSEPH J. PIATT | COMMISSION PRESIDENT |
| | COMMISSION SECRETARY |
| ALDERMAN PETER BARTELS | COMMISSIONER |
| GERALD COURI | COMMISSIONER |
| JOAN FRANCOEUR | COMMISSIONER |
| ALDERMAN TERRY THIEME | COMMISSIONER |
| PAUL YBARRA | COMMISSIONER |

**WATER UTILITY GENERAL MANAGER**
DAN DUCHNIAK, PE

**WATER OPERATIONS MANAGER**
KELLY ZYLSTRA, PE

**TECHNICAL SERVICES MANAGER**
CHRIS WALTER, PE

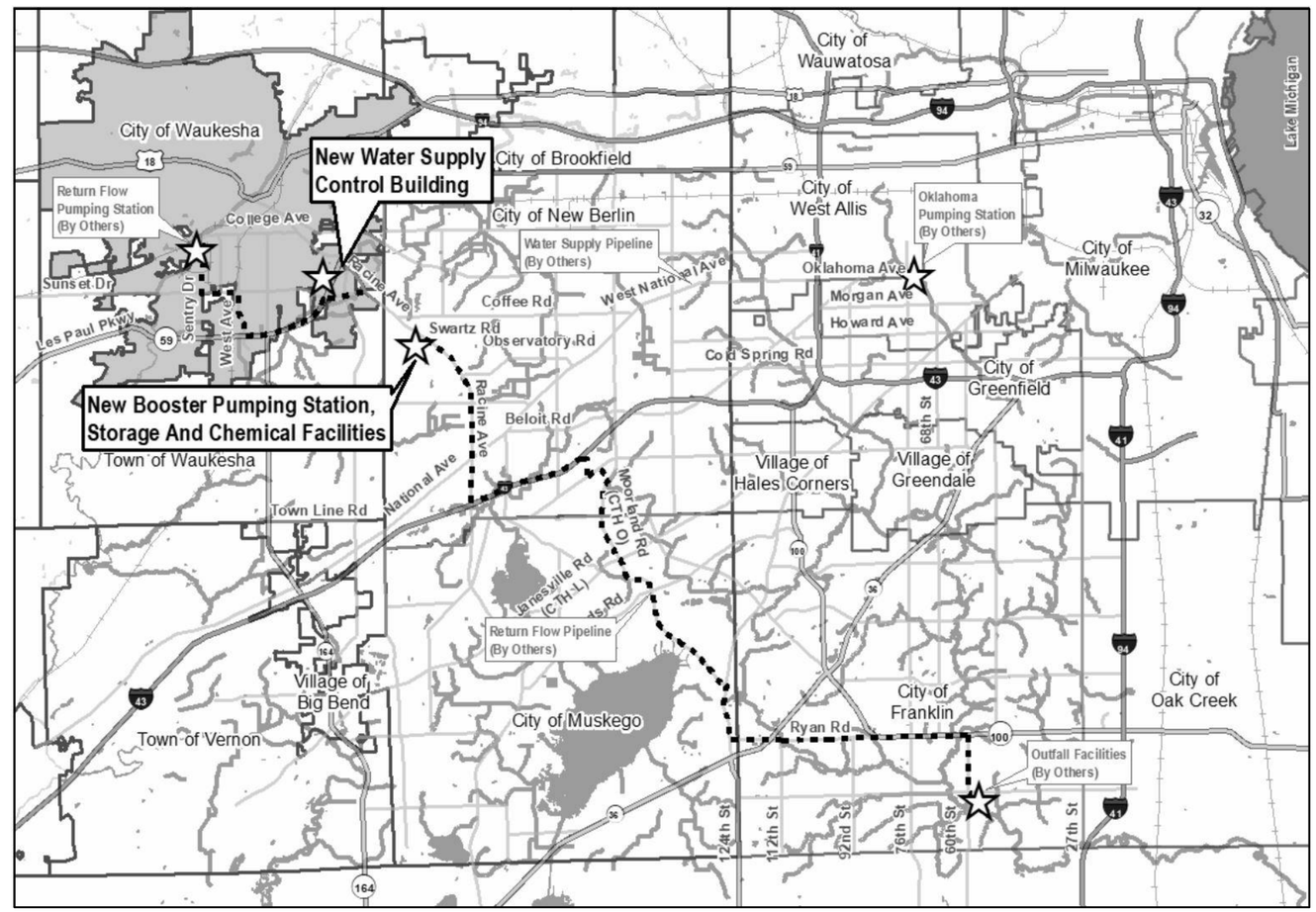


**VICINITY MAP**
SCALE: NOT TO SCALE

GREELEY AND HANSEN
741 N. GRAND AVE, SUITE 308
WAUKESHA, WI 53186

DRAFT 98% PROGRESS DRAWINGS

DIGGERS HOTLINE
Dial 811 or (800) 242-8511
www.DiggersHotline.com

**NEW BERLIN PERMIT SET**
**OCTOBER 2019**

10/2/2019 10:04:50 AM BAR MEASURE 1" ON FULL SIZE SHEETS
FILE: C:\Users\lgreen\Documents\GLWSP-P3-BPSF-GAMHPNE_lgreen.rvt

# ENGINEER SEALS AND SIGNATURES

## SHEET 1 OF 1

| | | | | | | |
|---|---|---|---|---|---|---|
| EXP DATE: _____ | EXP DATE: _____ | EXP DATE: _____ | EXP DATE: _____ | EXP DATE: _____ | EXP DATE: _____ | EXP DATE: _____ |
| SIGNATURE: DATE: | SIGNATURE: DATE: | SIGNATURE: DATE: | SIGNATURE: DATE: | SIGNATURE: DATE: | SIGNATURE: DATE: | SIGNATURE: DATE: |
| TITLE: | TITLE: | TITLE: | TITLE: | TITLE: | TITLE: | TITLE: |
| GREELEY AND HANSEN LLC<br>FIRM: | GREELEY AND HANSEN LLC<br>FIRM: | GREELEY AND HANSEN LLC<br>FIRM: | GREELEY AND HANSEN LLC<br>FIRM: | GREELEY AND HANSEN LLC<br>FIRM: | GRAEF-USA INC<br>FIRM: | GRAEF-USA INC<br>FIRM: |
| DRAWING LIST: | DRAWING LIST: | DRAWING LIST: | DRAWING LIST: | DRAWING LIST: | DRAWING LIST: | DRAWING LIST: |
| AG1 | AA1 | AH1 | AE1 | AN1 | AC3 | AS1 |
| AG2 | AA2 | AH2 | AE2 | AN2 | AC4 | AS2 |
| AG3 | AA3 | AH3 | AE3 | AN3 | AC5 | AS3 |
| AG4 | AA4 | | AE4 | AN4 | AC6 | AS4 |
| AG5 | | AP1 | AE5 | AN5 | AC7 | AS5 |
| AG6 | BA1 | AP2 | AE6 | AN6 | AC8 | |
| AG7 | BA2 | AP3 | | AN7 | AC9 | BS1 |
| | BA3 | AP4 | BE1 | AN8 | | BS2 |
| AC1 | BA4 | | BE2 | | BC7 | BS3 |
| AC2 | BA5 | AF1 | BE3 | BN1 | BC8 | BS4 |
| | BA6 | | BE4 | BN2 | BC9 | BS5 |
| AM1 | BA7 | BH1 | BE5 | BN3 | BC10 | BS6 |
| AM2 | BA8 | BH2 | BE6 | BN4 | BC11 | BS7 |
| AM3 | BA9 | BH3 | BE7 | BN5 | BC12 | BS8 |
| | BA10 | BH4 | BE8 | BN6 | BC13 | BS9 |
| BC1 | BA11 | BH5 | BE9 | BN7 | | BS10 |
| BC2 | BA12 | | BE10 | BN8 | CC4 | BS11 |
| BC3 | BA13 | BP1 | BE11 | BN9 | CC5 | BS12 |
| BC4 | BA14 | BP2 | BE12 | | | BS13 |
| BC5 | BA15 | BP3 | BE13 | CN1 | | BS14 |
| BC6 | BA16 | BP4 | BE14 | | | BS15 |
| BC14 | BA17 | BP5 | BE15 | | | CS1 |
| BM1 | BA18 | | BE16 | | | CS2 |
| BM2 | BA19 | BF1 | BE17 | | | CS3 |
| BM3 | BA20 | BF2 | BE18 | | | |
| BM4 | BA21 | | BE19 | | | |
| BM5 | BA22 | CH1 | BE20 | | | |
| BM6 | BA23 | CP1 | BE21 | | | |
| BM7 | CA1 | | BE22 | | | |
| BM8 | CA2 | | | | | |
| BM9 | CA3 | | CE1 | | | |
| BM10 | | | CE2 | | | |
| BM11 | | | CE3 | | | |
| BM12 | | | | | | |
| BM13 | | | | | | |
| BM14 | | | | | | |
| BM15 | | | | | | |
| BM16 | | | | | | |
| BM17 | | | | | | |
| BM18 | | | | | | |
| BM19 | | | | | | |
| CC1 | | | | | | |
| CC2 | | | | | | |
| CC3 | | | | | | |
| CC6 | | | | | | |
| CM1 | | | | | | |
| CM2 | | | | | | |

**THE DRAWINGS LISTED AND BOUND HEREIN ARE PART OF THE CONTRACT FOR:**

# WAUKESHA WATER UTILITY
# GREAT LAKES WATER SUPPLY PROGRAM
# CONTRACT PACKAGE 3

## BOOSTER PUMPING STATION AND
## WATER SUPPLY CONTROL BUILDING

OCTOBER 2019

**PERMIT SET**
**NOT FOR CONSTRUCTION**

BAR MEASURE 1" ON FULLSIZE SHEETS
10/01/2019 9:56:38 AM
FILE: \\GH-DATA01\CLIENT02\15310-WAUKESHA GREAT LAKES WATER SUPPLY PM-CM\21 CADD\21.05 WORKING DWGS\CONTRACT PACKAGE 3 - BPSF\GLWSP-P3-BPSF-AG0I.DWG

# INDEX

## GENERAL

| DWG NO | SHEET | DESCRIPTION |
|---|---|---|
| **GENERAL** | | |
| - | i | CONTRACT PACKAGE 3 - COVER SHEET |
| - | ii | ENGINEER SEALS AND SIGNATURES |
| 1 | AG1 | INDEX OF DRAWINGS |
| 2 | AG2 | GENERAL NOTES |
| 3 | AG3 | SYMBOLS AND ABBREVIATIONS |
| 4 | AG4 | GENERAL LOCATION MAP |
| 5 | AG5 | AREA B - LOCATION PLAN |
| 6 | AG6 | AREA C - LOCATION PLAN |
| 7 | AG7 | OVERALL PROCESS FLOW DIAGRAM |
| **CIVIL** | | |
| 8 | AC1 | NOTES, SYMBOLS AND LEGEND |
| 9 | AC2 | UTILITY DETAILS |
| 10 | AC3 | GRADING AND EROSION CONTROL NOTES AND DETAILS |
| 11 | AC4 | GRADING AND EROSION CONTROL DETAILS |
| 12 | AC5 | GRADING AND EROSION CONTROL DETAILS |
| 13 | AC6 | GRADING AND EROSION CONTROL DETAILS |
| 14 | AC7 | LANDSCAPE AND RESTORATION NOTES |
| 15 | AC8 | LANDSCAPE AND RESTORATION DETAILS |
| 16 | AC9 | LANDSCAPE AND RESTORATION DETAILS |
| **STRUCTURAL** | | |
| 17 | AS1 | SYMBOL LEGEND |
| 18 | AS2 | GENERAL NOTES |
| 19 | AS3 | WALL, SLAB AND FOOTING DETAILS |
| 20 | AS4 | PIPING SUPPORT SECTIONS AND DETAILS |
| 21 | AS5 | PIPING SUPPORT SECTIONS AND DETAILS |
| **ARCHITECTURAL** | | |
| 22 | AA1 | NOTES AND ABBREVIATIONS |
| 23 | AA2 | CODE SUMMARY |
| 24 | AA3 | FRP RAILING DETAILS |
| 25 | AA4 | AL RAILING DETAILS |
| **MECHANICAL** | | |
| 26 | AM1 | NOTES, SYMBOLS AND LEGEND |
| 27 | AM2 | DETAILS |
| 28 | AM3 | DETAILS |
| **HVAC** | | |
| 29 | AH1 | GENERAL NOTES, SYMBOLS AND LEGEND |
| 30 | AH2 | DETAILS |
| 31 | AH3 | DETAILS |
| **PLUMBING** | | |
| 32 | AP1 | GENERAL NOTES, SYMBOLS AND LEGEND |
| 33 | AP2 | DETAILS |
| 34 | AP3 | DETAILS |
| 35 | AP4 | DETAILS |
| **FIRE PROTECTION** | | |
| 36 | AF1 | GENERAL NOTES, SYMBOLS AND LEGEND |
| **ELECTRICAL** | | |
| 37 | AE1 | SYMBOL LEGEND |
| 38 | AE2 | CABLE AND CONDUIT SCHEDULE |
| 39 | AE3 | CABLE AND CONDUIT SCHEDULE |
| 40 | AE4 | CABLE AND CONDUIT SCHEDULE |
| 41 | AE5 | DETAILS |
| 42 | AE6 | DETAILS |
| **INSTRUMENTATION** | | |
| 43 | AN1 | NOTES AND SYMBOLS LEGEND |
| 44 | AN2 | DETAILS |
| 45 | AN3 | DETAILS |
| 46 | AN4 | DETAILS |
| 47 | AN5 | PLC PANEL DETAILS |
| 48 | AN6 | CHEMICAL FEED - FILL TANK PANEL |
| 49 | AN7 | CONTROL NETWORK BLOCK DIAGRAM |
| 50 | AN8 | CONTROL NETWORK ARCHITECTURE DIAGRAM |

## BOOSTER PUMPING STATION

| DWG NO | SHEET | DESCRIPTION |
|---|---|---|
| **CIVIL** | | |
| 51 | BC1 | EXISTING SITE AND YARD PIPING DEMOLITION PLAN |
| 52 | BC2 | YARD PIPING PARTIAL PLAN |
| 53 | BC3 | YARD PIPING VALVE VAULT DETAILS |
| 54 | BC4 | YARD PIPING VALVE VAULT DETAILS |
| 55 | BC5 | YARD PIPING PROFILES |
| 56 | BC6 | YARD PIPING PROFILES |
| 57 | BC7 | GRADING, EROSION CONTROL, SANITARY AND STORMWATER PIPING PLAN |
| 58 | BC8 | STORMWATER PROFILE AND PAVING DETAILS |
| 59 | BC9 | INTERIM GRADING AND EROSION CONTROL PLAN |
| 60 | BC10 | SITE GRADING AND PAVING PLAN |
| 61 | BC11 | SITE AND PAVING DETAILS |
| 62 | BC12 | LANDSCAPE AND RESTORATION PLAN |
| 63 | BC13 | LANDSCAPE AND RESTORATION DETAILS |
| 64 | BC14 | CONSTRUCTION STAGING PLAN |
| **STRUCTURAL** | | |
| 65 | BS1 | FOUNDATION PLAN AT EL 967.50 |
| 66 | BS2 | FLOOR FRAMING PLAN AT EL 981.50 |
| 67 | BS3 | PRECAST ROOF - FRAMING PLAN AT EL 994.83 |
| 68 | BS4 | LOW ROOF - FRAMING PLAN AT EL 994.83 |
| 69 | BS5 | HIGH ROOF - FRAMING PLAN AT EL 1006.17 |
| 70 | BS6 | FOUNDATION - SECTIONS AND DETAILS |
| 71 | BS7 | FOUNDATION - SECTIONS AND DETAILS |
| 72 | BS8 | CONCRETE FLOOR- SECTIONS AND DETAILS |
| 73 | BS9 | CONCRETE FLOOR - SECTIONS AND DETAILS |
| 74 | BS10 | MASONRY - SECTIONS AND DETAILS |
| 75 | BS11 | MASONRY - SECTIONS AND DETAILS |
| 76 | BS12 | LOW ROOF - SECTIONS AND DETAILS |
| 77 | BS13 | FRAME AND FRAME DETAILS |
| 78 | BS14 | HIGH ROOF - TRUSS ELEVATIONS |
| 79 | BS15 | HIGH ROOF - SECTIONS AND DETAILS |
| **ARCHITECTURAL** | | |
| 80 | BA1 | LIFE SAFETY DIAGRAMS AND NOTES |
| 81 | BA2 | PLAN AT EL 967.50 |
| 82 | BA3 | PLAN AT EL 981.50 |
| 83 | BA4 | LOW ROOF AND CLERESTORY PLAN AT EL 1001.50 |
| 84 | BA5 | HIGH ROOF PLAN AT EL 1014.18 |
| 85 | BA6 | ENLARGED PLAN AT EL 981.50 |
| 86 | BA7 | ENLARGED PLAN AT EL 981.50 |
| 87 | BA8 | BUILDING ELEVATIONS |
| 88 | BA9 | BUILDING ELEVATIONS |
| 89 | BA10 | BUILDING SECTIONS |
| 90 | BA11 | BUILDING SECTIONS |
| 91 | BA12 | ENLARGED VIEWS AND REFLECTED CEILING PLANS |
| 92 | BA13 | ENLARGED VIEWS - STONE PROFILES AND DETAILS |
| 93 | BA14 | ENLARGED VIEWS - STAIRS A, B, C AND DETAILS |
| 94 | BA15 | WALL SECTIONS |
| 95 | BA16 | WALL SECTIONS |
| 96 | BA17 | WALL SECTION DETAILS |
| 97 | BA18 | WALL SECTION DETAILS |
| 98 | BA19 | SCHEDULES AND DETAILS |
| 99 | BA20 | SCHEDULES AND DETAILS |
| 100 | BA21 | OPENING DETAILS |
| 101 | BA22 | MISC DETAIL VIEWS |
| 102 | BA23 | 3D VIEWS |
| **MECHANICAL** | | |
| 103 | BM1 | PUMPING SYSTEM AND RESERVOIR - PROCESS FLOW DIAGRAM |
| 104 | BM2 | SODIUM HYPOCHLORITE - SYSTEM DIAGRAM |
| 105 | BM3 | LIQUID AMMONIUM SULFATE - SYSTEM DIAGRAM |
| 106 | BM4 | DIAGRAMS |
| 107 | BM5 | PLAN AT EL 967.50 |
| 108 | BM6 | PLAN AT EL 981.50 |
| 109 | BM7 | CHEMICAL ROOM NO. 1 - PLAN AT EL 977.50 AND 984.00 |
| 110 | BM8 | CHEMICAL ROOM NO. 2 - PLAN AT EL 977.50 AND 984.00 |
| 111 | BM9 | CHEMICAL ROOM NO. 1 SECTIONS |
| 112 | BM10 | CHEMICAL ROOM NO. 1 SECTIONS |
| 113 | BM11 | CHEMICAL ROOM NO. 2 SECTIONS |
| 114 | BM12 | CHEMICAL ROOM NO. 2 SECTIONS |
| 115 | BM13 | PUMPING ROOM SECTIONS |
| 116 | BM14 | PUMPING ROOM SECTIONS |
| 117 | BM15 | PUMPING ROOM SECTIONS |
| 118 | BM16 | RESERVOIR PIPING PLAN |
| 119 | BM17 | RESERVOIR SECTIONS AND DETAILS |
| 120 | BM18 | RESERVOIR SECTIONS AND DETAILS |
| 121 | BM19 | RESERVOIR SECTIONS AND DETAILS |

## BOOSTER PUMPING STATION CONTINUED

| DWG NO | SHEET | DESCRIPTION |
|---|---|---|
| **HVAC** | | |
| 122 | BH1 | SCHEDULES |
| 123 | BH2 | SCHEDULES |
| 124 | BH3 | AIR FLOW DIAGRAMS |
| 125 | BH4 | PLAN AT EL 967.50 AND NG DIAGRAM |
| 126 | BH5 | PLAN AT EL 981.50 |
| **PLUMBING** | | |
| 127 | BP1 | SCHEDULES |
| 128 | BP2 | DIAGRAMS |
| 129 | BP3 | DIAGRAMS |
| 130 | BP4 | PLANS |
| 131 | BP5 | PLAN AT EL 981.50 |
| **FIRE PROTECTION** | | |
| 132 | BF1 | DIAGRAM AND DESIGN CRITERIA |
| 133 | BF2 | PLANS |
| **ELECTRICAL** | | |
| 134 | BE1 | SITE PLAN |
| 135 | BE2 | SWITCHGEAR ONE LINE DIAGRAM |
| 136 | BE3 | SWITCHGEAR AND MCC ELEVATIONS |
| 137 | BE4 | MCC ONE LINE DIAGRAM |
| 138 | BE5 | MCC ONE LINE DIAGRAM |
| 139 | BE6 | SCHEMATIC DIAGRAMS |
| 140 | BE7 | SCHEMATIC DIAGRAMS |
| 141 | BE8 | BLOCK DIAGRAMS |
| 142 | BE9 | BLOCK DIAGRAMS |
| 143 | BE10 | POWER PLAN AT EL 967.50 |
| 144 | BE11 | POWER PLAN AT EL 981.50 |
| 145 | BE12 | POWER PLAN AT EL 981.50 |
| 146 | BE13 | LIGHTING PLAN AT EL 967.50 |
| 147 | BE14 | LIGHTING PLAN AT EL 981.50 |
| 148 | BE15 | LIGHTING PLAN AT EL 981.50 |
| 149 | BE16 | COMMUNICATIONS AND SECURITY SYSTEMS RISER DIAGRAMS |
| 150 | BE17 | COMMUNICATIONS AND SECURITY SYSTEMS PLANS |
| 151 | BE18 | FIRE ALARM RISER DIAGRAM |
| 152 | BE19 | FIRE ALARM PLANS |
| 153 | BE20 | GROUNDING PLAN AND DETAILS |
| 154 | BE21 | LIGHTNING PROTECTION PLAN AND DETAILS |
| 155 | BE22 | SCHEDULES |
| **INSTRUMENTATION** | | |
| 156 | BN1 | PUMPING SYSTEM AND RESERVOIR - P&ID |
| 157 | BN2 | PUMPING SYSTEM AND RESERVOIR - P&ID |
| 158 | BN3 | PUMPING SYSTEM AND RESERVOIR - P&ID |
| 159 | BN4 | SODIUM HYPOCHLORITE FEED - P&ID |
| 160 | BN5 | SODIUM HYPOCHLORITE FEED - P&ID |
| 161 | BN6 | SODIUM HYPOCHLORITE FEED - P&ID |
| 162 | BN7 | LIQUID AMMONIUM SULFATE FEED - P&ID |
| 163 | BN8 | LIQUID AMMONIUM SULFATE FEED - P&ID |
| 164 | BN9 | LIQUID AMMONIUM SULFATE FEED - P&ID |

## WATER SUPPLY CONTROL BUILDING

| DWG NO | SHEET | DESCRIPTION |
|---|---|---|
| **CIVIL** | | |
| 165 | CC1 | EXISTING SITE AND DEMOLITION PLAN |
| 166 | CC2 | YARD PIPING PLAN AND DETAILS |
| 167 | CC3 | YARD PIPING PROFILES |
| 168 | CC4 | GRADING AND RESTORATION PLAN |
| 169 | CC5 | SITE, LANDSCAPE AND PAVING PLAN |
| 170 | CC6 | CONSTRUCTION STAGING PLAN |
| **STRUCTURAL** | | |
| 171 | CS1 | FOUNDATION AND ROOF FRAMING PLANS |
| 172 | CS2 | SECTIONS AND DETAILS |
| 173 | CS3 | ROOFING DETAILS |
| **ARCHITECTURAL** | | |
| 174 | CA1 | PLANS AND BUILDING SECTIONS |
| 175 | CA2 | BUILDING ELEVATIONS |
| 176 | CA3 | ENLARGED VIEWS, WALL SECTIONS, SCHEDULES, AND DETAILS |
| **MECHANICAL** | | |
| 177 | CM1 | PROCESS FLOW DIAGRAM AND PLANS AT EL 850.00 AND 858.67 |
| 178 | CM2 | SECTIONS |
| **HVAC** | | |
| 179 | CH1 | PLAN, AIR FLOW DIAGRAM AND SCHEDULE |
| **PLUMBING** | | |
| 180 | CP1 | PLANS AND PLUMBING DIAGRAM |
| **ELECTRICAL** | | |
| 181 | CE1 | SITE PLAN AND ONE-LINE DIAGRAM |
| 182 | CE2 | POWER AND LIGHTING PLANS |
| 183 | CE3 | SCHEDULES |
| **INSTRUMENTATION** | | |
| 184 | CN1 | WSCB - P&ID |

## AREA DESIGNATION

| | |
|---|---|
| A | GENERAL |
| B | BOOSTER PUMPING STATION |
| C | WATER SUPPLY CONTROL BUILDING |

## DISCIPLINE DESIGNATION

| | |
|---|---|
| G | GENERAL |
| C | CIVIL PROCESS / CIVIL SITE |
| S | STRUCTURAL |
| A | ARCHITECTURAL |
| M | PROCESS MECHANICAL |
| H | HVAC |
| P | PLUMBING |
| F | FIRE PROTECTION |
| E | ELECTRICAL |
| N | INSTRUMENTATION |

## SHEET NUMBER LEGEND

AREA DESIGNATION
DISCIPLINE DESIGNATION
CONSECUTIVE NUMBER PER BUILDING OR SEPARATE STRUCTURE DESIGNATION

BC4

DRAFT 98% PROGRESS DRAWINGS
OCTOBER 2019

| NO. | DATE | APPD | DESCRIPTION |
|---|---|---|---|

Waukesha Water Utility
SERVING WAUKESHA SINCE 1886

GREELEY AND HANSEN
741 N. GRAND AVE. SUITE 308
WAUKESHA, WI 53186

GREAT WATER ALLIANCE™

CONTRACT PACKAGE 3: BOOSTER PUMPING STATION AND WATER SUPPLY CONTROL BUILDING

INDEX OF DRAWINGS

APPROVED

SEAL AFFIXED
MONTH / DAY / YEAR

OCTOBER 2019

| | | | |
|---|---|---|---|
| JOB NO.: | 15310 | | |
| DESGN | LAM | CHCK | RMC |
| APPRV | AJM | DRWN | OR |
| SCALE: | NO SCALE | | |

DRAWING NUMBER

AG1

SHEET 1 OF 184 REV

10/2/2019 10:04:56 AM
BAR MEASURE 1" ON FULLSIZE SHEETS
FILE: C:\Users\lgreen\Documents\GLWSP-P3-BPSF-GAMHPNE_lgreen.rvt

## GENERAL NOTES:

1. THE ENGINEER ASSUMES NO RESPONSIBILITY FOR DAMAGES, LIABILITY, OR COSTS RESULTING FROM CHANGES OR ALTERATIONS MADE TO THESE DRAWINGS WITHOUT THE WRITTEN CONSENT OF THE ENGINEER.

2. THE INFORMATION PROVIDED IN THESE DRAWINGS PERTAINING TO EXISTING CONDITIONS IS SOLELY TO ASSIST THE CONTRACTOR IN ASSESSING THE NATURE AND EXTENT OF THE CONDITIONS, WHICH MAY BE ENCOUNTERED DURING THE COURSE OF WORK. CONTRACTORS ARE DIRECTED, PRIOR TO BIDDING, TO CONDUCT WHATEVER INVESTIGATIONS THEY MAY DEEM NECESSARY TO ARRIVE AT THEIR OWN CONCLUSIONS REGARDING THE ACTUAL CONDITIONS THAT WILL BE ENCOUNTERED, AND UPON WHICH THEIR BIDS WILL BE BASED.

3. SECTIONS AND DETAILS ARE IDENTIFIED WITH A FRACTION. THE NUMERATOR IS THE SECTION OR DETAIL NUMBER AND THE DENOMINATOR IS THE DRAWING NUMBER ON WHICH THE SECTION IS CUT OR SHOWN OR THE DETAIL IS SHOWN.

4. NEW WORK IS SHOWN USING HEAVIER LINES THAN THOSE USED FOR EXISTING CONDITIONS AND FACILITIES.

5. THESE DRAWINGS MAY BE REDUCED IN SIZE FROM THE ORIGINALS. USE ONLY THE GRAPHIC SCALES.

6. THE HORIZONTAL DATUM IS NORTH AMERICAN DATUM OF 1927 (NAD27) WISCONSIN STATE PLANE COORDINATE SYSTEM, SOUTH ZONE, IN U.S. SURVEY FEET. THE VERTICAL DATUM IS NATIONAL GEODETIC VERTICAL DATUM OF 1929 (NGVD29).

7. THE SURVEYS WERE TAKEN BETWEEN JANUARY 2017 TO JANUARY 2019 AND UTILIZED IN THE PREPARATION OF THESE DRAWINGS.

8. IMMEDIATELY NOTIFY THE RESIDENT PROJECT REPRESENTATIVE WHEN CONFLICTS BETWEEN THESE DRAWINGS AND ACTUAL CONDITIONS ARE DISCOVERED.

9. THE PIPE LENGTHS INDICATED ON THESE DRAWINGS ARE IN LINEAR FEET AND ARE NOT THE ACTUAL LENGTH OF PIPE. PIPE CALLOUT IS NOMINAL DIAMETER.

10. WHERE CONTOURS ARE NOT SHOWN ON PLAN, INVESTIGATE GRADE SURROUNDING WORK SITE PRIOR TO BIDDING. APPROXIMATE GRADE ABOVE PIPELINE SHOWN ON PROFILES REPRESENTS THE TOP OF PAVEMENT, GRAVEL, OR LANDSCAPED AREAS ABOVE THE CENTERLINE OF THE PIPE.

11. THESE DRAWINGS DO NOT CONSTITUTE AN EROSION CONTROL PLAN. PROVIDE AN EROSION CONTROL PLAN IN ACCORDANCE WITH EACH AUTHORITY HAVING JURISDICTION AND THE WISCONSIN DEPARTMENT OF NATURAL RESOURCES.

12. THESE DRAWINGS DO NOT CONSTITUTE A STORMWATER MANAGEMENT PLAN. CONTRACTOR TO PROVIDE FOR THE DRAINAGE OF STORMWATER, WATER APPLIED, OR WATER DISCHARGED IN PERFORMANCE OF THE WORK. PROVIDE ADEQUATE DRAINAGE FACILITIES TO PREVENT DAMAGE TO THE WORK, THE SITE, AND ADJACENT PROPERTY. SUPPLEMENT EXISTING DRAINAGE CHANNELS, CONDUITS AND DIKES AS NECESSARY TO DIVERT AND CARRY THE EXISTING RUNOFF AND THE INCREASED RUNOFF DUE TO THE WORK. PROVIDE PONDING AS NECESSARY TO PREVENT DOWNSTREAM FLOODING. MAINTAIN EXCAVATION FREE OF WATER. PROVIDE, OPERATE, AND MAINTAIN PUMPING EQUIPMENT AS NEEDED.

13. SURVEY AND MARK WETLAND LIMITS CLEARLY PRIOR TO WORK IN THE AREA AND MAINTAIN WETLAND LIMIT MARKINGS UNTIL FINAL ACCEPTANCE OF RESTORATION. AFTER PIPE INSTALLATION, PLACE WETLAND RESTORATION SIGNS AT THE WETLAND BOUNDARIES EVERY TIME THE CONSTRUCTION CORRIDOR ENTERS OR EXITS A JURISDICTIONAL WETLAND AS DELINEATED ON THESE DRAWINGS. WHERE THE WETLAND BOUNDARY IS PARALLEL AND LOCATED WITHIN THE LIMITS OF THE CONSTRUCTION, PLACE SIGNS AT A DISTANCE NO GREATER THAN 400 FEET APART. LOCATE DISCHARGE FROM DEWATERING OPERATIONS MORE THAN 100 FEET FROM WETLANDS, PREVENT SEDIMENTATION FROM ACCUMULATING WITHIN THE WETLAND, AND PREVENT EROSION DAMAGE TO THE WETLAND.

14. CONTACT WATER USERS / CUSTOMERS AFFECTED BY A PLANNED WATER UTILITY SHUTDOWN PRIOR TO THE SHUTDOWN PER THE SPECIFICATIONS. COMMUNICATE THE ANTICIPATED BEGINNING TIME AND APPROXIMATE DURATION OF SHUTDOWN.

15. CONTRACTOR SHALL NOT OPERATE EXISTING VALVES AT ANY TIME. THE LOCAL WATER AUTHORITY WILL OPERATE EXISTING VALVES. OPERATIONAL FUNCTIONS OF THE EXISTING SYSTEMS THAT ARE REQUIRED TO BE DONE TO FACILITATE THE WORK OF THE CONTRACTOR WILL BE PERFORMED BY THE LOCAL WATER AUTHORITY.

16. CALL DIGGERS HOTLINE AT (811) OR (800) 242-8511 THREE WORKING DAYS IN ADVANCE OF WORK TO OBTAIN THE LOCATION OF EXISTING UNDERGROUND UTILITIES. PROVIDE THREE WORKING DAYS NOTICE PRIOR TO THE START OF WORK IN THOSE AREAS TO A DESIGNATED LOCATING SERVICE, UTILITIES, GOVERNMENTAL AGENCIES, AND OTHERS REASONABLY ASSUMED TO HAVE ABOVE AND BELOW GROUND UTILITIES WITHIN THE LIMITS OF CONSTRUCTION. EXCAVATION WORK SHALL NOT COMMENCE IN ANY AREA WHERE UNDERGROUND UTILITIES HAVE NOT BEEN LOCATED.

17. LOCATIONS, ELEVATIONS, AND DIMENSIONS OF EXISTING UTILITIES ARE SHOWN ACCORDING TO THE BEST INFORMATION AVAILABLE AT THE TIME OF PREPARATION OF THESE DRAWINGS. NOT ALL ELEVATIONS OF UTILITIES SHOWN IN THE PROFILE HAVE BEEN ESTABLISHED FROM ACTUAL FIELD CONDITIONS OR AS-BUILT INFORMATION. UTILITIES SUCH AS UNDERGROUND FIBER OPTIC, CABLE, TELEPHONE, ELECTRIC, PRIVATE WATER LATERALS, AND PRIVATE GAS LATERALS ARE SHOWN ONLY IN THE PLAN, DO NOT HAVE SIZES IDENTIFIED, AND ARE NOT SHOWN IN THE PROFILE. PRIVATE SANITARY LATERALS HAVE NOT BEEN LOCATED AND ARE NOT IDENTIFIED ON THE PLAN OR PROFILE. WHEN WORKING IN AN AREA WHERE EXISTING UTILITIES ARE ANTICIPATED, PROTECT EXISTING UTILITIES AND PROVIDE PROPER AND ADEQUATE SUPPORT DURING CONSTRUCTION TO AVOID DAMAGE OR BREAKAGE. REMOVE, REPLACE, RELOCATE, REPAIR, AND/OR SECURE ANY UTILITY OR STRUCTURE DAMAGED AS A DIRECT OR INDIRECT RESULT OF THE WORK AT NO ADDITIONAL COST TO THE OWNER. WHEN RELOCATING UTILITIES, GRAVITY UTILITIES TAKE PRECEDENT OVER PRESSURIZED UTILITIES.

18. PROVIDE VERTICAL SEPARATION BETWEEN THE NEW PIPELINE AND ANY OTHER UTILITY NO LESS THAN 18-INCHES. PROVIDE HORIZONTAL SEPARATION BETWEEN EXISTING WATER MAINS OR THE NEW WATER PIPELINES AND THE NEW RETURN FLOW PIPELINE, EXISTING SANITARY/STORM SEWERS, OR EXISTING SANITARY/STORM SEWER MANHOLES NO LESS THAN AN 8-FEET CENTERLINE TO CENTERLINE. WHERE REQUIRED SEPARATIONS CANNOT BE ACHIEVED, NOTIFY THE RESIDENT PROJECT REPRESENTATIVE IN WRITING, WHO WILL DIRECT THE CONTRACTOR AS NECESSARY.

19. WHEN CROSSING EXISTING UTILITIES, USE FLOWABLE FILL TO PROVIDE ADEQUATE STRUCTURAL SUPPORT FOR BOTH THE PIPELINE AND THE UTILITY. EXCAVATE AND BACKFILL WITH SLURRY A MINIMUM OF 5'-0" ON EACH SIDE OF THE EXISTING UTILITY AT THE CROSSING LOCATION. PROPERLY AND ADEQUATELY SUPPORT THE EXISTING UTILITY UNTIL SLURRY MATERIAL HAS SET UP. ALL VALVES AND ANY SLIDING OR EXPANSION STYLE JOINTS SHALL BE BOXED OUT.

20. EXCAVATE TRENCHES IN CONFORMITY WITH THE REQUIRED ALIGNMENT AND PROFILE AS SHOWN ON THESE DRAWINGS. FIELD CONDITIONS MAY NECESSITATE SLIGHT ALIGNMENT AND GRADE DEVIATION FROM THE DESIGN TO AVOID OBSTACLES. MAKE HORIZONTAL AND VERTICAL ADJUSTMENTS TO THE PIPELINE, AS REQUIRED, TO ACCOMMODATE FIELD CONDITIONS. ADJUSTMENTS SHALL BE APPROVED BY THE RESIDENT PROJECT REPRESENTATIVE AND ARE INCIDENTAL TO THE CONTRACT PRICE. INSTALL NEW PIPE TO THE ELEVATION AND SLOPES SHOWN ON THESE DRAWINGS WITH NO INTERMEDIATE HIGH OR LOW POINTS BETWEEN VERTICAL POINTS OF INFLECTION. ACCURATELY ANNOTATE FIELD ADJUSTMENTS ON THE RECORD DRAWINGS.

21. PROVIDE SHEETING, SHORING, AND BRACING NEEDED TO PROTECT THE WORK, EXISTING PROPERTY, UTILITIES, PAVEMENT, ETC., AND PROVIDE SAFE WORKING CONDITIONS IN THE TRENCH IN ACCORDANCE WITH OCCUPATIONAL SAFETY AND HEALTH ADMINISTRATION REQUIREMENTS.

22. PIPE SLOPE INFORMATION SHOWN IN THE PROFILE IS IN PERCENTAGE AND DOES NOT INDICATE UPWARD OR DOWNWARD SLOPE. REFER TO INVERT ELEVATIONS BETWEEN REFERENCE POINTS TO DETERMINE DIRECTION OF SLOPE. DO NOT DETERMINE SLOPE DIRECTION USING SCALING OR PICTORIAL REPRESENTATION FROM THE PROFILE. INSTALL PIPE LEVEL OR AT CONSTANT SLOPE BETWEEN REFERENCE POINTS.

23. LIMIT JOINT DEFLECTIONS FOR RESTRAINED JOINT DUCTILE IRON PIPE TO THE RECOMMENDED MAXIMUM DEFLECTIONS PUBLISHED BY THE PIPE MANUFACTURER. JOINT DEFLECTIONS FOR NON-RESTRAINED JOINT DUCTILE IRON PIPE SHALL BE LIMITED TO ONE DEGREE LESS THAN THE RECOMMENDED MAXIMUM DEFLECTIONS PUBLISHED BY THE PIPE MANUFACTURER.

24. BACKFILL ALL WATER MAIN TRENCHES UNDER PAVEMENT AND WITHIN THE MEDIANS WITH SLURRY BACKFILL. BACKFILL ALL WATER MAIN TRENCHES IN THE TERRACE AREAS WITH EITHER GRANULAR OR SUITABLE SPOIL MATERIAL (AS INDICATED ON THE PLANS) AND MECHANICALLY COMPACT IT, WITH THE EXCEPTION OF ANY PORTION OF THE TRENCH THAT IS WITHIN A 1:1 INFLUENCE ZONE OF THE EXISTING PAVEMENT STRUCTURE. SEE PLAN AND PROFILE DRAWINGS FOR LOCATIONS WHERE GRANULAR AND SPOIL BACKFILL IS ALLOWED.

25. STATIONING FOR ISOLATION VALVES, AIR VALVES, BLOW-OFF ASSEMBLIES, AND OTHER PIPELINE APPURTENANCES ARE APPROXIMATE. ALL HIGH POINTS SHALL BE VENTED AND LOW POINTS SHALL HAVE BLOW-OFF ASSEMBLIES INSTALLED. THE CONTRACTOR IS TO SUBMIT THE LAYOUT AND LOCATION OF ISOLATION VALVES, AIR VALVES, BLOW-OFF ASSEMBLIES, AND OTHER PIPELINE APPURTENANCES TO THE RESIDENT PROJECT REPRESENTATIVE FOR APPROVAL. ACCURATELY ANNOTATE LOCATIONS OF PIPELINE APPURTENANCES ON THE RECORD DRAWINGS.

26. FOR PROPERTIES WITH MORE THAN ONE ACCESS ENTRANCE, MAINTAIN AT LEAST ONE ACCESS ENTRANCE AT ALL TIMES DURING CONSTRUCTION. MAINTAIN ACCESS FOR PROPERTIES WITH ONE ACCESS ENTRANCE WITH LIMITED CLOSURES DURING CONSTRUCTION ACTIVITY WITH NO OVERNIGHT CLOSURES PERMITTED UNLESS PRIOR WRITTEN AUTHORIZATION OBTAINED.

27. FOR PAVEMENT RESTORATION, COMPLY WITH WISCONSIN DEPARTMENT OF TRANSPORTATION STANDARD SPECIFICATION FOR HIGHWAY AND STRUCTURE CONSTRUCTION WITH SUPPLEMENTAL SPECIFICATION (REFERRED TO AS "STATE INSPECTIONS"), UNLESS OTHERWISE NOTED.

28. RESTORE ALL GRADES AND FACILITIES DISTURBED BY CONSTRUCTION ACTIVITIES TO THE ORIGINAL CONDITION OR BETTER IN ACCORDANCE WITH THE REQUIREMENTS OF THE AUTHORITY HAVING JURISDICTION. RESTORE ALL GRADE ABOVE PIPE AND IN DISTURBED AREA TO PREEXISTING GRADE. PROVIDE ROUND DITCH BOTTOMS, TOE OF SLOPE, CUTS, AND TOP EDGE OF BACKSLOPES. PROVIDE POSITIVE DRAINAGE AWAY FROM ANY BUILDING STRUCTURE AND TOWARD AN OPEN DRAINAGE DITCH OR OTHER STORM SEWER CONVEYANCE SYSTEM.

29. UNLESS OTHERWISE SHOWN, REPLACE FENCES EITHER DAMAGED OR REMOVED DURING CONSTRUCTION ACTIVITIES WITH NEW MATERIALS OF SAME TYPE, SIZE, AND HEIGHT, INCLUDING GATES, GATE POSTS, AND LINE POSTS. THE USE OF TEMPORARY FENCING IS REQUIRED AS NECESSARY TO MAINTAIN THE INTEGRITY OF FENCE SYSTEMS WHICH IMPOUND ANIMALS. OBTAIN WRITTEN PERMISSION FROM THE FENCE OWNER PRIOR TO RELOCATING OR DISMANTLING FENCES WHICH INTERFERE WITH CONSTRUCTION OPERATIONS. REACH AGREEMENTS WITH THE FENCE OWNER AS TO THE PERIOD THE FENCE MAY BE LEFT RELOCATED OR DISMANTLED.

30. AT THE SITE KEEP AND MAINTAIN ONE RECORD COPY OF ALL THE CONTRACT DOCUMENTS, REFERENCE DOCUMENTS, AND ALL TECHNICAL DOCUMENTS SUBMITTED IN GOOD ORDER. USING DRAFTING SYMBOLS AND STANDARDS CONSISTENT WITH THE ORIGINAL DOCUMENTS, ANNOTATE CONTRACT DRAWINGS TO SHOW ALL CHANGES MADE DURING THE CONSTRUCTION PERIOD. ANNOTATED DRAWINGS WITH CURRENT FIELD CHANGES ARE TO BE MADE AVAILABLE TO THE RESIDENT PROJECT REPRESENTATIVE AND ENGINEER FOR REFERENCE AT ALL TIMES. AT COMPLETION OF THE CONTRACT AND BEFORE FINAL PAYMENT IS MADE, DELIVER TO THE RESIDENT PROJECT REPRESENTATIVE AND ENGINEER ONE SET OF CLEARLY READABLE, REPRODUCIBLE CONTRACT DRAWINGS REFLECTING CHANGES MADE DURING CONSTRUCTION.

31. AN ASTERISK (*) AT NEW CONSTRUCTION DENOTES LOCATIONS, ELEVATIONS, DIMENSIONS, AND OTHER INFORMATION DEPENDENT ON THE CONTRACTOR'S SUBMITTALS. DEVELOP AND SHOW THE INFORMATION MARKED WITH AN ASTERISK (*) ON SUBMITTALS AND DEVELOP AND PROVIDE SUCH INFORMATION FOR ALL ASTERISKS (*) WITHIN OR INTERFACING WITH ANY SUBMITTALS AND BETWEEN SUBMITTALS. THIS REQUIREMENT ALSO EXTENDS TO CONDITIONS OR SITUATIONS WHERE A LOCATION, DIMENSION, ELEVATION, OR OTHER ITEM IS INDICATED TO BE DETERMINED AFTER FINAL SELECTION OF EQUIPMENT AND/OR APPURTENANCES. ALL INFORMATION FOR ASTERISK (*) AND EQUIPMENT/APPURTENANCES SITUATIONS DESCRIBED HEREIN ARE THE RESPONSIBILITY OF THE CONTRACTOR TO DEVELOP AND ASSURE COMPATIBLE INTERFACING FOR A COMPLETE, COORDINATED, AND TROUBLE-FREE OPERATING INSTALLATION.

32. CONTRACTOR SHALL BE RESPONSIBLE FOR COORDINATING, OBTAINING, AND MAINTAINING ALL SITE SPECIFIC PERMITS WITH THE STATE OF LOCAL REGULATORY AGENCY, INCLUDING BUT NOT LIMITED TO TEMPORARY CONSTRUCTION ACCESS, TEMPORARY CULVERT PERMITS, AND OTHERS.

33. DIAGRAMMED PIPELINES:
VARIOUS PIPELINES ARE SHOWN ON THE CONTRACT DRAWINGS IN DIAGRAM FORM. WHERE SUCH PIPELINES ARE SHOWN ONLY IN DIAGRAM, ARRANGE THE PIPELINES CLEAR OF OTHER PIPELINES, EQUIPMENT, AND WALKING AREAS, AND SO THAT THEY ARE ACCESSIBLE FOR MAINTENANCE. SUCH PIPELINES ARE TO BE FITTED AND INSTALLED IN A NEAT AND WORKMANLIKE MANNER IN ACCORDANCE WITH SPECIFICATION SECTIONS 40 05 10, 40 05 16, AND 40 05 18, MANUFACTURER'S RECOMMENDATIONS, APPROVED SHOP DRAWINGS AND AS SPECIFIED IN DIVISION 1. AN ADEQUATE NUMBER OF UNIONS ARE TO BE PROVIDED IN MAIN PIPE AND BRANCH PIPE RUNS TO FACILITATE DISMANTLING AND REMOVAL OF PIPELINE SECTIONS WITHOUT DISTURBING BRANCHES OR CONNECTING PIPELINES.
THE FINAL LOCATION OF HOSE VALVES, PIPE DRAINS, VALVES, AND OTHER SUCH APPURTENANCES INCLUDED AS A PART OF DIAGRAMMED PIPELINES ARE TO BE AS SHOWN ON APPROVED SHOP DRAWINGS OR AS APPROVED IN THE FIELD BY THE ENGINEER.
ALL COSTS ASSOCIATED WITH FURNISHING, FABRICATING, LOCATING, ERECTING AND OTHERWISE COMPLETELY AND PROPERLY INSTALLING ALL DIAGRAMMED PIPELINES SHALL BE INCLUDED IN THE VARIOUS CONTRACT ITEMS, AND NO SEPARATE PAYMENTS WILL BE MADE THEREFORE.

## CITY OF WAUKESHA NOTES:

1. ALL SITE IMPROVEMENTS AND CONSTRUCTION SHOWN ON THE DRAWINGS SHALL CONFORM TO THE CURRENT CITY OF WAUKESHA DESIGN AND CONSTRUCTION MANUAL. WHERE THE DRAWINGS DO NOT COMPLY, IT SHALL BE THE SOLE RESPONSIBILITY AND EXPENSE OF THE CONTRACTOR TO MAKE REVISIONS TO THE DRAWINGS AND/OR CONSTRUCTED INFRASTRUCTURE TO COMPLY.

DRAFT 98% PROGRESS DRAWINGS
OCTOBER 2019

| NO. | DATE | APPD | DESCRIPTION |
|---|---|---|---|

Waukesha Water Utility
SERVING WAUKESHA SINCE 1886

GREELEY AND HANSEN
741 N. GRAND AVE. SUITE 308
WAUKESHA, WI 53186

GREAT WATER ALLIANCE™

CONTRACT PACKAGE 3: BOOSTER PUMPING STATION AND WATER SUPPLY CONTROL BUILDING

GENERAL NOTES

APPROVED

SEAL AFFIXED
MONTH / DAY / YEAR

OCTOBER 2019

| | | | |
|---|---|---|---|
| JOB NO.: | 15310 | | |
| DESGN | TRB | CHCK | RMC |
| APPRV | AJM | DRWN | OR |
| SCALE: | NO SCALE | | |

DRAWING NUMBER

AG2

SHEET 2 OF 184 REV 0

10/2/2019 10:05:00 AM BAR MEASURE 1" ON FULLSIZE SHEETS
FILE: C:\Users\lgreen\Documents\GLWSP-P3-BPSF-GAMHPNE_lgreen.rvt

10/2/2019 10:05:03 AM

BAR MEASURE 1" ON FULLSIZE SHEETS

## SYMBOLS

| | |
|---|---|
| 1 / 4 AA12 2 / 3 | INTERIOR ELEVATION CALLOUT |
| 10 / AA16 | ELEVATION CALLOUT |
| 10 / AA16 | WALL SECTION CALLOUT |
| | SECTION CALLOUT |
| 10 / AA16 — 10 / AA16 | BUILDING SECTION CALLOUT |
| 10 / AA16 | DETAIL BOUNDARY CALLOUT |
| 10.9 | COLUMN CENTER LINE |
| 10 — WALL TAG | B101-10 — DOOR TAG |
| 10 — WINDOW TAG | 100 — SIGNAGE TAG |
| 100 — FURNITURE TAG | FE — FIRE EXTINGUISHER TAG |
| 0.00' | SPOT ELEVATIONS |
| B/ CONC 0.00' | SPOT ELEVATIONS (WALL SECTIONS) |
| 300' TO EXIT 1 | EGRESS PATH AND TRAVEL DISTANCE |
| CONTROL ROOM — 100 — CONTROL ROOM 100 FL EL: +0.00 | ROOM TAGS |
| MATCHLINE A: SEE DWG AA36 FOR CONTINUATION | MATCHLINE |
| TITLE ON SHEET — SCALE: 1/4" = 1'-0" | VIEW TITLE - TYPE 1 (FOR NONREFERENCED VIEWS) |
| 10 / AA16 TITLE ON SHEET — SCALE: 1/4" = 1'-0" | VIEW TITLE - TYPE 2 (FOR REFERENCED VIEWS) |
| 1 DETAIL TITLE — SCALE: 1 : 1 (M-101) | DETAIL TITLE (FOR REFERENCED VIEWS) |

## ABBREVIATIONS

| | |
|---|---|
| @ | AT |
| ADDL | ADDITIONAL |
| AFF | ABOVE FINISHED FLOOR |
| AHJ | AUTHORITY HAVING JURISDICTION |
| AHU | AIR HANDLING UNIT |
| AL | ALUMINIUM |
| ALT | ALTERNATE |
| APPROX | APPROXIMATE |
| AR | AIR RELEASE |
| ARCH | ARCHITECTURAL |
| ASSY | ASSEMBLY |
| AVE | AVENUE |
| BFV | BUTTERFLY VALVE |
| BLDG | BUILDING |
| BM | BENCHMARK |
| B/ | BOTTOM OF |
| BOT | BOTTOM |
| BP | BOOSTER PUMP |
| BPS | BOOSTER PUMPING STATION |
| BRNG | BEARING |
| BTWN | BETWEEN |
| CHEM | CHEMICAL FACILITIES |
| CIP | CAST IN PLACE |
| CIR | CIRCLE |
| CIW | CENTER IN WALL |
| CJ | CONTROL/CONSTRUCTION JOINT |
| CL | CENTERLINE |
| CLR | CLEAR |
| CMU | CONCRETE MASONRY UNIT |
| COL | COLUMN |
| CONC | CONCRETE |
| CONN | CONNECTION |
| CONT | CONTINUOUS |
| CP | CONTRACT PACKAGE |
| CV | CONTROL VALVE |
| CWP | CLEAN WATER PLANT |
| D | DEPTH |
| DBL | DOUBLE |
| DCMU | DECORATIVE CMU |
| DEMO | DEMOLITION |
| DI | DUCTILE IRON |
| DIA | DIAMETER |
| DIAG | DIAGONAL |
| DIM | DIMENSION |
| DN | DOWN |
| DP | DEEP |
| DR | DRIVE |
| DWG | DRAWING |
| E | EAST |
| EA | EACH |
| ECC | ECCENTRIC |
| EF | EACH FACE |
| EJ | EXPANSION JOINT |
| EL | ELEVATION |
| ELEC | ELECTRICAL |
| EOD | EDGE OF DECK |
| EOS | EDGE OF SLAB |
| EQ | EQUAL |
| ES | EMERGENCY SHOWER |
| EW | EACH WAY OR EYEWASH |
| EXIST | EXISTING |
| EXT | EXTERIOR |
| F | FLANGE |
| FD | FLOOR DRAIN |
| FES | FLARED END SECTION |
| FL | FLOOR |
| FDN | FOUNDATION |
| FO | FACE OF |
| FP | FEED PUMP |
| FT | FOOT/FEET |
| FTG | FOOTING |
| FWY | FREEWAY |
| GA | GAUGE |
| GALV | GALVANIZED |
| HDD | HORIZONTAL DIRECTIONAL DRILL |
| HORIZ | HORIZONTAL |
| HP | HIGH POINT OR HORSEPOWER |
| HSS | HOLLOW STRUCTURAL SECTION |
| HT | HEIGHT |
| HWL | HIGH WATER LEVEL |
| HWY | HIGHWAY |
| ID | INSIDE DIAMETER |
| IF | INSIDE FACE |
| IN | INCH |
| INSUL | INSULATION |
| INT | INTERIOR |
| INV | INVERT |
| KIP, k | 1000 LBS |
| KSI | KIPS PER SQUARE INCH |
| L | LENGTH |
| LAS | LIQUID AMMONIUM SULFATE |
| LBS | POUNDS |
| LD | DEVELOPMENT LENGTH |
| LLH | LONG LEG HORIZONTAL |
| LLV | LONG LEG VERTICAL |
| Ln | CLEAR SPAN |
| LN | LANE |
| LONG | LONGITUDINAL |
| LP | LOW POINT |
| LWL | LOW WATER LEVEL |
| LWT | LIGHTWEIGHT |
| MAX | MAXIMUM |
| MFR | MANUFACTURER |
| MIN | MINIMUM |
| MISC | MISCELLANEOUS |
| MJ | MECHANICAL JOINT |
| MWW | MILWAUKEE WATER WORKS |
| N | NORTH |
| NE | NORTHEAST |
| NO, # | NUMBER |
| NOM | NOMINAL |
| NTS | NOT TO SCALE |
| NW | NORTHWEST |
| NWT | NORMAL WEIGHT |
| OC | ON CENTER |
| OCC | OCCUPANCY |
| OD | OUTSIDE DIAMETER |
| OF | OUTSIDE FACE |
| OPNG | OPENING |
| PEN | PENETRATION |
| PERP | PERPENDICULAR |
| PKG | PACKAGE |
| PKWY | PARKWAY |
| PL | PLATE OR PLACE |
| PRV | PRESSURE REDUCING VALVE |
| PS | PUMPING STATION |
| PSF | POUNDS PER SQUARE FOOT |
| PSI | POUNDS PER SQUARE INCH |
| PSV | PRESSURE SUSTAINING VALVE |
| PT | PRESSURE TREATED |
| PVC | POLYVINYL CHLORIDE |
| R | RADIUS |
| RD | ROAD |
| REC | RECIRCULATION |
| RED | REDUCER |
| REF | REFERENCE |
| REQD | REQUIRED |
| RES | WATER RESERVOIR |
| RFFO | RETURN FLOW FACILITIES AND OUTFALL |
| RFPL | RETURN FLOW PIPELINE |
| RFPS | RETURN FLOW PUMPING STATION |
| RJ | RESTRAINED JOINT |
| ROW | RIGHT OF WAY |
| RP | RESERVOIR MIXING PUMP |
| RR | RAILROAD |
| RTU | ROOF TOP UNIT |
| S | SOUTH |
| SCH | SCHEDULE |
| SE | SOUTHEAST |
| SECT | SECTION |
| SF | STEP FOOTING OR SQUARE FEET |
| SH | SODIUM HYPOCHLORITE |
| SHGC | SOLAR HEAT GAIN COEFFICIENT |
| SHT | SHEET |
| SIM | SIMILAR |
| SQ | SQUARE |
| SQ FT | SQUARE FEET |
| SS | STAINLESS STEEL |
| SSP | STANDARD STEEL PIPE |
| ST | STREET |
| STA | STATION |
| STIFF | STIFFENER |
| STINL | STORM INLET |
| STM | STORM SEWER |
| STMH | STORM MANHOLE |
| SW | SOUTHWEST |
| T/ | TOP OF |
| T/C | TOP OF CONCRETE |
| T/W | TOP OF WALL |
| T&B | TOP AND BOTTOM |
| TBD | TO BE DETERMINED |
| THK | THICKNESS |
| TP | TEST PIT OR TRANSFER PUMP |
| TYP | TYPICAL |
| UON | UNLESS OTHERWISE NOTED |
| VERT | VERTICAL |
| VIF | VERIFY IN FIELD |
| W | WIDE OR WEST |
| W/ | WITH |
| WM | WATERMAIN |
| W/O | WITHOUT |
| WP | WORKPOINT |
| WS | WATERSTOP |
| WSCB | WATER SUPPLY CONTROL BUILDING |
| WSPL | WATER SUPPLY PIPELINE |
| WSPS | WATER SUPPLY PUMPING STATION |
| WWF | WELDED WIRE FABRIC |
| WWU | WAUKESHA WATER UTILITY |
| XFMRS | TRANSFORMERS |

DRAFT 98% PROGRESS DRAWINGS
OCTOBER 2019

FILE: C:\Users\lgreen\Documents\GLWSP-P3-BPSF-GAMHPNE_lgreen.rvt

| NO. | DATE | APPD | DESCRIPTION |
|---|---|---|---|

Waukesha Water Utility
SERVING WAUKESHA SINCE 1886

GREELEY AND HANSEN
741 N. GRAND AVE. SUITE 308
WAUKESHA, WI 53186

GREAT WATER ALLIANCE™

CONTRACT PACKAGE 3: BOOSTER PUMPING STATION AND WATER SUPPLY CONTROL BUILDING

SYMBOLS AND ABBREVIATIONS

APPROVED

SEAL AFFIXED
MONTH / DAY / YEAR

OCTOBER 2019

| | | | |
|---|---|---|---|
| JOB NO.: | 15310 | | |
| DESGN | LAM | CHCK | RMC |
| APPRV | AJM | DRWN | OR |
| SCALE: | NO SCALE | | |

DRAWING NUMBER

AG3

SHEET 3 OF 184 REV 0

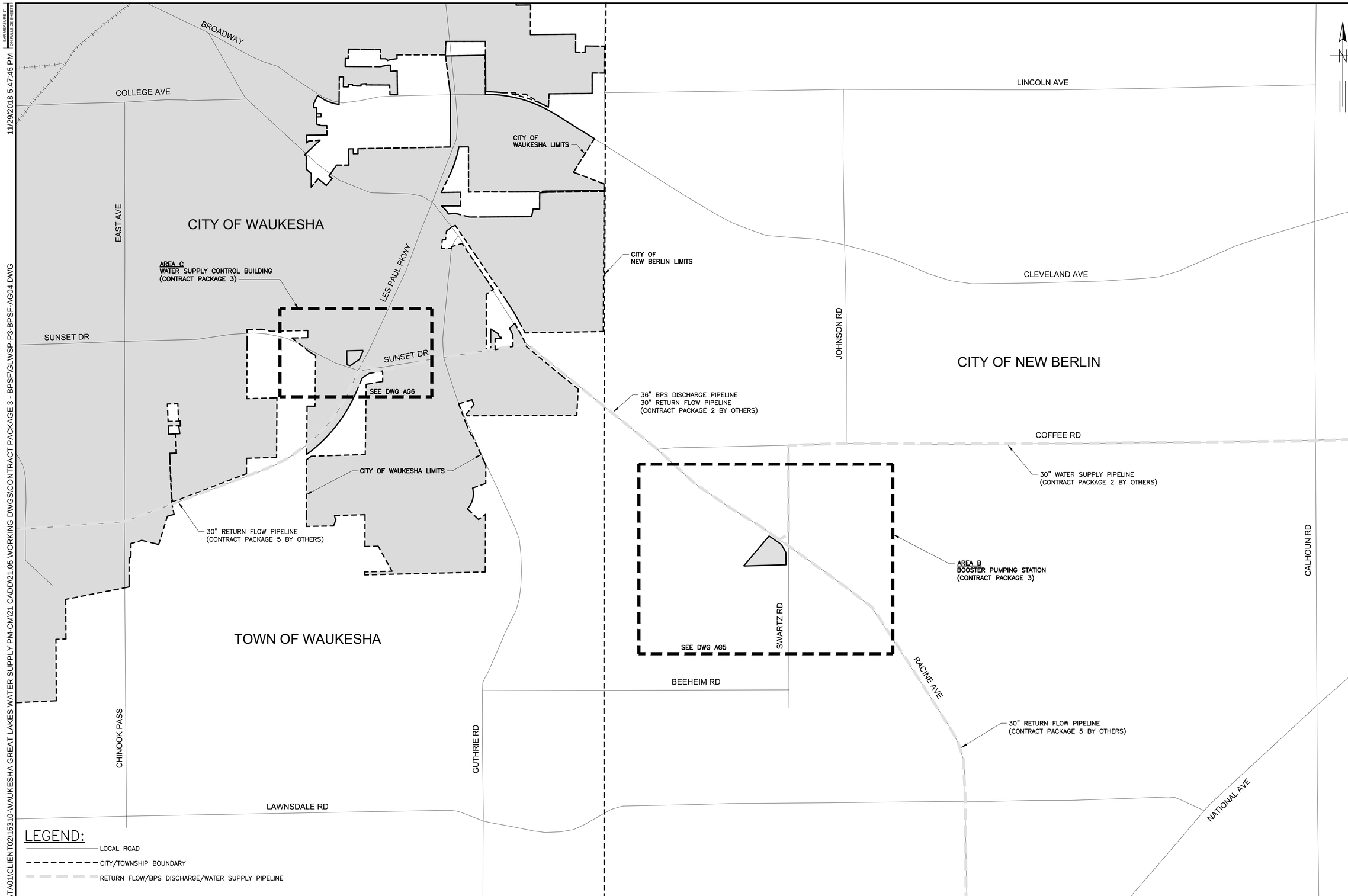


DRAFT 98% PROGRESS DRAWINGS
OCTOBER 2019

GENERAL LOCATION MAP
SCALE: 1"=1,000'

| NO. | DATE | APPD | REVISION |
|---|---|---|---|

Waukesha Water Utility
SERVING WAUKESHA SINCE 1886

GREELEY AND HANSEN
741 N. GRAND AVE, SUITE 308
WAUKESHA, WI 53186

GREAT WATER ALLIANCE™

CONTRACT PACKAGE 3: BOOSTER PUMPING STATION AND WATER SUPPLY CONTROL BUILDING

GENERAL LOCATION MAP

APPROVED

SEAL AFFIXED
MONTH / DAY / YEAR

OCTOBER 2019

JOB NO.: 15310

| | | | |
|---|---|---|---|
| DESGN | LAM | CHCK | RMC |
| APPRV | AJM | DRWN | TSM |
| SCALE: | 1" = 1,000' | | |

DRAWING NUMBER

AG4

SHEET 4 OF 184 REV 0

FILE: \\GH-DATA01\CLIENT02\15310-WAUKESHA GREAT LAKES WATER SUPPLY PM-CM\21 CADD\21.05 WORKING DWGS\CONTRACT PACKAGE 3 - BPSF\GLWSP-P3-BPSF-AG04.DWG

11/29/2018 5:47:45 PM

BAR MEASURE 1" ON FULLSIZE SHEETS

BAR MEASURE 1" ON FULL SIZE SHEETS
12/04/2018 5:16:22 PM
FILE: \IGH-DATA01\CLIENT02\15310-WAUKESHA GREAT LAKES WATER SUPPLY PM-CM\21 CADD\21.05 WORKING DWGS\CONTRACT PACKAGE 3 - BPSF\GLWSP-P3-BPSF-AG05.DWG

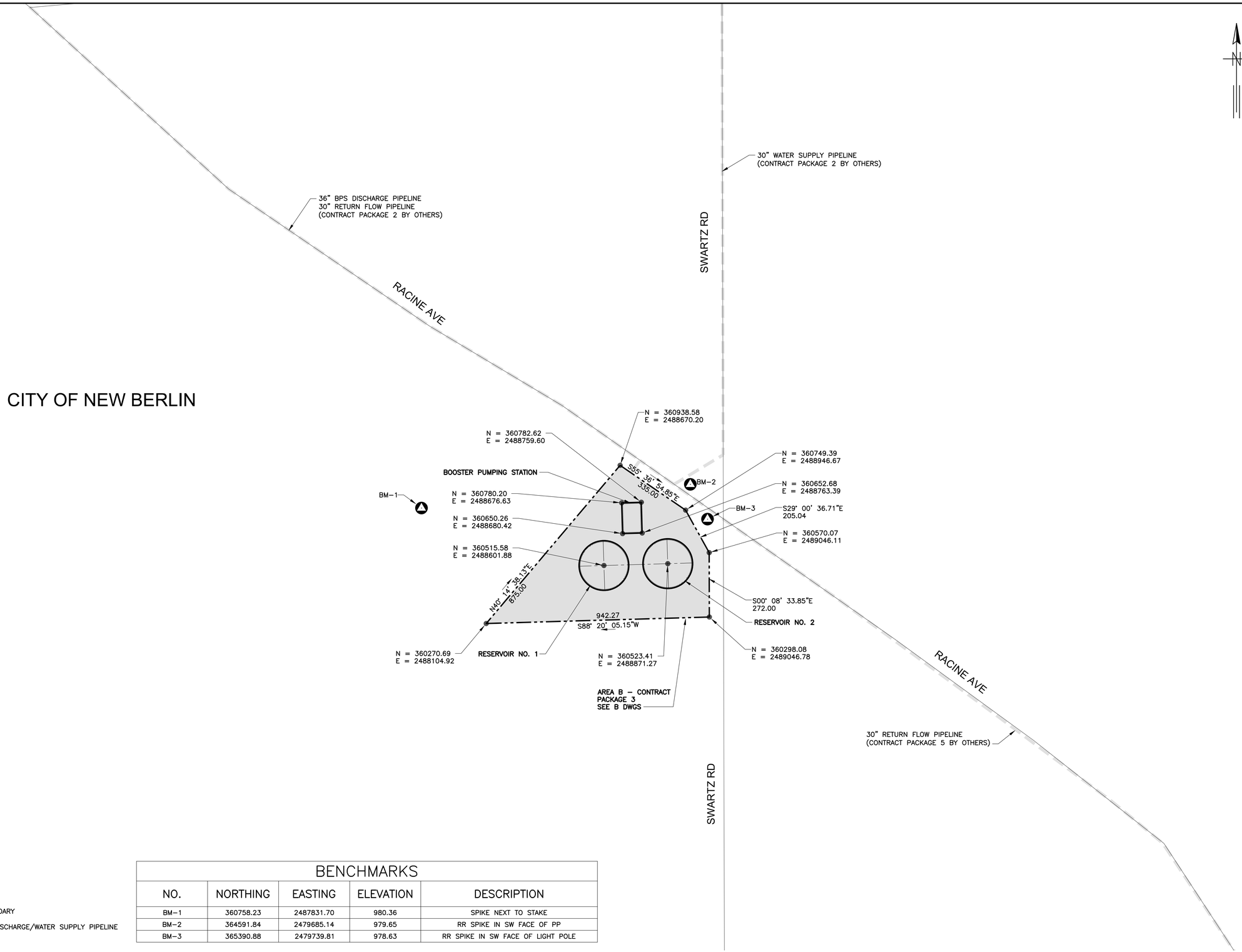


## LEGEND:

- LOCAL ROAD
- CITY/TOWNSHIP BOUNDARY
- RETURN FLOW/BPS DISCHARGE/WATER SUPPLY PIPELINE

| BENCHMARKS | | | | |
|---|---|---|---|---|
| NO. | NORTHING | EASTING | ELEVATION | DESCRIPTION |
| BM–1 | 360758.23 | 2487831.70 | 980.36 | SPIKE NEXT TO STAKE |
| BM–2 | 364591.84 | 2479685.14 | 979.65 | RR SPIKE IN SW FACE OF PP |
| BM–3 | 365390.88 | 2479739.81 | 978.63 | RR SPIKE IN SW FACE OF LIGHT POLE |

DRAFT 98% PROGRESS DRAWINGS
OCTOBER 2019

## AREA B LOCATION PLAN
SCALE: 1"=200'

| NO. | DATE | APPD | REVISION |
|---|---|---|---|

Waukesha Water Utility
SERVING WAUKESHA SINCE 1886

GREELEY AND HANSEN
741 N. GRAND AVE, SUITE 308
WAUKESHA, WI 53186

GREAT WATER ALLIANCE™

CONTRACT PACKAGE 3: BOOSTER PUMPING STATION AND WATER SUPPLY CONTROL BUILDING

AREA B LOCATION PLAN

APPROVED

SEAL AFFIXED
MONTH / DAY / YEAR

OCTOBER 2019

| | | | |
|---|---|---|---|
| JOB NO.: 15310 | | | |
| DESGN | LAM | CHCK | RMC |
| APPRV | AJM | DRWN | TSM |
| SCALE: | 1" = 200' | | |

DRAWING NUMBER
AG5

SHEET 5 OF 184 REV 0

AYRES ASSOCIATES

BAR MEASURE 1" ON FULLSIZE SHEETS

06/06/2019 3:22:02 PM

FILE: \\GH-DATA01\CLIENT02\15310-WAUKESHA GREAT LAKES WATER SUPPLY PM-CM\21 CADD\21.05 WORKING DWGS\CONTRACT PACKAGE 3 - BPSF\GLWSP-P3-BPSF-AG06.DWG

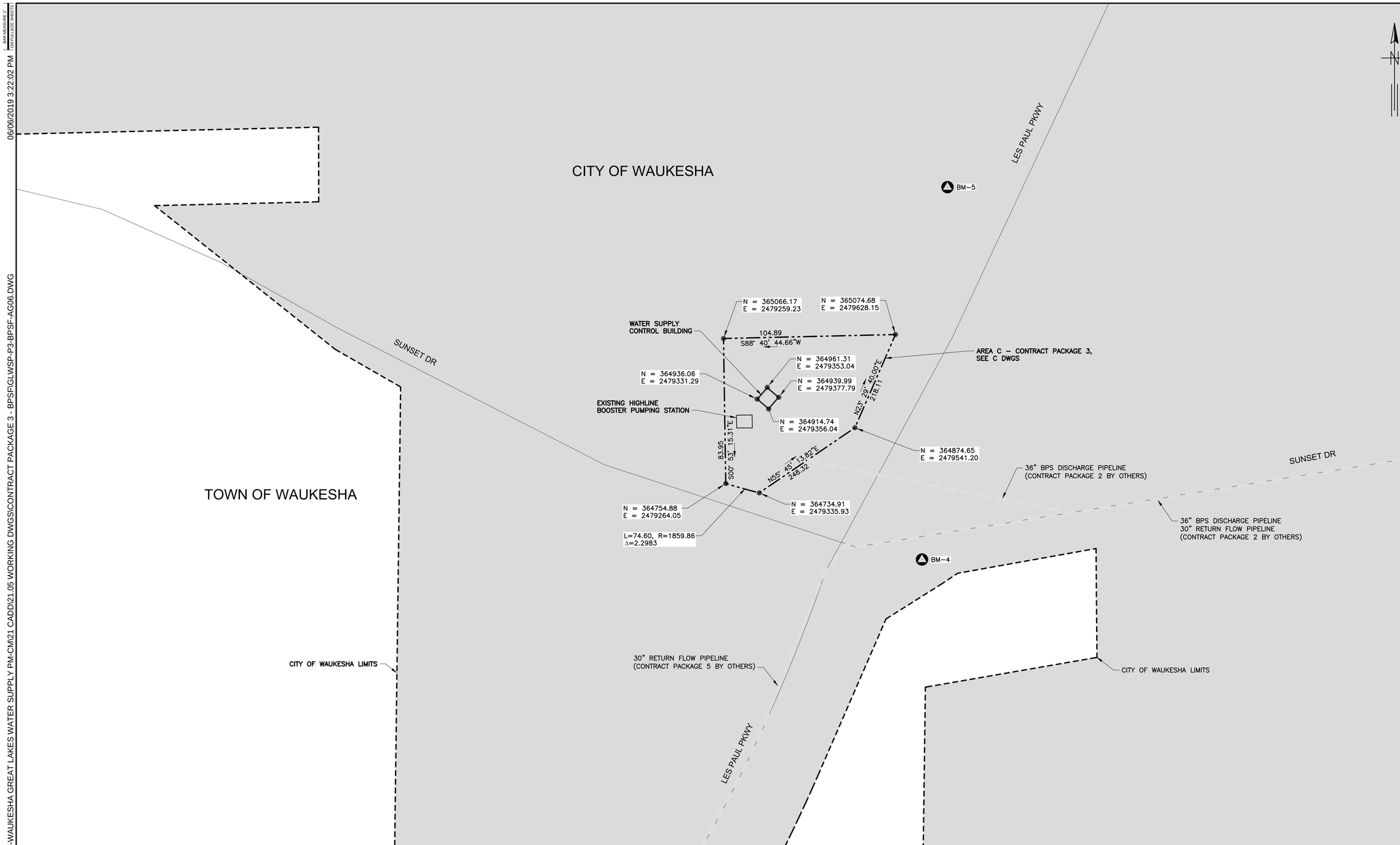


## LEGEND:

- LOCAL ROAD
- CITY/TOWNSHIP BOUNDARY
- RETURN FLOW/BPS DISCHARGE/WATER SUPPLY PIPELINE

## BENCHMARKS

| NO. | NORTHING | EASTING | ELEVATION | DESCRIPTION |
|---|---|---|---|---|
| BM–4 | 364591.84 | 2479685.14 | 857.76 | CP IR W/CAP |
| BM–5 | 365390.88 | 2479739.81 | 860.01 | SEC BRASS CAP MONUMENT |

## NOTES:

1. CITY OF WAUKESHA DATUM = NGVD29 – 780.558
2. THE VERTICAL CONTROL NETWORK IS REFERENCED TO THE NGVD 29 DATUM AND WAS ESTABLISHED FROM SECTION CORNERS IN THE SURROUNDING AREA. SEWRPC ESTABLISHES THE ELEVATIONS AND COORDINATES FOR ALL OF THE SECTION CORNERS IN SOUTHEAST WISCONSIN.

DRAFT 98% PROGRESS DRAWINGS
OCTOBER 2019

## AREA C LOCATION PLAN

SCALE: 1"=100'

100 0 100 200 FT
1"=100'

AYRES ASSOCIATES

| NO. | DATE | APPD | REVISION |
|---|---|---|---|

Waukesha Water Utility
SERVING WAUKESHA SINCE 1886

GREELEY AND HANSEN
741 N. GRAND AVE, SUITE 308
WAUKESHA, WI 53186

GREAT WATER ALLIANCE™

CONTRACT PACKAGE 3: BOOSTER PUMPING STATION AND WATER SUPPLY CONTROL BUILDING

AREA C LOCATION PLAN

APPROVED

SEAL AFFIXED
MONTH / DAY / YEAR

OCTOBER 2019

JOB NO.: 15310

| | | | |
|---|---|---|---|
| DESGN | LAM | CHCK | RMC |
| APPRV | AJM | DRWN | TSM |

SCALE: 1" = 100'

DRAWING NUMBER

AG6

SHEET 6 OF 184 REV 0

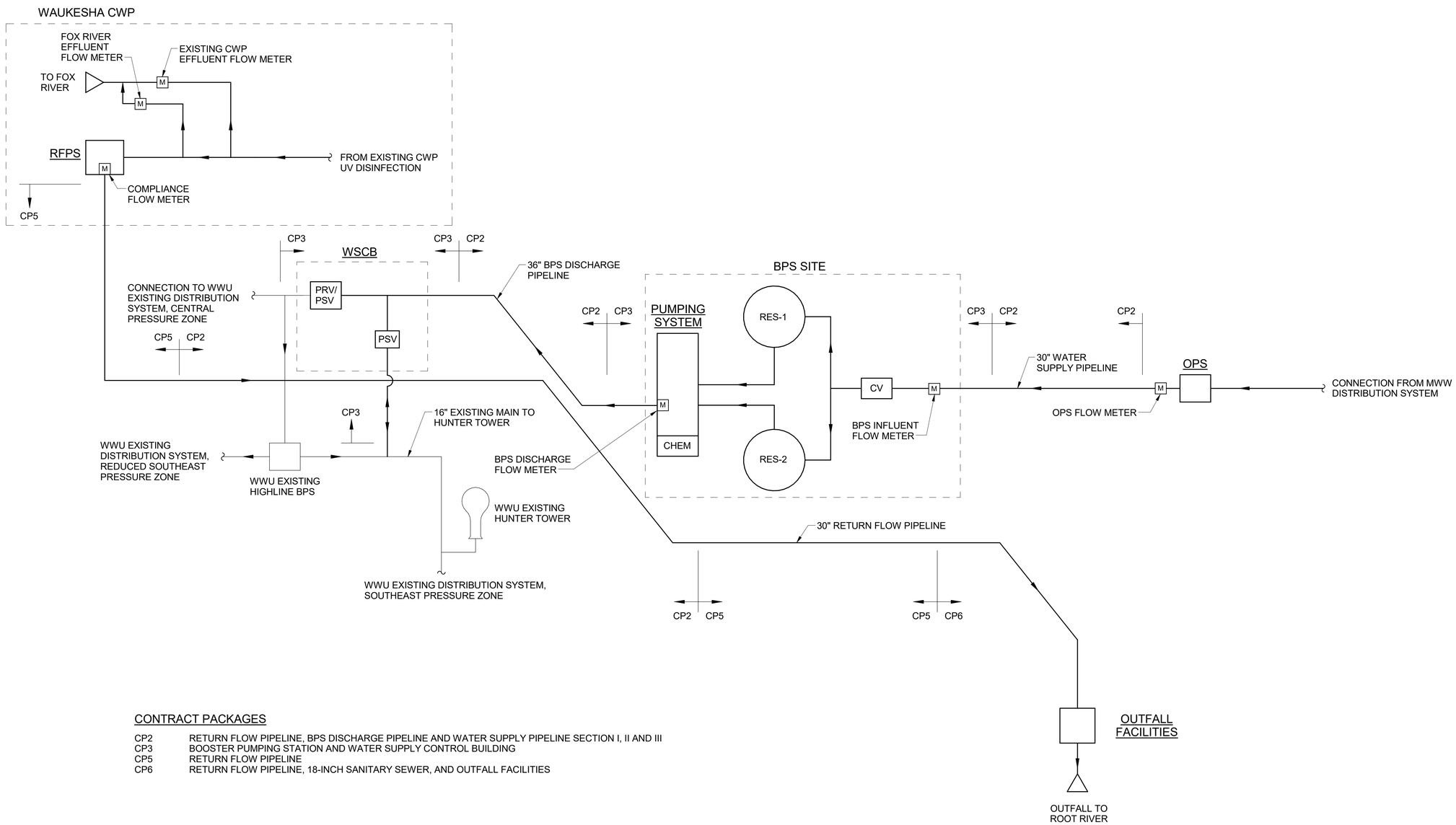


CONTRACT PACKAGES

| | |
|---|---|
| CP2 | RETURN FLOW PIPELINE, BPS DISCHARGE PIPELINE AND WATER SUPPLY PIPELINE SECTION I, II AND III |
| CP3 | BOOSTER PUMPING STATION AND WATER SUPPLY CONTROL BUILDING |
| CP5 | RETURN FLOW PIPELINE |
| CP6 | RETURN FLOW PIPELINE, 18-INCH SANITARY SEWER, AND OUTFALL FACILITIES |

## OVERALL PROCESS FLOW DIAGRAM

NO SCALE

DRAFT 98% PROGRESS DRAWINGS
OCTOBER 2019

| NO. | DATE | APPD | DESCRIPTION |
|---|---|---|---|

Waukesha Water Utility
SERVING WAUKESHA SINCE 1886

GREELEY AND HANSEN
741 N. GRAND AVE. SUITE 308
WAUKESHA, WI 53186

GREAT WATER ALLIANCE™

CONTRACT PACKAGE 3: BOOSTER PUMPING STATION AND WATER SUPPLY CONTROL BUILDING

OVERALL PROCESS FLOW DIAGRAM

APPROVED

SEAL AFFIXED
MONTH / DAY / YEAR

OCTOBER 2019

| | | | |
|---|---|---|---|
| JOB NO.: | 15310 | | |
| DESGN | TRB | CHCK | LAM |
| APPRV | AJM | DRWN | OR |
| SCALE: | NO SCALE | | |

DRAWING NUMBER

AG7

SHEET 7 OF 184 REV 0

10/2/2019 10:05:06 AM BAR MEASURE 1" ON FULLSIZE SHEETS

FILE: C:\Users\lgreen\Documents\GLWSP-P3-BPSF-GAMHPNE_lgreen.rvt

## LEGEND

| EXISTING | NEW | |
|---|---|---|
| | | PROPERTY LINE |
| | | 100-YEAR HIGH WATER LEVEL |
| | | WETLAND LIMITS |
| | | WETLAND BUFFER |
| | | EASEMENT |
| 969 / 970 | 969 / 970 | CONTOUR MINOR / CONTOUR MAJOR |
| W | W | WATER MAIN |
| OE | OE | OVERHEAD ELECTRIC |
| UE | UE | UNDERGROUND ELECTRIC |
| OFO | OFO | OVERHEAD FIBER OPTIC |
| UFO | UFO | UNDERGROUND FIBER OPTIC |
| T | T | TELEPHONE |
| | | COPPER |
| G | G | NATURAL GAS |
| SAN | SAN | SANITARY SEWER |
| FM | FM | FORCE MAIN |
| STM | STM | STORM SEWER |
| x | x | SECURITY / SILT FENCE |
| | | LANDSCAPE FENCE |
| | | LIMITS OF CONSTRUCTION |
| 1+00 2+00 | 1+00 2+00 | PIPELINE AND STATIONING |
| | | UTILITY/POWER POLE |
| | | UTILITY PEDESTAL |
| | | STREET LIGHT |
| | | TRAFFIC SIGNAL |
| | | TRAFFIC SIGNAL WITH MAST |
| | | POST/BOLLARD |
| | | FLARED END SECTION |
| | | FLOW DIRECTION |
| | | SWALE |
| | | OVERLAND FLOW PATH |
| x 969 990.00 | x 969 990.00 | SPOT ELEVATION |
| | | INLET |
| ST/SS/W | ST/SS/W | MANHOLE OR VAULT W/ DESIGNATION |
| | | INLET / OUTLET PROTECTION |
| | | HYDRANT |
| WV | WV | WATER VALVE |
| CS | CS | WATER SHUTOFF |

## LEGEND (CONTINUED)

| EXISTING | NEW | |
|---|---|---|
| | | TREELINE |
| | | DECIDUOUS TREE |
| | | CONIFEROUS TREE |
| | | SIGN |
| | | BORING |
| BM1 | BM1 | BENCHMARK |
| | | DITCH CHECK |
| | | GRAVEL |
| | | ASPHALT |
| | | CONCRETE |
| | | EARTH |

DRAFT 98% PROGRESS DRAWINGS
OCTOBER 2019

BAR MEASURE 1" ON FULLSIZE SHEETS

10/02/2019 10:47:20 AM

FILE: \\GH-DATA01\CLIENT02\15310-WAUKESHA GREAT LAKES WATER SUPPLY PM-CM\21 CADD\21.05 WORKING DWGS\CONTRACT PACKAGE 3 - BPSF\GLWSP-P3-BPSF-AC01.DWG

| NO. | DATE | APPD | REVISION |
|---|---|---|---|

Waukesha Water Utility
SERVING WAUKESHA SINCE 1886

GREELEY AND HANSEN
741 N. GRAND AVE, SUITE 308
WAUKESHA, WI 53186

GREAT WATER ALLIANCE™

CONTRACT PACKAGE 3: BOOSTER PUMPING STATION AND WATER SUPPLY CONTROL BUILDING

NOTES, SYMBOLS AND LEGEND

APPROVED

SEAL AFFIXED
MONTH / DAY / YEAR

OCTOBER 2019

| | | | |
|---|---|---|---|
| JOB NO.: 15310 | | | |
| DESGN | LAM | CHCK | RMC |
| APPRV | AJM | DRWN | TSM |
| SCALE: | NO SCALE | | |

DRAWING NUMBER

AC1

SHEET 8 OF 184 REV 0

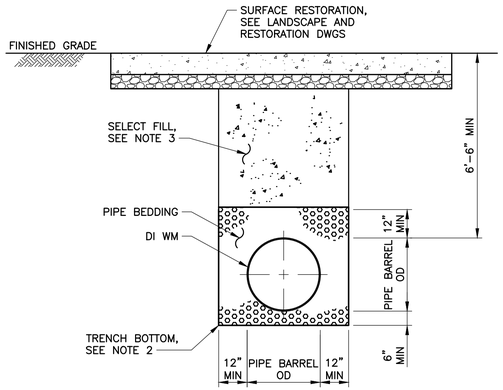


UNDER PAVEMENT

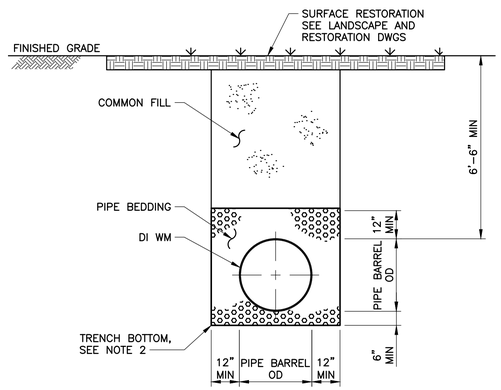


NOT UNDER PAVEMENT

NOTES:

1. SHORING, SHEETING, AND BRACING MAY BE UTILIZED AT CONTRACTOR'S DISCRETION AND EXPENSE AS REQUIRED. IF SHEETING IS UTILIZED, CUTOFF AND REMOVE SHEETING 1'-6" ABOVE PIPE BEDDING. LEAVE REMAINING SHEETING IN PLACE.
2. WHERE ROCK OR BOULDERS ARE ENCOUNTERED, OVER-EXCAVATE REQUIRED TRENCH BOTTOM A MINIMUM OF 4" AND PLACE PIPE BEDDING TO REQUIRED TRENCH BOTTOM ELEVATION PRIOR TO LAYING PIPE BARREL.
3. USE DETAIL IF ANY PART OF TRENCH IS UNDER PAVEMENT AND IF THE EDGE OF THE TRENCH IS WITHIN 5 FEET OF THE EDGE OF PAVEMENT.
4. THE DETAILS ON THIS DWG ARE NOT TO BE INTERPRETED AS DELINEATING, OR INFLUENCING IN ANY MANNER, THE TRENCH CONFIGURATION, WHICH IS SUBJECT TO OSHA REGULATIONS.

## 1 WATERMAIN TRENCH SECTIONS
NOT TO SCALE

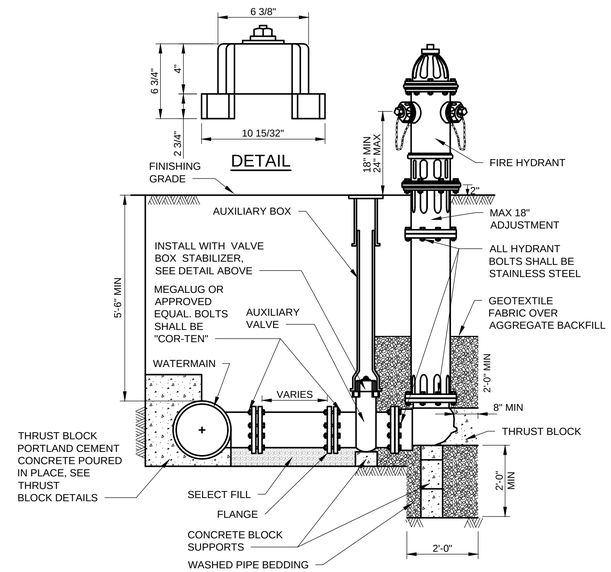


## 2 FIRE HYDRANT AND AUXILIARY VALVE
NOT TO SCALE

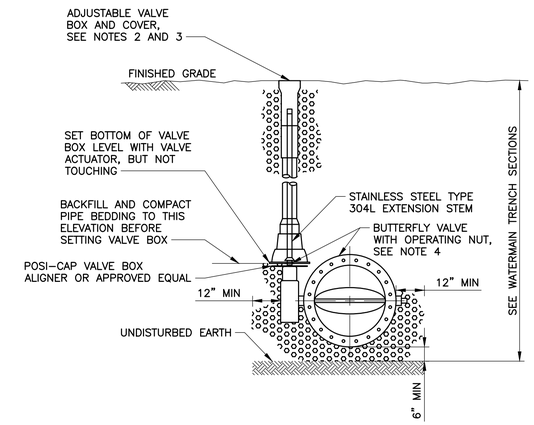


NOTES:

1. CONTRACTOR TO PROVIDE SUPPORTS AS RECOMMENDED BY THE MANUFACTURER.
2. SET EXTENSION ON VALVE BOX SO AS TO RESERVE DIAMETER ON THE ADJUSTMENT LENGTH FOR FUTURE USE.
3. PROVIDE POLYETHYLENE ENCASEMENT SO AS NOT TO IMPEDE VALVE OPERATION.
4. RESTRAIN JOINTS AT BUTTERFLY VALVES AS SHOWN IN PROFILE. PROVIDE BUTTERFLY VALVES WITH RESTRAINED MECHANICAL JOINTS.

## 3 ISOLATION VALVE DETAIL - BURIED
NOT TO SCALE

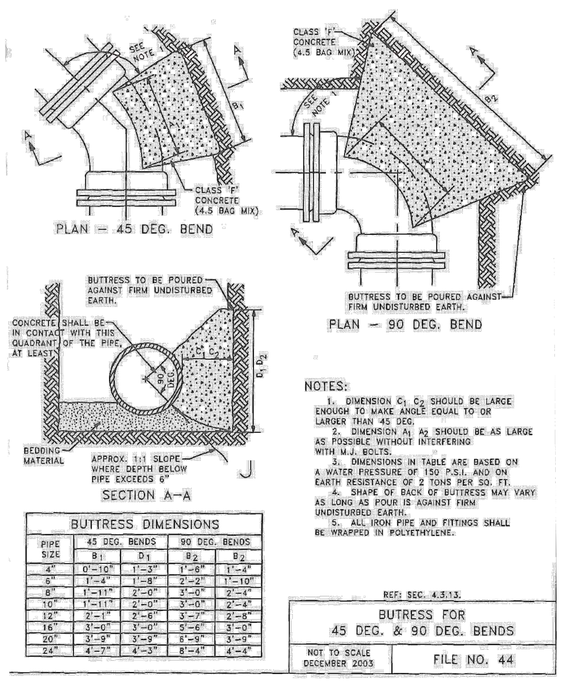


NOTES:

1. DIMENSION $C_1$ $C_2$ SHOULD BE LARGE ENOUGH TO MAKE ANGLE EQUAL TO OR LARGER THAN 45 DEG.
2. DIMENSION $A_1$ $A_2$ SHOULD BE AS LARGE AS POSSIBLE WITHOUT INTERFERING WITH M.J. BOLTS.
3. DIMENSIONS IN TABLE ARE BASED ON A WATER PRESSURE OF 150 P.S.I. AND ON EARTH RESISTANCE OF 2 TONS PER SQ. FT.
4. SHAPE OF BACK OF BUTTRESS MAY VARY AS LONG AS POUR IS AGAINST FIRM UNDISTURBED EARTH.
5. ALL IRON PIPE AND FITTINGS SHALL BE WRAPPED IN POLYETHYLENE.

BUTTRESS DIMENSIONS

| PIPE SIZE | 45 DEG. BENDS | | 90 DEG. BENDS | |
|---|---|---|---|---|
| | $B_1$ | $D_1$ | $B_2$ | $D_2$ |
| 4" | 0'-10" | 1'-3" | 1'-6" | 1'-4" |
| 6" | 1'-4" | 1'-8" | 2'-2" | 1'-10" |
| 8" | 1'-11" | 2'-0" | 3'-0" | 2'-4" |
| 10" | 1'-11" | 2'-0" | 3'-0" | 2'-4" |
| 12" | 2'-1" | 2'-6" | 3'-7" | 2'-8" |
| 16" | 3'-0" | 3'-0" | 5'-6" | 3'-0" |
| 20" | 3'-9" | 3'-9" | 6'-9" | 3'-9" |
| 24" | 4'-7" | 4'-3" | 8'-4" | 4'-4" |

REF: SEC. 4.3.13.

BUTRESS FOR 45 DEG. & 90 DEG. BENDS

NOT TO SCALE DECEMBER 2003 | FILE NO. 44

SOURCE: STANDARD SPECIFICATION FOR SEWER AND WATER CONSTRUCTION IN WISCONSIN.

**NOTE:** REFER TO THE MOST RECENT REVISION OF THE STANDARD.

## 4 THRUST BLOCK DETAIL
NOT TO SCALE

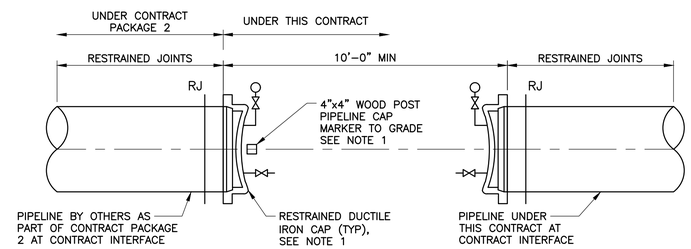


NOTE:

1. FIELD LOCATE THE FIRST PIPELINE CAP INSTALLED UNDER CONTRACT PACKAGE 2 AND MEASURE PIPE ELEVATION, ALIGNMENT, AND SLOPE. PROVIDE RESTRAINED DUCTILE IRON CAP AND COMPLETES PRESSURE AND LEAKAGE TEST AS SPECIFIED. THEN REMOVE BOTH CAPS AND PROVIDE CLOSURE PIPE. PROVIDE PRESSURE AND LEAKAGE TESTS AS SPECIFIED ON CLOSURE PIPE, BACKFILL, AND FINAL SURFACE RESTORATION. LEAVE DUCTILE IRON SOLID SLEEVES EXPOSED DURING CLOSURE PIPE PRESSURE AND LEAKAGE TEST AND PROVIDE TEMPORARY CLOSURE PIPE SUPPORT WHILE THE TWO DUCTILE IRON SOLID SLEEVES ARE EXPOSED FOR VISUAL INSPECTION.

## 5 PIPELINE PRESSURE AND LEAKAGE TEST DETAIL
SCALE: 3/8" = 1'-0"

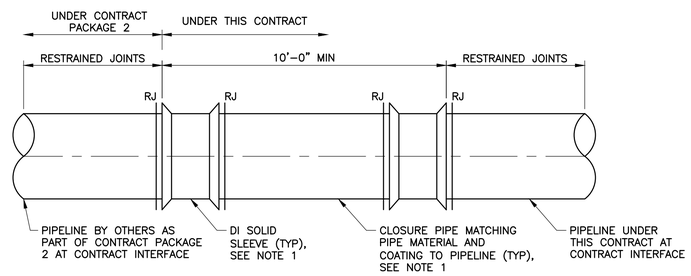


## 6 PIPELINE CLOSURE BETWEEN CONTRACTS DETAIL
SCALE: 3/8" = 1'-0"

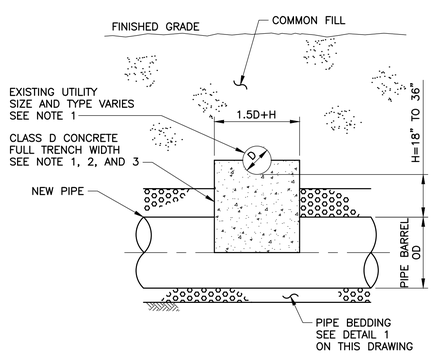


NOTES:

1. PROVIDE CLASS D CONCRETE ENCASEMENT AS SHOWN FOR EXISTING UTILITIES 6" DIAMETER AND GREATER AND AS DIRECTED BY THE RESIDENT PROJECT REPRESENTATIVE. PROPERLY AND ADEQUATELY SUPPORT THE EXISTING UTILITY UNTIL THE CLASS D CONCRETE IS SET.
2. REBED EXISTING UTILITIES WHICH CROSS UNDER NEW PIPE AND BECOME EXPOSED IN THE TRENCH IN PIPE BEDDING FOR FULL TRENCH WIDTH PER DWG C300.
3. IN NO CASE PROVIDE VERTICAL SEPARATION BETWEEN NEW PIPE AND ANY OTHER EXISTING UTILITY LESS THAN 18" UNLESS OTHERWISE SHOWN IN PROFILE.

## 7 EXISTING UTILITY CROSSING DETAIL
SCALE: 3/8" = 1'-0"

DRAFT 98% PROGRESS DRAWINGS
OCTOBER 2019

1 0 1 2 3 4 5 6 7 FT 3/8"=1'-0"

| NO. | DATE | APPD | REVISION |
|---|---|---|---|

Waukesha Water Utility
SERVING WAUKESHA SINCE 1886

GREELEY AND HANSEN
741 N. GRAND AVE, SUITE 308
WAUKESHA, WI 53186

GREAT WATER ALLIANCE™

CONTRACT PACKAGE 3: BOOSTER PUMPING STATION AND WATER SUPPLY CONTROL BUILDING

UTILITY DETAILS

APPROVED

SEAL AFFIXED
MONTH / DAY / YEAR

OCTOBER 2019

JOB NO.: 15310

| DESGN | LAM | CHCK | RMC |
|---|---|---|---|
| APPRV | AJM | DRWN | OR |
| SCALE: | AS SHOWN | | |

DRAWING NUMBER

AC2

SHEET 9 OF 184 REV 0

BAR MEASURE 1" ON FULLSIZE SHEETS
10/29/2018 12:26:33 PM
FILE: \\GH-DATA01\CLIENT02\15310-WAUKESHA GREAT LAKES WATER SUPPLY PM-CM\21 CADD\21.05 WORKING DWGS\CONTRACT PACKAGE 3 - BPSF\GLWSP-P3-BPSF-AC02.DWG

10/01/2019 6:52:08 AM

BAR MEASURE 1" ON FULLSIZE SHEETS

# EROSION CONTROL NOTES

1. CONSTRUCTION SITE EROSION CONTROL AND SEDIMENTATION CONTROL SHALL COMPLY WITH THE REQUIREMENTS OF THE CITY OF WAUKESHA AND THE CITY OF NEW BERLIN, AND SHALL EMPLOY EROSION CONTROL METHODS AS SHOWN AND SPECIFIED IN THE WISCONSIN DEPARTMENT OF NATURAL RESOURCES (WDNR) "CONSTRUCTION SITE EROSION AND SEDIMENT CONTROL TECHNICAL STANDARDS".

2. ALL EROSION CONTROL MEASURES SHALL BE ADJUSTED TO MEET FIELD CONDITIONS AT THE TIME OF CONSTRUCTION AND SHALL BE INSTALLED PRIOR TO ANY GRADING OR DISTURBANCE OF EXISTING SURFACE MATERIAL ON THE SITE.

3. ALL EROSION AND SEDIMENT CONTROL MEASURES WILL BE CHECKED FOR STABILITY AND OPERATION AFTER A RAINFALL OF 0.5 INCHES OR MORE, BUT NO LESS THAN ONCE EVERY WEEK. MAINTENANCE OF ALL EROSION CONTROL STRUCTURES SHALL BE PROVIDED TO INSURE INTENDED PURPOSE IS ACCOMPLISHED. REPAIRS AND MAINTENANCE SHALL BE COMPLETED WITHIN 24 HOURS OF INSPECTION. CONTRACTOR SHALL BE RESPONSIBLE FOR CLEANUP AND REMOVAL OF ALL SEDIMENT WHEN LEAVING PROPERTY. EROSION CONTROL MEASURES MUST BE IN WORKING CONDITION AT END OF EACH WORK DAY.

4. SILT FENCE SHALL BE INSTALLED IN THE LOCATIONS SHOWN ON THE CONSTRUCTION PLANS. SEDIMENT DEPOSITS WILL BE REMOVED FROM BEHIND THE SILT FENCE WHEN DEPOSITS REACH A DEPTH OF 6 INCHES. THE SILT FENCE WILL BE REPAIRED OR REPLACED AS NECESSARY TO MAINTAIN A BARRIER.

5. FILTER FABRIC SHALL BE INSTALLED BENEATH INLET COVERS TO TRAP SEDIMENT AS PER INLET PROTECTION DETAIL IN THE LOCATIONS SHOWN ON THE CONSTRUCTION PLANS.

6. CRUSHED STONE ENTRANCE SHALL BE MAINTAINED BY TURNING OVER THE STONE OR BY PLACING NEW STONE ONCE THE SURFACE BECOMES CLOGGED WITH SEDIMENT.

7. EROSION CONTROL MEASURES SHALL BE MAINTAINED ON A CONTINUING BASIS UNTIL SITE IS FULLY STABILIZED.

8. PERIODIC STREET SWEEPING SHALL BE COMPLETED TO MAINTAIN THE PUBLIC STREET FREE OF DUST AND DIRT.

9. SILT FENCE SHALL BE INSTALLED IN HORSESHOE FASHION AROUND ALL TOPSOIL AND FILL STOCKPILES. NOTIFY RESIDENT PROJECT REPRESENTATIVE OF ANY NEW STOCKPILE LOCATIONS.

10. CONSTRUCTION SEQUENCE FOR EROSION CONTROL INCLUDES:
    1. INSTALL STABILIZED CONSTRUCTION ENTRANCE.
    2. INSTALL SILT FENCE AND INLET PROTECTION.
    3. STRIP TOPSOIL IN TEMPORARY SEDIMENT BASIN AREA
    4. INSTALL SEDIMENT BASIN AND OUTLET CONTROL STRUCTURE. STABILIZE IMMEDIATELY AFTER INSTALLATION.
    5. STRIP TOPSOIL AND INSTALL TEMPORARY DIVERSIONS TO DIRECT RUNOFF TO SEDIMENT BASIN.
    6. STRIP TOPSOIL FROM REMAINDER OF SITE.
    7. PERFORM ROUGH GRADING AND BUILDING EXCAVATION. ADJUST DIVERSION DITCHES AS NEEDED TO MAINTAIN DRAINAGE TO SEDIMENT BASIN.
    8. INSTALL UTILITIES. INSTALL INLET PROTECTION ON NEW INLETS. INSTALL RIPRAP AT NEW OUTFALLS.
    9. CONSTRUCT BUILDING.
    10. INSTALL PAVEMENTS.
    11. INSTALL LANDSCAPING ON COMPLETED SITE WITHIN 7 DAYS OF COMPLETING CONSTRUCTION.
    12. REMOVE TEMPORARY SEDIMENTATION BASIN
    13. REMOVE EROSION CONTROL MEASURES ONLY WHEN SITE IS FULLY STABILIZED.

11. SITE DEWATERING. WATER PUMPED FROM THE SITE SHALL BE TREATED BY SEDIMENT BASINS OR OTHER APPROPRIATE BEST MANAGEMENT PRACTICES SPECIFIED IN THE WDNR "CONSTRUCTION SITE EROSION AND SEDIMENT CONTROL TECHNICAL STANDARDS". WATER SHALL NOT BE DISCHARGED IN A MANNER THAT CAUSES EROSION OF THE SITE, ADJACENT SITES, OR RECEIVING CHANNELS.

12. WASTE AND MATERIAL DISPOSAL. ALL WASTE AND UNUSED BUILDING MATERIALS INCLUDING GARBAGE, DEBRIS, CLEANING WASTES, WASTEWATER, TOXIC MATERIALS, OR HAZARDOUS MATERIALS SHALL BE PROPERLY DISPOSED AND NOT ALLOWED TO BE CARRIED OFF-SITE BY RUNOFF OR WIND.

13. TRACKING. EACH SITE SHALL HAVE GRAVELED ROADS, ACCESS DRIVES AND PARKING AREAS OF SUFFICIENT WIDTH AND LENGTH TO PREVENT SEDIMENT FROM BEING TRACKED ONTO PUBLIC OR PRIVATE ROADWAYS. ANY SEDIMENT REACHING A PUBLIC OR PRIVATE ROAD SHALL BE REMOVED BY STREET CLEANING, TO THE SATISFACTION OF THE RESIDENT PROJECT REPRESENTATIVE, BEFORE THE END OF EACH WORKDAY. FLUSHING MAY NOT BE USED UNLESS SEDIMENT WILL BE CONTROLLED BY A SEDIMENT BASIN OR OTHER APPROPRIATE BEST MANAGEMENT PRACTICE SPECIFIED IN THE WDNR "CONSTRUCTION SITE EROSION AND SEDIMENT CONTROL TECHNICAL STANDARDS". NOTIFY RESIDENT PROJECT REPRESENTATIVE FOR CHANGES IN STABILIZED CONSTRUCTION ENTRANCE LOCATION.

14. SEDIMENT CLEANUP. ALL OFF-SITE SEDIMENT DEPOSITS OCCURRING AS A RESULT OF A STORM EVENT SHALL BE CLEANED UP BY THE END OF THE NEXT WORK DAY. ALL OTHER OFF-SITE SEDIMENT DEPOSITS OCCURRING AS A RESULT OF CONSTRUCTION ACTIVITIES SHALL BE CLEANED UP BY THE END OF THE WORK DAY.

15. ALL DISTURBED GROUND LEFT INACTIVE FOR SEVEN OR MORE DAYS SHALL BE STABILIZED BY TEMPORARY OR PERMANENT SEEDING, AND MULCHING, SODDING, COVERING WITH TARPS, OR EQUIVALENT BEST MANAGEMENT PRACTICES. IF TEMPORARY SEEDING IS USED, A PERMANENT COVER SHALL ALSO BE REQUIRED AS PART OF THE FINAL SITE STABILIZATION. SEEDING OR SODDING SHALL BE REQUIRED AS PART OF THE FINAL SITE STABILIZATION.

16. PERMANENT SEEDING SHALL BE ESTABLISHED NO LATER THAN SEPTEMBER 15TH. IF PERMANENT SEEDING IS NOT ESTABLISHED, TEMPORARY SEEDING SHALL BE ESTABLISHED NO LATER THAN OCTOBER 15TH. ALL SEEDED AREAS MUST BE MULCHED AT A RATE OF 1.5 TO 2 TONS PER ACRE AND ANCHORED BY EITHER CRIMPING OR BY APPLYING A TACKIFIER.

17. PERMANENT SEED MIX AND APPLICATION SHALL CONFORM TO SECTION 329013. REFER TO LANDSCAPE AND RESTORATION SHEET BC12 FOR PERMANENT MIX LOCATIONS.

18. TEMPORARY SEED MIX SHALL CONFORM TO SPECIFICATION SECTION 31 25 13 – EROSION AND SEDIMENT CONTROLS. PERMANENT SEEDING SHALL FOLLOW WITHIN ONE YEAR. IF TEMPORARY SEEDING IS NOT ESTABLISHED BY OCTOBER 15TH, USE CLASS I TYPE B MATTING ON ALL SLOPES 4:1 OR STEEPER.

19. SOIL OR DIRT STORAGE PILES SHALL BE LOCATED A MINIMUM OF TWENTY-FIVE FEET FROM ANY DOWNSLOPE ROAD, LAKE, STREAM, WETLAND, OR DRAINAGE CHANNEL. STRAW BALE OR FILTER FABRIC FENCES SHALL BE PLACED ON THE DOWN SLOPE SIDE OF THE PILE. IF REMAINING FOR MORE THAN THIRTY DAYS. PILES SHALL BE STABILIZED BY MULCHING, VEGETATIVE COVER, TARPS, OR OTHER MEANS.

20. WHEN THE DISTURBED AREA HAS BEEN STABILIZED BY PERMANENT VEGETATION OR OTHER MEANS, TEMPORARY BEST MANAGEMENT PRACTICES SUCH AS FILTER FABRIC FENCES, STRAW BALES, SEDIMENT AND SEDIMENT TRAPS SHALL BE REMOVED.

21. NOTIFY THE RESIDENT PROJECT REPRESENTATIVE WITHIN TWO WORKING DAYS OF COMMENCING ANY LAND DEVELOPMENT OR LAND DISTURBING ACTIVITY.

22. NOTIFY THE RESIDENT PROJECT REPRESENTATIVE OF COMPLETION OF ANY BEST MANAGEMENT PRACTICES WITHIN THE NEXT WORKING DAY AFTER THEIR INSTALLATION.

23. OBTAIN PERMISSION IN WRITING FROM THE RESIDENT PROJECT REPRESENTATIVE PRIOR TO MODIFYING THE EROSION CONTROL PLAN. NOTIFY WDNR AT LEAST FIVE WORKING DAYS PRIOR TO IMPLEMENTING CHANGES TO THE EROSION CONTROL PLAN.

24. REPAIR ANY SILTATION OR EROSION DAMAGE TO ADJOINING SURFACES AND DRAINAGE WAYS RESULTING FROM LAND DEVELOPMENT OR LAND DISTURBING ACTIVITIES.

25. KEEP A COPY OF THE EROSION CONTROL PLAN ON-SITE.

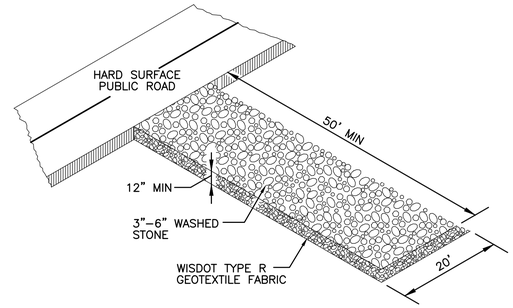


1 STONE CONSTRUCTION ENTRANCE
NOT TO SCALE

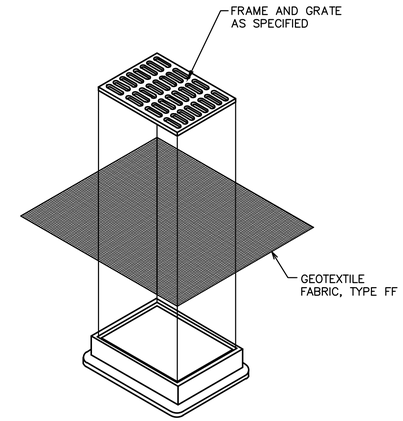


2 INLET PROTECTION
TYPE B (WITHOUT CURB BOX)
NOT TO SCALE

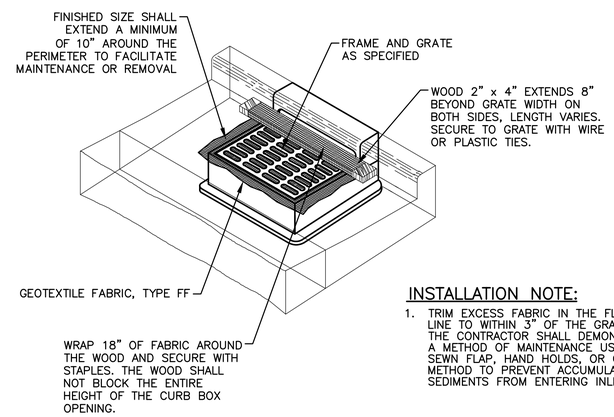


INSTALLATION NOTE:

1. TRIM EXCESS FABRIC IN THE FLOW LINE TO WITHIN 3" OF THE GRATE. THE CONTRACTOR SHALL DEMONSTRATE A METHOD OF MAINTENANCE USING A SEWN FLAP, HAND HOLDS, OR OTHER METHOD TO PREVENT ACCUMULATED SEDIMENTS FROM ENTERING INLET.

3 INLET PROTECTION
TYPE C (WITH CURB BOX)
NOT TO SCALE

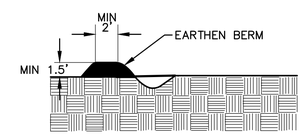


4 DIVERSION DITCH
NOT TO SCALE

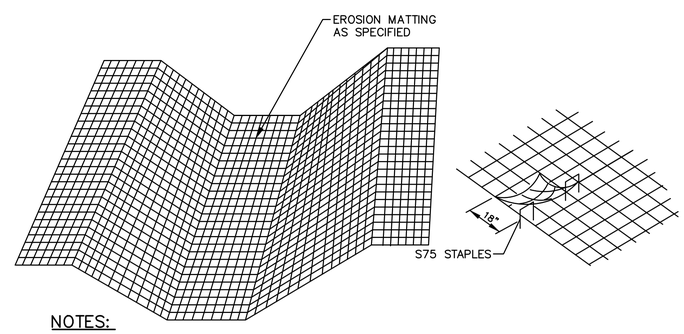


NOTES:

1. STAPLE PATTERN PER MANUFACTURER'S RECOMMENDATIONS
2. JOIN STRIPS BY ANCHORING AND OVERLAPPING
3. ROLL OUT STRIPS OF NETTING PARALLEL TO THE DIRECTION OF FLOW

5 EROSION MATTING
NOT TO SCALE

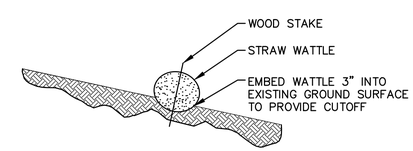


6 WATTLE DITCH CHECK
NOT TO SCALE

DRAFT 98% PROGRESS DRAWINGS
OCTOBER 2019

GRAEF

| NO. | DATE | APPD | REVISION |
|---|---|---|---|

Waukesha Water Utility
SERVING WAUKESHA SINCE 1886

GREELEY AND HANSEN
741 N. GRAND AVE, SUITE 308
WAUKESHA, WI 53186

GREAT WATER ALLIANCE™

CONTRACT PACKAGE 3: BOOSTER PUMPING STATION, STORAGE, AND CHEMICAL FACILITIES

GRADING AND EROSION CONTROL NOTES AND DETAILS

APPROVED

SEAL AFFIXED
MONTH / DAY / YEAR

OCTOBER 2019

JOB NO.: 15310

| DESGN | DDB | CHCK | PRE |
|---|---|---|---|
| APPRV | MNP | DRWN | SRK |
| SCALE: | AS SHOWN | | |

DRAWING NUMBER

AC3

SHEET 10 OF 184 | REV 0

FILE: X:\ML\2016\20160998\CAD\SITE\DWG\00\GH_00_BPSF_AC03_CONSTRUCTION_DETAILS.DWG

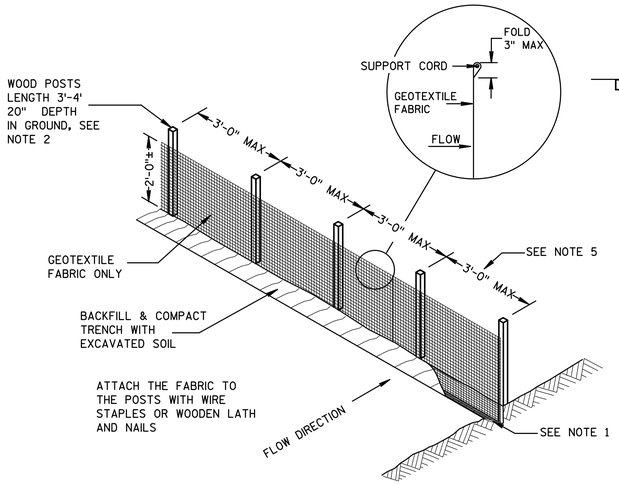


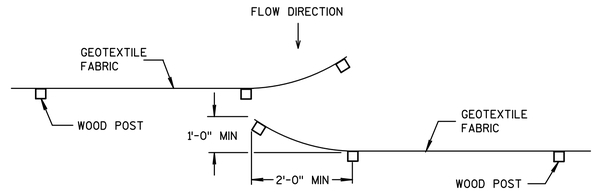


HOOK METHOD

JOINING TWO LENGTHS OF SILT FENCE SEE NOTE 3

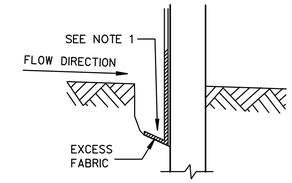


TRENCH DETAIL

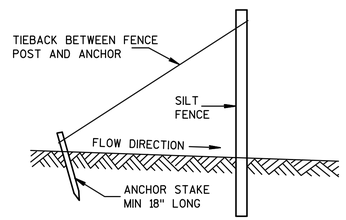


SILT FENCE TIE BACK

(WHEN ADDITIONAL SUPPORT REQUIRED)

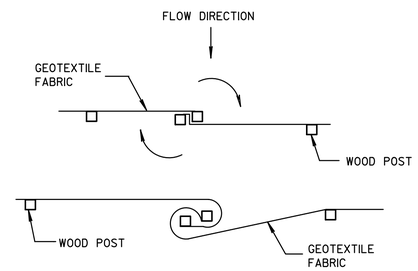


TWIST METHOD SEE NOTE 3

NOTES:

1. TRENCH SHALL BE MINIMUM OF 4" WIDE AND 6" DEEP TO BURY AND ANCHOR THE GEOTEXTILE FABRIC. FOLD MATERIAL TO FIT TRENCH AND BACKFILL AND COMPACT TRENCH WITH EXCAVATED SOIL.
2. WOOD POSTS SHALL BE A MINIMUM SIZE OF 1-1/8"x1-1/8" OF OAK OR HICKORY.
3. CONSTRUCT SILT FENCE FROM A CONTINUOUS ROLL IF POSSIBLE BY CUTTING LENGTHS TO AVOID JOINTS. IF A JOINT IS NECESSARY USE ONE OF THE FOLLOWING TWO METHODS: A) TWIST METHOD -- OVERLAP THE END POSTS AND TWIST, OR ROTATE, AT LEAST 180 DEGREES. B) HOOK METHOD: HOOK THE END OF EACH SILT FENCE LENGTH.
4. ADDITIONAL POST DEPTH OR TIE BACKS MAY BE REQUIRED IN UNSTABLE SOILS.
5. 8'-0" POST SPACING ALLOWED IF A WOVEN GEOTEXTILE FABRIC IS USED.

## 1 SILT FENCE

NOT TO SCALE

| PD (IN) | A (FT) | B (FT) | C (FT) | D (FT) | T (IN) | D50 (IN) |
|---|---|---|---|---|---|---|
| 24 | 6 | 11 | 8 | 5 | 12 | 6 |
| 18 | 5 | 9 | 6 | 4 | 7 | 4 |
| 12 | 4 | 6 | 4 | 3 | 7 | 4 |

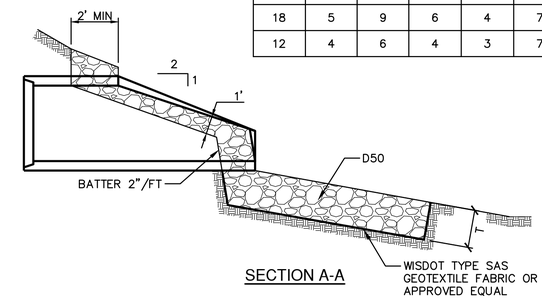


SECTION A-A

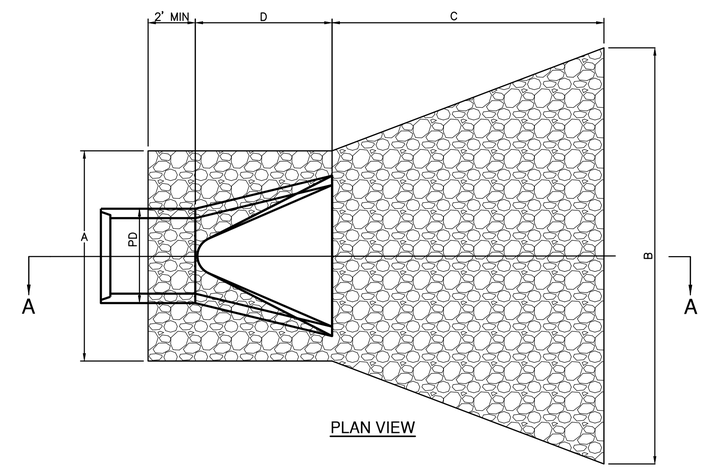


PLAN VIEW

## 2 RIPRAP AT STORM SEWER OUTFALL

NOT TO SCALE

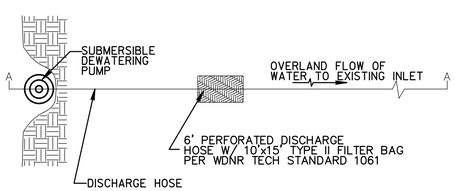


PLAN

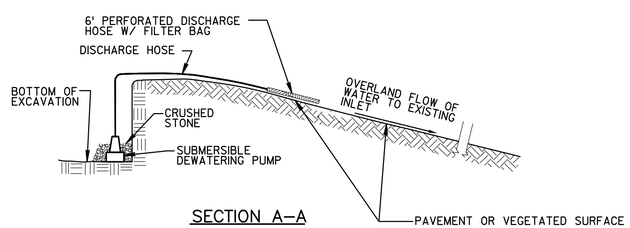


SECTION A-A

NOTES:

1. DISCHARGE OVER 70 GPM SHALL BE SPECIFICALLY PERMITTED WITH WDNR.
2. FILTER BAG SHALL BE USED IN CONJUNCTION WITH A WATER APPLIED POLYMER PER WDNR TECH STANDARD 1051.
3. CONTRACTOR SHALL REVIEW WITH RESIDENT PROJECT REPRESENTATIVE TO DETERMINE MAXIMUM ALLOWABLE RELEASE RATES.
4. CONTRACTOR SHALL MAKE PROVISIONS FOR INCORPORATING A PORTABLE SEDIMENT TANK COMPLIANT WITH WDNR TECH STANDARD 1061 SHOULD PROPOSED DETAIL BECOME NO LONGER APPLICABLE.

## 3 DEWATERING SEDIMENTATION CONTROL

NOT TO SCALE

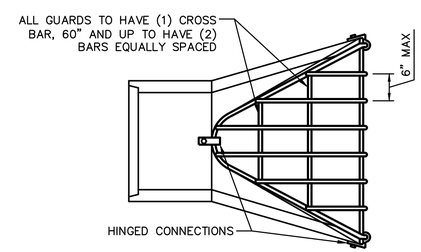


PLAN

| ROUND | |
|---|---|
| PIPE SIZE | H |
| 12" | 2 1/2" |
| 15" | 3" |
| 18"-24" | 4" |
| 27"-36" | 5" |
| 42"-54" | 6" |
| 60"-72" | 7" |
| 78"-90" | 8" |

| BAR SIZES | | | | | | | |
|---|---|---|---|---|---|---|---|
| STANDARD DESIGN | | | | HEAVY DESIGN | | | |
| PIPE SIZE | HOLE DIA REQD | BOLT DIA | BAR SIZE | PIPE SIZE | HOLE DIA REQD | BOLT DIA | BAR SIZE |
| 12"-24" | 3/4" | 5/8" | 5/8" | 12"-18" | 3/4" | 5/8" | 3/4" |
| 27"-48" | 7/8" | 3/4" | 3/4" | 21"-42" | 7/8" | 3/4" | 1" |
| 54"-90" | 1 1/8" | 1" | 1" | 48"-90" | 1 1/8" | 1" | 1 1/4" |
| BOLT LENGTH = PIPE WALL THICKNESS + 2 1/2" | | | | | | | |

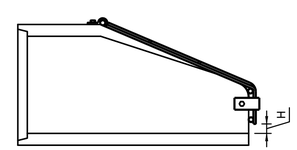


SECTION

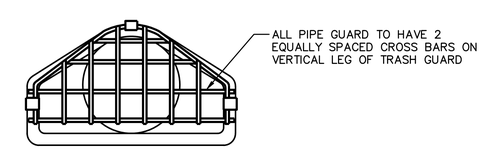


## 4 TRASH GUARD

NOT TO SCALE

DRAFT 98% PROGRESS DRAWINGS

OCTOBER 2019

| NO. | DATE | APPD | REVISION |
|---|---|---|---|

Waukesha Water Utility — SERVING WAUKESHA SINCE 1886

GREELEY AND HANSEN — 741 N. GRAND AVE, SUITE 308, WAUKESHA, WI 53186

GREAT WATER ALLIANCE™

CONTRACT PACKAGE 3: BOOSTER PUMPING STATION, STORAGE, AND CHEMICAL FACILITIES

GRADING AND EROSION CONTROL DETAILS

APPROVED

SEAL AFFIXED MONTH / DAY / YEAR

OCTOBER 2019

JOB NO.: 15310

| DESGN | DDB | CHCK | PRE |
|---|---|---|---|
| APPRV | MNP | DRWN | SRK |

SCALE: AS SHOWN

DRAWING NUMBER

AC4

SHEET 11 OF 184 REV 0

GRAEF

BAR MEASURE 1" ON FULLSIZE SHEETS
01/15/2019 12:32:26 PM
FILE: X:\MIL\2016\2016\0998\CAD\SITE\DWG\00\GH_00_BPSF_AC04_CONSTRUCTION_DETAILS.DWG

BAR MEASURE 1" ON FULL SIZE SHEETS

01/03/2019 12:01:31 PM

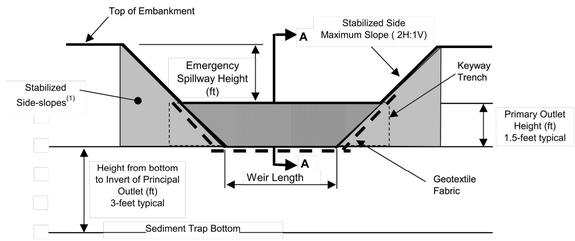


**Cross-section View of Principal Outlet**

Notes: (1) Side-slopes and faces of earthen embankment around outlet shall be armored with riprap or stabilized with erosion mat sufficient to handle flows from the 10-year storm.

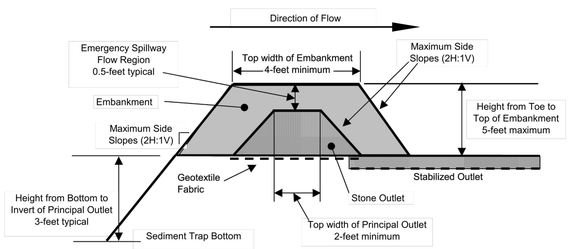


**View A - A of Principal Outlet**

SOURCE: WISCONSIN DEPARTMENT OF NATURAL RESOURCES

## 1 SEDIMENT TRAP OUTLET

NOT TO SCALE

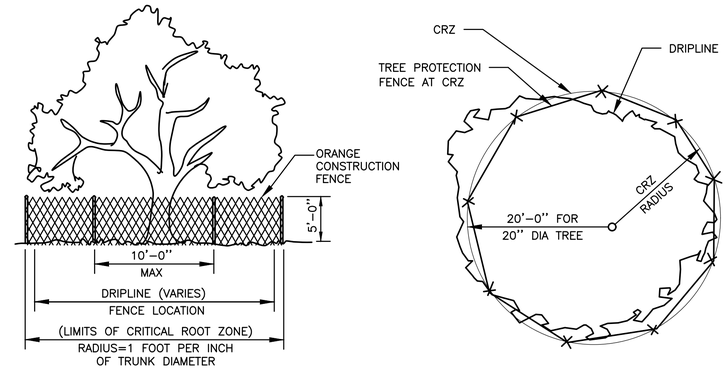


TREE PROTECTION FENCE – ORANGE CONSTRUCTION FENCE

NOTES:

1. ALL TREES SHOWN TO BE RETAINED WITHIN THE LIMITS OF CONSTRUCTION ON THE PLANS, SHALL BE PROTECTED DURING CONSTRUCTION WITH FENCING.
2. TREE PROTECTION FENCES SHALL BE INSTALLED PRIOR TO THE COMMENCEMENT OF ANY SITE PREPARATION WORK (CLEARING, GRUBBING, OR GRADING)
3. EROSION AND SEDIMENTATION CONTROL BARRIERS SHALL BE INSTALLED OR MAINTAINED IN A MANNER WHICH DOES NOT RESULT IN SOIL BUILD-UP WITHIN TREE DRIPLINES.
4. FENCES SHALL COMPLETELY SURROUND THE TREE OR CLUSTERS OF TREES, LOCATED AT THE OUTERMOST LIMITS OF THE TREE BRANCHES (DRIPLINE) OR CRITICAL ROOT ZONE (CRZ), WHICHEVER IS GREATER; AND SHALL BE MAINTAINED THROUGHOUT THE CONSTRUCTION PROJECT.
5. ANY ROOTS EXPOSED BY CONSTRUCTION ACTIVITY SHALL BE PRUNED FLUSH WITH THE SOIL AND BACKFILLED WITH GOOD QUALITY TOP SOIL WITHIN TWO DAYS. IF EXPOSED ROOT AREAS CANNOT BE BACKFILLED WITHIN 2 DAYS, AN ORGANIC MATERIAL WHICH REDUCES SOIL TEMPERATURE AND MINIMIZES WATER LOSS DUE TO EVAPORATION SHALL BE PLACED TO COVER THE ROOTS UNTIL BACKFILL CAN OCCUR.
6. PRIOR TO EXCAVATION OR GRADE CUTTING WITHIN TREE DRIPLINES, A CLEAN CUT SHALL BE MADE WITH A ROCK SAW OR SIMILAR EQUIPMENT, TO MINIMIZE DAMAGE TO REMAINING ROOTS.
7. NO LANDSCAPE TOPSOIL DRESSING GREATER THAN FOUR (4) INCHES SHALL BE PERMITTED WITHIN THE DRIPLINE OR CRZ OF TREES, WHICHEVER IS GREATER. NO TOPSOIL IS PERMITTED ON ROOT FLARES OF ANY TREE.
8. PRUNING TO PROVIDE CLEARANCE FOR STRUCTURES, VEHICULAR TRAFFIC, AND CONSTRUCTION EQUIPMENT SHALL TAKE PLACE BEFORE CONSTRUCTION

## 2 TREE PROTECTION

NOT TO SCALE

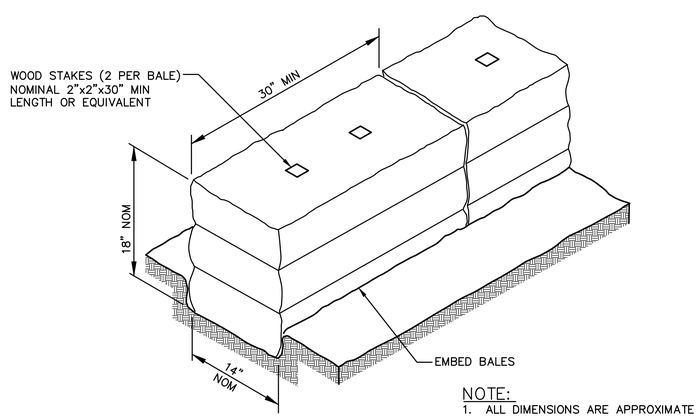


NOTE:

1. ALL DIMENSIONS ARE APPROXIMATE

## 3 DETAIL OF EROSION BALE INSTALLATION

NOT TO SCALE

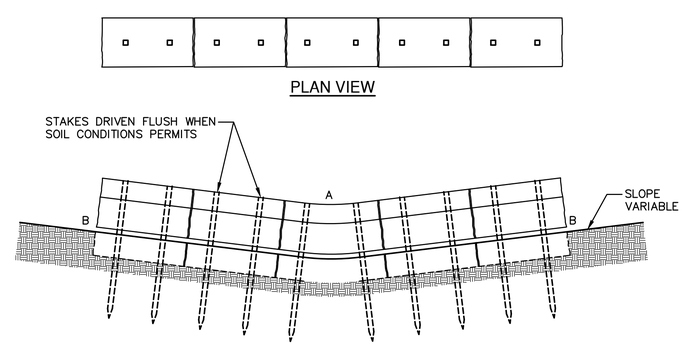


NOTES:

1. POINT "B" SHALL BE HIGHER THAN POINT "A"
2. IF REQUIRED TWO ROWS MAY BE USED WITH STAGGERED JOINTS.

## 4 EROSION BALES ACROSS DITCH BOTTOM

NOT TO SCALE

DRAFT 98% PROGRESS DRAWINGS

OCTOBER 2019

GRAEF

| NO. | DATE | APPD | REVISION |
|---|---|---|---|

Waukesha Water Utility
SERVING WAUKESHA SINCE 1886

GREELEY AND HANSEN
741 N. GRAND AVE, SUITE 308
WAUKESHA, WI 53186

GREAT WATER ALLIANCE™

CONTRACT PACKAGE 3: BOOSTER PUMPING STATION, STORAGE, AND CHEMICAL FACILITIES

GRADING AND EROSION CONTROL DETAILS

APPROVED

SEAL AFFIXED
MONTH / DAY / YEAR

OCTOBER 2019

| | | | |
|---|---|---|---|
| JOB NO.: 15310 | | | |
| DESGN | DDB | CHCK | PRE |
| APPRV | MNP | DRWN | SRK |
| SCALE: | AS SHOWN | | |

DRAWING NUMBER

AC5

SHEET 12 OF 184 REV 0

FILE: X:\ML\2016\2016\0998\CAD\SITE\DWG\00\GH_00_BPSF_AC05_CONSTRUCTION_DETAILS.DWG

BAR MEASURE 1" ON FULL SIZE SHEETS

05/28/2019 9:51:31 AM

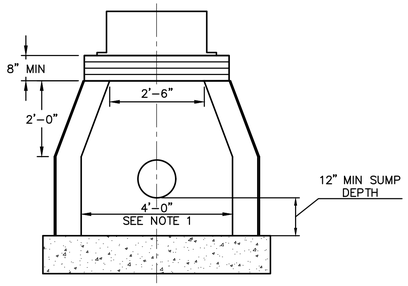


NOTE:

1. FOR INLETS OVER 4' IN DEPTH INCREASE WIDTH AT BASE TO 4'

## 1 STANDARD CATCH BASIN

NOT TO SCALE

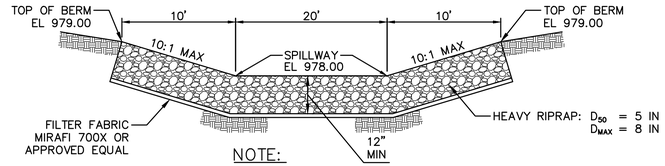


NOTE:

1. TOTAL LENGTH OF SPILLWAY IS APPROXIMATELY 40 FT

## 2 EMERGENCY OVERFLOW SPILLWAY DRY POND

NOT TO SCALE

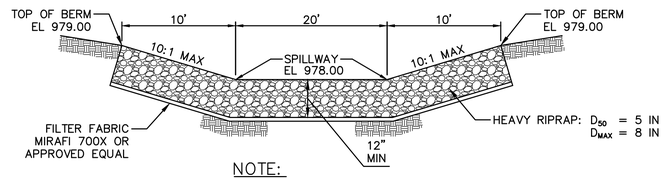


NOTE:

1. TOTAL LENGTH OF SPILLWAY IS APPROXIMATELY 40 FT

## 3 EMERGENCY OVERFLOW SPILLWAY WET POND

NOT TO SCALE

NOTE:

1. BAR MARKS REFER TO BAR BEND DIAGRAM SHOWN BELOW. A BILL OF MATERIAL FOR REINFORCING STEEL HAS NOT BEEN PROVIDED FOR THESE STRUCTURES. ALL DIMENSIONS ON BAR BEND ARE OUT TO OUT OF BAR.

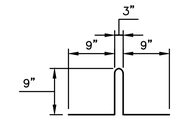


BEND DIAGRAM
DETAIL "A"

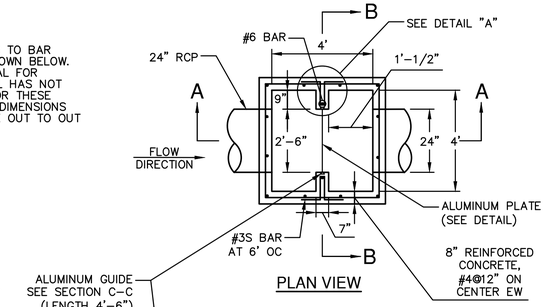


PLAN VIEW

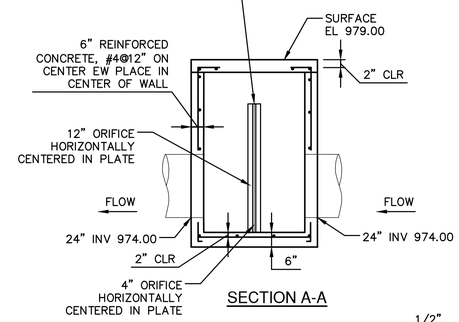


SECTION A-A

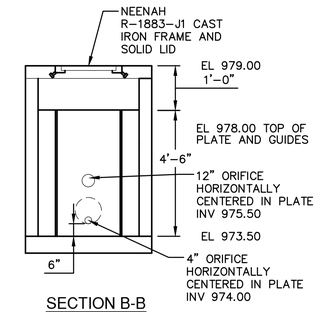


SECTION B-B

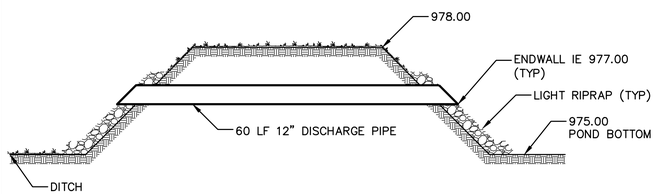


## 4 EAST POND DISCHARGE PIPE

NOT TO SCALE

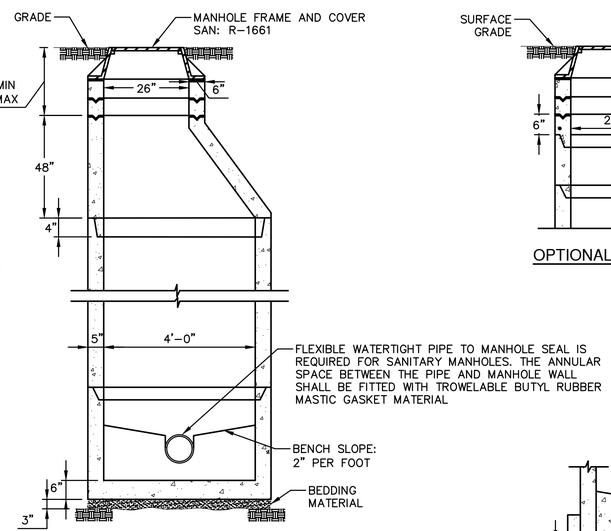


NOTES:

1. FLAT TOP SLAB MAY BE USED FOR 5'-0" AND 6'-0" DIA MANHOLES.
2. PRECAST CONCRETE ADJUSTING RINGS TO BE REINFORCED WITH ONE LINE OF STEEL CENTERED WITHIN THE RING. WHERE NECESSARY RINGS SHALL BE GROOVED TO RECEIVE STEP.
3. CONCRETE AND STEEL REINFORCEMENT SHALL CONFORM TO DESIGNATION C-478 REQUIREMENTS OF ASTM SPECIFICATIONS.
4. JOINTS SHALL BE WATERTIGHT AND SHALL BE MADE USING RUBBER GASKETS OR BUTYL RUBBER MASTIC MATERIAL.
5. AREA OF CIRCUMFERENTIAL STEEL = 0.12 SQ INCH PER LINEAL FOOT.

## 7 PRECAST MANHOLE

NOT TO SCALE

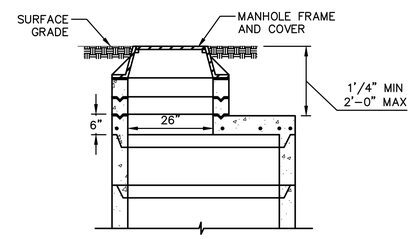


OPTIONAL FLAT-TOP SECTION

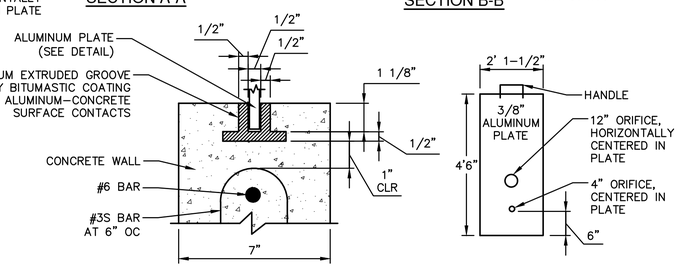


SECTION C-C

ALUMINUM PLATE

## 5 DRY POND OUTLET CONTROL STRUCTURE

NOT TO SCALE

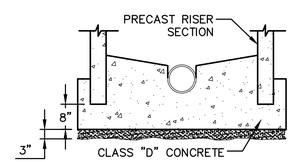


OPTIONAL POURED BASE

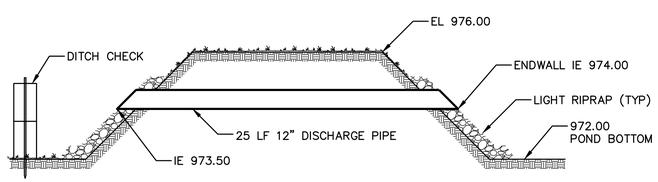


## 6 WEST POND DISCHARGE PIPE

NOT TO SCALE

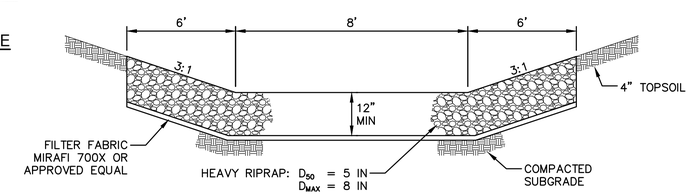


## 8 HEAVY RIPRAP ROCK

NOT TO SCALE

DRAFT 98% PROGRESS DRAWINGS

OCTOBER 2019

GRÄEF

| NO. | DATE | APPD | REVISION |
|---|---|---|---|

Waukesha Water Utility
SERVING WAUKESHA SINCE 1886

GREELEY AND HANSEN
741 N. GRAND AVE, SUITE 308
WAUKESHA, WI 53186

GREAT WATER ALLIANCE™

CONTRACT PACKAGE 3: BOOSTER PUMPING STATION, STORAGE, AND CHEMICAL FACILITIES

GRADING AND EROSION CONTROL DETAILS

APPROVED

SEAL AFFIXED
MONTH / DAY / YEAR

OCTOBER 2019

JOB NO.: 15310

| DESGN | DDB | CHCK | PRE |
|---|---|---|---|
| APPRV | MNP | DRWN | SRK |

SCALE: AS SHOWN

DRAWING NUMBER

AC6

SHEET 13 OF 184 | REV 0

FILE: X:\ML\2016\2016\0998\CAD\SITE\DWG\00\GH_00_BPSF_AC06_POND_DETAILS.DWG

## LANDSCAPE NOTES:

1. VERIFY EXISTING AND PROPOSED CONDITIONS, UTILITIES, PIPES, AND STRUCTURES, ETC. PRIOR TO BIDDING AND CONSTRUCTION.
2. INSPECT THE SITE PRIOR TO COMMENCING WORK. DOCUMENT IN WRITING AND PHOTOGRAPH EXISTING CONDITIONS WITHIN, AND IN AREAS ADJACENT TO, THE LIMITS OF CONSTRUCTION. PROVIDE DIGITAL COPIES OF PHOTOGRAPHS TO THE RESIDENT PROJECT REPRESENTATIVE. THE CONTRACTOR IS RESPONSIBLE FOR ANY DAMAGES NOT DOCUMENTED IN THE SUBMITTAL PRIOR TO COMMENCEMENT OF DEMOLITION ACTIVITIES.
3. REFER TO GEOTECHNICAL REPORT FOR INFILTRATION RATES AND SOIL TYPES / CONDITIONS.
4. SEE SPECIFICATIONS AND DETAILS FOR PLANTING METHODS, REQUIREMENTS, SOIL TESTING, MATERIALS, EXECUTION AND PLANT PROTECTION, PLANT STAKING METHODS, PLANT PIT DIMENSIONS, BACKFILL AND OTHER RELATED REQUIREMENTS.
5. PLANT PLACEMENT IS REQUIRED AS SHOWN ON THE LAYOUT, PLANTING, AND OTHER DRAWINGS.
6. PLANT NAMES ARE ABBREVIATED ON THE DRAWINGS. SEE PLANT LIST FOR SYMBOLS, ABBREVIATIONS, BOTANICAL/COMMON NAMES, SIZES, ESTIMATED QUANTITIES (IF GIVEN) AND OTHER REMARKS.
7. MAINTAIN AND WARRANT PLANT MATERIALS AS DESCRIBED IN SPECIFICATIONS.
8. PLANT BEDS AND TREE PLANTING PITS ARE TO RECEIVE 3" DEEP LAYER OF SHREDDED HARDWOOD BARK MULCH PER SPECIFICATIONS AND DETAILS.
9. FORM 72–INCH, OR AS OTHERWISE INDICATED, WATERING BASIN AROUND TREES NOT INSTALLED IN PAVED AREAS.
10. MAINTAIN 72–INCH DIAMETER MINIMUM CLEAR SOIL AREA AROUND ALL TREES IN MANICURED TURF AREAS. MULCH TREE RINGS WITH SPECIFIED DEPTH OF HARDWOOD BARK MULCH. SEE PLANTING DETAILS.
11. FINE GRADE, RAKE, AND ENSURE POSITIVE DRAINAGE AWAY FROM STRUCTURES AND THROUGHOUT SITE WITHIN THE LIMITS OF CONSTRUCTION, WITH ACCURATELY SET FLOW LINES. LOW SPOTS OR PONDING OF SURFACE WATER WILL NOT BE ACCEPTED IN THE FINAL WORK. ROCKS OR DEBRIS WILL NOT BE ACCEPTED. FINAL GRADE TOLERANCES ARE +/–0.1 FOOT MAXIMUM.
12. WHERE PROVIDED, AREA TAKEOFFS AND PLANT QUANTITY ESTIMATES ARE FOR INFORMATION ONLY. CONTRACTOR IS RESPONSIBLE TO CONDUCT QUANTITY TAKE–OFFS FOR PLANT MATERIALS AND SIZES SHOWN ON PLANS. PLANT SYMBOLS INDICATED ON THE PLAN TAKE PRECEDENCE IN CASE OF DISCREPANCIES BETWEEN CALLOUTS AND THE PLANT LIST.
13. COORDINATE THE INSTALLATION OF PLANT MATERIAL WITH INSTALLATION OF ADJACENT PAVEMENTS, DRAINAGE, CURB AND RELATED STRUCTURES WITH OTHER TRADES.
14. RESTORE AREAS OF THE SITE, OR ADJACENT AREAS, WHERE DISTURBED. DAMAGE CAUSED DURING LANDSCAPE INSTALLATION TO EXISTING CONDITIONS AND IMPROVEMENTS IS THE RESPONSIBILITY OF THE CONTRACTOR.
15. UNLESS OTHERWISE INDICATED, PLACE SHRUBS AND ORNAMENTAL GRASSES IN STRAIGHT ROWS, EQUALLY SPACED.
16. FOLLOWING TESTING AND ANALYSIS OF TOPSOIL, INCORPORATION OF RECOMMENDED AMENDMENTS, AND TOPSOIL PLACEMENT, ALL PLANT BED AREAS SHALL BE PREPARED AS DESCRIBED IN SPECIFICATIONS.
17. TAKE NECESSARY SCHEDULING AND OTHER PRECAUTIONS TO AVOID WINTER, CLIMATIC, OR OTHER DAMAGE TO PLANTS.
18. PLANTING BEDS ARE TO BE SEPARATED FROM ADJACENT TURF AREAS WITH SHOVEL CUT EDGING. INSTALL AT LOCATIONS INDICATED ON DRAWINGS AND PER LANDSCAPE DETAILS.
19. PLANT SUBSTITUTIONS WILL NOT BE PERMITTED UNLESS THE CONTRACTOR CAN DEMONSTRATE THE PLANTS ARE NOT AVAILABLE FROM NURSERY SOURCES LOCATED WITHIN 100 MILES FROM THE PROJECT SITE. ANY PROPOSED PLANT SUBSTITUTION WILL REQUIRE PRIOR REVIEW AND WRITTEN ACCEPTANCE BY THE ENGINEER.
20. PROVIDE TREE STAKING AS DESCRIBED IN SPECIFICATIONS.
21. PROVIDE THREE YEARS OF MAINTENANCE SERVICE FOR ALL NATIVE SEEDING AREAS. SEE SPECIFICATIONS FOR DETAILED SCHEDULE OF SERVICES.

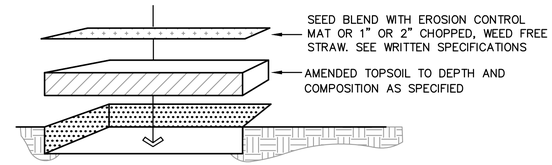


NOTES:

1. TOPSOIL SHALL CONFORM TO PROPERTIES AS DESCRIBED IN SPECIFICATION.
2. CONTRACTOR TO PROVIDE FINISHED TURF GRADE PER DRAWINGS WITH UNIFORM, NATURAL SLOPES PRIOR TO THE SOWING OF SEED.
3. SEED BLEND AND APPLICATION PROCEDURES ARE DESCRIBED IN SPECIFICATION.
4. SEE LANDSCAPE PLAN FOR LOCATION OF VARIOUS SEED MIXES.
5. CONTRACTOR SHALL PROVIDE SEED GERMINATION AND ESTABLISH VIGOROUS PLANT GROWTH AS DESCRIBED IN SPECIFICATION.
6. CONTRACTOR SHALL PERFORM MAINTENANCE SERVICES IN ORDER TO PROVIDE ADEQUATE WEED CONTROL. SEE SPECIFICATION FOR DETAILED MAINTENANCE SERVICES AND DURATION.

### 1 PRAIRIE / WILDFLOWER SEEDING
NO SCALE

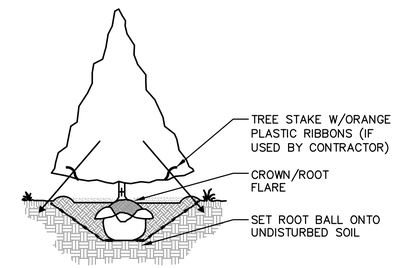


NOTES:

1. PRIOR TO DIGGING TREE, MARK NORTH SIDE OF TRUNK. INSTALL TREE IN SAME ORIENTATION.
2. EXCAVATE PLANTING PIT 3–TIMES THE DIA AND APPROXIMATELY THE HEIGHT OF ROOT BALL DEPTH. ROOT FLARE SHALL BE AT OR SLIGHTLY HIGHER THAN ADJACENT FINISHED GRADE.
3. LOOSEN SUBSOIL W/ PICK TO ENSURE POROSITY.
4. SELECT BEST VIEWING ANGLE, LIFT STOCK BY BALL AND PLACE IN PLANTING PIT.
5. CUT AND REMOVE ALL STRING AND WIRE AND UNWRAP TOP HALF OF ROOT BALL. BACKFILL PLANTING PIT WITH EXISTING SOIL UP TO BASE OF ROOT FLARE.
6. PACK BACKFILL AROUND BASE OF ROOT BALL TO STABILIZE IT.
7. BACKFILL REMAINDER OF PLANTING HOLE USING WATER PERIODICALLY TO REDUCE AIR POCKETS.
8. FORM 3" HT SAUCER IN 6'–0" DIAMETER AROUND TREE AND FILL WITH 3" SHREDDED HARDWOOD BARK MULCH.
9. KEEP MULCH 1–2 INCHES AWAY FROM TRUNK.
10. WATER IMMEDIATELY AND FREQUENTLY.
11. PLANT SIZES SPECIFIED ARE MINIMUM ACCEPTABLE.

### 3 EVERGREEN PLANTING DETAIL
NO SCALE

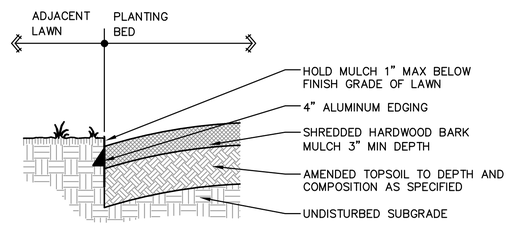


### 2 ALUMINUM PLANT BED EDGE
NO SCALE

| SYMBOL | BOTANICAL NAME | COMMON NAME | SIZE | SPACING | MATURE SIZE |
|---|---|---|---|---|---|
| EVERGREEN TREES | | | | | |
| ABC | ABIES CONCOLOR | WHITE FIR | 6'–8'–10' BB | AS SHOWN | 50'H X 30'W |
| JXJ | JUNIPERUS X 'J.N. SELECT BLUE' | STAR POWER JUNIPER | 6'–8' BB | AS SHOWN | 18'–20'H X 7'–9'W |
| PGD | PICEA GLAUCA VAR. DENSATA | BLACK HILLS SPRUCE | 6'–8'–10' BB | AS SHOWN | 20'–40'H X 15'–25'W |
| PPG | PICEA PUNGENS | GREEN COLORADO SPRUCE | 6'–8'–10' BB | AS SHOWN | 60'H X 20'W |
| PST | PINUS STROBUS | WHITE PINE | 6'–8'–10' BB | AS SHOWN | 80'H X 40'W |
| EVERGREEN SHRUBS | | | | | |
| BIW | BUXUS X SINICA VAR. INSULARIS 'WINTERGREEN' | WINTERGREEN BOXWOOD | 24" HEIGHT | 3' | 3'–4'H X 3'–4'W |
| JCI | JUNIPERUS CHINENSIS 'IOWA' | IOWA JUNIPER | 48" HEIGHT | 5' | 10'–15'H X 4'–5'W |
| ORNAMENTAL GRASSES AND SEDGES | | | | | |
| PVN | PANICUM VIRGATUM 'NORTHWIND' | NORTHWIND SWITCH GRASS | 1 GALLON | 36" | 6'H X 30"W |
| SCC | SCHIZACHYRIUM SCOPARIUM 'CAROUSEL' | CAROUSEL LITTLE BLUESTEM | 1 GALLON | 24" | 30"H X 30"W |

### 4 PLANT LIST
NOT TO SCALE

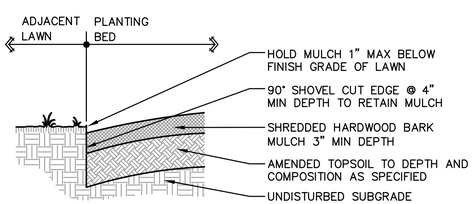


### 5 SHOVEL-CUT PLANT BED EDGE
NO SCALE

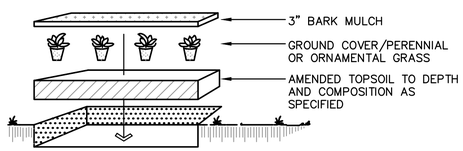


NOTES:

1. LAYOUT PLANT MATERIAL AT SPACING AS SHOWN PER PLANT MATERIALS SCHEDULE.
2. HAND BROADCAST UNIFORM 3" HARDWOOD MULCH THROUGHOUT GROUNDCOVER / PERENNIAL / ORNAMENTAL GRASS BED.
3. FLOOD IMMEDIATELY AND WATER FREQUENTLY PER SPECIFICATIONS.
4. PLANT SIZES SPECIFIED ARE MINIMUM ACCEPTABLE.

### 6 ORNAMENTAL GRASS PLANTING DETAIL
NO SCALE

DRAFT 98% PROGRESS DRAWINGS
OCTOBER 2019

GRAEF

| NO. | DATE | APPD | REVISION |
|---|---|---|---|

Waukesha Water Utility
SERVING WAUKESHA SINCE 1886

GREELEY AND HANSEN
741 N. GRAND AVE, SUITE 308
WAUKESHA, WI 53186

GREAT WATER ALLIANCE™

CONTRACT PACKAGE 3: BOOSTER PUMPING STATION, STORAGE, AND CHEMICAL FACILITIES

LANDSCAPE AND RESTORATION NOTES

APPROVED

SEAL AFFIXED
MONTH / DAY / YEAR

OCTOBER 2019

| JOB NO.: 15310 | | | |
|---|---|---|---|
| DESGN | DDB | CHCK | PRE |
| APPRV | MNP | DRWN | SRK |
| SCALE: | AS SHOWN | | |

DRAWING NUMBER
AC7

SHEET 14 OF 184 | REV 0

02/19/2019 8:45:06 AM
BAR MEASURE 1" ON FULL SIZE SHEETS
FILE: X:\MIL\2016\2016998\CAD\SITE\DWG\00\GH_00_BPSF_AC07_LANDSCAPE_DETAILS.DWG

BAR MEASURE 1" ON FULL SIZE SHEETS

01/04/2019 9:27:18 AM

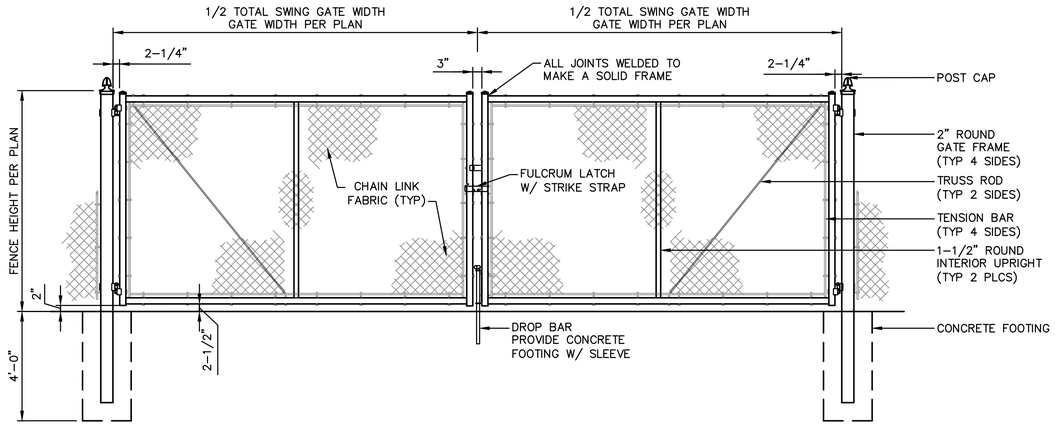


## 1 DOUBLE CHAIN LINK SWING GATE DETAIL

NOT TO SCALE

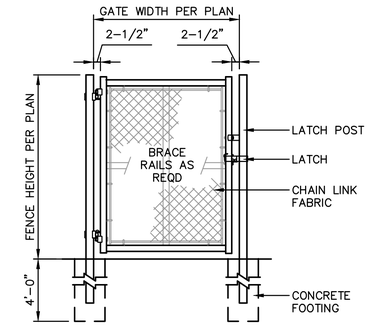


## 2 SINGLE SWING GATE DETAIL

NOT TO SCALE

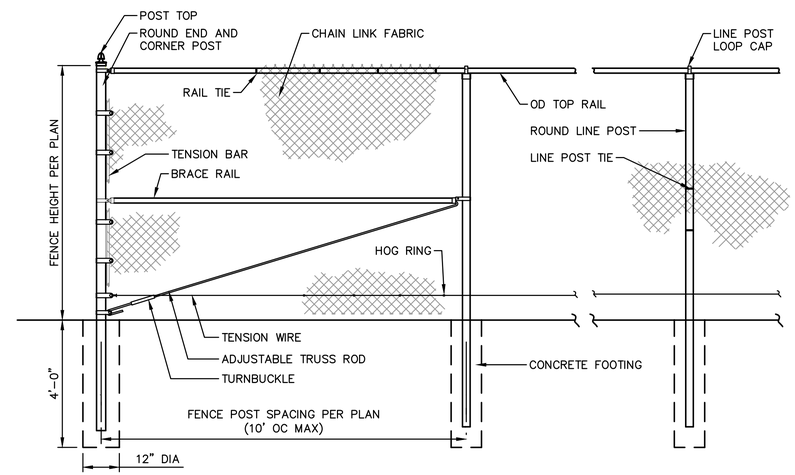


## 3 CHAIN LINK FENCE DETAIL

NOT TO SCALE

NOTES:

1. ORNAMENTAL PICKETS: 1" SQUARE TOP RAILS, UPRIGHTS AND DIAGONAL BRACES: 2" SQUARE BOTTOM RAIL: 2"x4" (NOTCHED & PLATED FOR V-TRACK WHEELS) ROLL GATE HARDWARE: KIT #PGKOD
2. VALUES SHOWN ARE NOMINAL AND NOT TO BE USED FOR INSTALLATION PURPOSES. SEE PRODUCT SPECIFICATION FOR INSTALLATION REQUIREMENTS.
3. REFER TO SITE LAYOUT PLAN FOR LOCATION AND LENGTH.

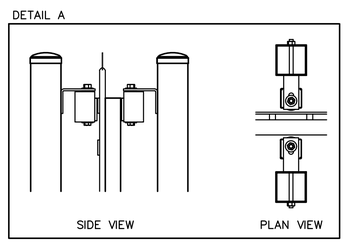


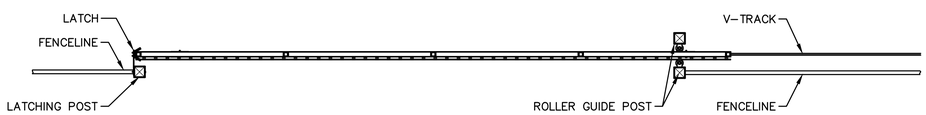


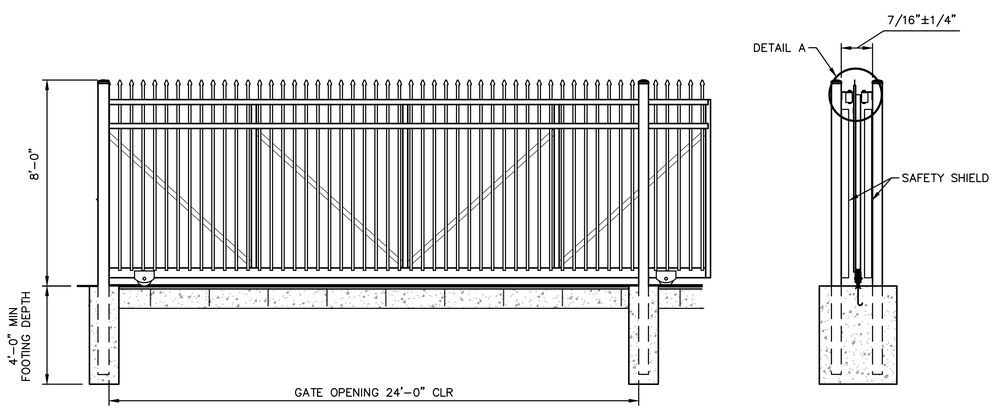


## 4 ORNAMENTAL ROLL GATE

NOT TO SCALE

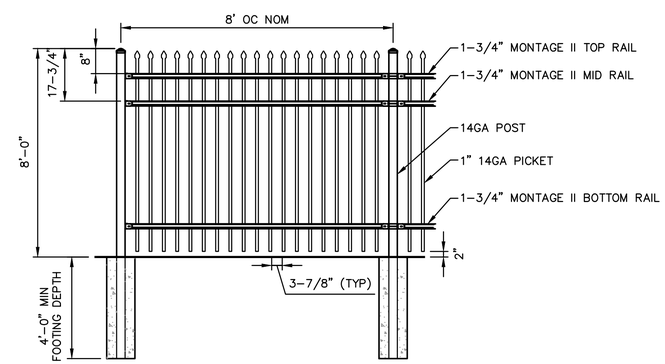


NOTE:

1. REFER TO SITE LAYOUT PLAN FOR LOCATIONS AND LENGTHS OF FENCING.

## 5 ORNAMENTAL FENCE

NOT TO SCALE

DRAFT 98% PROGRESS DRAWINGS

OCTOBER 2019

GRAEF

| NO. | DATE | APPD | REVISION |
|---|---|---|---|

Waukesha Water Utility
SERVING WAUKESHA SINCE 1886

GREELEY AND HANSEN
741 N. GRAND AVE, SUITE 308
WAUKESHA, WI 53186

GREAT WATER ALLIANCE™

CONTRACT PACKAGE 3: BOOSTER PUMPING STATION, STORAGE, AND CHEMICAL FACILITIES

LANDSCAPE AND RESTORATION DETAILS

APPROVED

SEAL AFFIXED
MONTH / DAY / YEAR

OCTOBER 2019

| | | | |
|---|---|---|---|
| JOB NO.: 15310 | | | |
| DESGN | DDB | CHCK | PRE |
| APPRV | MNP | DRWN | BRR |
| SCALE: | AS SHOWN | | |

DRAWING NUMBER

AC8

SHEET 15 OF 184 REV 0

FILE: X:\MIL\2016\2016\0998\CAD\SITE\DWG\00\GH_00_BPSF_AC08_LANDSCAPE FENCE_DETAILS.DWG

NOTES:

1. REFER TO SITE PLAN FOR LOCATIONS.
2. ENGINEERING DRAWINGS REQUIRED.

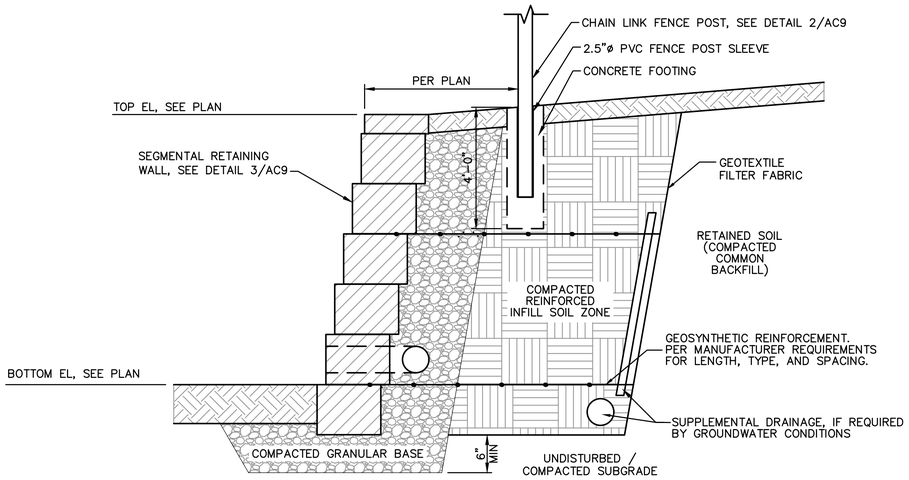


## 1 SEGMENTAL BLOCK WALL WITH FENCE POST PVC SLEEVE

NOT TO SCALE

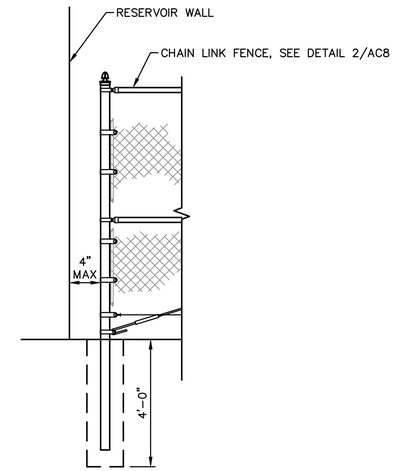


## 2 CHAIN LINK FENCE TO BUILDING CONNECTION

NOT TO SCALE

NOTES:

1. PLANS, ELEVATIONS AND DETAILS SHOWN ON THESE DRAWINGS ARE INTENDED TO INDICATE WALL LOCATIONS, LENGTHS, HEIGHTS AND DETAILS COMMON TO ALL WALL SYSTEMS. REFER TO SPECIFICATIONS FOR INFORMATION ON COLOR, FINISH, AND FACE GEOMETRY OF BLOCK, AS WELL AS REQUIRED SUBMITTALS.
2. A GLOBAL STABILITY REVIEW OF THE EXISTING SOILS SHALL BE CONDUCTED PRIOR TO CONSTRUCTION TO ENSURE THAT THE ALLOWABLE BEARING CAPACITY OF THE FOUNDATION SOILS EXCEED THE DESIGN REQUIREMENTS. PROFESSIONAL ENGINEER SHALL REVIEW SOILS REPORT, DEVELOP DRAWINGS FOR WALLS AND REINFORCEMENT, AND SIGN AND SEAL THE DRAWINGS. THE RETAINING WALL MANUFACTURER SHALL PROVIDE TECHNICAL ASSISTANCE TO THE CONTRACTOR DURING CONSTRUCTION. THE COST OF FURNISHING THESE ITEMS SHALL BE INCLUDED IN THE BID.
3. REFER TO SITE PLAN FOR LOCATIONS.
4. ENGINEERING DRAWINGS REQUIRED.

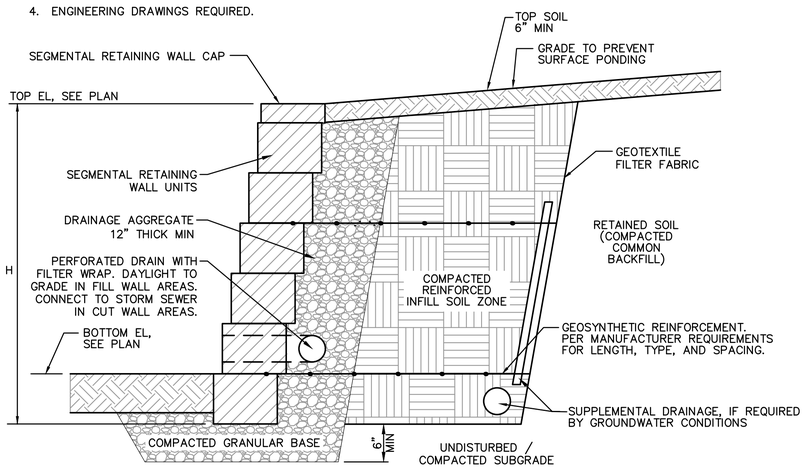


## 3 SEGMENTAL BLOCK WALL SECTION

NOT TO SCALE

DRAFT 98% PROGRESS DRAWINGS

OCTOBER 2019

GRAEF

| NO. | DATE | APPD | REVISION |
|---|---|---|---|

Waukesha Water Utility
SERVING WAUKESHA SINCE 1886

GREELEY AND HANSEN
741 N. GRAND AVE, SUITE 308
WAUKESHA, WI 53186

GREAT WATER ALLIANCE™

CONTRACT PACKAGE 3: BOOSTER PUMPING STATION, STORAGE, AND CHEMICAL FACILITIES

LANDSCAPE AND RESTORATION DETAILS

APPROVED

SEAL AFFIXED
MONTH / DAY / YEAR

OCTOBER 2019

| JOB NO.: 15310 | | | |
|---|---|---|---|
| DESGN | DDB | CHCK | PRE |
| APPRV | MNP | DRWN | SRK |
| SCALE: | AS SHOWN | | |

DRAWING NUMBER

AC9

SHEET 16 OF 184 REV 0

BAR MEASURE 1" ON FULL SIZE SHEETS
01/07/2019 7:43:01 AM
FILE: X:\ML\2016\20160998\CAD\SITE\DWG\00\GH_00_BPSF_AC09_LANDSCAPE FENCE_DETAILS.DWG

10/1/2019 12:29:15 PM

BAR MEASURES 1" ON FULL SIZE SHEETS

## FOUNDATION PLAN LEGEND

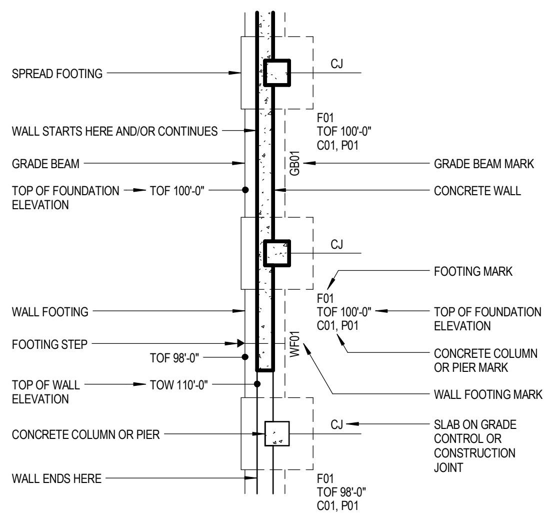


## SYMBOL LEGEND

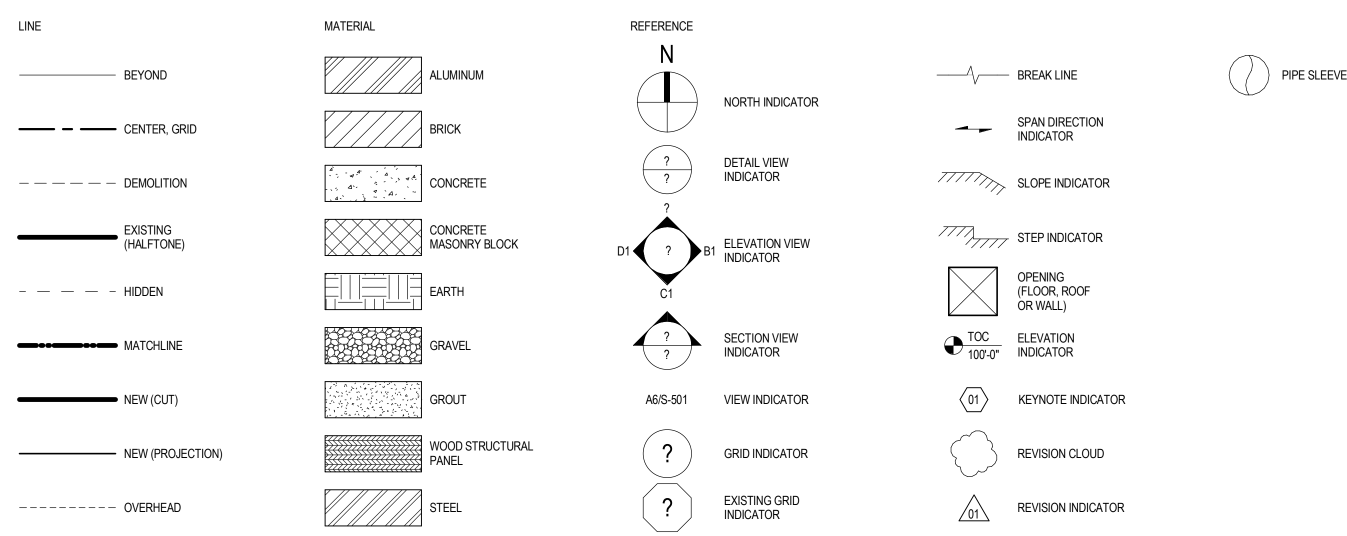


## CONCRETE MASONRY PLAN LEGEND

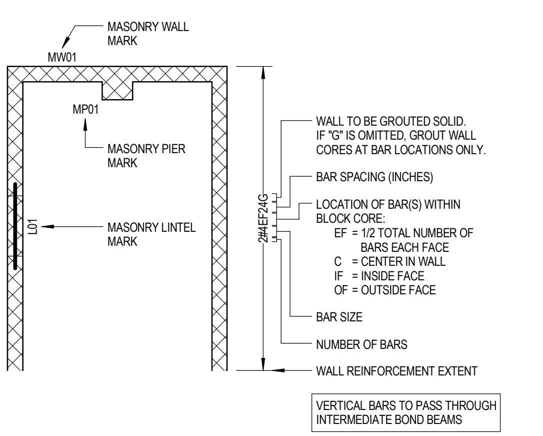


## CONCRETE MASONRY LEGEND

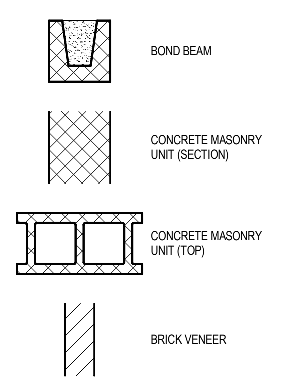


## CONCRETE LEGEND

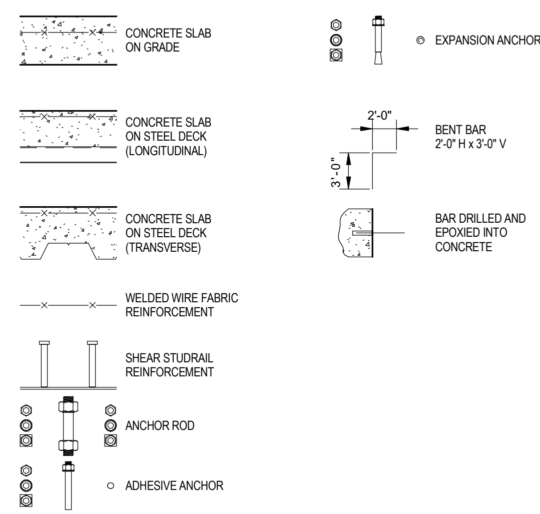


## STEEL FRAMING PLAN LEGEND

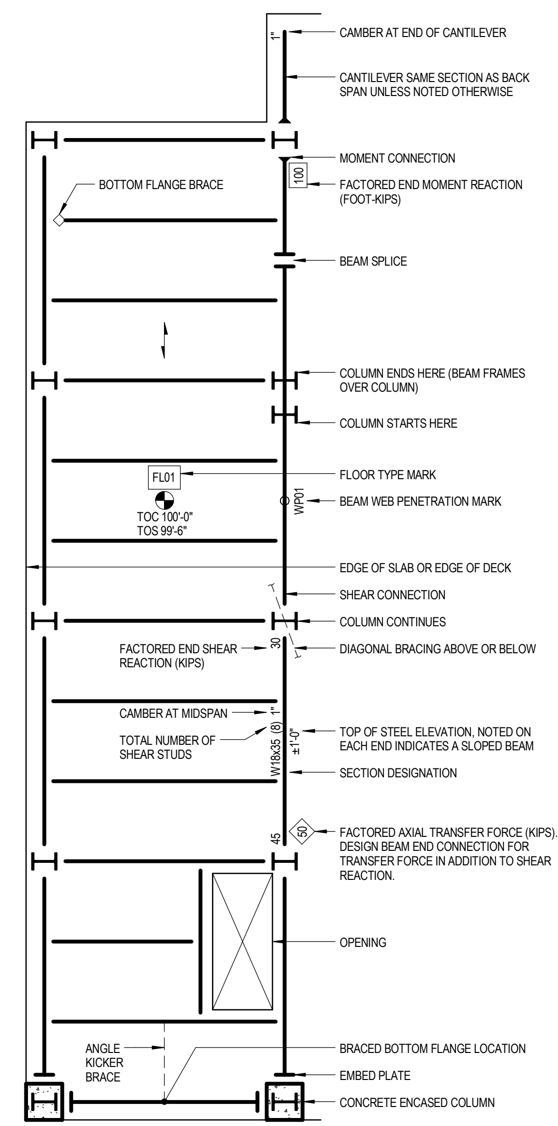


## PRECAST CONCRETE LEGEND

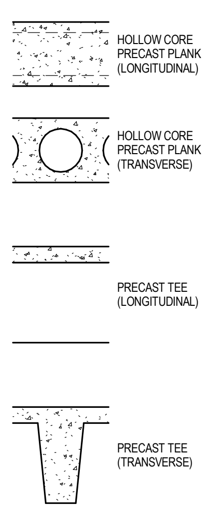


## STEEL LEGEND

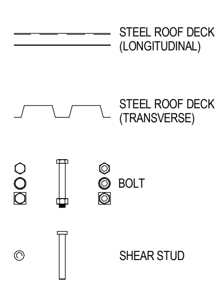


## STEEL SHAPES LEGEND

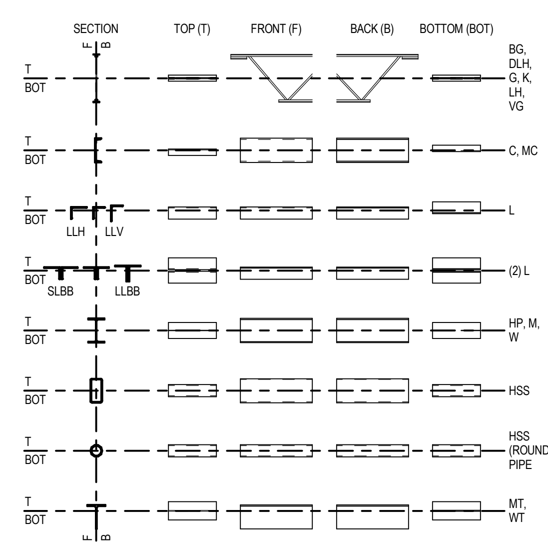


## ABBREVIATIONS

| | |
|---|---|
| 1WAY | ONE-WAY |
| AB | ANCHOR BOLT |
| ADDL | ADDITIONAL |
| ADDM | ADDENDUM |
| AHU | AIR HANDLING UNIT |
| ALT | ALTERNATE |
| APPROX | APPROXIMATE |
| AR | AS REQUIRED |
| ARCH | ARCHITECT |
| B PL | BASE PLATE |
| B/B | BACK TO BACK |
| BC | BOTTOM CHORD |
| BF | BOTH FACES |
| BF | BOTTOM FACE |
| BM | BEAM |
| BO | BOTTOM OF __ (REFER TO TOP OF __) |
| BOT | BOTTOM |
| BRDG | BRIDGING |
| BRG PL | BEARING PLATE |
| BS | BOTH SIDES |
| BSMT | BASEMENT |
| BW | BOTH WAYS |
| C | CHANNEL |
| C TO C | CENTER TO CENTER |
| CANTIL | CANTILEVER |
| CIP | CAST-IN-PLACE |
| CJ | CONSTRUCTION JOINT |
| CJ | CONTROL JOINT |
| CL | CENTER LINE |
| CMU | CONCRETE MASONRY UNIT |
| COL | COLUMN |
| CONC | CONCRETE |
| CONN | CONNECT |
| CONSTR | CONSTRUCTION |
| CONT | CONTINUE/CONTINUOUS |
| CONTR | CONTRACTOR |
| CPRS | COMPRESSIBLE |
| CTRL | CONTROL |
| CU | CUBIC |
| CU FT | CUBIC FEET |
| CU IN | CUBIC INCH |
| CU YD | CUBIC YARD |
| D | DEEP |
| D | DEPTH |
| DBE | DECK BEARING ELEVATION |
| DBL | DOUBLE |
| DEG | DEGREE |
| DET | DETAIL |
| DEMO | DEMOLITION |
| DIA | DIAMETER |
| DIAG | DIAGONAL |
| DIM | DIMENSION |
| DIR | DIRECTION |
| DL | DEAD LOAD |
| DWG | DRAWING |
| E | EAST |
| EA | EACH |
| EE | EACH END |
| EF | EACH FACE |
| EJ | EXPANSION JOINT |
| EL | ELEVATION |
| ELEC | ELECTRIC |
| ELEV | ELEVATOR |
| ENGR | ENGINEER |
| EOD | EDGE OF DECK |
| EOG | EDGE OF GRATING |
| EOS | EDGE OF SLAB |
| EQ | EQUAL |
| EQL SP | EQUALLY SPACED |
| EQUIP | EQUIPMENT |
| EQUIV | EQUIVALENT |
| EW | EACH WAY |
| EXC | EXCAVATE |
| EXIST, (E) | EXISTING |
| EXP | EXPANSION |
| EXP BT | EXPANSION BOLT |
| EXT | EXTERIOR |
| FD | FLOOR DRAIN |
| FDTN | FOUNDATION |
| FF | FAR FACE |
| FLR | FLOOR |
| FR | FRAME |
| FS | FAR SIDE |
| FSTNR | FASTENER |
| FT | FEET |
| FTG | FOOTING |
| FUT | FUTURE |
| GA | GAGE |
| GALV | GALVANIZED |
| GC | GENERAL CONTRACTOR |
| GLU LAM | GLUE LAMINATED WOOD |
| GR BM | GRADE BEAM |
| GRTG | GRATING |
| H | HIGH |
| HDR | HEADER |
| HGR | HANGER |
| HORIZ, H | HORIZONTAL |
| HS | HIGH STRENGTH |
| HSS | HOLLOW STRUCTURAL SECTION |
| HSKPG | HOUSEKEEPING |
| HT | HEIGHT |
| I | MOMENT OF INERTIA |
| ID | INSIDE DIAMETER |
| IF | INSIDE FACE |
| INFO | INFORMATION |
| INT | INTERIOR |
| JST | JOIST |
| JST BRG | JOIST BEARING |
| K | KIP |
| KB | KNEE BRACE |
| KIP | THOUSAND POUNDS |
| KLF | KIPS PER LINEAR FOOT |
| KOP | KNOCK OUT PANEL |
| KSF | KIPS PER SQUARE FOOT |
| KSI | KIPS PER SQUARE INCH |
| KWY | KEYWAY |
| L | ANGLE |
| LATL | LATERAL |
| LB | POUND |
| LD BRG | LOAD-BEARING |
| LDH | LONG DIMENSION HORIZONTAL |
| LDV | LONG DIMENSION VERTICAL |
| LL | LIVE LOAD |
| LLBB | LONG LEG BACK TO BACK |
| LLH | LONG LEG HORIZONTAL |
| LLV | LONG LEG VERTICAL |
| LVL | LAMINATED VENEER LUMBER |
| LVR | LOUVER |
| M | MOMENT |
| MAX | MAXIMUM |
| MBR | MEMBER |
| MC | MOMENT CONNECTION |
| MD | METAL DECK |
| MECH | MECHANICAL |
| MEZZ | MEZZANINE |
| MFR | MANUFACTURER |
| MFR REC | MANUFACTURER'S RECOMMENDATION |
| MID | MIDDLE |
| MIN | MINIMUM |
| MISC | MISCELLANEOUS |
| ML | MONOLITHIC |
| MO | MASONRY OPENING |
| MTL | METAL |
| MULT | MULTIPLE |
| N | NORTH |
| NF | NEAR FACE |
| NIC | NOT IN CONTRACT |
| NLB | NON-LOAD-BEARING |
| NO | NUMBER |
| NOM | NOMINAL |
| NS | NEAR SIDE |
| NTS | NOT TO SCALE |
| OC | ON CENTER |
| OD | OUTSIDE DIAMETER |
| OF | OUTSIDE FACE |
| OPNG | OPENING |
| OPH | OPPOSITE HAND |
| OPP | OPPOSITE |
| OPT | OPTIONAL |
| O/O | OUT TO OUT |
| PCC | PRECAST CONCRETE |
| PCF | POUNDS PER CUBIC FOOT |
| PCY | POUNDS PER CUBIC YARD |
| PL | PLATE |
| PLF | POUNDS PER LINEAR FOOT |
| PLYWD | PLYWOOD |
| PRCST | PRECAST |
| PRELIM | PRELIMINARY |
| PS CONC | PRESTRESSED CONCRETE |
| PSF | POUNDS PER SQUARE FOOT |
| PSI | POUNDS PER SQUARE INCH |
| PT | POST-TENSIONED |
| PT | PRESSURE TREATED |
| PT CONC | POST-TENSIONED CONCRETE |
| QTY | QUANTITY |
| R | RADIUS |
| RD | ROOF DRAIN |
| REF | REFERENCE |
| REINF | REINFORCE |
| REQD | REQUIRED |
| REV | REVISION |
| RS | ROUGH SAWN |
| RTU | ROOF TOP UNIT |
| S | SOUTH |
| SCHED | SCHEDULE |
| SCHEM | SCHEMATIC |
| SE | STRUCTURAL ENGINEER |
| SECT | SECTION |
| SF | SQUARE FOOT (FEET) |
| SHT | SHEET |
| SIM | SIMILAR |
| SL | SLAB |
| SLBB | SHORT LEG BACK TO BACK |
| SP | SUMP PIT |
| SPCL | SPECIAL |
| SPEC | SPECIFICATION |
| SQ | SQUARE |
| SQ IN | SQUARE INCH |
| SQ YD | SQUARE YARD |
| STD | STANDARD |
| STIF | STIFFENER |
| STL JST | STEEL JOIST |
| STRUC | STRUCTURAL |
| SYMM | SYMMETRICAL |
| T&B | TOP AND BOTTOM |
| TB | THROUGH BOLT |
| TC | TOP CHORD |
| TEMJ | TOP ELEVATION MATCHES JOIST |
| TEMP | TEMPORARY |
| THK | THICKNESS |
| THRU | THROUGH |
| TOB | TOP OF BEAM |
| TOC | TOP OF CONCRETE |
| TOD | TOP OF DECK |
| TOF | TOP OF FOUNDATION |
| TOG | TOP OF GRATING |
| TOP | TOP OF PIER |
| TOS | TOP OF STEEL |
| TOW | TOP OF WALL |
| TS | TUBE STEEL |
| TYP | TYPICAL |
| UNO | UNLESS NOTED OTHERWISE |
| VAR | VARIES |
| VERT, V | VERTICAL |
| VIF | VERIFY IN FIELD |
| W | WEST |
| W | WIDE |
| W/ | WITH |
| W/O | WITHOUT |
| WBL | WOOD BLOCKING |
| WD | WOOD |
| WF | WIDE FLANGE |
| WP | WORK POINT |
| WT | WEIGHT |
| WWF | WELDED WIRE FABRIC |
| WWM | WELDED WIRE MESH |
| YD | YARD |

GRAEF

DRAFT 98% PROGRESS DRAWINGS

OCTOBER 2019

FILE: F:\My Documents\My Projects\2016\GLWSP-P2-WSCB-S_bryan.mentzel@graef-usa.com.rvt

| NO. | DATE | APPD | DESCRIPTION |
|---|---|---|---|

Waukesha Water Utility
SERVING WAUKESHA SINCE 1886

GREELEY AND HANSEN
741 N. GRAND AVE, SUITE 308
WAUKESHA, WI 53186

GREAT WATER ALLIANCE™

CONTRACT PACKAGE 3: BOOSTER PUMPING STATION, STORAGE, AND CHEMICAL FACILITIES

SYMBOL LEGEND

APPROVED

SEAL AFFIXED
MONTH / DAY / YEAR

OCTOBER 2019

| | | | |
|---|---|---|---|
| JOB NO.: | 15310 | | |
| DESGN | MH | CHCK | PG |
| APPRV | MH | DRWN | BM |
| SCALE: | NO SCALE | | |

DRAWING NUMBER

AS1

SHEET 17 OF 184 REV 0

BAR MEASURE 1" ON FULLSIZE SHEETS

10/1/2019 12:31:39 PM

## DESIGN SPECIFICATIONS

1. DESIGN IS IN ACCORDANCE WITH THE STATE OF WISCONSIN AND THE 2015 INTERNATIONAL BUILDING CODE.

2. MINIMUM 28 DAY CONCRETE CYLINDER STRENGTH SHALL BE:

| | |
|---|---|
| FOOTINGS | 3000 PSI |
| SLABS ON GROUND | 3500 PSI |
| MAT SLABS | 4000 PSI |
| PIERS | 4000 PSI |
| COLUMNS | 4000 PSI |
| FOUNDATION WALLS | 4000 PSI |
| JOISTS AND BEAMS | 4000 PSI |
| STRUCTURAL SLAB SYSTEMS | 4000 PSI |

3. MAXIMUM WATER CEMENT RATIO FOR SLABS ON GRADE SHALL BE .45

4. REINFORCING STEEL SHALL CONFORM TO ASTM A615 GRADE 60.

5. CONCRETE MASONRY UNITS SHALL CONFORM TO ASTM C90 NORMAL WEIGHT UNITS. MINIMUM COMPRESSIVE STRENGTH OF CONCRETE MASONRY UNITS SHALL BE f 'cu = 2800 PSI.

6. MORTAR SHALL CONFORM TO ASTM C270 TYPE N.

7. MASONRY GROUT SHALL CONFORM TO ASTM C476. MINIMUM COMPRESSIVE STRENGTH SHALL BE f'c = 3000 PSI.

8. MINIMUM COMPRESSIVE STRENGTH OF UNREINFORCED CONCRETE MASONRY CONSTRUCTION SHALL BE f'm = 1500 PSI.

9. MINIMUM COMPRESSIVE STRENGTH OF REINFORCED CONCRETE MASONRY CONSTRUCTION SHALL BE f'm = 2500 PSI.

10. STRUCTURAL STEEL W-SHAPES SHALL CONFORM TO ASTM A992 GRADE 50.

11. STRUCTURAL STEEL PLATES, ANGLES, CHANNELS, AND OTHER ROLLED MEMBERS SHALL CONFORM TO ASTM A36.

12. RECTANGULAR OR SQUARE HSS MEMBERS SHALL CONFORM TO ASTM A500 GRADE B.

13. STATED BEARING CAPACITY FOR SPREAD FOOTINGS AT THE BOOSTER PUMP STATION IS 5000 PSF PER SOILS REPORT BY INTERTEK PSI DATED SEPTEMBER 2018. STATED BEARING CAPACITY FOR SPREAD FOOTINGS AT THE WATER SUPPLY CONTROL BUILDING IS 2000 PSF PER SOILS REPORT BY GESTRA INC. DATED DECEMBER 2018. CONTRACTOR SHALL OBTAIN AND REVIEW THE GEOTECHNICAL REPORTS FOR ALL FOUNDATION AND SITE USE CRITERIA.

14. DESIGN LOADS:

| | |
|---|---|
| FLOOR LIVE LOADS (IBC 2015) | |
| MECHANICAL ROOMS | 150 PSF |
| PUMP ROOMS | 200 PSF |
| PRECAST ROOF PLANK | 68 PSF |
| MINIMUM ROOF LIVE LOAD | 20 PSF |

LIVE LOAD REDUCTION PER IBC 2015 SECTION 1607.9 IS INCLUDED

| | |
|---|---|
| ROOF SNOW LOAD | |
| OCCUPANCY CATEGORY | IV |
| IMPORTANCE FACTOR | Is = 1.2 |
| GROUND SNOW LOAD | Pg = 30 PSF |
| FLAT ROOF SNOW LOAD | Pf = 25.2 PSF |
| EXPOSURE FACTOR | Ce = 1.0 |
| THERMAL FACTOR | Ct = 1.0 |

BUILDING HAS BEEN DESIGNED FOR RAIN LOADS PER IBC 2015 AND ASCE 7-10.

| | |
|---|---|
| WIND LOAD | |
| OCCUPANCY CATEGORY | IV |
| BASIC WIND SPEED | V = 120 MPH |
| EXPOSURE | C |
| INTERNAL PRESSURE COEFFICIENT | GCpi = +/- 0.18 |
| COMPONENTS AND CLADDING | REFER TO TABLE ON BUILDING PLANS |

| | |
|---|---|
| SEISMIC LOAD | |
| OCCUPANCY CATEGORY | IV |
| IMPORTANCE FACTOR | Ie = 1.5 |
| SPECTRAL RESPONSE ACCELERATIONS | SS = 0.089g |
| | S1 = 0.047g |
| SPECTRAL RESPONSE COEFFICIENTS | SDS = 0.071g |
| | SD1 = 0.053g |
| SEISMIC RESPONSE COEFFICIENT | Cs = 0.010 |
| SOIL SITE CLASS | C |
| SEISMIC DESIGN CATEGORY | A |

BASIC SEISMIC FORCE RESISTING SYSTEM SHEAR WALLS AND BRACED FRAMES
ANALYSIS PROCEDURE EQUIVALENT LATERAL FORCE PROCEDURE

15. RESISTANCE TO LATERAL LOADS ON STRUCTURE IS PROVIDED BY SHEAR WALL AND ROOF DIAPHRAGMS AND BRACED FRAMES. CONTRACTOR SHALL PROVIDE SUFFICIENT TEMPORARY BRACING UNTIL ALL LATERAL SUPPORT SYSTEMS ARE IN PLACE AND FUNCTIONAL.

16. ALL STRUCTURAL FRAMING AND CONNECTIONS HAVE BEEN DESIGNED FOR THE FINAL COMPLETED CONDITION AND HAVE NOT BEEN INVESTIGATED FOR POTENTIAL LOADINGS ENCOUNTERED DURING ERECTION AND CONSTRUCTION. ANY INVESTIGATION OF THE STRUCTURAL FRAMING AND CONNECTIONS FOR ADEQUACY DURING THE ERECTION AND CONSTRUCTION PROCESS IS THE RESPONSIBILITY OF THE CONTRACTOR.

17. CONTRACTOR IS RESPONSIBLE FOR MEANS AND METHODS OF CONSTRUCTION AND JOB SITE SAFETY.

## GENERAL NOTES

### EARTHWORK

1. FOOTINGS SHALL BE CAST ON UNDISTURBED SUBSOIL. IF DESIGN CAPACITY IS NOT ENCOUNTERED AT THE ELEVATIONS SHOWN, FOOTINGS MUST BE LOWERED. CONSULT ENGINEER BEFORE PROCEEDING.

2. NO HOLES, TRENCHES OR DISTURBANCES OF THE SOIL SHALL BE ALLOWED WITHIN THE VOLUME DESCRIBED BY 45 DEGREE LINES SLOPING FROM THE BOTTOM EDGE OF THE FOOTING. IF SUCH ARE REQUIRED, FOOTINGS MUST BE LOWERED.

3. BACKFILL EVENLY ON EACH SIDE OF FOUNDATION WALLS AND RETAINING WALLS.

4. DO NOT BACKFILL AGAINST BASEMENT WALLS UNTIL FLOOR SYSTEM IS IN PLACE AND FASTENED OR UNTIL WALLS ARE ADEQUATELY BRACED. BRACING SHALL BE DESIGNED BY THE CONTRACTOR.

5. TOPSOIL AND FILL BELOW SLABS ON GROUND SHALL BE REMOVED. AGGREGATE BASE COURSE UNDER SLABS ON GROUND SHALL BE SELECT FILL COMPACTED TO 6-INCH LAYERS EXCEPT WHERE LOOSE FILL IS INDICATED ON DRAWINGS.

6. BACKFILL AGAINST INTERIOR FOUNDATION WALLS SHALL BE SELECT BACKFILL COMPACTED TO MAXIMUM 6-INCH LAYERS.

7. BACKFILL AGAINST EXTERIOR FOUNDATION WALLS SHALL BE SELECT BACKFILL COMPACTED TO MAXIMUM 6-INCH LAYERS.

8. PROVIDE MINIMUM 24 INCHES OF DRAINAGE FILL OVER ALL DRAIN TILES AND 4 INCHES BELOW.

### CONCRETE

1. FORMWORK SHALL BE DESIGNED IN ACCORDANCE WITH THE ACI "MANUAL OF CONCRETE PRACTICE", LATEST EDITION.

2. REINFORCING STEEL SHALL BE DETAILED AND PLACED IN ACCORDANCE WITH THE ACI "MANUAL OF CONCRETE PRACTICE", LATEST EDITION, UNLESS OTHERWISE NOTED.

3. LAP ALL WALL BARS WITH CLASS A SPLICES UNLESS OTHERWISE DETAILED. LAP WELDED WIRE MESH 6 INCHES.

4. PROVIDE COLUMN AND WALL DOWELS OF THE SAME SIZE AND NUMBER AS THE RESPECTIVE COLUMN AND WALL REINFORCING UNLESS OTHERWISE DETAILED.

5. PROVIDE TWO #4 BARS AS STIRRUP CARRY BARS WHERE NO TOP STEEL IS AVAILABLE TO HOLD STIRRUPS.

6. ALL PIPES OR CONDUITS EXTENDING THROUGH A BEAM MUST BE APPROVED BY THE ENGINEER. WHEREVER AN APPROVED PIPE OR CONDUIT EXTENDS THROUGH A BEAM, PROVIDE ONE ADDITIONAL STIRRUP ON EACH SIDE OF THE OPENING.

7. CONCRETE PROTECTION FOR REINFORCING BARS SHALL BE IN ACCORDANCE WITH THE "BUILDING CODE REQUIREMENTS FOR STRUCTURAL CONCRETE", ACI 318-08.

8. SLABS ON GRADE SHALL BE CAST ALLOWING A SUFFICIENT NUMBER OF JOINTS TO ADEQUATELY CONTROL SHRINKAGE CRACKING. SAWCUTTING SHALL BE DONE AS SOON AS SAWCUT WILL NOT RAVEL CONCRETE OR WITHIN 24 HOURS MAXIMUM OF INITIAL POURING OPERATION. MAXIMUM SIZE OF PANELS SHALL BE 15 FEET BY 15 FEET. GENERALLY, JOINTS SHALL OCCUR ON COLUMN CENTERLINES.

9. INTERIOR SLABS ON GRADE SHALL BE 7 INCHES THICK AND REINFORCED WITH 5 POUNDS PER CUBIC YARD POLYPROPYLENE MACRO FIBERS OR AS INDICATED ON THE DRAWINGS.

10. ALLOW AT LEAST 24 HOURS BEFORE POURING ADJACENT WALL SECTIONS BETWEEN CONSTRUCTION JOINTS. MAXIMUM LENGTH OF POUR TO BE 40 FEET, UNLESS CRACK INDUCERS ARE USED AS DETAILED ON THE DRAWINGS.

11. ALL CONCRETE PLACEMENTS WITH A MINIMUM DIMENSION OF 3'-6" OR GREATER SHALL BE MASS CONCRETE IN ACCORDANCE WITH ACI 301. ALL CONCRETE WITH BOTH A MINIMUM CEMENTITOUS CONTENT OF 550 POUNDS PER CUBIC YARD AND A MINIMUM DIMENSION OF 2'-6" OR GREATER SHALL BE MASS CONCRETE IN ACCORDANCE WITH ACI 301.

12. CONTRACTOR SHALL NOTIFY THE ENGINEER AT LEAST 2 DAYS PRIOR TO PLACING CONCRETE.

13. CONSTRUCTION JOINTS IN BEAMS, JOISTS OR SLABS TO BE LOCATED BETWEEN THE 1/4 POINT AND CENTERLINE OF SPAN, OR AS DIRECTED BY THE ENGINEER.

14. DO NOT PLACE OR CUT HOLES IN CONCRETE SLABS, BEAMS, WALLS OR COLUMNS WITHOUT PRIOR APPROVAL OF THE ENGINEER.

15. EXTERIOR EXPOSED CONCRETE SHALL BE AIR-ENTRAINED. AIR CONTENT SHALL BE 6 PERCENT (+/-1 PERCENT).

16. CAMBER CONCRETE MEMBERS FOR DEAD LOAD DEFLECTION BY ADJUSTING FORMS.

17. NO PIPES AND CONDUITS ARE ALLOWED TO PASS THROUGH BEAMS. IF PENETRATION IS REQUIRED THE PROPOSED PENETRATION MUST BE SUBMITTED TO THE ENGINEER FOR FULL REVIEW. CONTRACTOR SHALL INSTALL ANY ADDITIONAL REINFORCING OR CONCRETE AS REQUIRED BY THE ENGINEER.

18. ALUMINUM CONDUITS SHALL NOT BE PLACED IN CONCRETE.

19. CHAMFER ALL EXPOSED CONCRETE CORNERS. SEE ARCHITECTURAL/STRUCTURAL DRAWINGS FOR REQUIREMENTS.

20. CONCRETE SHALL BE TESTED BY THE OWNER'S TESTING LAB. REFER TO SPECIFICATIONS FOR REQUIREMENTS.

21. PROPER CURING PROCEDURES SHALL BE USED FOR SLAB ON GRADE TO PREVENT CURLING.

22. CALCIUM CHLORIDE SHALL NOT BE USED IN CONCRETE MIXES.

23. PROVIDE WATERSTOPS AT ALL CONSTRUCTION JOINTS BELOW THE WATER TABLE AND AS SHOWN ON DRAWINGS.

24. PLACEMENT AND CURING OF CONCRETE WHERE (1) AVERAGE DAILY TEMPERATURE FOR THREE CONSECUTIVE DAYS IS LESS THAN 40 DEGREES F, AND (2) AIR TEMPERATURE IS NOT GREATER THAN 50 DEGREES F FOR MORE THAN ONE-HALF OF A 24-HOUR PERIOD FROM MIDNIGHT TO MIDNIGHT SHALL BE IN ACCORDANCE WITH ACI 306.1.

25. PLACEMENT AND CURING OF CONCRETE SUBJECT TO A COMBINATION OF (1) RISING AIR TEMPERATURE (GENERALLY GREATER THAN 75 DEGREES F) AND (2) WIND AND LOW RELATIVE HUMIDITY SHALL BE IN ACCORDANCE WITH ACI 305R.

### STRUCTURAL STEEL

1. STRUCTURAL STEEL SHALL BE DETAILED, FABRICATED, AND ERECTED IN ACCORDANCE WITH THE AISC "STEEL CONSTRUCTION MANUAL", THIRTEENTH EDITION, AND THE AISC "CODE OF STANDARD PRACTICE FOR STEEL BUILDINGS AND BRIDGES", MARCH 18, 2005 EDITION.

2. WHERE INDICATED ON DRAWINGS, STRUCTURAL AND MISCELLANEOUS STEEL WHICH SHALL REMAIN EXPOSED TO VIEW SHALL BE FABRICATED AND ERECTED IN ACCORDANCE WITH THE AISC "SPECIFICATION FOR ARCHITECTURALLY EXPOSED STRUCTURAL STEEL", LATEST EDITION, WITHOUT GAPS OR OPEN JOINTS.

3. STEEL DECK FABRICATION AND ERECTION SHALL CONFORM TO THE STANDARD SPECIFICATIONS OF THE STEEL DECK INSTITUTE.

4. ALL WELDING SHALL COMPLY WITH AWS D1.1 USING E70XX ELECTRODES. ALL WELDING TO BE DONE BY AWS PREQUALIFIED WELDERS, CERTIFIED FOR WELDS MADE. PROVIDE CONTINUOUS MINIMUM SIZED WELDS PER AISC REQUIREMENTS, UNLESS NOTED OTHERWISE.

5. THE MINIMUM SIZE OF FILLET WELDS SHALL BE AS SPECIFIED IN TABLE J2.4 IN THE AISC "STEEL CONSTRUCTION MANUAL".

6. MINIMUM STRENGTH OF WELDED CONNECTIONS: UNLESS NOTED OTHERWISE ON THE DRAWINGS, ALL SHOP AND FIELD WELDS SHALL DEVELOP THE FULL TENSILE STRENGTH OF THE MEMBER OF ELEMENT JOINED. ALL MEMBERS WITH MOMENT CONNECTIONS, NOTED ON THE DRAWINGS, SHALL BE WELDED TO DEVELOP THE FULL FLEXURAL CAPACITY OF THE MEMBER, UNLESS NOTED OTHERWISE ON THE DRAWINGS.

7. BOLTED CONNECTIONS SHALL BE MADE WITH ASTM A325 HIGH STRENGTH BOLTS (MINIMUM 3/4-INCH DIAMETER).

8. CONNECTIONS SHALL SUPPORT, AT A MINIMUM, ONE-HALF THE TOTAL FACTORED UNIFORM LOAD CAPACITY SHOWN IN THE AISC TABLES OF UNIFORM LOAD CONSTANTS FOR THE GIVEN BEAM, SPAN, AND STEEL SPECIFIED, UNLESS OTHERWISE DETAILED.

9. BEAM-TO-COLUMN CONNECTIONS SHALL BE MADE WITH DOUBLE ANGLES UNLESS OTHERWISE DETAILED.

10. MINIMUM NUMBER OF BOLTS FOR END SHEAR REACTIONS ARE AS FOLLOWS:
    W8, W10 OR W12: 2
    W14, W16 OR W18: 3
    W21 OR W24: 4
    W27 OR W30: 5
    W33, W36 OR W40: 6
    W44: 7

11. BEAMS SHALL BE EQUALLY SPACED IN A BAY UNLESS NOTED OTHERWISE ON PLAN.

12. COLUMN BASE PLATES SHALL HAVE OVERSIZED HOLES WITH PLATE WASHERS (MINIMUM 3/8-INCH THICK) PROVIDED WITH ANCHOR RODS.

13. GROUT UNDER BASE PLATES IN ACCORDANCE WITH THE "AISC CODE OF STANDARD PRACTICE FOR STEEL BUILDINGS AND BRIDGES", LATEST EDITION.

14. ALL JOISTS ADJACENT AND RUNNING PARALLEL TO BEAMS SHALL BE SUPPLIED WITH ONE HALF OF STANDARD CAMBER.

15. STEEL ROOF DECK SHALL BE WIDE RIB PROFILE, 1 1/2-INCH DEEP AND 20 GAGE THICKNESS UNLESS SHOWN OTHERWISE ON THE DRAWINGS.

16. STEEL ROOF DECK SHALL BE SECURELY FASTENED TO ALL PERIMETER STRUCTURAL SUPPORTS BY WELDING IN EVERY RIB. WELDS SHALL BE MADE WITH 5/8-INCH DIAMETER PUDDLE WELDS. IN NO CASE SHALL WELDS BE SPACED GREATER THAN 6 INCHES ON CENTER.

17. STEEL ROOF DECK SIDELAPS TO BE SCREWED AT MIDSPAN UNLESS SHOWN OTHERWISE ON THE DRAWINGS.

18. DECK END LAPS SHALL BE 2-INCH MINIMUM AND SHALL OCCUR AT SUPPORTS. LOCATE AT VALLEYS AND RIDGES. PROVIDE 20 GAGE BENT PLATE AT ALL VALLEYS AND RIDGES.

19. WHERE CONTINUOUS DIAPHRAGM CHORD ANGLES ARE INDICATED, PROVIDE A FULL PENETRATION WELD AT THE SPLICE LOCATIONS.

20. CLEAN, PREPARE, AND SHOP PRIME EXTERIOR EXPOSED STRUCTURAL STEEL MEMBERS IN ACCORDANCE WITH SSPC STANDARDS SP-1 AND SP-6.

21. CLEAN, PREPARE, AND SHOP PRIME INTERIOR EXPOSED STRUCTURAL STEEL MEMBERS IN ACCORDANCE WITH SSPC STANDARDS SP-1 AND SP-3.

22. WHILE THE DESIGN DOCUMENTS MAY REFERENCE OSHA, THEY ARE NOT INTENDED TO SPECIFICALLY IDENTIFY ALL APPLICABLE OSHA REQUIREMENTS. IT IS THE CONTRACTOR'S RESPONSIBILITY TO IDENTIFY AND COMPLY WITH ALL APPLICABLE OSHA REQUIREMENTS.

23. ALL STRUCTURAL STEEL PERMANENTLY EXPOSED TO THE WEATHER, INCLUDING MASONRY SHELF ANGLES, SHALL BE HOT-DIPPED GALVANIZED IN ACCORDANCE WITH ASTM A123, UNLESS OTHERWISE NOTED.

24. REFER TO ARCHITECTURAL DRAWINGS FOR ADDITIONAL MISCELLANEOUS STEEL.

### CONCRETE MASONRY

1. PRODUCTION AND CONSTRUCTION OF CONCRETE MASONRY SHALL BE IN ACCORDANCE WITH THE "BUILDING CODE REQUIREMENTS FOR MASONRY STRUCTURES", ACI 530-08, AND THE NCMA "TEK MANUAL FOR CONCRETE MASONRY DESIGN AND CONSTRUCTION", LATEST EDITION.

2. HOT AND COLD WEATHER CONSTRUCTION SHALL BE IN COMPLIANCE WITH THE INTERNATIONAL MASONRY INDUSTRY ALL-WEATHER COUNCIL (IMIAC) "RECOMMENDED PRACTICES AND GUIDE SPECIFICATIONS FOR HOT AND COLD WEATHER MASONRY AND CONSTRUCTION".

3. CALCIUM CHLORIDE OR ADMIXTURES CONTAINING CALCIUM CHLORIDE SHALL NOT BE USED.

4. MASONRY WALLS SHALL BE ADEQUATELY BRACED TO RESIST WIND FORCES UNTIL PERMANENT DESIGN SUPPORTS ARE IN PLACE AND FUNCTIONAL. BRACING SHALL BE DESIGNED BY THE CONTRACTOR.

5. PROVIDE DOWELS INTO FOUNDATION THE SAME SIZE AND NUMBER AS WALL REINFORCING.

6. LAP REINFORCING BARS 48 DIAMETERS.

7. CONCRETE MASONRY WALLS SHALL BE REINFORCED AT EVERY OTHER BED JOINT WITH 9 GAGE LADDER TYPE JOINT REINFORCEMENT.

8. VERTICAL BARS SHOWN ON THE DESIGN DRAWINGS SHALL BE PLACED IN A CONTINUOUS UNOBSTRUCTED CELL OF NOT LESS THAN 3 INCHES BY 4 INCHES.

9. ALL BOND BEAMS AND PILASTERS SHALL BE REINFORCED AS SHOWN ON THE DESIGN DRAWINGS AND FILLED WITH GROUT.

10. ALL DOOR AND WINDOW JAMBS SHALL BE GROUTED SOLID 8 INCHES WIDE UNLESS SHOWN OTHERWISE.

11. WHERE NOT SHOWN OTHERWISE, MINIMUM SOLID GROUTED MASONRY BELOW BEAM REACTIONS SHALL BE 16 INCHES DEEP BY 32 INCHES LONG.

12. WHERE NOT SHOWN OTHERWISE, MINIMUM SOLID GROUTED MASONRY BELOW LINTEL REACTIONS SHALL BE 16 INCHES DEEP BY 16 INCHES LONG.

### PRECAST CONCRETE

1. PRECAST CONCRETE MEMBERS SHALL BE DESIGNED IN ACCORDANCE WITH THE "BUILDING CODE REQUIREMENTS FOR STRUCTURAL CONCRETE", ACI 318-08.

2. PRECAST CONCRETE SHALL BE DETAILED, FABRICATED, AND ERECTED IN ACCORDANCE WITH THE ACI "MANUAL OF CONCRETE PRACTICE", LATEST EDITION, AND THE AFOREMENTIONED CONCRETE PROVISIONS.

3. PRECAST CONTRACTOR SHALL BE RESPONSIBLE FOR THE PROPER DESIGN AND REINFORCING OF PRECAST CONCRETE FOR HANDLING AND ERECTION STRESSES.

4. PRECAST MEMBERS SHALL BE ATTACHED AND SUPPORTED BY THE STRUCTURE AS INDICATED ON THE DRAWINGS.

5. PRECAST MEMBERS SHALL BE DESIGNED AND REINFORCED FOR SELF-WEIGHT AND ALL SUPERIMPOSED LOADS SHOWN ON THE DRAWINGS.

6. PRECAST MEMBERS SHALL BE CAPABLE OF SAFELY SUPPORTING ANY CONCENTRATED LOADS INDICATED BY THE STRUCTURAL, MECHANICAL, AND ARCHITECTURAL DRAWINGS.

7. PRECAST CONTRACTOR SHALL FURNISH AND INSTALL ALL MATERIALS (HANGERS, CLIPS, PLATES, HEADERS, ANCHORAGES, ETC.) WHICH MUST BE PRECAST INTO THE CONCRETE UNLESS OTHERWISE NOTED OR REQUIRED FOR CONNECTION OF PRECAST TO STRUCTURE.

8. CONTRACTOR SHALL COORDINATE LOCATIONS OF ALL HOLES OR OPENINGS WITH RESPECTIVE TRADES BEFORE FABRICATION. ANY DEVIATION FROM THESE LOCATIONS OR ADDITIONAL OPENINGS MUST BE APPROVED BY THE FABRICATOR.

9. MAXIMUM ALLOWABLE CAMBER SHALL BE 1/2 INCH.

10. GROUT IN PRECAST MEMBER KEYWAYS SHALL BE SAND-CEMENT GROUT. MINIMUM COMPRESSIVE STRENGTH SHALL BE 2500 PSI.

### MISCELLANEOUS

1. DIMENSIONS OF EXISTING CONSTRUCTION OR CONSTRUCTION IN PROGRESS SHALL BE VERIFIED AND COORDINATED PRIOR TO FABRICATION OF STRUCTURAL COMPONENTS.

2. VERIFY AND COORDINATE, WITH ALL CONTRACTORS, THE LOCATION OF ALL ARCHITECTURAL AND MECHANICAL APPURTENANCES AND OPENINGS.

3. EXPANSION ANCHORS SHALL BE HILTI KWIK BOLT TZ.

4. ADHESIVE ANCHORS SHALL BE HILTI HIT-HY 200.

5. SLEEVE ANCHORS SHALL BE HILTI HLC.

6. AN ASTERISK (*) AT NEW CONSTRUCTION DENOTES LOCATIONS, ELEVATIONS, DIMENSIONS AND OTHER INFORMATION DEPENDENT ON THE CONTRACTOR'S SUBMITTALS. DEVELOP AND SHOW THE INFORMATION MARKED WITH AN ASTERISK (*) ON SUBMITTALS AND DEVELOP AND PROVIDE SUCH INFORMATION FOR ALL ASTERISKS (*) WITHIN OF INTERFACING WITH ANY SUBMITTALS AND BETWEEN SUBMITTALS. THIS REQUIREMENT ALSO EXTENDS TO CONDITIONS OR SITUATIONS WHERE A LOCATION, DIMENSION, ELEVATION OR OTHER ITEM IS INDICATED TO BE DETERMINED AFTER FINAL SELECTION OF EQUIPMENT AND/OR APPURTENANCES. ALL INFORMATION FOR ASTERISKS (*) AND EQUIPMENT/APPURTENANCES SITUATIONS DESCRIBED HEREIN ARE THE RESPONSIBILITY OF THE CONTRACTOR TO DEVELOP AND ASSURE COMPATIBLE INTERFACING FOR A COMPLETE, COORDINATED AND TROUBLE-FREE OPERATING INSTALLATION.

DRAFT 98% PROGRESS DRAWINGS
OCTOBER 2019

FILE: F:\My Documents\My Projects\2016\GLWSP-P3-BPSF-S_bryan.mentzel@graef-usa.com.rvt

GRAEF

| NO. | DATE | APPD | DESCRIPTION |
|---|---|---|---|

Waukesha Water Utility
SERVING WAUKESHA SINCE 1886

GREELEY AND HANSEN
741 N. GRAND AVE, SUITE 308
WAUKESHA, WI 53186

GREAT WATER ALLIANCE™

CONTRACT PACKAGE 3: BOOSTER PUMPING STATION, STORAGE, AND CHEMICAL FACILITIES

GENERAL NOTES

APPROVED

SEAL AFFIXED
MONTH / DAY / YEAR

OCTOBER 2019

| | | | |
|---|---|---|---|
| JOB NO.: | 15310 | | |
| DESGN | MH | CHCK | PG |
| APPRV | MH | DRWN | BM |
| SCALE: | NO SCALE | | |

DRAWING NUMBER

AS2

10/1/2019 12:29:16 PM
1" BAR MEASURE 1" ON FULL SIZE SHEETS

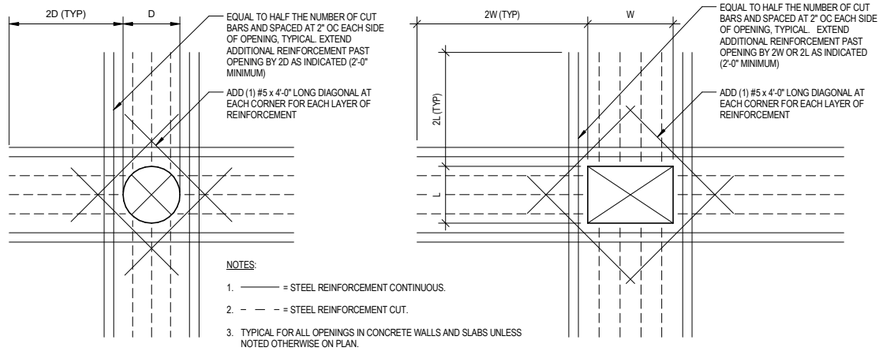


NOTES:

1. ——— = STEEL REINFORCEMENT CONTINUOUS.
2. – – – = STEEL REINFORCEMENT CUT.
3. TYPICAL FOR ALL OPENINGS IN CONCRETE WALLS AND SLABS UNLESS NOTED OTHERWISE ON PLAN.
4. DO NOT WELD REINFORCEMENT TO PIPE SLEEVES AND INSERTS.
5. FOR OPENINGS 1'-0" ROUND/SQUARE OR LESS THE WALL STEEL CAN BE REPLACED WITHOUT ADDITIONAL REINFORCEMENT.

## 1 OPENING REINFORCEMENT

NOT TO SCALE

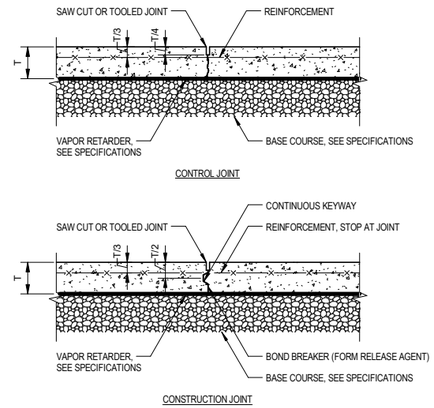


## 2 SLAB ON GRADE CONTROL AND CONSTRUCTION JOINT

NOT TO SCALE

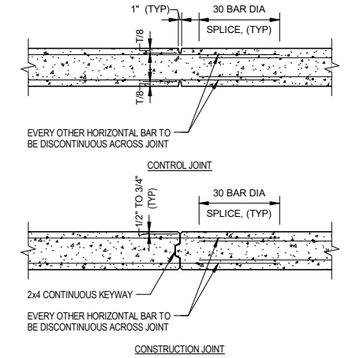


## 3 WALL CONTROL AND CONSTRUCTION JOINT

NOT TO SCALE

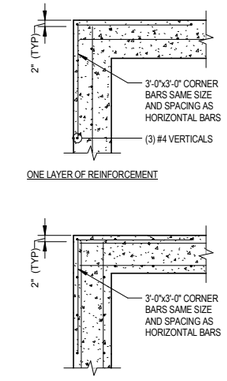


## 4 WALL CORNER

NOT TO SCALE

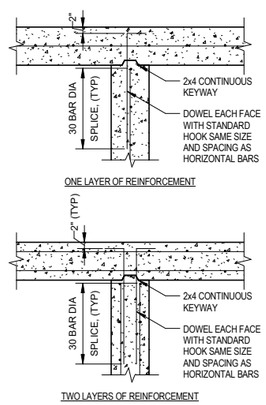


## 5 WALL INTERSECTION

NOT TO SCALE

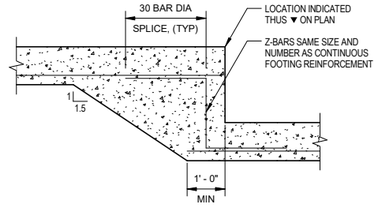


## 6 FOOTING STEP

NOT TO SCALE

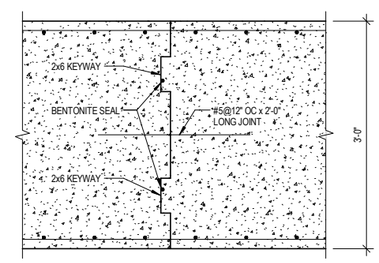


## 7 MAT SLAB CONSTRUCTION JOINT

1" = 1'-0"

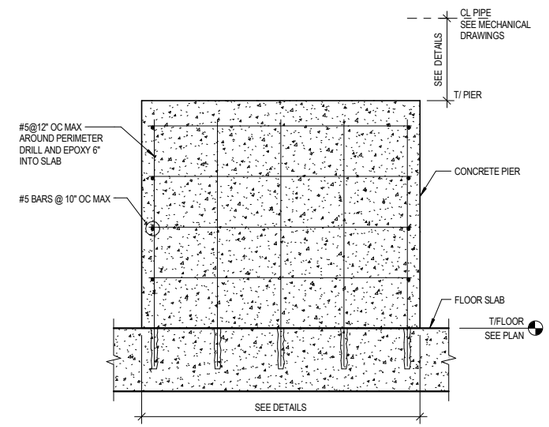


## 8 PIPING SUPPORT PIER

NOT TO SCALE

DRAFT 98% PROGRESS DRAWINGS
OCTOBER 2019

GRAEF

| NO. | DATE | APPD | DESCRIPTION |
|---|---|---|---|

Waukesha Water Utility
SERVING WAUKESHA SINCE 1886

GREELEY AND HANSEN
741 N. GRAND AVE, SUITE 308
WAUKESHA, WI 53186

GREAT WATER ALLIANCE™

CONTRACT PACKAGE 3: BOOSTER PUMPING STATION, STORAGE, AND CHEMICAL FACILITIES

WALL, SLAB AND FOOTING DETAILS

APPROVED

SEAL AFFIXED
MONTH / DAY / YEAR

OCTOBER 2019

| | | | |
|---|---|---|---|
| JOB NO.: | 15310 | | |
| DESGN | MH | CHCK | PG |
| APPRV | MH | DRWN | BM |
| SCALE: | AS SHOWN | | |

DRAWING NUMBER

AS3

SHEET 19 OF 184 REV 0

FILE: F:\My Documents\My Projects\2016\GLWSP-P2-WSCB-S_bryan.mentzel@graef-usa.com.rvt

10/1/2019 12:29:17 PM
1" BAR MEASURE 1" ON FULL SIZE SHEETS

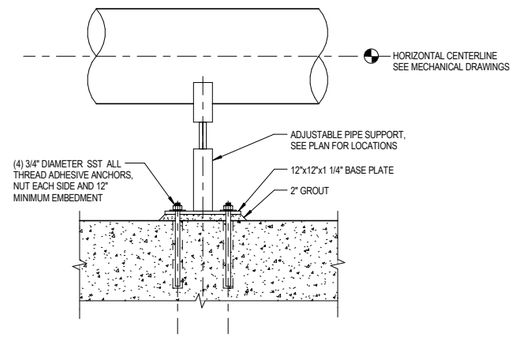


## 1 ADJUSTABLE PIPE SADDLE SUPPORT DETAIL

SCALE: 1" = 1'-0"

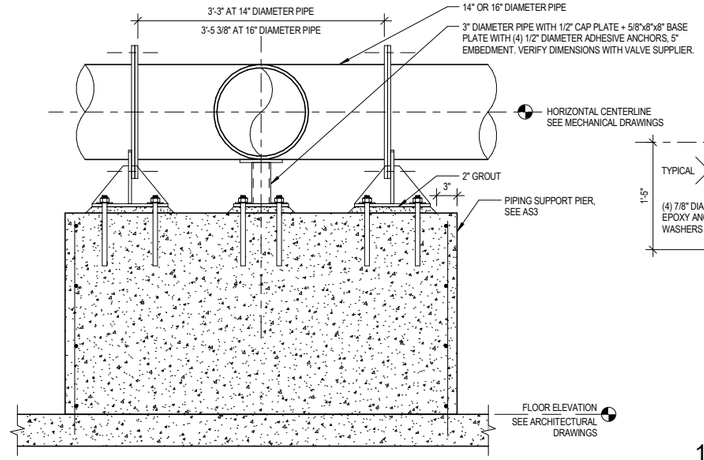


## 2 GLOBE VALVE SUPPORT DETAIL

SCALE: 1" = 1'-0"

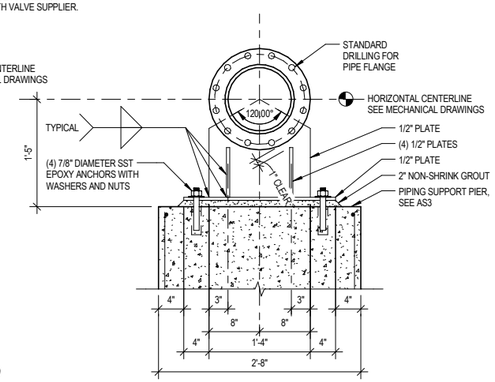


## 3 10-INCH DIAMETER PIPE SUPPORT DETAIL

SCALE: 1" = 1'-0"

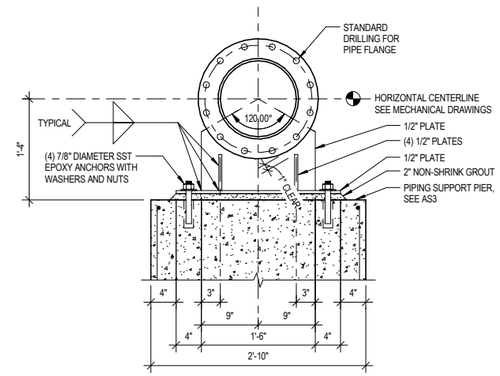


## 4 12-INCH DIAMETER PIPE SUPPORT DETAIL

SCALE: 1" = 1'-0"

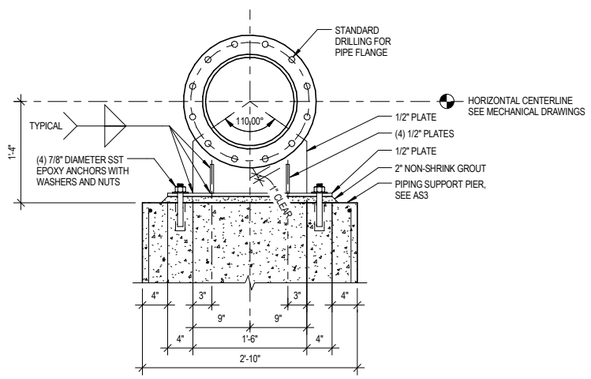


## 5 14-INCH DIAMETER PIPE SUPPORT DETAIL

SCALE: 1" = 1'-0"

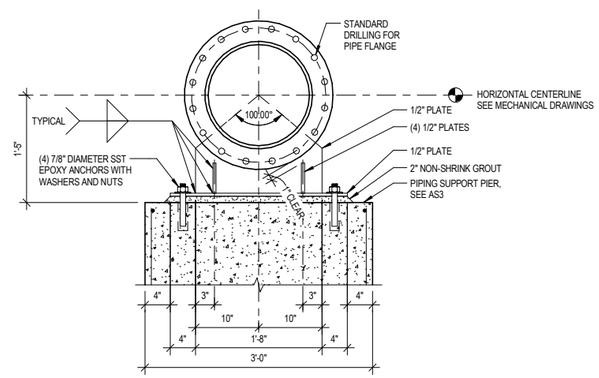


## 6 16-INCH DIAMETER PIPE SUPPORT DETAIL

SCALE: 1" = 1'-0"

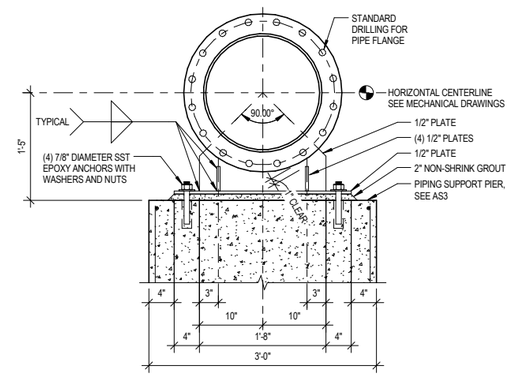


## 7 18-INCH DIAMETER PIPE SUPPORT DETAIL

SCALE: 1" = 1'-0"

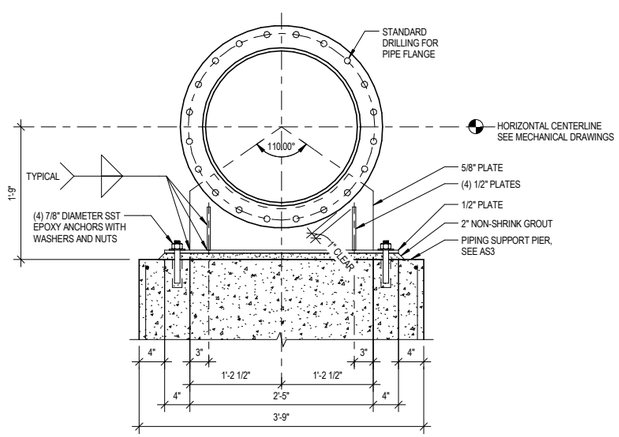


## 8 24-INCH DIAMETER PIPE SUPPORT DETAIL

SCALE: 1" = 1'-0"

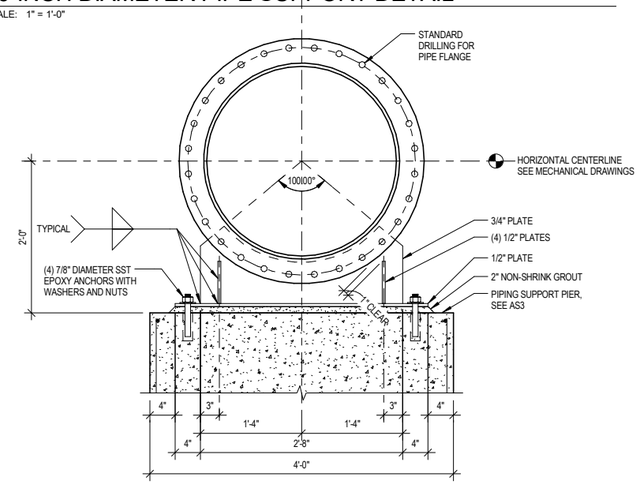


## 9 30-INCH DIAMETER PIPE SUPPORT DETAIL

SCALE: 1" = 1'-0"

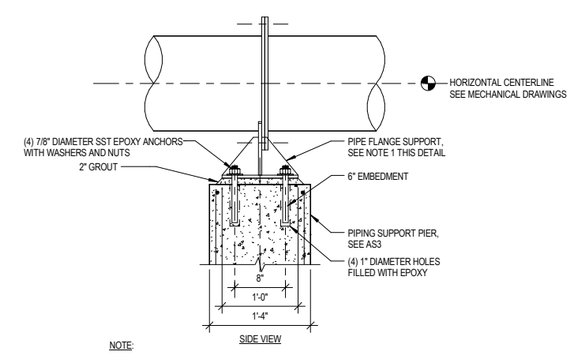


NOTE:

1. INSTALL FLANGE SUPPORT WITH PIPE TEMPORARILY SUPPORTED IN FINAL POSITION. REMOVE TEMPORARY PIPE SUPPORTS AFTER NON-SHRINK GROUT HAS CURED A MINIMUM 7 DAYS.

## 10 PIPE FLANGE SUPPORT DETAIL

SCALE: 1" = 1'-0"

DRAFT 98% PROGRESS DRAWINGS
OCTOBER 2019

1 0 1 2 FT
1" =1' - 0"

GRAEF

| NO. | DATE | APPD | DESCRIPTION |
|---|---|---|---|

Waukesha Water Utility
SEPVNO WAUKESHA SINCE 1886

GREELEY AND HANSEN
741 N. GRAND AVE, SUITE 308
WAUKESHA, WI 53186

GREAT WATER ALLIANCE™

CONTRACT PACKAGE 3: BOOSTER PUMPING STATION, STORAGE, AND CHEMICAL FACILITIES

PIPING SUPPORT SECTIONS AND DETAILS

APPROVED

SEAL AFFIXED
MONTH / DAY / YEAR

OCTOBER 2019

| | | | |
|---|---|---|---|
| JOB NO.: | 15310 | | |
| DESGN | MH | CHCK | PG |
| APPRV | MH | DRWN | BM |
| SCALE: | AS SHOWN | | |

DRAWING NUMBER

AS4

SHEET 20 OF 184 REV 0

FILE: F:\My Documents\My Projects\2016\GLWSP-P2-WSCB-S_bryan.mentzel@graef-usa.com.rvt

10/1/2019 12:29:17 PM

1" BAR MEASURE 1" ON FULLSIZE SHEETS

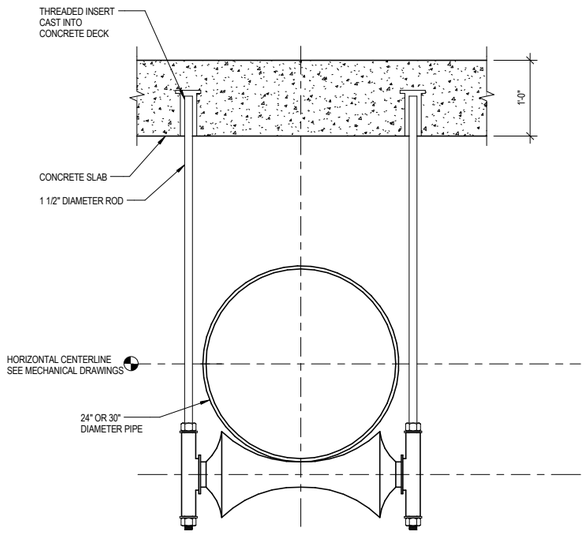


1 ADJUSTABLE ROLL SUPPORT
PIPE SUPPORT DETAIL AT CEILING
SCALE: 1" = 1'-0"

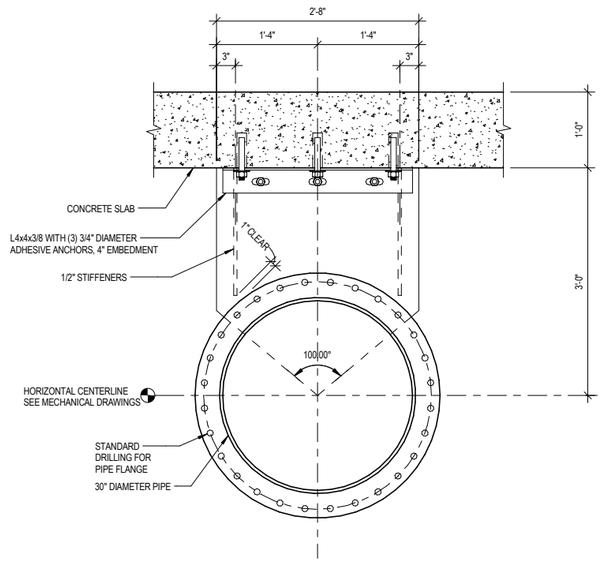


2 30-INCH DIAMETER PIPE SUPPORT DETAIL AT CEILING
SCALE: 1" = 1'-0"

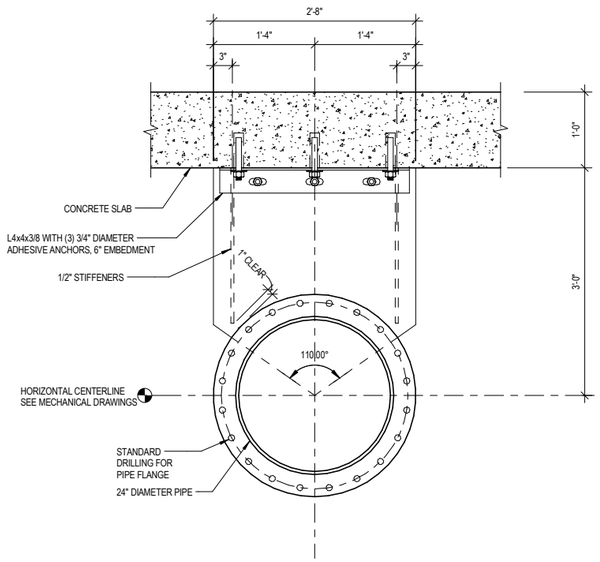


3 24-INCH DIAMETER PIPE SUPPORT DETAIL AT CEILING
SCALE: 1" = 1'-0"

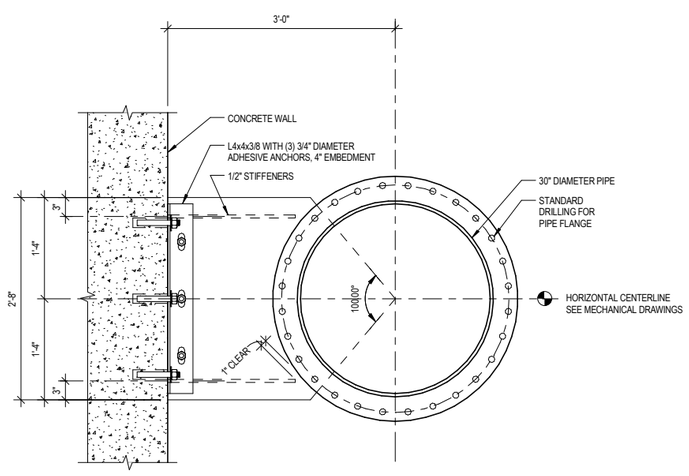


4 30-INCH DIAMETER PIPE BRACE DETAIL AT WALL
SCALE: 1" = 1'-0"

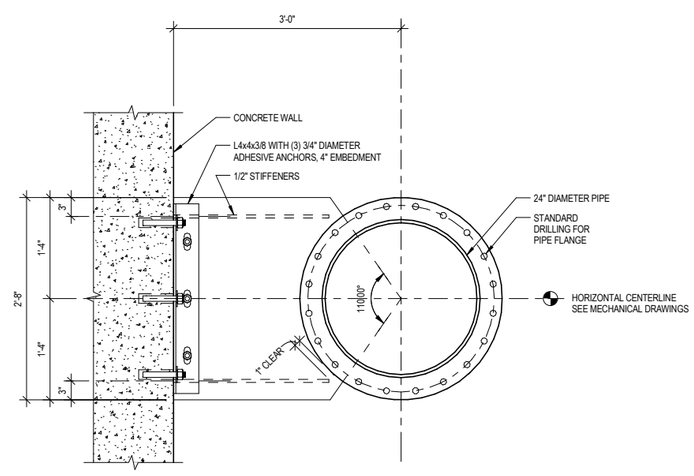


5 24-INCH DIAMETER PIPE BRACE DETAIL AT WALL
SCALE: 1" = 1'-0"

DRAFT 98% PROGRESS DRAWINGS
OCTOBER 2019

1 0 1 2 FT
1" =1' - 0"

GRAEF

| NO. | DATE | APPD | DESCRIPTION |
|---|---|---|---|

Waukesha Water Utility
SERVING WAUKESHA SINCE 1886

GREELEY AND HANSEN
741 N. GRAND AVE, SUITE 308
WAUKESHA, WI 53186

GREAT WATER ALLIANCE™

CONTRACT PACKAGE 3: BOOSTER PUMPING STATION, STORAGE, AND CHEMICAL FACILITIES

PIPING SUPPORT SECTIONS AND DETAILS

APPROVED

SEAL AFFIXED
MONTH / DAY / YEAR

OCTOBER 2019

| | | | |
|---|---|---|---|
| JOB NO.: | 15310 | | |
| DESGN | MH | CHCK | PG |
| APPRV | MH | DRWN | BM |
| SCALE: | AS SHOWN | | |

DRAWING NUMBER

AS5

SHEET 21 OF 184 REV 0

FILE: F:\My Documents\My Projects\2016\GLWSP-P2-WSCB-S_bryan.mentzel@graef-usa.com.rvt

10/2/2019 10:04:10 AM
BAR MEASURE 1" ON FULLSIZE SHEETS

## PERSPECTIVE VIEW OF BOOSTER PUMPING STATION

NO SCALE (FOR ILLUSTRATION PURPOSE ONLY)

### GENERAL ARCHITECTURAL NOTES:

1. CONDITIONS AFFECTING THE WORK: BEFORE PROCEEDING WITH THE WORK THOROUGHLY EXAMINE CONDITIONS AT THE PROJECT SITE TO VERIFY THAT THE WORK CAN PROCEED IN ACCORDANCE WITH THE CONTRACT DOCUMENTS. REPORT CONDITIONS FOUND WHICH WILL ADVERSELY AFFECT THE WORK TO THE RESIDENT PROJECT REPRESENTATIVE PRIOR TO PROCEEDING WITH THE WORK.

2. DIMENSIONAL VERIFICATION: BEFORE PROCEEDING WITH ANY WORK VERIFY ALL ASSOCIATED DIMENSIONS. REPORT ANY DIMENSIONAL VARIATIONS BETWEEN FIELD CONDITIONS AND PROPOSED WORK WHICH WILL ADVERSELY AFFECT THE WORK TO THE RESIDENT PROJECT REPRESENTATIVE PRIOR TO PROCEEDING. DO NOT SCALE DRAWINGS. WRITTEN DIMENSIONS TAKE PRECEDENCE

3. NOTES: NOTES APPEAR ON VARIOUS DRAWINGS FOR DIFFERENT SYSTEMS AND MATERIALS. REVIEW ALL SHEETS AND APPLY NOTES TO RELATED BUILDING COMPONENTS. REFER TO COMPLETE SET OF ISSUED CONTRACT DOCUMENTS FOR OTHER APPLICABLE NOTES, ABBREVIATIONS, AND SYMBOLS.

4. GRAPHIC REPRESENTATION: ITEMS NOT NOTED ON DRAWINGS ARE TO BE CONSIDERED THE SAME AS NOTED ITEMS WHICH ARE GRAPHICALLY REPRESENTED IN THE SAME MANNER, UNLESS OTHERWISE NOTED.

5. DISSIMILAR MATERIALS: ISOLATE DISSIMILAR METALS TO PREVENT GALVANIC ACTION. PROTECT ALUMINUM FROM CORROSION WHEN IN CONTACT WITH CONCRETE.

6. ADJACENT WORK: WHERE MATERIALS ARE APPLIED TO, OR ARE IN DIRECT CONTACT WITH WORK INSTALLED BY ANOTHER SUBCONTRACTOR, COMMENCEMENT OF WORK IMPLIES ACCEPTANCE OF THE SUBSTRATES AS SUITABLE FOR THE APPLICATION INTENDED.

7. FALL PROTECTION: PROVIDE GUARDS AT ELEVATION CHANGES OF MORE THAN 30" UNLESS OTHERWISE NOTED.

8. GAPS ADJACENT TO EQUIPMENT: PROVIDE CLOSURE PLATES, ANGLES AND OTHER MATERIALS AS REQUIRED TO ENSURE THAT NO GAP BETWEEN ANY EQUIPMENT AND THE FLOOR OR ADJACENT WALKING SURFACE IS GREATER THAN 1-INCH.

9. OTHER DISCIPLINES:

| | |
|---|---|
| SEE STRUCT DWG: | NOTES REFERRING TO LIVE AND DEAD LOADS, STRUCTURAL WORK, AND FOUNDATIONS. |
| SEE PROC DWG: | PROCESS WORK. |
| SEE HVAC DWG: | HVAC WORK. |
| SEE PLUMBING DWG: | PLUMBING WORK. |
| SEE ELEC DWG: | ELECTRICAL WORK. |

### ABBREVIATIONS

| | |
|---|---|
| @ | AT |
| ADDL | ADDITIONAL |
| AFF | ABOVE FINISHED FLOOR |
| AHU | AIR HANDLING UNIT |
| AL | ALUMINUM |
| ALT | ALTERNATE |
| APPROX | APPROXIMATE |
| ARCH | ARCHITECTURAL |
| ATP | ACOUSTICAL TILE PANEL |
| BLDG | BUILDING |
| B/ | BOTTOM OF |
| BOT | BOTTOM |
| BRNG | BEARING |
| BTWN | BETWEEN |
| CIP | CAST IN PLACE |
| CIW | CENTER IN WALL |
| CJ | CONTROL/CONSTRUCTION JOINT |
| CL | CENTERLINE |
| CLR | CLEAR |
| CMU | CONCRETE MASONRY UNIT |
| COL | COLUMN |
| CONC | CONCRETE |
| CONN | CONNECTION |
| CONT | CONTINUOUS |
| CLNG | CEILING |
| D | DEPTH |
| DBL | DOUBLE |
| DCMU | DECORATIVE CMU |
| DEMO | DEMOLITION |
| DIA | DIAMETER |
| DIAG | DIAGONAL |
| DIM | DIMENSION |
| DN | DOWN |
| DP | DEEP |
| DPC | DUST PROOF COATING |
| DWG | DRAWING |
| EA | EACH |
| EF | EACH FACE |
| EJ | EXPANSION JOINT |
| EL | ELEVATION |
| ELEC | ELECTRICAL |
| EOD | EDGE OF DECK |
| EOS | EDGE OF SLAB |
| EQ | EQUAL |
| EW | EACH WAY |
| EXIST | EXISTING |
| EXT | EXTERIOR |
| FD | FLOOR DRAIN |
| FF | FINISHED FLOOR |
| FLR | FLOOR |
| FDN | FOUNDATION |
| FO | FACE OF |
| FRP | FIBERGLASS REINFORCED PLASTIC |
| FT | FOOT/FEET |
| FTG | FOOTING |
| GA | GAUGE |
| GALV | GALVANIZED |
| GRAIL | GUARDRAIL |
| HORIZ | HORIZONTAL |
| HPT | HIGH POINT |
| HRAIL | HAND RAIL |
| HSS | HOLLOW STRUCTURAL SECTION |
| HT | HEIGHT |
| HVAC | HEATING, VENTILATION, AND COOLING |
| IF | INSIDE FACE |
| IN | INCH |
| INT | INTERIOR |
| INSUL | INSULATION |
| JT | JOINT |
| KIP, k | 1000 LBS |
| KSI | KIPS PER SQUARE INCH |
| L | LENGTH |
| LBS | POUNDS |
| LD | DEVELOPMENT LENGTH |
| LLH | LONG LEG HORIZONTAL |
| LLV | LONG LEG VERTICAL |
| Ln | CLEAR SPAN |
| LONG | LONGITUDINAL |
| LPT | LOW POINT |
| LWT | LIGHTWEIGHT |
| MAX | MAXIMUM |
| MFR | MANUFACTURER(S) |
| MTL | METAL |
| MIN | MINIMUM |
| MISC | MISCELLANEOUS |
| MJ | MOVEMENT JOINT |
| MNT | MOUNT(ED) |
| NA | NOT APPLICABLE |
| NO, # | NUMBER |
| NOM | NOMINAL |
| NTS | NOT TO SCALE |
| NWT | NORMAL WEIGHT |
| OC | ON CENTER |
| OF | OUTSIDE FACE |
| OHCD | OVERHEAD COILING DOOR |
| OPNG | OPENING |
| PNL | PANEL |
| PEN | PENETRATION |
| PERP | PERPENDICULAR |
| PL | PLATE |
| PLUMB | PLUMBING |
| PNT | PAINT(ED) |
| PROC | PROCESS |
| PSF | POUNDS PER SQUARE FOOT |
| PSI | POUNDS PER SQUARE INCH |
| PT | PRESSURE TREATED |
| R | RADIUS |
| REF | REFERENCE |
| REINF | REINFORCEMENT |
| REQ | REQUIREMENTS |
| REQD | REQUIRED |
| RTU | ROOF TOP UNIT |
| SECT | SECTION |
| SF | STEP FOOTING |
| SIM | SIMILAR |
| SMNT | SIDE MOUNTED |
| S.STL | STAINLESS STEEL |
| S | STRUCTURAL |
| SSP | STANDARD STEEL PIPE |
| STIFF | STIFFENER |
| STRUCT | STRUCTURAL |
| T/ | TOP OF |
| T&B | TOP AND BOTTOM |
| TMNT | TOP MOUNTED |
| THK | THICKNESS |
| TYP | TYPICAL |
| UON | UNLESS OTHERWISE NOTED |
| VERT | VERTICAL |
| VIF | VERIFY IN FIELD |
| W | WIDE |
| W/ | WITH |
| W/O | WITHOUT |
| WMNT | WALL MOUNTED |
| WP | WORKPOINT |
| WS | WATERSTOP |
| WWF | WELDED WIRE FABRIC |

DRAFT 98% PROGRESS DRAWINGS
OCTOBER 2019

| NO. | DATE | APPD | DESCRIPTION |
|---|---|---|---|

Waukesha Water Utility
SERVING WAUKESHA SINCE 1886

GREELEY AND HANSEN
741 N. GRAND AVE. SUITE 308
WAUKESHA, WI 53186

GREAT WATER ALLIANCE™

CONTRACT PACKAGE 3: BOOSTER PUMPING STATION AND WATER SUPPLY CONTROL BUILDING

NOTES AND ABBREVIATIONS

APPROVED

SEAL AFFIXED
MONTH / DAY / YEAR

OCTOBER 2019

| | | | |
|---|---|---|---|
| JOB NO.: | 15310 | | |
| DESGN | JJS | CHCK | TCB |
| APPRV | TCB | DRWN | AKB |
| SCALE: | NO SCALE | | |

DRAWING NUMBER

AA1

SHEET 22 OF 184 REV 0

FILE: C:\Users\lgreen\Documents\GLWSP-P3-BPSF-GAMHPNE_lgreen.rvt

10/2/2019 10:04:15 AM

BAR MEASURE 1" ON FULLSIZE SHEETS

**INTERNATIONAL BUILDING CODE 2015 EDITION**
**WITH INSERTS FROM: WISCONSIN COMMERCIAL BUILDING CODE, SPS 361-366**

| REF | DESCRIPTION | REQUIREMENT | ACTUAL | REMARKS |
|---|---|---|---|---|
| OCCUPANCY CLASSIFICATION | | | | |
| 306.2 | F-1 MODERATE HAZARD GROUP | ELECTRICAL ROOMS | | |
| 306.3 | F-2 LOW HAZARD GROUP | OTHER SPACES | | |
| 307.6 | H-4 HIGH HAZARD GROUP | BATTERY ROOMS, FUEL AND CHEMICAL STORAGE | | |
| TYPE OF CONSTRUCTION | | | | |
| 602.2 | TYPE II | BUILDING ELEMENTS ARE OF NONCOMBUSTIBLE MATERIALS | TYPE II-B | NONCOMBUSTIBLE |
| FIRE RESISTANCE REQUIREMENT FOR BUILDING ELEMENTS (HOURS) | | | | |
| TBL 508.2.4 | FIRE PUMP ROOM | SEPARATION RATING 2 HR | | |
| TBL 508.4 | REQUIRED SEPARATION OF OCCUPANCIES | | | |
| TBL 601 | PRIMARY STRUCTURAL FRAME | 0 HR | | * NOT LESS THAN REQUIRED BY 704.10 |
| | BEARING WALLS * | EXTERIOR 0 HR<br>INTERIOR 0 HR | | |
| TBL 602 | NONBEARING WALLS AND PARTITIONS | EXTERIOR F-1, F-2, H-4<br>< 5FT 2, 1, 3<br>5 ≤ X < 10 FT 1, 1, 2<br>10 ≤ X < 30 0, 0, 1<br>X ≥ 30 FT 0, 0, 0 | | |
| TBL 601 | NONBEARING WALLS AND PARTITIONS INTERIOR | 0 HR | | |
| | FLOOR CONSTRUCTION AND ASSOCIATED SECONDARY MEMBERS | 0 HR | | |
| | ROOF CONSTRUCTION AND ASSOCIATED SECONDARY MEMBERS | 0 HR | | |
| GENERAL BUILDING HEIGHTS AND AREAS | | | | |
| TBL 503, TBL 504, & TBL 506 | LIMITATIONS FOR II-B: | NON-SPRINKLERED F-1, F-2, H-4<br>SPRINKLERED F-1, F-2, H-4 | SPRINKLERED F-2 | * PER 503.1.1 SPECIAL INDUSTRIAL OCCUPANCIES: BUILDINGS AND STRUCTURES ARE EXEMPT FROM BUILDING HEIGHT AND AREA LIMITATIONS OF TABLE 503. |
| | HEIGHT (FT): | NA NA NA 75 75 75 | SEE ELEVATIONS | |
| | STORIES: | NA NA NA 3 4 4 | 1 | |
| | MAX AREA (SF): | NA NA NA 62,000 92,000 70,000 | SEE ROOM SCHEDULE | |
| 505.5 | EQUIPMENT PLATFORMS | EQUIPMENT PLATFORMS IN BUILDINGS SHALL NOT BE CONSIDERED AS A PORTION OF THE FLOOR BELOW. | NA | |
| 505.5.1 | EQUIPMENT PLATFORMS - AREA LIMITATIONS | THE AGGREGATE AREA OF ALL EQUIPMENT PLATFORMS WITHIN A ROOM SHALL NOT EXCEED TWO-THIRDS OF THE AREA OF THE ROOM IN WHICH THEY ARE LOCATED. | NA | |
| INTERIOR FINISHES | | | | |
| TBL 803.11 | INTERIOR WALL AND CEILING FINISH REQUIREMENTS (SPRINKLERED) | GROUP F | GROUP H | * IN EXIT ENCLOSURES OF BUILDINGS LESS THAN THREE STORIES ABOVE GRADE PLAN, CLASS B INTERIOR FINISH SHALL BE PERMITTED. |
| | EXIT ENCLOSURES AND EXIT PASSAGEWAYS | CLASS B | CLASS A * | |
| | CORRIDOR | CLASS C | CLASS A | |
| | ROOMS AND ENCLOSED SPACES | CLASS C | CLASS B | |
| FIRE PROTECTION SYSTEMS | | | | |
| SECTIONS 7 & 9 | | FOR THE WATER SUPPLY CONTROL BUILDING | SEE CA1 | |
| | | FOR THE BOOSTER PUMPING STATION | SEE BA1 | |
| MEANS OF EGRESS | | | | |
| 1003.2 | CEILING HEIGHT | TYPICAL CONDITIONS 7'-6" (90") MIN | SEE ROOM FINISH SCHEDULE | |
| 1003.3.1 | PROTRUDING OBJECTS | NOT MORE THAN 50% CEILING AREA OF A MEANS OF EGRESS 80"* | | * EXCEPTION: 78" AT DOOR CLOSERS AND STOPS |
| | | WHERE VERT CLEARANCE < 80" BARRIER @ 27" MAX AFF | | |
| 1003.3.2 | POST MOUNTED OBJECTS | WHERE OBJECT IS BETWEEN 27" AND 80" AFF OVERHANG < 4" * | | * EXCEPTION: SLOPING PORTIONS OF HANDRAILS BETWEEN TOP AND BOTTOM RISERS OR STAIRS AND ABOVE RAMP RUNS |
| 1003.3.3 | HORIZONTAL PROJECTIONS | STRUCTURAL ELEMENTS, FIXTURES AND FURNISHINGS BETWEEN 27" AND 80" AFF OVERHANG < 4" * | | * EXCEPTION: HANDRAILS MAY PROTRUDE 4 1/2" FROM WALL |
| 1003.3.4 | WALKING SURFACES | MEANS OF EGRESS SLIP-RESISTANT SURFACES AND BE SECURELY ATTACHED | | |
| 1003.5.1 | ELEVATION CHANGE AT EXTERIOR DOORS | SEE EXCEPTION IN REMARKS | | * EXCEPTION FOR GROUP F, H, & U OCCUPANCIES NOT REQUIRED TO BE ACCESSIBLE MAY HAVE A SINGLE STEP W/ 7" MAX RISER HT |
| TBL 1004.1.1 | MAXIMUM FLOOR AREA ALLOWANCES PER OCCUPANT: | INDUSTRIAL AREAS: 100 SQFT/ OC | SEE OCCUPANCY SCHEDULE | * CHECK FOR AMENDMENTS |
| 1004.8 | OUTDOOR AREAS | SEE EXCEPTION IN REMARKS | SEE LIFE SAFETY DIAGRAMS | * EXCEPTION: 1 MEANS OF EGRESS ALLOWED IN AREAS USED EXCLUSIVELY FOR THE SERVICE OF THE BUILDING |
| 1005.1 | MIN REQUIRED EGRESS WIDTH | OC x .3" OR 36", AT STAIRS: OC x .3" OR 36" | | |
| 1007.1 | ACCESSIBILTY | NA | | |
| 1008.1.1 | DOOR WIDTHS | MIN 32" CLEAR | SEE DOOR SCHEDULE | |
| 1009.5 | STAIRWAY LANDINGS | IN DIRECTION OF TRAVEL LESS THAN OR EQUAL TO 48" | | |
| 1009.7 | STAIRS | VERTICAL RISE LESS THAN OR EQUAL TO 12'-0" * | | * EXCEPTION: ALTERNATING TREAD DEVICES = NOT GREATER THAN 20'-0" |
| 1009.10 | ALTERNATING TREAD DEVICES | LIMITED TO MEZZANINES NO GREATER THAN 250 SQFT, WHICH SERVE NO MORE THAN 5 OCCUPANTS | | |
| 1011 | EXIT SIGNS | NO POINT IN AN EXIT ACCESS CORRIDOR OR EXIT PASSAGEWAY IS GREATER THAN 100 FT FROM THE NEAREST VISIBLE EXIT SIGN. * | | * EXCEPTION: SPACES REQUIRING ONLY ONE EXIT. |
| 1012.2 | HANDRAILS | STAIRS AND RAMPS 34" - 38" | SEE RAILING DETAILS | |
| 1013.2 | GUARDS | WHERE ELEVATION CHANGE IS 30-IN. 42" | | EXCEPTION 1: NOT REQUIRED ON THE LOADING SIDE OF LOADING DOCKS AND PIERS. |
| 1012.2 | HANDRAILS | STAIRS AND RAMPS 34" - 38" | | |

**CONTINUED FROM LEFT**

| REF | DESCRIPTION | REQUIREMENT | ACTUAL | REMARKS |
|---|---|---|---|---|
| 1013.2 | GUARDS | WHERE ELEVATION CHANGE IS 30-IN. 42" | | EXCEPTION 1: NOT REQUIRED ON THE LOADING SIDE OF LOADING DOCKS AND PIERS. |
| 1013.3 | OPENING LIMITATIONS | EXCEPTION 4. IN AREAS THAT ARE NOT OPEN TO THE PUBLIC WITHIN GROUP F, GUARDS SHALL NOT HAVE OPENINGS WHICH ALLOW PASSAGE OF A SPHERE 21 INCHES. | | |
| 1013.5 | MECHANICAL EQUIPMENT | GUARDS SHALL BE PROVIDED WHERE EQUIPMENT THAT REQUIRES SERVICE ARE LOCATED WITHIN 10 FEET OF A ROOF EDGE | | |
| 1013.6 | ROOF ACCESS | GUARDS SHALL BE PROVIDED WHERE ROOF HATCH IS LOCATED WITHIN 10 FEET OF ROOF EDGE | | |
| 1014.2 | EGRESS THROUGH INTERVENING SPACES | EXCEPTION: MEANS OF EGRESS ARE NOT PROHIBITED THROUGH ADJOINING OR INTERVENING ROOMS OR SPACES IN A GROUP F WHEN INTERVENING ROOMS ARE THE SAME OR A LESSER HAZARD GROUP | | |
| 1014.3 | COMMON PATH OF EGRESS TRAVEL | GROUP(S) OTHER THEN H-1,H-2, H-3, (UNSPRINKLERED): 75 FT MAX | SEE LIFESAFETY DIAGRAMS | |
| | | GROUP(S) H-1, H-2, H-3: 25 FT MAX | | |
| TBL 1015.1 | SPACES WITH ONE EXIT OR EXIT ACCESS DOORWAY | GROUP(S) F: 49 OCC. MAX | 0 | |
| | | GROUP(S) H-4, H-5: 10 OCC. MAX | 0 | |
| TBL 1016.1 | EXIT ACCESS TRAVEL DISTANCE | GROUP(S) F-1, UNSPRINKLERED: 200 FT MAX | SEE LIFESAFETY DIAGRAMS | |
| | | GROUP(S) F-2, UNSPRINKLERED: 300 FT MAX | | |
| | | GROUP(S) H-1 THROUGH 5 NOT PERMITTED W/O SPRINKLERS | | |
| TBL 1018.1 | CORRIDOR FIRE-RESISTANCE RATING | 1 HR | | |
| TBL 1018.2 | CORRIDOR WIDTH | 44 * | | * EXCEPTION 2: 36" FOR OCCUPANT LOAD LESS THAN 50. |
| TBL 1018.4 | DEAD END CORRIDOR | MAX LENGTH GROUP(S) F 20'<br>50' | | |
| TBL 1021.2 (2) | STORIES WITH ONE EXIT OR ACCESS TO ONE EXIT FOR OTHER OCCUPANCIES | GROUP F | | |
| | | FIRST STORY/ BASEMENT: 49 OCC<br>MAX EXIT ACCESS TRAVEL DISTANCE 75' | | |
| 1023.2 | EXIT PASSAGEWAY | MIN WIDTH 36" | | |
| ACCESSIBILITY | | | | |
| 1103.2.9 | EQUIPMENT SPACES | SPACES FREQUENTED ONLY BY SERVICE PERSONNEL FOR MAINTENANCE, REPAIR OR MONITORING OF EQUIPMENT ARE NOT REQUIRED TO COMPLY WITH THIS CHAPTER | NOT ACCESSIBLE | |
| INTERIORS | | | | |
| 1210.5 | TOILET ROOMS | SEE 2901 PLUMBING SYSTEMS | | |
| ENERGY EFFICIENCY | | | | |
| 1301.1.1 | CRITERIA | BUILDINGS SHALL BE DESIGNED AND CONSTRUCTED IN ACCORDANCE WITH THE INTERNATIONAL ENERGY CONSERVATION CODE.* | | * MODIFIED PER SPS |

**IECC 2015 W/ WISCONSIN AMENDMENTS**

TBL 5.5-5: BUILDING ENVELOPE REQUIREMENTS FOR CLIMATE ZONE 6

| | | | | | | |
|---|---|---|---|---|---|---|
| ROOFS | INSULATION ENTIRELY ABOVE DECK | R-20 C.I. | VERTICAL GLAZING | METAL FRAMING (CURTAINWALL / STOREFRONT) | | U-0.45 (MAX) SHGC-0.40 |
| WALLS ABOVE GRADE | MASS | R-13.3 C.I. | | METAL FRAMING (ENTRANCE DOORS) | | U-0.80 (MAX) SHGC-0.40 |
| WALLS BELOW GRADE | MASS | R-7.5 C.I. | | METAL FRAMING (ALL OTHER) | | U-0.55 (MAX) SHGC-0.40 |
| FLOORS | MASS | R-12.5 C.I. | SKYLIGHT WITH CURB | 0% - 2.0% | | 2.1% - 5.0% |
| SLAB-ON-GRADE FLOORS | UNHEATED | R-15 FOR 24" | | GLASS | U ALL –1.17 (MAX) SHGC ALL -0.49 | U ALL –1.17 (MAX) SHGC ALL -0.49 |
| OPAQUE DOORS | SWINGING | U-0.700 (MAX) | | PLASTIC | U ALL –0.87 (MAX) SHGC ALL -0.71 | U ALL –0.87 (MAX) SHGC ALL -0.58 |
| | NONSWINGING | U-0.500 (MAX) | | | | |

**CITY OF NEW BERLIN, WI**

| | | |
|---|---|---|
| CHAPTER 275: ZONING ORDINANCE | ARTICLE IV: ZONING DISTRICTS | |
| 275-36 | INSTITUTIONAL AND RECREATIONAL / PARK DISTRICTS | |
| 275-36.B(1) | I-1 INSTITUTIONAL DISTRICT<br>USED TO PROVIDE AREAS FOR PUBLIC OR PRIVATE INSTITUTIONS OR ORGANIZATIONS HOUSING SOCIAL, EDUCATIONAL, RELIGIOUS, OR GOVERNMENTAL ACTIVITIES. | |
| TBL 275-36-1 | USES FOR I-1 | GOVERNMENT OFFICES PRINCIPAL<br>UTILITIES CONDITIONAL<br>ESSENTIAL SERVICES PRINCIPAL |
| SITE DEVELOPMENT STANDARDS FOR I-1 | | |
| TBL 275-36-2 | MINIMUM LOT DIMENSIONS | |
| | MIN LOT AREA 40,000 SF MIN LOT WIDTH 200 FT | |
| | MINIMUM SETBACKS | |
| | FRONT / REAR | 50 / 50 FT |
| | SIDE (EACH SIDE) | 50 FT |
| | ORDINARY HIGH WATER MARK | 50 FT |
| | WETLAND | 10/30 |
| | MAXIMUM HEIGHT (FT) | 45 |
| TBL 275-36-3 | MAXIMUM COVERAGE BY: | |
| | BUILDINGS | 50% |
| | IMPERVIOUS SURFACES | 70% |
| | OPEN SPACE AND LANDSCAPING | 30% |

NOTE: ZONING INFORMATION TO BE FILLED OUT ONCE LAND AQUISITION IS COMPLETE AND ZONING PERMIT STATUS HAS BEEN CONFIRMED.

**CITY OF WAUKESHA, WI**

| | | |
|---|---|---|
| CHAPTER 22: ZONING ORDINANCE | | |
| 22.42 | INSTITUTIONAL AND RECREATIONAL / PARK DISTRICTS | |
| 22.42 (4) I | I-1 INSTITUTIONAL DISTRICT<br>UTILITY SUBSTATIONS, MUNICIPAL WELLS, PUMPING STATIONS AND TOWERS PROVIDED THAT THE USE IS NOT LESS THAN FIFTY (50) FEET FROM ANY LOT LINE. | |
| SITE DEVELOPMENT STANDARDS FOR I-1 | | |
| TBL 22.42 (5-7) | MINIMUM LOT DIMENSIONS | |
| | MIN LOT AREA | 10,000 SF |
| | MIN LOT WIDTH | 75 FT |
| | MINIMUM SETBACKS | |
| | FRONT / REAR | 25 / 40 FT |
| | SIDE (EACH SIDE) | 10 FT |
| | SIDE (CORNER LOT) | - FT |
| | ORDINARY HIGH WATER MARK | 75 FT |
| | WETLAND BUFFER / SETBACK | - / - FT |
| | MAXIMUM HEIGHT | NONE, 20 FT FOR ACCESSORY |

NOTE: ZONING INFORMATION TO BE FILLED OUT ONCE LAND AQUISITION IS COMPLETE AND ZONING PERMIT STATUS HAS BEEN CONFIRMED.

DRAFT 98% PROGRESS DRAWINGS
OCTOBER 2019

FILE: C:\Users\lgreen\Documents\GLWSP-P3-BPSF-GAMHPNE_lgreen.rvt

| NO. | DATE | APPD | DESCRIPTION |
|---|---|---|---|

Waukesha Water Utility
SERVING WAUKESHA SINCE 1886

GREELEY AND HANSEN
741 N. GRAND AVE. SUITE 308
WAUKESHA, WI 53186

GREAT WATER ALLIANCE™

CONTRACT PACKAGE 3: BOOSTER PUMPING STATION AND WATER SUPPLY CONTROL BUILDING

CODE SUMMARY

APPROVED

SEAL AFFIXED
MONTH / DAY / YEAR

OCTOBER 2019

| | | | |
|---|---|---|---|
| JOB NO.: | 15310 | | |
| DESGN | JJS | CHCK | TCB |
| APPRV | TCB | DRWN | AKB |
| SCALE: | NO SCALE | | |

DRAWING NUMBER

AA2

SHEET 23 OF 184 REV 0

10/2/2019 10:04:18 AM
BAR MEASURE 1" ON FULLSIZE SHEETS

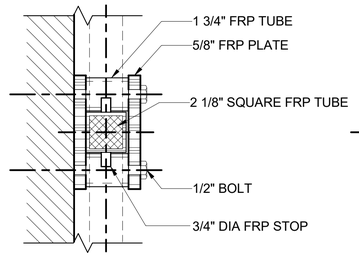


1 REMOVABLE RAIL PLAN
SCALE: 3"=1'-0"

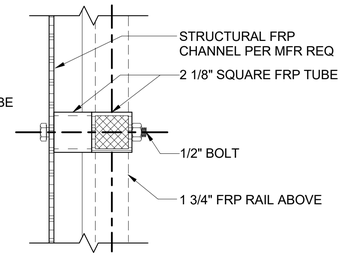


2 SMNT RAIL PLAN
SCALE: 3"=1'-0"

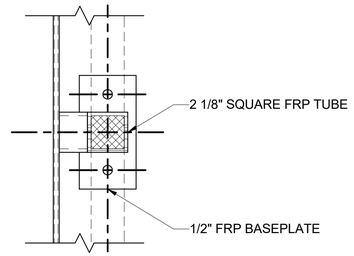


3 TMNT POST PLAN
SCALE: 3"=1'-0"

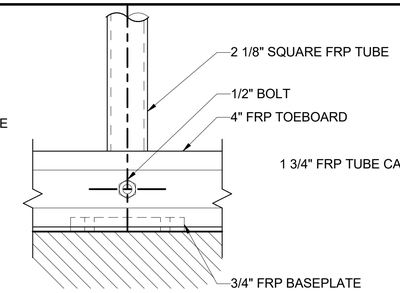


4 KICKPLATE CONNECTION
SCALE: 3"=1'-0"

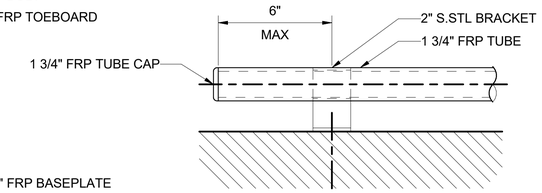


5 WMNT RAIL TERMINATION
SCALE: 3"=1'-0"

FRP TUBE TYPES LEGEND

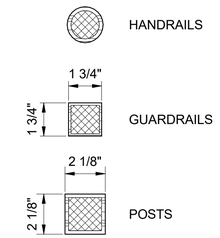


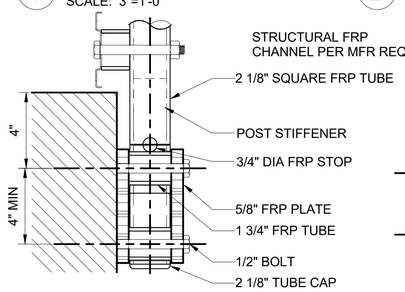


6 REMOVABLE RAIL SECTION
SCALE: 3"=1'-0"

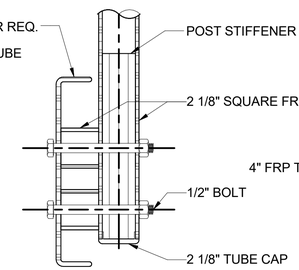


7 SMNT RAIL SECTION
SCALE: 3"=1'-0"

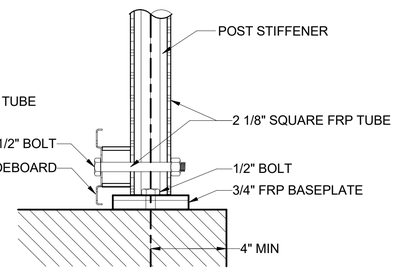


8 TMNT POST SECTION
SCALE: 3"=1'-0"

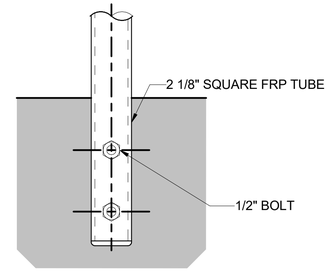


9 SMNT POST DETAIL
SCALE: 3"=1'-0"

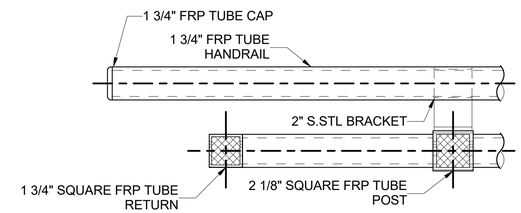


10 GUARD MOUNTED HRAIL SUPPORT AND TERMINATION
SCALE: 3"=1'-0"

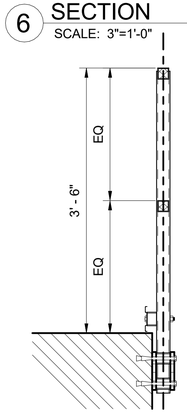


11 TYP SMNT REMOVABLE GRAIL SECTION
SCALE: 1"=1'-0"

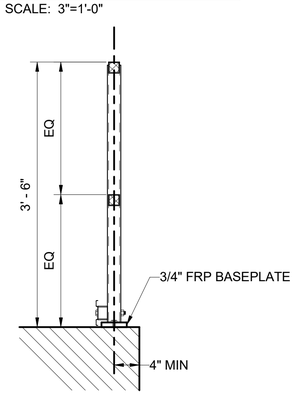


12 TYP TMNT GRAIL SECTION
SCALE: 1"=1'-0"

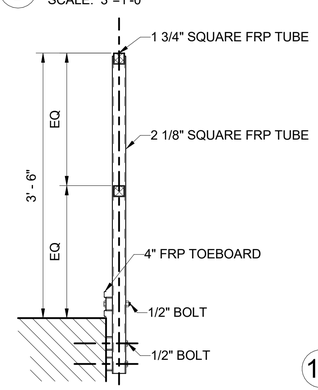


13 TYP SMNT GRAIL SECTION
SCALE: 1"=1'-0"

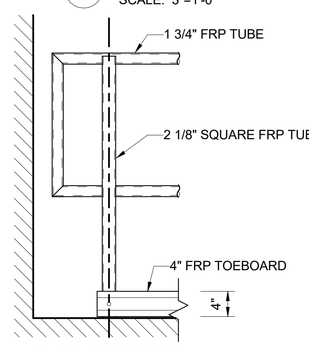


14 RAIL RETURN
SCALE: 1"=1'-0"

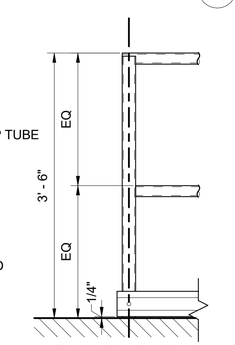


15 TYP RAIL END
SCALE: 1"=1'-0"

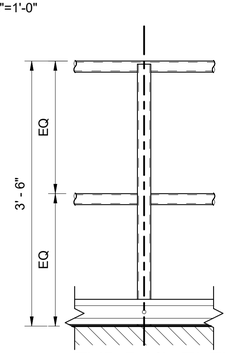


16 TYP RAIL ELEVATION
SCALE: 1"=1'-0"

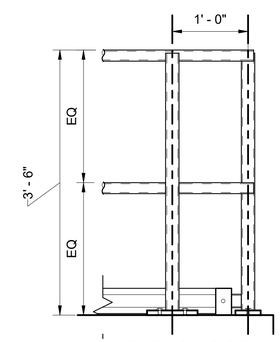


17 TYP RAIL CORNER
SCALE: 1"=1'-0"

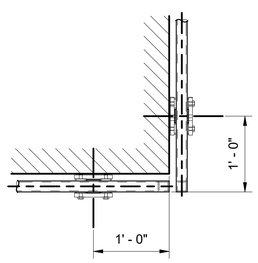


18 TYP SMNT REMOVABLE RAIL OUTSIDE TURN
SCALE: 1"=1'-0"

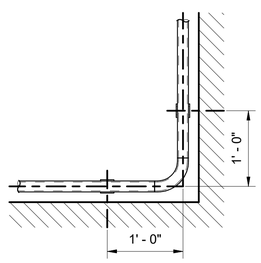


19 TYP SMNT RAIL INSIDE TURN
SCALE: 1"=1'-0"

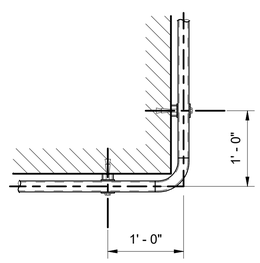


20 TYP SMNT RAIL OUTSIDE TURN
SCALE: 1"=1'-0"

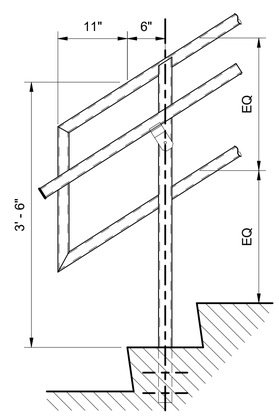


21 TYP RAIL ELEVATION
SCALE: 1"=1'-0"

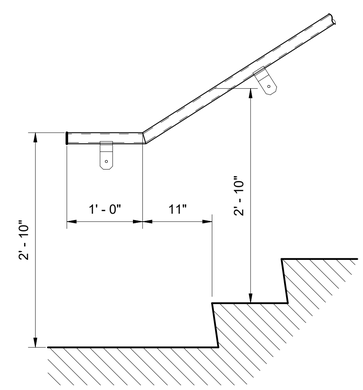


22 WALL MOUNTED RAIL STAIR BASE
SCALE: 1"=1'-0"

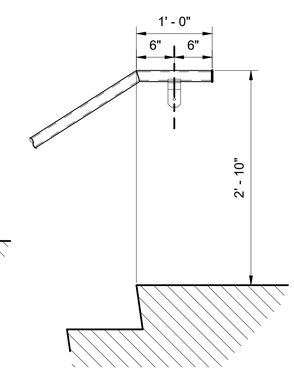


23 WALL MOUNTED RAIL STAIR LANDING
SCALE: 1"=1'-0"

DRAFT 98% PROGRESS DRAWINGS
OCTOBER 2019

0 4 8 12 IN 3" =1' - 0"
1 0 1 2 FT 1" =1' - 0"

| NO. | DATE | APPD | DESCRIPTION |
|---|---|---|---|

Waukesha Water Utility
SERVING WAUKESHA SINCE 1886

GREELEY AND HANSEN
741 N. GRAND AVE. SUITE 308
WAUKESHA, WI 53186

GREAT WATER ALLIANCE™

CONTRACT PACKAGE 3: BOOSTER PUMPING STATION AND WATER SUPPLY CONTROL BUILDING

FRP RAILING DETAILS

APPROVED

SEAL AFFIXED
MONTH / DAY / YEAR

OCTOBER 2019

| | | | |
|---|---|---|---|
| JOB NO.: | 15310 | | |
| DESGN | JJS | CHCK | TCB |
| APPRV | TCB | DRWN | AKB |
| SCALE: | AS SHOWN | | |

DRAWING NUMBER
AA3

SHEET 24 OF 184 REV 0

FILE: C:\Users\lgreen\Documents\GLWSP-P3-BPSF-GAMHPNE_lgreen.rvt

10/2/2019 10:04:22 AM
BAR MEASURE 1" ON FULLSIZE SHEETS

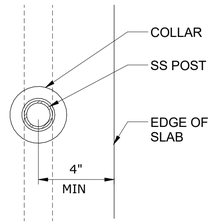


1 REMOVABLE RAIL PLAN
SCALE: 3"=1'-0"

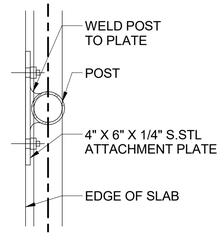


2 SIDE MOUNTED RAIL PLAN
SCALE: 3"=1'-0"

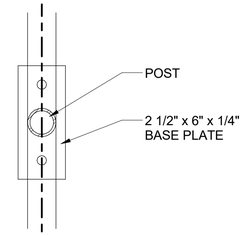


3 TOP MOUNTED POST PLAN
SCALE: 3"=1'-0"

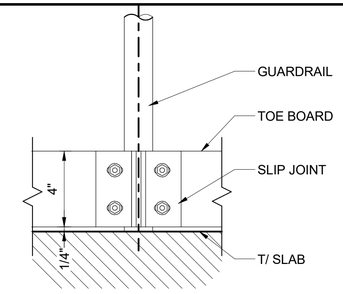


4 KICKPLATE CONNECTION
SCALE: 3"=1'-0"

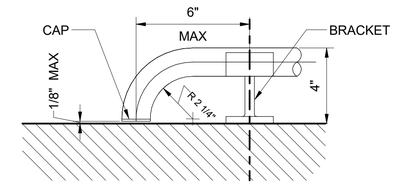


5 WALL MOUNTED RAIL
SCALE: 3"=1'-0"

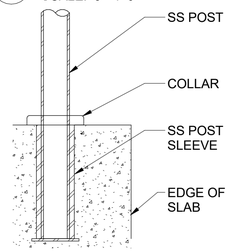


6 REMOVABLE RAIL SECTION
SCALE: 3"=1'-0"

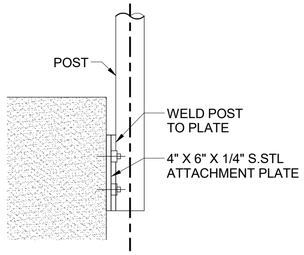


7 S/ MNT RAIL SECTION
SCALE: 3"=1'-0"

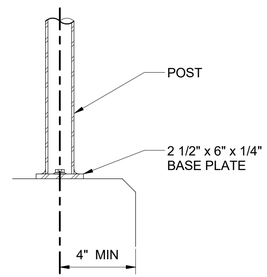


8 T/ MNT POST SECTION
SCALE: 3"=1'-0"

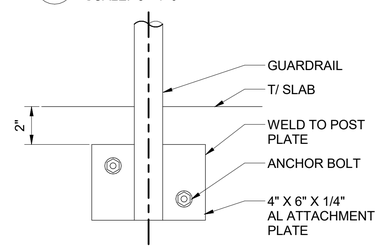


9 SIDE MOUNTED POST DETAIL
SCALE: 3"=1'-0"

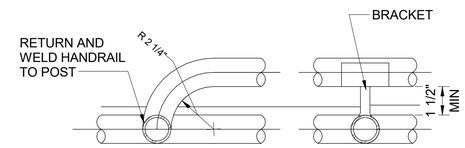


10 GUARD MOUNTED HANDRAIL SUPPORT AND RETURN
SCALE: 3"=1'-0"

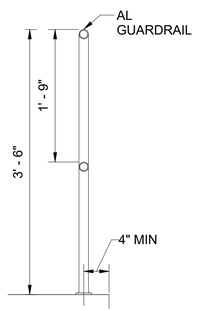


12 TYP TOP MOUNTED RAIL SECTION
SCALE: 1"=1'-0"

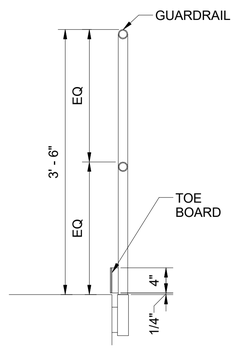


13 TYP SIDE MOUNTED RAIL SECTION
SCALE: 1"=1'-0"

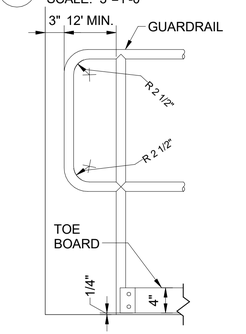


14 RAIL RETURN
SCALE: 1"=1'-0"

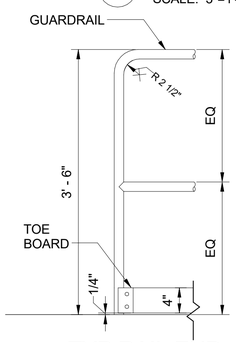


15 TYP RAIL END
SCALE: 1"=1'-0"

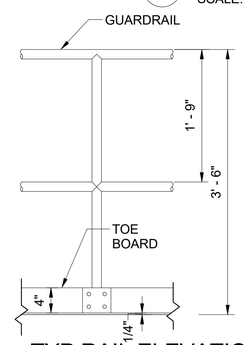


16 TYP RAIL ELEVATION
SCALE: 1"=1'-0"

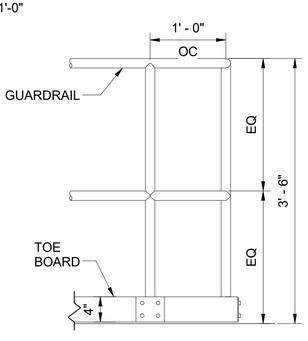


17 TYP RAIL CORNER
SCALE: 1"=1'-0"

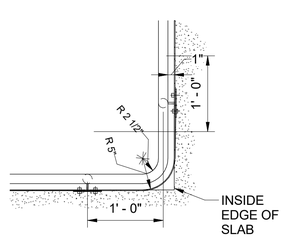


22 SIDE MOUNTED RAIL INSIDE TURN
SCALE: 1"=1'-0"

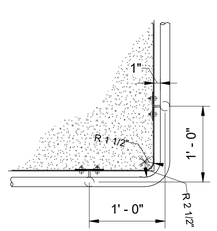


23 SIDE MOUNTED RAIL OUTSIDE TURN
SCALE: 1"=1'-0"

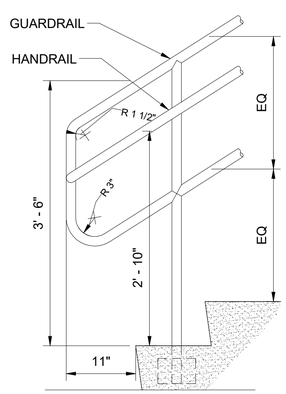


19 TYP RAIL ELEVATION
SCALE: 1"=1'-0"

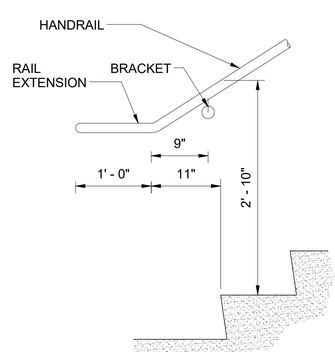


20 WALL MOUNTED RAIL STAIR BASE
SCALE: 1"=1'-0"

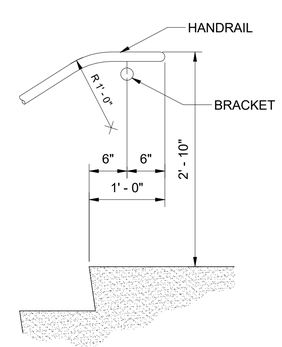


21 WALL MOUNTED RAIL STAIR LANDING
SCALE: 1"=1'-0"

DRAFT 98% PROGRESS DRAWINGS
OCTOBER 2019

0 4 8 12 IN 3" =1' - 0"
1 0 1 2 FT 1" =1' - 0"

| NO. | DATE | APPD | DESCRIPTION |
|---|---|---|---|

Waukesha Water Utility
SERVING WAUKESHA SINCE 1886

GREELEY AND HANSEN
741 N. GRAND AVE. SUITE 308
WAUKESHA, WI 53186

GREAT WATER ALLIANCE™

CONTRACT PACKAGE 3: BOOSTER PUMPING STATION AND WATER SUPPLY CONTROL BUILDING

AL RAILING DETAILS

APPROVED

SEAL AFFIXED
MONTH / DAY / YEAR

OCTOBER 2019

| | | | |
|---|---|---|---|
| JOB NO.: | 15310 | | |
| DESGN | JJS | CHCK | TCB |
| APPRV | TCB | DRWN | JJS |
| SCALE: | AS SHOWN | | |

DRAWING NUMBER
AA4

SHEET 25 OF 184 REV 0

FILE: C:\Users\jgreen\Documents\GLWSP-P3-BPSF-GAMHPNE_jgreen.rvt

10/2/2019 10:05:20 AM

BAR MEASURE 1" ON FULLSIZE SHEETS

## VALVE SYMBOLS

| DESCRIPTION | SINGLE LINE | THREE LINE |
|---|---|---|
| GATE | | |
| BUTTERFLY | | |
| CHECK (SWING) | | |
| BALL | | |
| DIAPHRAGM | | NA |
| GLOBE | | NA |
| AUTO COMBINATION AIR | AVR | NA |
| AUTO AIR RELEASE | AR | |
| AUTO VACUUM RELEASE | VR | NA |
| PRESSURE REDUCING | | NA |
| PRESSURE REGULATING | | NA |
| PRESSURE REDUCING AND SUSTAINING | | NA |

## VALVE OPERATORS

X

PLACE KEY FOR OPERATOR IN PLACE OF "X"

KEY

| | |
|---|---|
| C | CHAINWHEEL |
| D | DIAPHRAGM |
| F | FLOAT |
| G | GEAR |
| H | HANDWHEEL |
| L | LEVER |
| M | MOTOR (ELECTRIC) |
| S | SOLENOID |
| A | AIR MOTOR |
| N | NUT |

## PIPE FITTING SYMBOLS

| DESCRIPTION | SINGLE LINE | THREE LINE |
|---|---|---|
| TEE | | |
| 90 DEG ELBOW | | |
| 45 DEG ELBOW | | |
| REDUCER - CONCENTRIC | | |
| REDUCER - ECCENTRIC (OFFSET VIEW) | | |
| BLIND FLANGE | | |
| VENTURI FLOW METER | | |
| MAGNETIC FLOW METER | M | M |
| PRESSURE GAUGE | | NA |

## PIPE JOINT SYMBOLS

| DESCRIPTION | SINGLE LINE | THREE LINE |
|---|---|---|
| FLANGE | | |
| MECHANICAL JOINT | | |
| MECHANICAL JOINT (RESTRAINED) | R | R |

## PIPE FITTING ABBREVIATIONS

| | |
|---|---|
| BB | BASE BEND |
| BT | BASE TEE |

## WALL FITTING SYMBOLS

| DESCRIPTION | SINGLE LINE | THREE LINE |
|---|---|---|
| WALL SLEEVE (CAULKED) | | |
| WALL SLEEVE (ANNULAR TYPE SEAL) | | |
| WALL SLEEVE (MECHANICAL JOINT) | | |
| FLANGE AND FLANGE WALL PIPE WITH INTERMEDIATE COLLAR (F x F x F) | | |
| MECHANICAL JOINT AND MECHANICAL JOINT WALL PIPE WITH INTERMEDIATE COLLAR (MJ x F x MJ) | | |
| MECHANICAL JOINT AND FLANGE WALL PIPE WITH INTERMEDIATE COLLAR (MJ x F x F) | | |

## MECHANICAL EQUIPMENT

| DESCRIPTION | SYMBOL |
|---|---|
| PUMP | |
| WATER LEVEL | |

## GENERAL MECHANICAL NOTES:

1. PIPE FITTINGS, FLANGES, HARNESSED SLEEVE TYPE COUPLINGS, AND LOCATIONS AND ELEVATIONS OF PIPING ARE SHOWN TO GENERALLY DESCRIBE THE WORK AND DO NOT PURPORT TO BE COMPLETE FINAL CONSTRUCTION DETAILS. SHOP DRAWINGS SHALL BE PREPARED AND SUBMITTED FOR ACCEPTANCE AS SPECIFIED.
2. PIPE SUPPORTS SHALL BE PROVIDED ON EACH SIDE OF ALL HARNESSED COUPLINGS SYMMETRICALLY LOCATED WITHIN TWO FEET OF THE END OF THE COUPLING.
3. IF THE CONTRACTOR TEMPORARILY REMOVES ANY EXISTING PIPES, FITTINGS, VALVES, OR RELATED APPURTENANCES, CONTRACTOR SHALL REPLACE THE SAME IN KIND WITH NEW MATERIAL AND NO SEPARATE PAYMENT WILL BE MADE THEREFORE, UNLESS OTHERWISE NOTED OR SPECIFIED.
4. ALL ANCHOR BOLTS, NUTS, WASHERS, AND EXPANSION ANCHORS, OUTSIDE EXPOSED TO THE WEATHER, AND PARTIALLY OR TOTALLY SUBMERGED SHALL BE OF TYPE 304 STAINLESS STEEL.
5. WALL AND FLOOR SLEEVES SHALL BE LARGE ENOUGH TO ACCOMMODATE FLANGES IF NECESSARY OR REQUIRED.
6. ALL SHOP AND WORKING DRAWING SUBMITTALS SHALL BE PREPARED BY THE CONTRACTOR TO INCORPORATE ALL REQUIREMENTS AND RESPONSIBILITIES OF THESE MECHANICAL NOTES.
7. IN COMPLYING WITH ALL RESPONSIBILITIES AND REQUIREMENTS UNDER THESE MECHANICAL NOTES,THE CONTRACTOR SHALL PROVIDE ALL DESIGNS, LABOR, EQUIPMENT AND SERVICES NEEDED FOR SUCH COMPLIANCE.
8. ALL COSTS ASSOCIATED WITH COMPLIANCE WITH THESE GENERAL MECHANICAL NOTES ARE CONSIDERED INCIDENTAL TO THE COST OF CONSTRUCTION AND NO SEPARATE PAYMENT WILL BE MADE.
9. THE CONTRACTOR IS RESPONSIBLE TO FABRICATE, ERECT, CONSTRUCT AND OTHERWISE INSTALL ALL NEW WORK CONNECTING TO EXISTING WORK AND MAKE ALL NECESSARY RELOCATIONS TO THE ARRANGEMENTS AND GENERAL DESIGN SHOWN. THE CONTRACTOR IS ALSO RESPONSIBLE TO MAKE ANY ADJUSTMENTS IN FABRICATION, ERECTION, CONSTRUCTION AND INSTALLATION NECESSARY TO FIT NEW WORK AND RELOCATIONS TO EXISTING CONDITIONS TO CONFORM TO THE ARRANGEMENTS AND GENERAL DESIGN SHOWN. ADJUSTMENTS PROPOSED OR CONTEMPLATED BY THE CONTRACTOR SHALL CONFORM TO REQUIREMENTS AND STANDARDS OF THE CONTRACT DOCUMENTS.

DRAFT 98% PROGRESS DRAWINGS

OCTOBER 2019

| NO. | DATE | APPD | DESCRIPTION |
|---|---|---|---|

Waukesha Water Utility
SERVING WAUKESHA SINCE 1886

GREELEY AND HANSEN
741 N. GRAND AVE. SUITE 308
WAUKESHA, WI 53186

GREAT WATER ALLIANCE™

CONTRACT PACKAGE 3: BOOSTER PUMPING STATION AND WATER SUPPLY CONTROL BUILDING

NOTES, SYMBOLS AND LEGEND

APPROVED

SEAL AFFIXED
MONTH / DAY / YEAR

OCTOBER 2019

| | | | |
|---|---|---|---|
| JOB NO.: | 15310 | | |
| DESGN | AM | CHCK | DVH |
| APPRV | AJM | DRWN | OR |
| SCALE: | NO SCALE | | |

DRAWING NUMBER

AM1

SHEET 26 OF 184 REV 0

FILE: C:\Users\lgreen\Documents\GLWSP-P3-BPSF-GAMHPNE_lgreen.rvt

BAR MEASURE 1" ON FULL SIZE SHEETS
08/13/2019 2:34:58 PM
FILE: \\GH-DATA01\CLIENT02\15310-WAUKESHA GREAT LAKES WATER SUPPLY PM-CM\21 CADD\21.05 WORKING DWGS\CONTRACT PACKAGE 3 - BPSF\GLWSP-P3-BPSF-AM02.DWG

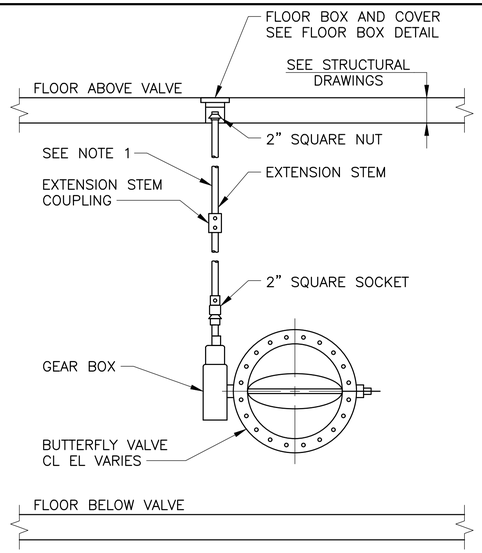


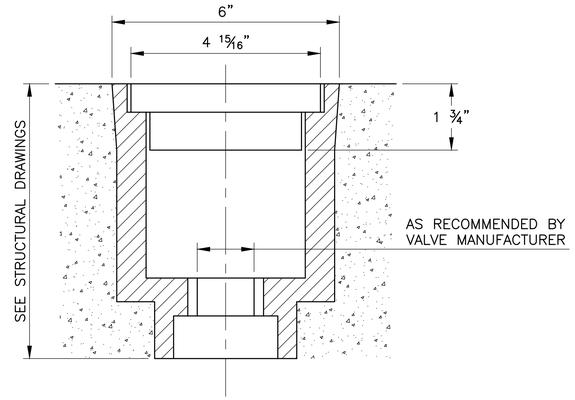


FLOOR BOX DETAIL

NOTE:

1. PROVIDE ONE STEM GUIDE FOR EVERY 10 FEET OF STEM EXTENSION LENGTH OR AS RECOMMENDED BY VALVE MANUFACTURER. SUPPORT STEM GUIDE BY STRUCTURAL STEEL SUPPORT FRAME EITHER BOLTED TO THE VALVE ACTUATOR MOUNTING BRACKET OR ANCHORED TO THE CEILING NEAR THE FLOOR BOX.

## 1 BUTTERFLY VALVE WITH FLOOR BOX DETAIL

NOT TO SCALE

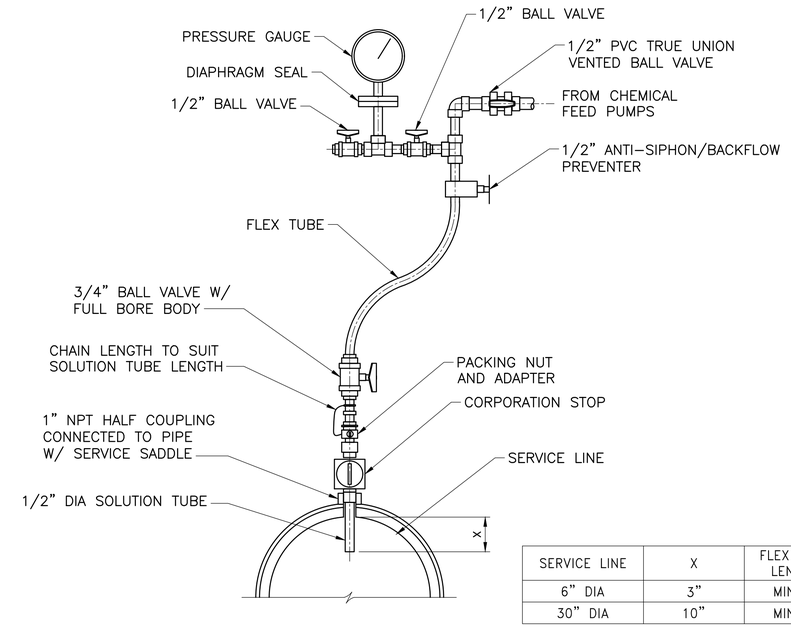


| SERVICE LINE | X | FLEX TUBE LENGTH |
|---|---|---|
| 6" DIA | 3" | MIN 6' |
| 30" DIA | 10" | MIN 6' |

## 2 CHEMICAL INJECTION ASSEMBLY DETAIL

NOT TO SCALE

TEST PRESSURE = 100 PSI

| PIPE | HARNESSED FLANGE – TYPE COUPLING JOINT DIMENSIONS – INCHES | | | | | | | | | | | | | | |
|---|---|---|---|---|---|---|---|---|---|---|---|---|---|---|---|
| DIA | A | B | C | D | E | F | G | H | K | L | M | N | P | Q | R |
| 10 | 11.57 | 26.63 | 1.250 | 18.00 | 1.250 | 0.750 | 9.625 | 20.50 | 12 | 1.000 | 14.25 | 0.875 | 2 | 0.625 | 0.750 |
| 12 | 11.81 | 27.36 | 1.375 | 21.25 | 1.500 | 0.875 | 9.625 | 24.25 | 12 | 1.000 | 17.00 | 0.875 | 2 | 0.750 | 0.750 |
| 14 | 12.25 | 28.49 | 1.500 | 23.75 | 1.625 | 1.000 | 9.625 | 27.00 | 12 | 1.125 | 18.75 | 1.000 | 2 | 0.875 | 1.000 |
| 16 | 12.69 | 29.62 | 1.625 | 26.50 | 1.875 | 1.125 | 9.625 | 30.25 | 16 | 1.125 | 21.25 | 1.000 | 2 | 1.000 | 1.250 |
| 18 | 12.94 | 30.37 | 1.750 | 28.25 | 2.125 | 1.250 | 9.625 | 32.50 | 16 | 1.250 | 22.75 | 1.125 | 2 | 1.125 | 1.250 |
| 20 | 13.63 | 32.00 | 1.875 | 31.25 | 2.375 | 1.375 | 9.625 | 36.00 | 20 | 1.250 | 25.00 | 1.125 | 2 | 1.250 | 1.750 |
| 24 | 14.06 | 33.11 | 2.000 | 36.00 | 2.500 | 1.500 | 9.625 | 41.00 | 20 | 1.375 | 29.50 | 1.250 | 2 | 1.375 | 1.750 |
| 30 | 18.75 | 43.25 | 2.375 | 43.75 | 3.250 | 1.875 | 13.000 | 50.25 | 28 | 1.375 | 36.00 | 1.250 | 2 | 1.750 | 2.750 |
| 36 | 20.87 | 47.99 | 2.625 | 51.75 | 3.625 | 2.125 | 14.000 | 59.00 | 32 | 1.625 | 42.75 | 1.500 | 2 | 2.000 | 3.250 |
| TEST PRESSURE = 200 PSI (FOR 14" BP DISCHARGE) | | | | | | | | | | | | | | | |
| 14 | 12.75 | 30.24 | 1.875 | 25.00 | 2.250 | 1.375 | 9.625 | 29.5 | 12 | 1.125 | 18.75 | 1.000 | 2 | 1.250 | 1.500 |

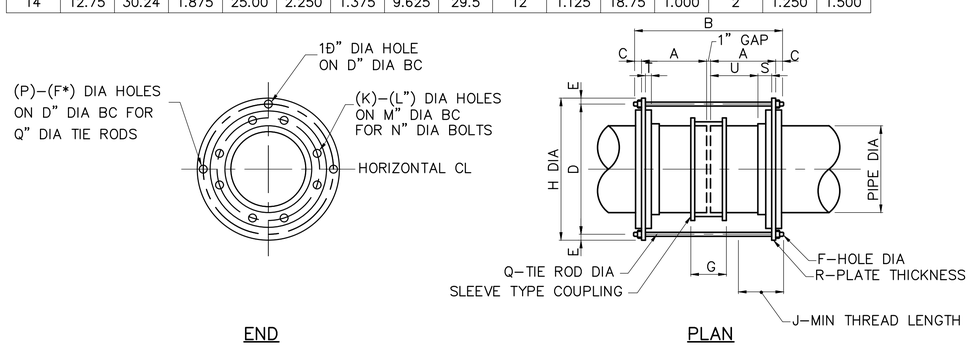


END PLAN

## 3 HARNESSED FLANGE-TYPE COUPLING DETAIL

NOT TO SCALE

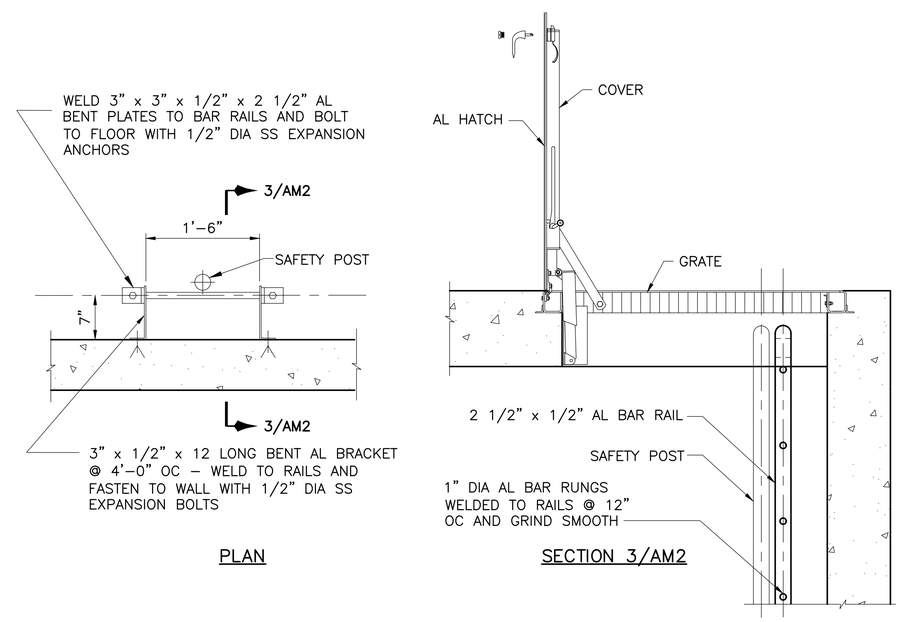


PLAN SECTION 3/AM2

## 4 ALUMINUM LADDER DETAIL

NOT TO SCALE

DRAFT 98% PROGRESS DRAWINGS
OCTOBER 2019

| NO. | DATE | APPD | REVISION |
|---|---|---|---|

Waukesha Water Utility
SERVING WAUKESHA SINCE 1886

GREELEY AND HANSEN
741 N. GRAND AVE, SUITE 308
WAUKESHA, WI 53186

GREAT WATER ALLIANCE™

CONTRACT PACKAGE 3: BOOSTER PUMPING STATION AND WATER SUPPLY CONTROL BUILDING

DETAILS

APPROVED

SEAL AFFIXED
MONTH / DAY / YEAR

OCTOBER 2019

JOB NO.: 15310

| DESGN | LAM | CHCK | RMC |
|---|---|---|---|
| APPRV | AJM | DRWN | OR |

SCALE: NOT TO SCALE

DRAWING NUMBER

AM2

SHEET 27 OF 184 REV 0

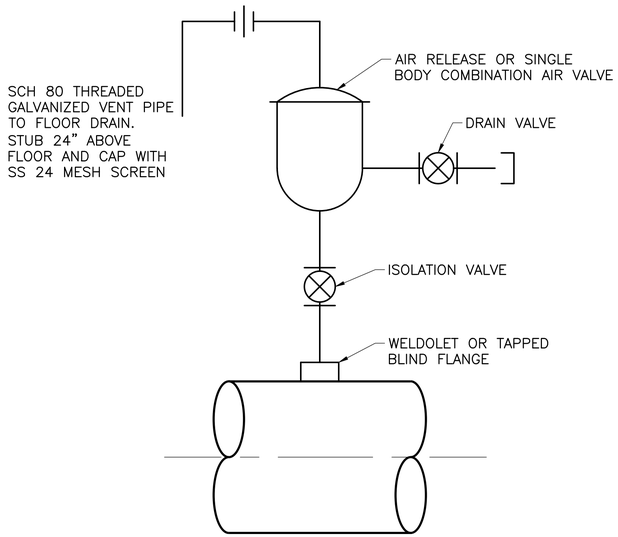


1 AIR RELEASE OR SINGLE BODY COMBINATION AIR VALVE DETAIL
NOT TO SCALE

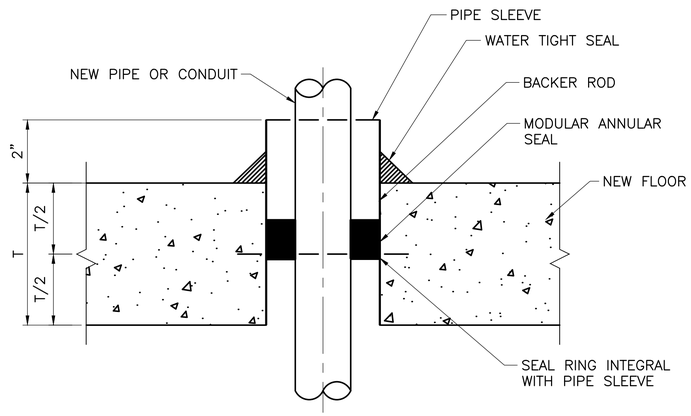


2 NEW FLOOR PENETRATION DETAIL
NOT TO SCALE

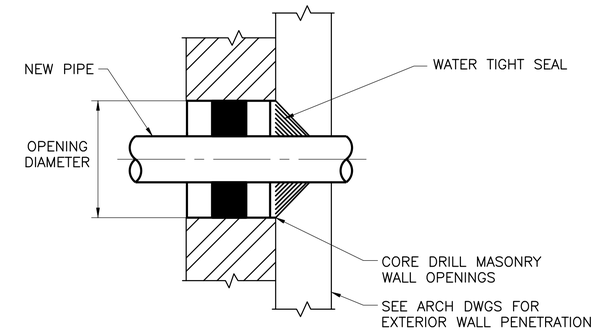


3 NEW MASONRY WALL PENETRATION DETAIL
NOT TO SCALE

DRAFT 98% PROGRESS DRAWINGS
OCTOBER 2019

| NO. | DATE | APPD | REVISION |
|---|---|---|---|

Waukesha Water Utility
SERVING WAUKESHA SINCE 1886

GREELEY AND HANSEN
741 N. GRAND AVE, SUITE 308
WAUKESHA, WI 53186

GREAT WATER ALLIANCE™

CONTRACT PACKAGE 3: BOOSTER PUMPING STATION AND WATER SUPPLY CONTROL BUILDING

DETAILS

APPROVED

SEAL AFFIXED
MONTH / DAY / YEAR

OCTOBER 2019

JOB NO.: 15310

| | | | |
|---|---|---|---|
| DESGN | LAM | CHCK | RMC |
| APPRV | AJM | DRWN | OR |

SCALE: NOT TO SCALE

DRAWING NUMBER

AM3

SHEET 28 OF 184 REV 0

BAR MEASURE 1" ON FULLSIZE SHEETS
07/23/2019 3:18:29 PM
FILE: \\GH-DATA01\CLIENT02\15310-WAUKESHA GREAT LAKES WATER SUPPLY PM-CM\21 CADD\21.05 WORKING DWGS\CONTRACT PACKAGE 3 - BPSF\GLWSP-P3-BPSF-AM03.DWG

## DUCTWORK SYMBOLS

| DESCRIPTION | SYMBOL |
|---|---|
| DUCT WIDTH x DEPTH (FIRST DIMENSIONS IS DIMENSION SEEN) | W x D |
| CHANGE OF ELEVATION RISE (R) DROP (D) | R |
| VOLUME DAMPER | VD |
| REGISTER OR GRILLE | * 48x12 3000 CFM; * 48x12 3000 CFM |
| * SEE MISCELLANEOUS DESIGNATIONS | |
| RECTANGULAR DIFFUSER (SIZE GIVEN REFERS TO NECK SIZE) | D L x W ____CFM |
| ROUND DIFFUSER (SIZE GIVEN REFERS TO NECK SIZE) | D L x W ____CFM |
| LINEAR DIFFUSER | |
| OUTLET AIR DIRECTION | |
| INLET AIR DIRECTION | |
| DUCT SUCTION * S = SUPPLY AIR * OA = OUTSIDE AIR | |
| DUCT SUCTION * E = EXHAUST AIR * RA = RETURN AIR | |
| ROUND DUCT WITH TRANSITION TO RECTANGULAR DUCT | |
| SPLITTER DAMPER (WITH ROD & LOCK) | |

| DESCRIPTION | SYMBOL |
|---|---|
| TURNING VANES | |
| DEFLECTING (SPLITTER) DAMPER WITH ROD & LOCK | |
| AIR EXTRACTOR WITH ROD & LOCK | |
| SUPPLY DUCT DOWN | |
| EXHAUST OR RETURN DUCT UP | |
| FLEXIBLE DUCT CONNECTION | |
| FLEXIBLE DUCT | |
| ACCESS DOORS IN DUCT | (FAR SIDE); AD (SIZE) |
| DIRECTION OF AIR FLOW IN DUCT | |
| DUCT SOUND ATTENUATOR | DSA |
| ACOUSTICAL LINING INSULATION | |

## EQUIPMENT SYMBOLS

| DESCRIPTION | SYMBOL |
|---|---|
| CENTRIFUGAL FAN | |
| IN-LINE FAN | |
| PROPELLER FAN | |
| LOUVERED ROOF FAN EXHAUST, SUPPLY | |
| ROOF MOUNTED FAN EXHAUST, SUPPLY | |
| GRAVITY ROOF VENTILATOR EXHAUST, INTAKE | |
| UNIT HEATER | |

## PIPING SYMBOLS

| DESCRIPTION | SYMBOL |
|---|---|
| HEATING WATER SUPPLY | HWS |
| HEATING WATER RETURN | HWR |
| COOLING WATER SUPPLY | CWS |
| COOLING WATER RETURN | CWR |
| CHILLED WATER SUPPLY | CHWS |
| CHILLED WATER RETURN | CHWR |
| LOW PRESSURE STEAM | LPS |
| LOW PRESSURE CONDENSATE | LPC |
| MEDIUM PRESSURE STEAM | MPS |
| MEDIUM PRESSURE CONDENSATE | MPC |
| HIGH PRESSURE STEAM | HPS |
| HIGH PRESSURE CONDENSATE | HPC |
| FUEL OIL SUPPLY | FOS |
| FUEL OIL RETURN | FOR |
| FUEL OIL FILL | FOF |
| FUEL OIL VENT | FOV |
| BOILER FEED | BF |
| NATURAL GAS | NG |
| LIQUID PETROLEUM GAS | LPG |
| REFRIGERANT LIQUID | RL |
| REFRIGERANT SUCTION | RS |
| REFRIGERANT DISCHARGE | RD |
| CONDENSATE PUMP DISCHARGE | CPD |
| COMPRESSED AIR | CA |
| GLYCOL SUPPLY | GLS |
| GLYCOL RETURN | GLR |
| PRESSURE & TEMPERATURE TEST PLUG | P&T |
| BALANCING VALVE | |
| MANUAL BALANCING & FLOW MEASURING VALVE | |
| AUTOMATIC BALANCING & FLOW MEASURING VALVE | |
| TRIPLE DUTY VALVE | |
| RELIEF VALVE | |
| FIRE DAMPER W/ ACCESS DOOR (FOR RATING SEE ARCH DWGS) | |
| COMBINATION FIRE SMOKE DAMPER W/ ACCESS DOOR (FOR RATING SEE ARCH DWGS) | |

| DESCRIPTION | SYMBOL |
|---|---|
| INLINE PUMP | |
| BASE MOUNTED PUMP | |
| PIPE GUIDE | |
| PIPE ANCHOR | |
| FLOAT & TEMPERATURE TRAP | |
| EXPANSION JOINT | |
| PIPE FLOW DIRECTION | |
| PIPE PITCH DOWN (WITH RESPECT TO FLOW) | DN |
| PIPE PITCH UP (WITH RESPECT TO FLOW) | UP |
| PIPE CAPPED | |
| MANUAL AIR VENT | |
| AUTOMATIC AIR VENT | |
| PUMP SUCTION DIFFUSER | |

## MISCELLANEOUS DESIGNATION

| DESIGNATION | DESCRIPTION |
|---|---|
| ACCU | AIR COOLED CONDENSING UNIT |
| ACU | AIR CONDITIONING UNIT |
| ARRGT | ARRANGEMENT |
| BDD | BACKDRAFT DAMPER |
| B/D EL | BOTTOM OF DUCT ELEVATION |
| CD | CEILING DIFFUSER |
| CFM | CFM |
| CG | CEILING GRILLE |
| CL EL | CENTERLINE ELEVATION |
| CR | CEILING REGISTER |
| CWR | CONDENSER WATER RETURN |
| CWS | CONDENSER WATER SUPPLY |
| D | DIFFUSER |
| DB | DRY BULB |
| DIA | BIAMETER |
| DL | DRUM LOUVER |
| EAF | EXHAUST AIR FAN |
| EBH | ELECTRIC BASEBOARD HEATER |
| EUH | ELECTRIC UNIT HEATER |
| FOB | FLAT ON BOTTOM |
| FOT | FLAT ON TOP |
| G | GRILLE |
| GD | GRAVITY DAMPER |
| GUH | GAS UNIT HEATER |
| HGT | HEIGHT |
| HPP | HOT WATER PRIMARY PUMP |
| HSP | HOT WATER SECONDARY PUMP |
| HVU | HEATING AND VENTILATING UNIT |
| HWB | HOT WATER BOILER |
| INV EL | INVERT ELEVATION |
| MAU | MAKE-UP AIR UNIT |
| MBH | THOUSAND BTU PER HOUR |
| MTG | MOUNTING |
| N.C. | NORMALLY CLOSED |
| N.O. | NORMALLY OPEN |
| NR | NOT REQUIRED |
| NTS | NOT TO SCALE |
| OAI | OUTSIDE AIR INTAKE |
| PACU | PACKAGED AIR CONDITIONING UNIT |
| R | REGISTER |
| RAF | RETURN AIR FAN |
| SD | SUPPLY DIFFUSER |
| SR | SUPPLY REGISTER |
| SS | STAINLESS STEEL |
| TCP | TEMPERATURE CONTROL PANEL |
| T/D EL | TOP OF DUCT ELEVATION |
| TG | TRANSFER GRILLE |
| TYP | TYPICAL |
| WB | WET BULB |
| WD | WALL DIFFUSER |
| WG | WALL GRILLE |
| WR | WALL REGISTER |
| WUH | WATER UNIT HEATER |

## TEMPERATURE CONTROL SYMBOLS

| DESCRIPTION | SYMBOL |
|---|---|
| MOTOR ACTUATOR | M |
| SOLENOID ACTUATOR | S |
| PNEUMATIC ACTUATOR | |
| 2-WAY CONTROL VALVE (WITH SOLENOID ACTUATOR) | S |
| 2-WAY CONTROL VALVE (WITH PNEUMATIC ACTUATOR) | |
| BUTTERFLY CONTROL VALVE (WITH MOTOR ACTUATOR) | M |
| OPPOSED BLADE CONTROL DAMPER (WITH MOTOR ACTUATOR) | M |
| PARALLEL BLADE CONTROL DAMPER (WITH PNEUMATIC ACTUATOR) | |
| SPACE TEMPERATURE SENSOR/THERMOSTAT | T |
| SPACE HUMIDITY SENSOR/HUMIDISTAT | H |
| TEMPERATURE SENSOR WITH RIGID ELEMENT | M |
| TEMPERATURE SENSOR WITH AVERAGING | T |
| PRESSURE SENSOR | P |
| DIFFERENTIAL PRESSURE SENSOR | DPS |
| HUMIDITY SENSOR | H |
| DEW POINT TEMPERATURE SENSOR | D |
| CFM AIR MEASURING STATION | AM |
| HIGH TEMPERATURE THERMOSTAT | HT |
| LOW TEMPERATURE THERMOSTAT | L |
| SPACE SMOKE DETECTOR | S |
| DUCT SMOKE DETECTOR | S |
| PADDLE FLOW SWITCH | FS |
| DIFFERENTIAL PRESSURE FLOW SWITCH | DP |
| HAZARDOUS GAS DETECTOR (* INDICATE GAS) | |
| TEMPERATURE CONTROL PANEL | TCP |
| AIR MONITORING PANEL | AMP |

## GENERAL NOTES:

1. THE SYMBOLS AND ABBREVIATIONS LISTED ON THIS SHEET ARE A STANDARD GUIDE INTENDED FOR GENERAL USE ON ALL PROJECTS; THEREFORE, NOT ALL THE SYMBOLS AND ABBREVIATION CONTAINED IN THIS LIST ARE NECESSARILY USED ON THIS PARTICULAR PROJECT.
2. * - DENOTES DIMENSION TO BE DETERMINED AFTER EQUIPMENT APPROVAL.
3. FOR OTHER VALVES, EQUIPMENT AND PIPING SYMBOLS, SEE PIPING AND EQUIPMENT SYMBOLS LEGEND.

DRAFT 98% PROGRESS DRAWINGS

OCTOBER 2019

| NO. | DATE | APPD | DESCRIPTION |
|---|---|---|---|

Waukesha Water Utility
SERVING WAUKESHA SINCE 1886

GREELEY AND HANSEN
741 N. GRAND AVE. SUITE 308
WAUKESHA, WI 53186

GREAT WATER ALLIANCE™

CONTRACT PACKAGE 3: BOOSTER PUMPING STATION AND WATER SUPPLY CONTROL BUILDING

GENERAL NOTES, SYMBOLS AND LEGEND

APPROVED

SEAL AFFIXED
MONTH / DAY / YEAR

OCTOBER 2019

| | | | |
|---|---|---|---|
| JOB NO.: | 15310 | | |
| DESGN | NH | CHCK | BW |
| APPRV | JD | DRWN | GS/ML |
| SCALE: | NO SCALE | | |

DRAWING NUMBER

AH1

SHEET 29 OF 184 REV 0

10/2/2019 10:05:10 AM

BAR MEASURE 1" ON FULLSIZE SHEETS

FILE: C:\Users\lgreen\Documents\GLWSP-P3-BPSF-GAMHPNE_lgreen.rvt

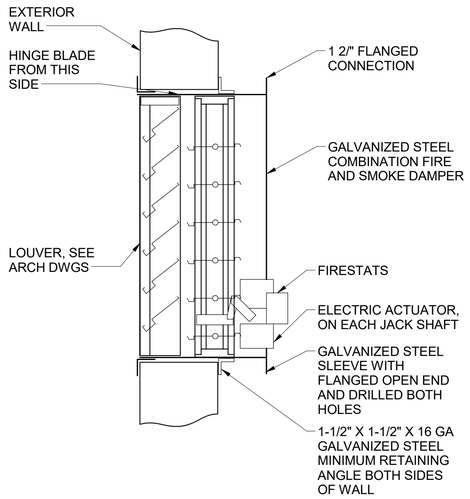


1 VERTICAL FIRE SMOKE DAMPER DETAIL
NOT TO SCALE

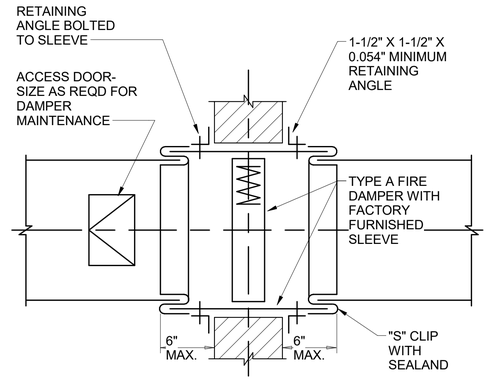


2 VERTICAL FIRE DAMPER DETAIL
NOT TO SCALE

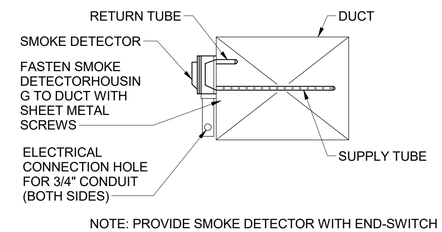


NOTE: PROVIDE SMOKE DETECTOR WITH END-SWITCH

3 SMOKE DETECTOR MOUNTING DETAIL
NOT TO SCALE

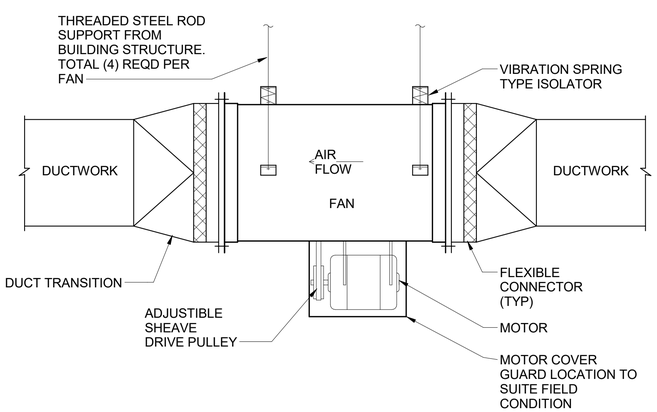


4 IN-LINE FAN DETAIL
NOT TO SCALE

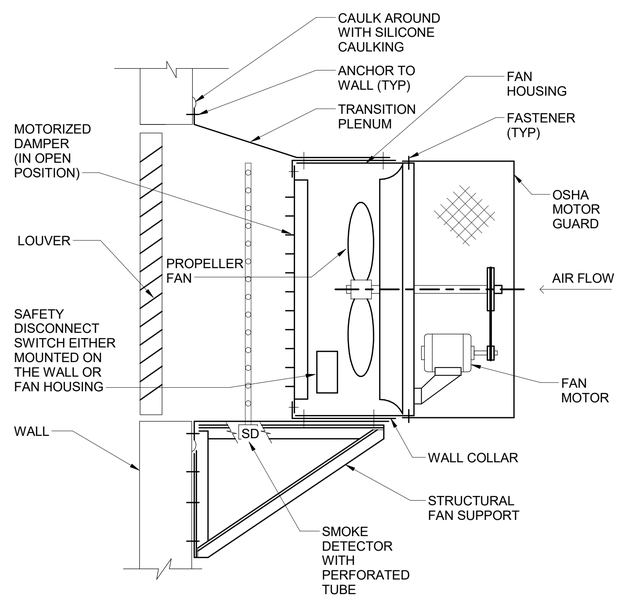


5 BELT DRIVEN WALL EXHAUST AIR FAN
NOT TO SCALE

DRAFT 98% PROGRESS DRAWINGS
OCTOBER 2019

| NO. | DATE | APPD | DESCRIPTION |
|---|---|---|---|

Waukesha Water Utility
SERVING WAUKESHA SINCE 1886

GREELEY AND HANSEN
741 N. GRAND AVE. SUITE 308
WAUKESHA, WI 53186

GREAT WATER ALLIANCE™

CONTRACT PACKAGE 3: BOOSTER PUMPING STATION AND WATER SUPPLY CONTROL BUILDING

DETAILS

APPROVED

SEAL AFFIXED
MONTH / DAY / YEAR

OCTOBER 2019

| | | | |
|---|---|---|---|
| JOB NO.: | 15310 | | |
| DESGN | NH | CHCK | BW |
| APPRV | JD | DRWN | GS/ML |
| SCALE: | NOT TO SCALE | | |

DRAWING NUMBER

AH2

SHEET 30 OF 184 REV 0

10/2/2019 10:05:13 AM
BAR MEASURE 1" ON FULLSIZE SHEETS
FILE: C:\Users\lgreen\Documents\GLWSP-P3-BPSF-GAMHPNE_lgreen.rvt

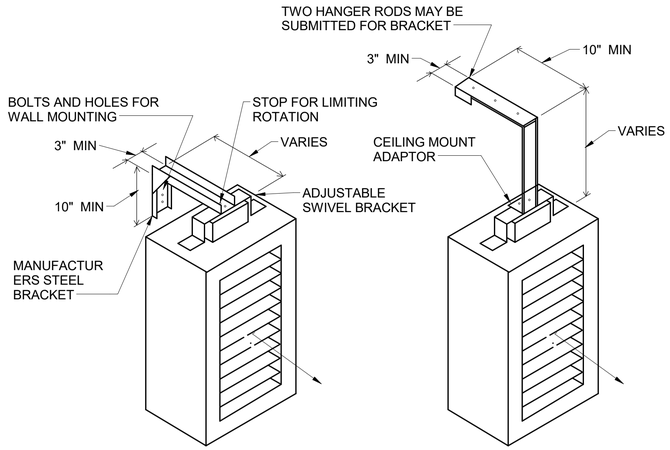


1 ELECTRIC UNIT HEATER DETAIL
NOT TO SCALE

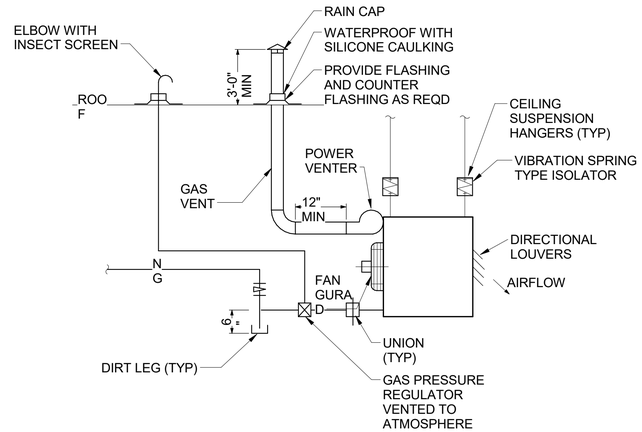


2 GAS UNIT HEATER DETAIL
NOT TO SCALE

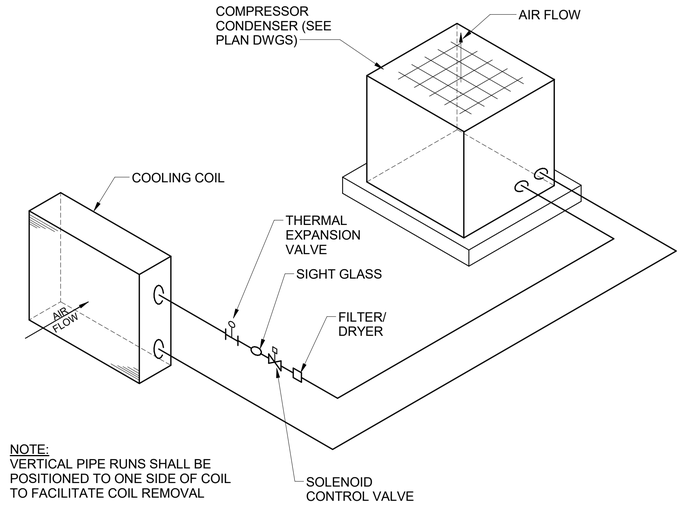


NOTE:
VERTICAL PIPE RUNS SHALL BE POSITIONED TO ONE SIDE OF COIL TO FACILITATE COIL REMOVAL

3 DX COOLING COIL AND AIR COOLED CONDENSER PIPING DIAGRAM
NOT TO SCALE

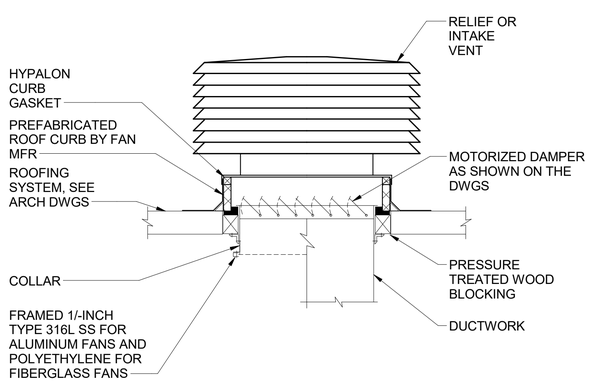


4 TYPICAL ROOF MOUNTED LOUVERED TYPE AIR INTAKE AND RELIEF DETAIL
NOT TO SCALE

DRAFT 98% PROGRESS DRAWINGS
OCTOBER 2019

| NO. | DATE | APPD | DESCRIPTION |
|---|---|---|---|

Waukesha Water Utility
SERVING WAUKESHA SINCE 1886

GREELEY AND HANSEN
741 N. GRAND AVE. SUITE 308
WAUKESHA, WI 53186

GREAT WATER ALLIANCE™

CONTRACT PACKAGE 3: BOOSTER PUMPING STATION AND WATER SUPPLY CONTROL BUILDING

DETAILS

APPROVED

SEAL AFFIXED
MONTH / DAY / YEAR

OCTOBER 2019

| | | | |
|---|---|---|---|
| JOB NO.: | 15310 | | |
| DESGN | NH | CHCK | BW |
| APPRV | JD | DRWN | GS/ML |
| SCALE: | NOT TO SCALE | | |

DRAWING NUMBER

AH3

SHEET 31 OF 184 REV 0

10/2/2019 10:05:17 AM
BAR MEASURE 1" ON FULLSIZE SHEETS
FILE: C:\Users\lgreen\Documents\GLWSP-P3-BPSF-GAMHPNE_lgreen.rvt

10/2/2019 10:05:29 AM

BAR MEASURE 1" ON FULLSIZE SHEETS

## FIXTURE SYMBOLS

| DESCRIPTION | SYMBOL |
|---|---|
| FLOOR DRAIN | FD |
| EQUIPMENT DRAIN | ED |
| AREA DRAIN | AD |
| ROOF DRAIN | RD |
| HOSE BIBB | HB |
| WALL HYDRANT | WH |
| ELECTRIC WATER HEATER | EWH |
| GAS WATER HEATER | GWH |
| LAVATORIES | L L |
| SAMPLING SINK | SS |
| KITCHEN SINK | KS |
| MOP RECEPTOR | MR |
| SHOWER STALL | SH |
| URINAL | U |
| WATER CLOSETS | WC WC |
| ELECTRIC WATER COOLER | EWC |
| WALL SIAMESE (EXPOSED) | |
| WALL SIAMESE (RECESSED) | |

## PIPING SYMBOLS

| DESCRIPTION | SYMBOL |
|---|---|
| SUSPENDED | |
| SANITARY DRAIN | SAN |
| WASTE | W |
| COLD WATER | CW |
| HOT WATER | HW |
| HOT WATER RETURN | HWR |
| TEMPERED WATER | TW |
| TEMPERED WATER RETURN | TWR |
| VENT | V |
| CLEAR WATER | CL |
| NON-POTABLE WATER | NPW |
| PUMP DISCHARGE | PD |
| FLOOR CLEANOUT | FCO |
| EXPOSED CLEANOUT | CO |
| UPRIGHT SPRINKLER HEAD | |
| PENDENT SPRINKLER HEAD | |
| SIDEWALL SPRINKLER HEAD | |
| WATER FLOW SWITCH | |
| P TRAP | |
| RUNNING TRAP | |
| BACKFLOW PREVENTER | |
| SPRINKLER RISER | |
| UNDERGROUND | |
| SANITARY DRAIN | SAN |
| WASTE | W |
| VENT | V |
| COLD WATER | CW |
| CLEAR WATER | CL |

## ABBREVIATIONS

| DESCRIPTION | DESIGNATION |
|---|---|
| AUTOMATIC SPRINKLER | A.S. |
| ALARM CHECK VALVE | ACV |
| BACKFLOW PREVENTER | BFP |
| BACK WATER VALVE | BWV |
| CENTERLINE ELEVATION | CL EL |
| CENTERLINE | CL |
| CLEANOUT | CO |
| CLEAR WATER | CL |
| CLEAR WATER PUMP | CLP |
| COLD WATER | CW |
| DEWATERING PUMP | DWP |
| DOUBLE CHECK DETECTOR ASSEMBLY | DCDA |
| DOWN | DN |
| DOWNSPOUT | DS |
| DOMESTIC RECIRCULATING PUMP | DCP |
| EMERGENCY EYEWASH | EE |
| EMERGENCY SHOWER | ES |
| EMERGENCY SHOWER/EYEWASH | ESE |
| ELECTRIC WATER HEATER | EWH |
| FIRE EXTINGUISHER | FE |
| FLOOR | FL |
| FLOOR CLEANOUT | FCO |
| FLOOR DRAIN | FD |
| FIRE PROTECTION | FP |
| GAS WATER HEATER | GWH |
| HOSE BIBB | HB |
| HIGH POINT | HP |
| HOT WATER | HW |
| HOT WATER RETURN | HWR |
| INCREASER | INCR |
| INVERT ELEVATION | INV EL |
| LOW POINT | LP |
| KITCHEN SINK | KS |
| MATCH LINE | ML |
| MOP BASIN | MB |
| OVERFLOW STORM | OST |
| OUTSIDE SCREW & YOKE | OS&Y |
| PLUG CLEANOUT | PLUG CO |
| REDUCED PRESSURE ZONE | RPZ |
| ROOF | RF |
| ROOF HYDRANT | RH |
| ROD OUT BASIN | ROB |
| SHOCK ABSORBER | SA |
| SANITARY | SAN |
| SAMPLING SINK | SS |
| STORM | ST |
| SUMP PUMP | SP |
| TAMPER SWITCH | TS |
| TAMPERED WATER | TW |
| THERMOSTATIC MIXING VALVE | TMV |
| VACUUM BREAKER | VB |
| VENT | V |
| VENT THRU ROOF | VTR |
| WALL HYDRANT | WH |
| WASTE | W |

DRAFT 98% PROGRESS DRAWINGS
OCTOBER 2019

FILE: C:\Users\lgreen\Documents\GLWSP-P3-BPSF-GAMHPNE_lgreen.rvt

| NO. | DATE | APPD | DESCRIPTION |
|---|---|---|---|

Waukesha Water Utility
SERVING WAUKESHA SINCE 1886

GREELEY AND HANSEN
741 N. GRAND AVE. SUITE 308
WAUKESHA, WI 53186

GREAT WATER ALLIANCE™

CONTRACT PACKAGE 3: BOOSTER PUMPING STATION AND WATER SUPPLY CONTROL BUILDING

GENERAL NOTES, SYMBOLS AND LEGEND

APPROVED

SEAL AFFIXED
MONTH / DAY / YEAR

OCTOBER 2019

| | | | |
|---|---|---|---|
| JOB NO.: | 15310 | | |
| DESGN | NH | CHCK | BW |
| APPRV | JD | DRWN | YS |
| SCALE: | NO SCALE | | |

DRAWING NUMBER

AP1

SHEET 32 OF 184 REV 0

10/2/2019 10:05:32 AM
BAR MEASURE 1" ON FULLSIZE SHEETS

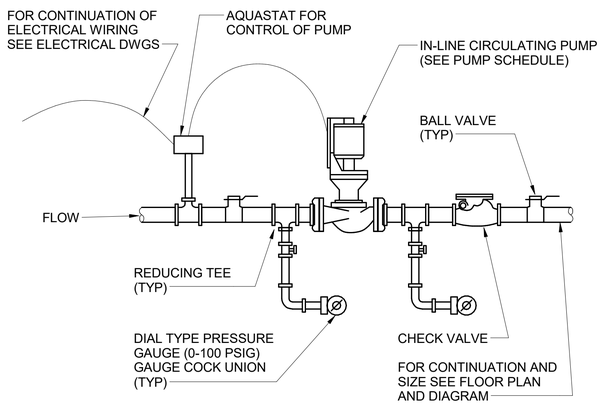


1 CIRCULATING PUMP DETAIL
NOT TO SCALE

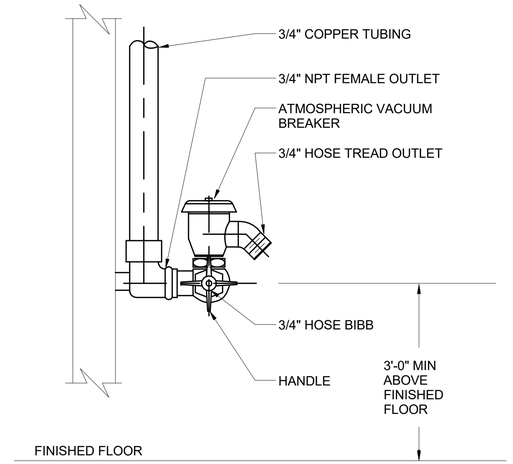


2 HOSE BIBB DETAIL
NOT TO SCALE

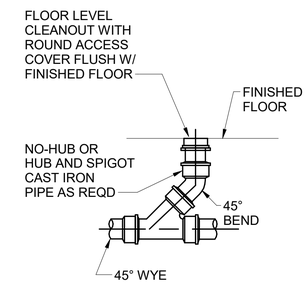


3 CLEANOUT DETAIL
NOT TO SCALE

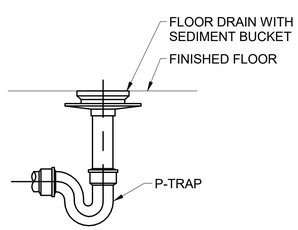


4 FLOOR DRAIN (FOR GENERAL AREAS) DETAIL
NOT TO SCALE

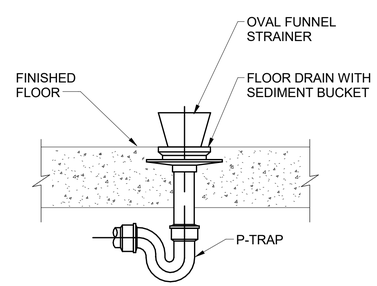


5 FLOOR DRAIN WITH FUNNEL DETAIL
NOT TO SCALE

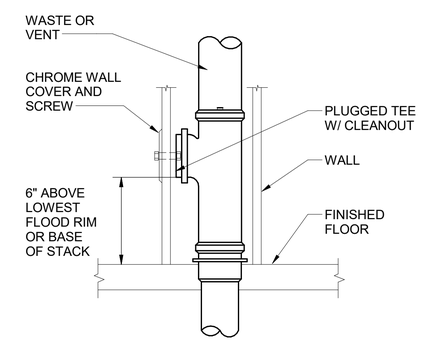


6 WALL CLEANOUT DETAIL
NOT TO SCALE

DRAFT 98% PROGRESS DRAWINGS
OCTOBER 2019

| NO. | DATE | APPD | DESCRIPTION |
|---|---|---|---|

Waukesha Water Utility
SERVING WAUKESHA SINCE 1886

GREELEY AND HANSEN
741 N. GRAND AVE. SUITE 308
WAUKESHA, WI 53186

GREAT WATER ALLIANCE™

CONTRACT PACKAGE 3: BOOSTER PUMPING STATION AND WATER SUPPLY CONTROL BUILDING

DETAILS

APPROVED

SEAL AFFIXED
MONTH / DAY / YEAR

OCTOBER 2019

| | | | |
|---|---|---|---|
| JOB NO.: | 15310 | | |
| DESGN | NH | CHCK | BW |
| APPRV | JD | DRWN | YS |
| SCALE: | NOT TO SCALE | | |

DRAWING NUMBER

AP2

SHEET 33 OF 184 REV 0

FILE: C:\Users\lgreen\Documents\GLWSP-P3-BPSF-GAMHPNE_lgreen.rvt

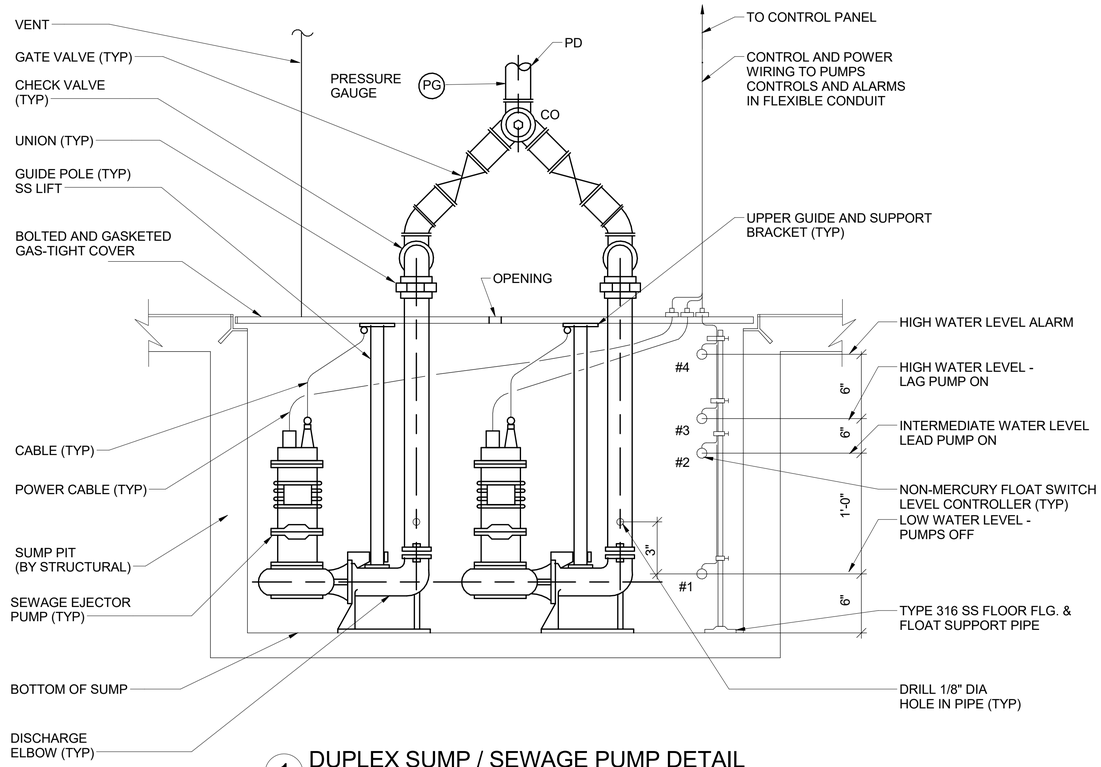


1 DUPLEX SUMP / SEWAGE PUMP DETAIL
NOT TO SCALE

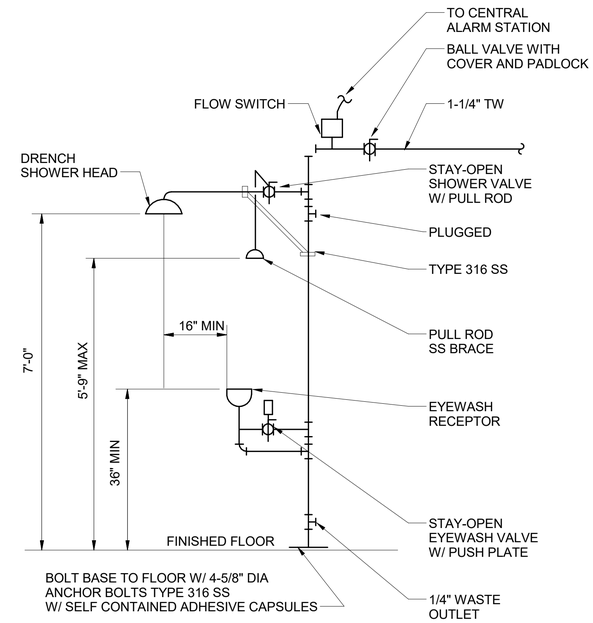


2 EMERGENCY SHOWER / EYEWASH DETAIL
NOT TO SCALE

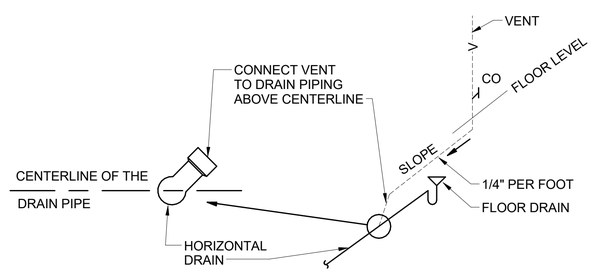


3 VENT PIPE CONNECTIONS TO HORIZONTAL DRAINS DETAIL
NOT TO SCALE

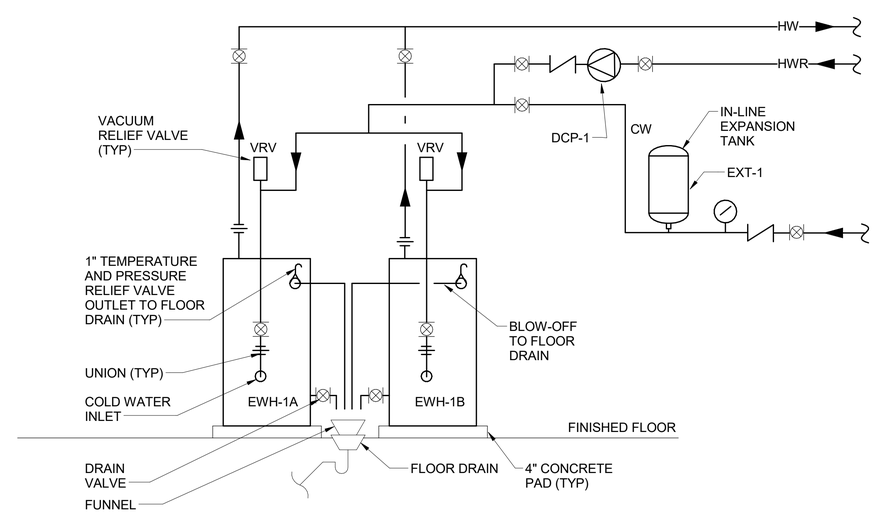


4 DUAL ELECTRIC WATER HEATER W / IN-LINE EXPANSION TANK DETAIL
NOT TO SCALE

DRAFT 98% PROGRESS DRAWINGS
OCTOBER 2019

| NO. | DATE | APPD | DESCRIPTION |
|---|---|---|---|

Waukesha Water Utility
SERVING WAUKESHA SINCE 1886

GREELEY AND HANSEN
741 N. GRAND AVE. SUITE 308
WAUKESHA, WI 53186

GREAT WATER ALLIANCE™

CONTRACT PACKAGE 3: BOOSTER PUMPING STATION AND WATER SUPPLY CONTROL BUILDING

DETAILS

APPROVED

SEAL AFFIXED
MONTH / DAY / YEAR

OCTOBER 2019

| | | | |
|---|---|---|---|
| JOB NO.: | 15310 | | |
| DESGN | NH | CHCK | BW |
| APPRV | JD | DRWN | YS |
| SCALE: | NOT TO SCALE | | |

DRAWING NUMBER

AP3

SHEET 34 OF 184 REV 0

10/2/2019 10:05:36 AM BAR MEASURE 1" ON FULLSIZE SHEETS

FILE: C:\Users\lgreen\Documents\GLWSP-P3-BPSF-GAMHPNE_lgreen.rvt

10/2/2019 10:05:39 AM
BAR MEASURE 1" ON FULLSIZE SHEETS

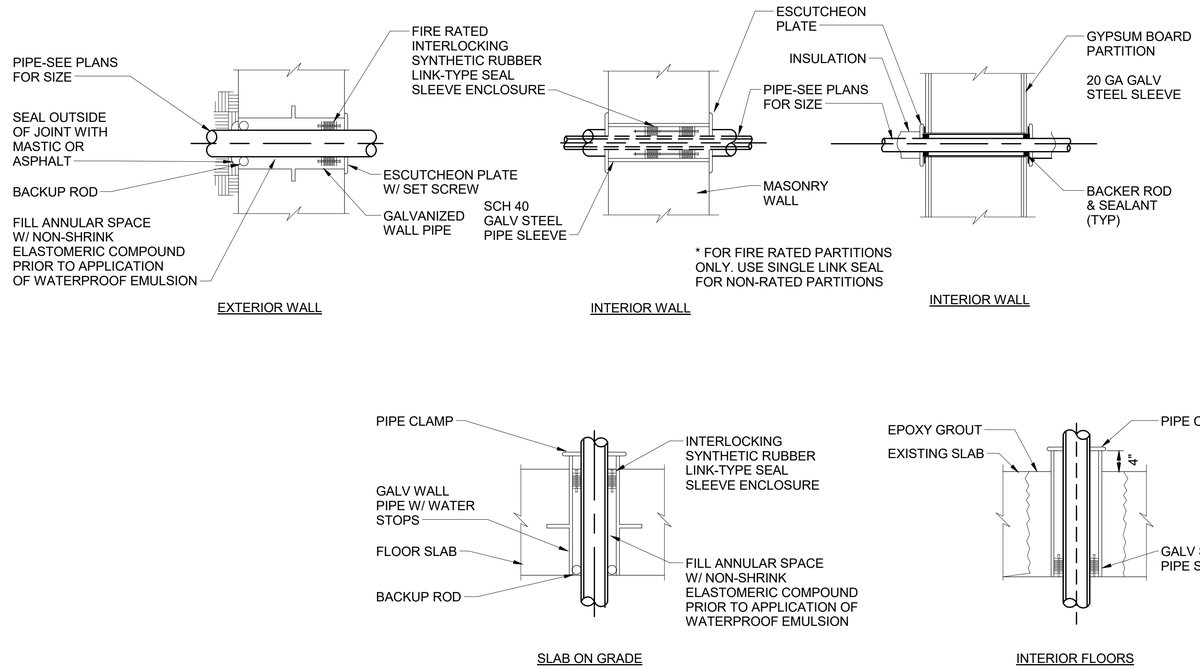


1 PIPE SLEEVES THRU WALL AND THRU FLOOR
NOT TO SCALE

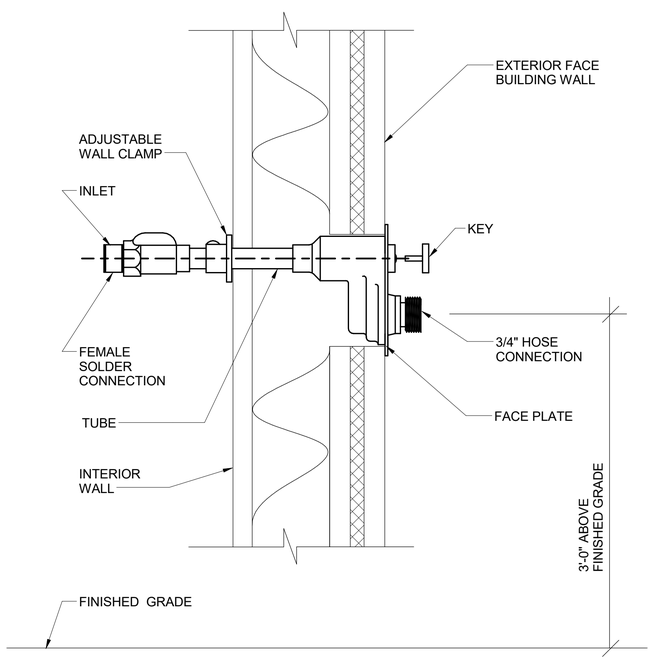


2 WALL HYDRANT DETAIL
NOT TO SCALE

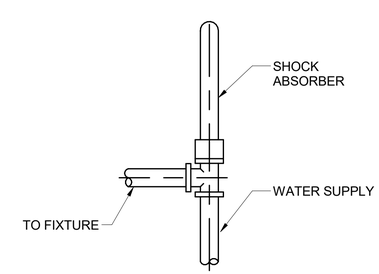


3 SHOCK ABSORBER DETAIL
NOT TO SCALE

DRAFT 98% PROGRESS DRAWINGS
OCTOBER 2019

| NO. | DATE | APPD | DESCRIPTION |
|---|---|---|---|

Waukesha Water Utility
SERVING WAUKESHA SINCE 1886

GREELEY AND HANSEN
741 N. GRAND AVE. SUITE 308
WAUKESHA, WI 53186

GREAT WATER ALLIANCE™

CONTRACT PACKAGE 3: BOOSTER PUMPING STATION AND WATER SUPPLY CONTROL BUILDING

DETAILS

APPROVED

SEAL AFFIXED
MONTH / DAY / YEAR

OCTOBER 2019

| | | | |
|---|---|---|---|
| JOB NO.: | 15310 | | |
| DESGN | NH | CHCK | BW |
| APPRV | JD | DRWN | YS |
| SCALE: | NOT TO SCALE | | |

DRAWING NUMBER

AP4

SHEET 35 OF 184 REV 0

FILE: C:\Users\lgreen\Documents\GLWSP-P3-BPSF-GAMHPNE_lgreen.rvt

## SYMBOLS AND ABBREVIATIONS

| SYMBOL | DESCRIPTION |
|---|---|
| FSR | FIRE SPRINKLER PIPING |
| | SPRINKLER BRANCH PIPING |
| F | MAIN FIRE PIPING |
| DR | SPRINKLER DRAIN PIPING |
| | GATE VALVE 4-INCH & LARGER |
| | DRAIN & TEST ASSEMBLY (NORMALLY CLOSED) |
| WFS | WATER FLOW SWITCH |
| | GATE VALVE (OS&Y) |
| | PRESSURE REDUCING VALVE |
| | CHECK VALVE |
| | PIPE DOWN OR DROP, UNLESS OTHERWISE NOTED |
| | PIPE UP OR RISE, UNLESS OTHERWISE NOTED |
| | RISE OR DROP IN RUN PIPE |
| | CAP ON END OF PIPE |
| | PLUGGED TEE |
| | ALARM CHECK VALVE |
| | VALVE IN VERTICAL (TYPE AS SPECIFIED OR NOTED) |
| | UPRIGHT SPRINKLER HEAD |
| SIA | SIAMESE PIPING |

| SYMBOL | DESCRIPTION |
|---|---|
| | REDUCED PRESSURE ZONE BACKFLOW PREVENTER |
| | SIAMESE CONNECTION (FIRE DEPARTMENT CONNECTION) |
| | CHECK VALVE W/ AUTO-BALL DRIP |
| | UPRIGHT SPRINKLER HEAD |
| | SIDEWALL SPRINKLER HEAD (STANDARD COVERAGE) |
| | SIDEWALL SPRINKLER HEAD (EXTENDED COVERAGE) |
| F 1 | RISER NUMBER DESIGNATION |
| | CORE DRILL PIPE PENETRATION AND MECH. SEAL AS REQUIRED |
| 1 | HYDRAULIC CALCULATION REFERENCE POINT DESIGNATION |
| | INSPECTORS TEST |
| | SPRINKLER RISER |
| | ELECTRIC BELL |
| | SIAMESE CONNECTION |
| T | TEST AND DRAIN VALVE |
| | SPRINKLER SYSTEM ZONE IDENTIFICATION |

| ABBREVIATION | DESCRIPTION |
|---|---|
| AFF | ABOVE FINISHED FLOOR |
| AS | AUTOMATIC SPRINKLER |
| CV | CHECK VALVE |
| CW | COLD WATER |
| CLG | CEILING |
| CONN | CONNECT |
| CONT | CONTINUATION |
| DN | DOWN |
| DR | DRAIN |
| F | FIRE |
| F.D.H.V. | FIRE DEPARTMENT HOSE VALVE |
| FS | FLOW SWITCH |
| FL | FLOOR |
| G.C. | GENERAL CONTRACTOR |
| GPM | GALLONS PER MINUTE |
| GAL | GALLONS |
| IN | INCH |

| ABBREVIATION | DESCRIPTION |
|---|---|
| MAX | MAXIMUM |
| MIN | MINIMUM |
| NC | NORMALLY CLOSED |
| NO | NORMALLY OPEN |
| NTS | NOT TO SCALE |
| OD | OUTSIDE DIAMETER |
| OS&Y | OUTSIDE SCREW & YOKE GATE VALVE |
| PRV | PRESSURE REDUCING VALVE |
| PSIG | POUNDS PER SQUARE INCH (GAUGE) |
| RPZ-BFP | REDUCED PRESSURE DETECTOR ASSEMBLY - BACKFLOW PREVENTER |
| RCH | RETARD CHAMBERSQUARE FEET |
| SQ FT. | SQUARE FEET |
| SPK | SPRINKLER |
| SIA | SIAMESE CONNECTION |
| TS | TAMPER SWITCH |
| TYP | TYPICAL |
| UON | UNLESS OTHERWISE NOTED |
| UP | UP (PENETRATES FLOOR SLAB) |
| VIV | VALVE IN VERTICAL |

## SPRINKLER GENERAL NOTES

1. THE INSTALLATION OF ALL COMPONENTS, SIZING, AND TYPE OF SYSTEM SHALL CONFORM TO WISCONSIN ADMINISTRATIVE CODE SPS 314, INTERNATIONAL BUILDING CODE (2009 EDITION) WITH WISCONSIN AMENDMENTS, NFPA 13 (2007 EDITION), NFPA 30 (2003 EDITION), AND NFPA 231 (1990 EDITION).
2. PROVIDE MATERIALS APPROVED BY NFPA 13.
3. PROVIDE DIRECT CONNECTION OF SPRINKLERS TO THE PUBLIC WATER SYSTEM PER NFPA 13.
4. PROTECT SPRINKLERS AGAINST FREEZING AND DAMAGE AS PER NFPA 13.
5. PROVIDE INSPECTION AND TESTS OF SPRINKLER SYSTEM PER NFPA 13.
6. PROVIDE WATER SUPPLY TEST PIPES AND GAUGES AS SPECIFIED IN NFPA 13.
7. PROVIDE STOCK OF EXTRA SPRINKLERS PER NFPA 13.
8. PROVIDE SPRINKLER ALARM IN ACCORDANCE WITH NFPA 13.
9. PROVIDE SPACING, LOCATION CLEARANCES AND POSITION OF SPRINKLERS IN ACCORDANCE WITH NFPA 13.
10. ALL PIPES PASSING THROUGH WALLS SHALL COMPLY WITH NFPA 13.
11. AUTOMATIC INTERLOCK CUTOFF SWITCH FOR VENTILATION SHALL CONFORM WITH REQUIREMENTS OF THE WISCONSIN ADMINISTRATIVE CODE.
12. IDENTIFY ALL VALVES AS REQUIRED BY NFPA 13.
13. PROVIDE VALVES AT CONNECTIONS TO WATER SUPPLY MAINS AND AT SPRINKLER MAINS WITH APPROVED OS&Y OR APPROVED BUTTERFLY INDICATOR TYPE VALVE.
14. PROVIDE AND TEST DRAIN VALVES FOR SPRINKLER SYSTEM AS REQUIRED PER NFPA 13.
15. HANGERS TO BE OF APPROVED TYPE FOR USE ON PIPING BEING SUPPORTED. SPRINKLER PIPING TO BE SUPPORTED BY ROUND WROUGHT IRON U-TYPE OR APPROVED ADJUSTABLE HANGERS.
16. PROVIDE 18" MINIMUM CLEARANCE TO BELOW FROM SPRINKLER DEFLECTOR AS PER NFPA 13.
17. PROVIDE 1" TO 10" MINIMUM CLEARANCE OF SPRINKLER DEFLECTOR TO CEILING AS PER NFPA 13.
18. PROTECTION AREA OF SPRINKLER HEAD: ORDINARY HAZARD - 130 SQ FT.
19. ALL PIPING SHALL BE SUBJECTED TO A HYDROSTATIC TEST PRESSURE OF AT LEAST 225 PSI IN THE SYSTEM AND PROVEN WATERTIGHT OVER A PERIOD OF 24 HOURS.
20. ALL SUSPENDED PIPING AND ACCESSORIES SHALL BE KEPT AS TIGHT TO THE BUILDING STRUCTURE AS POSSIBLE TO PROVIDE MAXIMUM CLEARANCE BELOW IT AND TO MINIMIZE ANY PIPE SWINGS AND INSTABILITY.
21. COORDINATE AND PROVIDE ALL SLEEVES REQUIRED FOR WALL AND SLAB PENETRATIONS.
22. SEISMIC REQUIREMENTS: ALL PIPING AND EQUIPMENT SHALL BE PROVIDED WITH SEISMIC RESTRAINTS IN ACCORDANCE WITH THE SEISMIC PROVISIONS OF THE INTERNATIONAL BUILDING CODE (IBC) 2015, CHAPTER 16 AND ASCE 7. REFER TO THE GENERAL STRUCTURAL NOTES ON THE STRUCTURAL DRAWING AS2 FOR SPECIFIC SEISMIC DESIGN CRITERIA.

DRAFT 98% PROGRESS DRAWINGS
OCTOBER 2019

| NO. | DATE | APPD | DESCRIPTION |
|---|---|---|---|

Waukesha Water Utility
SERVING WAUKESHA SINCE 1886

GREELEY AND HANSEN
741 N. GRAND AVE. SUITE 308
WAUKESHA, WI 53186

GREAT WATER ALLIANCE™

CONTRACT PACKAGE 3: BOOSTER PUMPING STATION AND WATER SUPPLY CONTROL BUILDING

GENERAL NOTES, SYMBOLS AND LEGEND

APPROVED

SEAL AFFIXED
MONTH / DAY / YEAR

OCTOBER 2019

| | | | |
|---|---|---|---|
| JOB NO.: | 15310 | | |
| DESGN | NH | CHCK | BW |
| APPRV | JD | DRWN | YS |
| SCALE: | NO SCALE | | |

DRAWING NUMBER

AF1

SHEET 36 OF 184 REV 0

10/2/2019 10:04:49 AM
BAR MEASURE 1" ON FULLSIZE SHEETS
FILE: C:\Users\lgreen\Documents\GLWSP-P3-BPSF-GAMHPNE_lgreen.rvt

10/2/2019 10:04:27 AM

BAR MEASURE 1" ON FULLSIZE SHEETS

## ONE LINE AND SCHEMATIC DIAGRAM SYMBOLS

| SYMBOL | DESCRIPTION |
|---|---|
| | INCOMING FEEDER |
| | OUTGOING FEEDER |
| | CONDUCTORS CONNECTED |
| | GROUNDING CONNECTION |
| | LIGHTNING OR SURGE ARRESTOR |
| | RECTIFIER OR DIODE |
| | SURGE CAPACITOR |
| | POWER TRANSFORMER |
| CPT | CONTROL POWER TRANSFORMER |
| 2 CT | CURRENT TRANSFORMER (NUMBER DENOTES QUANTITY REQUIRED) |
| CT | CURRENT TRANSFORMER 3 PHASE WINDOW TYPE |
| 2 PT | POTENTIAL TRANSFORMER (NUMBER DENOTES QUANTITY REQUIRED) |
| 52 | MEDIUM VOLTAGE DRAWOUT TYPE CIRCUIT BREAKER |
| | DISCONNECTING OR DRAWOUT DEVICE |
| 100A | LOW VOLTAGE AIR CIRCUIT BREAKER WITH 100A TRIP |
| 225AF/125AT | LOW VOLTAGE AIR CIRCUIT BREAKER 225A FRAME AND 125A TRIP |
| 225AF/150AT | LOW VOLTAGE AIR CIRCUIT BREAKER WITH COORDINATED CURRENT LIMITING FUSES - 225A FRAME AND 150A TRIP |
| I O I | KEY INTERLOCK - DASHED LINE WITH ARROWS INDICATES MOVEMENT OF KEY DURING INTERLOCK PROCEDURE |
| 5 | MOTOR - THREE PHASE (NUMBER DENOTES HORSEPOWER) |
| G | GENERATOR |

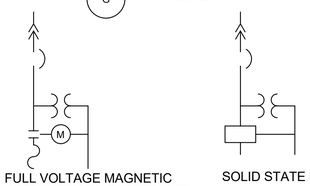


FULL VOLTAGE MAGNETIC COMBINATION STARTER WITH MOTOR CIRCUIT PROTECTOR, CONTROL TRANSFORMER AND OVERLOAD RELAYS (M - OPERATING COIL)



SOLID STATE REDUCED VOLTAGE COMBINATION STARTER WITH MOTOR CIRCUIT PROTECTION AND CONTROL TRANSFORMER

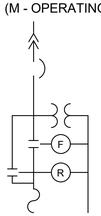


FULL VOLTAGE MAGNETIC COMBINATION REVERSING STARTER WITH MOTOR CIRCUIT PROTECTOR, CONTROL TRANSFOMER AND OVERLOAD RELAYS (F - FORWARD, R - REVERSE)

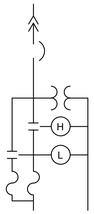


FULL VOLTAGE MAGNETIC COMBINATION TWO SPEED STARTER WITH MOTOR CIRCUIT PROTECTO, CONTROL TRANSFORMER AND OVERLOAD RELAYS (H - HIGH, L - LOW, F - FAST, S - SLOW)

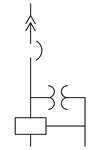

SOLID STATE REDUCED VOLTAGE COMBINATION STARTER WITH MOTOR CIRCUIT PROTECTION AND CONTROL TRANSFORMER

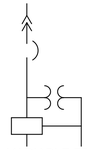

VARIABLE FREQUENCY DRIVE WITH CIRCUIT BREAKER PROTECTION AND CONTROL TRANSFORMER

| SYMBOL | DESCRIPTION |
|---|---|
| M | OPERATING COIL (C-CONTACTOR, F-FAST, F-FORWARD, H-HIGH, L-LOW, M-MOTOR STARTER, R-REVERSE, S-SLOW) |
| AR XX | RELAY COIL (AR-AUXILIARY RELAY, CR-CONTROL RELAY, LOR-LOCKOUT RELAY, TR-TIME DELAY RELAY WHERE `XX' DENOTES RELAY FUNCTION OR NUMBER) |
| | NORMALLY OPEN CONTACT |
| | NORMALLY CLOSED CONTACT |
| OL | OVERLOAD RELAY CONTACT |
| X-X-O | NORMALLY OPEN (SHOWN) OR NORMALLY CLOSED RESET TIMER CONTACT (X-X-O - DENOTES TIMER SEQUENCE FOR RESET-TIMING-TIMED OUT PERIODS. X INDICATES CONTACT CLOSED) |
| TC | NORMALLY OPEN CONTACT WITH TIME DELAY CLOSING (ON DELAY) |
| TC | NORMALLY CLOSED CONTACT WITH TIME DELAY CLOSING (OFF DELAY) |
| TO | NORMALLY CLOSED CONTACT WITH TIME DELAY OPENING (ON DELAY) |
| TO | NORMALLY OPEN CONTACT WITH TIME DELAY OPENING (OFF DELAY) |
| LS | LIMIT SWITCH |
| F | FLOAT SWITCH |
| P OR V | PRESSURE OR VACUUM SWITCH |
| FL | FLOW SWITCH |
| T | TEMPERATURE SWITCH |
| TQ | TORQUE SWITCH |
| U L / L U | LATCHING RELAY WITH CLEARING CONTACTS |
| | SELECTOR SWITCH |
| | NORMALLY OPEN PUSHBUTTON |
| | NORMALLY CLOSED PUSHBUTTON |
| | PUSHBUTTON STATION (ONE, TWO OR THREE UNIT) |
| R | INDICATING LIGHT (A-AMBER, B-BLUE, G-GREEN, R-RED, W-WHITE) |
| | THERMAL OVERLOAD ELEMENT (OL) |
| | ON-OFF SWITCH |
| R | RESISTOR |
| | FUSE |
| + - | BATTERY |
| | HEATING ELEMENT |
| PULL PUSH ON OFF | MAINTAINED CONTACT PUSHBUTTON WITH MUSHROOM HEAD OPERATOR |
| HAND OFF AUTO | SELECTOR SWITCH X INDICATES CONTACT CLOSED IN CORRESPONDING SWITCH POSITION |
| CS | CURRENT SENSOR TRIP SWITCH |
| | CONTROL STATION (SEE SCHEMATIC DIAGRAMS FOR ASSOCIATED DEVICES) |

| SYMBOL | DESCRIPTION |
|---|---|
| 27 | PROTECTIVE RELAYS:<br>25 - SYNCHRONIZING CHECK<br>27 - UNDERVOLTAGE<br>32 - REVERSE POWER<br>43 - SELECTOR SWITCH<br>47 - PHASE SEQUENCE<br>49 - THERMAL<br>50 - INSTANTANEOUS OVERCURRENT<br>51 - AC TIME OVERCURRENT<br>52 - AC CIRCUIT BREAKER<br>59 - OVERVOLTAGE<br>60 - VOLTAGE OR CURRENT BALANCE<br>62 - TIME DELAY<br>63 - SUDDEN PRESSURE/RAPID PRESSURE RISE<br>64 - GROUND<br>67 - DIRECTIONAL OVERCURRENT<br>86 - LOCKOUT<br>87 - DIFFERENTIAL CURRENT<br>DBX - DEAD BUS AUXILIARY<br>G - DEVICE IN GROUND CIRCUIT<br>GSR - GROUND SENSING<br>IR - INTERPOSING<br>LOR - LOCKOUT<br>N - DEVICE IN NEUTRAL CIRCUIT<br>PSR - PHASE SENSING<br>X - AUXILIARY |
| DPS | CONTROL DEVICES: (SEE NOTE 2)<br>DP - DIFFERENTIAL PRESSURE SWITCH<br>F - FLOAT SWITCH<br>FL - FLOW SWITCH<br>LD - LEAK DETECTOR<br>LE - LEVEL SENSOR<br>LIT - LEVEL TRANSMITTER<br>LL - LEVEL SWITCH<br>LS - LIMIT SWITCH<br>P - PRESSURE SWITCH<br>RDS - REVERSING DRUM SWITCH<br>ST - SHUNT TRIP<br>S - SOLENOID VALVE<br>T - THERMOSTAT<br>TQ - TORQUE SWITCH<br>T - TEMPERATURE SWITCH<br>VIB - VIBRATION SWITCH<br>V - VACUUM SWITCH<br>XS - TAMPER SWITCH |
| A | METER, INSTRUMENT OR INSTRUMENT SWITCHES:<br>A - AMMETER<br>AS - AMMETER SWITCH<br>AT - CURRENT TRANSDUCER<br>CS - BREAKER CONTROL SWITCH<br>DT - DUTY TRANSFER SWITCH<br>MMS - MICROPROCESSOR METERING SYSTEM<br>MPR - MICROPROCESSOR PROTECTION RELAY<br>MSH - MOTOR SPACE HEATER<br>PF - POWER FACTOR METER<br>POT - POTENTIOMETER<br>SI - SPEED INDICATOR<br>SS - SELECTOR SWITCH<br>TM - ELAPSED TIME METER<br>TMR - TIMER<br>V - VOLTMETER<br>VAR - VARMETER<br>VART - VARS TRANSDUCER<br>VS - VOLTMETER SWITCH<br>VT - VOLTAGE TRANSDUCER<br>W - WATTMETER<br>WH - WATTHOUR METER<br>WHD - WATTHOUR DEMAND METER<br>WT - WATTS TRANSDUCER<br>ZT - POSITION TRANSMITTER |

### ABBREVIATIONS

AFF - ABOVE FINISHED FLOOR
ATS - AUTOMATIC TRANSFER SWITCH
BKR - BREAKER
BOD - BOTTOM OF DUCT
CKT - CIRCUIT
DP - DISTRIBUTION PANELBOARD
DTC - DATA TERMINAL CABINET
EO - ELECTRICALLY OPERATED
EMH - ELECTRIC MANHOLE
GND - GROUND
GRS - GALVANIZED RIGID STEEL
JB - JUNCTION BOX
LCP - LIGHTING CONTROL PANEL
LP - LIGHTING PANELBOARD
LT - LIGHTING TRANSFORMER
MCC - MOTOR CONTROL CENTER
MH - MOUNTING HEIGHT
MTS - MANUAL TRANSFER SWITCH
PB - PULL BOX
PLC - PROGRAMMABLE LOGIC CONTROLLER
PVC - POLYVINYL CHLORIDE
RTU - REMOTE TERMINAL UNIT
SP - SPACE
SSRV - SOLID STATE REDUCED VOLTAGE
TB - TERMINAL BOX
TCP - TEMPERATURE CONTROL PANEL
TTC - TELEPHONE TERMINAL CABINET
TWSH - TWISTED SHIELDED PAIR
WP - WEATHERPROOF
XP - EXPLOSION-PROOF

## POWER, LIGHTING AND MISCELLANEOUS PLAN SYMBOLS

| SYMBOL | DESCRIPTION |
|---|---|
| | LIGHT LINE DENOTES EXISTING WORK |
| | HEAVY LINE DENOTES NEW WORK |
| | WORK TO BE DEMOLISHED |
| | EXPOSED CONDUIT RUN |
| | CONCEALED CONDUIT RUN ABOVE CEILING OR IN WALLS |
| | CONCEALED CONDUIT RUN IN OR BELOW FLOOR SLAB |
| E | UNDERGROUND CONDUIT (CONCRETE ENCASED) |
| DB | UNDERGROUND CONDUIT (DIRECT BURIED) |
| C | UNDERGROUND CABLE (DIRECT BURIED) |
| | CONDUIT CAPPED |
| | CONDUIT UP |
| | CONDUIT DOWN |
| | CONDUIT WITH HOT, NEUTRAL AND GROUND WIRES (LONG LINE DENOTES NEUTRAL; LONG LINE WITH DOT DENOTES GROUND) |
| LP6 1,3,5 | HOME RUN TO LIGHTING PANELBOARD (LP6 INDICATES PANELBOARD AND 1,3,5 INDICATES CIRCUITS 1, 3 AND 5) |
| | FLEXIBLE CONDUIT OR CABLE |
| | GROUNDING CONDUCTOR |
| | NEUTRAL CONDUCTOR |
| | EQUIPMENT ENCLOSURE AS INDICATED ON PLAN |
| | LIGHTING PANELBOARD 208Y/120V OR 120/240V |
| | LIGHTING PANELBOARD 480Y/277V |
| T | DRY TYPE TRANSFORMER |
| | JUNCTION BOX, PULL BOX OR TERMINAL BOX |
| | MANUALLY OPERATED DISCONNECTING CIRCUIT BREAKER OR SWITCH (SEE SPECIFICATIONS) |
| RS | MANUAL REVERSING DRUM SWITCH, FORWARD-OFF-REVERS, MAINTAINED CONTACTS |
| | FULL VOLTAGE MAGNETIC STARTER OR CONTACTOR |
| | COMBINATION CIRCUIT BREAKER STARTER |
| | MOTOR - THREE PHASE |
| | MOTOR - SINGLE PHASE |
| M | MOTOR OPERATED VALVE OR SLUICE GATE WITH INTEGRAL CONTROLLER AND CONTROL STATION |
| | CONTROL STATION (SEE SCHEMATIC DIAGRAMS FOR ASSOCIATED DEVICES |
| X | CONTROL STATION AND FIELD CONTROL DEVICES (SEE ONE LINE DIAGRAMS AND SCHEMATICS FOR DETAILS) |
| | GROUND ROD |
| | GROUND ROD WITH ACCESS BOX |
| | LIGHTNING ROD |
| M | METER SOCKET |
| WH | WATER HEATER |
| | UNIT HEATER |
| A 1A | WALL OR CEILING MOUNTED LED LIGHTING FIXTURE<br>UPPER LETTER DENOTES FIXTURE TYPE<br>NUMBER DENOTES CIRCUIT NUMBER AND<br>LETTER DENOTES SWITCH CONTROLLING FIXTURE |
| | EMERGENCY LIGHTING FIXTURE |

| SYMBOL | DESCRIPTION |
|---|---|
| | WALL OR CEILING MOUNTED EXIT OR DIRECTIONAL SIGN (SHADED SIDE DENOTES ILLUMINATED FACE ARROW INDICATES DIRECTION) |
| | POLE MOUNTED LIGHTING FIXTURE |
| | FLOODLIGHT |
| | FLUORESCENT STRIP LIGHTING FIXTURE |
| | LED LIGHTING FIXTURE |
| | EMERGENCY LED LIGHTING FIXTURE |
| T | REMOTE TEST PUSHBUTTON AND "ON" INDICATING LIGHT FOR BATTERY EQUIPPED LIGHTING FIXTURES |
| | EMERGENCY BATTERY PACK WITH TWO LED LIGHTING HEADS |
| | EMERGENCY BATTERY PACK - REMOTE HEAD |
| PC | PHOTOELECTRIC CELL |
| | SINGLE RECEPTACLE 2 POLE, 3 WIRE, 120 VOLT, 20A, OR AS NOTED |
| | DUPLEX RECEPTACLE 2 POLE, 3 WIRE, 120 VOLT, 20A, OR AS NOTED |
| | DUPLEX RECEPTACLE 2 POLE, 3 WIRE, 208 VOLT, 20A, OR AS NOTED |
| | FLOOR OUTLET BOX WITH DUPLEX RECEPTACLE 2 POLE, 3 WIRE, 120 VOLT, 20A, OR AS NOTED |
| | SINGLE RECEPTACLE - SINGLE PHASE (RATING AS NOTED) |
| | SINGLE RECEPTACLE - THREE PHASE (RATING AS NOTED) |
| C | CLOCK WITH RECEPTACLE |
| TYPE | SINGLE POLE SWITCH UNLESS NOTED OTHERWISE<br>2P - TWO POLE<br>3W - THREE WAY<br>4W - FOUR WAY<br>D - DOOR SWITCH<br>M - MOMENTARY CONTACT<br>MS - MOTOR STARTING<br>PL - WITH PILOT LIGHT<br>T - THERMAL OVERLOAD<br>TS - TIME SWITCH |
| | TELEPHONE OUTLET |
| | TELEPHONE FLOOR OUTLET |
| | DATA OUTLET |
| | DATA FLOOR OUTLET |
| S | SPEAKER |
| S | BI-DIRECTIONAL SPEAKER |
| S | INTERCOMMUNICATION SPEAKER |
| V | INTERCOMMUNICATION SPEAKER VOLUME CONTROL |
| TV | CLOSED CIRCUIT TELEVISION CAMERA |
| | ALARM HORN |
| | ALARM BEACON |
| FACP | FIRE ALARM CONTROL PANEL |
| FAAP | FIRE ALARM ANNUNCIATOR PANEL |
| F | MANUAL PULL STATION |
| S | SMOKE DETECTOR |
| H | HEAT DETECTOR |
| S | SMOKE DETECTOR |
| | PHOTOELECTRIC BEAM SMOKE DETECTOR TRANSMITTER |
| | PHOTOELECTRIC BEAM SMOKE DETECTOR RECEIVER |
| A | AUDIBLE/VISUAL INDICATING DEVICE WITH HORN |
| A | AUDIBLE/VISUAL INDICATING DEVICE WITH BELL |
| A | VISUAL INDICATING DEVICE |
| FS | SPRINKLER SYSTEM FLOW SWITCH |
| TS | SPRINKLER SYSTEM TAMPER SWITCH |
| M | MAGNETIC DOOR SWITCH |
| CR | CREDENTIAL READER (CARD OR FOB) |

### NOTES:

1. THIS IS A GENERAL LEGEND PROVIDED TO FACILITATE USE OF THE ELECTRICAL DRAWINGS. ALL SYMBOLS MAY NOT BE USED IN THIS SET OF ELECTRICAL DRAWINGS. REFER TO THE DRAWINGS AND SPECIFICATIONS FOR ITEMS REQUIRED.
2. THIS IS A PARTIAL LISTING OF CONTROL DEVICE DESIGNATIONS. SEE DRAWING AN1.

DRAFT 98% PROGRESS DRAWINGS
OCTOBER 2019

| NO. | DATE | APPD | DESCRIPTION |
|---|---|---|---|

Waukesha Water Utility
SERVING WAUKESHA SINCE 1886

GREELEY AND HANSEN
741 N. GRAND AVE. SUITE 308
WAUKESHA, WI 53186

GREAT WATER ALLIANCE™

CONTRACT PACKAGE 3: BOOSTER PUMPING STATION AND WATER SUPPLY CONTROL BUILDING

SYMBOL LEGEND

APPROVED

SEAL AFFIXED
MONTH / DAY / YEAR

OCTOBER 2019

| | | | |
|---|---|---|---|
| JOB NO.: | 15310 | | |
| DESGN | TMK | CHCK | NV |
| APPRV | NV | DRWN | LAN |
| SCALE: | NO SCALE | | |

DRAWING NUMBER

AE1

SHEET 37 OF 184 REV 0

FILE: C:\Users\lgreen\Documents\GLWSP-P3-BPSF-GAMHPNE_lgreen.rvt

10/2/2019 10:04:31 AM

BAR MEASURE 1" ON FULLSIZE SHEETS

## CABLE AND CONDUIT SCHEDULE SHEET 1

| CONDUIT NUMBER | CONDUIT SIZE | CONDUCTOR QUANTITY AND SIZE | FROM | TO | REMARKS |
|---|---|---|---|---|---|
| | | | | | |
| | | | | | |
| 1C2 | 1 1/2" | 42#14, 1#12G | MCC | TCP | |
| 1C3 | 1 1/4" | 24#14, 1#12G | MCC | PLC | |
| 1C4 | 1 1/2" | 36#14, 1#12G | MCC | TCP | |
| 1C5 | 1 1/4" | 24#14, 1#12G | MCC | PLC | |
| 1CM1 | 3/4" | 4#12, 1#12G | MCC | CHEMICAL 1 TRANSFER PUMP 1 PUSHBUTTON STATION | |
| 1CM2 | 3/4" | 4#12, 1#12G | MCC | CHEMICAL 2 TRANSFER PUMP 1 PUSHBUTTON STATION | |
| 1CM3 | 3/4" | 4#12, 1#12G | MCC | CHEMICAL 3 TRANSFER PUMP 1 PUSHBOTTON STATION | |
| 1CM14 | 3/4" | 4#12, 1#12G | MCC | RECIRCULATION PUMP 1 PUSHBUTTON STATION | |
| 1CM17 | 3/4" | 4#12, 1#12G | MCC | RECIRCULATION PUMP 3 PUSHBUTTON STATION | |
| 1CM28 | 3/4" | 4#12, 1#12G | MCC | RECIRCULATION PUMP 2 PUSHBUTTON STATION | |
| 1CM47 | 3/4" | 4#12, 1#12G | MCC | CHEMICAL 1 TRANSFER PUMP 2 PUSHBUTTON STATION | |
| 1CM48 | 3/4" | 4#12, 1#12G | MCC | CHEMICAL 2 TRANSFER PUMP 2 PUSHBUTTON STATION | |
| 1CM49 | 3/4" | 4#12, 1#12G | MCC | CHEMICAL 3 TRANSFER PUMP 2 PUSHBUTTON STATION | |
| 1CM50 | 3/4" | | CEILING FAN CF-1 VFD | CEILING FAN CF-1 PUSHBUTTON STATION | VENDOR CABLE |
| 1DM1 | 1 1/2" | 3#1, 1#6G | MTS | XFMR T-1-1 | |
| 1L1 | 1 1/2" | 4#1, 1#6G | LIGHTING PANELBOARD L1 | LIGHTING PANELBOARD L2 | |
| 1L2 | 3/4" | 3#12, 1#12G | LIGHTING PANELBOARD L1 | EMERGENCY LIGHTING INVERTER | |
| 1M4 | 3/4" | 3#10, 1#10G | MCC | CLEAR WATER PUMPS LCP DISCONNECT | |
| 1M4A | 3/4" | 3#10, 1#10G | CLEAR WATER PUMPS LCP DISCONNECT | CLEAR WATER PUMPS LCP | |
| 1M5 | 3/4" | 3#10, 1#10G | MCC | EXHAUST AIR FAN EAF-5 DISCONNECT | |
| 1M5A | 3/4" | 3#10, 1#10G | EXHAUST AIR FAN EAF-5 DISCONNECT | EXHAUST AIR FAN WAF-5 | |
| 1M6 | 3/4" | 3#10, 1#10G | MCC | EXHAUST AIR FAN EAF-8 DISCONNECT | |
| 1M6A | 3/4" | 3#10, 1#10G | EXHAUST AIR FAN EAF-8 DISCONNECT | EXHAUST AIR FAN EAF-8 | |
| 1M7 | 3/4" | 3#12, 1#12G | MCC | EXHAUST AIR FAN EAF-9 DISCONNECT | |
| 1M7A | 3/4" | 3#12, 1#12G | EXHAUST AIR FAN EAF-9 DISCONNECT | EXHAUST AIR FAN EAF-9 | |
| 1M8 | 1" | 3#8, 1#10G | MCC | AIR COOLED CONDENSING UNIT ACCU-1 DISCONNECT | |
| 1M8A | 1" | 3#8, 1#10G | AIR COOLED CONDENSING UNIT ACCU-1 DISCONNECT | AIR COOLED CONDENSING UNIT ACCU-1 | |
| 1M9 | 3/4" | 3#12, 1#12G | MCC | MAKEUP AIR UNIT MAU-1 DISCONNECT | |
| 1M9A | 3/4" | 3#12, 1#12G | MAKEUP AIR UNIT MAU-1 DISCONNECT | MAKEUP AIR UNIT MAU-1 | |
| 1M10 | 3/4" | 3#12, 1#12G | MCC | EXHAUST AIR FAN EAF-12 DISCONNECT | |
| 1M10A | 3/4" | 3#12, 1#12G | EXHAUST AIR FAN EAF-12 DISCONNECT | EXHAUST AIR FAN AEF-12 | |
| 1M11 | 1" | 3#6, 1#10G | MCC | UPS | |
| 1M12 | 3/4" | 3#8, 1#10G | MCC | AIR COOLED CONDENSING UNIT ACCU-3 DISCONNECT | |
| 1M12A | 3/4" | 3#8, 1#10G | AIR COOLED CONDENSING UNIT ACCU-3 DISCONNECT | AIR COOLED CONDENSING UNIT ACCU-3 | |
| 1M13 | 3/4" | 3#10, 1#10G | MCC | AIR CONDITIONING UNIT ACU-1 DISCONNECT | |
| 1M13A | 3/4" | 3#10, 1#10G | AIR CONDITIONING UNIT ACU-1 DISCONNECT | AIR CONDITIONING UNIT ACU-1 | |
| 1M14 | 3/4" | 3#10, 1#10G | MCC | RECIRCULATION PUMP 1 DISCONNECT | |
| 1M14A | 3/4" | 3#10, 1#10G | RECIRCULATION PUMP 1 DISCONNECT | RECIRCULATION PUMP 1 | |
| 1M15 | 3/4" | 3#12, 1#12G | MCC | EXHAUST AIR FAN EAF-6 DISCONNECT | |
| 1M15A | 3/4" | 3#12, 1#12G | EXHAUST AIR FAN EAF-6 DISCONNECT | EXHAUST AIR FAN EAF-6 | |
| 1M16 | 3/4" | 3#12, 1#12G | MCC | EXHAUST AIR FAN EAF-2 DISCONNECT | |
| 1M16A | 3/4" | 3#12, 1#12G | EXHAUST AIR FAN EAF-2 DISCONNECT | EXHAUST AIR FAN EAF-2 | |
| 1M17 | 3/4" | 3#10, 1#10G | MCC | RECIRCULATION PUMP 3 DISCONNECT | |
| 1M17A | 3/4" | 3#10, 1#10G | RECIRCULATION PUMP 3 DISCONNECT | RECIRCULATION PUMP 3 | |
| 1M18 | 3/4" | 3#12, 1#12G | MCC | EUH-1 DISCONNECT | |
| 1M18A | 3/4" | 3#12, 1#12G | EUH-1 DISCONNECT | EUH-1 | |

## CABLE AND CONDUIT SCHEDULE SHEET 1

| CONDUIT NUMBER | CONDUIT SIZE | CONDUCTOR QUANTITY AND SIZE | FROM | TO | REMARKS |
|---|---|---|---|---|---|
| 1M19 | 3/4" | 3#12, 1#12G | MCC | EUH-3 DISCONNECT | |
| 1M19A | 3/4" | 3#12, 1#12G | EUH-3 DISCONNECT | EUH-3 | |
| 1M20 | 3/4" | 3#12, 1#12G | MCC | EUH-5 DISCONNECT | |
| 1M20A | 3/4" | 3#12, 1#12G | EUH-5 DISCONNECT | EUH-5 | |
| 1M21 | 3/4" | 3#12, 1#12G | MCC | EUH-7 DISCONNECT | |
| 1M21A | 3/4" | 3#12, 1#12G | EUH-7 DISCONNECT | EUH-7 | |
| 1M22 | 3/4" | 3#12, 1#12G | MCC | EUH-9 DISCONNECT | |
| 1M22A | 3/4" | 3#12, 1#12G | EUH-9 DISCONNECT | EUH-9 | |
| 1M23 | 3/4" | 3#12, 1#12G | MCC | EUH-11 DISCONNECT | |
| 1M23A | 3/4" | 3#12, 1#12G | EUH-11 DISCONNECT | EUH-11 | |
| 1M24 | 3/4" | 3#12, 1#12G | MCC | EUH-13 DISCONNECT | |
| 1M24A | 3/4" | 3#12, 1#12G | EUH-13 DISCONNECT | EUH-13 | |
| 1M25 | 3/4" | 3#12, 1#12G | MCC | EUH-15 DISCONNECT | |
| 1M25A | 3/4" | 3#12, 1#12G | EUH-15 DISCONNECT | EUH-15 | |
| 1M26 | 3/4" | 3#12, 1#12G | MCC | EWH-1A DISCONNECT | |
| 1M26A | 3/4" | 3#12, 1#12G | EWH-1A DISCONNECT | EWH-1A | |
| 1M27 | 1 1/2" | 3#1, 1#6G | MCC | MTS | |
| 1M27A | 1 1/2" | 3#1, 1#6G | MCC | MTS | |
| 1M28 | 3/4" | 3#12, 1#12G | MCC | RECIRCULATION PUMP 2 DISCONNECT | |
| 1M28A | 3/4" | 3#12, 1#12G | RECIRCULATION PUMP 2 DISCONNECT | RECIRCULATION PUMP 2 | |
| 1M29 | 3/4" | 3#12, 1#12G | MCC | EXHAUST AIR FAN EAF-1 DISCONNECT | |
| 1M29A | 3/4" | 3#12, 1#12G | EXHAUST AIR FAN EAF-1 DISCONNECT | EXHAUST AIR FAN EAF-1 | |
| 1M30 | 3/4" | 3#12, 1#12G | MCC | EXHAUST AIR FAN EAF-4 DISCONNECT | |
| 1M30A | 3/4" | 3#12, 1#12G | EXHAUST AIR FAN EAF-4 DISCONNECT | EXHAUST AIR FAN EAF-4 | |
| 1M31 | 3/4" | 3#8, 1#10G | MCC | AIR COOLED CONDENSING UNIT ACCU-2 DISCONNECT | |
| 1M31A | 3/4" | 3#8, 1#10G | AIR COOLED CONDENSING UNIT ACCU-2 DISCONNECT | AIR COOLED CONDENSING UNIT ACCU-2 | |
| 1M32 | 3/4" | 3#12, 1#12G | MCC | AIR COOLED CONDITIONING UNIT ACU-2 DISCONNECT | |
| 1M32A | 3/4" | 3#12, 1#12G | AIR CONDITIONING UNIT ACU-2 DISCONNECT | AIR CONDITIONING UNIT ACU-2 | |
| 1M33 | 3/4" | 3#12, 1#12G | MCC | RETURN AIR FAN RAF-1 DISCONNECT | |
| 1M33A | 3/4" | 3#12, 1#12G | RETURN AIR FAN RAF-1 DISCONNECT | RETURN AIR FAN RAF-1 | |
| 1M34 | 3/4" | 3#10, 1#10G | MCC | UPS | |
| 1M35 | 3/4" | 3#12, 1#12G | MCC | EXHAUST AIR FAN EAF-7 DISCONNECT | |
| 1M35A | 3/4" | 3#12, 1#12G | EXHAUST AIR FAN EAF-7 DISCONNECT | EXHAUST AIR FAN EAF-7 | |
| 1M36 | 3/4" | 3#12, 1#12G | MCC | EXHAUST AIR FAN EAF-3 DISCONNECT | |
| 1M36A | 3/4" | 3#12, 1#12G | EXHAUST AIR FAN EAF-3 DISCONNECT | EXHAUST AIR FAN EAF-3 | |
| 1M37 | 3/4" | 3#12, 1#12G | MCC | EXHAUST AIR FAN EAF-10 DISCONNECT | |
| 1M37A | 3/4" | 3#12, 1#12G | EXHAUST AIR FAN EAF-10 DISCONNECT | EXHAUST AIR FAN EAF-10 | |
| 1M38 | 3/4" | 3#12, 1#12G | MCC | EUH-2 DISCONNECT | |
| 1M38A | 3/4" | 3#12, 1#12G | EUH-2 DISCONNECT | EUH-2 | |
| 1M39 | 3/4" | 3#12, 1#12G | MCC | EUH-4 DISCONNECT | |
| 1M39A | 3/4" | 3#12, 1#12G | EUH-4 DISCONNECT | EUH-4 | |
| 1M40 | 3/4" | 3#12, 1#12G | MCC | EUH-6 DISCONNECT | |
| 1M40A | 3/4" | 3#12, 1#12G | EUH-6 DISCONNECT | EUH-6 | |
| 1T1 | 3" | 4-250 KCMIL, 1 #2G | XFMR T-1-1 | LIGHTING PANELBOARD L1 | |

DRAFT 98% PROGRESS DRAWINGS

OCTOBER 2019

FILE: C:\Users\lgreen\Documents\GLWSP-P3-BPSF-GAMHPNE_lgreen.rvt

| NO. | DATE | APPD | DESCRIPTION |
|---|---|---|---|

Waukesha Water Utility
SERVING WAUKESHA SINCE 1886

GREELEY AND HANSEN
741 N. GRAND AVE. SUITE 308
WAUKESHA, WI 53186

GREAT WATER ALLIANCE™

CONTRACT PACKAGE 3: BOOSTER PUMPING STATION AND WATER SUPPLY CONTROL BUILDING

CABLE AND CONDUIT SCHEDULE

APPROVED

SEAL AFFIXED
MONTH / DAY / YEAR

OCTOBER 2019

| | | | |
|---|---|---|---|
| JOB NO.: | 15310 | | |
| DESGN | TMK | CHCK | NV |
| APPRV | NV | DRWN | LAN |
| SCALE: | NO SCALE | | |

DRAWING NUMBER

AE2

SHEET 38 OF 184 REV 0

## CABLE AND CONDUIT SCHEDULE SHEET 2

| CONDUIT NUMBER | CONDUIT SIZE | CONDUCTOR QUANTITY AND SIZE | FROM | TO | REMARKS |
|---|---|---|---|---|---|
| | | | | | |
| 1C6 | 1" | 14#12, 1#12G | PLC-BPS | MOV-3801 | |
| 1C7 | 3/4" | 8#12, 1#12G | PLC-BPS | NJB-V1 | |
| 1M41 | 3/4" | 3#12, 1#12G | MCC | EUH-8 DISCONNECT | |
| 1M41A | 3/4" | 3#12, 1#12G | EUH-8 DISCONNECT | EUH-8 | |
| 1M42 | 3/4" | 3#12, 1#12G | MCC | EUH-10 DISCONNECT | |
| 1M42A | 3/4" | 3#12, 1#12G | EUH-10 DISCONNECT | EUH-10 | |
| 1M43 | 3/4" | 3#12, 1#12G | MCC | EUH-12 DISCONNECT | |
| 1M43A | 3/4" | 3#12, 1#12G | EUH-12 DISCONNECT | EUH-12 | |
| 1M44 | 3/4" | 3#12, 1#12G | MCC | EUH-14 DISCONNECT | |
| 1M44A | 3/4" | 3#12, 1#12G | EUH-14 DISCONNECT | EUH-14 | |
| 1M45 | 3/4" | 3#12, 1#12G | MCC | EWH-1B DISCONNECT | |
| 1M45A | 3/4" | 3#12, 1#12G | EWH-1B DISCONNECT | EWH-1B | |
| 1M46 | 3/4" | 3#12, 1#12G | MCC | BRIDGE CRANE DISCONNECT | |
| 1M46A | 3/4" | 3#12, 1#12G | BRIDGE CRANE DISCONNECT | BRIDGE CRANE LCP | |
| 1M47 | 3/4" | 3#10, 1#10G | MCC | CHEMICAL 1 TRANSFER PUMP 2 DISCONNECT | |
| 1M47A | 3/4" | 3#10, 1#10G | CHEMICAL 1 TRANSFER PUMP 2 DISCONNECT | CHEMICAL 1 TRANSFER PUMP 2 | |
| 1M48 | 3/4" | 3#10, 1#10G | MCC | CHEMICAL 2 TRANSFER PUMP 2 DISCONNECT | |
| 1M48A | 3/4" | 3#10, 1#10G | CHEMICAL 2 TRANSFER PUMP 2 DISCONNECT | CHEMICAL 2 TRANSFER PUMP 2 | |
| 1M49 | 3/4" | 3#10, 1#10G | MCC | CHEMICAL 3 TRANSFER PUMP 2 DISCONNECT | |
| 1M49A | 3/4" | 3#10, 1#10G | CHEMICAL 3 TRANSFER PUMP 2 DISCONNECT | CHEMICAL 3 TRANSFER PUMP 2 | |
| 1M50 | 3/4" | 3#12, 1#12G | MCC | CEILING FAN CF-1 DISCONNECT | |
| 1N1 | 1" | 1 CAT 6 | MAIN SWITCHGEAR | PLC-BP5 | POWER MONITOR |
| 1N6 | 2" | 15-2/C#16 TWSH | PLC-BPS | NJB-B1 | |
| 1N6A | 3/4" | 2/C#16 TWSH | NJB-B1 | PIT-3600A | |
| 1N6B | 3/4" | 2/C#16 TWSH | NJB-B1 | PIT-3600B | |
| 1N6C | 3/4" | 2/C#16 TWSH | NJB-B1 | PIT-3600C | |
| 1N6D | 3/4" | 2/C#16 TWSH | NJB-B1 | FIT-3600 | |
| 1N6D1 | 3/4" | | FIT-3600 | FE-3600 | VENDOR CABLE |
| 1N6E | 3/4" | 2/C#16 TWSH | NJB-B1 | PIT-3694A | |
| 1N6F | 3/4" | 2/C#16 TWSH | NJB-B1 | PIT-3694B | |
| 1N6G | 3/4" | 2/C#16 TWSH | NJB-B1 | PIT-3694C | |
| 1N6H | 3/4" | 2/C#16 TWSH | NJB-B1 | PIT-3694 | |
| 1N6J | 3/4" | 2/C#16 TWSH | NJB-B1 | FIT-3691 | |
| 1N6J1 | 3/4" | | FIT-3691 | FE-3691 | VENDOR CABLE |
| 1N6K | 3/4" | 2/C#16 TWSH | NJB-B1 | FIT-3601 | |
| 1N6K1 | 3/4" | | FIT-3601 | FE-3601 | VENDOR CABLE |
| 1N6L | 3/4" | 2/C#16 TWSH | NJB-B1 | PIT-3630 | |
| 1N6M | 3/4" | 2/C#16 TWSH | NJB-B1 | PSV-3810 | |
| 1N6N | 3/4" | 2/C#16 TWSH | NJB-B1 | PSV-3820 | |
| 1N7 | 1" | 4-2/C#16 TWSH | PLC-BPS | NJB-V1 | |
| 1N7A | 3/4" | 2/C#16 TWSH, 4#12, 1#12G | NJB-V1 | VT-3330 | |
| 1N7B | 3/4" | 2/C#16 TWSH, 4#12, 1#12G | NJB-V1 | VT-3340 | |
| 1N7C | 3/4" | 2/C#16 TWSH, 4#12, 1#12G | NJB-V1 | VT-3350 | |
| 1N7D | 3/4" | 2/C#16 TWSH, 4#12, 1#12G | NJB-V1 | VT-3360 | |
| 1N8 | | | PLC-BPS | NJB-C1 | |
| 1N8A | 1" | 2-2/C#16 TWSH, 6#14, #14G | NJB-C1 | TANK FILL PANEL 1 | |
| 1N8A1 | 3/4" | 2#14, 1#14G | TANK FILL PANEL 1 | LSH-3610 | |
| 1N8B | 3/4" | 2/C#16 TWSH | NJB-C1 | LIT-3611 | |
| 1N8B1 | 3/4" | VENDOR CABLE | LIT-3611 | LE-3611 | |
| 1N8C | 3/4" | 2/C#16 TWSH | NJB-C1 | LIT-3612 | |
| 1N8C1 | 3/4" | VENDOR CABLE | LIT-3612 | LE-3612 | |
| 1N8D | 3/4" | 2#14, 1#14G | NJB-C1 | FS-3610 | |

## CABLE AND CONDUIT SCHEDULE SHEET 2

| CONDUIT NUMBER | CONDUIT SIZE | CONDUCTOR QUANTITY AND SIZE | FROM | TO | REMARKS |
|---|---|---|---|---|---|
| 1N8E | 3/4" | 2#14, 1#14G | NJB-C1 | FS-3611 | |
| 1N8F | 3/4" | 2/C#16 TWSH | NJB-C1 | TIT-3610 | |
| 1N8G | 3/4" | 4#14, 1#14G | NJB-C1 | HYPOCHLORITE TRANSFER PUMP LCP | |
| 1N8H | 3/4" | 2/C#16 TWSH | NJB-C1 | LIT-3613 | |
| 1N8H1 | 3/4" | VENDOR CABLE | LIT-3613 | LE-3613 | |
| 1N8J | 1 1/4" | 3-2/C#16 TWSH, 8#14, #14G | NJB-C1 | PMP-3133 | |
| 1N8K | 1 1/4" | 3-2/C#16 TWSH, 8#14, #14G | NJB-C1 | LCS PMP-3134 | |
| 1N8L | 1 1/4" | 3-2/C#16 TWSH, 8#14, #14G | NJB-C1 | LCS PMP-3135 | |
| 1N8M | 1 1/4" | 3-2/C#16 TWSH, 8#14, #14G | NJB-C1 | LCS PMP-3136 | |
| 1N9 | | | PLC-BPS | NJB-C2 | |
| 1N9A | 1" | 2-2/C#16 TWSH, 6#14, #14G | NJB-C2 | TANK FILL PANEL 1 (LAS) | |
| 1N9A1 | 3/4" | 2#14, 1#14G | TANK FILL PANEL 1 | LSH-3620 | |
| 1N9B | 3/4" | 2/C#16 TWSH | NJB-C2 | LIT-3621 | |
| 1N9B1 | 3/4" | VENDOR CABLE | LIT-3621 | LE-3621 | |
| 1N9C | 3/4" | 2/C#16 TWSH | NJB-C2 | LIT-3622 | |
| 1N9C1 | 3/4" | VENDOR CABLE | LIT-3622 | LE-3622 | |
| 1N9D | 3/4" | 2#14, 1#14G | NJB-C2 | FS-3620 | |
| 1N9E | 3/4" | 2#14, 1#14G | NJB-C2 | FS-3621 | |
| 1N9F | 3/4" | 2/C#16 TWSH | NJB-C2 | TIT-3620 | |
| 1N9G | 3/4" | 4#14, 1#14G | NJB-C2 | LIQUID AMMONIUM SULFATE TRANSFER PUMP LCP | |
| 1N9H | 3/4" | 2/C#16 TWSH | NJB-C2 | LIT-3623 | |
| 1N9H1 | 3/4" | VENDOR CABLE | LIT-3623 | LE-3623 | |
| 1N9J | 1 1/4" | 3-2/C#16 TWSH, 8#14, #14G | NJB-C2 | LCS PMP-3143 | |
| 1N9K | 1 1/4" | 3-2/C#16 TWSH, 8#14, #14G | NJB-C2 | LCS PMP-3144 | |
| 1N9L | 1 1/4" | 3-2/C#16 TWSH, 8#14, #14G | NJB-C2 | LCS PMP-3145 | |
| 1N9M | 1 1/4" | 3-2/C#16 TWSH, 8#14, #14G | NJB-C2 | LCS PMP-3146 | |
| 1N10 | 1" | 3-2/C#16 TWSH, 2#14, #14G | PLC-BPS | AIT-3610 | |
| 1N11 | 1" | 3-2/C#16 TWSH, 2#14, #14G | PLC-BPS | AIT-3611 | |
| 1N12 | 1" | 3-2/C#16 TWSH, 2#14, #14G | PLC-BPS | AIT-3620 | |
| 1N13 | 1" | 3-2/C#16 TWSH, 2#14, #14G | PLC-BPS | AIT-3621 | |
| 1PU1 | 3/4" | 3#6, 1#10G | PANELBOARD U1 | PANELBOARD G1 | |
| 1S1A | 3" | 3-350 KCMIL, 1#1G | MAIN SWITCHGEAR | MCC | |
| 1S8A | 3" | 3-350 KCMIL, 1#1G | MAIN SWITCHGEAR | MCC | |
| 1TU1 | 1 1/4" | 4#2, 1#8G | XFMR T-U1 | UPS PANELBOARD U1 | |
| 1U1 | 1" | 3#6, 1#10G | UPS | XFMR T-U1 | |
| 2C1 | 1" | 14#14, #12G | PLC-WSCB | MOV-7800 | |
| 2N1 | 3/4" | 2/C#16 TWSH | PLC-WSCB | TIT-7600 | |
| 2N2 | 3/4" | 2/C#16 TWSH | PLC-WSCB | PIT-7600 | |
| 2N3 | 1 1/4" | 3-2/C#16 TWSH, 2#14, #14G | PLC-WSCB | AIT-7600 | |
| 2N4 | 3/4" | 3-2/C#16 TWSH, 2#14, #14G | PLC-WSCB | AIT-7601 | |
| 2N5 | 3/4" | 2/C#16 TWSH | PLC-WSCB | PIT-7601 | |
| 2N6 | 3/4" | 2/C#16 TWSH | PLC-WSCB | TIT-7601 | |
| 2N7 | 1 1/4" | 4-2/C#16 TWSH, 2#14, #14G | PLC-WSCB | PC-7810 | |
| 2N8 | 1 1/4" | 4-2/C#16 TWSH, 2#14, #14G | PLC-WSCB | PC-7820 | |
| 2N9 | 1 1/4" | 4-2/C#16 TWSH, 2#14, #14G | PLC-WSCB | MOV-7830 | |
| U24H1 | 5" | EMPTY | WE ENERGIES FEED | XFMR 1 | CABLE BY WE ENERGIES |

DRAFT 98% PROGRESS DRAWINGS
OCTOBER 2019

| NO. | DATE | APPD | DESCRIPTION |
|---|---|---|---|

Waukesha Water Utility
SERVING WAUKESHA SINCE 1886

GREELEY AND HANSEN
741 N. GRAND AVE. SUITE 308
WAUKESHA, WI 53186

GREAT WATER ALLIANCE™

CONTRACT PACKAGE 3: BOOSTER PUMPING STATION AND WATER SUPPLY CONTROL BUILDING

CABLE AND CONDUIT SCHEDULE

APPROVED

SEAL AFFIXED
MONTH / DAY / YEAR

OCTOBER 2019

| | | | |
|---|---|---|---|
| JOB NO.: | 15310 | | |
| DESGN | TMK | CHCK | NV |
| APPRV | NV | DRWN | LAN |
| SCALE: | NO SCALE | | |

DRAWING NUMBER

AE3

SHEET 39 OF 184 REV 0

10/2/2019 10:04:35 AM BAR MEASURE 1" ON FULLSIZE SHEETS
FILE: C:\Users\lgreen\Documents\GLWSP-P3-BPSF-GAMHPNE_lgreen.rvt

10/2/2019 10:04:39 AM

BAR MEASURE 1" ON FULLSIZE SHEETS

## CABLE AND CONDUIT SCHEDULE SHEET 3

| CONDUIT NUMBER | CONDUIT SIZE | CONDUCTOR QUANTITY AND SIZE | FROM | TO | REMARKS |
|---|---|---|---|---|---|
| | | | | | |
| 1PU1 | 3/4" | 3#6, 1#10G | PANELBOARD U1 | PANELBOARD G1 | |
| 1S1A | 3" | 3-350 KCMIL, 1#1G | MAIN SWITCHGEAR | MCC | |
| 1S1B | 3" | 3-350 KCMIL, 1#1G | MAIN SWITCHGEAR | MCC | |
| 1S2 | 3 1/2" | 3-600 KCMIL, 1 #3G | MAIN SWITCHGEAR | BP-1 VFD | |
| 1S3 | 3 1/2" | 3-600 KCMIL, 1 #3G | MAIN SWITCHGEAR | BP-2 VFD | |
| 1S4A | 3" | 4-400 KCMIL, 1#4/0G | MAIN SWITCHGEAR | MOBILE GENERATOR CONNECTION CABINET | |
| 1S4B | 3" | 4-400 KCMIL, 1#4/0G | MAIN SWITCHGEAR | MOBILE GENERATOR CONNECTION CABINET | |
| 1S4C | 3" | 4-400 KCMIL, 1#4/0G | MAIN SWITCHGEAR | MOBILE GENERATOR CONNECTION CABINET | |
| 1S4D | 3" | 4-400 KCMIL, 1#4/0G | MAIN SWITCHGEAR | MOBILE GENERATOR CONNECTION CABINET | |
| 1S4E | 3" | 4-400 KCMIL, 1#4/0G | MAIN SWITCHGEAR | MOBILE GENERATOR CONNECTION CABINET | |
| 1S5A | 3 1/2" | 4-500 KCMIL, 1#4/0G | MAIN SWITCHGEAR | NATURAL GAS GENERATOR | |
| 1S5B | 3 1/2" | 4-500 KCMIL, 1#4/0G | MAIN SWITCHGEAR | NATURAL GAS GENERATOR | |
| 1S5C | 3 1/2" | 4-500 KCMIL, 1#4/0G | MAIN SWITCHGEAR | NATURAL GAS GENERATOR | |
| 1S5D | 3 1/2" | 4-500 KCMIL, 1#4/0G | MAIN SWITCHGEAR | NATURAL GAS GENERATOR | |
| 1S6 | 3 1/2" | 3-600 KCMIL, 1 #3G | MAIN SWITCHGEAR | BP-3 VFD | |
| 1S7 | 3 1/2" | 3-600 KCMIL, 1 #3G | MAIN SWITCHGEAR | BP-4 VFD | |
| 1S8A | 3" | 3-350 KCMIL, 1#1G | MAIN SWITCHGEAR | MCC | |
| 1S8B | 3" | 3-350 KCMIL, 1#1G | MAIN SWITCHGEAR | MCC | |
| 1T1A | 3" | 4-400 KCMIL, 1#4/0G | XFMR 1 | MAIN SWITCHGEAR | |
| 1T1B | 3" | 4-400 KCMIL, 1#4/0G | XFMR 1 | MAIN SWITCHGEAR | |
| 1T1C | 3" | 4-400 KCMIL, 1#4/0G | XFMR 1 | MAIN SWITCHGEAR | |
| 1T1D | 3" | 4-400 KCMIL, 1#4/0G | XFMR 1 | MAIN SWITCHGEAR | |
| 1T1E | 3" | 4-400 KCMIL, 1#4/0G | XFMR 1 | MAIN SWITCHGEAR | |
| 1T1F | 3" | 4-400 KCMIL, 1#4/0G | XFMR 1 | MAIN SWITCHGEAR | |
| 1TU1 | 1 1/4" | 4#2, 1#8G | XFMR T-U1 | UPS PANELBOARD U1 | |
| 1U1 | 1" | 3#6, 1#10G | UPS | XFMR T-U1 | |

## CABLE AND CONDUIT SCHEDULE SHEET 3

| CONDUIT NUMBER | CONDUIT SIZE | CONDUCTOR QUANTITY AND SIZE | FROM | TO | REMARKS |
|---|---|---|---|---|---|
| 1V1 | 3 1/2" | 3-600 KCMIL, 1 #3G | BP-1 VFD | BP-1 DISCONNECT | |
| 1V1A | 3 1/2" | 3-600 KCMIL, 1 #3G | BP-1 DISCONNECT | BP-1 | |
| 1VC1 | 1" | 10#12, 1#12G | BP-1 VFD | BP-1 PUSHBUTTON STATION | |
| 1VC2 | 3/4" | 2#12, 1#12G | NJB-V1 | BP-1 VFD | |
| 1VN1 | 1" | 1 CAT 6 | MAIN SWITCHGEAR | BP-1 VFD | |
| 1VN2 | 1 1/4" | 4-3/C#16 TWSH | BP-1 VFD | TE-3330 | |
| 2V1 | 3 1/2" | 3-600 KCMIL, 1 #3G | BP-2 VFD | BP-2 DISCONNECT | |
| 2V1A | 3 1/2" | 3-600 KCMIL, 1 #3G | BP-2 DISCONNECT | BP-2 | |
| 2VC1 | 1" | 10#12, 1#12G | BP-2 VFD | BP-2 PUSHBUTTON STATION | |
| 2VC2 | 3/4" | 2#12, 1#12G | NJB-V1 | BP-2 VFD | |
| 2VN1 | 1" | 1 CAT 6 | MAIN SWITCHGEAR | BP-2 VFD | |
| 2VN2 | 1 1/4" | 4-3/C#16 TWSH | BP-2 VFD | TE-3340 | |
| 3V1 | 3 1/2" | 3-600 KCMIL, 1 #3G | BP-3 VFD | BP-3 DISCONNECT | |
| 3V1A | 3 1/2" | 3-600 KCMIL, 1 #3G | BP-3 DISCONNECT | BP-3 | |
| 3VC1 | 1" | 10#12, 1#12G | BP-3 VFD | BP-3 PUSHBUTTON STATION | |
| 3VC2 | 3/4" | 2#12, 1#12G | NJB-V1 | BP-3 VFD | |
| 3VN1 | 1" | 1 CAT 6 | MAIN SWITCHGEAR | BP-3 VFD | |
| 3VN2 | 1 1/4" | 4-3/C#16 TWSH | BP-3 VFD | TE-3350 | |
| 4V1 | 3 1/2" | 3-600 KCMIL, 1 #3G | BP-4 VFD | BP-4 DISCONNECT | |
| 4V1A | 3 1/2" | 3-600 KCMIL, 1 #3G | BP-4 DISCONNECT | BP-4 | |
| 4VC1 | 1" | 10#12, 1#12G | BP-4 VFD | BP-4 PUSHBUTTON STATION | |
| 4VC2 | 3/4" | 2#12, 1#12G | NJB-V1 | BP-4 VFD | |
| 4VN1 | 1" | 1 CAT 6 | MAIN SWITCHGEAR | BP-4 VFD | |
| 4VN2 | 1 1/4" | 4-3/C#16 TWSH | BP-4 VFD | TE-3360 | |

DRAFT 98% PROGRESS DRAWINGS
OCTOBER 2019

FILE: C:\Users\lgreen\Documents\GLWSP-P3-BPSF-GAMHPNE_lgreen.rvt

| NO. | DATE | APPD | DESCRIPTION |
|---|---|---|---|

Waukesha Water Utility
SERVING WAUKESHA SINCE 1886

GREELEY AND HANSEN
741 N. GRAND AVE. SUITE 308
WAUKESHA, WI 53186

GREAT WATER ALLIANCE™

CONTRACT PACKAGE 3: BOOSTER PUMPING STATION AND WATER SUPPLY CONTROL BUILDING

CABLE AND CONDUIT SCHEDULE

APPROVED

SEAL AFFIXED
MONTH / DAY / YEAR

OCTOBER 2019

JOB NO.: 15310
DESGN TMK | CHCK NV
APPRV NV | DRWN LAN
SCALE:

DRAWING NUMBER

AE4

SHEET 40 OF 184 | REV 0

10/2/2019 10:04:42 AM
BAR MEASURE 1" ON FULLSIZE SHEETS

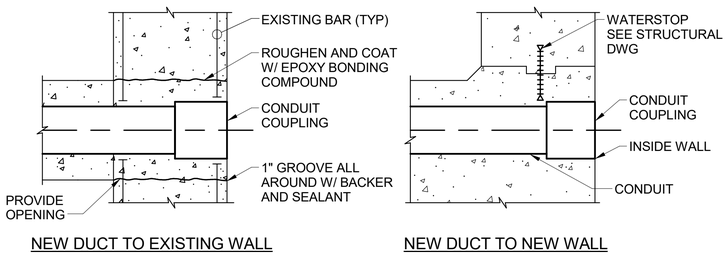


## 1 DUCTBANK ENTRY AT BUILDINGS
NOT TO SCALE

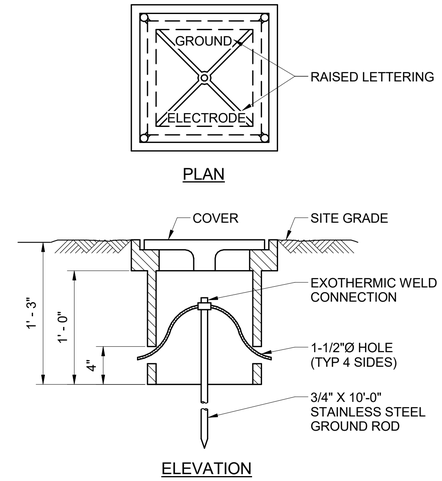


## 2 GROUND ROD AND ACCESS BOX
NOT TO SCALE

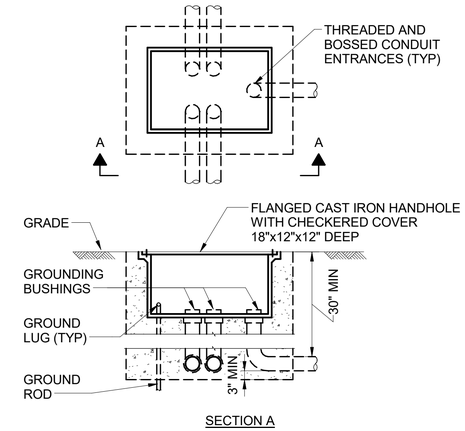


## 3 IN - GROUND JUNCTION BOX DETAIL
NOT TO SCALE

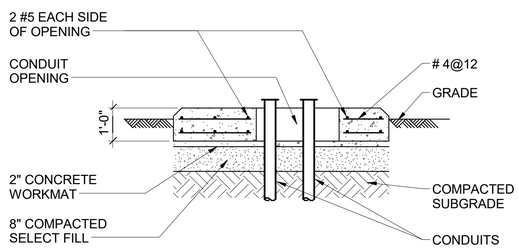


NOTE: COORDINATE WITH REQUIREMENTS OF WE ENERGIES

## 4 TYPICAL REINFORCING FOR TRANSFORMER PAD
NOT TO SCALE

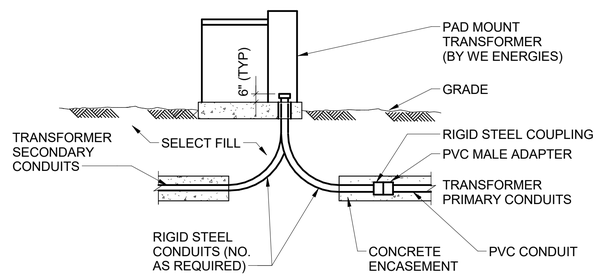


## 5 TYPICAL CONDUIT ENTRY AT TRANSFORMER PAD
NOT TO SCALE

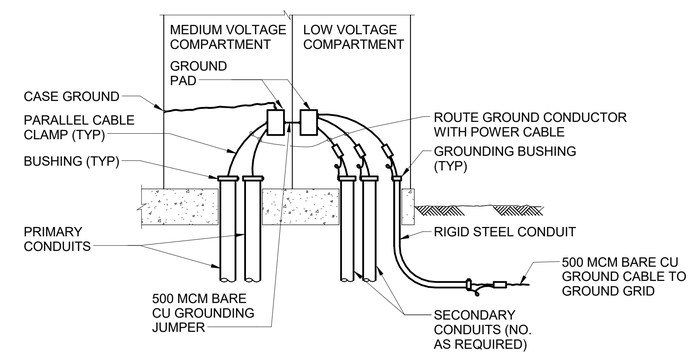


## 6 GROUNDING DETAIL FOR PAD MOUNT TRANSFORMER
NOT TO SCALE

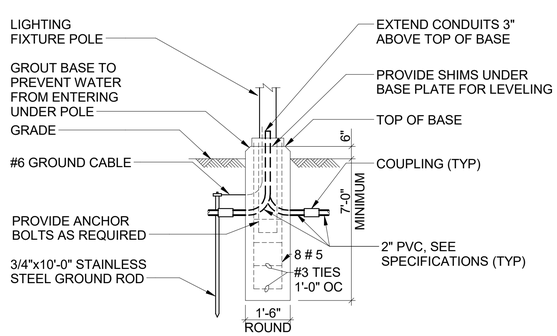


## 7 LIGHTING FIXTURE POLE BASE
NOT TO SCALE

DRAFT 98% PROGRESS DRAWINGS
OCTOBER 2019

| NO. | DATE | APPD | DESCRIPTION |
|---|---|---|---|

Waukesha Water Utility
SERVING WAUKESHA SINCE 1886

GREELEY AND HANSEN
741 N. GRAND AVE. SUITE 308
WAUKESHA, WI 53186

GREAT WATER ALLIANCE™

CONTRACT PACKAGE 3: BOOSTER PUMPING STATION AND WATER SUPPLY CONTROL BUILDING

DETAILS

APPROVED

SEAL AFFIXED
MONTH / DAY / YEAR

OCTOBER 2019

| | | | |
|---|---|---|---|
| JOB NO.: | 15310 | | |
| DESGN | TMK | CHCK | NV |
| APPRV | NV | DRWN | LAN |
| SCALE: | NOT TO SCALE | | |

DRAWING NUMBER

AE5

SHEET 41 OF 184 REV 0

FILE: C:\Users\lgreen\Documents\GLWSP-P3-BPSF-GAMHPNE_lgreen.rvt

10/2/2019 10:04:46 AM
BAR MEASURE 1" ON FULLSIZE SHEETS

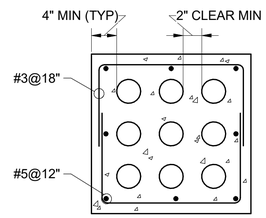


1 TYPICAL REINFORCING FOR CONCRETE ENCASED ELECTRICAL CONDUITS
NOT TO SCALE

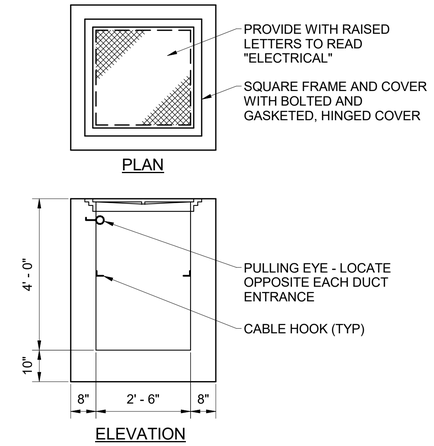


2 ELECTRICAL HANDHOLE DETAILS
NOT TO SCALE

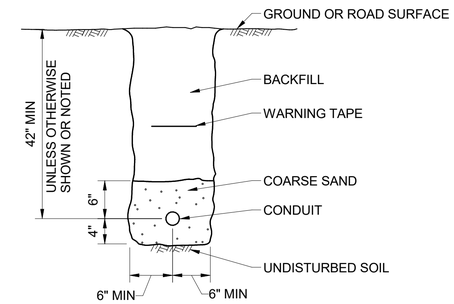


3 DIRECT BURIED CONDUIT TYPICAL SECTION
NOT TO SCALE

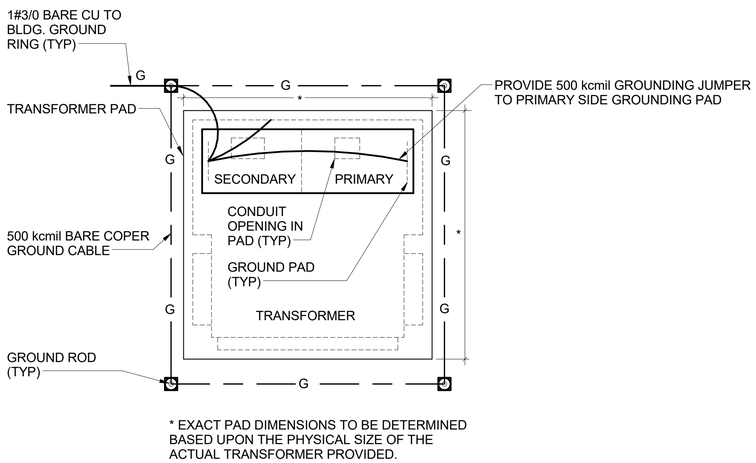


NOTE: COORDINATE WITH REQUIREMENTS OF WE ENERGIES

4 TYPICAL TRANSFORMER PAD DETAIL
NOT TO SCALE

DRAFT 98% PROGRESS DRAWINGS
OCTOBER 2019

| NO. | DATE | APPD | DESCRIPTION |
|---|---|---|---|

Waukesha Water Utility
SERVING WAUKESHA SINCE 1886

GREELEY AND HANSEN
741 N. GRAND AVE. SUITE 308
WAUKESHA, WI 53186

GREAT WATER ALLIANCE™

CONTRACT PACKAGE 3: BOOSTER PUMPING STATION AND WATER SUPPLY CONTROL BUILDING

DETAILS

APPROVED

SEAL AFFIXED
MONTH / DAY / YEAR

OCTOBER 2019

| | | | |
|---|---|---|---|
| JOB NO.: | 15310 | | |
| DESGN | TMK | CHCK | NV |
| APPRV | NV | DRWN | LAN |
| SCALE: | NOT TO SCALE | | |

DRAWING NUMBER

AE6

SHEET 42 OF 184 REV 0

FILE: C:\Users\lgreen\Documents\GLWSP-P3-BPSF-GAMHPNE_lgreen.rvt

10/2/2019 10:05:25 AM

BAR MEASURE 1" ON FULLSIZE SHEETS

## INSTRUMENT TAGGING AND LABELING

XYZ #### — INSTRUMENT - FIELD MOUNTED

XYZ #### — INSTRUMENT - PANEL MOUNTED

AE #### (Y) — ANALYSIS INSTRUMENT SEE BELOW FOR FUNCTION TYPES (Y)

- $NaClO$ SODIUM HYPOCHLORITE
- $NH_3$ AMMONIA
- $O_2$ OXYGEN
- ORP OXIDATION REDUCTION POTENTIAL
- pH HYDROGEN ION CONCENTRATION (-LOG )
- $PO_4$ PHOSPHATE
- $CL_2$ CHLORINE
- F FLUORIDE
- T TEMPERATURE
- REF REFERENCE

CNTLR — CONTROLLER

YL #### (Z) — LED INDICATING LIGHT SEE BELOW FOR COLOR DESIGNATIONS (Z)

- A = AMBER = ALARM STATUS
- B = BLUE = LOCK OUT RELAY TRIPPED
- G = GREEN = STOPPED
- R = RED = RUNNING
- W = WHITE = POWER
- Y = YELLOW = STATUS

HS #### (XYZ) — HAND SELECTOR SWITCH

HMS #### (XYZ) — PUSHBUTTON SEE BELOW FOR HAND SELECTOR SWITCH AND PUSHBUTTON FUNCTIONS (XYZ)

- CO CLOSE-OPEN
- ES EMERGENCY STOP
- HOA HAND-OFF-AUTO
- LOR LOCAL-OFF-REMOTE
- RS RESET
- SIL SILENCE ALARM
- SP STOP
- SPD SPEED
- SS START-STOP
- ST START

## INSTRUMENT IDENTIFICATION LEGEND

| | FIRST LETTER | | SUCCEEDING LETTERS | | |
|---|---|---|---|---|---|
| | MEASURED OR INITIATING VARIABLE | MODIFIER | READOUT OR PASSIVE FUNCTION | OUTPUT FUNCTION | MODIFIER |
| A | ANALYSIS | | ALARM | | |
| B | BURNER FLAME | | | CLOSE, STOP, DECREASE | OFF |
| C | CONDUCTIVITY (ELECTRICAL) | COMPUTER | | CONTROL | |
| D | DENSITY (MASS) OR SPECIFIC GRAVITY | DIFFERENTIAL | | OPEN, START, INCREASE | |
| E | VOLTAGE (EMF) | | PRIMARY ELEMENT | | |
| F | FLOW | RATIO (FRACTION) | | FORWARD | FAIL |
| G | GAUGING (DIMENSIONAL) | | GLASS, GAUGE, GATE | | |
| H | HAND (MANUALLY INITIATED) | | | | HIGH, OPEN |
| I | CURRENT (ELECTRICAL) | | INDICATE | | |
| J | POWER | SCAN | | | |
| K | TIME OR TIME SCHEDULE | TIME RATE OF CHANGE | | CONTROL STATION | |
| L | LEVEL | | LIGHT (PILOT) | | LOW, CLOSED |
| M | MOISTURE OR HUMIDITY | MANUAL | MOMENTARY | MOTOR | MIDDLE OR INTERMEDIATE |
| N | INTRUSION | | | | ON, OPERATE, RUNNING |
| O | | | ORIFICE (RESTRICTION) | | OVERLOAD |
| P | PRESSURE OR VACUUM | | POINT (TEST CONNECTION) | PUMP | |
| Q | QUANTITY | INTEGRATE OR TOTALIZE | | | |
| R | RADIOACTIVITY | | RECORD OR PRINT | REVERSE | |
| S | SPEED, FREQUENCY, MOTION | SAFETY | SENSOR | SWITCH | STOP |
| T | TEMPERATURE | | | TRANSMIT | |
| U | MULTIVARIABLE | | MULTIFUNCTION | MULTIFUNCTION | MULTIFUNCTION |
| V | VIBRATION | | | VALVE, DAMPER OR LOUVER | |
| W | WEIGHT, FORCE, TORQUE | | WELL | | |
| X | UNCLASSIFIED | X AXIS | UNCLASSIFIED | UNCLASSIFIED | UNCLASSIFIED |
| Y | EVENT STATUS | Y AXIS | | RELAY OR COMPUTE | |
| Z | POSITION | Z AXIS | | DRIVE, ACTUATE OR UNCLASSIFIED FINAL CONTROL ELEMENTS | |

## LINE SYMBOLS

- MAIN PROCESS LINE
- AUXILIARY LINE
- ELECTRIC (ELECTRONIC) SIGNAL LINE
- FO — FO — FO DATA LINK (FIBER OPTIC)
- DATA LINK (CAT6)
- AIR/POWER SUPPLY
- A N — PROCESS FLOW LINE CONTINUED ON ANOTHER DRAWING: N - DRAWING REFERENCE A - INTERFACE ID
- N A — PROCESS FLOW LINE CONTINUED ON ANOTHER DRAWING: N - DRAWING REFERENCE A - INTERFACE ID
- A N — PROCESS SIGNAL LINE CONTINUED ON ANOTHER DRAWING: N - DRAWING REFERENCE A - INTERFACE ID
- N A — PROCESS SIGNAL LINE CONTINUED ON ANOTHER DRAWING: N - DRAWING REFERENCE A - INTERFACE ID
- PROCESS FLOW LINE CONTINUED OUTSIDE SCOPE OF DRAWINGS
- DISCRETE INPUT
- DISCRETE OUTPUT
- ANALOG INPUT
- ANALOG OUTPUT

## SCHEMATIC SYMBOLS

- CIRCUIT BREAKER
- F FUSE
- CR CONTROL RELAY
- X INDICATING LIGHT (A-AMBER, B-BLUE, G-GREEN, R-RED, W-WHITE)
- NORMALLY OPEN CONTACT
- NORMALLY CLOSED CONTACT
- TEMPERATURE SWITCH
- NORMALLY OPEN PUSHBUTTON
- NORMALLY CLOSED PUSHBUTTON
- HEATING ELEMENT
- FLOAT SWITCH

## ABBREVIATIONS

| | |
|---|---|
| ACP | ACCESS CONTROL PANEL |
| AFD | ADJUSTABLE FREQUENCY DRIVE |
| BP-1 | BOOSTER PUMP 1 |
| BPS | BOOSTER PUMPING STATION |
| DISCH | DISCHARGE |
| FACP | FIRE ALARM CONTROL PANEL |
| FOPP | FIBER OPTIC PATCH PANEL |
| FP-1 | FEED PUMP 1 |
| GND | GROUND |
| HMI | HUMAN-MACHINE INTERFACE |
| HVAC | HEATING, VENTILATION, AND AIR CONDITIONING |
| LCP | LOCAL CONTROL PANEL |
| LAS | LIQUID AMMONIUM SULFATE |
| LCS | LOCAL CONTROL STATION |
| MCC | MOTOR CONTROL CENTER |
| MMS | MICRO-PROCESSOR METERING SYSTEM |
| MOV | MOTOR -OPERATED VALVE |
| NPT | NATIONAL PIPE THREAD |
| OIT | OPERATOR INTERFACE TERMINAL |
| PLC | PROGRAMMABLE LOGIC CONTROLLER |
| PMP | PUMP |
| PRV | PRESSURE REGULATING VALVE |
| PS | POWER SUPPLY |
| PSRV | PRESSURE SUSTAINING/REDUCING VALVE |
| PSV | PRESSURE SUSTAINING VALVE |
| P&ID | PROCESS AND INSTRUMENTATION DIAGRAM |
| RCP | RECEPTACLE |
| P&ID | PROCESS AND INSTRUMENTATION DIAGRAM |
| RCP | RECEPTACLE |
| RES | RESERVOIR |
| SCADA | SUPERVISORY CONTROL AND DATA ACQUISITION |
| SH | SODIUM HYPOCHLORITE |
| SOV | SOLENOID-OPERATED VALVE |
| SS | STAINLESS STEEL |
| TCP | TEMPERATURE CONTROL PANEL |
| TP-1 | TRANSFER PUMP 1 |
| TYP | TYPICAL |
| UPS | UNINTERRUPTIBLE POWER SUPPLY |
| VAC | VOLTS, AC |
| VDC | VOLTS, DC |
| VFD | VARIABLE FREQUENCY DRIVE |
| VLV | VALVE |
| VS | VARIABLE SPEED |
| VTMP | VIBRATION AND TEMPERATURE MONITORING PANEL |
| WSCB | WATER SUPPLY CONTROL BUILDING |
| WWU | WAUKESHA WATER UTILITY |

DRAFT 98% PROGRESS DRAWINGS

OCTOBER 2019

## MISC INSTRUMENT SYMBOLS

- H ALARM OR WARNING HORN
- FE FM MAGNETIC FLOW METER
- FE CM CORIOLIS FLOW METER
- FE FS INLINE FLOW SWITCH
- FE VENTURI METER
- DIAPHRAGM SEAL
- LE ULTRASONIC LEVEL TRANSMITTER
- LE RADAR LEVEL TRANSMITTER
- LE SUBMERSIBLE LEVEL TRANSMITTER

## VALVE SYMBOLS

- DIAPHRAGM VALVE
- GATE VALVE
- GLOBE VALVE
- BUTTERFLY VALVE
- BALL VALVE
- CHECK VALVE
- HOSE/COUPLING CONNECTION
- RELIEF VALVE
- AIR RELIEF VALVE
- PRESSURE REGULATING VALVE
- BACK-PRESSURE REGULATING VALVE
- PRESSURE SUSTAINING / REDUCING VALVE
- Y - STRAINER
- S SOLENOID VALVE
- REDUCER-CONCENTRIC

## PROCESS AND EQUIPMENT

- M ELECTRIC MOTOR ACTUATOR
- DIAPHRAGM ACTUATOR
- CAMERA
- MOTION
- WIRELESS RADIO ANTENNA
- CELLULAR ANTENNA
- RESERVOIR MIXING SYSTEM
- VS M VERTICAL TURBINE PUMP VS VARIABLE SPEED
- VS M CENTRIFUGAL PUMP VS VARIABLE SPEED
- VS M CHEMICAL METERING PUMP VS VARIABLE SPEED
- VS M SUBMERSIBLE PUMP VS VARIABLE SPEED

| NO. | DATE | APPD | DESCRIPTION |
|---|---|---|---|

Waukesha Water Utility — SERVING WAUKESHA SINCE 1886

GREELEY AND HANSEN — 741 N. GRAND AVE. SUITE 308, WAUKESHA, WI 53186

GREAT WATER ALLIANCE™

CONTRACT PACKAGE 3: BOOSTER PUMPING STATION AND WATER SUPPLY CONTROL BUILDING

NOTES AND SYMBOLS LEGEND

APPROVED

SEAL AFFIXED MONTH / DAY / YEAR

OCTOBER 2019

| | | | |
|---|---|---|---|
| JOB NO.: | 15310 | | |
| DESGN | RV | CHCK | THP |
| APPRV | THP | DRWN | LAN |
| SCALE: | NO SCALE | | |

DRAWING NUMBER

AN1

SHEET 43 OF 184 REV 0

FILE: C:\Users\lgreen\Documents\GLWSP-P3-BPSF-GAMHPNE_lgreen.rvt

BAR MEASURE 1" ON FULLSIZE SHEETS
06/27/2019 6:51:12 PM
FILE: \\GH-DATA01\CLIENT02\15310-WAUKESHA GREAT LAKES WATER SUPPLY PM-CM\21 CADD\21.05 WORKING DWGS\CONTRACT PACKAGE 3 - BPSF\GLWSP-P3-BPSF-AN02.DWG

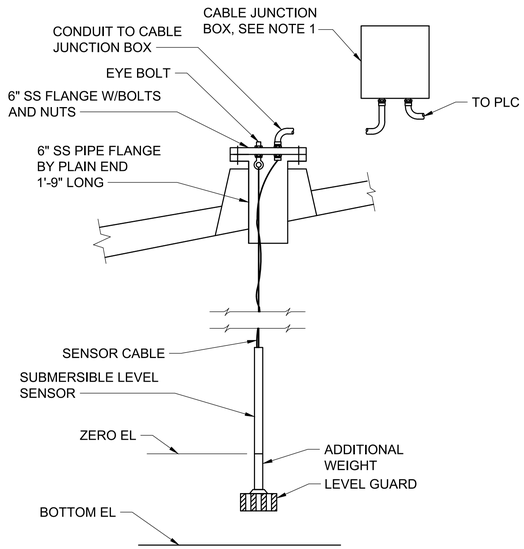


NOTES:
1. MOUNT CABLE JUNCTION BOX TO RAILING. CABLE BOX TO BE VENTED.
2. PROVIDE SUBMERSIBLE SENSOR WITH ADDITIONAL WEIGHT AND LEVEL GUARD.
3. FOLLOW MANUFACTURER'S RECOMMENDED INSTALLATION PRACTICES.

## 1 RESERVOIR SUBMERSIBLE LEVEL TRANSMITTER DETAIL
NOT TO SCALE

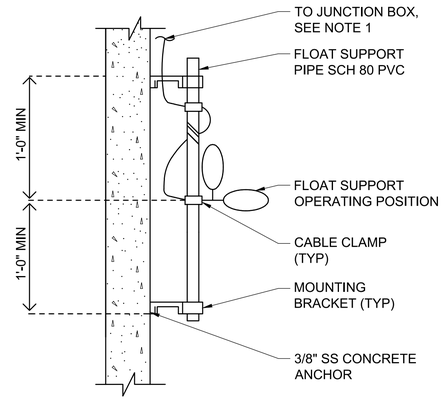


NOTES:
1. PROVIDE MIN OF 1 FOOT SLACK IN CABLE TO ALLOW FOR ADJUSTMENT OF SWITCH ACTUATION LEVEL.
2. FOLLOW MANUFACTURER'S RECOMMENDED INSTALLATION PRACTICES. REQUIREMENTS MAY VARY.

## 2 FLOAT TYPE LEVEL SWITCH DETAIL
NOT TO SCALE

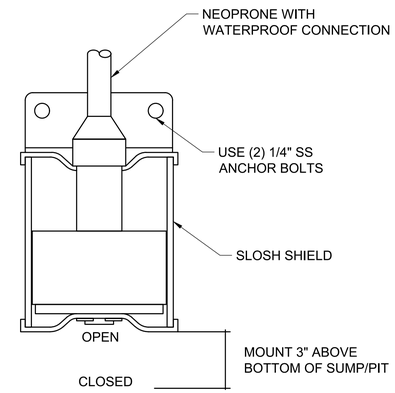


NOTES:
1. FOR CHEMICAL LEAK DETECTION USE.
2. LEVEL SWITCH SHOWN IN OPEN POSITION.
3. FOLLOW MANUFACTURER'S RECOMMENDED INSTALLATION PRACTICES. REQUIREMENTS MAY VARY.

## 3 LEVEL SWITCH - WET FLOOR DETECTOR DETAIL
NOT TO SCALE

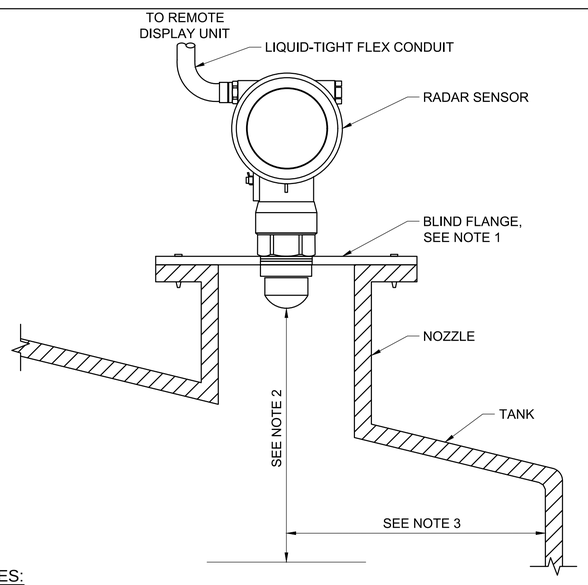


NOTES:
1. REFER TO TANK SHOP DRAWING FOR FLANGE SIZE AND BOLT PATTERN.
2. THE DISTANCE BETWEEN THE SENSOR AND MAXIMUM LEVEL MUST BE GREATER THAN THE SENSOR BLANKING DISTANCE.
3. THE HORIZONTAL LOCATION MUST AVOID TANK OBSTRUCTIONS AND MAXIMIZE THE RETURN SIGNAL.
4. FOLLOW MANUFACTURER'S RECOMMENDED INSTALLATION PRACTICES. REQUIREMENTS MAY VARY.

## 4 CHEMICAL TANK RADAR LEVEL SENSOR DETAIL
NOT TO SCALE

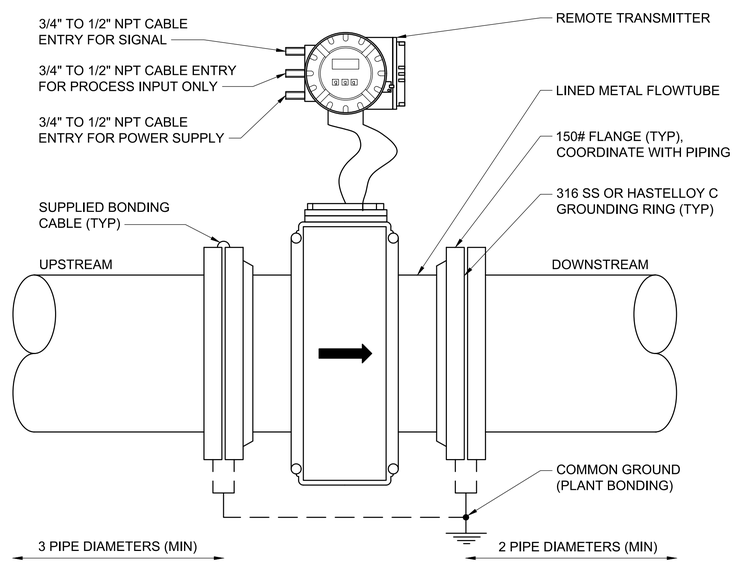


NOTES:
1. LAYING LENGTH SHOWN SHALL BE APPLICABLE FOR STRAIGHT PIPE RUNS WITH THE METER MOUNTED IN ANY POSITION.
2. GROUNDING SHOWN IS TYPICAL FOR METAL PIPELINE INSTALLATIONS.
3. FOLLOW MANUFACTURER'S RECOMMENDED INSTALLATION PRACTICES.

## 5 MAGNETIC FLOWTUBE AND TRANSMITTER DETAIL
NOT TO SCALE

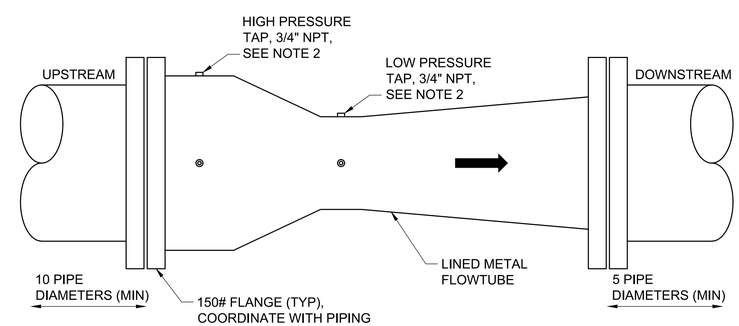


NOTES:
1. LAYING LENGTH SHOWN SHALL BE APPLICABLE FOR STRAIGHT PIPE RUNS WITH THE METER MOUNTED IN ANY POSITION.
2. LOCATED AT 90° & 270°. FOLLOW MANUFACTURER'S RECOMMENDED INSTALLATION PRACTICES.
3. REFERENCE DIFFERENTIAL PRESSURE INSTRUMENTATION INSTALLATION.
4. PRESSURE RATING SHOWN FOR BPS ONLY.
5. FOLLOW MANUFACTURER'S RECOMMENDED INSTALLATION PRACTICES. REQUIREMENTS MAY VARY.

## 6 VENTURI FLOW METER AND TRANSMITTER DETAIL
NOT TO SCALE

DRAFT 98% PROGRESS DRAWINGS
OCTOBER 2019

| NO. | DATE | APPD | REVISION |
|---|---|---|---|

Waukesha Water Utility
SERVING WAUKESHA SINCE 1886

GREELEY AND HANSEN
741 N. GRAND AVE, SUITE 308
WAUKESHA, WI 53186

GREAT WATER ALLIANCE™

CONTRACT PACKAGE 3: BOOSTER PUMPING STATION AND WATER SUPPLY CONTROL BUILDING

DETAILS

APPROVED

SEAL AFFIXED
MONTH / DAY / YEAR

OCTOBER 2019

JOB NO.: 15310

| DESGN | RV | CHCK | THP |
|---|---|---|---|
| APPRV | THP | DRWN | LAN |

SCALE: AS SHOWN

DRAWING NUMBER

AN2

SHEET 44 OF 184 | REV 0

BAR MEASURE 1" ON FULLSIZE SHEETS
06/27/2019 6:51:14 PM
FILE: \\GH-DATA01\CLIENT02\15310-WAUKESHA GREAT LAKES WATER SUPPLY PM-CM\21 CADD\21.05 WORKING DWGS\CONTRACT PACKAGE 3 - BPSF\GLWSP-P3-BPSF-AN03.DWG

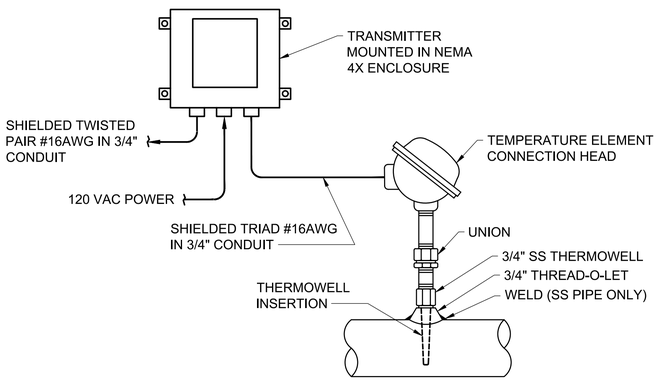


STRAIGHT PIPE MOUNTING

NOTES:
1. FOR DUCTILE IRON AND FIBERGLASS REINFORCED PLASTIC PIPE, ALL SIZES, USE PIPE SADDLE WITH BUSHING.
2. FOR STEEL AND STAINLESS STEEL PIPES 3" AND LARGER, USE THREAD-O-LET AS SHOWN.
3. FOLLOW MANUFACTURER'S RECOMMENDED INSTALLATION PRACTICES.

## 1 PROCESS TEMPERATURE SENSOR AND TRANSMITTER DETAIL
NO SCALE

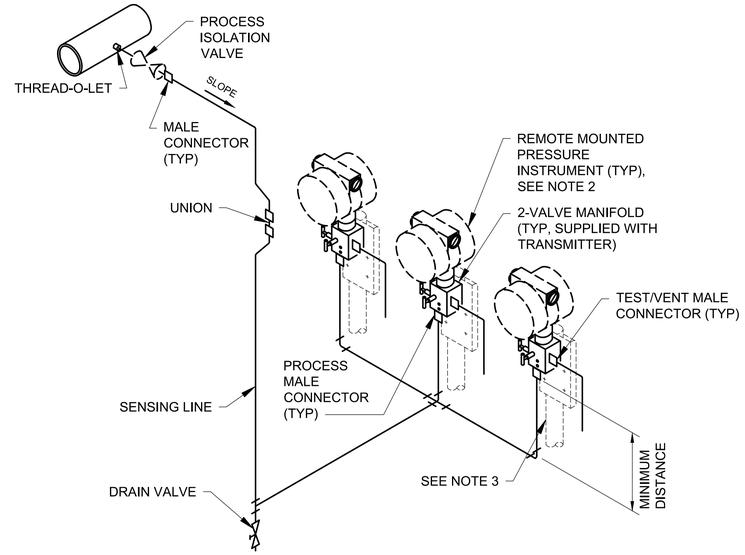


NOTES:
1. ALL SENSING LINES SHALL BE 316 SS AND SHALL HAVE A MIN SLOPE OF 1:12.
2. MOUNT PRESSURE GAUGE/SWITCH/TRANSMITTER BELOW PROCESS TAP AS SHOWN. IF (DUE TO LIMITING FIELD CONDITIONS) TRANSMITTER IS TO BE MOUNTED ABOVE PROCESS TAP, FURNISH AND INSTALL VENT VALVE IN HIGHEST POINT OF SENSING LINE.
3. TUBE END TO BE DIRECTED AWAY FROM OPERATOR.
4. TRANSMITTER MANIFOLD CONFIGURATION MAY VARY.
5. INSTRUMENTATION TO BE EITHER WALL MOUNTED OR FLOOR STAND MOUNTED.
6. FOLLOW MANUFACTURER'S RECOMMENDED INSTALLATION PRACTICES.

## 2 PRESSURE INSTRUMENTATION LIQUID (NON-SEWAGE) SERVICE DETAIL
NO SCALE

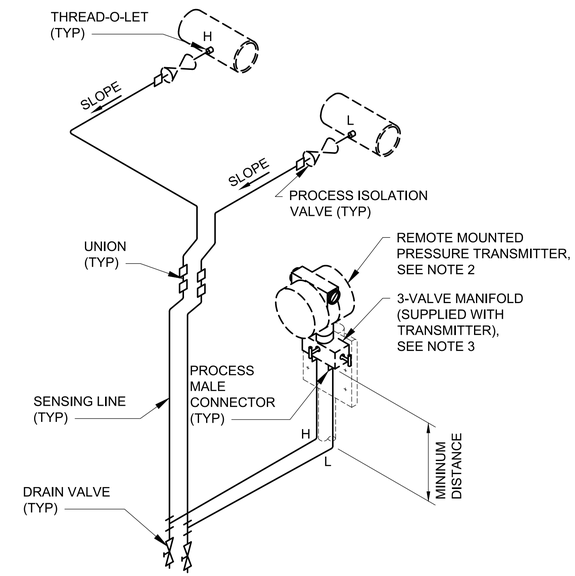


NOTES:
1. ALL SENSING LINES SHALL BE 316 SS AND SHALL HAVE A MIN SLOPE OF 1:12.
2. MOUNT TRANSMITTER BELOW PROCESS TAP AS SHOWN. IF (DUE TO LIMITING FIELD CONDITIONS) TRANSMITTER IS TO BE MOUNTED ABOVE PROCESS TAP, FURNISH AND INSTALL VENT VALVE IN HIGHEST POINT OF EACH SENSING LINE.
3. MANIFOLD CONFIGURATION MAY VARY.
5. INSTRUMENTATION TO BE EITHER WALL MOUNTED OR FLOOR STAND MOUNTED.
6. FOLLOW MANUFACTURER'S RECOMMENDED INSTALLATION PRACTICES.

## 3 DIFFERENTIAL PRESSURE INSTRUMENTATION LIQUID (NON-SEWAGE) SERVICE DETAIL
NO SCALE

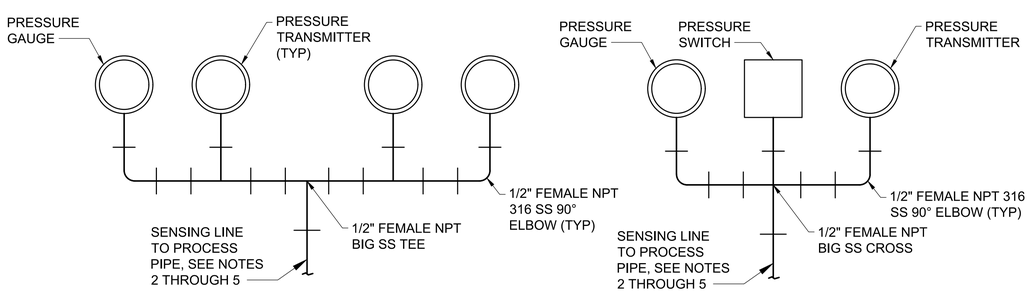


GAUGE - TRANSMITTERS

GAUGE - SWITCH - TRANSMITTER

NOTES:
1. MOUNT GAUGE/SWITCH/TRANSMITTER BELOW PROCESS TAP. IF (DUE TO LIMITING FIELD CONDITIONS) TRANSMITTER IS TO BE MOUNTED ABOVE PROCESS TAP, FURNISH AND INSTALL VENT VALVE IN HIGHEST POINT OF EACH SENSING LINE.
2. ALL SENSING LINES SHALL BE 316 SS AND SHALL HAVE A MIN SLOPE OF 1:12.
3. FOR STEEL, GALVANIZED STEEL, AND PVC 2-21/2" AND SMALLER USE A BUSHING TEE.
4. FOR DUCTILE IRON AND FIBERGLASS REINFORCED PLASTIC PIPE, ALL SIZES, USE PIPE SADDLE WITH BUSHING.
5. FOR STEEL AND STAINLESS STEEL PIPES 3" AND LARGER, USE THREAD-O-LET.
6. FOLLOW MANUFACTURER'S RECOMMENDED INSTALLATION PRACTICES.

## 4 PRESSURE GAUGE, SWITCH, AND TRANSMITTER DETAIL
NO SCALE

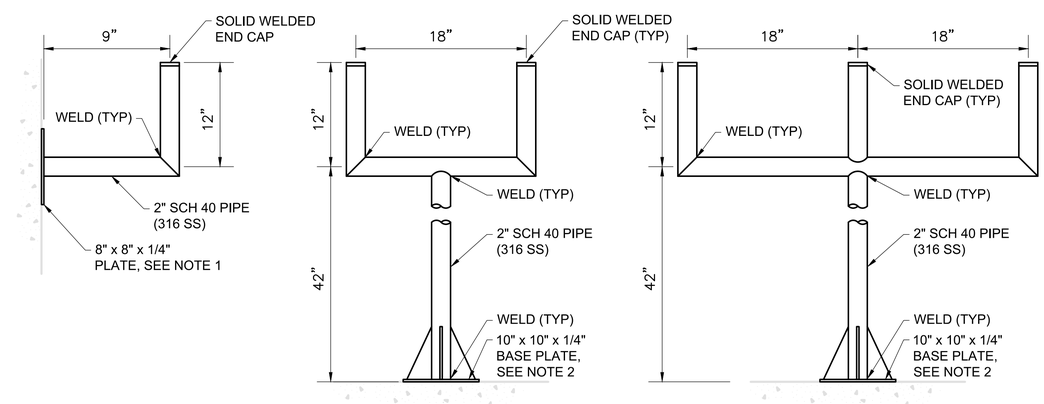


WALL MOUNTED INSTRUMENT PIPE SUPPORT

FLOOR MOUNTED INSTRUMENT PIPE STAND (TWO INSTRUMENTS)

FLOOR MOUNTED INSTRUMENT PIPE STAND (THREE INSTRUMENTS)

NOTES:
1. SECURE TO WALL WITH FOUR (4) 1/2" STAINLESS STEEL CONCRETE ANCHORS.
2. SECURE TO SLAB WITH FOUR (4) 1/2" STAINLESS STEEL CONCRETE ANCHORS.
3. ALL MOUNTING BRACKETS ARE TO BE INSTALLED APPROXIMATELY 4'-0" ABOVE FLOOR OR AS REQUIRED BY PROCESS CONNECTION.
4. FOLLOW MANUFACTURER'S RECOMMENDED INSTALLATION PRACTICES.

## 5 WALL/FLOOR MOUNTED INSTRUMENT PIPE STANDS DETAIL
NOT TO SCALE

DRAFT 98% PROGRESS DRAWINGS
OCTOBER 2019

| NO. | DATE | APPD | REVISION |
|---|---|---|---|

Waukesha Water Utility
SERVING WAUKESHA SINCE 1886

GREELEY AND HANSEN
741 N. GRAND AVE, SUITE 308
WAUKESHA, WI 53186

GREAT WATER ALLIANCE™

CONTRACT PACKAGE 3: BOOSTER PUMPING STATION AND WATER SUPPLY CONTROL BUILDING

DETAILS

APPROVED

SEAL AFFIXED
MONTH / DAY / YEAR

OCTOBER 2019

JOB NO.: 15310

| | | | |
|---|---|---|---|
| DESGN | RV | CHCK | THP |
| APPRV | THP | DRWN | LAN |
| SCALE: | AS SHOWN | | |

DRAWING NUMBER

AN3

SHEET 45 OF 184 REV 0

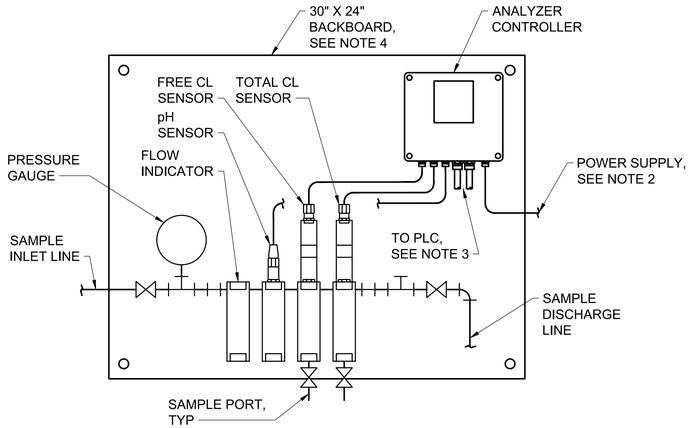


CHLORINE ANALYZER

NOTES:
1. PROVIDE ALL PIPINGS AND FITTINGS 1/4" SCH80 PVC SOCKET WELD WITH VITON SEALS UNLESS OTHERWISE REQUIRED BY COMPONENTS.
2. PROVIDE 120 VAC POWER SUPPLY TO CONTROLLER. REFERENCE ELECTRICAL POWER PLAN DRAWINGS.
3. PROVIDE FLEXIBLE CONDUITS FROM/TO ANALYZER CONTROLLER FOR CONTROLS WIRING.
4. MOUNT ANALYZER MOUNTING PANEL TO INSTRUMENT PIPE STAND PER MANUFACTURER'S RECOMMENDATIONS. FOLLOW MANUFACTURER'S RECOMMENDED INSTALLATION PRACTICES.

## 1 CHLORINE ANALYZER SYSTEM DETAIL
NO SCALE

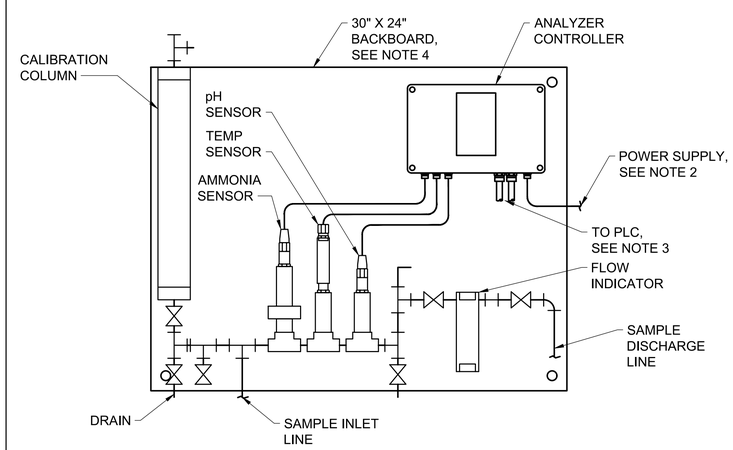


AMMONIA ANALYZER

NOTES:
1. PROVIDE ALL PIPINGS AND FITTINGS 1/4" SCH80 PVC SOCKET WELD WITH VITON SEALS UNLESS OTHERWISE REQUIRED BY COMPONENTS.
2. PROVIDE 120 VAC POWER SUPPLY TO CONTROLLER. REFERENCE ELECTRICAL POWER PLAN DRAWINGS.
3. PROVIDE FLEXIBLE CONDUITS FROM/TO ANALYZER CONTROLLER FOR CONTROLS WIRING.
4. MOUNT ANALYZER MOUNTING PANEL TO INSTRUMENT PIPE STAND PER MANUFACTURER'S RECOMMENDATIONS. FOLLOW MANUFACTURER'S RECOMMENDED INSTALLATION PRACTICES.

## 2 AMMONIA ANALYZER SYSTEM DETAIL
NO SCALE

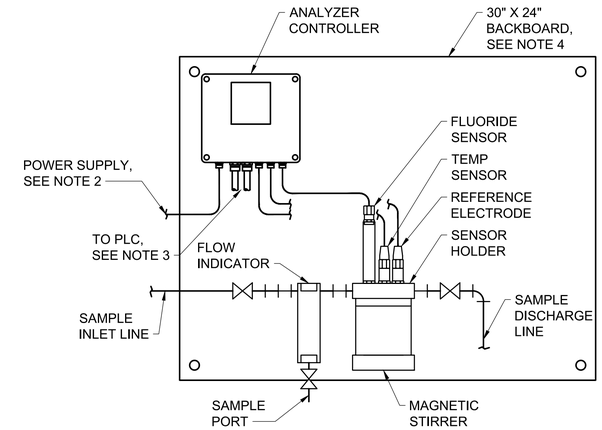


FLUORIDE ANALYZER

NOTES:
1. PROVIDE ALL PIPINGS AND FITTINGS 1/4" SCH80 PVC SOCKET WELD WITH VITON SEALS UNLESS OTHERWISE REQUIRED BY COMPONENTS.
2. PROVIDE 120 VAC POWER SUPPLY TO CONTROLLER. REFERENCE ELECTRICAL POWER PLAN DRAWINGS.
3. PROVIDE FLEXIBLE CONDUITS FROM/TO ANALYZER CONTROLLER FOR CONTROLS WIRING.
4. MOUNT ANALYZER MOUNTING PANEL TO INSTRUMENT PIPE STAND PER MANUFACTURER'S RECOMMENDATIONS. FOLLOW MANUFACTURER'S RECOMMENDED INSTALLATION PRACTICES.

## 3 FLUORIDE ANALYZER SYSTEM DETAIL
NO SCALE

DRAFT 98% PROGRESS DRAWINGS
OCTOBER 2019

| NO. | DATE | APPD | REVISION |
|---|---|---|---|

Waukesha Water Utility
SERVING WAUKESHA SINCE 1886

GREELEY AND HANSEN
741 N. GRAND AVE, SUITE 308
WAUKESHA, WI 53186

GREAT WATER ALLIANCE™

CONTRACT PACKAGE 3: BOOSTER PUMPING STATION AND WATER SUPPLY CONTROL BUILDING

DETAILS

APPROVED

SEAL AFFIXED
MONTH / DAY / YEAR

OCTOBER 2019

JOB NO.: 15310

| | | | |
|---|---|---|---|
| DESGN | LAM | CHCK | THP |
| APPRV | AJM | DRWN | TSM |

SCALE: NO SCALE

DRAWING NUMBER

AN4

SHEET 46 OF 184 REV 0

BAR MEASURE 1" ON FULLSIZE SHEETS
10/02/2019 10:44:11 AM
FILE: \\GH-DATA01\CLIENT02\15310-WAUKESHA GREAT LAKES WATER SUPPLY PM-CM\21 CADD\21.05 WORKING DWGS\CONTRACT PACKAGE 3 - BPSF\GLWSP-P3-BPSF-AN04.DWG

BAR MEASURE 1" ON FULLSIZE SHEETS

06/27/2019 6:51:16 PM

FILE: \\GH-DATA01\CLIENT02\15310-WAUKESHA GREAT LAKES WATER SUPPLY PM-CM\21 CADD\21.05 WORKING DWGS\CONTRACT PACKAGE 3 - BPSF\GLWSP-P3-BPSF-AN05.DWG

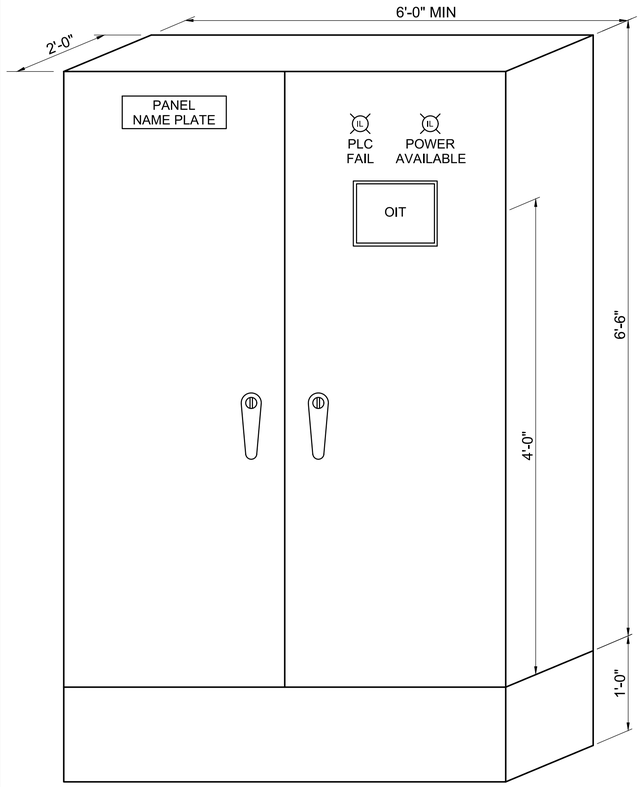


PANEL DOOR LAYOUT FRONT ELEVATION
NOT TO SCALE

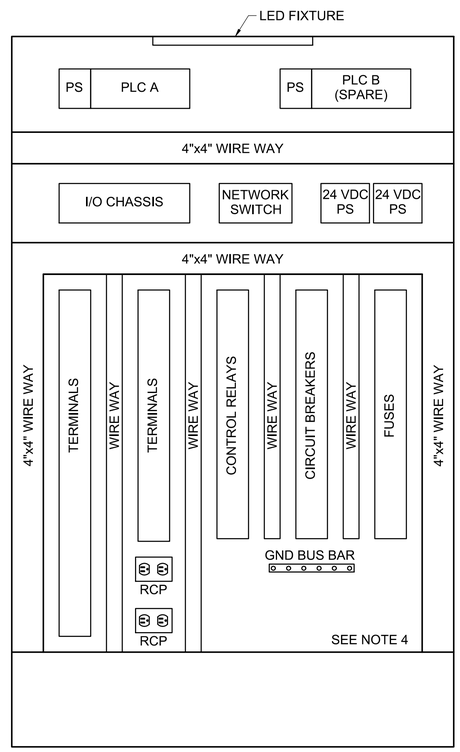


SUBPLATE LAYOUT FRONT ELEVATION
NO SCALE

1 PLC PANEL DETAILS
AS SHOWN

NOTES:

1. PANEL LAYOUT SHOWN IS CONCEPTUAL. CONTRACTOR SHALL BE RESPONSIBLE FOR SIZING AND FURNISHING PANEL MEETING REQUIREMENTS OF SPECIFICATION 409513 (PROCESS CONTROL SYSTEM PANEL ENCLOSURES AND EQUIPMENT), OTHER APPLICABLE PROJECT SPECIFICATIONS AS WELL AS APPLICABLE UL AND NEC REQUIREMENTS.
2. VDC AND VAC CABLES SHALL BE ROUTED IN SEPARATE WIRE WAYS.
3. PROVIDE UL AND NFPA REQUIRED LABELS.
4. PROVIDE PANEL MOUNTED UNINTERRUPTABLE POWER SUPPLY (UPS) FOR THE WSCB PLC PANEL.
5. FOR PLC BPS, INSTALL RESERVOIR DIGITAL LEVEL INDICATORS ON THE DOOR OF THE PLC CONTROL PANEL.

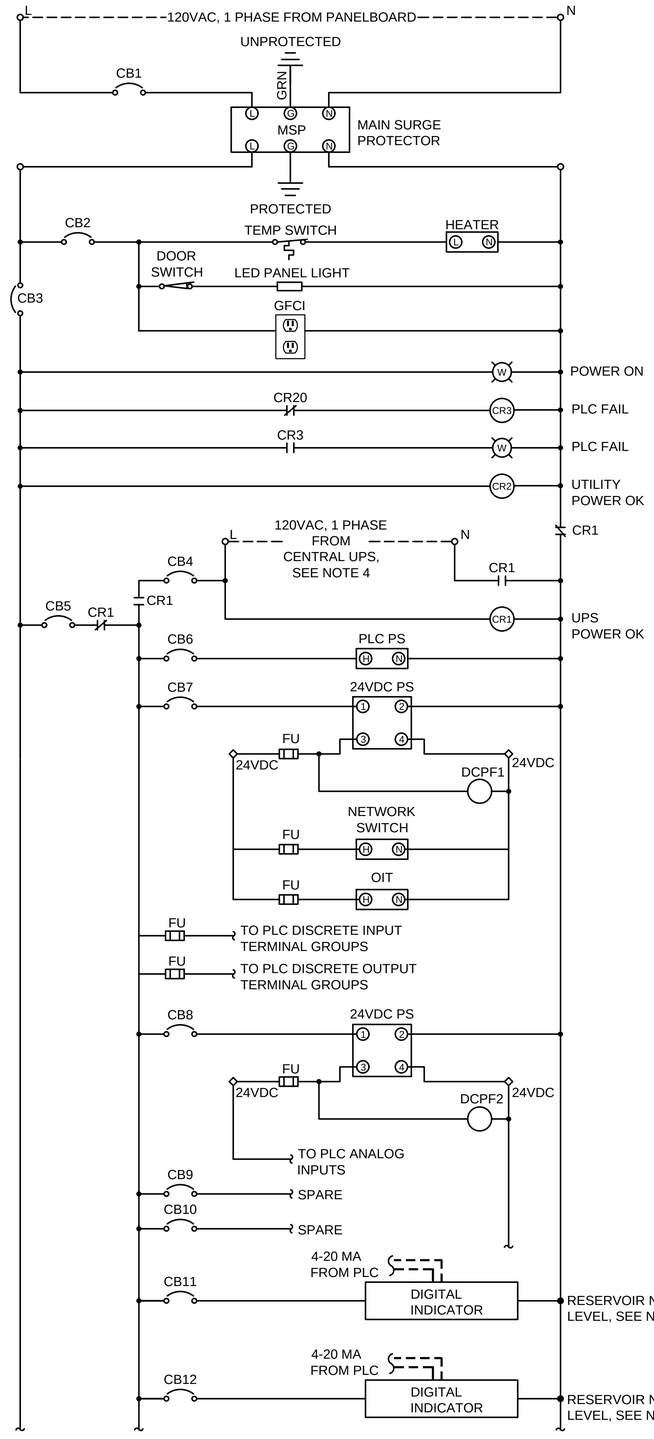


2 PLC PANEL PARTIAL WIRING DIAGRAM
NO SCALE

DRAFT 98% PROGRESS DRAWINGS
OCTOBER 2019

| NO. | DATE | APPD | REVISION |
|---|---|---|---|

Waukesha Water Utility
SERVING WAUKESHA SINCE 1886

GREELEY AND HANSEN
741 N. GRAND AVE, SUITE 308
WAUKESHA, WI 53186

GREAT WATER ALLIANCE™

CONTRACT PACKAGE 3: BOOSTER PUMPING STATION AND WATER SUPPLY CONTROL BUILDING

PLC PANEL DETAILS

APPROVED

SEAL AFFIXED
MONTH / DAY / YEAR

OCTOBER 2019

JOB NO.: 15310

| | | | |
|---|---|---|---|
| DESGN | RV | CHCK | THP |
| APPRV | THP | DRWN | LAN |
| SCALE: | AS SHOWN | | |

DRAWING NUMBER

AN5

SHEET 47 OF 184 | REV 0

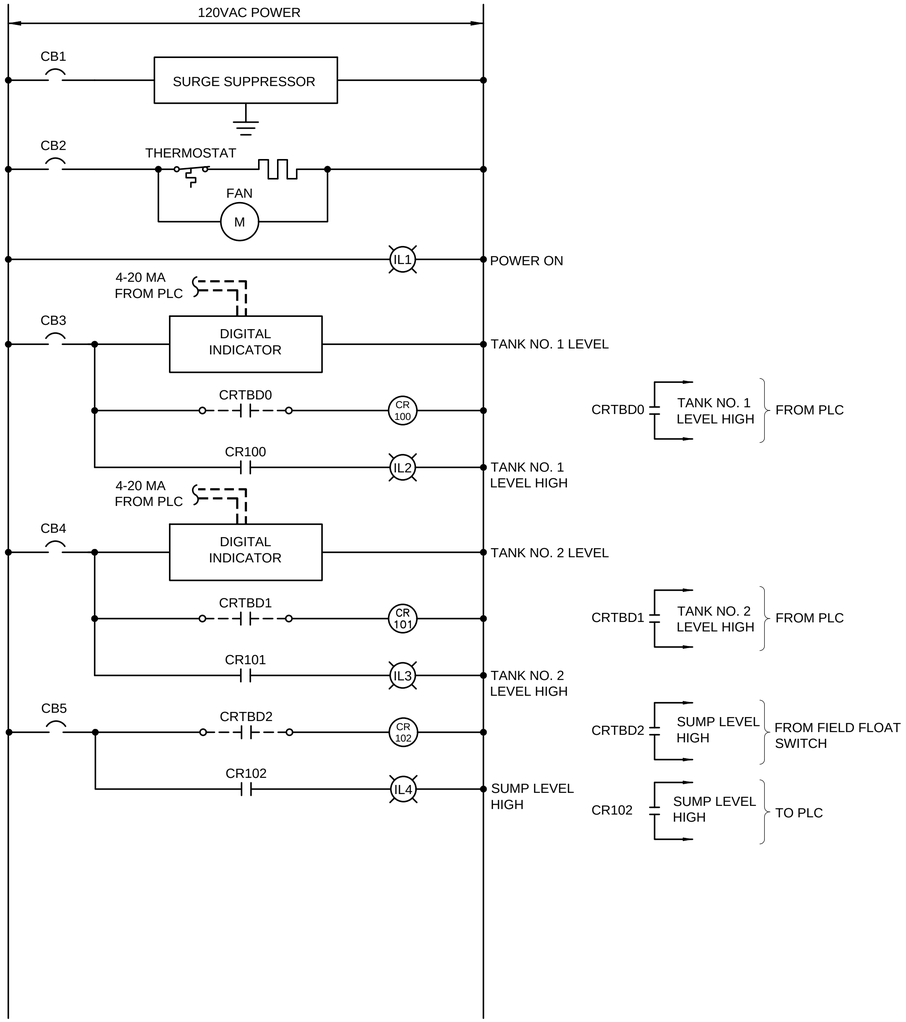


1 TYPICAL PANEL WIRING DIAGRAM
NO SCALE

| NO. | LETTERING (INCH) | NAMEPLATE TEXT |
|---|---|---|
| NP1 | 1/2 | SODIUM HYPOCHLORITE TANK FILL PANEL |
| NP2 | 3/8 | WARNING–ORANGE WIRING NOT DE–ENERGIZED BY PANEL CIRCUIT BREAKERS |
| NP3 | 3/8 | SODIUM HYPOCHLORITE TANK NO. 1 |
| NP4 | 3/8 | SODIUM HYPOCHLORITE TANK NO. 2 |

| LIGHT NO. | LENS COLOR | TYPE | NAMEPLATE TEXT |
|---|---|---|---|
| IL1 | WHITE | LED PUSH TO TEST | POWER ON |
| IL2 | RED | LED PUSH TO TEST | SODIUM HYPOCHLORITE TANK NO. 1 LEVEL HIGH |
| IL3 | RED | LED PUSH TO TEST | SODIUM HYPOCHLORITE TANK NO. 2 LEVEL HIGH |
| IL4 | RED | LED PUSH TO TEST | SUMP LEVEL HIGH |

| PUSHBUTTON / HANDSWITCH NO. | TYPE | COLOR | LEGEND PLATE TEXT |
|---|---|---|---|
| | | | |

| INDICATOR NO. | RANGE | INSTRUMENT TAG NO | DESCRIPTION |
|---|---|---|---|
| ID1 | | LI-3611 | SODIUM HYPOCHLORITE TANK NO. 1 LEVEL |
| ID2 | | LI-3612 | SODIUM HYPOCHLORITE TANK NO. 2 LEVEL |

3 SODIUM HYPOCHLORITE FILL PANEL SCHEDULE

| NO. | LETTERING (INCH) | NAMEPLATE TEXT |
|---|---|---|
| NP1 | 1/2 | LIQUID AMMONIUM SULFATE TANK FILL PANEL |
| NP2 | 3/8 | WARNING–ORANGE WIRING NOT DE–ENERGIZED BY PANEL CIRCUIT BREAKERS |
| NP3 | 3/8 | LIQUID AMMONIUM SULFATE TANK NO. 1 |
| NP4 | 3/8 | LIQUID AMMONIUM SULFATE TANK NO. 2 |

| LIGHT NO. | LENS COLOR | TYPE | NAMEPLATE TEXT |
|---|---|---|---|
| IL1 | WHITE | LED PUSH TO TEST | POWER ON |
| IL2 | RED | LED PUSH TO TEST | LIQUID AMMONIUM SULFATE TANK NO. 1 LEVEL HIGH |
| IL3 | RED | LED PUSH TO TEST | LIQUID AMMONIUM SULFATE TANK NO. 2 LEVEL HIGH |
| IL4 | RED | LED PUSH TO TEST | SUMP LEVEL HIGH |

| PUSHBUTTON / HANDSWITCH NO. | TYPE | COLOR | LEGEND PLATE TEXT |
|---|---|---|---|
| | | | |

| INDICATOR NO. | RANGE | INSTRUMENT TAG NO | DESCRIPTION |
|---|---|---|---|
| ID1 | | LI-3621 | LIQUID AMMONIUM SULFATE TANK NO. 1 LEVEL |
| ID2 | | LI-3622 | LIQUID AMMONIUM SULFATE TANK NO. 2 LEVEL |

4 LIQUID AMMONIUM SULFATE FILL PANEL SCHEDULE

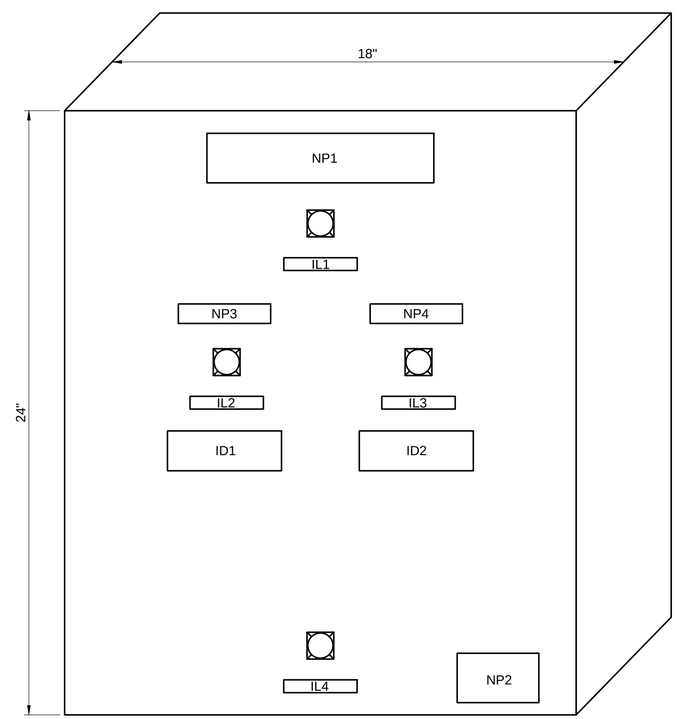


2 TYPICAL FILL PANEL DETAIL
NOT TO SCALE

PANEL NOTES:

1. PANEL LAYOUT SHOWN IS CONCEPTUAL. CONTRACTOR SHALL BE RESPONSIBLE FOR SIZING AND FURNISHING PANEL MEETING REQUIREMENTS OF SPECIFICATION 40 95 13 - PROCESS CONTROL SYSTEM PANEL ENCLOSURES AND EQUIPMENT, OTHER APPLICABLE PROJECT SPECIFICATIONS AS WELL AS APPLICABLE UL AND NEC REQUIREMENTS.
2. VDC AND VAC CABLES SHALL BE ROUTED IN SEPARATE WIRE WAYS.
3. FURNISH NEMA 4X FIBERGLASS LOCKABLE ENCLOSURE WITH HANDLE.
4. PANEL TO BE RAIL OR WALL MOUNTED. REFER TO CONTRACT DRAWINGS.
5. FOR OUTDOOR PANELS, PROVIDE RAIN/SUNSHIELD ON TOP AND SIDES OF ENCLOSURE.
6. MINIMUM DIMENSIONS SPECIFIED.

DRAFT 98% PROGRESS DRAWINGS
OCTOBER 2019

| NO. | DATE | APPD | REVISION |
|---|---|---|---|
| | | | |

Waukesha Water Utility
SERVING WAUKESHA SINCE 1886

GREELEY AND HANSEN
741 N. GRAND AVE, SUITE 308
WAUKESHA, WI 53186

GREAT WATER ALLIANCE™

CONTRACT PACKAGE 3: BOOSTER PUMPING STATION AND WATER SUPPLY CONTROL BUILDING

CHEMICAL FEED - FILL TANK PANEL

APPROVED

SEAL AFFIXED
MONTH / DAY / YEAR

OCTOBER 2019

| JOB NO.: 15310 | | | |
|---|---|---|---|
| DESGN | RV | CHCK | THP |
| APPRV | THP | DRWN | LAN |
| SCALE: | AS SHOWN | | |

DRAWING NUMBER

AN6

SHEET 48 OF 184 REV 0

BAR MEASURE 1" ON FULLSIZE SHEETS
06/27/2019 6:51:18 PM
FILE: \\GH-DATA01\CLIENT02\15310-WAUKESHA GREAT LAKES WATER SUPPLY PM-CM\21 CADD\21.05 WORKING DWGS\CONTRACT PACKAGE 3 - BPSF\GLWSP-P3-BPSF-AN06.DWG

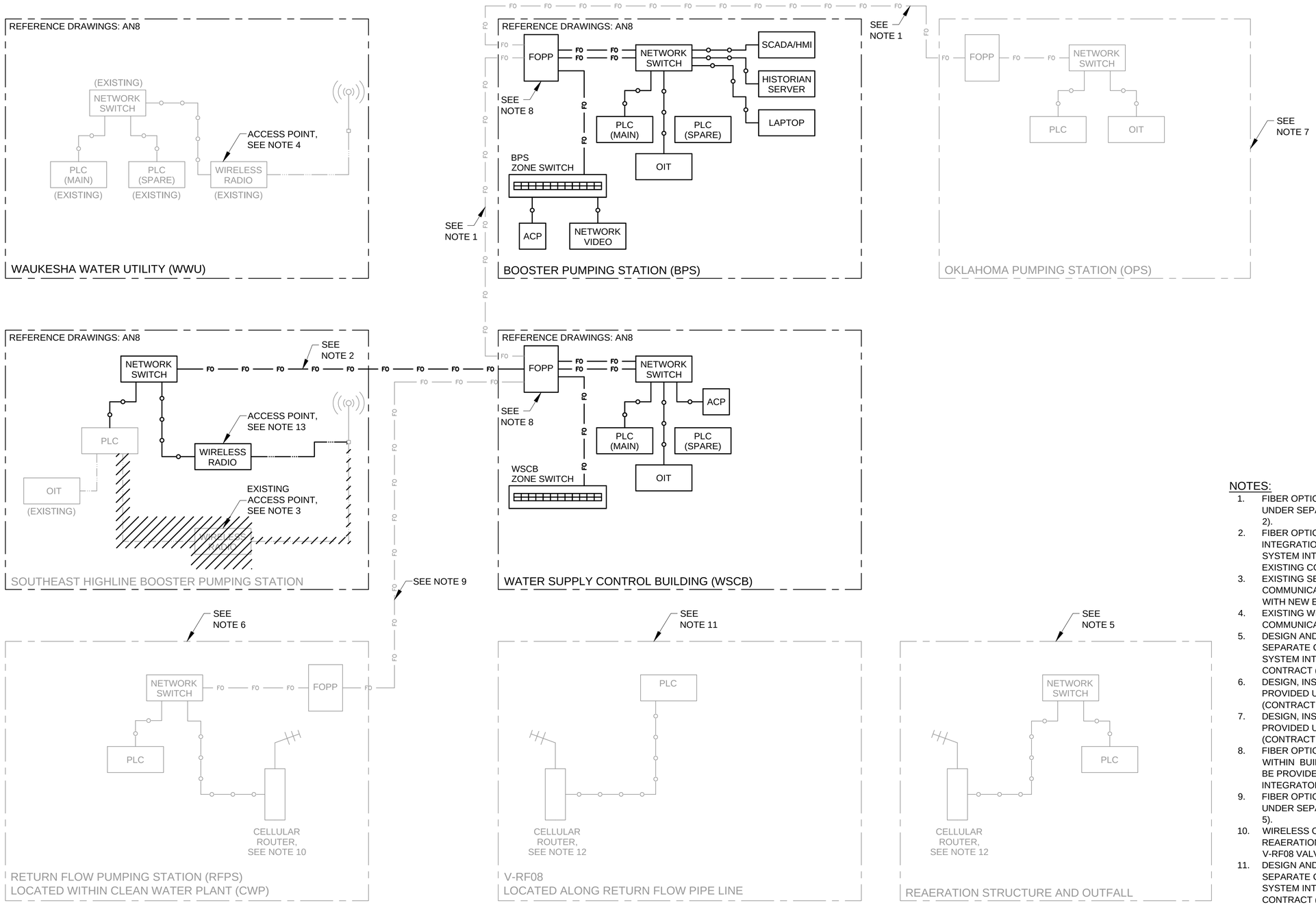


## CONTROL NETWORK BLOCK DIAGRAM

NO SCALE

NOTES:

1. FIBER OPTIC SUPPLY AND INSTALLATION PROVIDED UNDER SEPARATE CONTRACT (CONTRACT PACKAGE 2).
2. FIBER OPTIC SUPPLY, INSTALLATION, AND INTEGRATION PROVIDED BY CONTRACT PACKAGE 3 SYSTEM INTEGRATOR. CONNECT AND INTEGRATE TO EXISTING CONTROL NETWORK.
3. EXISTING SERIAL PORT WIRELESS RADIO NETWORK COMMUNICATION TO HUNTER TOWER. REPLACE WITH NEW ETHERNET CAPABLE RADIO CARD.
4. EXISTING WIRELESS RADIO NETWORK COMMUNICATION FROM HILLCREST RESERVOIR.
5. DESIGN AND INSTALLATION PROVIDED UNDER SEPARATE CONTRACT (CONTRACT PACKAGE 6). SYSTEM INTEGRATION PROVIDED UNDER SEPARATE CONTRACT (CONTRACT PACKAGE 4).
6. DESIGN, INSTALLATION, AND SYSTEM INTEGRATION PROVIDED UNDER SEPARATE CONTRACT (CONTRACT PACKAGE 4).
7. DESIGN, INSTALLATION, AND SYSTEM INTEGRATION PROVIDED UNDER SEPARATE CONTRACT (CONTRACT PACKAGE 1).
8. FIBER OPTIC FROM THE POINT OF DEMARCATION WITHIN BUILDING/STRUCTURE TO THE NETWORK TO BE PROVIDED BY CONTRACT PACKAGE 3 SYSTEM INTEGRATOR.
9. FIBER OPTIC SUPPLY AND INSTALLATION PROVIDED UNDER SEPARATE CONTRACT (CONTRACT PACKAGE 5).
10. WIRELESS CELLULAR COMMUNICATION FROM REAERATION STRUCTURE/OUTFALL AND FROM V-RF08 VALVE VAULT.
11. DESIGN AND INSTALLATION PROVIDED UNDER SEPARATE CONTRACT (CONTRACT PACKAGE 5). SYSTEM INTEGRATION PROVIDED UNDER SEPARATE CONTRACT (CONTRACT PACKAGE 4).
12. WIRELESS CELLULAR COMMUNICATION TO RFPS.
13. NEW ETHERNET PORT WIRELESS RADIO NETWORK COMMUNICATION TO HUNTER TOWER.

LEGEND:

- FIBER OPTIC CABLE UNDER CONTRACT PACKAGE 3
- FIBER OPTIC CABLE UNDER SEPARATE CONTRACT PACKAGE
- COPPER CABLE (CAT6) UNDER CONTRACT PACKAGE 3
- COPPER CABLE (CAT6) EXISTING OR UNDER SEPARATE CONTRACT PACKAGE
- WORK UNDER SEPARATE CONTRACT PACKAGE
- SERIAL CABLE, EXISTING
- COAXIAL CABLE UNDER CONTRACT PACKAGE 3
- COAXIAL CABLE, EXISTING

DRAFT 98% PROGRESS DRAWINGS
OCTOBER 2019

| NO. | DATE | APPD | REVISION |
|---|---|---|---|

Waukesha Water Utility
SERVING WAUKESHA SINCE 1886

GREELEY AND HANSEN
741 N. GRAND AVE., SUITE 308
WAUKESHA, WI 53186

GREAT WATER ALLIANCE™

CONTRACT PACKAGE 3: BOOSTER PUMPING STATION AND WATER SUPPLY CONTROL BUILDING

CONTROL NETWORK BLOCK DIAGRAM

APPROVED

SEAL AFFIXED
MONTH / DAY / YEAR

OCTOBER 2019

JOB NO.: 15310

| DESGN | RV | CHCK | THP |
|---|---|---|---|
| APPRV | THP | DRWN | LAN |

SCALE: NO SCALE

DRAWING NUMBER

AN7

SHEET 49 OF 184 REV 0

FILE: \\GH-DATA01\CLIENT02\15310-WAUKESHA GREAT LAKES WATER SUPPLY PM-CM\21 CADD\21.05 WORKING DWGS\CONTRACT PACKAGE 3 - BPSF\GLWSP-P3-BPSF-AN07.DWG

07/09/2019 5:46:41 PM

BAR MEASURE 1" ON FULLSIZE SHEETS

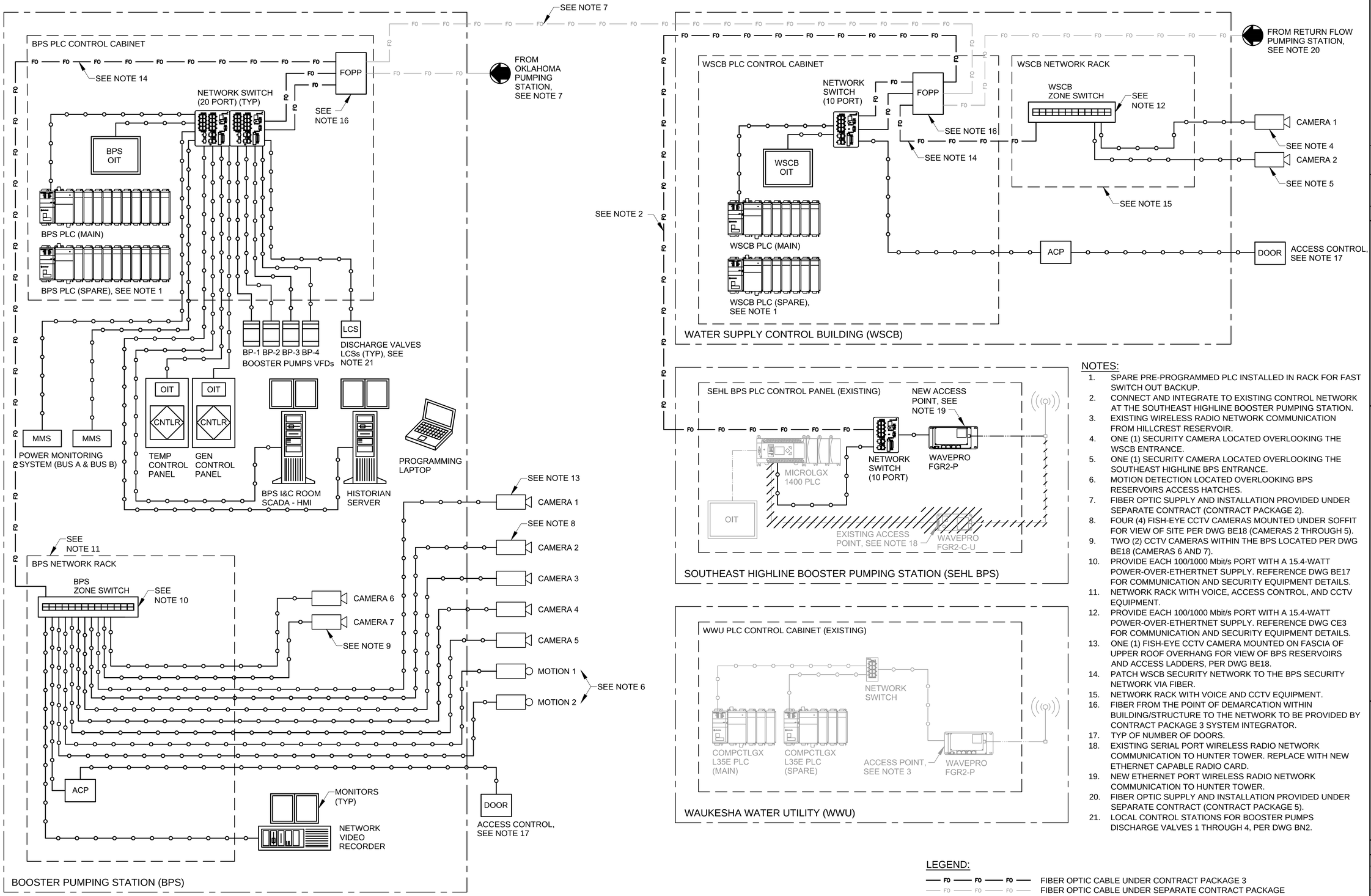


## NOTES:

1. SPARE PRE-PROGRAMMED PLC INSTALLED IN RACK FOR FAST SWITCH OUT BACKUP.
2. CONNECT AND INTEGRATE TO EXISTING CONTROL NETWORK AT THE SOUTHEAST HIGHLINE BOOSTER PUMPING STATION.
3. EXISTING WIRELESS RADIO NETWORK COMMUNICATION FROM HILLCREST RESERVOIR.
4. ONE (1) SECURITY CAMERA LOCATED OVERLOOKING THE WSCB ENTRANCE.
5. ONE (1) SECURITY CAMERA LOCATED OVERLOOKING THE SOUTHEAST HIGHLINE BPS ENTRANCE.
6. MOTION DETECTION LOCATED OVERLOOKING BPS RESERVOIRS ACCESS HATCHES.
7. FIBER OPTIC SUPPLY AND INSTALLATION PROVIDED UNDER SEPARATE CONTRACT (CONTRACT PACKAGE 2).
8. FOUR (4) FISH-EYE CCTV CAMERAS MOUNTED UNDER SOFFIT FOR VIEW OF SITE PER DWG BE18 (CAMERAS 2 THROUGH 5).
9. TWO (2) CCTV CAMERAS WITHIN THE BPS LOCATED PER DWG BE18 (CAMERAS 6 AND 7).
10. PROVIDE EACH 100/1000 Mbit/s PORT WITH A 15.4-WATT POWER-OVER-ETHERTNET SUPPLY. REFERENCE DWG BE17 FOR COMMUNICATION AND SECURITY EQUIPMENT DETAILS.
11. NETWORK RACK WITH VOICE, ACCESS CONTROL, AND CCTV EQUIPMENT.
12. PROVIDE EACH 100/1000 Mbit/s PORT WITH A 15.4-WATT POWER-OVER-ETHERTNET SUPPLY. REFERENCE DWG CE3 FOR COMMUNICATION AND SECURITY EQUIPMENT DETAILS.
13. ONE (1) FISH-EYE CCTV CAMERA MOUNTED ON FASCIA OF UPPER ROOF OVERHANG FOR VIEW OF BPS RESERVOIRS AND ACCESS LADDERS, PER DWG BE18.
14. PATCH WSCB SECURITY NETWORK TO THE BPS SECURITY NETWORK VIA FIBER.
15. NETWORK RACK WITH VOICE AND CCTV EQUIPMENT.
16. FIBER FROM THE POINT OF DEMARCATION WITHIN BUILDING/STRUCTURE TO THE NETWORK TO BE PROVIDED BY CONTRACT PACKAGE 3 SYSTEM INTEGRATOR.
17. TYP OF NUMBER OF DOORS.
18. EXISTING SERIAL PORT WIRELESS RADIO NETWORK COMMUNICATION TO HUNTER TOWER. REPLACE WITH NEW ETHERNET CAPABLE RADIO CARD.
19. NEW ETHERNET PORT WIRELESS RADIO NETWORK COMMUNICATION TO HUNTER TOWER.
20. FIBER OPTIC SUPPLY AND INSTALLATION PROVIDED UNDER SEPARATE CONTRACT (CONTRACT PACKAGE 5).
21. LOCAL CONTROL STATIONS FOR BOOSTER PUMPS DISCHARGE VALVES 1 THROUGH 4, PER DWG BN2.

## LEGEND:

- FIBER OPTIC CABLE UNDER CONTRACT PACKAGE 3
- FIBER OPTIC CABLE UNDER SEPARATE CONTRACT PACKAGE
- COPPER CABLE (CAT6) UNDER CONTRACT PACKAGE 3
- COPPER CABLE (CAT6) EXISTING OR UNDER SEPARATE CONTRACT PACKAGE
- SERIAL CABLE, EXISTING
- COAXIAL CABLE UNDER CONTRACT PACKAGE 3
- COAXIAL CABLE, EXISTING

DRAFT 98% PROGRESS DRAWINGS
OCTOBER 2019

# CONTROL NETWORK ARCHITECTURE DIAGRAM

NO SCALE

| NO. | DATE | APPD | REVISION |
|---|---|---|---|

Waukesha Water Utility
SERVING WAUKESHA SINCE 1886

GREELEY AND HANSEN
741 N. GRAND AVE, SUITE 308
WAUKESHA, WI 53186

GREAT WATER ALLIANCE™

CONTRACT PACKAGE 3: BOOSTER PUMPING STATION AND WATER SUPPLY CONTROL BUILDING

CONTROL NETWORK ARCHITECTURE DIAGRAM

APPROVED

SEAL AFFIXED
MONTH / DAY / YEAR

OCTOBER 2019

| | | | |
|---|---|---|---|
| JOB NO.: 15310 | | | |
| DESGN | RV | CHCK | THP |
| APPRV | THP | DRWN | LAN |
| SCALE: | NO SCALE | | |

DRAWING NUMBER

AN8

SHEET 50 OF 184 REV 0

FILE: \\GH-DATA01\CLIENT02\15310-WAUKESHA GREAT LAKES WATER SUPPLY PM-CM\21 CADD\21.05 WORKING DWGS\CONTRACT PACKAGE 3 - BPS\FIGLWSP-P3-BPSF-AN08.DWG

06/27/2019 6:45:44 PM

BAR MEASURE 1" ON FULLSIZE SHEETS

BAR MEASURE 1" ON FULLSIZE SHEETS



FILE: \\GH-DATA01\CLIENT02\15310-WAUKESHA GREAT LAKES WATER SUPPLY PM-CM\21 CADD\21.05 WORKING DWGS\CONTRACT PACKAGE 3 - BPSF\GLWSP-P3-BPSF-BC01.DWG

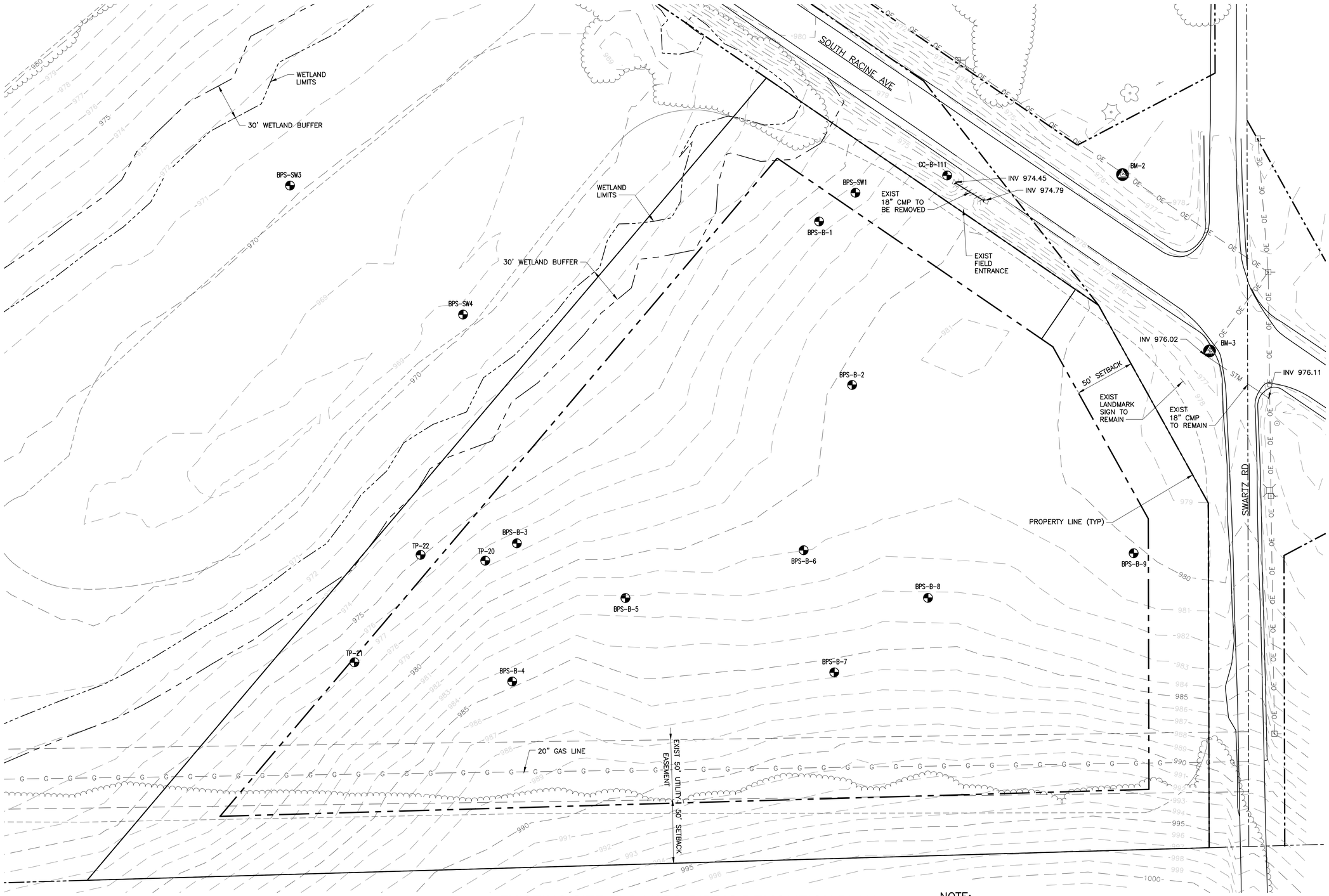


## EXISTING SITE AND YARD PIPING DEMOLITION PLAN

SCALE: 1" = 40'

NOTE:

1. THIS DRAWING SHOWS APPROXIMATE LOCATIONS OF SOIL BORINGS FOR GEOTECHNICAL INFORMATION SEE REFERENCE DOCUMENT "6-120 D2 GEOTECHNICAL REPORT, CONTRACT PACKAGE 3, BOOSTER PUMPING STATION, NEW BERLIN, WI" INCLUDED AS AN EXHIBIT TO THE CONTRACT DOCUMENTS.

DRAFT 98% PROGRESS DRAWINGS

OCTOBER 2019

40 0 40 80 FT 1"=40'

| NO. | DATE | APPD | REVISION |
|---|---|---|---|

Waukesha Water Utility
SERVING WAUKESHA SINCE 1886

GREELEY AND HANSEN
741 N. GRAND AVE, SUITE 308
WAUKESHA, WI 53186

GREAT WATER ALLIANCE™

CONTRACT PACKAGE 3: BOOSTER PUMPING STATION AND WATER SUPPLY CONTROL BUILDING

EXISTING SITE AND YARD PIPING DEMOLITION PLAN

APPROVED

SEAL AFFIXED
MONTH / DAY / YEAR

OCTOBER 2019

| | | | |
|---|---|---|---|
| JOB NO.: 15310 | | | |
| DESGN | LAM | CHCK | RMC |
| APPRV | AJM | DRWN | TSM |
| SCALE: | 1" = 40' | | |

DRAWING NUMBER

BC1

SHEET 51 OF 184 REV 0

BAR MEASURE 1" ON FULLSIZE SHEETS

10/02/2019 10:51:16 AM

FILE: \\GH-DATA01\CLIENT02\15310-WAUKESHA GREAT LAKES WATER SUPPLY PM-CM\21 CADD\21.05 WORKING DWGS\CONTRACT PACKAGE 3 - BPSF\GLWSP-P3-BPSF-BC02.DWG

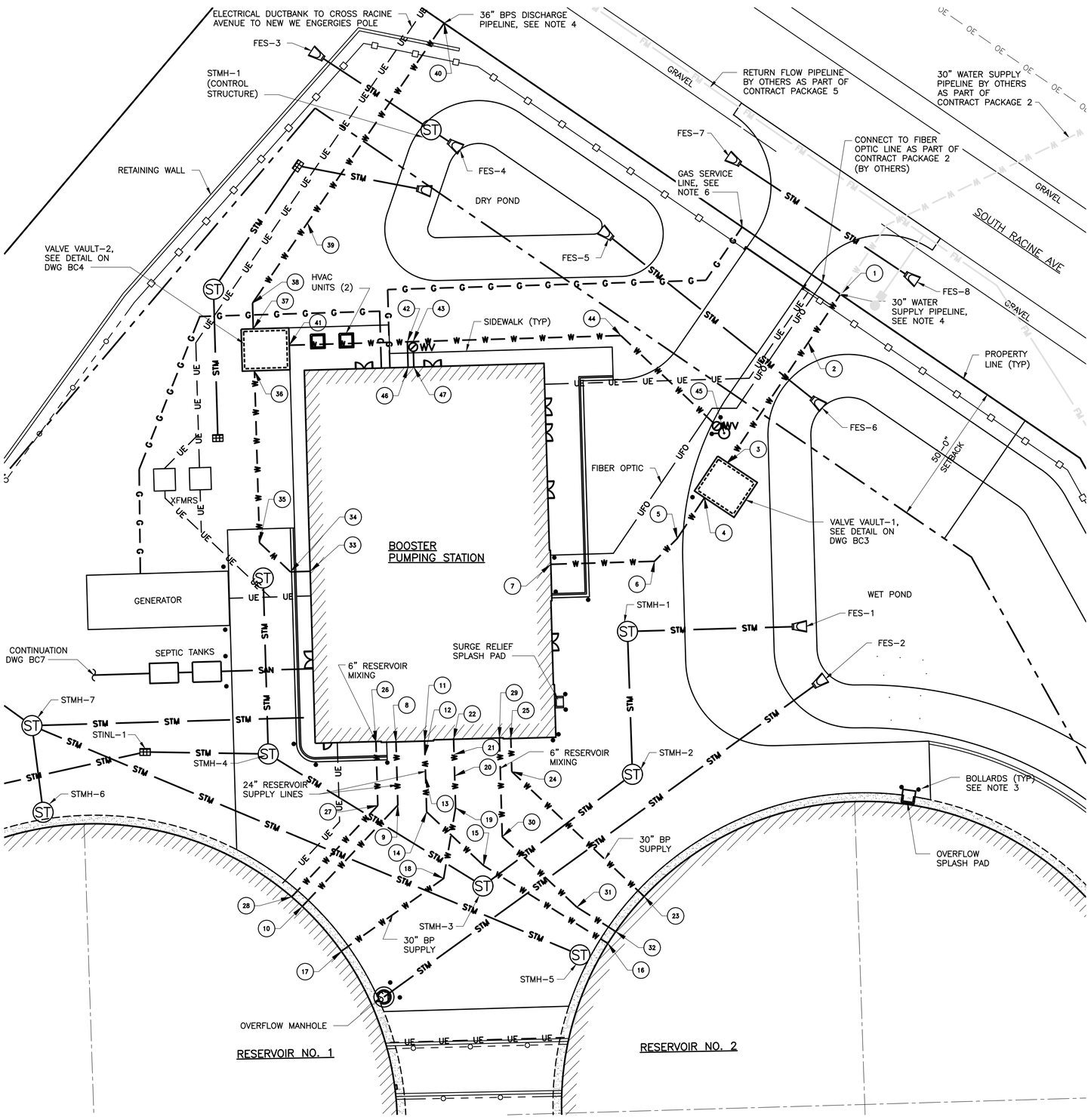


## KEYMAP

## YARD PIPING SCHEDULE

| PT ID | DESCRIPTION | NORTHING | EASTING | DIAMETER |
|---|---|---|---|---|
| 1 | WATER SUPPLY PIPELINE – PLUG | 360806.79 | 2488862.80 | 30" |
| 2 | WATER SUPPLY PIPELINE – PIPE DEFLECTED ALONG JOINTS | -- | -- | 30" |
| 3 | WATER SUPPLY PIPELINE AT VALVE VAULT-1 | 360747.82 | 2488823.39 | 30" |
| 4 | WATER SUPPLY PIPELINE AT VALVE VAULT-1 | 360735.62 | 2488815.25 | 30" |
| 5 | WATER SUPPLY PIPELINE – 11.25 DEG ELBOW, HORIZ | 360721.30 | 2488805.68 | 30" |
| 6 | WATER SUPPLY PIPELINE – 45 DEG ELBOW, HORIZ | 360713.37 | 2488797.75 | 30" |
| 7 | WATER SUPPLY PIPELINE AT BPS | 360712.32 | 2488761.51 | 30" |
| 8 | RESERVOIR NO. 1 SUPPLY LINE AT BPS | 360650.21 | 2488707.38 | 24" |
| 9 | RESERVOIR NO. 1 SUPPLY LINE – 45 DEG ELBOW, HORIZ | 360628.08 | 2488708.03 | 24" |
| 10 | RESERVOIR NO. 1 SUPPLY LINE AT RESERVOIR NO. 1 | 360592.68 | 2488674.63 | 24" |
| 11 | RESERVOIR NO. 2 SUPPLY LINE AT BPS | 360650.50 | 2488717.38 | 24" |
| 12 | RESERVOIR NO. 2 SUPPLY LINE – 11.25 DEG ELBOW, VERT | 360645.51 | 2488717.52 | 24" |
| 13 | RESERVOIR NO. 2 SUPPLY LINE – 11.25 DEG ELBOW, VERT | 360638.01 | 2488717.74 | 24" |
| 14 | RESERVOIR NO. 2 SUPPLY LINE – 45 DEG ELBOW, HORIZ | 360625.74 | 2488718.10 | 24" |
| 15 | RESERVOIR NO. 2 SUPPLY LINE – 11.25 DEG ELBOW, HORIZ | 360606.97 | 2488737.99 | 24" |
| 16 | RESERVOIR NO. 2 SUPPLY LINE AT RESERVOIR NO. 2 | 360579.72 | 2488781.46 | 24" |
| 17 | BP SUPPLY LINE AT RESERVOIR NO. 1 | 360577.01 | 2488688.27 | 30" |
| 18 | BP SUPPLY LINE FROM RESERVOIR NO. 1 – 45 DEG ELBOW, HORIZ | 360602.45 | 2488724.05 | 30" |
| 19 | BP SUPPLY LINE FROM RESERVOIR NO. 1 – 11.25 DEG ELBOW, HORIZ | 360627.16 | 2488728.22 | 30" |
| 20 | BP SUPPLY LINE FROM RESERVOIR NO. 1 – 11.25 DEG ELBOW, VERT | 360638.30 | 2488727.90 | 30" |
| 21 | BP SUPPLY LINE FROM RESERVOIR NO. 1 – 11.25 DEG ELBOW, VERT | 360645.80 | 2488727.68 | 30" |
| 22 | BP SUPPLY LINE FROM RESERVOIR NO. 1 AT BPS | 360651.13 | 2488727.53 | 30" |
| 23 | BP SUPPLY LINE FROM RESERVOIR NO. 2 AT RESERVOIR NO. 2 | 360596.15 | 2488794.17 | 30" |
| 24 | BP SUPPLY LINE FROM RESERVOIR NO. 2 – 45 DEG ELBOW, HORIZ | 360639.84 | 2488747.87 | 30" |
| 25 | BP SUPPLY LINE FROM RESERVOIR NO. 2 AT BPS | 360651.38 | 2488747.53 | 30" |
| 26 | RESERVOIR MIXING LINE FOR RESERVOIR NO. 1 AT BPS | 360650.34 | 2488700.37 | 6" |
| 27 | RESERVOIR MIXING LINE FOR RESERVOIR NO. 1 – 45 DEG ELBOW, HORIZ | 360627.95 | 2488701.03 | 6" |
| 28 | RESERVOIR MIXING LINE FOR RESERVOIR NO. 1 AT RESERVOIR NO. 1 | 360596.02 | 2488670.91 | 6" |
| 29 | RESERVOIR MIXING LINE FOR RESERVOIR NO. 2 AT BPS | 360651.60 | 2488743.52 | 6" |
| 30 | RESERVOIR MIXING LINE FOR RESERVOIR NO. 2 – 45 DEG ELBOW, HORIZ | 360617.02 | 2488744.53 | 6" |
| 31 | RESERVOIR MIXING LINE FOR RESERVOIR NO. 2 – 11.25 DEG ELBOW, HORIZ | 360592.42 | 2488770.61 | 6" |
| 32 | RESERVOIR MIXING LINE FOR RESERVOIR NO. 2 AT RESERVOIR NO. 2 | 360583.89 | 2488784.21 | 6" |
| 33 | BPS DISCHARGE PIPELINE AT BPS | 360709.86 | 2488677.38 | 30" |
| 34 | BPS DISCHARGE PIPELINE – 45 DEG ELBOW, HORIZ | 360709.66 | 2488670.48 | 30" |
| 35 | BPS DISCHARGE PIPELINE – 45 DEG ELBOW, HORIZ | 360719.87 | 2488659.67 | 30" |
| 36 | BPS DISCHARGE PIPELINE AT VALVE VAULT-2 | 360779.99 | 2488657.91 | 30" |
| 37 | BPS DISCHARGE PIPELINE AT VALVE VAULT-2 | 360794.65 | 2488657.49 | 36" |
| 38 | BPS DISCHARGE PIPELINE – 22.5 DEG ELBOW AND 11.25 DEG ELBOW, HORIZ | 360803.66 | 2488657.22 | 36" |
| 39 | BPS DISCHARGE PIPELINE – PIPE DEFLECTED ALONG JOINTS | -- | -- | 36" |
| 40 | BPS DISCHARGE PIPELINE – PLUG | 360901.60 | 2488724.24 | 36" |
| 41 | HYDRANT SUPPLY LINE AT VALVE VAULT-2 | 360788.93 | 2488670.07 | 12" |
| 42 | HYDRANT SUPPLY LINE – 3" TAP FOR BPS WATER SERVICE | 360790.14 | 2488711.36 | 12" |
| 43 | HYDRANT SUPPLY LINE – 12" X 6" TEE FOR 6" BPS FIRE WATER SERVICE | 360790.20 | 2488713.36 | 12" |
| 44 | HYDRANT SUPPLY LINE – 45 DEG ELBOW, HORIZ | 360792.31 | 2488785.99 | 6" |
| 45 | HYDRANT SUPPLY LINE AT HYDRANT | 360758.18 | 2488822.12 | 6" |
| 46 | 3" BPS WATER SERVICE AT BPS | 360781.22 | 2488711.62 | 3" |
| 47 | 6" BPS FIRE WATER SERVICE AT BPS | 360781.28 | 2488713.62 | 6" |

## NOTES:

1. ADJUST MANHOLE STRUCTURES AND INLETS WITH ADJUSTING RINGS UP TO 1 FOOT.
2. REFER TO ELECTRICAL PLANS IN BE DWGS FOR ELECTRICAL AND FIBER OPTIC UTILITIES.
3. SEE PAVING PLAN AND DETAILS IN AC DWGS.
4. STUB AND PLUG SITE PIPING AT THE PROPERTY LINE FOR CONNECTION WITH CONTRACT PACKAGE 2 BY OTHERS.
5. SEE DWG BC7 FOR STORM SEWER SYSTEM INFORMATION.
6. PROVIDE GAS SERVICE FROM PROPERTY LINE TO WITHIN 5 FEET OF BUILDING. SEE DWG BH5 FOR CONTINUATION. ALL WORK TO BE COORDINATED WITH GAS SERVICE PROVIDER.

DRAFT 98% PROGRESS DRAWINGS
OCTOBER 2019

## NEW YARD PIPING PARTIAL PLAN

SCALE: 1" = 20'

20 0 20 40 FT 1"=20'

| NO. | DATE | APPD | REVISION |
|---|---|---|---|

Waukesha Water Utility
SERVING WAUKESHA SINCE 1886

GREELEY AND HANSEN
741 N. GRAND AVE, SUITE 308
WAUKESHA, WI 53186

GREAT WATER ALLIANCE™

CONTRACT PACKAGE 3: BOOSTER PUMPING STATION AND WATER SUPPLY CONTROL BUILDING

YARD PIPING PARTIAL PLAN

APPROVED

SEAL AFFIXED
MONTH / DAY / YEAR

OCTOBER 2019

JOB NO.: 15310

| DESGN | LAM | CHCK | RMC |
|---|---|---|---|
| APPRV | AJM | DRWN | LG |

SCALE: AS SHOWN

DRAWING NUMBER

BC2

SHEET 52 OF 184 REV 0

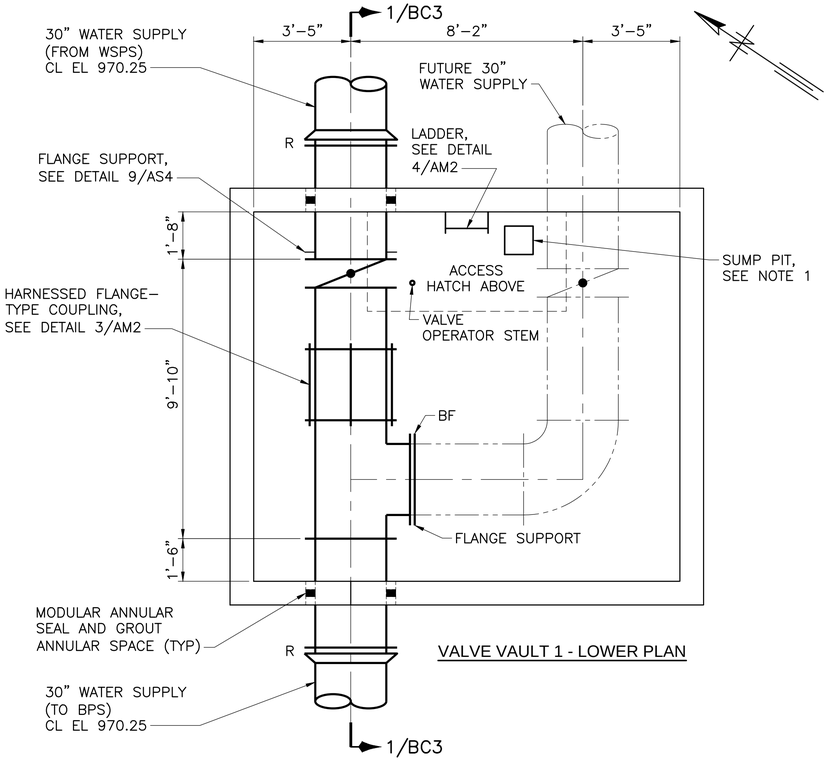


VALVE VAULT 1 - LOWER PLAN

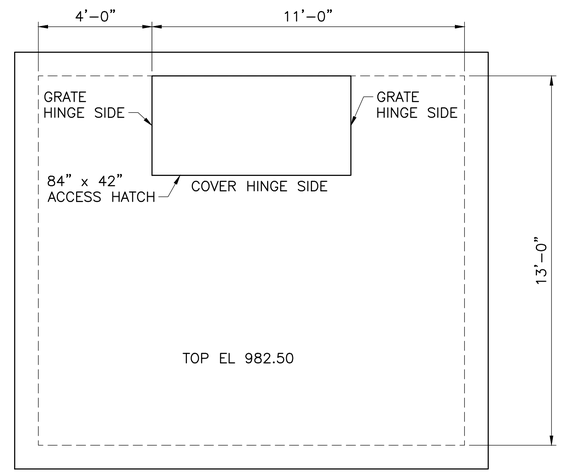


VALVE VAULT 1 - UPPER PLAN

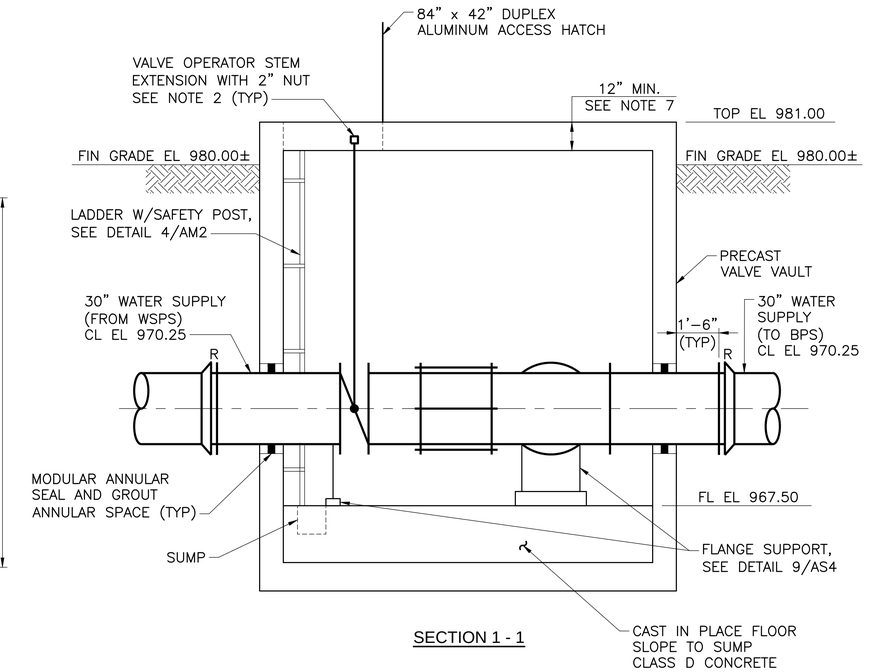


SECTION 1 - 1

## 1 VALVE VAULT 1 DETAILS

SCALE: 3/8" = 1' - 0"

NOTES:

1. ONE FOOT SQUARE BY ONE FOOT DEEP SUMP PIT WITH FIBERGLASS GRATING MOUNTED FLUSH WITH THE CONCRETE FLOOR. EQUIP GRATING WITH A STAINLESS STEEL CABLE ATTACHED TO A STAINLESS STEEL HOOK LOCATED AT THE 84" x 42" ACCESS HATCH OPENING.
2. PROVIDE ONE STEM GUIDE FOR EVERY 10 FEET OF STEM EXTENSION LENGTH OR AS RECOMMENDED BY VALVE MANUFACTURER. SUPPORT STEM GUIDE BY STRUCTURAL STEEL SUPPORT FRAME EITHER BOLTED TO THE VALVE ACTUATOR MOUNTING BRACKET OR ANCHORED TO THE CEILING NEAR THE ACCESS HATCH OPENING.
3. HATCH OPENINGS SHOWN ARE CLEAR SPACE OPENING REQUIRED.
4. CONTRACTOR SHALL VERIFY ALL DIMENSIONS, ELEVATIONS, PIPING LAYOUT AND ORIENTATION.
5. RESTRAINED MECHANICAL JOINTS ARE TO BE USED OUTSIDE OF THE STRUCTURE.
6. ALL BURIED DUCTILE IRON PIPE SHALL BE WRAPPED IN POLYETHYLENE IN CONFORMANCE WITH THE SPECIFICATIONS.
7. MINIMUM THICKNESS OF TOP SLAB TO ACCOMMODATE VALVE OPERATOR STEM AND MOUNTING OF ADJUSTABLE STEM GUIDE.

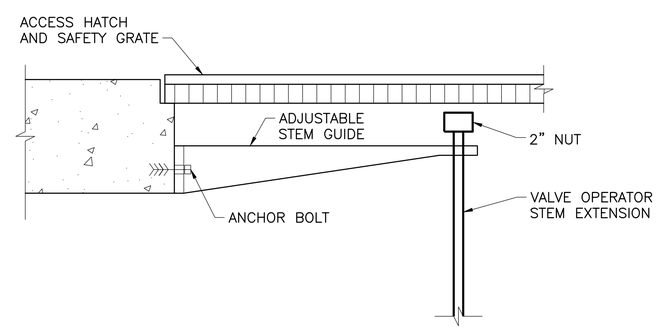


## 2 ADJUSTABLE VALVE OPERATOR STEM GUIDE DETAIL

NO SCALE

DRAFT 98% PROGRESS DRAWINGS

OCTOBER 2019

1 0 1 2 3 4 5 6 7 FT 3/8"=1'-0"

| NO. | DATE | APPD | REVISION |
|---|---|---|---|

Waukesha Water Utility
SERVING WAUKESHA SINCE 1886

GREELEY AND HANSEN
741 N. GRAND AVE, SUITE 308
WAUKESHA, WI 53186

GREAT WATER ALLIANCE™

CONTRACT PACKAGE 3: BOOSTER PUMPING STATION AND WATER SUPPLY CONTROL BUILDING

YARD PIPING VALVE VAULT DETAILS

APPROVED

SEAL AFFIXED
MONTH / DAY / YEAR

OCTOBER 2019

JOB NO.: 15310

| | | | |
|---|---|---|---|
| DESGN | LAM | CHCK | RMC |
| APPRV | AJM | DRWN | TSM |

SCALE: 3/8" = 1'-0"

DRAWING NUMBER

BC3

SHEET 53 OF 184 REV 0

FILE: \\GH-DATA01\CLIENT02\15310-WAUKESHA GREAT LAKES WATER SUPPLY PM-CM\21 CADD\21.05 WORKING DWGS\CONTRACT PACKAGE 3 - BPSF\GLWSP-P3-BPSF-BC03.DWG 10/02/2019 10:51:23 AM
BAR MEASURE 1" ON FULLSIZE SHEETS

BAR MEASURE 1" ON FULLSIZE SHEETS
10/02/2019 10:51:29 AM
FILE: \\GH-DATA01\CLIENT02\15310-WAUKESHA GREAT LAKES WATER SUPPLY PM-CM\21 CADD\21.05 WORKING DWGS\CONTRACT PACKAGE 3 - BPSF\GLWSP-P3-BPSF-BC04.DWG

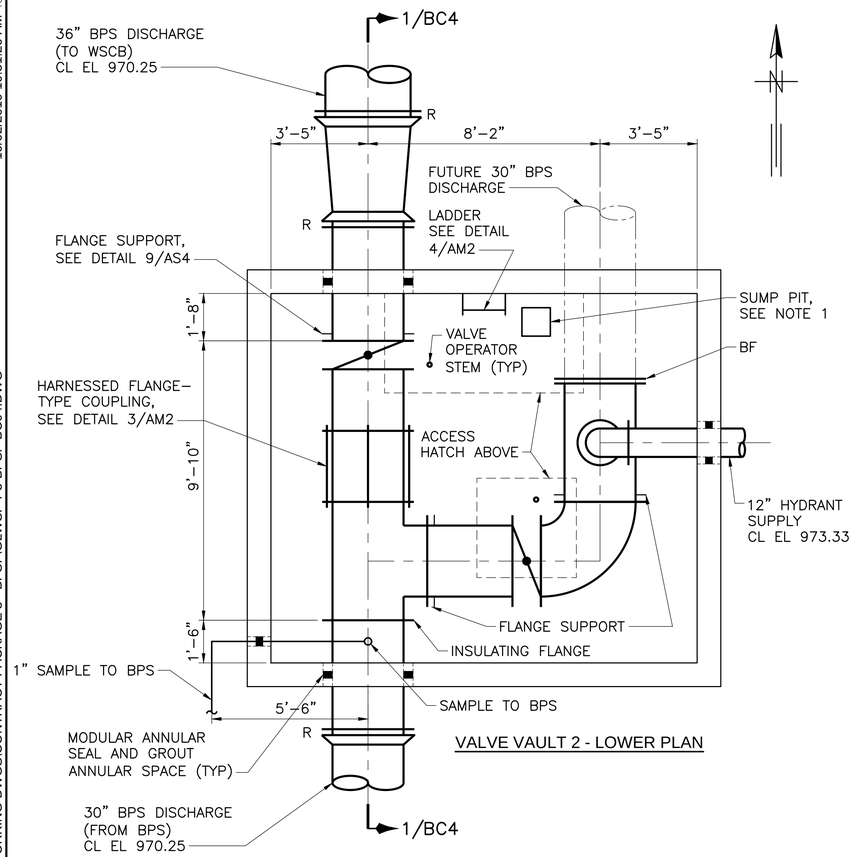


VALVE VAULT 2 - LOWER PLAN

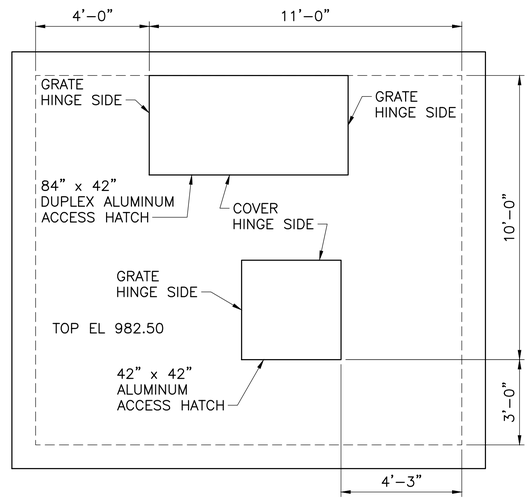


VALVE VAULT 2 - UPPER PLAN

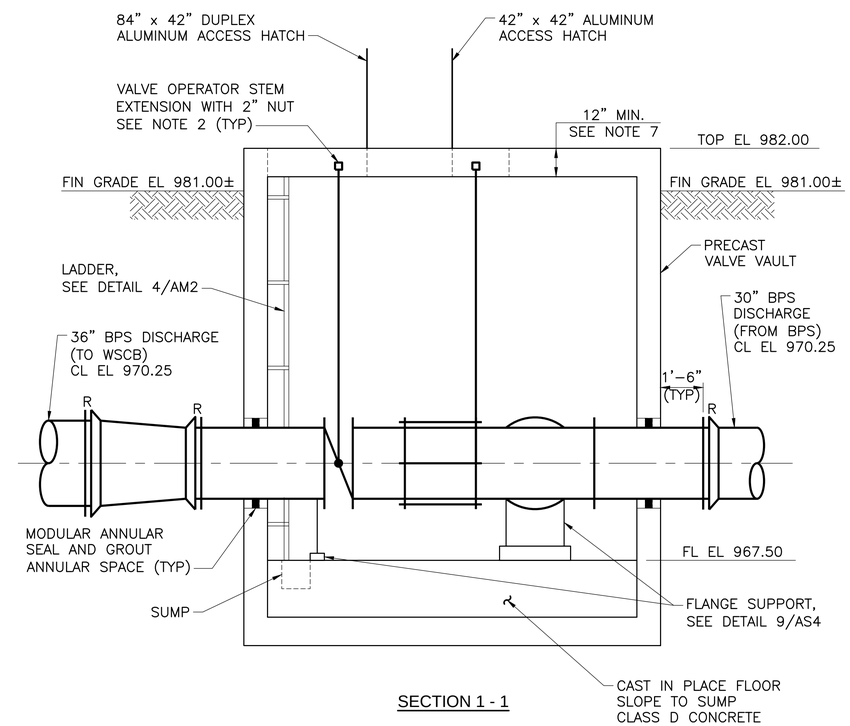


SECTION 1 - 1

## 1 VALVE VAULT 2 DETAILS

SCALE: 3/8" = 1' - 0"

NOTES:

1. ONE FOOT SQUARE BY ONE FOOT DEEP SUMP PIT WITH FIBERGLASS GRATING MOUNTED FLUSH WITH THE CONCRETE FLOOR. EQUIP GRATING WITH A STAINLESS STEEL CABLE ATTACHED TO A STAINLESS STEEL HOOK LOCATED AT THE 84" x 42" ACCESS HATCH OPENING.
2. PROVIDE ONE STEM GUIDE FOR EVERY 10 FEET OF STEM EXTENSION LENGTH OR AS RECOMMENDED BY VALVE MANUFACTURER. SUPPORT STEM GUIDE BY STRUCTURAL STEEL SUPPORT FRAME EITHER BOLTED TO THE VALVE ACTUATOR MOUNTING BRACKET OR ANCHORED TO THE CEILING NEAR THE ACCESS HATCH OPENING.
3. HATCH OPENINGS SHOWN ARE CLEAR SPACE OPENING REQUIRED.
4. CONTRACTOR SHALL VERIFY ALL DIMENSIONS, ELEVATIONS, PIPING LAYOUT AND ORIENTATION.
5. RESTRAINED MECHANICAL JOINTS ARE TO BE USED OUTSIDE OF THE STRUCTURE.
6. ALL BURIED DUCTILE IRON PIPE SHALL BE WRAPPED IN POLYETHYLENE IN CONFORMANCE WITH THE SPECIFICATIONS.
7. MINIMUM THICKNESS OF TOP SLAB TO ACCOMMODATE VALVE OPERATOR STEM AND MOUNTING OF ADJUSTABLE STEM GUIDE.

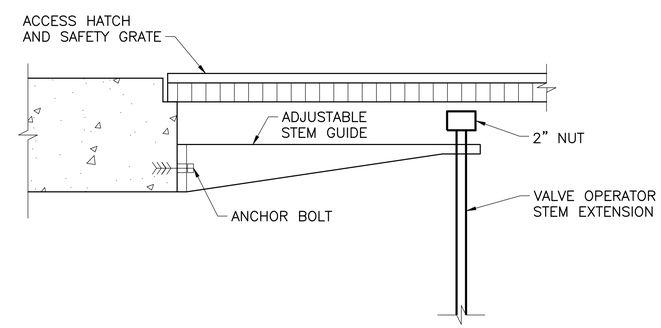


## 2 ADJUSTABLE VALVE OPERATOR STEM GUIDE DETAIL

NO SCALE

DRAFT 98% PROGRESS DRAWINGS
OCTOBER 2019

1 0 1 2 3 4 5 6 7 FT 3/8"=1'-0"

| NO. | DATE | APPD | REVISION |
|---|---|---|---|

Waukesha Water Utility
SERVING WAUKESHA SINCE 1886

GREELEY AND HANSEN
741 N. GRAND AVE, SUITE 308
WAUKESHA, WI 53186

GREAT WATER ALLIANCE™

CONTRACT PACKAGE 3: BOOSTER PUMPING STATION AND WATER SUPPLY CONTROL BUILDING

YARD PIPING VALVE VAULT DETAILS

APPROVED

SEAL AFFIXED
MONTH / DAY / YEAR

OCTOBER 2019

| | | | |
|---|---|---|---|
| JOB NO.: 15310 | | | |
| DESGN | LAM | CHCK | RMC |
| APPRV | AJM | DRWN | TSM |
| SCALE: | 3/8" = 1'-0" | | |

DRAWING NUMBER

BC4

SHEET 54 OF 184 REV 0

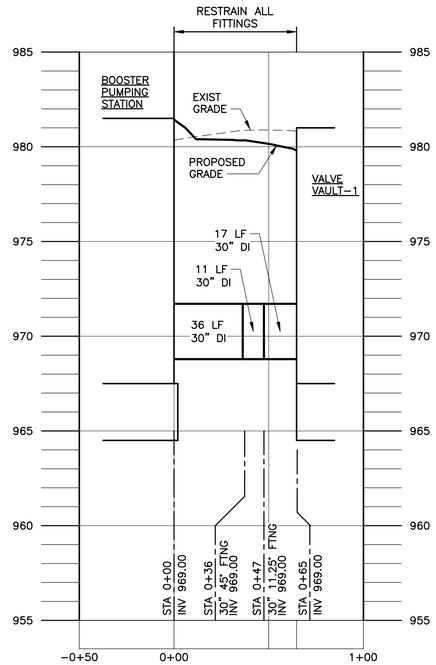


## WATER SUPPLY PIPELINE - BPS TO VALVE VAULT 1

SCALE: 1"=40' HORIZONTAL
SCALE: 1"=4' VERTICAL

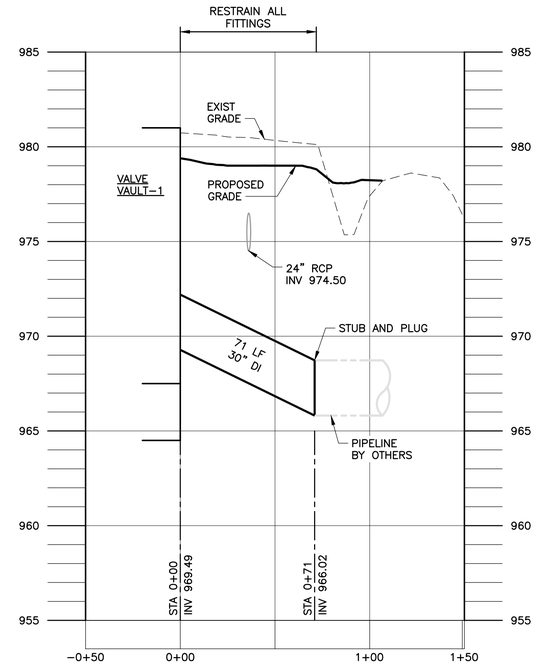


## WATER SUPPLY PIPELINE - VALVE VAULT 1 TO ROW

SCALE: 1"=40' HORIZONTAL
SCALE: 1"=4' VERTICAL

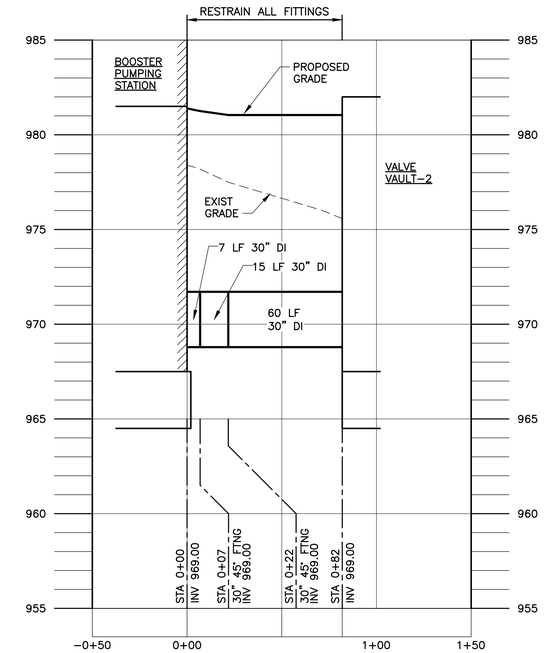


## BPS DISCHARGE PIPELINE - BPS TO VALVE VAULT 2

SCALE: 1"=40' HORIZONTAL
SCALE: 1"=4' VERTICAL

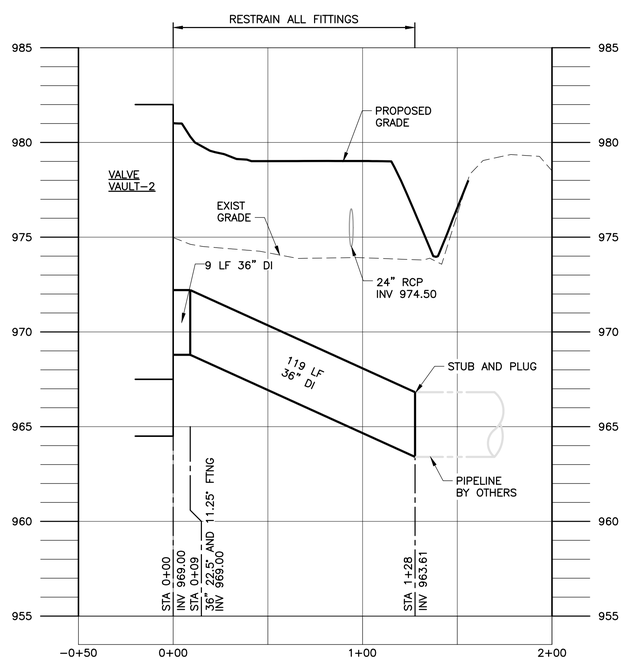


## BPS DISCHARGE PIPELINE - VALVE VAULT 2 TO ROW

SCALE: 1"=40' HORIZONTAL
SCALE: 1"=4' VERTICAL

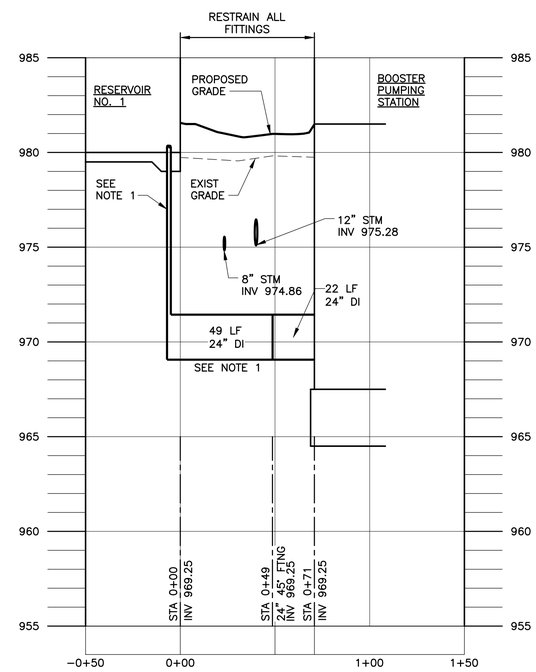


## RESERVOIR SUPPLY - BPS TO RESERVOIR NO. 1

SCALE: 1"=40' HORIZONTAL
SCALE: 1"=4' VERTICAL

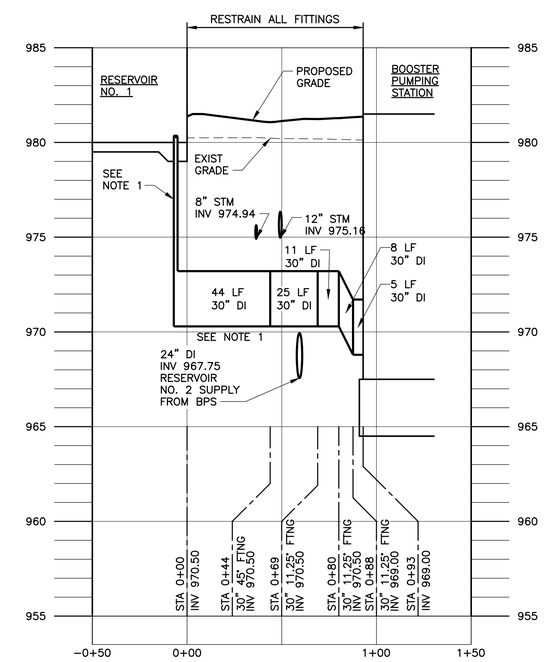


## BPS SUPPLY - RESERVOIR NO. 1 TO BPS

SCALE: 1"=40' HORIZONTAL
SCALE: 1"=4' VERTICAL

DRAFT 98% PROGRESS DRAWINGS
OCTOBER 2019

NOTE:
1. REFER TO BM DRAWINGS FOR ADDITIONAL FITTINGS ON THIS SEGMENT.

40 0 40 80 FT 1"=40'
4 0 4 8 FT 1"=4'

| NO. | DATE | APPD | REVISION |
|---|---|---|---|

Waukesha Water Utility
SERVING WAUKESHA SINCE 1886

GREELEY AND HANSEN
741 N. GRAND AVE., SUITE 308
WAUKESHA, WI 53186

GREAT WATER ALLIANCE™

CONTRACT PACKAGE 3: BOOSTER PUMPING STATION AND WATER SUPPLY CONTROL BUILDING

YARD PIPING PROFILES

APPROVED

SEAL AFFIXED
MONTH / DAY / YEAR

OCTOBER 2019

| | | | |
|---|---|---|---|
| JOB NO.: 15310 | | | |
| DESGN | LAM | CHCK | RMC |
| APPRV | AJM | DRWN | TSM |
| SCALE: | AS SHOWN | | |

DRAWING NUMBER

BC5

SHEET 55 OF 184 REV 0

BAR MEASURE 1" ON FULLSIZE SHEETS

10/02/2019 10:51:38 AM

FILE: \\GH-DATA01\CLIENT02\15310-WAUKESHA GREAT LAKES WATER SUPPLY PM-CM\21 CADD\21.05 WORKING DWGS\CONTRACT PACKAGE 3 - BPSF\GLWSP-P3-BPSF-BC05.DWG

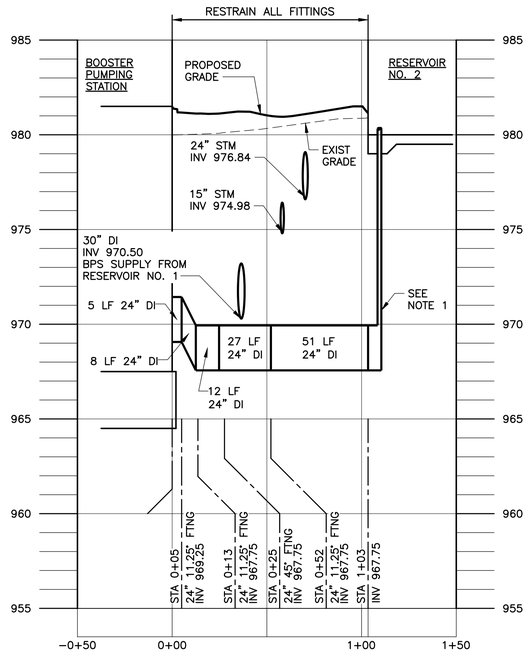


## RESERVOIR SUPPLY - BPS TO RESERVOIR NO. 2

SCALE: 1"=40' HORIZONTAL
SCALE: 1"=4' VERTICAL

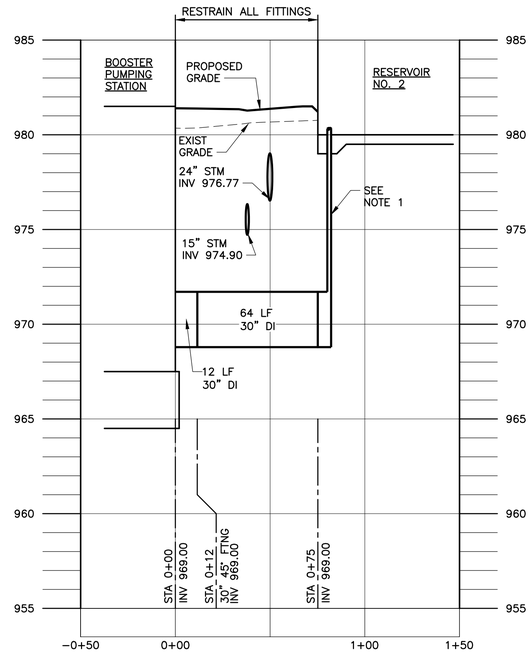


## BPS SUPPLY - RESERVOIR NO. 2 TO BPS

SCALE: 1"=40' HORIZONTAL
SCALE: 1"=4' VERTICAL

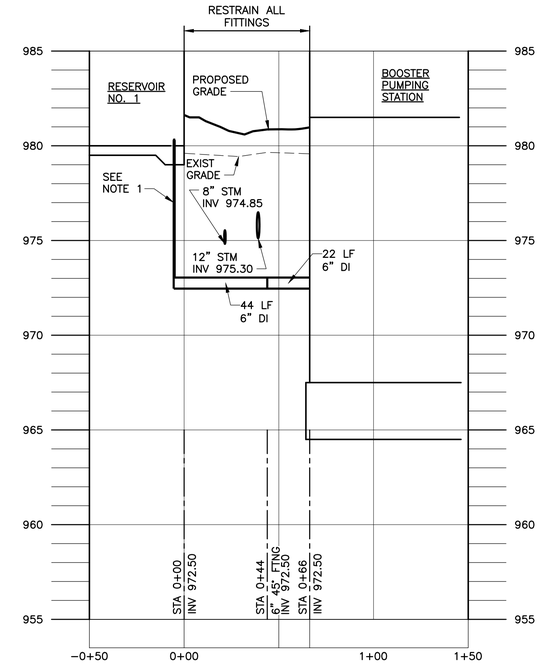


## RESERVOIR MIXING - BPS TO RESERVOIR NO. 1

SCALE: 1"=40' HORIZONTAL
SCALE: 1"=4' VERTICAL

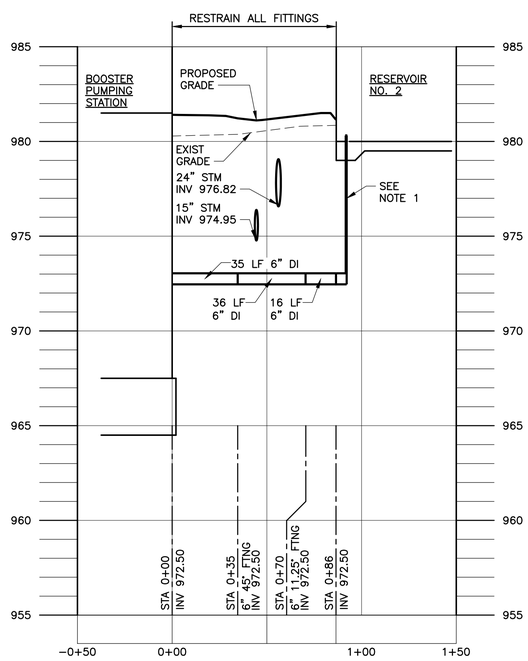


## RESERVOIR MIXING - BPS TO RESERVOIR NO. 2

SCALE: 1"=40' HORIZONTAL
SCALE: 1"=4' VERTICAL

DRAFT 98% PROGRESS DRAWINGS
OCTOBER 2019

NOTE:
1. REFER TO BM DRAWINGS FOR ADDITIONAL FITTINGS ON THIS SEGMENT.

40 0 40 80 FT 1"=40'
4 0 4 8 FT 1"=4'

| NO. | DATE | APPD | REVISION |
|---|---|---|---|

Waukesha Water Utility
SERVING WAUKESHA SINCE 1886

GREELEY AND HANSEN
741 N. GRAND AVE, SUITE 308
WAUKESHA, WI 53186

GREAT WATER ALLIANCE™

CONTRACT PACKAGE 3: BOOSTER PUMPING STATION AND WATER SUPPLY CONTROL BUILDING

YARD PIPING PROFILES

APPROVED

SEAL AFFIXED
MONTH / DAY / YEAR

OCTOBER 2019

JOB NO.: 15310

| | | | |
|---|---|---|---|
| DESGN | LAM | CHCK | RMC |
| APPRV | AJM | DRWN | TSM |
| SCALE: | AS SHOWN | | |

DRAWING NUMBER

BC6

SHEET 56 OF 184 REV 0

FILE: \\GH-DATA01\CLIENT02\15310-WAUKESHA GREAT LAKES WATER SUPPLY PM-CM\21 CADD\21.05 WORKING DWGS\CONTRACT PACKAGE 3 - BPSF\GLWSP-P3-BPSF-BC05.DWG 10/02/2019 10:51:38 AM

BAR MEASURE 1" ON FULLSIZE SHEETS

07/17/2019 3:04:33 PM

BAR MEASURE 1" ON FULLSIZE SHEETS

## STORM SEWER TABLE

1. FES #1
N: 360690.64
E: 2488850.92
15" W IE 974.34

2. 62.63 LF – 15"
RCP @ S=0.0026'/'

3. STMH INLET #1
N: 360688.84
E: 2488788.31
RIM EL 979.85
15" S IE 974.60
15" E IE 974.50
4" W IE 974.50

4. 50.00 LF – 15"
RCP @ S=0.0026'/'

5. STMH INLET #2
N: 360638.87
E: 2488790.05
RIM EL 980.80
15" SW IE 974.83
15" N IE 974.73

6. 65.26 LF – 15"
C900 @ S=0.0026'/'

7. STMH INLET #3
N: 360599.83
E: 2488737.76
RIM EL 980.85
12" NW IE 975.09
15" NE IE 975.00

8. 88.09 LF – 12"
C900 @ S=0.0045'/'

9. STMH INLET #4
N: 360645.99
E: 2488662.74
RIM EL 980.39
12" W IE 975.55
12" SE IE 975.49
8" N IE 975.49

10. 43.07 LF – 12"
RCP @ S=0.0052'/'

11. STCB #1
N: 360646.68
E: 2488619.67
RIM EL 979.75
8" W IE 975.85
12" SE IE 975.77

12. 103.38 LF – 8"
PVC @ S=0.0264'/'

13. STCB #2
N: 360624.10
E: 2488518.78
RIM EL 982.93
8" SW IE 979.58
8" E IE 978.58

14. 136.06 LF – 8"
PVC @ S=0.0104'/'

15. STCB #3
N: 360511.88
E: 2488441.86
RIM EL 985.43
8" NE IE 981.00

16. 61.56 – 8"
PVC @ S=0.0026'/'

17. STMH INLET #5
N: 360707.53
E: 2488660.94
RIM EL 979.31
8" S IE 975.65

18. F.E.S. #2
N: 360672.68
E: 2488857.47
24" SW IE 976.01

19. 190.48 LF – 24"
DI @ S=0.0026'/'

20. STMH INLET #6
N: 360560.99
E: 2488703.17
RIM EL 984.00
24" NE IE 976.50

21. STMH INLET #7
CONNECT TO RESERVOIR DRAIN TILE
N: 360575.70
E: 2488771.66
RIM EL 981.50
8" NW IE 975.09
6" NE IE 978.00±
6" SW IE 978.00±

22. 207.68 LF – 8"
C900 @ S=0.0026'/'

23. STMH INLET #9
N: 360655.91
E: 2488580.09
RIM EL 978.24
4" E IE 964.50
8" S IE 974.22
8" SE IE 974.55
12" NW IE 974.22

24. 30.57 LF – 8"
PVC @ S=0.0150'/'

25. STMH INLET #8
CONNECT TO RESERVOIR DRAIN TILE
N: 360625.59
E: 2488584.01
RIM EL 981.16
8" N IE 974.68
6" E IE 987.00±
6" W IE 987.00±

26. 62.60 LF – 12"
RCP @ S=0.0274'/'

27. FES #3
N: 360692.54
E: 2488529.34
12" SE IE 972.50

28. FES #4
N: 360886.87
E: 2488685.48
24" SE IE 973.97

29. 40.95 LF – 24"
RCP @ S=0.0007'/'

30. 48" STMH
N: 360864.29
E: 2488719.65
24" NW IE 974.00
24" SE IE 974.00

31. 12.40 LF – 24"
RCP @ S=0.0000'/'

32. FES #5
N: 360857.46
E: 2488729.99
24" NW IE 974.00

33. FES #6
N: 360829.40
E: 2488779.07
24" SE IE 974.00

34. 99.37 LF – 24"
RCP @ S=0.0000'/'

35. FES #7
N: 360767.32
E: 2488856.65
24" NW IE 974.00

36. FES #8
N: 360855.11
E: 2488823.48
24" SE IE 975.75

37. 79.45 LF – 24"
RCP @ S=0.0031'/'

38. FES #9
N: 360811.08
E: 2488889.62
24" NW IE 975.50

39. 92.12 LF – 4"
PVC @ S=0.0543'/'

40. 4" BUILDING CONNECTION
N: 360658.68
E: 2488675.17
4" W IE 969.50

41. CLEAR WATER BUILDING CONNECTION
N: 360687.92
E: 2488761.89
4" E IE 974.73

42. 26.00 LF – 4"
PVC @ S=0.0088'/'

43. STCB #4
N: 360756.47
E: 2488645.09
RIM EL 979.50
12" N IE 975.49

44. 52.07 LF – 12"
PVC @ S=0.0032'/'

45. STMH INLET #10
N: 360808.51
E: 2488643.58
RIM EL 979.50
12" S IE 975.32
12" NE IE 975.32

46. 52.31 LF – 12"
PVC @ S=0.0032'/'

47. STCB #5
N: 360851.67
E: 2488673.12
RIM EL 978.50
4" SW IE 975.15
4" SE IE 975.15

48. 47.36 LF – 12"
PVC @ S=0.0032'/'

49. FES #10
N: 360842.80
E: 2488719.63
12" NW IE 975.00

## SANITARY FORCE MAIN TABLE

1. LIFT STATION DISCHARGE CONNECTION
N: 360675.96
E: 2488678.37
3" W IE 975.30

2. 33.00 LF – 3"
@ S=0.0000'/'

3. BEND 3"X45°
GRADE BREAK
N: 360672.64
E: 2488570.53
3" IE 975.30

4. 45.04 LF – 3"
@ S=0.1843'/'

5. BEND 3"X45°
N: 360699.04
E: 2488534.03
3" IE 967.00

6. 7.05 LF – 3"
@ S=0.0000'/'

7. BEND 3"X45°
N: 360697.93
E: 2488527.06
3" IE 967.00

8. 210.56 LF – 3"
@ S=–0.0095'/'

9. BEND 3"X22–1/2°
GRADE BREAK
N: 360527.21
E: 2488403.79
3" IE 969.00

10. 115.97 LF – 3"
@ S=–0.0776'/'

11. BEND 3"X45°
N: 360411.25
E: 2488404.66
3" IE 978.00

12. 5.62 LF – 3"
@ S=0.0776'/'

13. BEND 3"X45°
N: 360407.22
E: 2488400.69
3" IE 978.44

14. 5.00 LF – 3"
@ S=0.0000'/'

15. GRADE BREAK
N: 360407.19
E: 2488395.69
3" IE 978.44

16. 93.62 LF – 3"
@ S=–0.0547'/'

17. BEND 3"X45°
N: 360406.50
E: 2488302.11
3" IE 973.32

18. 17.78 LF – 3"
@ S=–0.1825'/'

19. CONNECTION TO SEPTIC TANK
N: 360417.99
E: 2488288.54
3" SE IE 970.07

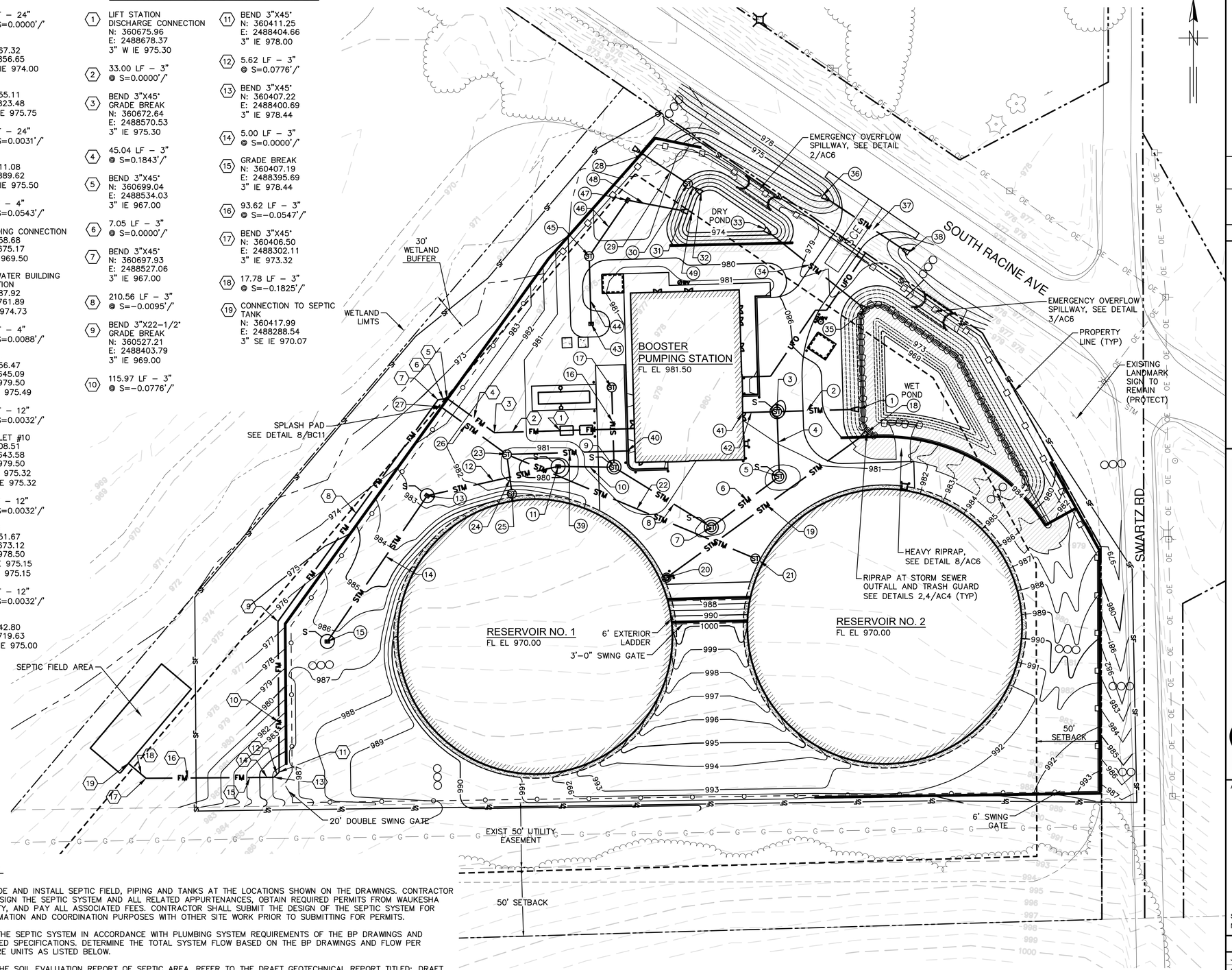


## LEGEND

- EXISTING CONTOUR
- PROPOSED CONTOUR
- PROPOSED RETAINING WALL
- PROPOSED DECORATIVE FENCE
- PROPOSED CHAIN LINK FENCE
- SILT FENCE
- RIPRAP
- INLET PROTECTION
- DITCH CHECK
- PROPOSED MANHOLE
- PROPOSED CATCH BASIN
- STONE CONSTRUCTION ENTRANCE
- EROSION MATTING

## NOTES:

1. PROVIDE AND INSTALL SEPTIC FIELD, PIPING AND TANKS AT THE LOCATIONS SHOWN ON THE DRAWINGS. CONTRACTOR TO DESIGN THE SEPTIC SYSTEM AND ALL RELATED APPURTENANCES, OBTAIN REQUIRED PERMITS FROM WAUKESHA COUNTY, AND PAY ALL ASSOCIATED FEES. CONTRACTOR SHALL SUBMIT THE DESIGN OF THE SEPTIC SYSTEM FOR INFORMATION AND COORDINATION PURPOSES WITH OTHER SITE WORK PRIOR TO SUBMITTING FOR PERMITS.
2. SIZE THE SEPTIC SYSTEM IN ACCORDANCE WITH PLUMBING SYSTEM REQUIREMENTS OF THE BP DRAWINGS AND RELATED SPECIFICATIONS. DETERMINE THE TOTAL SYSTEM FLOW BASED ON THE BP DRAWINGS AND FLOW PER FIXTURE UNITS AS LISTED BELOW.
3. FOR THE SOIL EVALUATION REPORT OF SEPTIC AREA, REFER TO THE DRAFT GEOTECHNICAL REPORT TITLED: DRAFT 6–120 D2 GEOTECHNICAL REPORT, CONTRACT PACKAGE 3, BOOSTER PUMPING STATION, NEW BERLIN, WI, INCLUDED AS AN EXHIBIT TO THE CONTRACT DOCUMENTS
4. STORMWATER PONDS SHALL HAVE EROSION MATTING ON SIDEWALLS
5. SLOPE FROM BLOCK WALL TO SWARTZ ROAD SHALL HAVE EROSION MATTING

DRAFT 98% PROGRESS DRAWINGS
OCTOBER 2019

## GRADING, EROSION CONTROL, SANITARY AND STORMWATER PIPING PLAN

SCALE: 1"=40'

40 0 40 80 FT
1"=40'

GRAEF

| NO. | DATE | APPD | REVISION |
|---|---|---|---|

Waukesha Water Utility
SERVING WAUKESHA SINCE 1886

GREELEY AND HANSEN
741 N. GRAND AVE, SUITE 308
WAUKESHA, WI 53186

GREAT WATER ALLIANCE™

CONTRACT PACKAGE 3: BOOSTER PUMPING STATION, STORAGE, AND CHEMICAL FACILITIES
GRADING, EROSION CONTROL, SANITARY AND STORMWATER PIPING PLAN

APPROVED

SEAL AFFIXED
MONTH / DAY / YEAR

OCTOBER 2019

| JOB NO.: 15310 | | | |
|---|---|---|---|
| DESGN | DDB | CHCK | PRE |
| APPRV | MNP | DRWN | SRK |
| SCALE: | 1" = 40' | | |

DRAWING NUMBER

BC7

SHEET 57 OF 184 | REV 0

FILE: X:\ML\2016\20160998\CAD\SITE\DWG\00\GH_00_BPSF_BC07_GRADING_EROSION_CONTROL.DWG

BAR MEASURE 1" ON FULLSIZE SHEETS

02/19/2019 9:54:57 AM

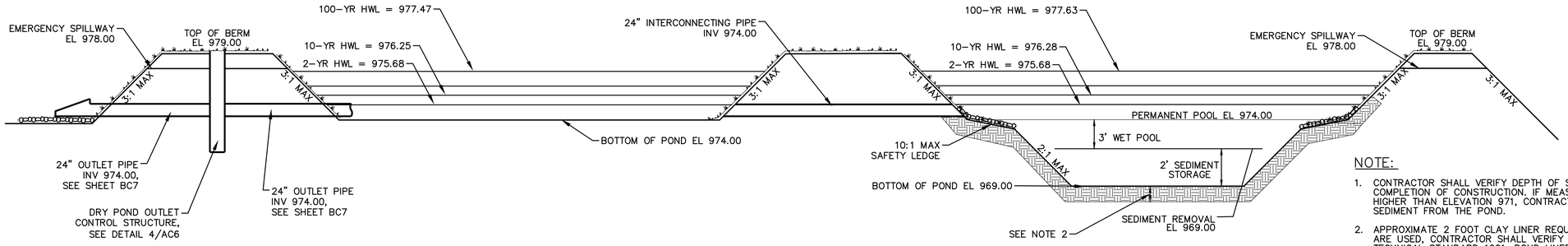


NOTE:

1. CONTRACTOR SHALL VERIFY DEPTH OF SEDIMENT IN POND FOLLOWING COMPLETION OF CONSTRUCTION. IF MEASURED DEPTH OF SEDIMENT IS HIGHER THAN ELEVATION 971, CONTRACTOR SHALL REMOVE EXCESS SEDIMENT FROM THE POND.
2. APPROXIMATE 2 FOOT CLAY LINER REQUIRED. IF IN SITU CLAY SOILS ARE USED, CONTRACTOR SHALL VERIFY THAT CLAY SOILS MEET WDNR TECHNICAL STANDARD 1001, POND LINER SPECIFICATIONS TYPE "B". IF SOILS OTHER THAN CLAY ARE ENCOUNTERED WITHIN DETENTION BASIN, CONTRACTOR SHALL OVEREXCAVATE A MINIMUM OF 2 FEET AND REPLACE WITH COMPACTED CLAY LINER IN ACCORDANCE WITH WDNR TECHNICAL STANDARD 1001 TYPE "B" CLAY LINER.

## 1 DRY POND
NOT TO SCALE

## 2 WET POND
NOT TO SCALE

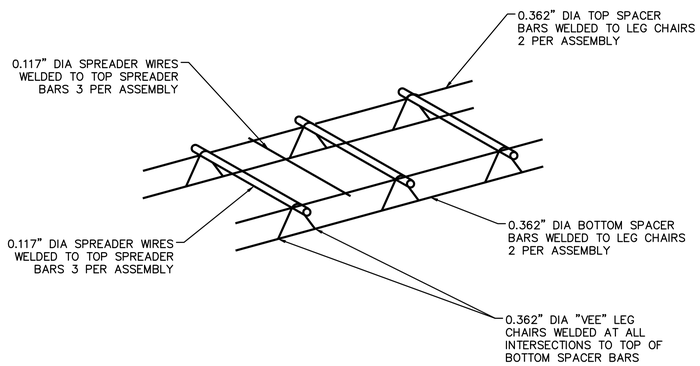


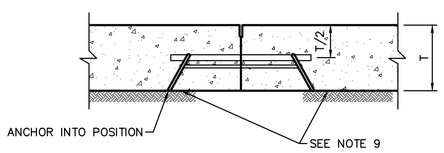


| TABLE 1: DIMENSIONS AND SPACING OF STEEL DOWELS | | | |
|---|---|---|---|
| SLAB THICKNESS (T) | DIAMETER (d) | LENGTH (L) | SPACING MAX |
| 7.5–12" | 1" | 19" | 12" OC |

NOTE:

1. BASKET MUST BE FIRMLY ATTACHED TO EXISTING OR NEW BASE.
2. ALL WIRE SIZES SHOWN ARE MINIMUM SIZE.
3. DOWELS SHALL BE HELD FIRMLY IN THE ABOVE WELDED ASSEMBLY.
4. ALL DOWELS PLACED TO BE PARALLEL TO TOP OF PAVEMENT GRADES.
5. ALL DOWELS PLACED TO HAVE 50% OF LENGTH ACROSS JOINT LINES.
6. NO DOWELS SHALL BE PLACED MANUALLY IN PLASTIC CONCRETE.
7. ALL DOWELS ARE TO BE EPOXY COATED.
8. ANY WELD ON DOWELS TO HAVE FIELD APPLIED EPOXY COATING APPLIED.
9. PRIOR TO PLACEMENT OF DOWEL BASKET ON ITEM P-306 APPLY AND LET DRY A SECOND APPLICATION OF CONCRETE CURING COMPOUND.
10. NO STEEL WITHIN 0.5' OF EDGE OF PAVED LANE

## 5 TYPICAL DOWEL AND TIE BAR BASKET
NOT TO SCALE

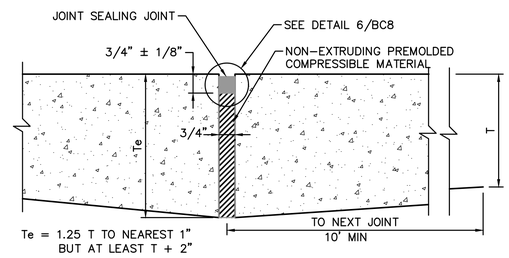


NOTE:

1. SEE TABLE 1
2. NO STEEL WITHIN 0.5' OF EDGE OF PAVED LANE

## 3 TYPE A THICKENED EDGE ISOLATION JOINT
NOT TO SCALE

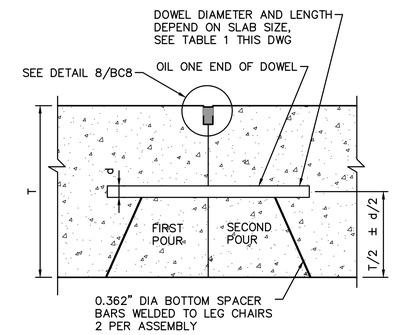


NOTE:

1. NO STEEL WITHIN 0.5' OF EDGE OF PAVED LANE

## 4 TYPE E DOWELED CONTRACTION JOINT
NOT TO SCALE

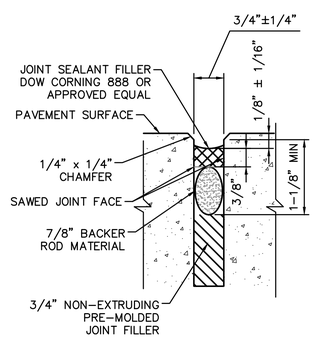


## 6 ISOLATION JOINT FILLER
NOT TO SCALE

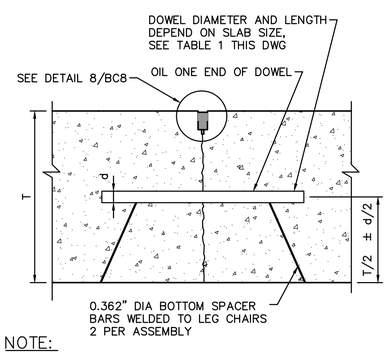


NOTE:

1. NO STEEL WITHIN 0.5' OF EDGE OF PAVED LANE

## 7 TYPE C DOWELED CONTRACTION JOINT
NOT TO SCALE

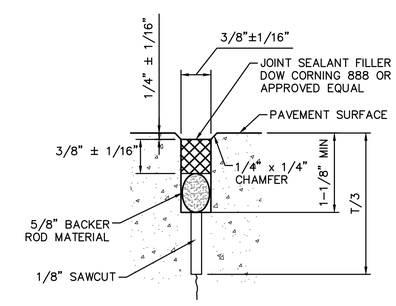


NOTE:

1. SEE TABLE 1
2. NO STEEL WITHIN 0.5' OF EDGE OF PAVED LANE

## 8 CONTRACTION JOINT FILLER
NOT TO SCALE

DRAFT 98% PROGRESS DRAWINGS
OCTOBER 2019

GRAEF

| NO. | DATE | APPD | REVISION |
|---|---|---|---|

Waukesha Water Utility
SERVING WAUKESHA SINCE 1886

GREELEY AND HANSEN
741 N. GRAND AVE, SUITE 308
WAUKESHA, WI 53186

GREAT WATER ALLIANCE™

CONTRACT PACKAGE 3: BOOSTER PUMPING STATION, STORAGE, AND CHEMICAL FACILITIES

STORMWATER PROFILE AND PAVING DETAILS

APPROVED

SEAL AFFIXED
MONTH / DAY / YEAR

OCTOBER 2019

JOB NO.: 15310

| DESGN | DDB | CHCK | PRE |
|---|---|---|---|
| APPRV | MNP | DRWN | SRK |

SCALE: AS SHOWN

DRAWING NUMBER

BC8

SHEET 58 OF 184 REV 0

FILE: X:\ML\2016\20160998\CAD\SITE\DWG\00\GH_00_BPSF_BC08_POND_SECTION.DWG

06/21/2019 8:24:54 AM

BAR MEASURE 1" ON FULLSIZE SHEETS

## NOTES:

1. DO NOT DISTURB AREA FOR SEPTIC SYSTEM.
2. EXISTING GRADES ARE ESTIMATED AT 1 FOOT LOWER TO SHOW TOPSOIL IS REMOVED.
3. SILT FENCE TO BE INSTALLED A MINIMUM OF FIVE FEET FROM WETLAND BOUNDARY.
4. AREA FOR SEPTIC SYSTEM SHALL BE PROTECTED FROM ANY CONSTRUCTION DISTURBANCE.
5. STOCKPILE LIMITS ARE APPROXIMATED. A STORAGE PLAN SHALL BE SUBMITTED AND APPROVED PRIOR TO GRADING.
6. TOPSOIL TO BE REMOVED UNDER HAUL ROAD, HAUL ROAD TO BE CONSTRUCTED USING STONE CONSTRUCTION ENTRANCE DETAIL, SEE DETAIL 1/AC3.
7. PROVIDE DRAINAGE PIPING ON HAUL ROAD AND UNDER STOCKPILE STORAGE.
8. CONTRACTOR TO MAINTAIN TEMPORARY PONDS. REMOVE SILT TO MAINTAIN A TWO FOOT SEPARATION AREA.
9. WETLAND HIGH WATER LEVEL IS 784.00. THE HAUL ROAD MAYBE UNDER WATER AT TIMES.
10. HAUL ROAD AND STOCKPILE SHALL BE RESTORED USING PERMANENT SEED MIX AND APPLICATION CONFORMING TO SPECIFICATION SECTION 329000.

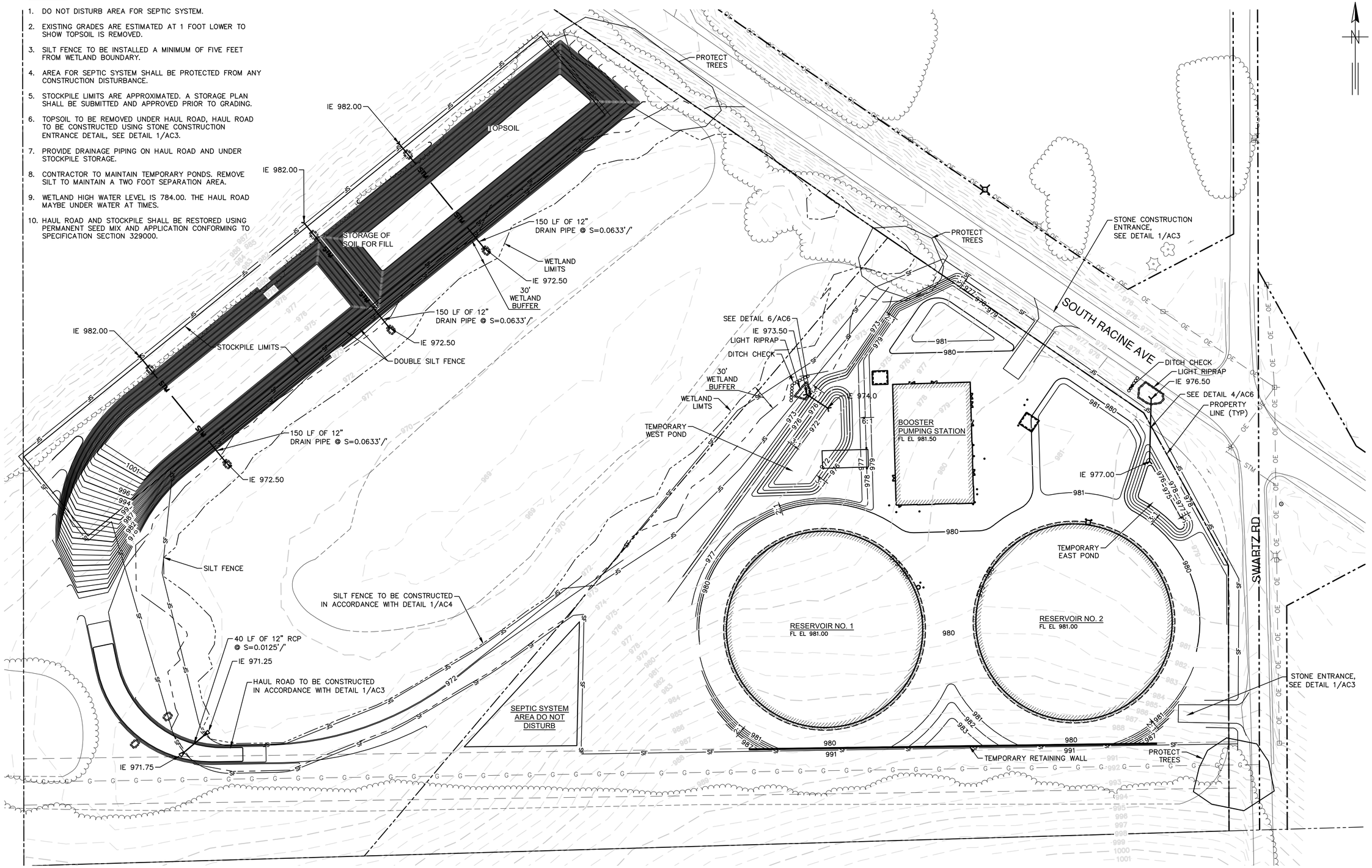


## INTERIM GRADING PLAN

SCALE: 1"=50'

50 0 50 100 FT 1"=50'

DRAFT 98% PROGRESS DRAWINGS

OCTOBER 2019

GRAEF

| NO. | DATE | APPD | REVISION |
|---|---|---|---|

Waukesha Water Utility
SERVING WAUKESHA SINCE 1886

GREELEY AND HANSEN
741 N. GRAND AVE, SUITE 308
WAUKESHA, WI 53186

GREAT WATER ALLIANCE™

CONTRACT PACKAGE 3: BOOSTER PUMPING STATION, STORAGE, AND CHEMICAL FACILITIES

INTERIM GRADING AND EROSION CONTROL PLAN

APPROVED

SEAL AFFIXED
MONTH / DAY / YEAR

OCTOBER 2019

JOB NO.: 15310

| DESGN | DDB | CHCK | PRE |
|---|---|---|---|
| APPRV | MNP | DRWN | SRK |
| SCALE: | AS SHOWN | | |

DRAWING NUMBER

BC9

SHEET 59 OF 184 REV 0

FILE: X:\ML\2016\20160998\CAD\SITE\DWG\00\GH_00_BPSF_BC09_INTERM_GRADING.DWG

## GRADING NOTES

1. RIM ELEVATIONS IN CURB AND GUTTER ARE FLANGE GRADES.

## LAYOUT NOTES

1. THE BUILDING OUTLINES SHOWN ARE FOR REFERENCE PURPOSES ONLY AND SHALL NOT BE USED FOR STAKING PURPOSES. THE CONTRACTOR SHALL COORDINATE WITH THE ARCHITECT AND STRUCTURAL ENGINEER ON THE STAKING OF THE BUILDING.
2. SITE LIGHTS ARE SHOWN FOR REFERENCE PURPOSES ONLY AND THE CONTRACTOR SHALL REFER TO THE ELECTRICAL PLANS FOR DETAIL DESIGN INFORMATION. CONTRACTOR SHALL COORDINATE WITH THE ELECTRICAL ENGINEER ON STAKING OF THE SITE LIGHTS.
3. ALL DIMENSIONS SHOWN ARE TO THE EDGE OF PAVEMENT OR FACE OF CURB WHERE CONCRETE CURB IS SHOWN.
4. REFER TO LANDSCAPING PLANS FOR SITE RESTORATION INFORMATION AND DETAILS.
5. CONTRACTOR SHALL SUBMIT A CONCRETE JOINTING PLAN TO THE ENGINEER FOR REVIEW AND APPROVAL PRIOR TO COMMENCING CONSTRUCTION. JOINTING PLAN SHALL INDICATE: POUR SEQUENCE, LOCATION OF CONSTRUCTION, ISOLATION, CONTRACTION JOINTS, AND TYPE OF REINFORCEMENT.

## LEGEND

- 100 — EXISTING CONTOUR
- 100 — PROPOSED CONTOUR
- PROPOSED HIGHSIDE VERTICAL CURB
- PROPOSED FLUSH CURB AND GUTTER
- ASPHALT PAVEMENT
- CONCRETE PAVEMENT
- CONCRETE SIDEWALK
- 999.99 SPOT GRADE
- 999.99 / 999.99 TOP OF CONCRETE CURB FLANGE GRADE
- CT CURB TAPER
- R RAMP
- ST PROPOSED MANHOLE
- PROPOSED CATCH BASIN
- WV PROPOSED GATE VALVE
- PROPOSED HYDRANT
- PROPOSED BOLLARD

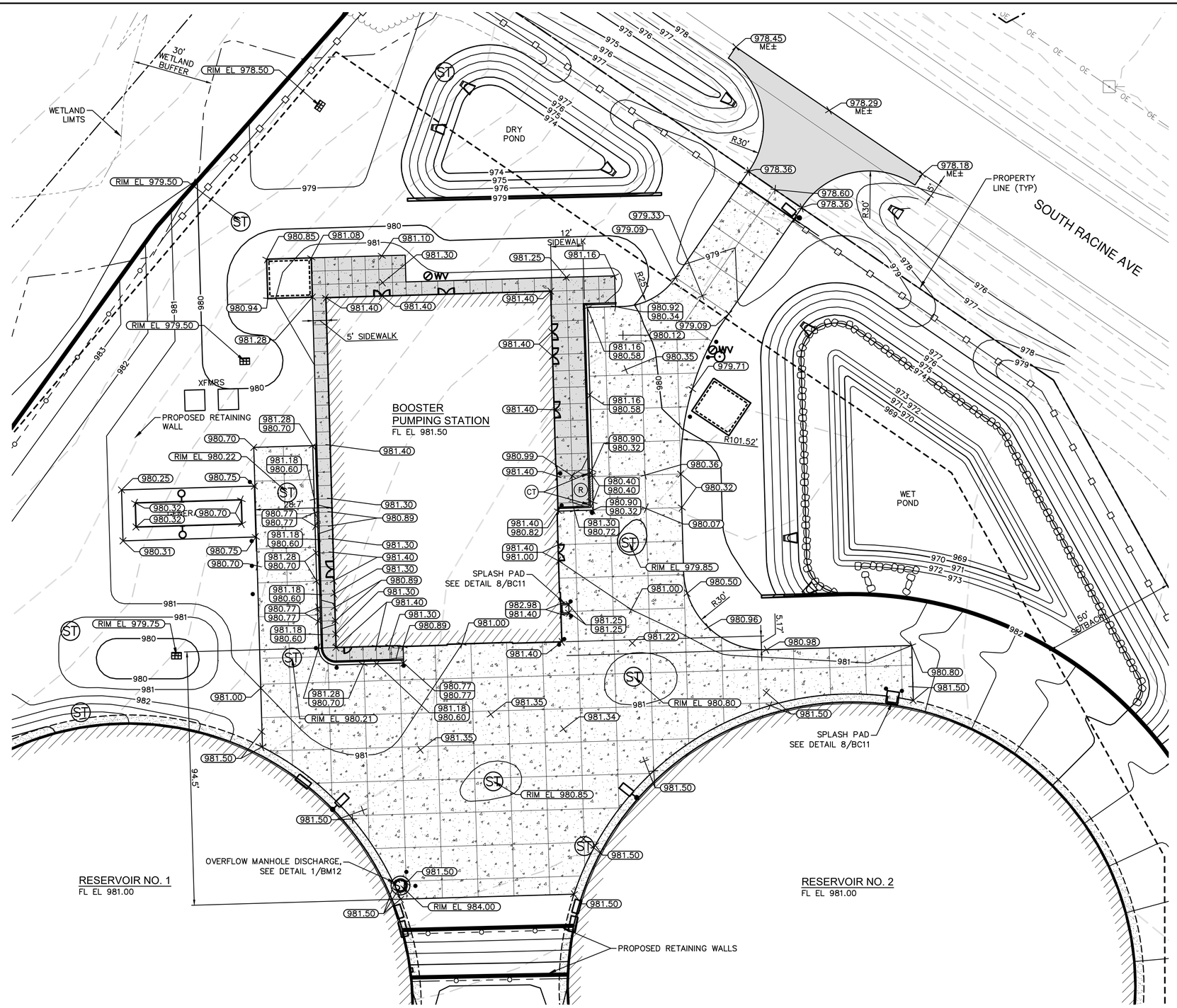


## SITE GRADING AND PAVING PARTIAL PLAN

SCALE: 1"=20'

20 0 20 40 FT 1"=20'

DRAFT 98% PROGRESS DRAWINGS
OCTOBER 2019

GRAEF

| NO. | DATE | APPD | REVISION |
|---|---|---|---|

Waukesha Water Utility
SERVING WAUKESHA SINCE 1886

GREELEY AND HANSEN
741 N. GRAND AVE, SUITE 308
WAUKESHA, WI 53186

GREAT WATER ALLIANCE™

CONTRACT PACKAGE 3: BOOSTER PUMPING STATION, STORAGE, AND CHEMICAL FACILITIES

SITE GRADING AND PAVING PLAN

APPROVED

SEAL AFFIXED
MONTH / DAY / YEAR

OCTOBER 2019

| | | | |
|---|---|---|---|
| JOB NO.: 15310 | | | |
| DESGN | DDB | CHCK | PRE |
| APPRV | MNP | DRWN | SRK |
| SCALE: | 1" = 20' | | |

DRAWING NUMBER

BC10

SHEET 60 OF 184 REV 0

BAR MEASURE 1" ON FULLSIZE SHEETS

06/10/2019 12:08:43 PM

FILE: X:\ML\2016\2016\0998\CAD\SITE\DWG\00\GH_00_BPSF_BC10_GRADING_PAVING_CONTROL.DWG

06/14/2019 9:51:47 AM
BAR MEASURE 1" ON FULLSIZE SHEETS

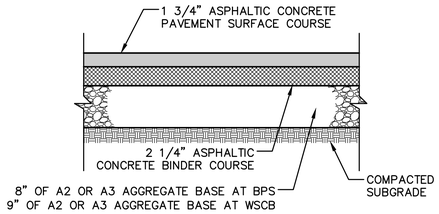


## 1 TYPICAL ASPHALT PAVEMENT SECTION
NOT TO SCALE

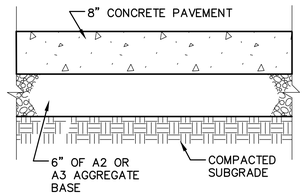


## 2 TYPICAL CONCRETE PAVEMENT SECTION
NOT TO SCALE

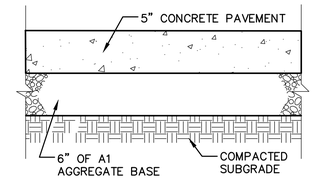


## 3 TYPICAL CONCRETE SIDEWALK SECTION
NOT TO SCALE

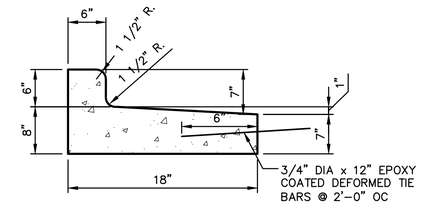


## 4 HIGHSIDE CONCRETE CURB AND GUTTER
NOT TO SCALE

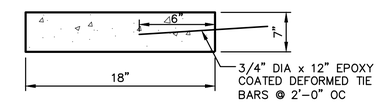


## 5 FLUSH CURB AND GUTTER
NOT TO SCALE

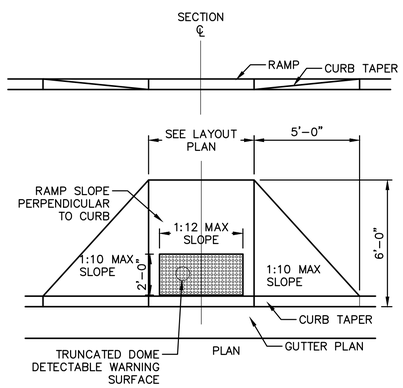


TYPE A RAMP

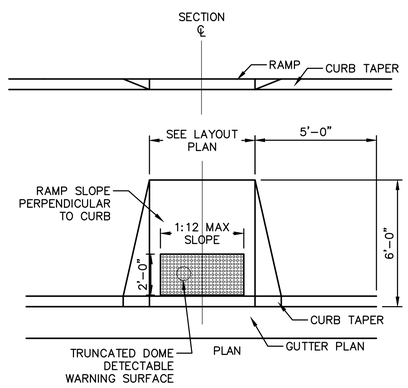


TYPE B RAMP

## 6 CURB AND SIDEWALK RAMPS
NOT TO SCALE

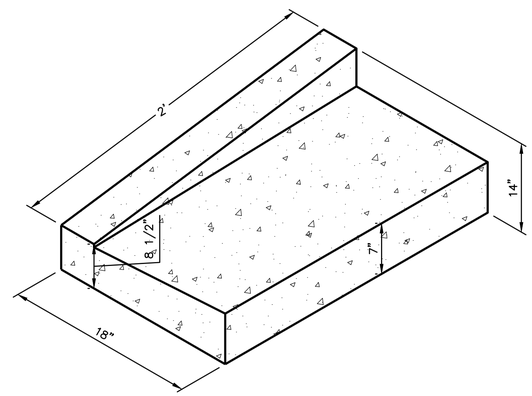


## 7 2' TAPER CURB SECTION
NOT TO SCALE

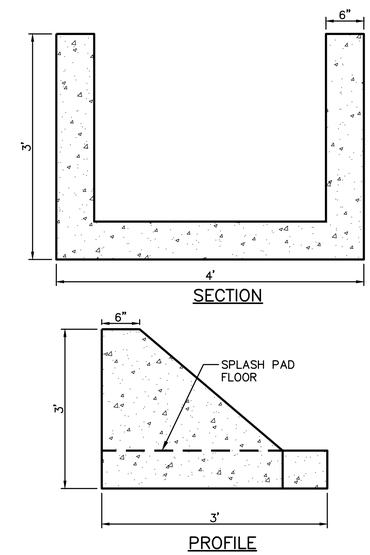


## 8 SPLASH PAD DETAIL
NOT TO SCALE

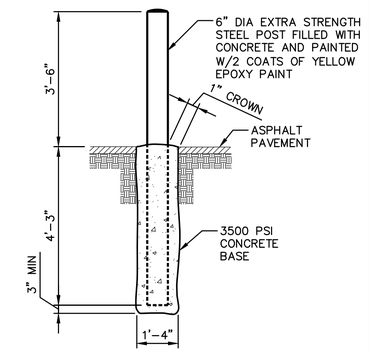


## 9 BOLLARD DETAIL
NOT TO SCALE

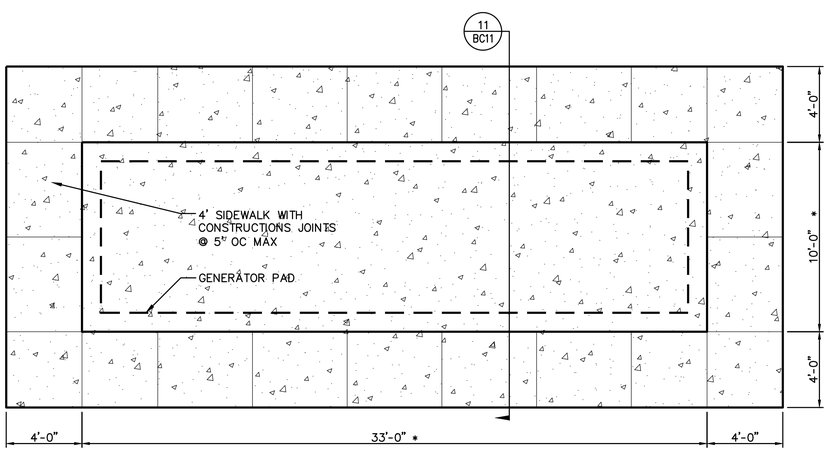


* PAD DIMENSIONS TO BE 1'-0" LARGER THAN SELECTED GENERATOR BASE DIMENSIONS

## 10 GENERATOR PAD PLAN
NOT TO SCALE

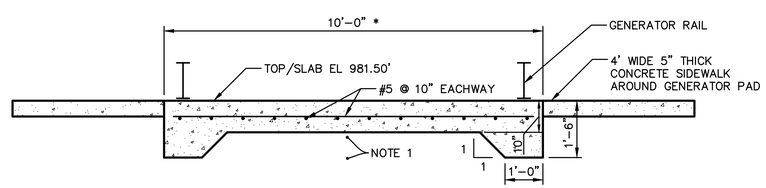


* PAD DIMENSIONS TO BE 1'-0" LARGER THAN SELECTED GENERATOR BASE DIMENSIONS

NOTE 1 PROVIDE WELL GRADED GRANULAR MATERIAL PLACED IN 8" LIFTS AND COMPACTED TO 98% MODIFIED PROCTOR FROM NATIVE SOIL TO UNDERSIDE OF SLAB.

## 11 GENERATOR PAD SECTION
NOT TO SCALE

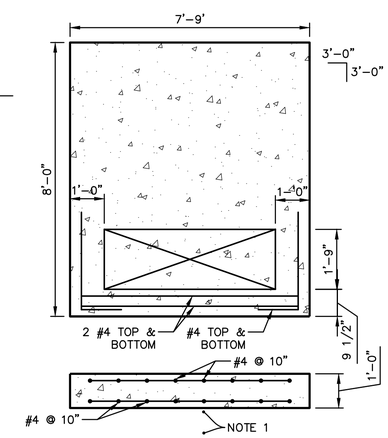


NOTE 1 PROVIDE WELL GRADED GRANULAR MATERIAL PLACED IN 8" LIFTS AND COMPACTED TO 98% MODIFIED PROCTOR FROM NATIVE SOIL TO UNDERSIDE OF SLAB.

## 12 TRANSFORMER PAD
NOT TO SCALE

DRAFT 98% PROGRESS DRAWINGS
OCTOBER 2019

GRAEF

| NO. | DATE | APPD | REVISION |
|---|---|---|---|

Waukesha Water Utility
SERVING WAUKESHA SINCE 1886

GREELEY AND HANSEN
741 N. GRAND AVE, SUITE 308
WAUKESHA, WI 53186

GREAT WATER ALLIANCE™

CONTRACT PACKAGE 3: BOOSTER PUMPING STATION, STORAGE, AND CHEMICAL FACILITIES

SITE AND PAVING DETAILS

APPROVED

SEAL AFFIXED
MONTH / DAY / YEAR

OCTOBER 2019

JOB NO.: 15310

| DESGN | DDB | CHCK | PRE |
|---|---|---|---|
| APPRV | MNP | DRWN | SRK |

SCALE: AS SHOWN

DRAWING NUMBER

BC11

SHEET 61 OF 184 REV 0

FILE: X:\MIL\2016\2016998\CAD\SITE\DWG\00\GH_00_BPSF_BC11_SITE_PAVING_DETAILS.DWG

07/03/2019 1:27:19 PM

BAR MEASURE 1" ON FULLSIZE SHEETS

## LANDSCAPE LEGEND

- LIMIT OF LANDSCAPE CONSTRUCTION
- PROPOSED ALUMINUM EDGER
- EVERGREEN TREE
- EVERGREEN SHRUB
- ORNAMENTAL GRASS
- ENHANCED NATIVE SEED MIX
- NMT — NO MOW FESCUE TURF SEEDING
- BM — SHREDDED BARK MULCH
- ORNAMENTAL FENCE
- CHAIN LINK FENCE

| SHADE TREES | | | | | |
|---|---|---|---|---|---|
| QTY | SYM | BOTANICAL NAME | COMMON NAME | SIZE | MATURE SIZE |
| 6 | GTS | Gleditsia triacanthos inermis 'Shademaster' | Shademaster Honeylocust | 2.5" BB | 50'-60'h x 30'-35'w |

| EVERGREEN TREES | | | | | |
|---|---|---|---|---|---|
| QTY | SYM | BOTANICAL NAME | COMMON NAME | SIZE | MATURE SIZE |
| 7 | ABC | Abies concolor | White Fir | 8'-10' BB | 50'h x 30'w |
| 10 | JVG | Juniperus virginiana | Eastern Redceder | 8' BB | 30'-40'h x 8'-20'w |
| 10 | PGL | Picea glauca | White Spruce | 8'-10' BB | 50'h x 20'w |
| 8 | PGD | Picea glauca var. densata | Black Hills Spruce | 8'-10' BB | 30'-40'h x 15-25'w |

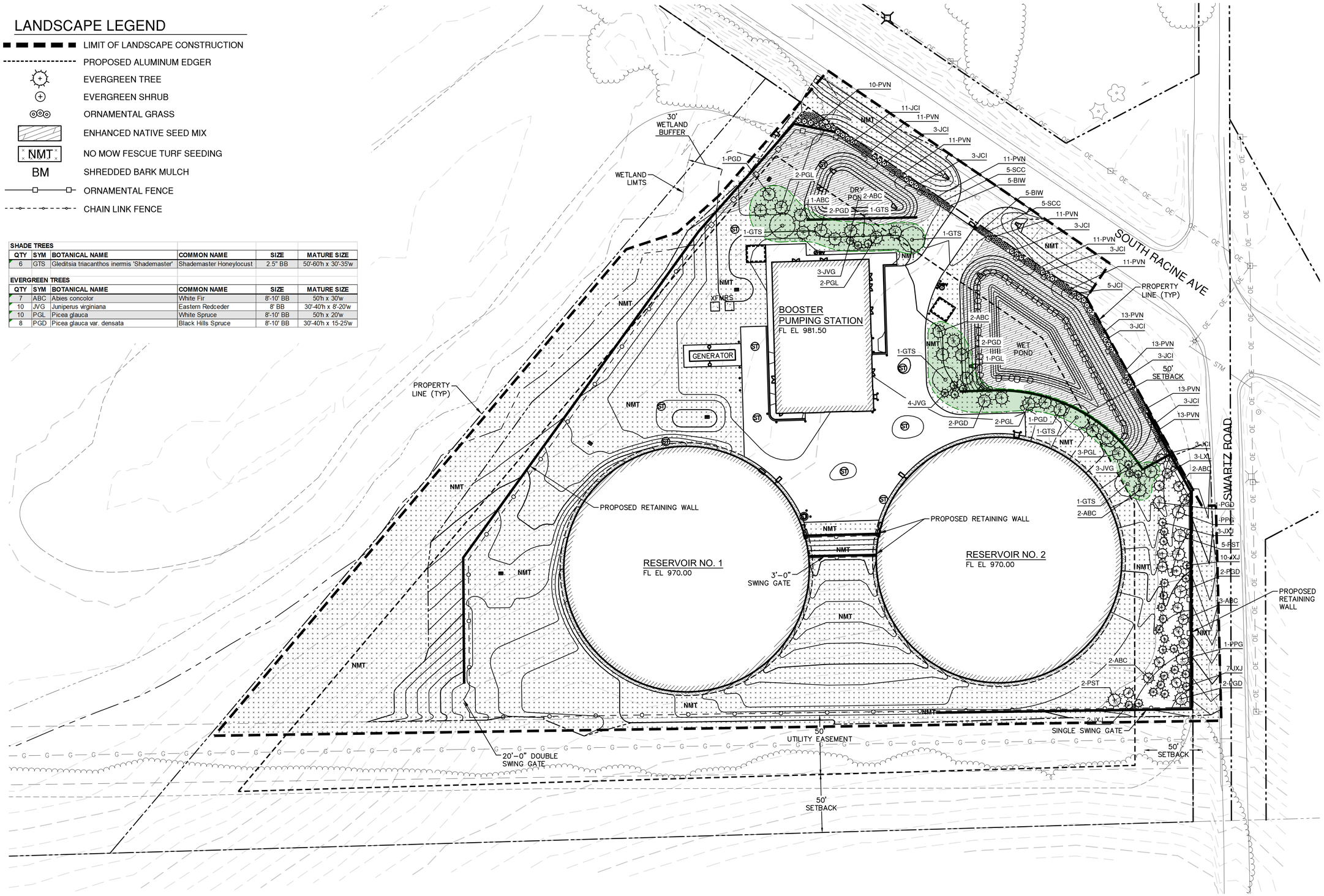


DRAFT 98% PROGRESS DRAWINGS

OCTOBER 2019

40 0 40 80 FT 1"=40'

GRÄEF

| NO. | DATE | APPD | REVISION |
|---|---|---|---|
| | | | |

Waukesha Water Utility — SERVING WAUKESHA SINCE 1886

GREELEY AND HANSEN — 741 N. GRAND AVE, SUITE 308, WAUKESHA, WI 53186

GREAT WATER ALLIANCE™

CONTRACT PACKAGE 3: BOOSTER PUMPING STATION, STORAGE, AND CHEMICAL FACILITIES

LANDSCAPE AND RESTORATION PLAN

APPROVED

SEAL AFFIXED MONTH / DAY / YEAR

O JULY 2019 9

| JOB NO.: 15310 | | | |
|---|---|---|---|
| DESGN | DDB | CHCK | PRE |
| APPRV | MNP | DRWN | ERR |
| SCALE: | 1" = 40' | | |

DRAWING NUMBER

BC12

SHEET 62 OF 184 REV 0

FILE: X:\ML\2016\2016\0998\CAD\SITE\DWG\00\GH_00_BPSF_BC12_LANDSCAPE PLAN_0998.DWG

06/13/2019 2:59:49 PM

BAR MEASURE 1" ON FULLSIZE SHEETS

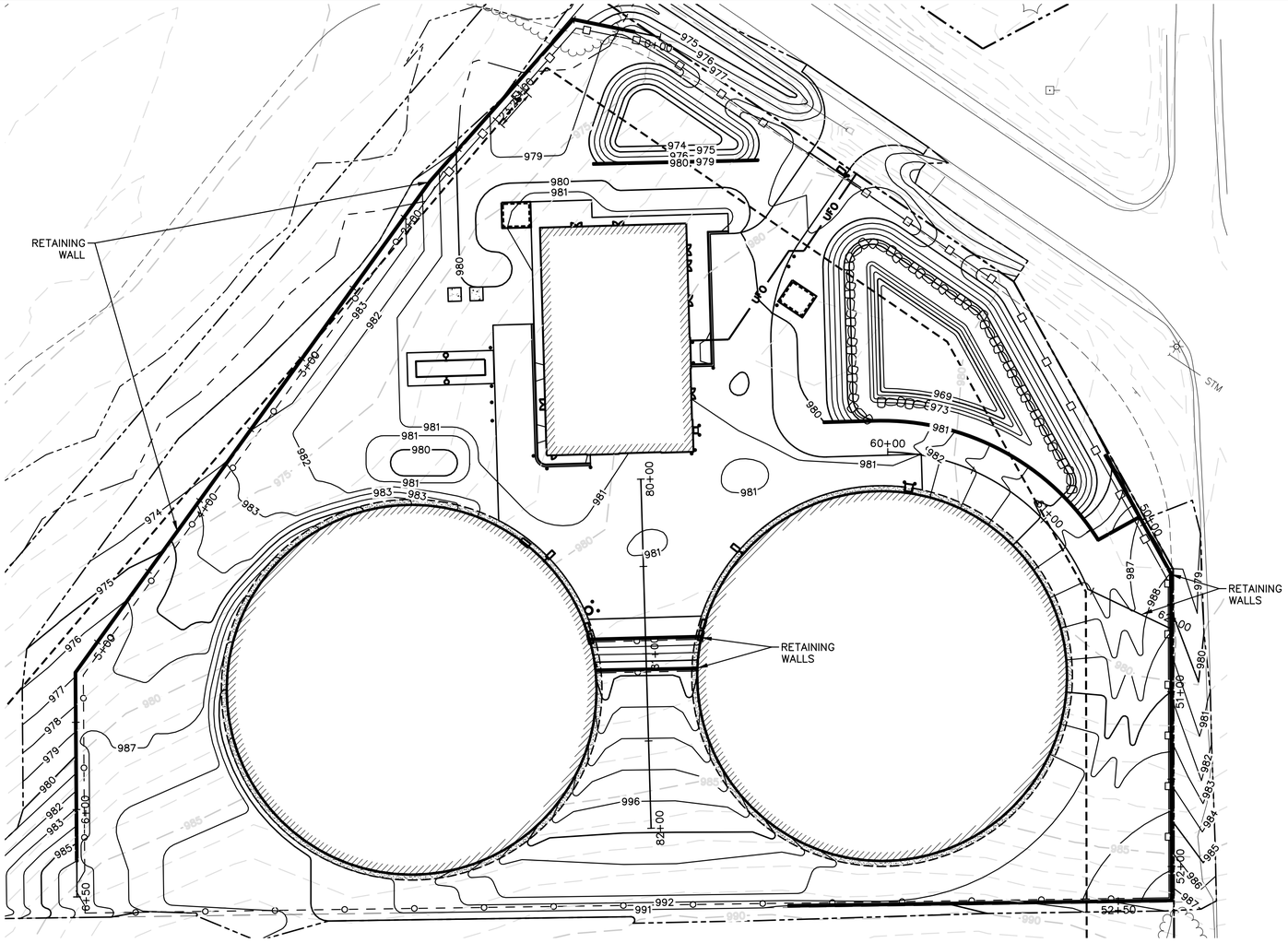


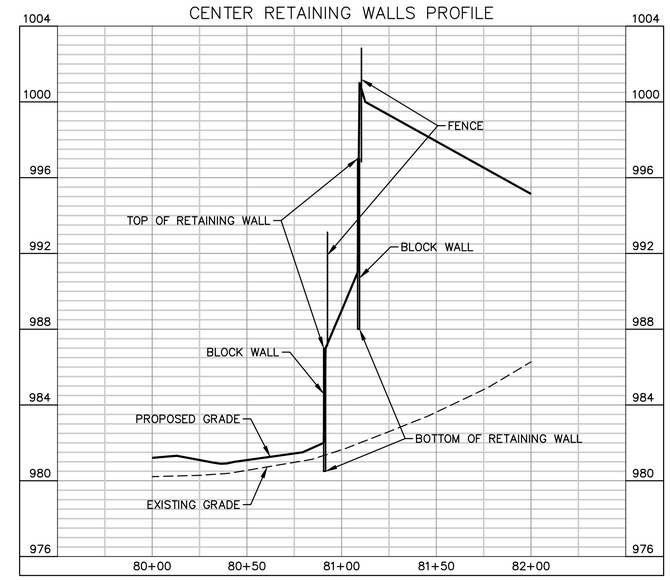


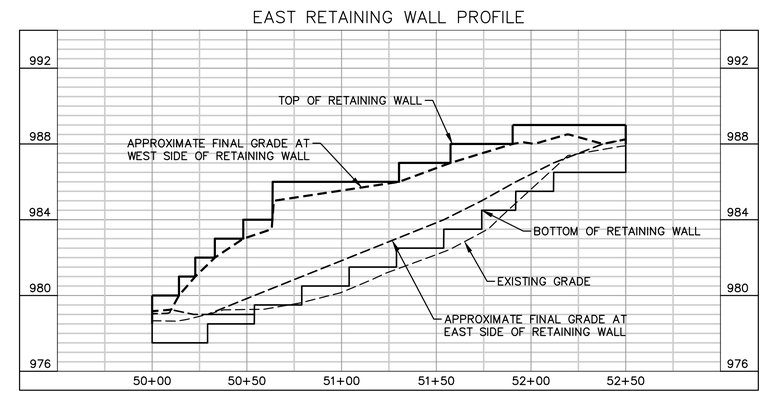


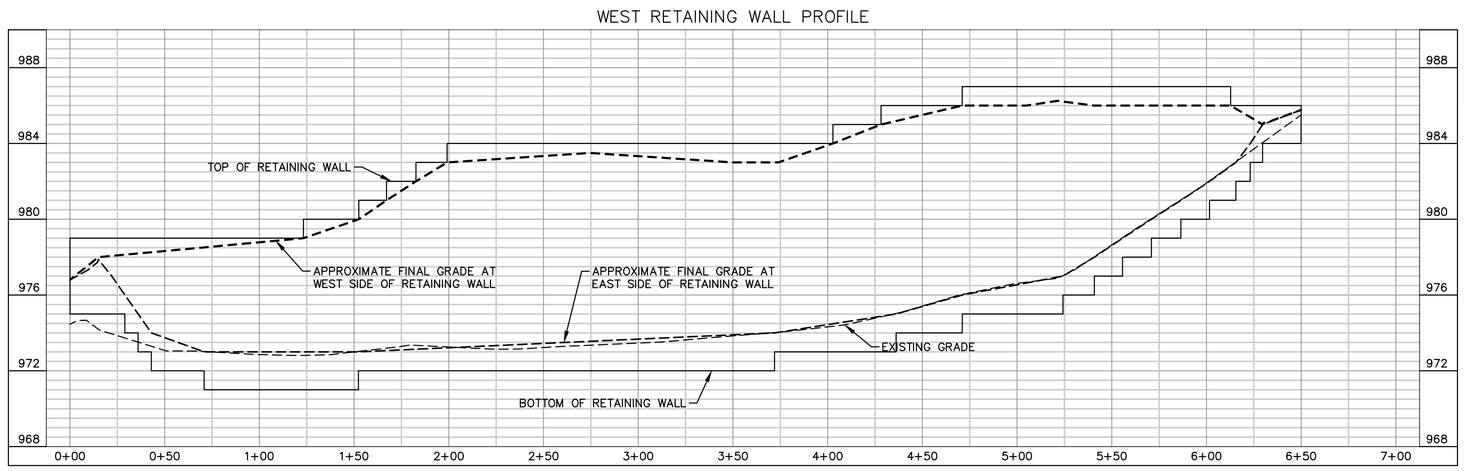


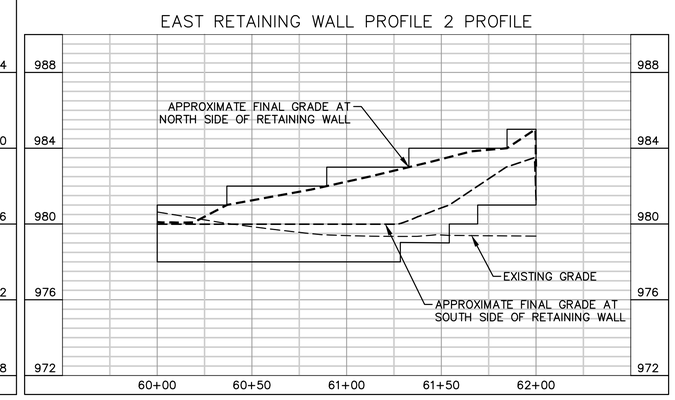


## RETAINING WALL PROFILES

HORIZONTAL SCALE: 1"=40'
VERTICAL SCALE: 1"=4'

4 0 4 8 FT 1"=4'

40 0 40 80 FT 1"=40'

DRAFT 98% PROGRESS DRAWINGS
OCTOBER 2019

GRAEF

| NO. | DATE | APPD | REVISION |
|---|---|---|---|

Waukesha Water Utility
SERVING WAUKESHA SINCE 1886

GREELEY AND HANSEN
741 N. GRAND AVE, SUITE 308
WAUKESHA, WI 53186

GREAT WATER ALLIANCE™

CONTRACT PACKAGE 3: BOOSTER PUMPING STATION, STORAGE, AND CHEMICAL FACILITIES

LANDSCAPE AND RESTORATION DETAILS

APPROVED

SEAL AFFIXED
MONTH / DAY / YEAR

OCTOBER 2019

JOB NO.: 15310

| DESGN | DDB | CHCK | PRE |
|---|---|---|---|
| APPRV | MNP | DRWN | SRK |

SCALE: AS SHOWN

DRAWING NUMBER

BC13

SHEET 63 OF 184 REV 0

FILE: X:\ML\2016\20160998\CAD\SITE\DWG\00\GH_00_BPSF_BC13_WALL_DETAILS.DWG

# NOTES

1. PHASE GRADING OF RETENTION/DETENTION PONDS AS NECESSARY TO PROVIDE SPACE FOR STAGING AND TRAILERS.
2. FINAL LOCATION OF CONSTRUCTION TRAILERS AND CONTRACTOR PARKING WILL BE APPROVED BY OWNER AND OWNERS REPRESENTATIVE. SEE SPECIFICATIONS FOR FURTHER REQUIREMENTS.
3. RECOMMENDED LOCATIONS FOR SEDIMENT BASINS SHOWN. REFER TO DRAWING AC4 FOR ADDITIONAL INFORMATION.
4. CONTRACTOR SHALL INSTALL SECURITY FENCING AS REQUIRED TO FACILITATE CONSTRUCTION. MINIMUM NUMBER AND SIZE OF ACCESS GATES SHOWN.
5. CONTRACTOR IS RESPONSIBLE FOR MAINTAINING ALL ROADWAYS USED FOR CONSTRUCTION TRAFFIC. CONTRACTOR SHALL CONFORM TO ALL LOCAL, COUNTY AND STATE REQUIREMENTS FOR TRAFFIC CONTROL ALONG RACINE AVENUE AND SWARTZ ROAD.
6. CONTRACTOR STAGING AREAS TO BE FULLY RESTORED AFTER CONSTRUCTION.
7. AGGREGATE PLACED FOR CONSTRUCTION ACCESS ROADWAYS OR STAGING AREAS MAY NOT BE USED FOR BASE MATERIAL FOR FINAL PAVING.
8. LOCATE GAS PIPELINE ALONG SOUTH PROPERTY LINE. NO STAGING OR EQUIPMENT ALLOWED WITHIN 15 FEET OF THE PIPELINE. ERECT PROTECTIVE MEASURES AS NECESSARY TO ISOLATE AREA AND SAFEGUARD.
9. INSTALL TEMPORARY CULVERTS AS NECESSARY TO FACILITATE STORMWATER CONVEYANCE AND DRAINAGE. CONFORM TO ALL EROSION CONTROL MEASURE REQUIREMENTS OF THE DRAWINGS AND SPECIFICATIONS.
10. ALL WETLANDS SHALL BE AVOIDED. THERE SHALL BE NO GRADING, STAGING, STORAGE, DISPOSAL, OR DISCHARGE OF MATERIALS INTO WETLAND. THERE ARE NO PERMITTED WETLAND IMPACTS FOR THE CONSTRUCTION OF THE BOOSTER PUMPING STATION.
11. AMPHIBIAN AND REPTILE EXCLUSION FENCING SHALL BE INSTALLED IN ADVANCE OF CONSTRUCTION AT THE APPROPRIATE TIME OF THE YEAR IN ACCORDANCE WITH THE WDNR'S AMPHIBIAN AND REPTILE EXCLUSION FENCING PROTOCOLS.
    - 11.1. THE INSTALLATION AND MAINTENANCE OF EXCLUSION FENCING USING THE WDNR AMPHIBIAN AND REPTILE EXCLUSION FENCING PROTOCOL SHALL BE INSTALLED BETWEEN NOVEMBER 16 AND MARCH 4. WORK CAN THEN BE CONDUCTED WITHIN THE FENCED AREA AT ANY TIME OF YEAR AS LONG AS THE FENCING IS MAINTAINED. IF SNAKES OR TURTLES ARE OTHERWISE FOUND IN THE CONSTRUCTION AREA, CAREFULLY MOVE THEM TO AREAS OUTSIDE THE CONSTRUCTION ZONE.
12. CONTRACTOR TO COORDINATE TEMPORARY CONSTRUCTION ENTRANCE AND CULVERT WITH THE CITY OF NEW BERLIN.

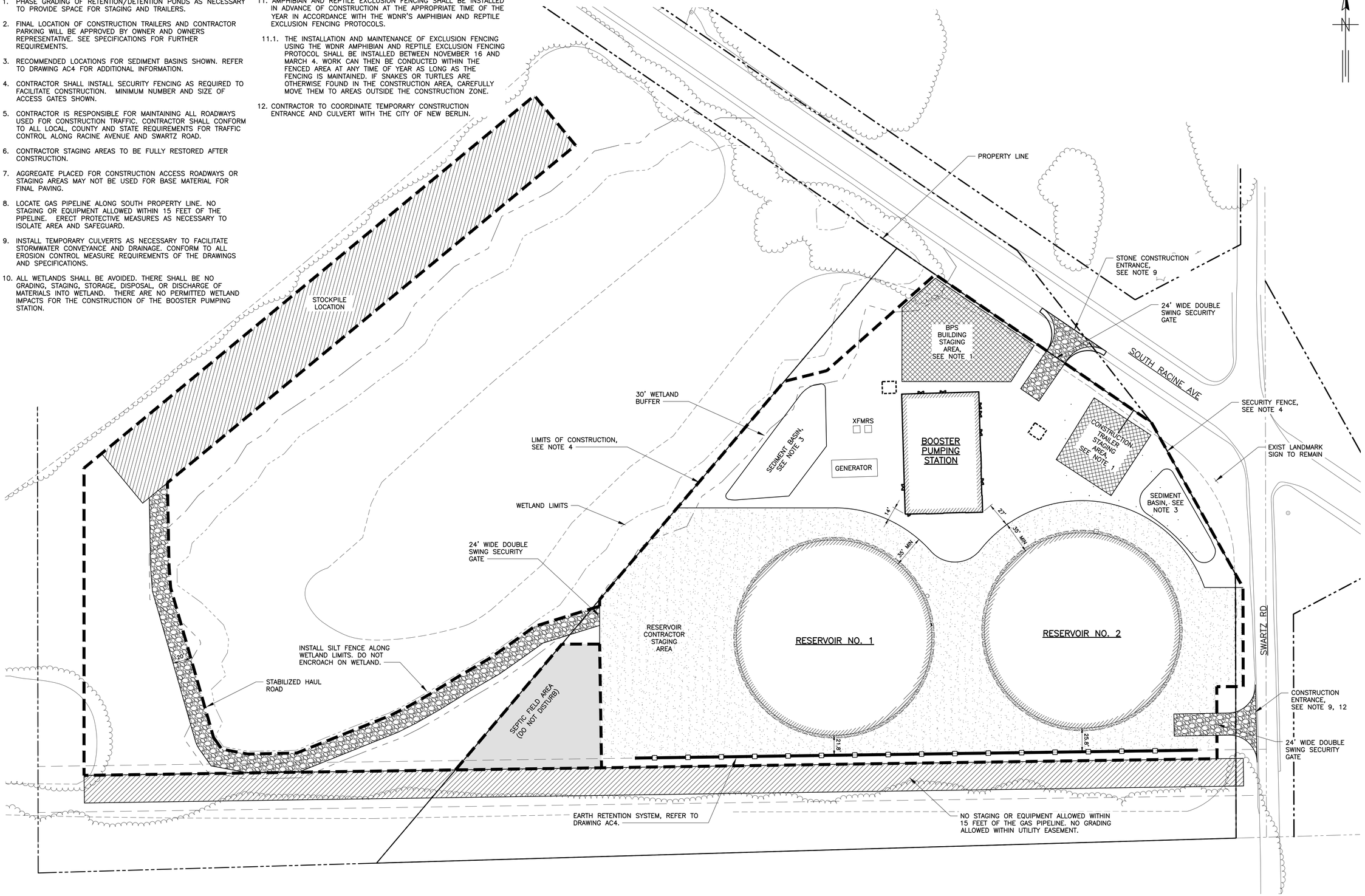


DRAFT 98% PROGRESS DRAWINGS
OCTOBER 2019

## CONSTRUCTION STAGING PLAN
SCALE: 1"=40'

| NO. | DATE | APPD | REVISION |
|---|---|---|---|

Waukesha Water Utility
SERVING WAUKESHA SINCE 1886

GREELEY AND HANSEN
741 N. GRAND AVE, SUITE 308
WAUKESHA, WI 53186

GREAT WATER ALLIANCE™

CONTRACT PACKAGE 3: BOOSTER PUMPING STATION AND WATER SUPPLY CONTROL BUILDING

CONSTRUCTION STAGING PLAN

APPROVED

SEAL AFFIXED
MONTH / DAY / YEAR

OCTOBER 2019

| | | | |
|---|---|---|---|
| JOB NO.: 15310 | | | |
| DESGN | LAM | CHCK | RMC |
| APPRV | AJM | DRWN | TSM |
| SCALE: | AS SHOWN | | |

DRAWING NUMBER
BC14

SHEET 64 OF 184 | REV 0

BAR MEASURE 1" ON FULLSIZE SHEETS
10/02/2019 11:49:45 AM
FILE: \\GH-DATA01\CLIENT02\15310-WAUKESHA GREAT LAKES WATER SUPPLY PM-CM\21 CADD\21.05 WORKING DWGS\CONTRACT PACKAGE 3 - BPSF\GLWSP-P3-BPSF-BC14.DWG

10/1/2019 12:31:40 PM

BAR MEASURE 1" ON FULLSIZE SHEETS

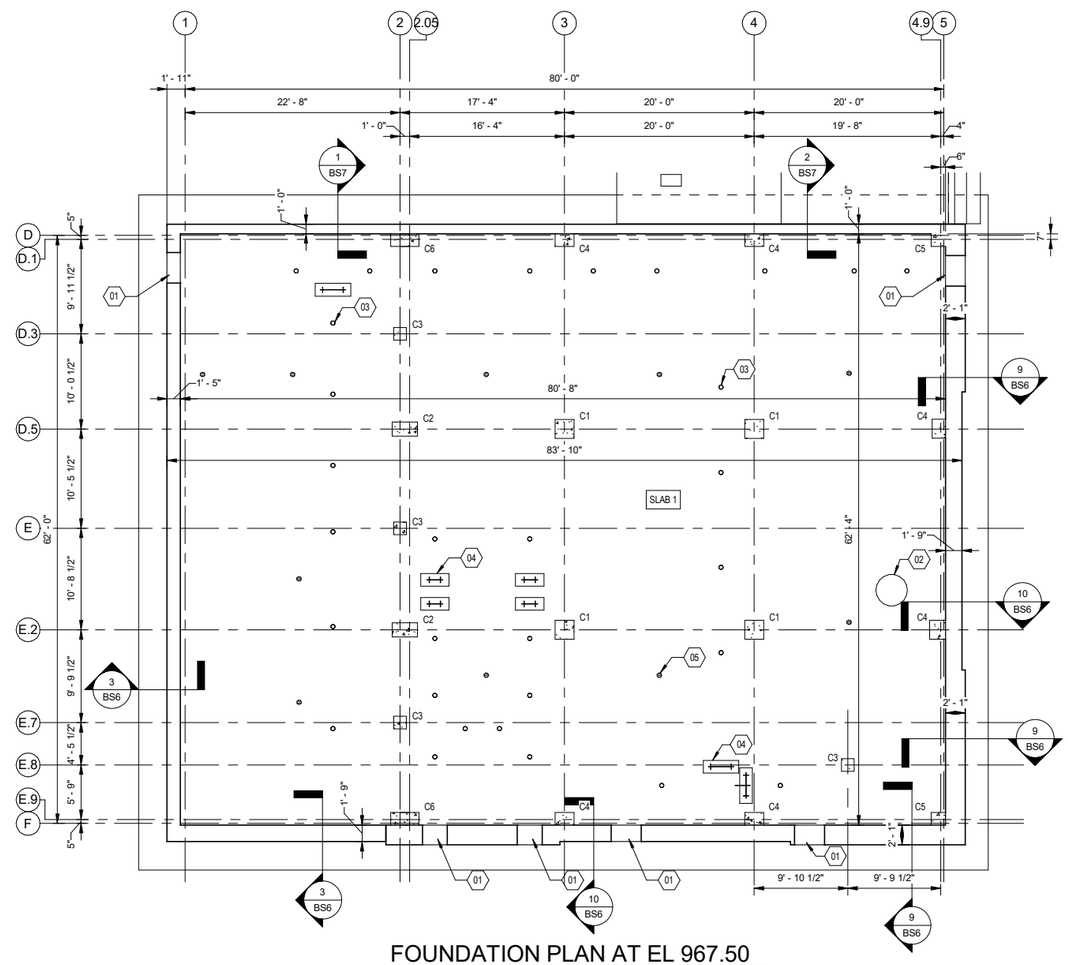


## FOUNDATION PLAN AT EL 967.50

SCALE: 1/8" = 1'-0"

## GENERAL SHEET NOTES

1. SLAB 1 = 36" DEEP MAT SLAB WITH #8@12" OC TOP AND BOTTOM. TOP OF SLAB ELEVATION = 967.50.
2. SEE "GENERAL DETAILS" SHEET AS3 FOR THE FOLLOWING DETAILS:
   - OPENING REINFORCEMENT
   - SLAB ON GRADE CONTROL AND CONSTRUCTION JOINT
   - WALL CONTROL AND CONSTRUCTION JOINT
   - WALL CORNER
   - WALL INTERSECTION
   - FOOTING STEP
   - CMU WALL ON SLAB ON GRADE
3. FOR COLUMN SCHEDULE SEE SHEET BS9.

## SHEET KEYNOTES

01 PIPE SLEEVE FOR UTILITY PENETRATION THROUGH WALL. COORDINATE SIZE, LOCATION AND ELEVATION WITH MECHANICAL/ELECTRICAL/PLUMBING DRAWINGS.

02 DUPLEX SUMP PUMP PIT. SEE PLUMBING DRAWINGS.

03 ADJUSTABLE PIPE SADDLE SUPPORT, SEE SHEET AS4.

04 PIPE FLANGE SUPPORT PIER, SEE SHEETS AS3 AND AS4.

05 FLOOR DRAIN SEE PLUMBING.

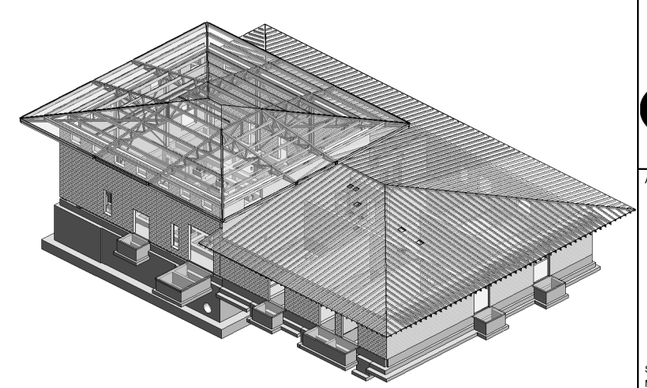

## PERSPECTIVE VIEW

NO SCALE

8 0 8 16 FT

1/8" =1' - 0"

GRÄEF

| NO. | DATE | APPD | DESCRIPTION |
|---|---|---|---|

Waukesha Water Utility
SEPC/NO WAUKESHA SINCE 1886

GREELEY AND HANSEN
741 N. GRAND AVE, SUITE 308
WAUKESHA, WI 53186

GREAT WATER ALLIANCE™

CONTRACT PACKAGE 3: BOOSTER PUMPING STATION, STORAGE, AND CHEMICAL FACILITIES

FOUNDATION PLAN AT EL 967.50

APPROVED

SEAL AFFIXED
MONTH / DAY / YEAR

OCTOBER 2019

| | | | |
|---|---|---|---|
| JOB NO.: | 15310 | | |
| DESGN | MH | CHCK | PG |
| APPRV | MH | DRWN | BM |
| SCALE: | AS SHOWN | | |

DRAWING NUMBER

BS1

SHEET 65 OF 184 REV 0

DRAFT 98% PROGRESS DRAWINGS
OCTOBER 2019

FILE: F:\My Documents\My Projects\2016\GLWSP-P3-BPSF-S_bryan.mentzel@graef-usa.com.rvt

10/1/2019 12:31:42 PM

BAR MEASURE 1" ON FULLSIZE SHEETS

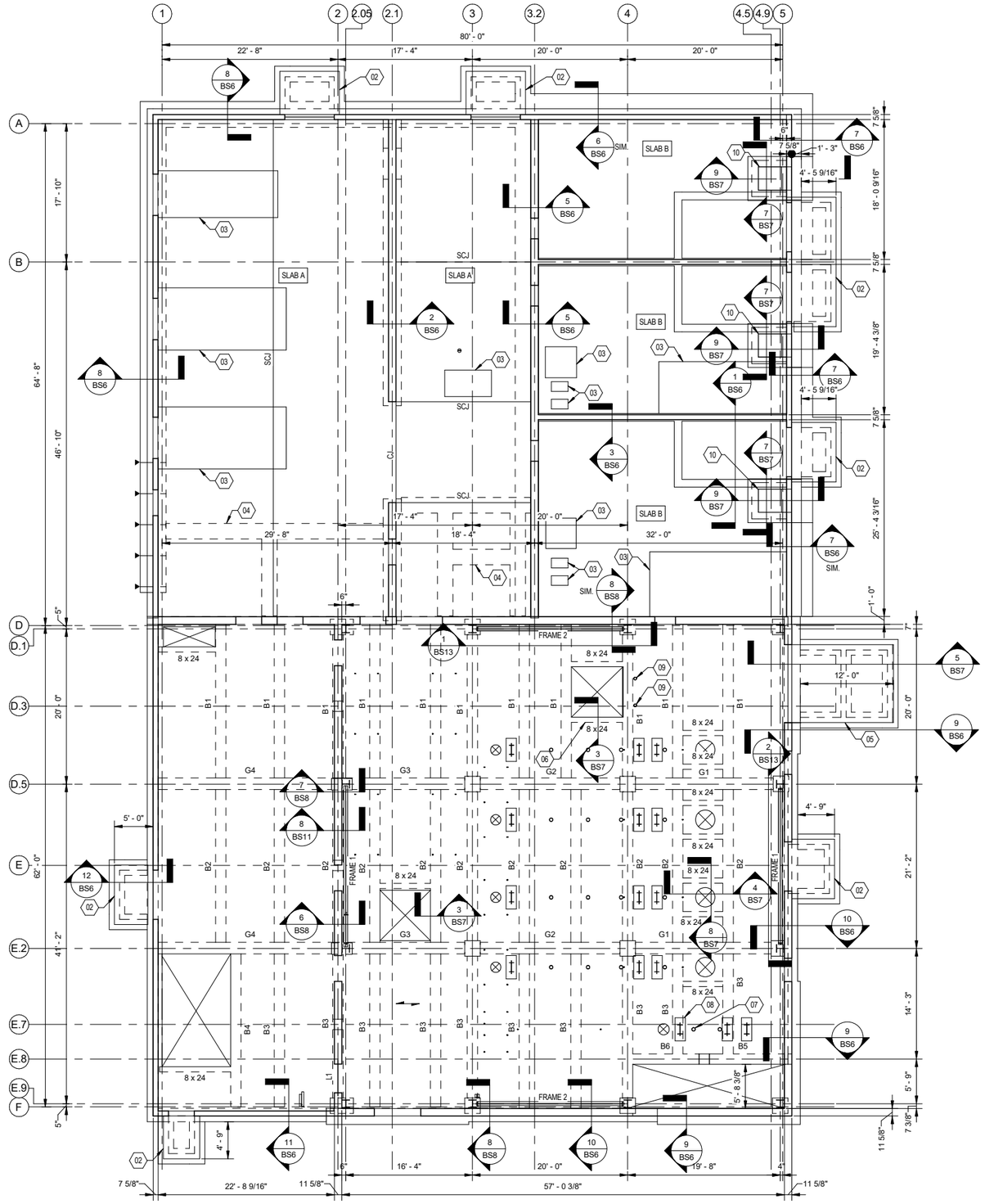


## FLOOR FRAMING PLAN AT EL 981.50

SCALE: 1/8" = 1'-0"

8 0 8 16 FT 1/8" =1' - 0"

### GENERAL SHEET NOTES

1. SLAB A = 7" CONCRETE SLAB ON GRADE REINFORCED WITH 5 LB/CY SYNTHETIC MACRO FIBERS. TOP OF CONCRETE SLAB ELEVATION = 981.5 UNLESS NOTED OTHERWISE ON PLAN.
2. SLAB B = 12" CONCRETE SLAB ON GRADE REINFORCED WITH #6@12" OC EACH WAY TOP AND BOTTOM. TOP OF CONCRETE SLAB ELEVATION = 977.5 UNLESS NOTED OTHERWISE ON PLAN.
3. SCJ = CONCRETE SLAB CONTROL JOINT.
4. CJ = CONCRETE SLAB JOINT.
5. SEE "GENERAL DETAILS" SHEET AS3 FOR THE FOLLOWING DETAILS:
   - OPENING REINFORCEMENT
   - SLAB ON GRADE CONTROL AND CONSTRUCTION JOINT
   - WALL CONTROL AND CONSTRUCTION JOINT
   - WALL CORNER
   - WALL INTERSECTION
   - FOOTING STEP
6. SEE SHEET B59 FOR CONCRETE BEAM SCHEDULE.

### SHEET KEYNOTES

01 PIPE SLEEVE FOR UTILITY PENETRATION THROUGH WALL. COORDINATE SIZE, LOCATION AND ELEVATION WITH MECHANICAL/ELECTRICAL/PLUMBING DRAWINGS.

02 STOOP. SEE ARCHITECTURAL DRAWINGS FOR SIZE AND LOCATION.

03 6" EQUIPMENT PAD. COORDINATE SIZE WITH MECHANICAL EQUIPMENT SUPPLIER, SEE DETAIL 4/BS6.

04 THICKENED SLAB TO 12" UNDER INTERIOR MASONRY WALLS, SEE DETAIL 10/BS11.

05 TRUCK APRON, SEE DETAIL 5/BS7.

06 REINFORCE ALL 8x24 CONCRETE BEAMS WITH (2) #5 TOP AND BOTTOM AND #4 STIRRUPS AT 8" OC.

07 ADJUSTABLE PIPE SADDLE SUPPORT, SEE SHEET AS4.

08 PIPE FLANGE SUPPORT PIER, SEE SHEETS AS3 AND AS4.

09 4" DIAMETER PIPE BOLLARD, SEE DETAIL 8/BS9.

| NO. | DATE | APPD | DESCRIPTION |
|---|---|---|---|

Waukesha Water Utility
SEPO NO WAUKESHA SINCE 1886

GREELEY AND HANSEN
741 N. GRAND AVE, SUITE 308
WAUKESHA, WI 53186

GREAT WATER ALLIANCE™

CONTRACT PACKAGE 3: BOOSTER PUMPING STATION, STORAGE, AND CHEMICAL FACILITIES

FLOOR FRAMING PLAN AT EL 981.50

APPROVED

SEAL AFFIXED
MONTH / DAY / YEAR

OCTOBER 2019

| | | | |
|---|---|---|---|
| JOB NO.: | 15310 | | |
| DESGN | MH | CHCK | PG |
| APPRV | MH | DRWN | BM |
| SCALE: | 1/8" = 1'-0" | | |

DRAWING NUMBER

BS2

SHEET 66 OF 184 REV 0

GRÄEF

DRAFT 98% PROGRESS DRAWINGS
OCTOBER 2019

FILE: F:\My Documents\My Projects\2016\GLWSP-P3-BPSF-S_bryan.mentzel@graef-usa.com.rvt

10/1/2019 12:31:43 PM

BAR MEASURE 1" ON FULLSIZE SHEETS

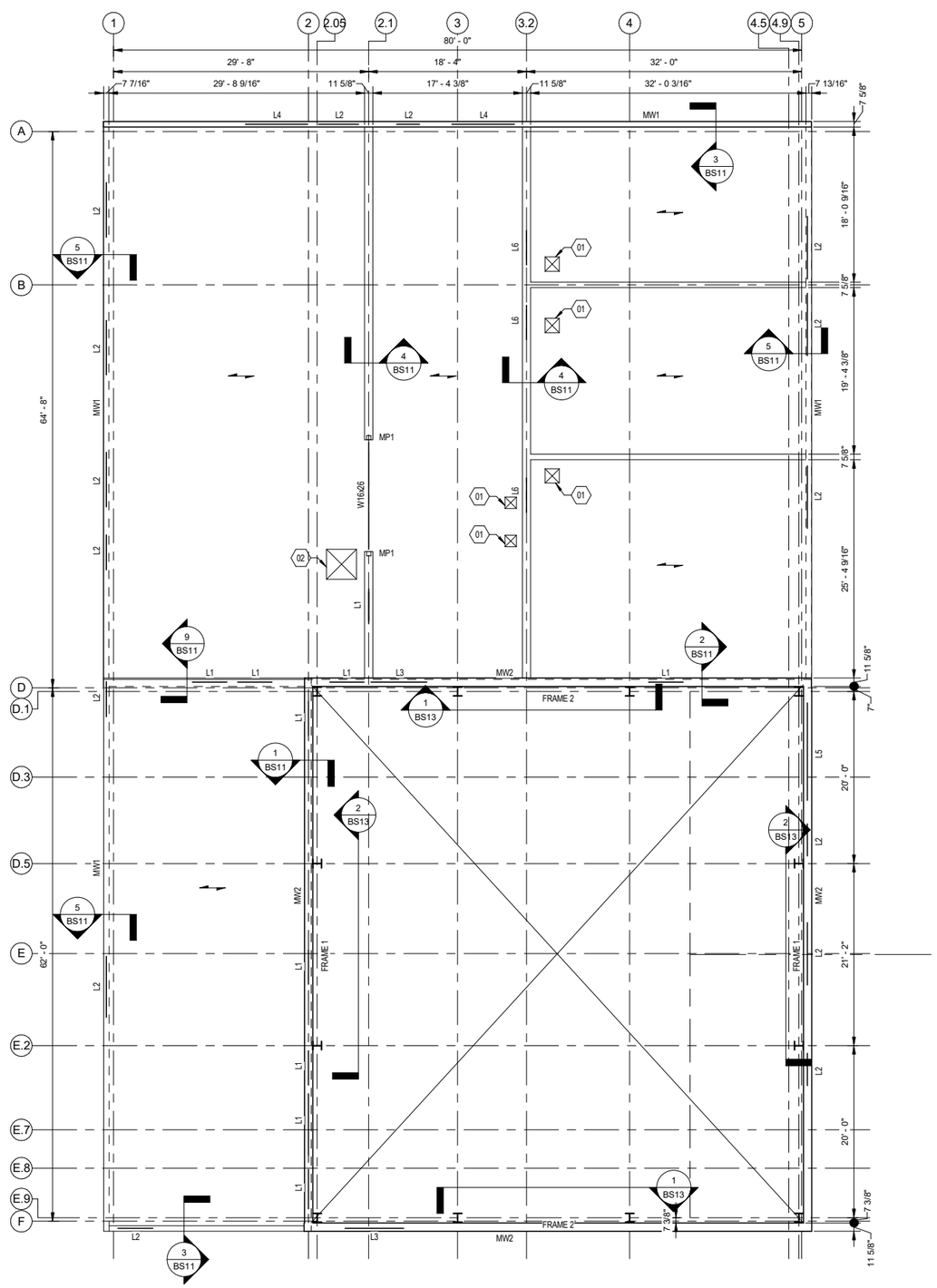


## PRECAST ROOF - FRAMING PLAN AT EL 994.83

SCALE: 1/8" = 1'-0"

### GENERAL SHEET NOTES

1. = SPAN OF 8" PRECAST PLANK WITH LIVE LOAD OF 68 PSF. TOD ELEVATION = 994.83.

### SHEET KEYNOTES

01 PRECAST DECK PENETRATION, SEE MECHANICAL DRAWINGS FOR SIZE AND LOCATION.

02 ROOF HATCH, SEE ARCHITECTURAL DRAWINGS FOR SIZE AND LOCATION.

| NO. | DATE | APPD | DESCRIPTION |
|---|---|---|---|

Waukesha Water Utility
SEPTIC NO WAUKESHA SINCE 1886

GREELEY AND HANSEN
741 N. GRAND AVE, SUITE 308
WAUKESHA, WI 53186

GREAT WATER ALLIANCE™

CONTRACT PACKAGE 3: BOOSTER PUMPING STATION, STORAGE, AND CHEMICAL FACILITIES

PRECAST ROOF - FRAMING PLAN AT EL 994.83

APPROVED

SEAL AFFIXED
MONTH / DAY / YEAR

OCTOBER 2019

| | | | |
|---|---|---|---|
| JOB NO.: | 15310 | | |
| DESGN | MH | CHCK | PG |
| APPRV | MH | DRWN | BM |
| SCALE: | 1/8" = 1'-0" | | |

DRAWING NUMBER

BS3

SHEET 67 OF 184 REV 0

DRAFT 98% PROGRESS DRAWINGS
OCTOBER 2019

8 0 8 16 FT 1/8" =1' - 0"

GRAEF

FILE: F:\My Documents\My Projects\2016\GLWSP-P3-BPSF-S_bryan.mentzel@graef-usa.com.rvt

10/1/2019 12:31:43 PM

1" BAR MEASURE 1" ON FULLSIZE SHEETS

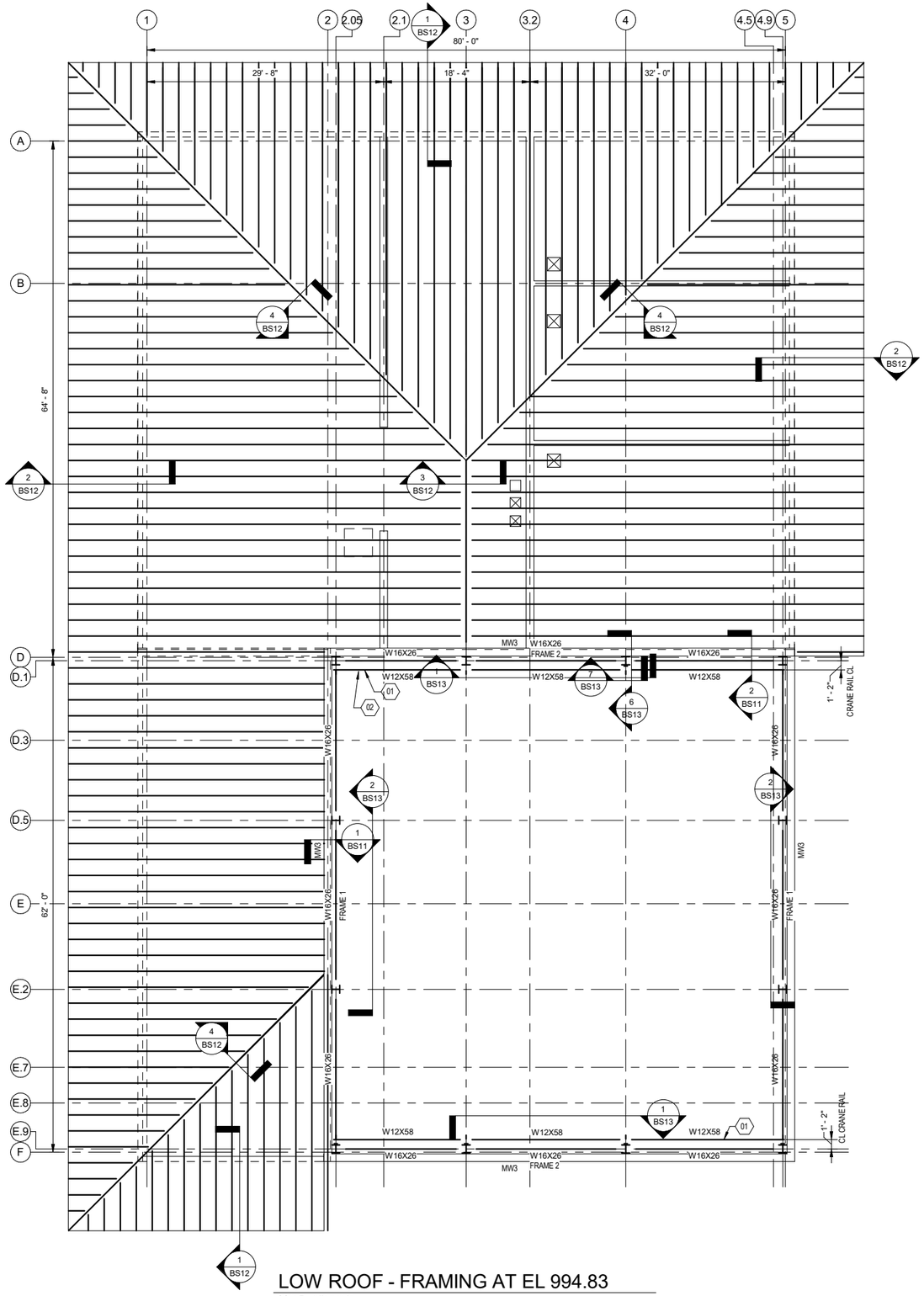


## GENERAL SHEET NOTES

1. ROOF SLOPE IS 2:12.
2. LIGHT GAGE DESIGNER SHALL PROVIDE DESIGN AND DETAILS FOR ALL CONNECTIONS TO STRUCTURE.

## SHEET KEYNOTES

01 CRANE BEAM. SEE BS13 FOR COLUMN CONNECTIONS.

02 SEE DETAIL 8/BS13 FOR CRANE STOP DETAIL

| NO. | DATE | APPD | DESCRIPTION |
|---|---|---|---|

Waukesha Water Utility
SERVING WAUKESHA SINCE 1886

GREELEY AND HANSEN
741 N. GRAND AVE, SUITE 308
WAUKESHA, WI 53186

GREAT WATER ALLIANCE™

CONTRACT PACKAGE 3: BOOSTER PUMPING STATION, STORAGE, AND CHEMICAL FACILITIES

LOW ROOF - FRAMING AT EL 994.83

APPROVED

SEAL AFFIXED
MONTH / DAY / YEAR

OCTOBER 2019

| | | | |
|---|---|---|---|
| JOB NO.: | 15310 | | |
| DESGN | MH | CHCK | PG |
| APPRV | MH | DRWN | BM |
| SCALE: | 1/8" = 1'-0" | | |

DRAWING NUMBER

BS4

SHEET 68 OF 184 REV 0

DRAFT 98% PROGRESS DRAWINGS
OCTOBER 2019

LOW ROOF - FRAMING AT EL 994.83
SCALE: 1/8" = 1'-0"

8 0 8 16 FT 1/8" =1' - 0"

GRAEF

FILE: F:\My Documents\My Projects\2016\GLWSP-P3-BPSF-S_bryan.mentzel@graef-usa.com.rvt

10/1/2019 12:31:44 PM

BAR MEASURE 1" ON FULLSIZE SHEETS

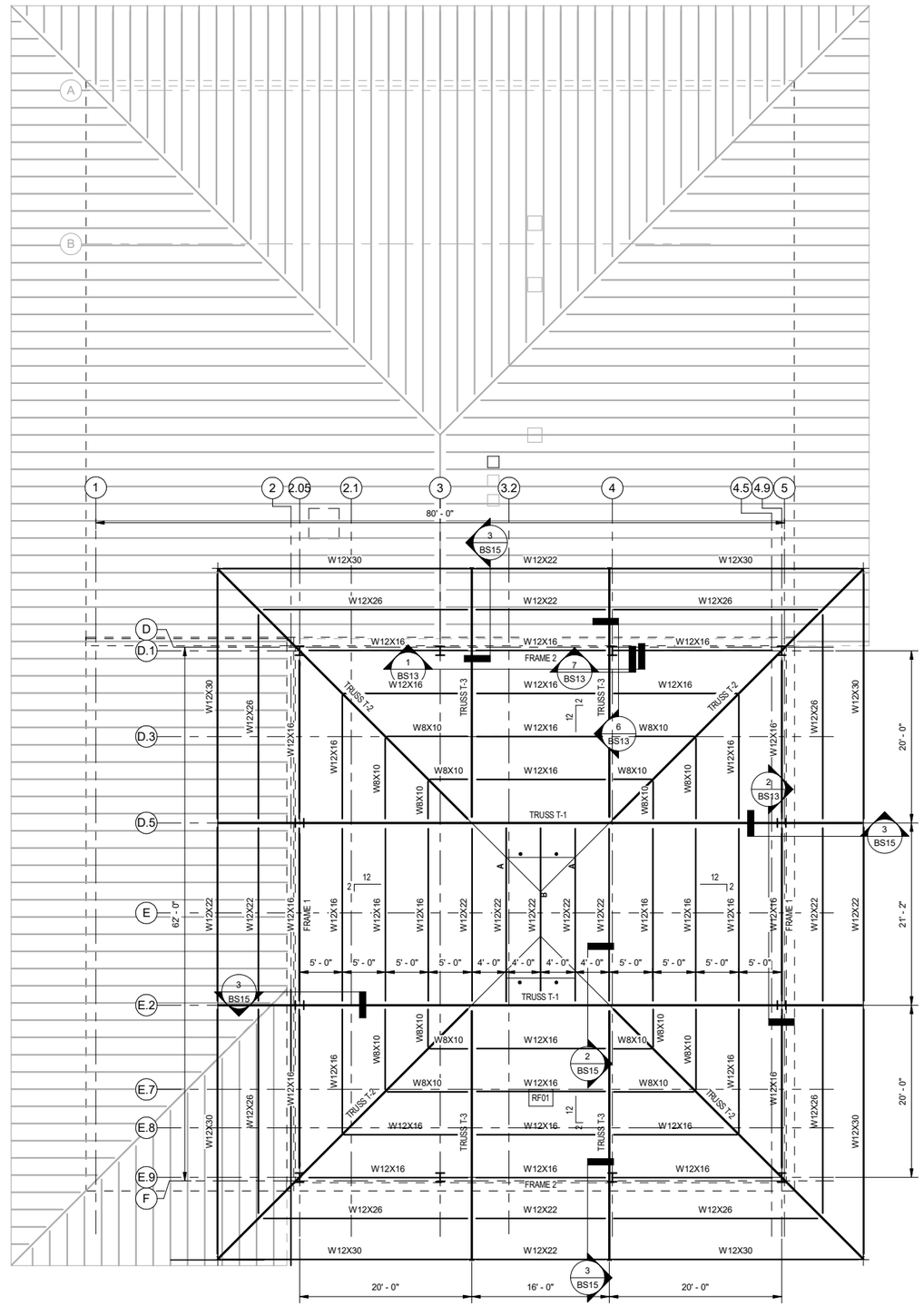


## GENERAL SHEET NOTES

1. TOP OF STEEL = TRUSS BEARING = 1006.17.

O = C6x8.2

A = BEAM WITH C8x11.8

B = BEAM WITH W16x26 PLUS BENT PLATE

| NO. | DATE | APPD | DESCRIPTION |
|---|---|---|---|

Waukesha Water Utility
SEPC/NO WAUKESHA SINCE 1886

GREELEY AND HANSEN
741 N. GRAND AVE, SUITE 308
WAUKESHA, WI 53186

GREAT WATER ALLIANCE™

CONTRACT PACKAGE 3: BOOSTER PUMPING STATION, STORAGE, AND CHEMICAL FACILITIES

HIGH ROOF - FRAMING PLAN AT EL 1006.17

APPROVED

SEAL AFFIXED
MONTH / DAY / YEAR

OCTOBER 2019

| | | | |
|---|---|---|---|
| JOB NO.: | 15310 | | |
| DESGN | MH | CHCK | PG |
| APPRV | MH | DRWN | BM |
| SCALE: | 1/8" = 1'-0" | | |

DRAWING NUMBER

BS5

SHEET 69 OF 184 REV 0

DRAFT 98% PROGRESS DRAWINGS
OCTOBER 2019

HIGH ROOF - FRAMING PLAN AT EL 1006.17
SCALE: 1/8" = 1'-0"

8 0 8 16 FT 1/8" =1' - 0"

GRAEF

FILE: F:\My Documents\My Projects\2016\GLWSP-P3-BPSF-S_bryan.mentzel@graef-usa.com.rvt

10/1/2019 12:31:45 PM

BAR MEASURE 1" ON FULLSIZE SHEETS

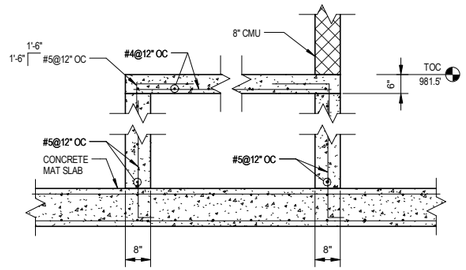


1 BS2 DETAIL
SCALE: 1/2" = 1'-0"

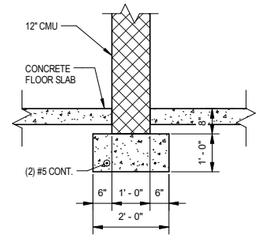


2 BS2 DETAIL
SCALE: 1/2" = 1'-0"

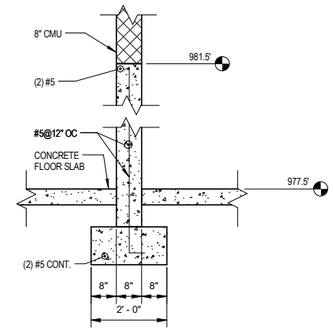


3 BS1 DETAIL
SCALE: 1/2" = 1'-0"

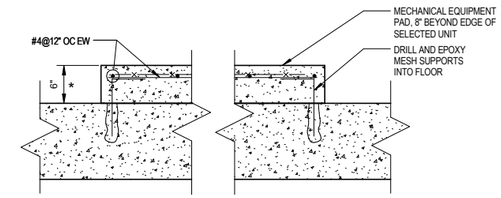


4 MECHANICAL PAD
SCALE: 1" = 1'-0"

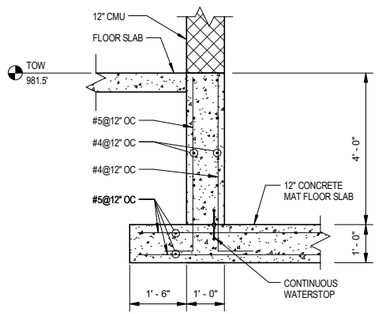


5 BS2 DETAIL
SCALE: 1/2" = 1'-0"

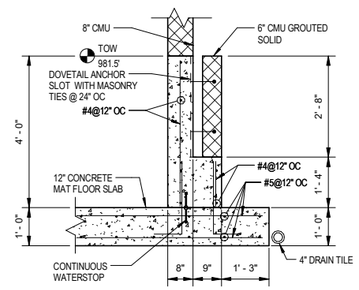


6 BS2 DETAIL
SCALE: 1/2" = 1'-0"

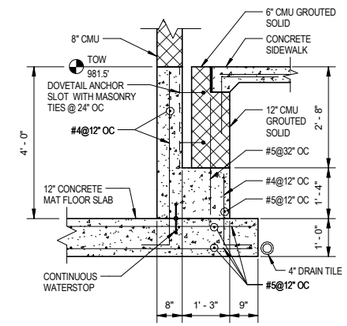


7 BS2 DETAIL
SCALE: 1/2" = 1'-0"

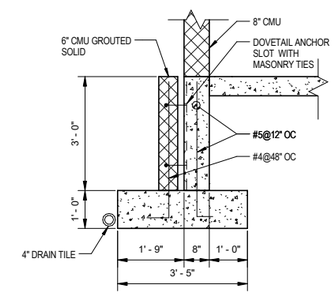


8 BS2 DETAIL
SCALE: 1/2" = 1'-0"

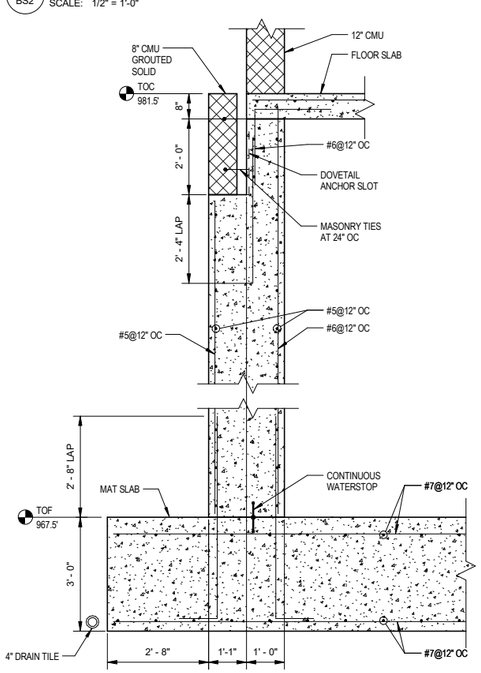


9 BS1 DETAIL
SCALE: 1/2" = 1'-0"

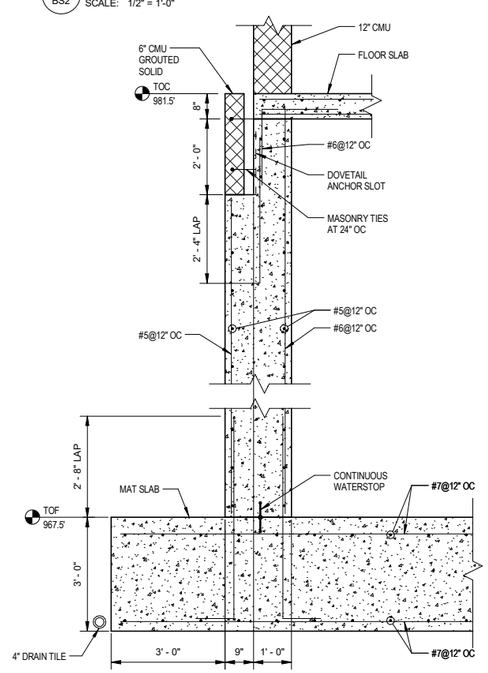


10 BS1 DETAIL
SCALE: 1/2" = 1'-0"

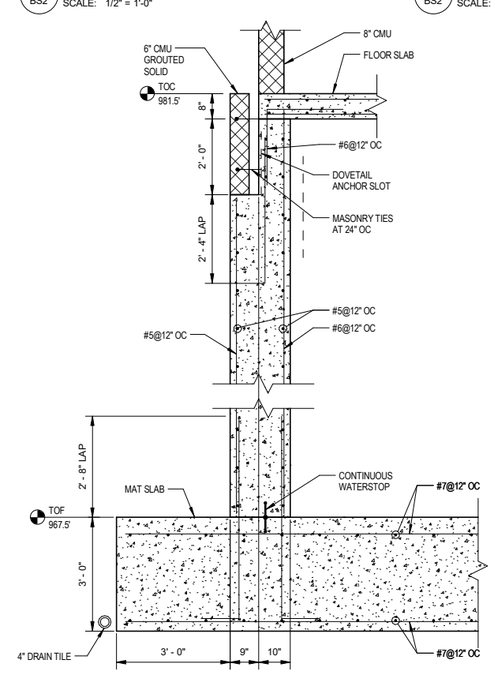


11 BS2 DETAIL
SCALE: 1/2" = 1'-0"

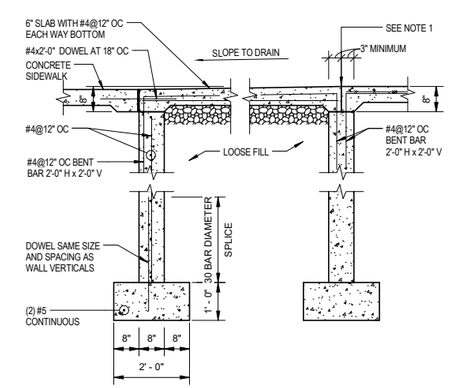


NOTE:

1. LOCATE SLAB BREAK UNDER DOOR THRESHOLD. COORDINATE LOCATION WITH ARCHITECTURAL DRAWINGS.

12 BS2 DETAIL
SCALE: 1/2" = 1'-0"

1 0 1 2 FT 1" =1' - 0"

2 0 2 4 FT 1/2" =1' - 0"

DRAFT 98% PROGRESS DRAWINGS
OCTOBER 2019

GRÄEF

| NO. | DATE | APPD | DESCRIPTION |
|---|---|---|---|

Waukesha Water Utility
SEPTIC NO WAUKESHA SINCE 1886

GREELEY AND HANSEN
741 N. GRAND AVE, SUITE 308
WAUKESHA, WI 53186

GREAT WATER ALLIANCE™

CONTRACT PACKAGE 3: BOOSTER PUMPING STATION, STORAGE, AND CHEMICAL FACILITIES

FOUNDATION - SECTIONS AND DETAILS

APPROVED

SEAL AFFIXED
MONTH / DAY / YEAR

OCTOBER 2019

| | | | |
|---|---|---|---|
| JOB NO.: | 15310 | | |
| DESGN | MH | CHCK | PG |
| APPRV | MH | DRWN | BM |
| SCALE: | AS SHOWN | | |

DRAWING NUMBER

BS6

SHEET 70 OF 184 REV 0

FILE: F:\My Documents\My Projects\2016\GLWSP-P3-BPSF-S_bryan.mentzel@graef-usa.com.rvt

10/1/2019 12:31:46 PM

BAR MEASURE 1" ON FULLSIZE SHEETS

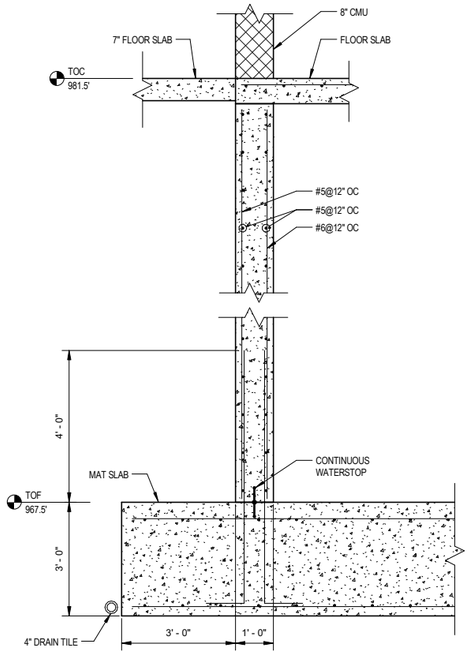


1 BS1 DETAIL
SCALE: 1/2" = 1'-0"

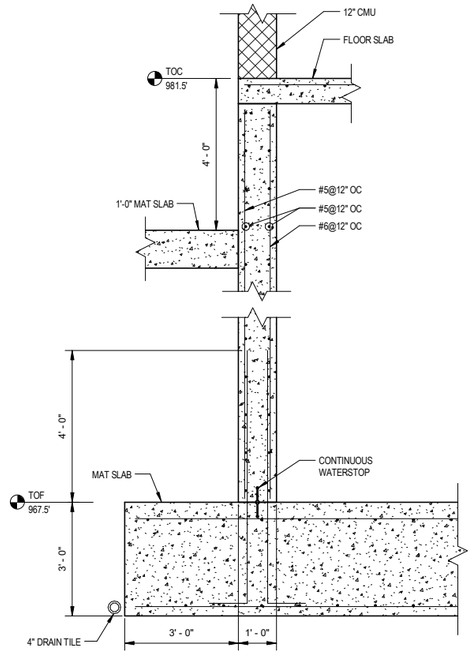


2 BS1 DETAIL
SCALE: 1/2" = 1'-0"

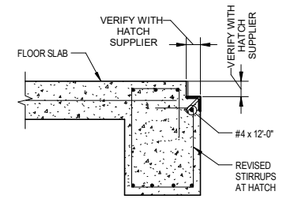


3 BS2 DETAIL
SCALE: 3/4" = 1'-0"

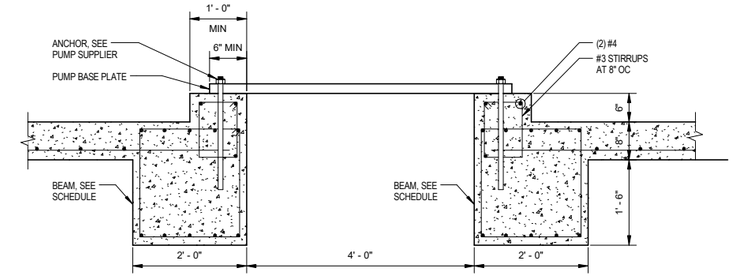


4 BS2 DETAIL
SCALE: 3/4" = 1'-0"

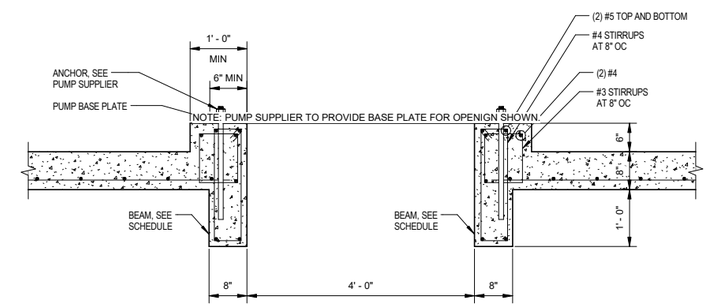


8 BS2 DETAIL
SCALE: 3/4" = 1'-0"

NOTE: PUMP SUPPLIER TO PROVIDE BASE PLATE FOR OPENIGN SHOWN.

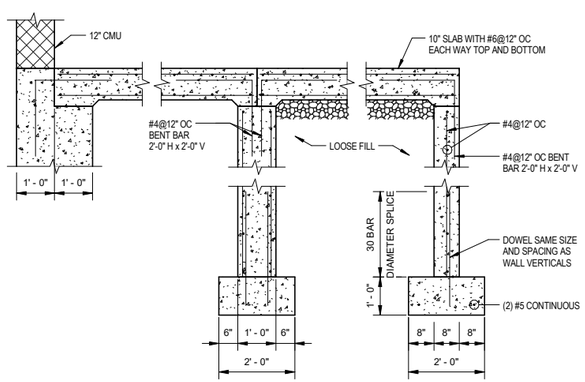


5 BS2 TRUCK APRON DETAIL
SCALE: 1/2" = 1'-0"

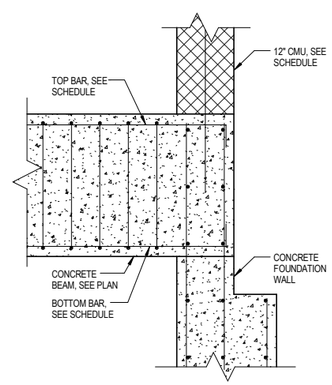


6 DETAIL
SCALE: 3/4" = 1'-0"

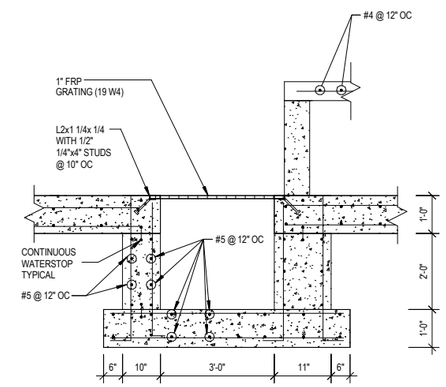


7 DETAIL
SCALE: 1/2" = 1'-0"

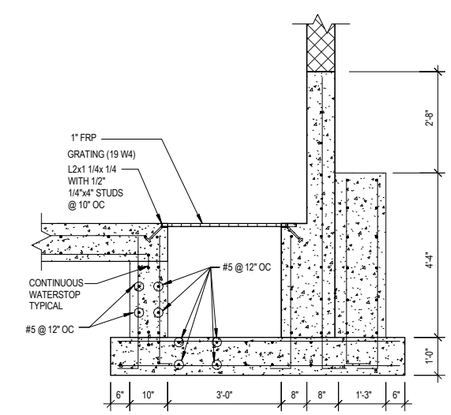


9 DETAIL
SCALE: 1/2" = 1'-0"

DRAFT 98% PROGRESS DRAWINGS
OCTOBER 2019

1 0 1 2 3 FT 3/4" =1' - 0"

2 0 2 4 FT 1/2" =1' - 0"

GRAEF

| NO. | DATE | APPD | DESCRIPTION |
|---|---|---|---|

Waukesha Water Utility
SERVING WAUKESHA SINCE 1886

GREELEY AND HANSEN
741 N. GRAND AVE, SUITE 308
WAUKESHA, WI 53186

GREAT WATER ALLIANCE™

CONTRACT PACKAGE 3: BOOSTER PUMPING STATION, STORAGE, AND CHEMICAL FACILITIES

FOUNDATION - SECTIONS AND DETAILS

APPROVED

SEAL AFFIXED
MONTH / DAY / YEAR

OCTOBER 2019

| | | | |
|---|---|---|---|
| JOB NO.: | 15310 | | |
| DESGN | MH | CHCK | PG |
| APPRV | MH | DRWN | BM |
| SCALE: | AS SHOWN | | |

DRAWING NUMBER

BS7

SHEET 71 OF 184 REV 0

FILE: F:\My Documents\My Projects\2016\GLWSP-P3-BPSF-S_bryan.mentzel@graefusa.com.rvt

10/1/2019 12:31:47 PM

1" BAR MEASURE 1" ON FULLSIZE SHEETS

## CONCRETE COLUMN SCHEDULE

| LEVEL \ MARK | | C1 | C2 | C3 | C4 | C5 | C6 |
|---|---|---|---|---|---|---|---|
| TOC FIRST FLOOR | | | | | | | |
| | SIZE (WxB) | 24x24 | 30x20 | 16x16 | 20x22 | 22x22 | 30x22 |
| | VERTICALS | (8) #9 | (6) #10 | (4) #8 | (4) #10 | (4) #10 | (6) #10 |
| | TIES | #4@12" OC | #4@12" OC | #3@12" OC | #4@12" OC | #4@12" OC | #4@12" OC |
| | TYPE | I | II | I | III | VI | V |
| TOF | CONCRETE STRENGTH (PSI) | 4000 | 4000 | 4000 | 4000 | 4000 | 4000 |
| 967'-6" | | | | | | | |

CONCRETE COLUMN SCHEDULE NOTES:

1. SEE TYPICAL COLUMN DIAGRAM DETAIL THIS SHEET FOR INFORMATION PERTAINING TO COLUMN SCHEDULE.
2. SEE CONCRETE COLUMN STRENGTH EXTENTS DETAIL THIS SHEET FOR COLUMN/SLAB INTERFACE.

## STEEL COLUMN SCHEDULE

| LOCATION | SIZE | BASE PLATE TxWxL | ANCHOR BOLTS | EMBEDMENT (Le) | TYPE |
|---|---|---|---|---|---|
| P.1-2.05, 3, 4, 4.9 | W12x58 | 1"x14"x14" | (4) 3/4" DIAMETER | 18" | I |
| E.9-2.05, 3, 4, 4.9 | W12x58 | 1"x14"x14" | (4) 3/4" DIAMETER | 18" | II |
| D.5-2.05 & 4.9 | W10x39 | 1"x12"x12" | (4) 3/4" DIAMETER | 18" | II |
| E.2-2.05 & 4.9 | W10x39 | 1"x12"x12" | (4) 3/4" DIAMETER | 18" | II |

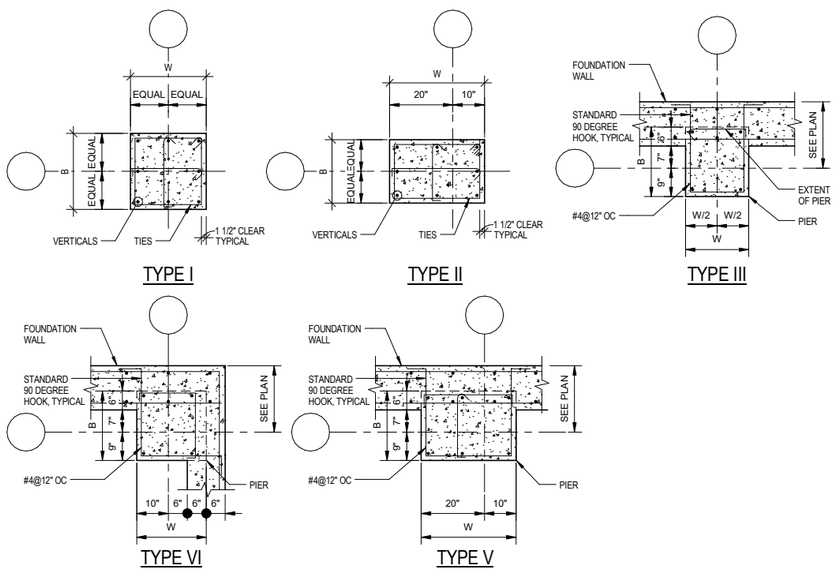


1 CONCRETE COLUMN TYPES
SCALE: 1/2" = 1'-0"

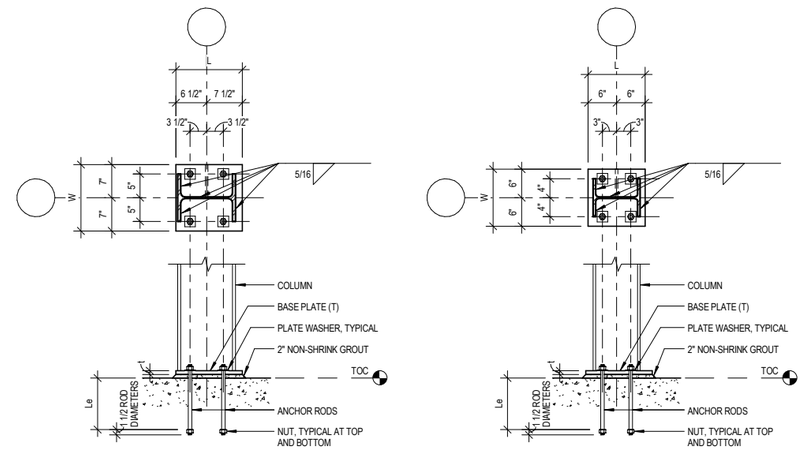


2 BASE PLATE DETAIL - TYPE I
SCALE: 3/4" = 1'-0"

3 BASE PLATE DETAIL - TYPE II
SCALE: 3/4" = 1'-0"

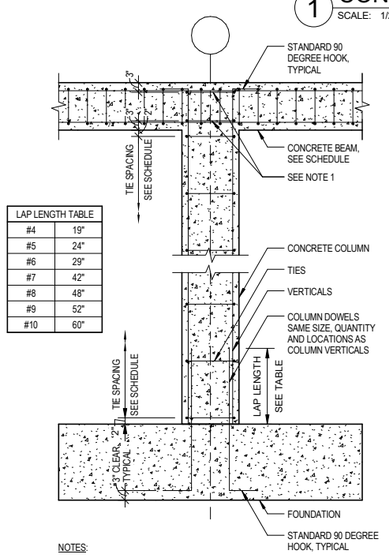


| LAP LENGTH TABLE | |
|---|---|
| #4 | 19" |
| #5 | 24" |
| #6 | 29" |
| #7 | 42" |
| #8 | 48" |
| #9 | 52" |
| #10 | 60" |

NOTES:

1. PROVIDE TWO TIES WITHIN SLAB DEPTH AT EXTERIOR COLUMN.
2. PROVIDE TIES AT 6" OC ALONG SLOPE.

4 TYPICAL COLUMN DIAGRAM
SCALE: 1/2" = 1'-0"

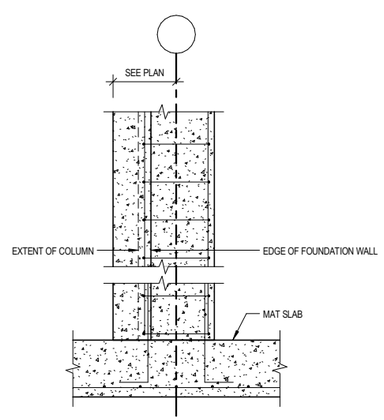


5 TYPICAL EXTERIOR COLUMN
SCALE: 1/2" = 1'-0"

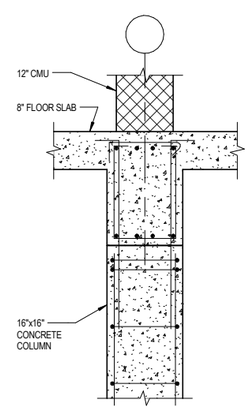


6 BS2 DETAIL
SCALE: 3/4" = 1'-0"

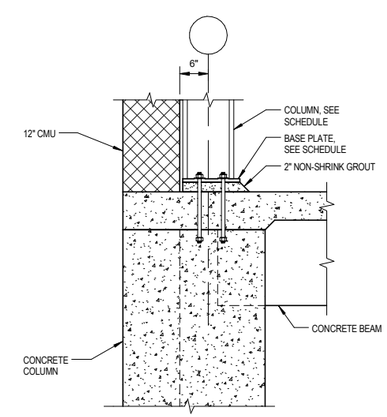


7 BS2 DETAIL
SCALE: 3/4" = 1'-0"

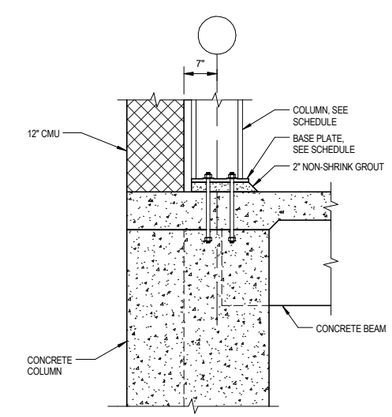


8 BS2 DETAIL
SCALE: 3/4" = 1'-0"

1 0 1 2 3 FT 3/4" =1' - 0"

2 0 2 4 FT 1/2" =1' - 0"

DRAFT 98% PROGRESS DRAWINGS
OCTOBER 2019

GRÄEF

| NO. | DATE | APPD | DESCRIPTION |
|---|---|---|---|

Waukesha Water Utility
SEPTIC NO WAUKESHA SINCE 1886

GREELEY AND HANSEN
741 N. GRAND AVE, SUITE 308
WAUKESHA, WI 53186

GREAT WATER ALLIANCE™

CONTRACT PACKAGE 3: BOOSTER PUMPING STATION, STORAGE, AND CHEMICAL FACILITIES

CONCRETE FLOOR - SECTIONS AND DETAILS

APPROVED

SEAL AFFIXED
MONTH / DAY / YEAR

OCTOBER 2019

| | | | |
|---|---|---|---|
| JOB NO.: | 15310 | | |
| DESGN | MH | CHCK | PG |
| APPRV | MH | DRWN | BM |
| SCALE: | AS SHOWN | | |

DRAWING NUMBER

BS8

SHEET 72 OF 184 REV 0

FILE: F:\My Documents\My Projects\2016\GLWSP-P3-BPSF-S_bryan.mentzel@graef-usa.com.rvt

10/1/2019 12:31:49 PM
BAR MEASURE 1" ON FULL SIZE SHEETS

# CONCRETE BEAM SCHEDULE

| BEAM | | | BOTTOM BARS | | TOP BARS | | | | | | | | | | | STIRRUPS | | | SIDE BARS | | REMARKS |
|---|---|---|---|---|---|---|---|---|---|---|---|---|---|---|---|---|---|---|---|---|---|
| | SIZE (INCH) | | | | NORTH OR EAST END | | | | | SOUTH OR WEST END | | | | | | SEE TYPICAL STIRRUP TYPE DIAGRAM | | | | | |
| MARK | W | D | QUANTITY | SIZE | SUPPORT X CL X | | TYPE A B | QUANTITY | SIZE | QUANTITY | SIZE | TYPE A B | SUPPORT X CL X | | SIZE | TYPE | SPACING AT EACH END | QUANTITY (EACH FACE) | SIZE | |
| G1 | 18 | 32 | 5 | 9 | 0'-6" | 6'-6" | B | 6 | 9 | 6 | 9 | A | 6'-6" | 6'-6" | 4 | T1 | 16@5", R@12" | - | - | |
| G2 | 18 | 32 | 5 | 9 | - | - | - | - | - | 6 | 9 | A | 6'-6" | 6'-6" | 4 | T1 | 16@5", R@12" | - | - | |
| G3 | 18 | 32 | 5 | 9 | - | - | - | - | - | 6 | 9 | A | 6'-6" | 6'-6" | 4 | T1 | 16@5", R@12" | - | - | |
| G4 | 18 | 32 | 5 | 9 | - | - | - | - | - | 6 | 9 | B | 6'-6" | 0'-6" | 4 | T1 | 12@7", R@12" | - | - | |
| B1 | 16 | 24 | 3 | 8 | 0'-6" | 5'-6" | B | 3 | 8 | 3 | 8 | A | 5'-6" | 5'-6" | 4 | T1 | 4@10", R@12" | - | - | |
| B2 | 16 | 24 | 3 | 8 | - | - | - | - | - | 3 | 8 | A | 5'-6" | 5'-6" | 4 | T1 | 4@10", R@12" | - | - | |
| B3 | 16 | 24 | 3 | 8 | - | - | - | - | - | 3 | 8 | B | 5'-6" | 0'-6" | 4 | T1 | 4@10", R@12" | - | - | |
| B4 | 16 | 24 | 3 | 8 | 0'-6" | 5'-6" | B | 3 | 8 | 3 | 8 | A | 5'-6" | 0'-6" | 4 | T1 | 4@10", R@12" | - | - | |
| B5 | 16 | 24 | 3 | 6 | 0'-6" | 13'-6" | B | 3 | 7 | - | - | - | - | - | 4 | T1 | 5@8", R@12" | - | - | |
| B6 | 16 | 24 | 3 | 6 | - | - | - | - | - | 3 | 8 | B | 4'-6" | 0'-6" | 4 | T1 | 5@8", R@12" | - | - | |
| | | | | | | | | | | | | | | | | | | | | |
| | | | | | | | | | | | | | | | | | | | | |

CONCRETE BEAM SCHEDULE NOTES:

1. BEAM BOTTOM BAR SUPPORTS SHALL BE IN ACCORDANCE WITH ACI DETAILING MANUAL (PLASTIC TIPPED).
2. PLACING TOLERANCES FOR ALL REINFORCEMENT TO CONFORM TO CRSI RECOMMENDED PRACTICES FOR PLACING REINFORCEMENT BARS.
3. SEE TYPICAL BEAM DIAGRAM THIS SHEET FOR INFORMATION PERTAINING TO BEAM SCHEDULE UNLESS NOTED OTHERWISE IN SCHEDULE.
4. SEE TYPICAL INTERIOR BEAM DETAILS THIS SHEET FOR ADDITIONAL REQUIREMENTS.
5. SEE TYPICAL BEAM CONSTRUCTION JOINT DETAIL THIS SHEET FOR BEAM CONSTRUCTION JOINTS.
6. PROVIDE INDIVIDUAL SHOP DRAWING PLANS AND SCHEDULES FOR ALL FLOORS.
7. WHEN CONTINUOUS TOP BARS ARE INDICATED IN SCHEDULE PROVIDE CLASS B TENSION LAP SPLICE AT CENTERLINE OF SPAN OF BEAM.
8. CAMBER PER SPECIFICATIONS UNLESS NOTED IN SCHEDULE.
9. BEAMS OVER OPENINGS ARE MINMUMS, NOT NECESSARILY THE REQUIRED HEIGHT OF OPENINGS. CONTRACTOR TO COORDINATE.

TYPICAL STIRRUP TYPE DIAGRAM
(UNLESS SHOWN OTHERWISE ON BEAM SECTION)

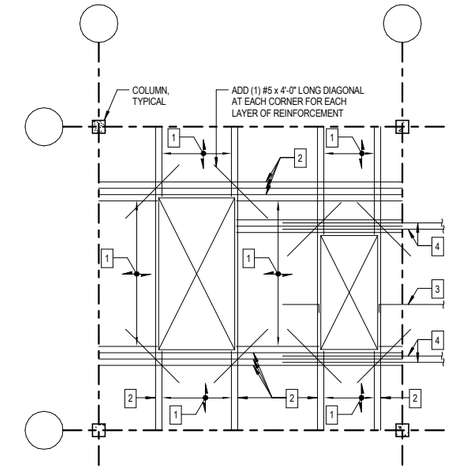


NOTES:

1. FOR OPENINGS 1'-0" OR LESS THE DISPLACED BARS CAN BE MOVED WITHOUT ADDITIONAL REINFORCEMENT.

1 = BOTTOM BARS INTERRUPTED BY OPENING.

2 = DISPLACED BOTTOM BARS. ADDITIONAL 1/2 OF INTERRUPTED BARS EACH SIDE OF OPENING. PROVIDE 2 BARS MINIMUM EACH SIDE. THE DISPLACED BOTTOM BARS SHALL EXTEND THE FULL LENGTH OF THE BAY IN WHICH THEY OCCUR.

3 = TOP BARS INTERRUPTED BY OPENING. PROVIDE 90 DEGREE HOOKS AT OPENING.

4 = DISPLACED TOP BARS. ADDITIONAL 1/2 OF INTERRUPTED BARS EACH SIDE OF OPENING. PROVIDE 2 BARS MINIMUM EACH SIDE.

## 1 SLAB OPENING REINFORCEMENT
SCALE: 1" = 1'-0"

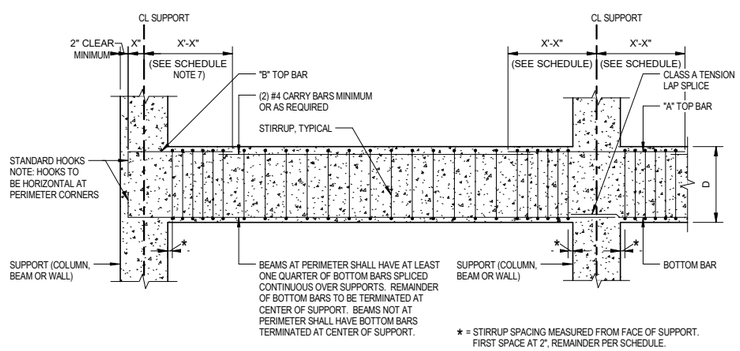


## 2 TYPICAL BEAM DIAGRAM
SCALE: 1/2" = 1'-0"

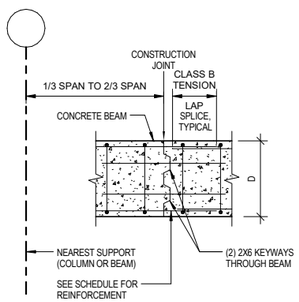


## 3 TYPICAL BEAM CONSTRUCTION JOINT
SCALE: 1/2" = 1'-0"

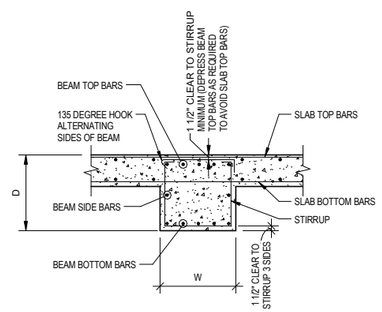


## 4 TYPICAL INTERIOR BEAM
SCALE: 1/2" = 1'-0"

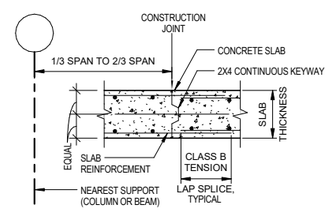


## 5 SLAB CONSTRUCTION JOINT
SCALE: 1/2" = 1'-0"

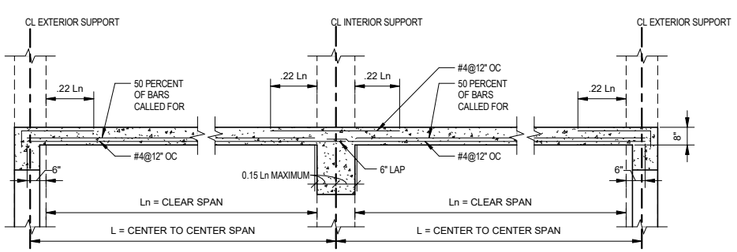


## 6 TYPICAL SLAB SECTION
SCALE: 1/2" = 1'-0"

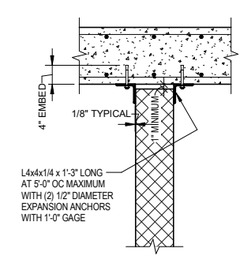


## 7 SUPPORT AT TOP OF INTERIOR CMU WALLS
SCALE: 3/4" = 1'-0"

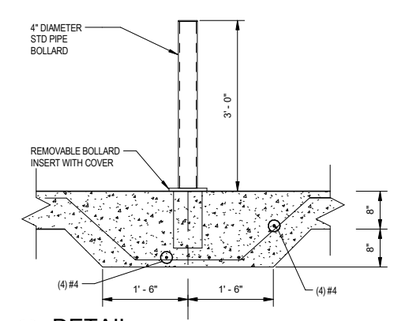


## 8 DETAIL
SCALE: 3/4" = 1'-0"

DRAFT 98% PROGRESS DRAWINGS
OCTOBER 2019

1 0 1 2 FT 1" =1' - 0"
2 0 2 4 FT 1/2" =1' - 0"

GRAEF

| NO. | DATE | APPD | DESCRIPTION |
|---|---|---|---|
| | | | |

Waukesha Water Utility
SEPTICNO WAUKESHA SINCE 1886

GREELEY AND HANSEN
741 N. GRAND AVE, SUITE 308
WAUKESHA, WI 53186

GREAT WATER ALLIANCE™

CONTRACT PACKAGE 3: BOOSTER PUMPING STATION, STORAGE, AND CHEMICAL FACILITIES

CONCRETE FLOOR - SECTIONS AND DETAILS

APPROVED

SEAL AFFIXED
MONTH / DAY / YEAR

OCTOBER 2019

| | | | |
|---|---|---|---|
| JOB NO.: | 15310 | | |
| DESGN | MH | CHCK | PG |
| APPRV | MH | DRWN | BM |
| SCALE: | AS SHOWN | | |

DRAWING NUMBER
BS9

SHEET 73 OF 184 REV 0

FILE: F:\My Documents\My Projects\2016\GLWSP-P3-BPSF-S_bryan.mentzel@graef-usa.com.rvt

10/1/2019 12:31:50 PM

1" BAR MEASURE 1" ON FULL SIZE SHEETS

## LINTEL SCHEDULE

| MARK | TYPE | SIZE | BEARING LENGTH | BEARING DETAIL | REMARKS |
|---|---|---|---|---|---|
| N/A | I | 8" BOND BEAM WITH (2) #5 BOTTOM | 8" | A | ALL INTERIOR NON-LOAD BEARING WALL OPENINGS LESS THAN OR EQUAL TO 6'-0". |
| N/A | IV | 16" BOND BEAM WITH (2) #5 BOTTOM (PROVIDE (2) #6 BOTTOM WHERE OPENINGS ARE GREATER THAN 10'-0" BUT LESS THAN OR EQUAL TO 12'-0") | 8" | A | ALL INTERIOR NON-LOAD BEARING WALL OPENINGS GREATER THAN 6'-0" BUT LESS THAN OR EQUAL TO 12'-0". |
| L1 | III | 8"x8" PRECAST LINTEL WITH (2) #4 BOTTOM | 8" | A | |
| L2 | V | 8"x8" PRECAST LINTEL WITH (2) #5 BOTTOM | 8" | A | |
| L3 | V | 8"x8" PRECAST LINTEL WITH (2) #5 BOTTOM | 8" | B | |
| L4 | VII | W8x15 | 8" | A | |
| L5 | IV | W12x22 | 8" | C | |
| L6 | III | 8"x12" PRECAST LINTEL WITH (2) #4 BOTTOM | 8" | C | |

LINTEL SCHEDULE NOTES:

1. SEE ARCHITECTURAL DRAWINGS FOR SIZE AND LOCATION OF ALL OPENINGS.
2. COORDINATE BOTTOM OF LINTEL ELEVATION WITH ARCHITECTURAL DRAWINGS.
3. ALL DIMENSIONS ARE NOMINAL MASONRY DIMENSIONS UNLESS NOTED OTHERWISE.
4. FOR PRECAST CONCRETE LINTELS, WIDTH OF LINTEL = NOMINAL MASONRY WALL THICKNESS - 3/8".
5. FOR STEEL LINTELS, PROVIDE 1/4" BOTTOM PLATE UNLESS NOTED OTHERWISE. WIDTH OF PLATE = NOMINAL MASONRY THICKNESS (INCLUDING VENEER) - 1" EXTEND PLATE FULL LENGTH OF LINTEL UNLESS NOTED OTHERWISE.
6. FOR STEEL LINTELS GREATER THAN OR EQUAL TO 12'-0" LONG, PROVIDE 1/2" DIAMETER x 4" LONG HEADED WELDED STUDS AT 32" OC ON TOP FLANGE. STEEL LINTELS LESS THAN 10'-0" LONG MAY BE PLACED LOOSE WITHOUT ANCHOR BOLTS OR BEARING PLATES, UNLESS NOTED OTHERWISE.
7. ALL STEEL LINTELS TO HAVE Fy = 50 KSI.

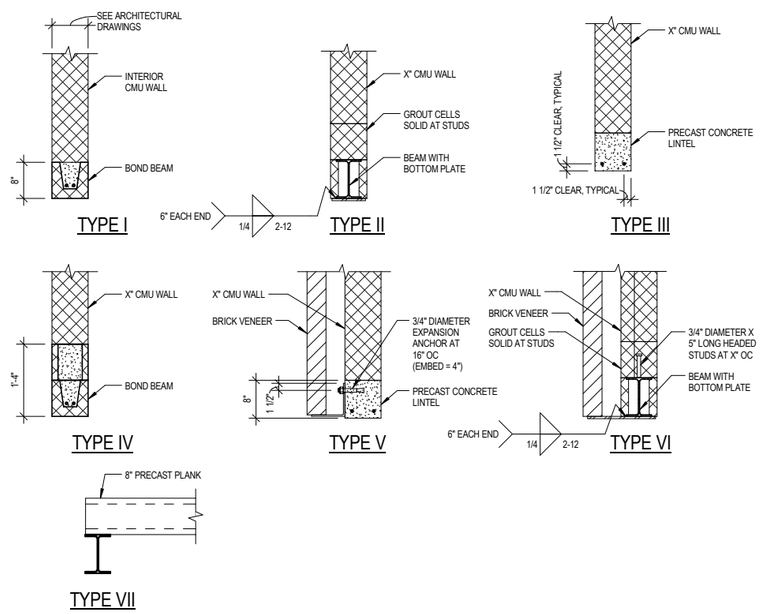


## 1 LINTEL DETAIL

SCALE: 3/4" = 1'-0"

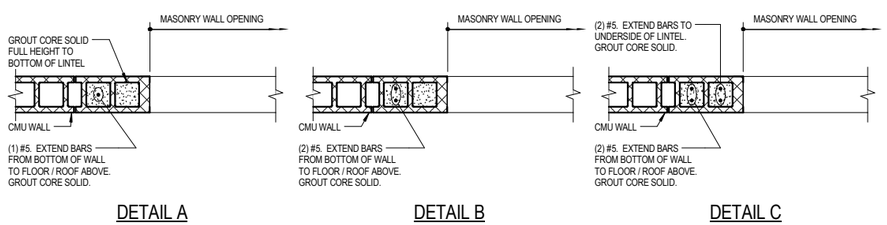


## 4 MASONRY JAMB DETAILS

SCALE: 3/4" = 1'-0"

DRAFT 98% PROGRESS DRAWINGS

OCTOBER 2019

## MASONRY PIER SCHEDULE

| MARK | TYPE | SIZE (L) | VERTICAL REINFORCEMENT | TIES | REMARKS |
|---|---|---|---|---|---|
| MP1 | B | 12"x16" | (4) #4 | #1/4@8" | EXTEND 2 BARS TO TOP OF WALL |

MASONRY PIER SCHEDULE NOTES:

1. PROVIDE DOWELS EQUAL IN SIZE AND NUMBER AS VERTICALS INTO FOUNDATION WALLS, PIERS OR FOOTINGS BELOW PER DETAILS.
2. CONTINUE WALL BOND BEAM AND HORIZONTAL JOINT REINFORCEMENT THROUGH MASONRY PIER.
3. EXTEND VERTICAL REINFORCEMENT FULL HEIGHT OF WALL.
4. PROVIDE LAP SPLICE LENGTH PER SPECIFICATIONS. STAGGER LAPS.
6. BED FACE SHELLS AND WEBS WITH MORTAR AT FILLED CORES.

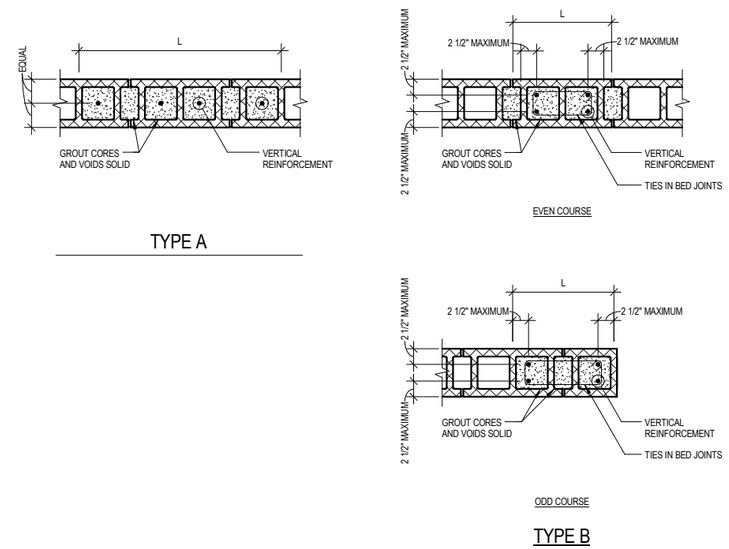


## 2 MASONRY PIER DETAILS

SCALE: 1" = 1'-0"

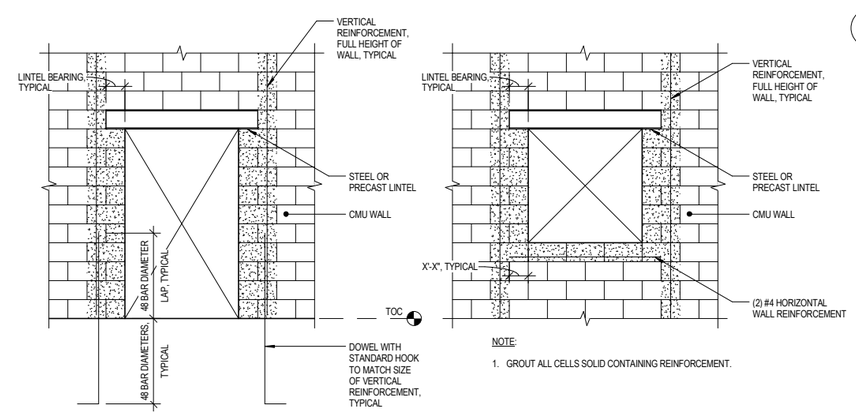


NOTE:

1. GROUT ALL CELLS SOLID CONTAINING REINFORCEMENT

NOTE:

1. GROUT ALL CELLS SOLID CONTAINING REINFORCEMENT.

## 5 MASONRY OPENINGS

SCALE: 3/8" = 1'-0"

## MASONRY WALL SCHEDULE

| MARK | NOMINAL THICKNESS | TYPE | VERTICAL REINFORCEMENT | REMARKS |
|---|---|---|---|---|
| MW1 | 8" | A | #5@40" OC | |
| MW2 | 12" | B | (2) #5@32" OC | |
| MW3 | 12" | B | (2) #5@16" OC | |

MASONRY WALL SCHEDULE NOTES:

1. PROVIDE TYPICAL VERTICAL REINFORCEMENT AT WALL ENDS AND EACH SIDE OF CONTROL JOINTS. REINFORCE FIRST TWO CELLS EACH SIDE OF OPENINGS FULL HEIGHT OF WALL. WHERE THE USE OF STEEL OR PRECAST LINTELS INTERRUPTS VERTICAL CONTINUITY OF WALL REINFORCEMENT, SHIFT REINFORCED CELLS PAST LINTEL BEARING AND GROUT WALL SOLID BELOW ENDS OF LINTELS.
2. PROVIDE DOWELS FOR VERTICAL REINFORCEMENT INTO FOUNDATION WALLS AND FOOTINGS BELOW PER DETAILS.
3. SEE GENERAL NOTES AND DETAILS FOR HORIZONTAL JOINT REINFORCEMENT AND BOND BEAM REQUIREMENTS.
4. UNLESS DETAILED OR OTHERWISE CALLED OUT, PROVIDE CMU LINTELS PER LINTEL SCHEDULE OVER OPENINGS IN MASONRY WALLS.
5. PROVIDE CONTINUOUS HORIZONTAL JOINT REINFORCEMENT IN ALL WALLS AS PER SPECIFICATIONS.
6. OPENINGS IN WALLS PROVIDED FOR MECHANICAL DUCTWORK SHALL BE CENTERED IN BETWEEN BEAM BEARING LOCATIONS OR POSITIONED WITH THE NEAREST EDGE NO CLOSER THAN 24" EITHER SIDE OF BEAM BEARING LOCATIONS.
7. SEE PLAN AND DETAILS FOR ADDITIONAL WALL REINFORCEMENT AND GROUTING REQUIREMENTS NOT COVERED IN THIS SCHEDULE.

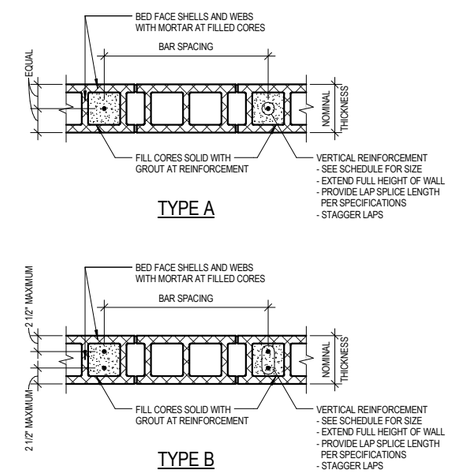


## 3 MASONRY WALL DETAILS

SCALE: 1" = 1'-0"

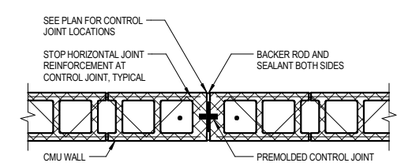


NOTE:

1. STOP BOND BEAM REINFORCEMENT (NOT SHOWN) AT CONTROL JOINT.

## 6 CMU WALL VERTICAL CONTROL JOINT

SCALE: 1" = 1'-0"

1 0 1 2 FT

1" =1' - 0"

GRAEF

| NO. | DATE | APPD | DESCRIPTION |
|---|---|---|---|

Waukesha Water Utility
SERVING WAUKESHA SINCE 1886

GREELEY AND HANSEN
741 N. GRAND AVE, SUITE 308
WAUKESHA, WI 53186

GREAT WATER ALLIANCE™

CONTRACT PACKAGE 3: BOOSTER PUMPING STATION, STORAGE, AND CHEMICAL FACILITIES

MASONRY - SECTIONS AND DETAILS

APPROVED

SEAL AFFIXED
MONTH / DAY / YEAR

OCTOBER 2019

| | | | |
|---|---|---|---|
| JOB NO.: | 15310 | | |
| DESGN | MH | CHCK | PG |
| APPRV | MH | DRWN | BM |
| SCALE: | AS SHOWN | | |

DRAWING NUMBER

BS10

SHEET 74 OF 184 REV 0

FILE: F:\My Documents\My Projects\2016\GLWSP-P3-BPSF-S_bryan.mentzel@graef-usa.com.rvt

10/1/2019 12:31:51 PM
1 BAR MEASURE 1" ON FULLSIZE SHEETS

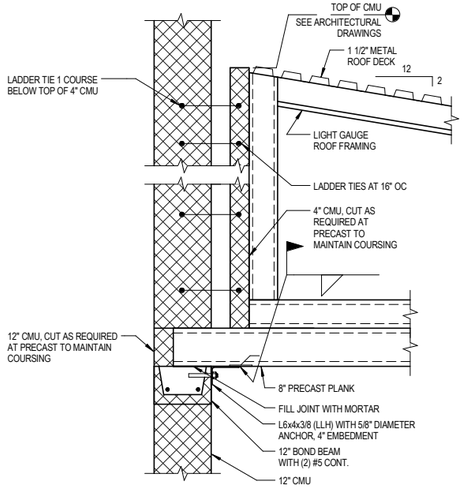


1 BS3 DETAIL
SCALE: 3/4" = 1'-0"

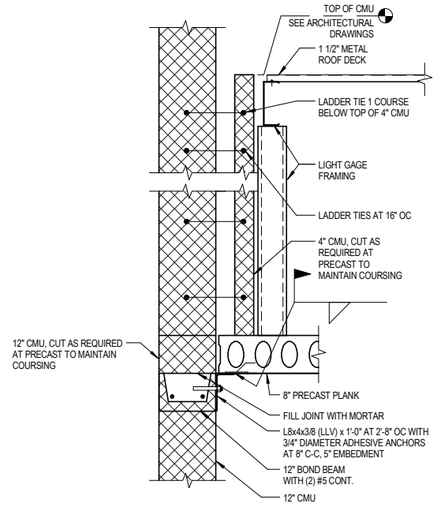


2 BS3 DETAIL
SCALE: 3/4" = 1'-0"

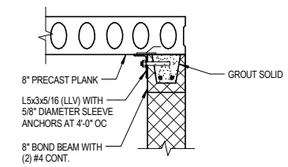


3 BS3 DETAIL
SCALE: 3/4" = 1'-0"

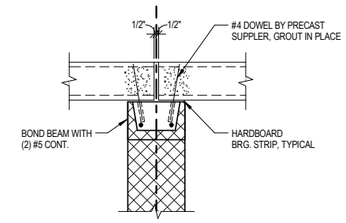


4 BS3 DETAIL
SCALE: 3/4" = 1'-0"

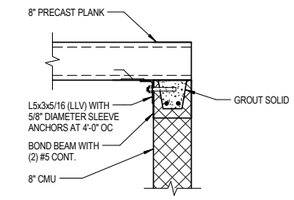


5 BS3 DETAIL
SCALE: 3/4" = 1'-0"

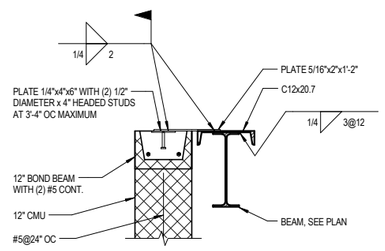


6 DETAIL
SCALE: 3/4" = 1'-0"

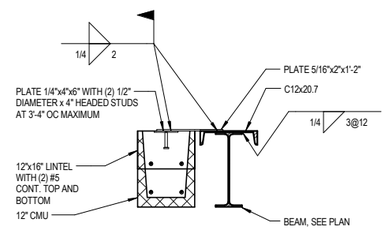


7 DETAIL
SCALE: 3/4" = 1'-0"

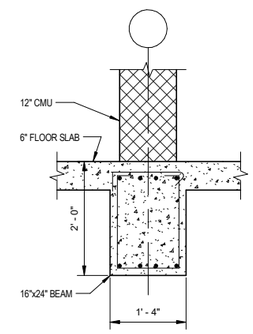


8 BS2 DETAIL
SCALE: 3/4" = 1'-0"

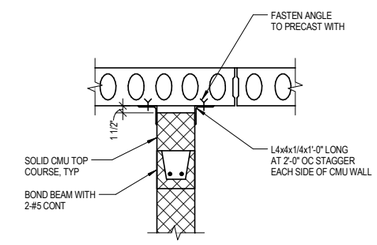


9 BS3 DETAIL
SCALE: 3/4" = 1'-0"

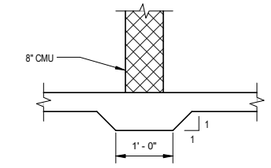


10 DETAIL
SCALE: 3/4" = 1'-0"

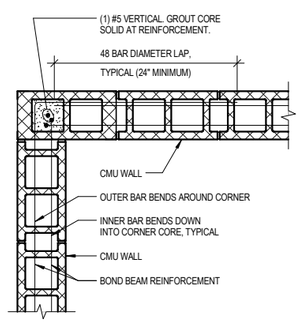


11 TYPICAL BOND BEAM CORNER DETAIL

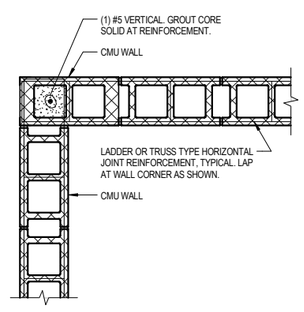


12 TYPICAL WALL CORNER DETAIL

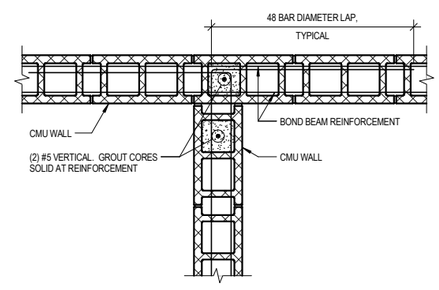


13 TYPICAL BOND BEAM INTERSECTION DETAIL

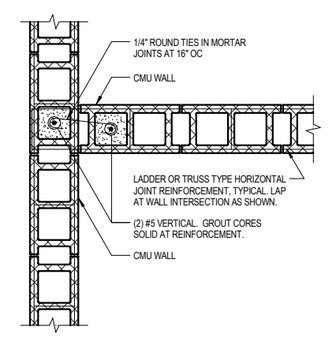


14 TYPICAL WALL INTERSECTION DETAIL

DRAFT 98% PROGRESS DRAWINGS
OCTOBER 2019

1 0 1 2 3 FT
3/4" =1' - 0"

GRAEF

| NO. | DATE | APPD | DESCRIPTION |
|---|---|---|---|

Waukesha Water Utility
SEPTIC WAUKESHA SINCE 1886

GREELEY AND HANSEN
741 N. GRAND AVE, SUITE 308
WAUKESHA, WI 53186

GREAT WATER ALLIANCE™

CONTRACT PACKAGE 3: BOOSTER PUMPING STATION, STORAGE, AND CHEMICAL FACILITIES

MASONRY - SECTIONS AND DETAILS

APPROVED

SEAL AFFIXED
MONTH / DAY / YEAR

OCTOBER 2019

| | | | |
|---|---|---|---|
| JOB NO.: | 15310 | | |
| DESGN | MH | CHCK | PG |
| APPRV | MH | DRWN | BM |
| SCALE: | AS SHOWN | | |

DRAWING NUMBER
BS11

SHEET 75 OF 184 REV 0

FILE: F:\My Documents\My Projects\2016\GLWSP-P3-BPSF-S_bryan.mentzel@graef-usa.com.rvt

10/1/2019 12:31:52 PM
BAR MEASURE 1" ON FULLSIZE SHEETS

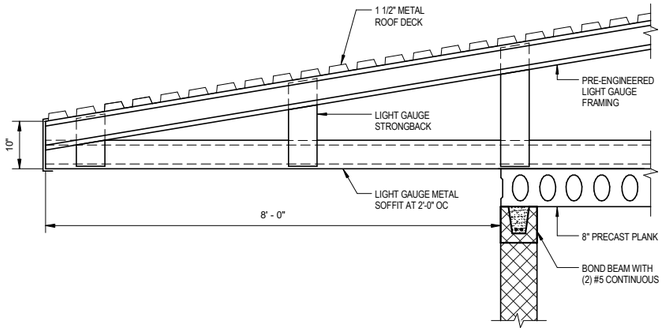


1 BS4 DETAIL
SCALE: 3/4" = 1'-0"

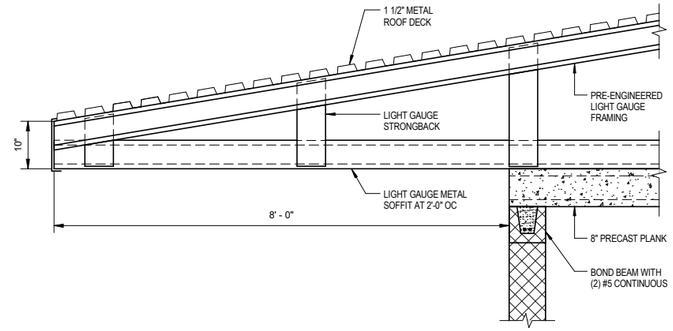


2 BS4 DETAIL
SCALE: 3/4" = 1'-0"

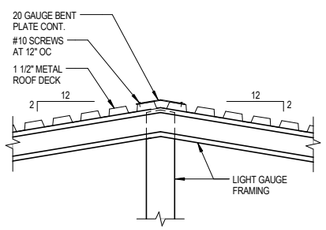


3 BS4 DETAIL
SCALE: 3/4" = 1'-0"

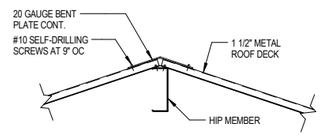


4 BS4 DETAIL
SCALE: 3/4" = 1'-0"

## WIND PROVISIONS FOR COMPONENTS AND CLADDING TABLE

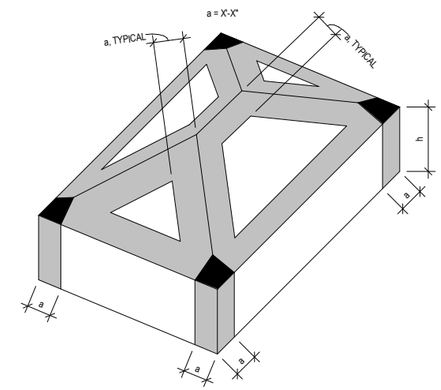


### HIP ROOF (7° < θ ≤ 27°) BUILDING

a = 6'-6"

= **INTERIOR ZONE** ROOF = ZONE 1 WALLS = ZONE 4

= **END ZONE** ROOF = ZONE 2 WALLS = ZONE 5

= **CORNER ZONE** ROOF = ZONE 3

| DESIGN WIND PRESSURE, PSF (RISK CATEGORY IV) | | | | | | | | |
|---|---|---|---|---|---|---|---|---|
| | EFFECTIVE WIND AREA, SF | | | | | | | |
| ZONE | 1 | 10 | 20 | 50 | 100 | 200 | > 500 | DESCRIPTION |
| 1 | -17.5 | -17.5 | -17.0 | -16.3 | -15.9 | -15.4 | -14.7 | ROOF INTERIOR ZONE |
| 2 | -30.4 | -30.4 | -28.0 | -24.8 | -22.3 | -22.3 | -22.3 | END ZONE REGION OF THE ROOF |
| 3 | -30.4 | -30.4 | -28.0 | -24.8 | -22.3 | -22.3 | -22.3 | CORNER ZONE REGION OF THE ROOF |
| ROOF OVERHANG (ZONES 1 AND 2) | -35.6 | -35.6 | -35.6 | -35.6 | -35.6 | -35.6 | -35.6 | |
| ROOF OVERHANG (ZONE 3) | -35.6 | -35.6 | -35.6 | -35.6 | -35.6 | -35.6 | -35.6 | |
| 4 (+) | 17.5 | 17.5 | 16.7 | 15.7 | 14.9 | 14.1 | 13.1 | WALL INTERIOR ZONE |
| 4 (-) | -18.9 | -18.9 | -18.2 | -17.1 | -16.4 | -15.6 | -14.6 | |
| 5 (+) | 17.5 | 17.5 | 16.7 | 15.7 | 14.9 | 14.1 | 13.1 | END ZONE REGION OF THE WALL |
| 5 (-) | -23.5 | -23.3 | -21.7 | -19.7 | -18.2 | -16.6 | -14.6 | |

NOTES:

1. NEGATIVE PRESSURES ACT AWAY FROM COMPONENT SURFACE. POSITIVE PRESSURES ACT TOWARD COMPONENT SURFACES.
2. FOR NET UPLIFT TO ROOF JOISTS, SUBTRACT A ROOFING DEAD LOAD OF 4 PSF (NOT INCLUDING JOIST SELF WEIGHT) FROM THE WIND PRESSURES SHOWN.
3. PROVIDE LIGHT GAGE BRACING TO TRANSFER ROOF WIND LOADS TO PRECAST DECK.

DRAFT 98% PROGRESS DRAWINGS
OCTOBER 2019

1 0 1 2 3 FT
3/4" =1' - 0"

GRAEF

| NO. | DATE | APPD | DESCRIPTION |
|---|---|---|---|

Waukesha Water Utility
SEPV/NO WAUKESHA SINCE 1886

GREELEY AND HANSEN
741 N. GRAND AVE, SUITE 308
WAUKESHA, WI 53186

GREAT WATER ALLIANCE™

CONTRACT PACKAGE 3: BOOSTER PUMPING STATION, STORAGE, AND CHEMICAL FACILITIES

LOW ROOF - SECTIONS AND DETAILS

APPROVED

SEAL AFFIXED
MONTH / DAY / YEAR

OCTOBER 2019

| | | | |
|---|---|---|---|
| JOB NO.: | 15310 | | |
| DESGN | MH | CHCK | PG |
| APPRV | MH | DRWN | BM |
| SCALE: | AS SHOWN | | |

DRAWING NUMBER

BS12

SHEET 76 OF 184 REV 0

FILE: F:\My Documents\My Projects\2016\GLWSP-P3-BPSF-S_bryan.mentzel@graef-usa.com.rvt

10/1/2019 12:31:53 PM
1" BAR MEASURE 1" ON FULLSIZE SHEETS

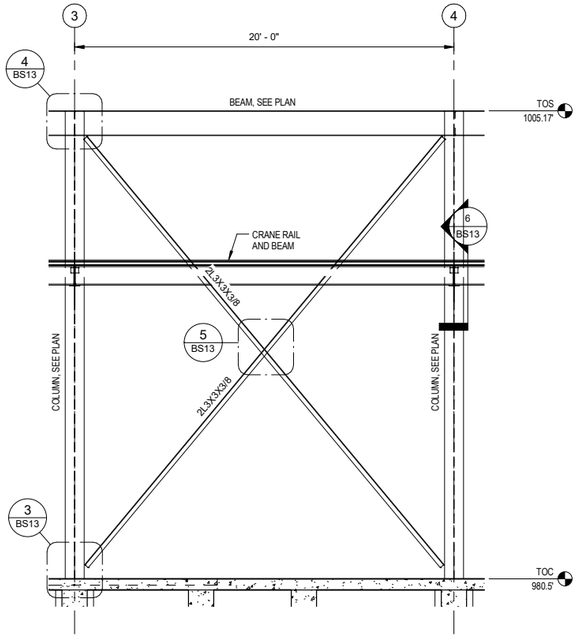


1 BS2 FRAME 2
SCALE: 1/4" = 1'-0"

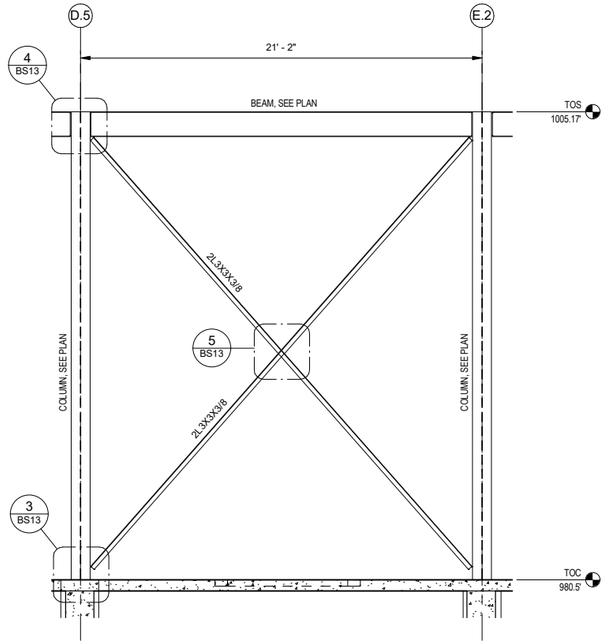


2 BS2 FRAME 1
SCALE: 1/4" = 1'-0"

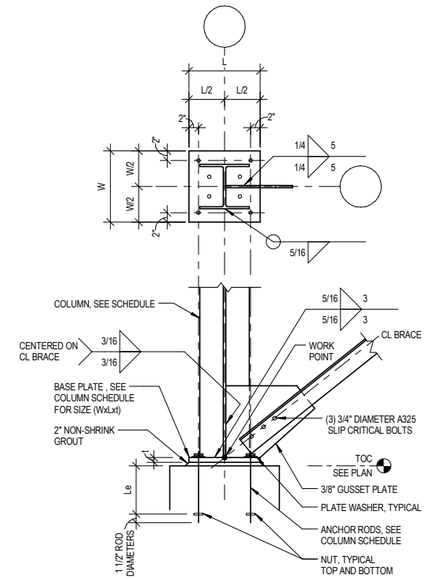


3 BS13 SECTION
SCALE: 3/4" = 1'-0"

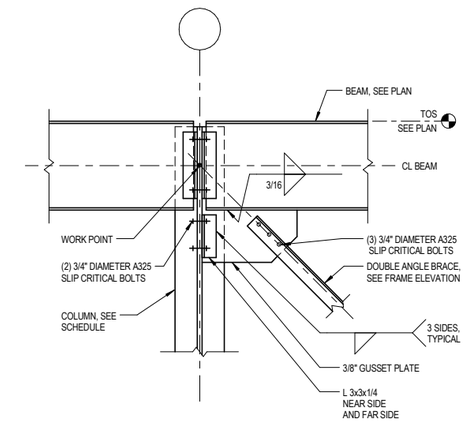


4 BS13 SECTION
SCALE: 3/4" = 1'-0"

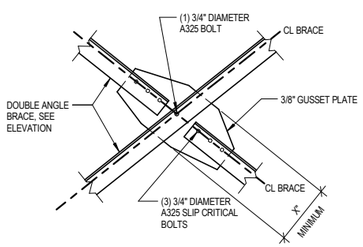


5 BS13 SECTION
SCALE: 3/4" = 1'-0"

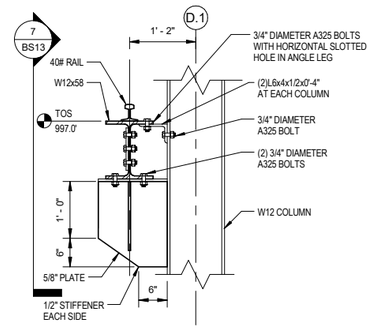


6 BS4 CRANE RAIL DETAIL
SCALE: 3/4" = 1'-0"

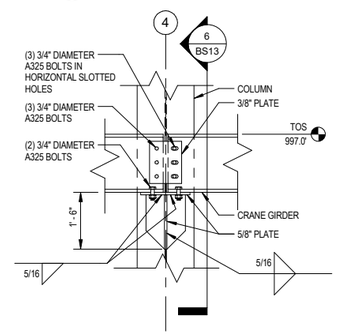


7 BS4 CRANE RAIL DETAIL
SCALE: 3/4" = 1'-0"

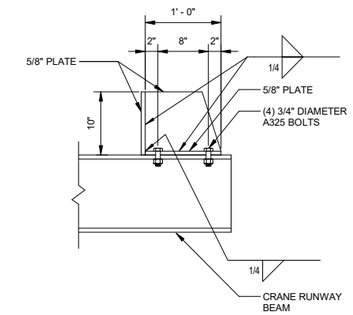


8 CRANE STOP DETAIL
SCALE: 1" = 1'-0"

DRAFT 98% PROGRESS DRAWINGS
OCTOBER 2019

4 0 4 8 FT 1/4" =1' - 0"
1 0 1 2 3 FT 3/4" =1' - 0"
1 0 1 2 FT 1" =1' - 0"

GRÄEF

| NO. | DATE | APPD | DESCRIPTION |
|---|---|---|---|

Waukesha Water Utility
SEPTIC WAUKESHA SINCE 1886

GREELEY AND HANSEN
741 N. GRAND AVE, SUITE 308
WAUKESHA, WI 53186

GREAT WATER ALLIANCE™

CONTRACT PACKAGE 3: BOOSTER PUMPING STATION, STORAGE, AND CHEMICAL FACILITIES

FRAME AND FRAME DETAILS

APPROVED

SEAL AFFIXED
MONTH / DAY / YEAR

OCTOBER 2019

| | | | |
|---|---|---|---|
| JOB NO.: | 15310 | | |
| DESGN | MH | CHCK | PG |
| APPRV | MH | DRWN | BM |
| SCALE: | AS SHOWN | | |

DRAWING NUMBER
BS13

SHEET 77 OF 184 REV 0

FILE: F:\My Documents\My Projects\2016\GLWSP-P3-BPSF-S_bryan.mentzel@graef-usa.com.rvt

10/1/2019 12:31:54 PM
BAR MEASURE 1" ON FULLSIZE SHEETS

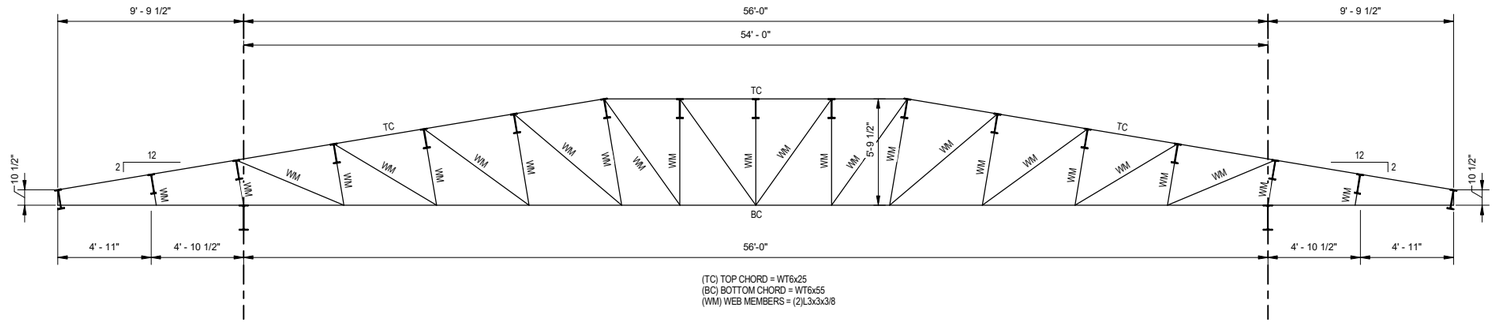


## 1 TRUSS T1

SCALE: 1/4" = 1'-0"

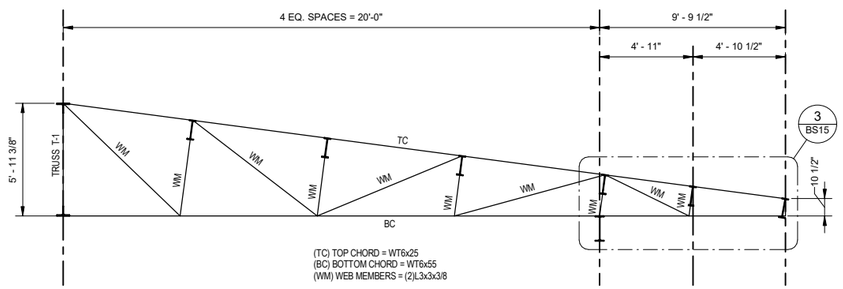


## 2 TRUSS T3

SCALE: 1/4" = 1'-0"

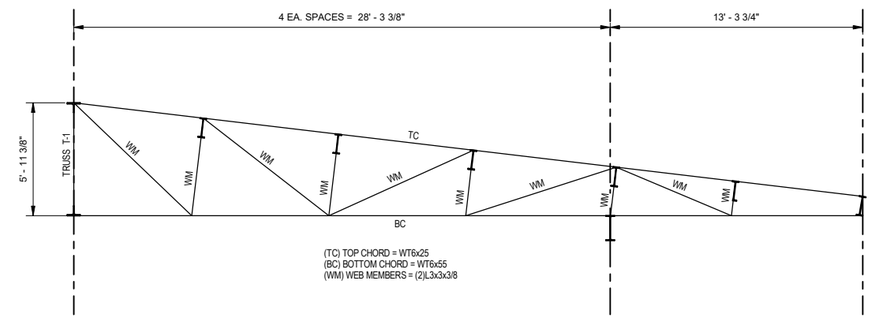


## 3 TRUSS T2

SCALE: 1/4" = 1'-0"

DRAFT 98% PROGRESS DRAWINGS
OCTOBER 2019

4 0 4 8 FT
1/4" =1' - 0"

GRAEF

| NO. | DATE | APPD | DESCRIPTION |
|---|---|---|---|

Waukesha Water Utility
SEPTIC WAUKESHA SINCE 1886

GREELEY AND HANSEN
741 N. GRAND AVE, SUITE 308
WAUKESHA, WI 53186

GREAT WATER ALLIANCE™

CONTRACT PACKAGE 3: BOOSTER PUMPING STATION, STORAGE, AND CHEMICAL FACILITIES

HIGH ROOF - TRUSS ELEVATIONS

APPROVED

SEAL AFFIXED
MONTH / DAY / YEAR

OCTOBER 2019

| | | | |
|---|---|---|---|
| JOB NO.: | 15310 | | |
| DESGN | MH | CHCK | PG |
| APPRV | MH | DRWN | BM |
| SCALE: | AS SHOWN | | |

DRAWING NUMBER

BS14

SHEET 78 OF 184 REV 0

FILE: F:\My Documents\My Projects\2016\GLWSP-P3-BPSF-S_bryan.mentzel@graef-usa.com.rvt

10/1/2019 12:31:54 PM
BAR MEASURE 1" ON FULLSIZE SHEETS

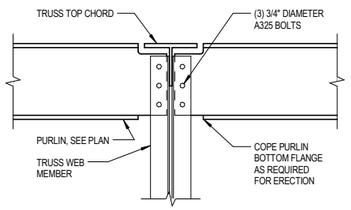


1 DETAIL
SCALE: 1" = 1'-0"

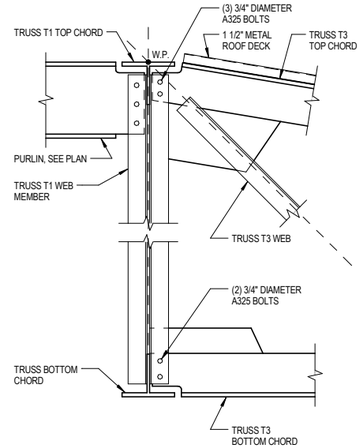


2 BS5 DETAIL
SCALE: 1" = 1'-0"

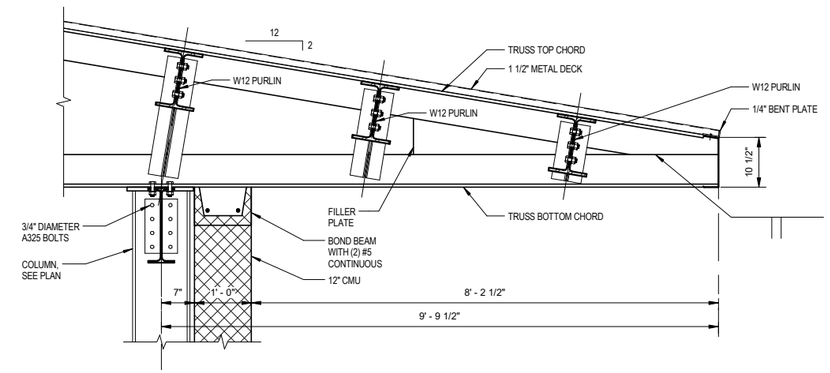


3 BS5 DETAIL
SCALE: 3/4" = 1'-0"

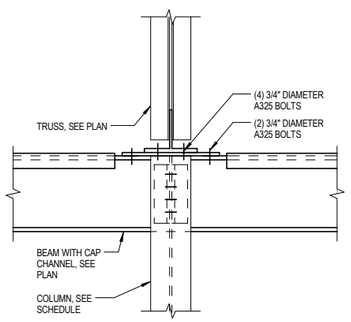


4 DETAIL
SCALE: 1" = 1'-0"

DRAFT 98% PROGRESS DRAWINGS
OCTOBER 2019

1 0 1 2 3 FT 3/4" =1' - 0"
1 0 1 2 FT 1" =1' - 0"

GRÄEF

| NO. | DATE | APPD | DESCRIPTION |
|---|---|---|---|

Waukesha Water Utility
SEPO NO WAUKESHA SINCE 1886

GREELEY AND HANSEN
741 N. GRAND AVE, SUITE 308
WAUKESHA, WI 53186

GREAT WATER ALLIANCE™

CONTRACT PACKAGE 3: BOOSTER PUMPING STATION, STORAGE, AND CHEMICAL FACILITIES

HIGH ROOF - SECTIONS AND DETAILS

APPROVED

SEAL AFFIXED
MONTH / DAY / YEAR

OCTOBER 2019

| | | | |
|---|---|---|---|
| JOB NO.: | 15310 | | |
| DESGN | MH | CHCK | PG |
| APPRV | MH | DRWN | BM |
| SCALE: | AS SHOWN | | |

DRAWING NUMBER
BS15

SHEET 79 OF 184 REV 0

FILE: F:\My Documents\My Projects\2016\GLWSP-P3-BPSF-S_bryan.mentzel@graef-usa.com.rvt

10/2/2019 10:06:00 AM

BAR MEASURE 1" ON FULLSIZE SHEETS

## FIRE PROTECTION SYSTEMS

| REF | DESCRIPTION | REQUIREMENT | ACTUAL | REMARKS |
|---|---|---|---|---|
| FIRE AND SMOKE PROTECTION FEATURES | | | | |
| 707.1 | FIRE BARRIERS SHALL EXTEND FROM THE TOP OF THE FOUNDATION; OR HORIZONTAL ASSEMBLY CONSTRUCTED IN ACCORDANCE WITH IBC SECTION 712; OF FLOOR/ CEILING ASSEMBLY BELOW TO THE UNDERSIDE OF THE FLOOR OR ROOF SHEATHING, SLAB OR DECK ABOVE, OR TO THE UNDERSIDE OF THE HORIZONTAL ASSEMBLY CONSTRUCTED IN ACCORDANCE WITH IBC 712 AND SHALL BE SECURELY ATTACHED THERETO. SUCH FIRE BARRIERS SHALL BE CONTINUOUS THROUGH CONCEALED SPACES, SUCH AS THE SPACE ABOVE A SUSPENDED CEILING. | | | |
| IBC 2015: 903 | AUTOMATIC SPRINKLERS SYSTEMS | | REQUIRED: | * SEE 124.2 BELOW |
| 903.2.4 | GROUP F-1 | REQUIRED WHERE ALL OF THE FOLLOWING CONDITIONS EXIST:<br>1. F-1 FIRE AREA EXCEED 12,000 SQFT<br>2. F-1 FIRE AREA LOCATED MORE THAN THREE STORIES ABOVE GRADE PLANE<br>3. COMBINED AREA OF ALL F-1 EXCEEDS 24,000 SQFT | NO | |
| 903.2 | GROUP F-2 | | NO | |
| 903.2.5.1 | GROUP H OCCUPANCIES | | YES | |
| 903.2.11.1 | STORIES WITHOUT OPENINGS | | YES | * SEE 124.11.A.2 BELOW |
| 905.5.3 | CLASS II STAND PIPE | NOT REQUIRED FOR BUILDINGS WITH OCCUPIED SPACES LESS THAN 30 FEET ABOVE OR BELOW FIRE DEPARTMENT ACCESS.REQUIRED FOR HIGH HAZARD LOCATIONS | | 1-INCH HOSE PERMITTED IF LISTED AND APPROVED BY A.H.J |
| 906.1 | PORTABLE FIRE EXTINGUISHERS - WHERE REQUIRED | | SEE LIFE SAFETY DIAGRAMS | |
| TBL 906.3(1) | FIRE EXTINGUISHERS FOR: | CLASS A FIRE HAZARDS — SF/ UNIT —; MAX TRAVEL DIST (FT) 75 | | |
| CH 124 | CITY OF NEW BERLIN; FIRE PREVENTION ORDINANCE | | | |
| 124.2 | DEFINITION: FIRE WALL | FIRE THE PURPOSE OF DETERMINING SQUARE FOOTAGE AS IT RELATES TO SPRINKLING OF A BUILDING, FIRE WALLS SHALL NOT BE CONSIDERED AS AREA DIVIDERS. | | |
| 124.11.A.2 | SPRINKLER REQUIREMENT FOR BASEMENTS | ALL BASEMENTS, SPRINKLERED THROUGHOUT | | |
| NFPA 13 - 2016 | INSTALLATION REQUIREMENTS FOR SPRINKLER SYSTEMS | | | |
| CHAPTER 8 8.15.11.2 | ELECTRICAL EQUIPMENT | SPRINKLERS SHALL NOT BE REQUIRED IN ELECTRICAL EQUIPMENT ROOMS WHERE ALL OF THE FOLLOWING CONDITIONS ARE MET:<br>1. THE ROOM IS DEDICATED TO ELECTRICAL EQUIPMENT ONLY<br>2. ONLY DRY-TYPE ELECTRICAL EQUIPMENT IS USED<br>3. EQUIPMENT IS INSTALLED IN A 2-HOUR FIRE-RATED ENCLOSURE INCLUDING PROTECTION FOR PENETRATIONS.<br>4. NO COMBUSTIBLE STORAGE IS PERMITTED TO BE STORED IN THE ROOM | | ALL CONDITIONS MET |

## ROOM OCCUPANCY SCHEDULE

| ROOM NO. | ROOM NAME | AREA | OCCUPANCY TYPE | OCCUPANCY LOAD FACTOR | OCCUPANCY OCC | OCCUPANCY ACTUAL | SPRINKLER | COMMENTS |
|---|---|---|---|---|---|---|---|---|
| BASEMENT | | | | | | | | |
| B100 | BASEMENT | 4,980 SF | F-2 | 100 SF | 50 | 0 | YES | |
| MAIN FLOOR | | | | | | | | |
| 100 | PUMPING ROOM | 3,919 SF | F-2 | 100 SF | 40 | 0 | YES | |
| 103 | SAMPLING ROOM | 177 SF | F-2 | 100 SF | 2 | 0 | YES | |
| 104 | ELECTRICAL ROOM | 910 SF | F-1 | 100 SF | 10 | 0 | YES | |
| 105 | STORAGE ROOM | 149 SF | F-1 | 100 SF | 2 | 0 | YES | |
| 106 | I & C ROOM | 160 SF | F-2 | 100 SF | 2 | 0 | YES | |
| 107 | TOILET | 64 SF | F-2 | 100 SF | 1 | 0 | YES | |
| 108 | JANITOR | 52 SF | F-2 | 100 SF | 1 | 0 | YES | |
| 109 | MECHANICAL ROOM | 1,801 SF | F-2 | 300 SF | 6 | 0 | YES | |
| 110 | FIRE PROTECTION ROOM | 618 SF | F-2 | 300 SF | 3 | 0 | YES | |
| 111 | CHEMICAL ROOM NO. 1 | 810 SF | H-4 | 100 SF | 9 | 0 | YES | CHEMICALS TYPES TBD |
| 112 | CHEMICAL ROOM NO. 2 | 619 SF | H-4 | 100 SF | 7 | 0 | YES | CHEMICALS TYPES TBD |
| 113 | CHEMICAL ROOM NO. 3 | 576 SF | H-4 | 100 SF | 6 | 0 | YES | CHEMICALS TYPES TBD |
| MAIN FLOOR ATTIC | | | | | | | | |
| 200 | ATTIC SPACE | 6,535 SF | UNOCC | 0 SF | | 0 | NO | |
| | | | | | 139 | 0 | | |

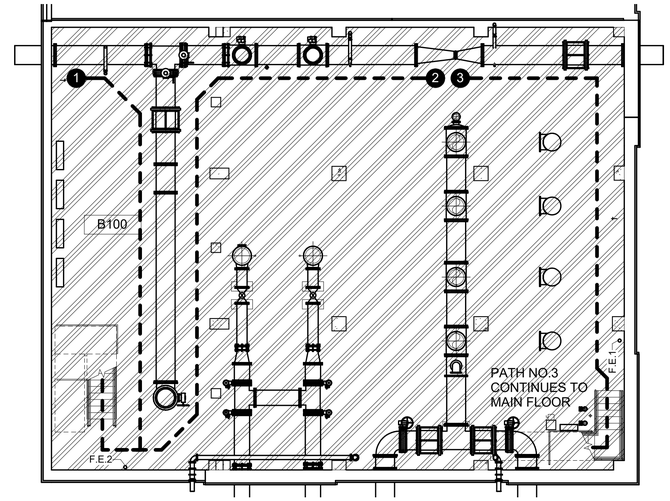


1 LOWER LEVEL LIFE SAFETY PLAN AT EL 967.50

SCALE: 3/32" = 1'-0"

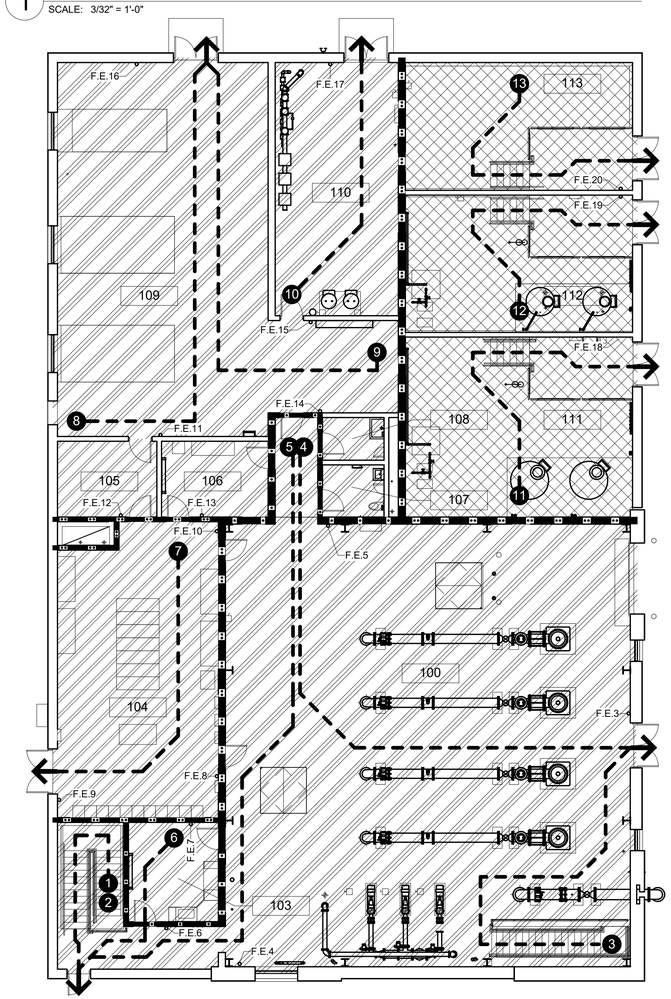


2 GROUND FLOOR LIFE SAFETY PLAN AT EL 981.50

SCALE: 3/32" = 1'-0"

## TRAVEL DISTANCES

| EGRESS PATH NO. | LENGTH |
|---|---|
| MAIN FLOOR | |
| PATH NO.1 | 91.67' |
| PATH NO.2 | 134.68' |
| PATH NO.3 | 134.66' |
| MAIN FLOOR | |
| PATH NO.4 | 84.34' |
| PATH NO.5 | 94.72' |
| PATH NO.6 | 27.15' |
| PATH NO.7 | 45.07' |
| PATH NO.8 | 67.86' |
| PATH NO.9 | 68.86' |
| PATH NO.10 | 36.75' |
| PATH NO.11 | 46.17' |
| PATH NO.12 | 40.17' |
| PATH NO.13 | 38.80' |

## FIRE EXTINGUISHER SCHEDULE

| ROOM NO. | CLASS | QTY | COMMENTS |
|---|---|---|---|
| BASEMENT | | | |
| B100 | A, B, C | 2 | |
| | | 2 | |
| MAIN FLOOR | | | |
| 100 | A, B, C | 4 | |
| 103 | A, B, C | 1 | |
| 104 | A, B, C | 3 | |
| 105 | A, B, C | 1 | |
| 106 | A, B, C | 1 | |
| 109 | A, B, C | 4 | |
| 110 | A, B, C | 1 | |
| 111 | A, B, C | 1 | |
| 112 | A, B, C | 1 | |
| 113 | A, B, C | 1 | |
| | | 18 | |
| GRAND TOTAL | | 20 | |

**OCCUPANCY TYPE**

- F-1
- F-2
- H-4

**LIFE SAFETY LEGEND**

- 1 HR
- 2 HR
- 3 HR
- 4 HR
- EXIT PATH

## BUILDING AREAS

| OCCUPANCY CLASSIFICATION | AREA |
|---|---|
| BASEMENT | |
| F-2 LOW HAZARD | 5,377 SF |
| | 5,377 SF |
| MAIN FLOOR | |
| F-2 LOW HAZARD | 7,504 SF |
| F-1 MODERATE HAZARD | 1,215 SF |
| H-4 HIGH HAZARD | 2,227 SF |
| | 10,946 SF |
| TOTAL | 16,323 SF |

8 0 8 16 24 FT

3/32" =1' - 0"

DRAFT 98% PROGRESS DRAWINGS

OCTOBER 2019

FILE: C:\Users\lgreen\Documents\GLWSP-P3-BPSF-GAMHPNE_lgreen.rvt

| NO. | DATE | APPD | DESCRIPTION |
|---|---|---|---|

Waukesha Water Utility — SERVING WAUKESHA SINCE 1886

GREELEY AND HANSEN — 741 N. GRAND AVE. SUITE 308, WAUKESHA, WI 53186

GREAT WATER ALLIANCE™

CONTRACT PACKAGE 3: BOOSTER PUMPING STATION AND WATER SUPPLY CONTROL BUILDING

LIFE SAFETY DIAGRAMS AND NOTES

APPROVED

SEAL AFFIXED MONTH / DAY / YEAR

OCTOBER 2019

| | | | |
|---|---|---|---|
| JOB NO.: | 15310 | | |
| DESGN | JJS | CHCK | TCB |
| APPRV | TCB | DRWN | AKB |
| SCALE: | AS SHOWN | | |

DRAWING NUMBER

BA1

SHEET 80 OF 184 REV 0

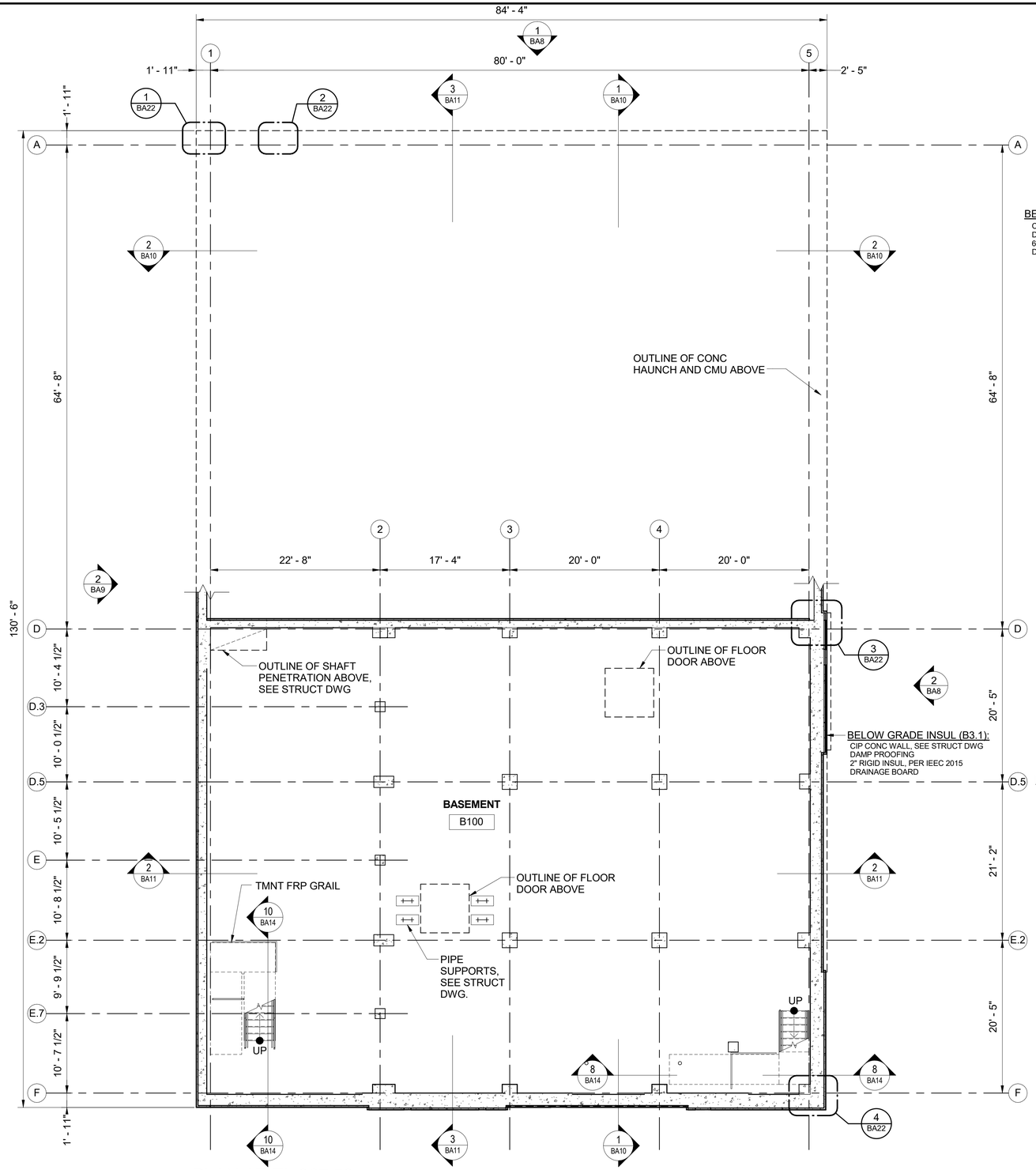


PLAN AT EL 967.50

SCALE: 1/8" = 1'-0"

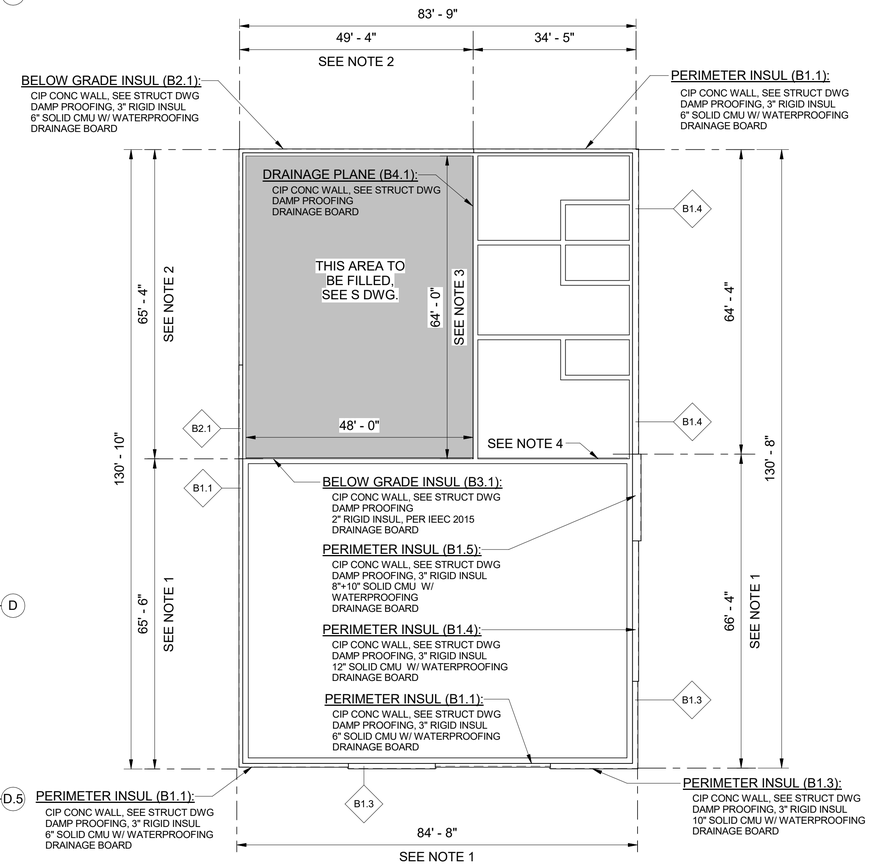


BELOW GRADE PERIMETER PROTECTION DIAGRAM

SCALE: 1/16" = 1'-0"

NOTES:

1. PERIMETER INSULATION DOWN TO 2'-8" BELOW FINISH FLOOR AND BELOW GRADE INSULATION DOWN TO FOOTING.
2. DAMP PROOFING NOT REQUIRED.
3. INSULATION NOT REQUIRED.
4. BELOW GRADE INSULATION FROM UNDER CHEMICAL ROOM SLAB DOWN TO FOOTING.

16 0 16 32 FT 1/16" =1' - 0"

8 0 8 16 FT 1/8" =1' - 0"

DRAFT 98% PROGRESS DRAWINGS

OCTOBER 2019

| NO. | DATE | APPD | DESCRIPTION |
|---|---|---|---|

Waukesha Water Utility
SERVING WAUKESHA SINCE 1886

GREELEY AND HANSEN
741 N. GRAND AVE, SUITE 308
WAUKESHA, WI 53186

GREAT WATER ALLIANCE™

CONTRACT PACKAGE 3: BOOSTER PUMPING STATION AND WATER SUPPLY CONTROL BUILDING

PLAN AT EL 967.50

APPROVED

SEAL AFFIXED
MONTH / DAY / YEAR

OCTOBER 2019

| | | | |
|---|---|---|---|
| JOB NO.: | 15310 | | |
| DESGN | JJS | CHCK | TCB |
| APPRV | TCB | DRWN | AKB |
| SCALE: | AS SHOWN | | |

DRAWING NUMBER

BA2

SHEET 81 OF 184 REV 0

10/2/2019 10:06:04 AM

BAR MEASURE 1" ON FULLSIZE SHEETS

FILE: C:\Users\lgreen\Documents\GLWSP-P3-BPSF-GAMHPNE_lgreen.rvt

10/2/2019 10:06:07 AM

BAR MEASURE 1" ON FULLSIZE SHEETS

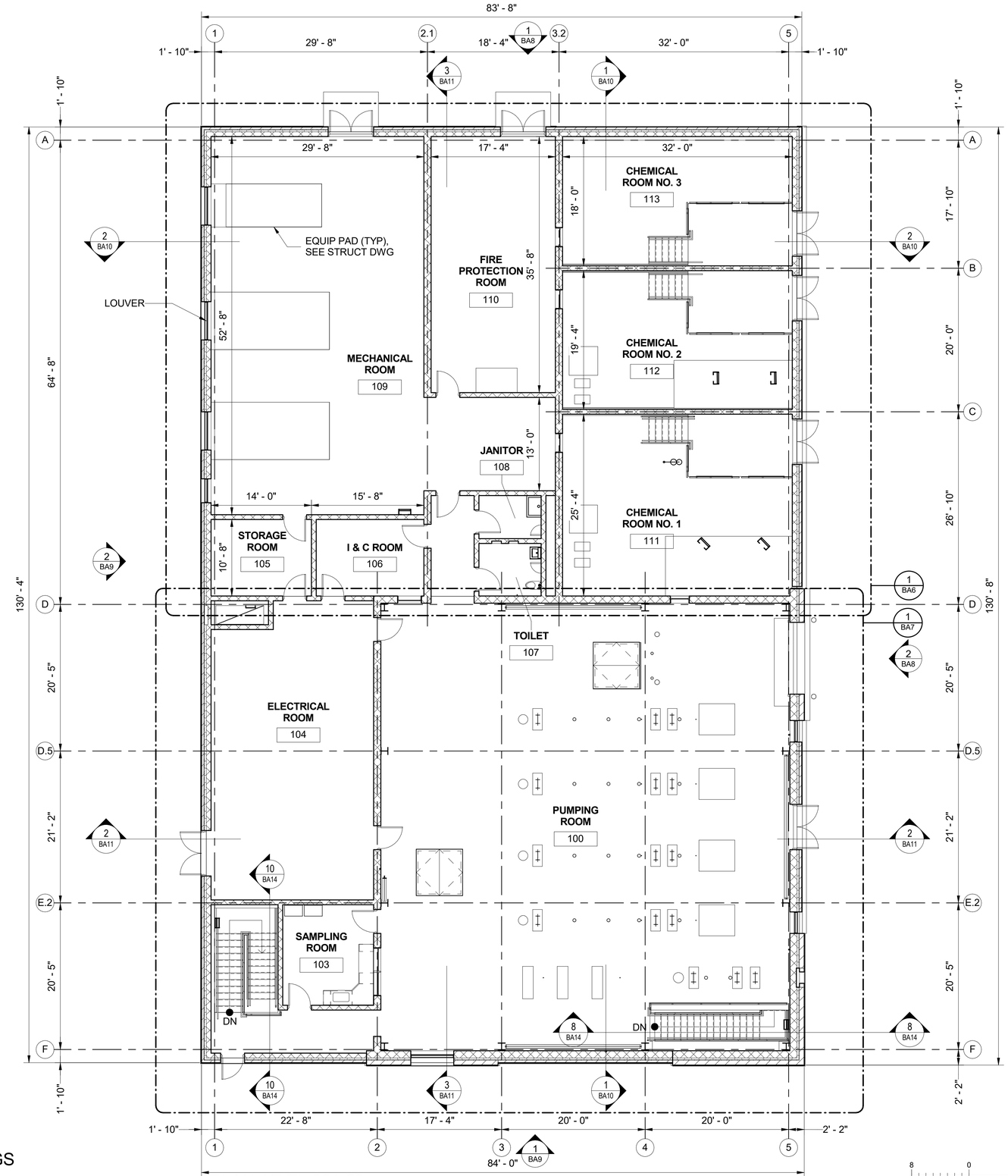


PLAN AT EL 981.50

SCALE: 1/8" = 1'-0"

8 0 8 16 FT

1/8" =1' - 0"

DRAFT 98% PROGRESS DRAWINGS

OCTOBER 2019

FILE: C:\Users\lgreen\Documents\GLWSP-P3-BPSF-GAMHPNE_lgreen.rvt

| NO. | DATE | APPD | DESCRIPTION |
|---|---|---|---|

Waukesha Water Utility
SERVING WAUKESHA SINCE 1886

GREELEY AND HANSEN
741 N. GRAND AVE. SUITE 308
WAUKESHA, WI 53186

GREAT WATER ALLIANCE™

CONTRACT PACKAGE 3: BOOSTER PUMPING STATION AND WATER SUPPLY CONTROL BUILDING

PLAN AT EL 981.50

APPROVED

SEAL AFFIXED
MONTH / DAY / YEAR

OCTOBER 2019

| | | | |
|---|---|---|---|
| JOB NO.: | 15310 | | |
| DESGN | JJS | CHCK | TCB |
| APPRV | TCB | DRWN | AKB |
| SCALE: | 1/8" = 1'-0" | | |

DRAWING NUMBER

BA3

SHEET 82 OF 184 REV 0

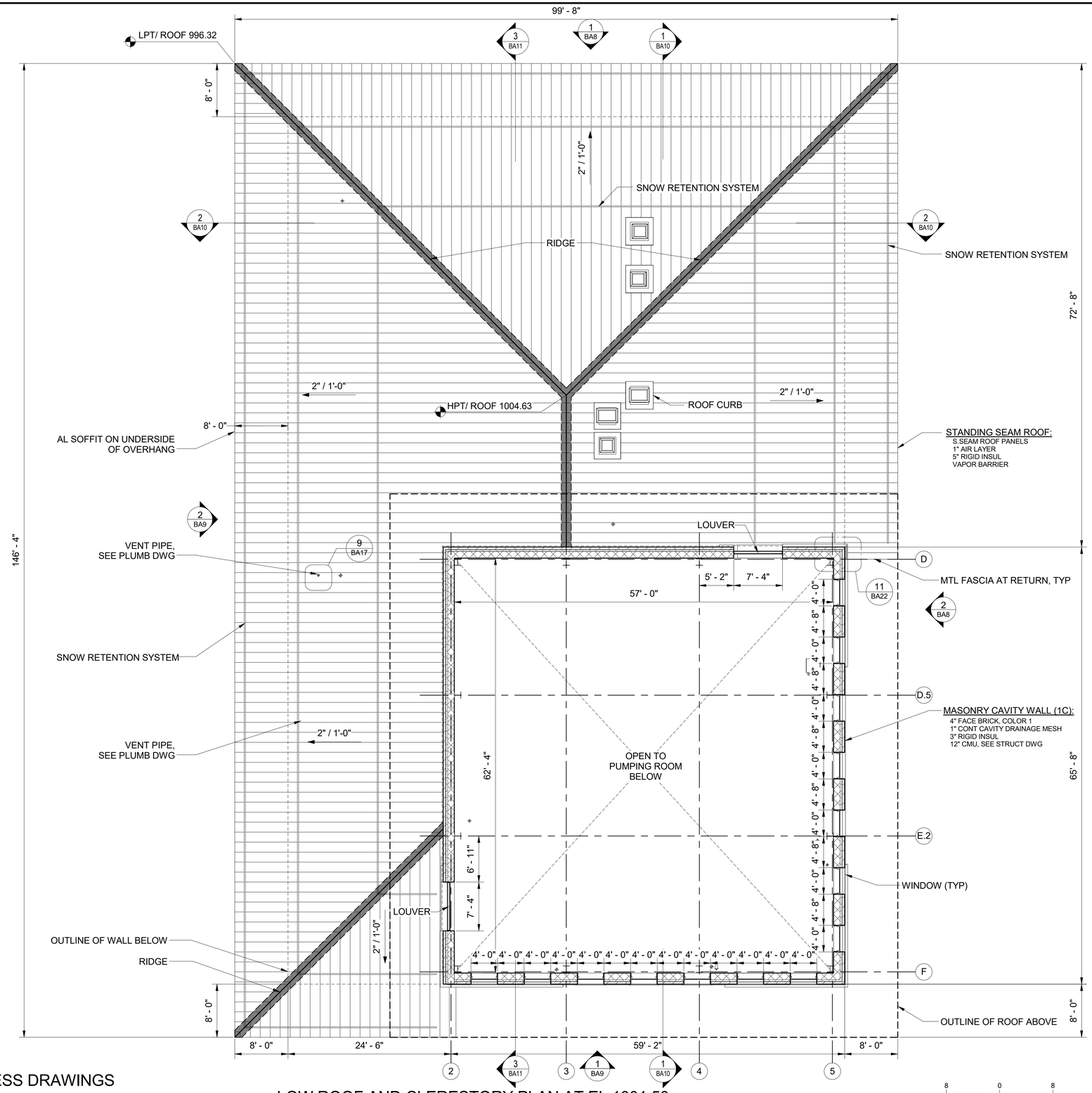


DRAFT 98% PROGRESS DRAWINGS
OCTOBER 2019

LOW ROOF AND CLERESTORY PLAN AT EL 1001.50
SCALE: 1/8" = 1'-0"

| NO. | DATE | APPD | DESCRIPTION |
|---|---|---|---|

Waukesha Water Utility
SERVING WAUKESHA SINCE 1886

GREELEY AND HANSEN
741 N. GRAND AVE, SUITE 308
WAUKESHA, WI 53186

GREAT WATER ALLIANCE™

CONTRACT PACKAGE 3: BOOSTER PUMPING STATION AND WATER SUPPLY CONTROL BUILDING

LOW ROOF AND CLERESTORY PLAN AT EL 1001.50

APPROVED

SEAL AFFIXED
MONTH / DAY / YEAR

OCTOBER 2019

| | | | |
|---|---|---|---|
| JOB NO.: | 15310 | | |
| DESGN | JJS | CHCK | TCB |
| APPRV | TCB | DRWN | AKB |
| SCALE: | 1/8" = 1'-0" | | |

DRAWING NUMBER

BA4

SHEET 83 OF 184 REV 0

10/2/2019 10:06:11 AM

BAR MEASURE 1" ON FULLSIZE SHEETS

FILE: C:\Users\lgreen\Documents\GLWSP-P3-BPSF-GAMHPNE_lgreen.rvt

10/2/2019 10:06:13 AM

BAR MEASURE 1" ON FULLSIZE SHEETS

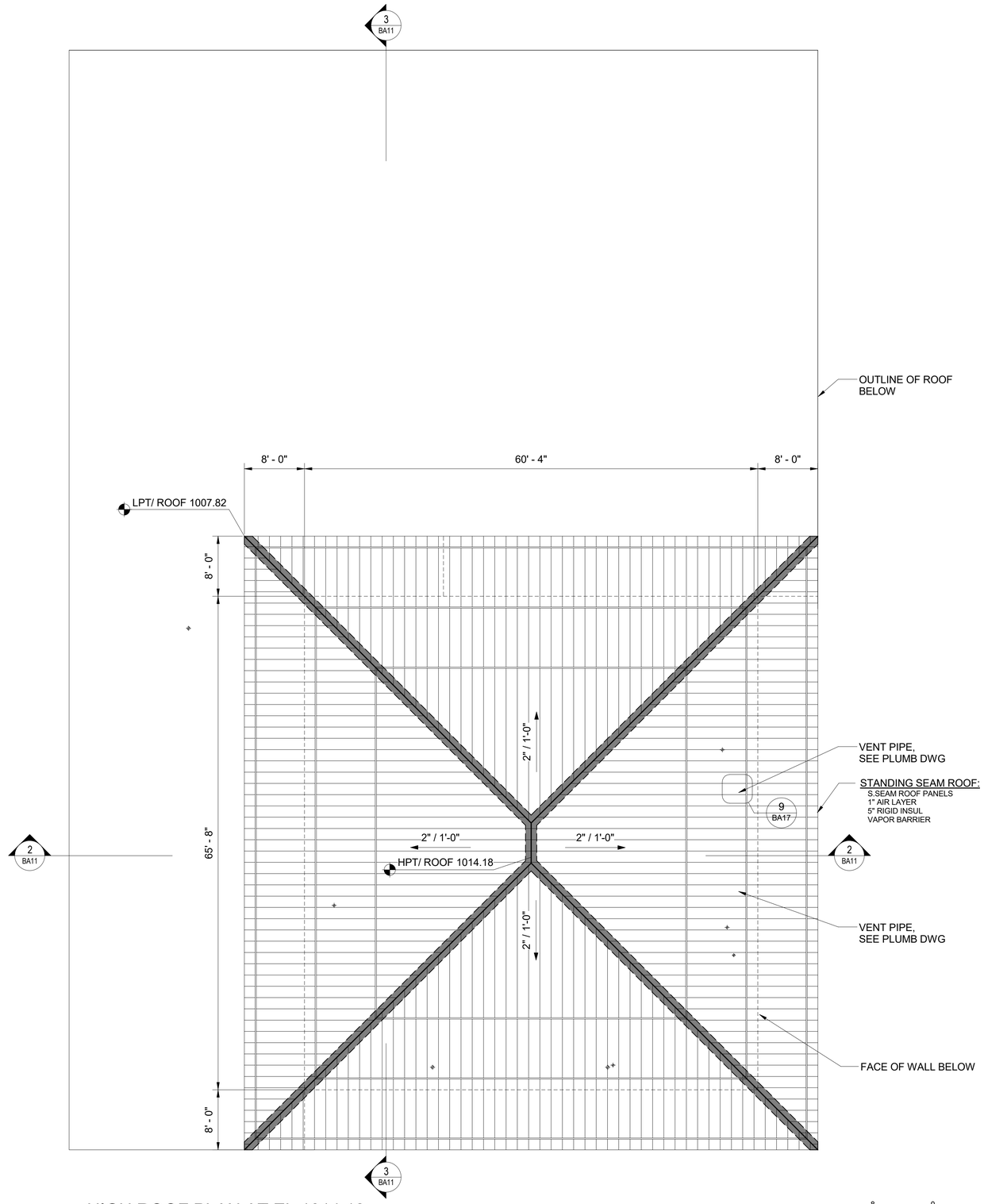


DRAFT 98% PROGRESS DRAWINGS
OCTOBER 2019

HIGH ROOF PLAN AT EL 1014.18
SCALE: 1/8" = 1'-0"

8 0 8 16 FT
1/8" =1' - 0"

| NO. | DATE | APPD | DESCRIPTION |
|---|---|---|---|

Waukesha Water Utility
SERVING WAUKESHA SINCE 1886

GREELEY AND HANSEN
741 N. GRAND AVE. SUITE 308
WAUKESHA, WI 53186

GREAT WATER ALLIANCE™

CONTRACT PACKAGE 3: BOOSTER PUMPING STATION AND WATER SUPPLY CONTROL BUILDING

HIGH ROOF PLAN AT EL 1014.18

APPROVED

SEAL AFFIXED
MONTH / DAY / YEAR

OCTOBER 2019

| | | | |
|---|---|---|---|
| JOB NO.: | 15310 | | |
| DESGN | JJS | CHCK | TCB |
| APPRV | TCB | DRWN | AKB |
| SCALE: | 1/8" = 1'-0" | | |

DRAWING NUMBER

BA5

SHEET 84 OF 184 REV 0

FILE: C:\Users\jgreen\Documents\GLWSP-P3-BPSF-GAMHPNE_Jgreen.rvt

10/2/2019 10:06:18 AM

BAR MEASURE 1" ON FULLSIZE SHEETS

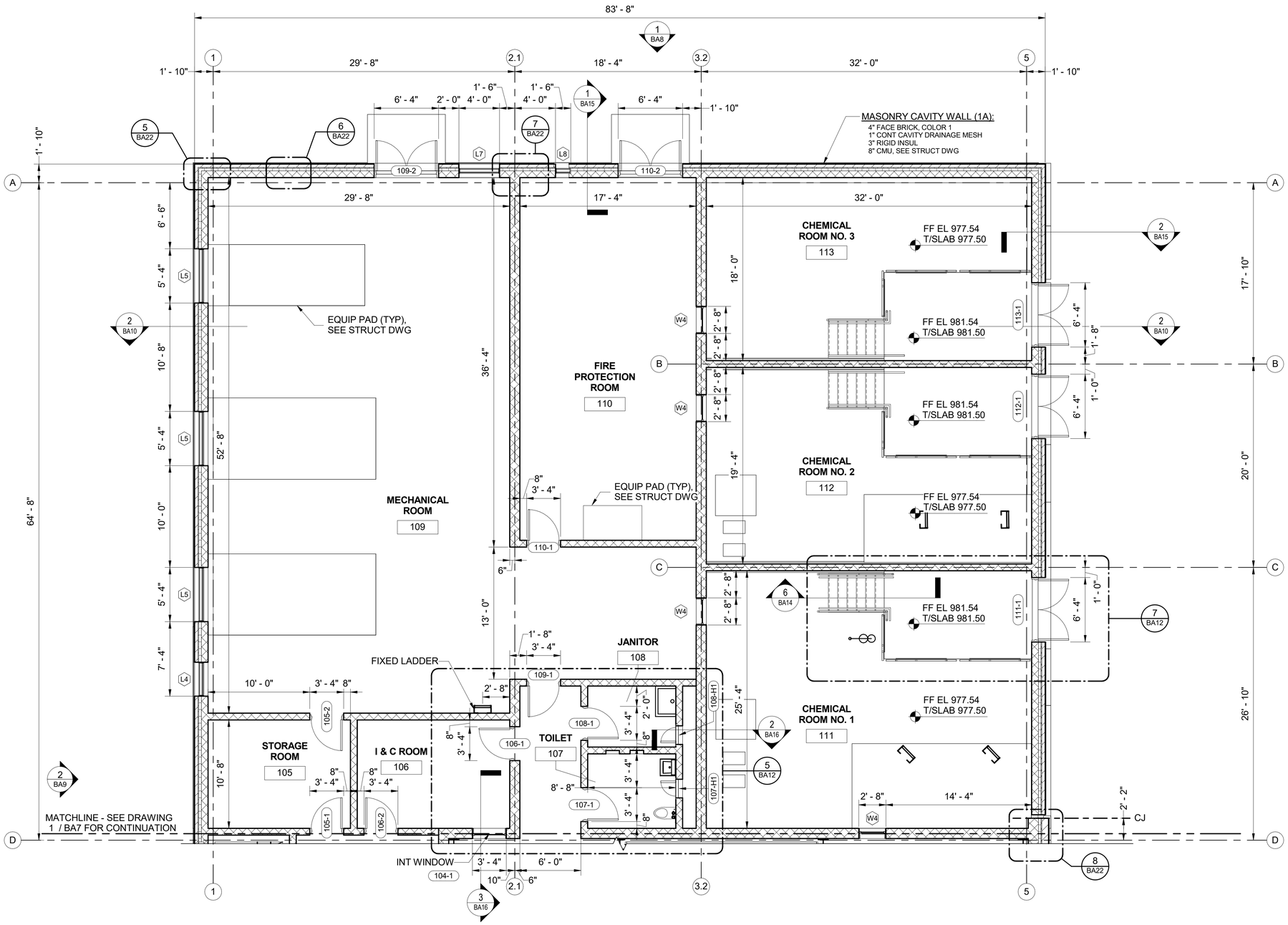


## PLAN AT EL 981.50

SCALE: 3/16" = 1'-0"

DRAFT 98% PROGRESS DRAWINGS

OCTOBER 2019

3/16" =1' - 0"

| NO. | DATE | APPD | DESCRIPTION |
|---|---|---|---|

Waukesha Water Utility
SERVING WAUKESHA SINCE 1886

GREELEY AND HANSEN
741 N. GRAND AVE. SUITE 308
WAUKESHA, WI 53186

GREAT WATER ALLIANCE™

CONTRACT PACKAGE 3: BOOSTER PUMPING STATION AND WATER SUPPLY CONTROL BUILDING

ENLARGED PLAN AT EL 981.50

APPROVED

SEAL AFFIXED
MONTH / DAY / YEAR

OCTOBER 2019

| | | | |
|---|---|---|---|
| JOB NO.: | 15310 | | |
| DESGN | JJS | CHCK | TCB |
| APPRV | TCB | DRWN | AKB |
| SCALE: | 3/16" = 1'-0" | | |

DRAWING NUMBER

BA6

SHEET 85 OF 184 REV 0

FILE: C:\Users\lgreen\Documents\GLWSP-P3-BPSF-GAMHPNE_lgreen.rvt

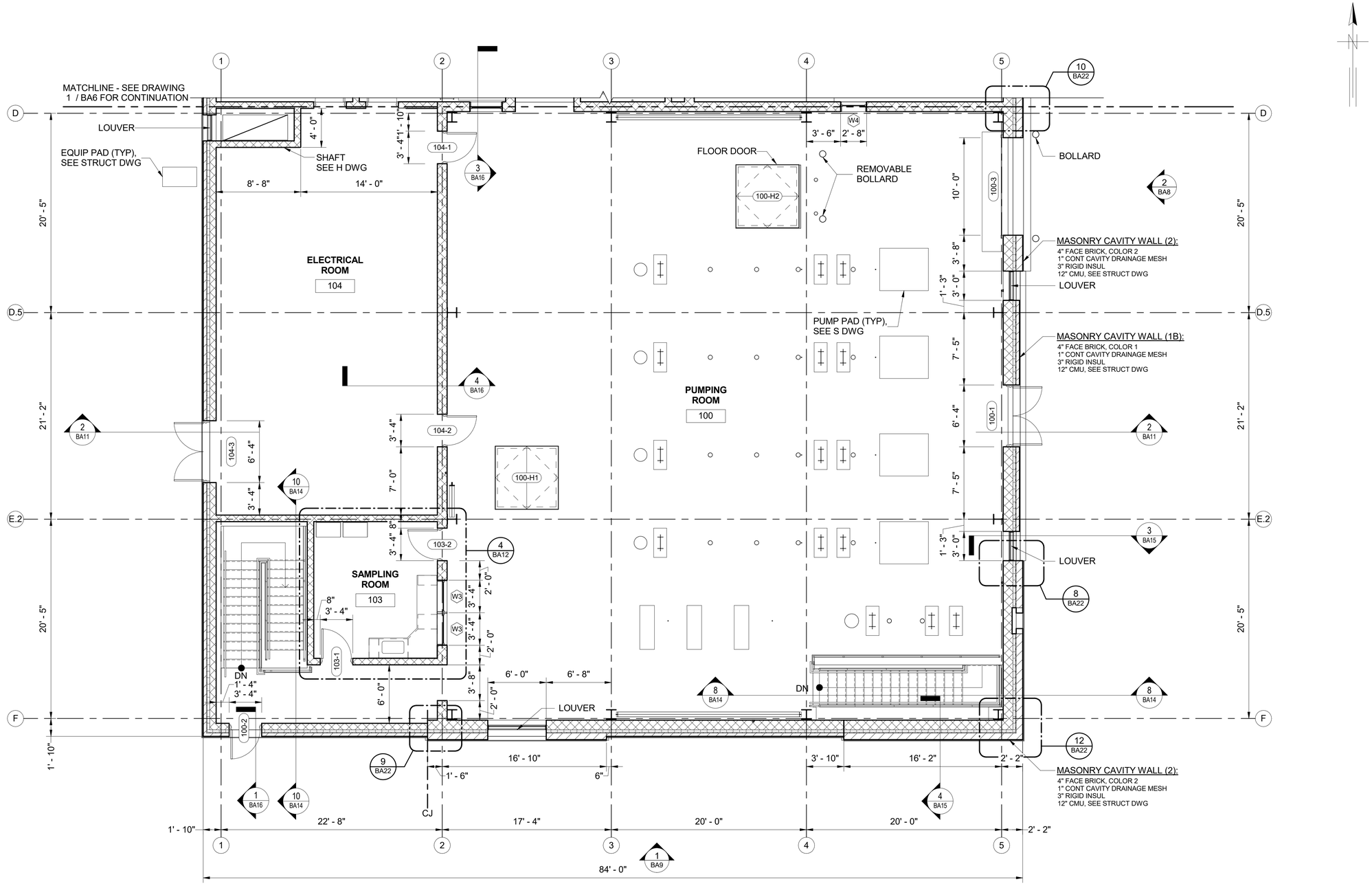


## PLAN AT EL 981.50

SCALE: 3/16" = 1'-0"

DRAFT 98% PROGRESS DRAWINGS
OCTOBER 2019

4 0 4 8 12 FT 3/16" =1' - 0"

| NO. | DATE | APPD | DESCRIPTION |
|---|---|---|---|

Waukesha Water Utility
SERVING WAUKESHA SINCE 1886

GREELEY AND HANSEN
741 N. GRAND AVE, SUITE 308
WAUKESHA, WI 53186

GREAT WATER ALLIANCE™

CONTRACT PACKAGE 3: BOOSTER PUMPING STATION AND WATER SUPPLY CONTROL BUILDING

ENLARGED PLAN AT EL 981.50

APPROVED

SEAL AFFIXED
MONTH / DAY / YEAR

OCTOBER 2019

| | | | |
|---|---|---|---|
| JOB NO.: | 15310 | | |
| DESGN | JJS | CHCK | TCB |
| APPRV | TCB | DRWN | AKB |
| SCALE: | 3/16" = 1'-0" | | |

DRAWING NUMBER

BA7

SHEET 86 OF 184 REV 0

10/2/2019 10:06:21 AM

BAR MEASURE 1" ON FULLSIZE SHEETS

FILE: C:\Users\lgreen\Documents\GLWSP-P3-BPSF-GAMHPNE_lgreen.rvt

10/2/2019 10:06:27 AM

BAR MEASURE 1" ON FULLSIZE SHEETS

## SCULPTED CAST STONE SCHEDULE - NORTH AND EAST ELEVATIONS

| TYPE | SIZE | QTY |
|---|---|---|
| GROUP 1 - NORTH ELEVATION | | |
| A20 | 36" X 20"X 5" | 6 |
| B9C | 4" X 9" X 5" CORNER | 2 |
| B10J | 4" X 10" X 5" JAMB | 2 |
| B12J | 4" X 12" X 5" JAMB | 2 |
| B24 | 4" X 24" X 5" | 33 |
| C16J | 8" X 16" X 5" JAMB BLOCK | 1 |
| C20 | 8" X 20" X 5" | 2 |
| C20E | 8" X 20" X 5" END UNIT | 4 |
| C22 | 8" X 22" X 5" | 3 |
| C22E | 8" X 22" X 5" END UNIT | 4 |
| C24 | 8" X 24" X 5" | 4 |
| C24D | 8" X 24" X 5" DOUBLE END | 4 |
| C24E | 8" X 24" X 5" END UNIT | 4 |
| D8 | 8" X 8" X 5" | 4 |
| D8C | 8" X 8" X 5" CORNER | 2 |
| D8J | 8" X 8" X 5" JAMB BLOCK | 4 |
| | | 81 |
| GROUP 2 - EAST ELEVATION | | |
| A20 | 36" X 20"X 5" | 6 |
| B9C | 4" X 9" X 5" CORNER | 3 |
| B10J | 4" X 10" X 5" JAMB | 6 |
| B12 | 4" X 12" X 5" | 1 |
| B12J | 4" X 12" X 5" JAMB | 1 |
| B16J | 4" X 16" X 5" JAMB | 3 |
| B18 | 4" X 18" X 5" | 4 |
| B24 | 4" X 24" X 5" | 31 |
| C14J | 8" X 14" X 5" JAMB BLOCK | 1 |
| C16 | 8" X 16" X 5" | 1 |
| C16E | 8" X 16" X 5" END UNIT | 5 |
| C16J | 8" X 16" X 5" JAMB BLOCK | 1 |
| C18E | 8" X 18" X 5" END UNIT | 4 |
| C19E | 8" X 19" X 5" END UNIT | 4 |
| C20 | 8" X 20" X 5" | 10 |
| C20E | 8" X 20" X 5" END UNIT | 10 |
| C22E | 8" X 22" X 5" END UNIT | 5 |
| C24 | 8" X 24" X 5" | 6 |
| C24D | 8" X 24" X 5" DOUBLE END | 2 |
| C24E | 8" X 24" X 5" END UNIT | 8 |
| D8 | 8" X 8" X 5" | 11 |
| D8C | 8" X 8" X 5" CORNER | 9 |
| | | 132 |
| GRAND TOTAL | | 213 |

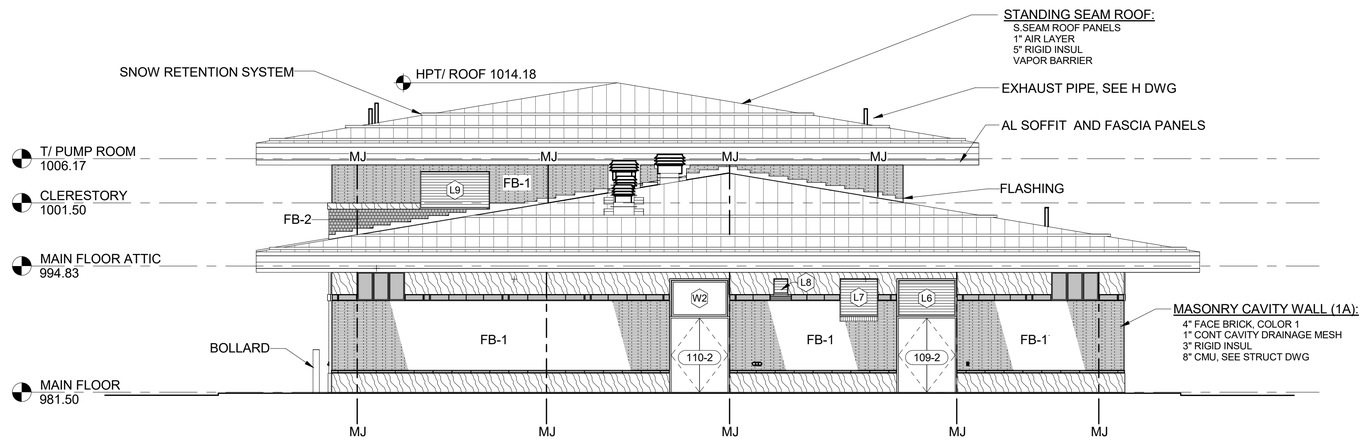


1 BA2 NORTH BUILDING ELEVATION

SCALE: 1/8" = 1'-0"

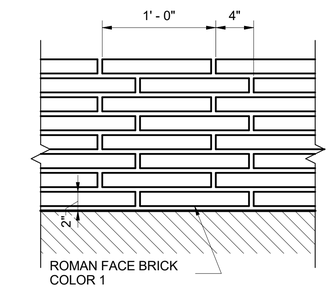


RUNNING BOND PATTERN NO.1

SCALE: 1 1/2" = 1'-0"

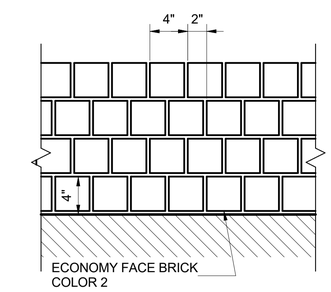


RUNNING BOND PATTER NO.2

SCALE: 1 1/2" = 1'-0"

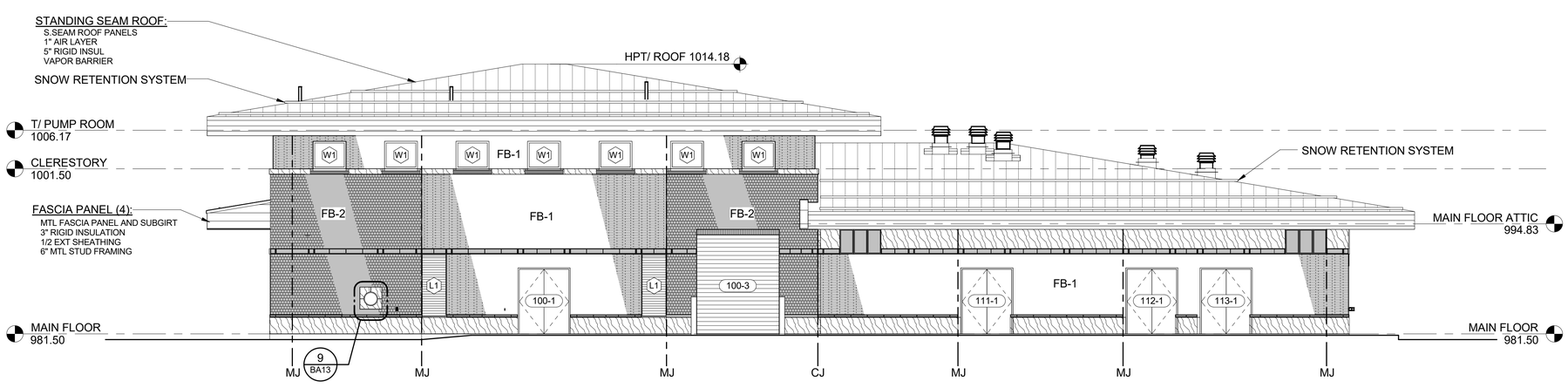


2 BA2 EAST BUILDING ELEVATION

SCALE: 1/8" = 1'-0"

## SHEET NOTES:

1. SEE CAST STONE DETAILS ON BA13.

## LEGEND

- 12X2 FACE BRICK FB-1
- 4X4X8 FACE BRICK FB-2
- 4x8X4 FACE BRICK FB-2
- CAST STONE
- CAST STONE MOTIF
- OHCD ELEV
- AL FASCIA PANEL
- S. SEAM ROOF
- GROUND, SEE CIVIL DWG

DRAFT 98% PROGRESS DRAWINGS

OCTOBER 2019

1 0 1 FT — 1 1/2" =1' - 0"

8 0 8 16 FT — 1/8" =1' - 0"

| NO. | DATE | APPD | DESCRIPTION |
|---|---|---|---|

Waukesha Water Utility — SERVING WAUKESHA SINCE 1886

GREELEY AND HANSEN — 741 N. GRAND AVE. SUITE 308, WAUKESHA, WI 53186

GREAT WATER ALLIANCE™

CONTRACT PACKAGE 3: BOOSTER PUMPING STATION AND WATER SUPPLY CONTROL BUILDING

BUILDING ELEVATIONS

APPROVED

SEAL AFFIXED
MONTH / DAY / YEAR

OCTOBER 2019

| | | | |
|---|---|---|---|
| JOB NO.: | 15310 | | |
| DESGN | JJS | CHCK | TCB |
| APPRV | TCB | DRWN | AKB |
| SCALE: | AS SHOWN | | |

DRAWING NUMBER

BA8

SHEET 87 OF 184 REV 0

FILE: C:\Users\jgreen\Documents\GLWSP-P3-BPSF-GAMHPNE_jgreen.rvt

10/2/2019 10:06:33 AM

BAR MEASURE 1" ON FULLSIZE SHEETS

| SCULPTED CAST STONE - SOUTH AND WEST ELEVATIONS | | |
|---|---|---|
| TYPE | SIZE | QTY |
| GROUP 3 - SOUTH ELEVATION | | |
| B9C | 4" X 9" X 5" CORNER | 4 |
| B10C | 4" X 10" X 5" CORNER | 1 |
| B10J | 4" X 10" X 5" JAMB | 3 |
| B12 | 4" X 12" X 5" | 1 |
| B12C | 4" X 12" X 5 CORNER | 2 |
| B12J | 4" X 12" X 5" JAMB | 2 |
| B14 | 4" X 14" X 5" | 3 |
| B16 | 4" X 16" X 5" | 3 |
| B18 | 4" X 18" X 5" | 4 |
| B24 | 4" X 24" X 5" | 25 |
| C16 | 8" X 16" X 5" | 1 |
| C20 | 8" X 20" X 5" | 7 |
| C20E | 8" X 20" X 5" END UNIT | 2 |
| C22 | 8" X 22" X 5" | 6 |
| C22E | 8" X 22" X 5" END UNIT | 8 |
| C24E | 8" X 24" X 5" END UNIT | 16 |
| D8 | 8" X 8" X 5" | 7 |
| D8C | 8" X 8" X 5" CORNER | 8 |
| | | 103 |
| GROUP 4 - WEST ELEVATION | | |
| A20 | 36" X 20"X 5" | 6 |
| B9C | 4" X 9" X 5" CORNER | 2 |
| B10J | 4" X 10" X 5" JAMB | 2 |
| B16 | 4" X 16" X 5" | 6 |
| B18 | 4" X 18" X 5" | 10 |
| B24 | 4" X 24" X 5" | 49 |
| C20 | 8" X 20" X 5" | 4 |
| C20E | 8" X 20" X 5" END UNIT | 6 |
| C22 | 8" X 22" X 5" | 10 |
| C22E | 8" X 22" X 5" END UNIT | 4 |
| C24 | 8" X 24" X 5" | 8 |
| C24D | 8" X 24" X 5" DOUBLE END | 2 |
| C24E | 8" X 24" X 5" END UNIT | 23 |
| D8 | 8" X 8" X 5" | 17 |
| D8C | 8" X 8" X 5" CORNER | 1 |
| | | 150 |
| GRAND TOTAL | | 253 |

## SHEET NOTES:

1. SEE CAST STONE DETAILS ON BA13.

## LEGEND

- 12X2 FACE BRICK FB-1
- 4X4X8 FACE BRICK FB-2
- 4x8X4 FACE BRICK FB-2
- CAST STONE
- CAST STONE MOTIF
- OHCD ELEV
- AL FASCIA PANEL
- S. SEAM ROOF
- GROUND, SEE CIVIL DWG

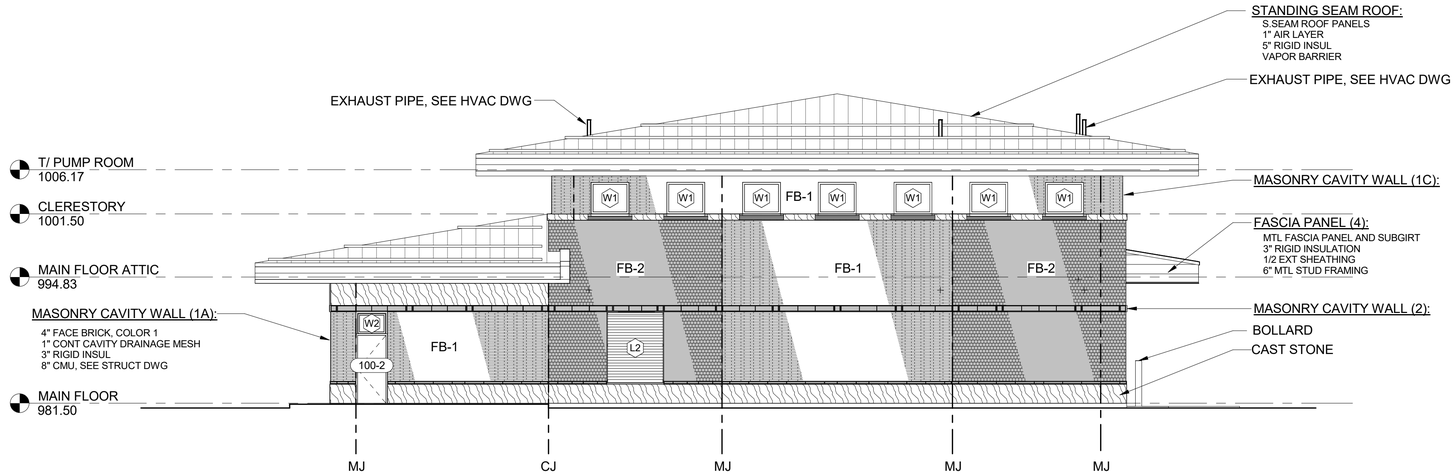


1 / BA3 SOUTH BUILDING ELEVATION
SCALE: 1/8" = 1'-0"

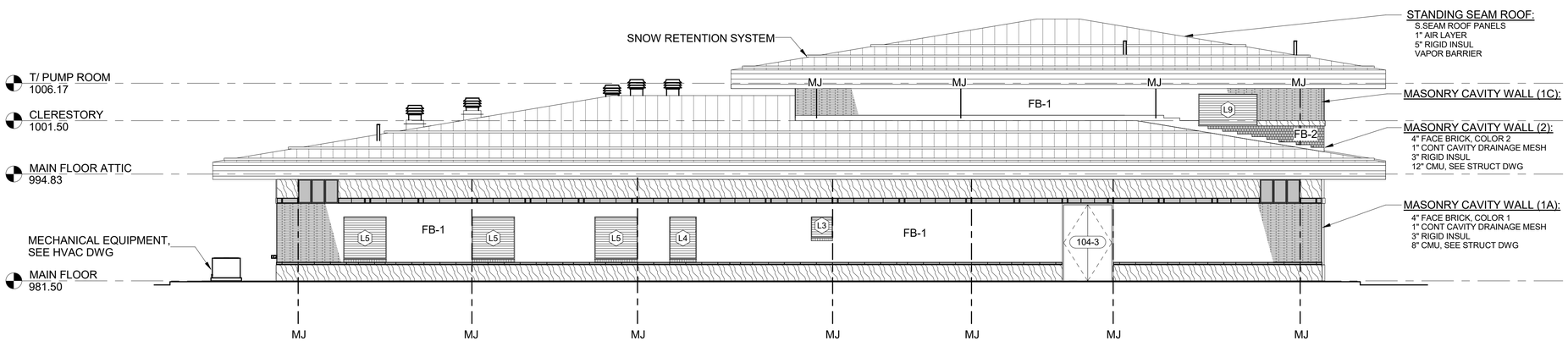


2 / BA2 WEST BUILDING ELEVATION
SCALE: 1/8" = 1'-0"

DRAFT 98% PROGRESS DRAWINGS
OCTOBER 2019

8 0 8 16 FT
1/8" =1' - 0"

| NO. | DATE | APPD | DESCRIPTION |
|---|---|---|---|

Waukesha Water Utility
SERVING WAUKESHA SINCE 1886

GREELEY AND HANSEN
741 N. GRAND AVE. SUITE 308
WAUKESHA, WI 53186

GREAT WATER ALLIANCE™

CONTRACT PACKAGE 3: BOOSTER PUMPING STATION AND WATER SUPPLY CONTROL BUILDING

BUILDING ELEVATIONS

APPROVED

SEAL AFFIXED
MONTH / DAY / YEAR

OCTOBER 2019

| | | | |
|---|---|---|---|
| JOB NO.: | 15310 | | |
| DESGN | JJS | CHCK | TCB |
| APPRV | TCB | DRWN | AKB |
| SCALE: | 1/8" = 1'-0" | | |

DRAWING NUMBER

BA9

SHEET 88 OF 184 REV 0

FILE: C:\Users\lgreen\Documents\GLWSP-P3-BPSF-GAMHPNE_lgreen.rvt

10/2/2019 10:06:38 AM
BAR MEASURE 1" ON FULLSIZE SHEETS

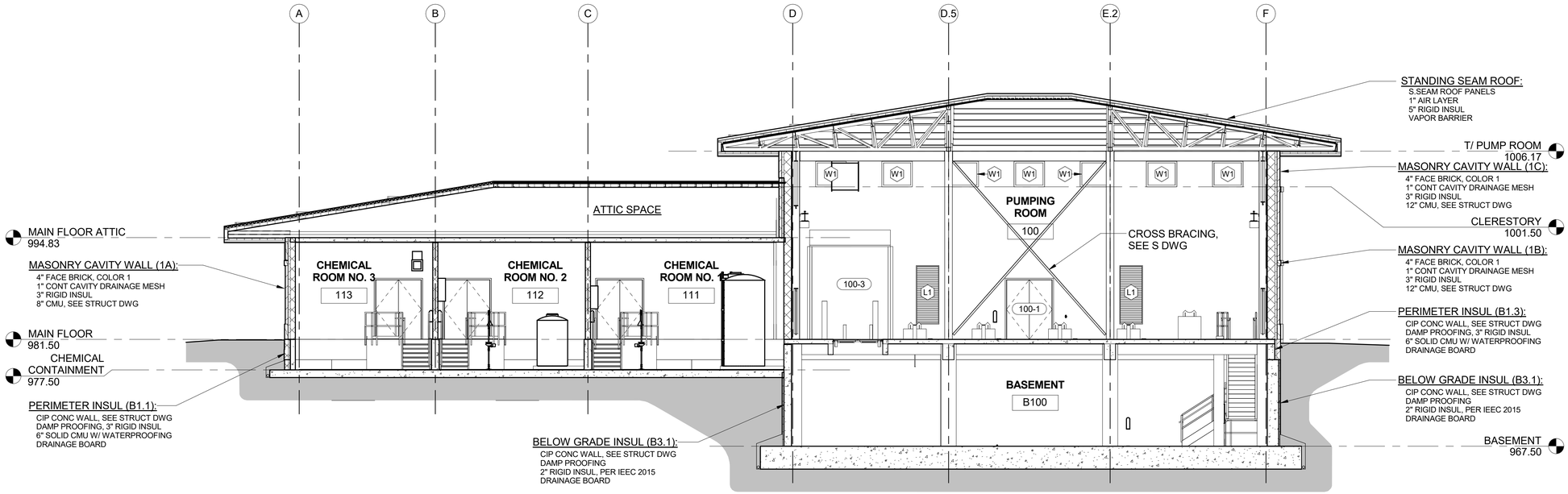


1 BA2 BUILDING SECTION
SCALE: 1/8" = 1'-0"

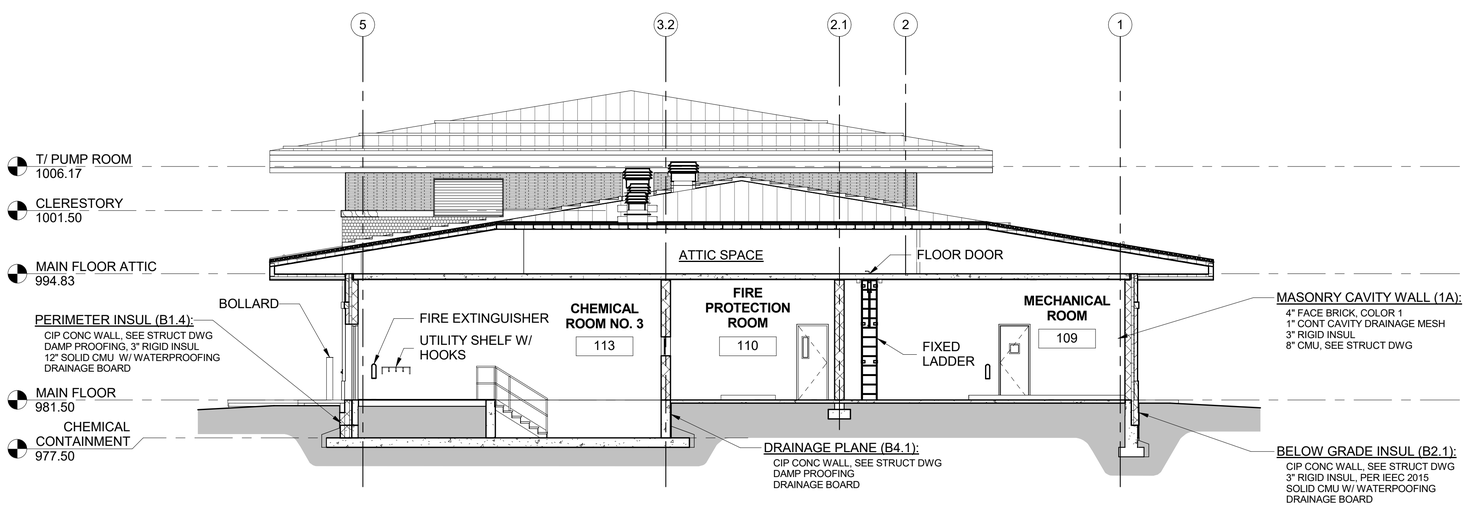


2 BA2 BUILDING SECTION
SCALE: 1/8" = 1'-0"

8 0 8 16 FT
1/8" =1' - 0"

DRAFT 98% PROGRESS DRAWINGS
OCTOBER 2019

| NO. | DATE | APPD | DESCRIPTION |
|---|---|---|---|

Waukesha Water Utility
SERVING WAUKESHA SINCE 1886

GREELEY AND HANSEN
741 N. GRAND AVE. SUITE 308
WAUKESHA, WI 53186

GREAT WATER ALLIANCE™

CONTRACT PACKAGE 3: BOOSTER PUMPING STATION AND WATER SUPPLY CONTROL BUILDING

BUILDING SECTIONS

APPROVED

SEAL AFFIXED
MONTH / DAY / YEAR

OCTOBER 2019

| | | | |
|---|---|---|---|
| JOB NO.: | 15310 | | |
| DESGN | JJS | CHCK | TCB |
| APPRV | TCB | DRWN | AKB |
| SCALE: | 1/8" = 1'-0" | | |

DRAWING NUMBER
BA10

SHEET 89 OF 184 REV 0

FILE: C:\Users\lgreen\Documents\GLWSP-P3-BPSF-GAMHPNE_lgreen.rvt

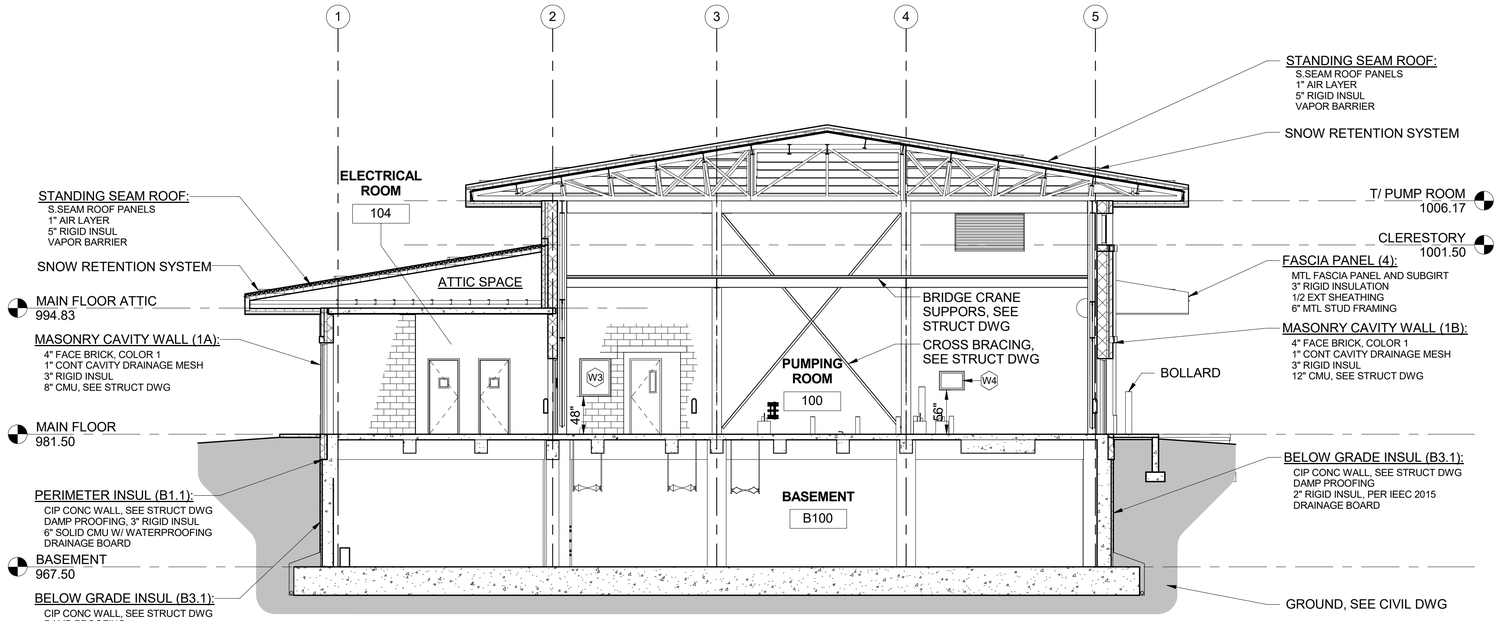


2 BA2 BUILDING SECTION
SCALE: 1/8" = 1'-0"

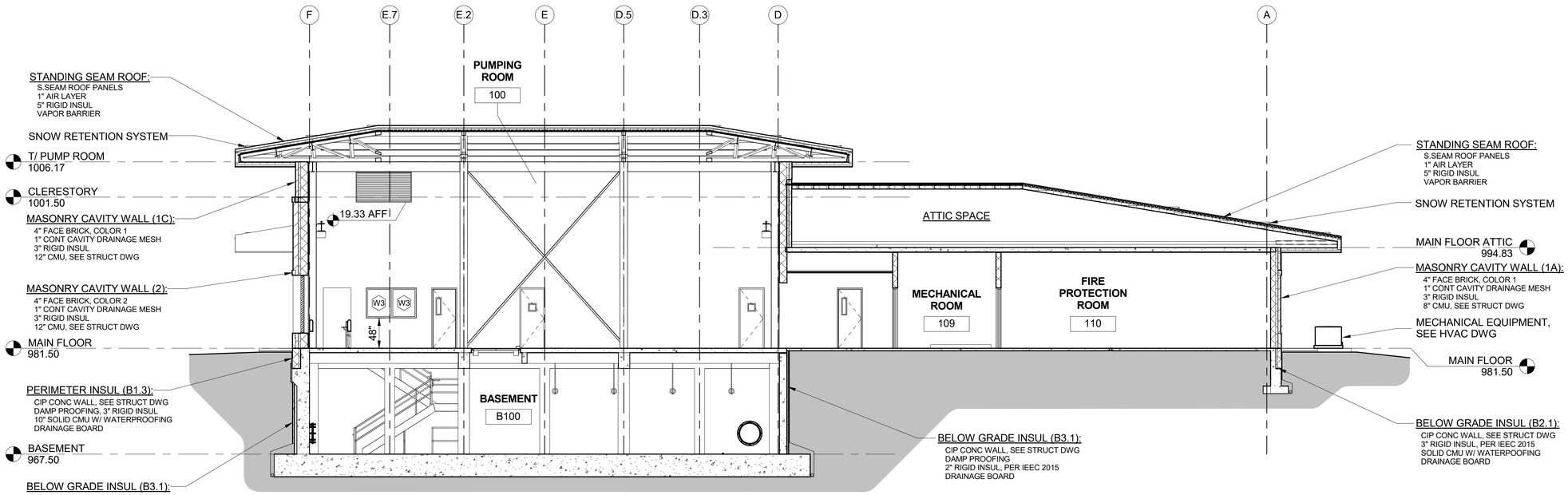


3 BA2 BUILDING SECTION
SCALE: 1/8" = 1'-0"

DRAFT 98% PROGRESS DRAWINGS
OCTOBER 2019

8 0 8 16 FT
1/8" =1' - 0"

| NO. | DATE | APPD | DESCRIPTION |
|---|---|---|---|

Waukesha Water Utility
SERVING WAUKESHA SINCE 1886

GREELEY AND HANSEN
741 N. GRAND AVE, SUITE 308
WAUKESHA, WI 53186

GREAT WATER ALLIANCE™

CONTRACT PACKAGE 3: BOOSTER PUMPING STATION AND WATER SUPPLY CONTROL BUILDING

BUILDING SECTIONS

APPROVED

SEAL AFFIXED
MONTH / DAY / YEAR

OCTOBER 2019

| | | | |
|---|---|---|---|
| JOB NO.: | 15310 | | |
| DESGN | JJS | CHCK | TCB |
| APPRV | TCB | DRWN | AKB |
| SCALE: | 1/8" = 1'-0" | | |

DRAWING NUMBER

BA11

SHEET 90 OF 184 REV 0

10/2/2019 10:06:42 AM

BAR MEASURE 1" ON FULLSIZE SHEETS

FILE: C:\Users\lgreen\Documents\GLWSP-P3-BPSF-GAMHPNE_lgreen.rvt

10/2/2019 10:06:49 AM
BAR MEASURE 1" ON FULLSIZE SHEETS

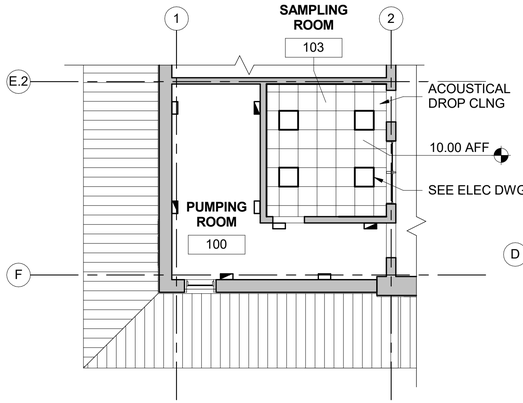


1 REFLECTED CLNG PLAN - SAMPLING ROOM AND STAIR B AREA IN PUMPING ROOM
SCALE: 1/8" = 1'-0"

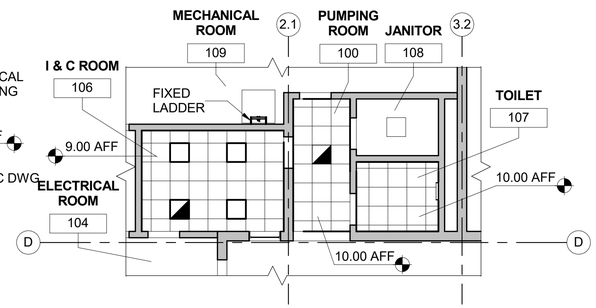


2 REFLECTED CLNG PLAN - MECHANICAL ROOM, I&C ROOM, JANITOR CLOSET, AND TOILET
SCALE: 1/8" = 1'-0"

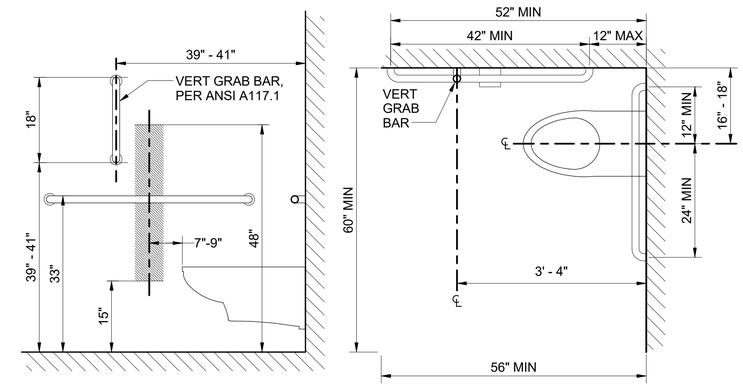


3 TYP GRAB BAR LAYOUT
SCALE: 3/4" = 1'-0"

| BATHROOM ACCESSORIES | | |
|---|---|---|
| NO. | DESCRIPTION | QTY |
| BA01 | TOILET TISSUE DISPENSER | 1 |
| BA02 | HORIZ GRAB BAR | 2 |
| BA03 | VERT GRAB BAR | 1 |
| BA04 | SOAP DISPENSER | 2 |
| BA05 | SEMI-RECESSED PAPER TOWEL ROLL DISPENSER | 1 |
| BA06 | WASTE RECEPTACLE | 1 |
| BA07 | MIRROR | 1 |
| BA08 | PIPE COVERS | 1 |
| BA09 | COAT HOOK | 1 |

| FURNITURE | | |
|---|---|---|
| ID NO. | DESCRIPTION | QTY |
| C1 | GUEST CHAIR | 1 |
| D1 | DESK | 1 |
| DC1 | DESK CHAIR | 1 |
| LF1 | LATERAL FILE | 2 |
| SS1 | STORAGE SHELF | 1 |
| US1 | UTILITY SHELF W/ HOOKS | 3 |

| CASEWORK | | | |
|---|---|---|---|
| ID NO. | WIDTH | DESCRIPTION | QTY |
| BASE CABINET | | | |
| BC-1 | 12" | BASE CABINET W/ 4 DRAWERS | 1 |
| BC-2 | 36" | DBL DOOR AND DRAWERS | 1 |
| BC-3 | 18" | SNG DOOR AND DRAWER | 1 |
| BC-4 | 36" | CORNER UNIT | 1 |
| BC-5 | 12" | BASE CABINET W/ 4 DRAWERS | 1 |
| COUNTER TOP | | | |
| CT-1 | | COUNTER TOP W/ SINK | 1 |

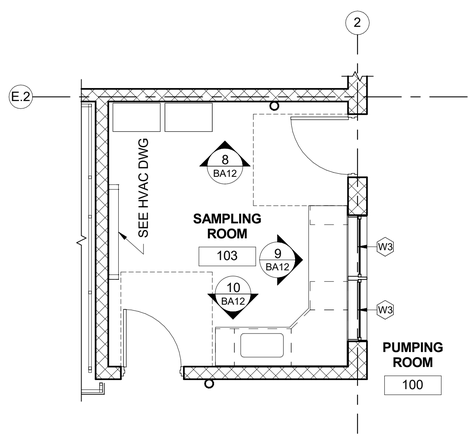


4 BA7 ENLARGED PLAN - SAMPLING ROOM
SCALE: 1/4" = 1'-0"

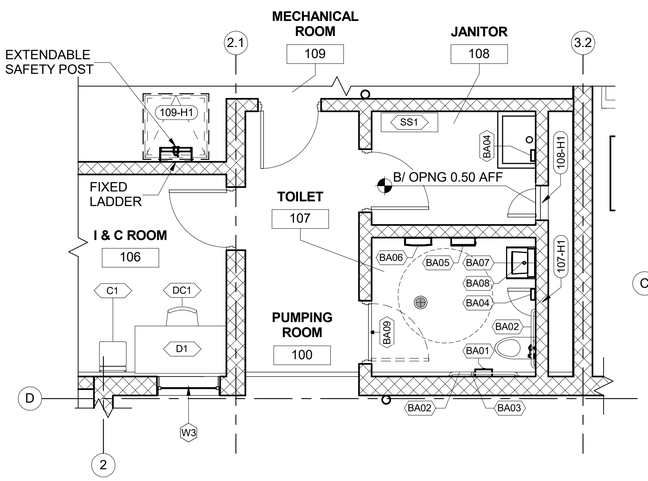


5 BA6 ENLARGED PLAN - I & C ROOM, JAN, AND TOILET
SCALE: 1/4" = 1'-0"

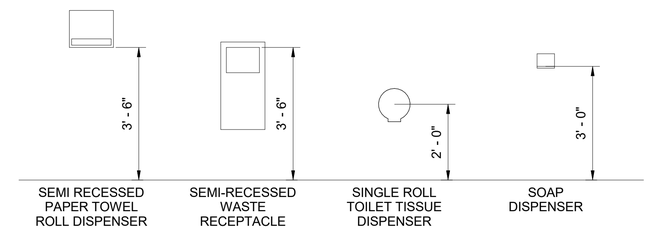


6 TOILET ACCESSORIES
SCALE: 1/2" = 1'-0"

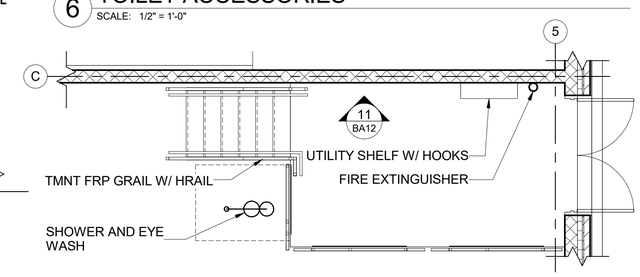


7 BA6 ENLARGED PLAN - TYP CHEMICAL ROOM
SCALE: 1/4" = 1'-0"

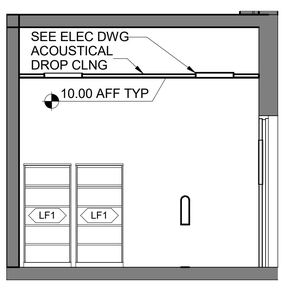


8 BA12 INTERIOR ELEVATION - NORTH WALL OF SAMPLING ROOM
SCALE: 1/4" = 1'-0"

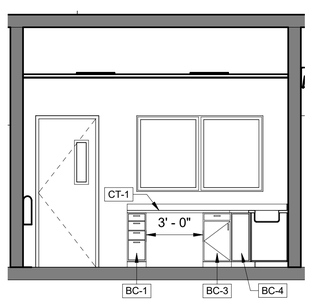


9 BA12 INTERIOR ELEVATION - EAST WALL OF SAMPLING ROOM
SCALE: 1/4" = 1'-0"

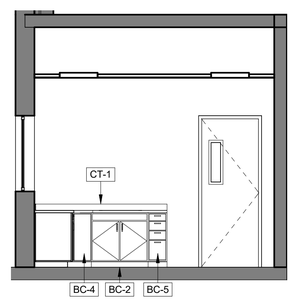


10 BA12 INTERIOR ELEVATION - SOUTH WALL OF SAMPLING ROOM
SCALE: 1/4" = 1'-0"

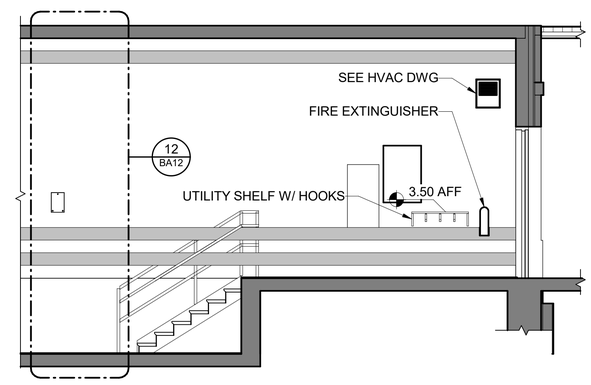


11 BA12 TYP INT ELEV - CHEMICAL ROOMS
SCALE: 1/4" = 1'-0"

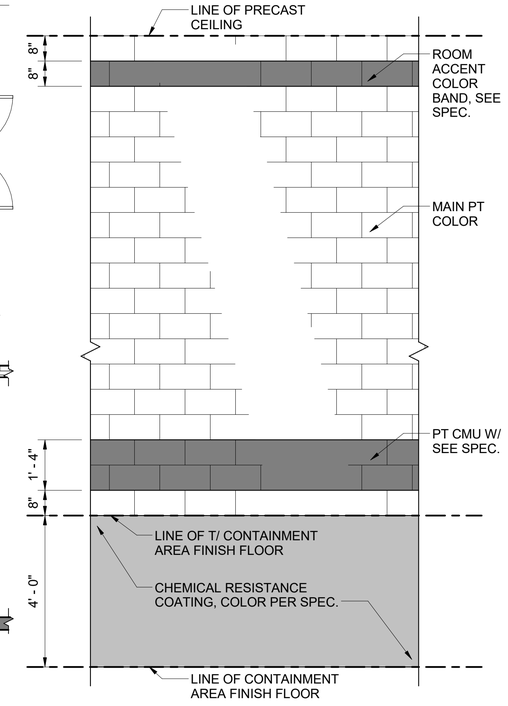


12 TYP ACCENT COLOR DETAIL - CHEMICAL ROOMS
SCALE: 1/2" = 1'-0"

1 0 1 2 3 FT 3/4" = 1' - 0"
4 0 4 8 FT 1/4" = 1' - 0"
8 0 8 16 FT 1/8" = 1' - 0"

DRAFT 98% PROGRESS DRAWINGS
OCTOBER 2019

| NO. | DATE | APPD | DESCRIPTION |
|---|---|---|---|

Waukesha Water Utility
SERVING WAUKESHA SINCE 1886

GREELEY AND HANSEN
741 N. GRAND AVE. SUITE 308
WAUKESHA, WI 53186

GREAT WATER ALLIANCE™

CONTRACT PACKAGE 3: BOOSTER PUMPING STATION AND WATER SUPPLY CONTROL BUILDING

ENLARGED VIEWS AND REFLECTED CEILING PLANS

APPROVED

SEAL AFFIXED
MONTH / DAY / YEAR

OCTOBER 2019

| | | | |
|---|---|---|---|
| JOB NO.: | 15310 | | |
| DESGN | JJS | CHCK | TCB |
| APPRV | TCB | DRWN | AKB |
| SCALE: | AS SHOWN | | |

DRAWING NUMBER
BA12

SHEET 91 OF 184 REV 0

FILE: C:\Users\lgreen\Documents\GLWSP-P3-BPSF-GAMHPNE_lgreen.rvt

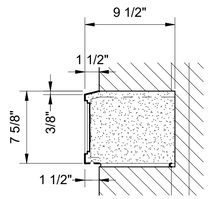


8" X 9 1/2" BLOCK

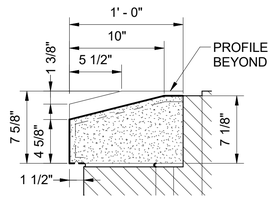


8" X 12" SILL BLOCK

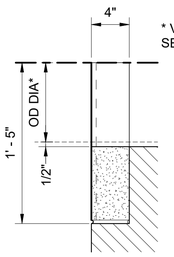


BOTTOM BLOCKING AT 16" PIPE PENETRATION

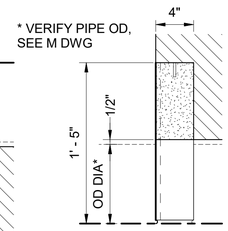


TOP BLOCKING AT 16" PIPE PENETRATION

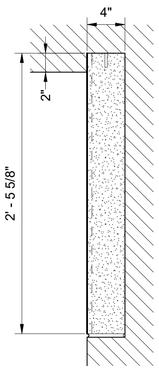


TYPICAL 30" X 4" PANEL AT T/ WALL

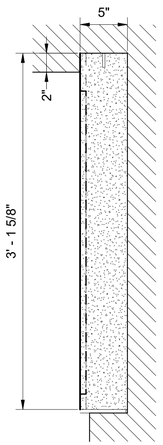


38" X 5" MOTIF PANEL AT T/ WALL

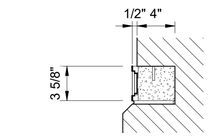


4" X 5" SCULPTED BLOCK

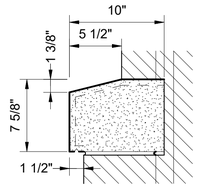


8" X 10" TRANSITION BLOCK

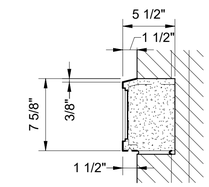


8" X 5 1/2" BLOCK

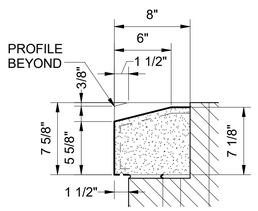


8" X 8" SILL BLOCK

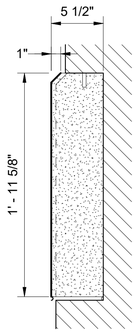


TYPICAL 24" X 5" PANEL AT B/ WALL

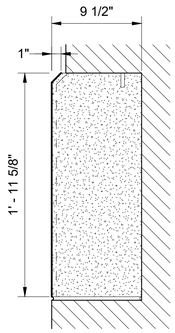


24" X 9 1/8" RETURN PANEL AT B/ WALL

## 1 TYP CAST STONE PROFILES

SCALE: 1 1/2" = 1'-0"

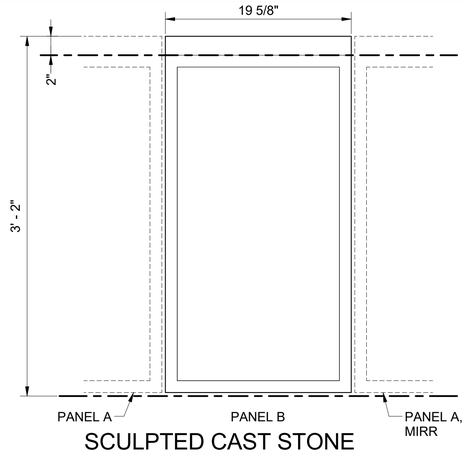


## 2 SCULPTED CAST STONE ELEVATION DETAIL

SCALE: 1 1/2" = 1'-0"

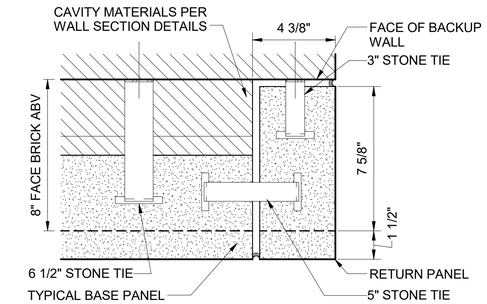


## 3 CAST STONE WALL BASE DETAIL AT DOOR OPENING LOCATIONS

SCALE: 3" = 1'-0"

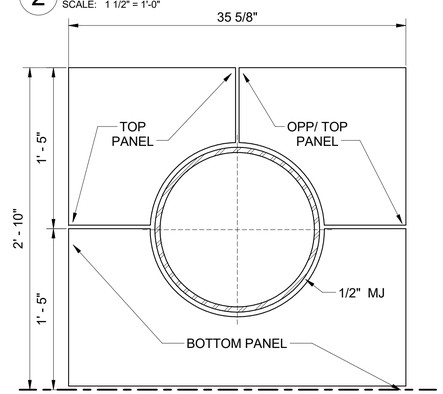


## 9 ELEV OF CAST STONE BLOCKING AT 16" DIA PIPE PENETRATION

SCALE: 1 1/2" = 1'-0"

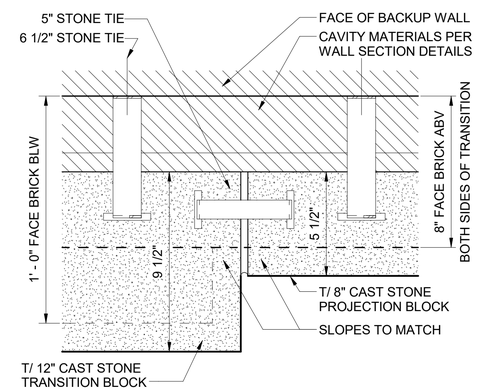


## 4 TYP CAST STONE RETURN DETAIL AT CLERESTORY

SCALE: 3" = 1'-0"

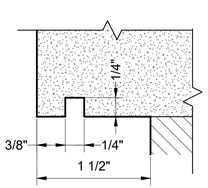


## 5 CAST STONE DRIP EDGE DETAIL

SCALE: 12" = 1'-0"

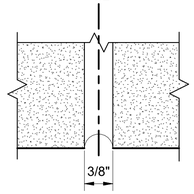


## 6 TYP CAST STONE JOINT DETAIL

SCALE: 12" = 1'-0"

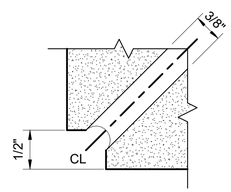


## 7 TYP CAST STONE JOINT DETAIL

SCALE: 12" = 1'-0"

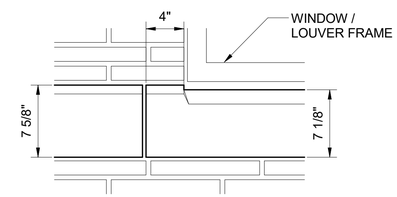


## 8 TYP ELEV OF CAST STONE SILL

SCALE: 1 1/2" = 1'-0"

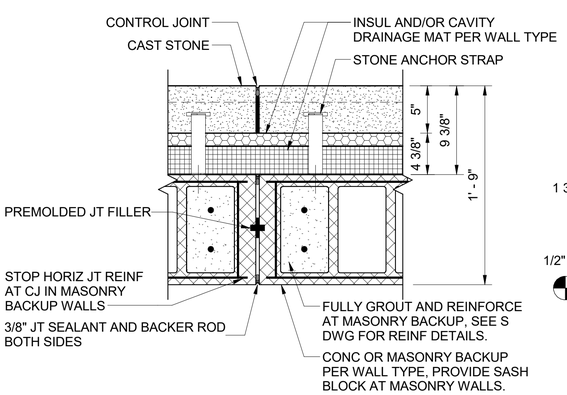


## 10 TYPICAL CONTROL JOINT

SCALE: 1 1/2" = 1'-0"

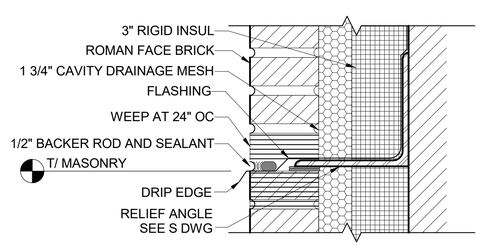


## 11 TYPICAL RELIEVING ANGLE

SCALE: 3" = 1'-0"

NOTE:
SEE BUILDING ELEV FOR RELIEVING ANGLE LOCATIONS

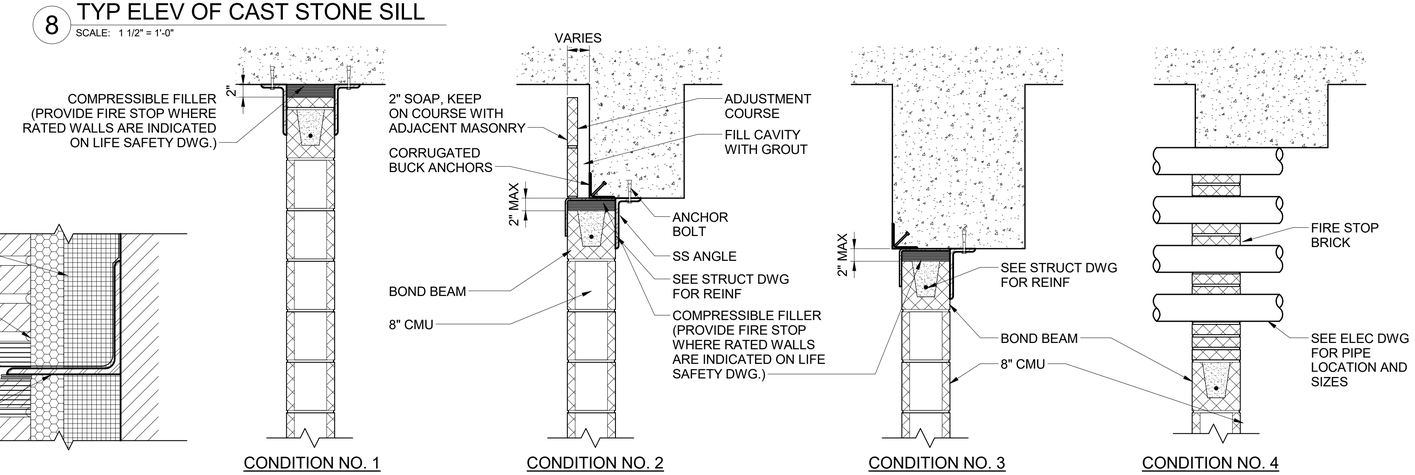


## 12 TOP OF WALL DETAILS

SCALE: 1" = 1'-0"

NOTE: FOR UL RATINGS OF WALL PARTITIONS AND UL ASSEMBLIES, SEE LIFE SAFETY DWG.

1 0 1 2 FT — 1" =1' - 0"
1 0 1 FT — 1 1/2" =1' - 0"
0 4 8 12 IN — 3" =1' - 0"
0.125 0 0.125FT — 12" =1' - 0"

DRAFT 98% PROGRESS DRAWINGS

OCTOBER 2019

| NO. | DATE | APPD | DESCRIPTION |
|---|---|---|---|

Waukesha Water Utility
SERVING WAUKESHA SINCE 1886

GREELEY AND HANSEN
741 N. GRAND AVE. SUITE 308
WAUKESHA, WI 53186

GREAT WATER ALLIANCE™

CONTRACT PACKAGE 3: BOOSTER PUMPING STATION AND WATER SUPPLY CONTROL BUILDING

ENLARGED VIEWS - STONE PROFILES AND DETAILS

APPROVED

SEAL AFFIXED
MONTH / DAY / YEAR

OCTOBER 2019

| | | | |
|---|---|---|---|
| JOB NO.: | 15310 | | |
| DESGN | JJS | CHCK | TCB |
| APPRV | TCB | DRWN | AKB |
| SCALE: | AS SHOWN | | |

DRAWING NUMBER

BA13

SHEET 92 OF 184 REV 0

10/2/2019 10:06:54 AM

BAR MEASURE 1" ON FULLSIZE SHEETS

FILE: C:\Users\lgreen\Documents\GLWSP-P3-BPSF-GAMHPNE_lgreen.rvt

10/2/2019 10:06:59 AM
BAR MEASURE 1" ON FULLSIZE SHEETS

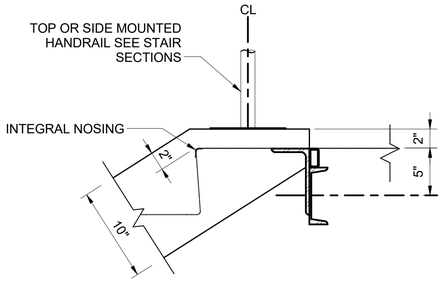


1 TYP MTL PLATE STAIR DETAIL
SCALE: 1 1/2" = 1'-0"

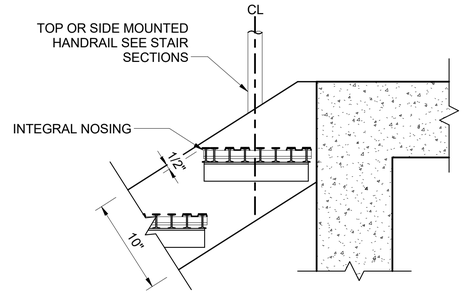


2 TYP FRP TREAD STAIR DETAIL
SCALE: 1 1/2" = 1'-0"

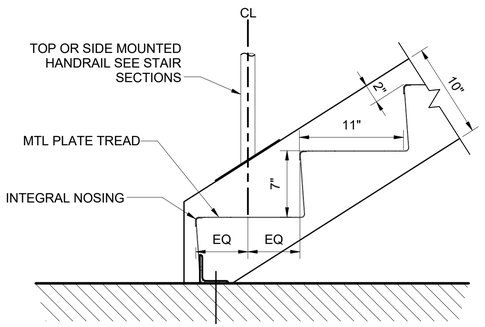


3 TYP MTL PLATE STAIR DETAIL
SCALE: 1 1/2" = 1'-0"

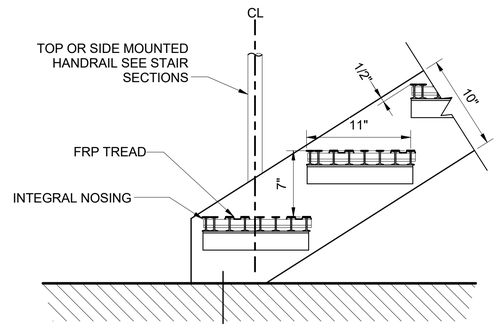


4 TYP FRP STAIR DETAIL
SCALE: 1 1/2" = 1'-0"

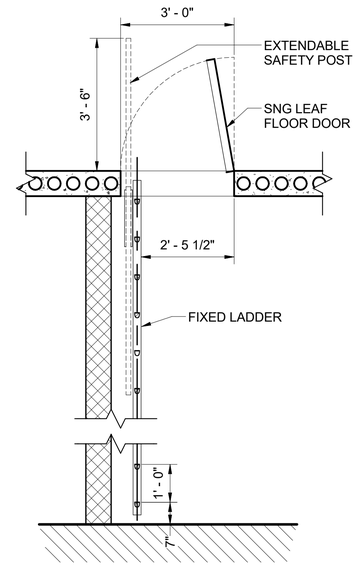


5 TYP INT LADDER DETAIL AT FLOOR DOOR
SCALE: 1/2" = 1'-0"

| STAIR RUN SCHEDULE | | | | | | | | |
|---|---|---|---|---|---|---|---|---|
| RUN NO. | DESCRIPTION | QTY. | RUN WIDTH | RISERS NO. | RISERS HEIGHT | TOTAL HEIGHT | TREADS NO. | TREADS DEPTH |
| STAIR A | | | | | | | | |
| 1 | MTL TREAD TYPE | 1 | 42" | 7 | 7" | 4' - 1" | 6 | 11" |
| 2 | MTL TREAD TYPE | 1 | 42" | 17 | 7" | 9' - 11" | 16 | 11" |
| STAIR B | | | | | | | | |
| 1 | MTL TREAD TYPE | 1 | 44" | 11 | 7" | 6' - 5" | 10 | 11" |
| 2 | MTL TREAD TYPE | 1 | 44" | 13 | 7" | 7' - 7" | 12 | 11" |
| STAIR C | | | | | | | | |
| 1 | FRP TREAD TYPE | 3 | 42" | 7 | 6 27/32" | 4' - 0" | 6 | 11" |

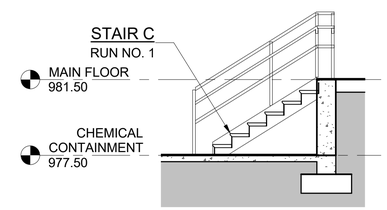


6 BA6 STAIR C SECTION
SCALE: 1/4" = 1'-0"

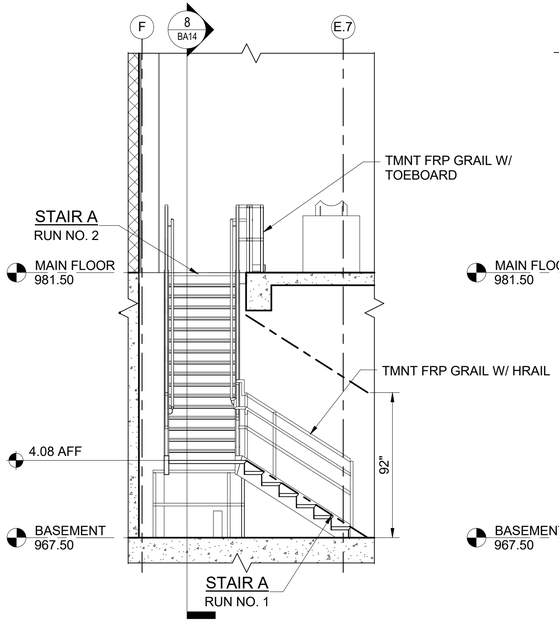


7 BA14 STAIR A SECTION
SCALE: 1/4" = 1'-0"

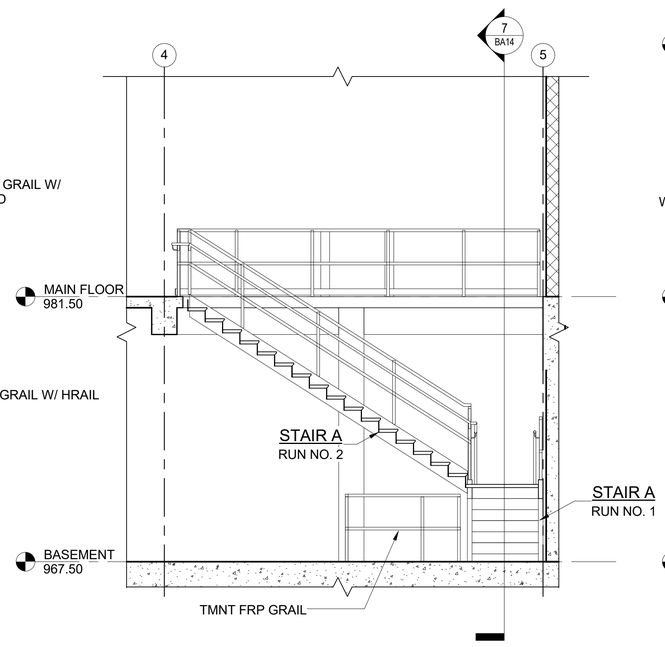


8 BA2 STAIR A SECTION
SCALE: 1/4" = 1'-0"

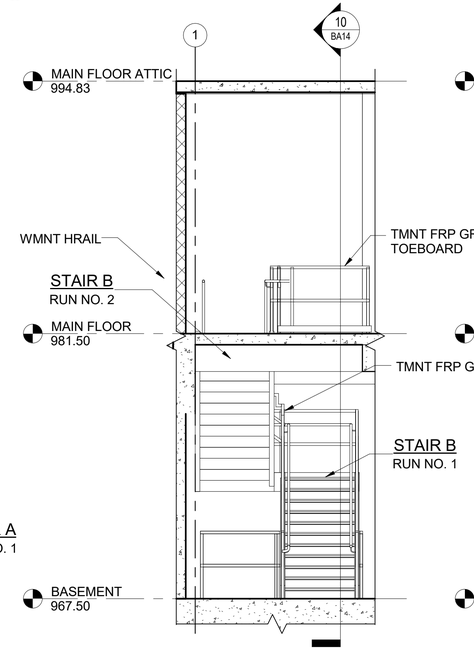


9 BA14 STAIR B SECTION
SCALE: 1/4" = 1'-0"

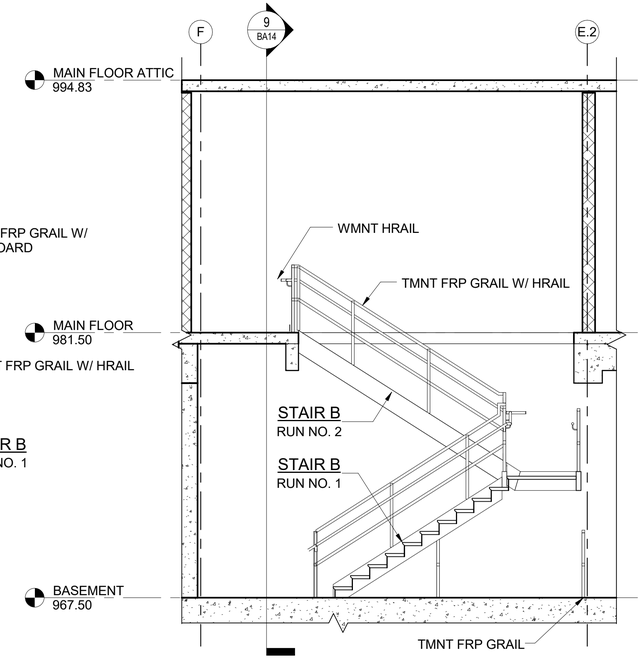


10 BA2 STAIR B SECTION
SCALE: 1/4" = 1'-0"

0 4 8 12 IN — 3" =1' - 0"
1 0 1 FT — 1 1/2" =1' - 0"
4 0 4 8 FT — 1/4" =1' - 0"

DRAFT 98% PROGRESS DRAWINGS
OCTOBER 2019

| NO. | DATE | APPD | DESCRIPTION |
|---|---|---|---|

Waukesha Water Utility
SERVING WAUKESHA SINCE 1886

GREELEY AND HANSEN
741 N. GRAND AVE. SUITE 308
WAUKESHA, WI 53186

GREAT WATER ALLIANCE™

CONTRACT PACKAGE 3: BOOSTER PUMPING STATION AND WATER SUPPLY CONTROL BUILDING

ENLARGED VIEWS - STAIRS A, B, C AND DETAILS

APPROVED

SEAL AFFIXED
MONTH / DAY / YEAR

OCTOBER 2019

| | | | |
|---|---|---|---|
| JOB NO.: | 15310 | | |
| DESGN | JJS | CHCK | TCB |
| APPRV | TCB | DRWN | AKB |
| SCALE: | AS SHOWN | | |

DRAWING NUMBER
BA14

SHEET 93 OF 184 REV 0

FILE: C:\Users\lgreen\Documents\GLWSP-P3-BPSF-GAMHPNE_lgreen.rvt

10/2/2019 10:07:04 AM

BAR MEASURE 1" ON FULLSIZE SHEETS

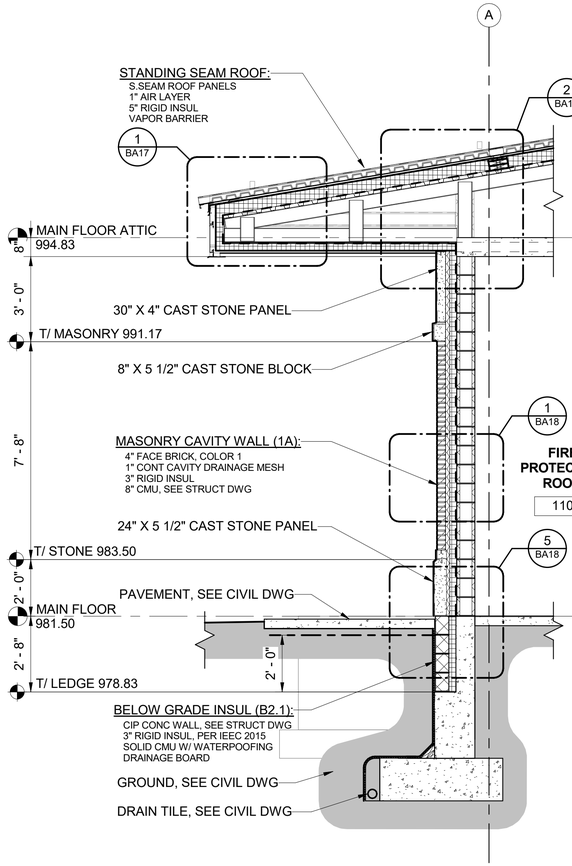


1 BA6 WALL SECTION
SCALE: 3/8" = 1'-0"

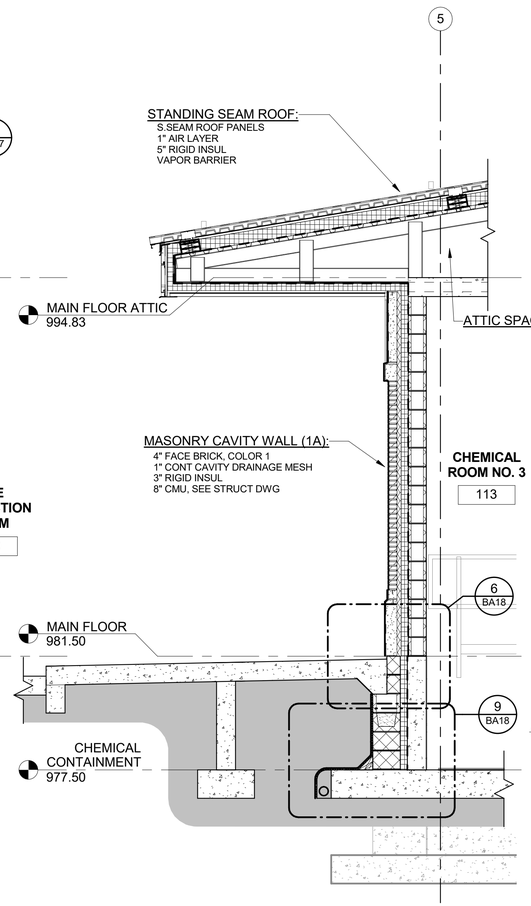


2 BA6 WALL SECTION
SCALE: 3/8" = 1'-0"

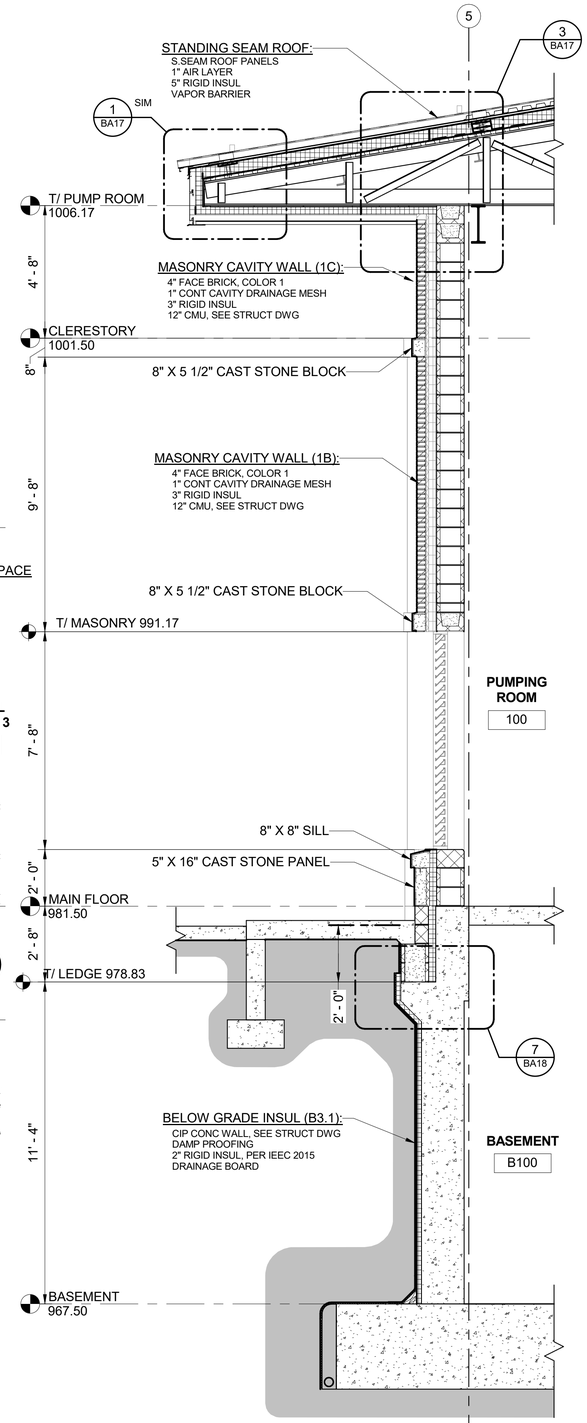


3 BA7 WALL SECTION
SCALE: 3/8" = 1'-0"

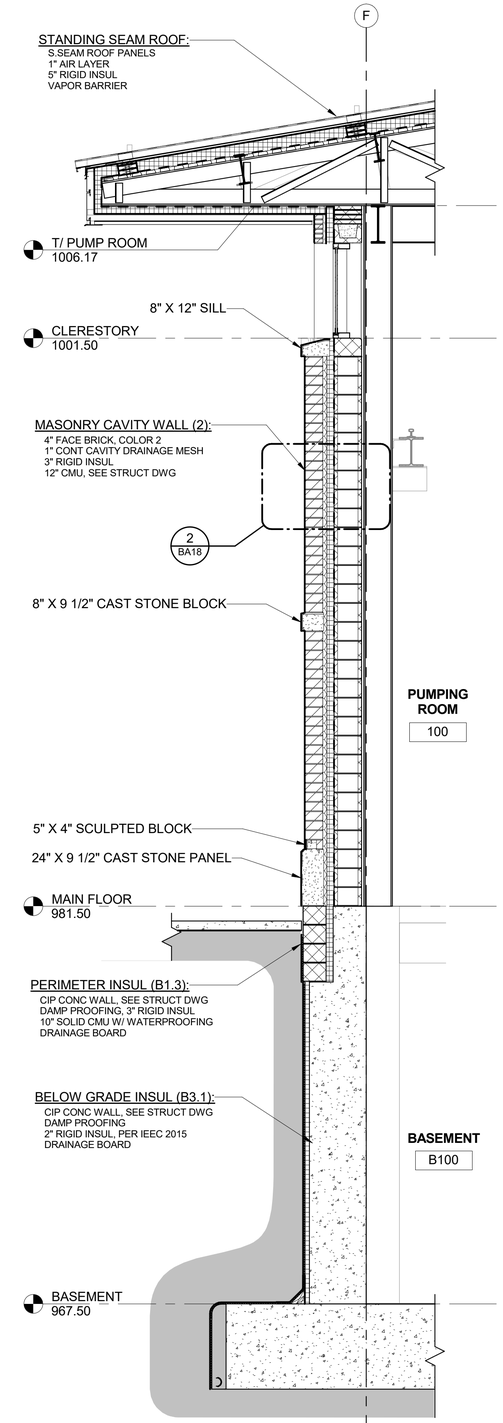


4 BA7 WALL SECTION
SCALE: 3/8" = 1'-0"

2 0 2 4 6 FT
3/8" =1' - 0"

DRAFT 98% PROGRESS DRAWINGS
OCTOBER 2019

| NO. | DATE | APPD | DESCRIPTION |
|---|---|---|---|

Waukesha Water Utility
SERVING WAUKESHA SINCE 1886

GREELEY AND HANSEN
741 N. GRAND AVE. SUITE 308
WAUKESHA, WI 53186

GREAT WATER ALLIANCE™

CONTRACT PACKAGE 3: BOOSTER PUMPING STATION AND WATER SUPPLY CONTROL BUILDING

WALL SECTIONS

APPROVED

SEAL AFFIXED
MONTH / DAY / YEAR

OCTOBER 2019

| | | | |
|---|---|---|---|
| JOB NO.: | 15310 | | |
| DESGN | JJS | CHCK | TCB |
| APPRV | TCB | DRWN | AKB |
| SCALE: | 3/8" = 1'-0" | | |

DRAWING NUMBER

BA15

SHEET 94 OF 184 REV 0

FILE: C:\Users\lgreen\Documents\GLWSP-P3-BPSF-GAMHPNE_lgreen.rvt

10/2/2019 10:07:08 AM

BAR MEASURE 1" ON FULLSIZE SHEETS

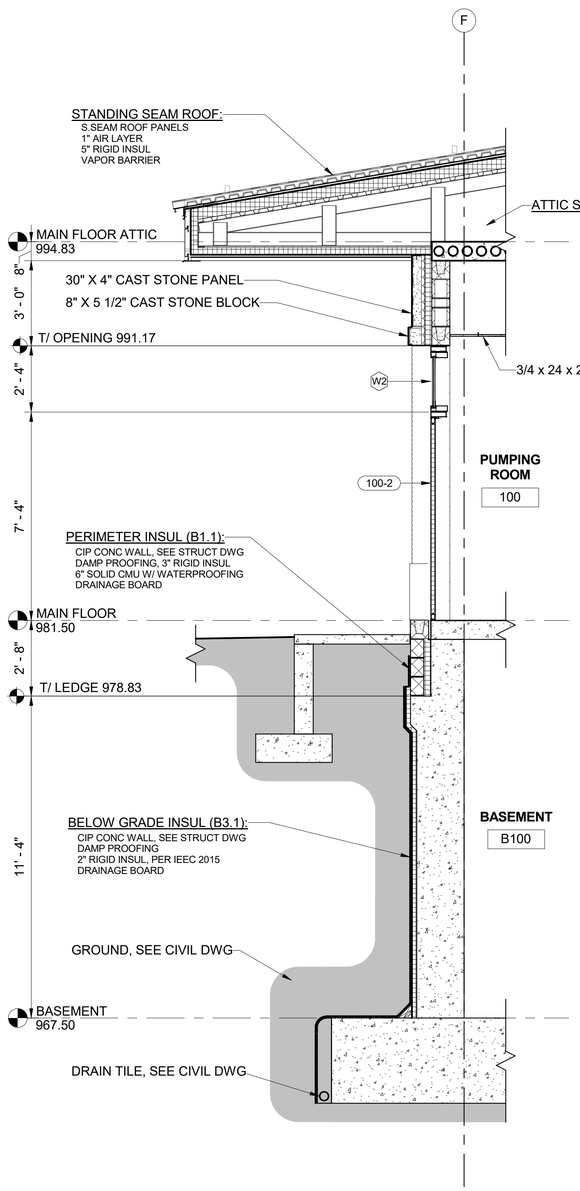


1 BA7 WALL SECTION
SCALE: 3/8" = 1'-0"

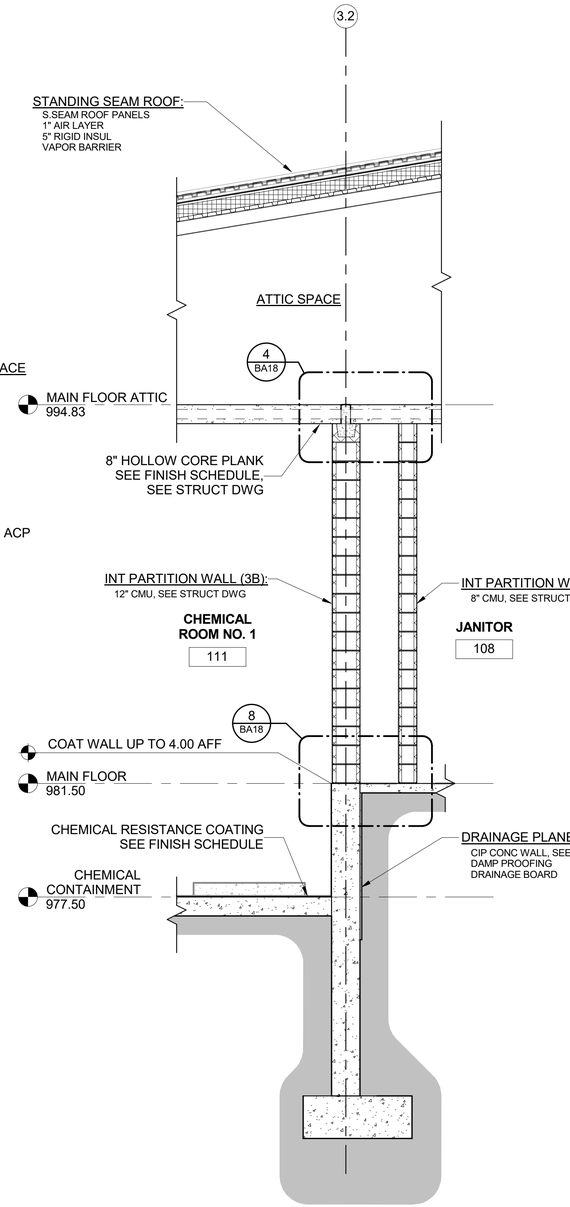


2 BA6 WALL SECTION
SCALE: 3/8" = 1'-0"

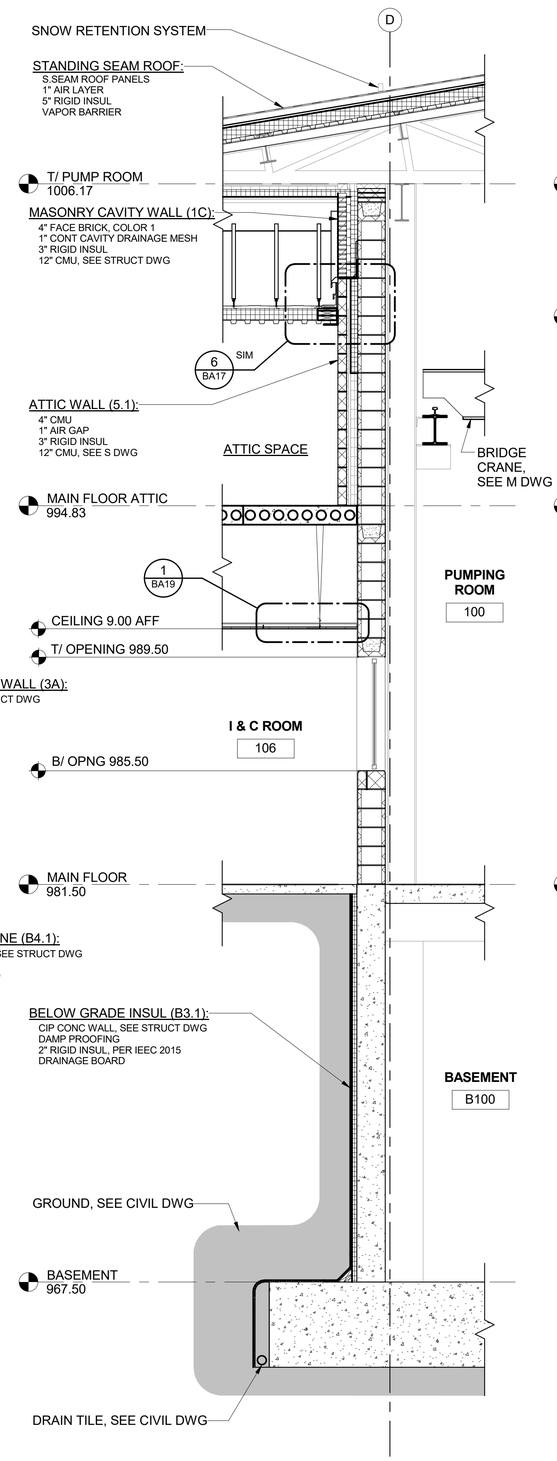


3 BA6 WALL SECTION
SCALE: 3/8" = 1'-0"

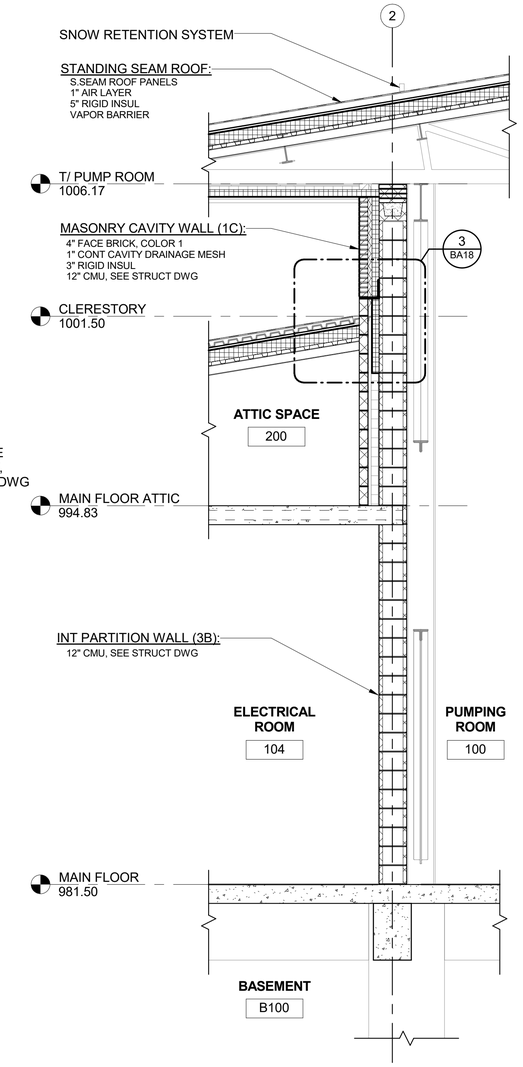


4 BA7 WALL SECTION
SCALE: 3/8" = 1'-0"

2 0 2 4 6 FT
3/8" =1' - 0"

DRAFT 98% PROGRESS DRAWINGS
OCTOBER 2019

FILE: C:\Users\lgreen\Documents\GLWSP-P3-BPSF-GAMHPNE_lgreen.rvt

| NO. | DATE | APPD | DESCRIPTION |
|---|---|---|---|

Waukesha Water Utility
SERVING WAUKESHA SINCE 1886

GREELEY AND HANSEN
741 N. GRAND AVE. SUITE 308
WAUKESHA, WI 53186

GREAT WATER ALLIANCE™

CONTRACT PACKAGE 3: BOOSTER PUMPING STATION AND WATER SUPPLY CONTROL BUILDING

WALL SECTIONS

APPROVED

SEAL AFFIXED
MONTH / DAY / YEAR

OCTOBER 2019

| | | | |
|---|---|---|---|
| JOB NO.: | 15310 | | |
| DESGN | JJS | CHCK | TCB |
| APPRV | TCB | DRWN | AKB |
| SCALE: | 3/8" = 1'-0" | | |

DRAWING NUMBER

BA16

SHEET 95 OF 184 REV 0

10/2/2019 11:22:48 AM

BAR MEASURE 1" ON FULLSIZE SHEETS

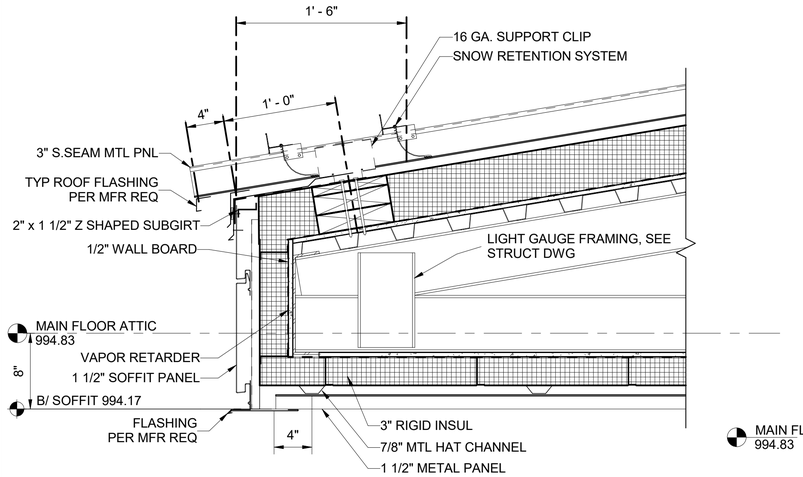


1 BA15 SECTION DETAIL - TYP ROOF EDGE
SCALE: 1 1/2" = 1'-0"

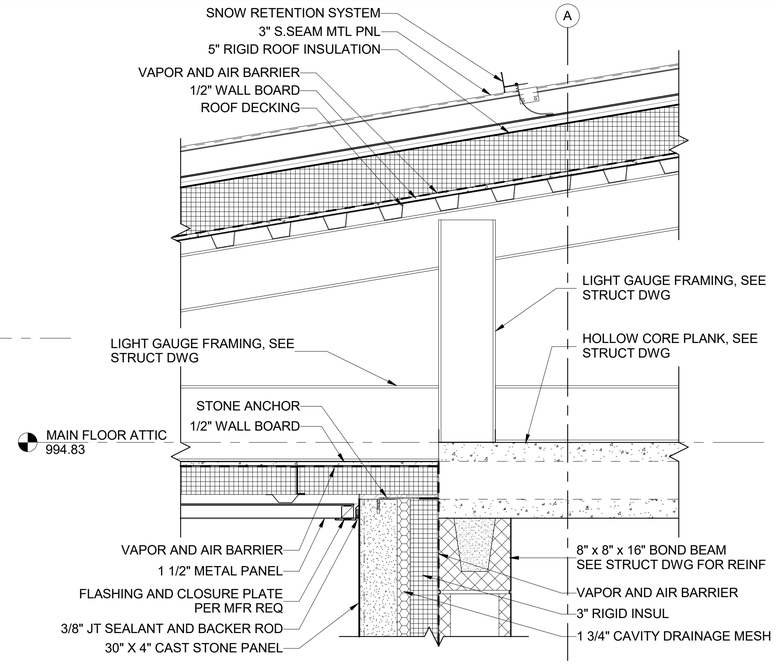


2 BA15 SECTION DETAIL - LOW ROOF AT OVERHANG
SCALE: 1 1/2" = 1'-0"

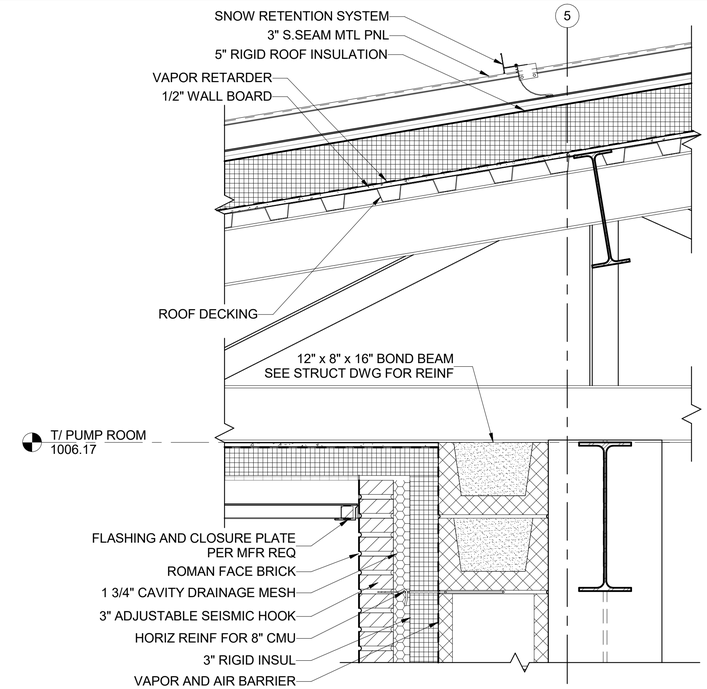


3 BA15 SECTION DETAIL - HIGH ROOF AT OVERHANG
SCALE: 1 1/2" = 1'-0"

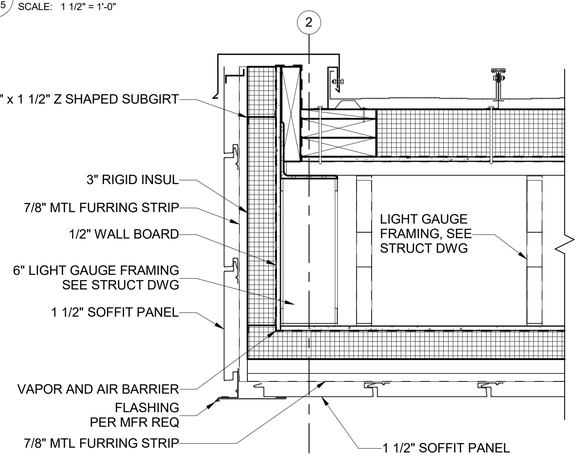


4 SECTION DETAIL - ENDCAP FASCIA AT OVERHANG
SCALE: 1 1/2" = 1'-0"

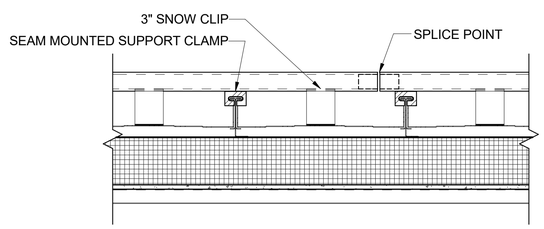


5 SECTION DETAIL - SNOW RETENTION SYSTEM
SCALE: 1 1/2" = 1'-0"

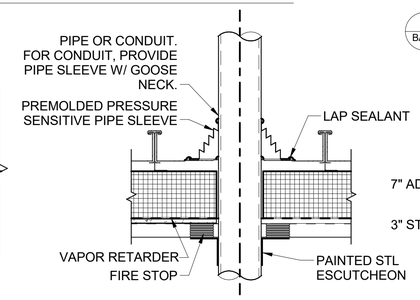


9 SECTION DETAIL - TYP PENETRATION AT S.SEAM ROOF
SCALE: 1 1/2" = 1'-0"

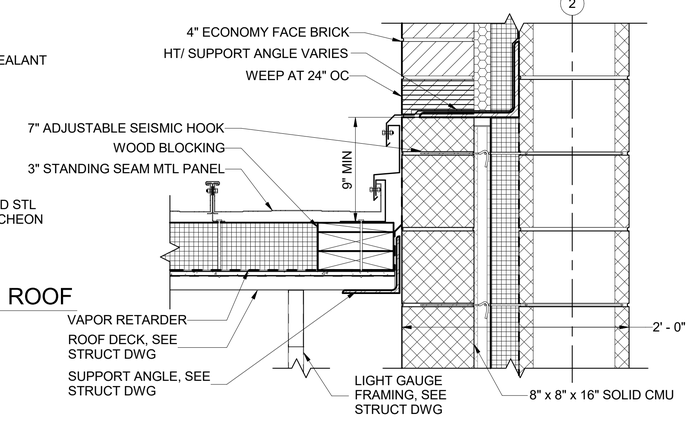


6 BA16 SECTION DETAIL - LOW ROOF AT CLERESTORY WALL
SCALE: 1 1/2" = 1'-0"

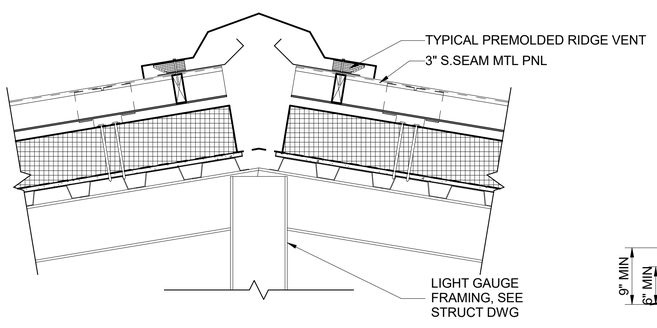


7 SECTION DETAIL - TYP RIDGE VENT
SCALE: 1 1/2" = 1'-0"

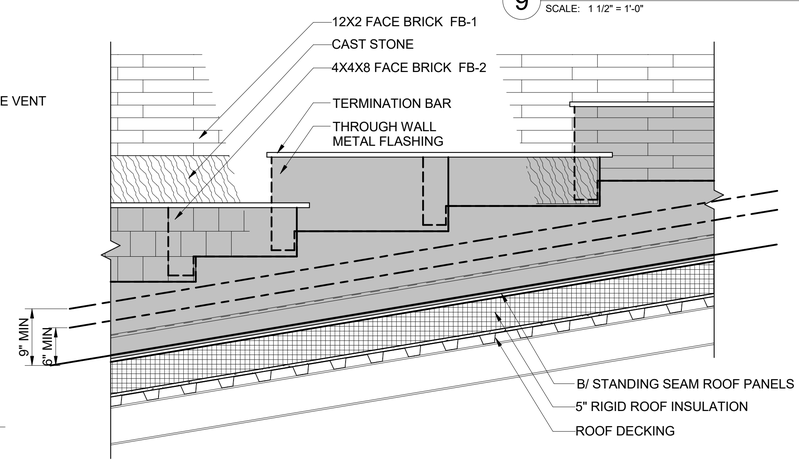


8 ELEVATION DETAIL - STEPPED FLASHING AT LOW ROOF
SCALE: 1" = 1'-0"

DRAFT 98% PROGRESS DRAWINGS
OCTOBER 2019

0 4 8 12 IN — 3" =1' - 0"
1 0 1 FT — 1 1/2" =1' - 0"
1 0 1 2 FT — 1" =1' - 0"

| NO. | DATE | APPD | DESCRIPTION |
|---|---|---|---|

Waukesha Water Utility
SERVING WAUKESHA SINCE 1886

GREELEY AND HANSEN
741 N. GRAND AVE. SUITE 308
WAUKESHA, WI 53186

GREAT WATER ALLIANCE™

CONTRACT PACKAGE 3: BOOSTER PUMPING STATION AND WATER SUPPLY CONTROL BUILDING

WALL SECTION DETAILS

APPROVED

SEAL AFFIXED
MONTH / DAY / YEAR

OCTOBER 2019

| | | | |
|---|---|---|---|
| JOB NO.: | 15310 | | |
| DESGN | JJS | CHCK | TCB |
| APPRV | TCB | DRWN | AKB |
| SCALE: | AS SHOWN | | |

DRAWING NUMBER
BA17

SHEET 96 OF 184 REV 0

FILE: C:\Users\lgreen\Documents\GLWSP-P3-BPSF-GAM\HPNE_lgreen.rvt

10/2/2019 10:07:17 AM

BAR MEASURE 1" ON FULLSIZE SHEETS

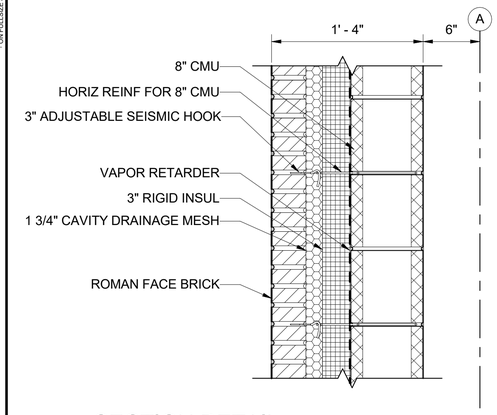


1 BA15 SECTION DETAIL
SCALE: 1 1/2" = 1'-0"

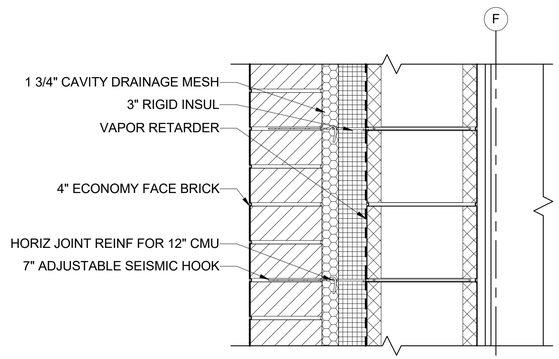


2 BA15 SECTION DETAIL
SCALE: 1 1/2" = 1'-0"

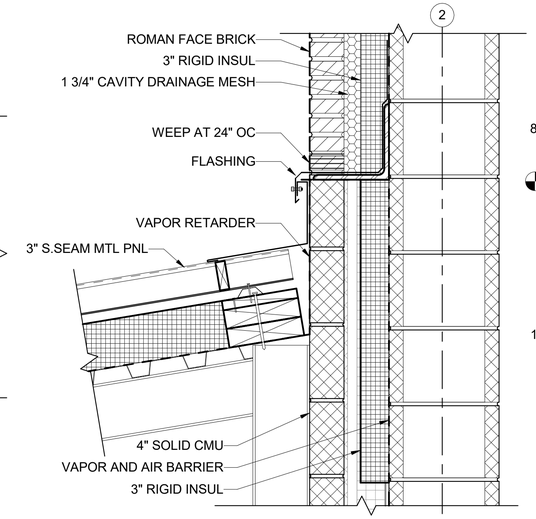


3 BA16 SECTION DETAIL
SCALE: 1 1/2" = 1'-0"

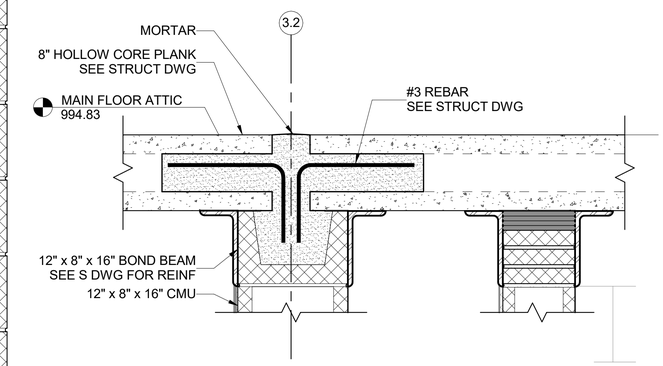


4 BA16 SECTION DETAIL
SCALE: 1 1/2" = 1'-0"

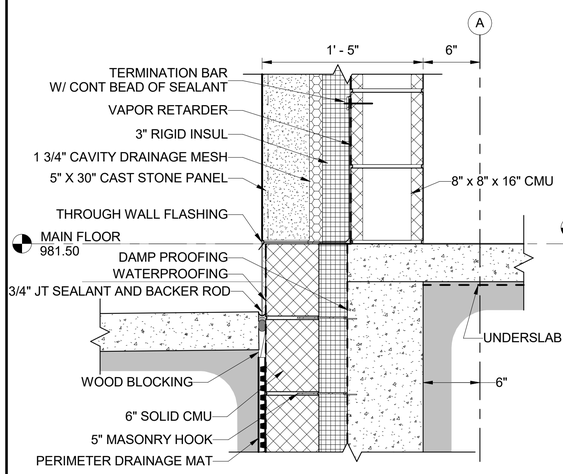


5 BA15 SECTION DETAIL
SCALE: 1 1/2" = 1'-0"

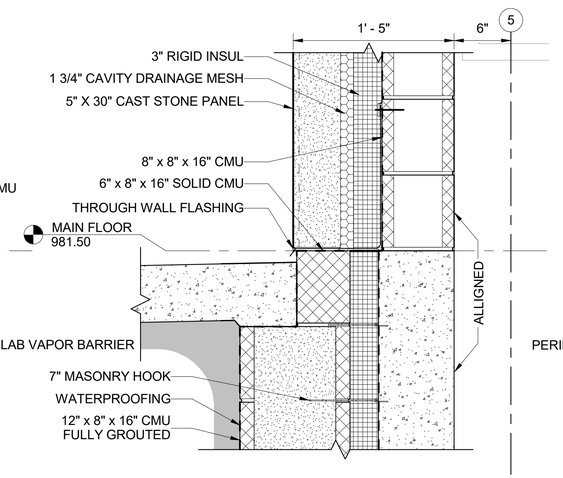


6 BA15 SECTION DETAIL
SCALE: 1 1/2" = 1'-0"

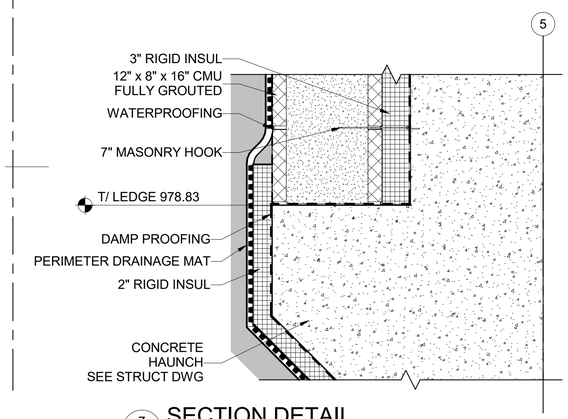


7 BA15 SECTION DETAIL
SCALE: 1 1/2" = 1'-0"

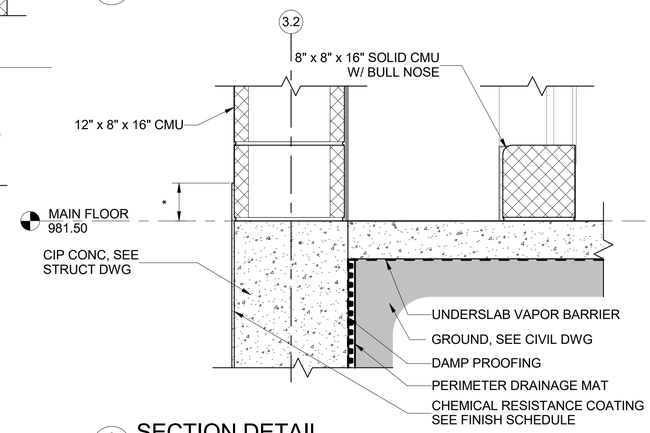


8 BA16 SECTION DETAIL
SCALE: 1 1/2" = 1'-0"

NOTE 1: SEE FINISH SCHEDULE

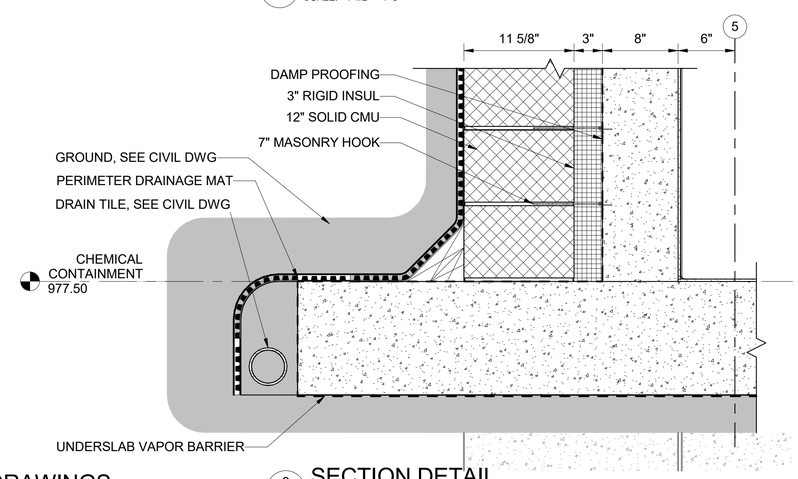


9 BA15 SECTION DETAIL
SCALE: 1 1/2" = 1'-0"

1 0 1 FT
1 1/2" =1' - 0"

DRAFT 98% PROGRESS DRAWINGS
OCTOBER 2019

FILE: C:\Users\lgreen\Documents\GLWSP-P3-BPSF-GAMHPNE_lgreen.rvt

| NO. | DATE | APPD | DESCRIPTION |
|---|---|---|---|

Waukesha Water Utility
SERVING WAUKESHA SINCE 1886

GREELEY AND HANSEN
741 N. GRAND AVE. SUITE 308
WAUKESHA, WI 53186

GREAT WATER ALLIANCE™

CONTRACT PACKAGE 3: BOOSTER PUMPING STATION AND WATER SUPPLY CONTROL BUILDING

WALL SECTION DETAILS

APPROVED

SEAL AFFIXED
MONTH / DAY / YEAR

OCTOBER 2019

| | | | |
|---|---|---|---|
| JOB NO.: | 15310 | | |
| DESGN | JJS | CHCK | TCB |
| APPRV | TCB | DRWN | AKB |
| SCALE: | 1 1/2" = 1'-0" | | |

DRAWING NUMBER

BA18

SHEET 97 OF 184 REV 0

10/2/2019 10:07:23 AM

BAR MEASURE 1" ON FULLSIZE SHEETS

## ROOM FINISH SCHEDULE

| ROOM NO. | ROOM NAME | FINISH FLOOR | FINISH BASE | FINISH WALL | FINISH CEILING | CEILING HEIGHT | COMMENTS |
|---|---|---|---|---|---|---|---|
| BASEMENT | | | | | | | |
| B100 | BASEMENT | DPC | NONE | DPC | PNT/ CONC&CMU | | |
| MAIN FLOOR | | | | | | | |
| 100 | PUMPING ROOM | DPC | NONE | PNT/CMU | PNT/ MTL DECK | | |
| 103 | SAMPLING ROOM | DPC | NONE | PNT/CMU | ACP | 10' - 0" | |
| 104 | ELECTRICAL ROOM | DPC | NONE | PNT/CMU | PNT/ PRECAST | | |
| 105 | STORAGE ROOM | DPC | NONE | PNT/CMU | PNT/ PRECAST | | |
| 106 | I & C ROOM | DPC | NONE | PNT/CMU | ACP | 9' - 0" | |
| 107 | TOILET | DPC | NONE | PNT/CMU | ACP | 10' - 0" | |
| 108 | JANITOR | DPC | NONE | PNT/CMU | ACP | 10' - 0" | |
| 109 | MECHANICAL ROOM | DPC | NONE | PNT/CMU | PNT/ PRECAST | | |
| 110 | FIRE PROTECTION ROOM | DPC | NONE | PNT/CMU | PNT/ PRECAST | | |
| 111 | CHEMICAL ROOM NO. 1 | TBD | TBD | TBD | TBD | | CHEMICALS TYPES TBD |
| 112 | CHEMICAL ROOM NO. 2 | TBD | TBD | TBD | TBD | | CHEMICALS TYPES TBD |
| 113 | CHEMICAL ROOM NO. 3 | TBD | TBD | TBD | TBD | | CHEMICALS TYPES TBD |
| MAIN FLOOR ATTIC | | | | | | | |
| 200 | ATTIC SPACE | PC CONC | NONE | N/A | PNT/ MTL DECK | | |

## ACCESS, FLOOR, SIDEWALK DOOR AND ROOF HATCH SCHEDULE

| DOOR/ HATCH NO. | DESCRIPTION | ROUGH OPENING WIDTH | ROUGH OPENING HEIGHT | TYPE | FRAME JAMB | FRAME HEAD | MTL | COMMENTS |
|---|---|---|---|---|---|---|---|---|
| MAIN FLOOR | | | | | | | | |
| 100-H1 | FLOOR DOOR | 6' - 6" | 6' - 6" | H3 | 3/ A19 | NA | AL | |
| 100-H2 | FLOOR DOOR | 6' - 6" | 6' - 6" | H3 | 3/ A19 | NA | AL | |
| 107-H1 | ACCESS DOOR | 1' - 10" | 1' - 8" | H1 | -- | -- | AL | |
| 108-H1 | ACCESS DOOR | 1' - 10" | 1' - 8" | H1 | -- | -- | AL | |
| MAIN FLOOR ATTIC | | | | | | | | |
| 109-H1 | FLOOR DOOR | 3' - 6" | 3' - 6" | H2 | -- | -- | AL | |

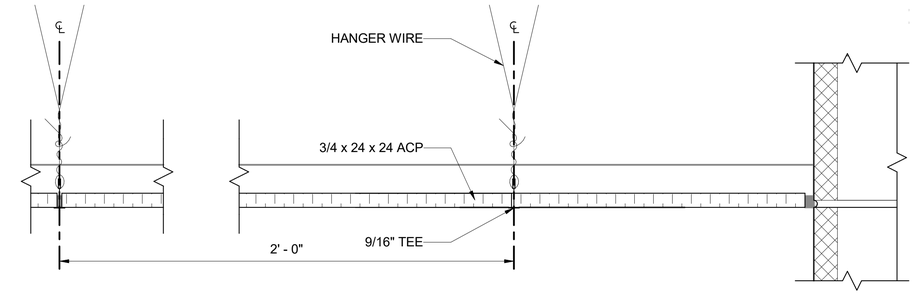


1 / BA16 SECTION DETAIL
SCALE: 3" = 1'-0"

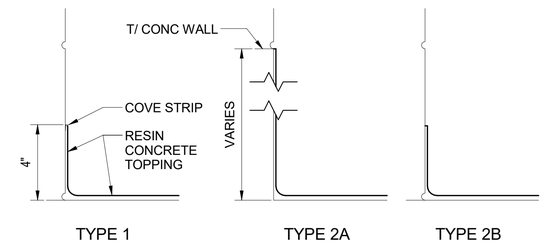


2 FLOOR BASE DETAILS
SCALE: 3" = 1'-0"

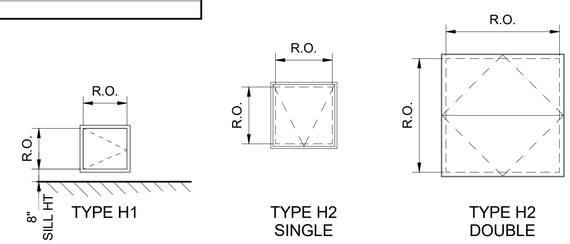


ACCESS, FLOOR AND OTHER SPECIALTY DOOR TYPES
SCALE: 1/4" = 1'-0"

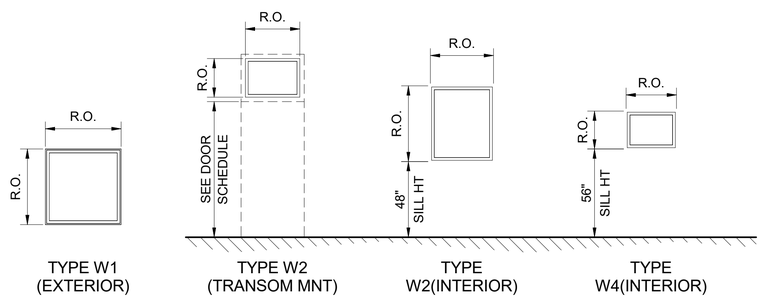


WINDOW TYPES
SCALE: 1/4" = 1'-0"

## OPENING SCHEDULE

| TYPE | QTY | R.O. WIDTH | R.O. HEIGHT | FRAME MAT | GLAZING TYPE | DETAILS HEAD | DETAILS JAMB | DETAILS SILL | TYPE COMMENTS |
|---|---|---|---|---|---|---|---|---|---|
| EXT WINDOW | | | | | | | | | |
| W1 | 14 | 4' - 0" | 3' - 4" | AL | GT-1 | 5/ A21 | 10/ A21 | 14, 15/ A21 SIM | |
| W2 | 1 | 3' - 0" | 2' - 2" | AL | GT-1 | 4/ A21 SIM | 9/ A21 SIM | 19/ A21 SIM | MNT IN DOOR TRANSOM |
| W2 | 1 | 6' - 0" | 3' - 10" | AL | GT-1 | 4/ A21 SIM | 9/ A21 SIM | 19/ A21 SIM | MNT IN DOOR TRANSOM |
| INT WINDOW | | | | | | | | | |
| W3 | 3 | 3' - 4" | 4' - 0" | AL | GT-2 | 1/ A21 | 6/ A21 | 11/ A21 | |
| W4 | 4 | 2' - 8" | 2' - 0" | AL | GT-3 | 1/ A21 | 6/ A21 | 11/ A21 | FIRE RATED |
| LOUVER | | | | | | | | | |
| L1 | 2 | 3' - 0" | 7' - 8" | AL | NA | 5/ A21 SIM | 10/ A21 SIM | 14, 15/ A21 SIM | |
| L2 | 1 | 6' - 0" | 7' - 8" | AL | NA | 4/ A21 SIM | 9/ A21 | 13/ A21 SIM | |
| L3 | 1 | 2' - 8" | 2' - 8" | AL | NA | 5/ A21 SIM | 10/ A21 SIM | 14, 15/ A21 SIM | |
| L4 | 1 | 3' - 4" | 5' - 4" | AL | NA | 5/ A21 SIM | 10/ A21 SIM | 14, 15/ A21 SIM | |
| L5 | 3 | 5' - 4" | 5' - 4" | AL | NA | 5/ A21 SIM | 10/ A21 SIM | 14, 15/ A21 SIM | |
| L6 | 1 | 6' - 0" | 3' - 10" | AL | NA | 4/ A21 | 9/ A21 SIM | 19/ A21 | MNT IN DOOR TRANSOM |
| L7 | 1 | 4' - 0" | 4' - 0" | AL | NA | 4/ A21 SIM | 9/ A21 | 13/ A21 SIM | |
| L8 | 1 | 1' - 6" | 1' - 8" | AL | NA | 4/ A21 SIM | 9/ A21 | 13/ A21 SIM | |
| L9 | 2 | 7' - 4" | 4' - 0" | AL | NA | 5/ A21 SIM | 10/ A21 SIM | 14, 15/ A21 SIM | |

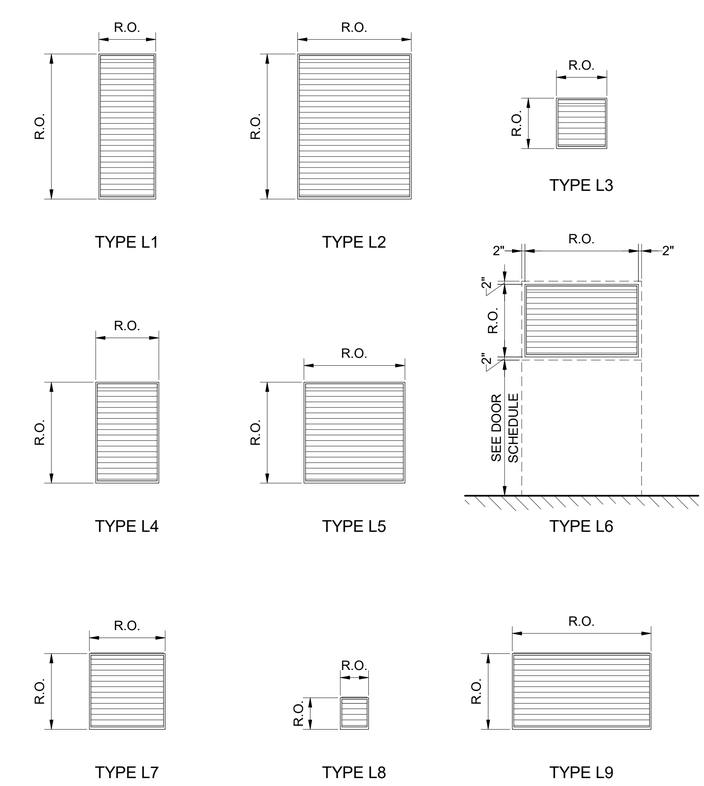


LOUVER TYPES
SCALE: 1/4" = 1'-0"

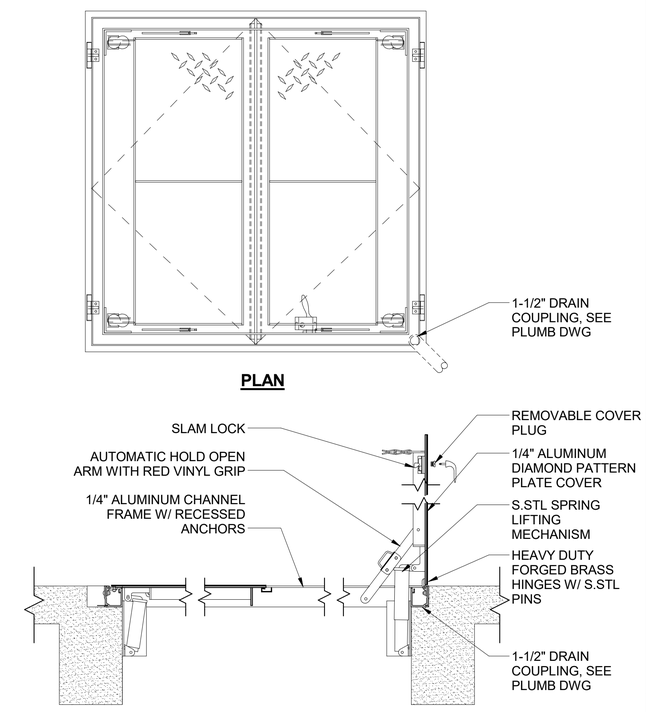


3 DOUBLE LEAF FLOOR DOOR
SCALE: 1" = 1'-0"
NOTE: SIMILAR FOR SINGLE LEAF FLOOR DOOR

0 4 8 12 IN — 3" =1' - 0"
1 0 1 2 FT — 1" =1' - 0"
4 0 4 8 FT — 1/4" =1' - 0"

DRAFT 98% PROGRESS DRAWINGS
OCTOBER 2019

FILE: C:\Users\lgreen\Documents\GLWSP-P3-BPSF-GAMHPNE_lgreen.rvt

| NO. | DATE | APPD | DESCRIPTION |
|---|---|---|---|

Waukesha Water Utility
SERVING WAUKESHA SINCE 1886

GREELEY AND HANSEN
741 N. GRAND AVE. SUITE 308
WAUKESHA, WI 53186

GREAT WATER ALLIANCE™

CONTRACT PACKAGE 3: BOOSTER PUMPING STATION AND WATER SUPPLY CONTROL BUILDING

SCHEDULES AND DETAILS

APPROVED

SEAL AFFIXED
MONTH / DAY / YEAR

OCTOBER 2019

| JOB NO.: | 15310 | | |
|---|---|---|---|
| DESGN | JJS | CHCK | TCB |
| APPRV | TCB | DRWN | AKB |
| SCALE: | AS SHOWN | | |

DRAWING NUMBER
BA19

SHEET 98 OF 184 REV 0

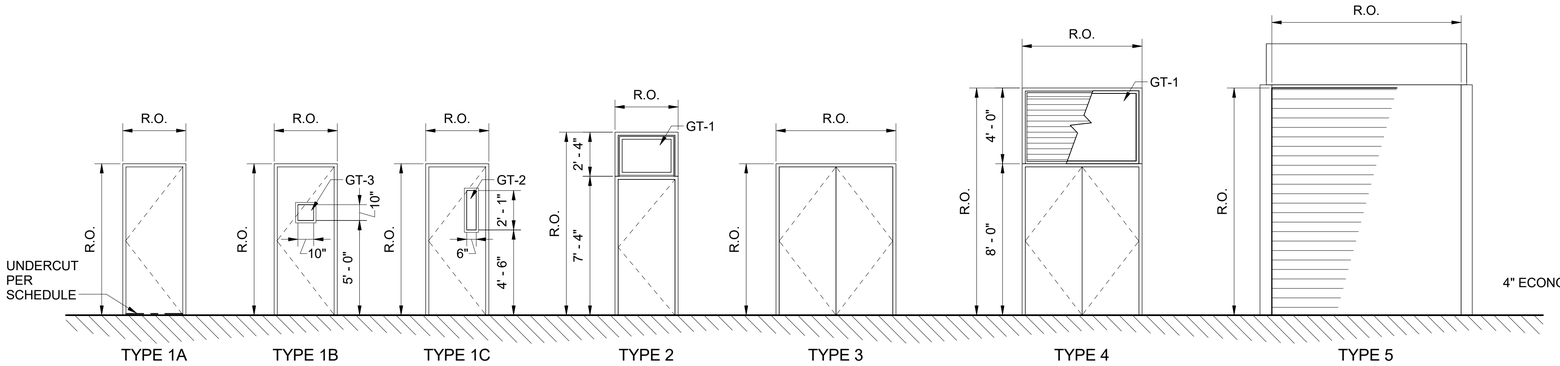


## DOOR AND FRAME TYPES

SCALE: 1/4" = 1'-0"

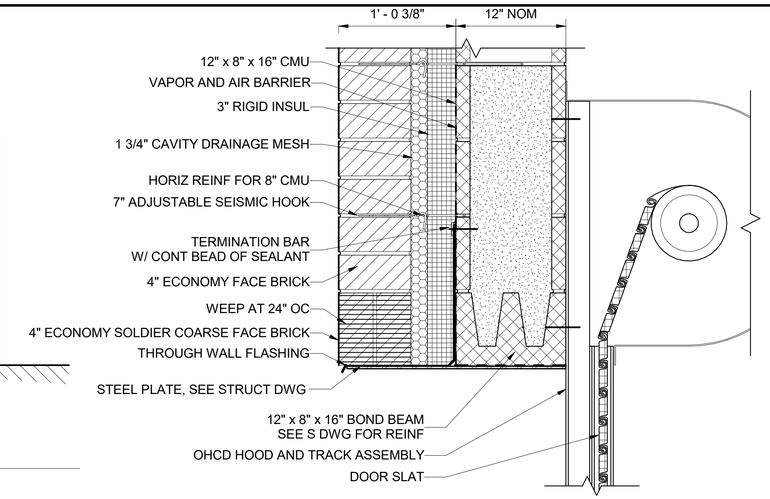


1 OHCD HEAD AT EXT CMU WALL

SCALE: 1 1/2" = 1'-0"

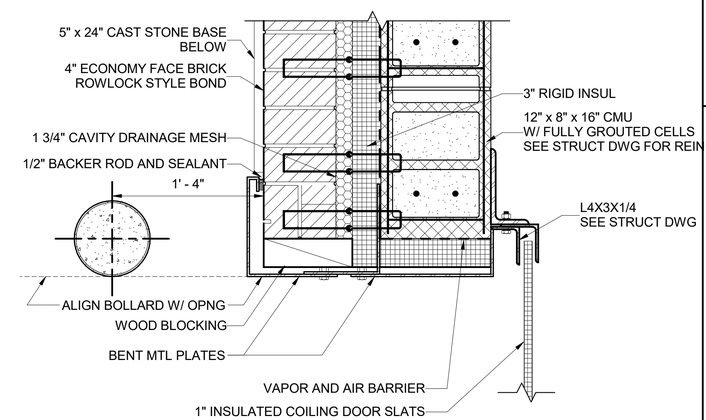


2 OHCD JAMB AT EXT CMU WALL

SCALE: 1 1/2" = 1'-0"

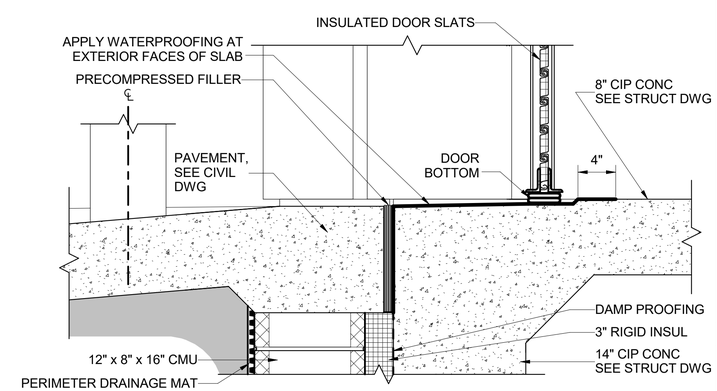


3 OHCD THRESHOLD AT EXT CMU WALL

SCALE: 1 1/2" = 1'-0"

1 0 1 FT — 1 1/2" =1' - 0"

4 0 4 8 FT — 1/4" =1' - 0"

### DOOR SCHEDULE

| DOOR NO. | ROUGH OPENING WIDTH | ROUGH OPENING HEIGHT | TYPE | DESCRIPTION | DOOR THICKNESS | DOOR UNDER CUT | DOOR MTL | FRAME JAMB | FRAME HEAD | FRAME MTL | LOCKSET TYPE | FIRE RATING (HR) | COMMENTS |
|---|---|---|---|---|---|---|---|---|---|---|---|---|---|
| MAIN FLOOR | | | | | | | | | | | | | |
| 100-1 | 6' - 4" | 8' - 0" | 3 | EXT DBL LEAF DOOR | 1 3/4" | -- | FRP/ AL HYBRID | 8/ A21 | 3/ A21 | AL | CLASSROOM SECURITY | -- | |
| 100-2 | 3' - 4" | 9' - 8" | 2 | EXT SNG LEAF DOOR W/ TRANSOM | 1 3/4" | -- | FRP/ AL HYBRID | 8/A21 | 19/A21 | AL | CLASSROOM SECURITY | -- | SEE W4 IN OPENING SCHEDULE |
| 100-3 | 10' - 0" | 12' - 0" | 5 | OVERHEAD COILING DOOR | | -- | AL | 2/ A20 | 1/ A20 | AL | N/A | -- | |
| 103-1 | 3' - 4" | 8' - 0" | 1C | SNG LEAF DOOR | 1 3/4" | -- | FRP | 7/ A21 | 2/ A21 | FRP | CLASSROOM | -- | |
| 103-2 | 3' - 4" | 8' - 0" | 1C | SNG LEAF DOOR | 1 3/4" | -- | FRP | 7/ A21 | 2/ A21 | FRP | CLASSROOM | -- | |
| 104-1 | 3' - 4" | 8' - 0" | 1B | SNG LEAF DOOR | 1 3/4" | -- | FRP | 7/ A21 | 2/ A21 | FRP | CLASSROOM SECURITY | 1 1/2 | |
| 104-2 | 3' - 4" | 8' - 0" | 1B | SNG LEAF DOOR | 1 3/4" | -- | FRP | 7/ A21 | 2/ A21 | FRP | CLASSROOM SECURITY | 1 1/2 | |
| 104-3 | 6' - 4" | 9' - 8" | 3 | EXT DBL LEAF DOOR | 1 3/4" | -- | FRP/ AL HYBRID | 8/ A21 | 3/ A21 | AL | STOREROOM | -- | |
| 105-1 | 3' - 4" | 8' - 0" | 1A | SNG LEAF DOOR | 1 3/4" | -- | FRP | 7/ A21 | 2/ A21 | FRP | CLASSROOM SECURITY | 1 1/2 | |
| 105-2 | 3' - 4" | 8' - 0" | 1A | SNG LEAF DOOR | 1 3/4" | -- | FRP | 7/ A21 | 2/ A21 | FRP | STOREROOM | 1 1/2 | |
| 106-1 | 3' - 4" | 8' - 0" | 1C | SNG LEAF DOOR | 1 3/4" | -- | FRP | 7/ A21 | 2/ A21 | FRP | CLASSROOM SECURITY | -- | |
| 106-2 | 3' - 4" | 8' - 0" | 1B | SNG LEAF DOOR | 1 3/4" | -- | FRP | 7/ A21 | 2/ A21 | FRP | CLASSROOM SECURITY | 1 1/2 | |
| 107-1 | 3' - 4" | 8' - 0" | 1A | SNG LEAF DOOR | 1 3/4" | 3/4" | FRP | 7/ A21 | 2/ A21 | FRP | PRIVACY | -- | |
| 108-1 | 3' - 4" | 8' - 0" | 1A | SNG LEAF DOOR | 1 3/4" | 3/4" | FRP | 7/ A21 | 2/ A21 | FRP | STOREROOM | -- | |
| 109-1 | 3' - 4" | 8' - 0" | 1C | SNG LEAF DOOR | 1 3/4" | -- | FRP | 7/ A21 | 2/ A21 | FRP | PASSAGE | -- | |
| 109-2 | 6' - 4" | 12' - 0" | 4 | EXT DBL LEAF DOOR W/ TRANSOM | 1 3/4" | -- | FRP/ AL HYBRID | 8 / A21 | 19/ A21 | AL | STOREROOM | -- | SEE L4 IN OPENING SCHEDULE |
| 110-1 | 3' - 4" | 8' - 0" | 1C | SNG LEAF DOOR | 1 3/4" | -- | FRP | 7/ A21 | 2/ A21 | FRP | PASSAGE | -- | |
| 110-2 | 6' - 4" | 12' - 0" | 4 | EXT DBL LEAF DOOR W/ TRANSOM | 1 3/4" | -- | FRP/ AL HYBRID | 8 / A21 | 19/ A21 | AL | STOREROOM | -- | SEE W4 IN OPENING SCHEDULE |
| 111-1 | 6' - 4" | 8' - 0" | 3 | EXT DBL LEAF DOOR | 1 3/4" | -- | FRP/ AL HYBRID | 8/ A21 | 3/ A21 | AL | STOREROOM | -- | |
| 112-1 | 6' - 4" | 8' - 0" | 3 | EXT DBL LEAF DOOR | 1 3/4" | -- | FRP/ AL HYBRID | 8/ A21 | 3/ A21 | AL | STOREROOM | -- | |
| 113-1 | 6' - 4" | 8' - 0" | 3 | EXT DBL LEAF DOOR | 1 3/4" | -- | FRP/ AL HYBRID | 8/ A21 | 3/ A21 | AL | STOREROOM | -- | |

DRAFT 98% PROGRESS DRAWINGS

OCTOBER 2019

| NO. | DATE | APPD | DESCRIPTION |
|---|---|---|---|

Waukesha Water Utility — SERVING WAUKESHA SINCE 1886

GREELEY AND HANSEN — 741 N. GRAND AVE. SUITE 308, WAUKESHA, WI 53186

GREAT WATER ALLIANCE™

CONTRACT PACKAGE 3: BOOSTER PUMPING STATION AND WATER SUPPLY CONTROL BUILDING

SCHEDULES AND DETAILS

APPROVED

SEAL AFFIXED
MONTH / DAY / YEAR

OCTOBER 2019

| | | | |
|---|---|---|---|
| JOB NO.: | 15310 | | |
| DESGN | JJS | CHCK | TCB |
| APPRV | TCB | DRWN | AKB |
| SCALE: | AS SHOWN | | |

DRAWING NUMBER

BA20

SHEET 99 OF 184 REV 0

10/2/2019 10:07:28 AM

BAR MEASURE 1" ON FULLSIZE SHEETS

FILE: C:\Users\lgreen\Documents\GLWSP-P3-BPSF-GAMHPNE_lgreen.rvt

10/2/2019 10:07:33 AM
BAR MEASURE 1" ON FULLSIZE SHEETS

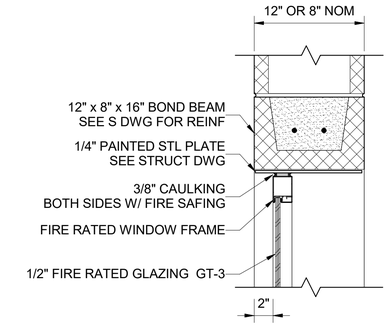


1 FIRE RATED WINDOW HEAD
SCALE: 1 1/2" = 1'-0"

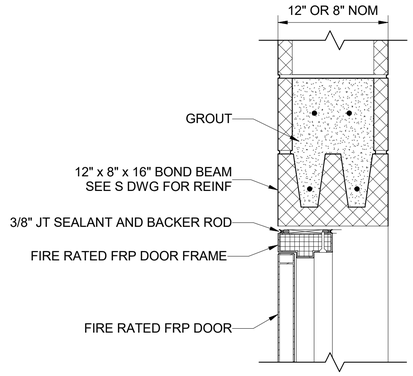


2 DOOR HEAD AT INT CMU WALL
SCALE: 1 1/2" = 1'-0"

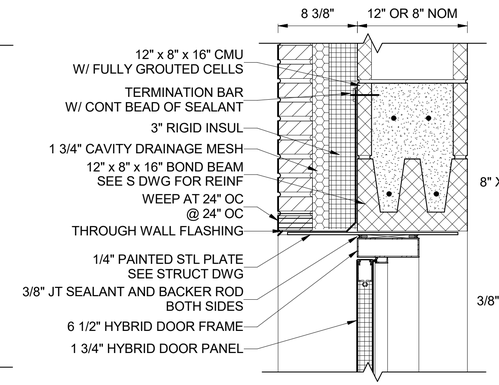


3 DOOR HEAD AT EXT CMU WALL
SCALE: 1 1/2" = 1'-0"

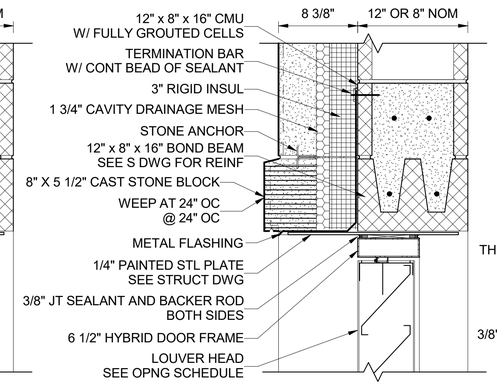


4 LOUVER/ WINDOW HEAD IN TRANSOM
SCALE: 1 1/2" = 1'-0"

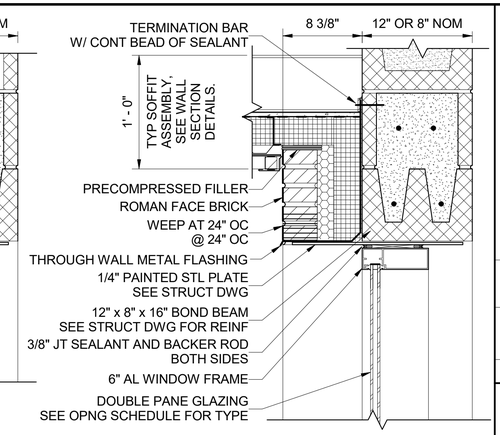


5 WINDOW HEAD AT EXT CMU WALL
SCALE: 1 1/2" = 1'-0"

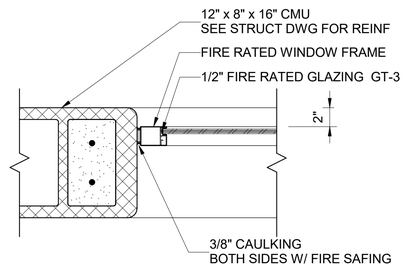


6 FIRE RATED WINDOW JAMB
SCALE: 1 1/2" = 1'-0"

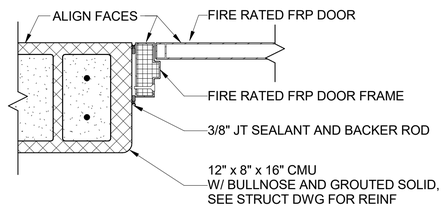


7 DOOR JAMB AT INT CMU WALL
SCALE: 1 1/2" = 1'-0"

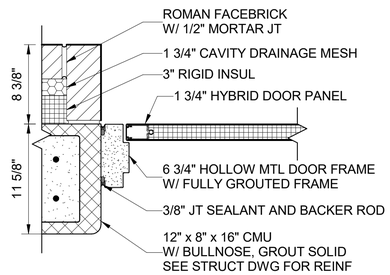


8 DOOR JAMB AT EXT CMU WALL
SCALE: 1 1/2" = 1'-0"

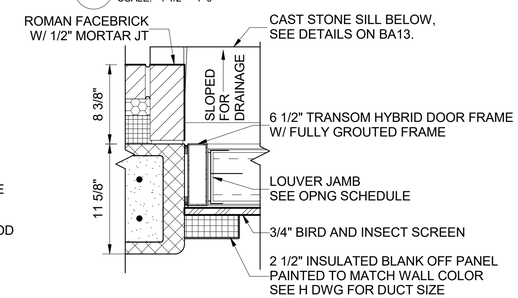


9 LOUVER/ WINDOW JAMB IN TRANSOM
SCALE: 1 1/2" = 1'-0"

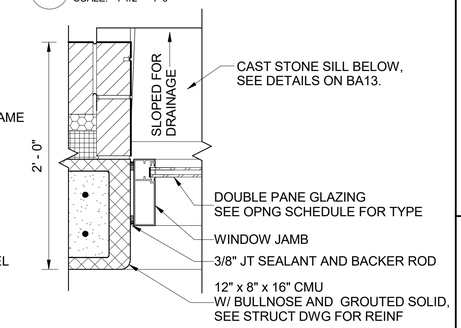


10 WINDOW JAMB AT EXT CMU WALL
SCALE: 1 1/2" = 1'-0"

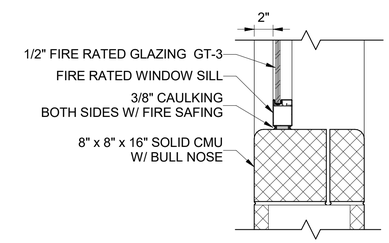


11 FIRE RATED WINDOW SILL
SCALE: 1 1/2" = 1'-0"

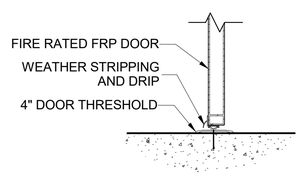


12 TYP INT DOOR THRESHOLD
SCALE: 1 1/2" = 1'-0"

NOTE: SEE DOOR SCHEDULE FOR UNDERCUT

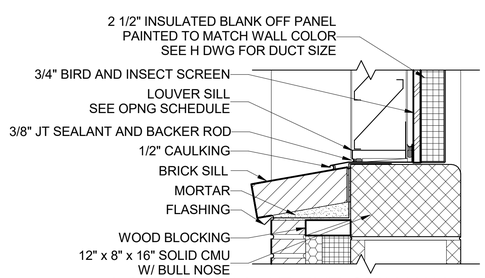


13 LOUVER SILL AT EXT CMU WALL
SCALE: 1 1/2" = 1'-0"

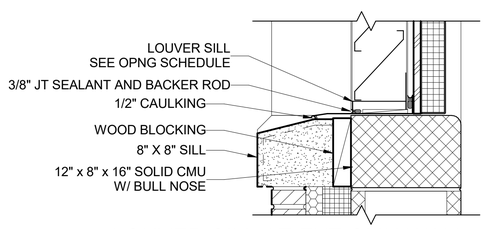


14 LOUVER SILL AT EXT CMU WALL
SCALE: 1 1/2" = 1'-0"

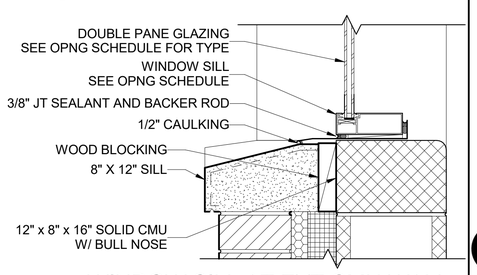


15 WINDOW SILL AT EXT CMU WALL
SCALE: 1 1/2" = 1'-0"

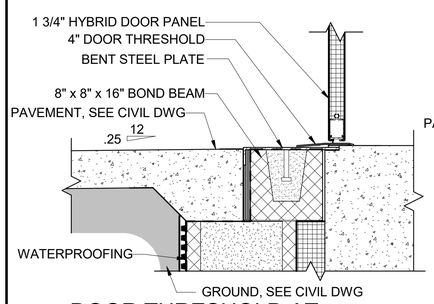


16 DOOR THRESHOLD AT ACCESSIBLE EXT CONDITIONS
SCALE: 1 1/2" = 1'-0"

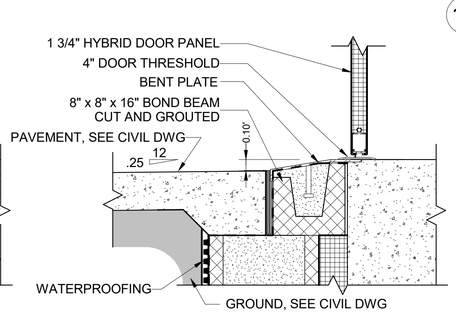


17 DOOR THRESHOLD W/ RAMPED ENTRANCE AT CHEMICAL ROOMS
SCALE: 1 1/2" = 1'-0"

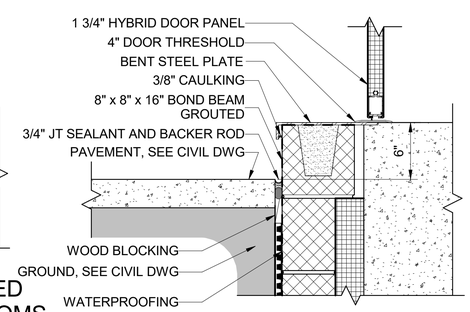


18 DOOR THRESHOLD AT EXT CONDITIONS W/ STEP DOWN
SCALE: 1 1/2" = 1'-0"

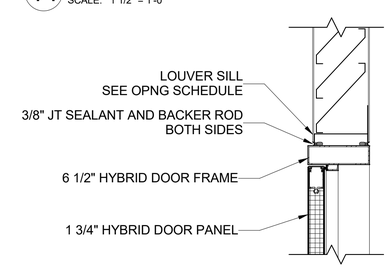


19 DOOR HEAD W/ LOUVER (OR WINDOW) IN TRANSOM
SCALE: 1 1/2" = 1'-0"

1 0 1 FT
1 1/2" =1' - 0"

DRAFT 98% PROGRESS DRAWINGS
OCTOBER 2019

| NO. | DATE | APPD | DESCRIPTION |
|---|---|---|---|

Waukesha Water Utility
SERVING WAUKESHA SINCE 1886

GREELEY AND HANSEN
741 N. GRAND AVE. SUITE 308
WAUKESHA, WI 53186

GREAT WATER ALLIANCE™

CONTRACT PACKAGE 3: BOOSTER PUMPING STATION AND WATER SUPPLY CONTROL BUILDING

OPENING DETAILS

APPROVED

SEAL AFFIXED
MONTH / DAY / YEAR

OCTOBER 2019

| | | | |
|---|---|---|---|
| JOB NO.: | 15310 | | |
| DESGN | JJS | CHCK | TCB |
| APPRV | TCB | DRWN | AKB |
| SCALE: | 1 1/2" = 1'-0" | | |

DRAWING NUMBER

BA21

SHEET 100 OF 184 REV 0

FILE: C:\Users\lgreen\Documents\GLWSP-P3-BPSF-GAMHPNE_lgreen.rvt

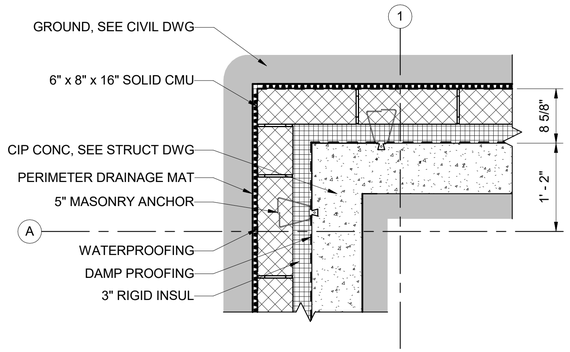


1 BA2 PLAN DETAIL
SCALE: 1" = 1'-0"

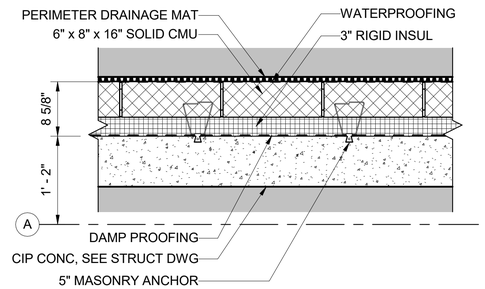


2 BA2 PLAN DETAIL
SCALE: 1" = 1'-0"

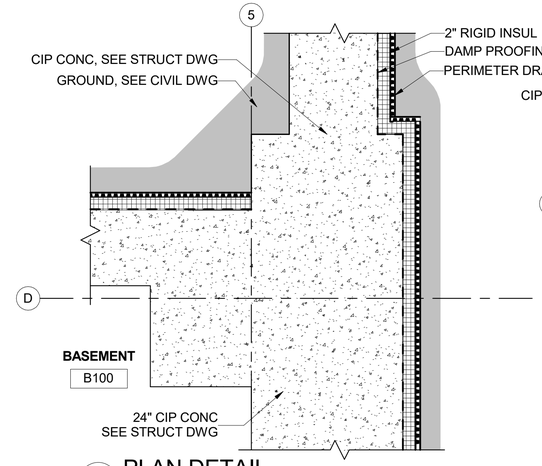


3 BA2 PLAN DETAIL
SCALE: 1" = 1'-0"

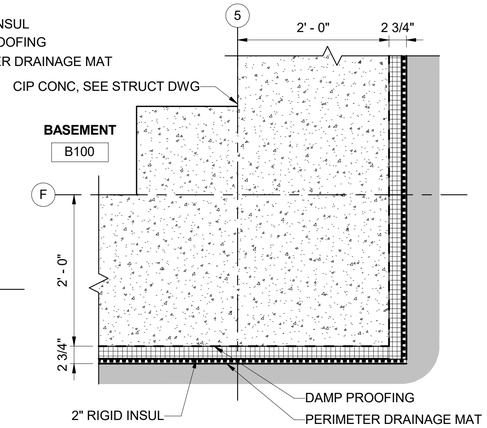


4 BA2 PLAN DETAIL
SCALE: 1" = 1'-0"

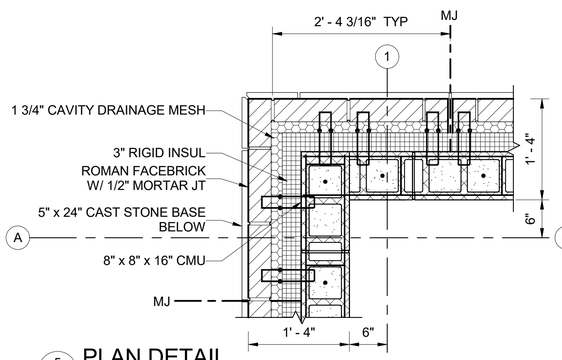


5 BA6 PLAN DETAIL
SCALE: 1" = 1'-0"

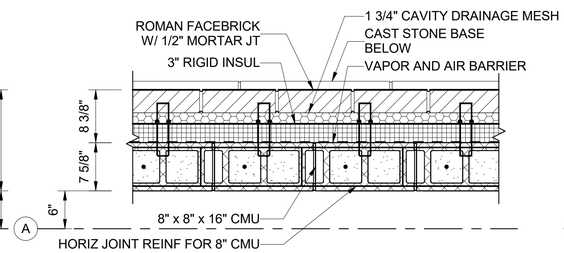


6 BA6 PLAN DETAIL
SCALE: 1" = 1'-0"

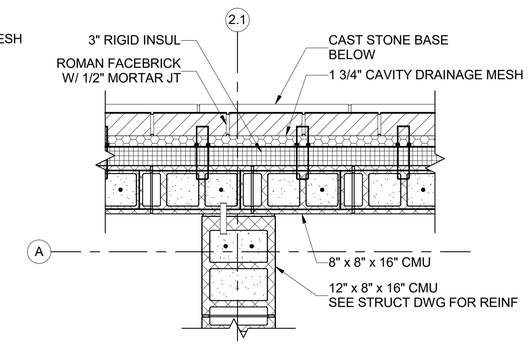


7 BA6 PLAN DETAIL
SCALE: 1" = 1'-0"

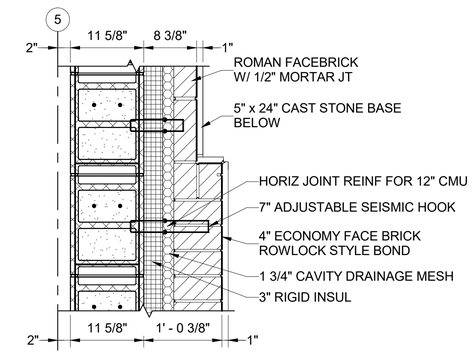


8 BA6 PLAN DETAIL
SCALE: 1" = 1'-0"

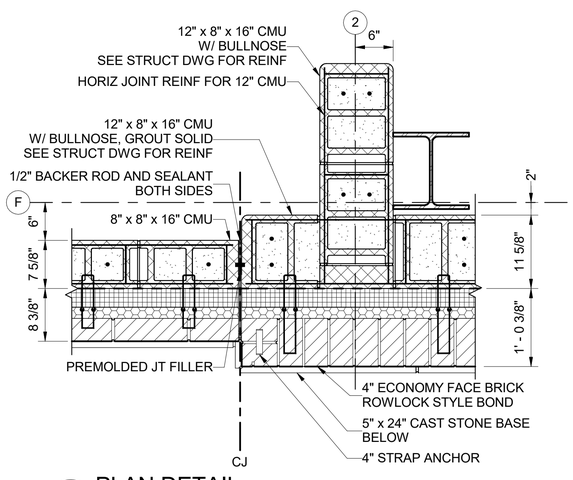


9 BA7 PLAN DETAIL
SCALE: 1" = 1'-0"

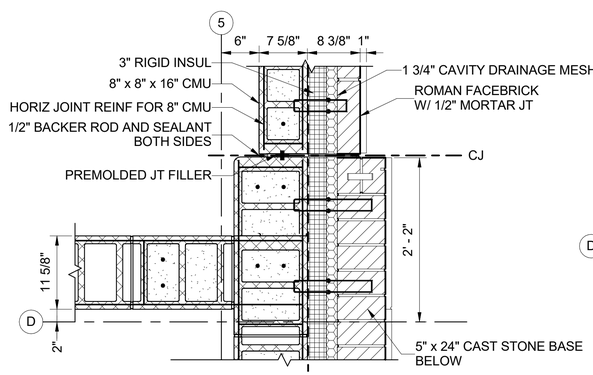


10 BA7 PLAN DETAIL
SCALE: 1" = 1'-0"

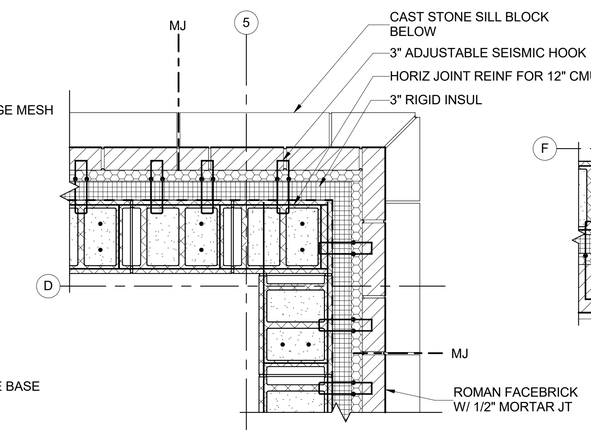


11 BA4 PLAN DETAIL
SCALE: 1" = 1'-0"

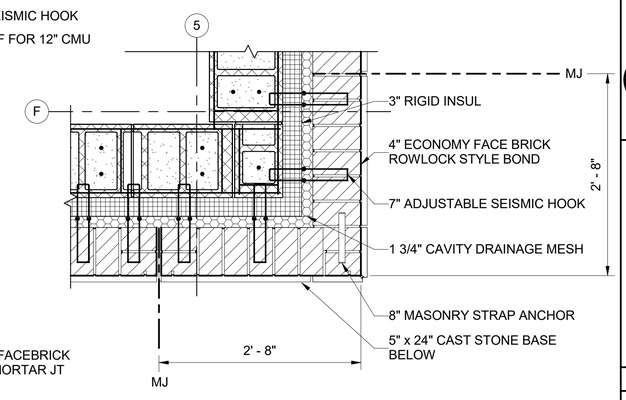


12 BA7 PLAN DETAIL
SCALE: 1" = 1'-0"

DRAFT 98% PROGRESS DRAWINGS
OCTOBER 2019

1 0 1 2 FT
1" =1' - 0"

| NO. | DATE | APPD | DESCRIPTION |
|---|---|---|---|

Waukesha Water Utility
SERVING WAUKESHA SINCE 1886

GREELEY AND HANSEN
741 N. GRAND AVE. SUITE 308
WAUKESHA, WI 53186

GREAT WATER ALLIANCE™

CONTRACT PACKAGE 3: BOOSTER PUMPING STATION AND WATER SUPPLY CONTROL BUILDING

MISC DETAIL VIEWS

APPROVED

SEAL AFFIXED
MONTH / DAY / YEAR

OCTOBER 2019

| | | | |
|---|---|---|---|
| JOB NO.: | 15310 | | |
| DESGN | JJS | CHCK | TCB |
| APPRV | TCB | DRWN | AKB |
| SCALE: | 1" = 1'-0" | | |

DRAWING NUMBER

BA22

SHEET 101 OF 184 REV 0

10/2/2019 10:07:39 AM BAR MEASURE 1" ON FULLSIZE SHEETS

FILE: C:\Users\lgreen\Documents\GLWSP-P3-BPSF-GAMHPNE_lgreen.rvt

10/2/2019 10:07:49 AM

BAR MEASURE 1" ON FULLSIZE SHEETS

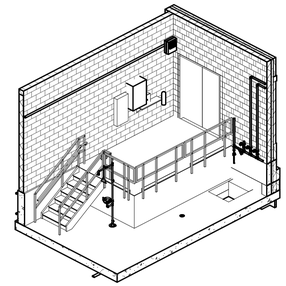

CUT AWAY VIEW AT TYPICAL CHEMICAL ENTRY PLATFORM

NO SCALE

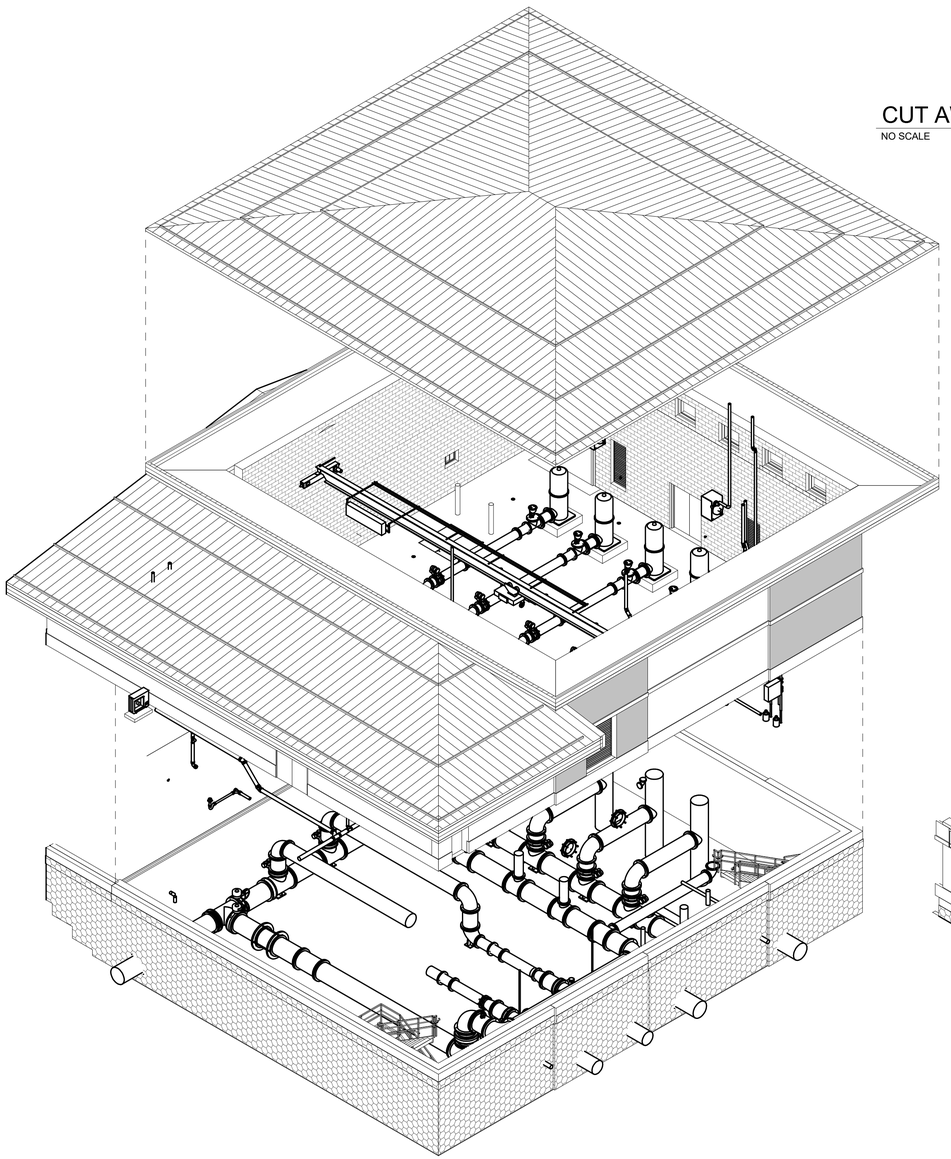

EXPLODED VIEW OF PROCESS AREAS

NO SCALE

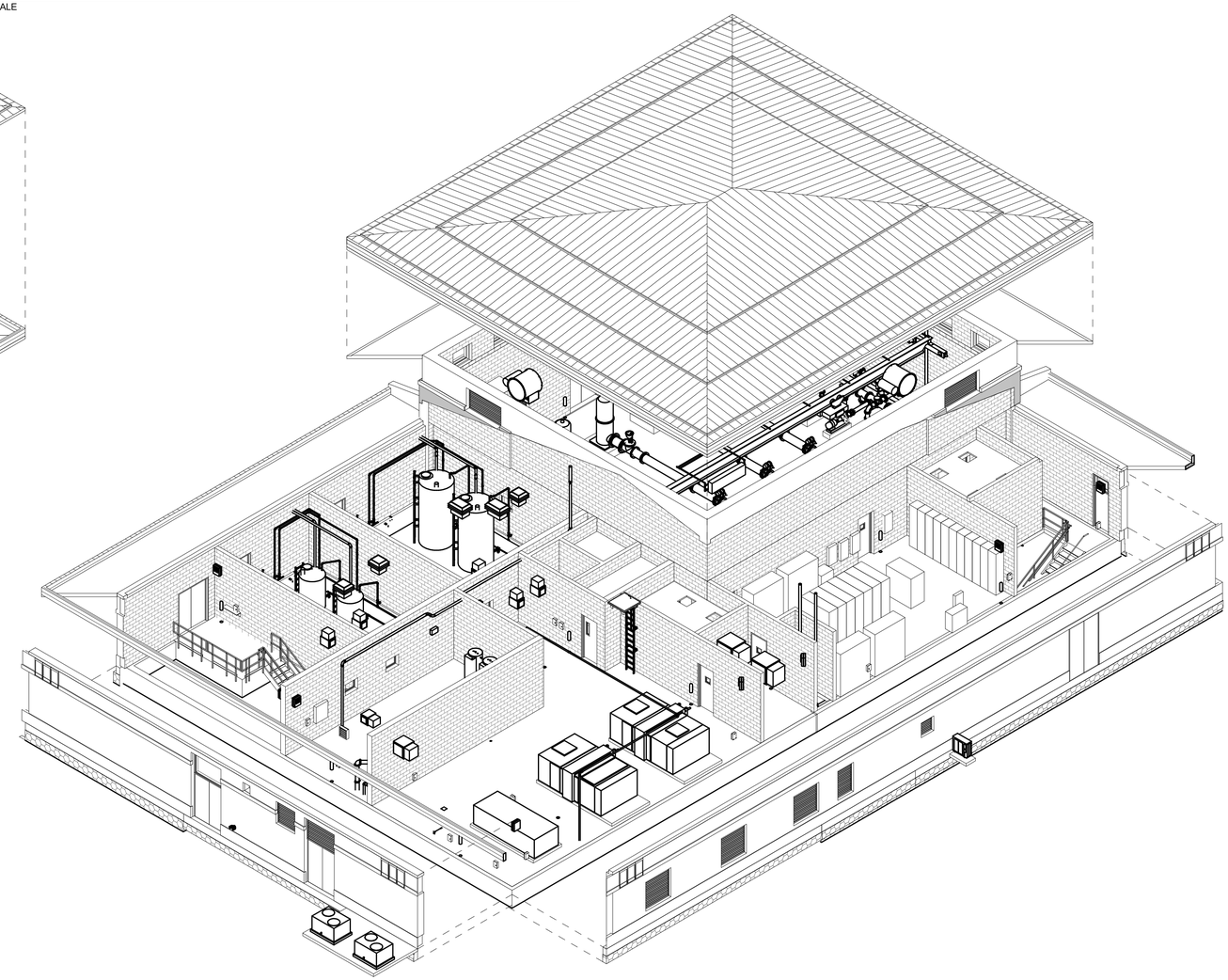

EXPLODED VIEW OF SUPPORT AREAS

NO SCALE

DRAFT 98% PROGRESS DRAWINGS

OCTOBER 2019

| NO. | DATE | APPD | DESCRIPTION |
|---|---|---|---|

Waukesha Water Utility
SERVING WAUKESHA SINCE 1886

GREELEY AND HANSEN
741 N. GRAND AVE. SUITE 308
WAUKESHA, WI 53186

GREAT WATER ALLIANCE™

CONTRACT PACKAGE 3: BOOSTER PUMPING STATION AND WATER SUPPLY CONTROL BUILDING

3D VIEWS

APPROVED

SEAL AFFIXED
MONTH / DAY / YEAR

OCTOBER 2019

| | | | |
|---|---|---|---|
| JOB NO.: | 15310 | | |
| DESGN | JJS | CHCK | TCB |
| APPRV | TCB | DRWN | AKB |
| SCALE: | NO SCALE | | |

DRAWING NUMBER

BA23

SHEET 102 OF 184 REV 0

FILE: C:\Users\lgreen\Documents\GLWSP-P3-BPSF-GAMHPNE_lgreen.rvt

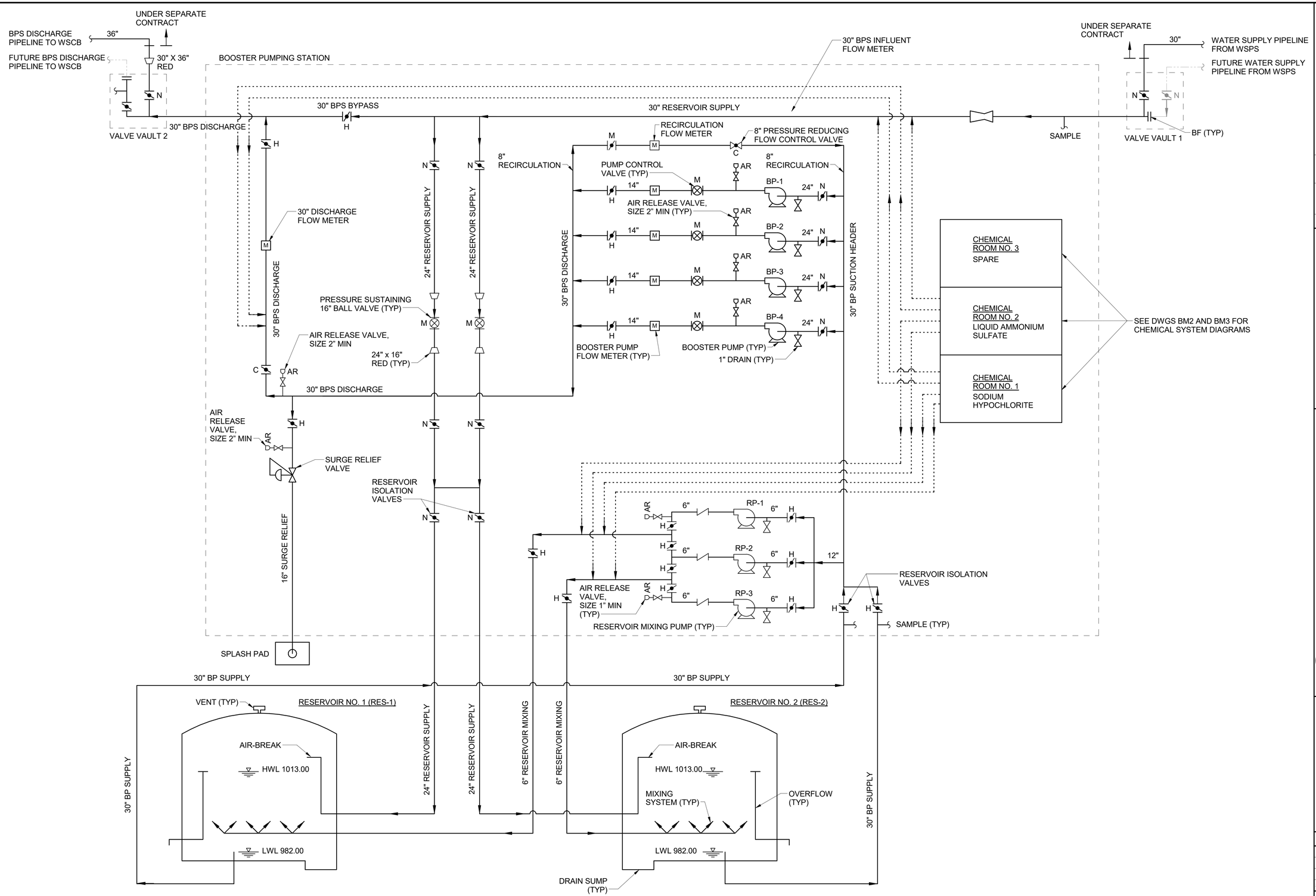


DRAFT 98% PROGRESS DRAWINGS
OCTOBER 2019

PROCESS FLOW DIAGRAM
NO SCALE

| NO. | DATE | APPD | DESCRIPTION |
|---|---|---|---|

Waukesha Water Utility
SERVING WAUKESHA SINCE 1886

GREELEY AND HANSEN
741 N. GRAND AVE. SUITE 308
WAUKESHA, WI 53186

GREAT WATER ALLIANCE™

CONTRACT PACKAGE 3: BOOSTER PUMPING STATION AND WATER SUPPLY CONTROL BUILDING

PUMPING SYSTEM AND RESERVOIR - PROCESS FLOW DIAGRAM

APPROVED

SEAL AFFIXED
MONTH / DAY / YEAR

OCTOBER 2019

| | | | |
|---|---|---|---|
| JOB NO.: | 15310 | | |
| DESGN | LAM | CHCK | RMC |
| APPRV | AJM | DRWN | LG |
| SCALE: | NO SCALE | | |

DRAWING NUMBER

BM1

SHEET 103 OF 184 REV 0

10/2/2019 10:09:46 AM

BAR MEASURE 1" ON FULLSIZE SHEETS

FILE: C:\Users\lgreen\Documents\GLWSP-P3-BPSF-GAMHPNE_lgreen.rvt

10/2/2019 10:09:50 AM
BAR MEASURE 1" ON FULLSIZE SHEETS

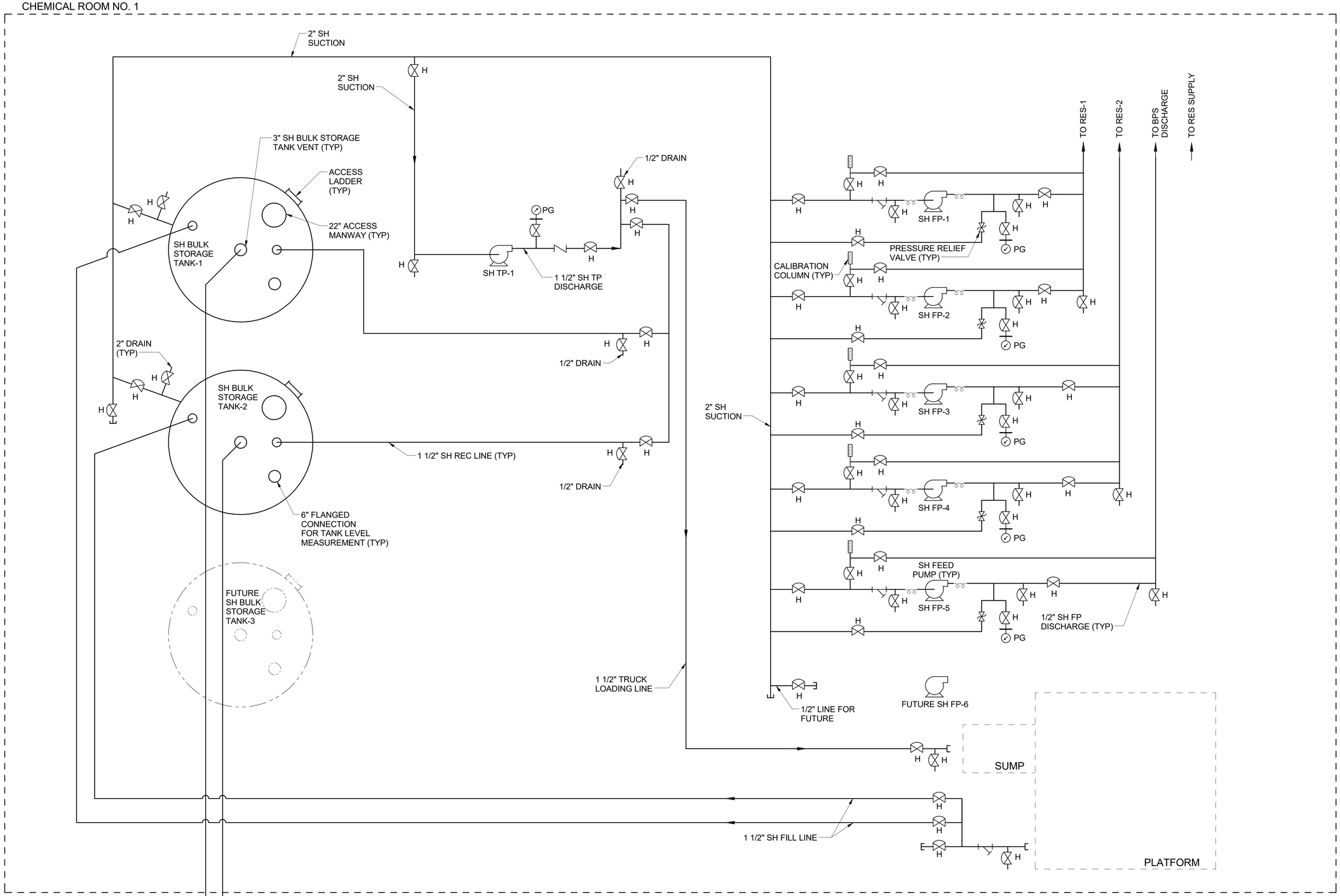


## SODIUM HYPOCHLORITE SYSTEM DIAGRAM

SCALE: NONE

DRAFT 98% PROGRESS DRAWINGS
OCTOBER 2019

| NO. | DATE | APPD | DESCRIPTION |
|---|---|---|---|

Waukesha Water Utility
SERVING WAUKESHA SINCE 1886

GREELEY AND HANSEN
741 N. GRAND AVE. SUITE 308
WAUKESHA, WI 53188

GREAT WATER ALLIANCE™

CONTRACT PACKAGE 3: BOOSTER PUMPING STATION AND WATER SUPPLY CONTROL BUILDING

SODIUM HYPOCHLORITE - SYSTEM DIAGRAM

APPROVED

SEAL AFFIXED
MONTH / DAY / YEAR

OCTOBER 2019

| | | | |
|---|---|---|---|
| JOB NO.: | 15310 | | |
| DESGN | AM | CHCK | DVH |
| APPRV | AJM | DRWN | OR |
| SCALE: | NONE | | |

DRAWING NUMBER

BM2

SHEET 104 OF 184 REV 0

FILE: C:\Users\lgreen\Documents\GLWSP-P3-BPSF-GAMHPNE_lgreen.rvt

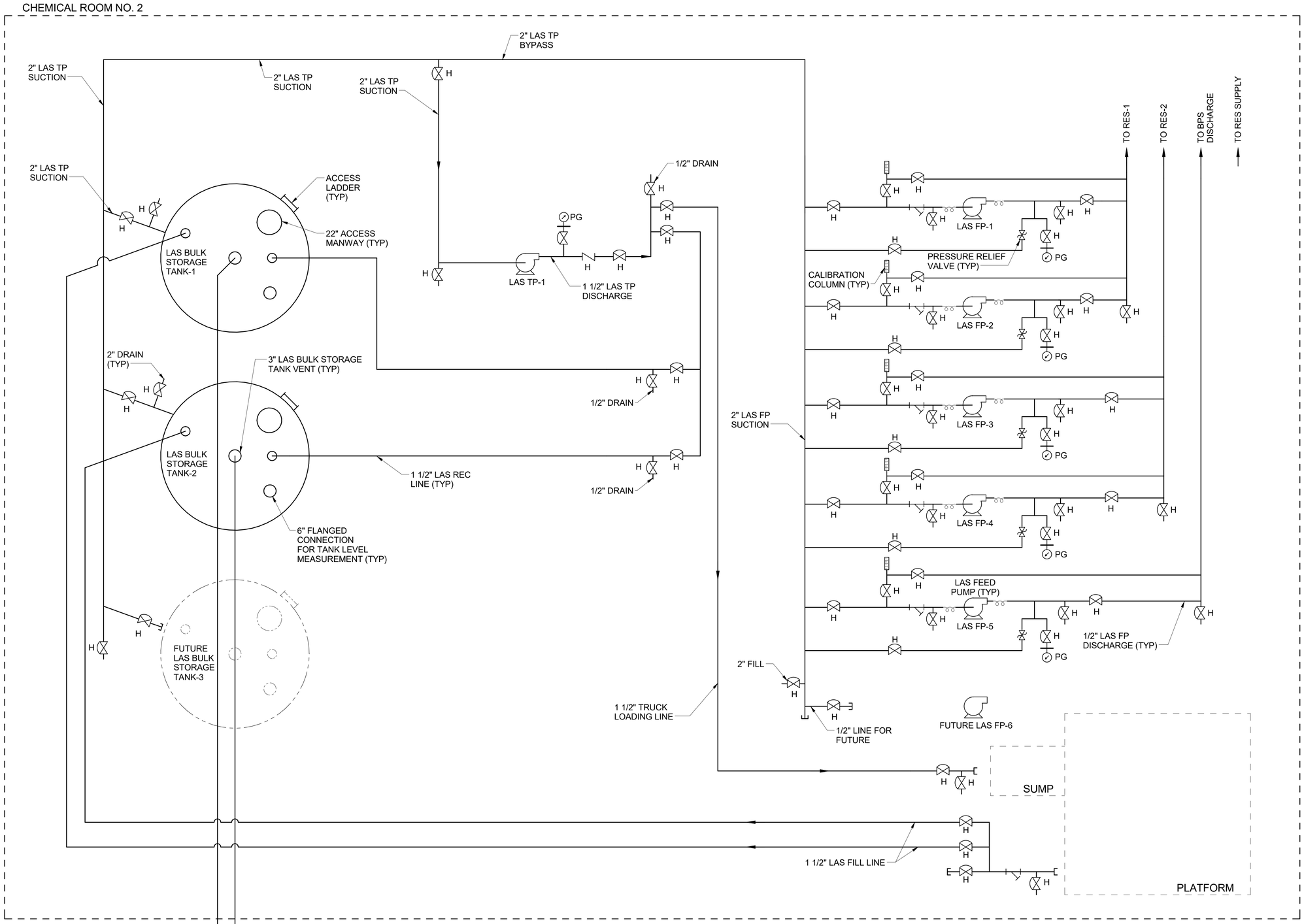


## LIQUID AMMONIA SULFATE SYSTEM DIAGRAM

SCALE: NONE

DRAFT 98% PROGRESS DRAWINGS

OCTOBER 2019

| NO. | DATE | APPD | DESCRIPTION |
|---|---|---|---|

Waukesha Water Utility
SERVING WAUKESHA SINCE 1886

GREELEY AND HANSEN
741 N. GRAND AVE, SUITE 308
WAUKESHA, WI 53186

GREAT WATER ALLIANCE™

CONTRACT PACKAGE 3: BOOSTER PUMPING STATION AND WATER SUPPLY CONTROL BUILDING

LIQUID AMMONIUM SULFATE - SYSTEM DIAGRAM

APPROVED

SEAL AFFIXED
MONTH / DAY / YEAR

OCTOBER 2019

| | | | |
|---|---|---|---|
| JOB NO.: | 15310 | | |
| DESGN | AM | CHCK | DVH |
| APPRV | AJM | DRWN | OR |
| SCALE: | NONE | | |

DRAWING NUMBER

BM3

SHEET 105 OF 184 REV 0

10/2/2019 10:09:54 AM

BAR MEASURE 1" ON FULLSIZE SHEETS

FILE: C:\Users\lgreen\Documents\GLWSP-P3-BPSF-GAMHPNE_lgreen.rvt

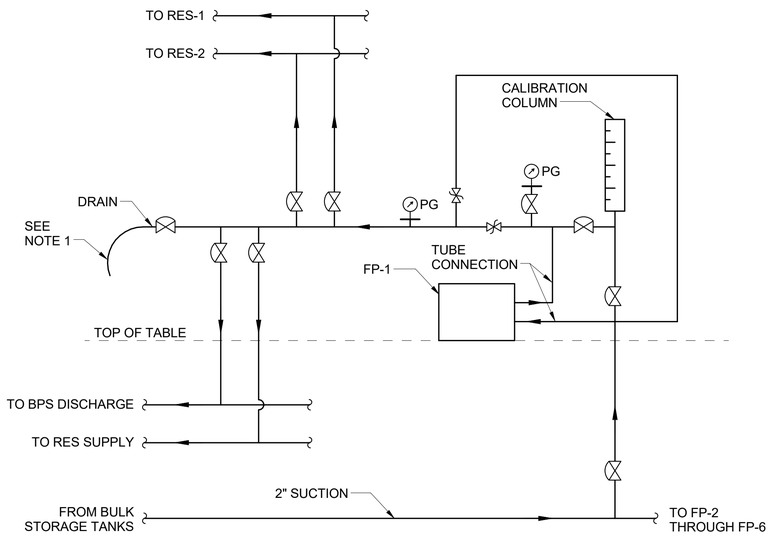


NOTES:
1. ROUTE 4' TUBE TO FRONT OF TABLE.
2. DIAGRAM TYPICAL FOR ALL FEED PUMPS.

## CHEMICAL FEED PUMP DIAGRAM

SCALE: NONE

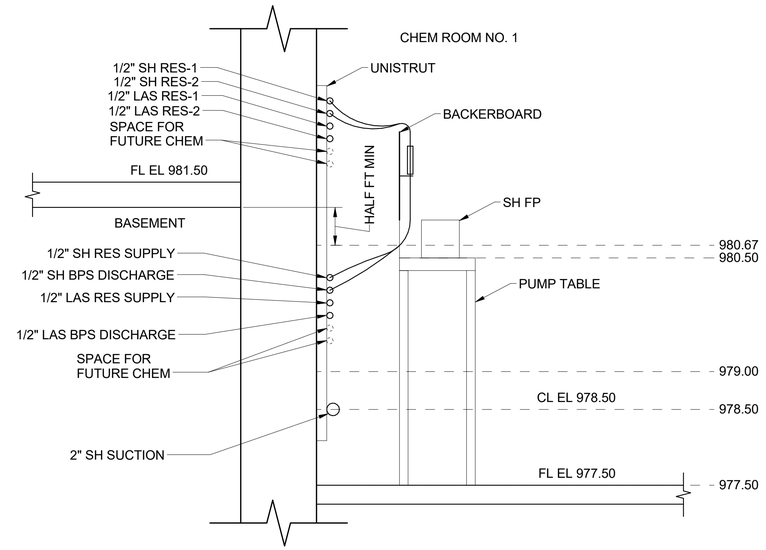


NOTE:
1. DIAGRAM TYPICAL FOR ALL SH FEED PUMPS. DIAGRAM TYPICAL FOR LAS BUT ROUTED TO LAS INJECTION PIPING.

## CHEMICAL FEED PUMP AND PIPING LAYOUT DIAGRAM

SCALE: NONE

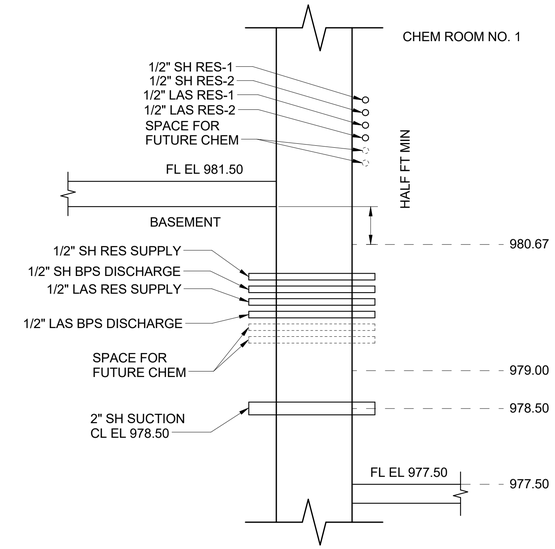


## CHEMICAL FEED PIPING WALL PENETRATION

SCALE: NONE

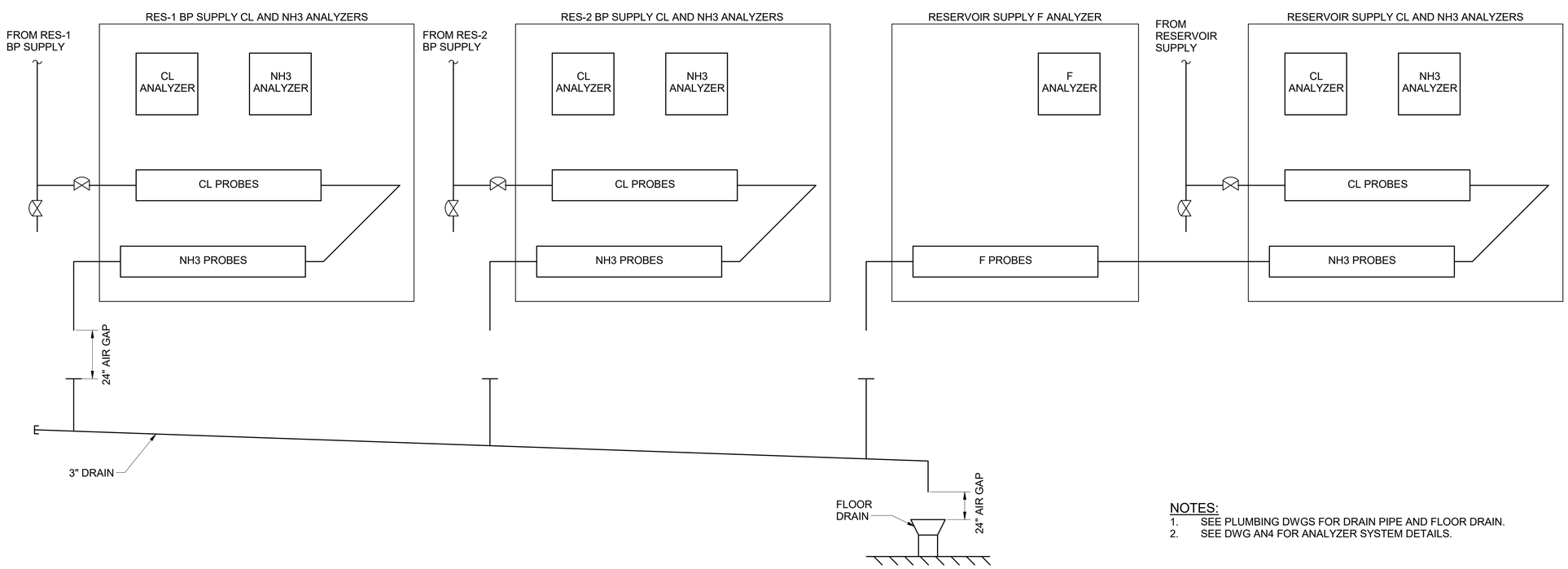


NOTES:
1. SEE PLUMBING DWGS FOR DRAIN PIPE AND FLOOR DRAIN.
2. SEE DWG AN4 FOR ANALYZER SYSTEM DETAILS.

## CHEMICAL ANALYZER DIAGRAM

SCALE: NONE

DRAFT 98% PROGRESS DRAWINGS
OCTOBER 2019

| NO. | DATE | APPD | DESCRIPTION |
|---|---|---|---|

Waukesha Water Utility
SERVING WAUKESHA SINCE 1886

GREELEY AND HANSEN
741 N. GRAND AVE. SUITE 308
WAUKESHA, WI 53186

GREAT WATER ALLIANCE™

CONTRACT PACKAGE 3: BOOSTER PUMPING STATION AND WATER SUPPLY CONTROL BUILDING

DIAGRAMS

APPROVED

SEAL AFFIXED
MONTH / DAY / YEAR

OCTOBER 2019

| | | | |
|---|---|---|---|
| JOB NO.: | 15310 | | |
| DESGN | LAM | CHCK | RMC |
| APPRV | AJM | DRWN | LG |
| SCALE: | NONE | | |

DRAWING NUMBER

BM4

SHEET 106 OF 184 REV 0

10/2/2019 10:09:57 AM
BAR MEASURE 1" ON FULLSIZE SHEETS
FILE: C:\Users\lgreen\Documents\GLWSP-P3-BPSF-GAMHPNE_lgreen.rvt

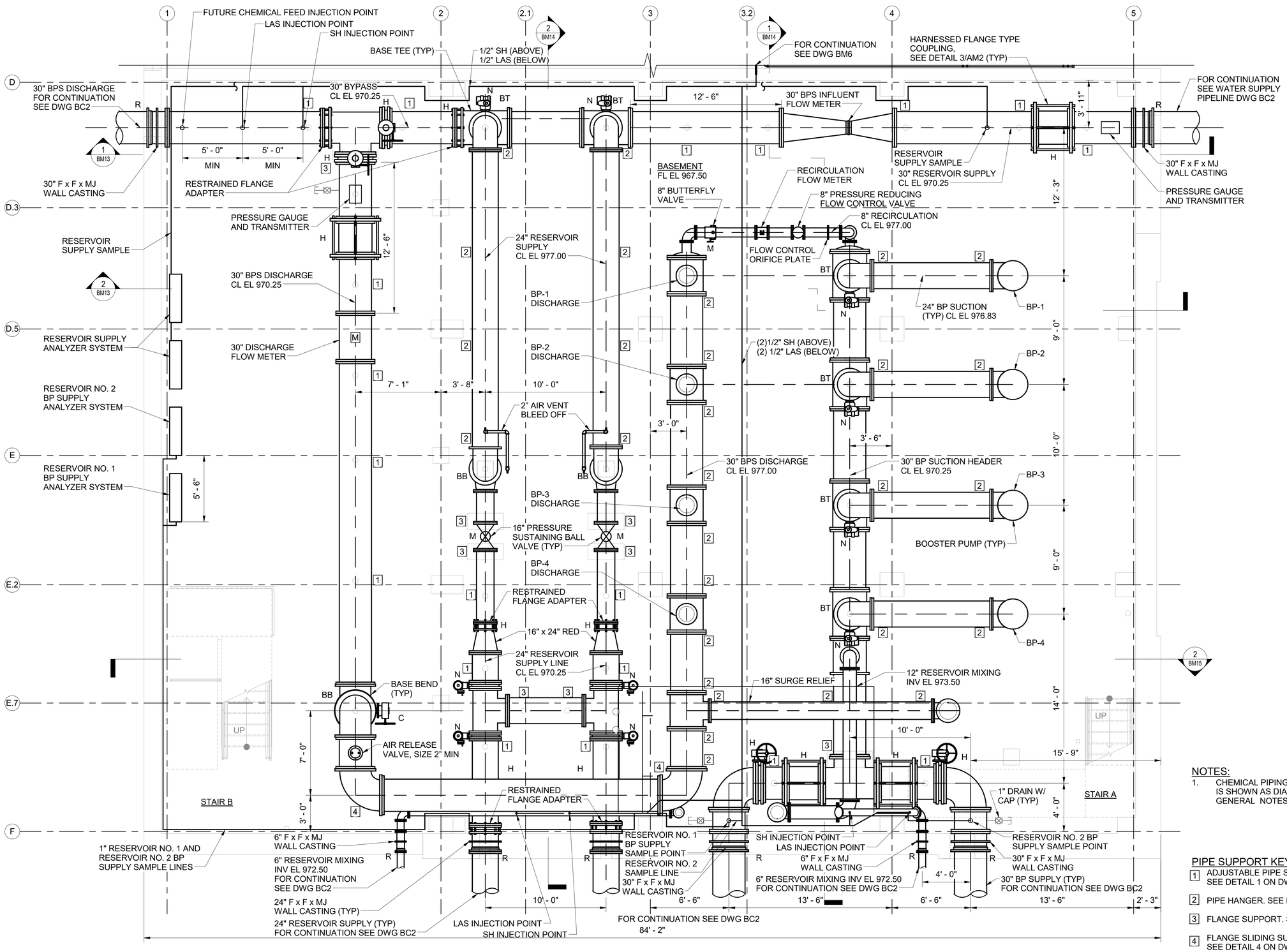


## NOTES:

1. CHEMICAL PIPING FOR SH AND LAS IS SHOWN AS DIAGRAMMATIC. SEE GENERAL NOTES.

## PIPE SUPPORT KEY NOTES:

1. ADJUSTABLE PIPE SADDLE SUPPORT. SEE DETAIL 1 ON DWG AS4.
2. PIPE HANGER. SEE DETAIL 1 ON DWG AS5.
3. FLANGE SUPPORT. SEE DWG AS4.
4. FLANGE SLIDING SUPPORT. SEE DETAIL 4 ON DWG AS5.

DRAFT 98% PROGRESS DRAWINGS
OCTOBER 2019

# PARTIAL PLAN AT EL 967.50

SCALE: 1/4" = 1'-0"

4 0 4 8 FT
1/4" = 1' - 0"

| NO. | DATE | APPD | DESCRIPTION |
|---|---|---|---|

Waukesha Water Utility
SERVING WAUKESHA SINCE 1886

GREELEY AND HANSEN
741 N. GRAND AVE. SUITE 308
WAUKESHA, WI 53186

GREAT WATER ALLIANCE™

CONTRACT PACKAGE 3: BOOSTER PUMPING STATION AND WATER SUPPLY CONTROL BUILDING

PLAN AT EL 967.50

APPROVED

SEAL AFFIXED
MONTH / DAY / YEAR

OCTOBER 2019

| | | | |
|---|---|---|---|
| JOB NO.: | 15310 | | |
| DESGN | LAM | CHCK | RMC |
| APPRV | AJM | DRWN | LG |
| SCALE: | 1/4" = 1'-0" | | |

DRAWING NUMBER

BM5

SHEET 107 OF 184 REV 0

10/2/2019 10:10:02 AM BAR MEASURE 1" ON FULLSIZE SHEETS

FILE: C:\Users\lgreen\Documents\GLWSP-P3-BPSF-GAMHPNE_lgreen.rvt

10/2/2019 10:10:07 AM
BAR MEASURE 1" ON FULLSIZE SHEETS

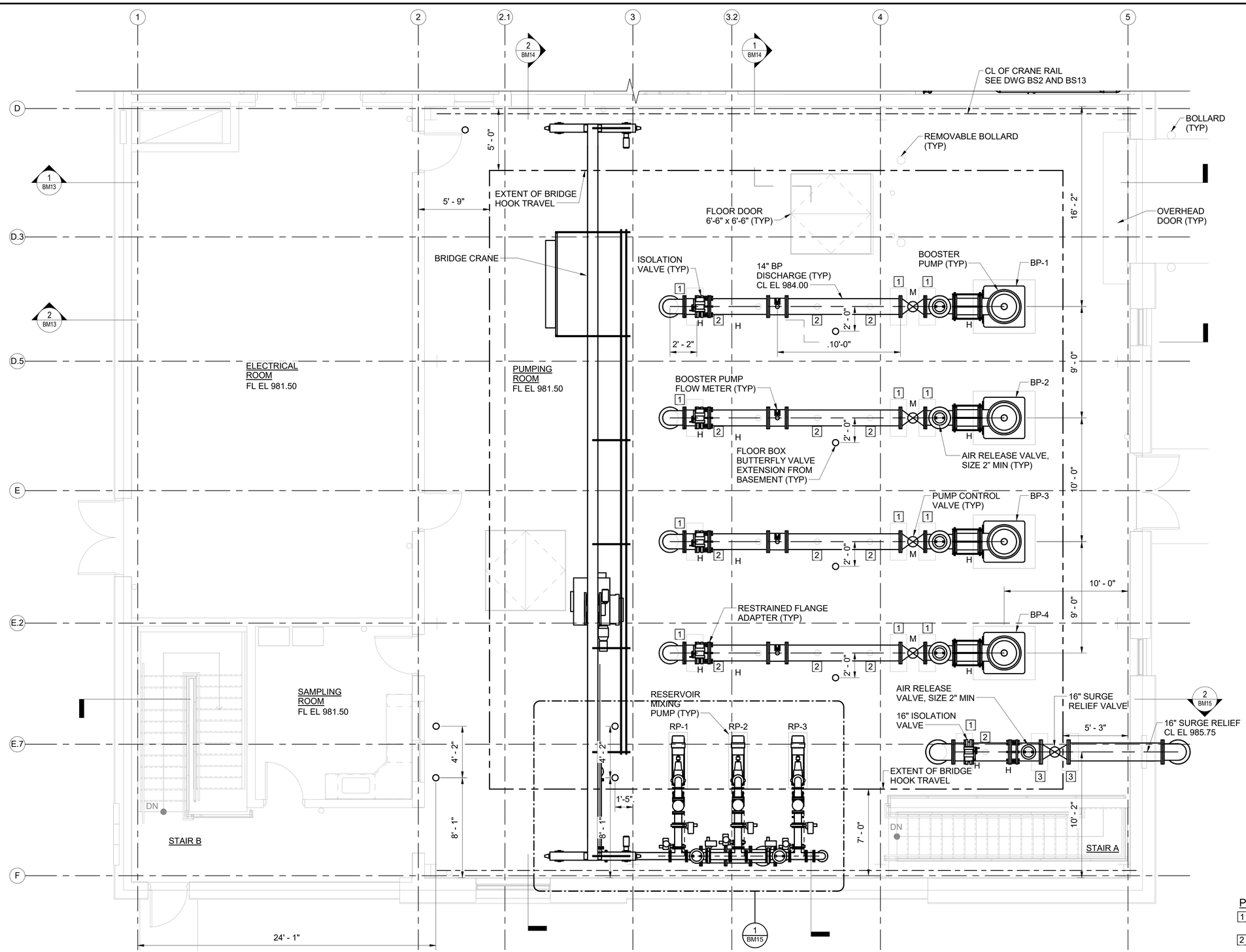


## PLAN AT EL 981.50

SCALE: 1/4" = 1'-0"

### PIPE SUPPORT KEY NOTES:

1. FLANGE SUPPORT. SEE DWG AS4.
2. ADJUSTABLE PIPE SUPPORT. SEE DETAIL 1 ON DWG AS4.
3. GLOBE VALVE SUPPORT. SEE DETAIL 2 ON DWG AS4.

4 0 4 8 FT
1/4" =1' - 0"

DRAFT 98% PROGRESS DRAWINGS
OCTOBER 2019

| NO. | DATE | APPD | DESCRIPTION |
|---|---|---|---|

Waukesha Water Utility
SERVING WAUKESHA SINCE 1886

GREELEY AND HANSEN
741 N. GRAND AVE. SUITE 308
WAUKESHA, WI 53186

GREAT WATER ALLIANCE™

CONTRACT PACKAGE 3: BOOSTER PUMPING STATION AND WATER SUPPLY CONTROL BUILDING

PLAN AT EL 981.50

APPROVED

SEAL AFFIXED
MONTH / DAY / YEAR

OCTOBER 2019

| | | | |
|---|---|---|---|
| JOB NO.: | 15310 | | |
| DESGN | LAM | CHCK | RMC |
| APPRV | AJM | DRWN | LG |
| SCALE: | 1/4" = 1'-0" | | |

DRAWING NUMBER

BM6

SHEET 108 OF 184 REV 0

FILE: C:\Users\lgreen\Documents\GLWSP-P3-BPSF-GAMHPNE_lgreen.rvt

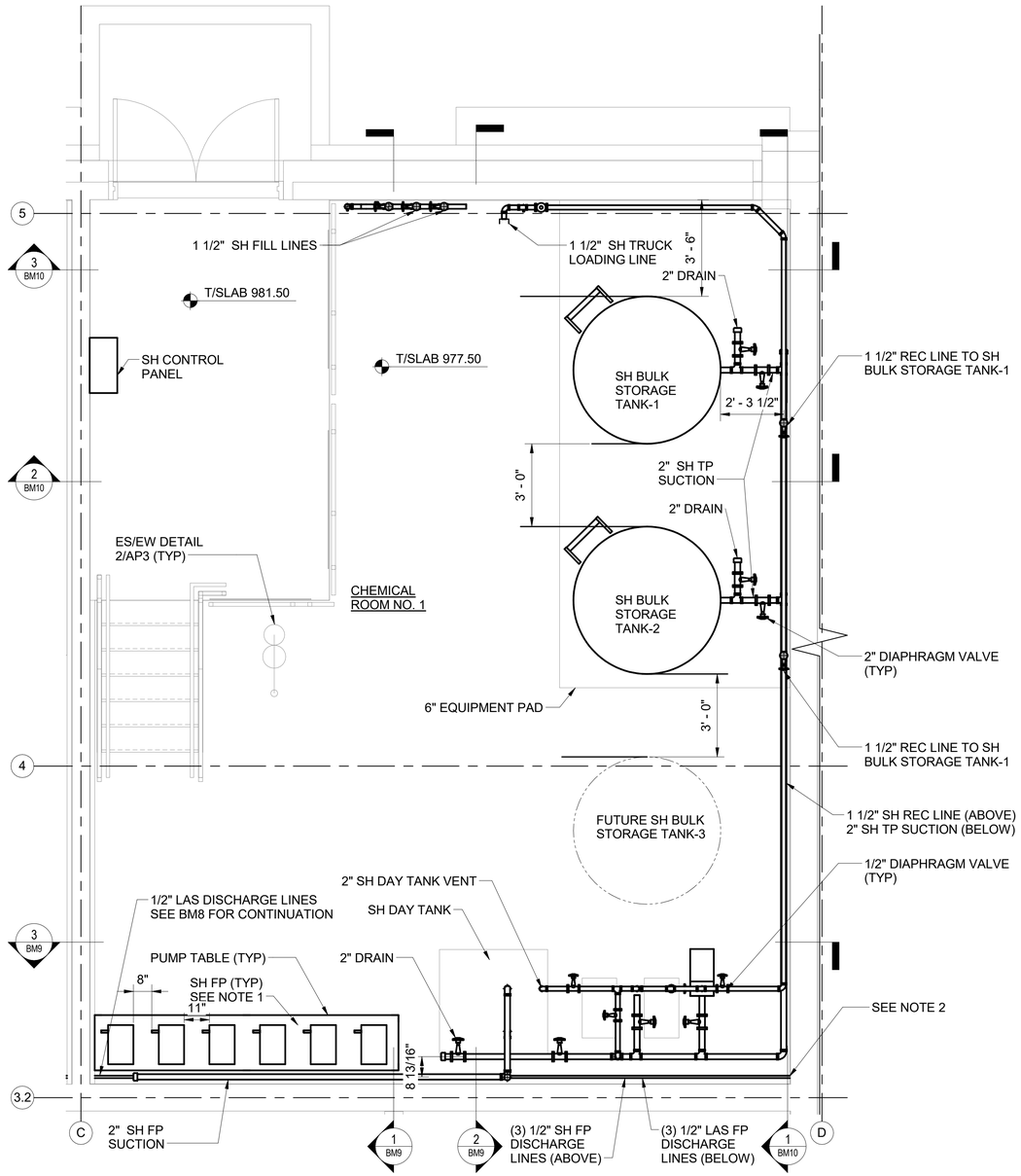


## CHEMICAL ROOM NO. 1 PLAN AT EL 977.50

SCALE: 3/8" = 1'-0"

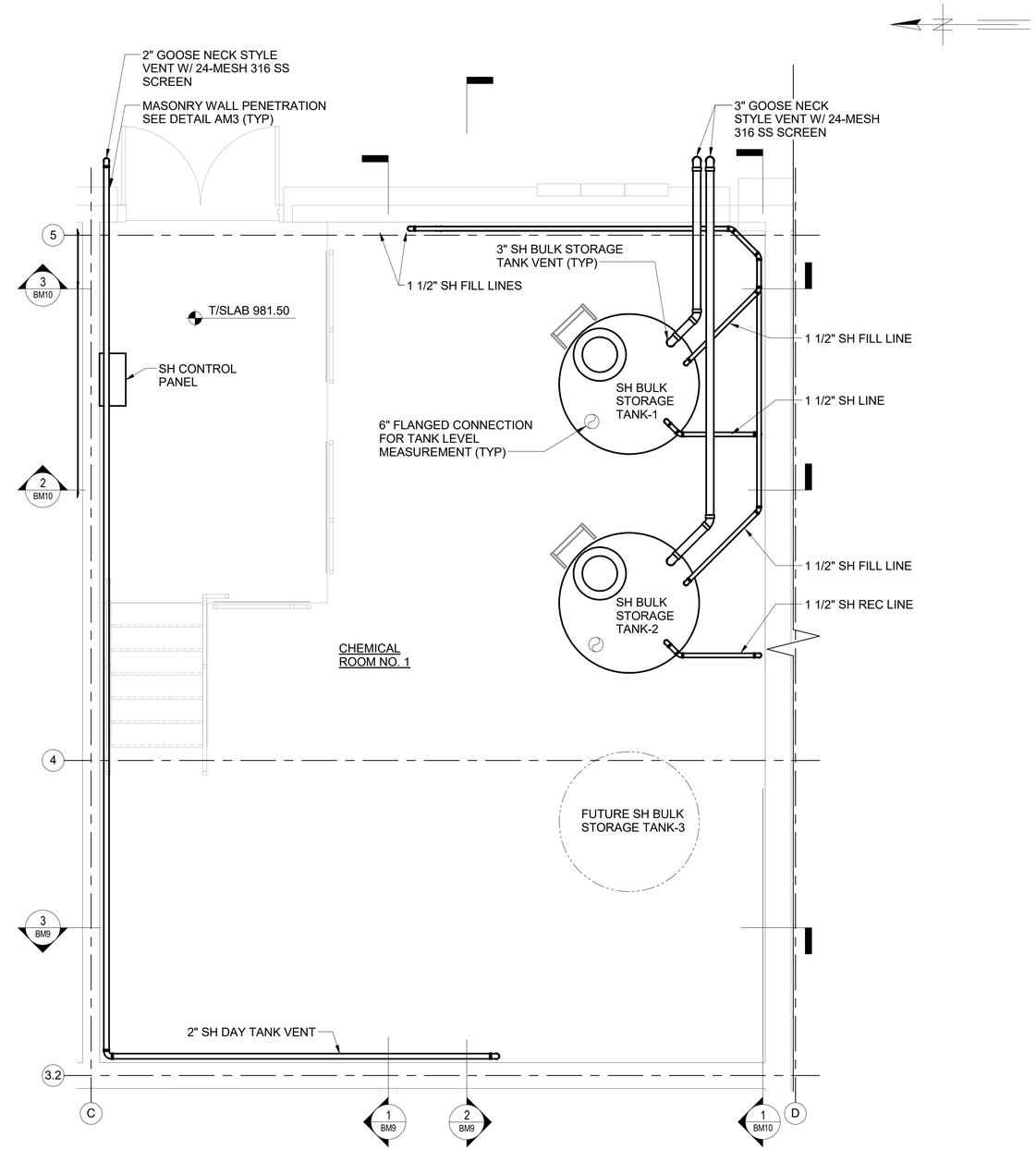


## CHEMICAL ROOM NO. 1 PLAN AT EL 984.00

SCALE: 3/8" = 1'-0"

NOTES:

1. SEE DWGS BM2, BM3 AND BM4 FOR PIPING AND APPURTENANCES ASSOCIATED WITH PUMPS.
2. SH AND LAS FEED PUMP DISCHARGE LINES CONNECT TO INJECTION POINTS IN BASEMENT. FOR CONTINUATION SEE DWG BM5.
3. CONTRACTOR SHALL ADD ADDITIONAL UNIONS AS REQUIRED TO PVC PIPING FOR DISASSEMBLY OF PIPING AND REMOVAL OF EQUIPMENT. CONTRACTOR SHALL COORDINATE LOCATION OF UNIONS WITH ENGINEER PRIOR TO INSTALLATION.

2 0 2 4 6 FT
3/8" =1' - 0"

DRAFT 98% PROGRESS DRAWINGS
OCTOBER 2019

| NO. | DATE | APPD | DESCRIPTION |
|---|---|---|---|

Waukesha Water Utility
SERVING WAUKESHA SINCE 1886

GREELEY AND HANSEN
741 N. GRAND AVE. SUITE 308
WAUKESHA, WI 53186

GREAT WATER ALLIANCE™

CONTRACT PACKAGE 3: BOOSTER PUMPING STATION AND WATER SUPPLY CONTROL BUILDING

CHEMICAL ROOM NO. 1
PLAN AT EL 977.50 AND 984.00

APPROVED

SEAL AFFIXED
MONTH / DAY / YEAR

OCTOBER 2019

| | | | |
|---|---|---|---|
| JOB NO.: | 15310 | | |
| DESGN | LAM | CHCK | RMC |
| APPRV | AJM | DRWN | OR |
| SCALE: | 3/8" = 1'-0" | | |

DRAWING NUMBER

BM7

SHEET 109 OF 184 REV 0

10/2/2019 10:10:11 AM

BAR MEASURE 1" ON FULLSIZE SHEETS

FILE: C:\Users\lgreen\Documents\GLWSP-P3-BPSF-GAMHPNE_lgreen.rvt

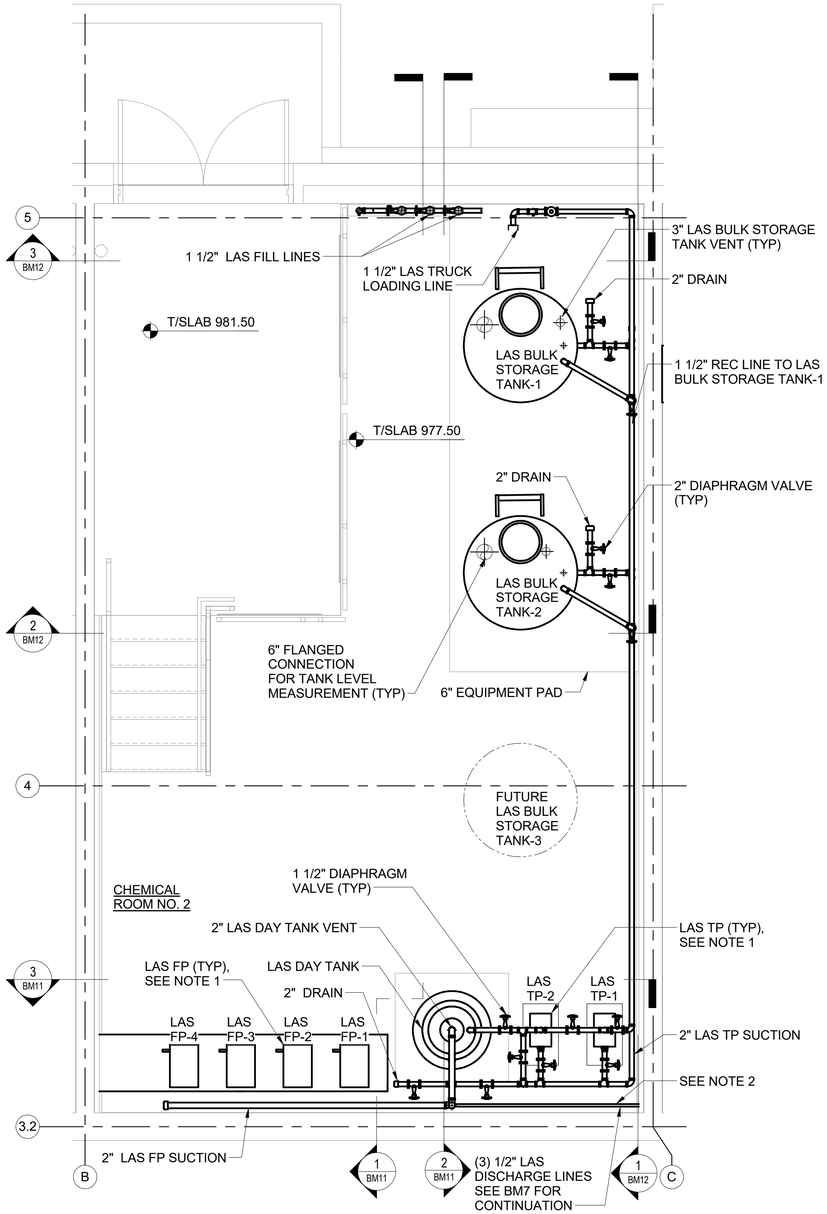


CHEMICAL ROOM NO. 2 PLAN AT EL 977.50

SCALE: 3/8" = 1'-0"

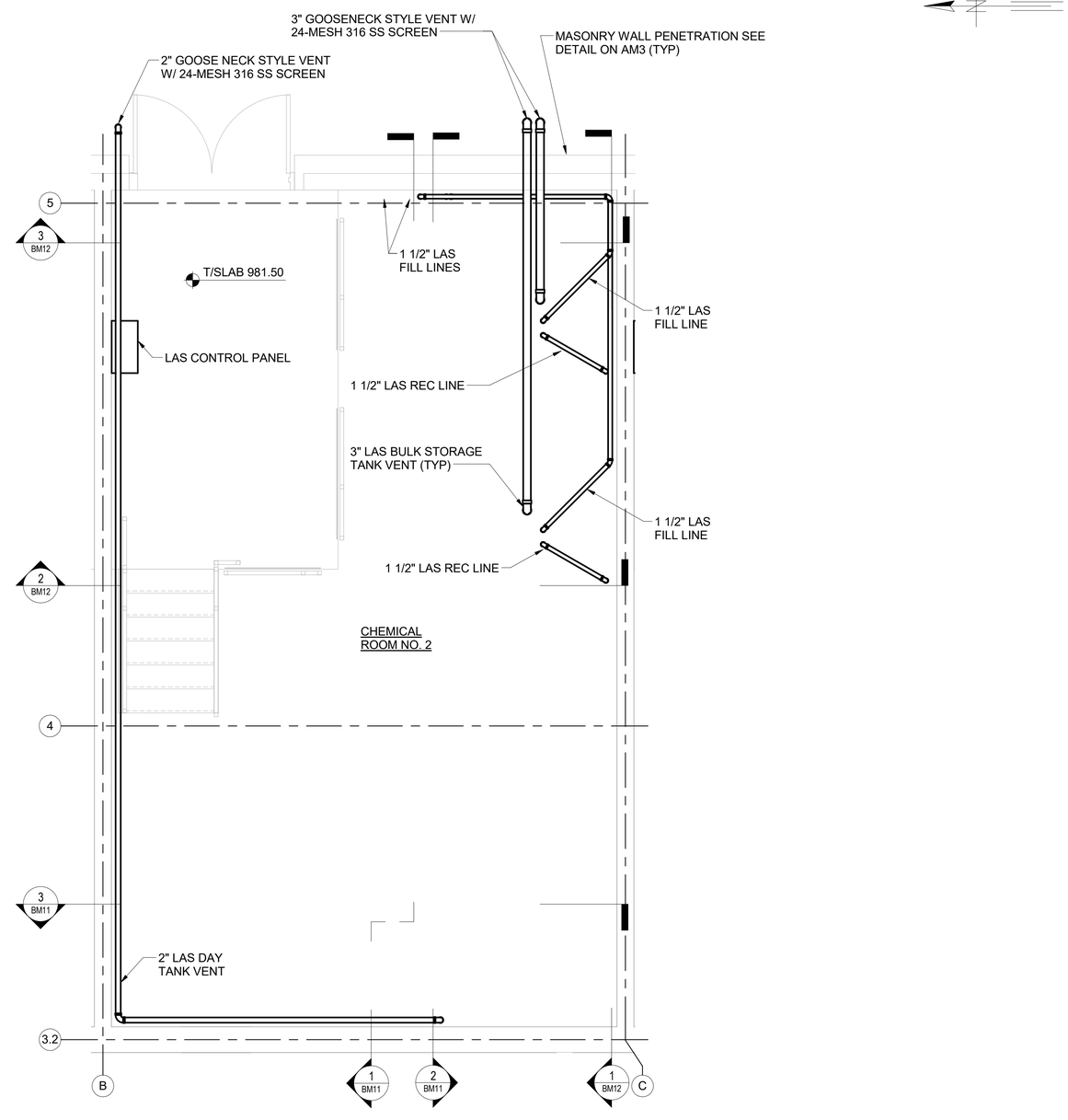


CHEMICAL ROOM NO. 2 PLAN AT EL 984.00

SCALE: 3/8" = 1'-0"

NOTES:

1. SEE DWGS BM2, BM3 AND BM4 FOR PIPING AND APPURTENANCES ASSOCIATED WITH PUMPS.
2. SH AND LAS FEED PUMP DISCHARGE LINES CONNECT TO INJECTION POINTS IN BASEMENT. FOR CONTINUATION SEE DWG BM5.
3. CONTRACTOR SHALL ADD ADDITIONAL UNIONS AS REQUIRED TO PVC PIPING FOR DISASSEMBLY OF PIPING AND REMOVAL OF EQUIPMENT. CONTRACTOR SHALL COORDINATE LOCATION OF UNIONS WITH ENGINEER PRIOR TO INSTALLATION.

2 0 2 4 6 FT
3/8" =1' - 0"

DRAFT 98% PROGRESS DRAWINGS
OCTOBER 2019

| NO. | DATE | APPD | DESCRIPTION |
|---|---|---|---|

Waukesha Water Utility
SERVING WAUKESHA SINCE 1886

GREELEY AND HANSEN
741 N. GRAND AVE. SUITE 308
WAUKESHA, WI 53186

GREAT WATER ALLIANCE™

CONTRACT PACKAGE 3: BOOSTER PUMPING STATION AND WATER SUPPLY CONTROL BUILDING

CHEMICAL ROOM NO. 2
PLAN AT EL 977.50 AND 984.00

APPROVED

SEAL AFFIXED
MONTH / DAY / YEAR

OCTOBER 2019

| | | | |
|---|---|---|---|
| JOB NO.: | 15310 | | |
| DESGN | LAM | CHCK | RMC |
| APPRV | AJM | DRWN | OR |
| SCALE: | 3/8" = 1'-0" | | |

DRAWING NUMBER

BM8

SHEET 110 OF 184 REV 0

10/2/2019 10:10:16 AM BAR MEASURE 1" ON FULLSIZE SHEETS

FILE: C:\Users\lgreen\Documents\GLWSP-P3-BPSF-GAMHPNE_lgreen.rvt

10/2/2019 10:10:21 AM
BAR MEASURE 1" ON FULLSIZE SHEETS

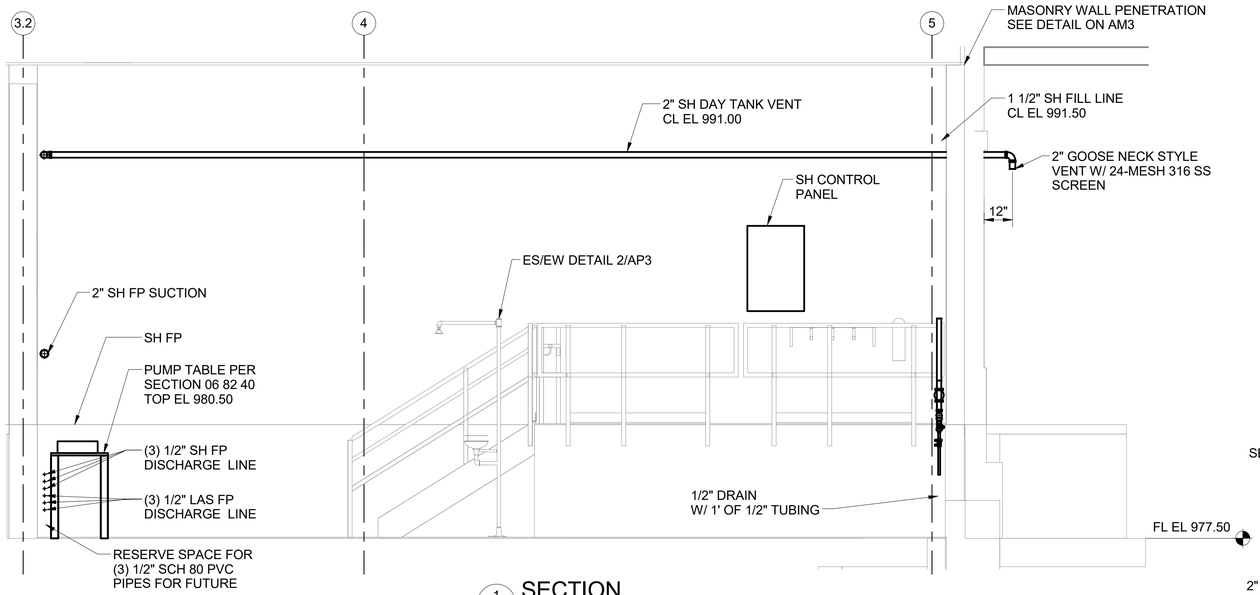


1 BM7 SECTION
SCALE: 3/8" = 1'-0"

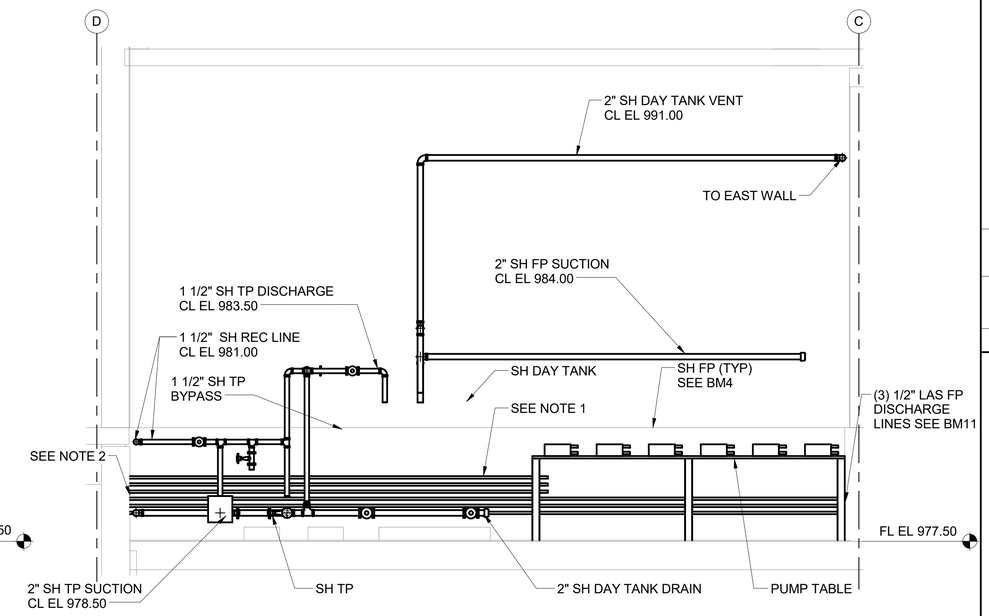


3 BM7 SECTION
SCALE: 3/8" = 1'-0"

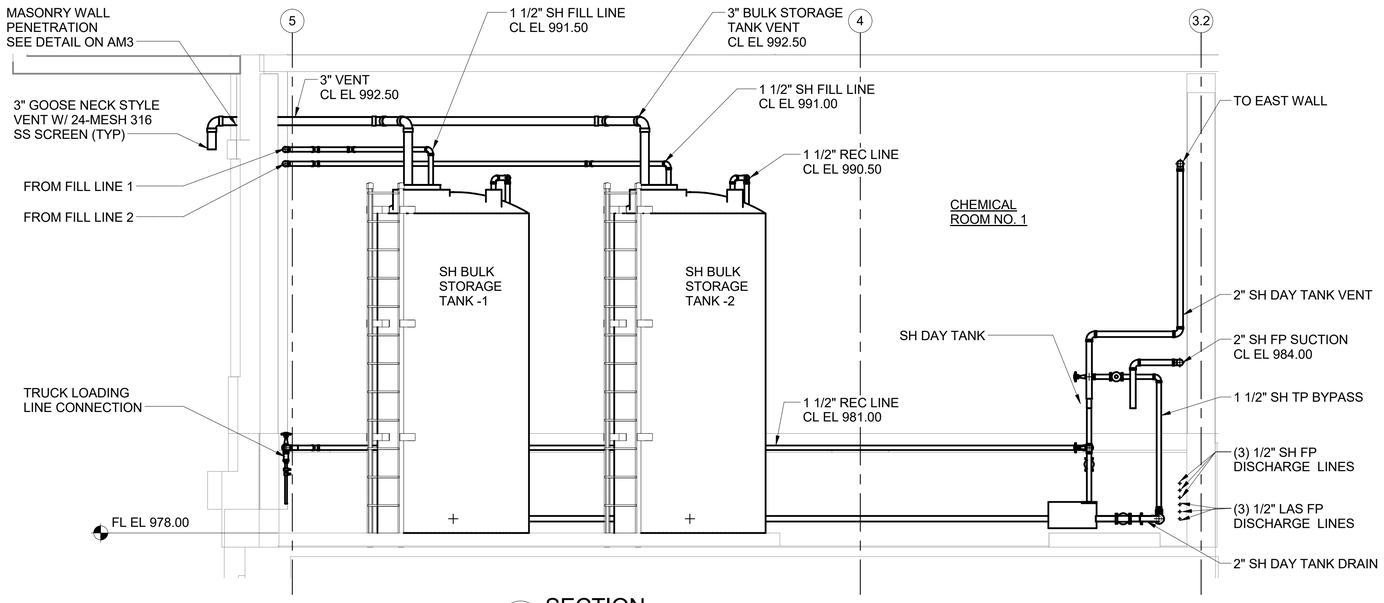


2 BM7 SECTION
SCALE: 3/8" = 1'-0"

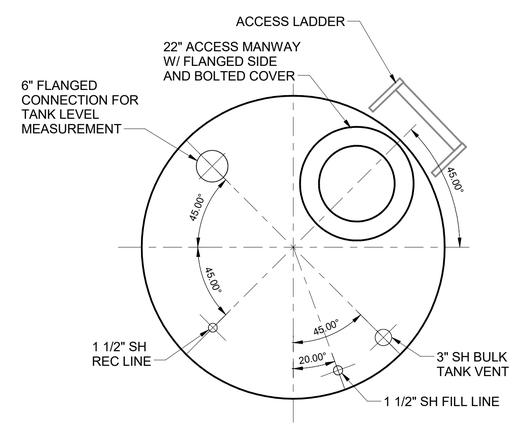


NOTES:
1. REFER TO TANK SHOP DRAWING FOR FLANGE SIZE AND BOLT PATTERN.
2. ALL PENETRATIONS SHALL BE INSTALLED DURING FABRICATION OF THE TANK BY THE MANUFACTURER.

## SH BULK TANK DETAIL
NOT TO SCALE

NOTES:
1. SEE DWGS BM2, BM3 AND BM4 FOR PIPING AND APPURTENANCES ASSOCIATED WITH PUMPS.
2. SH AND LAS FEED PUMP DISCHARGE LINES CONNECT TO INJECTION POINTS IN BASEMENT. FOR CONTINUATION SEE BM5.
3. CONTRACTOR SHALL ADD ADDITIONAL UNIONS AS REQUIRED TO PVC PIPING FOR DISASSEMBLY OF PIPING AND REMOVAL OF EQUIPMENT. CONTRACTOR SHALL COORDINATE LOCATION OF UNIONS WITH ENGINEER PRIOR TO INSTALLATION.

2 0 2 4 6 FT
3/8" =1' - 0"

DRAFT 98% PROGRESS DRAWINGS
OCTOBER 2019

| NO. | DATE | APPD | DESCRIPTION |
|---|---|---|---|

Waukesha Water Utility
SERVING WAUKESHA SINCE 1886

GREELEY AND HANSEN
741 N. GRAND AVE. SUITE 308
WAUKESHA, WI 53186

GREAT WATER ALLIANCE™

CONTRACT PACKAGE 3: BOOSTER PUMPING STATION AND WATER SUPPLY CONTROL BUILDING

CHEMICAL ROOM NO. 1 - SECTIONS

APPROVED

SEAL AFFIXED
MONTH / DAY / YEAR

OCTOBER 2019

| | | | |
|---|---|---|---|
| JOB NO.: | 15310 | | |
| DESGN | AM | CHCK | DVH |
| APPRV | AJM | DRWN | OR |
| SCALE: | AS SHOWN | | |

DRAWING NUMBER
BM9

SHEET 111 OF 184 REV 0

FILE: C:\Users\lgreen\Documents\GLWSP-P3-BPSF-GAMHPNE_lgreen.rvt

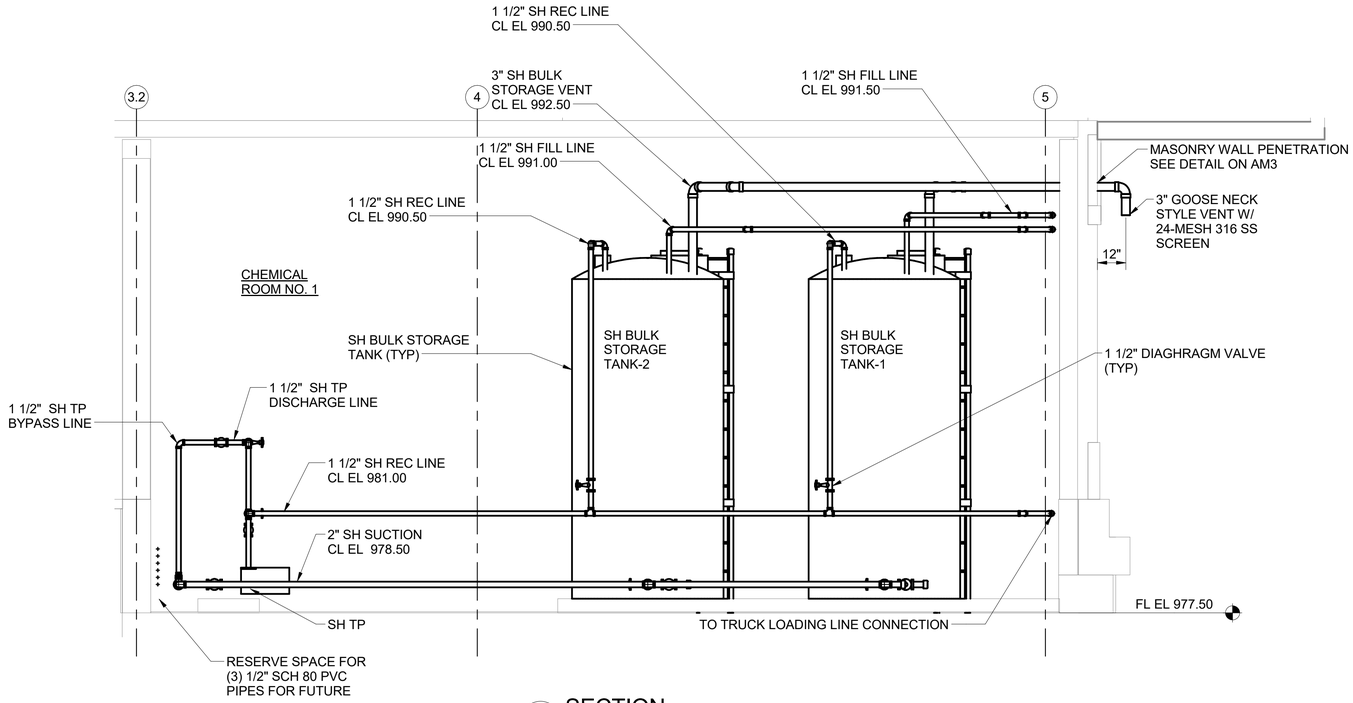


1 BM7 SECTION
SCALE: 3/8" = 1'-0"

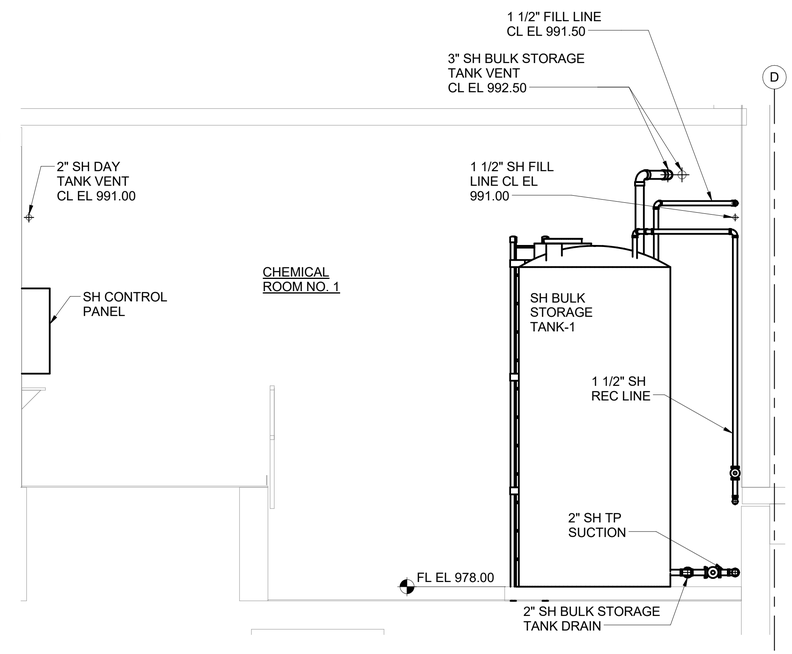


2 BM7 SECTION
SCALE: 3/8" = 1'-0"

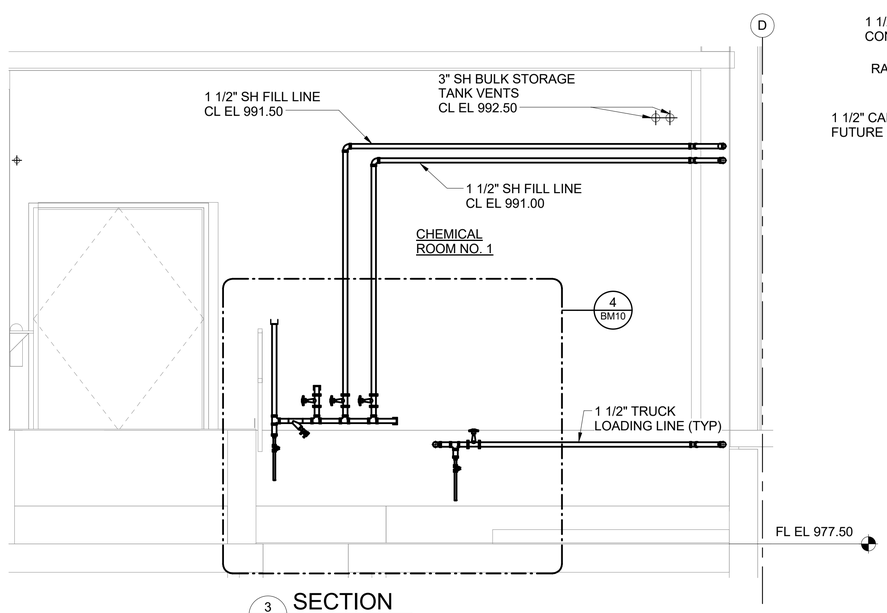


3 BM7 SECTION
SCALE: 3/8" = 1'-0"

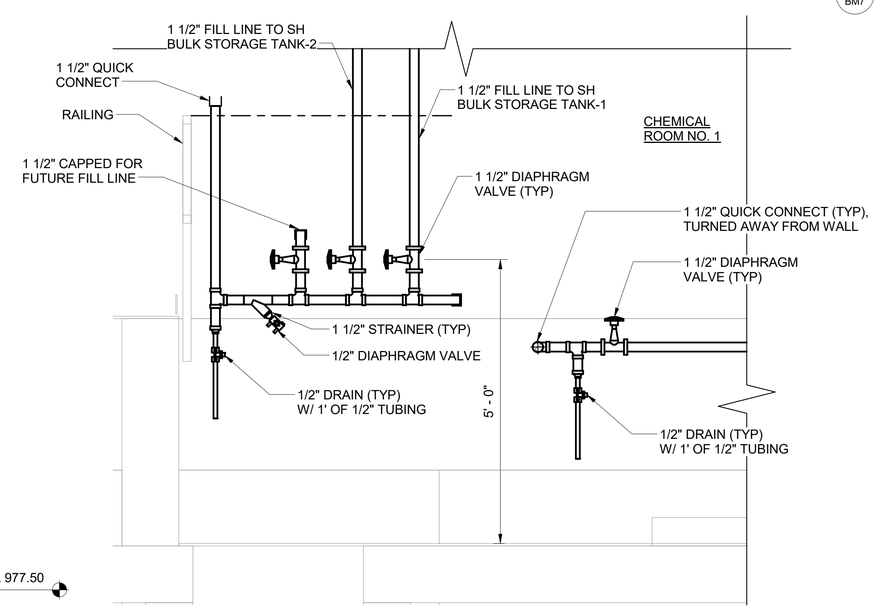


4 BM10 SH TRUCK LOADING AND FILL LINES
SCALE: 3/4" = 1'-0"

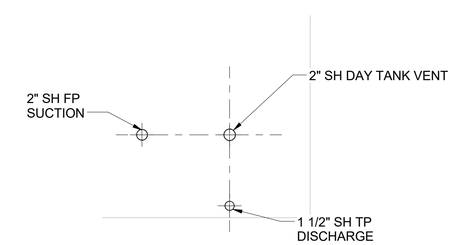


NOTES:
1. REFER TO TANK SHOP DRAWING FOR FLANGE SIZE AND BOLT PATTERN.
2. ALL PENETRATIONS SHALL BE INSTALLED DURING FABRICATION OF THE TANK BY THE MANUFACTURER.

## SH DAY TANK DETAIL
NOT TO SCALE

NOTES:
1. SEE DWGS BM2, BM3 AND BM4 FOR PIPING AND APPURTENANCES ASSOCIATED WITH PUMPS.
2. CONTRACTOR SHALL ADD ADDITIONAL UNIONS AS REQUIRED TO PVC PIPING FOR DISASSEMBLY OF PIPING AND REMOVAL OF EQUIPMENT. CONTRACTOR SHALL COORDINATE LOCATION OF UNIONS WITH ENGINEER PRIOR TO INSTALLATION.

2 0 2 4 6 FT 3/8" =1' - 0"
1 0 1 2 3 FT 3/4" =1' - 0"

DRAFT 98% PROGRESS DRAWINGS
OCTOBER 2019

| NO. | DATE | APPD | DESCRIPTION |
|---|---|---|---|

Waukesha Water Utility
SERVING WAUKESHA SINCE 1886

GREELEY AND HANSEN
741 N. GRAND AVE. SUITE 308
WAUKESHA, WI 53186

GREAT WATER ALLIANCE™

CONTRACT PACKAGE 3: BOOSTER PUMPING STATION AND WATER SUPPLY CONTROL BUILDING

CHEMICAL ROOM NO. 1 - SECTIONS

APPROVED

SEAL AFFIXED
MONTH / DAY / YEAR

OCTOBER 2019

| | | | |
|---|---|---|---|
| JOB NO.: | 15310 | | |
| DESGN | LAM | CHCK | RMC |
| APPRV | AJM | DRWN | OR |
| SCALE: | AS SHOWN | | |

DRAWING NUMBER
BM10

SHEET 112 OF 184 REV 0

10/2/2019 10:10:26 AM BAR MEASURE 1" ON FULLSIZE SHEETS

FILE: C:\Users\lgreen\Documents\GLWSP-P3-BPSF-GAMHPNE_lgreen.rvt

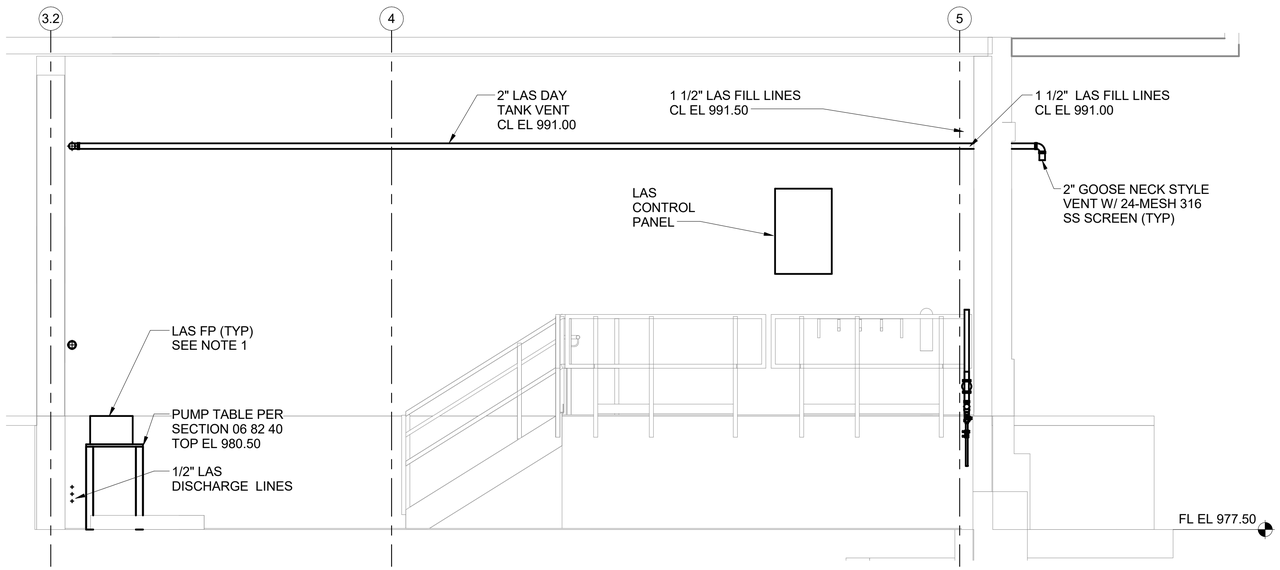


1 BM8 SECTION
SCALE: 3/8" = 1'-0"

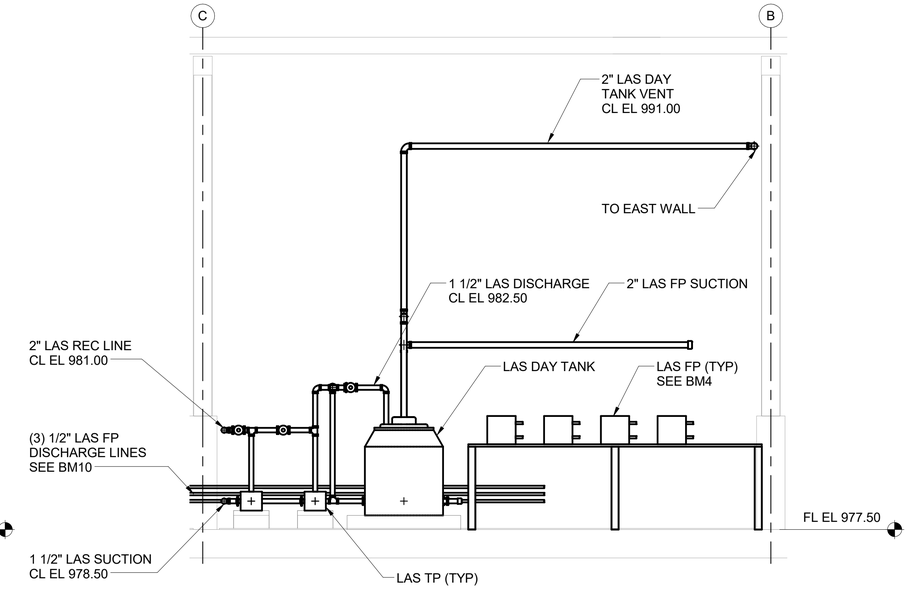


3 BM8 SECTION
SCALE: 3/8" = 1'-0"

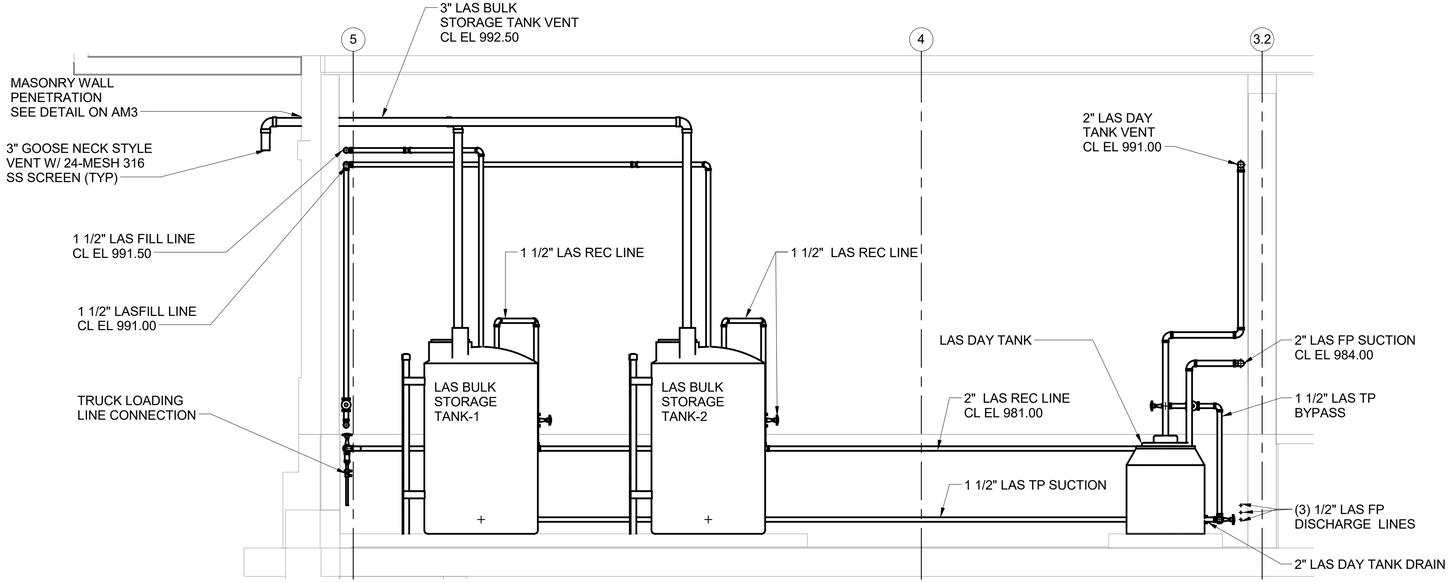


2 BM8 SECTION
SCALE: 3/8" = 1'-0"

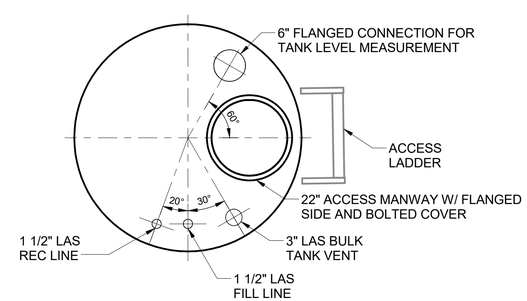


NOTES:
1. REFER TO TANK SHOP DRAWING FOR FLANGE SIZE AND BOLT PATTERN.
2. ALL PENETRATIONS SHALL BE INSTALLED DURING FABRICATION OF THE TANK BY THE MANUFACTURER.

LAS BULK TANK DETAIL
NOT TO SCALE

NOTES:
1. SEE DWGS BM2, BM3 AND BM4 FOR PIPING AND APPURTENANCES ASSOCIATED WITH PUMPS.
2. CONTRACTOR SHALL ADD ADDITIONAL UNIONS AS REQUIRED TO PVC PIPING FOR DISASSEMBLY OF PIPING AND REMOVAL OF EQUIPMENT. CONTRACTOR SHALL COORDINATE LOCATION OF UNIONS WITH ENGINEER PRIOR TO INSTALLATION.

2 0 2 4 6 FT
3/8" =1' - 0"

DRAFT 98% PROGRESS DRAWINGS
OCTOBER 2019

| NO. | DATE | APPD | DESCRIPTION |
|---|---|---|---|

Waukesha Water Utility
SERVING WAUKESHA SINCE 1886

GREELEY AND HANSEN
741 N. GRAND AVE. SUITE 308
WAUKESHA, WI 53186

GREAT WATER ALLIANCE™

CONTRACT PACKAGE 3: BOOSTER PUMPING STATION AND WATER SUPPLY CONTROL BUILDING

CHEMICAL ROOM NO. 2 - SECTIONS

APPROVED

SEAL AFFIXED
MONTH / DAY / YEAR

OCTOBER 2019

| | | | |
|---|---|---|---|
| JOB NO.: | 15310 | | |
| DESGN | LAM | CHCK | SR |
| APPRV | AJM | DRWN | OR |
| SCALE: | AS SHOWN | | |

DRAWING NUMBER
BM11

SHEET 113 OF 184 REV 0

10/2/2019 10:10:30 AM BAR MEASURE 1" ON FULLSIZE SHEETS

FILE: C:\Users\lgreen\Documents\GLWSP-P3-BPSF-GAMHPNE_lgreen.rvt

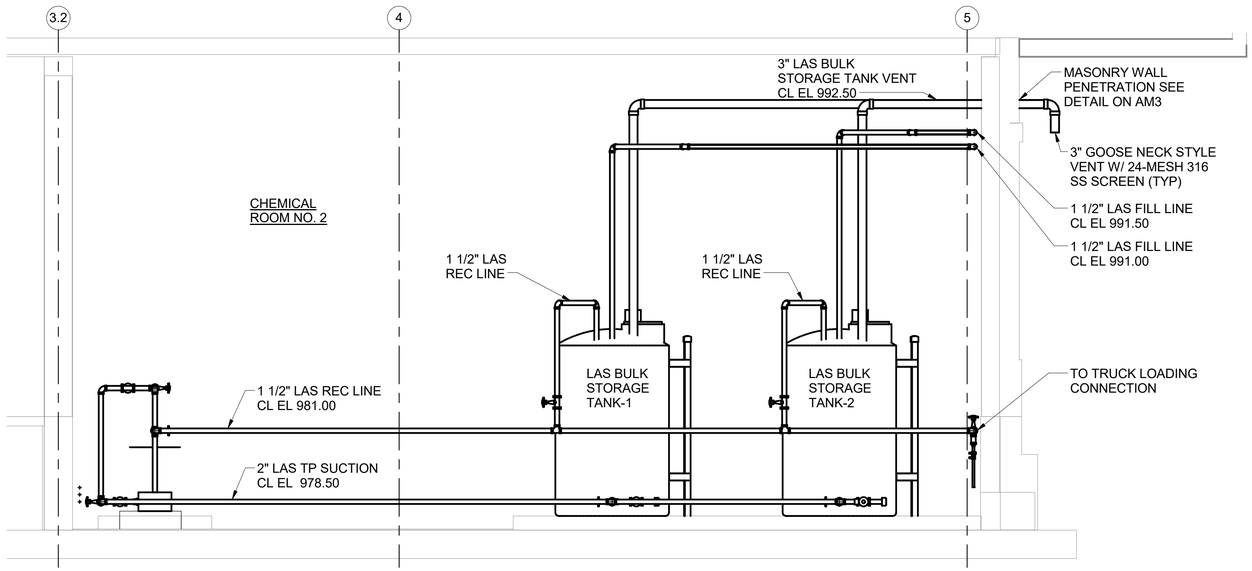


1 BM8 SECTION
SCALE: 3/8" = 1'-0"

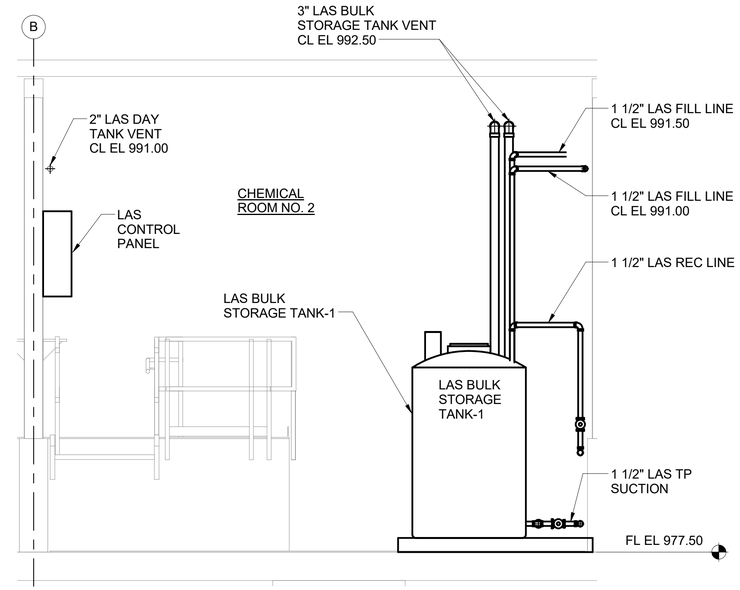


2 BM8 SECTION
SCALE: 3/8" = 1'-0"

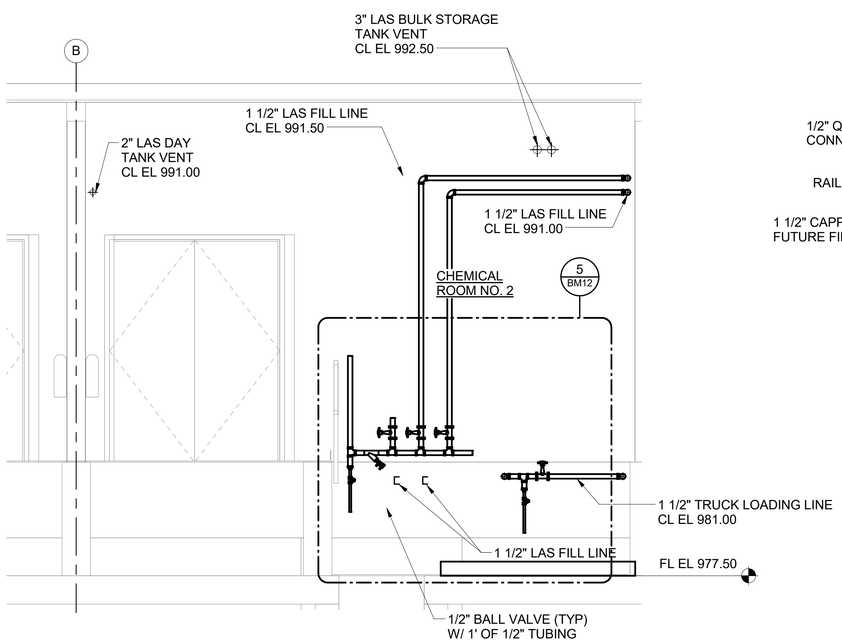


3 BM8 SECTION
SCALE: 3/8" = 1'-0"

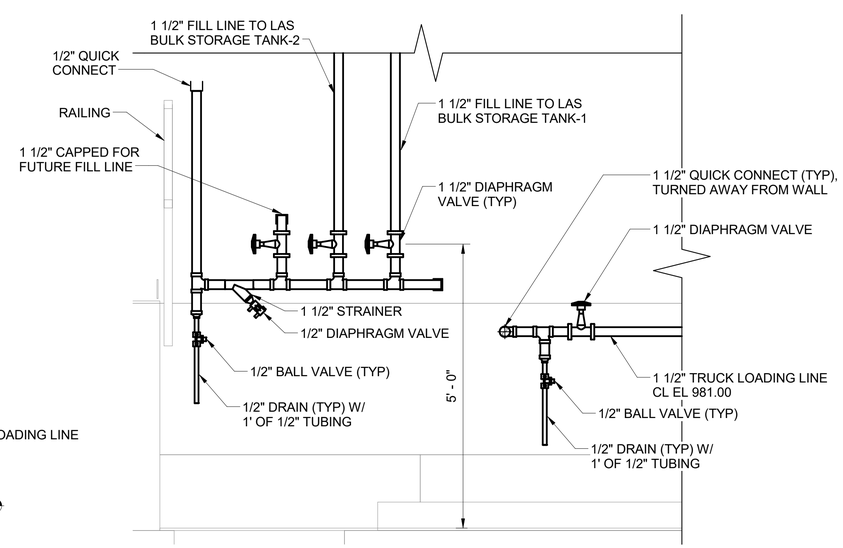


5 BM12 LAS TRUCK LOADING AND FILL LINES
SCALE: 3/4" = 1'-0"

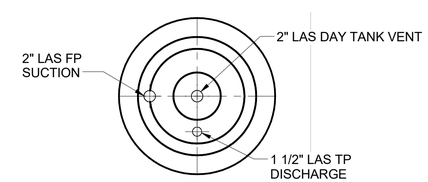


NOTES:
1. REFER TO TANK SHOP DRAWING FOR FLANGE SIZE AND BOLT PATTERN.
2. ALL PENETRATIONS SHALL BE INSTALLED DURING FABRICATION OF THE TANK BY THE MANUFACTURER.

LAS DAY TANK DETAIL
NOT TO SCALE

NOTES:
1. SEE DWGS BM2, BM3 AND BM4 FOR PIPING AND APPURTENANCES ASSOCIATED WITH PUMPS.
2. CONTRACTOR SHALL ADD ADDITIONAL UNIONS AS REQUIRED TO PVC PIPING FOR DISASSEMBLY OF PIPING AND REMOVAL OF EQUIPMENT. CONTRACTOR SHALL COORDINATE LOCATION OF UNIONS WITH ENGINEER PRIOR TO INSTALLATION.

2 0 2 4 6 FT 3/8" =1' - 0"
1 0 1 2 3 FT 3/4" =1' - 0"

DRAFT 98% PROGRESS DRAWINGS
OCTOBER 2019

| NO. | DATE | APPD | DESCRIPTION |
|---|---|---|---|

Waukesha Water Utility
SERVING WAUKESHA SINCE 1886

GREELEY AND HANSEN
741 N. GRAND AVE. SUITE 308
WAUKESHA, WI 53186

GREAT WATER ALLIANCE™

CONTRACT PACKAGE 3: BOOSTER PUMPING STATION AND WATER SUPPLY CONTROL BUILDING

CHEMICAL ROOM NO. 2 - SECTIONS

APPROVED

SEAL AFFIXED
MONTH / DAY / YEAR

OCTOBER 2019

| | | | |
|---|---|---|---|
| JOB NO.: | 15310 | | |
| DESGN | LAM | CHCK | RMC |
| APPRV | AJM | DRWN | OR |
| SCALE: | AS SHOWN | | |

DRAWING NUMBER
BM12

SHEET 114 OF 184 REV 0

10/2/2019 10:10:35 AM
BAR MEASURE 1" ON FULLSIZE SHEETS
FILE: C:\Users\lgreen\Documents\GLWSP-P3-BPSF-GAMHPNE_lgreen.rvt

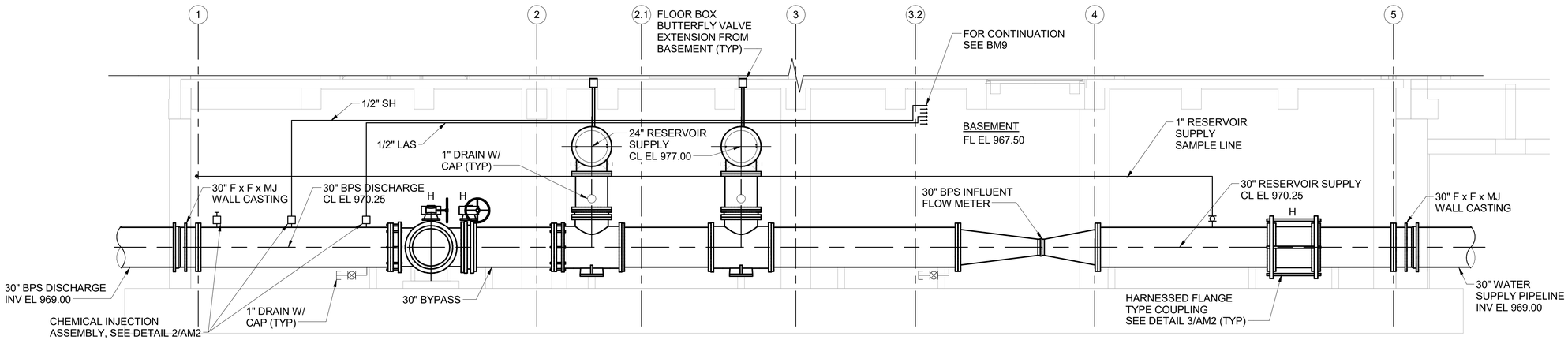


1 / BM5 SECTION
SCALE: 1/4" = 1'-0"

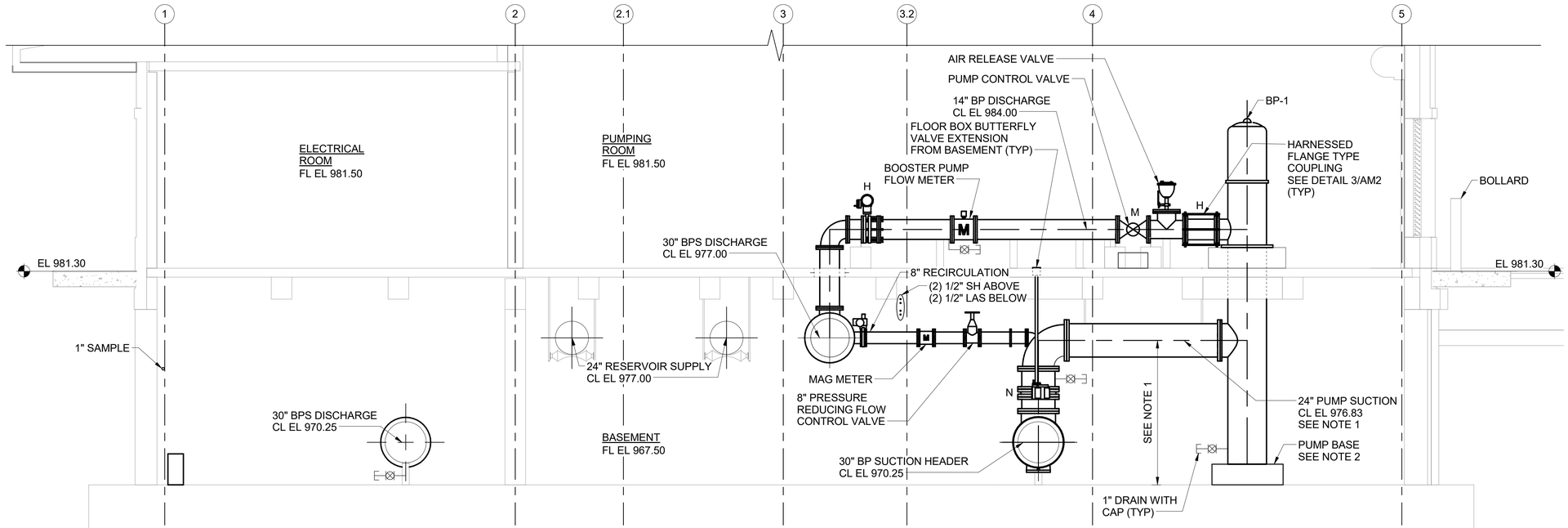


2 / BM5 SECTION
SCALE: 1/4" = 1'-0"

NOTES:

1. CONTRACTOR SHALL COORDINATE WITH MANUFACTURER TO FIELD VERIFY DIMENSIONS AND ELEVATION.
2. COORDINATE WITH PUMP MANUFACTURER FOR PUMP BASE REQUIREMENT AND DETAILS. PUMP NOT TO BE SUPPORTED AT THE BOTTOM OF THE PUMP BARREL.
3. CHEMICAL PIPING FOR SH AND LAS IS SHOWN AS DIAGRAMMATIC. SEE GENERAL NOTES.

4 0 4 8 FT
1/4" =1' - 0"

DRAFT 98% PROGRESS DRAWINGS
OCTOBER 2019

| NO. | DATE | APPD | DESCRIPTION |
|---|---|---|---|

Waukesha Water Utility
SERVING WAUKESHA SINCE 1886

GREELEY AND HANSEN
741 N. GRAND AVE. SUITE 308
WAUKESHA, WI 53186

GREAT WATER ALLIANCE™

CONTRACT PACKAGE 3: BOOSTER PUMPING STATION AND WATER SUPPLY CONTROL BUILDING

PUMPING ROOM SECTIONS

APPROVED

SEAL AFFIXED
MONTH / DAY / YEAR

OCTOBER 2019

| | | | |
|---|---|---|---|
| JOB NO.: | 15310 | | |
| DESGN | LAM | CHCK | RMC |
| APPRV | AJM | DRWN | OR |
| SCALE: | 1/4" = 1'-0" | | |

DRAWING NUMBER

BM13

SHEET 115 OF 184 REV 0

10/2/2019 10:10:39 AM BAR MEASURE 1" ON FULLSIZE SHEETS

FILE: C:\Users\lgreen\Documents\GLWSP-P3-BPSF-GAMHPNE_lgreen.rvt

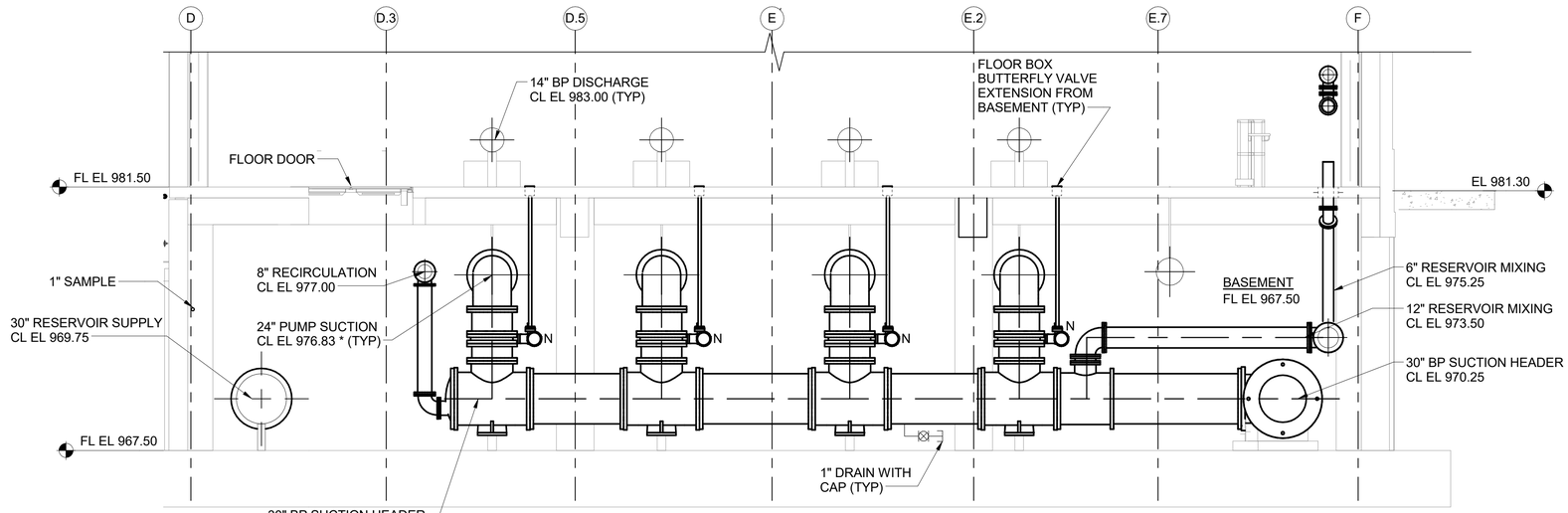


1 BM5 SECTION
SCALE: 1/4" = 1'-0"

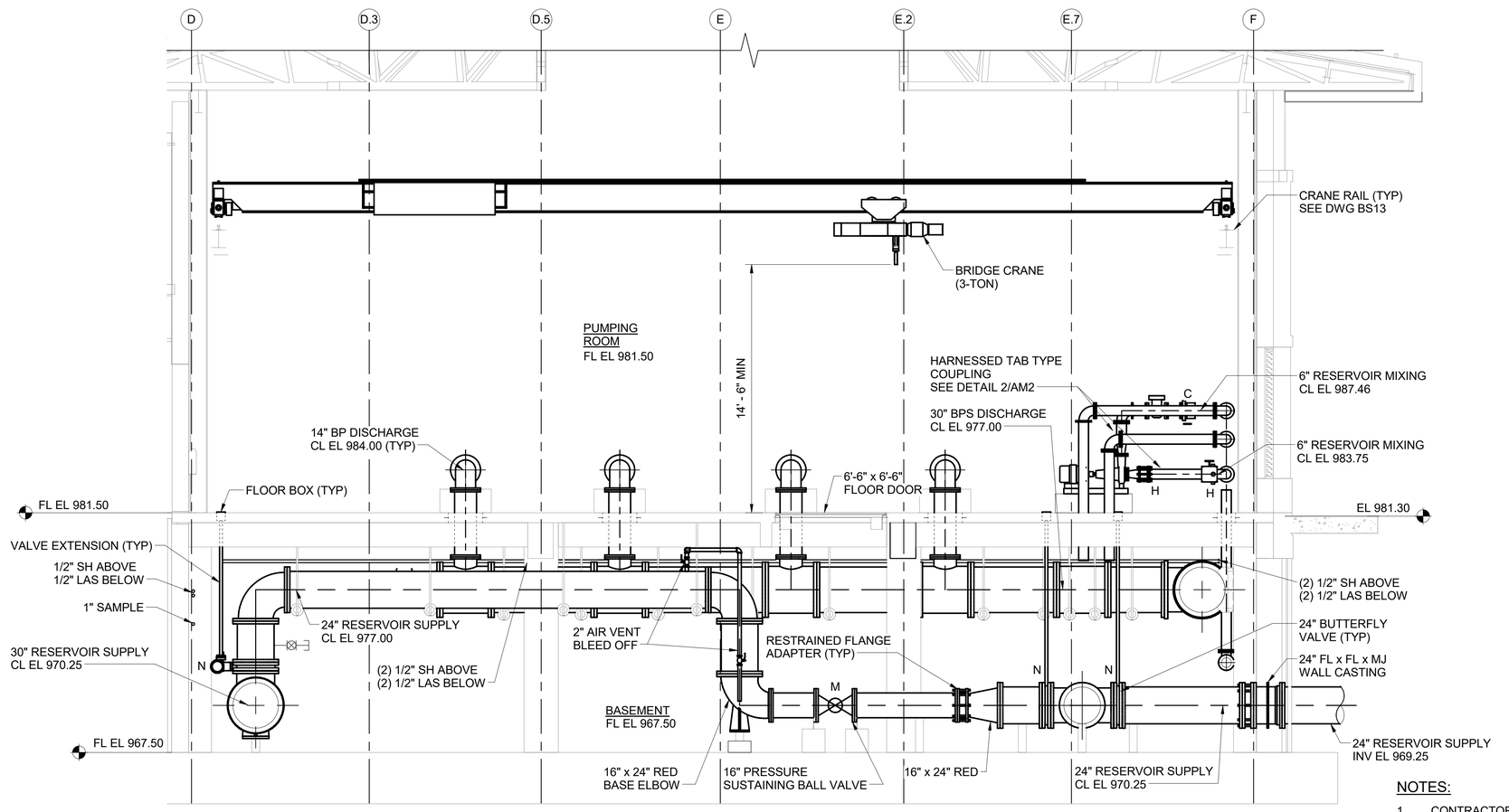


2 BM5 SECTION
SCALE: 1/4" = 1'-0"

## NOTES:

1. CONTRACTOR SHALL COORDINATE WITH MANUFACTURER TO FIELD VERIFY DIMENSIONS AND ELEVATION.
2. CHEMICAL PIPING FOR SH AND LAS IS SHOWN AS DIAGRAMMATIC. SEE GENERAL NOTES.

4 0 4 8 FT
1/4" =1' - 0"

DRAFT 98% PROGRESS DRAWINGS
OCTOBER 2019

| NO. | DATE | APPD | DESCRIPTION |
|---|---|---|---|

Waukesha Water Utility
SERVING WAUKESHA SINCE 1886

GREELEY AND HANSEN
741 N. GRAND AVE. SUITE 308
WAUKESHA, WI 53186

GREAT WATER ALLIANCE™

CONTRACT PACKAGE 3: BOOSTER PUMPING STATION AND WATER SUPPLY CONTROL BUILDING

PUMPING ROOM SECTIONS

APPROVED

SEAL AFFIXED
MONTH / DAY / YEAR

OCTOBER 2019

| | | | |
|---|---|---|---|
| JOB NO.: | 15310 | | |
| DESGN | LAM | CHCK | RMC |
| APPRV | AJM | DRWN | OR |
| SCALE: | 1/4" = 1'-0" | | |

DRAWING NUMBER

BM14

SHEET 116 OF 184 REV 0

10/2/2019 10:10:44 AM

BAR MEASURE 1" ON FULLSIZE SHEETS

FILE: C:\Users\lgreen\Documents\GLWSP-P3-BPSF-GAMHPNE_lgreen.rvt

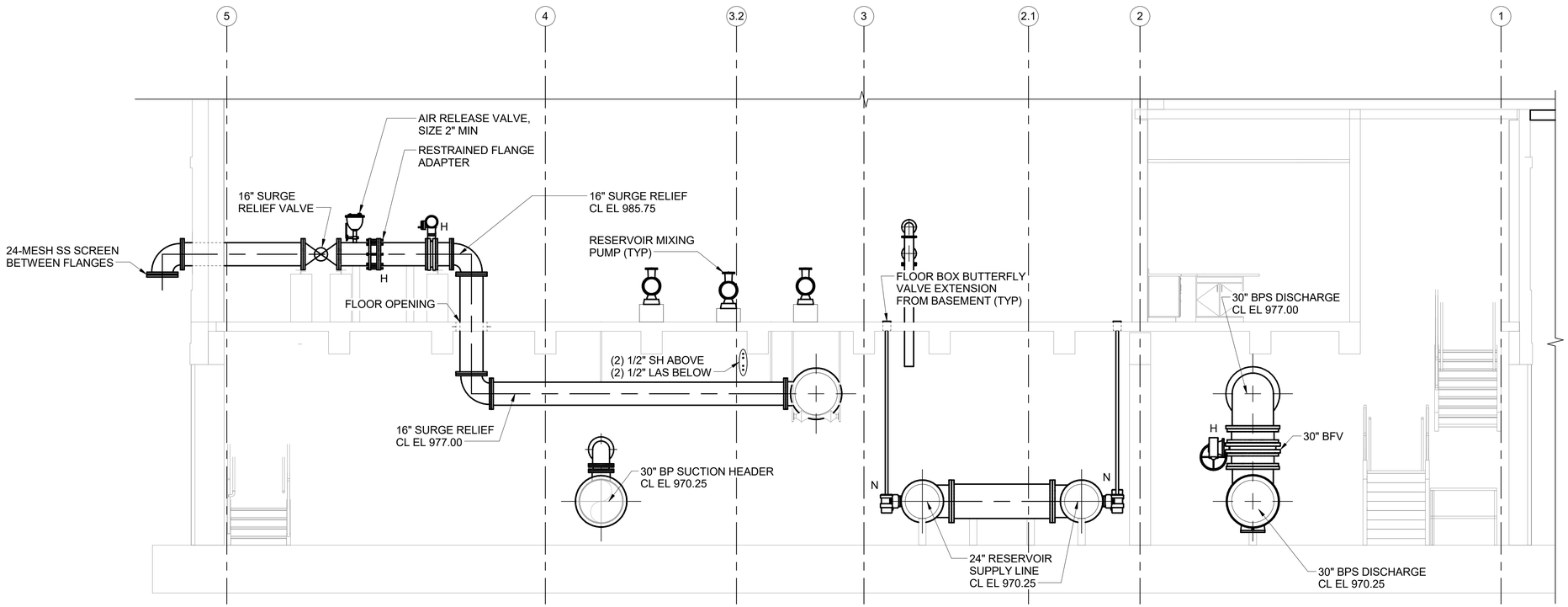


2 BM5 SECTION
SCALE: 1/4" = 1'-0"

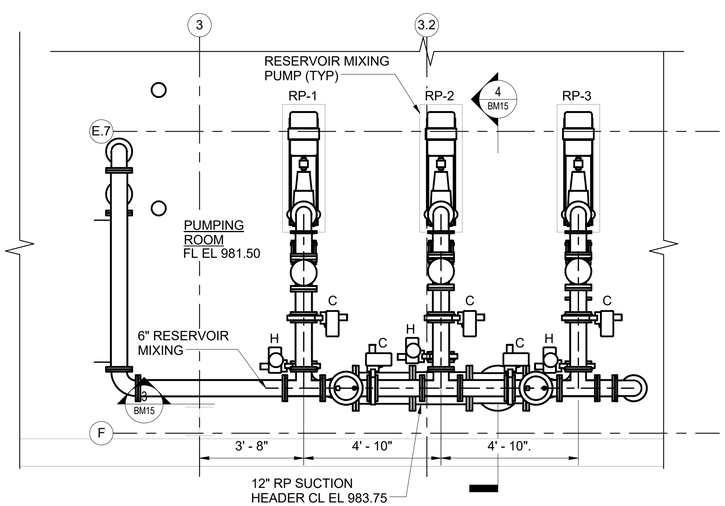


1 BM6 PARTIAL PLAN
SCALE: 3/8" = 1'-0"

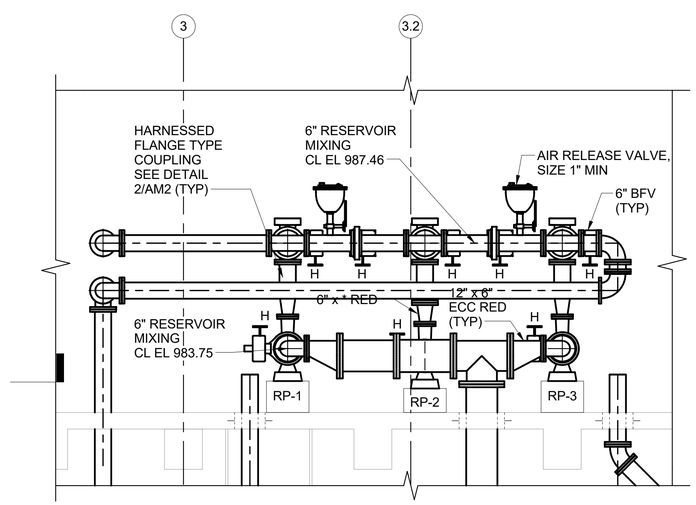


3 BM15 SECTION
SCALE: 3/8" = 1'-0"

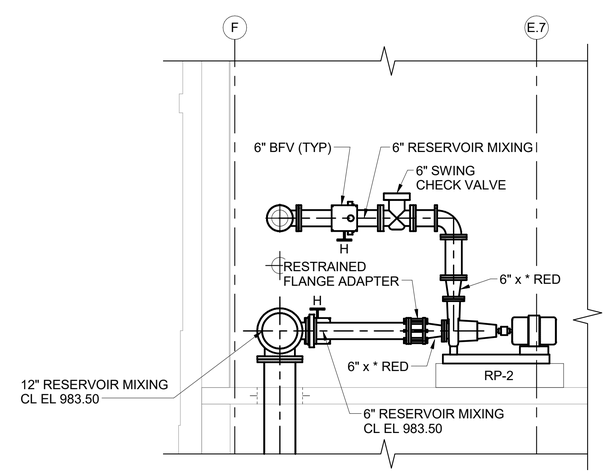


4 BM15 SECTION
SCALE: 3/8" = 1'-0"

4 0 4 8 FT 1/4" =1' - 0"
2 0 2 4 6 FT 3/8" =1' - 0"

DRAFT 98% PROGRESS DRAWINGS
OCTOBER 2019

| NO. | DATE | APPD | DESCRIPTION |
|---|---|---|---|

Waukesha Water Utility
SERVING WAUKESHA SINCE 1886

GREELEY AND HANSEN
741 N. GRAND AVE. SUITE 308
WAUKESHA, WI 53186

GREAT WATER ALLIANCE™

CONTRACT PACKAGE 3: BOOSTER PUMPING STATION AND WATER SUPPLY CONTROL BUILDING

PUMPING ROOM SECTIONS

APPROVED

SEAL AFFIXED
MONTH / DAY / YEAR

OCTOBER 2019

| | | | |
|---|---|---|---|
| JOB NO.: | 15310 | | |
| DESGN | AM | CHCK | DVH |
| APPRV | AJM | DRWN | OR |
| SCALE: | AS SHOWN | | |

DRAWING NUMBER
BM15

SHEET 117 OF 184 REV 0

10/2/2019 10:10:50 AM
BAR MEASURE 1" ON FULLSIZE SHEETS
FILE: C:\Users\lgreen\Documents\GLWSP-P3-BPSF-GAMHPNE_lgreen.rvt

BAR MEASURE 1" ON FULLSIZE SHEETS



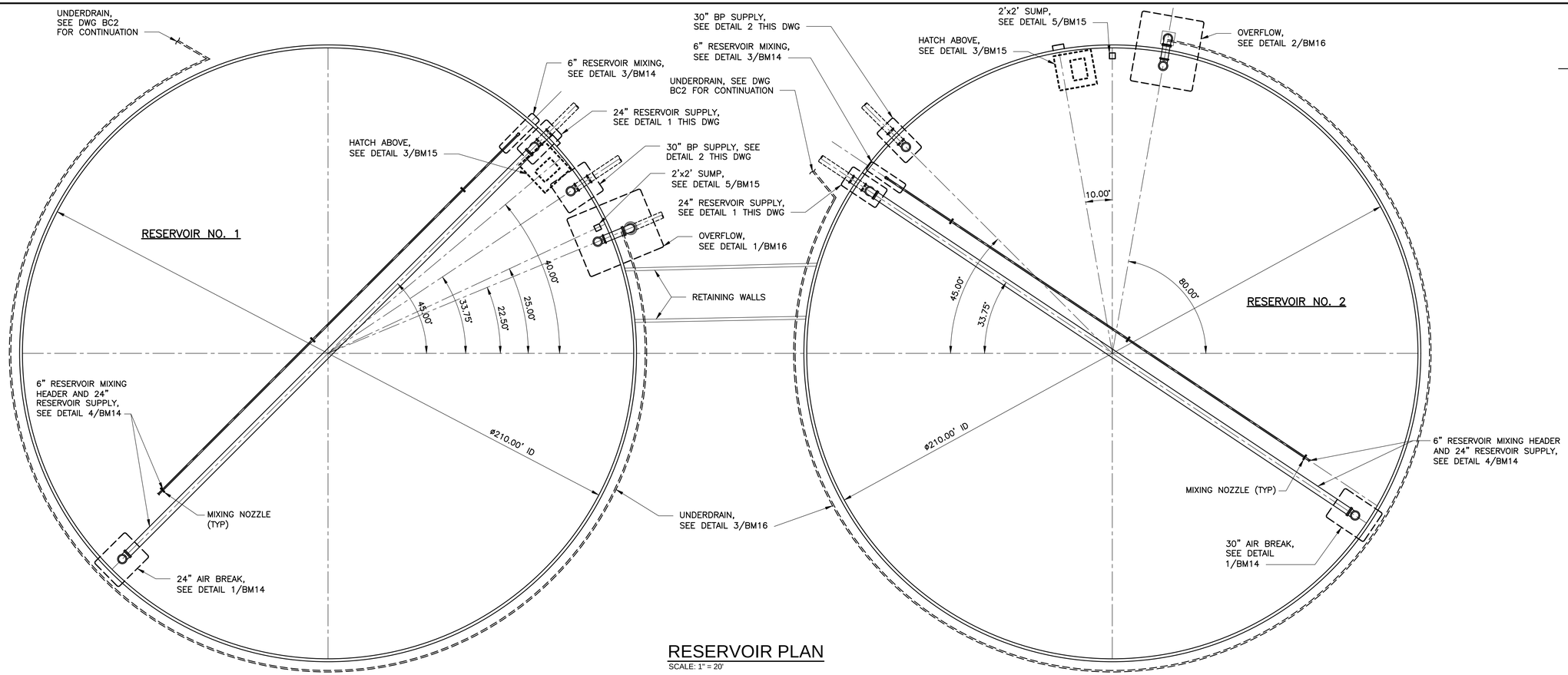


## RESERVOIR PLAN

SCALE: 1" = 20'

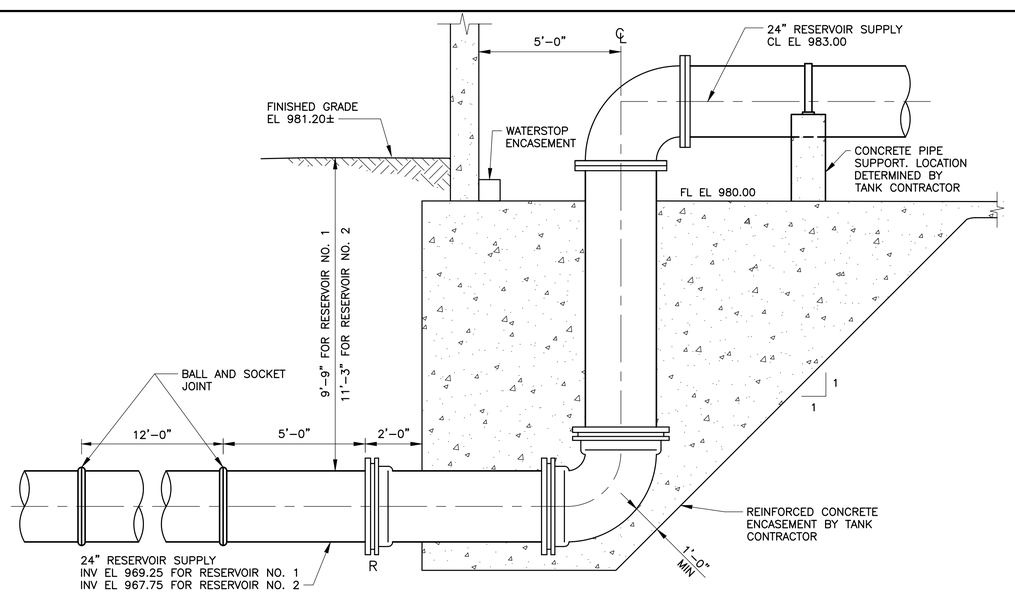


## 1 RESERVOIR SUPPLY DETAIL

NOT TO SCALE

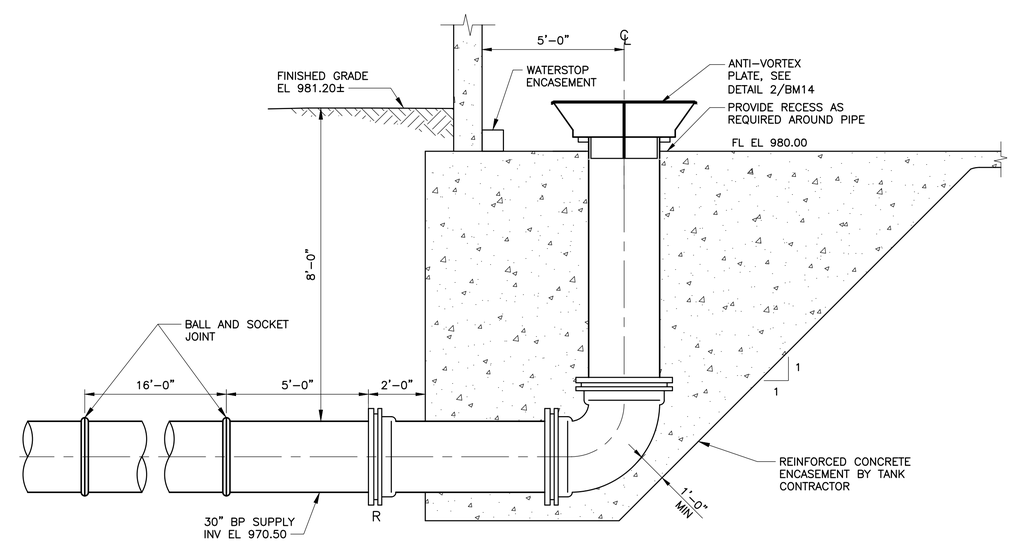


## 2 BP SUPPLY DETAIL

NOT TO SCALE

20 0 20 40 FT

1"=20'

DRAFT 98% PROGRESS DRAWINGS

OCTOBER 2019

| NO. | DATE | APPD | REVISION |
|---|---|---|---|

Waukesha Water Utility
SERVING WAUKESHA SINCE 1886

GREELEY AND HANSEN
741 N. GRAND AVE, SUITE 308
WAUKESHA, WI 53186

GREAT WATER ALLIANCE™

CONTRACT PACKAGE 3: BOOSTER PUMPING STATION AND WATER SUPPLY CONTROL BUILDING

RESERVOIR PIPING PLAN

APPROVED

SEAL AFFIXED
MONTH / DAY / YEAR

OCTOBER 2019

JOB NO.: 15310

| DESGN | LAM | CHCK | RMC |
|---|---|---|---|
| APPRV | AJM | DRWN | LG |
| SCALE: | AS SHOWN | | |

DRAWING NUMBER

BM16

SHEET 110 OF 184 | REV 0

FILE: \\GH-DATA01\CLIENT02\15310-WAUKESHA GREAT LAKES WATER SUPPLY PM-CM\21 CADD\21.05 WORKING DWGS\CONTRACT PACKAGE 3 - BPSF\GLWSP-P3-BPSF-BM16.DWG

BAR MEASURE 1" ON FULLSIZE SHEETS
07/25/2019 10:11:57 AM
FILE: \\GH-DATA01\CLIENT02\15310-WAUKESHA GREAT LAKES WATER SUPPLY PM-CM\21 CADD\21.05 WORKING DWGS\CONTRACT PACKAGE 3 - BPSF\GLWSP-P3-BPSF-BM17.DWG

NOTES:
1. PIPE SUPPORTS INTENTIONALLY NOT SHOWN. TANK CONTRACTOR SHALL DESIGN AND PROVIDE PIPE SUPPORTS AS REQUIRED.

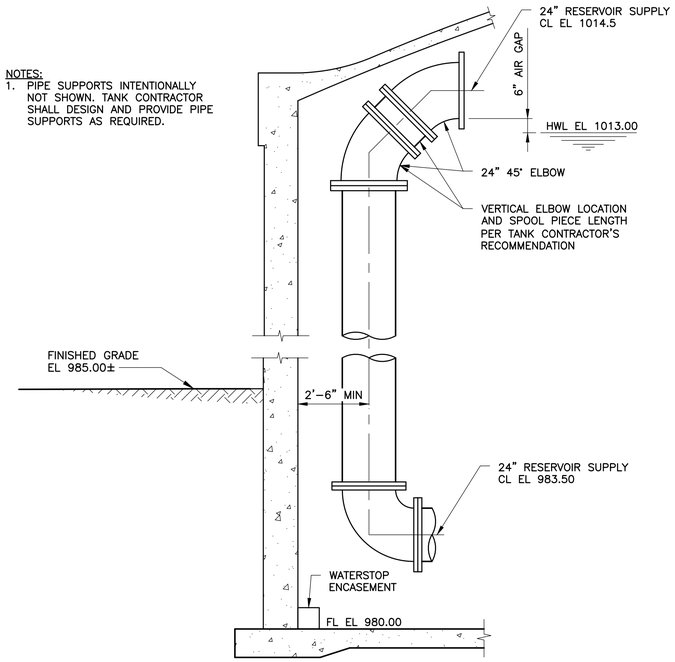


## 1 RESERVOIR AIR BREAK DETAIL
NOT TO SCALE

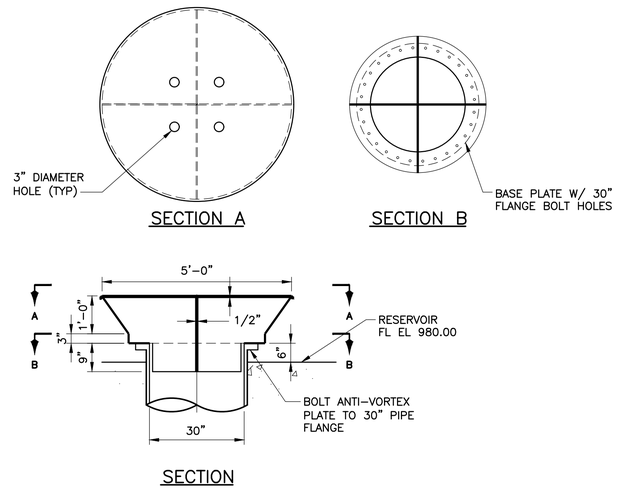


NOTES:
1. ANTI-VORTEX PLATE SHALL BE FABRICATED FROM ¼" 316 SS.
2. ALL PIECES SHALL BE SHOP FABRICATED. WELDS SHALL BE PICKLED AND PASSIVATED.

## 2 ANTI-VORTEX PLATE DETAIL
NOT TO SCALE

NOTES:
1. TANK CONTRACTOR SHALL COORDINATE WITH MIXING SYSTEM MANUFACTURER FOR MIXING HEADER PIPING AND PIPE SUPPORTS.
2. 6" MIXING HEADER CL ELEVATION DETERMINED BY MIXING SYSTEM MANUFACTURER.

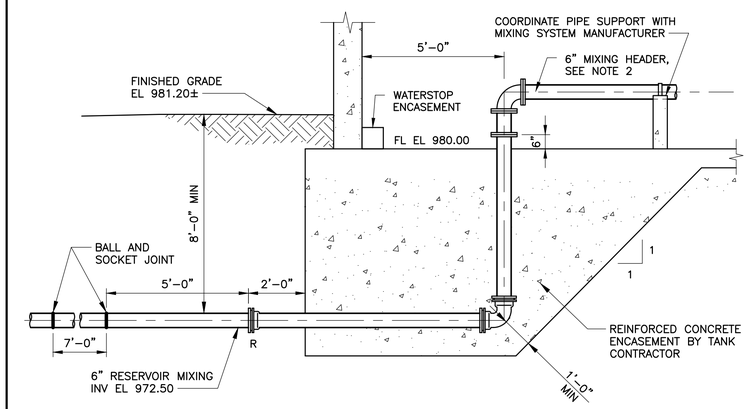


## 3 RESERVOIR MIXING DETAIL
NOT TO SCALE

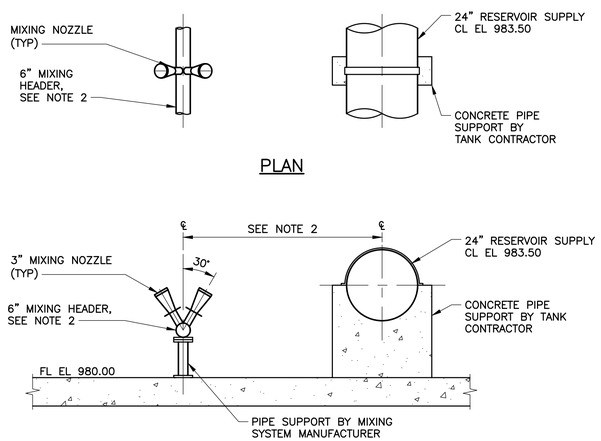


NOTES:
1. CONCRETE PIPE SUPPORT FOR 24" RESERVOIR SUPPLY SHOWN FOR ORIENTATION PURPOSE. NUMBER, SIZE, AND LOCATION DETERMINED BY TANK CONTRACTOR.
2. 6" MIXING HEADER CL ELEVATION AND DISTANCE FROM 24" RESERVOIR SUPPLY DETERMINED BY MIXING SYSTEM MANUFACTURER.

## 4 RESERVOIR PIPING DETAIL
NOT TO SCALE

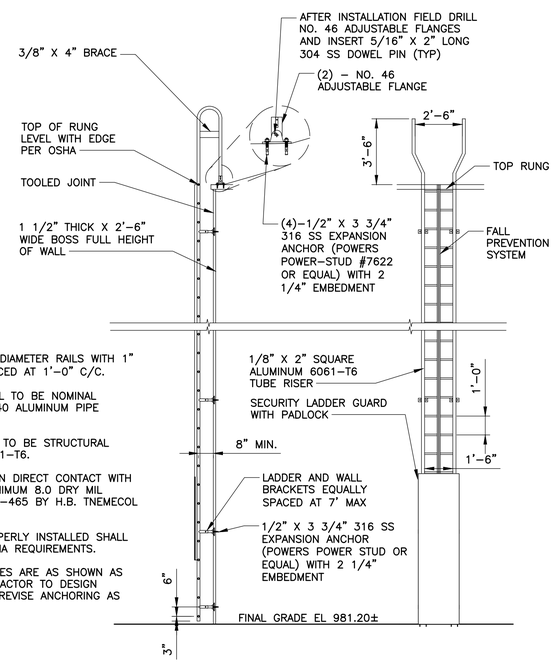


NOTES:
1. LADDER HAS 1–1/2" DIAMETER RAILS WITH 1" DIAMETER RUNGS SPACED AT 1'–0" C/C.
2. ALL TUBULAR MATERIAL TO BE NOMINAL DIAMETER SCHEDULE 40 ALUMINUM PIPE 6061–T6.
3. PLATES AND GUSSETS TO BE STRUCTURAL GRADE ALUMINUM 6061–T6.
4. COAT ALL ALUMINUM IN DIRECT CONTACT WITH CONCRETE WITH A MINIMUM 8.0 DRY MIL THICKNESS SERIES 46–465 BY H.B. TNEMECOL OR EQUAL.
5. ALL RAILS WHEN PROPERLY INSTALLED SHALL MEET OR EXCEED OSHA REQUIREMENTS.
6. ALL ANCHORING DEVICES ARE AS SHOWN AS MINIMUM. TANK CONTRACTOR TO DESIGN LADDER SYSTEM AND REVISE ANCHORING AS NECESSARY.

## 5 EXTERIOR LADDER DETAIL
NOT TO SCALE

NOTES:
1. 1/4" X 2" FLAT BAR FIBERGLASS CROSS BRACE TO BE PROVIDED FOR BRACING WALL BRACKET SUPPORTS ON EVERY BRACKET.
2. TANK WALL SUPPORT FOR LADDER TO BE ADDED AS REQUIRED BY TANK CONTRACTOR.
4. COAT ALL ALUMINUM IN DIRECT CONTACT WITH CONCRETE WITH A MINIMUM 8.0 DRY MIL THICKNESS SERIES 46–465 BY H.B. TNEMECOL OR EQUAL.
5. ALL RAILS WHEN PROPERLY INSTALLED SHALL MEET OR EXCEED OSHA REQUIREMENTS.
6. ALL ANCHORING DEVICES ARE AS SHOWN AS MINIMUM. TANK CONTRACTOR TO DESIGN LADDER SYSTEM AND REVISE ANCHORING AS NECESSARY.

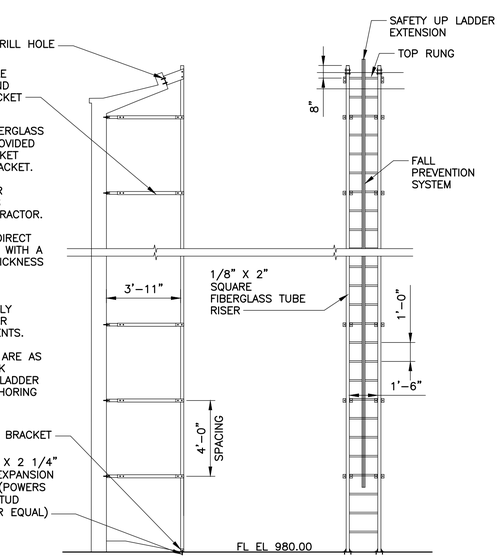


## 6 INTERIOR LADDER DETAIL
NOT TO SCALE

DRAFT 98% PROGRESS DRAWINGS
OCTOBER 2019

| NO. | DATE | APPD | REVISION |
|---|---|---|---|

Waukesha Water Utility
SERVING WAUKESHA SINCE 1886

GREELEY AND HANSEN
741 N. GRAND AVE, SUITE 308
WAUKESHA, WI 53186

GREAT WATER ALLIANCE™

CONTRACT PACKAGE 3: BOOSTER PUMPING STATION AND WATER SUPPLY CONTROL BUILDING

RESERVOIR SECTIONS AND DETAILS

APPROVED

SEAL AFFIXED
MONTH / DAY / YEAR

OCTOBER 2019

JOB NO.: 15310

| | | | |
|---|---|---|---|
| DESGN | LAM | CHCK | RMC |
| APPRV | AJM | DRWN | LG |

SCALE: NOT TO SCALE

DRAWING NUMBER

BM17

SHEET 119 OF 184 | REV 0

BAR MEASURE 1" ON FULLSIZE SHEETS



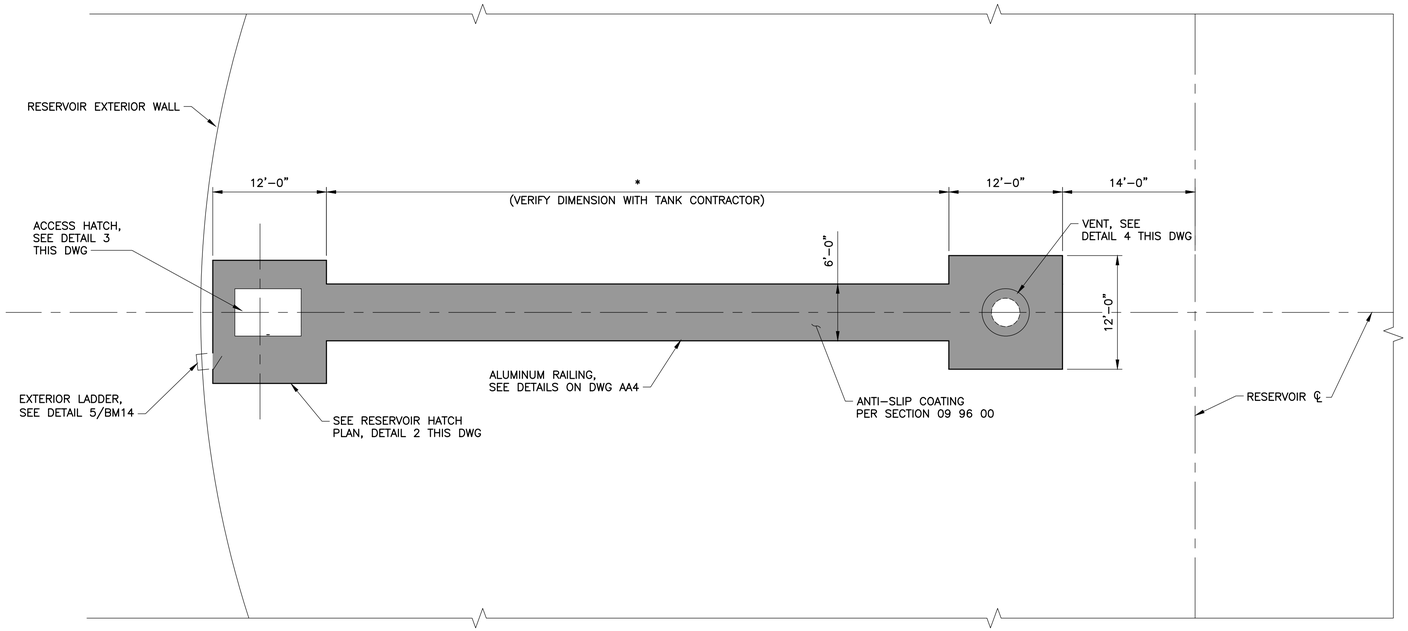


1 RESERVOIR ROOF PLAN
NOT TO SCALE

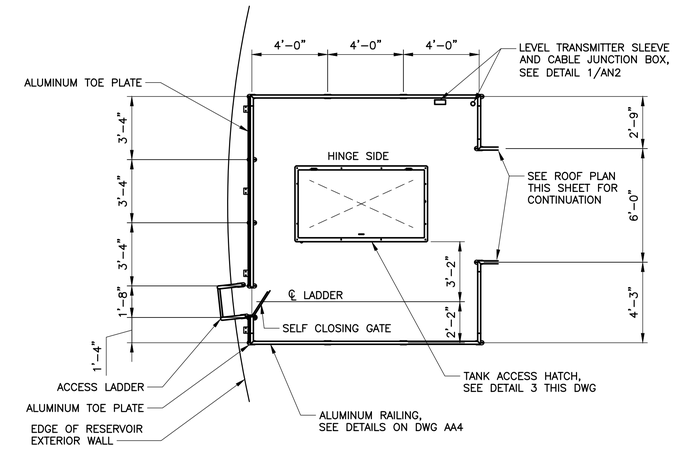


2 RESERVOIR HATCH PLAN
NOT TO SCALE

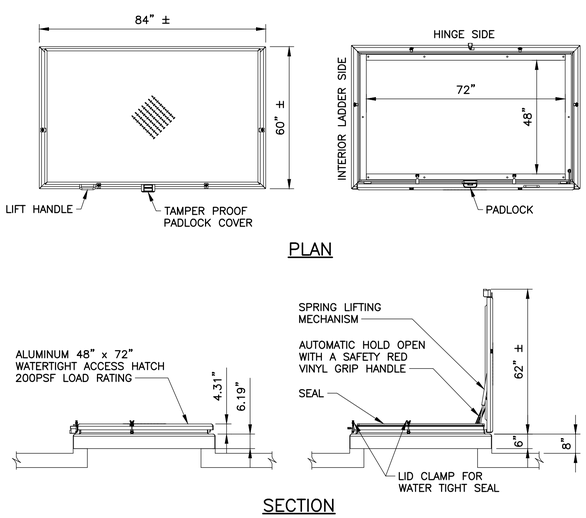


NOTE:
1. ALL SURFACES IN CONTACT WITH CONCRETE WILL BE COATED PER SECTION 09 96 00.

3 RESERVOIR ACCESS HATCH DETAIL
NOT TO SCALE

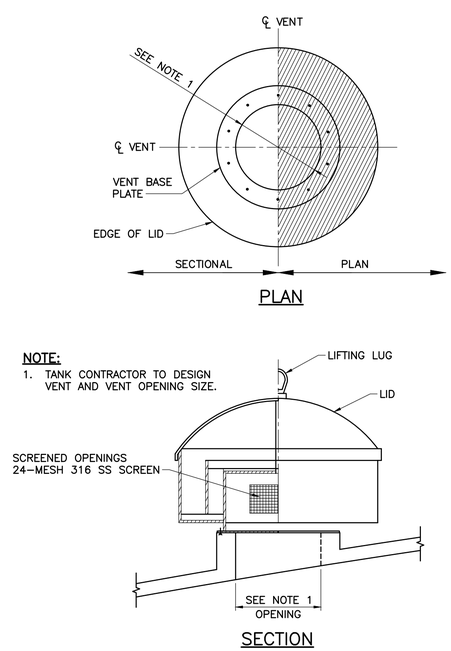


4 RESERVOIR VENT DETAIL
NOT TO SCALE

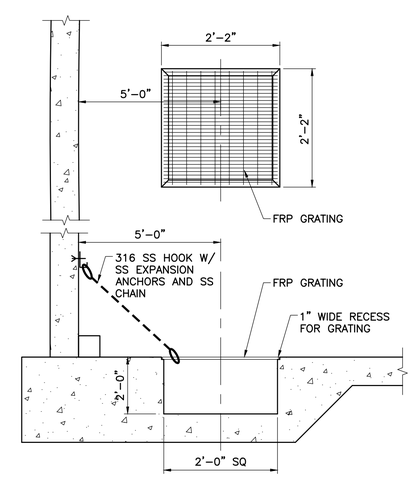


5 RESERVOIR SUMP DETAIL
NOT TO SCALE

DRAFT 98% PROGRESS DRAWINGS
OCTOBER 2019

| NO. | DATE | APPD | REVISION |
|---|---|---|---|

Waukesha Water Utility
SERVING WAUKESHA SINCE 1886

GREELEY AND HANSEN
741 N. GRAND AVE, SUITE 308
WAUKESHA, WI 53186

GREAT WATER ALLIANCE™

CONTRACT PACKAGE 3: BOOSTER PUMPING STATION AND WATER SUPPLY CONTROL BUILDING

RESERVOIR SECTIONS AND DETAILS

APPROVED

SEAL AFFIXED
MONTH / DAY / YEAR

OCTOBER 2019

JOB NO.: 15310

| | | | |
|---|---|---|---|
| DESGN | LAM | CHCK | RMC |
| APPRV | AJM | DRWN | TSM |
| SCALE: | AS SHOWN | | |

DRAWING NUMBER

BM18

SHEET 120 OF 184 | REV 0

FILE: \\GH-DATA01\CLIENT02\15310-WAUKESHA GREAT LAKES WATER SUPPLY PM-CM\21 CADD\21.05 WORKING DWGS\CONTRACT PACKAGE 3 - BPSF\GLWSP-P3-BPSF-BM18.DWG

BAR MEASURE 1" ON FULLSIZE SHEETS

07/25/2019 10:11:51 AM

FILE: \\GH-DATA01\CLIENT02\15310-WAUKESHA GREAT LAKES WATER SUPPLY PM-CM\21 CADD\21.05 WORKING DWGS\CONTRACT PACKAGE 3 - BPSF\GLWSP-P3-BPSF-BM19.DWG

NOTES:
1. TANK CONTRACTOR SHALL SIZE OVERFLOW PIPE AND WEIR TO ACCOMMODATE 15MGD.
2. PIPE SUPPORTS INTENTIONALLY NOT SHOWN. TANK CONTRACTOR SHALL DESIGN AND PROVIDE PIPE SUPPORTS AS REQUIRED.
3. DETAILS OF PIPE PENETRATION THROUGH TANK WALL INTENTIONALLY NOT SHOWN. TANK MANUFACTURER SHALL DESIGN AND PROVIDE PIPE PENETRATION AS REQUIRED.
4. EXTERIOR PORTION OF OVERFLOW PIPE TO BE SUPPORTED BY TANK WALL AS REQUIRED.
5. TAP 2" CONNECTION TO OVERFLOW PIPE. PROVIDE 2" ISOLATION BALL VALVE AND QUICK DISCONNECT CONNECTION TO CONNECT PORTABLE DEWATERING PUMP DISCHARGE PIPE. ROUTE AND LOCATE BALL VALVE AND QUICK CONNECT 4' ABOVE SUMP.

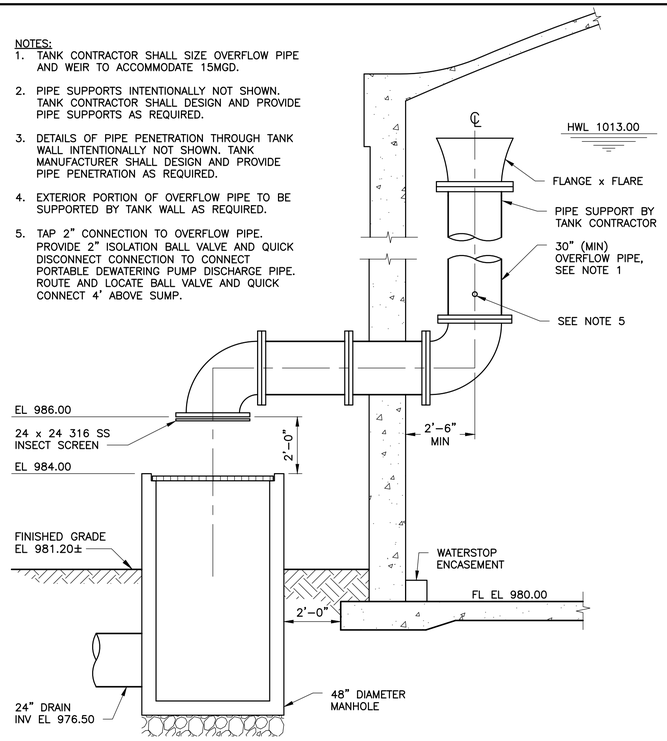


1 RESERVOIR NO. 1 OVERFLOW DETAIL
NOT TO SCALE

NOTES:
1. TANK CONTRACTOR SHALL SIZE OVERFLOW PIPE AND WEIR TO ACCOMMODATE 15MGD.
2. PIPE SUPPORTS INTENTIONALLY NOT SHOWN. TANK CONTRACTOR SHALL DESIGN AND PROVIDE PIPE SUPPORTS AS REQUIRED.
3. DETAILS OF PIPE PENETRATION THROUGH TANK WALL INTENTIONALLY NOT SHOWN. TANK CONTRACTOR SHALL DESIGN AND PROVIDE PIPE PENETRATION AS REQUIRED.
4. EXTERIOR PORTION OF OVERFLOW PIPE TO BE SUPPORTED BY TANK WALL AS REQUIRED.
5. TAP 2" CONNECTION TO OVERFLOW PIPE. PROVIDE 2" ISOLATION BALL VALVE AND QUICK DISCONNECT CONNECTION TO CONNECT PORTABLE DEWATERING PUMP DISCHARGE PIPE. ROUTE AND LOCATE BALL VALVE AND QUICK CONNECT 4' ABOVE SUMP.

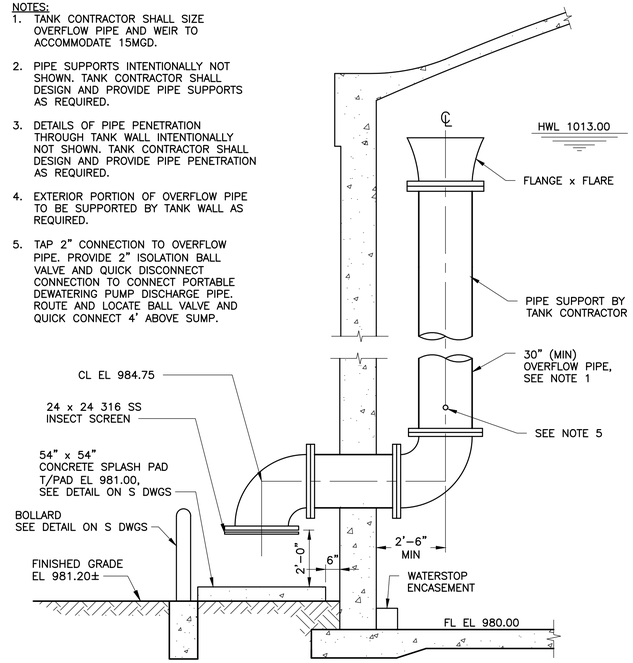


2 RESERVOIR NO. 2 OVERFLOW DETAIL
NOT TO SCALE

NOTES:
1. UNDERDRAIN MANUFACTURER TO SUPPLY DETAILED SHOP DRAWINGS.
2. RESERVOIR DETAILS SHOWN FOR REFERENCE ONLY. TANK CONTRACTOR RESPONSIBLE FOR DESIGN OF THESE COMPONENTS.

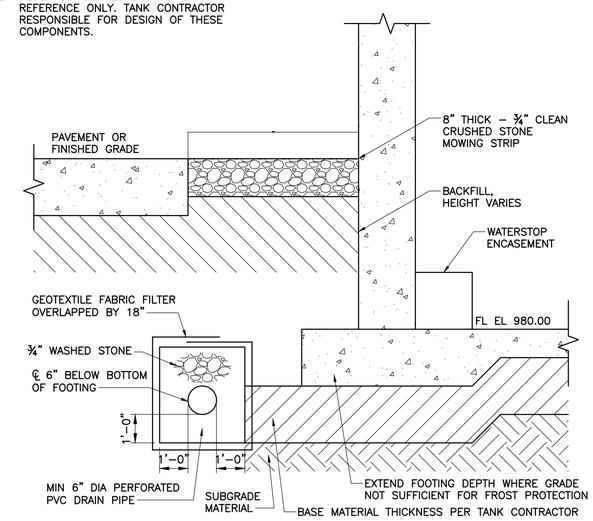


3 UNDERDRAIN DETAIL
NOT TO SCALE

DRAFT 98% PROGRESS DRAWINGS
OCTOBER 2019

| NO. | DATE | APPD | REVISION |
|---|---|---|---|

Waukesha Water Utility
SERVING WAUKESHA SINCE 1886

GREELEY AND HANSEN
741 N. GRAND AVE, SUITE 308
WAUKESHA, WI 53186

GREAT WATER ALLIANCE™

CONTRACT PACKAGE 3: BOOSTER PUMPING STATION AND WATER SUPPLY CONTROL BUILDING

RESERVOIR SECTIONS AND DETAILS

APPROVED

SEAL AFFIXED
MONTH / DAY / YEAR

OCTOBER 2019

JOB NO.: 15310

| | | | |
|---|---|---|---|
| DESGN | LAM | CHCK | RMC |
| APPRV | AJM | DRWN | TSM |

SCALE: AS SHOWN

DRAWING NUMBER

BM19

SHEET 121 OF 184 | REV 0

## MAKE-UP AIR HANDLING UNITS (GAS)

| UNIT I.D. | AREA(S) SERVED | LOCATION | TYPE | IN / OUT (MBH) | TEMP RISE (°F) | FAN TYPE / DISCH | FAN DIA / NO | FAN CFM / RPM | FAN EXT SP ("H2O) | FAN TOTAL SP ("H2O) | AIR EAT DB / LAT DB (°F) | MOTOR HP / MCA | MOTOR V/PH/HZ | MOTOR TYPE / DRIVE | BURNER FUEL TYPE | FILTERS ARRGT / SIZE | MANUFACTURER MODEL NO. | REMARKS/ NOTES |
|---|---|---|---|---|---|---|---|---|---|---|---|---|---|---|---|---|---|---|
| MAU-1 | CHEMICAL ROOMS 1, 2, 3 | MECHANICAL ROOM | INDIRECT FIRED | 150 120 | 60 | CENT HORIZ | 12 3 | 2,000 928 | 1.00 | 1.10 | -10 50 | 1 6.65 | 460/3/60 | TEFC BELT | NG | PERMINANT WASHABLE "1 | TRANE GGAA15PDG | 1, 2, 3, 4, 5 |

NOTES: 1. OUTDOOR AIR DAMPER (LOW LEAKAGE) 2. FM/IRI GAS TRAIN 3. 10:1 TURNDOWN RATIO 4. POWER VENTING 5. CORROSION RESISTANT COATING (HERESITE) IN/OUT

## AIR CONDITIONING UNITS (SPLIT SYSTEM)

| UNIT I.D. | LOCATION | AREA(S) SERVED | TYPE | SUPPLY FAN TYPE / DISCH | SUPPLY FAN BHP / CLASS | SUPPLY FAN CFM / RPM | SUPPLY FAN EXT SP (" H20) | SUPPLY FAN MOTOR HP | SUPPLY FAN MOTOR RPM | SUPPLY FAN MOTOR TYPE / DRIVE | EVAPORATOR COIL EAT (DB/WB) | EVAPORATOR COIL MBH / TONS | EVAPORATOR COIL VEL (FPM) | HEATING MBH / KW | HEATING CONTROL | ELECTRICAL V/PH/HZ | ELECTRICAL MCA | FILTERS ARRGT / SIZE | MANUFACTURER MODEL NO. | REMARKS/ NOTES |
|---|---|---|---|---|---|---|---|---|---|---|---|---|---|---|---|---|---|---|---|---|
| ACU-1 | MECHANICAL ROOM | ELECTRICAL ROOM | FLOOR MOUNTED INDOOR | FRONT TOP | 4.6 | 6,000 | 1.50 | 5.00 | 1709 | DIRECT | 80/67 55/54.03 | 240 15 | 488 | -- | -- | 460/3/60 | 8.38 | PLEATED MERV 8 16x20 | TRANE PERFORMANCE CLIMATE CHANGER | -- |
| ACU-2 | MECHANICAL ROOM | ELECTRICAL ROOM | FLOOR MOUNTED INDOOR | FRONT TOP | 4.6 | 6,000 | 1.50 | 5.00 | 1709 | DIRECT | 80/67 55/54.03 | 240 15 | 488 | -- | -- | 460/3/60 | 8.38 | PLEATED MERV 8 16x20 | TRANE PERFORMANCE CLIMATE CHANGER | 100% STAND-BY UNIT |
| ACU-3A | I&C ROOM | I&C ROOM | WALL MOUNTED INDOOR | -- | -- | 330 | -- | -- | -- | -- | 80/67 55/54.03 | 7 0.5 | -- | 7 | THERMOSTAT | 208/1/60 | 21.9 | TI. APATITE PHOTO CATALYTIC | DAIKIN CTXS07LVJU | 4, 5 |
| ACU-3B | SAMPLING ROOM | SAMPLING ROOM | WALL MOUNTED INDOOR | -- | -- | 330 | -- | -- | -- | -- | 80/67 55/54.03 | 7 0.5 | -- | 7 | THERMOSTAT | 208/1/60 | 21.9 | TI. APATITE PHOTO CATALYTIC | DAIKIN CTXS07LVJU | 4, 5 |

NOTES: 1. INERTIAL PAD W/ VIBRATION ISOLATION 2. CORROSION RESISTANT COATING (HERESITE) IN/OUT 3. ALL NEMA-4X ELECTRICAL. 4. WALL MOUNTED THERMOSTAT 5. INLINE CONDENSATE PUMP

## AIR COOLED CONDENSING UNITS (SPLIT SYSTEM)

| UNIT I.D. | LOCATION | SYSTEM AREA SERVED | AMBIENT TEMP. (ºF) | SUCTION TEMP. (ºF) | MBH TONS | REFRIG TYPE | CONDENSER NO. FANS | CONDENSER CFM / RPM EA | CONDENSER HP EA | ELECTRICAL V/PH/HZ | ELECTRICAL MCA | MANUFACTURER MODEL NO. | REMARKS/ NOTES |
|---|---|---|---|---|---|---|---|---|---|---|---|---|---|
| ACCU-1 | OUTSIDE | ACU-1 ELECTRICAL ROOM | 95 | 45 | 182 15 | R-410A | 2 | 1100 | 1 | 480/3/60 | 67.0 | TRANE TTA18043C | 1, 2, 4 |
| ACCU-2 | OUTSIDE | ACU-2 ELECTRICAL ROOM | 95 | 45 | 182 15 | R-410A | 2 | 1100 | 1 | 480/3/60 | 67.0 | TRANE TTA18043C | 1, 2, 4 |
| ACCU-3 | OUTSIDE | ACU-3A AND ACU-3B I&C AND SAMPLING ROOM | 95 | 47 | 24 2 | R-410A | 1 | 2100 | 0.1 | 208/1/60 | 21.9 | DAIKIN 3MXS24RMVJU | 1, 2, 3 |

NOTES: 1. NOISE LEVEL NOT TO EXCEED 68 DECIBEL AT FIVE (5) FEET 2. WITH NEMA 4X STAINLESS STEEL DISCONNECT SWITCH 3. LOW AMBIENT ACCESSORY (-13°F) 4. LOW AMBIENT ACCESSORY (0°F)

## UNIT HEATERS (GAS)

| UNIT I.D. | LOCATION | AREA SERVED | TYPE | MTG. HGT. (FT) | HEATER MBH INPUT | HEATER MBH OUTPUT | HEATER FUEL TYPE | FAN HP | FAN CFM | FAN RPM | FAN V/PH/HZ | MANUFACTURER MODEL NO. | REMARKS/ NOTES |
|---|---|---|---|---|---|---|---|---|---|---|---|---|---|
| GUH-1 | BOOSTER PUMPING STATION | PUMPING ROOM | FAN POWER VENTED | 8 MIN 10 MAX | 25 | 20.0 | NG | 1/6 | 410 | 1650 | 115/1/60 | REZNOR B SERIES | 1 |
| GUH-2 | BOOSTER PUMPING STATION | PUMPING ROOM | FAN POWER VENTED | 8 MIN 10 MAX | 25 | 20.0 | NG | 1/6 | 410 | 1650 | 115/1/60 | REZNOR B SERIES | 1 |
| GUH-3 | BOOSTER PUMPING STATION | PUMPING ROOM | FAN POWER VENTED | 8 MIN 10 MAX | 25 | 20.0 | NG | 1/6 | 410 | 1650 | 115/1/60 | REZNOR B SERIES | 1 |
| GUH-4 | BOOSTER PUMPING STATION | PUMPING ROOM | FAN POWER VENTED | 8 MIN 10 MAX | 25 | 20.0 | NG | 1/6 | 410 | 1650 | 115/1/60 | REZNOR B SERIES | 1 |

NOTES: 1. WALL MOUNTED THERMOSTAT

## DEHUMIDIFIERS

| QTY. | UNIT I.D. | LOCATION | TYPE | FAN CFM | UNIT M.R. PPD @ 80F, 60% RH | ELECTRICAL V/PH/HZ | ELECTRICAL TOT KW | ELECTRICAL AMPS | MANUFACTURER MODEL NO. | REMARKS/ NOTES |
|---|---|---|---|---|---|---|---|---|---|---|
| 20 | DEH-B | BOOSTER PUMPING STATION | PORTABLE PACKAGED | 610 | 195 | 115/1/60 | 1.5 | 13.1 | QUEST HI-E DRY 195 | 1, 2, 3, 4, 5, 6, 7 |

NOTES: 1. DIGITAL DEHUMIDISTAT CONTROL 2. INTERNAL CONDENSATE PUMP 3. 33' CONDENSATE HOSE 4. 115 V PLUG 5. 6' POWER CORD 6. R-410A REFRIGERANT 7.PORTABLE WITH CASTERS

## GRAVITY ROOF VENTILATORS

| UNIT I.D. | LOCATION | AREA(S) SERVED | TYPE | CFM | HEIGHT (IN) | THROAT OPENING (IN W x L) | MANUFACTURER MODEL NO. | REMARKS/ NOTES |
|---|---|---|---|---|---|---|---|---|
| GV-1 | BOOSTER PUMPING STATION | CHEMICAL ROOM NO. 1 | LOUVERED PENTHOUSE | 900 | 12.25 | 12 x 22 | GREENHECK WRH | 1, 2, 3 |
| GV-2 | BOOSTER PUMPING STATION | CHEMICAL ROOM NO. 2 | LOUVERED PENTHOUSE | 550 | 12.25 | 12 x 14 | GREENHECK WRH | 1, 2, 3 |
| GV-3 | BOOSTER PUMPING STATION | CHEMICAL ROOM NO. 3 | LOUVERED PENTHOUSE | 550 | 12.25 | 12 x 14 | GREENHECK WRH | 1, 2, 3 |
| GV-4 | BOOSTER PUMPING STATION | MECHANICAL ROOM | LOUVERED PENTHOUSE | 1,000 | 12.25 | 12 x 24 | GREENHECK WRH | 1, 2, 3 |
| GV-5 | BOOSTER PUMPING STATION | TOILET, JANITOR | LOUVERED PENTHOUSE | 150 | 12.25 | 12 x 12 | GREENHECK WRH | 1, 2, 3 |

NOTES: 1. KYNAR PAINT FINISH 2. 12" ROOF CURB 3. INSECT SCREEN

## BASEBOARD HEATERS (ELECTRIC)

| UNIT I.D. | LOCATION | TYPE | HEATER MBH KW | HEATER HEIGHT (IN) | HEATER DEPTH (IN) | HEATER LENGTH (FT) | HEATER V/PH/HZ | MANUFACTURER MODEL NO. | REMARKS/ NOTES |
|---|---|---|---|---|---|---|---|---|---|
| EBH-1 | SAMPLING ROOM | WALL MOUNTED FLUSH WITH FLOOR | 10.24 3.00 | 5.83 | 2.53 | 1.90 | 120/1/60 | REZNOR EBHB AK1E | 1 |
| EBH-2 | I&C ROOM | WALL MOUNTED FLUSH WITH FLOOR | 10.24 3.00 | 5.83 | 2.53 | 1.90 | 120/1/60 | REZNOR EBHB AK1E | 1 |

NOTES: 1. BUILT IN THERMOSTAT

DRAFT 98% PROGRESS DRAWINGS
OCTOBER 2019

| NO. | DATE | APPD | DESCRIPTION |
|---|---|---|---|

Waukesha Water Utility
SERVING WAUKESHA SINCE 1886

GREELEY AND HANSEN
741 N. GRAND AVE. SUITE 308
WAUKESHA, WI 53186

GREAT WATER ALLIANCE™

CONTRACT PACKAGE 3: BOOSTER PUMPING STATION AND WATER SUPPLY CONTROL BUILDING

SCHEDULES

APPROVED

SEAL AFFIXED
MONTH / DAY / YEAR

OCTOBER 2019

JOB NO.: 15310
DESGN NH CHCK BW
APPRV JD DRWN GS/ML
SCALE: NO SCALE

DRAWING NUMBER

BH1

SHEET 122 OF 184 REV 0

10/2/2019 10:09:24 AM
BAR MEASURE 1" ON FULLSIZE SHEETS
FILE: C:\Users\lgreen\Documents\GLWSP-P3-BPSF-GAMHPNE_lgreen.rvt

## FANS

| UNIT I.D. | LOCATION | AREA(S) SERVED | TYPE | FAN TYPE ROT. DISCH. | FAN DIA ARRGT CLASS | FAN CFM (HIGH) (LOW) | FAN RPM (HIGH) (LOW) | FAN EXT SP ("H20) | MOTOR BHP | MOTOR HP | MOTOR RPM | MOTOR V/PH/HZ | MOTOR TYPE DRIVE | MANUFACTURER MODEL NO. | REMARKS/ NOTES |
|---|---|---|---|---|---|---|---|---|---|---|---|---|---|---|---|
| EAF-1 | CHEMICAL ROOM NO. 1 | CHEMICAL ROOM NO. 1 | INLINE | CENT. | 10.0 | 900 | 851 | 0.50 | 0.19 | 1/2 | 1725 | 460/3/60 | BELT | GREENHECK 10-BCSW-FRP-10-I-5 | 1, 3, 4, 6 |
| EAF-2 | CHEMICAL ROOM NO. 2 | CHEMICAL ROOM NO. 2 | INLINE | CENT. | 10.0 | 550 | 723 | 0.50 | 0.12 | 1/2 | 1725 | 460/3/60 | BELT | GREENHECK 10-BCSW-FRP-10-I-5 | 1, 3, 4, 6 |
| EAF-3 | CHEMICAL ROOM NO. 3 | CHEMICAL ROOM NO. 3 | INLINE | CENT. | 10.0 | 550 | 700 | 0.50 | 0.12 | 1/2 | 1725 | 460/3/60 | BELT | GREENHECK 10-BCSW-FRP-10-I-5 | 1, 3, 4, 6 |
| EAF-4 | PUMPING ROOM | PUMPING ROOM | INLINE | CENT. | 44.0 | 10,000 | 1134 | 1.00 | 5.00 | 7 1/2 | 1725 | 460/3/60 | BELT | GREENHECK TCB-2-24-75 | 2, 3, 4, 5 |
| EAF-5 | PUMPING ROOM | PUMPING ROOM | INLINE | CENT. | 44.0 | 10,000 | 1134 | 1.00 | 5.00 | 7 1/2 | 1725 | 460/3/60 | BELT | GREENHECK TCB-2-24-75 | 2, 3, 4, 5 STAND-BY |
| EAF-6 | MECHANICAL ROOM | MECHANICAL ROOM | INLINE | CENT. | 23.0 | 4,000 | 1505 | 0.50 | 1.29 | 2 | 1725 | 460/3/60 | BELT | GREENHECK BSQ-160-20 | 2, 3, 4, 5 |
| EAF-7 | MECHANICAL ROOM | MECHANICAL ROOM | INLINE | CENT. | 12.0 | 1,000 | 1969 | 0.50 | 0.44 | 3/4 | 1725 | 460/3/60 | BELT | GREENHECK BSQ-90-7 | 2, 3, 4, 5 |
| EAF-8 | TOILET AND JANITOR | TOILET AND JANITOR | INLINE | CENT. | 12.00 | 150 | 1395 | 0.20 | 0.09 | 1/2 | 2500 | 208/1/60 | DIRECT | GREENHECK SQ-97-VG | 2, 3, 4, 5 |
| EAF-9 | PUMPING ROOM BASEMENT | PUMPING ROOM BASEMENT | INLINE | CENT. | 12.00 | 1,200 | 2257 | 0.50 | 0.65 | 3/4 | 1725 | 460/3/60 | BELT | GREENHECK BSQ-90-7 | 2, 3, 4, 5 |
| EAF-10 | FIRE PROTECTION ROOM | FIRE PROTECTION ROOM | INLINE | CENT. | 12.00 | 350 | 2129 | 0.50 | 0.36 | 1/2 | 1725 | 460/3/60 | BELT | GREENHECK BSQ-70-5 | 2, 3, 4, 5 |
| RAF-1 | MECHANICAL ROOM | ELECTRICAL ROOM | INLINE | CENT. | 35.0 | 6,000 | 1090 | 1.00 | 2.51 | 3 | 1725 | 460/3/60 | BELT | GREENHECK BSQ-240HP-30 | 2, 3, 4, 5 |
| RAF-2 | MECHANICAL ROOM | ELECTRICAL ROOM | INLINE | CENT. | 35.0 | 6,000 | 1090 | 1.00 | 2.51 | 3 | 1725 | 460/3/60 | BELT | GREENHECK BSQ-240HP-30 | 2, 3, 4, 5 STAND-BY |

NOTES: 1. FRP FAN 2. CORROSION RESISTANT COATING (HERESITE) IN/OUT 3. WITH HANGERS AND VIBRATION ISOLATORS 4. MOTORIZED DAMPER 5. WITH NEMA 12 DISCONNECT SWITCH 6. WITH NEMA 4X DISCONNECT SWITCH

## UNIT HEATERS (ELECTRIC)

| UNIT I.D. | LOCATION | AREA(S) SERVED | TYPE | MTG. HGT. (FT) | HEATER MBH KW | HEATER TEMP. RISE | FAN HP | FAN CFM | FAN RPM | FAN V/PH/HZ | MANUFACTURER MODEL NO. | REMARKS/ NOTES |
|---|---|---|---|---|---|---|---|---|---|---|---|---|
| EUH-1 | MECHANICAL ROOM | MECHANICAL ROOM | HORIZ. | 9 | 14.0 4.0 | 25 | 1/30 | 510 | 1550 | 480/3/60 | REZNOR EGHB4AK7E | 1 |
| EUH-2 | MECHANICAL ROOM | MECHANICAL ROOM | HORIZ. | 9 | 14.0 4.0 | 25 | 1/30 | 510 | 1550 | 480/3/60 | REZNOR EGHB4AK7E | 1 |
| EUH-3 | ELECTRICAL ROOM | ELECTRICAL ROOM | HORIZ. | 9 | 7.0 2.0 | 13 | 1/30 | 510 | 1550 | 480/3/60 | REZNOR EGHB2AK7E | 1 |
| EUH-4 | ELECTRICAL ROOM | ELECTRICAL ROOM | HORIZ. | 9 | 7.0 2.0 | 13 | 1/30 | 510 | 1550 | 480/3/60 | REZNOR EGHB2AK7E | 1 |
| EUH-5 | STAIR B | STAIR B | HORIZ. | 9 | 7.0 2.0 | 13 | 1/30 | 510 | 1550 | 480/3/60 | REZNOR EGHB2AK7E | 1 |
| EUH-6 | FIRE PROTECTION ROOM | FIRE PROTECTION ROOM | HORIZ. | 9 | 10.0 3.0 | 18 | 1/30 | 510 | 1550 | 480/3/60 | REZNOR EGHB3AK7E | 1 |
| EUH-7 | CHEMICAL ROOM NO. 3 | CHEMICAL ROOM NO. 3 | HORIZ. | 9 | 7.0 2.0 | 13 | 1/30 | 510 | 1550 | 480/3/60 | REZNOR EGHB2AK7E | 1, 2 |
| EUH-8 | CHEMICAL ROOM NO. 3 | CHEMICAL ROOM NO. 3 | HORIZ. | 9 | 7.0 2.0 | 13 | 1/30 | 510 | 1550 | 480/3/60 | REZNOR EGHB2AK7E | 1, 2 |
| EUH-9 | CHEMICAL ROOM NO. 2 | CHEMICAL ROOM NO. 2 | HORIZ. | 9 | 14.0 4.0 | 25 | 1/30 | 510 | 1550 | 480/3/60 | REZNOR EGHB4AK7E | 1, 2 |
| EUH-10 | CHEMICAL ROOM NO. 1 | CHEMICAL ROOM NO. 1 | HORIZ. | 9 | 17.0 5.0 | 23 | 1/30 | 510 | 1550 | 480/3/60 | REZNOR EGHB5AK7E | 1, 2 |
| EUH-11 | STAIR A | STAIR A | HORIZ. | 9 | 7.0 2.0 | 13 | 1/30 | 510 | 1550 | 480/3/60 | REZNOR EGHB2AK7E | 1 |
| EUH-12 | BASEMENT | BASEMENT | HORIZ. | 9 | 7.0 2.0 | 13 | 1/30 | 510 | 1550 | 480/3/60 | REZNOR EGHB2AK7E | 1 |
| EUH-13 | BASEMENT | BASEMENT | HORIZ. | 9 | 7.0 2.0 | 13 | 1/30 | 510 | 1550 | 480/3/60 | REZNOR EGHB2AK7E | 1 |
| EUH-14 | BASEMENT | BASEMENT | HORIZ. | 9 | 7.0 2.0 | 13 | 1/30 | 510 | 1550 | 480/3/60 | REZNOR EGHB2AK7E | 1 |
| EUH-15 | BASEMENT | BASEMENT | HORIZ. | 9 | 7.0 2.0 | 13 | 1/30 | 510 | 1550 | 480/3/60 | REZNOR EGHB2AK7E | 1 |
| EUH-16 | STORAGE ROOM | STORAGE ROOM | HORIZ. | 9 | 7.0 2.0 | 13 | 1/30 | 510 | 1550 | 480/3/60 | REZNOR EGHB2AK7E | 1 |

NOTES: 1. WALL MOUNTED THERMOSTAT 2. CORROSION RESISTANT COATING (HERESITE) IN/OUT

## CEILING FANS

| UNIT I.D. | LOCATION | AREA(S) SERVED | FAN DIAMETER (FT) | FAN MAX SPEED (RPM) | MOTOR HP | ELECTRICAL V/PH/HZ | ELECTRICAL AMPS | MANUFACTURER MODEL NO. | REMARKS/ NOTES |
|---|---|---|---|---|---|---|---|---|---|
| CLF-1 | BOOSTER PUMPING STATION | PUMPING ROOM | 14 | 109 | 1.5 | 480/3/60 | 10 | BIG ASS FANS PF8-14 | 1, 2, 3 |

NOTES: 1. ALUMINUM AIRFOILS 2.FAN MOUNTED NEMA 4X VFD CONTROLLER 3. WALL MOUNTED KEYPAD CONTROL 4. SOUND AT MAX SPEED LESS THAN 55 DBA

DRAFT 98% PROGRESS DRAWINGS
OCTOBER 2019

| NO. | DATE | APPD | DESCRIPTION |
|---|---|---|---|

Waukesha Water Utility
SERVING WAUKESHA SINCE 1886

GREELEY AND HANSEN
741 N. GRAND AVE. SUITE 308
WAUKESHA, WI 53186

GREAT WATER ALLIANCE™

CONTRACT PACKAGE 3: BOOSTER PUMPING STATION AND WATER SUPPLY CONTROL BUILDING

SCHEDULES

APPROVED

SEAL AFFIXED
MONTH / DAY / YEAR

OCTOBER 2019

| | | | |
|---|---|---|---|
| JOB NO.: | 15310 | | |
| DESGN | NH | CHCK | BW |
| APPRV | JD | DRWN | GS/ML |
| SCALE: | NO SCALE | | |

DRAWING NUMBER

BH2

SHEET 123 OF 184 REV 0

10/2/2019 10:09:30 AM
BAR MEASURE 1" ON FULLSIZE SHEETS
FILE: C:\Users\lgreen\Documents\GLWSP-P3-BPSF-GAMHPNE_lgreen.rvt

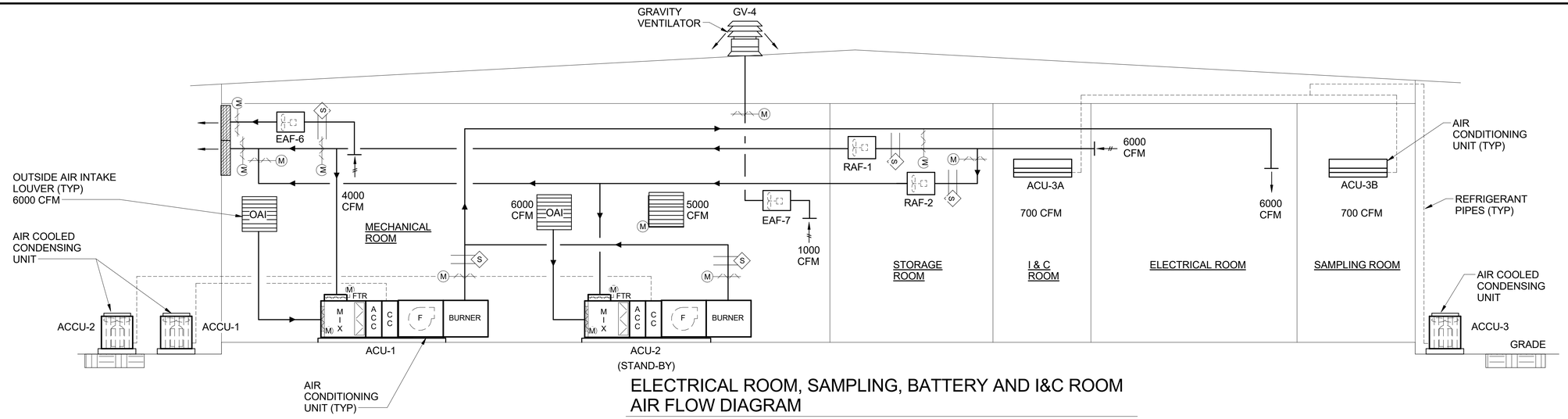


ELECTRICAL ROOM, SAMPLING, BATTERY AND I&C ROOM AIR FLOW DIAGRAM

NO SCALE

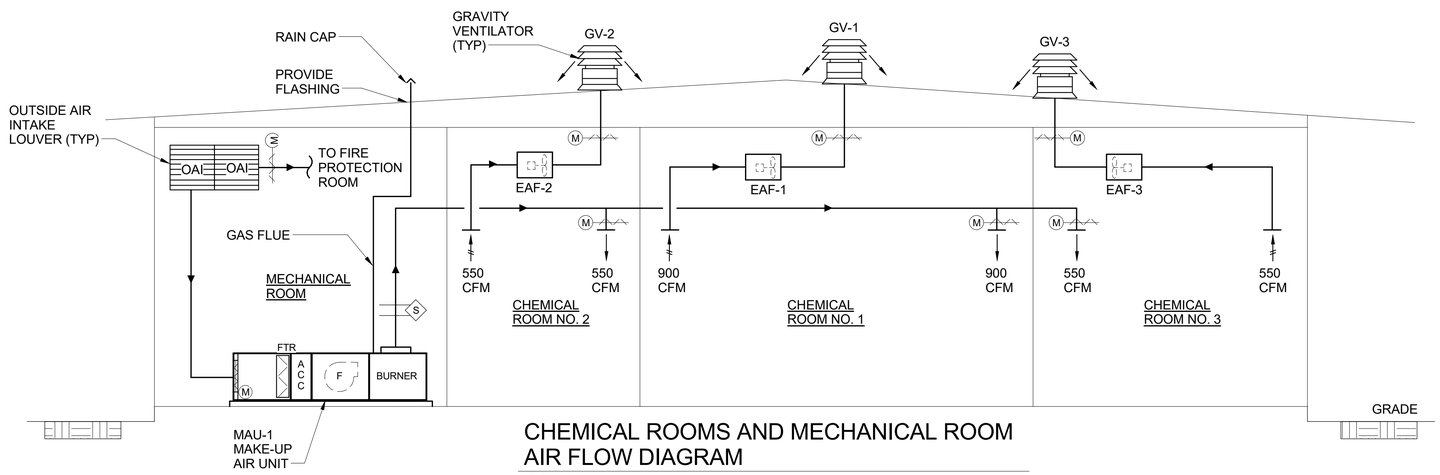


CHEMICAL ROOMS AND MECHANICAL ROOM AIR FLOW DIAGRAM

NO SCALE

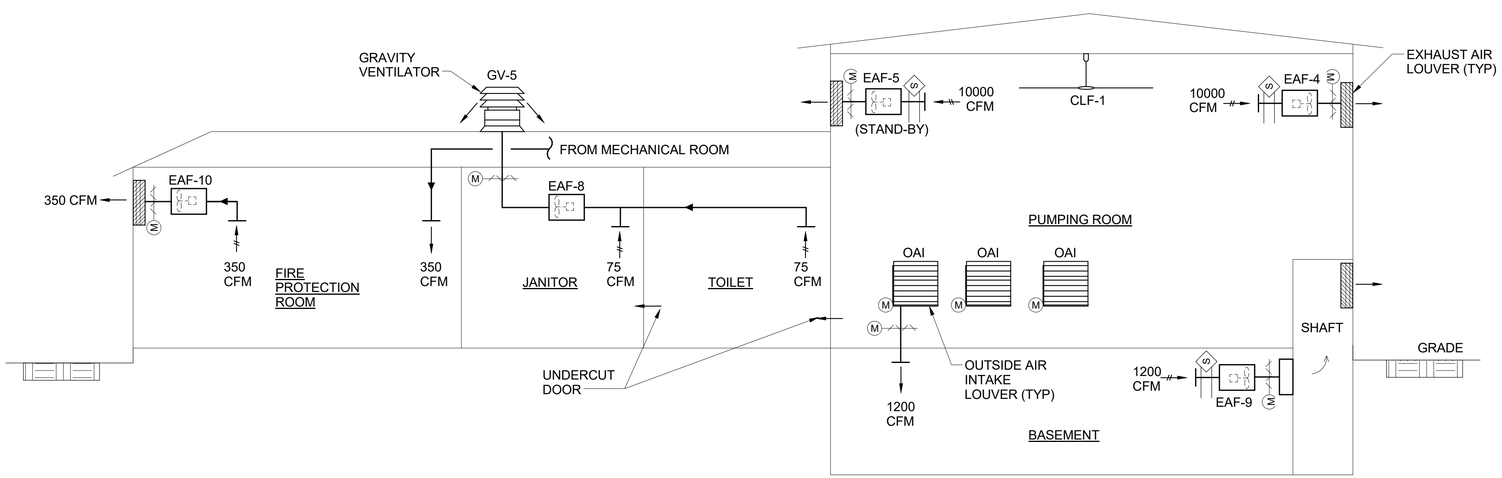


PUMPING ROOM, FIRE PROTECTION ROOM, JANITOR CLOSET AND TOILET AIR FLOW DIAGRAM

NO SCALE

DRAFT 98% PROGRESS DRAWINGS

OCTOBER 2019

| NO. | DATE | APPD | DESCRIPTION |
|---|---|---|---|

Waukesha Water Utility
SERVING WAUKESHA SINCE 1886

GREELEY AND HANSEN
741 N. GRAND AVE. SUITE 308
WAUKESHA, WI 53186

GREAT WATER ALLIANCE™

CONTRACT PACKAGE 3: BOOSTER PUMPING STATION AND WATER SUPPLY CONTROL BUILDING

AIR FLOW DIAGRAMS

APPROVED

SEAL AFFIXED
MONTH / DAY / YEAR

OCTOBER 2019

| | | | |
|---|---|---|---|
| JOB NO.: | 15310 | | |
| DESGN | NH | CHCK | BW |
| APPRV | JD | DRWN | GS/ML |
| SCALE: | NO SCALE | | |

DRAWING NUMBER

BH3

SHEET 124 OF 184 REV 0

10/2/2019 10:09:34 AM

BAR MEASURE 1" ON FULLSIZE SHEETS

FILE: C:\Users\lgreen\Documents\GLWSP-P3-BPSF-GAMHPNE_lgreen.rvt

10/2/2019 10:09:37 AM

BAR MEASURE 1" ON FULLSIZE SHEETS

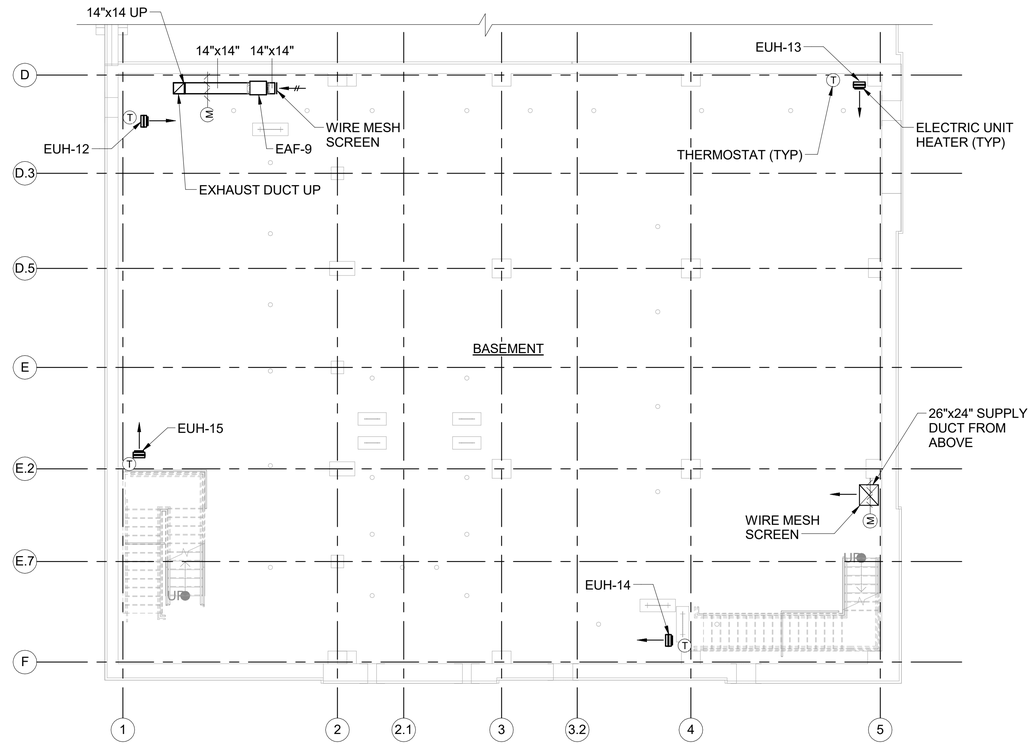


## PLAN AT EL 967.50

SCALE: 1/8" = 1'-0"

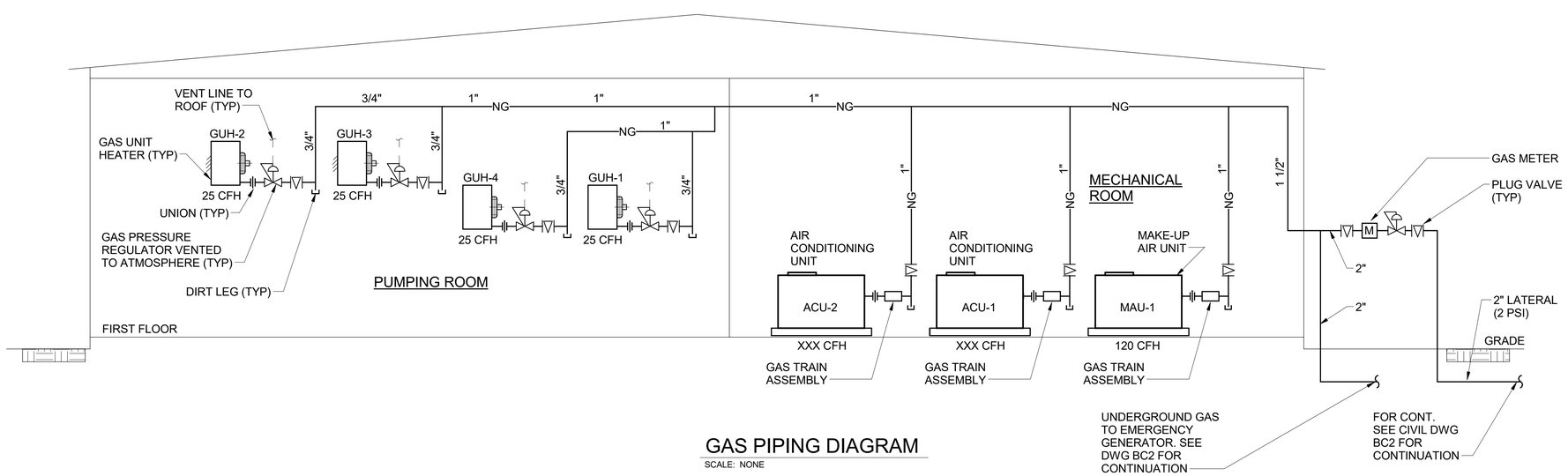


## GAS PIPING DIAGRAM

SCALE: NONE

8 0 8 16 FT
1/8" =1' - 0"

DRAFT 98% PROGRESS DRAWINGS
OCTOBER 2019

FILE: C:\Users\lgreen\Documents\GLWSP-P3-BPSF-GAMHPNE_lgreen.rvt

| NO. | DATE | APPD | DESCRIPTION |
|---|---|---|---|

Waukesha Water Utility
SERVING WAUKESHA SINCE 1886

GREELEY AND HANSEN
741 N. GRAND AVE. SUITE 308
WAUKESHA, WI 53186

GREAT WATER ALLIANCE™

CONTRACT PACKAGE 3: BOOSTER PUMPING STATION AND WATER SUPPLY CONTROL BUILDING

PLAN AT EL 967.50 AND NG DIAGRAM

APPROVED

SEAL AFFIXED
MONTH / DAY / YEAR

OCTOBER 2019

| | | | |
|---|---|---|---|
| JOB NO.: | 15310 | | |
| DESGN | NH | CHCK | BW |
| APPRV | JD | DRWN | GS/ML |
| SCALE: | AS SHOWN | | |

DRAWING NUMBER

BH4

SHEET 125 OF 184 REV 0

10/2/2019 10:09:43 AM

BAR MEASURE 1" ON FULLSIZE SHEETS

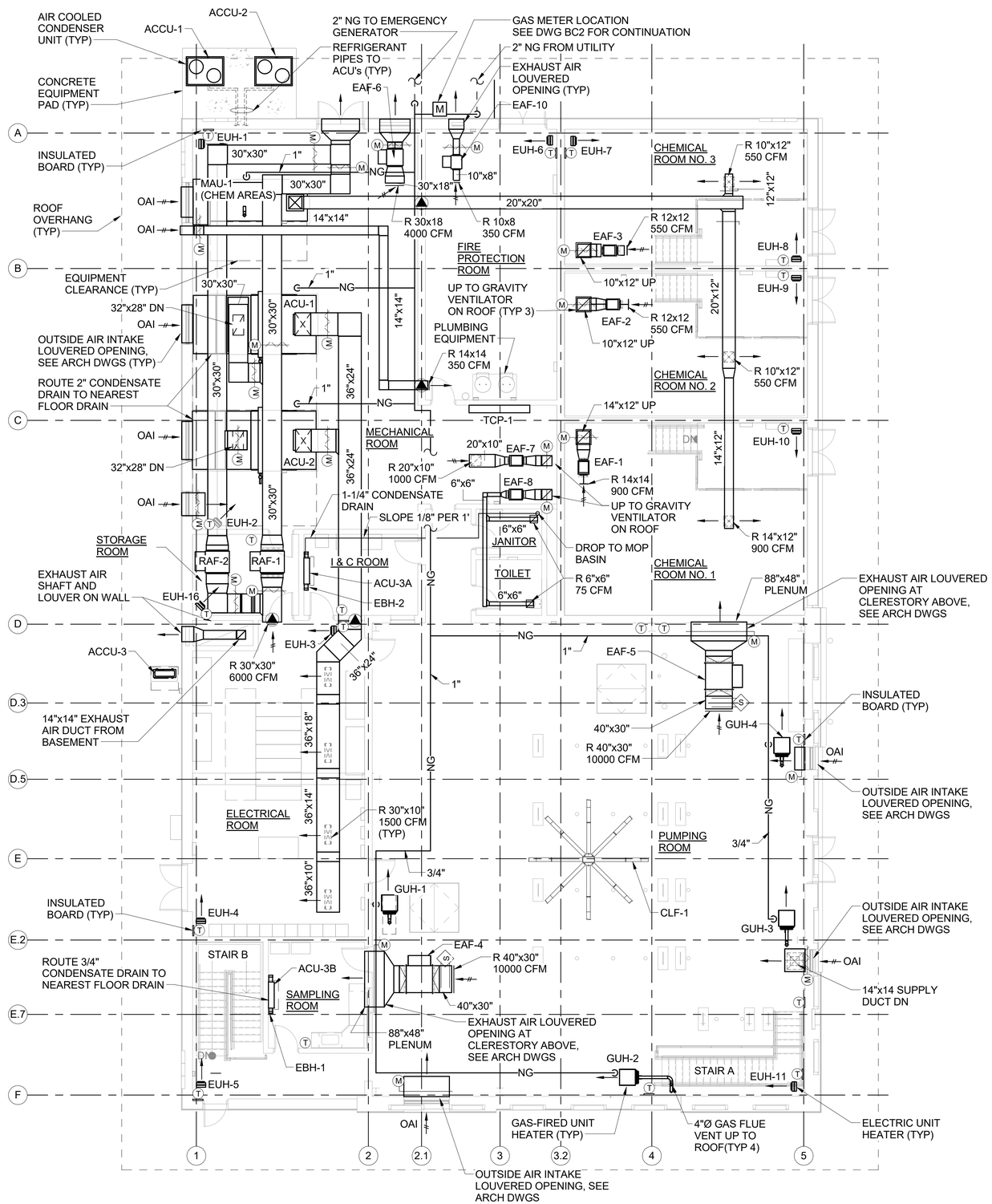


DRAFT 98% PROGRESS DRAWINGS

OCTOBER 2019

## PLAN AT EL 981.50

SCALE: 1/8" = 1'-0"

8 0 8 16 FT 1/8" =1' - 0"

| NO. | DATE | APPD | DESCRIPTION |
|---|---|---|---|
| | | | |

Waukesha Water Utility
SERVING WAUKESHA SINCE 1886

GREELEY AND HANSEN
741 N. GRAND AVE. SUITE 308
WAUKESHA, WI 53186

GREAT WATER ALLIANCE™

CONTRACT PACKAGE 3: BOOSTER PUMPING STATION AND WATER SUPPLY CONTROL BUILDING

PLAN AT EL 981.50

APPROVED

SEAL AFFIXED
MONTH / DAY / YEAR

OCTOBER 2019

| | | | |
|---|---|---|---|
| JOB NO.: | 15310 | | |
| DESGN | NH | CHCK | BW |
| APPRV | JD | DRWN | GS/ML |
| SCALE: | 1/8" = 1'-0" | | |

DRAWING NUMBER

BH5

SHEET 126 OF 184 REV 0

FILE: C:\Users\lgreen\Documents\GLWSP-P3-BPSF-GAMHPNE_lgreen.rvt

## CLEARWATER PUMPS

| UNIT I.D. | LOCATION | AREA SERVED | SERVICE | TYPE | SINGLE/ DUPLEX | GPM (EA) | HEAD ('H2O) | MOTOR HP | MOTOR RPM | MOTOR CONTROL | MOTOR V/PH/HZ | MANUFACTURER MODEL NO. | REMARKS/ NOTES |
|---|---|---|---|---|---|---|---|---|---|---|---|---|---|
| CLP-1A | PUMPING ROOM, BASEMENT | BOOSTER PUMPING STATION | CLEARWATER PIPING | SUBMER-SIBLE | DUPLEX | 42.0 | 18 | 1.00 | 1750 | FLOAT-SWITCH | 460/3/60 | WEIL PUMP CO. 2549 | 1, 2, 3 |
| CLP-1B | PUMPING ROOM, BASEMENT | BOOSTER PUMPING STATION | CLEARWATER PIPING | SUBMER-SIBLE | DUPLEX | 42.0 | 18 | 1.00 | 1750 | FLOAT-SWITCH | 460/3/60 | WEIL PUMP CO. 2549 | 1, 2, 3 |

NOTES: 1. AUXILIARY CONTACTS FOR REMOTE SIGNAL. 2. 3/4" SOLIDS. 3. NEMA 4X CONTROL PANEL.

## ELECTRIC WATER HEATERS

| UNIT I.D. | LOCATION | SERVICE | TYPE | TANK (GAL) | FLOW (GPM) | INPUT (KW) | RECOVERY RATE @ 90° RISE (GPH) | V/PH/HZ | MANUFACTURER MODEL NO. | REMARKS/ NOTES |
|---|---|---|---|---|---|---|---|---|---|---|
| EWH-1A | FIRE PROTECTION ROOM | ESE, PLUMBING FIXTURES | STORAGE TANK TYPE | 80 | 12 | 6 | 27 | 460/3/60 | A.O. SMITH DEN-80D | 1, 2, 3, 4, 5, 6 |
| EWH-1B | FIRE PROTECTION ROOM | ESE, PLUMBING FIXTURES | STORAGE TANK TYPE | 80 | 12 | 6 | 27 | 460/3/60 | A.O. SMITH DEN-80D | 1, 2, 3, 4, 5, 6 |

NOTES: 1. TANK-TYPE WATER HEATER 2. RELIEF VALVE INCLUDED 3. UL LISTED 4. COMPLIES WITH NSF-61 5. EXPANSION TANK A. O. SMITH MODEL PMI-5 6. ASME CERTIFIED

## DOMESTIC CIRCULATING PUMPS

| UNIT I.D. | LOCATION | SERVICE | TYPE MOUNTING | WATER GPM | WATER HEAD ('H2O) | MOTOR HP | MOTOR RPM | MOTOR V/PH/HZ | MANUFACTURER MODEL NO. | REMARKS/ NOTES |
|---|---|---|---|---|---|---|---|---|---|---|
| DCP-1 | MECHANICAL ROOM | HOT WATER SYSTEM | CENTRIFUGAL IN - LINE | 5 | 8 | 1/12 | 1750 | 115/1/60 | BELL & GOSSETT SER. 80- 2 1/2 X 2 1/2 X 9 1/2 B | 1, 2 |

NOTES: 1. AQ-1/2-AQUASTAT CONTROL. 2. TC-1 AUTOMATIC TIMER KIT.

## PLUMBING FIXTURE SCHEDULE

| PLBG. SYMBOLS | QTY | FIXTURE TYPE | FIXTURE MANUFACTURER | VALVE / FAUCET / TRIM TYPE | VALVE / FAUCET / TRIM MANUFACTURER | TRAP | SUPPLIES | FLOW CONTROL | REMARKS/NOTES |
|---|---|---|---|---|---|---|---|---|---|
| WC | 1 | WATER CLOSET HIGH EFFICIENCY WALL HUNG, ELONGATED, VITREOUS CHINA ADA | AMERICAN STANDARD | SENSOR ACTIVATED, ELECTRIC POWERED, FLUSH VALVE | SLOAN | INTEGRAL | 1" CW | 1.28 GPF | PROVIDE WITH: CHURCH 9500CC ELONGATED, OPEN FRONT SEAT, WALL CARRIER, INSTALL AT ADA HEIGHT, (25 PSIG MINIMUM OPERATING PRESSURE) |
| L | 1 | LAVATORY WALL HUNG, VITREOUS CHINA, ADA | AMERICAN STANDARD | SENSOR ACTIVATED, ELECTRIC POWERED, | SLOAN | OFFSET GRID STRAINER, P-TRAP | 1/2" CW, HW | 0.5 GPM AERATOR (FACTORY PROVIDED) | PROVIDE WITH: TEMPERATURE MIXING VALVE TMV-2, TRIM/COVER PLATE, ADA INSULATORS ON WASTE, TRAP & SUPPLIES, INSTALL PER ADA REQUIREMENTS, (20 PSIG MINIMUM OPERATING PRESSURE) 1/2"x1/2" CAST BRASS, HEAVY PATTERN QUARTER-TURN BALL VALVE WITH POLISHED CHROME RISER TUBE CONNECTORS |
| ESE | 6 | EMERGENCYSHOWER AND EYEWASH UNIT | HAWS | N/A | N/A | | 1 1/4 TEPID WATER | N/A | PROVIDE WITH EMERGENCY ALARM SYSTEM HAWS 9001.5 |
| 3" FD | 10 | 12"Ø DIA WASTEWATER FLOOR DRAIN, CAST IRON | JR SMITH | N/A | N/A | 3" P-TRAP | N/A | N/A | PROVIDE WITH: MEDIUM DUTY GALVANIZED GRATE & SEDIMENT BUCKET WITH LIFTING BAR. PROVIDE POLISHED BRONZE STARINER IN TOILET ROOM ONLY. PROVIDE WITH FUNNEL AS REQUIRED |
| 4" FD | 14 | 12"Ø WASTEWATER FLOOR DRAIN, CAST IRON | JR SMITH | N/A | N/A | 4" P-TRAP | N/A | N/A | PROVIDE WITH: MEDIUM DUTY GALVANIZED GRATE & SEDIMENT BUCKET WITH LIFTING BAR |
| 6" FD | 1 | 12"Ø WASTEWATER FLOOR DRAIN, CAST IRON | JR SMITH | N/A | N/A | 6" P-TRAP | N/A | N/A | PROVIDE WITH: MEDIUM DUTY GALVANIZED GRATE & SEDIMENT BUCKET WITH LIFTING BAR. PROVIDE WITH FUNNEL |
| SS | 1 | SAMPLING SINK STAINLESS STEEL COUTERTOP | SEE DWG BA12 | 8" GOOSENECK SPOUT | ELKAY | 2" P-TRAP | 3/8" CW, HW | 2.2 GPM MAX FLOW RATE | PROVIDE WITH: MEDIUM DUTY GALVANIZED GRATE & SEDIMENT BUCKET TEMPERATURE-PRESSURE AND SCALD BALANCING MIXING VALVE |
| MR | 1 | MOP RECEPTOR, FLOOR MOUNTED BASIN | FIAT | - | CHICAGO FAUCET | 3" P-TRAP | 3/4" CW, HW | 3 GPM | PROVIDE WITH: VACUUM BREAKER |

## SPECIALTY DEVICES

| SYMBOL | TYPE | MFR | NOTES/OPTIONS |
|---|---|---|---|
| TMV-1 | THERMOSTSTIC MIXING VALVE | HAWS | ASSE 1071 RATED. 1-1/4" INLETS AND OUTLET. 85° F TEMPERATURE SET POINT. PROVIDE SHUT-OFF VALVES AT HW AND CW SUPPLY INLETS. |
| TMV-2 | THERMOSTATIC MIXING VALVE | WILKINS | ASSE 1016/1070 RATED. POINT-OF-USE TEMPERING VALVE. 1/2" INLETS AND OUTLETS FOR LAVATORY, 3/8" INLET AND OUTLET FOR SINK. INSTALL AT FIXTURE WITH LOCKING ADJUSTMENT KNOB. PROVIDE SHUT-OFF VALVES AT HW AND CW SUPPLY INLETS. |
| EXT-1 | EXPANSION TANK | A.O. SMITH | 38 PSIG PRE-CHARGED TYPE THERMAL EXPANSION TANK WITH INTERNAL BUTYL DIAPHRAGM. 5.0 GALLONS TANK VOLUME. 3/4" CONNECTION. 13" DIA x 10" H. 60 LBS (FULL). NSF-61 COMPLIANCE. |
| HB | HOSE BIBB | JOSAM | 3/4" INDOOR HOSE BIBB WITH INTEGRAL VACUUM BREAKER (ASSE 1011) AND LOOSE KEY HANDLE. |
| WH | NON-FREEZE WALL HYDRANT | JOSEM | 3/4"CHROME FRREZELESS WALL HYDRANT ASSEMBLY WITH ROUND WALL BOX AND DOOR, INTEGRAL VACUUM BREAKER (ASSE 1011) AND LOOSE KEY HANDLE. PROVIDE STAINLESS STEEL ACCESS PANEL AS REQUIRED FOR SERVCIING. |

## PLUMBING FIXTURE ROUGH-IN SCHEDULE

| FIXTURE TYPE | TRAP | WASTE | VENT | AIR CHAMBER CW | AIR CHAMBER HW | INLET TO STOP CW | INLET TO STOP HW | REMARKS/NOTES |
|---|---|---|---|---|---|---|---|---|
| WATER CLOSET FLUSH VALVE | - | 4" | 2" | 1 1/4" | - | 1" | - | |
| LAVATORY | 1 1/2" | 2" | 2" | 1/2" | 1/2" | 1/2" | 1/2" | |
| FLOOR DRAIN | 3" | 3" | 1 1/2" | - | - | - | - | |
| JANITOR MOP BASIN | 3" | 3" | 1 1/2" | 3/4" | 3/4" | 1/2" | 1/2" | |
| SAMPLING SINK | 2" | 2" | 1 1/2" | 3/8" | 3/8" | 3/8" | 3/8" | |
| EMERGENCY SHOWER AND EYEWASH | - | 1 1/4" | - | 1/2" | - | 1/2" | - | |

DRAFT 98% PROGRESS DRAWINGS
OCTOBER 2019

| NO. | DATE | APPD | DESCRIPTION |
|---|---|---|---|

Waukesha Water Utility
SERVING WAUKESHA SINCE 1886

GREELEY AND HANSEN
741 N. GRAND AVE. SUITE 308
WAUKESHA, WI 53186

GREAT WATER ALLIANCE™

CONTRACT PACKAGE 3: BOOSTER PUMPING STATION AND WATER SUPPLY CONTROL BUILDING

SCHEDULES

APPROVED

SEAL AFFIXED
MONTH / DAY / YEAR

OCTOBER 2019

| | | | |
|---|---|---|---|
| JOB NO.: | 15310 | | |
| DESGN | NH | CHCK | BW |
| APPRV | JD | DRWN | YS |
| SCALE: | NO SCALE | | |

DRAWING NUMBER

BP1

SHEET 127 OF 184 REV 0

BAR MEASURE 1" ON FULLSIZE SHEETS
10/2/2019 10:11:18 AM
FILE: C:\Users\lgreen\Documents\GLWSP-P3-BPSF-GAMHPNE_lgreen.rvt

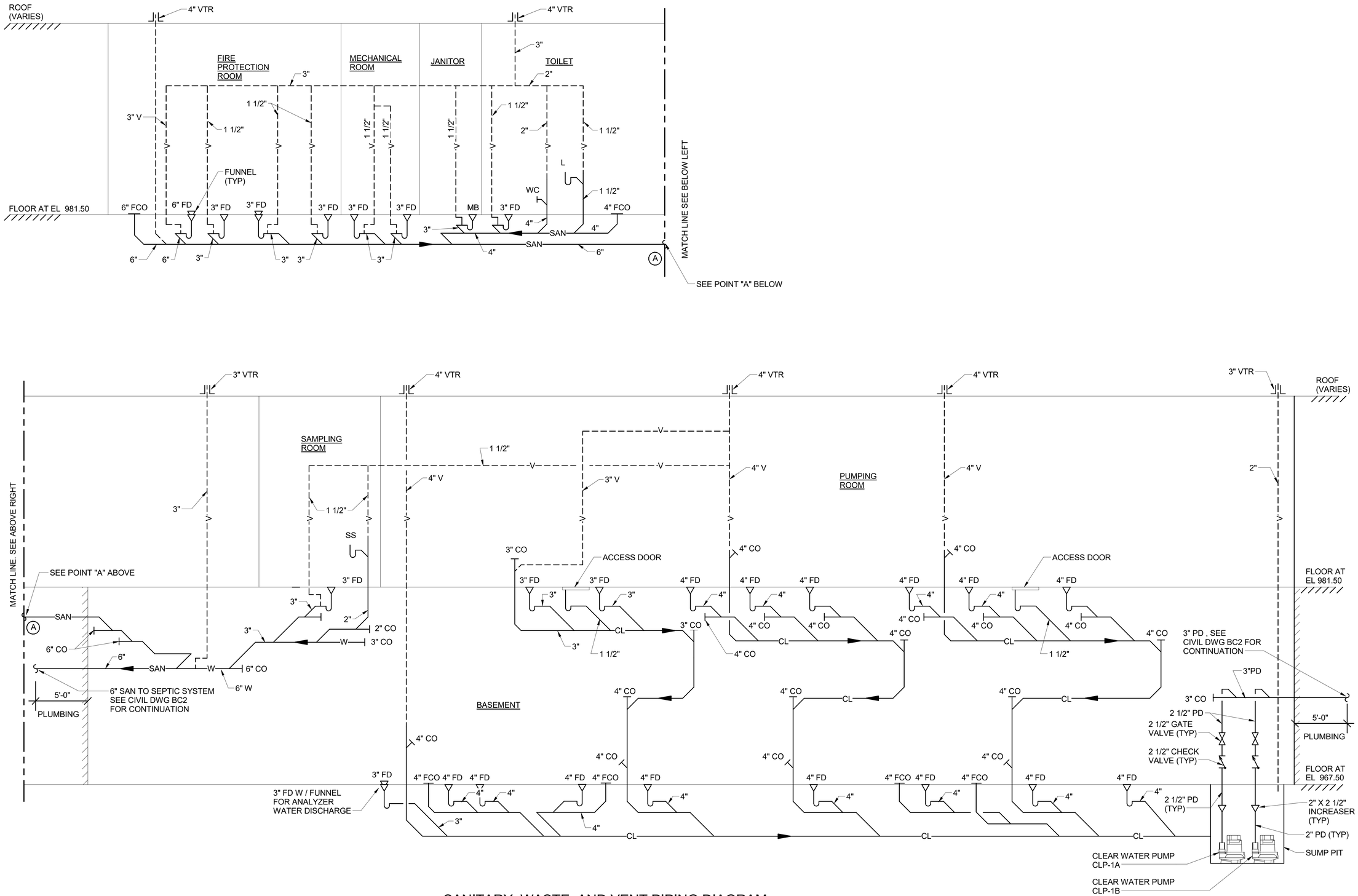


DRAFT 98% PROGRESS DRAWINGS
OCTOBER 2019

SANITARY, WASTE, AND VENT PIPING DIAGRAM
SCALE: NO SCALE

| NO. | DATE | APPD | DESCRIPTION |
|---|---|---|---|

Waukesha Water Utility
SERVING WAUKESHA SINCE 1886

GREELEY AND HANSEN
741 N. GRAND AVE, SUITE 308
WAUKESHA, WI 53186

GREAT WATER ALLIANCE™

CONTRACT PACKAGE 3: BOOSTER PUMPING STATION AND WATER SUPPLY CONTROL BUILDING

DIAGRAMS

APPROVED

SEAL AFFIXED
MONTH / DAY / YEAR

OCTOBER 2019

| | | | |
|---|---|---|---|
| JOB NO.: | 15310 | | |
| DESGN | NH | CHCK | BW |
| APPRV | JD | DRWN | YS |
| SCALE: | NO SCALE | | |

DRAWING NUMBER

BP2

SHEET 128 OF 184 REV 0

FILE: C:\Users\lgreen\Documents\GLWSP-P3-BPSF-GAMHPNE_lgreen.rvt

10/2/2019 10:11:22 AM

BAR MEASURE 1" ON FULL SIZE SHEETS

10/2/2019 10:11:25 AM
BAR MEASURE 1" ON FULLSIZE SHEETS

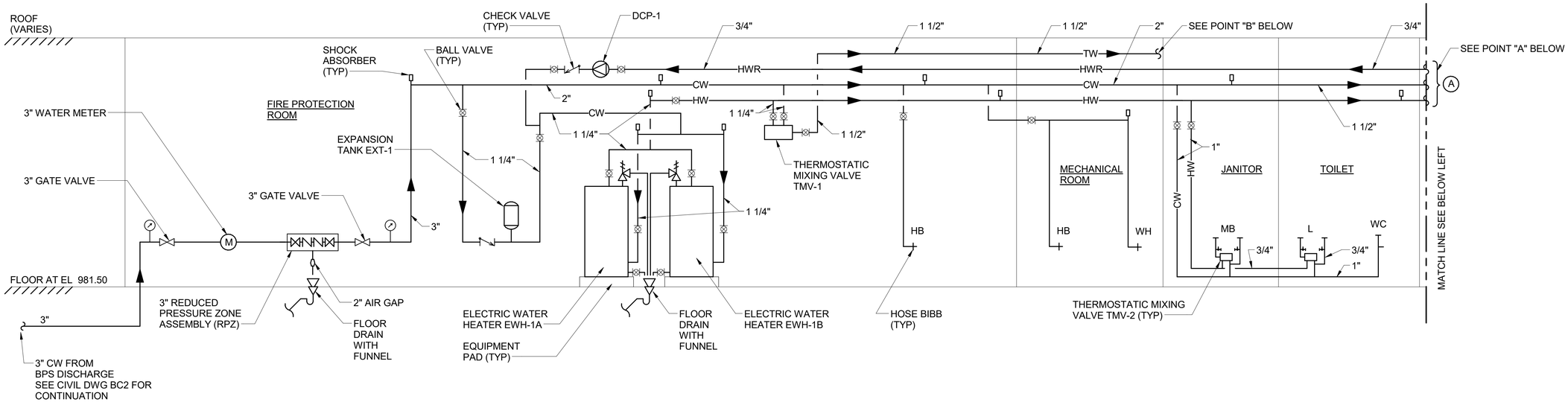


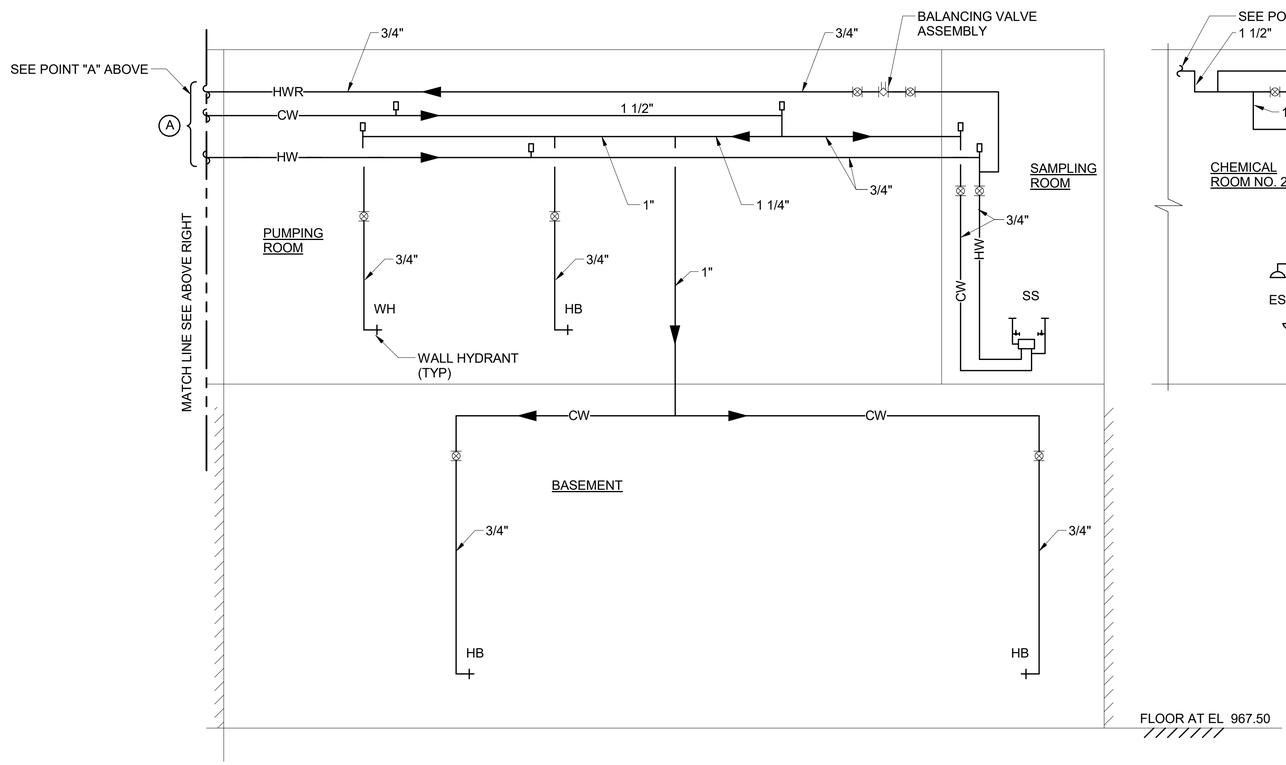


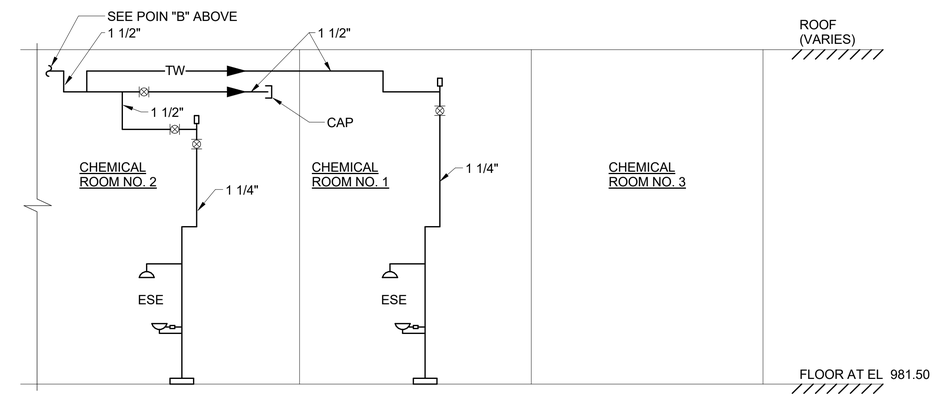


## DOMESTIC WATER PIPING DIAGRAM

SCALE: NO SCALE

DRAFT 98% PROGRESS DRAWINGS
OCTOBER 2019

| NO. | DATE | APPD | DESCRIPTION |
|---|---|---|---|

Waukesha Water Utility
SERVING WAUKESHA SINCE 1886

GREELEY AND HANSEN
741 N. GRAND AVE. SUITE 308
WAUKESHA, WI 53186

GREAT WATER ALLIANCE™

CONTRACT PACKAGE 3: BOOSTER PUMPING STATION AND WATER SUPPLY CONTROL BUILDING

DIAGRAMS

APPROVED

SEAL AFFIXED
MONTH / DAY / YEAR

OCTOBER 2019

| | | | |
|---|---|---|---|
| JOB NO.: | 15310 | | |
| DESGN | NH | CHCK | BW |
| APPRV | JD | DRWN | YS |
| SCALE: | NO SCALE | | |

DRAWING NUMBER

BP3

SHEET 129 OF 184 REV 0

FILE: C:\Users\lgreen\Documents\GLWSP-P3-BPSF-GAMHPNE_lgreen.rvt

10/2/2019 10:11:33 AM

BAR MEASURE 1" ON FULLSIZE SHEETS

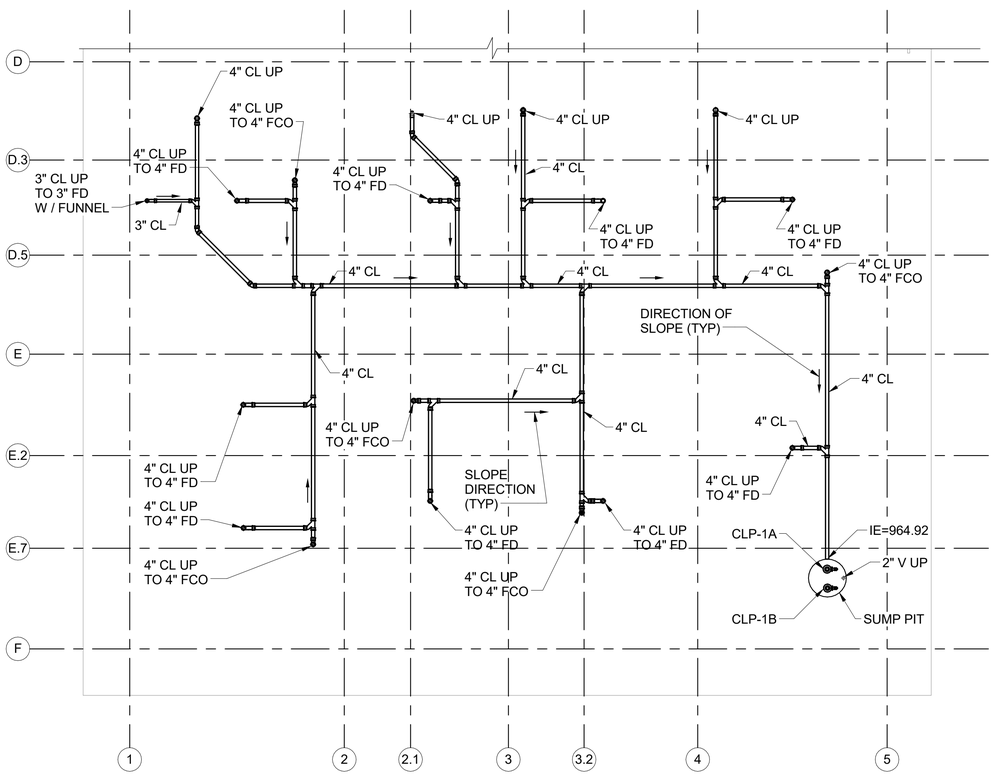


## PLAN AT EL 962.50

SCALE: 1/8" = 1'-0"

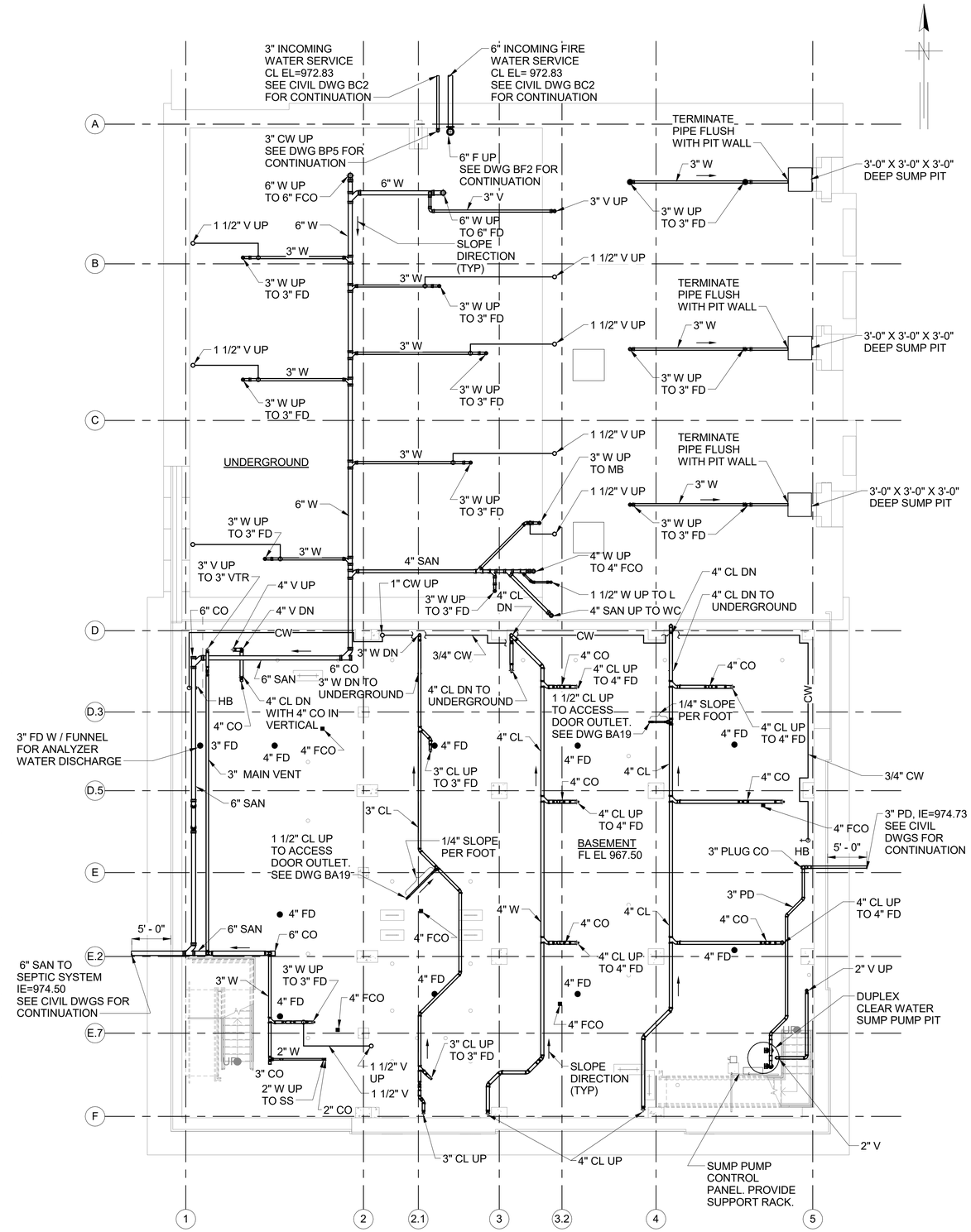


## PLAN AT EL 967.50

SCALE: 1/8" = 1'-0"

8 0 8 16 FT

1/8" =1' - 0"

DRAFT 98% PROGRESS DRAWINGS

OCTOBER 2019

| NO. | DATE | APPD | DESCRIPTION |
|---|---|---|---|

Waukesha Water Utility — SERVING WAUKESHA SINCE 1886

GREELEY AND HANSEN — 741 N. GRAND AVE. SUITE 308, WAUKESHA, WI 53186

GREAT WATER ALLIANCE™

CONTRACT PACKAGE 3: BOOSTER PUMPING STATION AND WATER SUPPLY CONTROL BUILDING

PLANS

APPROVED

SEAL AFFIXED MONTH / DAY / YEAR

OCTOBER 2019

| | | | |
|---|---|---|---|
| JOB NO.: | 15310 | | |
| DESGN | NH | CHCK | JD |
| APPRV | JD | DRWN | YS |
| SCALE: | 1/8" = 1'-0" | | |

DRAWING NUMBER

BP4

SHEET 130 OF 184 REV 0

FILE: C:\Users\lgreen\Documents\GLWSP-P3-BPSF-GAMHPNE_lgreen.rvt

10/2/2019 10:11:39 AM

BAR MEASURE 1" ON FULLSIZE SHEETS

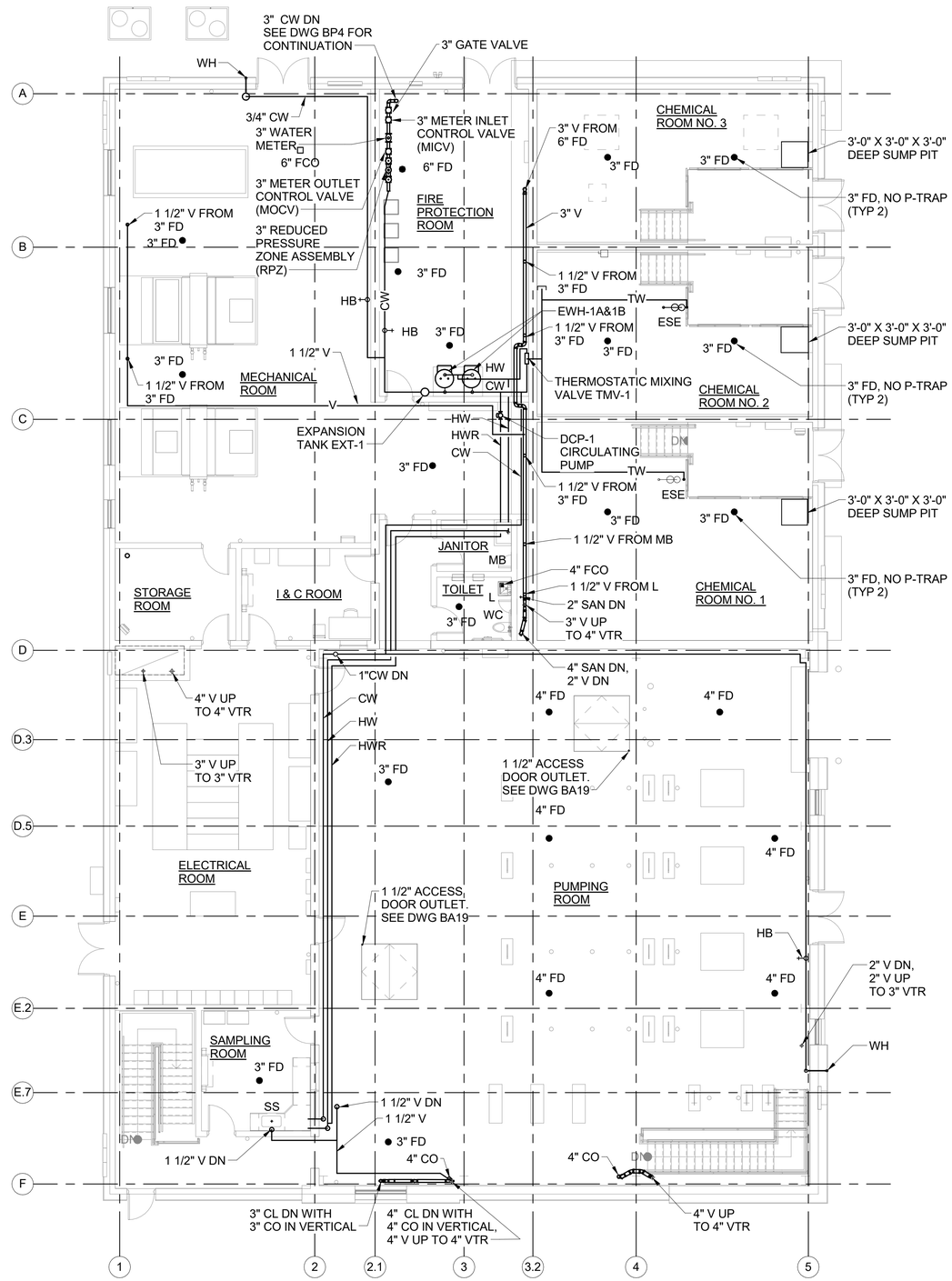


DRAFT 98% PROGRESS DRAWINGS
OCTOBER 2019

PLAN AT EL 981.50
SCALE: 1/8" = 1'-0"

8 0 8 16 FT
1/8" =1' - 0"

| NO. | DATE | APPD | DESCRIPTION |
|---|---|---|---|

Waukesha Water Utility
SERVING WAUKESHA SINCE 1886

GREELEY AND HANSEN
741 N. GRAND AVE. SUITE 308
WAUKESHA, WI 53186

GREAT WATER ALLIANCE™

CONTRACT PACKAGE 3: BOOSTER PUMPING STATION AND WATER SUPPLY CONTROL BUILDING

PLAN AT EL 981.50

APPROVED

SEAL AFFIXED
MONTH / DAY / YEAR

OCTOBER 2019

| | | | |
|---|---|---|---|
| JOB NO.: | 15310 | | |
| DESGN | NH | CHCK | JD |
| APPRV | JD | DRWN | YS |
| SCALE: | 1/8" = 1'-0" | | |

DRAWING NUMBER

BP5

SHEET 131 OF 184 REV 0

FILE: C:\Users\lgreen\Documents\GLWSP-P3-BPSF-GAMHPNE_lgreen.rvt

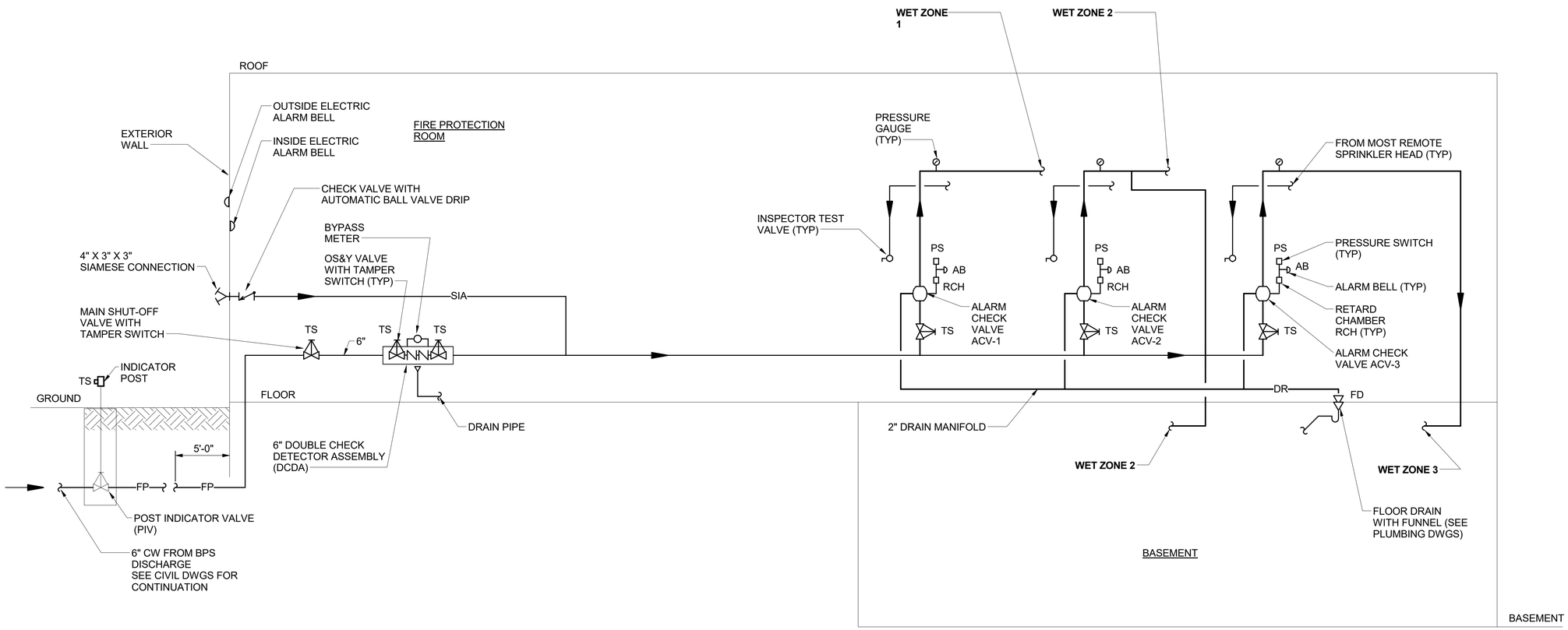


## FIRE PROTECTION DIAGRAM

SCALE: NO SCALE

### SPRINKLER DESIGN CRITERIA

| LOCATION | OCCUPANCY CLASSIFICATION | SYSTEM TYPE | GPM DENSITY/ AREA OF SPRINKLER OPERATION IN SQ. FT | SPRINKLER HEAD | | | | |
|---|---|---|---|---|---|---|---|---|
| | | | | TYPE | K-FACTOR | TEMPERATURE RATING ° F | MAX SPRINKLER COVERAGE SQ FT | MIN PRESSURE PER SPRINKLER, PSI |
| CHEMICAL ROOM # 1, 2, 3 | ORDINARY HAZARD GROUP 2 | WET ZONE 1 | 0.2 GPM / 1500 SQ. FT | UPRIGHT | 11.2 | 175 | 130 | 7 |
| BATTERY ROOM, FIRE PROTECTION ROOM, JAN, I & C, MECHANICAL ROOM, PUMPING ROOM, STAIRS, TOILET | ORDINARY HAZARD GROUP 2 | WET ZONE 2 | 0.2 GPM / 1500 SQ. FT | UPRIGHT | 11.2 | 175 | 130 | 7 |
| BASEMENT | ORDINARY HAZARD GROUP 2 | WET ZONE 3 | 0.2 GPM / 1500 SQ. FT | UPRIGHT | 11.2 | 175 | 130 | 7 |

NOTES:

1. OCCUPANCY CLASSIFICATION BASED ON CONSERVATIVE ESTIMATE FOR ALL POSSIBLE CHEMICALS THAT MAY BE UTILIZED. CLASSIFICATION WILL BE UPDATED AS CHEMICAL SELECTION AND DESIGN DATA IS REFINED.

DRAFT 98% PROGRESS DRAWINGS
OCTOBER 2019

| NO. | DATE | APPD | DESCRIPTION |
|---|---|---|---|

Waukesha Water Utility
SERVING WAUKESHA SINCE 1886

GREELEY AND HANSEN
741 N. GRAND AVE. SUITE 308
WAUKESHA, WI 53186

GREAT WATER ALLIANCE™

CONTRACT PACKAGE 3: BOOSTER PUMPING STATION AND WATER SUPPLY CONTROL BUILDING

DIAGRAM AND DESIGN CRITERIA

APPROVED

SEAL AFFIXED
MONTH / DAY / YEAR

OCTOBER 2019

| | | | |
|---|---|---|---|
| JOB NO.: | 15310 | | |
| DESGN | NH | CHCK | BW |
| APPRV | JD | DRWN | YS |
| SCALE: | NO SCALE | | |

DRAWING NUMBER

BF1

SHEET 132 OF 184 REV 0

10/2/2019 10:09:13 AM

BAR MEASURE 1" ON FULLSIZE SHEETS

FILE: C:\Users\lgreen\Documents\GLWSP-P3-BPSF-GAMHPNE_lgreen.rvt

NOTES:
1. PER NFPA 13-2007, CHAPTER 8.15.11.2, SPRINKLERS SHALL NOT BE REQUIRED IN ELECTRICAL EQUIPMENT ROOMS WHERE ALL OF THE FOLLOWING CONDITIONS ARE MET:
   (1) THE ROOM IS DEDICATED TO ELECTRICAL EQUIPMENT ONLY.
   (2) ONLY DRY-TYPE ELECTRICAL EQUIPMENT IS USED.
   (3) EQUIPMENT IS INSTALLED IN A 2-HR FIRE RATED ENCLOSURE INCLUDING PROTECTION FOR PENETRATIONS.
   (4) NO COMBUSTIBLE STORAGE IS PERMITTED TO BE STORED IN THE ROOM.

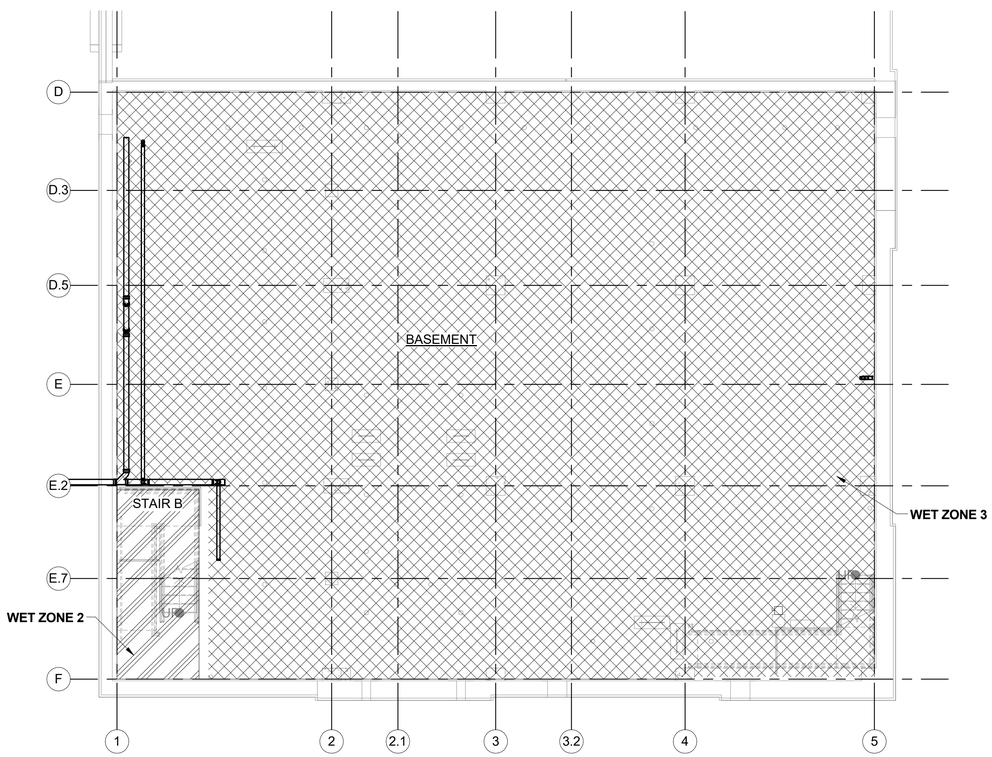


PLAN AT EL 967.50
SCALE: 1/8" = 1'-0"

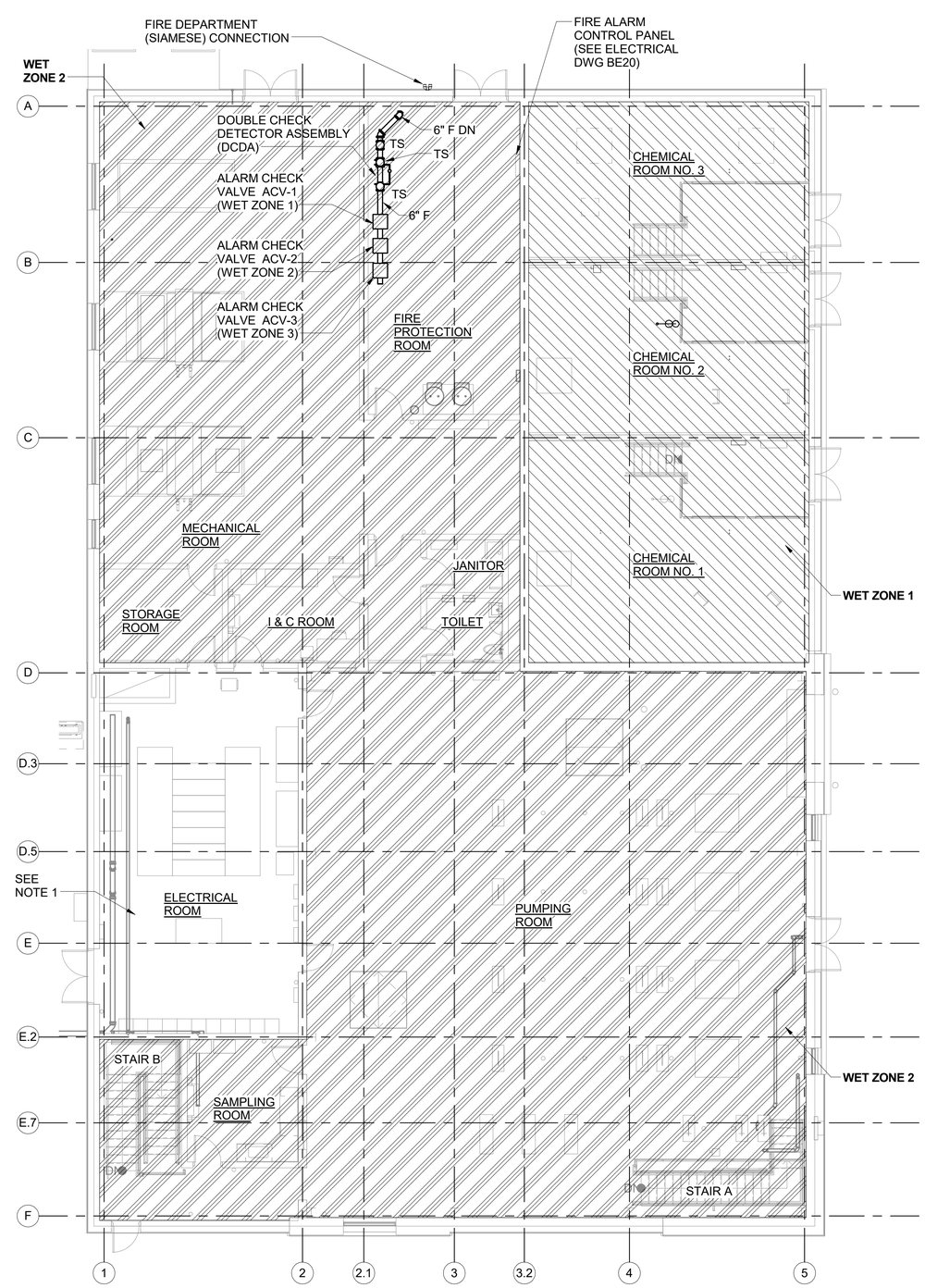


PLAN AT EL 981.50
SCALE: 1/8" = 1'-0"

8 0 8 16 FT
1/8" =1' - 0"

DRAFT 98% PROGRESS DRAWINGS
OCTOBER 2019

| NO. | DATE | APPD | DESCRIPTION |
|---|---|---|---|

Waukesha Water Utility
SERVING WAUKESHA SINCE 1886

GREELEY AND HANSEN
741 N. GRAND AVE. SUITE 308
WAUKESHA, WI 53186

GREAT WATER ALLIANCE™

CONTRACT PACKAGE 3: BOOSTER PUMPING STATION AND WATER SUPPLY CONTROL BUILDING

PLANS

APPROVED

SEAL AFFIXED
MONTH / DAY / YEAR

OCTOBER 2019

| | | | |
|---|---|---|---|
| JOB NO.: | 15310 | | |
| DESGN | NH | CHCK | BW |
| APPRV | JD | DRWN | YS |
| SCALE: | 1/8" = 1'-0" | | |

DRAWING NUMBER
BF2

SHEET 133 OF 184 REV 0

BAR MEASURE 1" ON FULLSIZE SHEETS
10/2/2019 10:09:18 AM
FILE: C:\Users\lgreen\Documents\GLWSP-P3-BPSF-GAMHPNE_lgreen.rvt

BAR MEASURE 1" ON FULLSIZE SHEETS

10/02/2019 11:46:04 AM

FILE: \\GH-DATA01\CLIENT02\15310-WAUKESHA GREAT LAKES WATER SUPPLY PM-CM\21 CADD\21.05 WORKING DWGS\CONTRACT PACKAGE 3 - BPSF\GLWSP-P3-BPSF-BE01.DWG

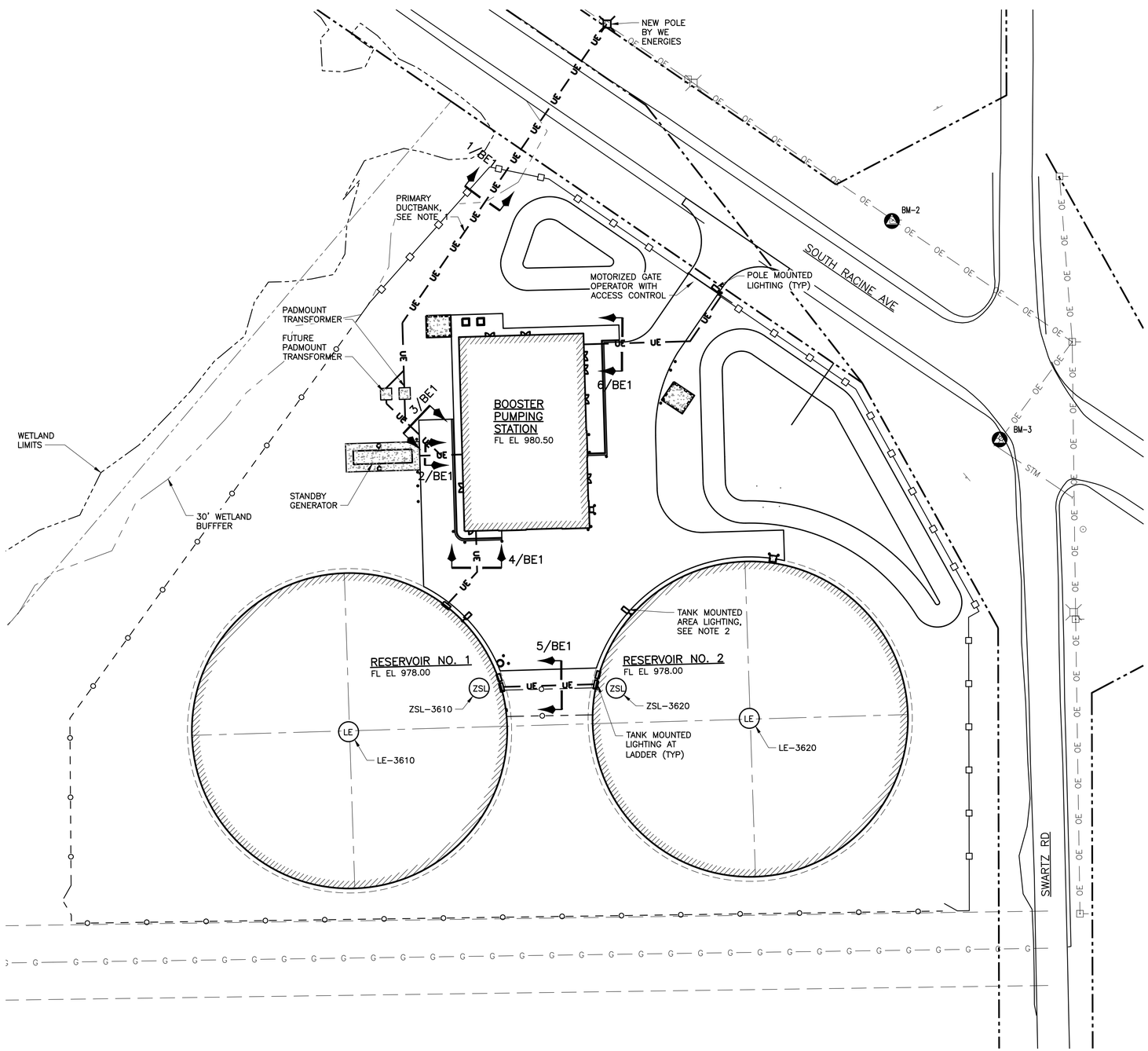


## ELECTRICAL SITE PLAN

SCALE: 1"=40'

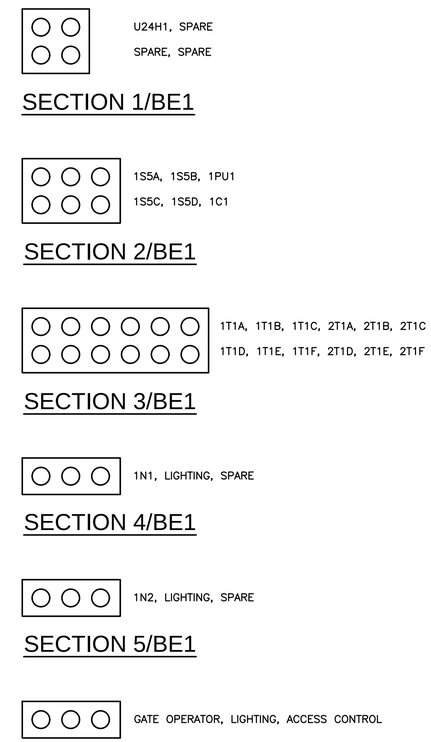


NOTES:

1. DUCTBANK, TRENCHING, AND RESTORATION IN RIGHT–OF–WAY BY WE ENERGIES.
2. LIGHTING ANCHORED TO PRECAST BOSSES ON TANK.

40 0 40 80 FT
1"=40'

DRAFT 98% PROGRESS DRAWINGS
OCTOBER 2019

| NO. | DATE | APPD | REVISION |
|---|---|---|---|

Waukesha Water Utility
SERVING WAUKESHA SINCE 1886

GREELEY AND HANSEN
741 N. GRAND AVE, SUITE 308
WAUKESHA, WI 53186

GREAT WATER ALLIANCE™

CONTRACT PACKAGE 3: BOOSTER PUMPING STATION AND WATER SUPPLY CONTROL BUILDING

SITE PLAN

APPROVED

SEAL AFFIXED
MONTH / DAY / YEAR

OCTOBER 2019

JOB NO.: 15310

| DESGN | TMK | CHCK | NV |
|---|---|---|---|
| APPRV | NV | DRWN | LAN |
| SCALE: | | 1" = 40' | |

DRAWING NUMBER

BE1

SHEET 130 OF 184 | REV 0

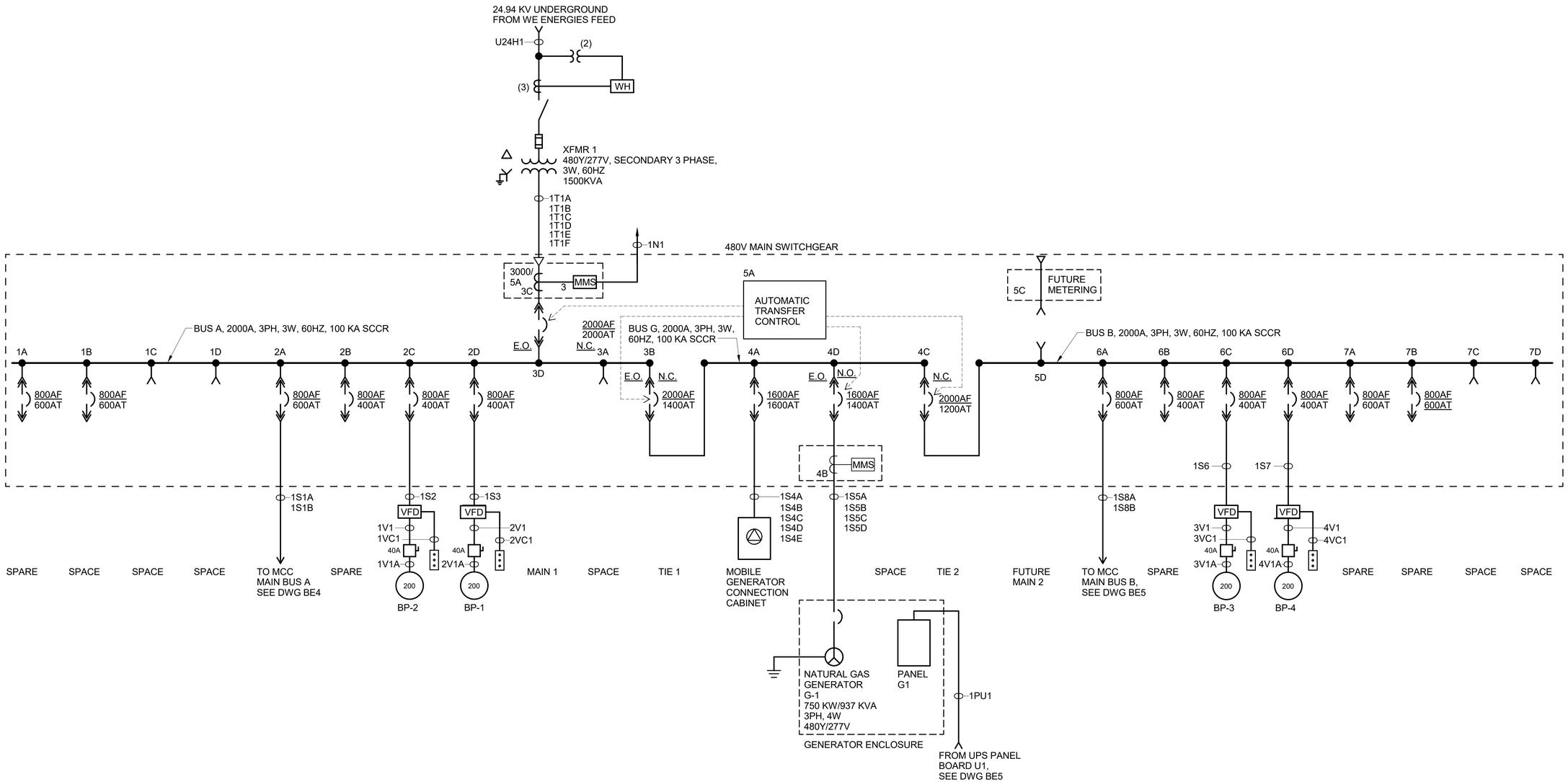


## SWITCHGEAR ONE LINE DIAGRAM

NO SCALE

DRAFT 98% PROGRESS DRAWINGS
OCTOBER 2019

| NO. | DATE | APPD | DESCRIPTION |
|---|---|---|---|

Waukesha Water Utility
SERVING WAUKESHA SINCE 1886

GREELEY AND HANSEN
741 N. GRAND AVE. SUITE 308
WAUKESHA, WI 53186

GREAT WATER ALLIANCE™

CONTRACT PACKAGE 3: BOOSTER PUMPING STATION AND WATER SUPPLY CONTROL BUILDING

SWITCHGEAR ONE LINE DIAGRAM

APPROVED

SEAL AFFIXED
MONTH / DAY / YEAR

OCTOBER 2019

| | | | |
|---|---|---|---|
| JOB NO.: | 15310 | | |
| DESGN | TMK | CHCK | NV |
| APPRV | NV | DRWN | LAN |
| SCALE: | NO SCALE | | |

DRAWING NUMBER

BE2

SHEET 135 OF 184 REV 0

10/2/2019 10:07:52 AM

BAR MEASURE 1" ON FULLSIZE SHEETS

FILE: C:\Users\lgreen\Documents\GLWSP-P3-BPSF-GAMHPNE_lgreen.rvt

10/2/2019 10:07:57 AM

BAR MEASURE 1" ON FULLSIZE SHEETS

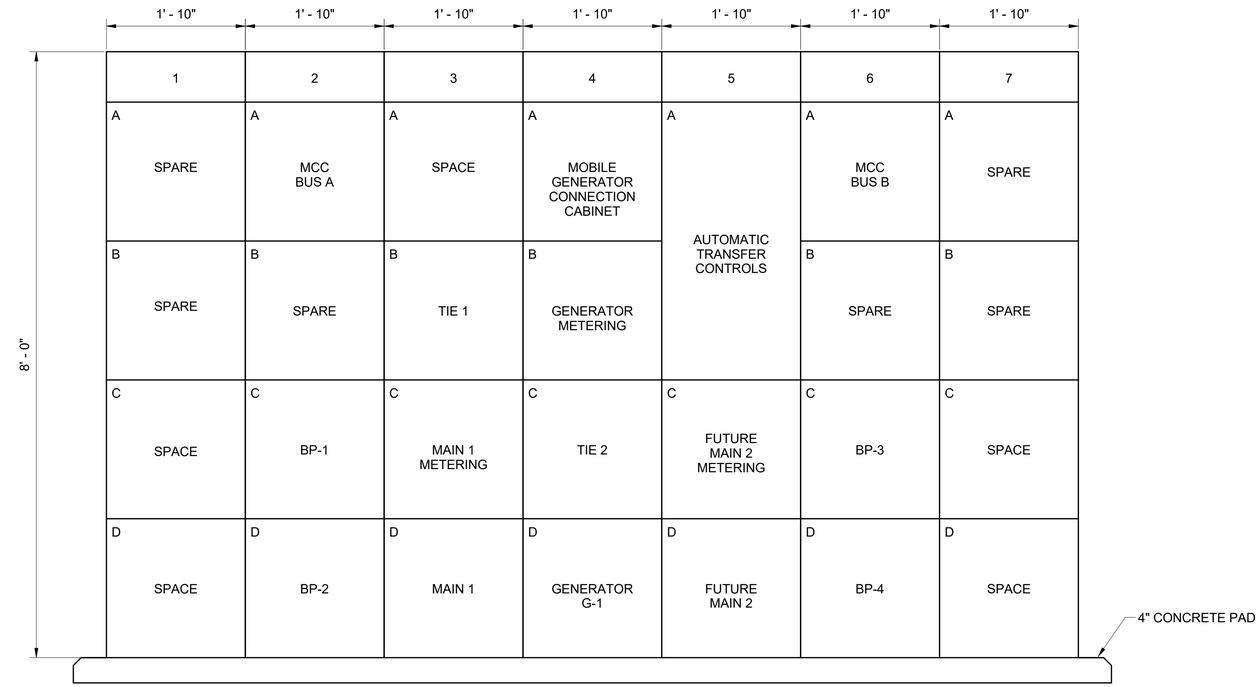


## SWITCHGEAR ELEVATION

NO SCALE

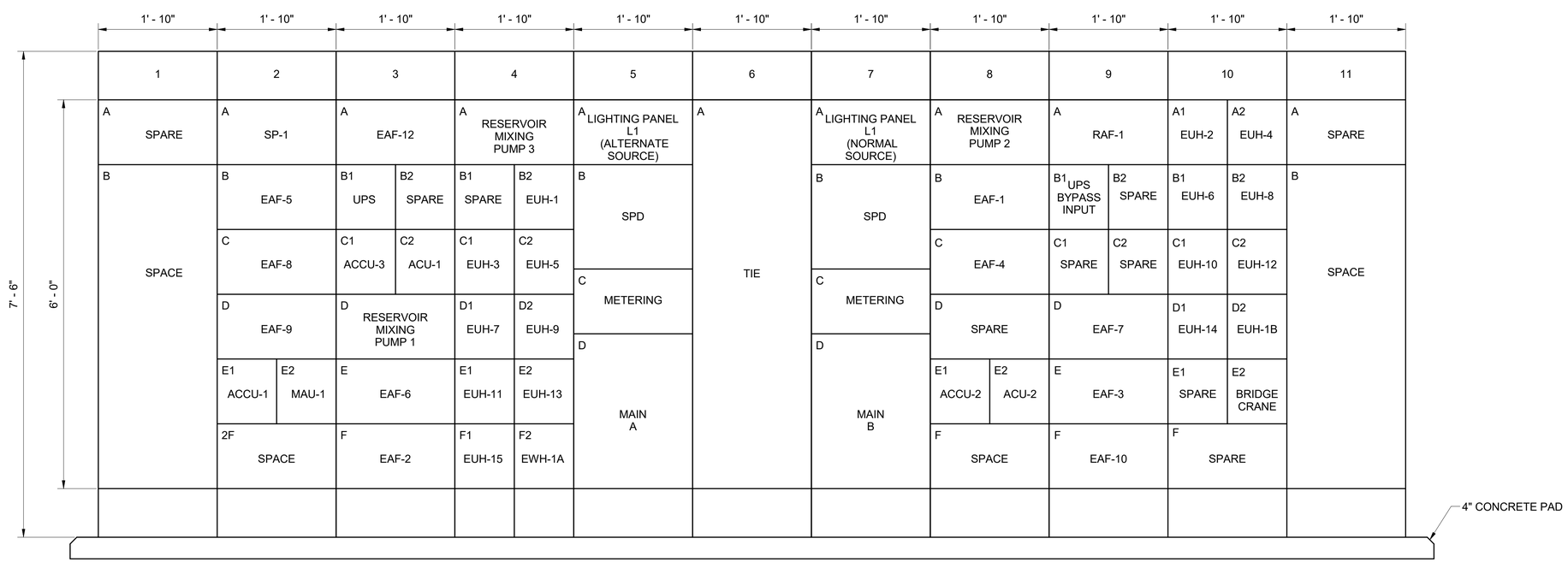


## MCC ELEVATION

NO SCALE

DRAFT 98% PROGRESS DRAWINGS

OCTOBER 2019

FILE: C:\Users\lgreen\Documents\GLWSP-P3-BPSF-GAMHPNE_lgreen.rvt

| NO. | DATE | APPD | DESCRIPTION |
|---|---|---|---|

Waukesha Water Utility
SERVING WAUKESHA SINCE 1886

GREELEY AND HANSEN
741 N. GRAND AVE. SUITE 308
WAUKESHA, WI 53186

GREAT WATER ALLIANCE™

CONTRACT PACKAGE 3: BOOSTER PUMPING STATION AND WATER SUPPLY CONTROL BUILDING

SWITCHGEAR AND MCC ELEVATIONS

APPROVED

SEAL AFFIXED
MONTH / DAY / YEAR

OCTOBER 2019

| | | | |
|---|---|---|---|
| JOB NO.: | 15310 | | |
| DESGN | TMK | CHCK | NV |
| APPRV | NV | DRWN | LAN |
| SCALE: | NO SCALE | | |

DRAWING NUMBER

BE3

SHEET 136 OF 184 REV 0

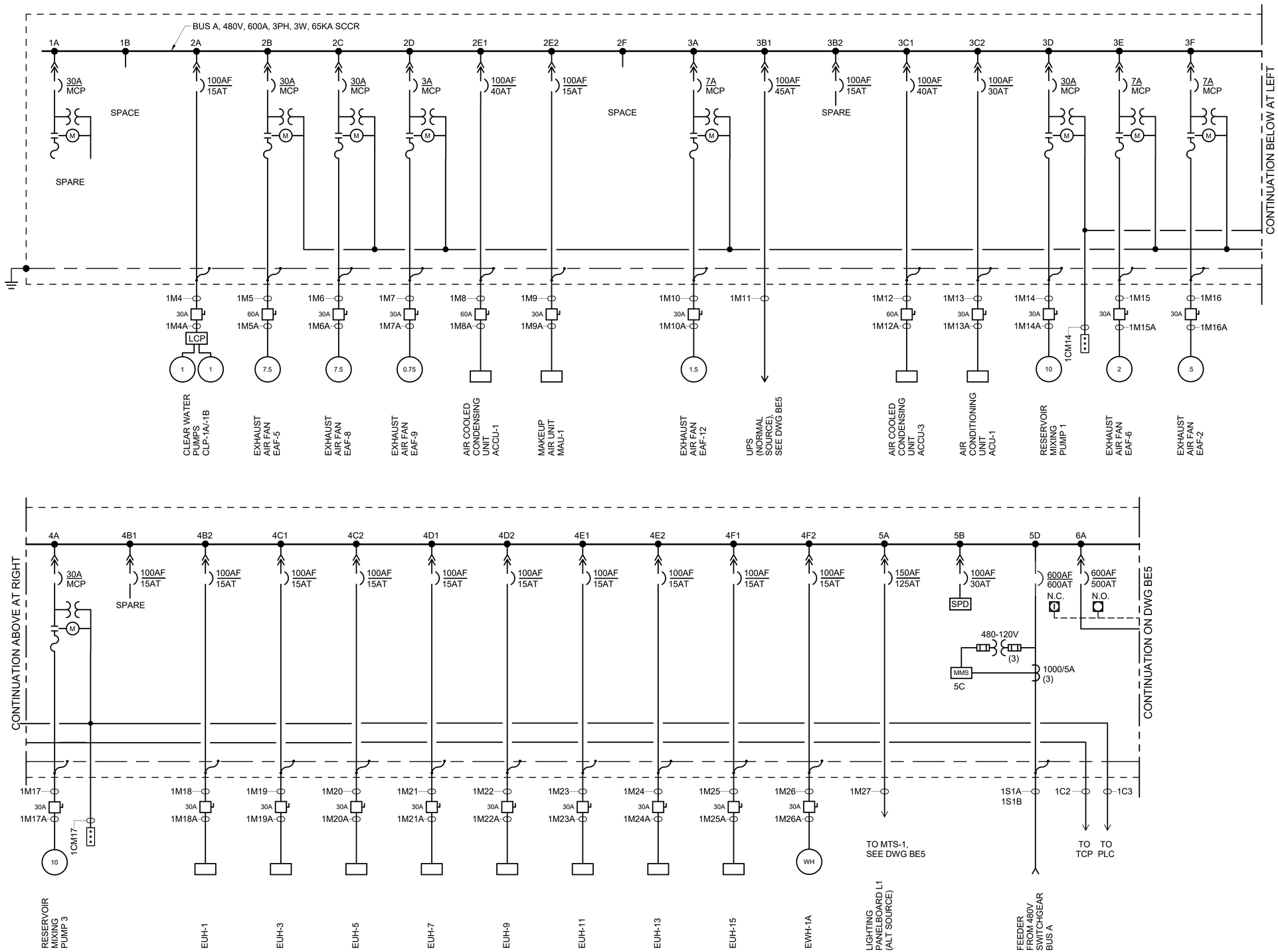


DRAFT 98% PROGRESS DRAWINGS
OCTOBER 2019

MCC ONE LINE DIAGRAM
NO SCALE

| NO. | DATE | APPD | DESCRIPTION |
|---|---|---|---|

Waukesha Water Utility
SERVING WAUKESHA SINCE 1886

GREELEY AND HANSEN
741 N. GRAND AVE. SUITE 308
WAUKESHA, WI 53186

GREAT WATER ALLIANCE™

CONTRACT PACKAGE 3: BOOSTER PUMPING STATION AND WATER SUPPLY CONTROL BUILDING

MCC ONE LINE DIAGRAM

APPROVED

SEAL AFFIXED
MONTH / DAY / YEAR

OCTOBER 2019

| | | | |
|---|---|---|---|
| JOB NO.: | 15310 | | |
| DESGN | TMK | CHCK | NV |
| APPRV | NV | DRWN | LAN |
| SCALE: | NO SCALE | | |

DRAWING NUMBER

BE4

SHEET 137 OF 184 REV 0

10/2/2019 10:08:00 AM

BAR MEASURE 1" ON FULLSIZE SHEETS

FILE: C:\Users\lgreen\Documents\GLWSP-P3-BPSF-GAMHPNE_lgreen.rvt

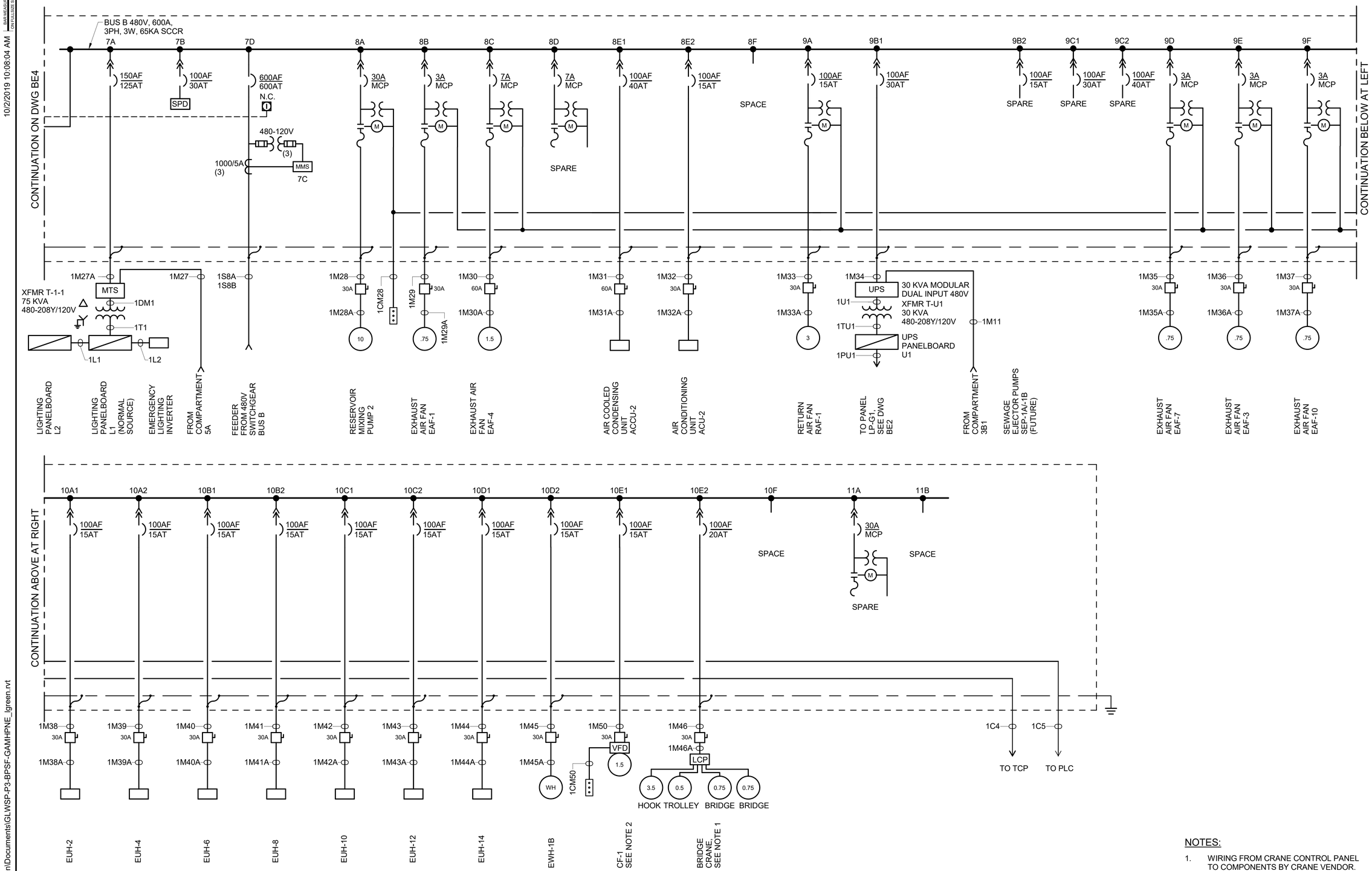


NOTES:

1. WIRING FROM CRANE CONTROL PANEL TO COMPONENTS BY CRANE VENDOR.
2. VFD AND DISCONNECT SWITCH ARE INTEGRAL TO FAN CF-1.

DRAFT 98% PROGRESS DRAWINGS
OCTOBER 2019

MCC ONE LINE DIAGRAM
NO SCALE

| NO. | DATE | APPD | DESCRIPTION |
|---|---|---|---|

Waukesha Water Utility
SERVING WAUKESHA SINCE 1886

GREELEY AND HANSEN
741 N. GRAND AVE. SUITE 308
WAUKESHA, WI 53186

GREAT WATER ALLIANCE™

CONTRACT PACKAGE 3: BOOSTER PUMPING STATION AND WATER SUPPLY CONTROL BUILDING

MCC ONE LINE DIAGRAM

APPROVED

SEAL AFFIXED
MONTH / DAY / YEAR

OCTOBER 2019

| | | | |
|---|---|---|---|
| JOB NO.: | 15310 | | |
| DESGN | TMK | CHCK | NV |
| APPRV | NV | DRWN | LAN |
| SCALE: | NO SCALE | | |

DRAWING NUMBER

BE5

SHEET 138 OF 184 REV 0

10/2/2019 10:08:04 AM BAR MEASURE 1" ON FULLSIZE SHEETS

FILE: C:\Users\lgreen\Documents\GLWSP-P3-BPSF-GAMHPNE_lgreen.rvt

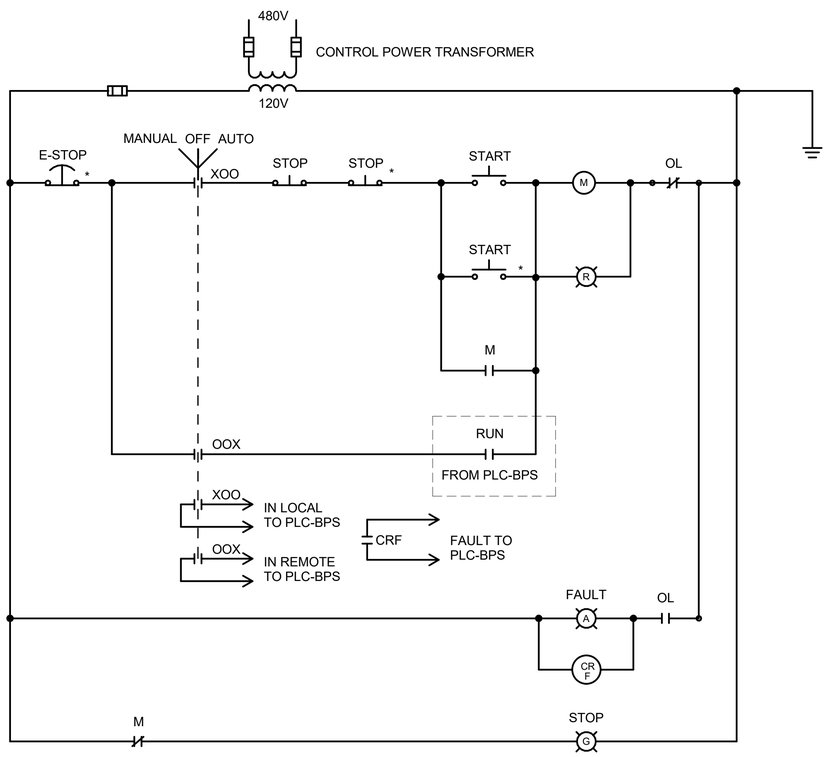


* DEVICE LOCATED AT PUMP

## RESERVOIR MIXING PUMP SCHEMATIC

NO SCALE

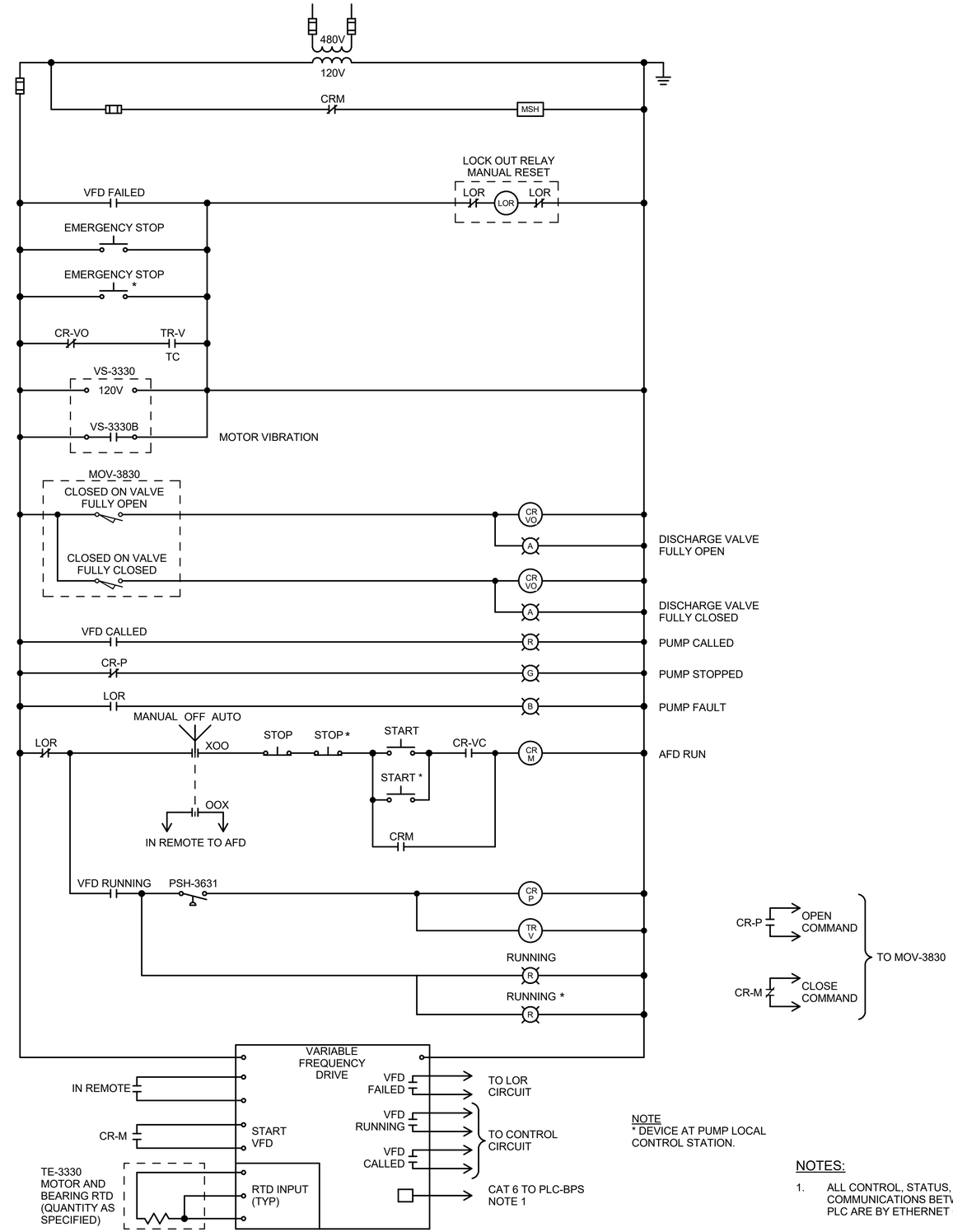


NOTE
* DEVICE AT PUMP LOCAL CONTROL STATION.

NOTES:

1. ALL CONTROL, STATUS, AND FAULT COMMUNICATIONS BETWEEN VFD AND PLC ARE BY ETHERNET CONNECTION.

## BOOSTER PUMP PMP-3330 SCHEMATIC DIAGRAM

NO SCALE
(TYPICAL FOR PMP-3340, PMP-3350, PMP-3360)

DRAFT 98% PROGRESS DRAWINGS
OCTOBER 2019

| NO. | DATE | APPD | DESCRIPTION |
|---|---|---|---|

Waukesha Water Utility
SERVING WAUKESHA SINCE 1886

GREELEY AND HANSEN
741 N. GRAND AVE, SUITE 308
WAUKESHA, WI 53186

GREAT WATER ALLIANCE™

CONTRACT PACKAGE 3: BOOSTER PUMPING STATION AND WATER SUPPLY CONTROL BUILDING

SCHEMATIC DIAGRAMS

APPROVED

SEAL AFFIXED
MONTH / DAY / YEAR

OCTOBER 2019

| | | | |
|---|---|---|---|
| JOB NO.: | 15310 | | |
| DESGN | TMK | CHCK | NV |
| APPRV | NV | DRWN | LAN |
| SCALE: | NO SCALE | | |

DRAWING NUMBER

BE6

SHEET 139 OF 184 REV 0

10/2/2019 10:08:07 AM

FILE: C:\Users\lgreen\Documents\GLWSP-P3-BPSF-GAMHPNE_lgreen.rvt

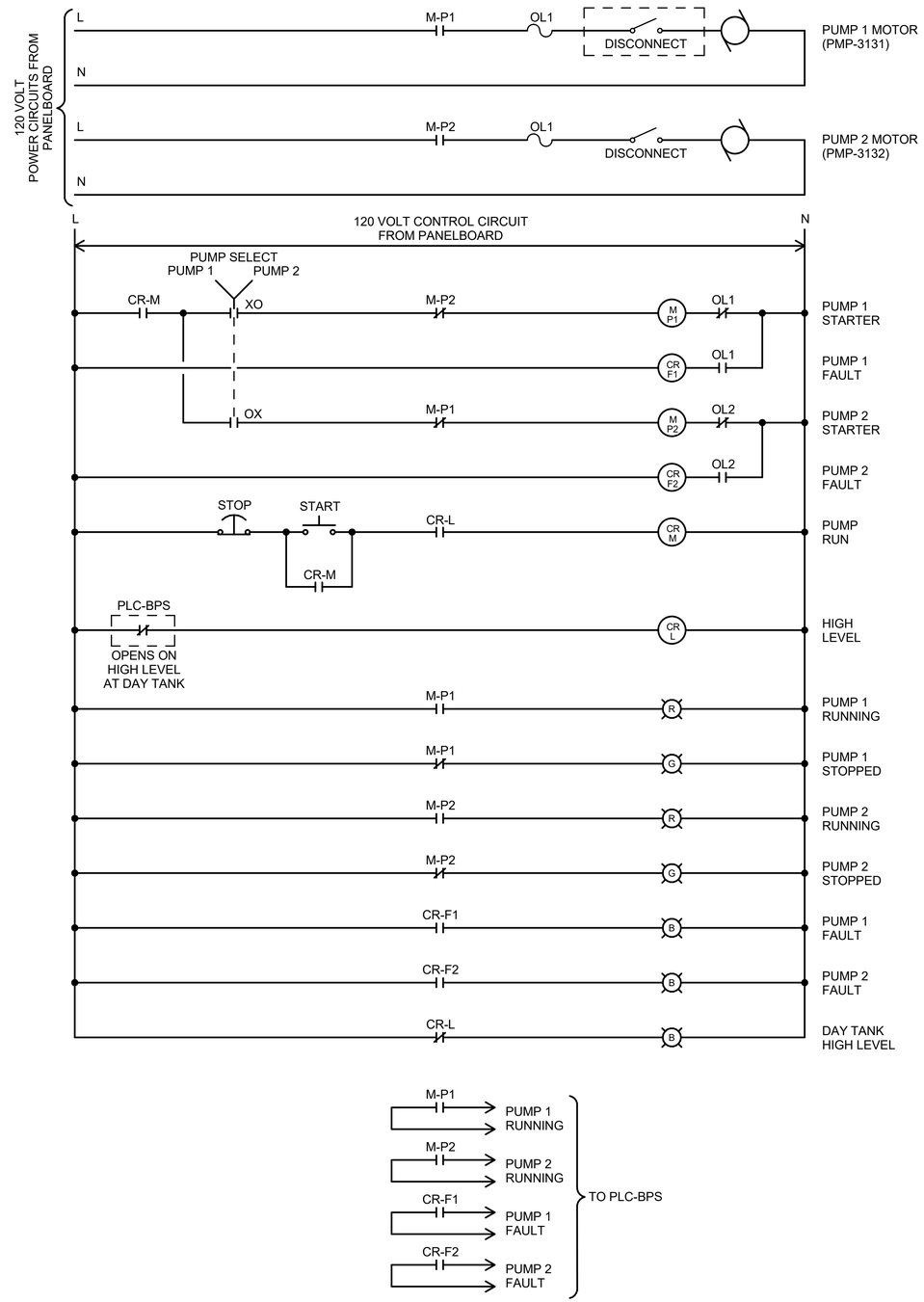


## SODIUM HYPOCHLORITE TRANSFER PUMPS SCHEMATIC DIAGRAM

NO SCALE

(PMP-3131 AND PMP-3132)

(SIMILAR FOR LIQUID AMMONIUM SULFATE TRANSFER PUMPS PMP-3134 AND PMP-3142)

DRAFT 98% PROGRESS DRAWINGS

OCTOBER 2019

| NO. | DATE | APPD | DESCRIPTION |
|---|---|---|---|

Waukesha Water Utility
SERVING WAUKESHA SINCE 1886

GREELEY AND HANSEN
741 N. GRAND AVE. SUITE 308
WAUKESHA, WI 53186

GREAT WATER ALLIANCE™

CONTRACT PACKAGE 3: BOOSTER PUMPING STATION AND WATER SUPPLY CONTROL BUILDING

SCHEMATIC DIAGRAMS

APPROVED

SEAL AFFIXED
MONTH / DAY / YEAR

OCTOBER 2019

| | | | |
|---|---|---|---|
| JOB NO.: | 15310 | | |
| DESGN | TMK | CHCK | NV |
| APPRV | NV | DRWN | LAN |
| SCALE: | NO SCALE | | |

DRAWING NUMBER

BE7

SHEET 140 OF 184 REV 0

10/2/2019 10:08:11 AM

BAR MEASURE 1" ON FULLSIZE SHEETS

FILE: C:\Users\lgreen\Documents\GLWSP-P3-BPSF-GAMHPNE_lgreen.rvt

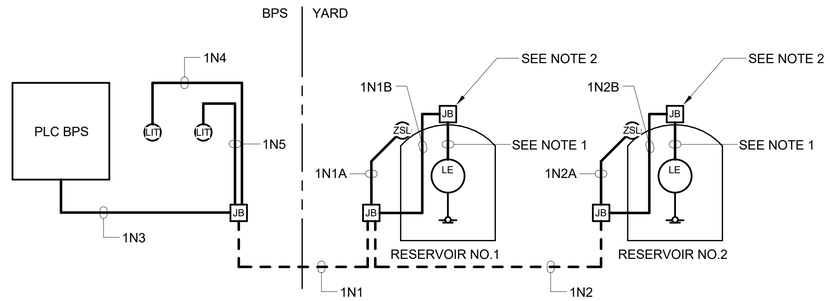


## RESERVOIRS BLOCK DIAGRAM

NO SCALE

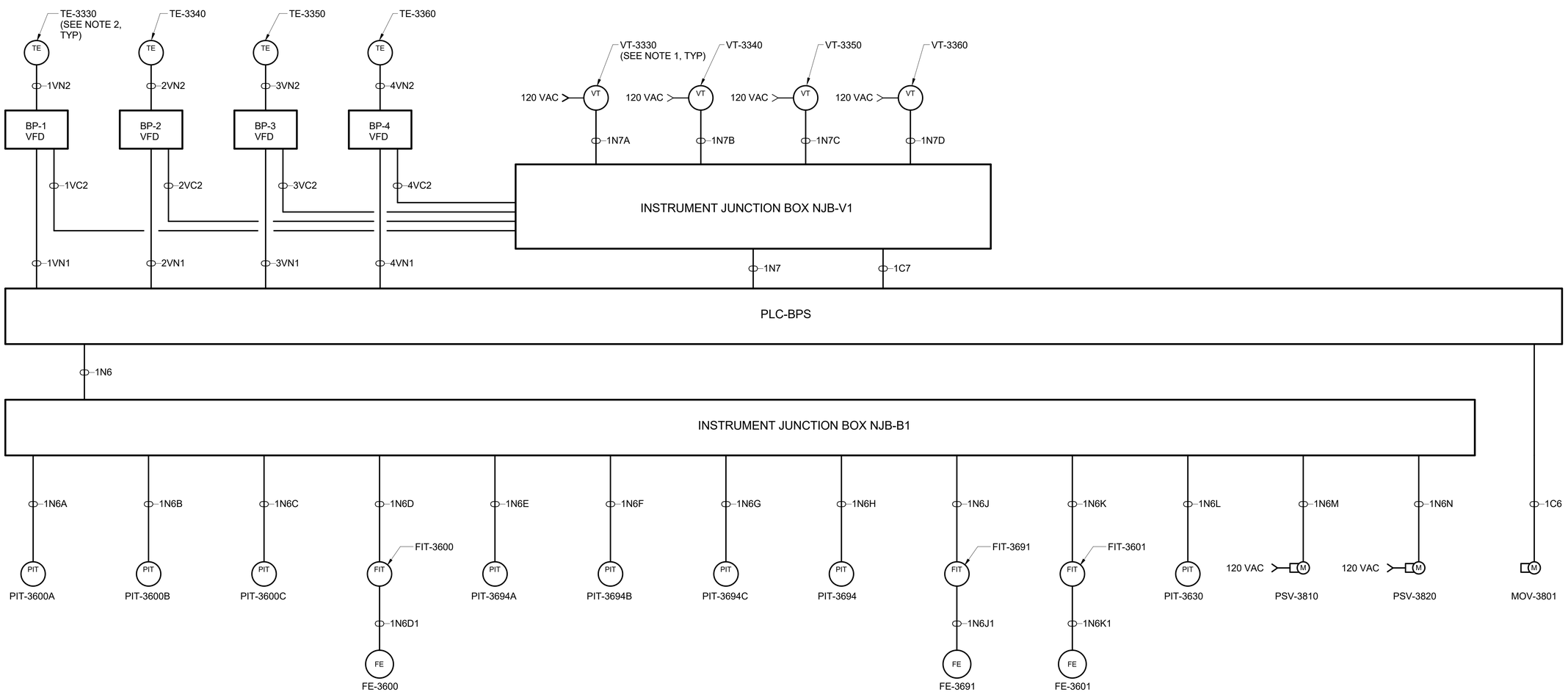


## PUMPING SYSTEM BLOCK DIAGRAM

NO SCALE

NOTES:

1. VT-3330 INCLUDES VE-3330, VS-3330A, VS-3330B IN COMMON ENCLOSURE. SIMILAR FOR VT-3340, VT-3350, VT-3360.
2. RTD TEMPERATURE SENSORS AT MOTOR AND BEARING.

DRAFT 98% PROGRESS DRAWINGS
OCTOBER 2019

| NO. | DATE | APPD | DESCRIPTION |
|---|---|---|---|

Waukesha Water Utility
SERVING WAUKESHA SINCE 1886

GREELEY AND HANSEN
741 N. GRAND AVE. SUITE 308
WAUKESHA, WI 53186

GREAT WATER ALLIANCE™

CONTRACT PACKAGE 3: BOOSTER PUMPING STATION AND WATER SUPPLY CONTROL BUILDING

BLOCK DIAGRAMS

APPROVED

SEAL AFFIXED
MONTH / DAY / YEAR

OCTOBER 2019

| | | | |
|---|---|---|---|
| JOB NO.: | 15310 | | |
| DESGN | TMK | CHCK | NV |
| APPRV | NV | DRWN | LAN |
| SCALE: | NO SCALE | | |

DRAWING NUMBER

BE8

SHEET 141 OF 184 REV 0

10/2/2019 10:08:14 AM

BAR MEASURE 1" ON FULLSIZE SHEETS

FILE: C:\Users\lgreen\Documents\GLWSP-P3-BPSF-GAMHPNE_lgreen.rvt

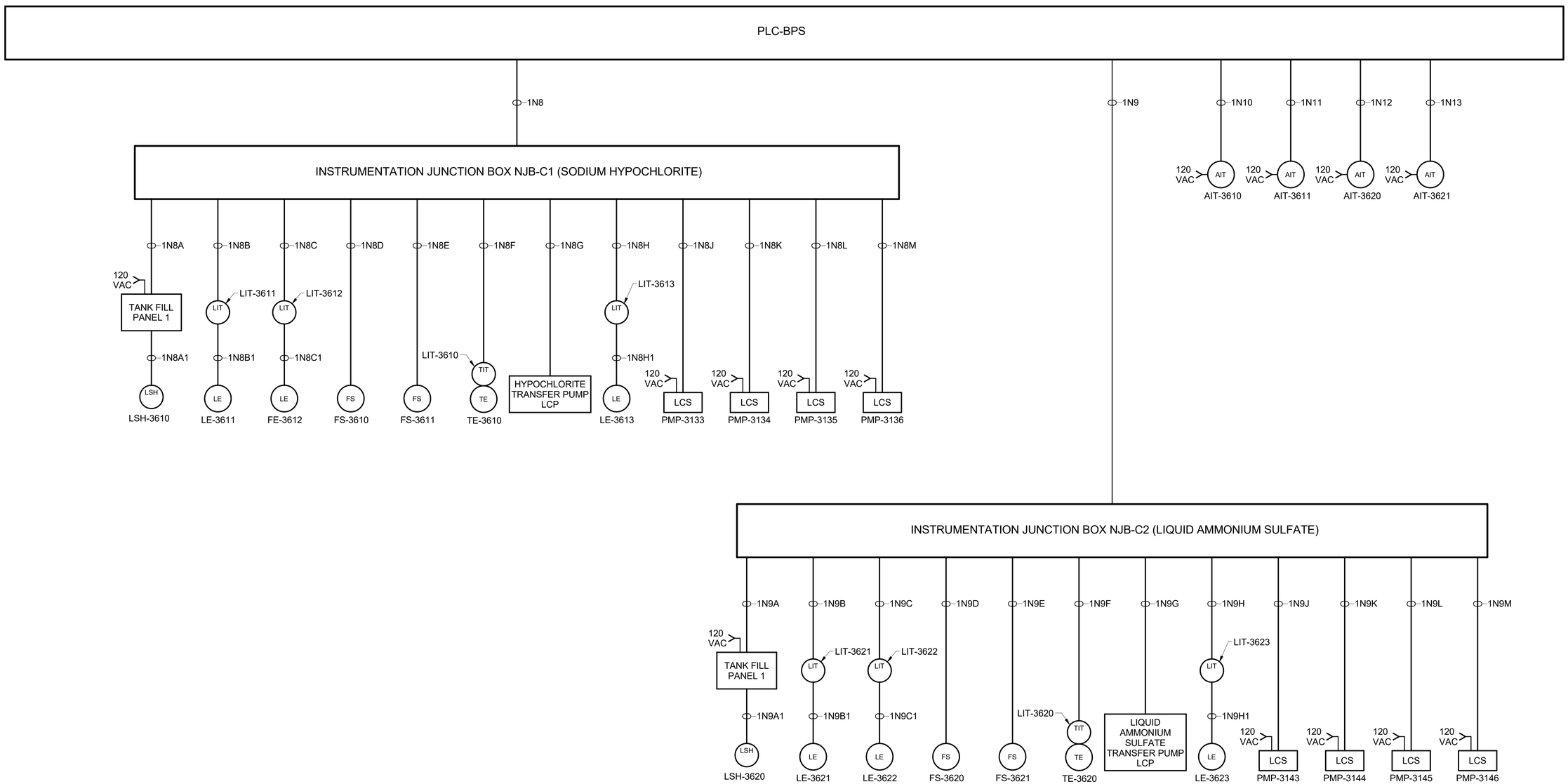


## CHEMICAL FEED SYSTEM BLOCK DIAGRAM

NO SCALE

DRAFT 98% PROGRESS DRAWINGS
OCTOBER 2019

10/2/2019 10:08:18 AM

BAR MEASURE 1" ON FULLSIZE SHEETS

FILE: C:\Users\lgreen\Documents\GLWSP-P3-BPSF-GAMHPNE_lgreen.rvt

| NO. | DATE | APPD | DESCRIPTION |
|---|---|---|---|

Waukesha Water Utility
SERVING WAUKESHA SINCE 1886

GREELEY AND HANSEN
741 N. GRAND AVE. SUITE 308
WAUKESHA, WI 53186

GREAT WATER ALLIANCE™

CONTRACT PACKAGE 3: BOOSTER PUMPING STATION AND WATER SUPPLY CONTROL BUILDING

BLOCK DIAGRAMS

APPROVED

SEAL AFFIXED
MONTH / DAY / YEAR

OCTOBER 2019

| | | | |
|---|---|---|---|
| JOB NO.: | 15310 | | |
| DESGN | TMK | CHCK | NV |
| APPRV | NV | DRWN | LAN |
| SCALE: | NO SCALE | | |

DRAWING NUMBER

BE9

SHEET 142 OF 184 REV 0

10/2/2019 10:08:22 AM

BAR MEASURE 1" ON FULLSIZE SHEETS

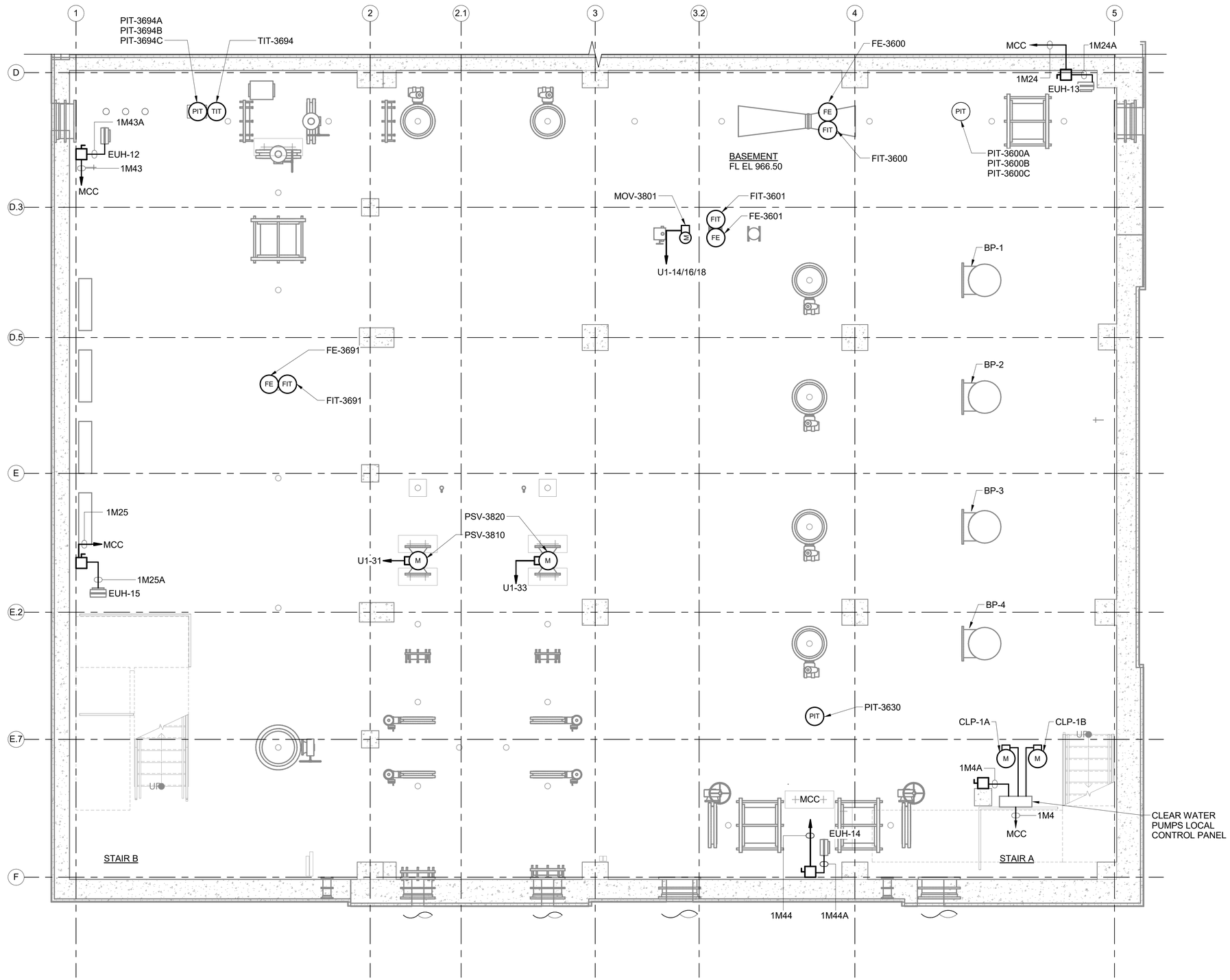


DRAFT 98% PROGRESS DRAWINGS

OCTOBER 2019

POWER PLAN AT EL 967.50

SCALE: 1/4" = 1'-0"

4 0 4 8 FT

1/4" =1' - 0"

| NO. | DATE | APPD | DESCRIPTION |
|---|---|---|---|
| | | | |

Waukesha Water Utility
SERVING WAUKESHA SINCE 1886

GREELEY AND HANSEN
741 N. GRAND AVE. SUITE 308
WAUKESHA, WI 53186

GREAT WATER ALLIANCE™

CONTRACT PACKAGE 3: BOOSTER PUMPING STATION AND WATER SUPPLY CONTROL BUILDING

POWER PLAN AT EL 967.50

APPROVED

SEAL AFFIXED
MONTH / DAY / YEAR

OCTOBER 2019

| | | | |
|---|---|---|---|
| JOB NO.: | 15310 | | |
| DESGN | TMK | CHCK | NV |
| APPRV | NV | DRWN | LAN |
| SCALE: | 1/4" = 1'-0" | | |

DRAWING NUMBER

BE10

SHEET 143 OF 184 REV 0

FILE: C:\Users\lgreen\Documents\GLWSP-P3-BPSF-GAMHPNE_lgreen.rvt

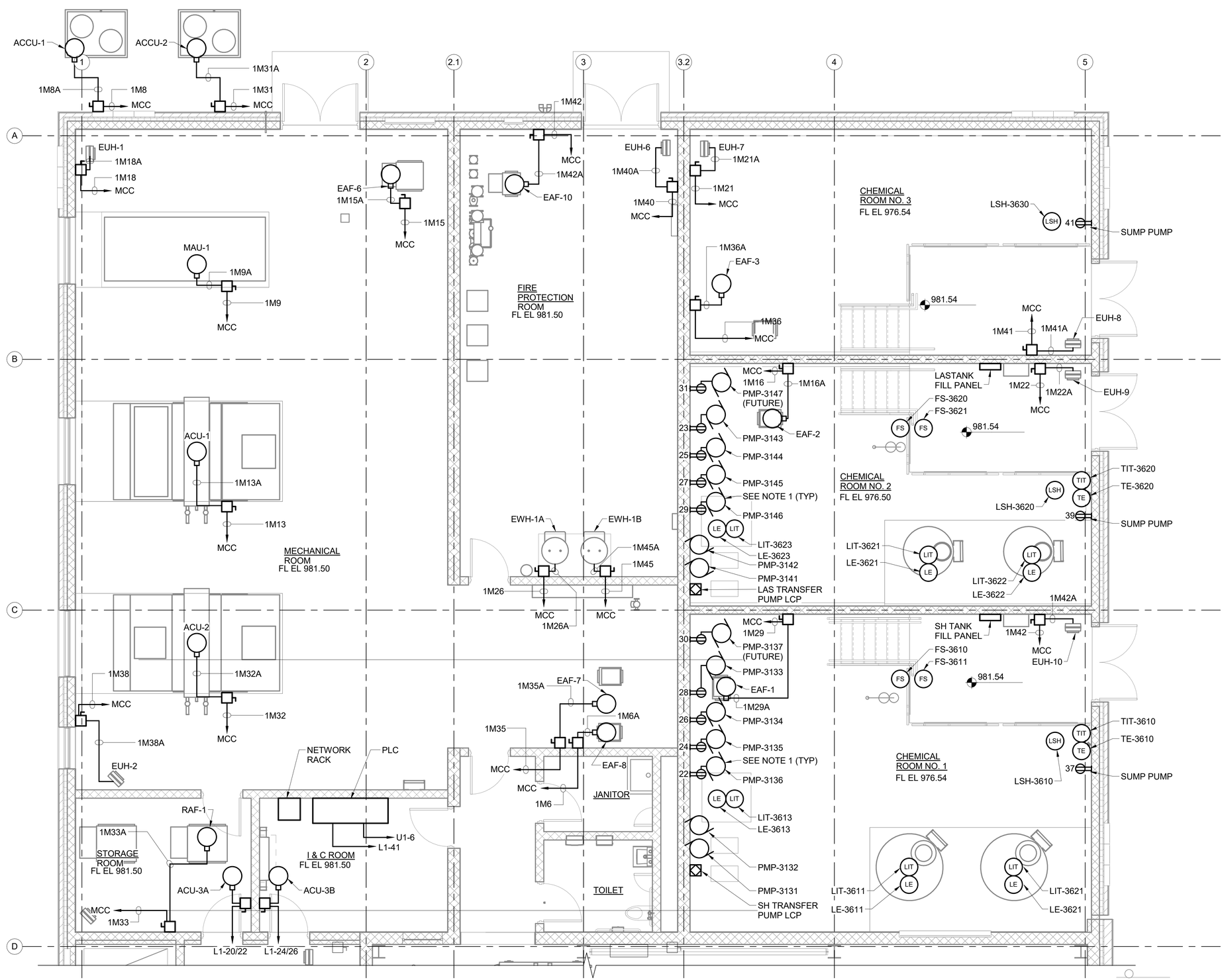


# DRAFT 98% PROGRESS DRAWINGS

OCTOBER 2019

## POWER PLAN AT EL 981.50

SCALE: 1/4" = 1'-0"

4 0 4 8 FT 1/4" =1' - 0"

NOTE:

1. NEMA 4X RECEPTACLE WITH COVER. CONNECTED TO PANELBOARD L2.

| NO. | DATE | APPD | DESCRIPTION |
|---|---|---|---|

Waukesha Water Utility
SERVING WAUKESHA SINCE 1886

GREELEY AND HANSEN
741 N. GRAND AVE, SUITE 308
WAUKESHA, WI 53186

GREAT WATER ALLIANCE™

CONTRACT PACKAGE 3: BOOSTER PUMPING STATION AND WATER SUPPLY CONTROL BUILDING

POWER PLAN AT EL 981.50

APPROVED

SEAL AFFIXED
MONTH / DAY / YEAR

OCTOBER 2019

| | | | |
|---|---|---|---|
| JOB NO.: | 15310 | | |
| DESGN | TMK | CHCK | NV |
| APPRV | NV | DRWN | LAN |
| SCALE: | 1/4" = 1'-0" | | |

DRAWING NUMBER

BE11

SHEET 144 OF 184 REV 0

10/2/2019 10:08:26 AM

BAR MEASURE 1" ON FULL SIZE SHEETS

FILE: C:\Users\lgreen\Documents\GLWSP-P3-BPSF-GAMHPNE_lgreen.rvt

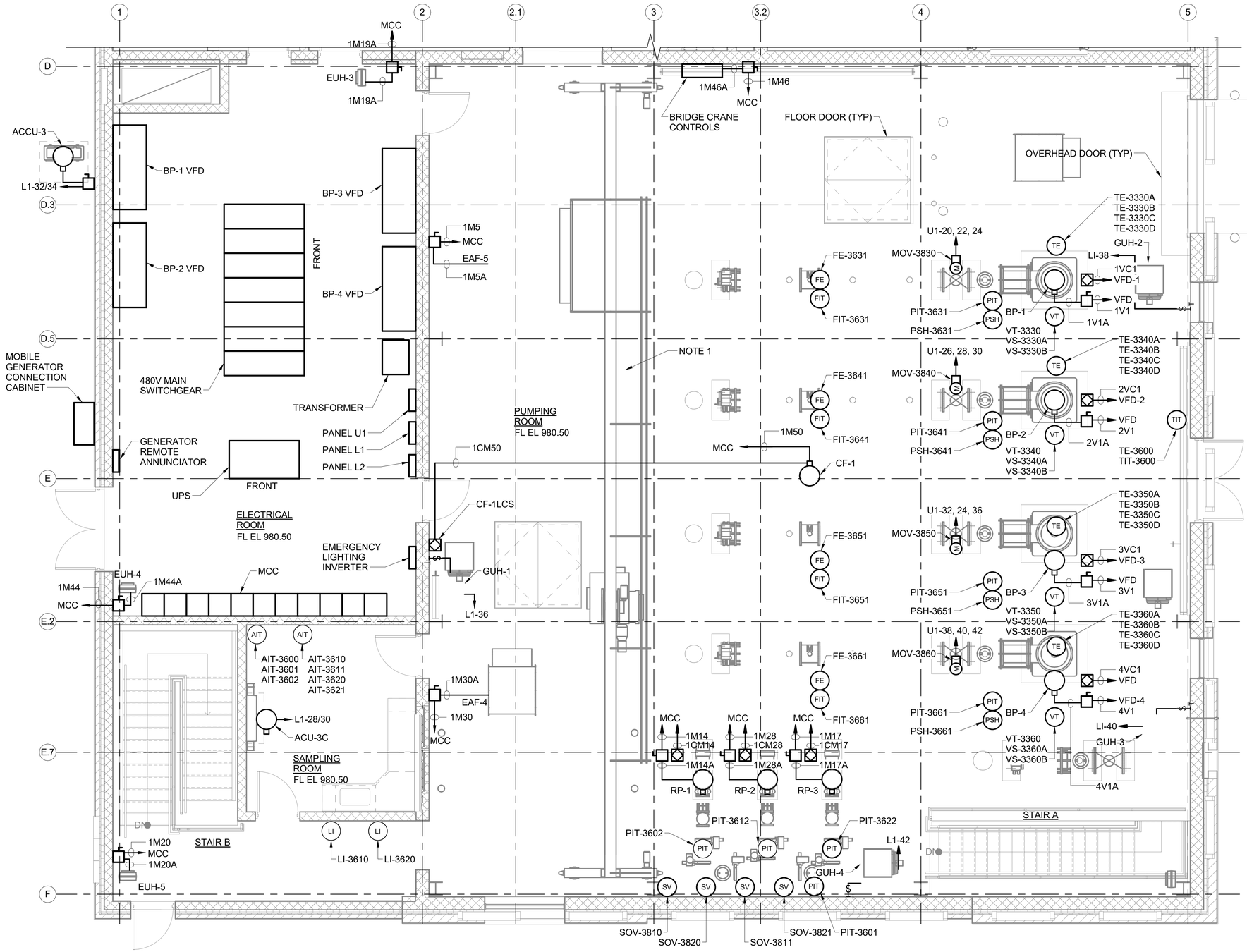


NOTE:

1. COORDINATE ALL INSTALLATION IN PUMPING ROOM WITH BRIDGE CRANE TO PREVENT INTERFERENCE WITH CRANE TRAVEL, OPERATION AND MAINTENANCE.

4 0 4 8 FT
1/4" =1' - 0"

POWER PLAN AT EL 981.50
SCALE: 1/4" = 1'-0"

DRAFT 98% PROGRESS DRAWINGS
OCTOBER 2019

| NO. | DATE | APPD | DESCRIPTION |
|---|---|---|---|

Waukesha Water Utility
SERVING WAUKESHA SINCE 1886

GREELEY AND HANSEN
741 N. GRAND AVE, SUITE 308
WAUKESHA, WI 53186

GREAT WATER ALLIANCE™

CONTRACT PACKAGE 3: BOOSTER PUMPING STATION AND WATER SUPPLY CONTROL BUILDING

POWER PLAN AT EL 981.50

APPROVED

SEAL AFFIXED
MONTH / DAY / YEAR

OCTOBER 2019

| | | | |
|---|---|---|---|
| JOB NO.: | 15310 | | |
| DESGN | TMK | CHCK | NV |
| APPRV | NV | DRWN | LAN |
| SCALE: | 1/4" = 1'-0" | | |

DRAWING NUMBER

BE12

SHEET 145 OF 184 REV 0

10/2/2019 10:08:31 AM

BAR MEASURE 1" ON FULLSIZE SHEETS

FILE: C:\Users\lgreen\Documents\GLWSP-P3-BPSF-GAMHPNE_lgreen.rvt

10/2/2019 10:08:34 AM

BAR MEASURE 1" ON FULLSIZE SHEETS

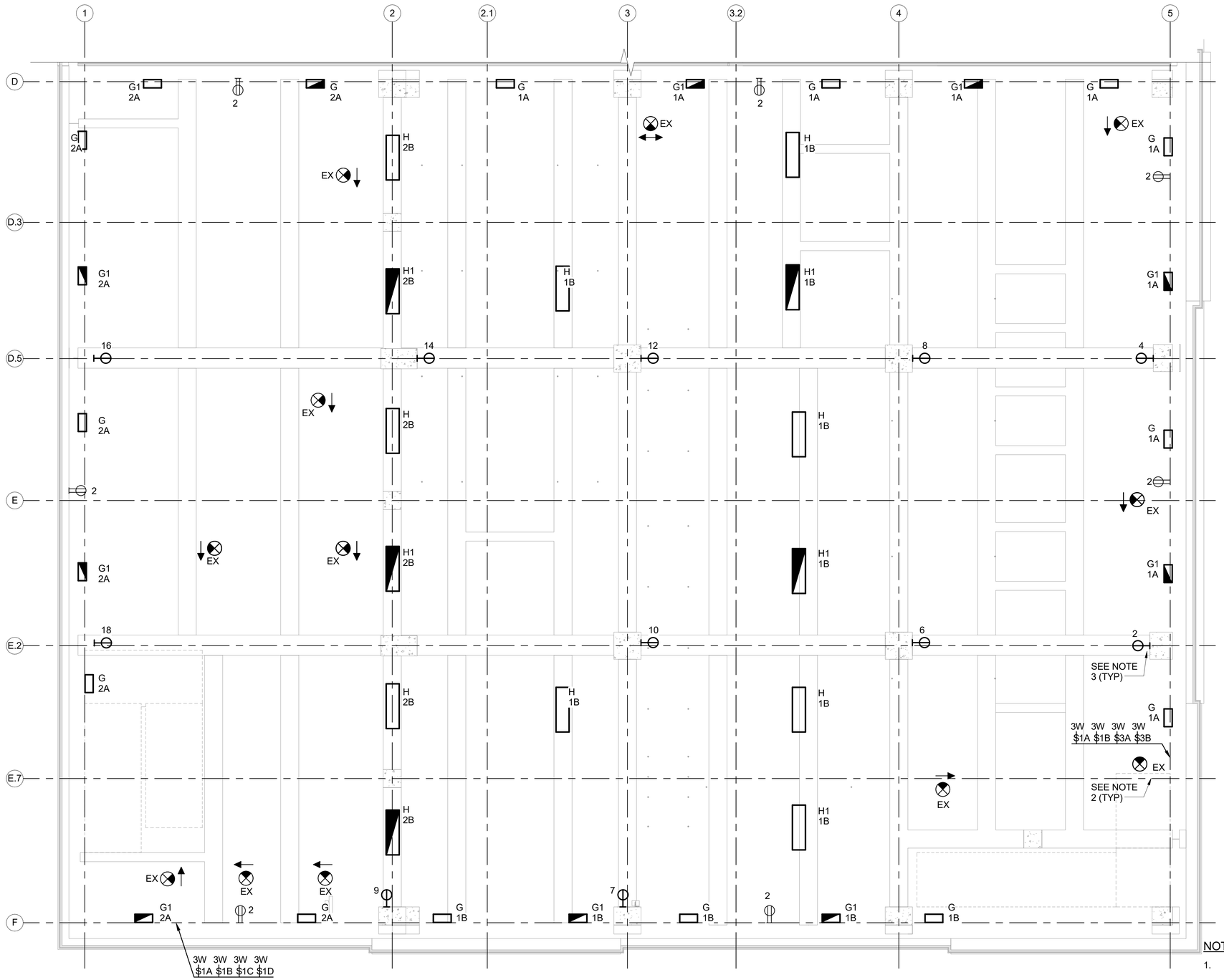


NOTES:

1. CONNECT ALL LIGHTING AND RECEPTACLES TO INDICATED CIRCUITS ON PANELBOARD L2 UNLESS NOTED.
2. CONNECT ALL EXIT SIGNAGE TO PANELBOARD L2, CIRCUIT 42.
3. PROVIDE ENGRAVED NAME PLATE AT ALL SINGLE RECEPTACLES READING "DEHUMIDIFIER CIRCUIT". CONNECT TO PANELBOARD L1.
4. SEE LIGHTING FIXTURE SCHEDULE ON DRAWING BE23.

DRAFT 98% PROGRESS DRAWINGS
OCTOBER 2019

## LIGHTING PLAN AT EL 967.50

SCALE: 1/4" = 1'-0"

4 0 4 8 FT
1/4" =1' - 0"

| NO. | DATE | APPD | DESCRIPTION |
|---|---|---|---|

Waukesha Water Utility
SERVING WAUKESHA SINCE 1886

GREELEY AND HANSEN
741 N. GRAND AVE. SUITE 308
WAUKESHA, WI 53186

GREAT WATER ALLIANCE™

CONTRACT PACKAGE 3: BOOSTER PUMPING STATION AND WATER SUPPLY CONTROL BUILDING

LIGHTING PLAN AT EL 967.50

APPROVED

SEAL AFFIXED
MONTH / DAY / YEAR

OCTOBER 2019

| | | | |
|---|---|---|---|
| JOB NO.: | 15310 | | |
| DESGN | TMK | CHCK | NV |
| APPRV | NV | DRWN | LAN |
| SCALE: | 1/4" = 1'-0" | | |

DRAWING NUMBER

BE13

SHEET 146 OF 184 REV 0

FILE: C:\Users\lgreen\Documents\GLWSP-P3-BPSF-GAMHPNE_lgreen.rvt

10/2/2019 10:08:38 AM

BAR MEASURE 1" ON FULLSIZE SHEETS

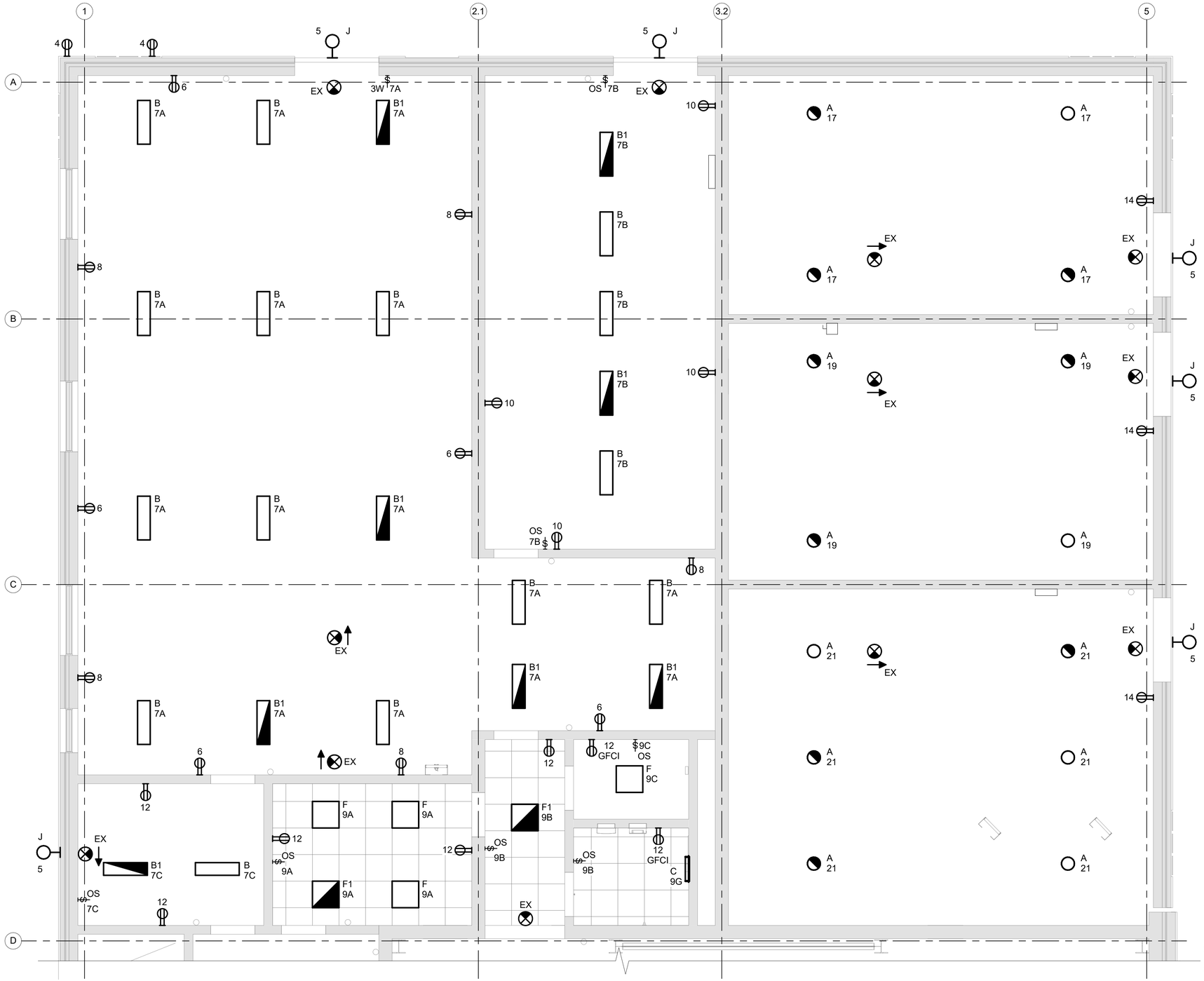


## NOTES:

1. CONNECT ALL LIGHTING AND RECEPTACLES TO INDICATED CIRCUITS ON PANELBOARD L2 UNLESS NOTED.
2. CONNECT ALL EXIT SIGNAGE TO PANELBOARD L2, CIRCUIT 42.
3. SEE LIGHTING FIXTURE SCHEDULE ON DRAWING BE23.

DRAFT 98% PROGRESS DRAWINGS

OCTOBER 2019

# LIGHTING PLAN AT EL 981.50

SCALE: 1/4" = 1'-0"

4 0 4 8 FT

1/4" =1' - 0"

| NO. | DATE | APPD | DESCRIPTION |
|---|---|---|---|

Waukesha Water Utility
SERVING WAUKESHA SINCE 1886

GREELEY AND HANSEN
741 N. GRAND AVE. SUITE 308
WAUKESHA, WI 53186

GREAT WATER ALLIANCE™

CONTRACT PACKAGE 3: BOOSTER PUMPING STATION AND WATER SUPPLY CONTROL BUILDING

LIGHTING PLAN AT EL 981.50

APPROVED

SEAL AFFIXED
MONTH / DAY / YEAR

OCTOBER 2019

| | | | |
|---|---|---|---|
| JOB NO.: | 15310 | | |
| DESGN | TMK | CHCK | NV |
| APPRV | NV | DRWN | LAN |
| SCALE: | 1/4" = 1'-0" | | |

DRAWING NUMBER

BE14

SHEET 147 OF 184 REV 0

FILE: C:\Users\lgreen\Documents\GLWSP-P3-BPSF-GAMHPNE_lgreen.rvt

10/2/2019 10:08:42 AM
BAR MEASURE 1" ON FULLSIZE SHEETS

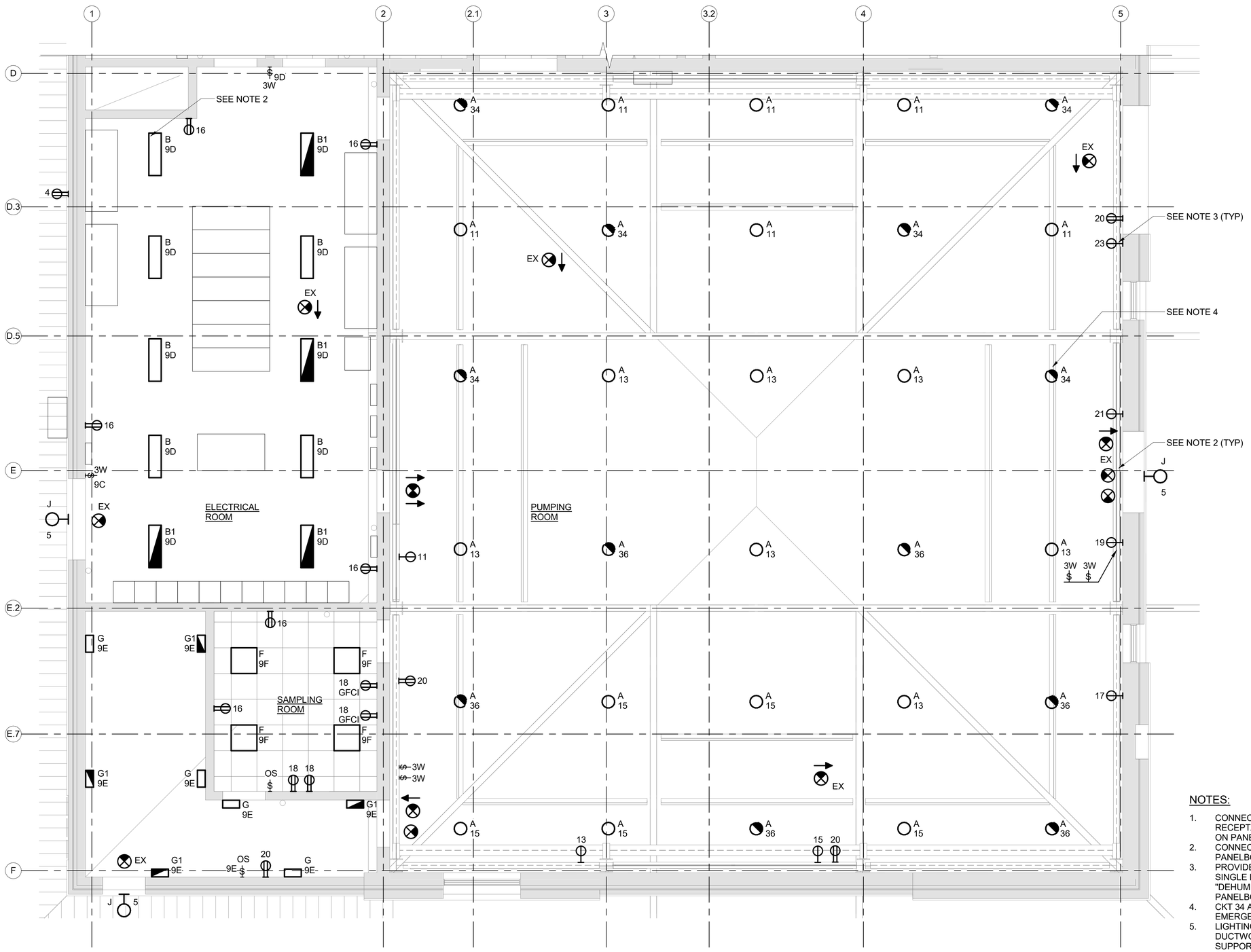


## NOTES:

1. CONNECT ALL LIGHTING AND RECEPTACLES TO INDICATED CIRCUITS ON PANELBOARD L2 UNLESS NOTED.
2. CONNECT ALL EXIT SIGNAGE TO PANELBOARD L2, CIRCUIT 40.
3. PROVIDE ENGRAVED NAME PLATE AT ALL SINGLE RECEPTACLES READING "DEHUMIDIFIER CIRCUIT". CONNECT TO PANELBOARD L1.
4. CKT 34 AND 36 TO BE CONNECTED TO EMERGENCY LIGHTING INVERTER.
5. LIGHTING FIXTURES INSTALLED BELOW DUCTWORK SHALL BE INDEPENDENTLY SUPPORTED ON STRUT CHANNEL, ANCHORED TO BUILDING STRUCTURE. FIXTURES AND ASSOCIATED RACEWAY SHALL NOT BE ATTACHED TO DUCTBANK.
6. SEE LIGHTING FIXTURE SCHEDULE ON DRAWING BE23.

# LIGHTING PLAN AT EL 981.50

SCALE: 1/4" = 1'-0"

4 0 4 8 FT
1/4" =1' - 0"

DRAFT 98% PROGRESS DRAWINGS
OCTOBER 2019

| NO. | DATE | APPD | DESCRIPTION |
|---|---|---|---|

Waukesha Water Utility
SERVING WAUKESHA SINCE 1886

GREELEY AND HANSEN
741 N. GRAND AVE. SUITE 308
WAUKESHA, WI 53186

GREAT WATER ALLIANCE™

CONTRACT PACKAGE 3: BOOSTER PUMPING STATION AND WATER SUPPLY CONTROL BUILDING

LIGHTING PLAN AT EL 981.50

APPROVED

SEAL AFFIXED
MONTH / DAY / YEAR

OCTOBER 2019

| | | | |
|---|---|---|---|
| JOB NO.: | 15310 | | |
| DESGN | TMK | CHCK | NV |
| APPRV | NV | DRWN | LAN |
| SCALE: | 1/4" = 1'-0" | | |

DRAWING NUMBER

BE15

SHEET 148 OF 184 REV 0

FILE: C:\Users\lgreen\Documents\GLWSP-P3-BPSF-GAMHPNE_lgreen.rvt

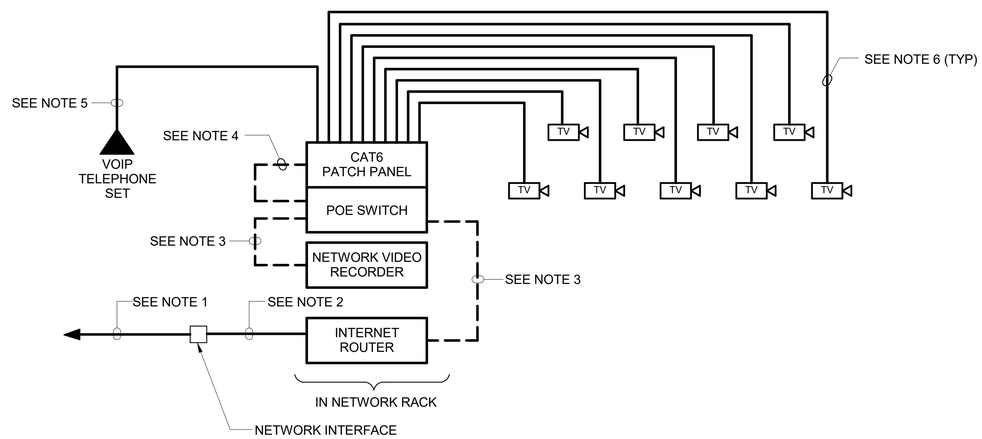


## COMMUNICATIONS AND SECURITY RISER DIAGRAM

NO SCALE

NOTES:

1. 2" EMPTY CONDUIT FOR CABLE BY INTERNET SERVICE PROVIDER.
2. 3/4" CONDUIT, CABLE AS REQUIRED BY INTERNET SERVICE PROVIDER.
3. CAT 6 PATCH CABLE.
4. CAT 6 PATCH CABLES, QUANTITY AS REQUIRED FOR INSTALLED DEVICES.
5. 3/4" CONDUIT, (2) CAT 6 CABLES.
6. 3/4" CONDUIT, (1) CAT 6 CABLE.

DRAFT 98% PROGRESS DRAWINGS
OCTOBER 2019

| NO. | DATE | APPD | DESCRIPTION |
|---|---|---|---|

Waukesha Water Utility
SERVING WAUKESHA SINCE 1886

GREELEY AND HANSEN
741 N. GRAND AVE. SUITE 308
WAUKESHA, WI 53186

GREAT WATER ALLIANCE™

CONTRACT PACKAGE 3: BOOSTER PUMPING STATION AND WATER SUPPLY CONTROL BUILDING

COMMUNICATIONS AND SECURITY SYSTEMS RISER DIAGRAMS

APPROVED

SEAL AFFIXED
MONTH / DAY / YEAR

OCTOBER 2019

| | | | |
|---|---|---|---|
| JOB NO.: | 15310 | | |
| DESGN | TMK | CHCK | NV |
| APPRV | NV | DRWN | LAN |
| SCALE: | 12" = 1'-0" | | |

DRAWING NUMBER

BE16

SHEET 149 OF 184 REV 0

10/2/2019 10:08:43 AM
BAR MEASURE 1" ON FULLSIZE SHEETS
FILE: C:\Users\lgreen\Documents\GLWSP-P3-BPSF-GAMHPNE_lgreen.rvt

10/2/2019 10:08:49 AM

BAR MEASURE 1" ON FULL SIZE SHEETS

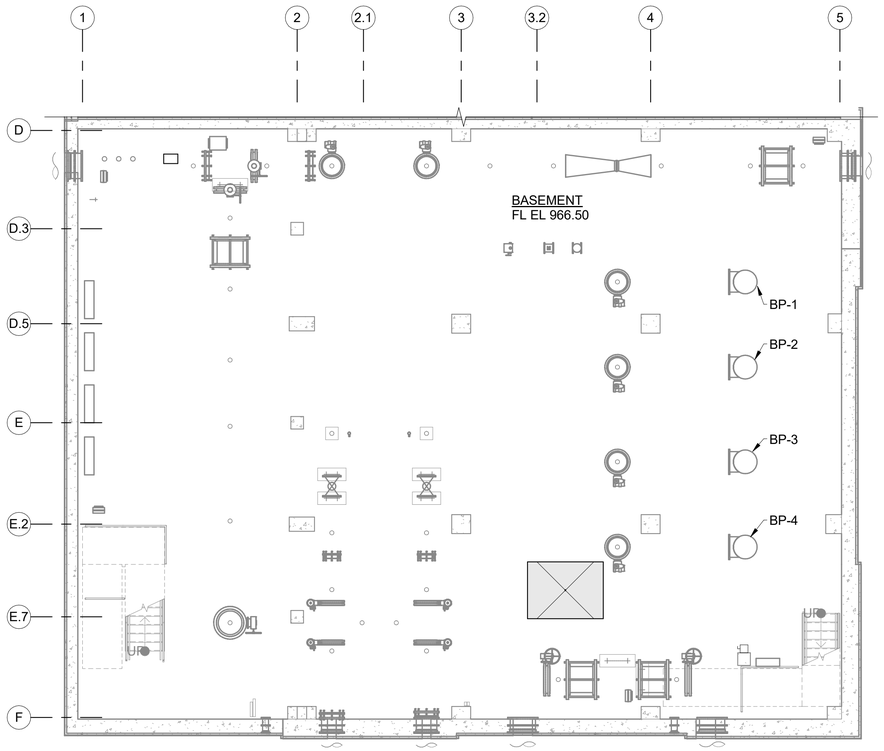


COMMUNICATION AND SECURITY PLAN AT EL 966.50

SCALE: 1/8" = 1'-0"

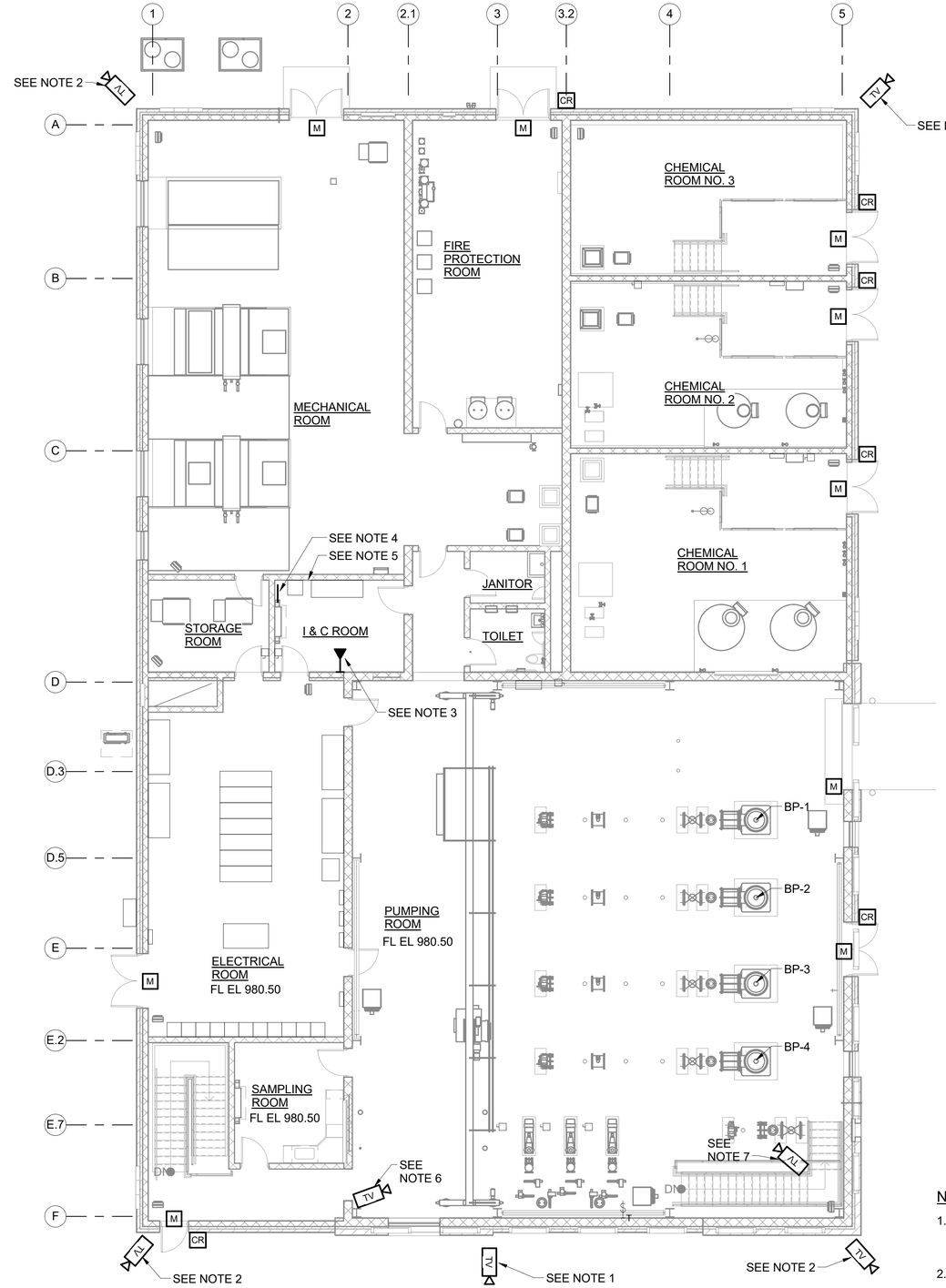


COMMUNICATION AND SECURITY PLAN AT EL 980.50

SCALE: 1/8" = 1'-0"

8 0 8 16 FT

1/8" =1' - 0"

NOTES:

1. FISH-EYE CCTV CAMERA MOUNTED ON FASCIA OF UPPER ROOF OVERHANG FOR VIEW OF RESERVOIRS AND ACCESS LADDERS.
2. FISH-EYE CCTV CAMERA MOUNTED UNDER SOFFIT FOR VIEW OF SITE.
3. VOICE-OVER-INTERNET PROTOCOL WALL-MOUNT TELEPHONE SET.
4. TELECOMMUNICATIONS SERVICE LOCATION.
5. NETWORK RACK WITH VOICE, ACCESS CONTROL AND CCTV EQUIPMENT.
6. CAMERA DIRECTED AT ENTRY DOOR.
7. CAMERA FOR GENERAL ROOM COVERAGE.

DRAFT 98% PROGRESS DRAWINGS

OCTOBER 2019

| NO. | DATE | APPD | DESCRIPTION |
|---|---|---|---|

Waukesha Water Utility
SERVING WAUKESHA SINCE 1886

GREELEY AND HANSEN
741 N. GRAND AVE, SUITE 308
WAUKESHA, WI 53186

GREAT WATER ALLIANCE™

CONTRACT PACKAGE 3: BOOSTER PUMPING STATION AND WATER SUPPLY CONTROL BUILDING

COMMUNICATIONS AND SECURITY SYSTEMS PLANS

APPROVED

SEAL AFFIXED
MONTH / DAY / YEAR

OCTOBER 2019

| | | | |
|---|---|---|---|
| JOB NO.: | 15310 | | |
| DESGN | TMK | CHCK | NV |
| APPRV | NV | DRWN | LAN |
| SCALE: | 1/8" = 1'-0" | | |

DRAWING NUMBER

BE17

SHEET 150 OF 184 REV 0

FILE: C:\Users\lgreen\Documents\GLWSP-P3-BPSF-GAMHPNE_lgreen.rvt

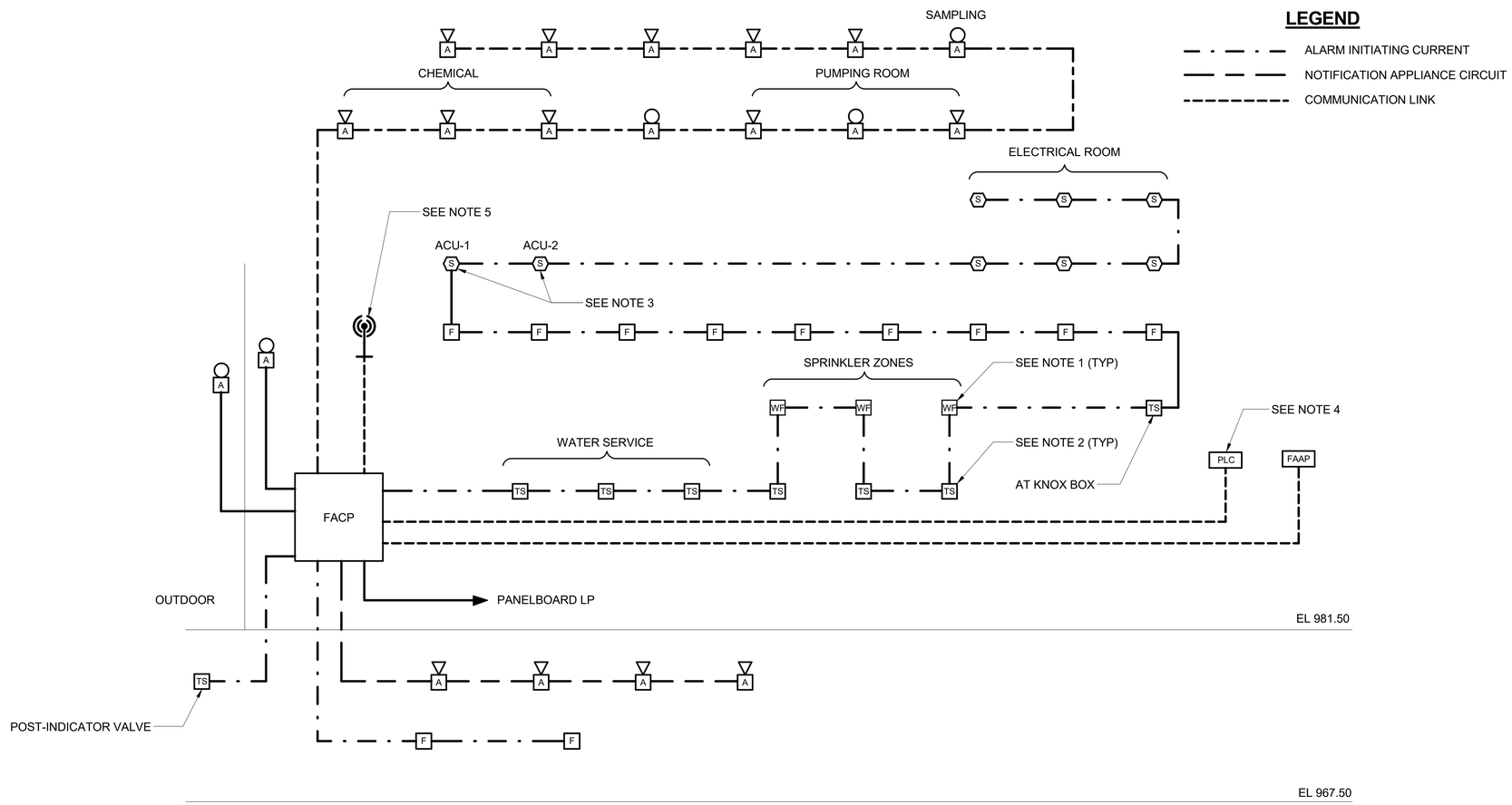


## LEGEND

- ALARM INITIATING CURRENT
- NOTIFICATION APPLIANCE CIRCUIT
- COMMUNICATION LINK

# FIRE ALARM RISER DIAGRAM

NO SCALE

NOTES:

1. PROVIDE ADDRESSABLE INPUT MODULES AS REQUIRED FOR CONNECTION OF WATER FLOW SWITCHES.
2. PROVIDE ADDRESSABLE INPUT MODULES AS REQUIRED FOR CONNECTION OF TAMPER SWITCHES.
3. CONNECTION OF DUCT SMOKE DETECTORS TO FAN CONTROLS BY HVAC.
4. CONFIGURE SYSTEM TO ALLOW PLC MONITORING OF ALARM AND TROUBLE STATUS.
5. WIRELESS TRANSMITTER FOR NEW BERLIN REMOTE MONITORING AGENCY.

DRAFT 98% PROGRESS DRAWINGS
OCTOBER 2019

| NO. | DATE | APPD | DESCRIPTION |
|---|---|---|---|

Waukesha Water Utility
SERVING WAUKESHA SINCE 1886

GREELEY AND HANSEN
741 N. GRAND AVE. SUITE 308
WAUKESHA, WI 53186

GREAT WATER ALLIANCE™

CONTRACT PACKAGE 3: BOOSTER PUMPING STATION AND WATER SUPPLY CONTROL BUILDING

FIRE ALARM RISER DIAGRAM

APPROVED

SEAL AFFIXED
MONTH / DAY / YEAR

OCTOBER 2019

| | | | |
|---|---|---|---|
| JOB NO.: | 15310 | | |
| DESGN | TMK | CHCK | NV |
| APPRV | NV | DRWN | LAN |
| SCALE: | NO SCALE | | |

DRAWING NUMBER

BE18

SHEET 151 OF 184 REV 0

10/2/2019 10:08:52 AM

BAR MEASURE 1" ON FULLSIZE SHEETS

FILE: C:\Users\lgreen\Documents\GLWSP-P3-BPSF-GAMHPNE_lgreen.rvt

10/2/2019 10:08:58 AM

BAR MEASURE 1" ON FULLSIZE SHEETS

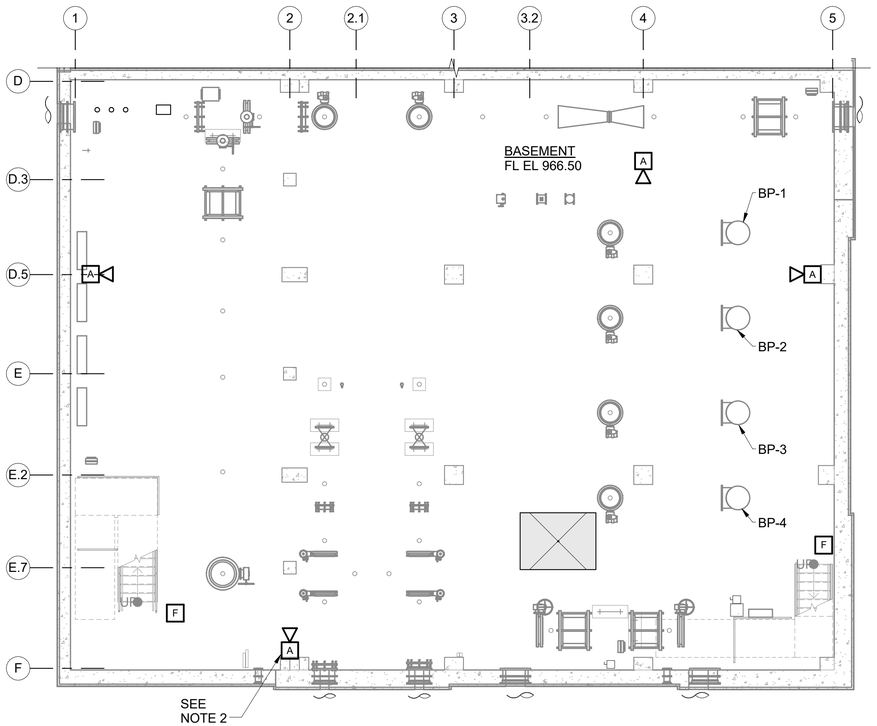


FIRE ALARM PLAN AT EL 966.50

SCALE: 1/8" = 1'-0"

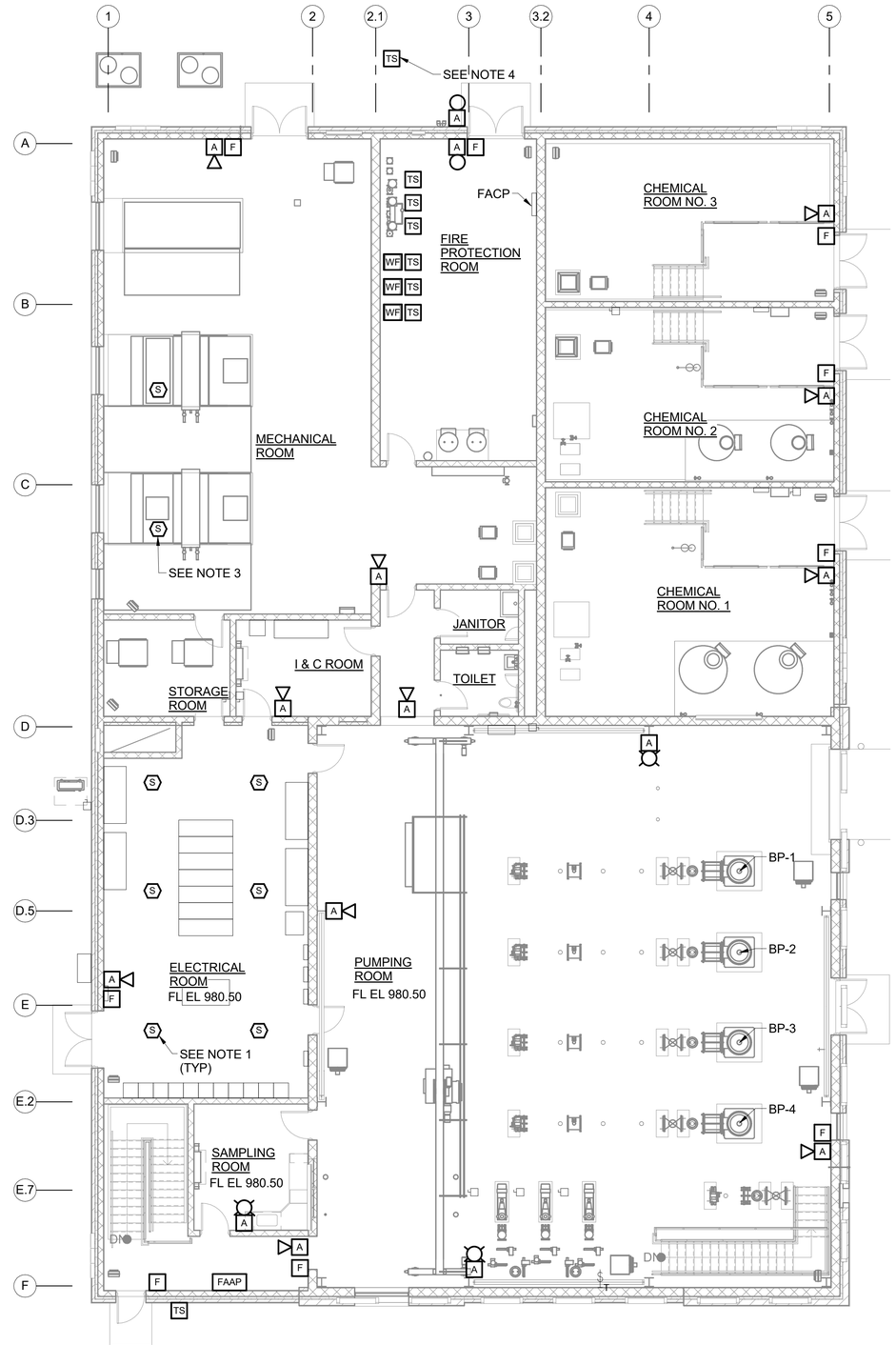


FIRE ALARM PLAN AT EL 980.50

SCALE: 1/8" = 1'-0"

8 0 8 16 FT

1/8" = 1' - 0"

## NOTES:

1. COORDINATE SMOKE DETECTOR QUANTITY AND PLACEMENT WITH MANUFACTURER'S REQUIREMENTS, LIGHTING, DUCTWORK AND OTHER OBSTRUCTIONS.
2. NOTIFICATION APPLIANCE LOCATED BELOW PIPING.
3. COORDINATE DUCT SMOKE DETECTOR LOCATION AND CONNECTION WITH HVAC.
4. TAMPER SWITCH LOCATED AT POST-INDICATOR VALVE. COORDINATE LOCATION WITH FIRE PROTECTION.

DRAFT 98% PROGRESS DRAWINGS

OCTOBER 2019

| NO. | DATE | APPD | DESCRIPTION |
|---|---|---|---|

Waukesha Water Utility
SERVING WAUKESHA SINCE 1886

GREELEY AND HANSEN
741 N. GRAND AVE. SUITE 308
WAUKESHA, WI 53186

GREAT WATER ALLIANCE™

CONTRACT PACKAGE 3: BOOSTER PUMPING STATION AND WATER SUPPLY CONTROL BUILDING

FIRE ALARM PLANS

APPROVED

SEAL AFFIXED
MONTH / DAY / YEAR

OCTOBER 2019

| | | | |
|---|---|---|---|
| JOB NO.: | 15310 | | |
| DESGN | TMK | CHCK | NV |
| APPRV | NV | DRWN | LAN |
| SCALE: | 1/8" = 1'-0" | | |

DRAWING NUMBER

BE19

SHEET 152 OF 184 REV 0

FILE: C:\Users\lgreen\Documents\GLWSP-P3-BPSF-GAMHPNE_lgreen.rvt

10/2/2019 10:09:02 AM

BAR MEASURE 1" ON FULLSIZE SHEETS

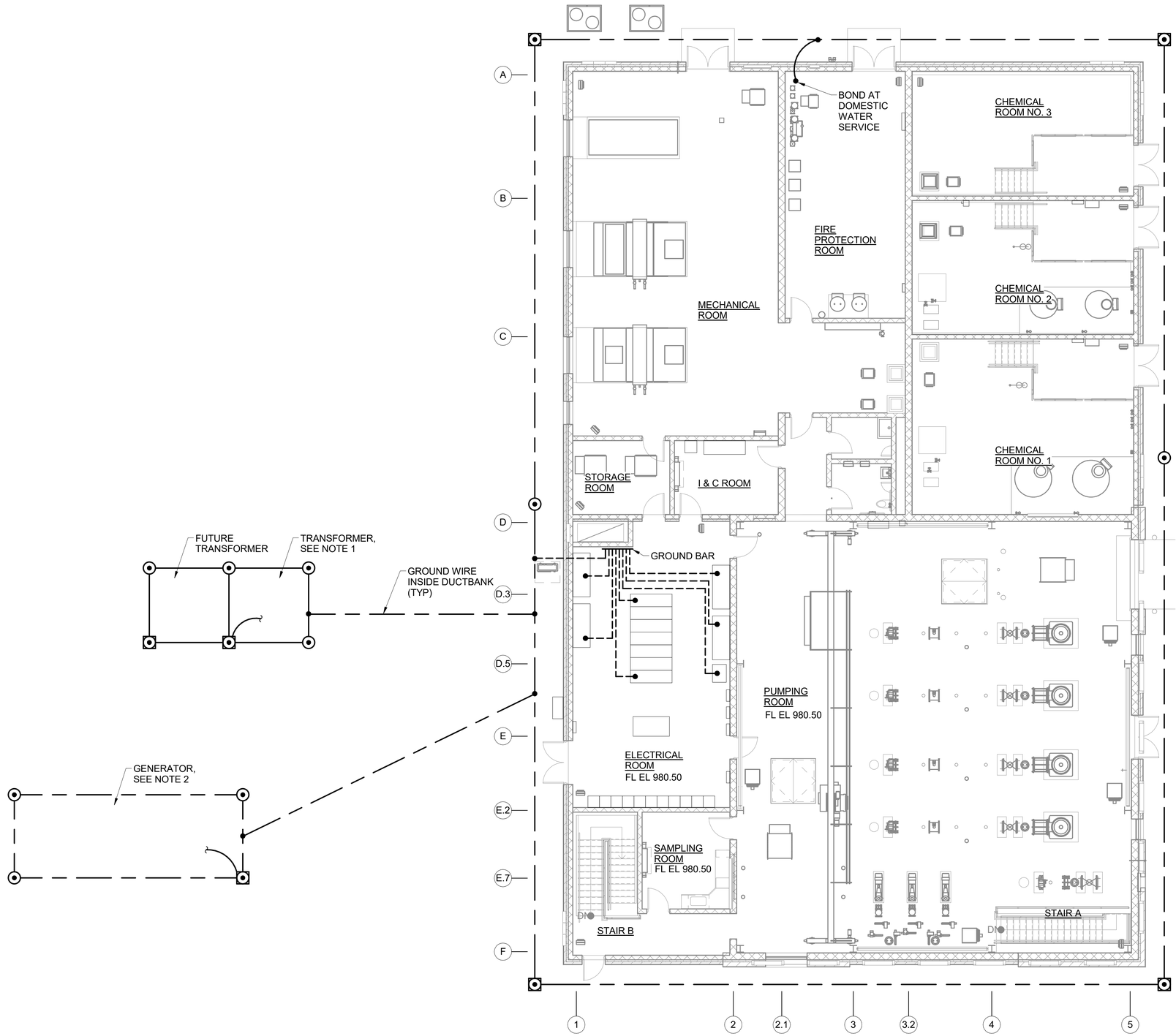


## NOTES:

1. GROUNDING AT TRANSFORMER IN ACCORDANCE WITH WE ENERGIES.
2. GROUND GENERATOR ENCLOSURE AND FOUNDATION REINFORCING.

DRAFT 98% PROGRESS DRAWINGS
OCTOBER 2019

## GROUNDING PLAN AND DETAILS

SCALE: 1/8" = 1'-0"

8 0 8 16 FT
1/8" =1' - 0"

| NO. | DATE | APPD | DESCRIPTION |
|---|---|---|---|

Waukesha Water Utility
SERVING WAUKESHA SINCE 1886

GREELEY AND HANSEN
741 N. GRAND AVE. SUITE 308
WAUKESHA, WI 53186

GREAT WATER ALLIANCE™

CONTRACT PACKAGE 3: BOOSTER PUMPING STATION AND WATER SUPPLY CONTROL BUILDING

GROUNDING PLAN AND DETAILS

APPROVED

SEAL AFFIXED
MONTH / DAY / YEAR

OCTOBER 2019

| | | | |
|---|---|---|---|
| JOB NO.: | 15310 | | |
| DESGN | TMK | CHCK | NV |
| APPRV | NV | DRWN | LAN |
| SCALE: | 1/8" = 1'-0" | | |

DRAWING NUMBER

BE20

SHEET 153 OF 184 REV 0

FILE: C:\Users\lgreen\Documents\GLWSP-P3-BPSF-GAMHPNE_lgreen.rvt

10/2/2019 10:09:03 AM

BAR MEASURE 1" ON FULLSIZE SHEETS

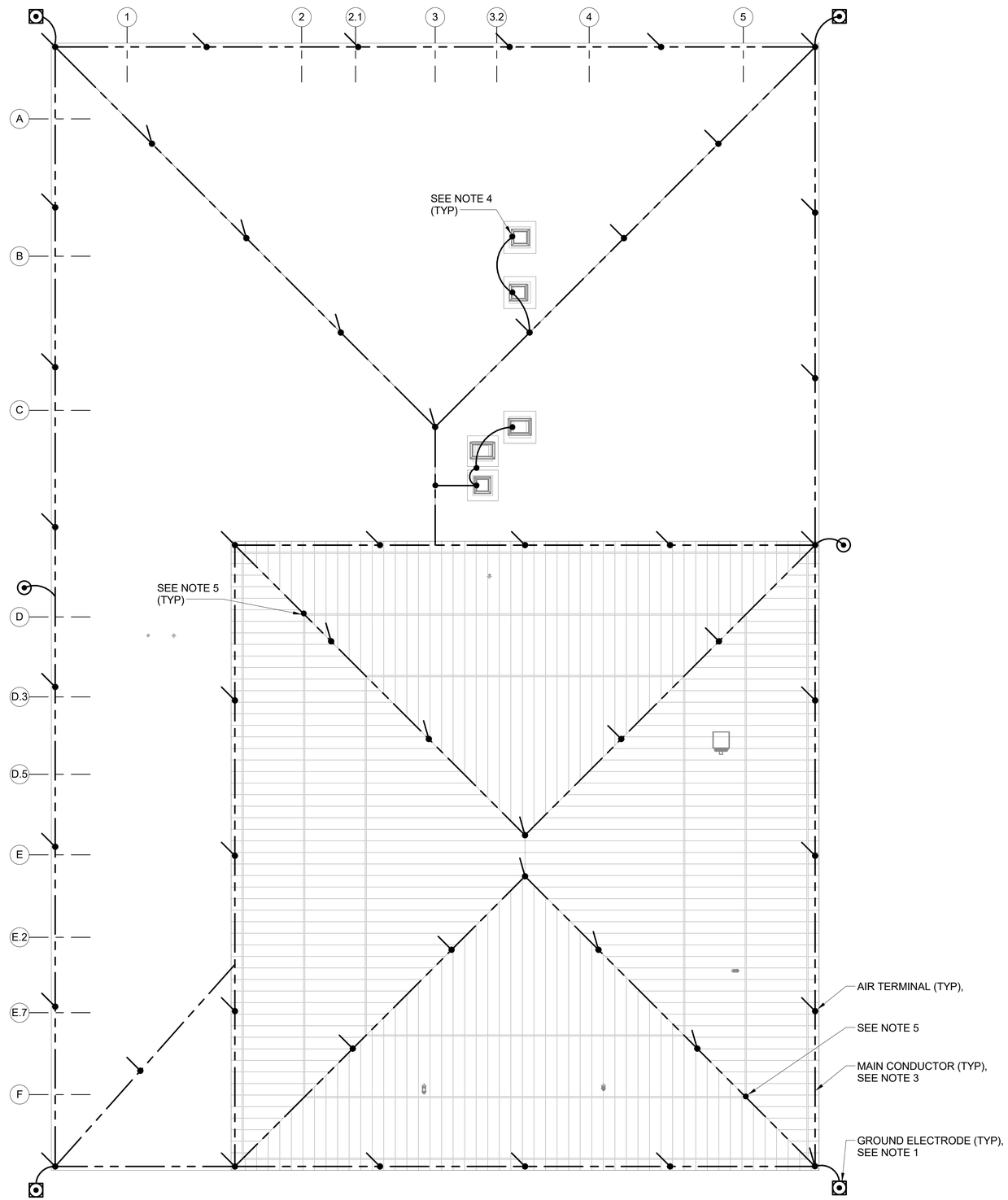


## LIGHTNING PROTECTION PLAN

SCALE: 1/8" = 1'-0"

8 0 8 16 FT

1/8" =1' - 0"

NOTES:

1. CONNECT TO BUILDING GROUND LOOP. SEE DWG BE21.
2. SPACE AIR TERMINALS EQUALLY AROUND PERIMETER AND RIDGES OF ROOF. MAXIMUM 20' SPACE BETWEEN TERMINALS.
3. CLASS I COPPER MAIN CONDUCTOR.
4. BOND METALLIC EQUIPMENT AND PIPING.
5. DOWN CONDUCTOR THROUGH ROOF OVERHANG TO LOW ROOF.

DRAFT 98% PROGRESS DRAWINGS

OCTOBER 2019

| NO. | DATE | APPD | DESCRIPTION |
|---|---|---|---|

Waukesha Water Utility
SERVING WAUKESHA SINCE 1886

GREELEY AND HANSEN
741 N. GRAND AVE. SUITE 308
WAUKESHA, WI 53186

GREAT WATER ALLIANCE™

CONTRACT PACKAGE 3: BOOSTER PUMPING STATION AND WATER SUPPLY CONTROL BUILDING

LIGHTNING PROTECTION PLAN AND DETAILS

APPROVED

SEAL AFFIXED
MONTH / DAY / YEAR

OCTOBER 2019

| | | | |
|---|---|---|---|
| JOB NO.: | 15310 | | |
| DESGN | TMK | CHCK | NV |
| APPRV | NV | DRWN | LAN |
| SCALE: | 1/8" = 1'-0" | | |

DRAWING NUMBER

BE21

SHEET 154 OF 184 REV 0

FILE: C:\Users\lgreen\Documents\GLWSP-P3-BPSF-GAMHPNE_lgreen.rvt

10/2/2019 10:09:10 AM

BAR MEASURE 1" ON FULLSIZE SHEETS

| INTERIOR LIGHTING FIXTURE SCHEDULE | | | | | | |
|---|---|---|---|---|---|---|
| LABEL | DESCRIPTION | LAMP TYPE | INPUT WATTAGE | MOUNTING | MANUFACTURER & CATALOG NUMBER | REMARKS |
| A | HIGH-BAY LED 25K LUMENS, 4000K WITH CORROSION-RESISTANT ALUMINUM HOUSING WITH POLYSTER TOPCOAT AND CHEMICAL-RESISTANT EPOXY PRIMER IDEAL FOR HEAVY INDUSTRY | LED | 215W | PENDANT | DIALIGHT HELMC4 PX LM79 | |
| B | 4' ENCLOSED AND GASKETED LED ELEC. BALLAST, ACRYLIC DIFFUSER, WET LOCATION RATED | LED | 40W | PENDANT | LITHONIA DMW2 400LM MD PFL MVOLT 40K | |
| B1 | 4' ENCLOSED AND GASKETED LED ELEC. BALLAST, ACRYLIC DIFFUSER, WET LOCATION RATED WITH EMERGENCY BATTERY | LED | 40W | PENDANT | LITHONIA DMW2 4000LM MD PFL MVOLT PS1050 40K | |
| C | 4' LED FIXTURE WITH ACRYLIC DIFFUSER 4000K 90CRI COLOR TEMPERATURE IDEAL FOR BATHROOM | LED | 34W | SURFACE | ACUITY FMVTRL 48IN 30K | |
| D | WALL MOUNTED FLOODLIGHT CORROSION RESISTANT DICAST ALUMINUM TYPE 3 DISTRIBUTION | LED | 67W | WALL | HOLOPHANE W4PLED 30C700 40K T3M | |
| E | HIGH-BAY LED FIXTURE 11K LUMENS, 4000K WITH CORROSION-RESISTANT ALUMINUM HOUSING WITH POLYSTER TOPCOAT AND CHEMICAL-RESISTANT EPOXY PRIMER IDEAL FOR HEAVY INDUSTRY | LED | 89W | PENDANT | DIALIGHT HEGMC4 DX | |
| F | 2X2 LED FIXTURE 4000K WITH ONE-PIECE COLD-ROLLED STEEL REFLECTOR AND COATED POLYESTER POWDER-PAINT | LED | 21W | WALL | LITHONIA 2RTL2 | |
| F1 | 2X2 LED FIXTURE 4000K WITH ONE-PIECE COLD-ROLLED STEEL REFLECTOR AND COATED POLYESTER POWDER-PAINT WITH EMERGENCY BATTERY PACK | LED | 21W | WALL | LITHONIA 2RTL2 E10WLCP | |
| G | LED WALL PACK CORROSION RESISTANT DICAST ALUMINUM POLYCARBONATE LENS WITH ADJUSTABLE OUTPUT LIGHT | LED | 49W | WALL | LITHONIA TWH LED ALO 40K | |
| G1 | LED WALL PACK CORROSION RESISTANT DIE-CAST ALUMINUM WITH ADJUSTABLE OUTPUT LIGHT AND EMERGENCY LIGHTING | LED | 49W | WALL | LITHONIA TWH LED ALO ELCW 40K | |
| H | 4' ENCLOSED AND GASKETED LED ELEC. BALLAST, ACRYLIC DIFFUSER, WET LOCATION RATED | LED | 40W | PENDANT | LITHONIA DMW2 4000LM WD ACL MVOLT 40K | |
| H1 | 4' ENCLOSED AND GASKETED LED ELEC. BALLAST, ACRYLIC DIFFUSER, WET LOCATION RATED WITH EMERGENCY BACK UP | LED | 40W | PENDANT | LITHONIA DMW2 4000LM WD ACL MVOLT 40K | |
| I | AC POWER SYSTEM NEMA TYPE 1 INVERTER | LED | 2880W | WALL | EAC FTT | FOR FIXTURE E |
| J | LED WALLPACK WITH CORROSION RESISTANT DIE-CAST ALUMINUM HOUSING AND ZINC INFUSED POWDER COAT | LED | 13W | SURFACE | LITHONIA OLWX1LED-13W-40K-DE | INTEGRAL PHOTOCELL |
| EX | SURFACE MOUNT SIGN WITH NICKEL CADMIUM BATTERY | LED | 6W | SURFACE | LITHONIA EDG W1R EL | |

## LIGHTING FIXTURE SCHEDULE

SCALE: NONE

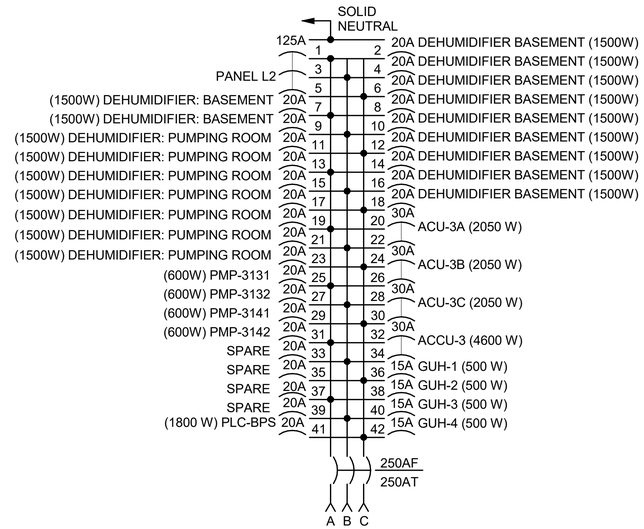


| | LOAD WATTS | | |
|---|---|---|---|
| | AN | BN | CN |
| SUBTOTAL | 21720 | 23143 | 20392 |
| TOTAL | 65255 | | |

## PANELBOARD SCHEDULE - L1

SCALE: NONE

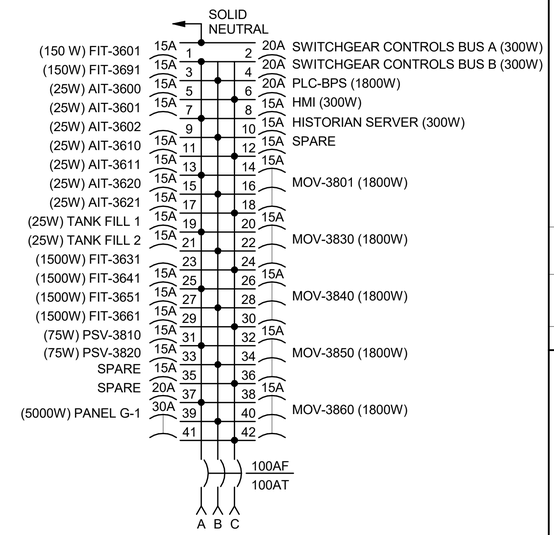


| | LOAD WATTS | | |
|---|---|---|---|
| | AN | BN | CN |
| SUBTOTAL | 3915 | 6550 | 7675 |
| TOTAL | 18140 | | |

## PANELBOARD SCHEDULE - U1

SCALE: NONE

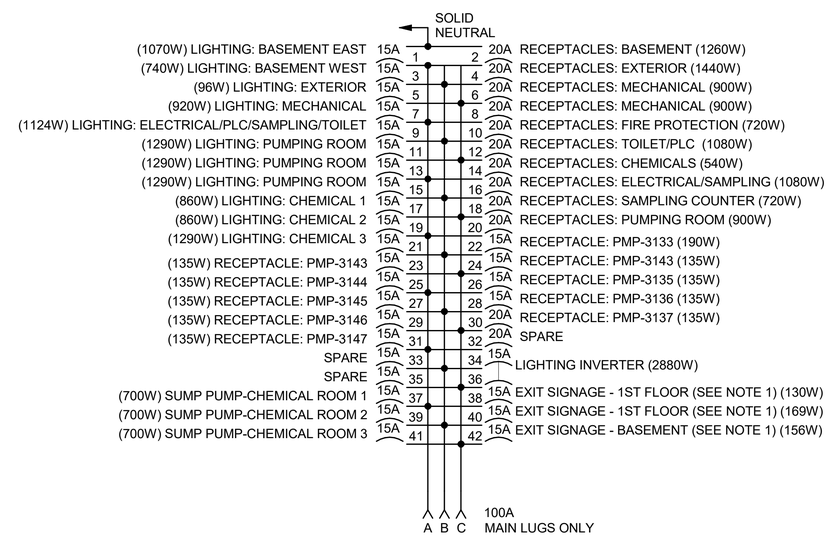


| | LOAD WATTS | | |
|---|---|---|---|
| | AN | BN | CN |
| SUBTOTAL | 8705 | 9993 | 7377 |
| TOTAL | 23975 | | |

NOTE:
1. HANDLE BLOCKING DEVICE

## PANELBOARD SCHEDULE - L2

SCALE: NONE

DRAFT 98% PROGRESS DRAWINGS
OCTOBER 2019

| NO. | DATE | APPD | DESCRIPTION |
|---|---|---|---|

Waukesha Water Utility
SERVING WAUKESHA SINCE 1886

GREELEY AND HANSEN
741 N. GRAND AVE. SUITE 308
WAUKESHA, WI 53186

GREAT WATER ALLIANCE™

CONTRACT PACKAGE 3: BOOSTER PUMPING STATION AND WATER SUPPLY CONTROL BUILDING

SCHEDULES

APPROVED

SEAL AFFIXED
MONTH / DAY / YEAR

OCTOBER 2019

| | | | |
|---|---|---|---|
| JOB NO.: | 15310 | | |
| DESGN | TMK | CHCK | NV |
| APPRV | NV | DRWN | LAN |
| SCALE: | NO SCALE | | |

DRAWING NUMBER

BE22

SHEET 155 OF 184 REV 0

FILE: C:\Users\lgreen\Documents\GLWSP-P3-BPSF-GAMHPNE_lgreen.rvt

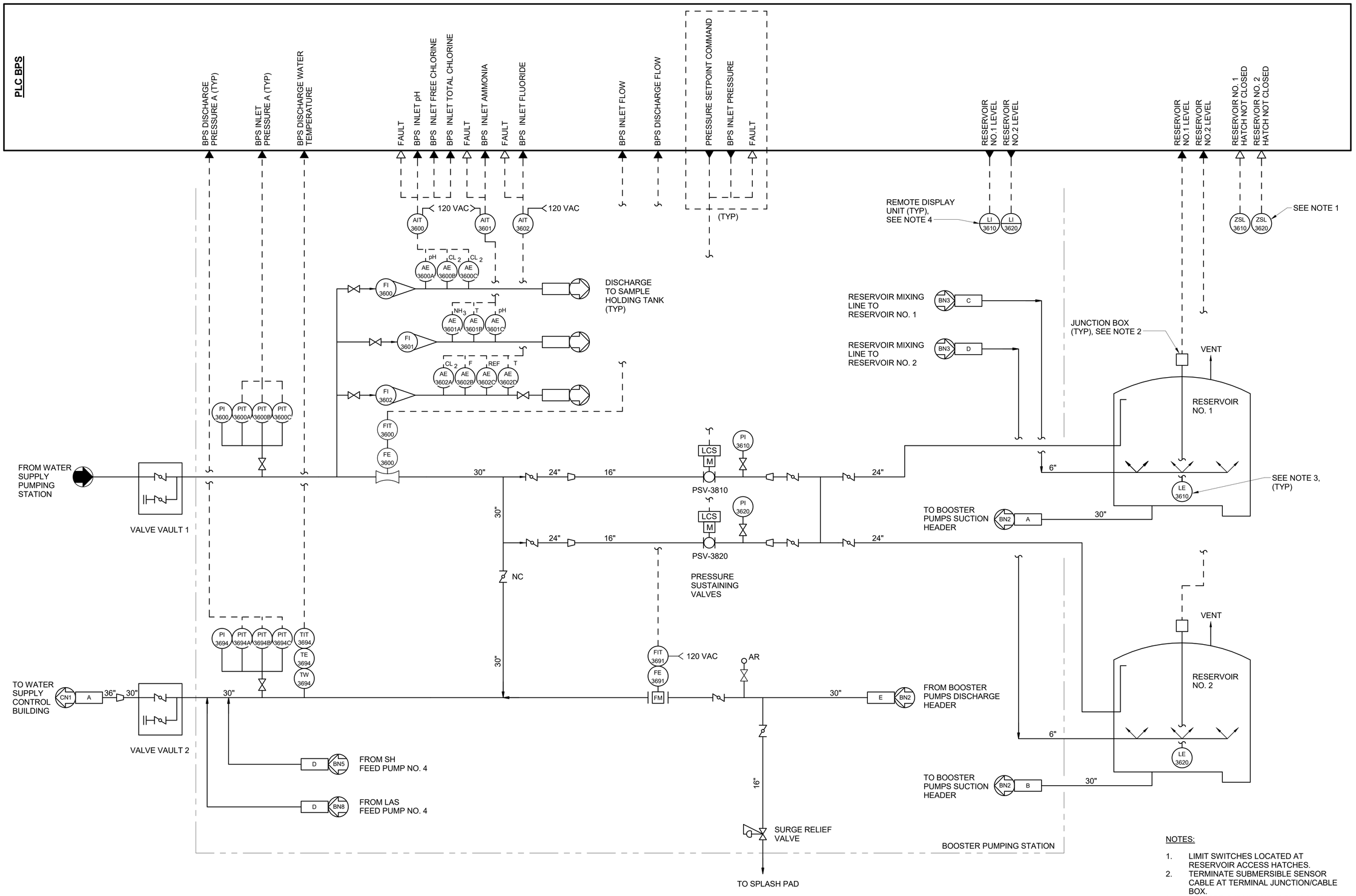


NOTES:

1. LIMIT SWITCHES LOCATED AT RESERVOIR ACCESS HATCHES.
2. TERMINATE SUBMERSIBLE SENSOR CABLE AT TERMINAL JUNCTION/CABLE BOX.
3. PROVIDE SUBMERSIBLE SENSOR WITH ADDITIONAL WEIGHT AND LEVELGUARD.
4. INSTALL DIGITAL LEVEL INDICATORS ON THE DOOR OF THE PLC CONTROL CABINET.

DRAFT 98% PROGRESS DRAWINGS
OCTOBER 2019

PUMPING SYSTEM AND RESERVOIR - P&ID
NO SCALE

| NO. | DATE | APPD | DESCRIPTION |
|---|---|---|---|

Waukesha Water Utility
SERVING WAUKESHA SINCE 1886

GREELEY AND HANSEN
741 N. GRAND AVE. SUITE 308
WAUKESHA, WI 53186

GREAT WATER ALLIANCE™

CONTRACT PACKAGE 3: BOOSTER PUMPING STATION AND WATER SUPPLY CONTROL BUILDING

PUMPING SYSTEM AND RESERVOIR - P&ID

APPROVED

SEAL AFFIXED
MONTH / DAY / YEAR

OCTOBER 2019

| | | | |
|---|---|---|---|
| JOB NO.: | 15310 | | |
| DESGN | RV | CHCK | THP |
| APPRV | THP | DRWN | LAN |
| SCALE: | NO SCALE | | |

DRAWING NUMBER

BN1

SHEET 156 OF 184 REV 0

10/2/2019 10:10:54 AM

BAR MEASURE 1" ON FULLSIZE SHEETS

FILE: C:\Users\lgreen\Documents\GLWSP-P3-BPSF-GAMHPNE_lgreen.rvt

10/2/2019 10:10:58 AM

BAR MEASURE 1" ON FULLSIZE SHEETS

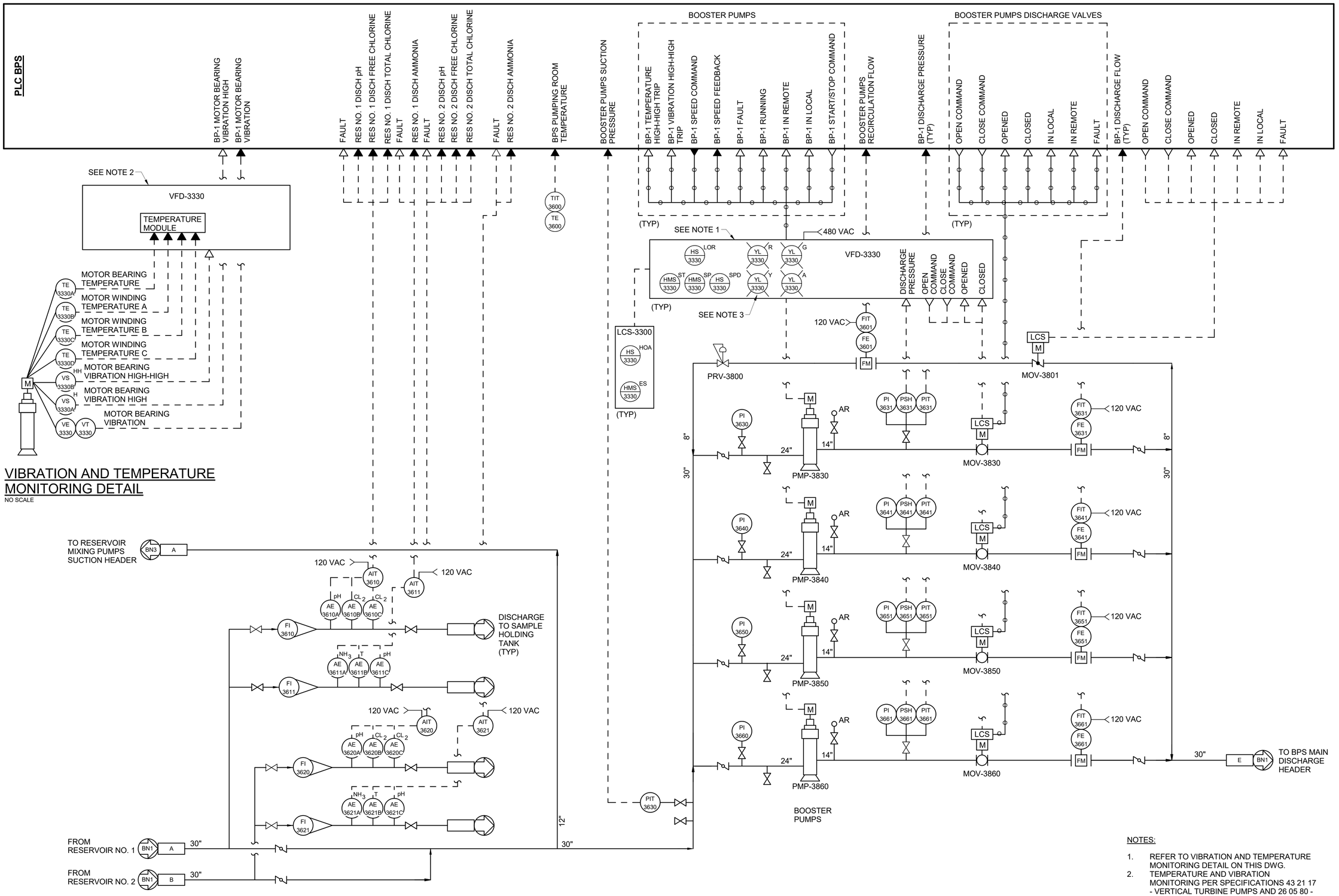


## VIBRATION AND TEMPERATURE MONITORING DETAIL

NO SCALE

## PUMPING SYSTEM AND RESERVOIR - P&ID

NO SCALE

NOTES:

1. REFER TO VIBRATION AND TEMPERATURE MONITORING DETAIL ON THIS DWG.
2. TEMPERATURE AND VIBRATION MONITORING PER SPECIFICATIONS 43 21 17 - VERTICAL TURBINE PUMPS AND 26 05 80 - ELECTRIC MOTORS.
3. PROVIDE 'CALLED' STATUS INDICATING LIGHT TO INDICATE PUMP START COMMAND FROM PLC IS ACTIVE.

DRAFT 98% PROGRESS DRAWINGS

OCTOBER 2019

| NO. | DATE | APPD | DESCRIPTION |
|---|---|---|---|

Waukesha Water Utility
SERVING WAUKESHA SINCE 1886

GREELEY AND HANSEN
741 N. GRAND AVE. SUITE 308
WAUKESHA, WI 53186

GREAT WATER ALLIANCE™

CONTRACT PACKAGE 3: BOOSTER PUMPING STATION AND WATER SUPPLY CONTROL BUILDING

PUMPING SYSTEM AND RESERVOIR - P&ID

APPROVED

SEAL AFFIXED
MONTH / DAY / YEAR

OCTOBER 2019

| | | | |
|---|---|---|---|
| JOB NO.: | 15310 | | |
| DESGN | RV | CHCK | THP |
| APPRV | THP | DRWN | LAN |
| SCALE: | NO SCALE | | |

DRAWING NUMBER

BN2

SHEET 157 OF 184 REV 0

FILE: C:\Users\lgreen\Documents\GLWSP-P3-BPSF-GAMHPNE_lgreen.rvt

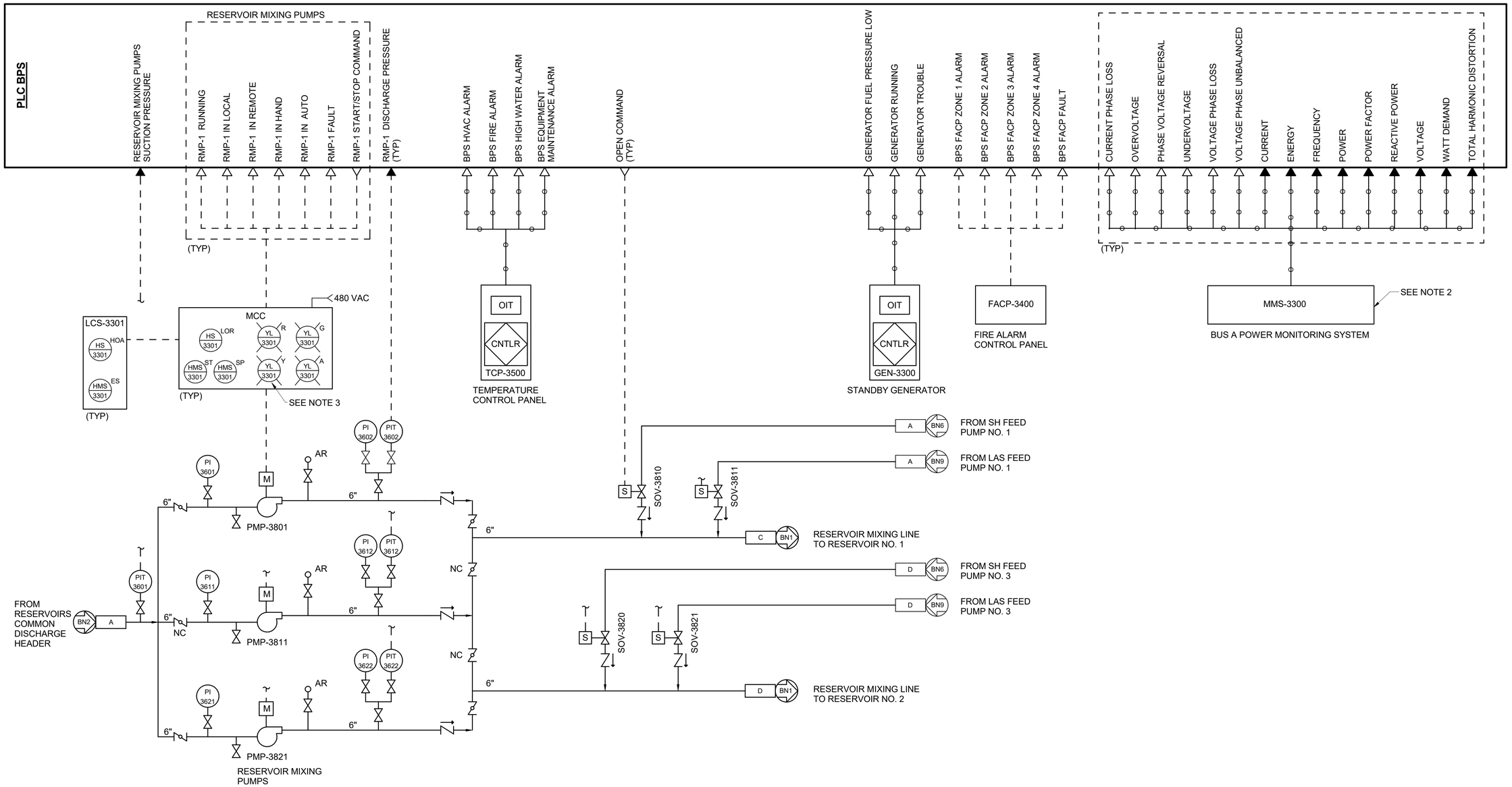


## PUMPING SYSTEM AND RESERVOIR - P&ID

NO SCALE

NOTES:

1. ALL SOLENOID VALVES ARE 120 VAC POWERED.
2. TYPICAL FOR BUS A AND BUS B.
3. PROVIDE 'CALLED' STATUS INDICATING LIGHT TO INDICATE PUMP START COMMAND FROM PLC IS ACTIVE.

DRAFT 98% PROGRESS DRAWINGS

OCTOBER 2019

| NO. | DATE | APPD | DESCRIPTION |
|---|---|---|---|

Waukesha Water Utility
SERVING WAUKESHA SINCE 1886

GREELEY AND HANSEN
741 N. GRAND AVE, SUITE 308
WAUKESHA, WI 53186

GREAT WATER ALLIANCE™

CONTRACT PACKAGE 3: BOOSTER PUMPING STATION AND WATER SUPPLY CONTROL BUILDING

PUMPING SYSTEM AND RESERVOIR - P&ID

APPROVED

SEAL AFFIXED
MONTH / DAY / YEAR

OCTOBER 2019

| | | | |
|---|---|---|---|
| JOB NO.: | 15310 | | |
| DESGN | RV | CHCK | THP |
| APPRV | THP | DRWN | YS |
| SCALE: | NO SCALE | | |

DRAWING NUMBER

BN3

SHEET 158 OF 184 REV 0

10/2/2019 10:11:02 AM

FILE: C:\Users\lgreen\Documents\GLWSP-P3-BPSF-GAMHPNE_lgreen.rvt

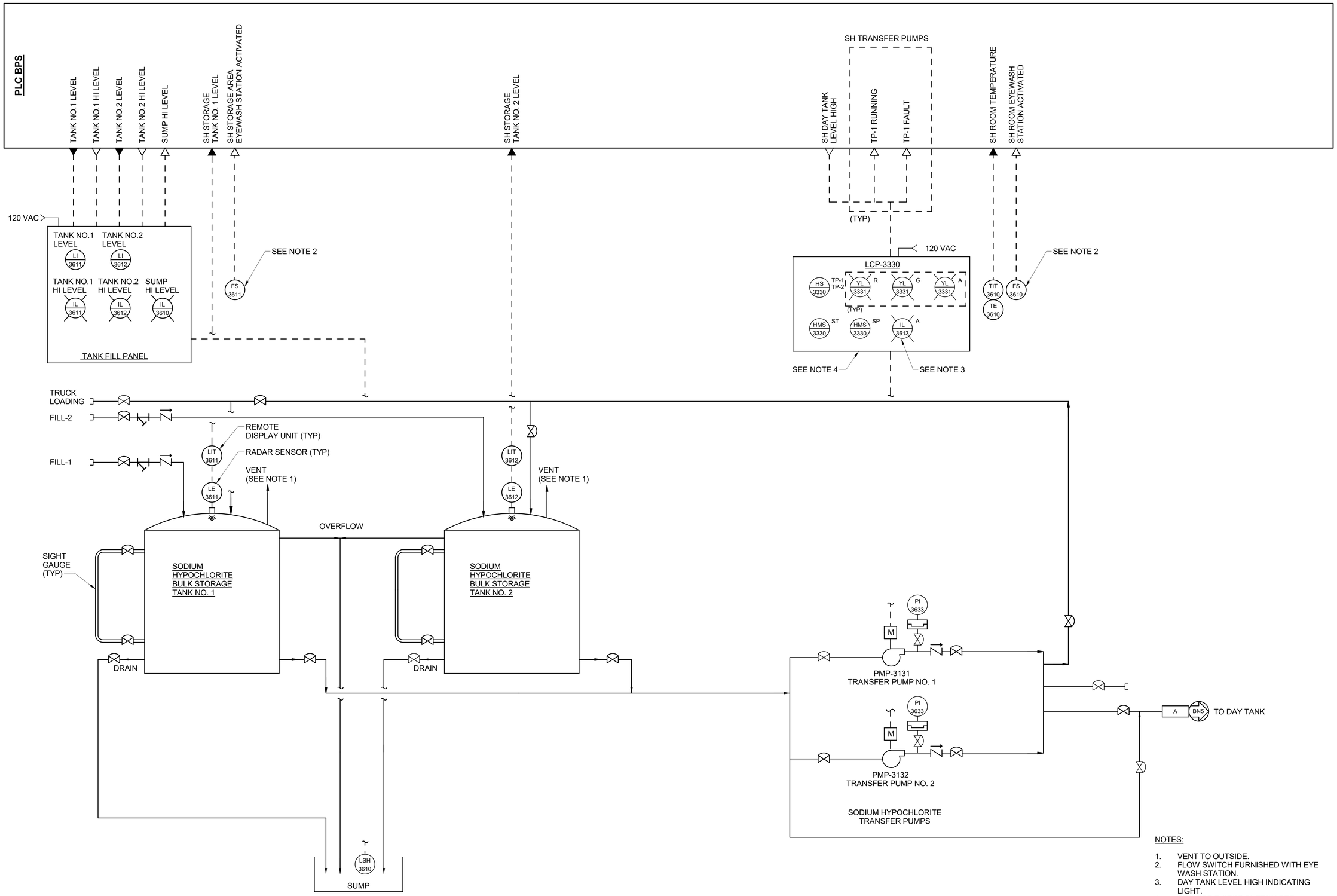


NOTES:

1. VENT TO OUTSIDE.
2. FLOW SWITCH FURNISHED WITH EYE WASH STATION.
3. DAY TANK LEVEL HIGH INDICATING LIGHT.
4. PROVIDE E-STOP BUTTON PER ELECTRICAL CONTRACT DRAWINGS.

DRAFT 98% PROGRESS DRAWINGS
OCTOBER 2019

SODIUM HYPOCHLORITE FEED - P&ID
NO SCALE

| NO. | DATE | APPD | DESCRIPTION |
|---|---|---|---|

Waukesha Water Utility
SERVING WAUKESHA SINCE 1886

GREELEY AND HANSEN
741 N. GRAND AVE, SUITE 308
WAUKESHA, WI 53186

GREAT WATER ALLIANCE™

CONTRACT PACKAGE 3: BOOSTER PUMPING STATION AND WATER SUPPLY CONTROL BUILDING

SODIUM HYPOCHLORITE FEED - P&ID

APPROVED

SEAL AFFIXED
MONTH / DAY / YEAR

OCTOBER 2019

| | | | |
|---|---|---|---|
| JOB NO.: | 15310 | | |
| DESGN | RV | CHCK | THP |
| APPRV | THP | DRWN | LAN |
| SCALE: | NO SCALE | | |

DRAWING NUMBER

BN4

SHEET 159 OF 184 REV 0

10/2/2019 10:11:05 AM

BAR MEASURE 1" ON FULLSIZE SHEETS

FILE: C:\Users\lgreen\Documents\GLWSP-P3-BPSF-GAMHPNE_lgreen.rvt

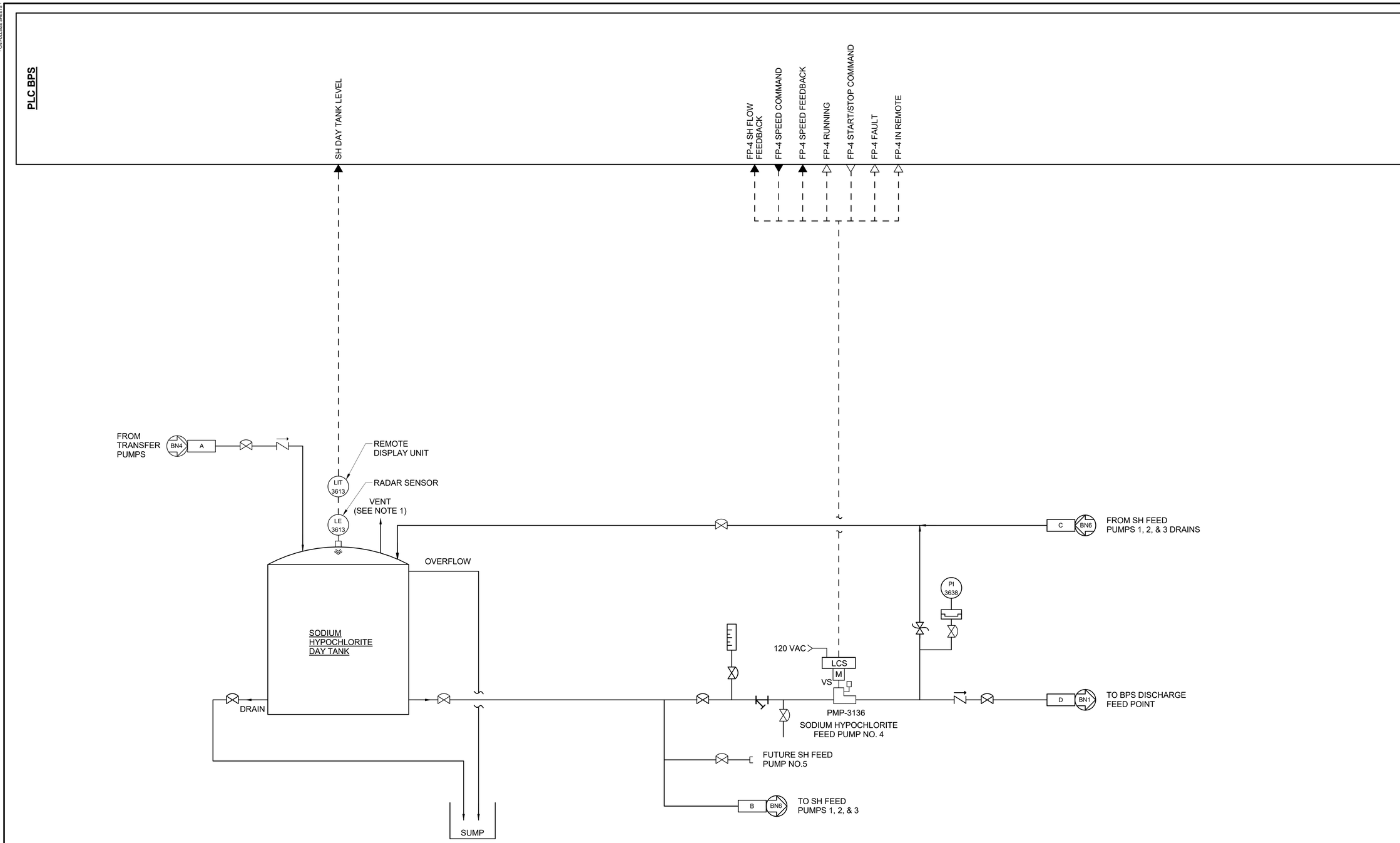


## SODIUM HYPOCHLORITE FEED - P&ID

NO SCALE

NOTES:

1. VENT TO OUTSIDE.

DRAFT 98% PROGRESS DRAWINGS
OCTOBER 2019

| NO. | DATE | APPD | DESCRIPTION |
|---|---|---|---|

Waukesha Water Utility
SERVING WAUKESHA SINCE 1886

GREELEY AND HANSEN
741 N. GRAND AVE. SUITE 308
WAUKESHA, WI 53186

GREAT WATER ALLIANCE™

CONTRACT PACKAGE 3: BOOSTER PUMPING STATION AND WATER SUPPLY CONTROL BUILDING

SODIUM HYPOCHLORITE FEED - P&ID

APPROVED

SEAL AFFIXED
MONTH / DAY / YEAR

OCTOBER 2019

| | | | |
|---|---|---|---|
| JOB NO.: | 15310 | | |
| DESGN | RV | CHCK | THP |
| APPRV | THP | DRWN | LAN |
| SCALE: | NO SCALE | | |

DRAWING NUMBER

BN5

SHEET 160 OF 184 REV 0

FILE: C:\Users\lgreen\Documents\GLWSP-P3-BPSF-GAMHPNE_lgreen.rvt

10/2/2019 10:11:08 AM

BAR MEASURE 1" ON FULLSIZE SHEETS

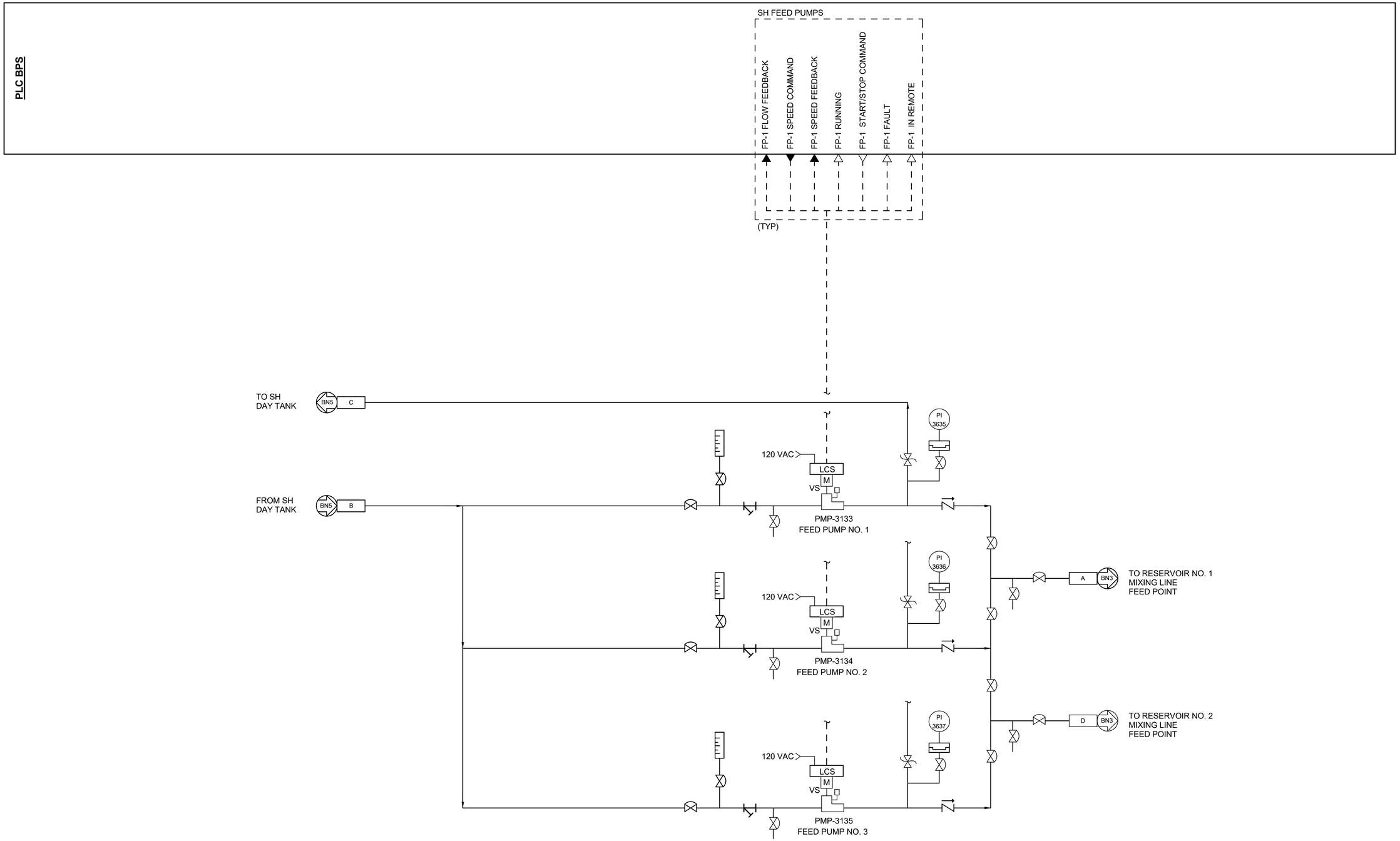


## SODIUM HYPOCHLORITE FEED - P&ID

NO SCALE

DRAFT 98% PROGRESS DRAWINGS

OCTOBER 2019

FILE: C:\Users\lgreen\Documents\GLWSP-P3-BPSF-GAMHPNE_lgreen.rvt

| NO. | DATE | APPD | DESCRIPTION |
|---|---|---|---|

Waukesha Water Utility
SERVING WAUKESHA SINCE 1886

GREELEY AND HANSEN
741 N. GRAND AVE. SUITE 308
WAUKESHA, WI 53186

GREAT WATER ALLIANCE™

CONTRACT PACKAGE 3: BOOSTER PUMPING STATION AND WATER SUPPLY CONTROL BUILDING

SODIUM HYPOCHLORITE FEED - P&ID

APPROVED

SEAL AFFIXED
MONTH / DAY / YEAR

OCTOBER 2019

| | | | |
|---|---|---|---|
| JOB NO.: | 15310 | | |
| DESGN | RV | CHCK | THP |
| APPRV | THP | DRWN | YS |
| SCALE: | NO SCALE | | |

DRAWING NUMBER

BN6

SHEET 161 OF 184 REV 0

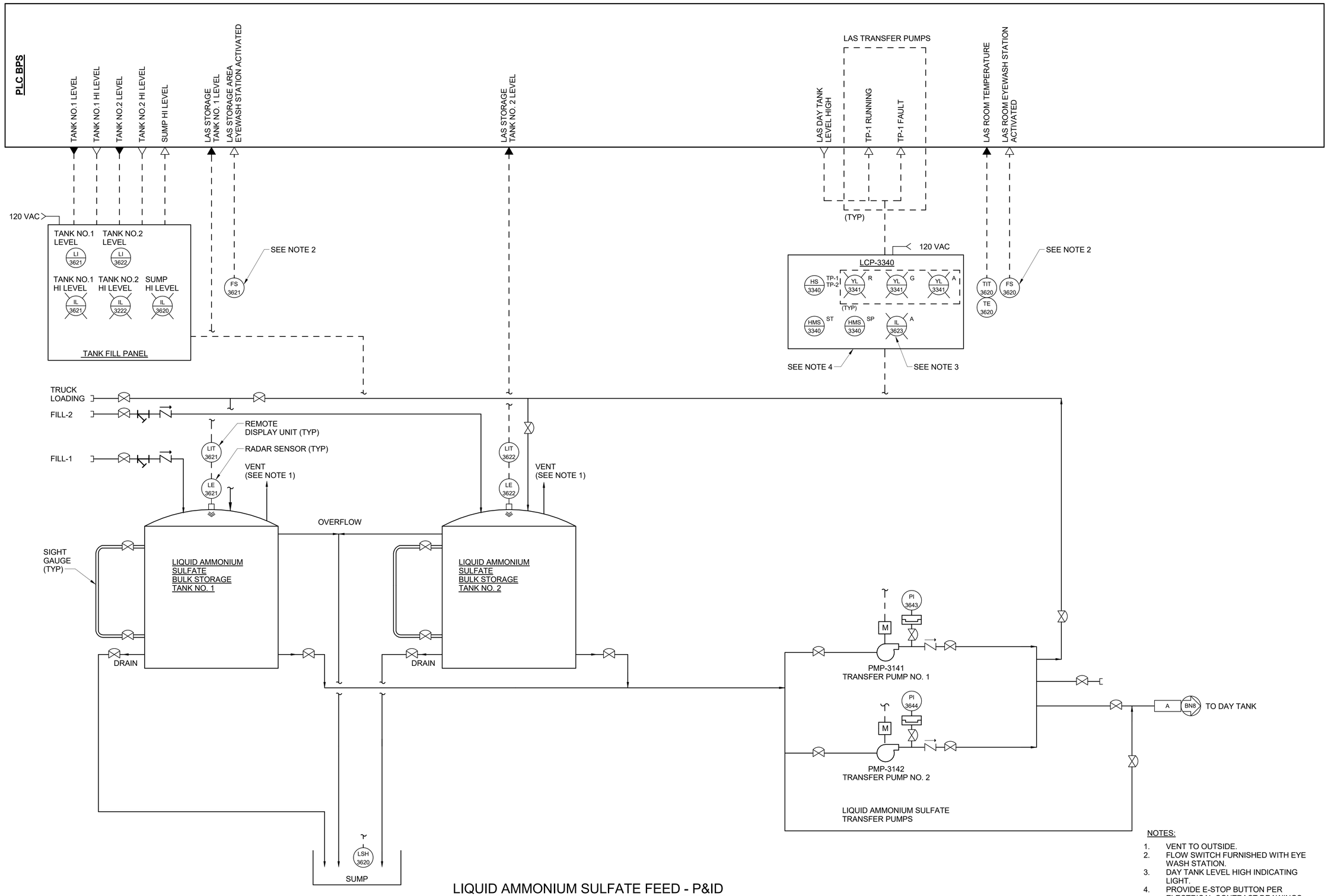


## LIQUID AMMONIUM SULFATE FEED - P&ID

NO SCALE

NOTES:

1. VENT TO OUTSIDE.
2. FLOW SWITCH FURNISHED WITH EYE WASH STATION.
3. DAY TANK LEVEL HIGH INDICATING LIGHT.
4. PROVIDE E-STOP BUTTON PER ELECTRICAL CONTRACT DRAWINGS.

DRAFT 98% PROGRESS DRAWINGS

OCTOBER 2019

| NO. | DATE | APPD | DESCRIPTION |
|---|---|---|---|

Waukesha Water Utility
SERVING WAUKESHA SINCE 1886

GREELEY AND HANSEN
741 N. GRAND AVE. SUITE 308
WAUKESHA, WI 53186

GREAT WATER ALLIANCE™

CONTRACT PACKAGE 3: BOOSTER PUMPING STATION AND WATER SUPPLY CONTROL BUILDING

LIQUID AMMONIUM SULFATE FEED - P&ID

APPROVED

SEAL AFFIXED
MONTH / DAY / YEAR

OCTOBER 2019

| | | | |
|---|---|---|---|
| JOB NO.: | 15310 | | |
| DESGN | RV | CHCK | THP |
| APPRV | THP | DRWN | LAN |
| SCALE: | NO SCALE | | |

DRAWING NUMBER

BN7

SHEET 162 OF 184 REV 0

10/2/2019 10:11:11 AM

BAR MEASURE 1" ON FULLSIZE SHEETS

FILE: C:\Users\lgreen\Documents\GLWSP-P3-BPSF-GAMHPNE_lgreen.rvt

10/2/2019 10:11:12 AM

BAR MEASURE 1" ON FULLSIZE SHEETS

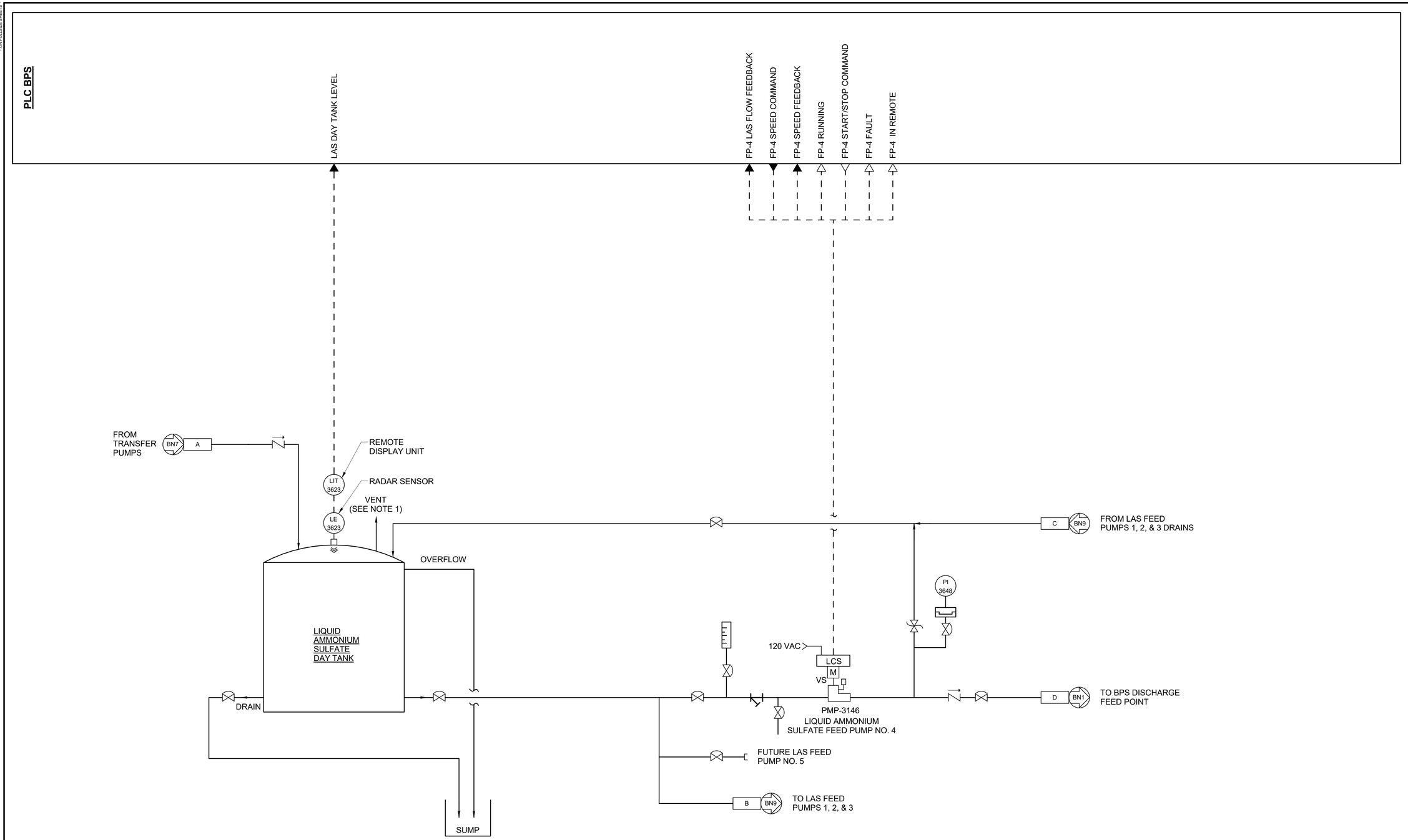


NOTES:

1. VENT TO OUTSIDE.

## LIQUID AMMONIUM SULFATE FEED - P&ID

NO SCALE

DRAFT 98% PROGRESS DRAWINGS

OCTOBER 2019

FILE: C:\Users\lgreen\Documents\GLWSP-P3-BPSF-GAMHPNE_lgreen.rvt

| NO. | DATE | APPD | DESCRIPTION |
|---|---|---|---|

Waukesha Water Utility
SERVING WAUKESHA SINCE 1886

GREELEY AND HANSEN
741 N. GRAND AVE. SUITE 308
WAUKESHA, WI 53186

GREAT WATER ALLIANCE™

CONTRACT PACKAGE 3: BOOSTER PUMPING STATION AND WATER SUPPLY CONTROL BUILDING

LIQUID AMMONIUM SULFATE FEED - P&ID

APPROVED

SEAL AFFIXED
MONTH / DAY / YEAR

OCTOBER 2019

| | | | |
|---|---|---|---|
| JOB NO.: | 15310 | | |
| DESGN | RV | CHCK | THP |
| APPRV | THP | DRWN | LAN |
| SCALE: | NO SCALE | | |

DRAWING NUMBER

BN8

SHEET 163 OF 184 REV 0

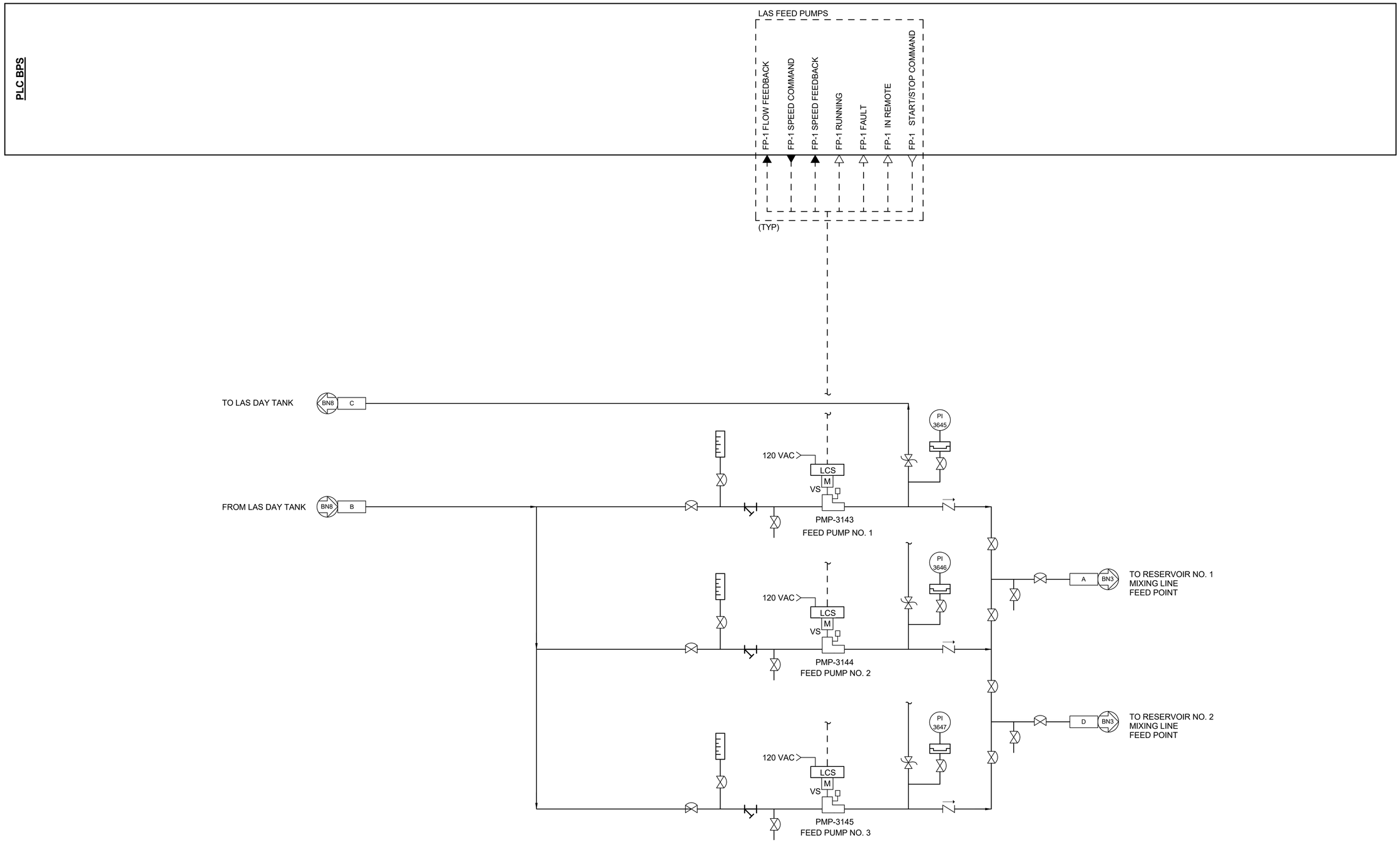


## LIQUID AMMONIUM SULFATE FEED - P&ID

NO SCALE

DRAFT 98% PROGRESS DRAWINGS

OCTOBER 2019

| NO. | DATE | APPD | DESCRIPTION |
|---|---|---|---|

Waukesha Water Utility
SERVING WAUKESHA SINCE 1886

GREELEY AND HANSEN
741 N. GRAND AVE, SUITE 308
WAUKESHA, WI 53186

GREAT WATER ALLIANCE™

CONTRACT PACKAGE 3: BOOSTER PUMPING STATION AND WATER SUPPLY CONTROL BUILDING

LIQUID AMMONIUM SULFATE FEED - P&ID

APPROVED

SEAL AFFIXED
MONTH / DAY / YEAR

OCTOBER 2019

| | | | |
|---|---|---|---|
| JOB NO.: | 15310 | | |
| DESGN | RV | CHCK | THP |
| APPRV | THP | DRWN | YS |
| SCALE: | NO SCALE | | |

DRAWING NUMBER

BN9

SHEET 164 OF 184 REV 0

10/2/2019 10:11:12 AM

BAR MEASURE 1" ON FULL SIZE SHEETS

FILE: C:\Users\lgreen\Documents\GLWSP-P3-BPSF-GAMHPNE_lgreen.rvt

BAR MEASURE 1" ON FULLSIZE SHEETS

07/25/2019 10:14:25 AM

FILE: \\GH-DATA01\CLIENT02\15310-WAUKESHA GREAT LAKES WATER SUPPLY PM-CM\21 CADD\21.05 WORKING DWGS\CONTRACT PACKAGE 3 - BPSFGLWSP-P3-WSCB-CC01.DWG

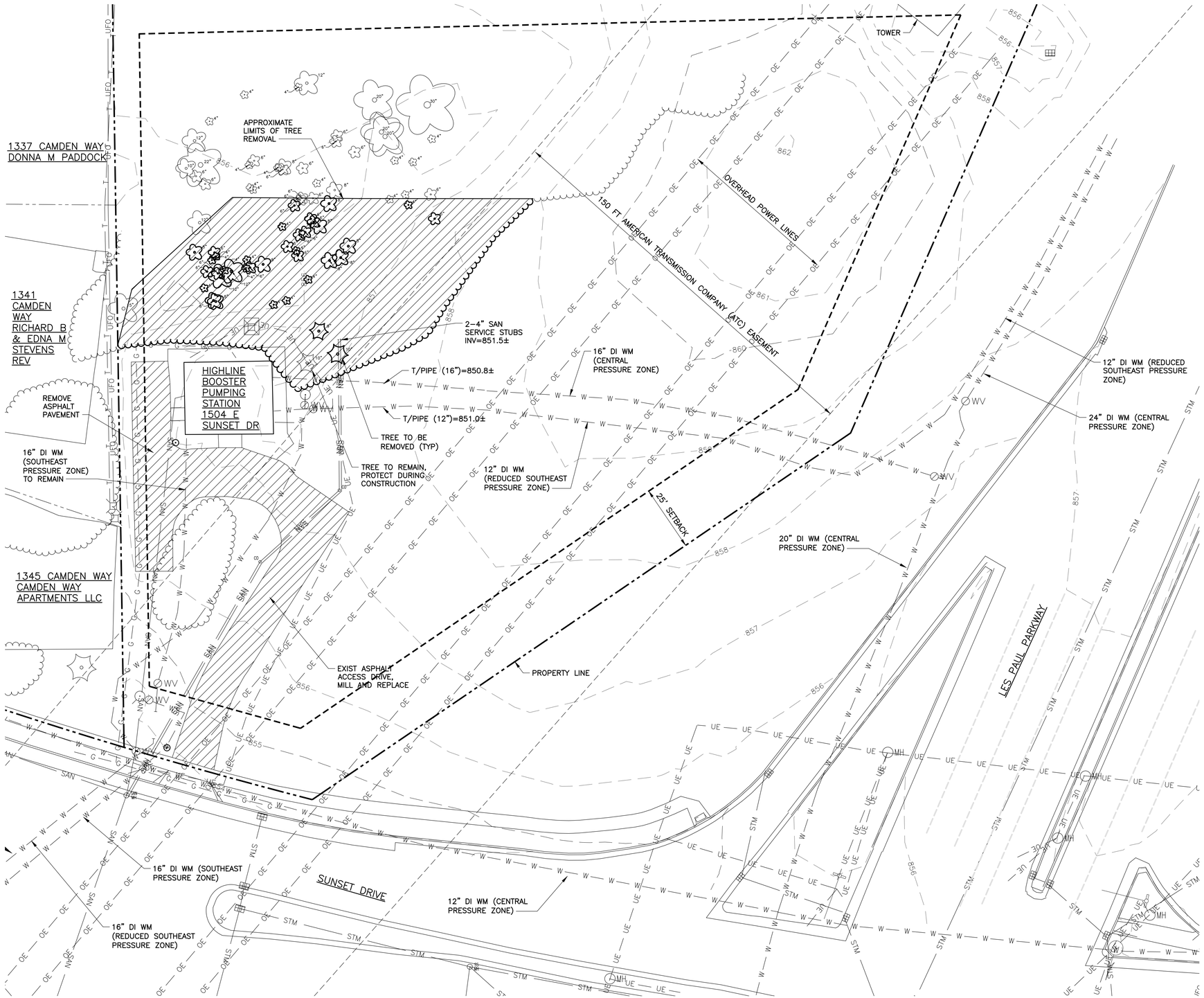


## EXISTING SITE AND DEMOLITION PLAN

SCALE: 1"=20'

### ATC EASEMENT NOTES:

1. ALL OSHA MINIMUM APPROACH OFFSETS SHALL BE OBTAINED AND UTILIZED BY ALL MACHINERY OPERATORS AND PERSONNEL ON SITE FOR THE DURATION OF THE PROJECT.
2. ACCESS TO THE TRANSMISSION LINE CORRIDOR AND EASEMENT SHALL REMAIN UNOBSTRUCTED DURING AND AFTER THE CONSTRUCTION OF THE PROJECT.
3. SHOULD ANY ISSUES ARISE INVOLVING THE SAFETY OR ACCESS OF THE TRANSMISSION SYSTEM, CONTACT CHRIS DAILEY, ATC MAINTENANCE SPECIALIST.

20 0 20 40 FT 1"=20'

DRAFT 98% PROGRESS DRAWINGS

OCTOBER 2019

| NO. | DATE | APPD | REVISION |
|---|---|---|---|

Waukesha Water Utility
SERVING WAUKESHA SINCE 1886

GREELEY AND HANSEN
741 N. GRAND AVE, SUITE 308
WAUKESHA, WI 53186

GREAT WATER ALLIANCE™

CONTRACT PACKAGE 3: BOOSTER PUMPING STATION AND WATER SUPPLY CONTROL BUILDING

EXISTING SITE AND DEMOLITION PLAN

APPROVED

SEAL AFFIXED
MONTH / DAY / YEAR

OCTOBER 2019

JOB NO.: 15310

| DESGN | LAM | CHCK | RMC |
|---|---|---|---|
| APPRV | AJM | DRWN | TSM |
| SCALE: | | 1" = 20' | |

DRAWING NUMBER

CC1

SHEET 165 OF 184 REV 0

BAR MEASURE 1" ON FULLSIZE SHEETS





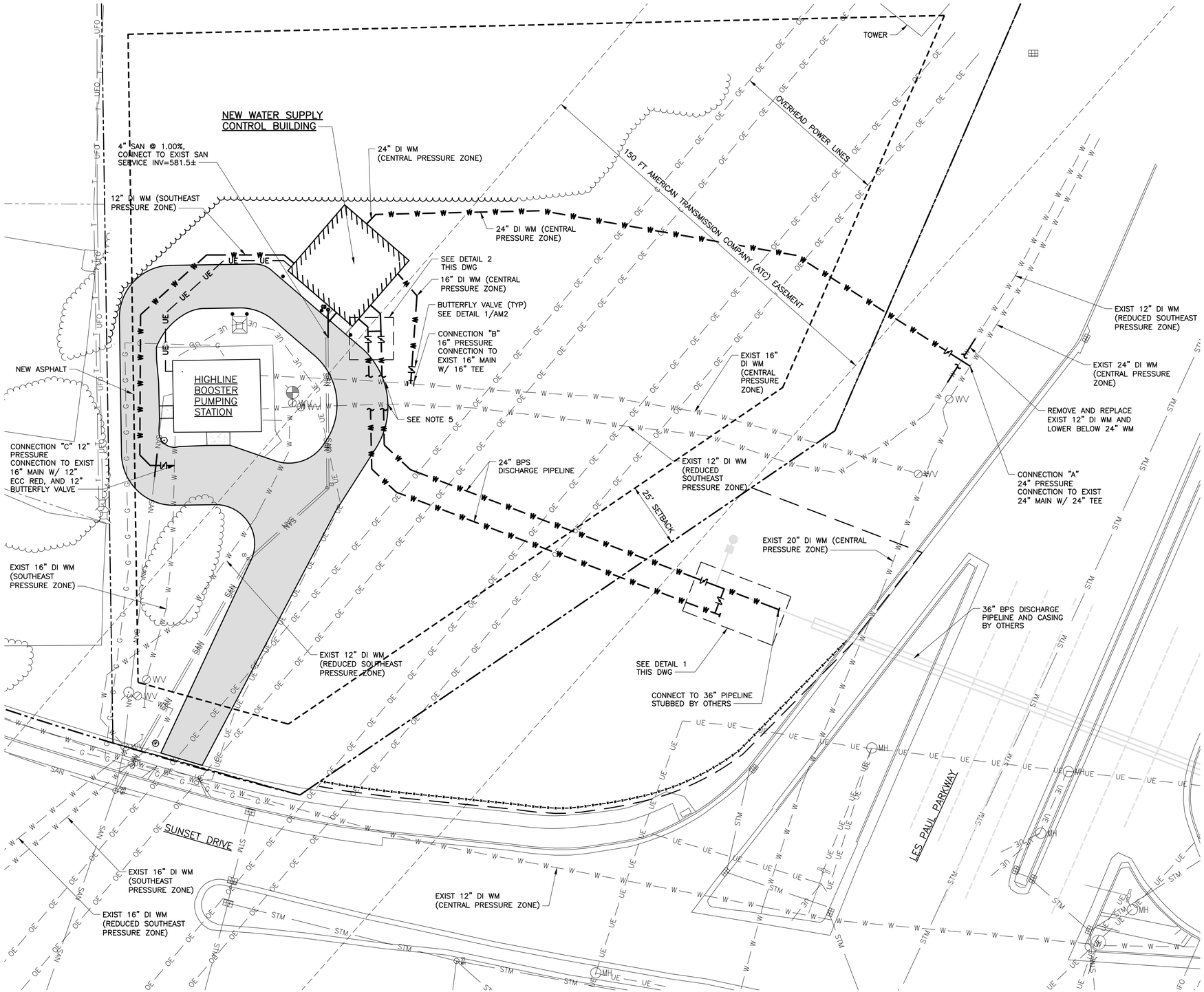


## NEW YARD PIPING PLAN

SCALE: 1"=20'

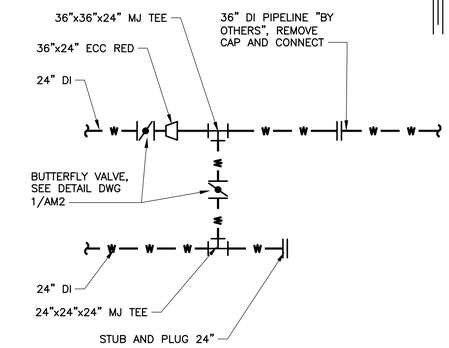


## DETAIL 1

SCALE: NO SCALE

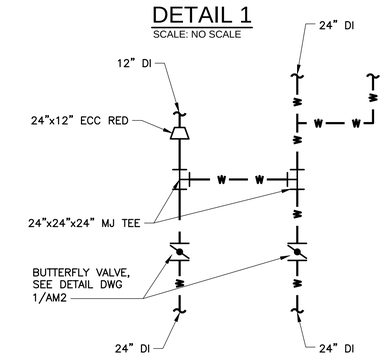


## DETAIL 2

SCALE: NO SCALE

## NOTES:

1. ADJUST MANHOLE STRUCTURES AND INLETS WITH ADJUSTING RINGS UP TO 1 FOOT.
2. REFER TO ELECTRICAL DRAWINGS FOR ELECTRICAL AND FIBER OPTIC UTILITIES.
3. SEE PAVING PLAN AND DETAILS IN AG SHEETS.
4. STUB AND PLUG SITE PIPING AT THE PROPERTY LINE FOR CONNECTION BY OTHERS.
5. CROSS THE EXISTING 12" AND 16" LINES WHILE ACTIVE. PROTECT THE EXISTING 12" AND 16" LINES DURING CONSTRUCTION. PROVIDE TEMPORARY PIPE SUPPORTS AND ANY REQUIRED SHEETING AND SHORING FOR THE EXCAVATED AREA. PROVIDE A CERTIFICATE SIGNED AND SEALED BY A LICENSED PROFESSIONAL ENGINEER AND REGISTERED IN THE STATE OF WISCONSIN THAT CERTIFIES THAT THE LICENSED PROFESSIONAL ENGINEER HAS EVALUATED AND APPROVED THE CONTRACTOR'S PIPE SUPPORT PLAN FOR THE EXISTING 12" AND 16" DI WM AND HAS PREPARED COMPLETE DESIGN CALCULATIONS AND WORKING DRAWINGS FOR THE PIPE SUPPORT SYSTEM NOT SPECIFICALLY SHOWN ON THE DRAWINGS.
6. FOR PRESSURE CONNECTIONS, REFER TO SECTION 33 05 70.

## ATC EASEMENT NOTES:

1. ALL OSHA MINIMUM APPROACH OFFSETS SHALL BE OBTAINED AND UTILIZED BY ALL MACHINERY OPERATORS AND PERSONNEL ON SITE FOR THE DURATION OF THE PROJECT.
2. ACCESS TO THE TRANSMISSION LINE CORRIDOR AND EASEMENT SHALL REMAIN UNOBSTRUCTED DURING AND AFTER THE CONSTRUCTION OF THE PROJECT.
3. SHOULD ANY ISSUES ARISE INVOLVING THE SAFETY OR ACCESS OF THE TRANSMISSION SYSTEM, CONTACT CHRIS DAILEY, ATC MAINTENANCE SPECIALIST.

20 0 20 40 FT 1"=20'

DRAFT 98% PROGRESS DRAWINGS

OCTOBER 2019

| NO. | DATE | APPD | REVISION |
|---|---|---|---|

Waukesha Water Utility
SERVING WAUKESHA SINCE 1886

GREELEY AND HANSEN
741 N. GRAND AVE, SUITE 308
WAUKESHA, WI 53186

GREAT WATER ALLIANCE™

CONTRACT PACKAGE 3: BOOSTER PUMPING STATION AND WATER SUPPLY CONTROL BUILDING

YARD PIPING PLAN AND DETAILS

APPROVED

SEAL AFFIXED
MONTH / DAY / YEAR

OCTOBER 2019

| | | | |
|---|---|---|---|
| JOB NO.: 15310 | | | |
| DESGN | LAM | CHCK | RMC |
| APPRV | AJM | DRWN | TSM |
| SCALE: | 1" = 20' | | |

DRAWING NUMBER

CC2

SHEET 166 OF 184 REV 0

BAR MEASURE 1" ON FULLSIZE SHEETS



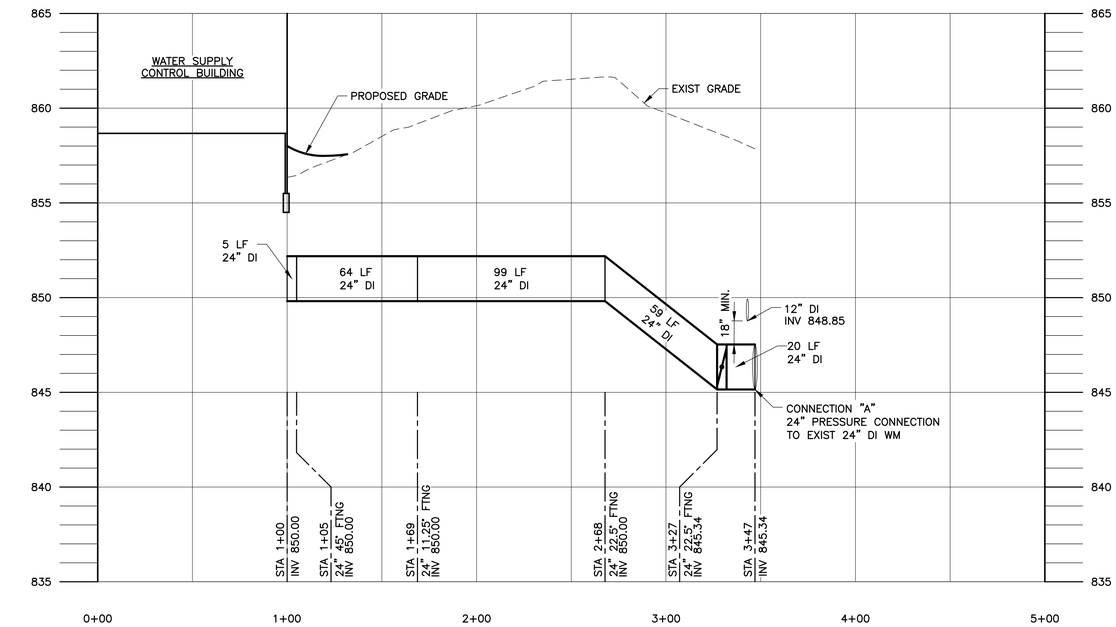


## 24" DI WM (CENTRAL PRESSURE ZONE)
## WSCB TO 24" EXIST DI WM (CENTRAL PRESSURE ZONE)

SCALE: 1"=40' HORIZONTAL
SCALE: 1"=4' VERTICAL

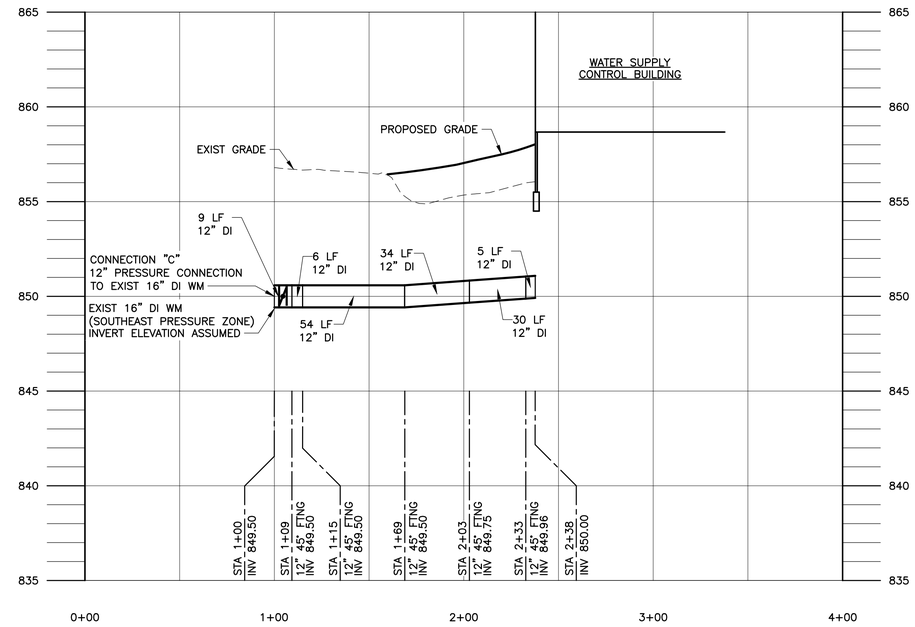


## 12" DI WM (SOUTHEAST PRESSURE ZONE)
## HIGHLINE BPS TO WSCB

SCALE: 1"=40' HORIZONTAL
SCALE: 1"=4' VERTICAL

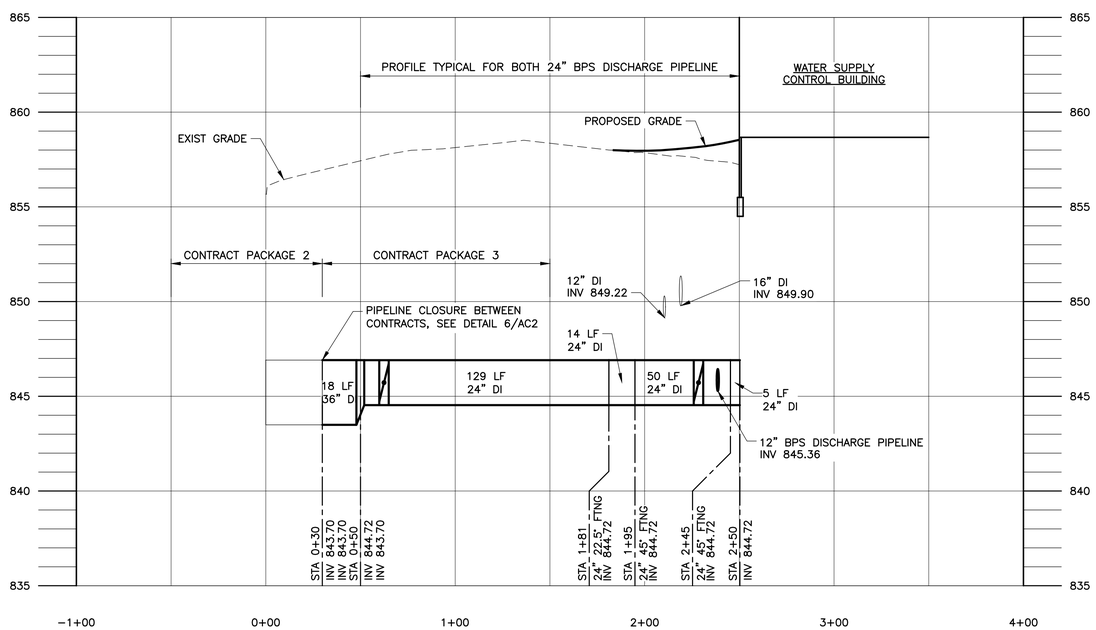


## 2 - 24" BPS DISCHARGE PIPELINES (TYPICAL FOR BOTH PIPES)
## LES PAUL PARKWAY TO WSCB

SCALE: 1"=40' HORIZONTAL
SCALE: 1"=4' VERTICAL

DRAFT 98% PROGRESS DRAWINGS
OCTOBER 2019

40 0 40 80 FT 1"=40'
4 0 4 8 FT 1"=4'

| NO. | DATE | APPD | REVISION |
|---|---|---|---|

Waukesha Water Utility
SERVING WAUKESHA SINCE 1886

GREELEY AND HANSEN
741 N. GRAND AVE, SUITE 308
WAUKESHA, WI 53186

GREAT WATER ALLIANCE™

CONTRACT PACKAGE 3: BOOSTER PUMPING STATION AND WATER SUPPLY CONTROL BUILDING

YARD PIPING PROFILES

APPROVED

SEAL AFFIXED
MONTH / DAY / YEAR

OCTOBER 2019

JOB NO.: 15310

| | | | |
|---|---|---|---|
| DESGN | LAM | CHCK | RMC |
| APPRV | AJM | DRWN | TSM |
| SCALE: | AS SHOWN | | |

DRAWING NUMBER

CC3

SHEET 167 OF 184 REV 0

FILE: \\GH-DATA01\CLIENT02\15310-WAUKESHA GREAT LAKES WATER SUPPLY PM-CM\21 CADD\21.05 WORKING DWGS\CONTRACT PACKAGE 3 - BPS\FIGLWSP-P3-WSCB-CC03.DWG

06/13/2019 1:00:07 PM

BAR MEASURE 1" ON FULLSIZE SHEETS

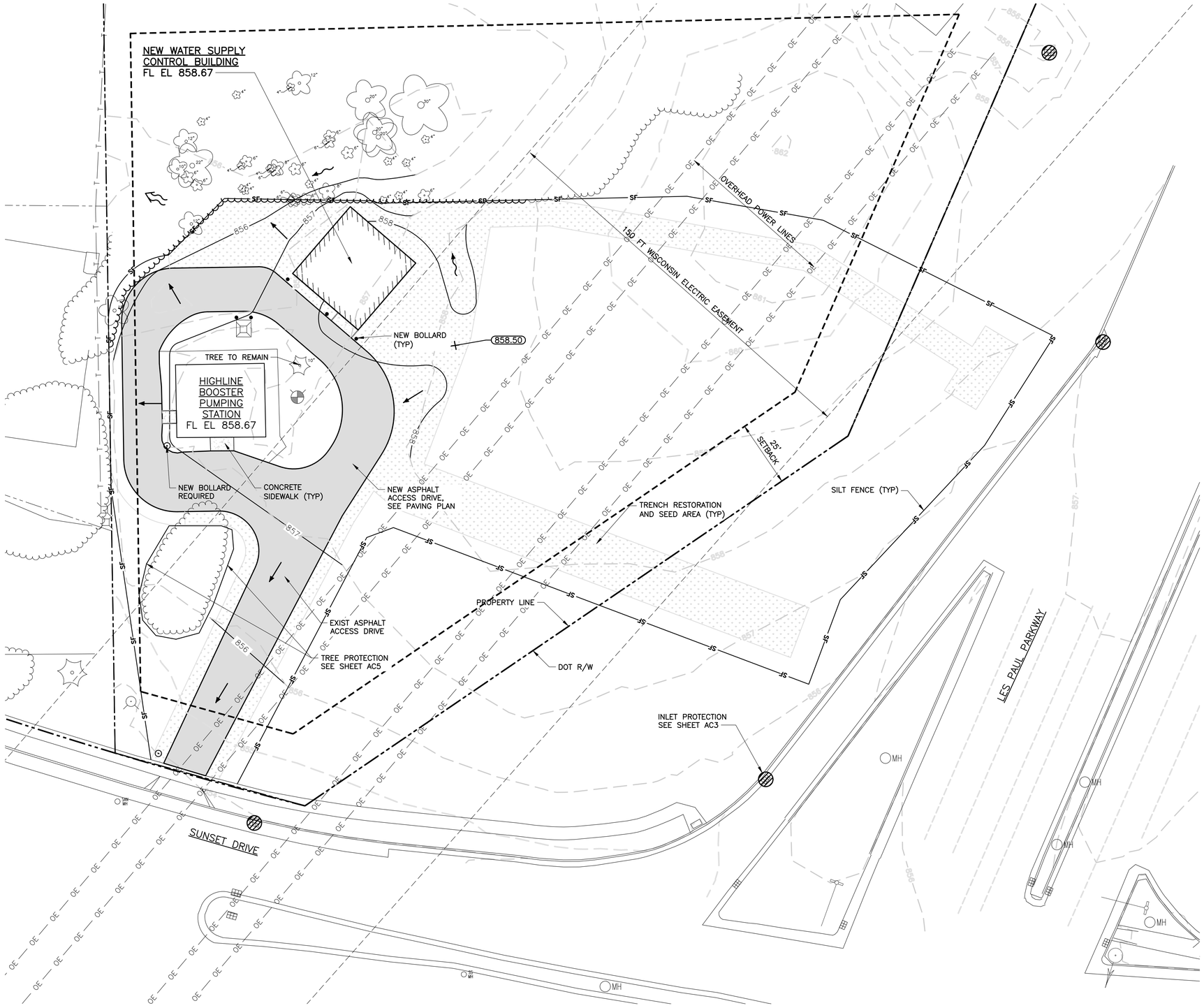


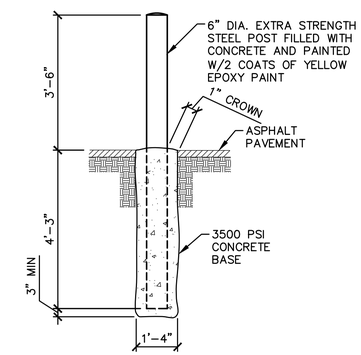


01 BOLLARD DETAIL

SCALE N.T.S.

## LEGEND

- ENHANCED NATIVE SEED MIX
- ASPHALT PAVEMENT

## NOTE:

1. REFER TO NEW SITE AND PAVING PLAN FOR DETAILED GRADING OF PAVED AND HARDSCAPE SURFACES.

## ATC EASEMENT NOTES:

1. ALL OSHA MINIMUM APPROACH OFFSETS SHALL BE OBTAINED AND UTILIZED BY ALL MACHINERY OPERATORS AND PERSONNEL ON SITE FOR THE DURATION OF THE PROJECT.
2. ACCESS TO THE TRANSMISSION LINE CORRIDOR AND EASEMENT SHALL REMAIN UNOBSTRUCTED DURING AND AFTER THE CONSTRUCTION OF THE PROJECT.
3. SHOULD ANY ISSUES ARISE INVOLVING THE SAFETY OR ACCESS OF THE TRANSMISSION SYSTEM, CONTACT CHRIS DAILEY, ATC MAINTENANCE SPECIALIST.

# GRADING AND RESOTRATION PLAN

SCALE: 1"=20'

20 0 20 40 FT 1"=20'

DRAFT 98% PROGRESS DRAWINGS

OCTOBER 2019

| NO. | DATE | APPD | REVISION |
|---|---|---|---|

Waukesha Water Utility
SERVING WAUKESHA SINCE 1886

GREELEY AND HANSEN
741 N. GRAND AVE, SUITE 308
WAUKESHA, WI 53186

GREAT WATER ALLIANCE™

CONTRACT PACKAGE 3: BOOSTER PUMPING STATION, STORAGE, AND CHEMICAL FACILITIES

GRADING AND RESOTRATION PLAN

APPROVED

SEAL AFFIXED
MONTH / DAY / YEAR

OCTOBER 2019

| | | | |
|---|---|---|---|
| JOB NO.: 15310 | | | |
| DESGN | BRL | CHCK | PRE |
| APPRV | MNP | DRWN | SRK |
| SCALE: | 1" = 20' | | |

DRAWING NUMBER

CC4

SHEET 168 OF 184 REV 0

GRAEF

FILE: X:\ML\2016\2016\0998\CAD\SITE\DWG\00\GH_00_WSCB-CC04_GRADING_RESTORATION_PLAN.DWG

06/13/2019 1:00:15 PM

BAR MEASURE 1" ON FULL SIZE SHEETS

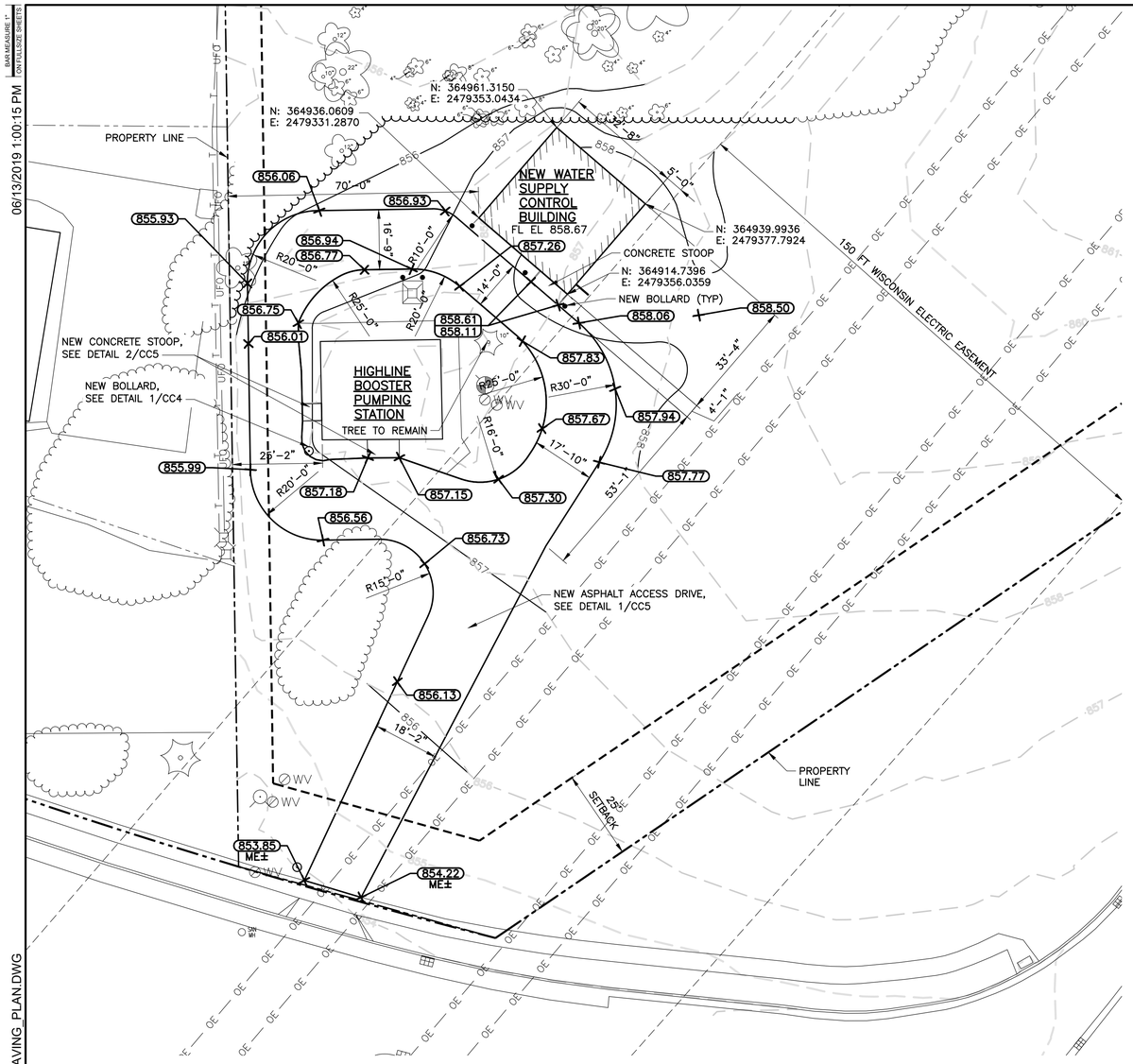


## SITE AND PAVING PLAN

SCALE: 1"=20'

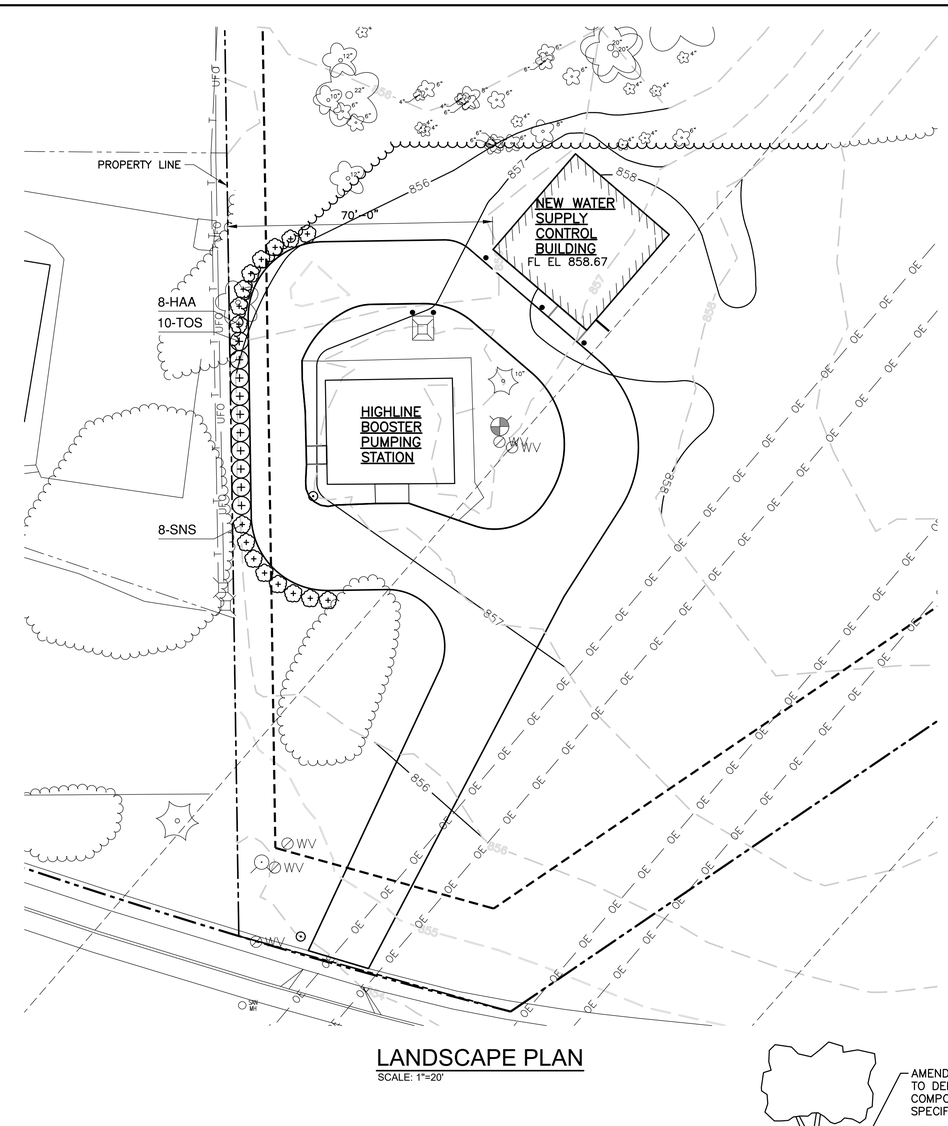


## LANDSCAPE PLAN

SCALE: 1"=20'

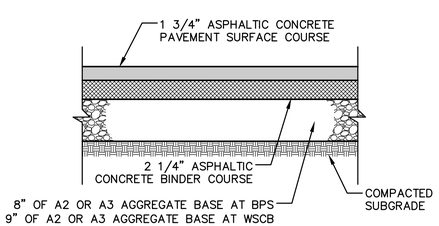


## 1 TYPICAL ASPHALT PAVEMENT SECTION

NOT TO SCALE

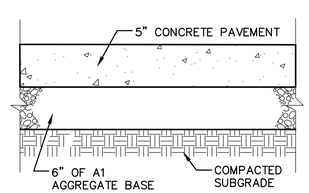


## 2 TYPICAL CONCRETE SIDEWALK SECTION

NOT TO SCALE

## PLANT LIST

| SYM | BOTANICAL NAME | COMMON NAME | SIZE | SPACING | MATURE SIZE |
|---|---|---|---|---|---|
| **DECIDUOUS SHRUBS** | | | | | |
| HAA | Hydrangea arborescens 'Annabelle' | Annabelle Hydrangea | 36" ht | 4' | 5'h x 5'w |
| SNS | Spiraea nipponica 'Snowmound' | Snowmound Spirea | 24" ht | 4' | 4'-6'h x 5'-6w |
| **EVERGREEN SHRUBS** | | | | | |
| **SYM** | **BOTANICAL NAME** | **COMMON NAME** | **SIZE** | **SPACING** | **MATURE SIZE** |
| TOS | Thuja occidentalis 'Smaragd' | Emerald Arborvitae | 6' ht | 4' | 15'-18'h x 3'-5'w |

## NOTE:

1. REFER TO NEW SITE AND PAVING PLAN FOR DETAILED GRADING OF PAVED AND HARDSCAPE SURFACES.

## ATC EASEMENT NOTES:

1. ALL OSHA MINIMUM APPROACH OFFSETS SHALL BE OBTAINED AND UTILIZED BY ALL MACHINERY OPERATORS AND PERSONNEL ON SITE FOR THE DURATION OF THE PROJECT.
2. ACCESS TO THE TRANSMISSION LINE CORRIDOR AND EASEMENT SHALL REMAIN UNOBSTRUCTED DURING AND AFTER THE CONSTRUCTION OF THE PROJECT.
3. SHOULD ANY ISSUES ARISE INVOLVING THE SAFETY OR ACCESS OF THE TRANSMISSION SYSTEM, CONTACT CHRIS DAILEY, ATC MAINTENANCE SPECIALIST.

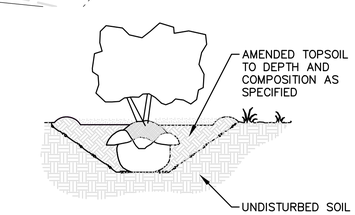


- EXCAVATE PLANTING PIT TWICE THE DIAMETER OF BALL & EQUAL IN DEPTH
- LOOSEN SUBSOIL W/PICK TO ENSURE POROSITY
- PLACE PLANTING SOIL IN PLANTING PIT & FOOT TAMP
- SELECT BEST VIEWING ANGLE, LIFT STOCK BY BALL & PLACE IN PLANTING PIT
- UNWRAP TOP HALF OF ROOT BALL
- BACKFILL TO FINISHED GRADE WITH AMENDED TOPSOIL & TAMP
- FORM 3" SAUCER TO ENCIRCLE STOCK & FILL WITH 3" SHREDDED BARK MULCH
- WATER IMMEDIATELY & FREQUENTLY.
- PLANT SIZES SPECIFIED ARE MINIMUM ACCEPTABLE

## 3 SHRUB PLANTING DETAIL

20 0 20 40 FT

1"=20'

DRAFT 98% PROGRESS DRAWINGS

OCTOBER 2019

GRAEF

| NO. | DATE | APPD | REVISION |
|---|---|---|---|

Waukesha Water Utility — SERVING WAUKESHA SINCE 1886

GREELEY AND HANSEN — 741 N. GRAND AVE, SUITE 308, WAUKESHA, WI 53186

GREAT WATER ALLIANCE™

CONTRACT PACKAGE 3: BOOSTER PUMPING STATION, STORAGE, AND CHEMICAL FACILITIES

SITE, LANSCAPE AND PAVING PLAN

APPROVED

SEAL AFFIXED MONTH / DAY / YEAR

OCTOBER 2019

| | | | |
|---|---|---|---|
| JOB NO.: 15310 | | | |
| DESGN | BRL | CHCK | PRE |
| APPRV | MNP | DRWN | SRK |
| SCALE: | 1" = 20' | | |

DRAWING NUMBER

CC5

SHEET 169 OF 184 REV 0

FILE: X:\MIL\2016\2016\0998\CAD\SITE\DWG\00\GH_00_WSCB-CC05_SITE_PAVING_PLAN.DWG

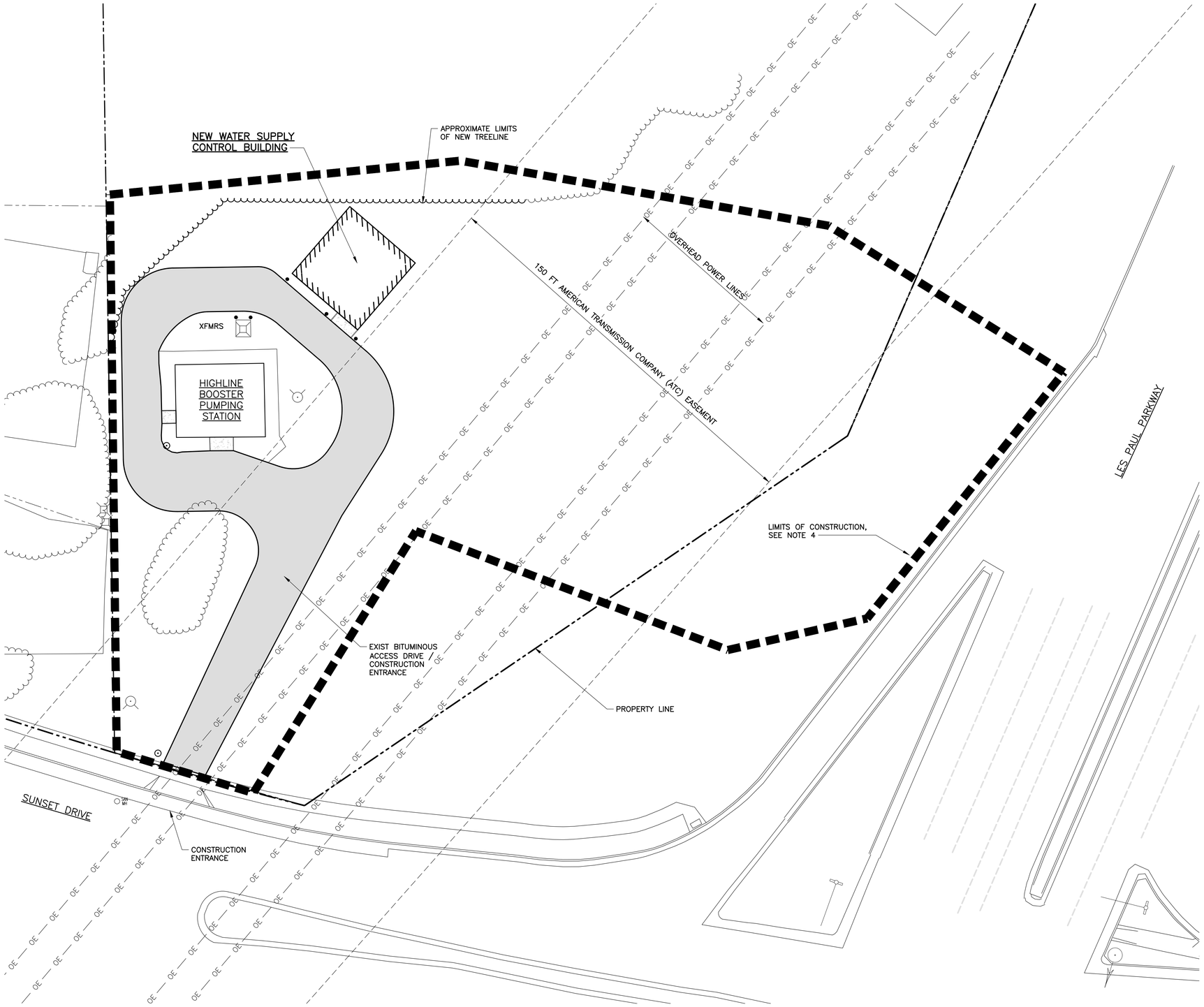


## CONSTRUCTION STAGING PLAN

SCALE: 1"=20'

## NOTES:

1. CONTRACTOR SHALL COORDINATE LOCATION OF CONSTRUCTION TRAILERS AND CONTRACTOR PARKING WITH OWNER AND OWNERS REPRESENTATIVE. SEE SPECIFICATIONS FOR FURTHER REQUIREMENTS.
2. CONTRACTOR SHALL INSTALL SECURITY FENCING AS REQUIRED TO FACILITATE CONSTRUCTION.
3. CONTRACTOR IS RESPONSIBLE FOR MAINTAINING ALL ROADWAYS USED FOR CONSTRUCTION TRAFFIC.
4. CONTRACTOR STAGING AREAS TO BE FULLY RESTORED AFTER CONSTRUCTION.
5. AGGREGATE PLACED FOR CONSTRUCTION ACCESS ROADWAYS OR STAGING AREAS MAY NOT BE USED FOR BASE MATERIAL FOR FINAL PAVING.
6. CONTRACTOR MUST MAINTAIN ACCESS TO HIGHLINE BPS AT ALL TIMES DURING CONSTRUCTION.
7. STORAGE AND STAGING IS NOT ALLOWED WITHIN THE RIGHT–OF–WAY.

## ATC EASEMENT NOTES:

1. ALL OSHA MINIMUM APPROACH OFFSETS SHALL BE OBTAINED AND UTILIZED BY ALL MACHINERY OPERATORS AND PERSONNEL ON SITE FOR THE DURATION OF THE PROJECT.
2. ACCESS TO THE TRANSMISSION LINE CORRIDOR AND EASEMENT SHALL REMAIN UNOBSTRUCTED DURING AND AFTER THE CONSTRUCTION OF THE PROJECT.

20 0 20 40 FT
1"=20'

DRAFT 98% PROGRESS DRAWINGS
OCTOBER 2019

| NO. | DATE | APPD | REVISION |
|---|---|---|---|

Waukesha Water Utility
SERVING WAUKESHA SINCE 1886

GREELEY AND HANSEN
741 N. GRAND AVE, SUITE 308
WAUKESHA, WI 53186

GREAT WATER ALLIANCE™

CONTRACT PACKAGE 3: BOOSTER PUMPING STATION AND WATER SUPPLY CONTROL BUILDING

CONSTRUCTION STAGING PLAN

APPROVED

SEAL AFFIXED
MONTH / DAY / YEAR

OCTOBER 2019

JOB NO.: 15310

| | | | |
|---|---|---|---|
| DESGN | LAM | CHCK | RMC |
| APPRV | AJM | DRWN | TSM |
| SCALE: | 1" = 20' | | |

DRAWING NUMBER

CC6

SHEET 170 OF 184 REV 0

FILE: \\GH-DATA01\CLIENT02\15310-WAUKESHA GREAT LAKES WATER SUPPLY PM-CM\21 CADD\21.05 WORKING DWGS\CONTRACT PACKAGE 3 - BPSFIGLWSP-P3-WSCB-CC06.DWG 07/25/2019 10:14:53 AM
BAR MEASURE 1" ON FULLSIZE SHEETS

10/1/2019 12:29:18 PM

BAR MEASURE 1" ON FULLSIZE SHEETS

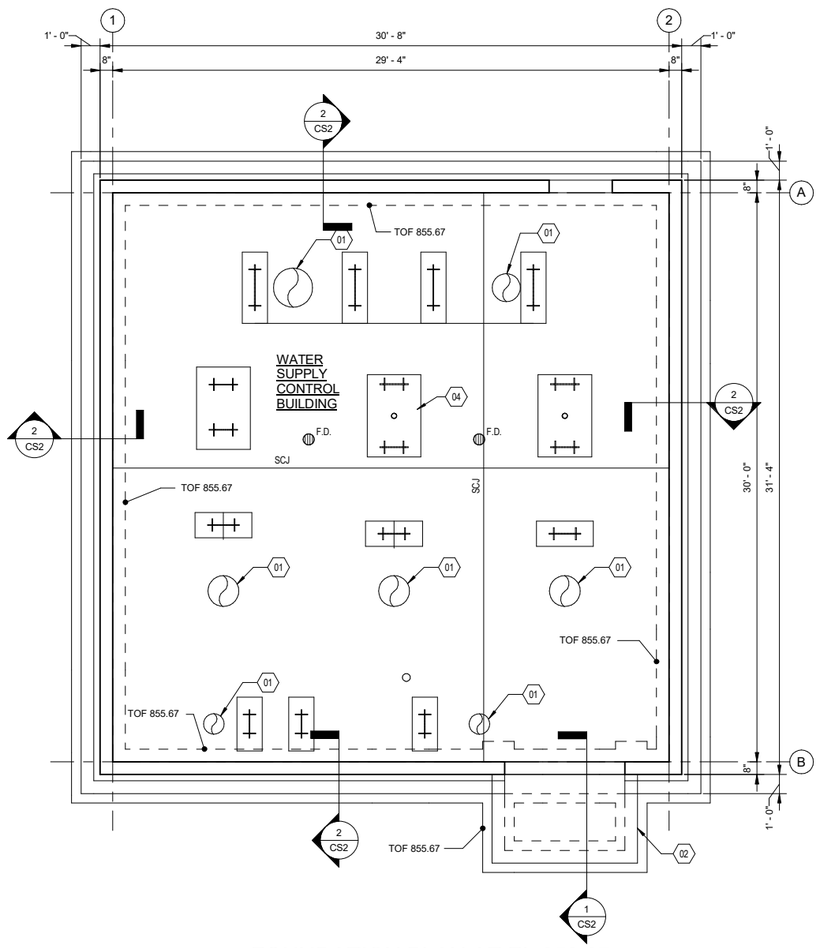


## FOUNDATION PLAN AT EL 858.67

SCALE: 1/4" = 1'-0"

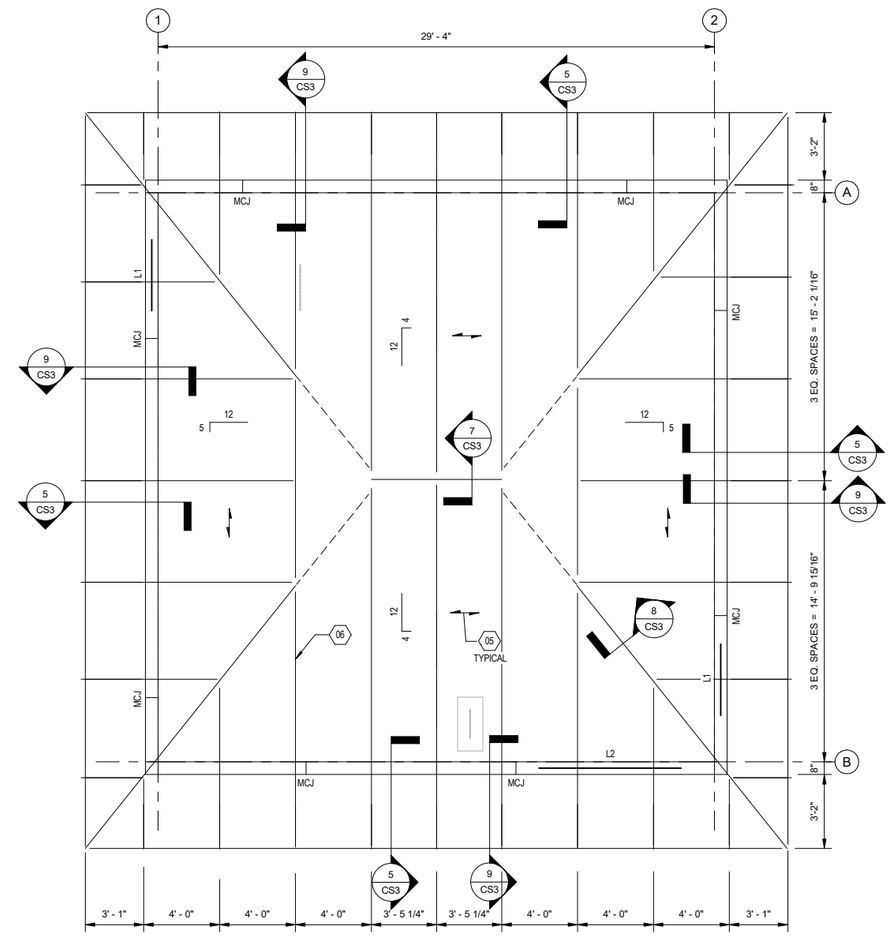


## ROOF FRAMING PLAN AT EL 873.30

SCALE: 1/4" = 1'-0"

## GENERAL SHEET NOTES

1. TYPICAL FLOOR = 7" CONCRETE SLAB ON GRADE REINFORCED WITH 5 LBS SYNTHETIC MACRO FIBERS. TOP OF CONCRETE SLAB ELEVATION = 858.67 UNLESS NOTED OTHERWISE ON PLAN.
2. SCJ = CONCRETE SLAB CONTROL JOINT.
3. MCJ = CONCRETE MASONRY CONTROL JOINT, SEE 2/S3. FOR CONCRETE MASONRY REINFORCEMENT AT CORNERS, SEE DETAILS 3/CS3 AND 4/CS3.
4. PROVIDE A MINIMUM OF 2'-0" AGGREGATE BASE COURSE UNDER SLAB ON GRADE. COMPACT TO 95% MODIFIED PROCTOR IN 8" MAXIMUM LIFTS.
5. SEE "GENERAL DETAILS" SHEET AS3 FOR THE FOLLOWING DETAILS:
   - OPENING REINFORCEMENT
   - SLAB ON GRADE CONTROL AND CONSTRUCTION JOINT
   - WALL CONTROL AND CONSTRUCTION JOINT
   - WALL CORNER
   - WALL INTERSECTION
   - FOOTING STEP
6. F.D. = FLOOR DRAIN, SEE PLUMBING DRAWINGS.
7. REFER TO SHEET CS3 FOR LINTEL SCHEDULE.
8. PREENGINEERED TRUSSES SHALL BE EQUALLY SPACED. SEE PLAN.
9. ROOF DECK SHALL BE FASTENED TO TRUSSES WITH #10 SELF-DRILLING SCREWS AT 12" OC.
10. ROOF DECK SHALL BE FASTENED TO PERIMETER BLOCKING WITH #10 SELF-DRILLING SCREWS AT 12" OC, MAXIMUM.

## SHEET KEYNOTES

01 PIPE SLEEVE FOR UTILITY PENETRATION THROUGH FLOOR. COORDINATE SIZE, LOCATION AND ELEVATION WITH PIPING DRAWINGS. SEE CS2 FOR DETAILS.

02 STOOP. SEE SHEET CS2.

03 (2) #4 x 5'-0" LONG LOCATED 1" BELOW TOP OF SLAB ON GRADE. PROVIDE AT ALL SLAB ON GRADE RE-ENTRANT CORNERS. ALL LOCATIONS NOT SHOWN ON PLAN.

04 SEE SHEETS AS3 AND AS4 FOR PIPE SUPPORT DETAILS.

05 SPAN OF 1 1/2"x 20 GAGE METAL ROOF DECK.

06 SEE SHEET CS3 FOR WIND LOADING ON PRE-ENGINEERED METAL ROOF TRUSSES.

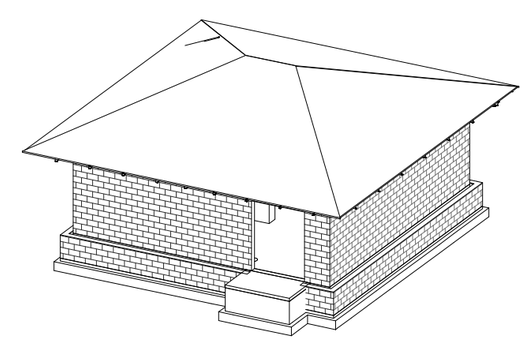

## PERSPECTIVE VIEW

NO SCALE

DRAFT 98% PROGRESS DRAWINGS
OCTOBER 2019

4 0 4 8 FT
1/4" =1' - 0"

GRÄEF

| NO. | DATE | APPD | DESCRIPTION |
|---|---|---|---|

Waukesha Water Utility
SERVING WAUKESHA SINCE 1886

GREELEY AND HANSEN
741 N. GRAND AVE, SUITE 308
WAUKESHA, WI 53186

GREAT WATER ALLIANCE™

CONTRACT PACKAGE 3: BOOSTER PUMPING STATION, STORAGE, AND CHEMICAL FACILITIES

FOUNDATION AND ROOF FRAMING PLANS

APPROVED

SEAL AFFIXED
MONTH / DAY / YEAR

OCTOBER 2019

| | | | |
|---|---|---|---|
| JOB NO.: | 15310 | | |
| DESGN | MH | CHCK | PG |
| APPRV | MH | DRWN | BM |
| SCALE: | 1/4" = 1'-0" | | |

DRAWING NUMBER

CS1

SHEET 171 OF 184 REV 0

FILE: F:\My Documents\My Projects\2016\GLWSP-P2-WSCB-S_bryan.mentzel@graef-usa.com.rvt

10/1/2019 12:29:19 PM
1" BAR MEASURE 1" ON FULLSIZE SHEETS

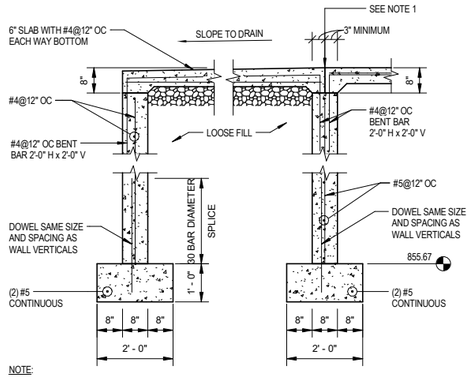


NOTE:

1. LOCATE SLAB BREAK UNDER DOOR THRESHOLD. COORDINATE LOCATION WITH ARCHITECTURAL DRAWINGS.

1 CS1 DETAIL
SCALE: 1/2" = 1'-0"

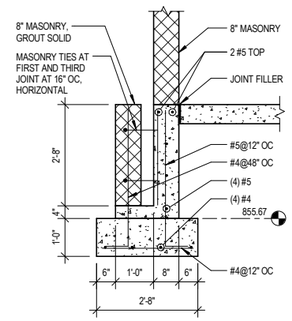


2 CS1 DETAIL
SCALE: 1/2" = 1'-0"

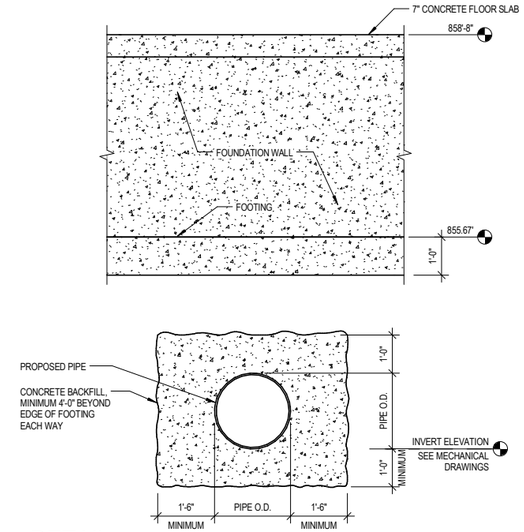


3 DETAIL
SCALE: 1/2" = 1'-0"

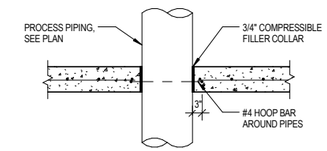


4 TYPICAL PENETRATION IN FLOOR SLAB
SCALE: 1/2" = 1'-0"

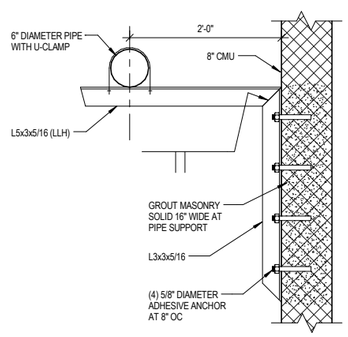


5 DETAIL
SCALE: 1" = 1'-0"

| NO. | DATE | APPD | DESCRIPTION |
|---|---|---|---|
| 9 | 11/17 | 9 | ADDENDUM 9 |

Waukesha Water Utility
SEPTIC WAUKESHA SINCE 1886

GREELEY AND HANSEN
741 N. GRAND AVE, SUITE 308
WAUKESHA, WI 53186

GREAT WATER ALLIANCE™

CONTRACT PACKAGE 3: BOOSTER PUMPING STATION, STORAGE, AND CHEMICAL FACILITIES

SECTIONS AND DETAILS

APPROVED

SEAL AFFIXED
MONTH / DAY / YEAR

OCTOBER 2019

| | | | |
|---|---|---|---|
| JOB NO.: | 15310 | | |
| DESGN | MH | CHCK | PG |
| APPRV | MH | DRWN | BM |
| SCALE: | AS SHOWN | | |

DRAWING NUMBER

CS2

SHEET 172 OF 184 REV 9

2 0 2 4 FT 1/2" =1' - 0"
1 0 1 2 FT 1" =1' - 0"

GRAEF

DRAFT 98% PROGRESS DRAWINGS
OCTOBER 2019

FILE: F:\My Documents\My Projects\2016\GLWSP-P2-WSCB-S_bryan.mentzel@graef-usa.com.rvt

10/1/2019 12:29:19 PM
1" BAR MEASURE 1" ON FULL SIZE SHEETS

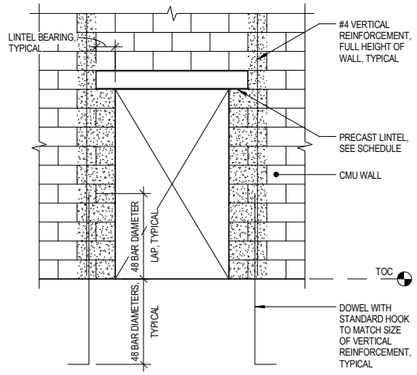


NOTE:

1. GROUT ALL CELLS SOLID CONTAINING REINFORCEMENT

## 1 CMU WALL DOOR OPENING

NOT TO SCALE

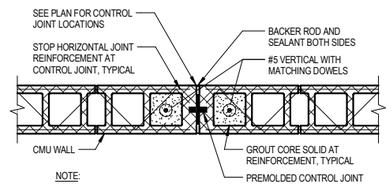


NOTE:

1. STOP BOND BEAM REINFORCEMENT (NOT SHOWN) AT CONTROL JOINT.

## 2 CMU WALL VERTICAL CONTROL JOINT

NOT TO SCALE

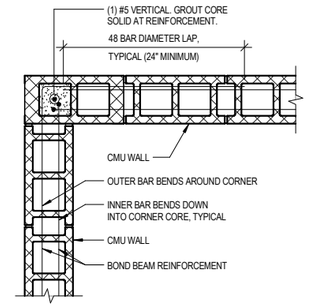


## 3 BOND BEAM CORNER

NOT TO SCALE

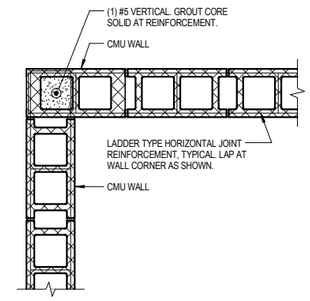


## 4 CMU WALL CORNER

NOT TO SCALE

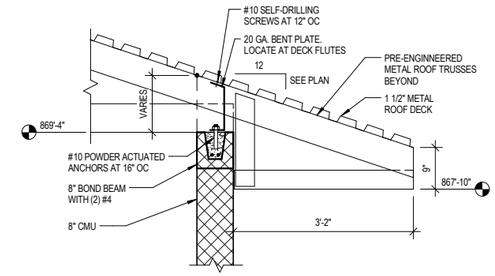


## 5 CS1 DETAIL

SCALE: 3/4" = 1'-0"

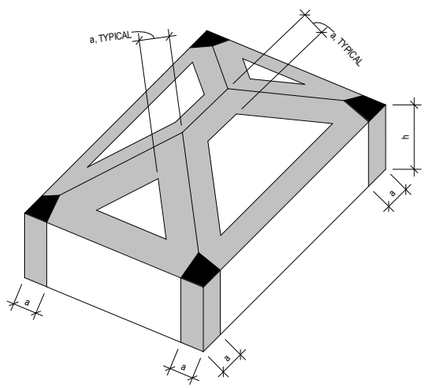


HIP ROOF (7° < θ ≤ 27°) BUILDING

a = 3'-0"

= **INTERIOR ZONE** ROOF = ZONE 1 WALLS = ZONE 4

= **END ZONE** ROOF = ZONE 2 WALLS = ZONE 5

= **CORNER ZONE** ROOF = ZONE 3

| DESIGN WIND PRESSURE, PSF RISK CATEGORY VI | | | | | | | | |
|---|---|---|---|---|---|---|---|---|
| | EFFECTIVE WIND AREA, SF | | | | | | | |
| ZONE | 5 | 10 | 20 | 50 | 100 | 200 | > 500 | DESCRIPTION |
| 1 | -28.7 | -28.7 | -27.9 | -26.9 | -26.1 | -25.3 | -26.1 | ROOF INTERIOR ZONE |
| 2 | -50 | -50 | -46.0 | -40.7 | -36.7 | -36.7 | -36.7 | END ZONE REGION OF THE ROOF |
| 3 | -50 | -50 | -46.0 | -40.7 | -36.7 | -36.7 | -36.7 | CORNER ZONE REGION OF THE ROOF |
| ROOF OVERHANG (ZONES 1 AND 2) | -58.5 | -58.5 | -58.5 | -58.5 | -58.5 | -58.8 | -58.8 | |
| ROOF OVERHANG (ZONE 3) | -58.5 | -58.5 | -58.5 | -58.5 | -58.5 | -58.8 | -58.8 | |
| 4 (+) | 31.4 | 31.4 | 30.0 | 28.1 | 26.7 | 25.3 | 23.4 | WALL INTERIOR ZONE |
| 4 (-) | -34 | -34 | -32.6 | -35.5 | -29.3 | -27.9 | -26.1 | |
| 5 (+) | 31.4 | 31.4 | 30.0 | 28.1 | 26.7 | 25.3 | 23.4 | END ZONE REGION OF THE WALL |
| 5 (-) | -42 | -42 | -39.2 | -35.5 | -32.6 | -29.8 | -26.1 | |

NOTES:

1. NEGATIVE PRESSURES ACT AWAY FROM COMPONENT SURFACE. POSITIVE PRESSURES ACT TOWARD COMPONENT SURFACES.
2. FOR NET UPLIFT TO ROOF JOISTS, SUBTRACT A ROOFING DEAD LOAD OF 5 PSF (NOT INCLUDING JOIST SELF WEIGHT) FROM THE WIND PRESSURES SHOWN.

## 6 WIND PROVISIONS FOR COMPONENTS AND CLADDING TABLE

NO SCALE

## LINTEL SCHEDULE

| MARK | TYPE | SIZE | BEARING LENGTH | REMARKS |
|---|---|---|---|---|
| L1 | I | 8" BOND BEAM WITH (2) #4 BOTTOM | 8" | SEE DETAIL A |
| L2 | II | 8" PRECAST CONCRETE BEAM WITH (2) #5 BOTTOM | 8" | SEE DETAIL A |

LINTEL SCHEDULE NOTES:

1. SEE ARCHITECTURAL DRAWINGS FOR SIZE AND LOCATION OF ALL OPENINGS.
2. COORDINATE BOTTOM OF LINTEL ELEVATION WITH ARCHITECTURAL DRAWINGS.
3. ALL DIMENSIONS ARE NOMINAL MASONRY DIMENSIONS UNLESS NOTED OTHERWISE.
4. PROVIDE MINIMUM 8" BEARING EACH END UNLESS NOTED OTHERWISE.
5. FOR PRECAST CONCRETE LINTELS, WIDTH AND HEIGHT OF LINTEL = NOMINAL MASONRY DIMENSIONS.

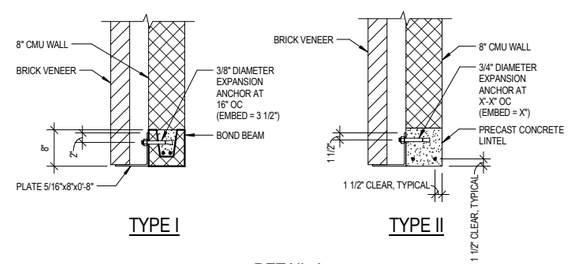


TYPE I

TYPE II

DETAIL A

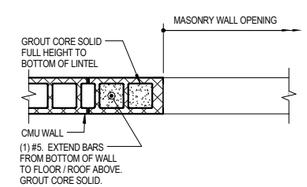


TYPICAL JAMB

## 7 CS1 DETAIL

SCALE: 3/4" = 1'-0"

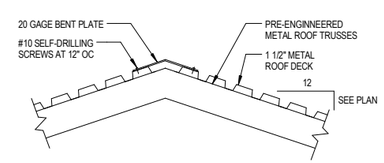


## 8 CS1 DETAIL

SCALE: 3/4" = 1'-0"

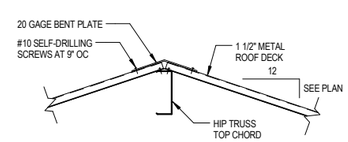


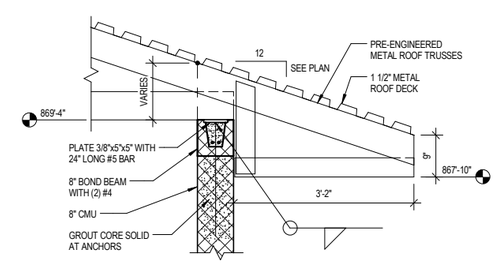


## 9 CS1 DETAIL

SCALE: 3/4" = 1'-0"

1 0 1 2 3 FT
3/4" =1' - 0"

GRAEF

DRAFT 98% PROGRESS DRAWINGS
OCTOBER 2019

| NO. | DATE | APPD | DESCRIPTION |
|---|---|---|---|

Waukesha Water Utility
SEPTIC NO WAUKESHA SINCE 1886

GREELEY AND HANSEN
741 N. GRAND AVE, SUITE 308
WAUKESHA, WI 53186

GREAT WATER ALLIANCE™

CONTRACT PACKAGE 3: BOOSTER PUMPING STATION, STORAGE, AND CHEMICAL FACILITIES

ROOFING DETAILS

APPROVED

SEAL AFFIXED
MONTH / DAY / YEAR

OCTOBER 2019

| | | | |
|---|---|---|---|
| JOB NO.: | 15310 | | |
| DESGN | MH | CHCK | PG |
| APPRV | MH | DRWN | BM |
| SCALE: | AS SHOWN | | |

DRAWING NUMBER

CS3

SHEET 173 OF 184 REV 0

FILE: F:\My Documents\My Projects\2016\GLWSP-P2-WSCB-S_bryan.mentzel@graef-usa.com.rvt

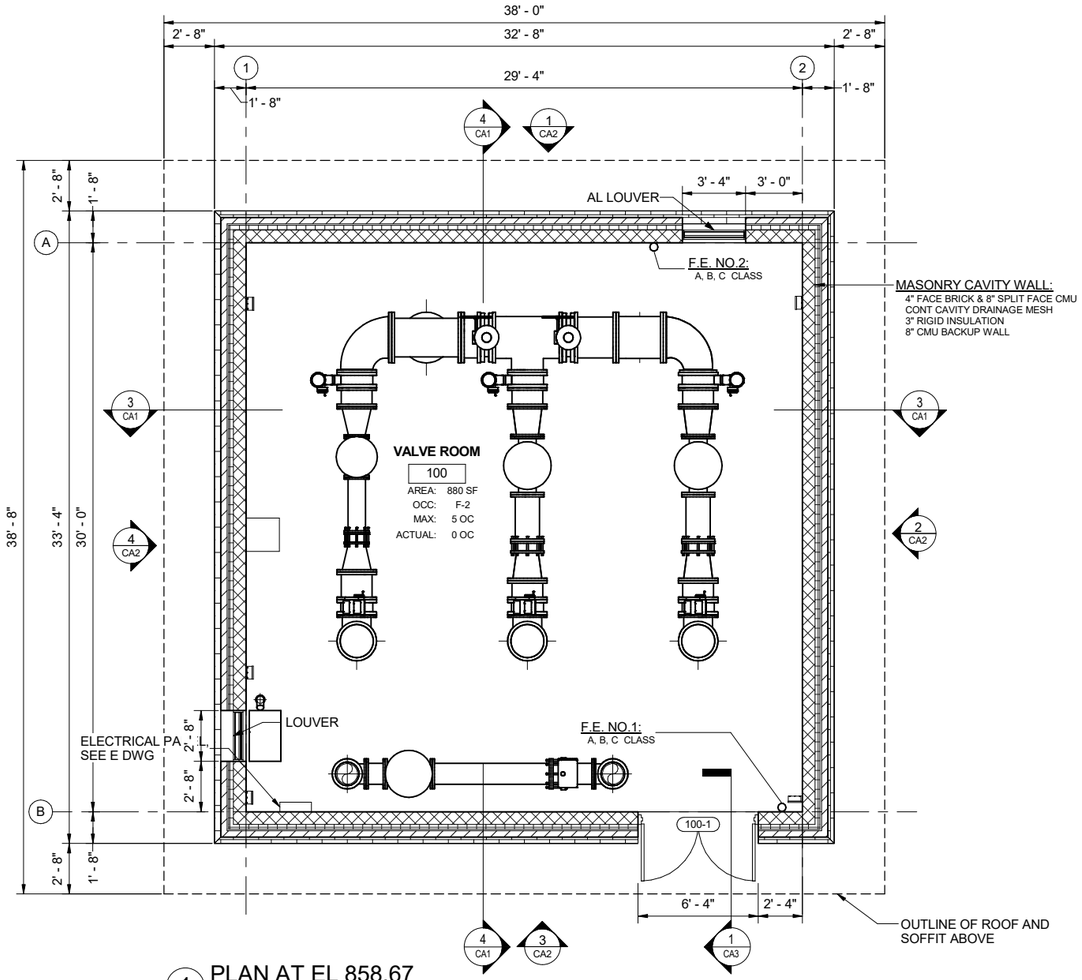


1 PLAN AT EL 858.67
SCALE: 1/4" = 1'-0"

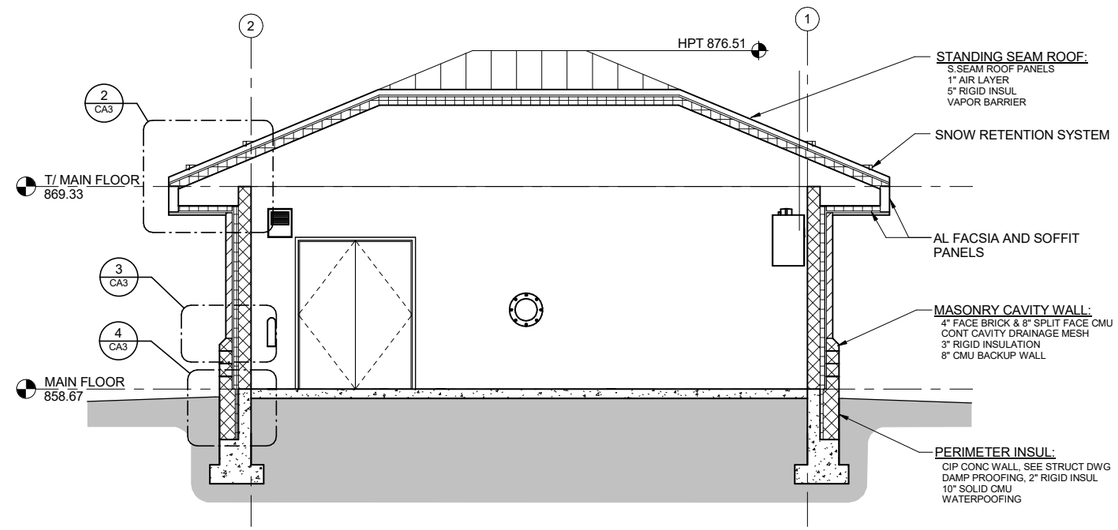


3 BUILDING SECTION
SCALE: 1/4" = 1'-0"

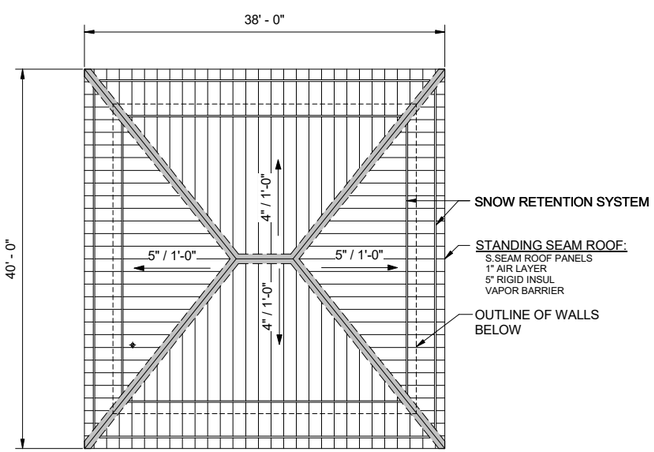


2 ROOF PLAN AT EL 876.51
SCALE: 1/8" = 1'-0"

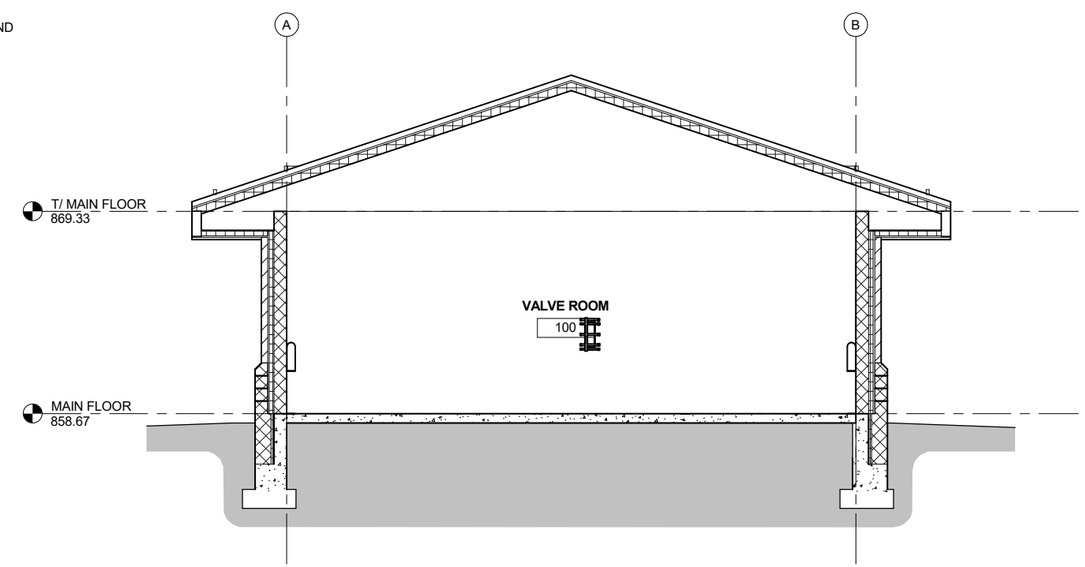


4 BUILDING SECTION
SCALE: 1/4" = 1'-0"

4 0 4 8 FT 1/4" =1' - 0"
8 0 8 16 FT 1/8" =1' - 0"

DRAFT 98% PROGRESS DRAWINGS
OCTOBER 2019

| NO. | DATE | APPD | DESCRIPTION |
|---|---|---|---|

Waukesha Water Utility
SERVING WAUKESHA SINCE 1886

GREELEY AND HANSEN
741 N. GRAND AVE, SUITE 308
WAUKESHA, WI 53186

GREAT WATER ALLIANCE™

CONTRACT PACKAGE 3: BOOSTER PUMPING STATION, STORAGE, AND CHEMICAL FACILITIES

PLANS, BUILDING SECTIONS AND NOTES

APPROVED

SEAL AFFIXED
MONTH / DAY / YEAR

OCTOBER 2019

| | | | |
|---|---|---|---|
| JOB NO.: | 15310 | | |
| DESGN | JJS | CHCK | TCB |
| APPRV | TCB | DRWN | AKB |
| SCALE: | AS SHOWN | | |

DRAWING NUMBER

CA1

SHEET 174 OF 184 REV 0

10/2/2019 10:25:50 AM

FILE: C:\Users\lgreen\Documents\GLWSP-P2-WSCB-GAMHPNE_lgreen.rvt

10/2/2019 10:26:59 AM

1" BAR MEASURE 1" ON FULLSIZE SHEETS

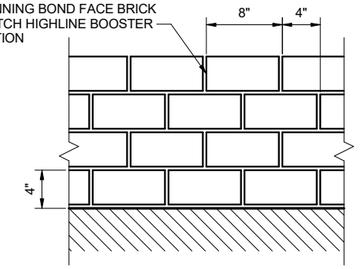


RUNNING BOND PATTERN NO.1

SCALE: 1 1/2" = 1'-0"

LEGEND

- 4x8X4 FACE BRICK
- 8"X6"x16" SPLIT FACE CMU
- AL FASCIA PANEL
- S. SEAM ROOF
- GROUND SEE CIVIL DWG

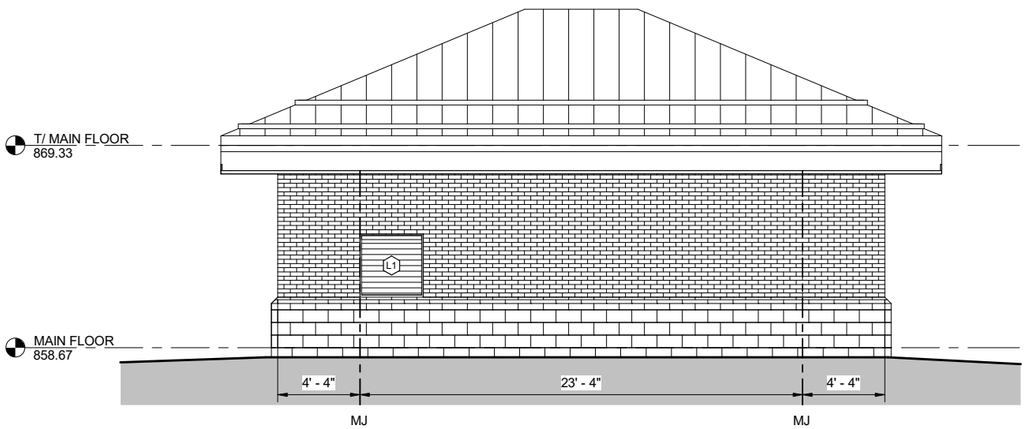


1 CA1 NORTHEAST BUILDING ELEVATION

SCALE: 1/4" = 1'-0"

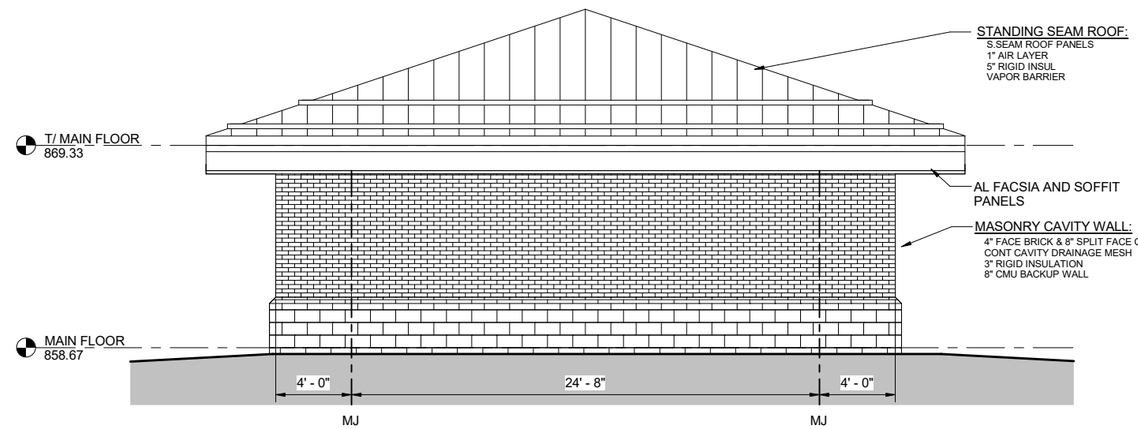


2 CA1 SOUTHEAST BUILDING ELEVATION

SCALE: 1/4" = 1'-0"

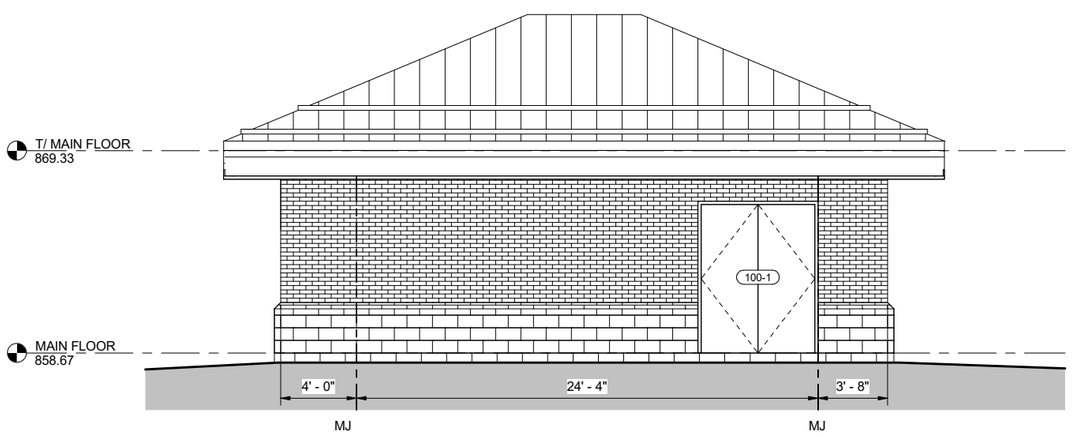


3 CA1 SOUTHWEST BUILDING ELEVATION

SCALE: 1/4" = 1'-0"

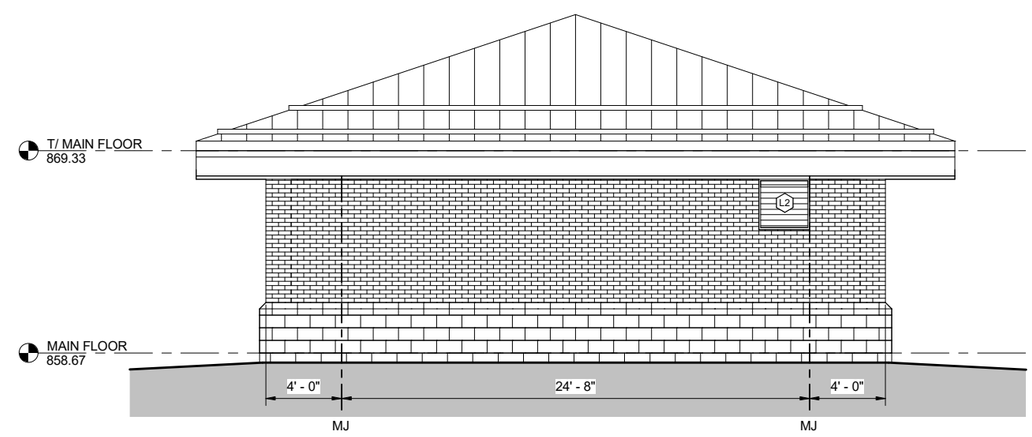


4 CA1 NORTHWEST BUILDING ELEVATION

SCALE: 1/4" = 1'-0"

4 0 4 8 FT

1/4" =1' - 0"

DRAFT 98% PROGRESS DRAWINGS

OCTOBER 2019

| NO. | DATE | APPD | DESCRIPTION |
|---|---|---|---|

Waukesha Water Utility

SEPO NO WAUKESHA SINCE 1886

GREELEY AND HANSEN

741 N. GRAND AVE, SUITE 308
WAUKESHA, WI 53186

GREAT WATER ALLIANCE™

CONTRACT PACKAGE 3: BOOSTER PUMPING STATION, STORAGE, AND CHEMICAL FACILITIES

BUILDING ELEVATIONS

APPROVED

SEAL AFFIXED
MONTH / DAY / YEAR

OCTOBER 2019

| | | | |
|---|---|---|---|
| JOB NO.: | 15310 | | |
| DESGN | JJS | CHCK | TCB |
| APPRV | TCB | DRWN | AKB |
| SCALE: | AS SHOWN | | |

DRAWING NUMBER

CA2

SHEET 175 OF 184 REV 0

FILE: C:\Users\lgreen\Documents\GLWSP-P2-WSCB-GAMHPNE_lgreen.rvt

10/2/2019 10:25:52 AM

BAR MEASURE 1" ON FULLSIZE SHEETS

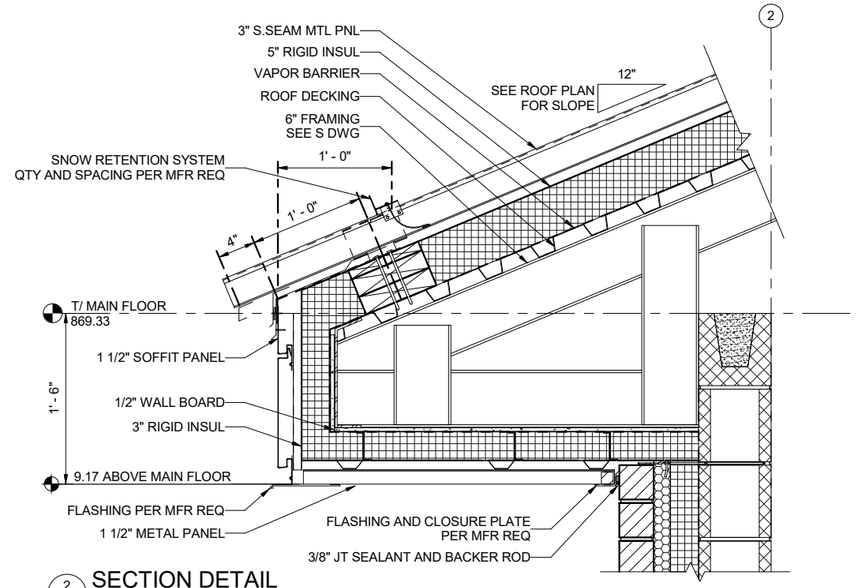


2 CA1 SECTION DETAIL
SCALE: 1 1/2" = 1'-0"

| DOOR SCHEDULE | | | | | | | | | | | | |
|---|---|---|---|---|---|---|---|---|---|---|---|---|
| DOOR NO. | ROUGH OPENING | | TYPE | DOOR | | | FRAME | | | LOCKSET TYPE | FIRE RATING (HR) | COMMENTS |
| | WIDTH | HEIGHT | | THICKNESS | UNDER CUT | MTL | JAMB | HEAD | MTL | | | |
| 100-1 | 6' - 4" | 8' - 0" | 3 | 1 3/4" | -- | FRP/AL HYBRID | 6/ CA3 | 5/ CA3 | AL | STOREROOM | -- | |

| ROOM FINISH SCHEDULE | | | | | | | |
|---|---|---|---|---|---|---|---|
| ROOM NO. | ROOM NAME | FINISH | | | | CEILING HEIGHT | COMMENTS |
| | | FLOOR | BASE | WALL | CEILING | | |
| 100 | VALVE ROOM | DPC | NONE | PT/CMU | PT/ PRECAST | 10' - 0" | |

| OPENING SCHEDULE | | | | | | | | | | |
|---|---|---|---|---|---|---|---|---|---|---|
| TYPE | DESCRIPTION | R.O. | | QTY | MAT | GL TYPE | DETAILS | | | TYPE COMMENTS |
| | | WIDTH | HEIGHT | | | | HEAD | JAMB | SILL | |
| L1 | AL LOUVER | 3' - 4" | 3' - 4" | 1 | AL | NA | 8/ CA3 | 9/ CA3 | 10/ CA3 SIM | |
| L2 | LOUVER | 2' - 8" | 2' - 8" | 1 | | | | | | |

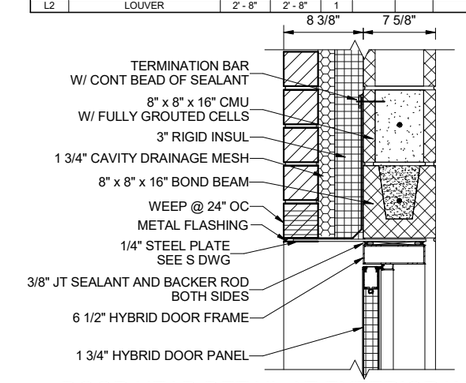


5 DOOR HEAD DETAIL AT EXTERIOR WALL
SCALE: 1 1/2" = 1'-0"

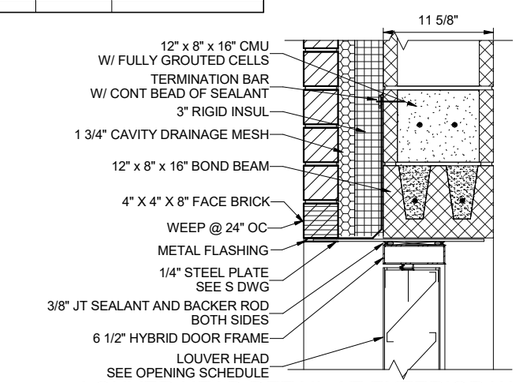


8 LOUVER HEAD DETAIL AT EXTERIOR WALL
SCALE: 1 1/2" = 1'-0"

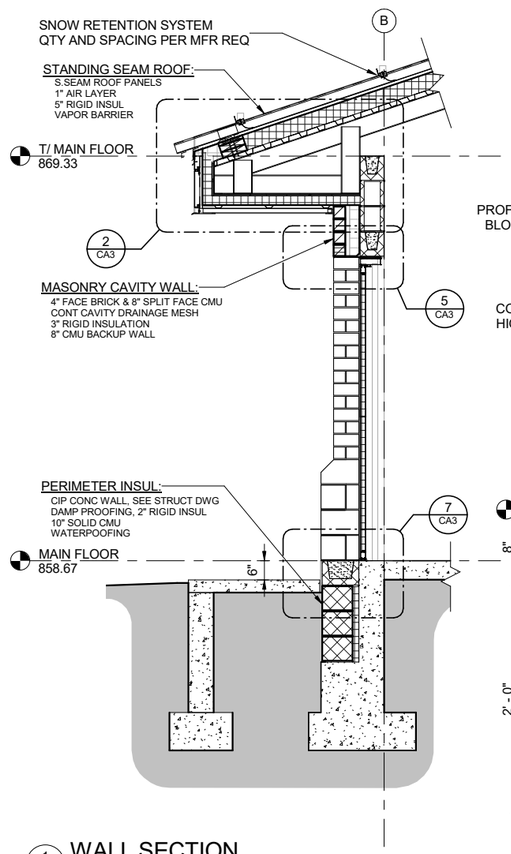


1 CA1 WALL SECTION
SCALE: 1/2" = 1'-0"

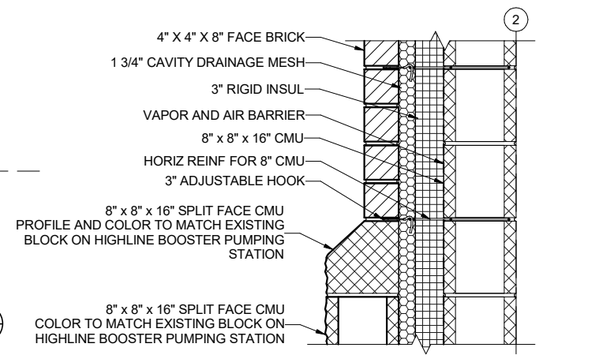


3 CA1 SECTION DETAIL
SCALE: 1 1/2" = 1'-0"

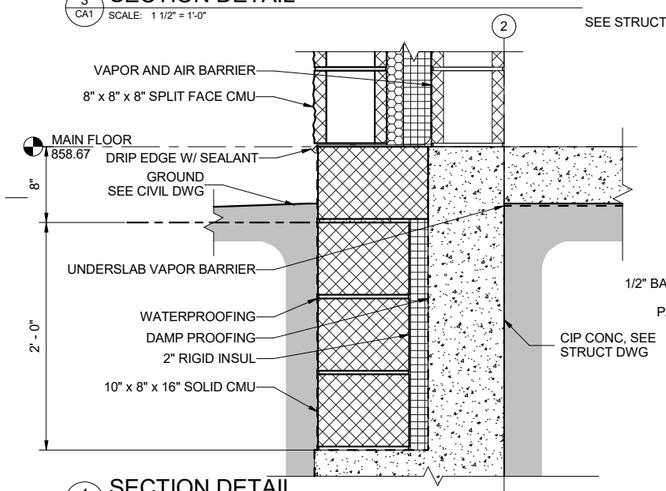


4 CA1 SECTION DETAIL
SCALE: 1 1/2" = 1'-0"

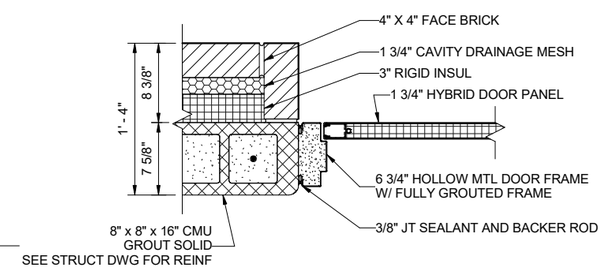


6 DOOR JAMB DETAIL AT EXTERIOR WALL
SCALE: 1 1/2" = 1'-0"

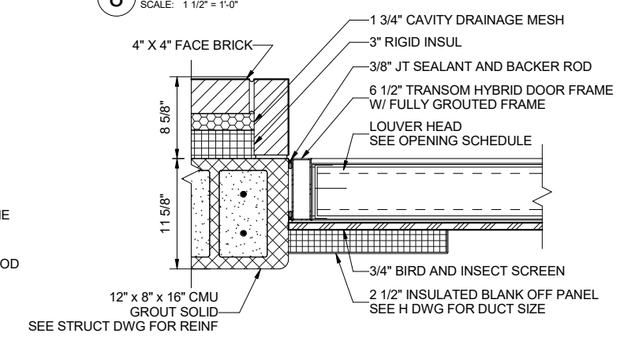


9 LOUVER JAMB DETAIL AT EXTERIOR WALL
SCALE: 1 1/2" = 1'-0"

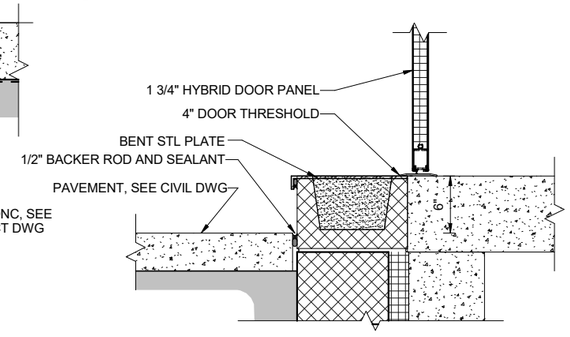


7 DOOR THRESHOLD AT EXTERIOR WALL
SCALE: 1 1/2" = 1'-0"

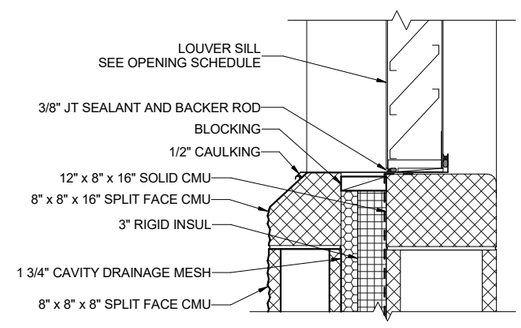


10 LOUVER SILL DETAIL AT EXTERIOR WALL
SCALE: 1 1/2" = 1'-0"

1 0 1 FT
1 1/2" =1' - 0"

DRAFT 98% PROGRESS DRAWINGS
OCTOBER 2019

| NO. | DATE | APPD | DESCRIPTION |
|---|---|---|---|

Waukesha Water Utility
SEPVNO WAUKESHA SINCE 1886

GREELEY AND HANSEN
741 N. GRAND AVE, SUITE 308
WAUKESHA, WI 53186

GREAT WATER ALLIANCE™

CONTRACT PACKAGE 3: BOOSTER PUMPING STATION, STORAGE, AND CHEMICAL FACILITIES

ENLARGED VIEWS, WALL SECTIONS, SCHEDULES AND DETAILS

APPROVED

SEAL AFFIXED
MONTH / DAY / YEAR

OCTOBER 2019

| | | | |
|---|---|---|---|
| JOB NO.: | 15310 | | |
| DESGN | JJS | CHCK | TCB |
| APPRV | TCB | DRWN | AKB |
| SCALE: | AS SHOWN | | |

DRAWING NUMBER

CA3

SHEET 176 OF 184 REV 0

FILE: C:\Users\green\Documents\GLWSP-P2-WSCB-GAMHPNE_lgreen.rvt

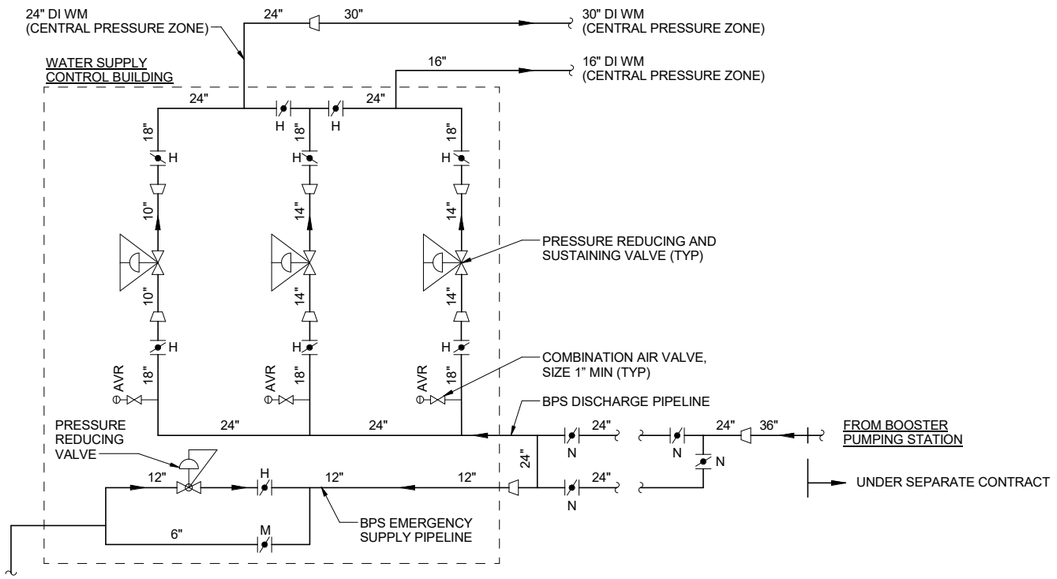


## PROCESS FLOW DIAGRAM

NO SCALE

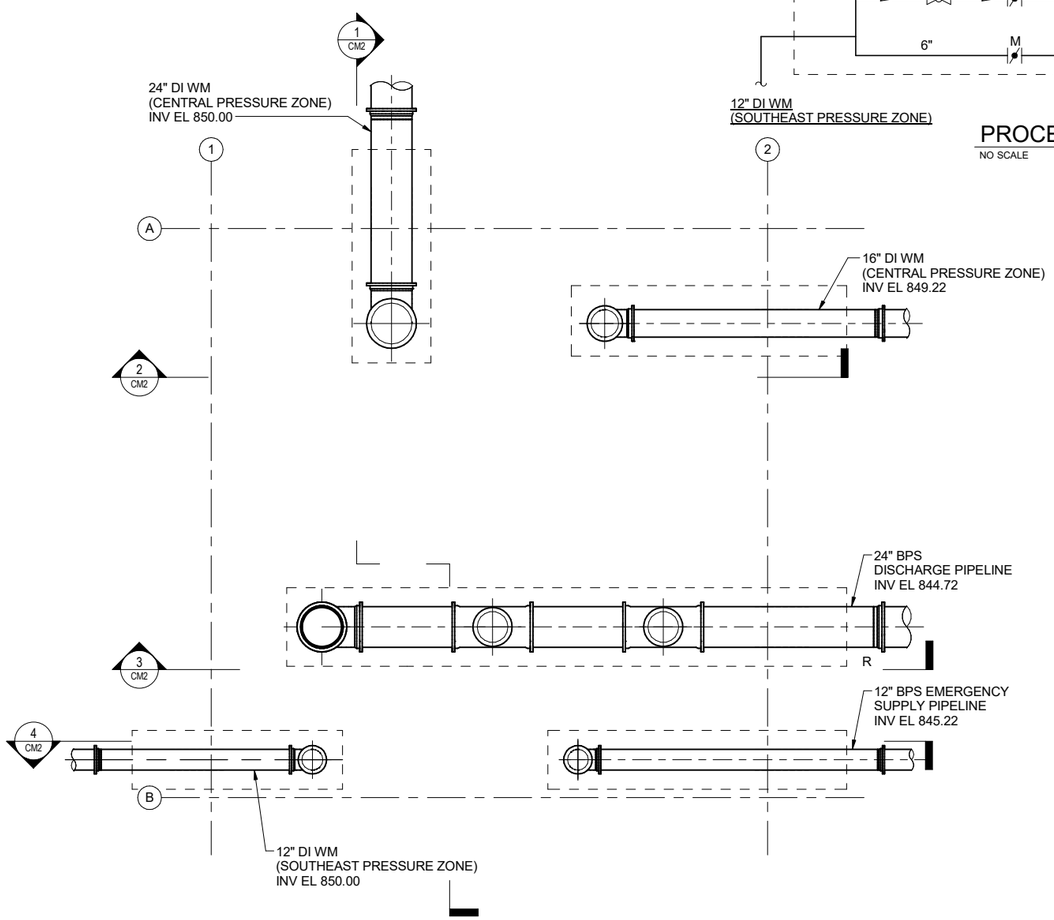


## PLAN AT EL 850.00

SCALE: 1/4" = 1'-0"

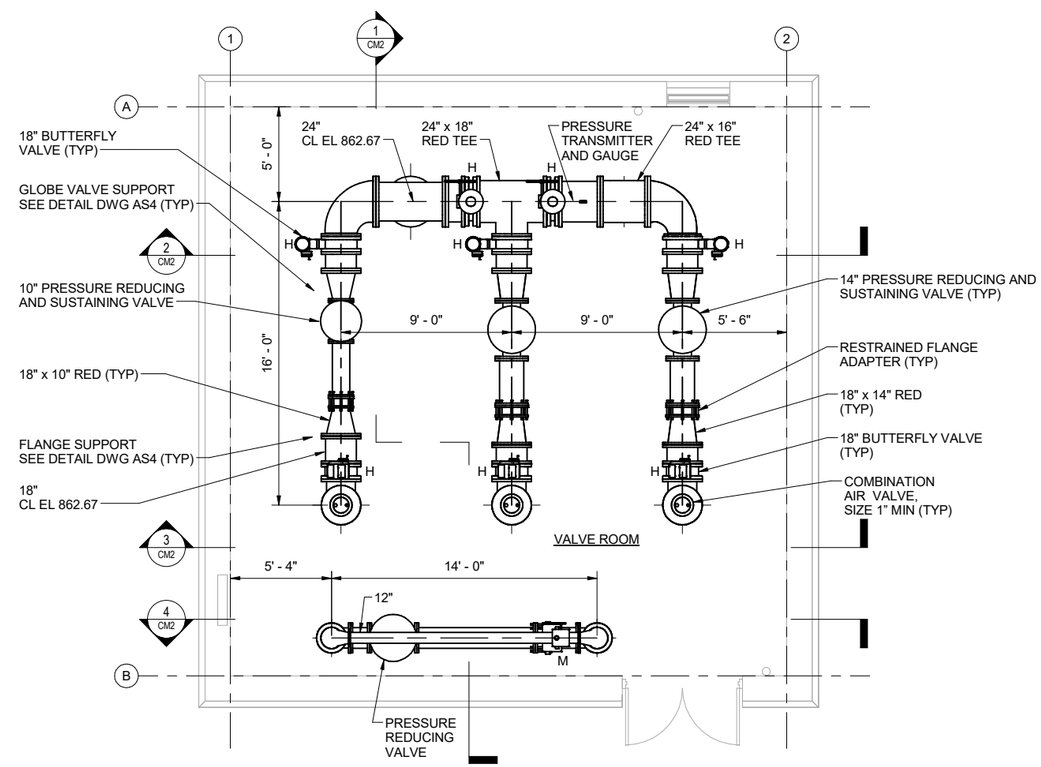


## PLAN AT EL 858.67

SCALE: 1/4" = 1'-0"

4 0 4 8 FT
1/4" =1' - 0"

DRAFT 98% PROGRESS DRAWINGS
OCTOBER 2019

| NO. | DATE | APPD | DESCRIPTION |
|---|---|---|---|

Waukesha Water Utility
SERVING WAUKESHA SINCE 1886

GREELEY AND HANSEN
741 N. GRAND AVE, SUITE 308
WAUKESHA, WI 53186

GREAT WATER ALLIANCE™

CONTRACT PACKAGE 3: BOOSTER PUMPING STATION, STORAGE, AND CHEMICAL FACILITIES

PROCESS FLOW DIAGRAM AND PLANS AT EL 850.00 AND 858.67

APPROVED

SEAL AFFIXED
MONTH / DAY / YEAR

OCTOBER 2019

| | | | |
|---|---|---|---|
| JOB NO.: | 15310 | | |
| DESGN | LAM | CHCK | RMC |
| APPRV | AJM | DRWN | OR |
| SCALE: | AS SHOWN | | |

DRAWING NUMBER

CM1

SHEET 177 OF 184 REV 0

10/2/2019 10:25:56 AM

FILE: C:\Users\lgreen\Documents\GLWSP-P2-WSCB-GAMHPNE_lgreen.rvt

10/2/2019 10:25:58 AM
BAR MEASURE 1" ON FULLSIZE SHEETS

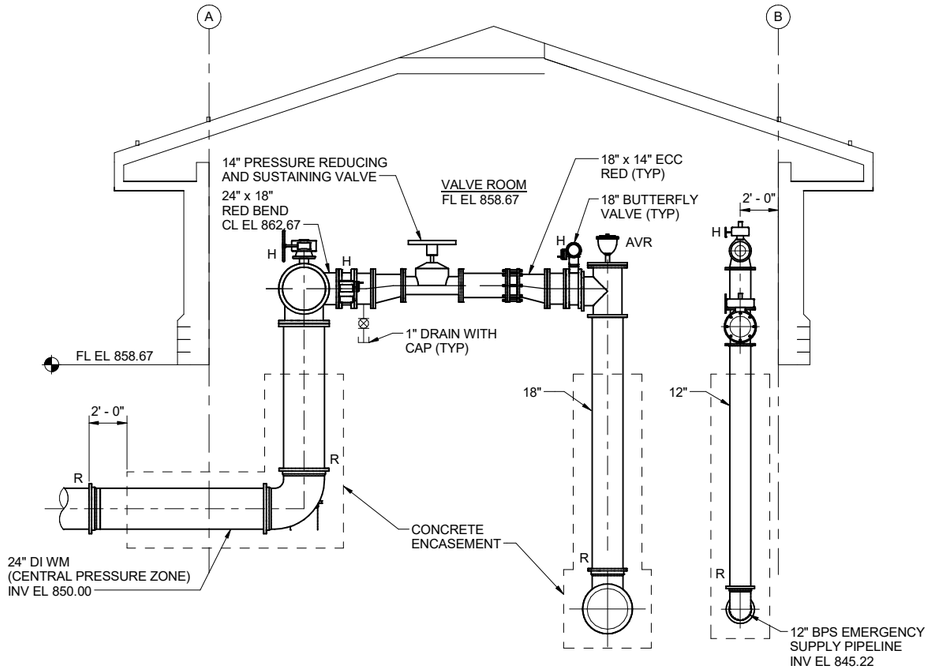


1 CM1 SECTION
SCALE: 1/4" = 1'-0"

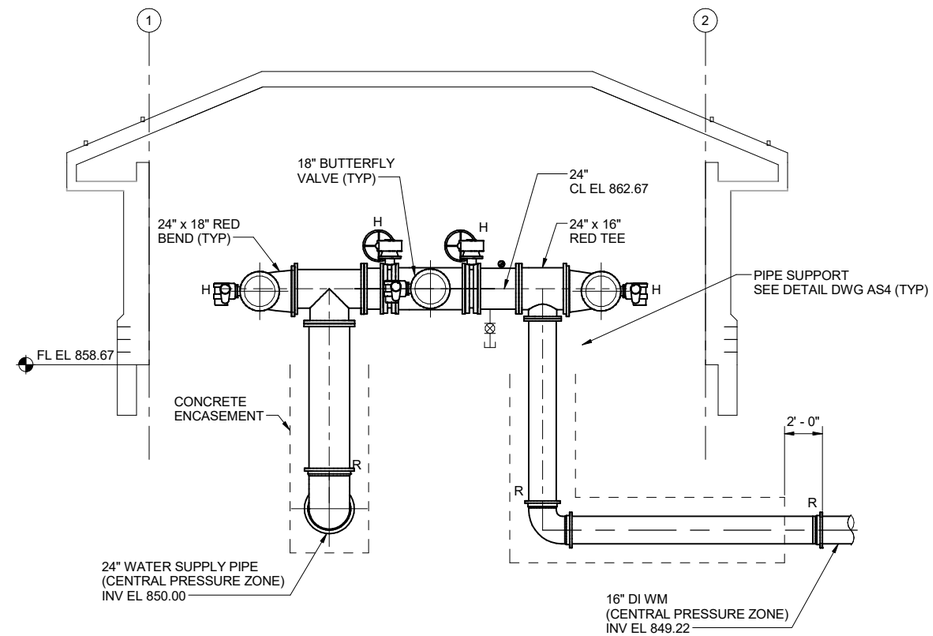


2 CM1 SECTION
SCALE: 1/4" = 1'-0"

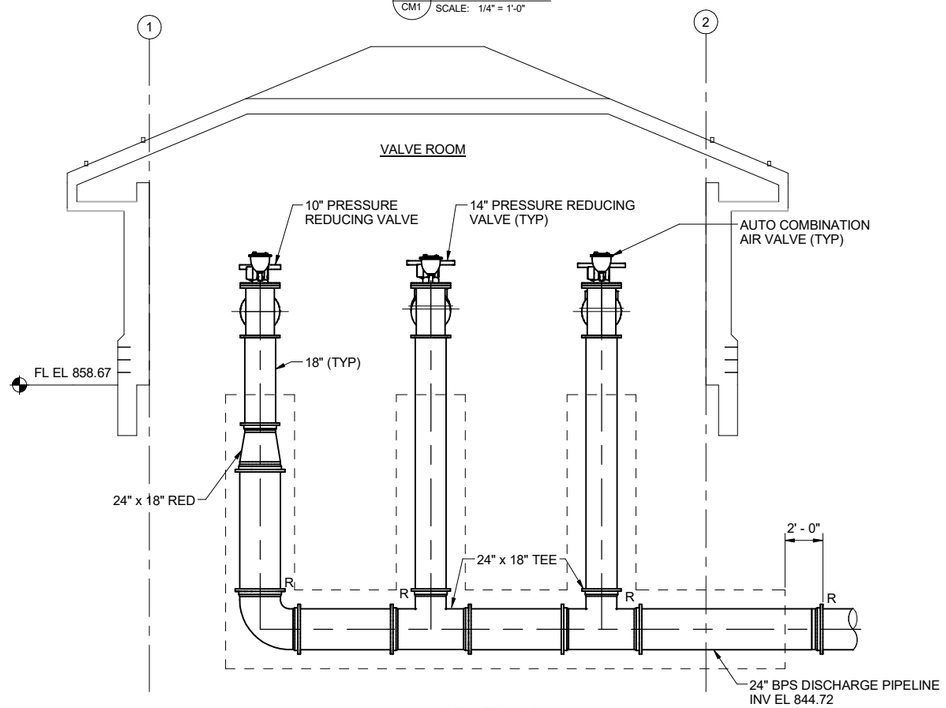


3 CM1 SECTION
SCALE: 1/4" = 1'-0"

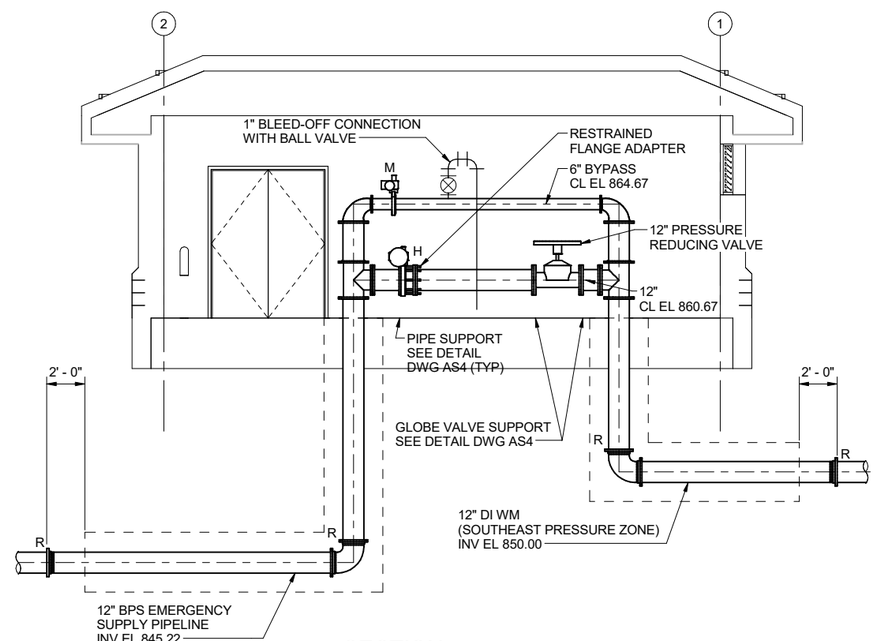


4 CM1 SECTION
SCALE: 1/4" = 1'-0"

4 0 4 8 FT
1/4" =1' - 0"

DRAFT 98% PROGRESS DRAWINGS
OCTOBER 2019

| NO. | DATE | APPD | DESCRIPTION |
|---|---|---|---|

Waukesha Water Utility
SEPO NO WAUKESHA SINCE 1886

GREELEY AND HANSEN
741 N. GRAND AVE, SUITE 308
WAUKESHA, WI 53186

GREAT WATER ALLIANCE™

CONTRACT PACKAGE 3: BOOSTER PUMPING STATION, STORAGE, AND CHEMICAL FACILITIES

SECTIONS

APPROVED

SEAL AFFIXED
MONTH / DAY / YEAR

OCTOBER 2019

| | | | |
|---|---|---|---|
| JOB NO.: | 15310 | | |
| DESGN | LAM | CHCK | RMC |
| APPRV | AJM | DRWN | OR |
| SCALE: | 1/4" = 1'-0" | | |

DRAWING NUMBER

CM2

SHEET 178 OF 184 REV 0

FILE: C:\Users\lgreen\Documents\GLWSP-P2-WSCB-GAMHPNE_lgreen.rvt

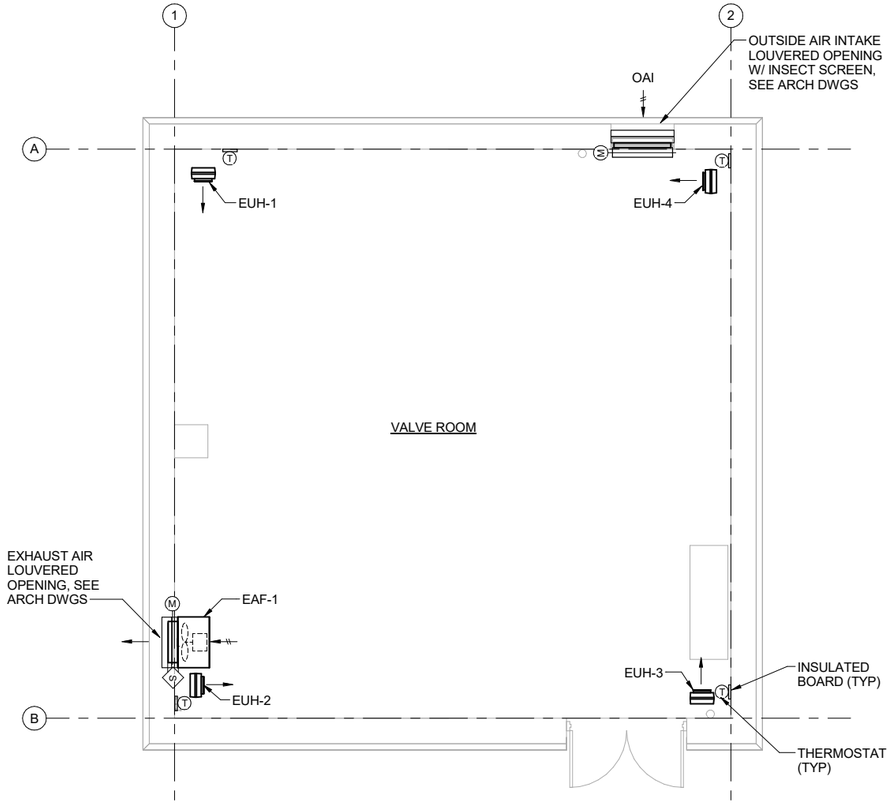


PLAN AT EL 858.67

SCALE: 1/4" = 1'-0"

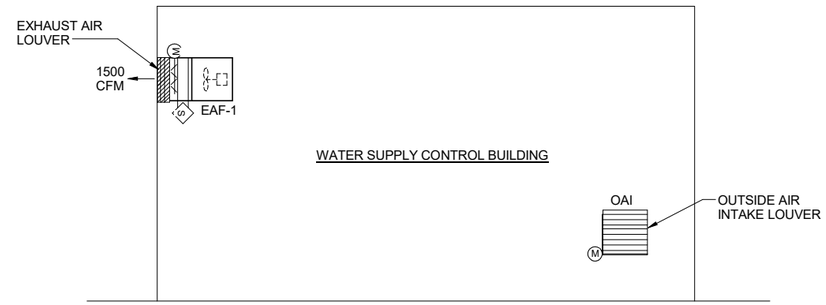


WATER SUPPLY CONTROL BUILDING AIR FLOW DIAGRAM

SCALE: NO SCALE

## DEHUMIDIFIERS

| QTY. | UNIT I.D. | LOCATION | TYPE | FAN CFM | UNIT M.R. PPD @ 80F, 60% RH | ELECTRICAL V/PH/HZ | TOT (KW) | (AMPS) | MANUFACTURER MODEL NO. | REMARKS/ NOTES |
|---|---|---|---|---|---|---|---|---|---|---|
| 6 | DEH-A | WATER SUPPLY CONTROL BLDG | PORTABLE PACKAGED | 445 | 120 | 115/1/60 | 0.68 | 5.9 | QUEST HI-E DRY 120 | 1, 2, 3, 4, 5, 6, 7 |

NOTES: 1. DIGITAL DEHUMIDISTAT CONTROL 2. INTERNAL CONDENSATE PUMP 3. 33' CONDENSATE HOSE 4. 115 V PLUG 5. 6' POWER CORD 6. R-410A REFRIGERANT 7.PORTABLE WITH CASTERS

## UNIT HEATERS (ELECTRIC)

| UNIT I.D. | LOCATION | AREA(S) SERVED | TYPE | MTG. HGT. (FT) | HEATER MBH / KW | TEMP. RISE | V/PH/HZ | FAN HP | CFM | RPM | V/PH/HZ | MANUFACTURER MODEL NO. | REMARKS/ NOTES |
|---|---|---|---|---|---|---|---|---|---|---|---|---|---|
| EUH-1 | WATER SUPPLY CONTROL BUILDING | VALVE ROOM | HORIZ. | 9 | 7.0 / 2.0 | 13 | 480/3/60 | 1/30 | 510 | 1550 | 480/3/60 | REZNOR EGHB2AK7E | 1 |
| EUH-2 | WATER SUPPLY CONTROL BUILDING | VALVE ROOM | HORIZ. | 9 | 7.0 / 2.0 | 13 | 480/3/60 | 1/30 | 510 | 1550 | 480/3/60 | REZNOR EGHB2AK7E | 1 |
| EUH-3 | WATER SUPPLY CONTROL BUILDING | VALVE ROOM | HORIZ. | 9 | 7.0 / 2.0 | 13 | 480/3/60 | 1/30 | 510 | 1550 | 480/3/60 | REZNOR EGHB2AK7E | 1 |
| EUH-4 | WATER SUPPLY CONTROL BUILDING | VALVE ROOM | HORIZ. | 9 | 7.0 / 2.0 | 13 | 480/3/60 | 1/30 | 510 | 1550 | 480/3/60 | REZNOR EGHB2AK7E | 1 |

NOTES: 1. WALL MOUNTED THERMOSTAT

## FANS

| UNIT I.D. | LOCATION | AREA(S) SERVED | TYPE | FAN TYPE | DIA (IN) | CFM | RPM | EXT SP ("H20) | O.V. (FPM) | MOTOR BHP | HP | RPM | V/PH/HZ | TYPE DRIVE | MANUFACTURER MODEL NO. | REMARKS/ NOTES |
|---|---|---|---|---|---|---|---|---|---|---|---|---|---|---|---|---|
| EAF-1 | WATER SUPPLY CONTROL BUILDING | VALVE ROOM | SIDE WALL PROPELLER | PROPELLER EXHAUST | 25.0 -- | 1,500 | 1750 | 0.500 | 5880 | 0.45 | 3/4 | 1725 | 460/3/60 | BELT | GREENHECK SBE-1H24-7 | 1, 3, 4 |

NOTES: 1. CORROSION RESISTANT COATING (HERESITE) IN/OUT 2. WITH HANGERS AND VIBRATION ISOLATORS 3. MOTORIZED DAMPER 4. WITH NEMA 12 DISCONNECT SWITCH

DRAFT 98% PROGRESS DRAWINGS

OCTOBER 2019

4 0 4 8 FT

1/4" =1' - 0"

| NO. | DATE | APPD | DESCRIPTION |
|---|---|---|---|

Waukesha Water Utility

SEPC/NO WAUKESHA SINCE 1886

GREELEY AND HANSEN

741 N. GRAND AVE, SUITE 308
WAUKESHA, WI 53186

GREAT WATER ALLIANCE™

CONTRACT PACKAGE 3: BOOSTER PUMPING STATION, STORAGE, AND CHEMICAL FACILITIES

PLAN, AIR FLOW DIAGRAM AND SCHEDULE

APPROVED

SEAL AFFIXED
MONTH / DAY / YEAR

OCTOBER 2019

JOB NO.: 15310

DESGN NH | CHCK JD

APPRV JD | DRWN GS

SCALE: AS SHOWN

DRAWING NUMBER

CH1

SHEET 179 OF 184 | REV 0

10/2/2019 10:25:55 AM

BAR MEASURE 1" ON FULLSIZE SHEETS

FILE: C:\Users\lgreen\Documents\GLWSP-P2-WSCB-GAMHPNE_lgreen.rvt

10/2/2019 10:25:59 AM

BAR MEASURE 1" ON FULLSIZE SHEETS

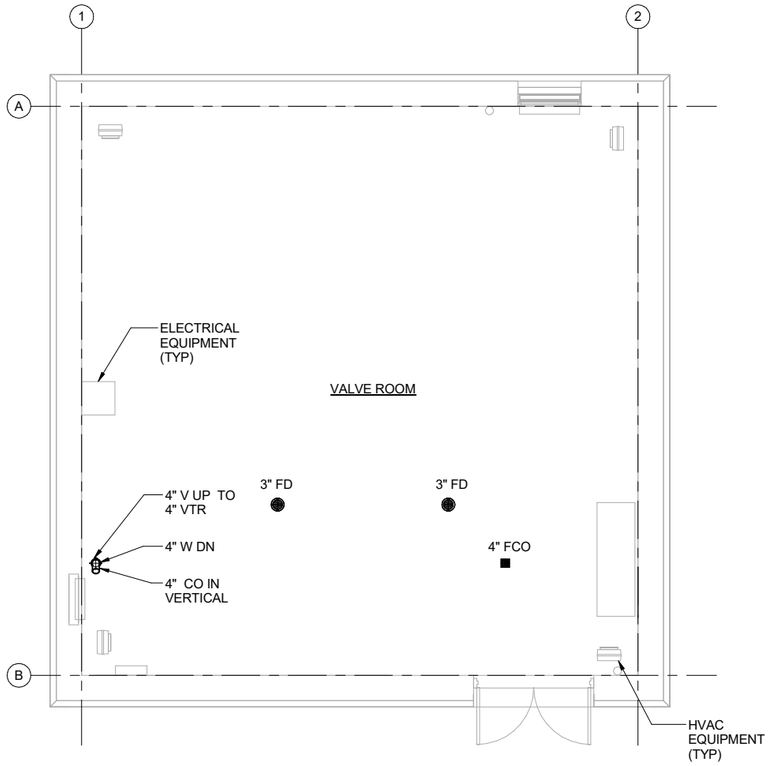


## PLAN AT EL 858.67

SCALE: 1/4" = 1'-0"

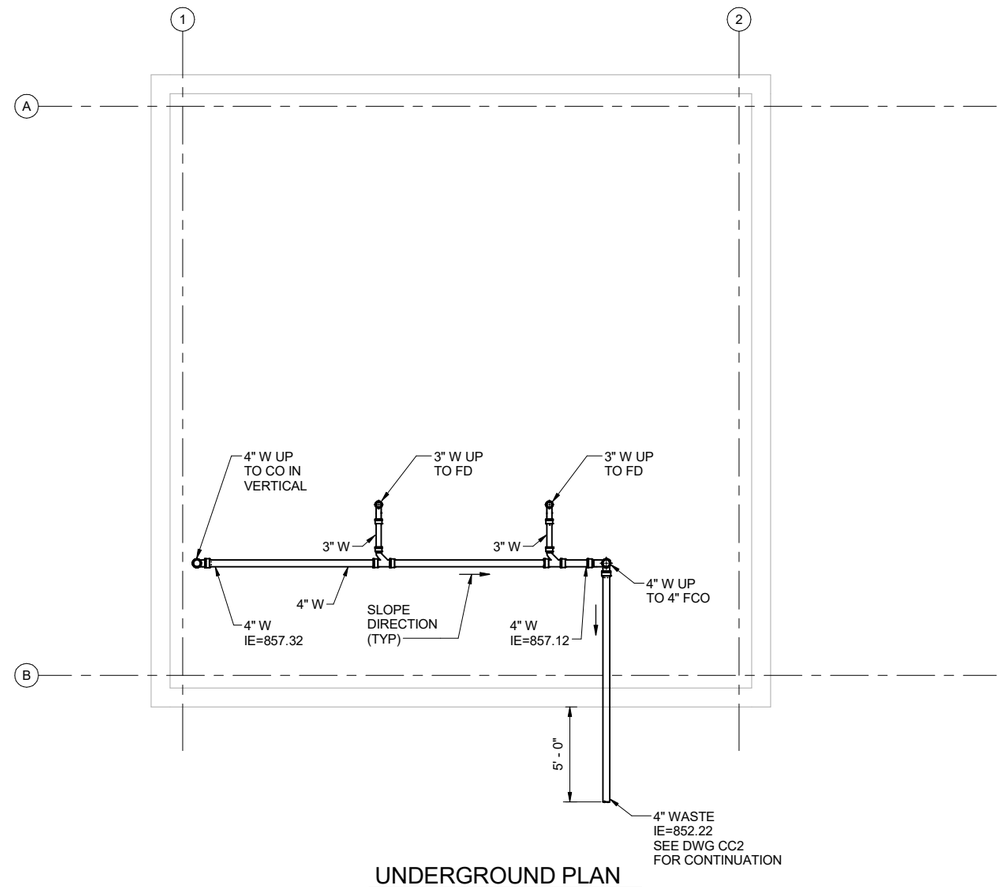


## UNDERGROUND PLAN

SCALE: 1/4" = 1'-0"

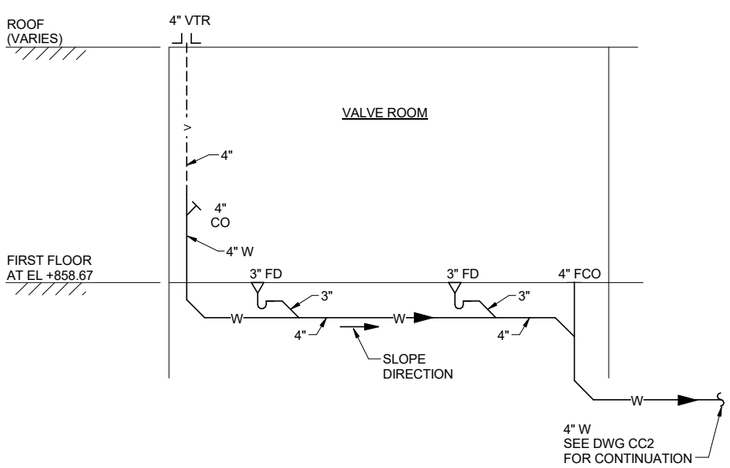


## WASTE AND VENT PIPING DIAGRAM

SCALE: NO SCALE

DRAFT 98% PROGRESS DRAWINGS

OCTOBER 2019

4 0 4 8 FT

1/4" =1' - 0"

| NO. | DATE | APPD | DESCRIPTION |
|---|---|---|---|

Waukesha Water Utility

SEPO/NO WAUKESHA SINCE 1886

GREELEY AND HANSEN

741 N. GRAND AVE, SUITE 308
WAUKESHA, WI 53186

GREAT WATER ALLIANCE™

CONTRACT PACKAGE 3: BOOSTER PUMPING STATION, STORAGE, AND CHEMICAL FACILITIES

PLANS AND PLUMBING DIAGRAM

APPROVED

SEAL AFFIXED
MONTH / DAY / YEAR

OCTOBER 2019

| | | | |
|---|---|---|---|
| JOB NO.: | 15310 | | |
| DESGN | NH | CHCK | BW |
| APPRV | JD | DRWN | YS |
| SCALE: | AS SHOWN | | |

DRAWING NUMBER

CP1

SHEET 180 OF 184 REV 0

FILE: C:\Users\lgreen\Documents\GLWSP-P2-WSCB-GAMHPNE_lgreen.rvt

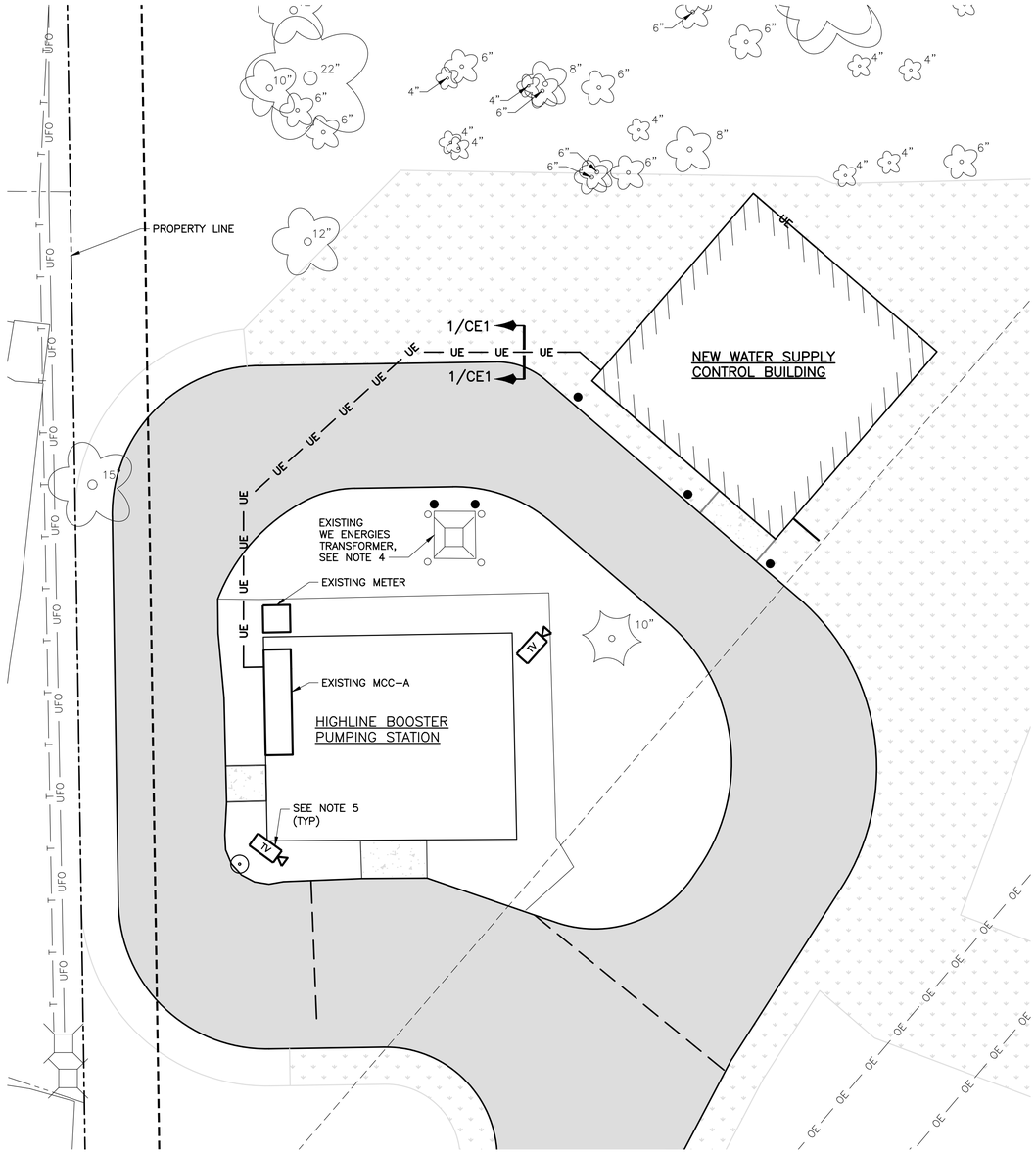


## ELECTRICAL SITE PLAN

SCALE: 1"=10'

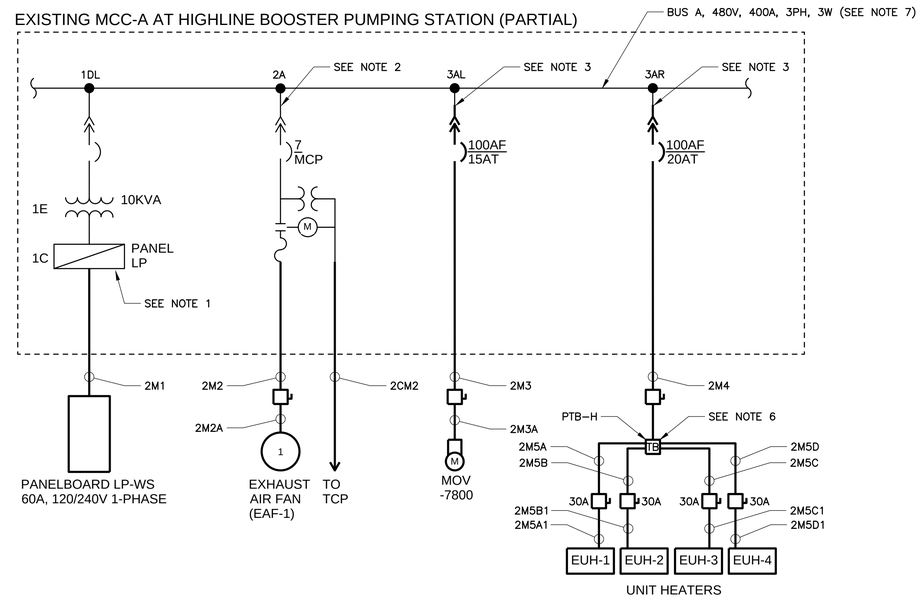


## WATER SUPPLY CONTROL BUILDING ONE LINE DIAGRAM

NO SCALE

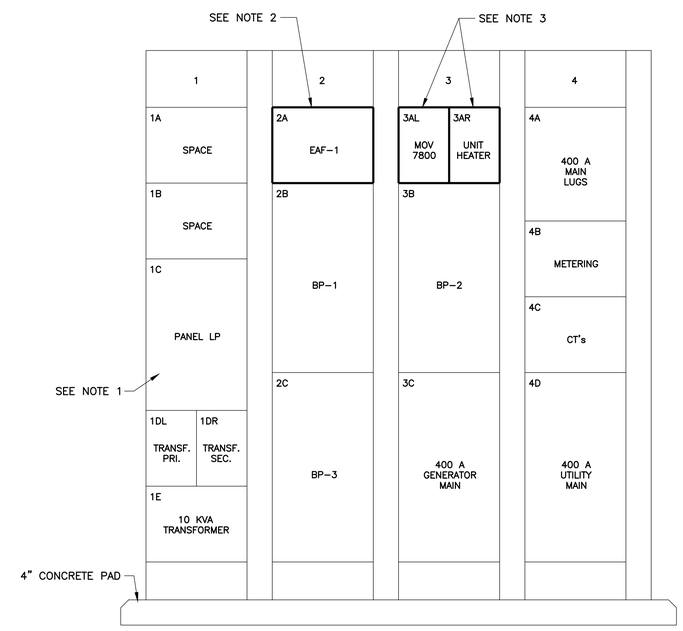


## MCC–A – EXISTING FRONT ELEVATION

NO SCALE

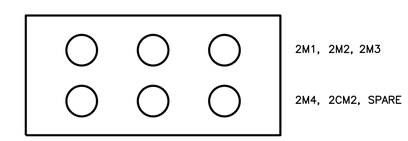


## SECTION 1/CE1

NO SCALE

## NOTES:

1. PROVIDE NEW 60A/2P CIRCUIT BREAKER IN EXISTING SPACE.
2. USE EXISTING SPARE STARTER IN MCC–A. ADJUST MCP SETTING AS INDICATED.
3. PROVIDE NEW FEEDER UNIT MATCHING EXISTING.
4. PROVIDE VEHICULAR BARRIER BOLLARDS MEETING WE ENERGIES REQUIREMENTS.
5. FIXED POSITION FISH–EYE CAMERA.
6. PROVIDE POWER DISTRIBUTION BLOCK FOR FEEDER TAP.
7. TOTAL CONNECTED LOAD ON MCC–A AFTER ADDED LOADS: 214KVA/257A.

10 0 10 20 FT 1"=10'

DRAFT 98% PROGRESS DRAWINGS

OCTOBER 2019

| NO. | DATE | APPD | REVISION |
|---|---|---|---|

Waukesha Water Utility
SERVING WAUKESHA SINCE 1886

GREELEY AND HANSEN
741 N. GRAND AVE, SUITE 308
WAUKESHA, WI 53186

GREAT WATER ALLIANCE™

CONTRACT PACKAGE 3: BOOSTER PUMPING STATION AND WATER SUPPLY CONTROL BUILDING

SITE PLAN AND ONE-LINE DIAGRAM

APPROVED

SEAL AFFIXED
MONTH / DAY / YEAR

OCTOBER 2019

JOB NO.: 15310

| DESGN | TMK | CHCK | NV |
|---|---|---|---|
| APPRV | NV | DRWN | LAN |
| SCALE: | 1" = 10' | | |

DRAWING NUMBER

CE1

SHEET 178 OF 184 REV 0

BAR MEASURE 1" ON FULLSIZE SHEETS

02/11/2019 2:20:29 PM

FILE: \\GH-DATA01\CLIENT02\15310-WAUKESHA GREAT LAKES WATER SUPPLY PM-CM\21 CADD\21.05 WORKING DWGS\CONTRACT PACKAGE 3 - BPSF\GLWSP-P3-WSCB-CE1.DWG

10/2/2019 10:25:52 AM
BAR MEASURE 1" ON FULLSIZE SHEETS

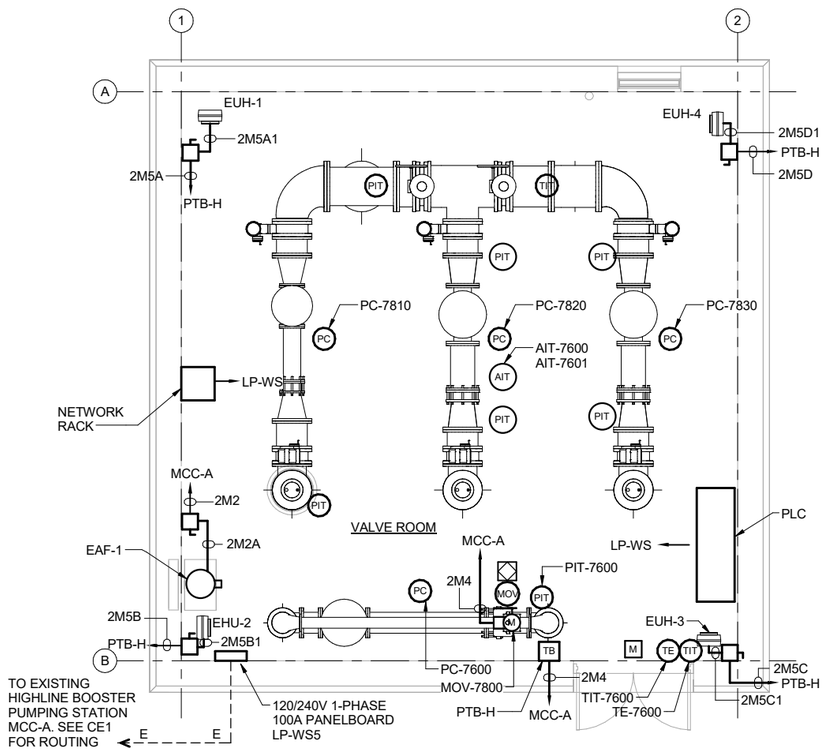


PLAN AT EL 858.67

SCALE: 1/4" = 1'-0"

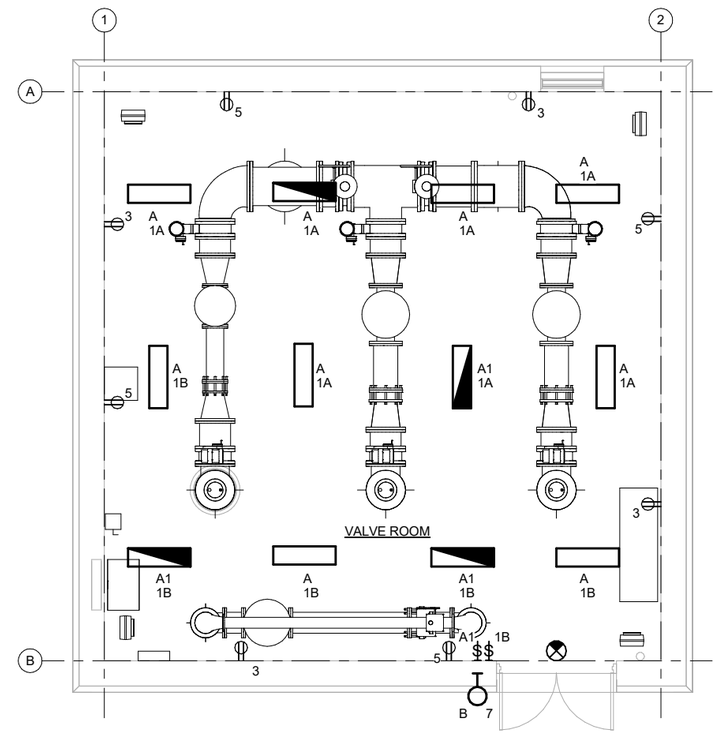


LIGHTING PLAN AT EL 858.67

SCALE: 1/4" = 1'-0"

NOTE:

1. SEE DRAWING CE3, LIGHT FIXTURE SCHEDULE.

4 0 4 8 FT
1/4" =1' - 0"

DRAFT 98% PROGRESS DRAWINGS
OCTOBER 2019

| NO. | DATE | APPD | DESCRIPTION |
|---|---|---|---|

Waukesha Water Utility
SEPC/NO WAUKESHA SINCE 1886

GREELEY AND HANSEN
741 N. GRAND AVE, SUITE 308
WAUKESHA, WI 53186

GREAT WATER ALLIANCE™

CONTRACT PACKAGE 3: BOOSTER PUMPING STATION, STORAGE, AND CHEMICAL FACILITIES

POWER AND LIGHTING PLANS

APPROVED

SEAL AFFIXED
MONTH / DAY / YEAR

OCTOBER 2019

| | | | |
|---|---|---|---|
| JOB NO.: | 15310 | | |
| DESGN | TMK | CHCK | NV |
| APPRV | NV | DRWN | LAN |
| SCALE: | 1/4" = 1'-0" | | |

DRAWING NUMBER

CE2

SHEET 182 OF 184 REV 0

FILE: C:\Users\lgreen\Documents\GLWSP-P2-WSCB-GAMHPNE_lgreen.rvt

10/2/2019 10:25:53 AM

BAR MEASURE 1" ON FULLSIZE SHEETS

| INTERIOR LIGHTING FIXTURE SCHEDULE | | | | | | |
|---|---|---|---|---|---|---|
| LABEL | DESCRIPTION | LAMP TYPE | INPUT WATTAGE | MOUNTING | MANUFACTURER & CATALOG NO. | REMARKS |
| A | 4' ENCLOSED AND GASKETED LED ELEC. BALLAST, ACRYLIC DIFFUSER, WET LOCATION RATED | LED | 40W | PENDANT | LITHONIA DMW2 400LM MD PFL MVOLT 40K | |
| A1 | 4' ENCLOSED AND GASKETED LED ELEC. BALLAST, ACRYLIC DIFFUSER, WET LOCATION RATED WITH EMERGENCY BATTERY | LED | 40W | PENDANT | LITHONIA DMW2 4000LM MD PFL MVOLT PS1050 40K | |
| B | LED WALLPACK WITH CORROSION RESISTANT DIE-CAST ALUMINUM HOUSING AND ZINC INFUSED POWDER COAT | LED | 13W | SURFACE | LITHONIA OLWX1LED-13W-40K-DE | INTEGRAL PHOTOCELL |
| EX | SURFACE MOUNT SIGN WITH NICKEL CADMIUM BATTERY | LED | 6W | SURFACE | LITHONIA EDG W1R EL | |

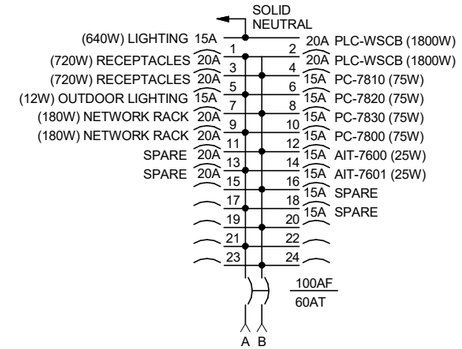


| | LOAD WATTS | |
|---|---|---|
| | AN | BN |
| SUBTOTAL | 3515 | 2887 |
| TOTAL | 6352 | |

LP-WS PANELBOARD SCHEDULE

SCALE: NONE

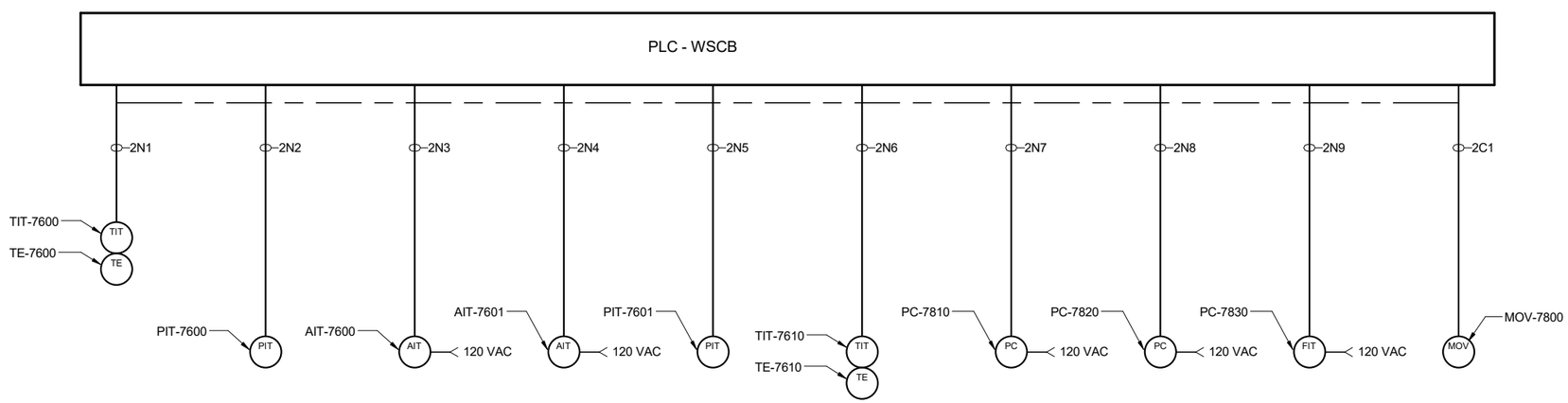


WATER SUPPLY CONTROL BLOCK DIAGRAM

NO SCALE

DRAFT 98% PROGRESS DRAWINGS

OCTOBER 2019

FILE: C:\Users\lgreen\Documents\GLWSP-P2-WSCB-GAMHPNE_lgreen.rvt

| NO. | DATE | APPD | DESCRIPTION |
|---|---|---|---|

Waukesha Water Utility

SEPVNO WAUKESHA SINCE 1886

GREELEY AND HANSEN

741 N. GRAND AVE, SUITE 308
WAUKESHA, WI 53186

GREAT WATER ALLIANCE™

CONTRACT PACKAGE 3: BOOSTER PUMPING STATION, STORAGE, AND CHEMICAL FACILITIES

SCHEDULES

APPROVED

SEAL AFFIXED
MONTH / DAY / YEAR

OCTOBER 2019

| | | | |
|---|---|---|---|
| JOB NO.: | 15310 | | |
| DESGN | TMK | CHCK | NV |
| APPRV | NV | DRWN | LAN |
| SCALE: | NO SCALE | | |

DRAWING NUMBER

CE3

SHEET 183 OF 184 REV 0

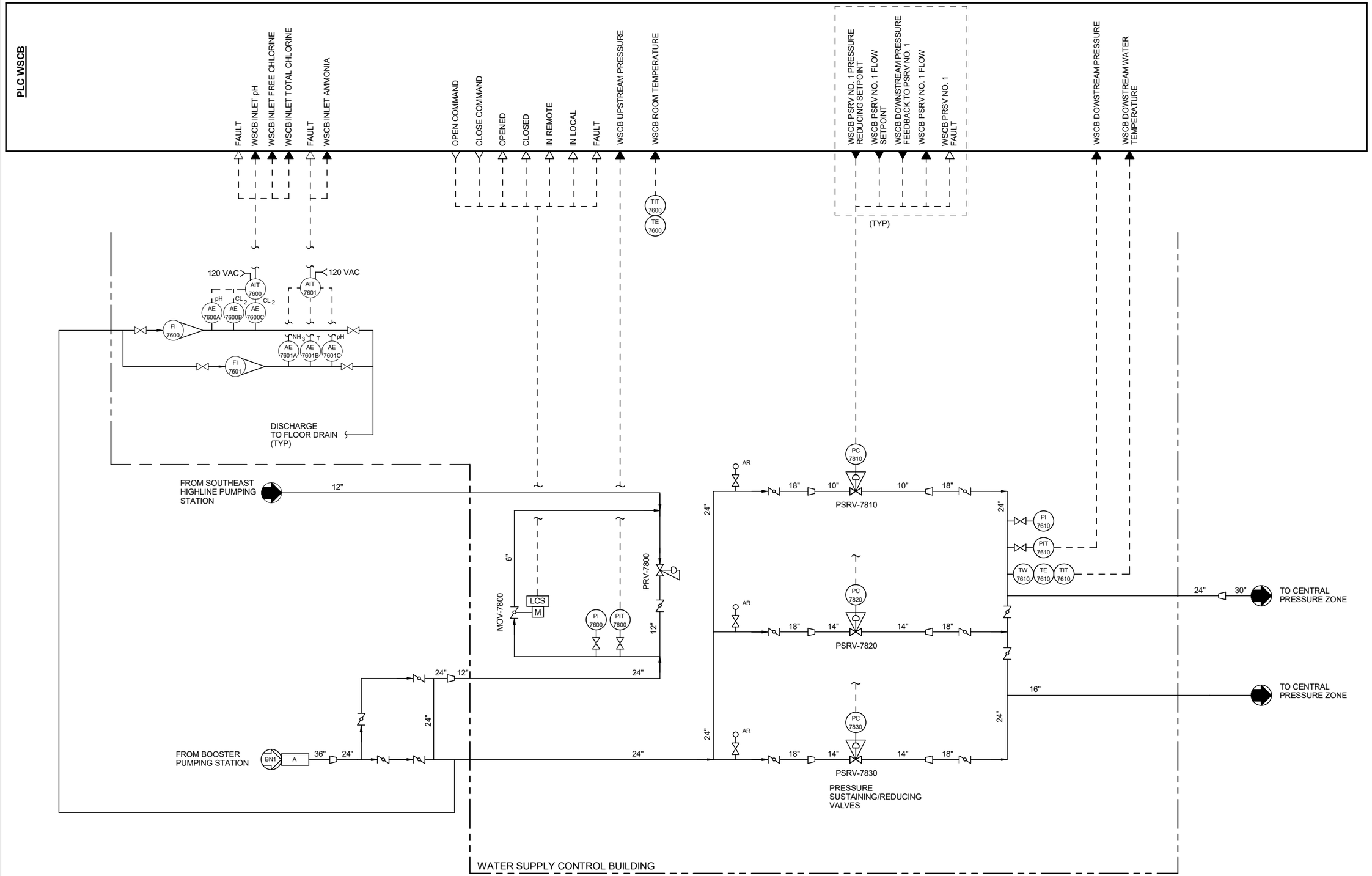


## WATER SUPPLY CONTROL BUILDING - P&ID

NO SCALE

DRAFT 98% PROGRESS DRAWINGS

OCTOBER 2019

10/2/2019 10:25:58 AM

BAR MEASURE 1" ON FULLSIZE SHEETS

FILE: C:\Users\lgreen\Documents\GLWSP-P2-WSCB-GAMHPNE_lgreen.rvt

| NO. | DATE | APPD | DESCRIPTION |
|---|---|---|---|

Waukesha Water Utility
SERVING WAUKESHA SINCE 1886

GREELEY AND HANSEN
741 N. GRAND AVE, SUITE 308
WAUKESHA, WI 53186

GREAT WATER ALLIANCE™

CONTRACT PACKAGE 3: BOOSTER PUMPING STATION, STORAGE, AND CHEMICAL FACILITIES

WSCB - P&ID

APPROVED

SEAL AFFIXED
MONTH / DAY / YEAR

OCTOBER 2019

| | | | |
|---|---|---|---|
| JOB NO.: | 15310 | | |
| DESGN | RV | CHCK | THP |
| APPRV | THP | DRWN | LAN |
| SCALE: | NO SCALE | | |

DRAWING NUMBER

CN1

SHEET 184 OF 184 REV 0