Gateway Energy and Coke Company, LLC,
Haverhill Coke Company, LLC,
SunCoke Energy, Inc.

Consent Decree
Semi-Annual Report

Reporting Period: January 1, 2018 – June 30, 2018

Report Table of Contents

1.0 Introduction 3
2.0 Work performed and progress made toward implementing the requirements of Section IV of the CD (Compliance Requirements), including completion of any milestones; 4
3.0 Any significant modifications to previously-submitted design specifications of any pollution control system, or to monitoring equipment, required to comply with the requirements of Section IV (Compliance Requirements); 8
4.0 Any significant problems encountered or anticipated in complying with the requirements of Section IV (Compliance Requirements), including implemented or proposed solutions; 9
5.0 A summary of the emissions monitoring and testing data collected to demonstrate compliance with a requirement of the Consent Decree; 10
6.0 All exceedances of any emission limits set forth in Section IV. B (Emission Limits) of the Consent Decree; 12
7.0 All failures to comply with the emissions minimization required by Section IV.C. of the Consent Decree; 12
8.0 All RCFA(s) required by Section IV.D (Root Cause Failure Analysis for Bypass Venting Incidents) of this Consent Decree; 13
9.0 Any updated PMO Plan required by Paragraph 37 of this Consent Decree; 14
10.0 The emissions reduction information required by Paragraph 25 of this Consent Decree; 15
11.0 Status of permit applications and a summary of all permitting activity pertaining to compliance with this Consent Decree; 23
12.0 Any reports to the State of Illinois or the State of Ohio pertaining to compliance with this Consent Decree or the CAA 24
13.0 Information required by Appendix 4 (Potential Middletown Redundant HRSG project). 25
14.0 Information required by July 2018 CD Amendment. 26

Attachments

Attachment A – RCFA Reports for GECC and HNCC
Attachment B – HNCC Information Submitted Pertaining to Compliance with the Consent Decree or CAA
Attachment C – GECC Information Submitted Pertaining to Compliance with the Consent Decree or CAA
Attachment D – Redundancy Analysis for Middletown Coke Company, LLC
Attachment E – GECC, HNCC No. 1 and HNCC No. 2 Bypass Vent Stack CEMs Data and Excess Emissions Reports

1.0 Introduction

The United States, The State of Illinois, the State of Ohio, SunCoke Energy, Inc., Gateway Energy and Coke Company, LLC (GECC), and Haverhill Coke Company, LLC (HNCC), are parties to a Consent Decree (CD) lodged in the U.S. District Court for the Southern District of Illinois with an Effective Date of November 7, 2014. A First Amendment to the CD was filed on June 5, 2015. A Second Amendment to the CD was entered on July 10, 2018. *See United States, et al. v. Gateway Energy & Coke Company, LLC, et al.*, Civil Action No. 3:13-cv-00616-DRH-SCW (S.D. Ill.).

This report is being submitted pursuant to Paragraph 48 of the CD and the Second Amendment, and includes all information required to be submitted.

2.0 Work performed and progress made toward implementing the requirements of Section IV of the CD (Compliance Requirements), including completion of any milestones;

A. Redundant HRSG Project, pursuant to Appendix A of the CD

GECC Progress Made and Completion of Milestones			
Milestone Time	**Calendar Date**	**Milestone Description**	**Status**
913 Days after Effective Date	5/8/2017	Finalize GECC Battery Design and Changes based on HNCC No. 2 testing	Complete
	5/8/2017	Place order for long lead items for GECC Battery	Complete
	5/8/2017	Update Site Specific detailed engineering with lessons learned with HNCC No. 2	Complete
1004 Days after Effective Date	8/7/2017	Issue Construction Contract Request for Proposals	Complete
3 Years after Effective Date	11/7/2017	Finalize Site Specific Detailed Engineering	Complete
1187 Days after Effective Date	2/6/2018	Award Construction Contract	Complete
	2/6/2018	Mobilize Construction	Complete
	2/6/2018	Start Site Preparation	Complete
1278 Days after Effective Date	5/8/2018	Start Structural Work	Complete
1369 Days after Effective Date	8/7/2018	Redundant HRSG Installation	In Progress
	8/7/2018	Pipework Installation	In Progress
4 Years after Effective Date	11/7/2018	GECC Battery Redundant HRSG in Service, subject to Operational testing	Not Started
1552 Days after Effective Date	2/6/2019	GECC Battery Redundant HRSG Operational Testing	Not Started
	2/6/2019	GECC Battery Tests; GECC Battery Redundant HRSG in Service	Not Started

HNCC No. 1 Progress Made and Completion of Milestones			
Milestone Time		**Milestone Description**	**Status**
913 Days after Effective Date	5/8/2017	Finalize HNCC No. 1 Battery Design and Changes based on HNCC No. 2 testing	HNCC No. 1 Battery Design complete, SDA evaluation is on-going
	5/8/2017	Place order for long lead items for HNCC No. 1 Battery	Complete
	5/8/2017	Update Site Specific detailed engineering with lessons learned with HNCC No. 2	Complete
1004 Days after Effective Date	8/7/2017	Issue Construction Contract Request for Proposals	Complete
3 Years after Effective Date	11/7/2017	Finalize Site Specific Detailed Engineering	Complete
1187 Days after Effective Date	2/6/2018	Award Construction Contract	Complete
	2/6/2018	Mobilize Construction	Complete
	2/6/2018	Start Site Preparation	Complete
1278 Days after Effective Date	5/8/2018	Start Structural Work	Complete
1369 Days after Effective Date	8/7/2018	Redundant HRSG Installation	Complete
	8/7/2018	Pipework Installation	Complete
4 Years after Effective Date	11/7/2018	HNCC No. 1 Battery Redundant HRSG in Service, subject to Operational testing	Complete
1552 Days after Effective Date	2/6/2019	HNCC No. 1 Battery Redundant HRSG Operational Testing	In Progress
	2/6/2019	Complete HNCC No. 1 Battery Tests; HNCC No. 1 Battery Redundant HRSG in Service	In Progress

HNCC No. 2 Progress Made and Completion of Milestones			
Milestone Time	**Calendar Date**	**Milestone Description**	**Status**
92 Days after Effective Date	2/7/2015	Finalize process details	Complete
	2/7/2015	Evaluate long lead item quotes and place order by end of 1Q after the Effective Date for longest lead items	Complete
183 Days after Effective Date	5/9/2015	Finalize process modeling	Complete
	5/9/2015	Order balance of long lead materials	Complete
	5/9/2015	Start detailed engineering	Complete
274 Days after Effective Date	8/8/2015	Issue Construction Contract Request for Proposal	Complete
1 Year after Effective Date	11/7/2015	Finalize Site Specific Detailed Engineering	Complete
457 Days after Effective Date	2/7/2016	Award Construction Contract	Complete
	2/7/2016	Mobilize Construction	Complete
	2/7/2016	Start Site Preparation	Complete
548 Days after Effective Date	5/8/2016	Start Structural Work	Complete
639 Days after Effective Date	8/7/2016	Redundant HRSG Installation	Complete
	8/7/2016	Pipework Installation	Complete
2 years after Effective Date	11/7/2016	HNCC No. 2 Redundant HRSG in Service, subject to Operational testing	Complete
822 Days after Effective Date	2/6/2017	HNCC No. 2 Project Operational testing	Complete
	2/6/2017	Complete HNCC No. 2 Tests; HNCC No. 2 Redundant HRSG in service	Completed Feb 6, 2017

B. Emission Limits

Please see section 6.0 for more information regarding compliance with emissions limitations during the reporting period, pursuant to Paragraphs 14 and 15 of the Consent Decree. Please see section 10.0 for a summary of emissions during Bypass Venting and Redundant Heat Recovery Steam Generator (HRSG) Tie-In time hours used.

C. Emissions Minimization During All Bypass Venting

Please see section 7.0 for more information regarding emissions minimization during Bypass Venting during the reporting period, pursuant to Paragraph 19 of the Consent Decree.

D. Root Cause Failure Analysis ("RCFA") for Bypass Venting Incidents

Please see section 8.0 for a list of all RCFAs performed during the reporting period, pursuant to Paragraph 20 of the Consent Decree. A copy of the RCFA report for each Bypass Venting Incident (as defined in Paragraph 8.e. of the CD) that occurred during the reporting period is included in Attachment A.

E. Future Emissions Reductions

Please see section 10.0 for more information regarding emissions of particulate matter (PM), PM_{10}, lead (Pb), sulfur dioxide (SO_2), hydrochloric acid (HCl), mercury (Hg), sulfuric acid (H_2SO_4), and nitrogen oxides (NO_X) that occurred as a result of Bypass Venting during the reporting period, pursuant to Paragraph 25 of the Consent Decree.

F. Quantification of Emissions During Bypass Venting

Please see section 10.0 for more information regarding emissions of PM, PM_{10}, Pb, SO_2, HCl, Hg, H_2SO_4, and NO_X that occurred as a result of Bypass Venting during the reporting period, pursuant to Paragraph 26 of the Consent Decree.

G. Stack Testing and Continuous Emissions Monitoring ("CEMs")

Please see section 5.0 for more information regarding stack testing, continuous emissions monitoring and flow studies (as applicable) that occurred during the reporting period, pursuant to Paragraphs 29 - 33, and Paragraphs 34 - 36, of the Consent Decree, respectively.

H. FGD and HRSG Preventative Maintenance and Operation ("PMO") Plan and Reliability Studies

Please see section 9.0 for more information regarding the PMO plan and reliability studies required by Paragraphs 37 and 38 of the Consent Decree, respectively.

I. Permit Requirements

Please see section 11.0 for more information regarding the status of permit applications, pursuant to Paragraphs 41 and 42 of the Consent Decree.

3.0 Any significant modifications to previously-submitted design specifications of any pollution control system, or to monitoring equipment, required to comply with the requirements of Section IV (Compliance Requirements);

In May 2016, during the biennial FGD outage, new induced draft fans (ID Fans) were installed at HNCC No. 1. HNCC is in the process of testing at HNCC No. 1 under the higher draft conditions utilized for gas sharing. Once testing is complete, HNCC will evaluate the impact of the higher draft conditions on the system as a whole and proceed accordingly.

4.0 Any significant problems encountered or anticipated in complying with the requirements of Section IV (Compliance Requirements), including implemented or proposed solutions;

No significant problems have been previously encountered in complying with Section IV of this Consent Decree for HH1 or HH2.

As we have discussed with the governments, re-plating of the spray dryer absorbers (SDAs) at HNCC No. 1, HNCC No. 2 and GECC is necessary and will be completed to maintain and improve the mechanical integrity and reliability of the flue gas desulfurization units (FGDs), which in turn are required to ensure reliable and consistent operation of the Redundant HRSGs and Existing HRSGs simultaneously while operating in gas sharing mode. Redundant HRSG Tie-in hours will be used to complete this re-plating work in accordance with the Second Amendment to the CD.

To date, GECC has been in compliance with the work plan and schedule set forth in Appendix 1 of this CD, as demonstrated in Section 2.0. In June 2018, we notified the United States and Illinois that a Force Majeure event as defined in Paragraph 99 of the CD occurred at GECC that will delay completion of the Redundant HRSG Project by approximately four months to approximately June 9, 2019. Because of significant safety incidents associated with a contractor's construction of the Redundant HRSG Project, GECC terminated its contract with that contractor, and work on that portion of the Redundant HRSG Project was halted. GECC is continuing to diligently work on other portions of the Redundant HRSG Project, including the gas sharing tunnel work. A new contractor is being selected in early August and an executed contract will follow. GECC still intends to complete the Redundant HRSG Project by approximately June 9, 2019.

Any potential non-conformances to the PMO plan, required under section IV.H, are included in Attachments B1 and C1, for HNCC and GECC respectively.

5.0 A summary of the emissions monitoring and testing data collected to demonstrate compliance with a requirement of the Consent Decree;

A. Stack Testing During Scheduled FGD Maintenance (Paragraphs 29 – 33)

Paragraph 29 of the CD requires certain stack testing be performed during any Scheduled FGD Maintenance that occurs more than 90 days after the Effective Date and is scheduled to last more than 2 days.

GECC

No such Scheduled FGD Maintenance occurred at GECC during the reporting period.

HNCC No. 1

Stack testing was conducted at HNCC No. 1 during Scheduled FGD maintenance on March 7 - 9, 2018. Notification was submitted to USEPA and OEPA on January 5, 2018, at least 60 days prior to the testing, of Haverhill's intent to conduct the testing during its Scheduled FGD Maintenance period.

A report documenting the results of the stack test was submitted to USEPA and OEPA on May 8, 2018, within 60 days after conducting the stack test, as required by Paragraph 33 of the CD.

The test results from the completed testing are summarized in the table below.

HNCC No. 1 March 2018 Scheduled FGD Maintenance Stack Testing Results Summary (lb/hr)	
Pollutant	**Avg. Emission Rate**
PM/PM_{10} [1] (filt + cond)	12.5
Lead	0.080
Mercury	0.0015
H_2SO_4	10.8
HCl	39.2
NO_x	14.9

HNCC No. 2

Stack testing was conducted at HNCC No. 2 during Scheduled FGD Maintenance on June 12 - 15, 2018. Notification was submitted to USEPA and OEPA on April 2, 2018, at least 60 days prior to the testing, of Haverhill's intent to conduct the testing during its Scheduled FGD Maintenance period.

A final report documenting the results of the stack test was not yet available as of the date of this semiannual report. The final stack testing report will be submitted to USEPA and OEPA within 60 days after conducting the stack test as required by Paragraph 33 of the CD.

[1] As detailed in the protocol submitted on January 5, 2018, the bypass vent stack temperature is too hot to perform the filterable portion of PM_{10} testing; therefore, PM_{10} emissions are assumed to be the same as PM.

B. CEMs (Paragraphs 34 – 35)

Emissions monitoring pursuant to Paragraphs 34 and 35 was conducted at GECC, HNCC No. 1 and HNCC No. 2.

As required by Paragraphs 34 and 35, the CEMS was certified on HRSG #5 at HNCC No. 1 in May 2016, on HRSG #6 at HNCC No. 2 in September 2016 and on HRSG #5 at GECC in May 2017. Certifications were done in a manner that complies with 40 CFR Part 60 Appendix B, Performance Specification 2, and Appendix F. Copies of the CEMS certification reports for the HNCC No. 1, HNCC No. 2 and GECC CEMS were provided in the 1st Half 2016 semi-annual report, the 2nd Half 2016 semi-annual report and the 1st Half 2017 semi-annual report, respectively.

A copy of the hourly SO_2 CEMS data for GECC, HNCC No. 1 and HNCC No.2 is included in Attachment E for the hours during which Bypass Venting was occurring. The CEMS units operated continuously during Bypass Venting, with the exception of some very brief periods of time, as shown in Appendix E, during which invalid data was collected or maintenance or calibration was occurring.

Attachment E includes the calculation of the average SO_2 concentration for Bypass Venting during the reporting period and a calculation of the SO_2 emission factors used to calculate emissions of SO_2 from Bypass Venting during the reporting period for GECC, HNCC No. 1 and HNCC No. 2. In addition, Attachment E includes the CEMS Excess Emissions Reports (EERs) for GECC, HNCC No. 1 and HNCC No. 2, as required by Paragraph 48, subparagraph (m) of the CD, as amended by the Second Amendment.

C. Flow Studies (Paragraph 36)

All flow studies have been completed and submitted, as required.

6.0 All exceedances of any emission limits set forth in Section IV. B (Emission Limits) of the Consent Decree;

HNCC No. 1, HNCC No. 2 and GECC

No exceedances of any emission limits set forth in Section IV.B of the Consent Decree occurred during this reporting period at HNCC No. 1, HNCC No.2 or GECC.

7.0 All failures to comply with the emissions minimization required by Section IV.C. of the Consent Decree;

Emissions Minimization Actions:

(1) Reduce coal charge at each Affected Coke Oven Battery to no more than forty-two and a half (42.5) ton average on a wet basis, if practicable.

   (a) GECC, HNCC No. 1 and HNCC No. 2 followed this emissions minimization action during all periods of Bypass Venting during the reporting period.

(2) Minimize sulfur content of coal charged to each oven to no more than 1.1% by weight if practicable

   (a) GECC, HNCC No. 1 and HNCC No. 2 followed this emissions minimization action during all periods of Bypass Venting during the reporting period.

(3) Minimize duration of Bypass Venting to the extent practicable

   (a) GECC, HNCC No. 1 and HNCC No. 2 followed this emissions minimization action during all periods of Bypass Venting during the reporting period.

8.0 All RCFA(s) required by Section IV.D (Root Cause Failure Analysis for Bypass Venting Incidents) of this Consent Decree;

The following table provides a summary of the RCFAs completed during this reporting period. Please see Attachment A for all RCFAs completed during this reporting period. Additionally, a table showing the status of all corrective actions identified from each RCFA is included in Attachment A3.

Investigation	Description	Start Date	Duration (Days)	Site
7818	20180118_GCO_084_LOSS OF POWER	01/18/18	8	GC
7870	20180205_GCO_085_HRSG 01 PHOSPHATE LINE	02/05/18	22	GC
7906	20180211_GCO_086_HRSG 03 TUBE LEAK	02/11/18	18	GC
7924	20180220_GCO_087_HRSG 02 TUBE LEAK	02/20/18	21	GC
7933	20180222_GCO_088_HRSG 05 TUBE LEAK	02/22/18	19	GC
8062	20180328_GCO_089_HRSG 01 TUBE LEAK	03/28/18	22	GC
8123	20180415_GCO_090_HRSG 05 TUBE LEAK	04/15/18	18	GC
8187	20180508_GCO_091_HRSG 03 TUBE LEAK	05/08/18	21	GC
8214	20180514_GCO_092_HRSG 06 TUBE LEAK	05/14/18	17	GC
8219	20180514_GCO_093_LOSS OF POWER	05/14/18	16	GC
8298	20180610_GCO_094_HRSG 03 TUBE LEAK	06/11/18	22	GC
8306	20180612_GCO_095_HRSG 05 TUBE LEAK	06/12/18	20	GC
8336	20180621_GCO_096_LOSS OF FEEDWATER	06/21/18	25	GC
8339	20180624_GCO_097_HRSG 01 TUBE LEAK	06/24/18	22	GC
8354	20180628_GCO_098_HRSG 02 TUBE LEAK	06/28/18	18	GC
7808	20180118_HHO_001_HCC1_VFD_Trip_Voltage_Drop	01/18/18	19	HH
7827	20180122_HHO_002_HCC1 Loss of Power	01/22/18	15	HH
8096	20180304_HHO_003_HCC1_FGD_Scheduled_ Maintenance_Outage	03/04/18*	20	HH
8097	20180327_HHO_004_HCC2_Loss_of_Plant_Air	03/27/18	23	HH
8098	20180327_HHO_005_HCC2_Penthouse_Fire_Atomizer_ Trip	03/28/18	22	HH
8169	20180423_HHO_006_HRSG5_Loss_of_Draft	04/23/18	28	HH
8253	20180521_HHO_007_HRSG9_Trips	05/21/18	30	HH
8367	20180603_ HHO_009_HCC2_FGD_Scheduled_ Maintenance_Outage	6/03/18**	5	HH

*The HCC1 FGD scheduled outage began on March 4, 2018 and concluded on March 27, 2018. The RCFA was completed on April 16, 2018.
**The HCC2 FGD scheduled outage began on June 3, 2018 and concluded on July 7, 2018. The RCFA was completed on July 12, 2018.

9.0 Any updated PMO Plan required by Paragraph 37 of this Consent Decree;

No changes were made to the PMO Plans during the reporting period. The current versions of the plans were submitted with the 1st Half 2017 semi-annual report.

10.0 The emissions reduction information required by Paragraph 25 of this Consent Decree;

The tables below outline actual emissions due to Bypass Venting (excluding Redundant HRSG Tie-in Time), total Redundant HRSG Tie-in Time used, and quantification of emissions during Bypass Venting for this reporting period. The below tables have been revised to reflect the definition of "Redundant HRSG Tie-In" and Paragraph 15 as amended by the Second Amendment to the CD. As stated in the amended Paragraph 15, for purposes of Redundant HRSG Tie-In pursuant to this CD, HNCC No. 1, HNCC No. 2 and GECC shall have 720 hours to complete such work, per Bypass Vent Stack, including all Bypass Venting through the Main Stack, plus additional time to complete the SDA Replating Project. Additional reporting as required by the Second Amendment will be included in the 2nd Half 2018 semi-annual report.

A. Tie-in Time Used

Gateway Energy and Coke Company				
	Total Tie In Time Bypass Venting Used (hours)		**Tie In Time Bypass Venting During Current Reporting Period (hours)**	
	For Tie In Work (hours)[1]	For SDA Replating Project (hours)[2]	For Tie In Work (hours) [1]	For SDA Replating Project (hours) [2]
Stack #1 Open Hours	621.97	0	0	0
Stack #2 Open Hours	624.88	0	0	0
Stack #3 Open Hours	621.25	0	0	0
Stack #4 Open Hours	654.92	0	0	0
Stack #5 Open Hours	655.02	0	0	0
Stack #6 Open Hours	657.85	0	0	0

[1] These columns identify the amount of hours used to complete the Redundant HRSG Tie-in work pursuant to the original CD.
[2] These columns identify the amount of hours used to complete the SDA Replating Project pursuant to the Second Amendment to the CD.

Haverhill Coke Company HNCC #1				
	Total Tie In Time Bypass Venting Used (hours)		**Tie In Time Bypass Venting During Current Reporting Period (hours)**	
	For Tie In Work (hours)[1]	For SDA Replating Project (hours)[2]	For Tie In Work (hours) [1]	For SDA Replating Project (hours) [2]
Stack # Open Hours	564.85	0	551.70	0
Stack #2 Open Hours	558.15	0	553.53	0
Stack #3 Open Hours	566.15	0	554.98	0
Stack #4 Open Hours	565.80	0	556.53	0
Stack #5 Open Hours	570.39	0	555.27	0

[1] These columns identify the amount of hours used to complete the Redundant HRSG Tie-in work pursuant to the original CD.
[2] These columns identify the amount of hours used to complete the SDA Replating Project pursuant to the Second Amendment to the CD.

Haverhill Coke Company HNCC #2				
	Total Tie In Time Bypass Venting Used (hours)		**Tie In Time Bypass Venting During Current Reporting Period (hours)**	
	For Tie In Work (hours)[1]	For SDA Replating Project (hours)[2]	For Tie In Work (hours) [1]	For SDA Replating Project (hours) [2]
Stack #6 Open Hours	681.33	653.88	0	653.88
Stack #7 Open Hours	683.52	653.42	0	653.42
Stack #8 Open Hours	714.92	653.23	0	653.23
Stack #9 Open Hours	700.85	653.12	0	653.12
Stack #10 Open Hours	689.42	653.57	0	653.57

[1] These columns identify the amount of hours used to complete the Redundant HRSG Tie-in work pursuant to the original CD.
[2] These columns identify the amount of hours used to complete the SDA Replating Project pursuant to the Second Amendment to the CD

B. Emissions During Bypass Venting

1. Stack Testing

HNCC No. 1

Scheduled FGD Maintenance was performed in March of 2018 at HNCC No. 1. Stack testing was conducted during the Scheduled FGD Maintenance as required. Emissions (other than SO_2) for the entire semi-annual reporting period of January 1, 2018 through June 30, 2018 for HNCC No. 1 were calculated using the stack test results obtained from the tests conducted in March 2018.

Emissions of SO_2 are calculated based on Bypass Vent Stack CEMS data collected during the reporting period. The table below illustrates the emission factors used in more detail.

HNCC No. 2

Scheduled FGD Maintenance was performed in June of 2018 at HNCC No. 2. Stack testing was conducted during the Scheduled FGD Maintenance as required; however, results are not yet available for the testing conducted in June 2018. Emissions for the entire semi-annual reporting period of January 1, 2018 through June 30, 2018 for HNCC No. 2 were calculated using the stack test results obtained from the tests conducted in September 2016 at HNCC No. 2, except for PM emissions. As stated in previous reports, HNCC determined that the PM test results from the September 2016 test are not representative of actual emissions or valid test results. Therefore, the PM test results were not used to calculate emissions. Instead, HNCC No. 1 test results for PM were used to calculate PM emissions at HNCC No. 2.

Emissions of SO_2 are calculated based on Bypass Vent Stack CEMS data collected during the reporting period. The table below illustrates the emission factors used in more detail.

GECC and HNCC No. 2

No stack testing was performed at GECC during the reporting period because a Scheduled FGD Maintenance outage did not occur.

Emissions (other than SO_2) for the entire semi-annual reporting period of January 1, 2018 through June 30, 2018 for GECC were calculated using the stack test results obtained from the tests conducted in May 2017. Emissions of SO_2 are calculated based on Bypass Vent Stack CEMS data collected during the reporting period.

Emissions in Section 2 below were calculated as outlined in Paragraph 26 of the Consent Decree.

2. Emission Factors

Emission factors for GECC for 2nd Half 2017:

PM (Filt + Cond)	12.7	lb/hr	May 2017 Test, GECC, Bypass Vent Stack #5
SO_2[2]	174.9	lb/hr	Bypass Vent Stack #5 CEMs Data 2nd Half 2017

Emission factors for GECC for 1st Half 2018:

PM (Filt + Cond)	12.7	lb/hr	May 2017 Test, GECC, Bypass Vent Stack #5
SO_2	206.0	lb/hr	Bypass Vent Stack #5 CEMs Data 1st Half 2018

Emission factors for HNCC No. 1 for 2nd Half 2017:

PM (Filt + Cond)	17.8	lb/hr	May 2016 Test, HNCC 1, Bypass Vent Stack #5
SO_2	156.1	lb/hr	Bypass Vent Stack #5 CEMs Data 2nd Half 2017

Emission factors for HNCC No. 1 for 1st Half 2018:

PM (Filt + Cond)	12.5	lb/hr	Mar 2018 Test, HNCC 1, Bypass Vent Stack #5
SO_2	175.2	lb/hr	Bypass Vent Stack #5 CEMs Data 1st Half 2018

Emission factors for HNCC No. 2 for 2nd Half 2017:

PM (Filt + Cond)	17.8	lb/hr	May 2016 Test, HNCC 1, Bypass Vent Stack #5
SO_2	141.9	lb/hr	Bypass Vent Stack #6 CEMs Data 2nd Half 2017

Emission factors for HNCC No. 2 for 1st Half 2018:

PM (Filt + Cond)	12.5	lb/hr	Mar 2018 Test, HNCC 1, Bypass Vent Stack #5
SO_2	164.8	lb/hr	Bypass Vent Stack #6 CEMs Data 1st Half 2018

[2] The emission factors for SO_2 during Bypass Venting on HNCC No. 1, HNCC No. 2 and GECC were calculated using the data collected from the Bypass Vent Stack CEMs during the semi-annual reporting period after the units were certified. These values were combined with the flue gas flow rate determined by the HNCC No. 1 flue gas flow rate study for HNCC No. 1 and HNCC No. 2 and by the GECC flue gas flow rate study for GECC to determine emissions for each semi-annual period. SO_2 emission factors will continue to be updated for each semi-annual reporting period using the data collected from the CEMs during that reporting period.

3. Estimated Emissions

Date	GECC Monthly Emissions								
	Total Venting Hours (excludes Tie-in time)	PM (tons)	PM_{10} (tons)	Lead (tons)	SO_2 (tons)	HCl (tons)	Hg (tons)	H_2SO_4 (tons)	NO_x (tons)
Jul 2017	29.2	0.2	0.2	0.0	2.6	0.4	0.0	0.3	0.2
Aug 2017	33.2	0.2	0.2	0.0	2.9	0.4	0.0	0.3	0.2
Sep 2017	0.4	0.0	0.0	0.0	0.0	0.0	0.0	0.0	0.0
Oct 2017	40.1	0.3	0.3	0.0	3.5	0.5	0.0	0.4	0.3
Nov 2017	46.1	0.3	0.3	0.0	4.0	0.6	0.0	0.4	0.3
Dec 2017	38.7	0.2	0.2	0.0	3.4	0.5	0.0	0.4	0.3
Jan 2018	15.7	0.1	0.1	0.0	1.6	0.2	0.0	0.2	0.1
Feb 2018	149.0	0.9	0.9	0.0	15.3	1.9	0.0	1.4	1.0
Mar 2018	46.3	0.3	0.3	0.0	4.8	0.6	0.0	0.4	0.3
Apr 2018	50.4	0.3	0.3	0.0	5.2	0.6	0.0	0.5	0.3
May 2018	126.5	0.8	0.8	0.0	13.0	1.6	0.0	1.2	0.8
Jun 2018	316.6	2.0	2.0	0.0	32.6	4.0	0.0	3.1	2.1

Date	GECC Rolling 12-Month Emissions								
	Total Venting Hours (excludes Tie-in time)	PM (tons)	PM_{10} (tons)	Lead (tons)	SO_2 (tons)	HCl (tons)	Hg (tons)	H_2SO_4 (tons)	NO_x (tons)
Jul 2017	1119.0	10.0	2.1	0.0	136.3	4.2	0.0	3.3	2.2
Aug 2017	768.1	6.4	2.4	0.0	87.7	4.7	0.0	3.6	2.4
Sep 2017	643.5	5.1	2.4	0.0	71.0	4.7	0.0	3.6	2.4
Oct 2017	598.9	4.5	2.6	0.0	63.2	5.2	0.0	4.0	2.7
Nov 2017	589.8	4.2	2.9	0.0	59.8	5.8	0.0	4.4	3.0
Dec 2017	495.5	3.1	3.1	0.0	45.4	6.2	0.0	4.8	3.2
Jan 2018	511.0	3.2	3.2	0.0	47.0	6.4	0.0	4.9	3.3
Feb 2018	564.1	3.6	3.6	0.0	53.3	7.1	0.0	5.4	3.7
Mar 2018	550.0	3.5	3.5	0.0	52.4	6.9	0.0	5.3	3.6
Apr 2018	599.9	3.8	3.8	0.0	57.5	7.6	0.0	5.8	3.9
May 201	726.3	4.6	4.6	0.0	70.5	9.2	0.0	7.0	4.8
Jun 2018	892.2	5.7	5.7	0.0	89.0	11.2	0.0	8.6	5.8

Date	HNCC No. 1 Monthly Emissions								
	Total Venting Hours (excludes Tie-in time)	PM (tons)	PM_{10} (tons)	Lead (tons)	SO_2 (tons)	HCl (tons)	Hg (tons)	H_2SO_4 (tons)	NO_x (tons)
Jul 2017	0.1	0.0	0.0	0.0	0.0	0.0	0.0	0.0	0.0
Aug 2017	0.0	0.0	0.0	0.0	0.0	0.0	0.0	0.0	0.0
Sep 2017	0.2	0.0	0.0	0.0	0.0	0.0	0.0	0.0	0.0
Oct 2017	0.3	0.0	0.0	0.0	0.0	0.0	0.0	0.0	0.0
Nov 2017	0.7	0.0	0.0	0.0	0.1	0.0	0.0	0.0	0.0
Dec 2017	0.3	0.0	0.0	0.0	0.0	0.0	0.0	0.0	0.0
Jan 2018	0.0	0.0	0.0	0.0	0.0	0.0	0.0	0.0	0.0
Feb 2018	0.0	0.0	0.0	0.0	0.0	0.0	0.0	0.0	0.0
Mar 2018	0.0	0.0	0.0	0.0	0.0	0.0	0.0	0.0	0.0
Apr 2018	0.1	0.0	0.0	0.0	0.0	0.0	0.0	0.0	0.0
May 201	0.1	0.0	0.0	0.0	0.0	0.0	0.0	0.0	0.0
Jun 2018	0.0	0.0	0.0	0.0	0.0	0.0	0.0	0.0	0.0

Date	HNCC No. 1 Rolling 12-Month Emissions								
	Total Venting Hours (excludes Tie-in time)	PM (tons)	PM_{10} (tons)	Lead (tons)	SO_2 (tons)	HCl (tons)	Hg (tons)	H_2SO_4 (tons)	NO_x (tons)
Jul 2017	471.3	4.2	4.2	0.0	42.3	7.6	0.0	2.4	4.3
Aug 2017	151.6	1.3	1.3	0.0	13.6	2.4	0.0	0.8	1.4
Sep 2017	8.1	0.1	0.1	0.0	0.7	0.1	0.0	0.0	0.1
Oct 2017	1.9	0.0	0.0	0.0	0.1	0.0	0.0	0.0	0.0
Nov 2017	2.6	0.0	0.0	0.0	0.2	0.0	0.0	0.0	0.0
Dec 2017	2.3	0.0	0.0	0.0	0.2	0.0	0.0	0.0	0.0
Jan 2018	2.4	0.0	0.0	0.0	0.2	0.0	0.0	0.0	0.0
Feb 2018	1.8	0.0	0.0	0.0	0.1	0.0	0.0	0.0	0.0
Mar 2018	1.7	0.0	0.0	0.0	0.1	0.0	0.0	0.0	0.0
Apr 2018	1.8	0.0	0.0	0.0	0.1	0.0	0.0	0.0	0.0
May 201	1.8	0.0	0.0	0.0	0.1	0.0	0.0	0.0	0.0
Jun 2018	1.7	0.0	0.0	0.0	0.1	0.0	0.0	0.0	0.0

Date	HNCC No. 2 Monthly Emissions								
	Total Venting Hours (excludes Tie-in time)	PM (tons)	PM_{10} (tons)	Lead (tons)	SO_2 (tons)[3]	HCl (tons)	Hg (tons)	H_2SO_4 (tons)	NO_x (tons)
Jul 2017	0.1	0.0	0.0	0.0	0.0	0.0	0.0	0.0	0.0
Aug 2017	3.0	0.0	0.0	0.0	0.2	0.0	0.0	0.0	0.0
Sep 2017	0.1	0.0	0.0	0.0	0.0	0.0	0.0	0.0	0.0
Oct 2017	1.4	0.0	0.0	0.0	0.1	0.0	0.0	0.0	0.0
Nov 2017	37.1	0.3	0.3	0.0	2.6	0.4	0.0	0.2	0.3
Dec 2017	0.2	0.0	0.0	0.0	0.0	0.0	0.0	0.0	0.0
Jan 2018	0.4	0.0	0.0	0.0	0.0	0.0	0.0	0.0	0.0
Feb 2018	0.0	0.0	0.0	0.0	0.0	0.0	0.0	0.0	0.0
Mar 2018	83.0	0.5	0.5	0.0	6.8	0.8	0.0	0.4	0.8
Apr 2018	24.1	0.2	0.2	0.0	2.0	0.2	0.0	0.1	0.2
May 201	0.8	0.0	0.0	0.0	0.1	0.0	0.0	0.0	0.0
Jun 2018	0.0	0.0	0.0	0.0	0.0	0.0	0.0	0.0	0.0

Date	HNCC No. 2 Rolling 12-Month Emissions								
	Total Venting Hours (excludes Tie-in time)	PM (tons)	PM_{10} (tons)	Lead (tons)	SO_2 (tons)[3]	HCl (tons)	Hg (tons)	H_2SO_4 (tons)	NO_x (tons)
Jul 2017	1315.6	11.7	11.7	0.0	129.7	13.2	0.0	6.6	12.3
Aug 2017	1318.5	11.7	11.7	0.0	129.9	13.2	0.0	6.6	12.3
Sep 2017	1318.6	11.7	11.7	0.0	129.9	13.2	0.0	6.6	12.3
Oct 2017	1320.0	11.7	11.7	0.0	130.0	13.2	0.0	6.6	12.3
Nov 2017	1194.0	10.6	10.6	0.0	116.2	11.9	0.0	6.0	11.2
Dec 2017	367.6	3.3	3.3	0.0	32.6	3.7	0.0	1.8	3.4
Jan 2018	96.2	0.9	0.9	0.0	7.9	1.0	0.0	0.5	0.9
Feb 2018	66.7	0.6	0.6	0.0	5.2	0.7	0.0	0.3	0.6
Mar 2018	127.1	0.9	0.9	0.0	10.0	1.3	0.0	0.6	1.2
Apr 2018	149.8	1.0	1.0	0.0	11.9	1.5	0.0	0.7	1.4
May 201	150.2	1.0	1.0	0.0	11.9	1.5	0.0	0.8	1.4
Jun 2018	150.2	1.0	1.0	0.0	11.9	1.5	0.0	0.8	1.4

[3] SO_2 emissions were calculated using the HNCC No. 1, HRSG #3 Flow Study results for flue gas flow rate.

11.0 Status of permit applications and a summary of all permitting activity pertaining to compliance with this Consent Decree;

GECC permitting status and compliance:

- The permit application to incorporate post-redundancy emission limits into the facility operating permit was submitted within 1 year of the effective date on November 4, 2015 as required by Paragraph 42. A copy of the submitted application was included in the 2nd half 2015 semi-annual report.
- A construction permit application for construction of the redundant HRSG was submitted to IEPA November 6, 2015. A copy of the submitted application was included in the 2nd half 2015 semi-annual report. A construction permit was issued for the redundant HRSG on February 19, 2016.
- GECC is currently preparing a permit application to incorporate the amended emissions limitations established in Paragraph 17, in accordance with the Second Amendment.

HNCC permitting status and compliance:

- The permit application to incorporate post-redundancy emission limits into the facility operating permit was submitted within 1 year of the effective date on November 6, 2015 as required by Paragraph 42. A draft permit incorporating the post-redundancy emission limits into the facility operating permit was issued draft by OEPA on October 14, 2016. A copy of the draft permit was provided to EPA/DOJ on October 19, 2016, in accordance with Paragraph 45 of the Consent Decree. The permit was issued in final to HNCC on November 21, 2016.
- A draft Title V Operating Permit was issued for HNCC on March 1, 2018. A copy of the draft permit is included in Attachment B4.
- HNCC is currently preparing a permit application to incorporate the amended emissions limitations established in Paragraph 17, in accordance with the Second Amendment.

12.0 Any reports to the State of Illinois or the State of Ohio pertaining to compliance with this Consent Decree or the CAA

For the HNCC facility, quarterly and semi-annual reports submitted for the time period covered by this report are included in Attachment B1. All malfunction reports submitted during the reporting period are included in Attachment B2. HNCC has submitted Weekly Tie-In Time notifications to the Portsmouth Local Air Agency for weeks during which Tie-In Time was utilized. These notifications are included in Attachment B3. Other HNCC agency notifications are included in Attachment B4.

For the GECC facility, semi-annual reports submitted for the time period covered by this report are included in Attachment C1. All malfunction reports submitted during the reporting period are included in Attachment C2. All other GECC reports are included in Attachment C3.

13.0 Information required by Appendix 4 (Potential Middletown Redundant HRSG project).

Written evaluation for the duration of this reporting period of the compliance at the Middletown Facility with all Bypass Venting limits can be found in Attachment D.

14.0 Additional Information Required by Second Amendment to the CD.

A Second Amendment to the CD was entered on July 10, 2018 ("Second Amendment") to allow for additional bypass venting for re-plating the spray dryer absorbers ("SDAs") at HNCC No. 1, HNCC No. 2, and GECC. This section of the report satisfies the additional reporting requirements contained in the Second Amendment.

A. Status of Corrective Actions

Paragraph 20(j), as amended, requires reporting in this semi-annual report the status of all corrective actions not completed prior to the submission of the previous semi-annual report. Attachment A3 outlines the status of all corrective actions identified from each RCFA in this semi-annual reporting period. Attachment A4 provides an update of the status of all corrective actions identified from RCFAs in prior reporting periods.

B. CEMS Excess Emissions Reports (EERs)

Attachment E includes the CEMS Excess Emissions Reports (EERs) for GECC, HNCC No. 1 and HNCC No. 2 as required by Paragraph 48, subparagraph (m) of the CD as amended.

C. SDA Replating Project Status & Emissions Mitigation Calculations

The replating project is expected to be completed at GECC in September 2018 and at HNCC No.1 in 2019.

The replating project at HNCC No. 2 was completed on July 7, 2018. The required information regarding the SDA replating project will be included in the next semi-annual report, which would be the first semi-annual report due more than 30 days after completion of the replating project, in accordance with Paragraph 48.A, as amended.

According to Paragraph 48.A of the CD as amended, the first semi-annual progress report due on the first January 31 or July 31 that occurs more than thirty (30) days after completion of each SDA Replating Project at HNCC No. 1, HNCC No. 2 and GECC shall include additional information including the number of bypass venting hours from the SDA Replating Project beyond 720 hours per bypass vent stack, the excess emissions resulting from the SDA Replating Project, and the amount of emissions mitigation achieved. Since the SDA Replating Project at HNCC No. 2 was completed less than thirty (30) days prior to the submission of this report, this additional information is not required to be submitted until the next semi-annual report.

CERTIFICATION OF DOCUMENT

I certify under penalty of law that this information was prepared under my direction or supervision in accordance with a system designed to assure that qualified personnel properly gather and evaluate the information submitted. Based on my directions and my inquiry of the person(s) who manage the system, or the person(s) directly responsible for gathering the information, the information submitted is, to the best of my knowledge and belief, true, accurate, and complete. I am aware that there are significant penalties for submitting false information, including the possibility of fine and imprisonment for knowing violations.

Matthew Lester
General Manager - Gateway Energy and Coke Company, LLC

7/30/2018
Date

James Skipworth
General Manager - Haverhill Coke Company, LLC

7/30/2018
Date

Kris Singleton
Corporate Environmental Engineer – SunCoke Energy, Inc.

7/30/18
Date

Attachment A1

Haverhill Coke Company, RCFAs Completed

SunCoke Energy Environmental RCFA Report

SunCoke Energy
The Higher Degree

RCFA Name:	20180118_ HHO_001_HCC1_VFD_Trip_ Voltage_Drop	Report Date:	01/18/2018
Report #:	7808	Site:	HH
RCFA Facilitator:	DMSTARKWEATHER	Location:	HH1 HRSG
RCFA Type:	Environmental	Location name:	PLANT 1 HRSG
Date of Occurrence:	Jan 18, 2018, 7:33 AM	Investigation Completed:	02/06/2018

Section1 - General Information

Executive Summary:
This bypass venting event is a result of Redundant HRSG Tie in Time on HCC 1. Per paragraph 20.d. of the Consent Decree, information outlined in Paragraph 20.f. through 20.i. is not required for bypass venting events that are a result of Redundant HRSG Tie In Time.

SunCoke Energy Environmental RCFA Report

SunCoke Energy
The Higher Degree

Section 1a) Environmental Information

Did the stack lid bypass event result from planned FGD or HRSG maintenance?	No
Describe: The HCC1 induced draft (ID) fan variable frequency drives (VFDs) tripped due to an "incoming power phase imbalance" fault. This fault occurred as a result of the breaker failing to open following a ground fault on the HCC1 pusher charger machine (PCM) due to a mismatch between the relay and current transducer settings.	

Were charge weights to affected ovens reduced to a 42.5 wet tons/oven average 48 hours prior to venting?	No
If no, provide explanation of why the charge weights were not reduced to a 42.5 wet ton average.	
Explanation: Bypass venting was a result of unplanned maintenance; therefore, charge weights could not be reduced at least 48 hours in advance. HRSG Bypass Venting was not expected to exceed 24 hours. Per the PMO plan, coal charge weights are reduced by approximately two tons per charging cycle during bypass venting events that are expected to exceed 24 hours.	

Did the coal charged during the bypass event contain less than 1.1% sulfur content?	Yes
If no, provide explanation of why the coal sulfur content was not reduced to a maximum of 1.1%.	
Explanation:	

Did multiple events involving stack lid open time occur within a 24 period?				No
If yes, please list the Maximo RCFA numbers here:				

P901					
Vent Stack No.	**#1**	**#2**	**#3**	**#4**	**#5**
Stack Lid Open Date/Time	1/18/18 07:33	1/18/18 07:33	1/18/18 07:33	1/18/18 07:33	1/18/18 07:35
Stack Lid Close Date/Time	1/18/18 7:55	1/18/18 7:56	1/18/18 7:54	1/18/18 7:56	1/18/18 7:55
Total Bypass Venting Time (mins)	22	23	21	23	20
Total Bypass Venting Time (hrs)	0.37	0.38	0.35	0.38	0.33

P902					
Vent Stack No.	**#6**	**#7**	**#8**	**#9**	**#10**
Stack Lid Open Date/Time					
Stack Lid Close Date/Time					
Total Bypass Venting Time (mins)	0	0	0	0	0
Total Bypass Venting Time (hrs)	0.00	0.00	0.00	0.00	0.00

Estimated Quantity of Emissions (tons)						
Pollutant:	**Lead**	0.0	**PM**	0.0	**SO_2**	0.2

Estimated Avg Coal Sulfur Content Charged Per Day (applies to all ovens charged each day):				
Date	**Avg S (%):**		**Date**	**Avg S (%):**
1/17/2018	0.80			
1/18/2018	0.90			

SunCoke Energy Environmental RCFA Report

SunCoke Energy
The Higher Degree

Estimated Avg Charge Tons per Oven Charged (avg over duration of event):				
No.	Estimated Avg Coal Charge Weight/		No.	Estimated Avg Coal Charge Weight/
1	41.89		2	42.20
5	41.75		6	42.38
9	41.72		10	42.35
13	41.72		14	42.35
17	41.26		18	42.27
3	42.38		4	42.08
7	41.15		8	42.25
11	41.42		12	42.23
15	41.15		16	42.18
19	41.17		20	42.27
21	41.14		22	42.32
25	41.09		26	42.20
29	41.56		30	42.27
33	41.58		34	42.16
37	41.28		38	42.16
23	41.16		24	42.23
27	41.05		28	42.15
31	41.24		32	42.06
35	41.12		36	42.04
39	41.17		40	42.16
41	41.21		42	42.09
45	41.29		46	42.20
49	41.22		50	42.13
53	41.27		54	42.18
57	41.19		58	42.21
43	41.15		44	42.09
47	41.12		48	42.11
51	41.31		52	42.27
55	41.24		56	42.32
59	41.10		60	42.28
61	41.34		62	42.15
65	41.22		66	42.14
69	41.24		70	42.14
73	41.21		74	42.21
77	41.22		78	42.13
63	40.88		64	42.08
67	41.10		68	42.11
71	41.09		72	42.20
75	41.17		76	42.32
79	41.19		80	42.33
81	41.22		82	42.27
85	41.15		86	42.09
89	41.26		90	42.25
93	41.24		94	42.25
97	41.24		98	42.28
83	40.98		84	41.74
87	41.12		88	41.56
91	41.10		92	40.97
95	41.12		96	41.20
99	41.17		100	41.10

Bypass Venting Emissions Calculations for Haverhill Coke Company No. 1

Emission Factors (for one bypass vent stack):

Lead	0.080	lb/hr	March 2018 Test, HNCC No. 1 FGD Outage
PM (Filt + Cond)	12.5	lb/hr	March 2018 Test, HNCC No. 1 FGD Outage
SO2	175.2	lb/hr	Calculated from 1st Half CEMs Data

Corresponding RCFA Report: 20180118_HHO_001_HCC1_VFD_Trip_Voltage_Drop (7808)

Start Date/Time of Bypass Venting: 1/18/18 07:33

End Date/Time of Bypass Venting: 1/18/2018 7:56

Bypass Vent Stack Lid Open and Close Date/Time:

	#1	#2	#3	#4	#5
Open Date/Time:	1/18/18 07:33	1/18/18 07:33	1/18/18 07:33	1/18/18 07:33	1/18/18 07:35
Close Date/Time:	1/18/18 7:55	1/18/18 7:56	1/18/18 7:54	1/18/18 7:56	1/18/18 7:55

Total Stack Lid Open Time per Bypass Vent Stack:

	#1	#2	#3	#4	#5
Hours:	0.4	0.4	0.4	0.4	0.3
Minutes:	22	23	21	23	20

Total Bypass Venting Time:

Hours: 1.8 Minutes: 109

Calculation of Bypass Venting Emissions:

Emissions = Emission Factor (lb/hr) x Total Hours of Bypass Venting x 1 ton/2000 lbs

	#1	#2	#3	#4	#5
Lead (lbs)	0.0	0.0	0.0	0.0	0.0
PM (lbs)	4.6	4.8	4.4	4.8	4.2
SO2 (lbs)	64.2	67.2	61.3	67.2	58.4

Total Emissions from Bypass Venting Event

Total Emissions = Sum of Emissions from Each Affected Bypass Vent Stack

Total lbs of Pollutant Emitted During Bypass Venting

Lead (tons)	0.0
PM (tons)	0.0
SO_2 (tons)	0.2

SunCoke Energy Environmental RCFA Report

RCFA Name:	20180122_HHO_002_HCC1_ Loss_of_Power	Report Date:	01/23/2018
Report #:	7827	Site:	HH
RCFA Facilitator:	NDGLOCKNER	Location:	HH1 HRSG
RCFA Type:	Environmental	Location name:	PLANT 1 HRSG
Date of Occurrence:	Jan 22, 2018, 11:51 PM	Investigation Completed:	02/06/2018

Section1 - General Information

Executive Summary:
This bypass venting event is a result of Redundant HRSG Tie in Time on HCC 1. Per paragraph 20.d. of the Consent Decree, information outlined in Paragraph 20.f. through 20.i. is not required for bypass venting events that are a result of Redundant HRSG Tie In Time.

SunCoke Energy Environmental RCFA Report

SunCoke Energy
The Higher Degree

Section 1a) Environmental Information

Did the stack lid bypass event result from planned FGD or HRSG maintenance?	No
Describe: The Bypass Venting Event was a result of a brief disruption in power from the utility provider that caused the HCC1 variable frequency drives for the induced draft fans to trip on incoming power line fault.	

Were charge weights to affected ovens reduced to a 42.5 wet tons/oven average 48 hours prior to venting?	No
If no, provide explanation of why the charge weights were not reduced to a 42.5 wet ton average.	
Explanation: Bypass venting was a result of unplanned maintenance; therefore, charge weights could not be reduced at least 48 hours in advance. HRSG Bypass Venting was not expected to exceed 24 hours. Per the PMO plan, coal charge weights are reduced by approximately two tons per charging cycle during bypass venting events that are expected to exceed 24 hours.	

Did the coal charged during the bypass event contain less than 1.1% sulfur content?	Yes
If no, provide explanation of why the coal sulfur content was not reduced to a maximum of 1.1%.	
Explanation:	

Did multiple events involving stack lid open time occur within a 24 period?				No
If yes, please list the Maximo RCFA numbers here:				

P901					
Vent Stack No.	**#1**	**#2**	**#3**	**#4**	**#5**
Stack Lid Open Date/Time	1/22/18 23:53	1/22/18 23:53	1/22/18 23:53	1/22/18 23:52	1/22/18 23:51
Stack Lid Close Date/Time	1/23/18 0:06	1/23/18 0:17	1/23/18 0:01	1/23/18 0:09	1/23/18 0:04
Total Bypass Venting Time (mins)	13	24	8	17	13
Total Bypass Venting Time (hrs)	0.22	0.40	0.13	0.28	0.22

P902					
Vent Stack No.	**#6**	**#7**	**#8**	**#9**	**#10**
Stack Lid Open Date/Time					
Stack Lid Close Date/Time					
Total Bypass Venting Time (mins)	0	0	0	0	0
Total Bypass Venting Time (hrs)	0.00	0.00	0.00	0.00	0.00

Estimated Quantity of Emissions (tons)						
Pollutant:	**Lead**	0.0	**PM**	0.0	**SO_2**	0.1

Estimated Avg Coal Sulfur Content Charged Per Day (applies to all ovens charged each day):				
Date	**Avg S (%):**		**Date**	**Avg S (%):**
1/21/2018	0.81		1/23/2018	0.84
1/22/2018	0.96			

SunCoke Energy Environmental RCFA Report

SunCoke Energy
The Higher Degree

Estimated Avg Charge Tons per Oven Charged (avg over duration of event):				
No.	Estimated Avg Coal Charge Weight/		No.	Estimated Avg Coal Charge Weight/
1	41.24		2	41.67
5	41.34		6	41.63
9	41.32		10	41.62
13	41.46		14	41.65
17	40.86		18	41.68
3	41.79		4	41.27
7	41.63		8	41.21
11	41.68		12	41.22
15	41.79		16	41.15
19	41.77		20	41.79
21	41.24		22	41.68
25	41.29		26	41.72
29	41.19		30	41.67
33	41.31		34	41.72
37	41.92		38	41.60
23	41.44		24	41.91
27	41.60		28	41.29
31	41.56		32	41.19
35	41.44		36	41.72
39	41.39		40	41.24
41	42.24		42	41.62
45	41.24		46	41.74
49	41.23		50	41.70
53	41.32		54	41.72
57	41.24		58	41.48
43	41.44		44	41.27
47	41.41		48	41.38
51	40.73		52	41.17
55	41.48		56	41.38
59	41.53		60	41.34
61	41.31		62	41.74
65	41.14		66	41.67
69	41.22		70	41.79
73	41.32		74	41.74
77	41.17		78	41.58
63	41.38		64	41.41
67	41.44		68	41.26
71	41.68		72	41.29
75	41.79		76	41.27
79	41.50		80	41.31
81	41.19		82	41.67
85	41.31		86	41.60
89	41.21		90	41.68
93	41.10		94	41.67
97	41.27		98	41.67
83	41.74		84	41.31
87	41.80		88	41.21
91	40.42		92	41.39
95	41.46		96	41.32
99	41.48		100	41.38

Bypass Venting Emissions Calculations for Haverhill Coke Company No. 1

Emission Factors (for one bypass vent stack):

Lead	0.080	lb/hr	March 2018 Test, HNCC No. 1 FGD Outage
PM (Filt + Cond)	12.5	lb/hr	March 2018 Test, HNCC No. 1 FGD Outage
SO2	175.2	lb/hr	Calculated from 1st Half CEMs Data

Corresponding RCFA Report: 20180122_HHO_002_HCC1_Loss_of_Power (7827)

Start Date/Time of Bypass Venting: 1/22/18 23:51

End Date/Time of Bypass Venting: 1/23/2018 0:17

Bypass Vent Stack Lid Open and Close Date/Time:

	#1	#2	#3	#4	#5
Open Date/Time:	1/22/18 23:53	1/22/18 23:53	1/22/18 23:53	1/22/18 23:52	1/22/18 23:51
Close Date/Time:	1/23/18 0:06	1/23/18 0:17	1/23/18 0:01	1/23/18 0:09	1/23/18 0:04

Total Stack Lid Open Time per Bypass Vent Stack:

	#1	#2	#3	#4	#5
Hours:	0.2	0.4	0.1	0.3	0.2
Minutes:	13	24	8	17	13

Total Bypass Venting Time:

Hours: 1.3 Minutes: 75

Calculation of Bypass Venting Emissions:

Emissions = Emission Factor (lb/hr) x Total Hours of Bypass Venting x 1 ton/2000 lbs

	#1	#2	#3	#4	#5
Lead (lbs)	0.0	0.0	0.0	0.0	0.0
PM (lbs)	2.7	5.0	1.7	3.5	2.7
SO2 (lbs)	38.0	70.1	23.4	49.6	38.0

Total Emissions from Bypass Venting Event

Total Emissions = Sum of Emissions from Each Affected Bypass Vent Stack

Total lbs of Pollutant Emitted During Bypass Venting

Lead (tons)	0.0
PM (tons)	0.0
SO_2 (tons)	0.1

SunCoke Energy Environmental RCFA Report

RCFA Name:	20180304_ HHO_003_HCC1_FGD_Scheduled_Maintenance_Outage	Report Date:	03/04/2018
Report #:	8096	Site:	HH
RCFA Facilitator:	DMSTARKWEATHER	Location:	HH1 HRSG
RCFA Type:	Environmental	Location name:	PLANT 1 HRSG
Date of Occurrence:	Mar 4, 2018, 6:04 PM	Investigation Completed:	04/16/2018

Section1 - General Information

Executive Summary:

This bypass venting event is a result of Redundant HRSG Tie in Time. The Tie in Time consisted of extensive work on the HNCC No 1 Spray Dryer Absorber (SDA) vessel, part of the Flue Gas Desulfurization (FGD) Unit. This work was required to ensure long term reliability of the SDA and FGD during gas-sharing operation. Other maintenance work, including Scheduled HRSG Maintenance on three HRSGs and Scheduled FGD Maintenance, was coordinated and conducted concurrently to minimize bypass venting in accordance with HNCC's PMO Plan. HNCC received OEPA Director's Approval for the Scheduled FGD maintenance on February 16, 2018. Pursuant to paragraph 20.d. of the Consent Decree, information outlined in Paragraph 20.f. through 20.i., is not required to be included in the RCFA for bypass venting events that are a result of Scheduled HRSG Maintenance, Scheduled FGD Maintenance or Redundant HRSG Tie in Time.

SunCoke Energy Environmental RCFA Report

SunCoke Energy
The Higher Degree

Section 1a) Environmental Information

Did the stack lid bypass event result from planned FGD or HRSG maintenance?	Yes
Describe: The Bypass Venting Event was a result of completing Scheduled FGD Maintenance on HCC No. 1.	

Were charge weights to affected ovens reduced to a 42.5 wet tons/oven average 48 hours prior to venting?	Yes
If no, provide explanation of why the charge weights were not reduced to a 42.5 wet ton average.	
Explanation:	

Did the coal charged during the bypass event contain less than 1.1% sulfur content?	Yes
If no, provide explanation of why the coal sulfur content was not reduced to a maximum of 1.1%.	
Explanation:	

Did multiple events involving stack lid open time occur within a 24 period?				Yes
If yes, please list the Maximo RCFA numbers here:	8097	8098		

P901					
Vent Stack No.	**#1**	**#2**	**#3**	**#4**	**#5**
Stack Lid Open Date/Time	3/4/18 21:22	3/4/18 20:54	3/4/18 20:07	3/4/18 18:04	3/4/18 18:45
Stack Lid Close Date/Time	3/27/18 20:29	3/27/18 21:23	3/27/18 22:37	3/27/18 21:55	3/27/18 20:37
Total Bypass Venting Time (mins)	33067	33149	33270	33351	33232
Total Bypass Venting Time (hrs)	551.12	552.48	554.50	555.85	553.87

P902					
Vent Stack No.	**#6**	**#7**	**#8**	**#9**	**#10**
Stack Lid Open Date/Time					
Stack Lid Close Date/Time					
Total Bypass Venting Time (mins)	0	0	0	0	0
Total Bypass Venting Time (hrs)	0.00	0.00	0.00	0.00	0.00

Estimated Quantity of Emissions (tons)						
Pollutant:	**Lead**	0.1	**PM**	17.3	**SO_2**	242.5

Estimated Avg Coal Sulfur Content Charged Per Day (applies to all ovens charged each day):				
Date	**Avg S (%):**		**Date**	**Avg S (%):**
3/3/2018	1.00		3/16/2018	0.77
3/4/2018	0.83		3/17/2018	0.94
3/5/2018	0.97		3/18/2018	0.8
3/6/2018	0.83		3/19/2018	0.88
3/7/2018	0.89		3/20/2018	0.8
3/8/2018	0.8		3/21/2018	0.83
3/9/2018	0.89		3/22/2018	0.77
3/10/2018	0.81		3/23/2018	1.01
3/11/2018	0.9		3/24/2018	0.8
3/12/2018	0.79		3/25/2018	1
3/13/2018	0.96		3/26/2018	0.79
3/14/2018	0.77		3/27/2018	0.96
3/15/2018	0.94			

SunCoke Energy Environmental RCFA Report

SunCoke Energy
The Higher Degree

Estimated Avg Charge Tons per Oven Charged (avg over duration of event):				
Affected Oven No.	Estimated Avg Coal Charge Weight/ Oven:		Affected Oven No.	Estimated Avg Coal Charge Weight/ Oven:
2	41.97		1	41.99
6	41.91		5	41.92
10	41.99		9	41.92
14	41.93		13	41.87
18	41.92		17	41.94
4	41.95		3	42.04
8	41.96		7	41.93
12	41.93		11	41.96
16	42.01		15	41.99
20	41.86		19	42.02
22	41.93		21	41.92
26	41.96		25	41.93
30	42.06		29	41.95
34	42.08		33	41.91
38	41.96		37	41.93
24	41.93		23	42.00
28	41.99		27	42.00
32	41.97		31	41.95
36	41.91		35	41.99
40	41.93		39	41.98
42	41.93		41	41.97
46	41.88		45	41.95
50	41.85		49	41.93
54	41.99		53	41.94
58	41.93		57	41.92
44	41.97		43	42.13
48	41.92		47	42.05
52	41.92		51	42.15
56	41.95		55	41.99
60	41.92		59	41.95
62	42.00		61	41.95
66	41.99		65	41.88
70	41.94		69	41.95
74	42.01		73	41.87
78	41.96		77	41.85
64	41.98		63	41.92
68	42.01		67	41.94
72	41.90		71	41.95
76	41.90		75	41.94
80	42.12		79	41.92
82	41.98		81	41.74
86	42.00		85	41.78
90	41.95		89	41.94
94	41.97		93	41.89
98	41.97		97	41.89
84	41.95		83	41.92
88	41.97		87	41.95
92	41.90		91	41.91
96	41.82		95	42.11
100	41.92		99	41.89

Bypass Venting Emissions Calculations for Haverhill Coke Company No. 1

Emission Factors (for one bypass vent stack):

Lead	0.080	lb/hr	March 2018 Test, HNCC No. 1 FGD Outage
PM (Filt + Cond)	12.5	lb/hr	March 2018 Test, HNCC No. 1 FGD Outage
SO2	175.2	lb/hr	Calculated from 1st Half CEMs Data

Corresponding RCFA Report: 20170304_ HHO_03_HCC1_FGD_Scheduled_Maintenance_Outage (8096)

Start Date/Time of Bypass Venting: 3/4/2018 18:04

End Date/Time of Bypass Venting: 3/27/2018 22:37

Bypass Vent Stack Lid Open and Close Date/Time:

	#1	#2	#3	#4	#5
Open Date/Time:	3/4/18 21:22	3/4/18 20:54	3/4/18 20:07	3/4/18 18:04	3/4/18 18:45
Close Date/Time:	3/27/18 20:29	3/27/18 21:23	3/27/18 22:37	3/27/18 21:55	3/27/18 20:37

Total Stack Lid Open Time per Bypass Vent Stack:

	#1	#2	#3	#4	#5
Hours:	551.1	552.5	554.5	555.8	553.9
Minutes:	33067	33149	33270	33351	33232

*Stack lids were not continuously open during this event.

Total Bypass Venting Time:

Hours: 2767.8 Minutes: 166069

Calculation of Bypass Venting Emissions:

Emissions = Emission Factor (lb/hr) x Total Hours of Bypass Venting x 1 ton/2000 lbs

	#1	#2	#3	#4	#5
Lead (lbs)	44.1	44.2	44.4	44.5	44.3
PM (lbs)	6889.0	6906.0	6931.3	6948.1	6923.3
SO2 (lbs)	96555.6	96795.1	97148.4	97384.9	97037.4

Total Emissions from Bypass Venting Event

Total Emissions = Sum of Emissions from Each Affected Bypass Vent Stack

Total lbs of Pollutant Emitted During Bypass Venting

Lead (tons)	0.1
PM (tons)	17.3
SO_2 (tons)	242.5

SunCoke Energy Environmental RCFA Report

SunCoke Energy
The Higher Degree

RCFA Name:	20180327_HHO_004_HCC2_ Loss_of_Plant_Air	Report Date:	03/27/2018
Report #:	8097	Site:	HH
RCFA Facilitator:	NDGLOCKNER	Location:	HH2 HRSG
RCFA Type:	Environmental	Location name:	PLANT 2 HRSG
Date of Occurrence:	Mar 27, 2018, 6:37 PM	Investigation Completed:	04/19/2018

Section1 - General Information

Executive Summary:

On March 27, 2018, at 6:37 pm, the HRSGs #6 – 10 bypass vent stack lids opened on high high inlet temperature to the dump condenser. There were several events that occurred leading up to the high high inlet temperature to the dump condenser, including a loss of plant air across HCC2 during compressor maintenance activities. With insufficient air available to operate equipment associated with the HCC2 Plant, all control valves and dampers began moving to their failsafe states of "closed", including the Heat Recovery Steam Generator (HRSG) #6 level control valve (LCV) and the HCC2 ID fan control dampers. HRSG 6 is the furthest away from the air compressors so HRSG#6 was the first to lose air pressure. As a result of the HRSG #6 LCV closing, the steam drum level dropped quickly.

Operations personnel immediately responded and started a portable air compressor and opened the valve on the compressed air line between HCC1 and HCC2, restoring air pressure to HCC2 at approximately 6:30 pm. Once air pressure was reestablished, the HRSG #6 LCV fully opened in order to restore the level in the steam drum, causing a high high steam drum level. Though the equipment responded as intended, the accuracy and response time of the valve resulted in the high high steam drum level when the valve opened too quickly in order restore required level to the steam drum. As a result, the Steam Turbine Generator (STG) tripped offline to prevent potential damage to the turbine blades caused by water intrusion. With the STG offline, the turbine bypass valve opened as designed and began sending steam to the dump condenser. However, due to the previous loss of air pressure, the steam attemperator valve for the dump condenser was in a faulted state and was unable to cool the steam going to the dump condenser, causing the dump condenser to trip on high high inlet temperature, and subsequently opening the bypass vent stack lids #6 – 10. Please refer to the bypass venting table included in Section 1a of this report for the stack lid open and close times. The total duration of this bypass venting event was 1.98 hours.

The root cause of this bypass venting event was determined to be "A" compressor tripping on high high temperature as a result of the exhaust fan motor for the compressor building shorting out.

The corrective actions identified for this bypass venting event include but are not limited to: repair the failed B air compressor motor and breaker, open the valve between HCC1 and HCC2 air systems, evaluate the appropriate position of the valve between the HCC1 and HCC2 air systems for different operating or maintenance scenarios, evaluate the fault state for the attemperator valve on loss of air, and repair the failed exhaust fan motor.

SunCoke Energy Environmental RCFA Report

SunCoke Energy
The Higher Degree

Section 1a) Environmental Information

Did the stack lid bypass event result from planned FGD or HRSG maintenance?	No
Describe: The Bypass Venting Event was a result of a "A" compressor tripping on high high temperature as a result of the exhaust fan motor for the compressor building shorting out.	

Were charge weights to affected ovens reduced to a 42.5 wet tons/oven average 48 hours prior to venting?	No
If no, provide explanation of why the charge weights were not reduced to a 42.5 wet ton average.	
Explanation: Bypass venting was a result of unplanned maintenance; therefore, charge weights could not be reduced at least 48 hours in advance. HRSG Bypass Venting was not expected to exceed 24 hours. Per the PMO plan, coal charge weights are reduced by approximately two tons per charging cycle during bypass venting events that are expected to exceed 24 hours.	

Did the coal charged during the bypass event contain less than 1.1% sulfur content?	Yes
If no, provide explanation of why the coal sulfur content was not reduced to a maximum of 1.1%.	
Explanation:	

Did multiple events involving stack lid open time occur within a 24 period?				Yes
If yes, please list the Maximo RCFA numbers here:	8096	8098		

P901					
Vent Stack No.	**#1**	**#2**	**#3**	**#4**	**#5**
Stack Lid Open Date/Time					
Stack Lid Close Date/Time					
Total Bypass Venting Time (mins)	0	0	0	0	0
Total Bypass Venting Time (hrs)	0.00	0.00	0.00	0.00	0.00

P902					
Vent Stack No.	**#6**	**#7**	**#8***	**#9**	**#10**
Stack Lid Open Date/Time	3/27/2018 18:38	3/27/2018 18:38	3/27/2018 18:37	3/27/2018 18:39	3/27/2018 18:38
Stack Lid Close Date/Time	3/27/18 19:10	3/27/18 18:54	3/27/18 18:57	3/27/18 19:03	3/27/18 19:05
Total Bypass Venting Time (mins)	32	16	20	24	27
Total Bypass Venting Time (hrs)	0.53	0.27	0.33	0.40	0.45

Estimated Quantity of Emissions (tons)						
Pollutant:	**Lead**	0.0	**PM**	0.0	**SO_2**	0.2

Estimated Avg Coal Sulfur Content Charged Per Day (applies to all ovens charged each day):				
Date	**Avg S (%):**		**Date**	**Avg S (%):**
3/26/2018	0.79			
3/27/2018	0.96			

SunCoke Energy Environmental RCFA Report

SunCoke Energy
The Higher Degree

Estimated Avg Charge Tons per Oven Charged (avg over duration of event):				
No.	Estimated Avg Coal Charge Weight/		No.	Estimated Avg Coal Charge Weight/
101	43.74		102	45.84
105	43.79		106	45.91
109	43.68		110	45.82
113	43.77		114	45.10
117	43.72		118	45.26
103	43.22		104	44.24
107	45.24		108	44.24
111	44.74		112	44.45
115	44.73		116	44.83
119	44.71		120	44.78
121	43.65		122	44.28
125	43.75		126	44.21
129	42.76		130	44.24
133	43.74		134	44.20
137	43.74		138	44.30
123	44.68		124	44.74
127	44.80		128	44.74
131	44.69		132	-0.26
135	44.78		136	44.80
139	44.78		140	43.82
141	43.72		142	45.01
145	43.70		146	44.18
149	43.67		150	-0.26
153	43.70		154	44.28
157	43.74		158	44.25
143	44.62		144	44.74
147	44.57		148	43.77
151	44.73		152	44.82
155	44.74		156	44.76
159	44.68		160	43.79
161	43.67		162	44.25
165	43.72		166	44.23
169	43.70		170	43.98
173	43.60		174	43.84
177	43.65		178	44.40
163	44.45		164	44.74
167	44.32		168	44.76
171	44.50		172	44.81
175	44.40		176	44.73
179	44.28		180	44.80
181	43.67		182	43.91
185	43.65		186	44.13
189	43.68		190	44.21
193	43.67		194	44.23
197	43.65		198	44.22
183	44.30		184	44.76
187	44.40		188	44.69
191	44.30		192	43.82
195	44.32		196	44.86
199	44.31		200	42.78

Bypass Venting Emissions Calculations for Haverhill Coke Company No. 2

Emission Factors (for one bypass vent stack)*:

Lead	0.060	lb/hr	September 2016 Test, HNCC No. 2 FGD Outage
PM (Filt + Cond)	12.5	lb/hr	March 2018 Test, HNCC No. 1 FGD Outage
SO2	164.8	lb/hr	Calculated from 1st Half CEMs Data

Event Description: 20180327_HHO_004_HCC2_Loss_of_Plant_Air (8097)

Start Date/Time of Bypass Venting: 3/27/2018 18:37

End Date/Time of Bypass Venting: 3/27/2018 19:10

Bypass Vent Stack Lid Open and Close Date/Time:

	#6	#7	#8	#9	#10
Open Date/Time:	3/27/2018 18:38	3/27/2018 18:38	3/27/2018 18:37	3/27/2018 18:39	3/27/2018 18:38
Close Date/Time:	3/27/18 19:10	3/27/18 18:54	3/27/18 18:57	3/27/18 19:03	3/27/18 19:05

Total Stack Lid Open Time per Bypass Vent Stack:

	#6	#7	#8	#9	#10
Hours:	0.5	0.3	0.3	0.4	0.5
Minutes:	32.0	16.0	20.0	24.0	27.0

Total Bypass Venting Time:

Hours: 2.0 Minutes: 119

Calculation of Bypass Venting Emissions:

Emissions = Emission Factor (lb/hr) x Total Hours of Bypass Venting x 1 ton/2000 lbs

	#6	#7	#8	#9	#10
Lead (lbs)	0.0	0.0	0.0	0.0	0.0
PM (lbs)	6.7	3.3	4.2	5.0	5.6
SO2 (lbs)	87.9	43.9	54.9	65.9	74.2

Total Emissions from Bypass Venting Event

Total Emissions = Sum of Emissions from Each Affected Bypass Vent Stack

Total tons of Pollutant Emitted During Bypass Venting

Lead (tons)	0.0
PM (tons)	0.0
SO_2 (tons)	0.2

Section 2 - Investigation Information and Summary

Cause and Effect Analysis (include steps taken to minimize emissions, if applicable):
On March 27, 2018, at 6:37 pm, the HRSGs #6 – 10 bypass vent stack lids opened on high high inlet temperature to the dump condenser. There were several events that occurred leading up to the high high inlet temperature to the dump condenser, as described herein. Prior to the alarm, at approximately 6:15 pm, a low low system air pressure alarm was received in the control room for the HCC2 Plant. Operations personnel were immediately dispatched and found that the "A" compressor had tripped on high high temperature as a result of the exhaust fan motor for the compressor building shorting out. There are three compressor units that provide compressed air to HCC2, A, B and C. "B" compressor had been removed from service earlier that week due to a failed motor and was undergoing repairs at the time. Therefore, when "A" compressor tripped, only "C" compressor remained online. A valve that connects the HCC1 and HCC2 plant air systems is present in order to help maintain the compressed air balance between the HCC1 and HCC2 plants. However, the valve connecting the HCC1 and HCC2 plant air systems had been closed as a precautionary measure to prevent an upset in the plant air going to HCC1 during the "B" compressor maintenance on HCC2. Without either "A" or "B" compressor online and the valve between HCC1 and HCC2 in the closed position, only "C" compressor remained in service. Having only C Compressor in service was insufficient to operate the HCC2 Plant and the air pressure for the unit dropped below 50 psig. With insufficient air available to operate equipment associated with the HCC2 Plant, all control valves and dampers began moving to their failsafe states of "closed", including the Heat Recovery Steam Generator (HRSG) #6 level control valve (LCV) and the HCC2 ID fan control dampers. HRSG 6 is the furthest away from the air compressors so HRSG#6 was the first to lose air pressure. As a result of the HRSG #6 LCV closing, the steam drum level dropped quickly. Additionally, draft was greatly reduced across the HCC2 ovens when the ID fan dampers began to close. Operations personnel immediately responded and started a portable air compressor and opened the valve on the compressed air line between HCC1 and HCC2, restoring air pressure to HCC2 at approximately 6:30 pm. Once air pressure was reestablished, the HRSG #6 LCV fully opened in order to restore the level in the steam drum, causing a high high steam drum level. Though the equipment responded as intended, the accuracy and response time of the valve resulted in the high high steam drum level when the valve opened too quickly in order restore required level to the steam drum. As a result, the Steam Turbine Generator (STG) tripped offline to prevent potential damage to the turbine blades caused by water intrusion. With the STG offline, the turbine bypass valve opened as designed and began sending steam to the dump condenser. However, due to the previous loss of air pressure, the steam attemperator valve for the dump condenser was in a faulted state and was unable to cool the steam going to the dump condenser, causing the dump condenser to trip on high high inlet temperature, and subsequently opening the bypass vent stack lids #6 – 10. Please refer to the bypass venting table included in Section 1a of this report for the stack lid open and close times. The total duration of this bypass venting event was 1.98 hours. The root cause of this bypass venting event was determined to be "A" compressor tripping on high high temperature as a result of the exhaust fan motor for the compressor building shorting out. The corrective actions identified for this bypass venting event include but are not limited to: repair the failed B air compressor motor and breaker, open the valve between HCC1 and HCC2 air systems, evaluate the appropriate position of the valve between the HCC1 and HCC2 air systems for different operating or maintenance scenarios, evaluate the fault state for the attemperator valve on loss of air, and repair the failed exhaust fan motor.

SunCoke Energy Environmental RCFA Report

SunCoke Energy
The Higher Degree

Section 3 - Causes

Cause	Description of Root Cause	Analysis of Root Cause (how did this contribute?)	Type of Cause	Cause Class	Repeat?
1668	Exhaust fan for the compressor building failed	The root cause of this bypass venting event was determined to be "A" compressor tripping on high high temperature as a result of the exhaust fan for the compressor building failing to control building temperature.	Root Cause	Physical Cause	NO
1669	"B" compressor was out of service	"B" compressor was out of service and the valve between HCC1 and HCC2 was closed	Secondary Cause	Physical Cause	NO

Section 4 - Measures Reasonably Available to Prevent or Reduce Likelihood of Recurrence (Corrective Actions)

CA#	Description of Corrective Action	Analysis of Corrective Action
1085270	CD - Repair the failed HCC2 B air compressor,	This will place the air compressor redundancy back in service for HCC2.
1085271	CD - Lock open the valve between HCC1 and HCC2 air systems	This will place air system redundancy in service for both HCC1 and HCC2 units
1085273	CD - evaluate the fault state for the attemperator valve on loss of air	By evaluating the faulted state the valve could potentially stay in auto and control after a loss of plant air event.
1085274	CD - Repair the failed exhaust fan for HCC2 Compressor Room	Help ensure proper operating temperatures are maintained for the HCC2 air compressors.
1085371	CD - Consider installing additional ducting in compressor room	By adding ducting above the compressors this will pull the hot air away from the compressors.
1088826	CD - Evaluate the position of the valve between the HCC1/HCC2 air systems for different scenarios	The appropriate position of the HCC1/2 compressed air line valve should be determined for different operating and maintenance scenarios to maximize the air that is available to operate the plant

Additional Corrective Action Information:

CA#	Responsible Person	Probable Effectiveness	Estimated Start Date of CA	Estimated Completion Date	Estimated Cost of Implementation	3rd Party Needed for Implementation?
1085270	CTCOLLIER	2) Reduce Likelihood	03/20/2018	05/31/2018	30,000.00	YES
1085271	MCTHOMPSON	2) Reduce Likelihood	03/27/2018	05/31/2018	0.00	NO
1085273	JJLIENESCH	2) Reduce Likelihood	05/01/2018	08/31/2018	10,000.00	YES
1085274	CTCOLLIER	4) Improvement / Unlikely to Prevent	05/01/2018	05/31/2018	15,000.00	YES
1085371	NDGLOCKNER	2) Reduce Likelihood	05/01/2018	12/31/2018	30,000.00	YES
1088826	NDGLOCKNER	3) Lessen Impact	05/31/2018	12/31/2018	10,000.00	NO

Action Effectiveness Definition

Value	Description
1) Prevent Reoccurrence	Action will Prevent Reoccurrence
2) Reduce Likelihood	Action will Reduce Likelihood of Reoccurrence
3) Lessen Impact	Action will Lessen Impact of Reoccurrence

4) Improvement / Unlikely to Prevent	An Improvement but not Likely to Prevent Reoccurrence
5) Impact Cannot be Determined	Action Impact Cannot be Determined at this Time

SunCoke Energy Environmental RCFA Report

RCFA Name:	20180328_HHO_005_HCC2_ Penthouse_Fire_Atomizer_Trip	Report Date:	03/28/2018
Report #:	8098	Site:	HH
RCFA Facilitator:	JAWATKINS	Location:	HH2 HRSG
RCFA Type:	Environmental	Location name:	PLANT 2 HRSG
Date of Occurrence:	Mar 28, 2018, 3:05 AM	Investigation Completed:	04/19/2018

Section1 - General Information

Executive Summary:

On March 28, 2018, at 2:55 am, the control room operator (CRO) lost communication with B-atomizer on HNCC2. The Outside Phase Operator responded by going to the MCC electrical building B3 to check to the breakers on the atomizers to see if they had tripped. The Outside Phase Operator found that A and C were still running, but B atomizer had tripped. The Outside Phase Operator then went to the SDA penthouse to investigate. When the Outside Phase Operator arrived, he found the B-atomizer control cabinet engulfed in flames. He quickly found a fire extinguisher and attempted to extinguish the fire. After he discharged 2 fire extinguishers on the fire, he realized that he could not extinguish the fire and notified the CRO to contact the guard shack to summon Green Local Fire Department (GLFD). GLFD arrived on site and extinguished the fire.

While waiting for GLFD, the CRO manually opened the SDA Baghouse bypass to avoid a high temperature in the baghouse and manually opened Emergency Vent Stacks #6-10 to stop process flow to the SDA to get the SDA Penthouse into a safe state.

Investigation immediately began to make sure the penthouse was in a safe condition, as well as, beginning to determine the needed repairs to return the SDA to service. Haverhill Supervision, Maintenance, and Contract Maintenance personnel began assessing the situation. Power was isolated to the penthouse, damaged equipment removed, and atomizer inlet duct insulation was removed. Once the penthouse was determined to be in a safe state, Operations returned the SDA to service. Operations personnel returned all HNCC2 Heat Recovery Steam Generators (HRSGs) #6-11 to service, all Emergency Vent Stacks #6-10 were closed, the SDA was brought online using just two of three atomizers, and the fabric filter baghouse was returned to service. Please refer to the bypass venting table included in Section 1a of this report for the stack lid open and close times. The total duration of the Emergency Vent Stack bypass venting was 81.1 hours.

This bypass venting event is suspected to have been caused by a combination of contributing factors including damaged electrical wiring that arced, the inadvertent application of water to lime (as a fire fighting measure) that resulted in an exothermic reaction, and the presence of oil soaked insulation that combusted. For addition information, refer to the Cause and Effect Analysis below.

Although HNCC is unable to determine exactly which of these sources sparked the fires, corrective actions are being evaluated to prevent the potential for these items to start a fire in the future. These potential actions include installation of secondary containments and flammable cabinets for oil in the penthouse, preventing the use of water in this area, and replacing any damaged electrical wiring in the penthouse.

SunCoke Energy Environmental RCFA Report

SunCoke Energy
The Higher Degree

Section 1a) Environmental Information

Did the stack lid bypass event result from planned FGD or HRSG maintenance?	No
Describe: The Bypass Venting Event occurred as the result of a fire.	

Were charge weights to affected ovens reduced to a 42.5 wet tons/oven average 48 hours prior to venting?	No
If no, provide explanation of why the charge weights were not reduced to a 42.5 wet ton average.	
Explanation: Bypass venting was a result of unplanned maintenance; therefore, charge weights could not be reduced at least 48 hours in advance. HRSG Bypass Venting was not expected to exceed 24 hours. Per the PMO plan, coal charge weights are reduced by approximately two tons per charging cycle during bypass venting events that are expected to exceed 24 hours.	

Did the coal charged during the bypass event contain less than 1.1% sulfur content?	Yes
If no, provide explanation of why the coal sulfur content was not reduced to a maximum of 1.1%.	
Explanation:	

Did multiple events involving stack lid open time occur within a 24 period?				Yes
If yes, please list the Maximo RCFA numbers here:	8096	8097		

P901					
Vent Stack No.	**#1**	**#2**	**#3**	**#4**	**#5**
Stack Lid Open Date/Time					
Stack Lid Close Date/Time					
Total Bypass Venting Time (mins)	0	0	0	0	0
Total Bypass Venting Time (hrs)	0.00	0.00	0.00	0.00	0.00

P902					
Vent Stack No.	**#6**	**#7**	**#8***	**#9**	**#10**
Stack Lid Open Date/Time	3/28/2018 3:05	3/28/2018 3:06	3/28/2018 3:08	3/28/2018 3:09	3/28/2018 3:10
Stack Lid Close Date/Time	3/28/18 19:20	3/28/18 18:15	3/28/18 21:13	3/28/18 19:15	3/28/18 18:33
Total Bypass Venting Time (mins)	975	909	1085	966	923
Total Bypass Venting Time (hrs)	16.25	15.15	18.08	16.10	15.38

Estimated Quantity of Emissions (tons)						
Pollutant:	**Lead**	0.0	**PM**	0.5	**SO_2**	6.7

Estimated Avg Coal Sulfur Content Charged Per Day (applies to all ovens charged each day):				
Date	**Avg S (%):**		**Date**	**Avg S (%):**
3/26/2018	0.79		3/28/2018	0.80
3/27/2018	0.96			

SunCoke Energy Environmental RCFA Report

SunCoke Energy
The Higher Degree

Estimated Avg Charge Tons per Oven Charged (avg over duration of event):				
No.	Estimated Avg Coal Charge Weight/		No.	Estimated Avg Coal Charge Weight/
101	43.74		102	42.64
105	43.79		106	42.80
109	43.68		110	42.77
113	43.77		114	42.62
117	43.72		118	42.83
103	43.22		104	43.70
107	45.24		108	43.13
111	44.74		112	43.30
115	44.73		116	43.67
119	44.71		120	44.13
121	43.65		122	42.70
125	43.75		126	42.66
129	42.76		130	42.69
133	43.74		134	42.69
137	43.74		138	42.74
123	44.68		124	44.20
127	44.80		128	44.19
131	44.69		132	-0.26
135	44.78		136	44.38
139	44.78		140	43.60
141	43.72		142	42.81
145	43.70		146	42.66
149	43.67		150	-0.26
153	43.70		154	42.76
157	43.74		158	42.72
143	44.62		144	43.98
147	44.57		148	43.32
151	44.73		152	44.11
155	44.74		156	44.08
159	44.68		160	43.36
161	43.67		162	42.87
165	43.72		166	42.90
169	43.70		170	42.69
173	43.60		174	42.74
177	43.65		178	43.00
163	44.45		164	44.43
167	44.32		168	44.48
171	44.50		172	44.59
175	44.40		176	44.54
179	44.28		180	44.63
181	43.67		182	42.81
185	43.65		186	42.82
189	43.68		190	42.89
193	43.67		194	42.93
197	43.65		198	42.89
183	44.30		184	44.74
187	44.40		188	44.70
191	44.30		192	43.84
195	44.32		196	44.92
199	44.31		200	42.80

Bypass Venting Emissions Calculations for Haverhill Coke Company No. 2

Emission Factors (for one bypass vent stack):

Lead	0.060	lb/hr	September 2016 Test, HNCC No. 2 FGD Outage
PM (Filt + Cond)	12.5	lb/hr	March 2018 Test, HNCC No. 1 FGD Outage
SO2	164.8	lb/hr	Calculated from 1st Half CEMs Data

Event Description: 20180318_HHO_005_HCC2_Penthouse_Fire_Atomizer_Trip (8098)

Start Date/Time of Bypass Venting: 3/28/2018 3:05

End Date/Time of Bypass Venting: 3/28/2018 21:13

Bypass Vent Stack Lid Open and Close Date/Time:

	#6	#7	#8	#9	#10
Open Date/Time:	3/28/2018 3:05	3/28/2018 3:06	3/28/2018 3:08	3/28/2018 3:09	3/28/2018 3:10
Close Date/Time:	3/28/18 19:20	3/28/18 18:15	3/28/18 21:13	3/28/18 19:15	3/28/18 18:33

Total Stack Lid Open Time per Bypass Vent Stack:

	#6	#7	#8	#9	#10
Hours:	16.3	15.1	18.1	16.1	15.4
Minutes:	975.0	909.0	1085.0	966.0	923.0

Total Bypass Venting Time:

Hours: 81.0 Minutes: 4858

Calculation of Bypass Venting Emissions:

Emissions = Emission Factor (lb/hr) x Total Hours of Bypass Venting x 1 ton/2000 lbs

	#6	#7	#8	#9	#10
Lead (lbs)	1.0	0.9	1.1	1.0	0.9
PM (lbs)	203.1	189.4	226.0	201.3	192.3
SO2 (lbs)	2678.0	2496.7	2980.1	2653.3	2535.2

Total Emissions from Bypass Venting Event

Total Emissions = Sum of Emissions from Each Affected Bypass Vent Stack

Total tons of Pollutant Emitted During Bypass Venting

Lead (tons)	0.0
PM (tons)	0.5
SO_2 (tons)	6.7

Section 2 - Investigation Information and Summary

Cause and Effect Analysis (include steps taken to minimize emissions, if applicable):
On March 28, 2018, at 2:55 am, the control room operator (CRO) lost communication with B atomizer on HNCC2. The Outside Phase Operator responded by going to the motor control center (MCC) electrical building B3 to check the breakers on the atomizers to see if they had tripped. The Outside Phase Operator found that A and C were still running, but B atomizer had tripped. The Outside Phase Operator then went to the Spray Dryer Absorber (SDA) penthouse to investigate. When the Outside Phase Operator arrived, the B atomizer control cabinet was engulfed in flames. This area had just been inspected less than an hour prior to the fire and no fire was noted. He quickly found a fire extinguisher and attempted to extinguish the fire. After discharging two fire extinguishers on the fire, the Outside Phase Operator notified the CRO to contact the guard shack to summon Green Local Fire Department (GLFD). GLFD arrived onsite and extinguished the fire. While waiting for GLFD, the CRO manually bypassed the SDA baghouse to avoid a high temperature in the baghouse, which would have resulted in bypass venting and also manually opened Emergency Bypass Vent Stacks #6-10 to stop process gas flow to the SDA to get the SDA Penthouse into a safe state. The investigation immediately began to make sure the penthouse was in a safe condition, and to determine the needed repairs to return the SDA to service. Haverhill supervision, maintenance, and contractor personnel began assessing the situation. Power was isolated to the penthouse, and damaged equipment and atomizer inlet duct insulation were removed. Once the penthouse was determined to be in a safe state, Operations personnel returned HNCC2 Heat Recovery Steam Generators (HRSGs) #6-11 to service and closed Emergency Vent Stacks #6-10. The SDA was brought online, using just two of three atomizers, and the fabric filter baghouse was returned to service. Prior to the March 28 incident, two contributing incidents occurred. On March 25, 2018, at approximately 3:10 pm, the CRO notified the Outside Phase Operator that B atomizer had tripped. The Outside Phase Operator went to the MCC electrical building B3 and reset the breaker for B atomizer and the atomizer started with no problem. The Outside Phase Operator then went to SDA penthouse and found a fire approximately 18 inches in diameter and about 3-4 inches high in front of the B atomizer control cabinet under the grating. The Outside Phase Operator extinguished the fire with a fire extinguisher. The Outside Phase Operator stated that the the oil pump can used to add oil to the atomizers appeared to be leaking and that the oil leaking from the can caught fire after it came into contact with a heat source that heated the oil above its flash point. After extinguishing the fire, the area was sprayed with a water hose on top of and under the insulation flashing. The leaking oil can was replaced and the fire extinguisher was replaced. Operations began a temporary protocol to make hourly rounds through the penthouse area over the next 24 hours. The second incident occurred the following morning, March 26, 2018, at approximately 10:26 am, when engineering personnel went to the SDA penthouse to evaluate the incident area. Upon arrival, a smoldering fire was discovered below the HNCC2 B atomizer cabinet on top of the inlet duct where there had been a fire with flames the previous day. The CRO, operations supervision, and the site Safety Manager were notified and investigation and cleanup were started. Several pictures were taken and several surface temperatures were taken of the B atomizer inlet duct with a handheld infrared (IR) thermometer. The smoldering insulation was then sprayed with water. Contractor personnel then began removing insulation flashing and insulating material from the affected area under and just south of B atomizer control cabinet. The process of safely removing the insulation and flashing took a significant amount of time due to its location and the higher temperatures in the incident area. Therefore, operations continued to make hourly rounds through the penthouse area while the insulation removal was ongoing. During the cleanup and investigation of the fire damage, potential contributing factors, other than the suspected leaking oil can, were found that could have caused the fire. A broken 3” conduit supplying power to B atomizer and damaged heat tracing circuit were found, which may have allowed arcing that could have caught the surrounding insulation contaminated with oil on fire. In addition, contact with the hot SDA roof may have heated the insulation contaminated with oil above the flashpoint of oil. During the cleanup, lime was found under the flashing of the insulation that was not visible during the immediate fire response. The application of water to lime can result in an exothermic reaction. The lime was inadvertently sprayed during the March 25th and 26th incident responses. Each of these may have acted as the heat source that ignited the oil and started the fire. Although HNCC is unable to determine exactly which of these sources sparked the fires, corrective actions are being evaluated to prevent the potential for these items to start a fire in the future. These potential actions include

installation of secondary containments and flammable cabinets for oil in the penthouse, preventing the use of water in this area, and replacing any damaged electrical wiring in the penthouse.

Section 3 - Causes

Cause	Description of Root Cause	Analysis of Root Cause (how did this contribute?)	Type of Cause	Cause Class	Repeat?
1665	Damaged Electrical Wiring	Damaged electrical wiring may have allowed arcing which could have caught surrounding combustibles on fire.	Root Cause	Physical Cause	NO
1666	Exothermic Lime Reaction	Water was used to cool and extinguish fires in this area on 3/25/18 and 3/26/18. Water was sprayed onto and under the insulation sheeting. Water application to Quicklime may produce exothermic reaction and release sufficient heat to ignite combustible material. At the time the water was applied, it was not known nor expected that lime was present under the insulation.	Root Cause	Human Cause	NO
1667	Combustible Materials Present	Oil contaminated insulation being present in the area provided fuel for the fire.	Secondary Cause	Systemic Cause	NO

Section 4 - Measures Reasonably Available to Prevent or Reduce Likelihood of Recurrence (Corrective Actions)

CA#	Description of Corrective Action	Analysis of Corrective Action
1085099	CD - strip Old insulation and replace with new	Removing the old insulation allows for cleanup of spilled lime and oil from underneath the insulation flashing and removes a source of combustible material.
1085100	CD - Replace B Atomizer Control Cabinet	Installing a new cabinet, hoses and wiring will improve the system integrity and reduce potential leaks.
1085102	CD - Replace control and power wiring to B Atomizer Cabinet	Replacing all wiring with new will remove all of the damaged wiring that could have contributed to the incident.
1085105	CD - Consider adding Fire Detection Alarm system in SDA Penthouse	Installing this will allow for quicker notification of a fire in the area which will allow for a quicker response to address the issue.
1085109	CD - Consider installing a drainage system in the penthouse to reduce fluids getting to roof of SDA.	Installing drainage system will reduce the amount of lime and oil that can get on the SDA roof and under the insulation flashing to prevent buildup of material.
1085111	CD - Consider installing secondary containment for atomizer used oil and pump	Installing secondary containment under the pumps and oil will reduce the amount of oil that can spill on the SDA roof and get under the insulation flashing.
1085113	CD - Consider installing flammable storage cabinet in Penthouse for oil storage	Installing flammable storage cabinets in the penthouse will provide a location to store oil that is not being used in the process at the time and will not be open to the elements of the room.
1085373	CD - Clean debris from under insluation flashing	Removing the old insulation allows for cleanup of spilled lime and oil from underneath the insulation flashing and removes a source of combustible material.
1085374	CD – Consider installing waste storage and spill clean up kit in Penthouse	Installing proper waste storage and providing a spill clean up kit will reduce the amount of spilled material getting onto the top of the insulation and draining under it.
1085377	CD – Consider installing monitoring camera in Penthouse with view into the control room	Installing a camera in the penthouse with a monitoring station in the control room will allow for more a quick response in the event of an incident.

Additional Corrective Action Information:

CA#	Responsible Person	Probable Effectiveness	Estimated Start Date of CA	Estimated Completion Date	Estimated Cost of Implementation	3rd Party Needed for Implementation?
1085099	CTCOLLIER	2) Reduce Likelihood	03/28/2018	06/01/2018	10,000.00	YES

1085100	NDGLOCKNER	2) Reduce Likelihood	03/30/2018	06/01/2018	80,000.00	YES
1085102	NDGLOCKNER	2) Reduce Likelihood	03/30/2018	06/01/2018	30,000.00	YES
1085105	AJTURNER	4) Improvement / Unlikely to Prevent	06/01/2018	12/31/2018	25,000.00	YES
1085109	AJTURNER	2) Reduce Likelihood	05/01/2018	12/31/2018	100,000.00	YES
1085111	CTCOLLIER	2) Reduce Likelihood	04/02/2018	06/01/2018	5,000.00	YES
1085113	CTCOLLIER	4) Improvement / Unlikely to Prevent	04/02/2018	06/01/2018	5,000.00	YES
1085373	CTCOLLIER	2) Reduce Likelihood	03/30/2018	08/01/2018	10,000.00	YES
1085374	MCTHOMPSON	4) Improvement / Unlikely to Prevent	05/01/2018	08/01/2018	5,000.00	YES
1085377	AJTURNER	4) Improvement / Unlikely to Prevent	06/01/2018	12/31/2018	15,000.00	YES

Action Effectiveness Definition

Value	Description
1) Prevent Reoccurrence	Action will Prevent Reoccurrence
2) Reduce Likelihood	Action will Reduce Likelihood of Reoccurrence
3) Lessen Impact	Action will Lessen Impact of Reoccurrence
4) Improvement / Unlikely to Prevent	An Improvement but not Likely to Prevent Reoccurrence
5) Impact Cannot be Determined	Action Impact Cannot be Determined at this Time

SunCoke Energy Environmental RCFA Report

SunCoke Energy
The Higher Degree

RCFA Name:	20180423_HHO_006_HRSG5_Loss_of_Draft	Report Date:	04/23/2018
Report #:	8169	Site:	HH
RCFA Facilitator:	LMILLER	Location:	H-6105
RCFA Type:	Environmental	Location name:	HRSG 05, RENTECH, BATTERY B
Date of Occurrence:	Apr 23, 2018, 1:44 AM	Investigation Completed:	05/21/2018

Section1 - General Information

Executive Summary:
This bypass venting event is a result of Redundant HRSG Tie in Time on HCC 1. Per paragraph 20.d. of the Consent Decree, information outlined in Paragraph 20.f. through 20.i. is not required for bypass venting events that are a result of Redundant HRSG Tie In Time.

SunCoke Energy Environmental RCFA Report

SunCoke Energy
The Higher Degree

Section 1a) Environmental Information

Did the stack lid bypass event result from planned FGD or HRSG maintenance?	No
Describe: The Bypass Venting Event was a result of a loss of draft at stack 5.	

Were charge weights to affected ovens reduced to a 42.5 wet tons/oven average 48 hours prior to venting?	No
If no, provide explanation of why the charge weights were not reduced to a 42.5 wet ton average.	
Explanation: Bypass venting was not a result of scheduled HRSG or FGD maintenance and HRSG Bypass Venting was not expected to exceed 24 hours. Per the PMO plan, coal charge weights are reduced by approximately two tons per charging cycle during bypass venting events that are expected to exceed 24 hours.	

Did the coal charged during the bypass event contain less than 1.1% sulfur content?	Yes
If no, provide explanation of why the coal sulfur content was not reduced to a maximum of 1.1%.	
Explanation:	

Did multiple events involving stack lid open time occur within a 24 period?				No
If yes, please list the Maximo RCFA numbers here:				

P901					
Vent Stack No.	**#1**	**#2**	**#3**	**#4**	**#5**
Stack Lid Open Date/Time					4/23/18 01:44
Stack Lid Close Date/Time					4/23/18 2:17
Total Bypass Venting Time (mins)	0	0	0	0	33
Total Bypass Venting Time (hrs)	0.00	0.00	0.00	0.00	0.55

P902					
Vent Stack No.	**#6**	**#7**	**#8**	**#9**	**#10**
Stack Lid Open Date/Time					
Stack Lid Close Date/Time					
Total Bypass Venting Time (mins)	0	0	0	0	0
Total Bypass Venting Time (hrs)	0.00	0.00	0.00	0.00	0.00

Estimated Quantity of Emissions (tons)						
Pollutant:	**Lead**	0.0	**PM**	0.0	**SO_2**	0.0

Estimated Avg Coal Sulfur Content Charged Per Day (applies to all ovens charged each day):				
Date	**Avg S (%):**		**Date**	**Avg S (%):**
4/21/2018	0.87		4/23/2018	0.86
4/22/2018	1.04			

SunCoke Energy Environmental RCFA Report

SunCoke Energy
The Higher Degree

Estimated Avg Charge Tons per Oven Charged (avg over duration of event):				
No.	Estimated Avg Coal Charge Weight/		No.	Estimated Avg Coal Charge Weight/
81	43.23		82	43.10
85	43.11		86	41.68
89	43.08		90	41.68
93	43.06		94	42.46
97	43.13		98	41.52
83	42.07		84	41.57
87	42.07		88	41.63
91	42.09		92	41.66
95	42.08		96	41.15
99	42.12		100	41.57

Bypass Venting Emissions Calculations for Haverhill Coke Company No. 1

Emission Factors (for one bypass vent stack):

Lead	0.080	lb/hr	March 2018 Test, HNCC No. 1 FGD Outage
PM (Filt + Cond)	12.5	lb/hr	March 2018 Test, HNCC No. 1 FGD Outage
SO2	175.2	lb/hr	Calculated from 1st Half CEMs Data

Corresponding RCFA Report: 20180423_HHO_006_HRSG5_Loss_of_Draft (8169)

Start Date/Time of Bypass Venting: 4/23/18 01:44

End Date/Time of Bypass Venting: 4/23/18 2:17

Bypass Vent Stack Lid Open and Close Date/Time:

	#1	#2	#3	#4	#5
Open Date/Time:					4/23/18 01:44
Close Date/Time:					4/23/18 2:17

Total Stack Lid Open Time per Bypass Vent Stack:

	#1	#2	#3	#4	#5
Hours:	0.0	0.0	0.0	0.0	0.5
Minutes:	0	0	0	0	33

Total Bypass Venting Time:

Hours: 0.5 Minutes: 33

Calculation of Bypass Venting Emissions:

Emissions = Emission Factor (lb/hr) x Total Hours of Bypass Venting x 1 ton/2000 lbs

	#1	#2	#3	#4	#5
Lead (lbs)	0.0	0.0	0.0	0.0	0.0
PM (lbs)	0.0	0.0	0.0	0.0	6.9
SO2 (lbs)	0.0	0.0	0.0	0.0	96.4

Total Emissions from Bypass Venting Event

Total Emissions = Sum of Emissions from Each Affected Bypass Vent Stack

Total lbs of Pollutant Emitted During Bypass Venting

Lead (tons)	0.0
PM (tons)	0.0
SO_2 (tons)	0.0

SunCoke Energy Environmental RCFA Report

SunCoke Energy
The Higher Degree

RCFA Name:	20180521_HHO_007_HRSG9_Trips	Report Date:	05/21/2018
Report #:	8253	Site:	HH
RCFA Facilitator:	KESINGLETON	Location:	H-6109
RCFA Type:	Environmental	Location name:	HRSG 09, HEAT RECOVERY STEAM GEN, NOOTER, BATTERY D
Date of Occurrence:	May 21, 2018, 8:39 AM	Investigation Completed:	06/20/2018

Section1 - General Information

Executive Summary:

On May 21, 2018, at 8:39 AM, the HNCC2 Heat Recovery Steam Generator (HRSG) #9 Emergency Vent Stack opened due to insufficient system draft. Low draft conditions continued during the day, causing the HRSG #9 Emergency Vent Stack to open intermittently throughout the day. There were several events that occurred leading up to this condition, as described herein. HRSG #9 was taken offline as scheduled the morning of May 20, 2018. In addition, two baghouse compartments were scheduled to be isolated so that filter bags could be changed out. With the FGD system in gas-sharing mode as a result of removing HRSG #9 from service and having five of six baghouse compartments online, HNCC operators noticed the FGD baghouse differential pressure (DP) increasing, the induced draft (ID) fan amps increasing and low system draft. The operators continued to monitor the situation and make adjustments to keep the parameters in the required ranges the rest of the day and overnight. At 7:32 AM on May 21st, the FGD baghouse DP went above 15" H2O. Operations personnel tried to lower the DP by manually cleaning baghouse compartments and by reducing the FGD inlet flow. Maintenance personnel also responded to check the pressure transmitters and check the system for leaks. Due to the low draft condition, the HRSG #9 Emergency Vent Stack initially tripped open from 8:39 AM to 8:40 AM on May 21st. Operations continued to experience high baghouse DP, high FGD fan amps and low draft. In an effort to keep the ID fans from tripping offline due to high fan amps which would result in opening all five stack lids, operations personnel opened the HRSG #9 Emergency Vent Stack from 1:20 PM to 1:48 PM. However, the system fluctuations continued, causing the HRSG #9 Emergency Vent Stack to open intermittently throughout the day. The system continued to experience periods of low draft and high baghouse DP until 11:38 PM when the B compartment of the baghouse was returned to normal operation after the filter bag change-out was completed. Please refer to the bypass venting table included in Section 1a of this report for the stack lid open and close times. The total duration of the Emergency Vent Stack bypass venting event was 0.65 hours.

The root cause of this bypass venting event was determined to be increased pressure drop across the SDA system due to SDA pluggage, SDA air in-leakage and ID fan inlet damper/vanes damage. This increase in pressure drop resulted in low system draft, which caused the Emergency Vent Stack to trip open.

The corrective actions identified for this bypass venting event include cleaning the SDA vessel to remove lime build-up, repairing the leaks/holes in the SDA, repairing the ID fan inlet damper/vanes and repairing the auto-pulsing system for the baghouse fabric filters. In addition, ID fan alarm settings will be reviewed and adjusted, as necessary.

SunCoke Energy Environmental RCFA Report

SunCoke Energy
The Higher Degree

Section 1a) Environmental Information

Did the stack lid bypass event result from planned FGD or HRSG maintenance?	No
Describe: The bypass venting was a result of a loss of draft due to increased pressure drop across the SDA system due to SDA pluggage, SDA air in-leakage, and ID fan inlet damper/vanes damage.	

Were charge weights to affected ovens reduced to a 42.5 wet tons/oven average 48 hours prior to venting?	No
If no, provide explanation of why the charge weights were not reduced to a 42.5 wet ton average.	
Explanation: Bypass venting was not a result of scheduled HRSG or FGD maintenance and HRSG Bypass Venting was not expected to exceed 24 hours. Per the PMO plan, coal charge weights are reduced by approximately two tons per charging cycle during bypass venting events that are expected to exceed 24 hours.	

Did the coal charged during the bypass event contain less than 1.1% sulfur content?	Yes
If no, provide explanation of why the coal sulfur content was not reduced to a maximum of 1.1%.	
Explanation:	

Did multiple events involving stack lid open time occur within a 24 period?				No
If yes, please list the Maximo RCFA numbers here:				

P901					
Vent Stack No.	**#1**	**#2**	**#3**	**#4**	**#5**
Stack Lid Open Date/Time					
Stack Lid Close Date/Time					
Total Bypass Venting Time (mins)	0	0	0	0	0
Total Bypass Venting Time (hrs)	0.00	0.00	0.00	0.00	0.00

P902					
Vent Stack No.	**#6**	**#7**	**#8**	**#9**	**#10**
Stack Lid Open Date/Time				5/21/18 8:39	
Stack Lid Close Date/Time				5/21/18 19:41	
Total Bypass Venting Time (mins)	0	0	0	39	0
Total Bypass Venting Time (hrs)	0.00	0.00	0.00	0.65	0.00

Estimated Quantity of Emissions (tons)						
Pollutant:	**Lead**	0	**PM**	0	**SO_2**	0

Estimated Avg Coal Sulfur Content Charged Per Day (applies to all ovens charged each day):				
Date	**Avg S (%):**		**Date**	**Avg S (%):**
5/19/2018	0.86		5/21/2018	0.84
5/20/2018	1.04			

SunCoke Energy Environmental RCFA Report

SunCoke Energy
The Higher Degree

Estimated Avg Charge Tons per Oven Charged (avg over duration of event):				
No.	**Estimated Avg Coal Charge Weight/**		**No.**	**Estimated Avg Coal Charge Weight/**
161	40.63		162	45.14
165	42.69		166	45.23
169	42.72		170	45.14
173	43.51		174	45.05
177	43.85		178	45.23
163	43.51		164	45.02
167	45.10		168	45.01
171	45.10		172	45.02
175	45.11		176	45.04
179	45.23		180	45.08

Bypass Venting Emissions Calculations for Haverhill Coke Company No. 2

Emission Factors (for one bypass vent stack)*:

Lead	0.060	lb/hr	September 2016 Test, HNCC No. 2 FGD Outage
PM (Filt + Cond)	12.5	lb/hr	March 2018 Test, HNCC No. 1 FGD Outage
SO2	164.8	lb/hr	Calculated from 1st Half CEMs Data

Event Description: 20180521_HHO_007_HRSG9_Trips (8253)

Start Date/Time of Bypass Venting: 5/21/2018 8:39

End Date/Time of Bypass Venting: 5/21/2018 19:41

Bypass Vent Stack Lid Open and Close Date/Time:

	#6	#7	#8	#9	#10
Open Date/Time:				5/21/18 8:39	
Close Date/Time:				5/21/18 8:40	

Total Stack Lid Open Time per Bypass Vent Stack:

	#6	#7	#8	#9	#10
Hours:	0.0	0.0	0.0	0.0	0.0
Minutes:	0	0	0	1	0

Total Bypass Venting Time:

Hours: 0.0 Minutes: 1

Calculation of Bypass Venting Emissions:

Emissions = Emission Factor (lb/hr) x Total Hours of Bypass Venting x 1 ton/2000 lbs

	#6	#7	#8	#9	#10
Lead (lbs)	0.0	0.0	0.0	0.0	0.0
PM (lbs)	0.0	0.0	0.0	0.2	0.0
SO2 (lbs)	0.0	0.0	0.0	2.7	0.0

Total Emissions from Bypass Venting Event

Total Emissions = Sum of Emissions from Each Affected Bypass Vent Stack

Total tons of Pollutant Emitted During Bypass Venting

Lead (tons)	0.0
PM (tons)	0.0
SO_2 (tons)	0.0

Bypass Venting Emissions Calculations for Haverhill Coke Company No. 2

Emission Factors (for one bypass vent stack)*:

Lead	0.060	lb/hr	September 2016 Test, HNCC No. 2 FGD Outage
PM (Filt + Cond)	12.5	lb/hr	March 2018 Test, HNCC No. 1 FGD Outage
SO2	164.8	lb/hr	Calculated from 1st Half CEMs Data

Event Description: 20180521_HHO_007_HRSG9_Trips (8253)

Start Date/Time of Bypass Venting: 5/21/2018 8:39

End Date/Time of Bypass Venting: 5/21/2018 19:41

Bypass Vent Stack Lid Open and Close Date/Time:

	#6	#7	#8	#9	#10
Open Date/Time:				5/21/18 13:20	
Close Date/Time:				5/21/18 13:48	

Total Stack Lid Open Time per Bypass Vent Stack:

	#6	#7	#8	#9	#10
Hours:	0.0	0.0	0.0	0.5	0.0
Minutes:	0	0	0	28	0

Total Bypass Venting Time:

Hours: 0.5 Minutes: 28

Calculation of Bypass Venting Emissions:

Emissions = Emission Factor (lb/hr) x Total Hours of Bypass Venting x 1 ton/2000 lbs

	#6	#7	#8	#9	#10
Lead (lbs)	0.0	0.0	0.0	0.0	0.0
PM (lbs)	0.0	0.0	0.0	5.8	0.0
SO2 (lbs)	0.0	0.0	0.0	76.9	0.0

Total Emissions from Bypass Venting Event

Total Emissions = Sum of Emissions from Each Affected Bypass Vent Stack

Total tons of Pollutant Emitted During Bypass Venting

Lead (tons)	0.0
PM (tons)	0.0
SO_2 (tons)	0.0

Bypass Venting Emissions Calculations for Haverhill Coke Company No. 2

Emission Factors (for one bypass vent stack)*:

Lead	0.060	lb/hr	September 2016 Test, HNCC No. 2 FGD Outage
PM (Filt + Cond)	12.5	lb/hr	March 2018 Test, HNCC No. 1 FGD Outage
SO2	164.8	lb/hr	Calculated from 1st Half CEMs Data

Event Description: 20180521_HHO_007_HRSG9_Trips (8253)

Start Date/Time of Bypass Venting: 5/21/2018 8:39

End Date/Time of Bypass Venting: 5/21/2018 19:41

Bypass Vent Stack Lid Open and Close Date/Time:

	#6	#7	#8	#9	#10
Open Date/Time:				5/21/18 13:49	
Close Date/Time:				5/21/18 13:50	

Total Stack Lid Open Time per Bypass Vent Stack:

	#6	#7	#8	#9	#10
Hours:	0.0	0.0	0.0	0.0	0.0
Minutes:	0	0	0	1	0

Total Bypass Venting Time:

Hours: 0.0 Minutes: 1

Calculation of Bypass Venting Emissions:

Emissions = Emission Factor (lb/hr) x Total Hours of Bypass Venting x 1 ton/2000 lbs

	#6	#7	#8	#9	#10
Lead (lbs)	0.0	0.0	0.0	0.0	0.0
PM (lbs)	0.0	0.0	0.0	0.2	0.0
SO2 (lbs)	0.0	0.0	0.0	2.7	0.0

Total Emissions from Bypass Venting Event

Total Emissions = Sum of Emissions from Each Affected Bypass Vent Stack

Total tons of Pollutant Emitted During Bypass Venting

Lead (tons)	0.0
PM (tons)	0.0
SO_2 (tons)	0.0

Bypass Venting Emissions Calculations for Haverhill Coke Company No. 2

Emission Factors (for one bypass vent stack)*:

Lead	0.060	lb/hr	September 2016 Test, HNCC No. 2 FGD Outage
PM (Filt + Cond)	12.5	lb/hr	March 2018 Test, HNCC No. 1 FGD Outage
SO2	164.8	lb/hr	Calculated from 1st Half CEMs Data

Event Description: 20180521_HHO_007_HRSG9_Trips (8253)

Start Date/Time of Bypass Venting: 5/21/2018 8:39

End Date/Time of Bypass Venting: 5/21/2018 19:41

Bypass Vent Stack Lid Open and Close Date/Time:

	#6	#7	#8	#9	#10
Open Date/Time:				5/21/18 14:26	
Close Date/Time:				5/21/18 14:27	

Total Stack Lid Open Time per Bypass Vent Stack:

	#6	#7	#8	#9	#10
Hours:	0.0	0.0	0.0	0.0	0.0
Minutes:	0	0	0	1	0

Total Bypass Venting Time:

Hours: 0.0 Minutes: 1

Calculation of Bypass Venting Emissions:

Emissions = Emission Factor (lb/hr) x Total Hours of Bypass Venting x 1 ton/2000 lbs

	#6	#7	#8	#9	#10
Lead (lbs)	0.0	0.0	0.0	0.0	0.0
PM (lbs)	0.0	0.0	0.0	0.2	0.0
SO2 (lbs)	0.0	0.0	0.0	2.7	0.0

Total Emissions from Bypass Venting Event

Total Emissions = Sum of Emissions from Each Affected Bypass Vent Stack

Total tons of Pollutant Emitted During Bypass Venting

Lead (tons)	0.0
PM (tons)	0.0
SO_2 (tons)	0.0

Bypass Venting Emissions Calculations for Haverhill Coke Company No. 2

Emission Factors (for one bypass vent stack)*:

Lead	0.060	lb/hr	September 2016 Test, HNCC No. 2 FGD Outage
PM (Filt + Cond)	12.5	lb/hr	March 2018 Test, HNCC No. 1 FGD Outage
SO2	164.8	lb/hr	Calculated from 1st Half CEMs Data

Event Description: 20180521_HHO_007_HRSG9_Trips (8253)

Start Date/Time of Bypass Venting: 5/21/2018 8:39

End Date/Time of Bypass Venting: 5/21/2018 19:41

Bypass Vent Stack Lid Open and Close Date/Time:

	#6	#7	#8	#9	#10
Open Date/Time:				5/21/18 14:51	
Close Date/Time:				5/21/18 14:53	

Total Stack Lid Open Time per Bypass Vent Stack:

	#6	#7	#8	#9	#10
Hours:	0.0	0.0	0.0	0.0	0.0
Minutes:	0	0	0	2	0

Total Bypass Venting Time:

Hours: 0.0 Minutes: 2

Calculation of Bypass Venting Emissions:

Emissions = Emission Factor (lb/hr) x Total Hours of Bypass Venting x 1 ton/2000 lbs

	#6	#7	#8	#9	#10
Lead (lbs)	0.0	0.0	0.0	0.0	0.0
PM (lbs)	0.0	0.0	0.0	0.4	0.0
SO2 (lbs)	0.0	0.0	0.0	5.5	0.0

Total Emissions from Bypass Venting Event

Total Emissions = Sum of Emissions from Each Affected Bypass Vent Stack

Total tons of Pollutant Emitted During Bypass Venting

Lead (tons)	0.0
PM (tons)	0.0
SO_2 (tons)	0.0

Bypass Venting Emissions Calculations for Haverhill Coke Company No. 2

Emission Factors (for one bypass vent stack)*:

Lead	0.060	lb/hr	September 2016 Test, HNCC No. 2 FGD Outage
PM (Filt + Cond)	12.5	lb/hr	March 2018 Test, HNCC No. 1 FGD Outage
SO2	164.8	lb/hr	Calculated from 1st Half CEMs Data

Event Description: 20180521_HHO_007_HRSG9_Trips (8253)

Start Date/Time of Bypass Venting: 5/21/2018 8:39

End Date/Time of Bypass Venting: 5/21/2018 19:41

Bypass Vent Stack Lid Open and Close Date/Time:

	#6	#7	#8	#9	#10
Open Date/Time:				5/21/18 15:13	
Close Date/Time:				5/21/18 15:14	

Total Stack Lid Open Time per Bypass Vent Stack:

	#6	#7	#8	#9	#10
Hours:	0.0	0.0	0.0	0.0	0.0
Minutes:	0	0	0	1	0

Total Bypass Venting Time:

Hours: 0.0 Minutes: 1

Calculation of Bypass Venting Emissions:

Emissions = Emission Factor (lb/hr) x Total Hours of Bypass Venting x 1 ton/2000 lbs

	#6	#7	#8	#9	#10
Lead (lbs)	0.0	0.0	0.0	0.0	0.0
PM (lbs)	0.0	0.0	0.0	0.2	0.0
SO2 (lbs)	0.0	0.0	0.0	2.7	0.0

Total Emissions from Bypass Venting Event

Total Emissions = Sum of Emissions from Each Affected Bypass Vent Stack

Total tons of Pollutant Emitted During Bypass Venting

Lead (tons)	0.0
PM (tons)	0.0
SO_2 (tons)	0.0

Bypass Venting Emissions Calculations for Haverhill Coke Company No. 2

Emission Factors (for one bypass vent stack)*:

Lead	0.060	lb/hr	September 2016 Test, HNCC No. 2 FGD Outage
PM (Filt + Cond)	12.5	lb/hr	March 2018 Test, HNCC No. 1 FGD Outage
SO2	164.8	lb/hr	Calculated from 1st Half CEMs Data

Event Description: 20180521_HHO_007_HRSG9_Trips (8253)

Start Date/Time of Bypass Venting: 5/21/2018 8:39

End Date/Time of Bypass Venting: 5/21/2018 19:41

Bypass Vent Stack Lid Open and Close Date/Time:

	#6	#7	#8	#9	#10
Open Date/Time:				5/21/18 18:52	
Close Date/Time:				5/21/18 18:53	

Total Stack Lid Open Time per Bypass Vent Stack:

	#6	#7	#8	#9	#10
Hours:	0.0	0.0	0.0	0.0	0.0
Minutes:	0	0	0	1	0

Total Bypass Venting Time:

Hours: 0.0 Minutes: 1

Calculation of Bypass Venting Emissions:

Emissions = Emission Factor (lb/hr) x Total Hours of Bypass Venting x 1 ton/2000 lbs

	#6	#7	#8	#9	#10
Lead (lbs)	0.0	0.0	0.0	0.0	0.0
PM (lbs)	0.0	0.0	0.0	0.2	0.0
SO2 (lbs)	0.0	0.0	0.0	2.7	0.0

Total Emissions from Bypass Venting Event

Total Emissions = Sum of Emissions from Each Affected Bypass Vent Stack

Total tons of Pollutant Emitted During Bypass Venting

Lead (tons)	0.0
PM (tons)	0.0
SO_2 (tons)	0.0

Bypass Venting Emissions Calculations for Haverhill Coke Company No. 2

Emission Factors (for one bypass vent stack)*:

Lead	0.060	lb/hr	September 2016 Test, HNCC No. 2 FGD Outage
PM (Filt + Cond)	12.5	lb/hr	March 2018 Test, HNCC No. 1 FGD Outage
SO2	164.8	lb/hr	Calculated from 1st Half CEMs Data

Event Description: 20180521_HHO_007_HRSG9_Trips (8253)

Start Date/Time of Bypass Venting: 5/21/2018 8:39

End Date/Time of Bypass Venting: 5/21/2018 19:41

Bypass Vent Stack Lid Open and Close Date/Time:

	#6	#7	#8	#9	#10
Open Date/Time:				5/21/18 19:01	
Close Date/Time:				5/21/18 19:02	

Total Stack Lid Open Time per Bypass Vent Stack:

	#6	#7	#8	#9	#10
Hours:	0.0	0.0	0.0	0.0	0.0
Minutes:	0	0	0	1	0

Total Bypass Venting Time:

Hours: 0.0 Minutes: 1

Calculation of Bypass Venting Emissions:

Emissions = Emission Factor (lb/hr) x Total Hours of Bypass Venting x 1 ton/2000 lbs

	#6	#7	#8	#9	#10
Lead (lbs)	0.0	0.0	0.0	0.0	0.0
PM (lbs)	0.0	0.0	0.0	0.2	0.0
SO2 (lbs)	0.0	0.0	0.0	2.7	0.0

Total Emissions from Bypass Venting Event

Total Emissions = Sum of Emissions from Each Affected Bypass Vent Stack

Total tons of Pollutant Emitted During Bypass Venting

Lead (tons)	0.0
PM (tons)	0.0
SO_2 (tons)	0.0

Bypass Venting Emissions Calculations for Haverhill Coke Company No. 2

Emission Factors (for one bypass vent stack)*:

Lead	0.060	lb/hr	September 2016 Test, HNCC No. 2 FGD Outage
PM (Filt + Cond)	12.5	lb/hr	March 2018 Test, HNCC No. 1 FGD Outage
SO2	164.8	lb/hr	Calculated from 1st Half CEMs Data

Event Description: 20180521_HHO_007_HRSG9_Trips (8253)

Start Date/Time of Bypass Venting: 5/21/2018 8:39

End Date/Time of Bypass Venting: 5/21/2018 19:41

Bypass Vent Stack Lid Open and Close Date/Time:

	#6	#7	#8	#9	#10
Open Date/Time:				5/21/18 19:03	
Close Date/Time:				5/21/18 19:04	

Total Stack Lid Open Time per Bypass Vent Stack:

	#6	#7	#8	#9	#10
Hours:	0.0	0.0	0.0	0.0	0.0
Minutes:	0	0	0	1	0

Total Bypass Venting Time:

Hours: 0.0 Minutes: 1

Calculation of Bypass Venting Emissions:

Emissions = Emission Factor (lb/hr) x Total Hours of Bypass Venting x 1 ton/2000 lbs

	#6	#7	#8	#9	#10
Lead (lbs)	0.0	0.0	0.0	0.0	0.0
PM (lbs)	0.0	0.0	0.0	0.2	0.0
SO2 (lbs)	0.0	0.0	0.0	2.7	0.0

Total Emissions from Bypass Venting Event

Total Emissions = Sum of Emissions from Each Affected Bypass Vent Stack

Total tons of Pollutant Emitted During Bypass Venting

Lead (tons)	0.0
PM (tons)	0.0
SO_2 (tons)	0.0

Bypass Venting Emissions Calculations for Haverhill Coke Company No. 2

Emission Factors (for one bypass vent stack)*:

Lead	0.060	lb/hr	September 2016 Test, HNCC No. 2 FGD Outage
PM (Filt + Cond)	12.5	lb/hr	March 2018 Test, HNCC No. 1 FGD Outage
SO2	164.8	lb/hr	Calculated from 1st Half CEMs Data

Event Description: 20180521_HHO_007_HRSG9_Trips (8253)

Start Date/Time of Bypass Venting: 5/21/2018 8:39

End Date/Time of Bypass Venting: 5/21/2018 19:41

Bypass Vent Stack Lid Open and Close Date/Time:

	#6	#7	#8	#9	#10
Open Date/Time:				5/21/18 19:39	
Close Date/Time:				5/21/18 19:41	

Total Stack Lid Open Time per Bypass Vent Stack:

	#6	#7	#8	#9	#10
Hours:	0.0	0.0	0.0	0.0	0.0
Minutes:	0	0	0	2	0

Total Bypass Venting Time:

Hours: 0.0 Minutes: 2

Calculation of Bypass Venting Emissions:

Emissions = Emission Factor (lb/hr) x Total Hours of Bypass Venting x 1 ton/2000 lbs

	#6	#7	#8	#9	#10
Lead (lbs)	0.0	0.0	0.0	0.0	0.0
PM (lbs)	0.0	0.0	0.0	0.4	0.0
SO2 (lbs)	0.0	0.0	0.0	5.5	0.0

Total Emissions from Bypass Venting Event

Total Emissions = Sum of Emissions from Each Affected Bypass Vent Stack

Total tons of Pollutant Emitted During Bypass Venting

Lead (tons)	0.0
PM (tons)	0.0
SO_2 (tons)	0.0

Section 2 - Investigation Information and Summary

Cause and Effect Analysis (include steps taken to minimize emissions, if applicable):
On May 21, 2018, at 8:39 AM, the HNCC2 Heat Recovery Steam Generator (HRSG) #9 Emergency Vent Stack opened due to insufficient system draft. Low draft conditions continued during the day, causing the HRSG #9 Emergency Vent Stack to open intermittently throughout the day. There were several events that occurred leading up to this condition, as described herein. HRSG #9 was taken offline as scheduled the morning of May 20, 2018. In addition, two baghouse compartments were scheduled to be isolated so that filter bags could be changed out. The first compartment, Compartment D, was isolated, the filter bags changed out, and the compartment returned to service over the previous weekend. After shutting down HRSG #9 at 11:25 AM on May 20th, the second baghouse compartment (Compartment B) was isolated at 12:27 PM on May 20th for filter bag replacement. With the FGD system in gas-sharing mode and five of six baghouse compartments online, HNCC operators noticed the FGD baghouse differential pressure (DP) increasing, the induced draft (ID) fan amps increasing and low system draft. The operators continued to monitor the situation and make adjustments to keep the parameters in the required ranges the rest of the day and overnight. At 7:32 AM on May 21st, the FGD baghouse DP went above 15” H2O. Operations personnel tried to lower the DP by manually cleaning baghouse compartments and by reducing the FGD inlet flow. Maintenance personnel also responded to check the pressure transmitters and check the system for leaks. Due to the low draft condition, the HRSG #9 Emergency Vent Stack initially tripped open from 8:39 AM to 8:40 AM on May 21st. Operations continued to experience high baghouse DP, high FGD fan amps and low draft. In an effort to keep the ID fans from tripping offline due to high fan amps which would result in opening all five stack lids, operations personnel opened the HRSG #9 Emergency Vent Stack from 1:20 PM to 1:48 PM. However, the system fluctuations continued, causing the HRSG #9 Emergency Vent Stack to open intermittently throughout the day. The system continued to experience periods of low draft and high baghouse DP until 11:38 PM when the B compartment of the baghouse was returned to normal operation after the filter bag change-out was completed. The root cause of this bypass venting event was determined to be increased pressure drop across the SDA system due to SDA pluggage, SDA air in-leakage and ID fan inlet damper/vanes damage. This increase in pressure drop resulted in low system draft, which caused the Emergency Vent Stack to trip open. The corrective actions identified for this bypass venting event include cleaning the SDA vessel to remove lime build-up, repairing the leaks/holes in the SDA, repairing the ID fan inlet damper/vanes and repairing the auto-pulsing system for the baghouse fabric filters. In addition, ID fan alarm settings will be reviewed and adjusted, as necessary.

SunCoke Energy Environmental RCFA Report

SunCoke Energy
The Higher Degree

Section 3 - Causes

Cause	Description of Root Cause	Analysis of Root Cause (how did this contribute?)	Type of Cause	Cause Class	Repeat?
1745	Increased pressure drop across the SDA system	The root cause of this bypass venting event was determined to be increased pressure drop across the SDA system due to SDA pluggage, SDA air in-leakage and ID fan inlet damper/vanes damage. This increase in pressure drop resulted in low system draft, which caused the Emergency Vent Stack to trip open.	Root Cause	Physical Cause	NO

Section 4 - Measures Reasonably Available to Prevent or Reduce Likelihood of Recurrence (Corrective Actions)

CA#	Description of Corrective Action	Analysis of Corrective Action
1098695	CD-Repair Leaks/Holes in HH2 SDA	Repairing leaks/holes in the SDA will reduce the system pressure drop by reducing air in-leakage and reducing moisture inside the SDA which can lead to material build-up and pluggage.
1098696	CD-Evaluate and Correct if needed ID Fan Alarm Settings	Adjusting ID fan amp alarms will allow the ID fan to run at higher amps
1098698	CD-Repair ID Fan Inlet Dampers/Vanes	Repairing the ID fan inlet damper/vanes will allow proper air flow and reduce the overall system pressure drop.
1098699	CD-Clean SDA System Lime Buildup	Cleaning the SDA system will remove lime buildup and blockage and reduce the overall system pressure drop.
1098700	CD-Repair Auto Pulsing System for FF Baghouse	Repairing the auto-pulsing system will help maintain the proper baghouse pressure drop and maintain fabric filter life.

Additional Corrective Action Information:

CA#	Responsible Person	Probable Effectiveness	Estimated Start Date of CA	Estimated Completion Date	Estimated Cost of Implementation	3rd Party Needed for Implementation?
1098695	AJTURNER	2) Reduce Likelihood	06/04/2018	08/01/2018	3,000,000.00	YES
1098696	MMUHLBAIER	2) Reduce Likelihood	05/21/2018	10/01/2018	5,000.00	NO
1098698	CTCOLLIER	2) Reduce Likelihood	06/04/2018	08/01/2018	20,000.00	YES
1098699	LMILLER	2) Reduce Likelihood	06/04/2018	08/01/2018	100,000.00	YES
1098700	CTCOLLIER	2) Reduce Likelihood	06/04/2018	09/01/2018	20,000.00	YES

Action Effectiveness Definition

Value	Description
1) Prevent Reoccurrence	Action will Prevent Reoccurrence
2) Reduce Likelihood	Action will Reduce Likelihood of Reoccurrence
3) Lessen Impact	Action will Lessen Impact of Reoccurrence
4) Improvement / Unlikely to Prevent	An Improvement but not Likely to Prevent Reoccurrence
5) Impact Cannot be Determined	Action Impact Cannot be Determined at this Time

SunCoke Energy Environmental RCFA Report

RCFA Name:	20180603_ HHO_009_HCC2_FGD_Scheduled_Maintenance_Outage	Report Date:	06/03/2018
Report #:	8367	Site:	HH
RCFA Facilitator:	DMSTARKWEATHER	Location:	HH2 HRSG
RCFA Type:	Environmental	Location name:	PLANT 2 HRSG
Date of Occurrence:	Jun 3, 2018, 6:06 PM	Investigation Completed:	07/12/2018

Section1 - General Information

Executive Summary:

This bypass venting event is a result of Redundant HRSG Tie in Time. The Tie in Time consisted of extensive work on the HNCC No 2 Spray Dryer Absorber (SDA) vessel, part of the Flue Gas Desulfurization (FGD) Unit. This work was required to ensure long term reliability of the SDA and FGD during gas-sharing operation. Other maintenance work, including Scheduled HRSG Maintenance on two HRSGs and Scheduled FGD Maintenance, was coordinated and conducted concurrently to minimize bypass venting in accordance with HNCC's PMO Plan. HNCC received OEPA Director's Approval for the Scheduled FGD maintenance on May 10, 2018. Pursuant to paragraph 20.d. of the Consent Decree, information outlined in Paragraph 20.f. through 20.i., is not required to be included in the RCFA for bypass venting events that are a result of Scheduled HRSG Maintenance, Scheduled FGD Maintenance or Redundant HRSG Tie in Time.

SunCoke Energy Environmental RCFA Report

SunCoke Energy
The Higher Degree

Section 1a) Environmental Information

Did the stack lid bypass event result from planned FGD or HRSG maintenance?	Yes
Describe: The Bypass Venting Event was a result of completing Scheduled FGD Maintenance on HCC No. 2.	

Were charge weights to affected ovens reduced to a 42.5 wet tons/oven average 48 hours prior to venting?	Yes
If no, provide explanation of why the charge weights were not reduced to a 42.5 wet ton average.	
Explanation:	

Did the coal charged during the bypass event contain less than 1.1% sulfur content?	Yes
If no, provide explanation of why the coal sulfur content was not reduced to a maximum of 1.1%.	
Explanation:	

Did multiple events involving stack lid open time occur within a 24 period?				Yes
If yes, please list the Maximo RCFA numbers here:	8351			

P901					
Vent Stack No.	**#1**	**#2**	**#3**	**#4**	**#5**
Stack Lid Open Date/Time					
Stack Lid Close Date/Time					
Total Bypass Venting Time (mins)	0	0	0	0	0
Total Bypass Venting Time (hrs)	0.00	0.00	0.00	0.00	0.00

P902					
Vent Stack No.	**#6**	**#7**	**#8**	**#9**	**#10**
Stack Lid Open Date/Time	6/3/2018 18:06	6/3/2018 18:34	6/3/2018 18:45	6/3/2018 18:52	6/3/2018 18:25
Stack Lid Close Date/Time	7/7/2018 16:30	7/7/2018 16:33	7/7/2018 17:25	7/7/2018 17:37	7/7/2018 23:59
Total Bypass Venting Time (mins)	48864	48839	48843	48864	49090
Total Bypass Venting Time (hrs)	814.40	813.98	814.05	814.40	818.17

Estimated Quantity of Emissions (tons)						
Pollutant:	**Lead**	0.1	**PM**	25.5	**SO_2**	335.8

Estimated Avg Coal Sulfur Content Charged Per Day (applies to all ovens charged each day):				
Date	**Avg S (%):**		**Date**	**Avg S (%):**
6/2/2018	0.83		6/20/2018	0.81
6/3/2018	0.82		6/21/2018	0.93
6/4/2018	0.80		6/22/2018	0.81
6/5/2018	0.94		6/23/2018	0.95
6/6/2018	0.87		6/24/2018	0.82
6/7/2018	0.92		6/25/2018	0.92
6/8/2018	0.78		6/26/2018	0.82
6/9/2018	0.9		6/27/2018	0.87
6/10/2018	0.82		6/28/2018	0.82
6/11/2018	0.91		6/29/2018	0.9
6/12/2018	0.82		6/30/2018	0.82
6/13/2018	0.96		7/1/2018	0.86
6/14/2018	0.81		7/2/2018	0.8
6/15/2018	0.94		7/3/2018	0.83
6/16/2018	0.8		7/4/2018	0.78
6/17/2018	0.92		7/5/2018	0.86
6/18/2018	0.81		7/6/2018	0.81
6/19/2018	0.96		7/7/2018	0.82

SunCoke Energy Environmental RCFA Report

SunCoke Energy
The Higher Degree

Estimated Avg Charge Tons per Oven Charged (avg over duration of event):				
Affected Oven No.	Estimated Avg Coal Charge Weight/ Oven:		Affected Oven No.	Estimated Avg Coal Charge Weight/ Oven:
101	41.96		102	41.90
105	41.93		106	41.89
109	41.93		110	41.90
113	41.87		114	41.90
117	41.96		118	41.90
103	41.89		104	33.43
107	41.87		108	41.90
111	41.98		112	41.89
115	41.90		116	41.95
119	41.89		120	33.44
121	41.89		122	34.29
125	41.86		126	41.87
129	41.93		130	41.87
133	41.95		134	41.88
137	41.93		138	41.87
123	41.88		124	41.95
127	41.91		128	41.87
131	41.89		132	41.86
135	41.87		136	34.28
139	41.89		140	41.87
141	41.94		142	41.92
145	41.86		146	41.91
149	41.88		150	41.90
153	41.85		154	41.87
157	41.88		158	41.88
143	41.99		144	41.92
147	41.88		148	42.00
151	41.88		152	41.92
155	41.89		156	41.90
159	41.92		160	42.01
161	41.85		162	41.90
165	41.84		166	41.88
169	42.02		170	41.92
173	41.87		174	41.92
177	41.90		178	41.90
163	41.90		164	41.94
167	41.94		168	41.87
171	41.95		172	41.89
175	41.86		176	41.89
179	41.93		180	41.92
181	41.84		182	41.88
185	41.85		186	41.89
189	41.94		190	41.89
193	41.96		194	41.87
197	41.79		198	41.87
183	41.87		184	41.89
187	41.85		188	41.89
191	41.95		192	41.92
195	41.83		196	41.90
199	41.92		200	41.97

Bypass Venting Emissions Calculations for Haverhill Coke Company No. 2

Emission Factors (for one bypass vent stack)*:

Lead	0.060	lb/hr	September 2016 Test, HNCC No. 2 FGD Outage
PM (Filt + Cond)	12.5	lb/hr	March 2018 Test, HNCC No. 1 FGD Outage
SO2	164.8	lb/hr	Calculated from 1st Half CEMs Data

Event Description: 20180603_ HHO_009_HCC2_FGD_Scheduled_Maintenance_Outage (8367)

Start Date/Time of Bypass Venting: 6/3/2018 18:06

End Date/Time of Bypass Venting: 7/7/2018 23:59

Bypass Vent Stack Lid Open and Close Date/Time:

	#6	#7	#8	#9	#10
Open Date/Time:	6/3/2018 18:06	6/3/2018 18:34	6/3/2018 18:45	6/3/2018 18:52	6/3/2018 18:25
Close Date/Time:	7/7/2018 16:30	7/7/2018 16:33	7/7/2018 16:43	7/7/2018 17:03	7/7/2018 16:57

Total Stack Lid Open Time per Bypass Vent Stack:

	#6	#7	#8	#9	#10
Hours:	814.4	814.0	814.0	814.2	814.5
Minutes:	48864.0	48839.0	48838.0	48851.0	48872.0

Total Bypass Venting Time:

Hours: 4071.1 Minutes: 244264

Calculation of Bypass Venting Emissions:

Emissions = Emission Factor (lb/hr) x Total Hours of Bypass Venting x 1 ton/2000 lbs

	#6	#7	#8	#9	#10
Lead (lbs)	48.9	48.8	48.8	48.9	48.9
PM (lbs)	10180.0	10174.8	10174.6	10177.3	10181.7
SO2 (lbs)	134213.1	134144.5	134141.7	134177.4	134235.1

Total Emissions from Bypass Venting Event

Total Emissions = Sum of Emissions from Each Affected Bypass Vent Stack

Total tons of Pollutant Emitted During Bypass Venting

Lead (tons)	0.1
PM (tons)	25.4
SO_2 (tons)	335.5

Bypass Venting Emissions Calculations for Haverhill Coke Company No. 2

Emission Factors (for one bypass vent stack)*:

Lead	0.060	lb/hr	September 2016 Test, HNCC No. 2 FGD Outage
PM (Filt + Cond)	12.5	lb/hr	March 2018 Test, HNCC No. 1 FGD Outage
SO2	164.8	lb/hr	Calculated from 1st Half CEMs Data

Event Description: 20180603_ HHO_009_HCC2_FGD_Scheduled_Maintenance_Outage (8367)

Start Date/Time of Bypass Venting: 6/3/2018 18:06

End Date/Time of Bypass Venting: 7/7/2018 23:59

Bypass Vent Stack Lid Open and Close Date/Time:

	#6	#7	#8	#9	#10
Open Date/Time:			7/7/2018 17:20	7/7/2018 17:20	7/7/2018 17:20
Close Date/Time:			7/7/2018 17:25	7/7/2018 17:29	7/7/2018 17:56

Total Stack Lid Open Time per Bypass Vent Stack:

	#6	#7	#8	#9	#10
Hours:	0.0	0.0	0.1	0.2	0.6
Minutes:	0.0	0.0	5.0	9.0	36.0

Total Bypass Venting Time:

Hours: 0.8 Minutes: 50

Calculation of Bypass Venting Emissions:

Emissions = Emission Factor (lb/hr) x Total Hours of Bypass Venting x 1 ton/2000 lbs

	#6	#7	#8	#9	#10
Lead (lbs)	0.0	0.0	0.0	0.0	0.0
PM (lbs)	0.0	0.0	1.0	1.9	7.5
SO2 (lbs)	0.0	0.0	13.7	24.7	98.9

Total Emissions from Bypass Venting Event

Total Emissions = Sum of Emissions from Each Affected Bypass Vent Stack

Total tons of Pollutant Emitted During Bypass Venting

Lead (tons)	0.0
PM (tons)	0.0
SO_2 (tons)	0.1

Bypass Venting Emissions Calculations for Haverhill Coke Company No. 2

Emission Factors (for one bypass vent stack)*:

Lead	0.060	lb/hr	September 2016 Test, HNCC No. 2 FGD Outage
PM (Filt + Cond)	12.5	lb/hr	March 2018 Test, HNCC No. 1 FGD Outage
SO2	164.8	lb/hr	Calculated from 1st Half CEMs Data

Event Description: 20180603_ HHO_009_HCC2_FGD_Scheduled_Maintenance_Outage (8367)

Start Date/Time of Bypass Venting: 6/3/2018 18:06

End Date/Time of Bypass Venting: 7/7/2018 23:59

Bypass Vent Stack Lid Open and Close Date/Time:

	#6	#7	#8	#9	#10
Open Date/Time:				7/7/2018 17:33	7/7/2018 18:29
Close Date/Time:				7/7/2018 17:37	7/7/2018 18:45

Total Stack Lid Open Time per Bypass Vent Stack:

	#6	#7	#8	#9	#10
Hours:	0.0	0.0	0.0	0.1	0.3
Minutes:	0.0	0.0	0.0	4.0	16.0

Total Bypass Venting Time:

Hours: 0.3 Minutes: 20

Calculation of Bypass Venting Emissions:

Emissions = Emission Factor (lb/hr) x Total Hours of Bypass Venting x 1 ton/2000 lbs

	#6	#7	#8	#9	#10
Lead (lbs)	0.0	0.0	0.0	0.0	0.0
PM (lbs)	0.0	0.0	0.0	0.8	3.3
SO2 (lbs)	0.0	0.0	0.0	11.0	43.9

Total Emissions from Bypass Venting Event

Total Emissions = Sum of Emissions from Each Affected Bypass Vent Stack

Total tons of Pollutant Emitted During Bypass Venting

Lead (tons)	0.0
PM (tons)	0.0
SO_2 (tons)	0.0

Bypass Venting Emissions Calculations for Haverhill Coke Company No. 2

Emission Factors (for one bypass vent stack)*:

Lead	0.060	lb/hr	September 2016 Test, HNCC No. 2 FGD Outage
PM (Filt + Cond)	12.5	lb/hr	March 2018 Test, HNCC No. 1 FGD Outage
SO2	164.8	lb/hr	Calculated from 1st Half CEMs Data

Event Description: 20180603_ HHO_009_HCC2_FGD_Scheduled_Maintenance_Outage (8367)

Start Date/Time of Bypass Venting: 6/3/2018 18:06

End Date/Time of Bypass Venting: 7/7/2018 23:59

Bypass Vent Stack Lid Open and Close Date/Time:

	#6	#7	#8	#9	#10
Open Date/Time:					7/7/2018 21:12
Close Date/Time:					7/7/2018 21:18

Total Stack Lid Open Time per Bypass Vent Stack:

	#6	#7	#8	#9	#10
Hours:	0.0	0.0	0.0	0.0	0.1
Minutes:	0.0	0.0	0.0	0.0	6.0

Total Bypass Venting Time:

Hours: 0.1 Minutes: 6

Calculation of Bypass Venting Emissions:

Emissions = Emission Factor (lb/hr) x Total Hours of Bypass Venting x 1 ton/2000 lbs

	#6	#7	#8	#9	#10
Lead (lbs)	0.0	0.0	0.0	0.0	0.0
PM (lbs)	0.0	0.0	0.0	0.0	1.2
SO2 (lbs)	0.0	0.0	0.0	0.0	16.5

Total Emissions from Bypass Venting Event

Total Emissions = Sum of Emissions from Each Affected Bypass Vent Stack

Total tons of Pollutant Emitted During Bypass Venting

Lead (tons)	0.0
PM (tons)	0.0
SO_2 (tons)	0.0

Bypass Venting Emissions Calculations for Haverhill Coke Company No. 2

Emission Factors (for one bypass vent stack)*:

Lead	0.060	lb/hr	September 2016 Test, HNCC No. 2 FGD Outage
PM (Filt + Cond)	12.5	lb/hr	March 2018 Test, HNCC No. 1 FGD Outage
SO2	164.8	lb/hr	Calculated from 1st Half CEMs Data

Event Description: 20180603_ HHO_009_HCC2_FGD_Scheduled_Maintenance_Outage (8367)

Start Date/Time of Bypass Venting: 6/3/2018 18:06

End Date/Time of Bypass Venting: 7/7/2018 23:59

Bypass Vent Stack Lid Open and Close Date/Time:

	#6	#7	#8	#9	#10
Open Date/Time:					7/7/2018 21:19
Close Date/Time:					7/7/2018 23:59

Total Stack Lid Open Time per Bypass Vent Stack:

	#6	#7	#8	#9	#10
Hours:	0.0	0.0	0.0	0.0	2.7
Minutes:	0.0	0.0	0.0	0.0	160.0

Total Bypass Venting Time:

Hours: 2.7 Minutes: 160

Calculation of Bypass Venting Emissions:

Emissions = Emission Factor (lb/hr) x Total Hours of Bypass Venting x 1 ton/2000 lbs

	#6	#7	#8	#9	#10
Lead (lbs)	0.0	0.0	0.0	0.0	0.2
PM (lbs)	0.0	0.0	0.0	0.0	33.3
SO2 (lbs)	0.0	0.0	0.0	0.0	439.5

Total Emissions from Bypass Venting Event

Total Emissions = Sum of Emissions from Each Affected Bypass Vent Stack

Total tons of Pollutant Emitted During Bypass Venting

Lead (tons)	0.0
PM (tons)	0.0
SO_2 (tons)	0.2

Attachment A2

Gateway Energy and Coke Company, RCFAs Completed

SunCoke Energy Environmental RCFA Report

RCFA Name:	20180118_GCO_084_LOSS OF POWER	Report Date:	01/22/2018
Report #:	7818	Site:	GC
RCFA Facilitator:	JRMCLAREN	Location:	080
RCFA Type:	Environmental	Location name:	PLANT ELECTRICAL
Date of Occurrence:	Jan 18, 2018, 10:30 AM	Investigation Completed:	01/26/2018

Section1 - General Information

Executive Summary:
On January 18, 2018 the Gateway Energy and Coke Company (GECC) experienced an interruption in the main utility power at approximately 10:30 AM. Emergency Vent Stacks (EVS) #1 through #6 opened due to loss of draft caused by the shutdown of the Induced Draft (ID) fan motors. Personnel checked the main substation and began rounds to prepare for restart. ID Fan A was restarted at 11:15 AM on January 18, 2018. The restart of the six Heat Recovery Steam Generators (HRSG) and the Flue Gas Desulphurization (FGD) commenced at that time with ID Fan C restarting at 11:45 AM. The last EVS closed at 1:41 PM. The total venting time associated with this event was 15.20 hours. Previous to the power interruption event, EVS #6 was opened at 9:53 AM for 0.02 hours for a planned EVS monthly PM.

SunCoke Energy Environmental RCFA Report

SunCoke Energy
The Higher Degree

Environmental Information

Did the stack lid bypass event result from planned FGD or HRSG maintenance?	No
Describe:	

Were charge weights to affected ovens reduced to a 42.5 wet tons/oven average 48 hours prior to venting?	No
If no, provide explanation of why the charge weights were not reduced to a 42.5 wet ton average.	
Explanation: Bypass venting was a result of unplanned maintenance; therefore, charge weights could not be reduced at least 48 hours in advance. Per the PMO plan, coal charge weights are reduced by approximately two tons per charging cycle during bypass venting events that are expected to exceed 24 hours.	

Did the coal charged during the bypass event contain less than 1.1% sulfur content?	Yes
If no, provide explanation of why the coal sulfur content was not reduced to a maximum of 1.1%.	
Explanation:	

Did multiple events involving stack lid open time occur within a 24 period?				No
If yes, please list the Maximo RCFA numbers here:				

Vent Stacks Open/Close				
Vent Stack No.	**#1**	**#2**	**#3**	**#4**
Stack Lid Open Date/Time	1/18/18 10:34	1/18/18 10:33	1/18/18 10:34	1/18/18 10:34
Stack Lid Close Date/Time	1/18/18 13:02	1/18/18 13:03	1/18/18 12:45	1/18/18 13:09
Total Bypass Venting Time (mins)	148	150	131	155
Total Bypass Venting Time (hrs)	2.47	2.50	2.18	2.6

Vent Stacks Open/Close		
Vent Stack No.	**#5**	**#6**
Stack Lid Open Date/Time	1/18/18 10:34	1/18/18 10:34
Stack Lid Close Date/Time	1/18/18 13:41	1/18/18 12:53
Total Bypass Venting Time (mins)	187	139
Total Bypass Venting Time (hrs)	3.12	2.32

Estimated Quantity of Emissions (tons)						
Pollutant:	**Lead**	0.0	**PM**	0.1	**SO_2**	1.6

Estimated Avg Coal Sulfur Content Charged Per Day (applies to all ovens charged each day):			
Date	**Avg S (%):**	**Date**	**Avg S (%):**
1/18/2018	1.04		

Estimated Avg Charge Tons per Oven Charged (avg over duration of event):			
Affected Oven No.	**Estimated Avg Coal Charge Weight/ Oven:**	**Affected Oven No.**	**Estimated Avg Coal Charge Weight/ Oven:**
1	38.93	61	35.65
2	41.29	62	41.22
3	35.47	63	35.26
4	34.80	64	34.57
5	38.90	65	35.50
6	43.59	66	44.57
7	35.61	67	35.26

SunCoke Energy Environmental RCFA Report

8	34.63
9	38.68
10	44.74
11	35.53
12	35.58
13	38.75
14	43.77
15	35.58
16	34.57
17	38.49
18	41.11
19	35.53
20	35.09
21	38.68
22	44.67
23	35.50
24	35.12
25	38.77
26	43.77
27	35.44
28	35.87
29	35.72
30	44.82
31	35.55
32	35.12
33	35.55
34	43.64
35	35.55
36	34.63
37	35.43
38	41.17
39	35.26
40	35.12
41	35.43
42	41.35
43	35.27
44	35.61
45	35.55
46	43.80
47	35.47
48	34.66
49	35.40
50	44.89
51	35.40
52	35.26
53	35.40
54	43.67
55	35.30
56	35.08
57	35.55
58	41.19
59	35.27
60	35.34

68	35.26
69	35.36
70	44.64
71	35.18
72	35.36
73	35.40
74	44.54
75	35.12
76	35.23
77	35.44
78	42.05
79	35.08
80	35.33
81	35.05
82	35.27
83	42.75
84	35.61
85	34.95
86	35.27
87	45.59
88	35.78
89	35.23
90	35.36
91	44.85
92	35.61
93	35.20
94	35.39
95	44.15
96	35.50
97	36.10
98	35.53
99	40.20
100	35.56
101	35.20
102	35.46
103	42.34
104	35.47
105	35.34
106	35.47
107	44.15
108	35.55
109	35.26
110	35.61
111	36.20
112	35.40
113	35.23
114	35.43
115	35.72
116	35.47
117	35.27
118	35.63
119	35.23
120	35.40

Bypass Venting Emissions Calculations for Gateway Energy and Coke Company

Emission Factors (for one bypass vent stack)*:

Lead	0.075	lb/hr	May 2017 Test, GECC, Bypass Vent Stack #5
PM (Filt + Cond)	12.7	lb/hr	May 2017 Test, GECC, Bypass Vent Stack #5
SO2	206	lb/hr	Calculated from 1st half CEMS data

Corresponding RCFA Report: 7818

Start Date/Time of Bypass Venting: 1/18/18 10:33

End Date/Time of Bypass Venting: 1/18/18 13:41

Bypass Vent Stack Lid Open and Close Date/Time:

	#1	#2	#3	#4	#5	#6
Open Date/Time:	1/18/18 10:34	1/18/18 10:33	1/18/18 10:34	1/18/18 10:34	1/18/18 10:34	1/18/18 10:34
Close Date/Time:	1/18/18 13:02	1/18/18 13:03	1/18/18 12:45	1/18/18 13:09	1/18/18 13:41	1/18/18 12:53

Total Stack Lid Open Time per Bypass Vent Stack:

	#1	#2	#3	#4	#5	#6
Hours:	2.5	2.5	2.2	2.6	3.1	2.3
Minutes:	148	150	131	155	187	139

Total Bypass Venting Time:

Hours: 15.2 Minutes: 910.0

Calculation of Bypass Venting Emissions:

Emissions = Emission Factor (lb/hr) x Total Hours of Bypass Venting x 1 ton/2000 lbs

	#1	#2	#3	#4	#5	#6
Lead (lbs)	0.2	0.2	0.2	0.2	0.2	0.2
PM (lbs)	31.3	31.7	27.7	32.8	39.6	29.4
SO2 (lbs)	508.1	515.0	449.8	532.2	642.0	477.2

Total Emissions from Bypass Venting Event

Total Emissions = Sum of Emissions from Each Affected Bypass Vent Stack

Total tons of Pollutant Emitted During Bypass Venting

Lead (tons)	0.0
PM (tons)	0.1
SO_2 (tons)	1.6

* Please note, most recent stack test data for HNCC No. 1, HNCC No. 2 and GECC was used to calculate estimated emissions. Data used to estimate total PM emissions is from a 2017 GECC bypass vent stack test. No condensable PM test data was available for HNCC No.1 or No. 2. Emission factors will be updated once required testing is completed.

Section 2 - Investigation Information and Summary

Cause and Effect Analysis (include steps taken to minimize emissions, if applicable):
On January 18, 2018 the Gateway Energy and Coke Company (GECC) experienced an interruption in the main utility power at approximately 10:30 AM. Emergency Vent Stacks (EVS) #1 through #6 opened due to loss of draft caused by the shutdown of the Induced Draft (ID) fan motors. Personnel checked the main substation and began rounds to prepare for restart. ID Fan A was restarted at 11:15 AM on January 18, 2018. The restart of the six Heat Recovery Steam Generators (HRSG) and the Flue Gas Desulphurization (FGD) commenced at that time with ID Fan C restart following at 11:45 AM. The EVS were closed on January 18, 2018 at the following times: #1 - 1:02 PM; #2 - 1:03 PM; #3 - 12:45 PM; #4 - 1:09 PM; #5 - 1:41 PM; and #6 - 12:53 PM. The electrical utility provider attributed the interruption to a failed lightening arrestor on a transformer located in a utility-owned substation west of the GECC facility. Because the event was due to a lightening arrestor failure external to GECC, the actions identified relate to ensuring GECC was clear to restart safely.

SunCoke Energy Environmental RCFA Report

SunCoke Energy
The Higher Degree

Section 3 - Causes

Cause	Description of Root Cause	Analysis of Root Cause (how did this contribute?)	Type of Cause	Cause Class	Repeat?
1627	Failed lightening arrestor on utility equipment	According to verbal notification from utility dispatch and from US Steel associates, the lightening arrestor failure caused the interruption in the power supply that resulted in the ID Fan motors to shutdown	Root Cause	Physical Cause	NO

Section 4 - Measures Reasonably Available to Prevent or Reduce Likelihood of Recurrence (Corrective Actions)

CA#	Description of Corrective Action	Analysis of Corrective Action
1063495	Inspect GECC Main Substation for clearance to restart	Inspect GECC main substation equipment for trips / alarms prior to giving clearance to restart operation
1063497	Confirm US Steel / Co-Gen able to receive steam from GECC HRSGs	Due to power interruption impact to Co-Gen, ensure equipment able to provide feedwater flow to HRSGs and receive steam generation from GECC

Additional Corrective Action Information:

CA#	Responsible Person	Probable Effectiveness	Estimated Start Date of CA	Estimated Completion Date	Estimated Cost of Implementation	3rd Party Needed for Implementation?
1063495	JRMCLAREN	5) Impact Cannot be Determined	01/18/2018	02/02/2018	0.00	NO
1063497	JRMCLAREN	5) Impact Cannot be Determined	01/18/2018	02/02/2018	0.00	NO

Action Effectiveness Definition

Value	Description
1) Prevent Reoccurrence	Action will Prevent Reoccurrence
2) Reduce Likelihood	Action will Reduce Likelihood of Reoccurrence
3) Lessen Impact	Action will Lessen Impact of Reoccurrence
4) Improvement / Unlikely to Prevent	An Improvement but not Likely to Prevent Reoccurrence
5) Impact Cannot be Determined	Action Impact Cannot be Determined at this Time

SunCoke Energy Environmental RCFA Report

RCFA Name:	20180205_GCO_085_HRSG 01 PHOSPHATE LINE	Report Date:	02/06/2018
Report #:	7870	Site:	GC
RCFA Facilitator:	RSKREMER	Location:	066
RCFA Type:	Environmental	Location name:	CHEMICAL FEED SYSTEM
Date of Occurrence:	Feb 5, 2018, 2:07 PM	Investigation Completed:	02/27/2018

Section1 - General Information

Executive Summary:

On February 5, 2018 Gateway Energy and Coke Company (GECC) experienced a failure of the secondary phosphate injection line on Heat Recovery Steam Generator (HRSG) #1. Excessive steam and noise were reported coming from near the feed water station as well as difficulty controlling HRSG drum level. The emergency vent stack (EVS) #1 was opened at 2:07 PM. HRSG #1 was idled to reduce drum pressure and enable safe access to the block valves for the secondary phosphate line. Phosphate is injected into the HRSG feed water for pH control. The block valves for the secondary phosphate line were closed and the valves for the original phosphate line were opened. HRSG #1 was returned to service with EVS #1 closing at 9:44 PM. The total venting time associated with this event was 7.61 hours. EVS #1 opened on February 5, 2018 at 11:41 AM for the planned monthly Preventative Maintenance (PM). The total venting time associated with the EVS #1 PM was 0.02 hours.

SunCoke Energy Environmental RCFA Report

SunCoke Energy
The Higher Degree

Environmental Information

Did the stack lid bypass event result from planned FGD or HRSG maintenance?	No
Describe:	

Were charge weights to affected ovens reduced to a 42.5 wet tons/oven average 48 hours prior to venting?	No
If no, provide explanation of why the charge weights were not reduced to a 42.5 wet ton average.	
Explanation: Bypass venting was a result of unplanned maintenance; therefore, charge weights could not be reduced at least 48 hours in advance. Per the PMO plan, coal charge weights are reduced by approximately two tons per charging cycle during bypass venting events that are expected to exceed 24 hours.	

Did the coal charged during the bypass event contain less than 1.1% sulfur content?	Yes
If no, provide explanation of why the coal sulfur content was not reduced to a maximum of 1.1%.	
Explanation:	

Did multiple events involving stack lid open time occur within a 24 period?				No
If yes, please list the Maximo RCFA numbers here:				

Vent Stacks Open/Close				
Vent Stack No.	**#1**	**#2**	**#3**	**#4**
Stack Lid Open Date/Time	2/5/18 14:07			
Stack Lid Close Date/Time	2/5/18 21:44			
Total Bypass Venting Time (mins)	457	0	0	0
Total Bypass Venting Time (hrs)	7.61	0.00	0.00	0.0

Vent Stacks Open/Close		
Vent Stack No.	**#5**	**#6**
Stack Lid Open Date/Time		
Stack Lid Close Date/Time		
Total Bypass Venting Time (mins)	0	0
Total Bypass Venting Time (hrs)	0.00	0.00

Estimated Quantity of Emissions (tons)						
Pollutant:	**Lead**	0.0	**PM**	0.0	**SO_2**	0.8

Estimated Avg Coal Sulfur Content Charged Per Day (applies to all ovens charged each day):			
Date	**Avg S (%):**	**Date**	**Avg S (%):**
2/5/2018	0.99		

Estimated Avg Charge Tons per Oven Charged (avg over duration of event):			
Affected Oven No.	**Estimated Avg Coal Charge Weight/ Oven:**	**Affected Oven No.**	**Estimated Avg Coal Charge Weight/ Oven:**
1	41.79	61	
2	45.76	62	
3	44.82	63	
4	42.76	64	
5	47.31	65	
6	48.29	66	
7	45.24	67	

SunCoke Energy Environmental RCFA Report

8	42.72
9	48.36
10	48.33
11	48.24
12	42.76
13	48.42
14	44.74
15	44.16
16	42.76
17	45.81
18	47.18
19	46.23
20	43.88
21	
22	
23	
24	
25	
26	
27	
28	
29	
30	
31	
32	
33	
34	
35	
36	
37	
38	
39	
40	
41	
42	
43	
44	
45	
46	
47	
48	
49	
50	
51	
52	
53	
54	
55	
56	
57	
58	
59	
60	

68	
69	
70	
71	
72	
73	
74	
75	
76	
77	
78	
79	
80	
81	
82	
83	
84	
85	
86	
87	
88	
89	
90	
91	
92	
93	
94	
95	
96	
97	
98	
99	
100	
101	
102	
103	
104	
105	
106	
107	
108	
109	
110	
111	
112	
113	
114	
115	
116	
117	
118	
119	
120	

Bypass Venting Emissions Calculations for Gateway Energy and Coke Company

Emission Factors (for one bypass vent stack)*:

Lead	0.075	lb/hr	May 2017 Test, GECC, Bypass Vent Stack #5
PM (Filt + Cond)	12.7	lb/hr	May 2017 Test, GECC, Bypass Vent Stack #5
SO2	206	lb/hr	Calculated from 1st half CEMS data

Corresponding RCFA Report: 7870

Start Date/Time of Bypass Venting: 2/5/18 14:07

End Date/Time of Bypass Venting: 2/5/18 21:44

Bypass Vent Stack Lid Open and Close Date/Time:

	#1	#2	#3	#4	#5	#6
Open Date/Time:	2/5/18 14:07					
Close Date/Time:	2/5/18 21:44					

Total Stack Lid Open Time per Bypass Vent Stack:

	#1	#2	#3	#4	#5	#6
Hours:	7.6	0.0	0.0	0.0	0.0	0.0
Minutes:	456.5	0	0	0	0	0

Total Bypass Venting Time:

Hours: 7.6 Minutes: 456.5

Calculation of Bypass Venting Emissions:

Emissions = Emission Factor (lb/hr) x Total Hours of Bypass Venting x 1 ton/2000 lbs

	#1	#2	#3	#4	#5	#6
Lead (lbs)	0.6	0.0	0.0	0.0	0.0	0.0
PM (lbs)	96.6	0.0	0.0	0.0	0.0	0.0
SO2 (lbs)	1567.3	0.0	0.0	0.0	0.0	0.0

Total Emissions from Bypass Venting Event

Total Emissions = Sum of Emissions from Each Affected Bypass Vent Stack

Total tons of Pollutant Emitted During Bypass Venting

Lead (tons)	0.0
PM (tons)	0.0
SO_2 (tons)	0.8

* Please note, most recent stack test data for HNCC No. 1, HNCC No. 2 and GECC was used to calculate estimated emissions. Data used to estimate total PM emissions is from a 2017 GECC bypass vent stack test. No condensable PM test data was available for HNCC No.1 or No. 2. Emission factors will be updated once required testing is completed.

Section 2 - Investigation Information and Summary

Cause and Effect Analysis (include steps taken to minimize emissions, if applicable):
On February 5, 2018 Gateway Energy and Coke Company (GECC) experienced a failure of the secondary phosphate injection line on Heat Recovery Steam Generator (HRSG) #1. Excessive steam and noise were reported coming from near the feed water station as well as difficulty controlling drum level. The emergency vent stack (EVS) #1 was opened at 2:07 PM. HRSG #1 was idled to reduce drum pressure and enable safe access to the block valves for the secondary phosphate line. Phosphate is injected into the HRSG feed water for pH control. The block valves for the secondary phosphate line were closed and locked out. The valves to the original phosphate line were opened and pH was monitored. HRSG #1 was returned to service with EVS #1 closing at 9:44 PM. The total venting time associated with this event was 7.61 hours. HRSG #1 is only unit with this secondary phosphate line. The other five units have satisfactory chemistry and no incidents of phosphate line failures. The secondary phosphate line is to be removed during the next planned HRSG #1 outage.

SunCoke Energy Environmental RCFA Report

SunCoke Energy
The Higher Degree

Section 3 - Causes

Cause	Description of Root Cause	Analysis of Root Cause (how did this contribute?)	Type of Cause	Cause Class	Repeat?
1637	Failed Phosphate Line Check Valve / Fitting	Phosphate line fitting failed at check valve threaded connection	Root Cause	Physical Cause	NO

Section 4 - Measures Reasonably Available to Prevent or Reduce Likelihood of Recurrence (Corrective Actions)

CA#	Description of Corrective Action	Analysis of Corrective Action
1068993	Isolate HRSG #1 secondary phosphate line and lock out	Eliminate feed water leaking from failed phosphate line and allow HRSG #1 to be returned to service
1068994	Demo HRSG #1 secondary phosphate line	Removed failed phosphate line

Additional Corrective Action Information:

CA#	Responsible Person	Probable Effectiveness	Estimated Start Date of CA	Estimated Completion Date	Estimated Cost of Implementation	3rd Party Needed for Implementation?
1068993	JRMCLAREN	2) Reduce Likelihood	02/05/2018	03/08/2018	0.00	NO
1068994	RSKREMER	1) Prevent Reoccurrence	09/04/2018	12/15/2018	0.00	NO

Action Effectiveness Definition

Value	Description
1) Prevent Reoccurrence	Action will Prevent Reoccurrence
2) Reduce Likelihood	Action will Reduce Likelihood of Reoccurrence
3) Lessen Impact	Action will Lessen Impact of Reoccurrence
4) Improvement / Unlikely to Prevent	An Improvement but not Likely to Prevent Reoccurrence
5) Impact Cannot be Determined	Action Impact Cannot be Determined at this Time

SunCoke Energy Environmental RCFA Report

RCFA Name:	20180211_GCO_086_HRSG 03 TUBE LEAK	Report Date:	02/14/2018
Report #:	7906	Site:	GC
RCFA Facilitator:	JRMCLAREN	Location:	H-6103
RCFA Type:	Environmental	Location name:	HRSG 03, NOOTER, BATTERY B
Date of Occurrence:	Feb 11, 2018, 8:52 PM	Investigation Completed:	03/01/2018

Section1 - General Information

Executive Summary:

On February 11, 2018 Gateway Energy and Coke Company (GECC) experienced a tube leak condition on Heat Recovery Steam Generator (HRSG) #3. The emergency vent stack (EVS) #3 was opened at 8:52 PM. HRSG #3 was removed from service to facilitate repairs. The location of the leak was found to be on the east side of the Superheat #2 section – u-bend between row 9 and 10 for tube 9 and u-bend between row 9 and 10 for tube 16. The repair included the replacement of both u-bends. A water pressure test was performed on February 12, 2018. Additional leaks were indicated at the following locations: Superheat #2 – row 2 tube 5 and Superheat #2 row 10 tube 16. The repairs involved replacing a section of row 10 tube 16 and replacing a section of tube 5 from row 1 into row 2. A successful pressure test was achieved on February 14, 2018. HRSG #3 was returned to service with EVS #3 closing at 12:10 AM on February 15, 2018. The total venting time associated with this event was 75.30 hours.

An inspection of the tube leak locations in Superheat #2 indicated that the failures were related to thermal fatigue cracking except for the Superheat #2 – row 10 tube 16 which appeared to be a weld failure. Tubes in proximity to the leaking tubes were inspected prior to determining the final scope of repairs.

Corrective action identified were the replacement of the tubes and the future implementation of the redundant HRSG / Gas Sharing project at GECC (per action item #585231 of RCFA #2679).

SunCoke Energy Environmental RCFA Report

SunCoke Energy
The Higher Degree

Environmental Information

Did the stack lid bypass event result from planned FGD or HRSG maintenance?	No
Describe:	

Were charge weights to affected ovens reduced to a 42.5 wet tons/oven average 48 hours prior to venting?	No
If no, provide explanation of why the charge weights were not reduced to a 42.5 wet ton average.	
Explanation: Bypass venting was a result of unplanned maintenance; therefore, charge weights could not be reduced at least 48 hours in advance. Per the PMO plan, coal charge weights are reduced by approximately two tons per charging cycle during bypass venting events that are expected to exceed 24 hours.	

Did the coal charged during the bypass event contain less than 1.1% sulfur content?	Yes
If no, provide explanation of why the coal sulfur content was not reduced to a maximum of 1.1%.	
Explanation:	

Did multiple events involving stack lid open time occur within a 24 period?				No
If yes, please list the Maximo RCFA numbers here:				

Vent Stacks Open/Close				
Vent Stack No.	**#1**	**#2**	**#3**	**#4**
Stack Lid Open Date/Time			2/11/18 20:52	
Stack Lid Close Date/Time			2/15/18 00:10	
Total Bypass Venting Time (mins)	0	0	4518	0
Total Bypass Venting Time (hrs)	0.00	0.00	75.30	0.0

Vent Stacks Open/Close		
Vent Stack No.	**#5**	**#6**
Stack Lid Open Date/Time		
Stack Lid Close Date/Time		
Total Bypass Venting Time (mins)	0	0
Total Bypass Venting Time (hrs)	0.00	0.00

Estimated Quantity of Emissions (tons)						
Pollutant:	**Lead**	0.0	**PM**	0.5	**SO_2**	7.8

Estimated Avg Coal Sulfur Content Charged Per Day (applies to all ovens charged each day):			
Date	**Avg S (%):**	**Date**	**Avg S (%):**
2/11/2018	0.99	2/15/2018	0.99
2/12/2018	0.99		
2/13/2018	0.99		
2/14/2018	0.99		

Estimated Avg Charge Tons per Oven Charged (avg over duration of event):			
Affected Oven No.	**Estimated Avg Coal Charge Weight/ Oven:**	**Affected Oven No.**	**Estimated Avg Coal Charge Weight/ Oven:**
1		61	
2		62	
3		63	
4		64	
5		65	
6		66	
7		67	

SunCoke Energy Environmental RCFA Report

8	
9	
10	
11	
12	
13	
14	
15	
16	
17	
18	
19	
20	
21	
22	
23	
24	
25	
26	
27	
28	
29	
30	
31	
32	
33	
34	
35	
36	
37	
38	
39	
40	
41	45.27
42	44.76
43	44.38
44	42.71
45	47.05
46	44.74
47	43.72
48	42.70
49	36.76
50	47.15
51	46.23
52	42.61
53	47.46
54	41.27
55	43.32
56	42.62
57	45.03
58	45.72
59	44.27
60	43.11

68	
69	
70	
71	
72	
73	
74	
75	
76	
77	
78	
79	
80	
81	
82	
83	
84	
85	
86	
87	
88	
89	
90	
91	
92	
93	
94	
95	
96	
97	
98	
99	
100	
101	
102	
103	
104	
105	
106	
107	
108	
109	
110	
111	
112	
113	
114	
115	
116	
117	
118	
119	
120	

Bypass Venting Emissions Calculations for Gateway Energy and Coke Company

Emission Factors (for one bypass vent stack)*:

Lead	0.075	lb/hr	May 2017 Test, GECC, Bypass Vent Stack #5
PM (Filt + Cond)	12.7	lb/hr	May 2017 Test, GECC, Bypass Vent Stack #5
SO2	206	lb/hr	Calculated from 1st half CEMS data

Corresponding RCFA Report: 7906

Start Date/Time of Bypass Venting: 2/11/18 20:52

End Date/Time of Bypass Venting: 2/15/18 00:10

Bypass Vent Stack Lid Open and Close Date/Time:

	#1	#2	#3	#4	#5	#6
Open Date/Time:			2/11/18 20:52			
Close Date/Time:			2/15/18 00:10			

Total Stack Lid Open Time per Bypass Vent Stack:

	#1	#2	#3	#4	#5	#6
Hours:	0.0	0.0	75.3	0.0	0.0	0.0
Minutes:	0	0	4518	0	0	0

Total Bypass Venting Time:

Hours: 75.3 Minutes: 4518.0

Calculation of Bypass Venting Emissions:

Emissions = Emission Factor (lb/hr) x Total Hours of Bypass Venting x 1 ton/2000 lbs

	#1	#2	#3	#4	#5	#6
Lead (lbs)	0.0	0.0	5.6	0.0	0.0	0.0
PM (lbs)	0.0	0.0	956.3	0.0	0.0	0.0
SO2 (lbs)	0.0	0.0	15511.8	0.0	0.0	0.0

Total Emissions from Bypass Venting Event

Total Emissions = Sum of Emissions from Each Affected Bypass Vent Stack

Total tons of Pollutant Emitted During Bypass Venting

Lead (tons)	0.0
PM (tons)	0.5
SO_2 (tons)	7.8

* Please note, most recent stack test data for HNCC No. 1, HNCC No. 2 and GECC was used to calculate estimated emissions. Data used to estimate total PM emissions is from a 2017 GECC bypass vent stack test. No condensable PM test data was available for HNCC No.1 or No. 2. Emission factors will be updated once required testing is completed.

Section 2 - Investigation Information and Summary

Cause and Effect Analysis (include steps taken to minimize emissions, if applicable):
On February 11, 2018 Gateway Energy and Coke Company (GECC) experienced a tube leak condition on Heat Recovery Steam Generator (HRSG) #3. The emergency vent stack (EVS) #3 was opened at 8:52 PM. HRSG #3 was removed from service to facilitate repairs. The location of the leak was found to be on the east side of the Superheat #2 section – u-bend between row 9 and 10 for tube 9 and u-bend between row 9 and 10 for tube 16. The repair included the replacement of both u-bends. A water pressure test was performed on February 12, 2018. Additional leaks were indicated at the following locations: Superheat #2 – row 2 tube 5 and Superheat #2 row 10 tube 16. The repairs involved replacing a section of row 10 tube 16 and replacing a section of tube 5 from row 1 into row 2. A successful pressure test was achieved on February 14, 2018. HRSG #3 was returned to service with EVS #3 closing at 12:10 AM on February 15, 2018. The total venting time associated with this event was 75.30 hours. Corrective actions identified include the replacement of tube assemblies and the implementation of the redundant HRSG / Gas Sharing project at GECC (per action item #585231 of RCFA #2679). The replacement of the affected tube assemblies allowed for the immediate return to service of HRSG #3. Given the potential of other tube leaks to occur, the longer term corrective action is to install and operate GECC's redundant HRSG. The redundant HRSG will allow for more extensive maintenance to help prevent future tube leaks and will allow for gas to be shifted in order to reduce venting while a tube leak is occurring or associated maintenance is ongoing. While the redundant HRSG / Gas Sharing project is being implemented, GECC will apply other processes and procedures to minimize the frequency of tube leaks and / or venting time that occurs while tube leaks are being repaired. The processes and procedures include but are not limited to the following: · A tube inspection program that identifies areas of the HRSG that are prone to corrosion and may require more thorough tube inspection; · An ultrasonic thickness (UT) testing method to identify thinning tubes and a "map" of the UT readings for each HRSG in order to target specific areas of the HRSG for additional evaluation or tube replacement; · An inventory of spare, upgraded, more corrosion resistant materials for certain HRSG sections; · An orbital welding process that provides a more even, consistent weld quality; and · The use of soda ash solution as a prewash to make cleaning more effective and to protect tubes from low pH conditions. It should be noted that GECC was following the above processes and procedures prior to the venting incident, so the processes and procedures should not be considered RCFA corrective actions.

Section 3 - Causes

Cause	Description of Root Cause	Analysis of Root Cause (how did this contribute?)	Type of Cause	Cause Class	Repeat?
1638	HRSG #3 - Thermal Fatigue SH2 U-bend R9-10 T16	The mechanical stresses exceeded the strength of the tube section where the failure occurred due to thermal stress cracking	Root Cause	Physical Cause	NO
1639	HRSG #3 - Thermal Fatigue SH2 U-bend R9-10 T9	The mechanical stresses exceeded the strength of the tube section where the failure occurred due to thermal stress cracking	Root Cause	Physical Cause	NO
1640	HRSG #3 - Thermal Fatigue SH2 R2 T5	The mechanical stresses exceeded the strength of the tube section where the failure occurred due to thermal stress cracking	Root Cause	Physical Cause	NO
1641	HRSG #3 - Weld Failure SH2 R10 T16	Contamination in weld	Root Cause	Physical Cause	NO

Section 4 - Measures Reasonably Available to Prevent or Reduce Likelihood of Recurrence (Corrective Actions)

CA#	Description of Corrective Action	Analysis of Corrective Action
1072485	HRSG #3 - Replace U-bend section between Row 9 and 10 Tube 9	Enable HRSG #3 to be returned to service and EVS #3 to be closed
1072486	HRSG #3 - Replace U-bend section between Row 9 and 10 Tube 16	Enable HRSG #3 to be returned to service and EVS #3 to be closed
1072487	HRSG #3 - Replace section of SH2 Row 1 into Row 2 Tube 5	Enable HRSG #3 to be returned to service and EVS #3 to be closed
1072488	HRSG #3 - Replace section of SH2 Row 10 Tube 16	Enable HRSG #3 to be returned to service and EVS #3 to be closed

Additional Corrective Action Information:

CA#	Responsible Person	Probable Effectiveness	Estimated Start Date of CA	Estimated Completion Date	Estimated Cost of Implementation	3rd Party Needed for Implementation?
1072485	JRMCLAREN	2) Reduce Likelihood	02/12/2018	03/09/2018	20,000.00	YES
1072486	JRMCLAREN	2) Reduce Likelihood	02/12/2018	03/09/2018	20,000.00	YES
1072487	JRMCLAREN	2) Reduce Likelihood	02/13/2018	03/09/2018	20,000.00	YES
1072488	JRMCLAREN	2) Reduce Likelihood	02/13/2018	03/09/2018	10,000.00	YES

Action Effectiveness Definition

Value	Description
1) Prevent Reoccurrence	Action will Prevent Reoccurrence
2) Reduce Likelihood	Action will Reduce Likelihood of Reoccurrence
3) Lessen Impact	Action will Lessen Impact of Reoccurrence
4) Improvement / Unlikely to Prevent	An Improvement but not Likely to Prevent Reoccurrence
5) Impact Cannot be Determined	Action Impact Cannot be Determined at this Time

SunCoke Energy Environmental RCFA Report

RCFA Name:	20180220_GCO_087_HRSG 02 TUBE LEAK	Report Date:	02/20/2018
Report #:	7924	Site:	GC
RCFA Facilitator:	JRMCLAREN	Location:	H-6102
RCFA Type:	Environmental	Location name:	HRSG 02, NOOTER, BATTERY A
Date of Occurrence:	Feb 20, 2018, 12:00 AM	Investigation Completed:	03/13/2018

Section1 - General Information

Executive Summary:

On February 20, 2018 Gateway Energy and Coke Company (GECC) experienced a tube leak condition on Heat Recovery Steam Generator (HRSG) #2. The emergency vent stack (EVS) #2 was opened at 12:00 AM. HRSG #2 was removed from service to facilitate repairs. The location of the leak was found to be on the west side of the Superheat #2 section – u-bend between row 8 and 9 tube 4 and u-bend between row 8 and 9 tube 5. The repair included the replacement of two u-bend sections. A successful water pressure test was achieved on February 21, 2018. HRSG #2 was returned to service with EVS #2 closing at 3:45 PM on February 21, 2018. The total venting time associated with this event was 39.75 hours.

An inspection of the tube leak location in Superheat #2 section indicated that the failure was the result of thermal fatigue cracking in combination with mechanical stresses. Tubes in proximity to the leaking tube were inspected prior to determining the final scope of repair.

Corrective actions identified were the replacement of the tube section and the future implementation of the redundant HRSG / Gas Sharing project at GECC (per action item #585231 of RCFA 2679).

SunCoke Energy Environmental RCFA Report

SunCoke Energy
The Higher Degree

Environmental Information

Did the stack lid bypass event result from planned FGD or HRSG maintenance?	No
Describe:	

Were charge weights to affected ovens reduced to a 42.5 wet tons/oven average 48 hours prior to venting?	No
If no, provide explanation of why the charge weights were not reduced to a 42.5 wet ton average.	
Explanation: Bypass venting was a result of unplanned maintenance; therefore, charge weights could not be reduced at least 48 hours in advance. Per the PMO plan, coal charge weights are reduced by approximately two tons per charging cycle during bypass venting events that are expected to exceed 24 hours.	

Did the coal charged during the bypass event contain less than 1.1% sulfur content?	Yes
If no, provide explanation of why the coal sulfur content was not reduced to a maximum of 1.1%.	
Explanation:	

Did multiple events involving stack lid open time occur within a 24 period?				No
If yes, please list the Maximo RCFA numbers here:				

Vent Stacks Open/Close				
Vent Stack No.	**#1**	**#2**	**#3**	**#4**
Stack Lid Open Date/Time		2/20/18 00:00		
Stack Lid Close Date/Time		2/21/18 15:45		
Total Bypass Venting Time (mins)	0	2385	0	0
Total Bypass Venting Time (hrs)	0.00	39.75	0.00	0.0

Vent Stacks Open/Close		
Vent Stack No.	**#5**	**#6**
Stack Lid Open Date/Time		
Stack Lid Close Date/Time		
Total Bypass Venting Time (mins)	0	0
Total Bypass Venting Time (hrs)	0.00	0.00

Estimated Quantity of Emissions (tons)						
Pollutant:	**Lead**	0.0	**PM**	0.3	**SO_2**	4.1

Estimated Avg Coal Sulfur Content Charged Per Day (applies to all ovens charged each day):			
Date	**Avg S (%):**	**Date**	**Avg S (%):**
2/20/2018	0.96		
2/21/2018	0.96		

Estimated Avg Charge Tons per Oven Charged (avg over duration of event):			
Affected Oven No.	**Estimated Avg Coal Charge Weight/ Oven:**	**Affected Oven No.**	**Estimated Avg Coal Charge Weight/ Oven:**
1		61	
2		62	
3		63	
4		64	
5		65	
6		66	
7		67	

SunCoke Energy Environmental RCFA Report

8	
9	
10	
11	
12	
13	
14	
15	
16	
17	
18	
19	
20	
21	44.25
22	43.71
23	39.34
24	43.47
25	45.28
26	45.58
27	41.31
28	45.15
29	41.05
30	44.23
31	42.82
32	46.11
33	47.09
34	43.75
35	40.20
36	44.60
37	45.60
38	43.68
39	38.06
40	43.60
41	
42	
43	
44	
45	
46	
47	
48	
49	
50	
51	
52	
53	
54	
55	
56	
57	
58	
59	
60	

68	
69	
70	
71	
72	
73	
74	
75	
76	
77	
78	
79	
80	
81	
82	
83	
84	
85	
86	
87	
88	
89	
90	
91	
92	
93	
94	
95	
96	
97	
98	
99	
100	
101	
102	
103	
104	
105	
106	
107	
108	
109	
110	
111	
112	
113	
114	
115	
116	
117	
118	
119	
120	

Bypass Venting Emissions Calculations for Gateway Energy and Coke Company

Emission Factors (for one bypass vent stack)*:

Lead	0.075	lb/hr	May 2017 Test, GECC, Bypass Vent Stack #5
PM (Filt + Cond)	12.7	lb/hr	May 2017 Test, GECC, Bypass Vent Stack #5
SO2	206	lb/hr	Calculated from 1st half CEMS data

Corresponding RCFA Report: 7924

Start Date/Time of Bypass Venting: 2/20/18 00:00

End Date/Time of Bypass Venting: 2/21/18 15:45

Bypass Vent Stack Lid Open and Close Date/Time:

	#1	#2	#3	#4	#5	#6
Open Date/Time:	2/20/18 00:00					
Close Date/Time:	2/21/18 15:45					

Total Stack Lid Open Time per Bypass Vent Stack:

	#1	#2	#3	#4	#5	#6
Hours:	0.0	39.8	0.0	0.0	0.0	0.0
Minutes:	0	2385	0	0	0	0

Total Bypass Venting Time:

Hours: 39.8 Minutes: 2385.0

Calculation of Bypass Venting Emissions:

Emissions = Emission Factor (lb/hr) x Total Hours of Bypass Venting x 1 ton/2000 lbs

	#1	#2	#3	#4	#5	#6
Lead (lbs)	0.0	3.0	0.0	0.0	0.0	0.0
PM (lbs)	0.0	504.8	0.0	0.0	0.0	0.0
SO2 (lbs)	0.0	8188.5	0.0	0.0	0.0	0.0

Total Emissions from Bypass Venting Event

Total Emissions = Sum of Emissions from Each Affected Bypass Vent Stack

Total tons of Pollutant Emitted During Bypass Venting

Lead (tons)	0.0
PM (tons)	0.3
SO_2 (tons)	4.1

* Please note, most recent stack test data for HNCC No. 1, HNCC No. 2 and GECC was used to calculate estimated emissions. Data used to estimate total PM emissions is from a 2017 GECC bypass vent stack test. No condensable PM test data was available for HNCC No.1 or No. 2. Emission factors will be updated once required testing is completed.

Section 2 - Investigation Information and Summary

Cause and Effect Analysis (include steps taken to minimize emissions, if applicable):
On February 20, 2018 Gateway Energy and Coke Company (GECC) experienced a tube leak condition on Heat Recovery Steam Generator (HRSG) #2. The emergency vent stack (EVS) #2 was opened at 12:00 AM. HRSG #2 was removed from service to facilitate repairs. The location of the leak was found to be on the west side of the Superheat #2 section – u-bend between row 8 and 9 tube 4 and u-bend between row 8 and 9 tube 5. The repair included the replacement of two u-bend sections. A successful water pressure test was achieved on February 21, 2018. HRSG #2 was returned to service with EVS #2 closing at 3:45 PM on February 21, 2018. The total venting time associated with this event was 39.75 hours. Corrective actions identified include replacement of the tube sections and implementation of the redundant HRSG / Gas Sharing project at GECC (per action item #585231 of RCFA #2679). The replacement of the affected tube assemblies allows for the immediate return to service of HRSG #2. Given the potential for other tube leaks to occur, the longer term corrective action is to install and operate GECC's redundant HRSG. The redundant HRSG will allow for more extensive maintenance to help prevent future tube leaks and will allow for gas to be shifted in order to reduce venting while a tube leak is occurring or associated maintenance in ongoing. While the redundant HRSG / Gas Sharing project is being implemented, GECC will apply other processes and procedures to minimize the frequency of tube leaks and / or venting time that occurs while tube leaks are being repaired. The processes and procedures include but are not limited to the following: · A tube inspection program that identifies areas of the HRSG that are prone to corrosion and may require more thorough tube inspections; · An ultrasonic thickness (UT) testing method to identify thinning tubes and a "map" of the UT readings for each HRSG in order to target specific areas of the HRSG for additional evaluation or tube replacement; · An inventory of spare, upgraded, more corrosion resistant materials for certain HRSG sections; · An orbital welding process that provides a more even, consistent weld quality; and · The use of soda ash solution as a prewash to make cleaning more effective and to protect tubes from low pH conditions. It should be noted that GECC was following the above processes and procedures prior to the venting incident, so the processes and procedures should not be considered as RCFA corrective actions.

SunCoke Energy Environmental RCFA Report

SunCoke Energy
The Higher Degree

Section 3 - Causes

Cause	Description of Root Cause	Analysis of Root Cause (how did this contribute?)	Type of Cause	Cause Class	Repeat?
1642	HRSG #2 - Thermal Fatigue SH2 R8-9 T4	The mechanical stresses exceeded the strength of the tube section where the failure occurred due to thermal stress cracking	Root Cause	Physical Cause	NO
1643	HRSG #2 - Thermal Fatigue SH2 R8-9 T5	The mechanical stresses exceeded the strength of the tube section where the failure occurred due to thermal stress cracking	Root Cause	Physical Cause	NO

Section 4 - Measures Reasonably Available to Prevent or Reduce Likelihood of Recurrence (Corrective Actions)

CA#	Description of Corrective Action	Analysis of Corrective Action
1074070	HRSG #2 - Replace U-bend section of SH2 Row 8-9 Tube 4	Enable HRSG #2 to be returned to service and EVS #2 to be closed
1074071	HRSG #2 - Replace U-bend section of SH2 Row 8-9 Tube 5	Enable HRSG #2 to be returned to service and EVS #2 to be closed

Additional Corrective Action Information:

CA#	Responsible Person	Probable Effectiveness	Estimated Start Date of CA	Estimated Completion Date	Estimated Cost of Implementation	3rd Party Needed for Implementation?
1074070	JRMCLAREN	2) Reduce Likelihood	02/20/2018	03/16/2018	20,000.00	YES
1074071	JRMCLAREN	2) Reduce Likelihood	02/20/2018	03/16/2018	20,000.00	YES

Action Effectiveness Definition

Value	Description
1) Prevent Reoccurrence	Action will Prevent Reoccurrence
2) Reduce Likelihood	Action will Reduce Likelihood of Reoccurrence
3) Lessen Impact	Action will Lessen Impact of Reoccurrence
4) Improvement / Unlikely to Prevent	An Improvement but not Likely to Prevent Reoccurrence
5) Impact Cannot be Determined	Action Impact Cannot be Determined at this Time

SunCoke Energy Environmental RCFA Report

RCFA Name:	20180222_GCO_088_HRSG 05 TUBE LEAK	Report Date:	02/22/2018
Report #:	7933	Site:	GC
RCFA Facilitator:	JRMCLAREN	Location:	H-6105
RCFA Type:	Environmental	Location name:	HRSG 05, NOOTER, BATTERY C
Date of Occurrence:	Feb 22, 2018, 12:02 AM	Investigation Completed:	03/13/2018

Section1 - General Information

Executive Summary:

On February 22, 2018 Gateway Energy and Coke Company (GECC) experienced a tube leak condition on Heat Recovery Steam Generator (HRSG) #5. The emergency vent stack (EVS) #5 was opened at 12:02 AM. HRSG #5 was removed from service to facilitate repairs. The location of the leak was found to be on the east side of the Superheat #2 section – u-bend between row 9 and 10 tube 21. The repair included the replacement of the u-bend section. A successful water pressure test was achieved on February 22, 2018. HRSG #5 was returned to service with EVS #5 closing at 2:16 AM on February 23, 2018. The total venting time associated with this event was 26.23 hours.

An inspection of the tube leak location in Superheat #2 section indicated that the failure was the result of thermal fatigue cracking in combination with mechanical stresses. Tubes in proximity to the leaking tube were inspected prior to determining the final scope of repair.

Corrective actions identified were the replacement of the tube section and the future implementation of the redundant HRSG / Gas Sharing project at GECC (per action item #585231 of RCFA 2679).

SunCoke Energy Environmental RCFA Report

SunCoke Energy
The Higher Degree

Environmental Information

Did the stack lid bypass event result from planned FGD or HRSG maintenance?	No
Describe:	

Were charge weights to affected ovens reduced to a 42.5 wet tons/oven average 48 hours prior to venting?	No
If no, provide explanation of why the charge weights were not reduced to a 42.5 wet ton average.	
Explanation: Bypass venting was a result of unplanned maintenance; therefore, charge weights could not be reduced at least 48 hours in advance. Per the PMO plan, coal charge weights are reduced by approximately two tons per charging cycle during bypass venting events that are expected to exceed 24 hours.	

Did the coal charged during the bypass event contain less than 1.1% sulfur content?	Yes
If no, provide explanation of why the coal sulfur content was not reduced to a maximum of 1.1%.	
Explanation:	

Did multiple events involving stack lid open time occur within a 24 period?				No
If yes, please list the Maximo RCFA numbers here:				

Vent Stacks Open/Close				
Vent Stack No.	**#1**	**#2**	**#3**	**#4**
Stack Lid Open Date/Time				
Stack Lid Close Date/Time				
Total Bypass Venting Time (mins)	0	0	0	0
Total Bypass Venting Time (hrs)	0.00	0.00	0.00	0.0

Vent Stacks Open/Close		
Vent Stack No.	**#5**	**#6**
Stack Lid Open Date/Time	2/22/18 00:02	
Stack Lid Close Date/Time	2/23/18 02:16	
Total Bypass Venting Time (mins)	1574	0
Total Bypass Venting Time (hrs)	26.23	0.00

Estimated Quantity of Emissions (tons)						
Pollutant:	**Lead**	0.0	**PM**	0.2	**SO_2**	2.7

Estimated Avg Coal Sulfur Content Charged Per Day (applies to all ovens charged each day):			
Date	**Avg S (%):**	**Date**	**Avg S (%):**
2/22/2018	0.96		
2/23/2018	0.96		

Estimated Avg Charge Tons per Oven Charged (avg over duration of event):			
Affected Oven No.	**Estimated Avg Coal Charge Weight/ Oven:**	**Affected Oven No.**	**Estimated Avg Coal Charge Weight/ Oven:**
1		61	
2		62	
3		63	
4		64	
5		65	
6		66	
7		67	

SunCoke Energy Environmental RCFA Report

8	
9	
10	
11	
12	
13	
14	
15	
16	
17	
18	
19	
20	
21	
22	
23	
24	
25	
26	
27	
28	
29	
30	
31	
32	
33	
34	
35	
36	
37	
38	
39	
40	
41	
42	
43	
44	
45	
46	
47	
48	
49	
50	
51	
52	
53	
54	
55	
56	
57	
58	
59	
60	

68	
69	
70	
71	
72	
73	
74	
75	
76	
77	
78	
79	
80	
81	38.86
82	42.98
83	46.03
84	39.08
85	42.64
86	44.73
87	46.85
88	42.51
89	42.44
90	45.70
91	46.78
92	42.77
93	41.02
94	45.57
95	46.64
96	40.94
97	39.74
98	43.18
99	44.61
100	39.50
101	
102	
103	
104	
105	
106	
107	
108	
109	
110	
111	
112	
113	
114	
115	
116	
117	
118	
119	
120	

Bypass Venting Emissions Calculations for Gateway Energy and Coke Company

Emission Factors (for one bypass vent stack)*:

Lead	0.075	lb/hr	May 2017 Test, GECC, Bypass Vent Stack #5
PM (Filt + Cond)	12.7	lb/hr	May 2017 Test, GECC, Bypass Vent Stack #5
SO2	206	lb/hr	Calculated from 1st half CEMS data

Corresponding RCFA Report: 7933

Start Date/Time of Bypass Venting: 2/22/18 00:02

End Date/Time of Bypass Venting: 2/23/18 02:16

Bypass Vent Stack Lid Open and Close Date/Time:

	#1	#2	#3	#4	#5	#6
Open Date/Time:					2/22/18 00:02	
Close Date/Time:					2/23/18 02:16	

Total Stack Lid Open Time per Bypass Vent Stack:

	#1	#2	#3	#4	#5	#6
Hours:	0.0	0.0	0.0	0.0	26.2	0.0
Minutes:	0	0	0	0	1574	0

Total Bypass Venting Time:

Hours: 26.2 Minutes: 1574.0

Calculation of Bypass Venting Emissions:

Emissions = Emission Factor (lb/hr) x Total Hours of Bypass Venting x 1 ton/2000 lbs

	#1	#2	#3	#4	#5	#6
Lead (lbs)	0.0	0.0	0.0	0.0	2.0	0.0
PM (lbs)	0.0	0.0	0.0	0.0	333.2	0.0
SO2 (lbs)	0.0	0.0	0.0	0.0	5404.1	0.0

Total Emissions from Bypass Venting Event

Total Emissions = Sum of Emissions from Each Affected Bypass Vent Stack

Total tons of Pollutant Emitted During Bypass Venting

Lead (tons)	0.0
PM (tons)	0.2
SO_2 (tons)	2.7

* Please note, most recent stack test data for HNCC No. 1, HNCC No. 2 and GECC was used to calculate estimated emissions. Data used to estimate total PM emissions is from a 2017 GECC bypass vent stack test. No condensable PM test data was available for HNCC No.1 or No. 2. Emission factors will be updated once required testing is completed.

Section 2 - Investigation Information and Summary

Cause and Effect Analysis (include steps taken to minimize emissions, if applicable):
On February 22, 2018 Gateway Energy and Coke Company (GECC) experienced a tube leak condition on Heat Recovery Steam Generator (HRSG) #5. The emergency vent stack (EVS) #5 was opened at 12:02 AM. HRSG #5 was removed from service to facilitate repairs. The location of the leak was found to be on the east side of the Superheat #2 section – U-bend between row 9 and 10 tube 21. The repair included the replacement of the u-bend section. A successful water pressure test was achieved on February 22, 2018. HRSG #5 was returned to service with EVS #5 closing at 2:16 AM on February 23, 2018. The total venting time associated with this event was 26.23 hours. Corrective actions identified include replacement of the tube sections and implementation of the redundant HRSG / Gas Sharing project at GECC (per action item #585231 of RCFA #2679). The replacement of the affected tube assemblies allows for the immediate return to service of HRSG #5. Given the potential for other tube leaks to occur, the longer term corrective action is to install and operate GECC's redundant HRSG. The redundant HRSG will allow for more extensive maintenance to help prevent future tube leaks and will allow for gas to be shifted in order to reduce venting while a tube leak is occurring or associated maintenance in ongoing. While the redundant HRSG / Gas Sharing project is being implemented, GECC will apply other processes and procedures to minimize the frequency of tube leaks and / or venting time that occurs while tube leaks are being repaired. The processes and procedures include but are not limited to the following: · A tube inspection program that identifies areas of the HRSG that are prone to corrosion and may require more thorough tube inspections; · An ultrasonic thickness (UT) testing method to identify thinning tubes and a "map" of the UT readings for each HRSG in order to target specific areas of the HRSG for additional evaluation or tube replacement; · An inventory of spare, upgraded, more corrosion resistant materials for certain HRSG sections; · An orbital welding process that provides a more even, consistent weld quality; and · The use of soda ash solution as a prewash to make cleaning more effective and to protect tubes from low pH conditions. It should be noted that GECC was following the above processes and procedures prior to the venting incident, so the processes and procedures should not be considered as RCFA corrective actions.

SunCoke Energy Environmental RCFA Report

SunCoke Energy
The Higher Degree

Section 3 - Causes

Cause	Description of Root Cause	Analysis of Root Cause (how did this contribute?)	Type of Cause	Cause Class	Repeat?
1644	HRSG #5 - Thermal Fatigue SH2 R9-10 T21	The mechanical stresses exceeded the strength of the tube section where the failure occurred due to thermal stress cracking	Root Cause	Physical Cause	NO

Section 4 - Measures Reasonably Available to Prevent or Reduce Likelihood of Recurrence (Corrective Actions)

CA#	Description of Corrective Action	Analysis of Corrective Action
1074085	HRSG #5 - Replace U-bend section of SH2 Row 9-10 Tube 21	Enable HRSG #5 to be returned to service and EVS #5 to be closed

Additional Corrective Action Information:

CA#	Responsible Person	Probable Effectiveness	Estimated Start Date of CA	Estimated Completion Date	Estimated Cost of Implementation	3rd Party Needed for Implementation?
1074085	JRMCLAREN	2) Reduce Likelihood	02/22/2018	03/16/2018	30,000.00	YES

Action Effectiveness Definition

Value	Description
1) Prevent Reoccurrence	Action will Prevent Reoccurrence
2) Reduce Likelihood	Action will Reduce Likelihood of Reoccurrence
3) Lessen Impact	Action will Lessen Impact of Reoccurrence
4) Improvement / Unlikely to Prevent	An Improvement but not Likely to Prevent Reoccurrence
5) Impact Cannot be Determined	Action Impact Cannot be Determined at this Time

SunCoke Energy Environmental RCFA Report

RCFA Name:	20180328_GCO_089_HRSG 01 TUBE LEAK	Report Date:	03/29/2018
Report #:	8062	Site:	GC
RCFA Facilitator:	RSKREMER	Location:	H-6101
RCFA Type:	Environmental	Location name:	HRSG 01, NOOTER, BATTERY A
Date of Occurrence:	Mar 28, 2018, 3:43 AM	Investigation Completed:	04/19/2018

Section1 - General Information

Executive Summary:

On March 28, 2018 Gateway Energy and Coke Company (GECC) experienced a tube leak condition on Heat Recovery Steam Generator (HRSG) #1. The emergency vent stack (EVS) #1 was opened at 3:43 AM. HRSG #1 was removed from service to facilitate repairs. The location of the leak was found to be on the west side of the Economizer section – row 7 tube 15. The repair included the replacement of row 7 tube 15 and 14 along with associated u-bends and jumpers. During the draining of Economizer section, a leak in the Economizer drain line piping was discovered. Materials were procured to enable the repair of the external piping in order to perform a water pressure test on HRSG #1. A successful water pressure test was achieved on March 29, 2018. HRSG #1 was returned to service with EVS #1 closing at 1:53 AM on March 30, 2018. The total venting time associated with this event was 46.15 hours.

An inspection of the tube leak location in the Economizer section indicated that the failure was the result material wastage due to erosion / corrosion in the soot blower path. Tubes in proximity to the leaking tube were inspected prior to determining the final scope of repair. The Economizer drain line piping issue was the result of drain valve leak-by and freezing conditions.

Corrective actions identified were the replacement of the tube section, the external piping section, the drain valves during the next planned outage, and the future implementation of the redundant HRSG / Gas Sharing project at GECC (per action item #585231 of RCFA 2679).

SunCoke Energy Environmental RCFA Report

SunCoke Energy
The Higher Degree

Environmental Information

Did the stack lid bypass event result from planned FGD or HRSG maintenance?	No
Describe:	

Were charge weights to affected ovens reduced to a 42.5 wet tons/oven average 48 hours prior to venting?	No
If no, provide explanation of why the charge weights were not reduced to a 42.5 wet ton average.	
Explanation: Bypass venting was a result of unplanned maintenance; therefore, charge weights could not be reduced at least 48 hours in advance. Per the PMO plan, coal charge weights are reduced by approximately two tons per charging cycle during bypass venting events that are expected to exceed 24 hours.	

Did the coal charged during the bypass event contain less than 1.1% sulfur content?	Yes
If no, provide explanation of why the coal sulfur content was not reduced to a maximum of 1.1%.	
Explanation:	

Did multiple events involving stack lid open time occur within a 24 period?				No
If yes, please list the Maximo RCFA numbers here:				

Vent Stacks Open/Close				
Vent Stack No.	**#1**	**#2**	**#3**	**#4**
Stack Lid Open Date/Time	3/28/18 03:43			
Stack Lid Close Date/Time	3/30/18 01:53			
Total Bypass Venting Time (mins)	2769	0	0	0
Total Bypass Venting Time (hrs)	46.15	0.00	0.00	0.0

Vent Stacks Open/Close		
Vent Stack No.	**#5**	**#6**
Stack Lid Open Date/Time		
Stack Lid Close Date/Time		
Total Bypass Venting Time (mins)	0	0
Total Bypass Venting Time (hrs)	0.00	0.00

Estimated Quantity of Emissions (tons)						
Pollutant:	**Lead**	0.0	**PM**	0.3	**SO_2**	4.8

Estimated Avg Coal Sulfur Content Charged Per Day (applies to all ovens charged each day):			
Date	**Avg S (%):**	**Date**	**Avg S (%):**
3/28/2018	0.97		
3/29/2018	0.97		
3/30/2018	1.0		

Estimated Avg Charge Tons per Oven Charged (avg over duration of event):			
Affected Oven No.	**Estimated Avg Coal Charge Weight/ Oven:**	**Affected Oven No.**	**Estimated Avg Coal Charge Weight/ Oven:**
1	44.76	61	
2	43.35	62	
3	32.73	63	
4	43.31	64	
5	46.18	65	
6	46.37	66	
7	45.30	67	

SunCoke Energy Environmental RCFA Report

8	45.26
9	47.16
10	46.08
11	46.92
12	43.44
13	47.45
14	46.13
15	46.09
16	43.27
17	44.51
18	44.09
19	44.70
20	43.20
21	
22	
23	
24	
25	
26	
27	
28	
29	
30	
31	
32	
33	
34	
35	
36	
37	
38	
39	
40	
41	
42	
43	
44	
45	
46	
47	
48	
49	
50	
51	
52	
53	
54	
55	
56	
57	
58	
59	
60	

68	
69	
70	
71	
72	
73	
74	
75	
76	
77	
78	
79	
80	
81	
82	
83	
84	
85	
86	
87	
88	
89	
90	
91	
92	
93	
94	
95	
96	
97	
98	
99	
100	
101	
102	
103	
104	
105	
106	
107	
108	
109	
110	
111	
112	
113	
114	
115	
116	
117	
118	
119	
120	

Bypass Venting Emissions Calculations for Gateway Energy and Coke Company

Emission Factors (for one bypass vent stack)*:

Lead	0.075	lb/hr	May 2017 Test, GECC, Bypass Vent Stack #5
PM (Filt + Cond)	12.7	lb/hr	May 2017 Test, GECC, Bypass Vent Stack #5
SO2	206	lb/hr	Calculated from 1st half CEMS data

Corresponding RCFA Report: 8062

Start Date/Time of Bypass Venting: 3/28/18 03:43

End Date/Time of Bypass Venting: 3/30/18 01:53

Bypass Vent Stack Lid Open and Close Date/Time:

	#1	#2	#3	#4	#5	#6
Open Date/Time:	3/28/18 03:43					
Close Date/Time:	3/30/18 01:53					

Total Stack Lid Open Time per Bypass Vent Stack:

	#1	#2	#3	#4	#5	#6
Hours:	46.2	0.0	0.0	0.0	0.0	0.0
Minutes:	2769.25	0	0	0	0	0

Total Bypass Venting Time:

Hours: 46.2 Minutes: 2769.3

Calculation of Bypass Venting Emissions:

Emissions = Emission Factor (lb/hr) x Total Hours of Bypass Venting x 1 ton/2000 lbs

	#1	#2	#3	#4	#5	#6
Lead (lbs)	3.5	0.0	0.0	0.0	0.0	0.0
PM (lbs)	586.2	0.0	0.0	0.0	0.0	0.0
SO2 (lbs)	9507.8	0.0	0.0	0.0	0.0	0.0

Total Emissions from Bypass Venting Event

Total Emissions = Sum of Emissions from Each Affected Bypass Vent Stack

Total tons of Pollutant Emitted During Bypass Venting

Lead (tons)	0.0
PM (tons)	0.3
SO_2 (tons)	4.8

* Please note, most recent stack test data for HNCC No. 1, HNCC No. 2 and GECC was used to calculate estimated emissions. Data used to estimate total PM emissions is from a 2017 GECC bypass vent stack test. No condensable PM test data was available for HNCC No.1 or No. 2. Emission factors will be updated once required testing is completed.

Section 2 - Investigation Information and Summary

Cause and Effect Analysis (include steps taken to minimize emissions, if applicable):
On March 28, 2018 Gateway Energy and Coke Company (GECC) experienced a tube leak condition on Heat Recovery Steam Generator (HRSG) #1. The emergency vent stack (EVS) #1 was opened at 3:43 AM. HRSG #1 was removed from service to facilitate repairs. The location of the leak was found to be on the west side of the Economizer section – row 7 tube 15. The repair included the replacement of row 7 tube 15 and 14 along with associated u-bends and jumpers. During the draining of Economizer section, a leak in the Economizer drain line piping was discovered. Materials were procured to enable the repair of the external piping in order to perform a water pressure test on HRSG #1. A successful water pressure test was achieved on March 29, 2018. HRSG #1 was returned to service with EVS #1 closing at 1:53 AM on March 30, 2018. The total venting time associated with this event was 46.15 hours. Corrective actions identified were the replacement of the tube section, the external piping section, the drain valves during the next planned outage, and the future implementation of the redundant HRSG / Gas Sharing project at GECC (per action item #585231 of RCFA 2679). The replacement of the affected tube assemblies allows for the immediate return to service of HRSG #1. Given the potential for other tube leaks to occur, the longer-term corrective action is to install and operate GECC's redundant HRSG. The redundant HRSG will allow for more extensive maintenance to help prevent future tube leaks and will allow for gas to be shifted in order to reduce venting while a tube leak is occurring or associated maintenance in ongoing. While the redundant HRSG / Gas Sharing project is being implemented, GECC will apply other processes and procedures to minimize the frequency of tube leaks and / or venting time that occurs while tube leaks are being repaired. The processes and procedures include but are not limited to the following: · A tube inspection program that identifies areas of the HRSG that are prone to corrosion and may require more thorough tube inspections; · An ultrasonic thickness (UT) testing method to identify thinning tubes and a "map" of the UT readings for each HRSG in order to target specific areas of the HRSG for additional evaluation or tube replacement; · An inventory of spare, upgraded, more corrosion resistant materials for certain HRSG sections; · An orbital welding process that provides a more even, consistent weld quality; and · The use of soda ash solution as a prewash to make cleaning more effective and to protect tubes from low pH conditions. It should be noted that GECC was following the above processes and procedures prior to the venting incident, so the processes and procedures should not be considered as RCFA corrective actions.

SunCoke Energy Environmental RCFA Report

SunCoke Energy
The Higher Degree

Section 3 - Causes

Cause	Description of Root Cause	Analysis of Root Cause (how did this contribute?)	Type of Cause	Cause Class	Repeat?
1662	HRSG #1 - Localized Corrosion Row 7 Tube 15	The mechanical stresses exceeded the strength of the tube section where the failure occurred due to material wastage / thinning	Root Cause	Physical Cause	NO
1664	HRSG #1 - Drain Valve Leak-by and Freezing	Drain valve leak-by allowed drain piping to fill with water over a period of time then the freezing conditions caused the water to freeze and burst the pipe	Secondary Cause	Physical Cause	NO

Section 4 - Measures Reasonably Available to Prevent or Reduce Likelihood of Recurrence (Corrective Actions)

CA#	Description of Corrective Action	Analysis of Corrective Action
1083472	HRSG #1 - Replace Economizer Row 7 Tube 14 and 15	Enable HRSG #1 to be returned to service and EVS #1 to be closed
1083491	HRSG #1 - Repair Economizer Drain Line Piping	Enable HRSG #1 to be returned to service and EVS #1 to be closed
1083720	HRSG #1 - Replace Economizer Drain Valves during next planned Outage	Stop leak-by from filling external piping with water prior to winter conditions

Additional Corrective Action Information:

CA#	Responsible Person	Probable Effectiveness	Estimated Start Date of CA	Estimated Completion Date	Estimated Cost of Implementation	3rd Party Needed for Implementation?
1083472	JRMCLAREN	2) Reduce Likelihood	03/28/2018	04/20/2018	50,000.00	YES
1083491	JRMCLAREN	5) Impact Cannot be Determined	03/28/2018	04/20/2018	2,500.00	YES
1083720	SATELFORD	2) Reduce Likelihood	09/04/2018	10/12/2018	12,000.00	YES

Action Effectiveness Definition

Value	Description
1) Prevent Reoccurrence	Action will Prevent Reoccurrence
2) Reduce Likelihood	Action will Reduce Likelihood of Reoccurrence
3) Lessen Impact	Action will Lessen Impact of Reoccurrence
4) Improvement / Unlikely to Prevent	An Improvement but not Likely to Prevent Reoccurrence
5) Impact Cannot be Determined	Action Impact Cannot be Determined at this Time

SunCoke Energy Environmental RCFA Report

SunCoke Energy
The Higher Degree

RCFA Name:	20180415_GCO_090_HRSG 05 TUBE LEAK
Report #:	8123
RCFA Facilitator:	JRMCLAREN
RCFA Type:	Environmental
Date of Occurrence:	Apr 15, 2018, 9:03 PM

Report Date:	04/16/2018
Site:	GC
Location:	H-6105
Location name:	HRSG 05, NOOTER, BATTERY C
Investigation Completed:	05/04/2018

Section1 - General Information

Executive Summary:

On April 15, 2018 Gateway Energy and Coke Company (GECC) experienced a tube leak condition on Heat Recovery Steam Generator (HRSG) #5. The emergency vent stack (EVS) #5 was opened at 9:03 PM. HRSG #5 was removed from service to facilitate repairs. The location of the leak was found to be on the east side of the Economizer section – row 23 tube 11. The repair included the replacement of row 23 tube 11, row 23 tube 10, row 22 tube 6 and row 22 tube 7 along with associated u-bends and jumpers. A successful water pressure test was achieved on April 17, 2018. HRSG #5 was returned to service with EVS #5 closing at 11:19 PM on April 17, 2018. The total venting time associated with this event was 50.26 hours.

An inspection of the tube leak location in the Economizer section indicated that the failure was the result material wastage due to erosion / corrosion in the soot blower path. Tubes in proximity to the leaking tube were inspected prior to determining the final scope of repair.

Corrective actions identified were the replacement of the tube section, the external piping section, the drain valves during the next planned outage, and the future implementation of the redundant HRSG / Gas Sharing project at GECC (per action item #585231 of RCFA 2679).

SunCoke Energy Environmental RCFA Report

SunCoke Energy
The Higher Degree

Environmental Information

Did the stack lid bypass event result from planned FGD or HRSG maintenance?	No
Describe:	

Were charge weights to affected ovens reduced to a 42.5 wet tons/oven average 48 hours prior to venting?	No
If no, provide explanation of why the charge weights were not reduced to a 42.5 wet ton average.	
Explanation: Bypass venting was a result of unplanned maintenance; therefore, charge weights could not be reduced at least 48 hours in advance. Per the PMO plan, coal charge weights are reduced by approximately two tons per charging cycle during bypass venting events that are expected to exceed 24 hours.	

Did the coal charged during the bypass event contain less than 1.1% sulfur content?	Yes
If no, provide explanation of why the coal sulfur content was not reduced to a maximum of 1.1%.	
Explanation:	

Did multiple events involving stack lid open time occur within a 24 period?				No
If yes, please list the Maximo RCFA numbers here:				

Vent Stacks Open/Close				
Vent Stack No.	**#1**	**#2**	**#3**	**#4**
Stack Lid Open Date/Time				
Stack Lid Close Date/Time				
Total Bypass Venting Time (mins)	0	0	0	0
Total Bypass Venting Time (hrs)	0.00	0.00	0.00	0.0

Vent Stacks Open/Close		
Vent Stack No.	**#5**	**#6**
Stack Lid Open Date/Time	4/15/18 21:03	
Stack Lid Close Date/Time	4/17/18 23:19	
Total Bypass Venting Time (mins)	3016	0
Total Bypass Venting Time (hrs)	50.26	0.00

Estimated Quantity of Emissions (tons)						
Pollutant:	**Lead**	0.0	**PM**	0.3	**SO_2**	5.2

Estimated Avg Coal Sulfur Content Charged Per Day (applies to all ovens charged each day):			
Date	**Avg S (%):**	**Date**	**Avg S (%):**
4/15/2018	0.93		
4/16/2018	0.93		
4/17/2018	0.93		

Estimated Avg Charge Tons per Oven Charged (avg over duration of event):			
Affected Oven No.	**Estimated Avg Coal Charge Weight/ Oven:**	**Affected Oven No.**	**Estimated Avg Coal Charge Weight/ Oven:**
1		61	
2		62	
3		63	
4		64	
5		65	
6		66	
7		67	

SunCoke Energy Environmental RCFA Report

8	
9	
10	
11	
12	
13	
14	
15	
16	
17	
18	
19	
20	
21	
22	
23	
24	
25	
26	
27	
28	
29	
30	
31	
32	
33	
34	
35	
36	
37	
38	
39	
40	
41	
42	
43	
44	
45	
46	
47	
48	
49	
50	
51	
52	
53	
54	
55	
56	
57	
58	
59	
60	

68	
69	
70	
71	
72	
73	
74	
75	
76	
77	
78	
79	
80	
81	45.63
82	44.33
83	44.95
84	45.44
85	44.47
86	45.93
87	46.24
88	47.02
89	46.01
90	45.73
91	46.05
92	47.02
93	46.09
94	45.97
95	45.55
96	45.86
97	44.49
98	43.52
99	44.73
100	45.22
101	
102	
103	
104	
105	
106	
107	
108	
109	
110	
111	
112	
113	
114	
115	
116	
117	
118	
119	
120	

Bypass Venting Emissions Calculations for Gateway Energy and Coke Company

Emission Factors (for one bypass vent stack)*:

Lead	0.075	lb/hr	May 2017 Test, GECC, Bypass Vent Stack #5
PM (Filt + Cond)	12.7	lb/hr	May 2017 Test, GECC, Bypass Vent Stack #5
SO2	206	lb/hr	Calculated from 1st half CEMS data

Corresponding RCFA Report: 8123

Start Date/Time of Bypass Venting: 4/15/18 21:03

End Date/Time of Bypass Venting: 4/17/18 23:19

Bypass Vent Stack Lid Open and Close Date/Time:

	#1	#2	#3	#4	#5	#6
Open Date/Time:					4/15/18 21:03	
Close Date/Time:					4/17/18 23:19	

Total Stack Lid Open Time per Bypass Vent Stack:

	#1	#2	#3	#4	#5	#6
Hours:	0.0	0.0	0.0	0.0	50.3	0.0
Minutes:	0	0	0	0	3015.5	0

Total Bypass Venting Time:

Hours: 50.3 Minutes: 3015.5

Calculation of Bypass Venting Emissions:

Emissions = Emission Factor (lb/hr) x Total Hours of Bypass Venting x 1 ton/2000 lbs

	#1	#2	#3	#4	#5	#6
Lead (lbs)	0.0	0.0	0.0	0.0	3.8	0.0
PM (lbs)	0.0	0.0	0.0	0.0	638.3	0.0
SO2 (lbs)	0.0	0.0	0.0	0.0	10353.2	0.0

Total Emissions from Bypass Venting Event

Total Emissions = Sum of Emissions from Each Affected Bypass Vent Stack

Total tons of Pollutant Emitted During Bypass Venting

Lead (tons)	0.0
PM (tons)	0.3
SO_2 (tons)	5.2

* Please note, most recent stack test data for HNCC No. 1, HNCC No. 2 and GECC was used to calculate estimated emissions. Data used to estimate total PM emissions is from a 2017 GECC bypass vent stack test. No condensable PM test data was available for HNCC No.1 or No. 2. Emission factors will be updated once required testing is completed.

Section 2 - Investigation Information and Summary

Cause and Effect Analysis (include steps taken to minimize emissions, if applicable):
On April 15, 2018 Gateway Energy and Coke Company (GECC) experienced a tube leak condition on Heat Recovery Steam Generator (HRSG) #5. The emergency vent stack (EVS) #5 was opened at 9:03 PM. HRSG #5 was removed from service to facilitate repairs. The location of the leak was found to be on the east side of the Economizer section – row 23 tube 11. The repair included the replacement of row 23 tube 11, row 23 tube 10, row 22 tube 6 and row 22 tube 7 along with associated u-bends and jumpers. A successful water pressure test was achieved on April 17, 2018. HRSG #5 was returned to service with EVS #5 closing at 11:19 PM on April 17, 2018. The total venting time associated with this event was 50.26 hours. Corrective actions identified were the replacement of the tube section, the external piping section, the drain valves during the next planned outage, and the future implementation of the redundant HRSG / Gas Sharing project at GECC (per action item #585231 of RCFA 2679). The replacement of the affected tube assemblies allows for the immediate return to service of HRSG #5. Given the potential for other tube leaks to occur, the longer-term corrective action is to install and operate GECC's redundant HRSG. The redundant HRSG will allow for more extensive maintenance to help prevent future tube leaks and will allow for gas to be shifted in order to reduce venting while a tube leak is occurring or associated maintenance in ongoing. While the redundant HRSG / Gas Sharing project is being implemented, GECC will apply other processes and procedures to minimize the frequency of tube leaks and / or venting time that occurs while tube leaks are being repaired. The processes and procedures include but are not limited to the following: · A tube inspection program that identifies areas of the HRSG that are prone to corrosion and may require more thorough tube inspections; · An ultrasonic thickness (UT) testing method to identify thinning tubes and a "map" of the UT readings for each HRSG in order to target specific areas of the HRSG for additional evaluation or tube replacement; · An inventory of spare, upgraded, more corrosion resistant materials for certain HRSG sections; · An orbital welding process that provides a more even, consistent weld quality; and · The use of soda ash solution as a prewash to make cleaning more effective and to protect tubes from low pH conditions. It should be noted that GECC was following the above processes and procedures prior to the venting incident, so the processes and procedures should not be considered as RCFA corrective actions.

Section 3 - Causes

Cause	Description of Root Cause	Analysis of Root Cause (how did this contribute?)	Type of Cause	Cause Class	Repeat ?
1671	HRSG #5 - Localized Corrosion Row 23 Tube 11	The mechanical stresses exceeded the strength of the tube section where the failure occurred due to material wastage / thinning	Root Cause	Physical Cause	NO
1672	HRSG #5 - Localized Corrosion Row 23 Tube 10	The mechanical stresses exceeded the strength of the tube section where the failure occurred due to material wastage / thinning	Root Cause	Physical Cause	NO
1673	HRSG #5 - Localized Corrosion Row 22 Tube 6	The mechanical stresses exceeded the strength of the tube section where the failure occurred due to material wastage / thinning	Root Cause	Physical Cause	NO
1674	HRSG #5 - Localized Corrosion Row 22 Tube 7	The mechanical stresses exceeded the strength of the tube section where the failure occurred due to material wastage / thinning	Root Cause	Physical Cause	NO

Section 4 - Measures Reasonably Available to Prevent or Reduce Likelihood of Recurrence (Corrective Actions)

CA#	Description of Corrective Action	Analysis of Corrective Action
1088603	HRSG #5 - Replace Economizer Row 23 Tube 11	Enable HRSG #5 to be returned to service and EVS #5 to be closed
1088604	HRSG #5 - Replace Economizer Row 23 Tube 10	Enable HRSG #5 to be returned to service and EVS #5 to be closed
1088605	HRSG #5 - Replace Economizer Row 22 Tube 6	Enable HRSG #5 to be returned to service and EVS #5 to be closed
1088606	HRSG #5 - Replace Economizer Row 22 Tube 7	Enable HRSG #5 to be returned to service and EVS #5 to be closed

Additional Corrective Action Information:

CA#	Responsible Person	Probable Effectiveness	Estimated Start Date of CA	Estimated Completion Date	Estimated Cost of Implementation	3rd Party Needed for Implementation?
1088603	JRMCLAREN	2) Reduce Likelihood	04/15/2018	05/11/2018	10,000.00	YES
1088604	JRMCLAREN	2) Reduce Likelihood	04/15/2018	05/11/2018	10,000.00	YES
1088605	JRMCLAREN	2) Reduce Likelihood	04/15/2018	05/11/2018	10,000.00	YES
1088606	JRMCLAREN	2) Reduce Likelihood	04/15/2018	05/11/2018	10,000.00	YES

Action Effectiveness Definition

Value	Description
1) Prevent Reoccurrence	Action will Prevent Reoccurrence
2) Reduce Likelihood	Action will Reduce Likelihood of Reoccurrence
3) Lessen Impact	Action will Lessen Impact of Reoccurrence
4) Improvement / Unlikely to Prevent	An Improvement but not Likely to Prevent Reoccurrence
5) Impact Cannot be Determined	Action Impact Cannot be Determined at this Time

SunCoke Energy Environmental RCFA Report

RCFA Name:	20180508_GCO_091_HRSG 03 TUBE LEAK	Report Date:	05/08/2018
Report #:	8187	Site:	GC
RCFA Facilitator:	JRMCLAREN	Location:	H-6103
RCFA Type:	Environmental	Location name:	HRSG 03, NOOTER, BATTERY B
Date of Occurrence:	May 8, 2018, 1:15 AM	Investigation Completed:	05/28/2018

Section1 - General Information

Executive Summary:

On May 8, 2018 Gateway Energy and Coke Company (GECC) experienced a tube leak condition on Heat Recovery Steam Generator (HRSG) #3. The emergency vent stack (EVS) #3 was opened at 1:15 AM. HRSG #3 was removed from service to facilitate repairs. The location of the leak was found to be on the east side of the Economizer section − row 7 tube 10. The repair included the replacement of row 7 tube 9 and row 7 tube 10 along with associated u-bends and jumpers. A water pressure test was performed on May 9, 2018. Additional leaks were indicated at the following locations: Evaporator 1 − Row 3 Tube 3 and east side of Superheat #2 − u-bend between Row 7 and 8 Tube 5. Repairs involved replacing the u-bend between 9 and 10 Tube 5 and the u-bend between Row 7 and 8 Tube 5 as well as plugging Evaporator 1 Row 2 Tube 3 and Row 3 Tube 3. Repair timeline was protracted in order to source plugs with proper material test report (MTR) documentation and identification. A successful water pressure test was achieved on May 10, 2018. HRSG #3 was returned to service with EVS #3 closing at 2:56 AM on May 11, 2018. The total venting time associated with this event was 73.68 hours.

An inspection of the tube leak location in the Economizer section indicated that the failure was the result material wastage due to erosion / corrosion in the soot blower path. The Superheat #2 failure was related to thermal fatigue cracking while the Evaporator 1 failure pertained to material wastage due to erosion / corrosion. Tubes in proximity to the leaking tubes were inspected prior to determining the final scope of repair.

Corrective actions identified were the replacement or plugging of the tube section, procurement of properly documented and identified plugs and the future implementation of the redundant HRSG / Gas Sharing project at GECC (per action item #585231 of RCFA 2679).

SunCoke Energy Environmental RCFA Report

SunCoke Energy
The Higher Degree

Environmental Information

Did the stack lid bypass event result from planned FGD or HRSG maintenance?	No
Describe:	

Were charge weights to affected ovens reduced to a 42.5 wet tons/oven average 48 hours prior to venting?	No
If no, provide explanation of why the charge weights were not reduced to a 42.5 wet ton average.	
Explanation: Bypass venting was a result of unplanned maintenance; therefore, charge weights could not be reduced at least 48 hours in advance. Per the PMO plan, coal charge weights are reduced by approximately two tons per charging cycle during bypass venting events that are expected to exceed 24 hours.	

Did the coal charged during the bypass event contain less than 1.1% sulfur content?	Yes
If no, provide explanation of why the coal sulfur content was not reduced to a maximum of 1.1%.	
Explanation:	

Did multiple events involving stack lid open time occur within a 24 period?				No
If yes, please list the Maximo RCFA numbers here:				

Vent Stacks Open/Close				
Vent Stack No.	**#1**	**#2**	**#3**	**#4**
Stack Lid Open Date/Time			5/8/18 01:15	
Stack Lid Close Date/Time			5/11/18 02:56	
Total Bypass Venting Time (mins)	0	0	4421	0
Total Bypass Venting Time (hrs)	0.00	0.00	73.68	0.0

Vent Stacks Open/Close		
Vent Stack No.	**#5**	**#6**
Stack Lid Open Date/Time		
Stack Lid Close Date/Time		
Total Bypass Venting Time (mins)	0	0
Total Bypass Venting Time (hrs)	0.00	0.00

Estimated Quantity of Emissions (tons)						
Pollutant:	**Lead**	0.0	**PM**	0.5	**SO_2**	7.6

Estimated Avg Coal Sulfur Content Charged Per Day (applies to all ovens charged each day):				
Date	**Avg S (%):**		**Date**	**Avg S (%):**
5/8/2018	0.98			
5/9/2018	0.98			
5/10/2018	0.98			
5/11/2018	0.98			

Estimated Avg Charge Tons per Oven Charged (avg over duration of event):				
Affected Oven No.	**Estimated Avg Coal Charge Weight/ Oven:**		**Affected Oven No.**	**Estimated Avg Coal Charge Weight/ Oven:**
1			61	
2			62	
3			63	
4			64	
5			65	
6			66	
7			67	

SunCoke Energy Environmental RCFA Report

8	
9	
10	
11	
12	
13	
14	
15	
16	
17	
18	
19	
20	
21	
22	
23	
24	
25	
26	
27	
28	
29	
30	
31	
32	
33	
34	
35	
36	
37	
38	
39	
40	
41	43.87
42	42.83
43	44.22
44	44.47
45	45.20
46	43.69
47	45.99
48	45.17
49	45.96
50	45.14
51	45.99
52	45.12
53	45.81
54	45.13
55	32.94
56	44.37
57	44.08
58	43.11
59	43.96
60	42.92

68	
69	
70	
71	
72	
73	
74	
75	
76	
77	
78	
79	
80	
81	
82	
83	
84	
85	
86	
87	
88	
89	
90	
91	
92	
93	
94	
95	
96	
97	
98	
99	
100	
101	
102	
103	
104	
105	
106	
107	
108	
109	
110	
111	
112	
113	
114	
115	
116	
117	
118	
119	
120	

Bypass Venting Emissions Calculations for Gateway Energy and Coke Company

Emission Factors (for one bypass vent stack)*:

Lead	0.075	lb/hr	May 2017 Test, GECC, Bypass Vent Stack #5
PM (Filt + Cond)	12.7	lb/hr	May 2017 Test, GECC, Bypass Vent Stack #5
SO2	206	lb/hr	Calculated from 1st half CEMS data

Corresponding RCFA Report: 8187

Start Date/Time of Bypass Venting: 5/8/18 01:15

End Date/Time of Bypass Venting: 5/11/18 02:56

Bypass Vent Stack Lid Open and Close Date/Time:

	#1	#2	#3	#4	#5	#6
Open Date/Time:			5/8/18 01:15			
Close Date/Time:			5/11/18 02:56			

Total Stack Lid Open Time per Bypass Vent Stack:

	#1	#2	#3	#4	#5	#6
Hours:	0.0	0.0	73.7	0.0	0.0	0.0
Minutes:	0	0	4421	0	0	0

Total Bypass Venting Time:

Hours: 73.7 Minutes: 4421.0

Calculation of Bypass Venting Emissions:

Emissions = Emission Factor (lb/hr) x Total Hours of Bypass Venting x 1 ton/2000 lbs

	#1	#2	#3	#4	#5	#6
Lead (lbs)	0.0	0.0	5.5	0.0	0.0	0.0
PM (lbs)	0.0	0.0	935.8	0.0	0.0	0.0
SO2 (lbs)	0.0	0.0	15178.8	0.0	0.0	0.0

Total Emissions from Bypass Venting Event

Total Emissions = Sum of Emissions from Each Affected Bypass Vent Stack

Total tons of Pollutant Emitted During Bypass Venting

Lead (tons)	0.0
PM (tons)	0.5
SO_2 (tons)	7.6

* Please note, most recent stack test data for HNCC No. 1, HNCC No. 2 and GECC was used to calculate estimated emissions. Data used to estimate total PM emissions is from a 2017 GECC bypass vent stack test. No condensable PM test data was available for HNCC No.1 or No. 2. Emission factors will be updated once required testing is completed.

Section 2 - Investigation Information and Summary

Cause and Effect Analysis (include steps taken to minimize emissions, if applicable):
On May 8, 2018 Gateway Energy and Coke Company (GECC) experienced a tube leak condition on Heat Recovery Steam Generator (HRSG) #3. The emergency vent stack (EVS) #3 was opened at 1:15 AM. HRSG #3 was removed from service to facilitate repairs. The location of the leak was found to be on the east side of the Economizer section – row 7 tube 10. The repair included the replacement of row 7 tube 9 and row 7 tube 10 along with associated u-bends and jumpers. A water pressure test was performed on May 9, 2018. Additional leaks were indicated at the following locations: Evaporator 1 – Row 3 Tube 3 and east side of Superheat #2 – u-bend between Row 7 and 8 Tube 5. Repairs involved replacing the u-bend between 9 and 10 Tube 5 and the u-bend between Row 7 and 8 Tube 5 as well as plugging Evaporator 1 Row 2 Tube 3 and Row 3 Tube 3. Repair timeline was protracted in order to source plugs with proper material test report (MTR) documentation and identification. A successful water pressure test was achieved on May 10, 2018. HRSG #3 was returned to service with EVS #3 closing at 2:56 AM on May 11, 2018. The total venting time associated with this event was 73.68 hours. Corrective actions identified were the replacement or plugging of the tube section, procurement of properly documented and identified plugs and the future implementation of the redundant HRSG / Gas Sharing project at GECC (per action item #585231 of RCFA 2679). The replacement or plugging of the affected tube assemblies allows for the immediate return to service of HRSG #3. Given the potential for other tube leaks to occur, the longer-term corrective action is to install and operate GECC's redundant HRSG. The redundant HRSG will allow for more extensive maintenance to help prevent future tube leaks and will allow for gas to be shifted in order to reduce venting while a tube leak is occurring or associated maintenance in ongoing. While the redundant HRSG / Gas Sharing project is being implemented, GECC will apply other processes and procedures to minimize the frequency of tube leaks and / or venting time that occurs while tube leaks are being repaired. The processes and procedures include but are not limited to the following: · A tube inspection program that identifies areas of the HRSG that are prone to corrosion and may require more thorough tube inspections; · An ultrasonic thickness (UT) testing method to identify thinning tubes and a "map" of the UT readings for each HRSG in order to target specific areas of the HRSG for additional evaluation or tube replacement; · An inventory of spare, upgraded, more corrosion resistant materials for certain HRSG sections; · An orbital welding process that provides a more even, consistent weld quality; and · The use of soda ash solution as a prewash to make cleaning more effective and to protect tubes from low pH conditions. It should be noted that GECC was following the above processes and procedures prior to the venting incident, so the processes and procedures should not be considered as RCFA corrective actions.

Section 3 - Causes

Cause	Description of Root Cause	Analysis of Root Cause (how did this contribute?)	Type of Cause	Cause Class	Repeat?
1675	HRSG #3 - Localized Corrosion Econ 2 R7 T9	The mechanical stresses exceeded the strength of the tube section where the failure occurred due to material wastage / thinning	Root Cause	Physical Cause	NO
1676	HRSG #3 - Localized Corrosion Econ 2 R7 T10	The mechanical stresses exceeded the strength of the tube section where the failure occurred due to material wastage / thinning	Root Cause	Physical Cause	NO
1677	HRSG #3 - Thermal Fatigue SH2 Ubend R9-10 T5	The mechanical stresses exceeded the strength of the tube section where the failure occurred due to thermal stress cracking	Root Cause	Physical Cause	NO
1678	HRSG #3 - Thermal Fatigue SH2 Ubend R7-8 T5	The mechanical stresses exceeded the strength of the tube section where the failure occurred due to thermal stress cracking	Root Cause	Physical Cause	NO
1679	HRSG #3 - Localized Corrosion Evap1 R2 T3	The mechanical stresses exceeded the strength of the tube section where the failure occurred due to material wastage / thinning	Root Cause	Physical Cause	NO
1680	HRSG #3 - Localized Corrosion Evap1 R3 T3	The mechanical stresses exceeded the strength of the tube section where the failure occurred due to material wastage / thinning	Root Cause	Physical Cause	NO
1689	HRSG #3 - Inadequate Identification on Plugs	Plug documentation and identification inadequate for Code compliant ASME Section 1 repair	Secondary Cause	Systemic Cause	NO

Section 4 - Measures Reasonably Available to Prevent or Reduce Likelihood of Recurrence (Corrective Actions)

CA#	Description of Corrective Action	Analysis of Corrective Action
1092676	Replace Econ 2 Row 7 Tube 9 with associated ubends and jumpers	Enable HRSG #3 to be returned to service and EVS #3 to be closed
1092677	Replace Econ 2 Row 7 Tube 10 with associated ubends and jumpers	Enable HRSG #3 to be returned to service and EVS #3 to be closed
1092678	Replace SH2 Ubend between Row 9 and 10 Tube 5	Enable HRSG #3 to be returned to service and EVS #3 to be closed
1092679	Replace SH2 Ubend between Row 7 and 8 Tube 5	Enable HRSG #3 to be returned to service and EVS #3 to be closed
1092680	Plug Evap1 Row 2 Tube 3	Enable HRSG #3 to be returned to service and EVS #3 to be closed
1092681	Plug Evap1 Row 3 Tube 3	Enable HRSG #3 to be returned to service and EVS #3 to be closed
1093270	Procure adequately documented and identified plugs	Enable HRSG #3 to be returned to service and EVS #3 to be closed

Additional Corrective Action Information:

CA#	Responsible Person	Probable Effectiveness	Estimated Start Date of CA	Estimated Completion Date	Estimated Cost of Implementation	3rd Party Needed for Implementation?
1092676	JRMCLAREN	2) Reduce Likelihood	05/08/2018	05/31/2018	10,000.00	YES
1092677	JRMCLAREN	2) Reduce Likelihood	05/08/2018	05/31/2018	10,000.00	YES
1092678	JRMCLAREN	2) Reduce Likelihood	05/09/2018	05/31/2018	10,000.00	YES

1092679	JRMCLAREN	2) Reduce Likelihood	05/09/2018	05/31/2018	10,000.00	YES
1092680	JRMCLAREN	2) Reduce Likelihood	05/09/2018	05/31/2018	10,000.00	YES
1092681	JRMCLAREN	2) Reduce Likelihood	05/09/2018	05/31/2018	10,000.00	YES
1093270	JRMCLAREN	2) Reduce Likelihood	05/09/2018	05/31/2018	5,000.00	NO

Action Effectiveness Definition

Value	Description
1) Prevent Reoccurrence	Action will Prevent Reoccurrence
2) Reduce Likelihood	Action will Reduce Likelihood of Reoccurrence
3) Lessen Impact	Action will Lessen Impact of Reoccurrence
4) Improvement / Unlikely to Prevent	An Improvement but not Likely to Prevent Reoccurrence
5) Impact Cannot be Determined	Action Impact Cannot be Determined at this Time

SunCoke Energy Environmental RCFA Report

RCFA Name:	20180514_GCO_092_HRSG 06 TUBE LEAK	Report Date:	05/16/2018
Report #:	8214	Site:	GC
RCFA Facilitator:	JRMCLAREN	Location:	H-6106
RCFA Type:	Environmental	Location name:	HRSG 06, NOOTER, BATTERY C
Date of Occurrence:	May 14, 2018, 10:00 PM	Investigation Completed:	05/31/2018

Section1 - General Information

Executive Summary:

On May 14, 2018 Gateway Energy and Coke Company (GECC) experienced a tube leak condition on Heat Recovery Steam Generator (HRSG) #6. The emergency vent stack (EVS) #6 was opened at 10:00 PM. HRSG #6 was removed from service to facilitate repairs. The location of the leaks were found to be on the west side of the Economizer section – row 23 tube 13 and the east side of Superheat #2 – u-bend between row 9 and 10 tube 16. The repair included the replacement of row 23 tube 11, tube 12 and tube 13 in the Economizer section along with associated u-bends and jumpers and the replacement of the Superheat #2 u-bend between row 9 and 10 tube 16. A successful water pressure test was achieved on May 16, 2018. HRSG #6 was returned to service with EVS #6 closing at 7:56 PM on May 16, 2018. The total venting time associated with this event was 45.93 hours. Shortly after EVS #6 was opened, a power interruption occurred at the GECC facility that resulted in the Induced Draft (ID) Fans shutting down and EVS #1 through #5 opening at approximately 10:28 PM on May 14, 2018. RCFA 8219 addresses the 6.66 hours of venting time associated with the power loss event.

An inspection of the tube leak location in the Economizer section indicated that the failure was the result material wastage due to erosion / corrosion in the soot blower path. The Superheat #2 u-bend failure was related to thermal fatigue cracking. Tubes in proximity to the leaking tubes were inspected prior to determining the final scope of repair.

Corrective actions identified were the replacement of the tube sections, and the future implementation of the redundant HRSG / Gas Sharing project at GECC (per action item #585231 of RCFA 2679).

SunCoke Energy Environmental RCFA Report

SunCoke Energy
The Higher Degree

Environmental Information

Did the stack lid bypass event result from planned FGD or HRSG maintenance?	No
Describe:	

Were charge weights to affected ovens reduced to a 42.5 wet tons/oven average 48 hours prior to venting?	No
If no, provide explanation of why the charge weights were not reduced to a 42.5 wet ton average.	
Explanation: Bypass venting was a result of unplanned maintenance; therefore, charge weights could not be reduced at least 48 hours in advance. Per the PMO plan, coal charge weights are reduced by approximately two tons per charging cycle during bypass venting events that are expected to exceed 24 hours.	

Did the coal charged during the bypass event contain less than 1.1% sulfur content?	Yes
If no, provide explanation of why the coal sulfur content was not reduced to a maximum of 1.1%.	
Explanation:	

Did multiple events involving stack lid open time occur within a 24 period?				Yes
If yes, please list the Maximo RCFA numbers here:	8219			

Vent Stacks Open/Close				
Vent Stack No.	**#1**	**#2**	**#3**	**#4**
Stack Lid Open Date/Time				
Stack Lid Close Date/Time				
Total Bypass Venting Time (mins)	0	0	0	0
Total Bypass Venting Time (hrs)	0.00	0.00	0.00	0.0

Vent Stacks Open/Close		
Vent Stack No.	**#5**	**#6**
Stack Lid Open Date/Time		5/14/18 22:00
Stack Lid Close Date/Time		5/16/18 19:56
Total Bypass Venting Time (mins)	0	2756
Total Bypass Venting Time (hrs)	0.00	45.93

Estimated Quantity of Emissions (tons)						
Pollutant:	**Lead**	0.0	**PM**	0.3	**SO_2**	4.7

Estimated Avg Coal Sulfur Content Charged Per Day (applies to all ovens charged each day):				
Date	**Avg S (%):**		**Date**	**Avg S (%):**
5/14/2018	0.99			
5/15/2018	0.99			
5/16/2018	0.99			

Estimated Avg Charge Tons per Oven Charged (avg over duration of event):				
Affected Oven No.	**Estimated Avg Coal Charge Weight/ Oven:**		**Affected Oven No.**	**Estimated Avg Coal Charge Weight/ Oven:**
1			61	
2			62	
3			63	
4			64	
5			65	
6			66	
7			67	

SunCoke Energy Environmental RCFA Report

8	
9	
10	
11	
12	
13	
14	
15	
16	
17	
18	
19	
20	
21	
22	
23	
24	
25	
26	
27	
28	
29	
30	
31	
32	
33	
34	
35	
36	
37	
38	
39	
40	
41	
42	
43	
44	
45	
46	
47	
48	
49	
50	
51	
52	
53	
54	
55	
56	
57	
58	
59	
60	

68	
69	
70	
71	
72	
73	
74	
75	
76	
77	
78	
79	
80	
81	
82	
83	
84	
85	
86	
87	
88	
89	
90	
91	
92	
93	
94	
95	
96	
97	
98	
99	
100	
101	42.85
102	43.57
103	43.81
104	43.23
105	43.03
106	44.35
107	44.17
108	43.31
109	43.32
110	44.16
111	44.33
112	43.47
113	42.89
114	44.19
115	44.23
116	43.47
117	42.71
118	43.53
119	43.83
120	42.70

Bypass Venting Emissions Calculations for Gateway Energy and Coke Company

Emission Factors (for one bypass vent stack)*:

Lead	0.075	lb/hr	May 2017 Test, GECC, Bypass Vent Stack #5
PM (Filt + Cond)	12.7	lb/hr	May 2017 Test, GECC, Bypass Vent Stack #5
SO2	206	lb/hr	Calculated from 1st half CEMS data

Corresponding RCFA Report: 8214

Start Date/Time of Bypass Venting: 5/14/18 22:00

End Date/Time of Bypass Venting: 5/16/18 19:56

Bypass Vent Stack Lid Open and Close Date/Time:

	#1	#2	#3	#4	#5	#6
Open Date/Time:						5/14/18 22:00
Close Date/Time:						5/16/18 19:56

Total Stack Lid Open Time per Bypass Vent Stack:

	#1	#2	#3	#4	#5	#6
Hours:	0.0	0.0	0.0	0.0	0.0	45.9
Minutes:	0	0	0	0	0	2756

Total Bypass Venting Time:

Hours: 45.9 Minutes: 2756.0

Calculation of Bypass Venting Emissions:

Emissions = Emission Factor (lb/hr) x Total Hours of Bypass Venting x 1 ton/2000 lbs

	#1	#2	#3	#4	#5	#6
Lead (lbs)	0.0	0.0	0.0	0.0	0.0	3.4
PM (lbs)	0.0	0.0	0.0	0.0	0.0	583.4
SO2 (lbs)	0.0	0.0	0.0	0.0	0.0	9462.3

Total Emissions from Bypass Venting Event

Total Emissions = Sum of Emissions from Each Affected Bypass Vent Stack

Total tons of Pollutant Emitted During Bypass Venting

Lead (tons)	0.0
PM (tons)	0.3
SO_2 (tons)	4.7

* Please note, most recent stack test data for HNCC No. 1, HNCC No. 2 and GECC was used to calculate estimated emissions. Data used to estimate total PM emissions is from a 2017 GECC bypass vent stack test. No condensable PM test data was available for HNCC No.1 or No. 2. Emission factors will be updated once required testing is completed.

Section 2 - Investigation Information and Summary

Cause and Effect Analysis (include steps taken to minimize emissions, if applicable):
On May 14, 2018 Gateway Energy and Coke Company (GECC) experienced a tube leak condition on Heat Recovery Steam Generator (HRSG) #6. The emergency vent stack (EVS) #6 was opened at 10:00 PM. HRSG #6 was removed from service to facilitate repairs. The location of the leaks were found to be on the west side of the Economizer section – row 23 tube 13 and the east side of Superheat #2 – u-bend between row 9 and 10 tube 16. The repair included the replacement of row 23 tube 11, tube 12 and tube 13 in the Economizer section along with associated u-bends and jumpers and the replacement of the Superheat #2 u-bend between row 9 and 10 tube 16. A successful water pressure test was achieved on May 16, 2018. HRSG #6 was returned to service with EVS #6 closing at 7:56 PM on May 16, 2018. The total venting time associated with this event was 45.93 hours. Corrective actions identified were the replacement of the tube sections, and the future implementation of the redundant HRSG / Gas Sharing project at GECC (per action item #585231 of RCFA 2679). The replacement of the affected tube assemblies allows for the immediate return to service of HRSG #6. Given the potential for other tube leaks to occur, the longer-term corrective action is to install and operate GECC's redundant HRSG. The redundant HRSG will allow for more extensive maintenance to help prevent future tube leaks and will allow for gas to be shifted in order to reduce venting while a tube leak is occurring or associated maintenance in ongoing. While the redundant HRSG / Gas Sharing project is being implemented, GECC will apply other processes and procedures to minimize the frequency of tube leaks and / or venting time that occurs while tube leaks are being repaired. The processes and procedures include but are not limited to the following: · A tube inspection program that identifies areas of the HRSG that are prone to corrosion and may require more thorough tube inspections; · An ultrasonic thickness (UT) testing method to identify thinning tubes and a "map" of the UT readings for each HRSG in order to target specific areas of the HRSG for additional evaluation or tube replacement; · An inventory of spare, upgraded, more corrosion resistant materials for certain HRSG sections; · An orbital welding process that provides a more even, consistent weld quality; and · The use of soda ash solution as a prewash to make cleaning more effective and to protect tubes from low pH conditions. It should be noted that GECC was following the above processes and procedures prior to the venting incident, so the processes and procedures should not be considered as RCFA corrective actions.

SunCoke Energy Environmental RCFA Report

SunCoke Energy
The Higher Degree

Section 3 - Causes

Cause	Description of Root Cause	Analysis of Root Cause (how did this contribute?)	Type of Cause	Cause Class	Repeat?
1683	HRSG #6 - Localized Corrosion Econ R23 T11	The mechanical stresses exceeded the strength of the tube section where the failure occurred due to material wastage / thinning	Root Cause	Physical Cause	NO
1684	HRSG #6 - Localized Corrosion Econ R23 T12	The mechanical stresses exceeded the strength of the tube section where the failure occurred due to material wastage / thinning	Root Cause	Physical Cause	NO
1685	HRSG #6 - Localized Corrosion Econ R23 T13	The mechanical stresses exceeded the strength of the tube section where the failure occurred due to material wastage / thinning	Root Cause	Physical Cause	NO
1686	HRSG #6 - Thermal Fatigue SH2 Ubend R9-10 T16	The mechanical stresses exceeded the strength of the tube section where the failure occurred due to thermal stress cracking	Root Cause	Physical Cause	NO

Section 4 - Measures Reasonably Available to Prevent or Reduce Likelihood of Recurrence (Corrective Actions)

CA#	Description of Corrective Action	Analysis of Corrective Action
1093813	HRSG #6 - Replace Econ Row 23 Tube 11 with associated ubends and jumpers	Enable HRSG #6 to be returned to service and EVS #6 to be closed
1093814	HRSG #6 - Replace Econ Row 23 Tube 12 with associated ubends and jumpers	Enable HRSG #6 to be returned to service and EVS #6 to be closed
1093815	HRSG #6 - Replace Econ Row 23 Tube 13 with associated ubends and jumpers	Enable HRSG #6 to be returned to service and EVS #6 to be closed
1093816	HRSG #6 - Replace SH2 Ubend between Row 9 and 10 Tube 16	Enable HRSG #6 to be returned to service and EVS #6 to be closed

Additional Corrective Action Information:

CA#	Responsible Person	Probable Effectiveness	Estimated Start Date of CA	Estimated Completion Date	Estimated Cost of Implementation	3rd Party Needed for Implementation?
1093813	JRMCLAREN	2) Reduce Likelihood	05/15/2018	06/06/2018	10,000.00	YES
1093814	JRMCLAREN	2) Reduce Likelihood	05/15/2018	06/06/2018	10,000.00	YES
1093815	JRMCLAREN	2) Reduce Likelihood	05/15/2018	06/06/2018	10,000.00	YES
1093816	JRMCLAREN	2) Reduce Likelihood	05/15/2018	06/06/2018	10,000.00	YES

Action Effectiveness Definition

Value	Description
1) Prevent Reoccurrence	Action will Prevent Reoccurrence
2) Reduce Likelihood	Action will Reduce Likelihood of Reoccurrence
3) Lessen Impact	Action will Lessen Impact of Reoccurrence
4) Improvement / Unlikely to Prevent	An Improvement but not Likely to Prevent Reoccurrence
5) Impact Cannot be Determined	Action Impact Cannot be Determined at this Time

SunCoke Energy Environmental RCFA Report

RCFA Name:	20180514_GCO_093_LOSS OF POWER	Report Date:	05/17/2018
Report #:	8219	Site:	GC
RCFA Facilitator:	RSKREMER	Location:	080
RCFA Type:	Environmental	Location name:	PLANT ELECTRICAL
Date of Occurrence:	May 14, 2018, 10:28 PM	Investigation Completed:	05/31/2018

Section1 - General Information

Executive Summary:

On May 14, 2018 the Gateway Energy and Coke Company (GECC) experienced an interruption in the main incoming power at approximately 10:28 PM that was caused by lightening and severe weather in the area. Emergency Vent Stacks (EVS) #1 through #5 opened due to loss of draft caused by the shutdown of the Induced Draft (ID) fan motors when power was lost. Personnel checked the main substation and began rounds to prepare for restart. ID Fan A was restarted at 10:33 PM on May 14, 2018. The restart of the five Heat Recovery Steam Generators (HRSG) and the Flue Gas Desulphurization (FGD) commenced at that time with ID Fan B restarting at 11:43 PM. The last EVS closed at 12:25 AM on May 15, 2018. The total venting time associated with this event was 6.66 hours. Before the power interruption event, EVS #6 was opened at 10:00 AM for tube leak repairs. RCFA 8214 addresses the venting time associated with EVS #6.

SunCoke Energy Environmental RCFA Report

SunCoke Energy
The Higher Degree

Environmental Information

Did the stack lid bypass event result from planned FGD or HRSG maintenance?	No
Describe:	

Were charge weights to affected ovens reduced to a 42.5 wet tons/oven average 48 hours prior to venting?	No
If no, provide explanation of why the charge weights were not reduced to a 42.5 wet ton average.	
Explanation: Bypass venting was a result of unplanned maintenance; therefore, charge weights could not be reduced at least 48 hours in advance. Per the PMO plan, coal charge weights are reduced by approximately two tons per charging cycle during bypass venting events that are expected to exceed 24 hours.	

Did the coal charged during the bypass event contain less than 1.1% sulfur content?	Yes
If no, provide explanation of why the coal sulfur content was not reduced to a maximum of 1.1%.	
Explanation:	

Did multiple events involving stack lid open time occur within a 24 period?				Yes
If yes, please list the Maximo RCFA numbers here:	8214			

Vent Stacks Open/Close				
Vent Stack No.	**#1**	**#2**	**#3**	**#4**
Stack Lid Open Date/Time	5/14/18 22:28	5/14/18 22:28	5/14/18 22:29	5/14/18 22:28
Stack Lid Close Date/Time	5/15/18 00:14	5/14/18 23:20	5/14/18 23:42	5/15/18 00:25
Total Bypass Venting Time (mins)	105	51	72	116
Total Bypass Venting Time (hrs)	1.75	0.85	1.20	1.9

Vent Stacks Open/Close		
Vent Stack No.	**#5**	**#6**
Stack Lid Open Date/Time	5/14/18 22:29	
Stack Lid Close Date/Time	5/14/18 23:28	
Total Bypass Venting Time (mins)	58	0
Total Bypass Venting Time (hrs)	0.97	0.00

Estimated Quantity of Emissions (tons)						
Pollutant:	**Lead**	0.0	**PM**	0.0	**SO_2**	0.7

Estimated Avg Coal Sulfur Content Charged Per Day (applies to all ovens charged each day):			
Date	**Avg S (%):**	**Date**	**Avg S (%):**
5/14/2018	0.99		

Estimated Avg Charge Tons per Oven Charged (avg over duration of event):			
Affected Oven No.	**Estimated Avg Coal Charge Weight/ Oven:**	**Affected Oven No.**	**Estimated Avg Coal Charge Weight/ Oven:**
1	43.00	61	43.17
2	45.09	62	
3	42.79	63	44.23
4	44.06	64	44.58
5	43.13	65	43.05
6	47.02	66	47.50
7	43.33	67	44.51

SunCoke Energy Environmental RCFA Report

8	45.68
9	44.22
10	47.40
11	44.13
12	45.63
13	44.10
14	47.44
15	44.19
16	45.68
17	38.17
18	46.45
19	43.18
20	44.06
21	42.65
22	45.12
23	43.13
24	45.05
25	43.13
26	47.62
27	43.81
28	45.71
29	44.18
30	47.24
31	44.53
32	45.33
33	44.25
34	47.05
35	43.23
36	45.20
37	42.65
38	45.01
39	42.73
40	43.65
41	42.70
42	42.47
43	42.79
44	43.72
45	43.26
46	
47	43.74
48	45.18
49	43.77
50	45.01
51	43.43
52	45.11
53	43.65
54	45.25
55	41.44
56	45.15
57	42.73
58	45.01
59	43.20
60	43.61

68	45.20
69	44.15
70	47.32
71	44.83
72	45.18
73	43.10
74	47.50
75	44.35
76	45.12
77	42.63
78	45.15
79	41.57
80	43.65
81	43.23
82	43.69
83	44.18
84	42.79
85	43.67
86	45.15
87	45.46
88	44.13
89	44.79
90	45.18
91	45.23
92	44.13
93	44.73
94	45.11
95	45.40
96	44.13
97	44.22
98	43.37
99	43.72
100	42.73
101	
102	
103	
104	
105	
106	
107	
108	
109	
110	
111	
112	
113	
114	
115	
116	
117	
118	
119	
120	

Bypass Venting Emissions Calculations for Gateway Energy and Coke Company

Emission Factors (for one bypass vent stack)*:

Lead	0.075	lb/hr	May 2017 Test, GECC, Bypass Vent Stack #5
PM (Filt + Cond)	12.7	lb/hr	May 2017 Test, GECC, Bypass Vent Stack #5
SO2	206	lb/hr	Calculated from 1st half CEMS data

Corresponding RCFA Report: 8219

Start Date/Time of Bypass Venting: 5/14/18 22:28

End Date/Time of Bypass Venting: 5/15/18 00:25

Bypass Vent Stack Lid Open and Close Date/Time:

	#1	#2	#3	#4	#5	#6
Open Date/Time:	5/14/18 22:28	5/14/18 22:28	5/14/18 22:29	5/14/18 22:28	5/14/18 22:29	
Close Date/Time:	5/15/18 00:14	5/14/18 23:20	5/14/18 23:42	5/15/18 00:25	5/14/18 23:28	

Total Stack Lid Open Time per Bypass Vent Stack:

	#1	#2	#3	#4	#5	#6
Hours:	1.8	0.9	1.2	1.9	1.0	0.0
Minutes:	105.0	51.0	72.0	116.0	58.0	0

Total Bypass Venting Time:

Hours: 6.7 Minutes: 402.1

Calculation of Bypass Venting Emissions:

Emissions = Emission Factor (lb/hr) x Total Hours of Bypass Venting x 1 ton/2000 lbs

	#1	#2	#3	#4	#5	#6
Lead (lbs)	0.1	0.1	0.1	0.1	0.1	0.0
PM (lbs)	22.2	10.8	15.2	24.6	12.3	0.0
SO2 (lbs)	360.6	175.2	247.3	398.3	199.2	0.0

Total Emissions from Bypass Venting Event

Total Emissions = Sum of Emissions from Each Affected Bypass Vent Stack

Total tons of Pollutant Emitted During Bypass Venting

Lead (tons)	0.0
PM (tons)	0.0
SO_2 (tons)	0.7

* Please note, most recent stack test data for HNCC No. 1, HNCC No. 2 and GECC was used to calculate estimated emissions. Data used to estimate total PM emissions is from a 2017 GECC bypass vent stack test. No condensable PM test data was available for HNCC No.1 or No. 2. Emission factors will be updated once required testing is completed.

Section 2 - Investigation Information and Summary

Cause and Effect Analysis (include steps taken to minimize emissions, if applicable):
On May 14, 2018 the Gateway Energy and Coke Company (GECC) experienced an interruption in the main incoming power at approximately 10:28 PM that was caused by lightening and severe weather in the area. Emergency Vent Stacks (EVS) #1 through #5 opened due to loss of draft caused by the shutdown of the Induced Draft (ID) fan motors when power was lost. Personnel checked the main substation and began rounds to prepare for restart. ID Fan A was restarted at 10:45 PM on May 14, 2018. The restart of five Heat Recovery Steam Generators (HRSG) and the Flue Gas Desulphurization (FGD) commenced at that time with ID Fan B restart following at 11:43 PM. The EVS were closed on May 14, 2018 at the following times: #2 – 11:20 PM; #3 – 11:42 PM; #5 - 11:28 PM; while EVS #1, and #4 closed on May 15, 2018 at 12:14 AM and 12:25 AM, respectively. EVS #6 remained open due to tube leak repairs addressed under RCFA 8214. Nearby facilities were also impacted by the lightning event which was reported to have damaged a transformer located in a utility-owned substation west of the GECC facility. GECC personnel reviewed plant operations and prepared to restart the facility once the utility company restored site power.

SunCoke Energy Environmental RCFA Report

SunCoke Energy
The Higher Degree

Section 3 - Causes

Cause	Description of Root Cause	Analysis of Root Cause (how did this contribute?)	Type of Cause	Cause Class	Repeat?
1690	Loss of Incoming Power to GECC	According event descriptions, lightening associated with a thunderstorm impacted a nearby facility and caused an interruption to the utility power supply that resulted in the ID Fan motors shutdown	Root Cause	Physical Cause	NO

Section 4 - Measures Reasonably Available to Prevent or Reduce Likelihood of Recurrence (Corrective Actions)

CA#	Description of Corrective Action	Analysis of Corrective Action
1094332	Inspect GECC Main Substation for clearance to restart	Inspect GECC main substation equipment for trips / alarms prior to giving clearance to restart operation
1094333	Confirm US Steel / Co-Gen able to receive steam from GECC HRSGs	Due to power interruption, ensure equipment able to provide feedwater flow to HRSGs and receive steam generation from GECC

Additional Corrective Action Information:

CA#	Responsible Person	Probable Effectiveness	Estimated Start Date of CA	Estimated Completion Date	Estimated Cost of Implementation	3rd Party Needed for Implementation?
1094332	JRMCLAREN	3) Lessen Impact	05/14/2018	06/06/2018	0.00	NO
1094333	JRMCLAREN	5) Impact Cannot be Determined	05/14/2018	06/06/2018	0.00	NO

Action Effectiveness Definition

Value	Description
1) Prevent Reoccurrence	Action will Prevent Reoccurrence
2) Reduce Likelihood	Action will Reduce Likelihood of Reoccurrence
3) Lessen Impact	Action will Lessen Impact of Reoccurrence
4) Improvement / Unlikely to Prevent	An Improvement but not Likely to Prevent Reoccurrence
5) Impact Cannot be Determined	Action Impact Cannot be Determined at this Time

SunCoke Energy Environmental RCFA Report

RCFA Name:	20180610_GCO_094_HRSG 03 TUBE LEAK	Report Date:	06/11/2018
Report #:	8298	Site:	GC
RCFA Facilitator:	RSKREMER	Location:	H-6103
RCFA Type:	Environmental	Location name:	HRSG 03, NOOTER, BATTERY B
Date of Occurrence:	Jun 10, 2018, 3:02 PM	Investigation Completed:	07/02/2018

Section1 - General Information

Executive Summary:

On June 10, 2018 Gateway Energy and Coke Company (GECC) experienced a tube leak condition on Heat Recovery Steam Generator (HRSG) #3. The emergency vent stack (EVS) #3 was opened at 3:02 PM. HRSG #3 was removed from service to facilitate repairs. The location of the leaks were found to be on the east side of the Economizer section – row 7 tube 11 and the east side of Superheat #2 – u-bend between row 3 and 4 tube 5. The repair included the replacement of row 7 tube 11 in the Economizer section along with associated u-bend and jumper and the replacement of the Superheat #2 u-bend between row 3 and 4 tube 5 and u-bend between row 1 and 2 tube 5 to allow access for row 3 and 4 repair. A pressure test was performed on June 13, 2018 that discovered additional leaks in the Economizer section – row 6 tube 3 and tube 2. The repair scope was determined to include row 7 tube 3; row 6 tube 1, 2, 3, 4 and 5 with associated u-bends and jumpers. A successful water pressure test was achieved on June 14, 2018. HRSG #3 was returned to service with EVS #3 closing at 7:22 PM on June 14, 2018. The total venting time associated with this event was 100.34 hours. During the HRSG #3 tube leak event, HRSG #5 developed a tube leak on June 12, 2018. RCFA 8306 addresses the venting time associated with EVS #5.

An inspection of the tube leak location in the Economizer section indicated that the failure was the result material wastage due to erosion / corrosion in the soot blower path. The Superheat #2 u-bend failure was related to thermal fatigue cracking. Tubes in proximity to the leaking tubes were inspected prior to determining the final scope of repair.

Corrective actions identified were the replacement of the tube sections, and the future implementation of the redundant HRSG / Gas Sharing project at GECC (per action item #585231 of RCFA 2679).

SunCoke Energy Environmental RCFA Report

SunCoke Energy
The Higher Degree

Environmental Information

Did the stack lid bypass event result from planned FGD or HRSG maintenance?	No
Describe:	

Were charge weights to affected ovens reduced to a 42.5 wet tons/oven average 48 hours prior to venting?	No
If no, provide explanation of why the charge weights were not reduced to a 42.5 wet ton average.	
Explanation: Bypass venting was a result of unplanned maintenance; therefore, charge weights could not be reduced at least 48 hours in advance. Per the PMO plan, coal charge weights are reduced by approximately two tons per charging cycle during bypass venting events that are expected to exceed 24 hours.	

Did the coal charged during the bypass event contain less than 1.1% sulfur content?	Yes
If no, provide explanation of why the coal sulfur content was not reduced to a maximum of 1.1%.	
Explanation:	

Did multiple events involving stack lid open time occur within a 24 period?				Yes
If yes, please list the Maximo RCFA numbers here:	8306			

Vent Stacks Open/Close				
Vent Stack No.	**#1**	**#2**	**#3**	**#4**
Stack Lid Open Date/Time			6/10/18 15:02	
Stack Lid Close Date/Time			6/14/18 19:22	
Total Bypass Venting Time (mins)	0	0	6021	0
Total Bypass Venting Time (hrs)	0.00	0.00	100.34	0.0

Vent Stacks Open/Close		
Vent Stack No.	**#5**	**#6**
Stack Lid Open Date/Time		
Stack Lid Close Date/Time		
Total Bypass Venting Time (mins)	0	0
Total Bypass Venting Time (hrs)	0.00	0.00

Estimated Quantity of Emissions (tons)						
Pollutant:	**Lead**	0.0	**PM**	0.6	**SO_2**	10.3

Estimated Avg Coal Sulfur Content Charged Per Day (applies to all ovens charged each day):			
Date	**Avg S (%):**	**Date**	**Avg S (%):**
6/10/2018	0.93	6/14/2018	0.93
6/11/2018	0.93		
6/12/2018	0.93		
6/13/2018	0.93		

Estimated Avg Charge Tons per Oven Charged (avg over duration of event):			
Affected Oven No.	**Estimated Avg Coal Charge Weight/ Oven:**	**Affected Oven No.**	**Estimated Avg Coal Charge Weight/ Oven:**
1		61	
2		62	
3		63	
4		64	
5		65	
6		66	
7		67	

SunCoke Energy Environmental RCFA Report

8	
9	
10	
11	
12	
13	
14	
15	
16	
17	
18	
19	
20	
21	
22	
23	
24	
25	
26	
27	
28	
29	
30	
31	
32	
33	
34	
35	
36	
37	
38	
39	
40	
41	44.71
42	43.72
43	44.24
44	44.27
45	45.15
46	46.16
47	45.92
48	44.66
49	45.39
50	46.02
51	45.99
52	44.91
53	45.18
54	45.03
55	44.92
56	44.09
57	44.52
58	43.86
59	43.68
60	43.00

68	
69	
70	
71	
72	
73	
74	
75	
76	
77	
78	
79	
80	
81	
82	
83	
84	
85	
86	
87	
88	
89	
90	
91	
92	
93	
94	
95	
96	
97	
98	
99	
100	
101	
102	
103	
104	
105	
106	
107	
108	
109	
110	
111	
112	
113	
114	
115	
116	
117	
118	
119	
120	

Bypass Venting Emissions Calculations for Gateway Energy and Coke Company

Emission Factors (for one bypass vent stack)*:

Lead	0.075	lb/hr	May 2017 Test, GECC, Bypass Vent Stack #5
PM (Filt + Cond)	12.7	lb/hr	May 2017 Test, GECC, Bypass Vent Stack #5
SO2	206	lb/hr	Calculated from 1st half CEMS data

Corresponding RCFA Report: 8298

Start Date/Time of Bypass Venting: 6/10/18 15:02

End Date/Time of Bypass Venting: 6/14/18 19:22

Bypass Vent Stack Lid Open and Close Date/Time:

	#1	#2	#3	#4	#5	#6
Open Date/Time:			6/10/18 15:02			
Close Date/Time:			6/14/18 19:22			

Total Stack Lid Open Time per Bypass Vent Stack:

	#1	#2	#3	#4	#5	#6
Hours:	0.0	0.0	100.3	0.0	0.0	0.0
Minutes:	0	0	6020.5	0	0	0

Total Bypass Venting Time:

Hours: 100.3 Minutes: 6020.5

Calculation of Bypass Venting Emissions:

Emissions = Emission Factor (lb/hr) x Total Hours of Bypass Venting x 1 ton/2000 lbs

	#1	#2	#3	#4	#5	#6
Lead (lbs)	0.0	0.0	7.5	0.0	0.0	0.0
PM (lbs)	0.0	0.0	1274.3	0.0	0.0	0.0
SO2 (lbs)	0.0	0.0	20670.4	0.0	0.0	0.0

Total Emissions from Bypass Venting Event

Total Emissions = Sum of Emissions from Each Affected Bypass Vent Stack

Total tons of Pollutant Emitted During Bypass Venting

Lead (tons)	0.0
PM (tons)	0.6
SO_2 (tons)	10.3

* Please note, most recent stack test data for HNCC No. 1, HNCC No. 2 and GECC was used to calculate estimated emissions. Data used to estimate total PM emissions is from a 2017 GECC bypass vent stack test. No condensable PM test data was available for HNCC No.1 or No. 2. Emission factors will be updated once required testing is completed.

Section 2 - Investigation Information and Summary

Cause and Effect Analysis (include steps taken to minimize emissions, if applicable):
On June 10, 2018 Gateway Energy and Coke Company (GECC) experienced a tube leak condition on Heat Recovery Steam Generator (HRSG) #3. The emergency vent stack (EVS) #3 was opened at 3:02 PM. HRSG #3 was removed from service to facilitate repairs. The location of the leaks were found to be on the east side of the Economizer section – row 7 tube 11 and the east side of Superheat #2 – u-bend between row 3 and 4 tube 5. The repair included the replacement of row 7 tube 11 in the Economizer section along with associated u-bend and jumper and the replacement of the Superheat #2 u-bend between row 3 and 4 tube 5 and u-bend between row 1 and 2 tube 5 to allow access for row 3 and 4 repair. A pressure test was performed on June 13, 2018 that discovered additional leaks in the Economizer section – row 6 tube 3 and tube 2. The repair scope was determined to include row 7 tube 3; row 6 tube 1, 2, 3, 4 and 5 with associated u-bends and jumpers. A successful water pressure test was achieved on June 14, 2018. HRSG #3 was returned to service with EVS #3 closing at 7:22 PM on June 14, 2018. The total venting time associated with this event was 100.34 hours. Corrective actions identified were the replacement of the tube sections, and the future implementation of the redundant HRSG / Gas Sharing project at GECC (per action item #585231 of RCFA 2679). The replacement of the affected tube assemblies allows for the immediate return to service of HRSG #3. Given the potential for other tube leaks to occur, the longer-term corrective action is to install and operate GECC's redundant HRSG. The redundant HRSG will allow for more extensive maintenance to help prevent future tube leaks and will allow for gas to be shifted in order to reduce venting while a tube leak is occurring or associated maintenance in ongoing. While the redundant HRSG / Gas Sharing project is being implemented, GECC will apply other processes and procedures to minimize the frequency of tube leaks and / or venting time that occurs while tube leaks are being repaired. The processes and procedures include but are not limited to the following: · A tube inspection program that identifies areas of the HRSG that are prone to corrosion and may require more thorough tube inspections; · An ultrasonic thickness (UT) testing method to identify thinning tubes and a "map" of the UT readings for each HRSG in order to target specific areas of the HRSG for additional evaluation or tube replacement; · An inventory of spare, upgraded, more corrosion resistant materials for certain HRSG sections; · An orbital welding process that provides a more even, consistent weld quality; and · The use of soda ash solution as a prewash to make cleaning more effective and to protect tubes from low pH conditions. It should be noted that GECC was following the above processes and procedures prior to the venting incident, so the processes and procedures should not be considered as RCFA corrective actions.

SunCoke Energy Environmental RCFA Report

SunCoke Energy
The Higher Degree

Section 3 - Causes

Cause	Description of Root Cause	Analysis of Root Cause (how did this contribute?)	Type of Cause	Cause Class	Repeat?
1709	HRSG #3 - Thermal Fatigue SH2 Ubend R3-4 T5	The mechanical stresses exceeded the strength of the tube section where the failure occurred due to thermal stress cracking	Root Cause	Physical Cause	NO
1710	HRSG #3 - Localized Corrosion Econ R7 T11	The mechanical stresses exceeded the strength of the tube section where the failure occurred due to material wastage / thinning	Root Cause	Physical Cause	NO
1711	HRSG #3 - Localized Corrosion Econ R7 T3	The mechanical stresses exceeded the strength of the tube section where the failure occurred due to material wastage / thinning	Root Cause	Physical Cause	NO
1712	HRSG #3 - Localized Corrosion Econ R6 T1	The mechanical stresses exceeded the strength of the tube section where the failure occurred due to material wastage / thinning	Root Cause	Physical Cause	NO
1713	HRSG #3 - Localized Corrosion Econ R6 T2	The mechanical stresses exceeded the strength of the tube section where the failure occurred due to material wastage / thinning	Root Cause	Physical Cause	NO
1714	HRSG #3 - Localized Corrosion Econ R6 T3	The mechanical stresses exceeded the strength of the tube section where the failure occurred due to material wastage / thinning	Root Cause	Physical Cause	NO
1715	HRSG #3 - Localized Corrosion Econ R6 T4	The mechanical stresses exceeded the strength of the tube section where the failure occurred due to material wastage / thinning	Root Cause	Physical Cause	NO
1716	HRSG #3 - Localized Corrosion Econ R6 T5	The mechanical stresses exceeded the strength of the tube section where the failure occurred due to material wastage / thinning	Root Cause	Physical Cause	NO

Section 4 - Measures Reasonably Available to Prevent or Reduce Likelihood of Recurrence (Corrective Actions)

CA#	Description of Corrective Action	Analysis of Corrective Action
1102428	HRSG #3 - Replace U-bend sections of SH2 Row 3-4 and Row 1-2 Tube 5	Enable HRSG #3 to be returned to service and EVS #3 to be closed
1102429	HRSG #3 - Replace Econ Row 7 Tube 11 with associated ubend and jumper	Enable HRSG #3 to be returned to service and EVS #3 to be closed
1102430	HRSG #3 - Replace Econ Row 7 Tube 3 with associated ubend and jumper	Enable HRSG #3 to be returned to service and EVS #3 to be closed
1102431	HRSG #3 - Replace Econ Row 6 Tube 1 with associated ubend and jumper	Enable HRSG #3 to be returned to service and EVS #3 to be closed
1102432	HRSG #3 - Replace Econ Row 6 Tube 2 with associated ubend and jumper	Enable HRSG #3 to be returned to service and EVS #3 to be closed
1102433	HRSG #3 - Replace Econ Row 6 Tube 3 with associated ubend and jumper	Enable HRSG #3 to be returned to service and EVS #3 to be closed
1102434	HRSG #3 - Replace Econ Row 6 Tube 4 with associated ubend and jumper	Enable HRSG #3 to be returned to service and EVS #3 to be closed
1102435	HRSG #3 - Replace Econ Row 6 Tube 5 with associated ubend and jumper	Enable HRSG #3 to be returned to service and EVS #3 to be closed

Additional Corrective Action Information:

SunCoke Energy Environmental RCFA Report

CA#	Responsible Person	Probable Effectiveness	Estimated Start Date of CA	Estimated Completion Date	Estimated Cost of Implementation	3rd Party Needed for Implementation?
1102428	JRMCLAREN	2) Reduce Likelihood	06/11/2018	07/13/2018	50,000.00	YES
1102429	JRMCLAREN	2) Reduce Likelihood	06/11/2018	07/13/2018	10,000.00	YES
1102430	JRMCLAREN	2) Reduce Likelihood	06/13/2018	07/13/2018	5,000.00	YES
1102431	JRMCLAREN	2) Reduce Likelihood	06/13/2018	07/13/2018	5,000.00	YES
1102432	JRMCLAREN	2) Reduce Likelihood	06/13/2018	07/13/2018	5,000.00	YES
1102433	JRMCLAREN	2) Reduce Likelihood	06/13/2018	07/13/2018	5,000.00	YES
1102434	JRMCLAREN	2) Reduce Likelihood	06/13/2018	07/13/2018	5,000.00	YES
1102435	JRMCLAREN	2) Reduce Likelihood	06/13/2018	07/13/2018	5,000.00	YES

Action Effectiveness Definition

Value	Description
1) Prevent Reoccurrence	Action will Prevent Reoccurrence
2) Reduce Likelihood	Action will Reduce Likelihood of Reoccurrence
3) Lessen Impact	Action will Lessen Impact of Reoccurrence
4) Improvement / Unlikely to Prevent	An Improvement but not Likely to Prevent Reoccurrence
5) Impact Cannot be Determined	Action Impact Cannot be Determined at this Time

SunCoke Energy Environmental RCFA Report

RCFA Name:	20180612_GCO_095_HRSG 05 TUBE LEAK	Report Date:	06/12/2018
Report #:	8306	Site:	GC
RCFA Facilitator:	RSKREMER	Location:	H-6105
RCFA Type:	Environmental	Location name:	HRSG 05, NOOTER, BATTERY C
Date of Occurrence:	Jun 12, 2018, 3:54 PM	Investigation Completed:	07/02/2018

Section1 - General Information

Executive Summary:

On June 12, 2018 Gateway Energy and Coke Company (GECC) experienced a tube leak condition on Heat Recovery Steam Generator (HRSG) #5. The emergency vent stack (EVS) #5 was opened at 3:54 PM. HRSG #5 was removed from service to facilitate repairs. The location of the leaks were found to be on the east side of the Economizer section – row 22 tube 8 and tube 9 and the east side of Superheat #2 – u-bend between row 9 and 10 tube 19. The repair included the replacement of row 22 tube 8, row 22 tube 9 and row 21 tube 8 in the Economizer section along with associated u-bends and jumpers and the replacement of the Superheat #2 u-bend between row 9 and 10 tube 19. A pressure test was performed on June 14, 2018 that discovered additional leaks in Superheat #1 – u-bend between row 2 and 3 tube 18 and in Superheat #2 – u-bend between row 8 and 9 tube 15. The repair scope was determined to include u-bend replacement on Superheat #1 row 2 and 3 tube 18 and a u-bend with added tube length on Superheat #2 row 8 and 9 tube 15. A pressure test on June 15, 2018 revealed a leak at a repair weld on Superheat #2 row 8 tube 15. The weld was repaired and a successful water pressure test was achieved on June 15, 2018. HRSG #5 was returned to service with EVS #5 closing at 1:06 AM on June 16, 2018. The total venting time associated with this event was 81.19 hours. The HRSG #5 tube leak event initiated during a tube leak repair on HRSG #3 that started on June 10, 2018. RCFA 8298 addresses the venting time associated with EVS #3.

An inspection of the tube leak locations in the Economizer section indicated that the failure was the result material wastage due to erosion / corrosion in the soot blower path. The Superheat #2 and Superheat #1 u-bend failures were related to thermal fatigue cracking. Tubes in proximity to the leaking tubes were inspected prior to determining the final scope of repair.

Corrective actions identified were the replacement of the tube sections, and the future implementation of the redundant HRSG / Gas Sharing project at GECC (per action item #585231 of RCFA 2679).

SunCoke Energy Environmental RCFA Report

SunCoke Energy
The Higher Degree

Environmental Information

Did the stack lid bypass event result from planned FGD or HRSG maintenance?	No
Describe:	

Were charge weights to affected ovens reduced to a 42.5 wet tons/oven average 48 hours prior to venting?	No
If no, provide explanation of why the charge weights were not reduced to a 42.5 wet ton average.	
Explanation: Bypass venting was a result of unplanned maintenance; therefore, charge weights could not be reduced at least 48 hours in advance. Per the PMO plan, coal charge weights are reduced by approximately two tons per charging cycle during bypass venting events that are expected to exceed 24 hours.	

Did the coal charged during the bypass event contain less than 1.1% sulfur content?	Yes
If no, provide explanation of why the coal sulfur content was not reduced to a maximum of 1.1%.	
Explanation:	

Did multiple events involving stack lid open time occur within a 24 period?				Yes
If yes, please list the Maximo RCFA numbers here:	8298			

Vent Stacks Open/Close				
Vent Stack No.	**#1**	**#2**	**#3**	**#4**
Stack Lid Open Date/Time				
Stack Lid Close Date/Time				
Total Bypass Venting Time (mins)	0	0	0	0
Total Bypass Venting Time (hrs)	0.00	0.00	0.00	0.0

Vent Stacks Open/Close		
Vent Stack No.	**#5**	**#6**
Stack Lid Open Date/Time	6/12/18 15:54	
Stack Lid Close Date/Time	6/16/18 01:06	
Total Bypass Venting Time (mins)	4871	0
Total Bypass Venting Time (hrs)	81.19	0.00

Estimated Quantity of Emissions (tons)						
Pollutant:	**Lead**	0.0	**PM**	0.5	**SO_2**	8.4

Estimated Avg Coal Sulfur Content Charged Per Day (applies to all ovens charged each day):			
Date	**Avg S (%):**	**Date**	**Avg S (%):**
6/12/2018	0.93	6/16/2018	0.93
6/13/2018	0.93		
6/14/2018	0.93		
6/15/2018	0.93		

Estimated Avg Charge Tons per Oven Charged (avg over duration of event):			
Affected Oven No.	**Estimated Avg Coal Charge Weight/ Oven:**	**Affected Oven No.**	**Estimated Avg Coal Charge Weight/ Oven:**
1		61	
2		62	
3		63	
4		64	
5		65	
6		66	
7		67	

SunCoke Energy Environmental RCFA Report

8	
9	
10	
11	
12	
13	
14	
15	
16	
17	
18	
19	
20	
21	
22	
23	
24	
25	
26	
27	
28	
29	
30	
31	
32	
33	
34	
35	
36	
37	
38	
39	
40	
41	
42	
43	
44	
45	
46	
47	
48	
49	
50	
51	
52	
53	
54	
55	
56	
57	
58	
59	
60	

68	
69	
70	
71	
72	
73	
74	
75	
76	
77	
78	
79	
80	
81	44.06
82	43.73
83	44.05
84	45.66
85	46.14
86	45.15
87	44.39
88	47.11
89	46.16
90	44.34
91	44.36
92	47.18
93	46.23
94	44.25
95	44.34
96	46.18
97	44.26
98	43.05
99	43.61
100	45.23
101	
102	
103	
104	
105	
106	
107	
108	
109	
110	
111	
112	
113	
114	
115	
116	
117	
118	
119	
120	

Bypass Venting Emissions Calculations for Gateway Energy and Coke Company

Emission Factors (for one bypass vent stack)*:

Lead	0.075	lb/hr	May 2017 Test, GECC, Bypass Vent Stack #5
PM (Filt + Cond)	12.7	lb/hr	May 2017 Test, GECC, Bypass Vent Stack #5
SO2	206	lb/hr	Calculated from 1st half CEMS data

Corresponding RCFA Report: 8306

Start Date/Time of Bypass Venting: 6/12/18 15:54

End Date/Time of Bypass Venting: 6/16/18 01:06

Bypass Vent Stack Lid Open and Close Date/Time:

	#1	#2	#3	#4	#5	#6
Open Date/Time:					6/12/18 15:54	
Close Date/Time:					6/16/18 01:06	

Total Stack Lid Open Time per Bypass Vent Stack:

	#1	#2	#3	#4	#5	#6
Hours:	0.0	0.0	0.0	0.0	81.2	0.0
Minutes:	0	0	0	0	4871.5	0

Total Bypass Venting Time:

Hours: 81.2 Minutes: 4871.5

Calculation of Bypass Venting Emissions:

Emissions = Emission Factor (lb/hr) x Total Hours of Bypass Venting x 1 ton/2000 lbs

	#1	#2	#3	#4	#5	#6
Lead (lbs)	0.0	0.0	0.0	0.0	6.1	0.0
PM (lbs)	0.0	0.0	0.0	0.0	1031.1	0.0
SO2 (lbs)	0.0	0.0	0.0	0.0	16725.5	0.0

Total Emissions from Bypass Venting Event

Total Emissions = Sum of Emissions from Each Affected Bypass Vent Stack

Total tons of Pollutant Emitted During Bypass Venting

Lead (tons)	0.0
PM (tons)	0.5
SO_2 (tons)	8.4

* Please note, most recent stack test data for HNCC No. 1, HNCC No. 2 and GECC was used to calculate estimated emissions. Data used to estimate total PM emissions is from a 2017 GECC bypass vent stack test. No condensable PM test data was available for HNCC No.1 or No. 2. Emission factors will be updated once required testing is completed.

Section 2 - Investigation Information and Summary

Cause and Effect Analysis (include steps taken to minimize emissions, if applicable):
On June 12, 2018 Gateway Energy and Coke Company (GECC) experienced a tube leak condition on Heat Recovery Steam Generator (HRSG) #5. The emergency vent stack (EVS) #5 was opened at 3:54 PM. HRSG #5 was removed from service to facilitate repairs. The location of the leaks were found to be on the east side of the Economizer section – row 22 tube 8 and tube 9 and the east side of Superheat #2 – u-bend between row 9 and 10 tube 19. The repair included the replacement of row 22 tube 8, row 22 tube 9 and row 21 tube 8 in the Economizer section along with associated u-bends and jumpers and the replacement of the Superheat #2 u-bend between row 9 and 10 tube 19. A pressure test was performed on June 14, 2018 that discovered additional leaks in Superheat #1 – u-bend between row 2 and 3 tube 18 and in Superheat #2 – u-bend between row 8 and 9 tube 15. The repair scope was determined to include u-bend replacement on Superheat #1 row 2 and 3 tube 18 and a u-bend with added tube length on Superheat #2 row 8 and 9 tube 15. A pressure test on June 15, 2018 revealed a leak at a repair weld on Superheat #2 row 8 tube 15. The weld was repaired and a successful water pressure test was achieved on June 15, 2018. HRSG #5 was returned to service with EVS #5 closing at 1:06 PM on June 16, 2018. The total venting time associated with this event was 81.19 hours Corrective actions identified were the replacement of the tube sections, and the future implementation of the redundant HRSG / Gas Sharing project at GECC (per action item #585231 of RCFA 2679). The replacement of the affected tube assemblies allows for the immediate return to service of HRSG #5. Given the potential for other tube leaks to occur, the longer-term corrective action is to install and operate GECC's redundant HRSG. The redundant HRSG will allow for more extensive maintenance to help prevent future tube leaks and will allow for gas to be shifted in order to reduce venting while a tube leak is occurring or associated maintenance in ongoing. While the redundant HRSG / Gas Sharing project is being implemented, GECC will apply other processes and procedures to minimize the frequency of tube leaks and / or venting time that occurs while tube leaks are being repaired. The processes and procedures include but are not limited to the following: · A tube inspection program that identifies areas of the HRSG that are prone to corrosion and may require more thorough tube inspections; · An ultrasonic thickness (UT) testing method to identify thinning tubes and a "map" of the UT readings for each HRSG in order to target specific areas of the HRSG for additional evaluation or tube replacement; · An inventory of spare, upgraded, more corrosion resistant materials for certain HRSG sections; · An orbital welding process that provides a more even, consistent weld quality; and · The use of soda ash solution as a prewash to make cleaning more effective and to protect tubes from low pH conditions. It should be noted that GECC was following the above processes and procedures prior to the venting incident, so the processes and procedures should not be considered as RCFA corrective actions.

SunCoke Energy Environmental RCFA Report

SunCoke Energy
The Higher Degree

Section 3 - Causes

Cause	Description of Root Cause	Analysis of Root Cause (how did this contribute?)	Type of Cause	Cause Class	Repeat?
1717	HRSG #5 - Localized Corrosion Econ R22 T8	The mechanical stresses exceeded the strength of the tube section where the failure occurred due to material wastage / thinning	Root Cause	Physical Cause	NO
1718	HRSG #5 - Localized Corrosion Econ R21 T8	The mechanical stresses exceeded the strength of the tube section where the failure occurred due to material wastage / thinning	Root Cause	Physical Cause	NO
1719	HRSG #5 - Localized Corrosion Econ R22 T9	The mechanical stresses exceeded the strength of the tube section where the failure occurred due to material wastage / thinning	Root Cause	Physical Cause	NO
1720	HRSG #5 - Thermal Fatigue SH1 Ubend R2-3 T18	The mechanical stresses exceeded the strength of the tube section where the failure occurred due to thermal stress cracking	Root Cause	Physical Cause	NO
1721	HRSG #5 - Thermal Fatigue SH2 Ubend R8-9 T15	The mechanical stresses exceeded the strength of the tube section where the failure occurred due to thermal stress cracking	Root Cause	Physical Cause	NO
1722	HRSG #5 - Weld Failure SH2 R8 T15	Weld contamination / porosity	Root Cause	Physical Cause	NO

Section 4 - Measures Reasonably Available to Prevent or Reduce Likelihood of Recurrence (Corrective Actions)

CA#	Description of Corrective Action	Analysis of Corrective Action
1102442	HRSG #5 - Replace Econ Row 22 Tube 8 with associated ubend and jumper	Enable HRSG #5 to be returned to service and EVS #5 to be closed
1102444	HRSG #5 - Replace Econ Row 21 Tube 8 with associated ubend and jumper	Enable HRSG #5 to be returned to service and EVS #5 to be closed
1102445	HRSG #5 - Replace Econ Row 22 Tube 9 with associated ubend and jumper	Enable HRSG #5 to be returned to service and EVS #5 to be closed
1102446	HRSG #5 - Replace SH2 Ubend between Row 9 and 10 Tube 19	Enable HRSG #5 to be returned to service and EVS #5 to be closed
1102447	HRSG #5 - Replace SH1 Ubend between Row 2 and 3 Tube 18	Enable HRSG #5 to be returned to service and EVS #5 to be closed
1102448	HRSG #5 - Replace SH2 Ubend between Row 8 and 9 Tube 15	Enable HRSG #5 to be returned to service and EVS #5 to be closed
1102449	HRSG #5 - Repair SH2 Ubend Weld at Row 8 Tube15	Enable HRSG #5 to be returned to service and EVS #5 to be closed

Additional Corrective Action Information:

CA#	Responsible Person	Probable Effectiveness	Estimated Start Date of CA	Estimated Completion Date	Estimated Cost of Implementation	3rd Party Needed for Implementation?
1102442	JRMCLAREN	2) Reduce Likelihood	06/13/2018	07/13/2018	5,000.00	YES
1102444	JRMCLAREN	2) Reduce Likelihood	06/13/2018	07/13/2018	5,000.00	YES
1102445	JRMCLAREN	2) Reduce Likelihood	06/13/2018	07/13/2018	5,000.00	YES
1102446	JRMCLAREN	2) Reduce Likelihood	06/13/2018	07/13/2018	10,000.00	YES
1102447	JRMCLAREN	2) Reduce Likelihood	06/14/2018	07/13/2018	10,000.00	YES

1102448	JRMCLAREN	2) Reduce Likelihood	06/14/2018	07/13/2018	10,000.00	YES
1102449	JRMCLAREN	2) Reduce Likelihood	06/15/2018	07/13/2018	5,000.00	YES

Action Effectiveness Definition

Value	Description
1) Prevent Reoccurrence	Action will Prevent Reoccurrence
2) Reduce Likelihood	Action will Reduce Likelihood of Reoccurrence
3) Lessen Impact	Action will Lessen Impact of Reoccurrence
4) Improvement / Unlikely to Prevent	An Improvement but not Likely to Prevent Reoccurrence
5) Impact Cannot be Determined	Action Impact Cannot be Determined at this Time

SunCoke Energy Environmental RCFA Report

SunCoke Energy
The Higher Degree

RCFA Name:	20180621_GCO_096_LOSS OF FEEDWATER	Report Date:	06/27/2018
Report #:	8336	Site:	GC
RCFA Facilitator:	RSKREMER	Location:	060 HRSG
RCFA Type:	Environmental	Location name:	HEAT RECOVERY
Date of Occurrence:	Jun 21, 2018, 10:04 PM	Investigation Completed:	07/16/2018

Section1 - General Information

Executive Summary:

On June 21, 2018 the Gateway Energy and Coke Company (GECC) experienced a loss of feed water supply to the Heat Recovery Steam Generators (HRSG) at approximately 10:02 PM. The loss of feed water was caused by an upset condition at the US Steel Co-Gen facility that supplies GECC with feed water. Emergency Vent Stack (EVS) #4 opened at 10:04 PM; EVS #2 opened at 10: 07 PM; EVS #3 opened at 10:18 PM; EVS #5 and EVS #6 opened at 11:00 PM. After working through the upset conditions and stabilizing the HRSGs, the last EVS closed at 11:43 PM. The total venting time associated with this event was 2.42 hours. EVS #4 opened on June 21, 2018 at 8:41 AM for the planned monthly Preventative Maintenance (PM). The total venting time associated with the EVS #4 PM was 0.06 hours.

SunCoke Energy Environmental RCFA Report

SunCoke Energy
The Higher Degree

Environmental Information

Did the stack lid bypass event result from planned FGD or HRSG maintenance?	No
Describe:	

Were charge weights to affected ovens reduced to a 42.5 wet tons/oven average 48 hours prior to venting?	No
If no, provide explanation of why the charge weights were not reduced to a 42.5 wet ton average.	
Explanation: Bypass venting was a result of unplanned maintenance; therefore, charge weights could not be reduced at least 48 hours in advance. Per the PMO plan, coal charge weights are reduced by approximately two tons per charging cycle during bypass venting events that are expected to exceed 24 hours.	

Did the coal charged during the bypass event contain less than 1.1% sulfur content?	Yes
If no, provide explanation of why the coal sulfur content was not reduced to a maximum of 1.1%.	
Explanation:	

Did multiple events involving stack lid open time occur within a 24 period?				No
If yes, please list the Maximo RCFA numbers here:				

Vent Stacks Open/Close				
Vent Stack No.	**#1**	**#2**	**#3**	**#4**
Stack Lid Open Date/Time		6/21/18 22:07	6/21/18 22:18	6/21/18 22:04
Stack Lid Close Date/Time		6/21/18 22:14	6/21/18 23:13	6/21/18 23:43
Total Bypass Venting Time (mins)	0	7	15	99
Total Bypass Venting Time (hrs)	0.00	0.12	0.26	1.6

Vent Stacks Open/Close		
Vent Stack No.	**#5**	**#6**
Stack Lid Open Date/Time	6/21/18 23:00	6/21/18 23:00
Stack Lid Close Date/Time	6/21/18 23:15	6/21/18 23:08
Total Bypass Venting Time (mins)	15	8
Total Bypass Venting Time (hrs)	0.25	0.13

Estimated Quantity of Emissions (tons)						
Pollutant:	**Lead**	0.0	**PM**	0.0	**SO_2**	0.2

Estimated Avg Coal Sulfur Content Charged Per Day (applies to all ovens charged each day):				
Date	**Avg S (%):**		**Date**	**Avg S (%):**
6/21/2018	0.93			

Estimated Avg Charge Tons per Oven Charged (avg over duration of event):				
Affected Oven No.	**Estimated Avg Coal Charge Weight/ Oven:**		**Affected Oven No.**	**Estimated Avg Coal Charge Weight/ Oven:**
1			61	43.48
2			62	46.67
3			63	42.88
4			64	46.95
5			65	45.33
6			66	48.13
7			67	45.95

SunCoke Energy Environmental RCFA Report

8	
9	
10	
11	
12	
13	
14	
15	
16	
17	
18	
19	
20	
21	42.75
22	45.44
23	44.28
24	47.15
25	43.83
26	48.20
27	45.95
28	48.08
29	46.03
30	48.20
31	46.20
32	47.98
33	45.78
34	47.89
35	45.01
36	45.56
37	44.31
38	45.63
39	43.96
40	45.50
41	44.07
42	45.44
43	44.18
44	46.96
45	45.41
46	47.99
47	45.98
48	47.98
49	45.98
50	48.08
51	45.98
52	48.05
53	45.71
54	48.16
55	44.73
56	47.05
57	43.48
58	46.65
59	43.91
60	45.55

68	48.18
69	46.06
70	47.81
71	46.11
72	48.02
73	46.13
74	47.73
75	43.14
76	46.07
77	44.13
78	45.43
79	42.49
80	45.56
81	42.35
82	46.03
83	46.62
84	44.73
85	43.49
86	47.03
87	48.10
88	47.95
89	44.07
90	46.61
91	47.98
92	46.23
93	44.82
94	46.58
95	47.53
96	45.01
97	42.43
98	46.58
99	46.58
100	44.03
101	42.43
102	45.60
103	47.11
104	44.60
105	43.37
106	48.04
107	48.10
108	46.13
109	42.53
110	46.06
111	48.05
112	46.06
113	44.06
114	48.08
115	47.46
116	45.25
117	42.44
118	46.70
119	45.53
120	43.96

Bypass Venting Emissions Calculations for Gateway Energy and Coke Company

Emission Factors (for one bypass vent stack)*:

Lead	0.075	lb/hr	May 2017 Test, GECC, Bypass Vent Stack #5
PM (Filt + Cond)	12.7	lb/hr	May 2017 Test, GECC, Bypass Vent Stack #5
SO2	206	lb/hr	Calculated from 1st half CEMS data

Corresponding RCFA Report: 8336

Start Date/Time of Bypass Venting: 6/21/18 22:04

End Date/Time of Bypass Venting: 6/21/18 23:43

Bypass Vent Stack Lid Open and Close Date/Time:

	#1	#2	#3	#4	#5	#6
Open Date/Time:		6/21/18 22:07	6/21/18 22:18	6/21/18 22:04	6/21/18 23:00	6/21/18 23:00
Close Date/Time:		6/21/18 22:14	6/21/18 23:13	6/21/18 23:43	6/21/18 23:15	6/21/18 23:08

Total Stack Lid Open Time per Bypass Vent Stack:

	#1	#2	#3	#4	#5	#6
Hours:	0.0	0.1	0.3	1.6	0.2	0.1
Minutes:	0	7.0	15.42	99	15	8.0

Total Bypass Venting Time:

Hours: 2.4 Minutes: 144.4

Calculation of Bypass Venting Emissions:

Emissions = Emission Factor (lb/hr) x Total Hours of Bypass Venting x 1 ton/2000 lbs

	#1	#2	#3	#4	#5	#6
Lead (lbs)	0.0	0.0	0.0	0.1	0.0	0.0
PM (lbs)	0.0	1.5	3.3	21.0	3.2	1.7
SO2 (lbs)	0.0	24.0	52.9	339.9	51.5	27.5

Total Emissions from Bypass Venting Event

Total Emissions = Sum of Emissions from Each Affected Bypass Vent Stack

Total tons of Pollutant Emitted During Bypass Venting

Lead (tons)	0.0
PM (tons)	0.0
SO_2 (tons)	0.2

* Please note, most recent stack test data for HNCC No. 1, HNCC No. 2 and GECC was used to calculate estimated emissions. Data used to estimate total PM emissions is from a 2017 GECC bypass vent stack test. No condensable PM test data was available for HNCC No.1 or No. 2. Emission factors will be updated once required testing is completed.

Section 2 - Investigation Information and Summary

Cause and Effect Analysis (include steps taken to minimize emissions, if applicable):
On June 21, 2018 the Gateway Energy and Coke Company (GECC) experienced a loss of feed water supply to the Heat Recovery Steam Generators (HRSG) at approximately 10:02 PM. The loss of feed water was caused by an upset condition at the US Steel Co-Gen facility that supplies GECC with feed water. Emergency Vent Stack (EVS) #4 opened at 10:04 PM; EVS #2 opened at 10: 07 PM; EVS #3 opened at 10:18 PM; EVS #5 and EVS #6 opened at 11:00 PM. After working through the upset conditions and stabilizing the HRSGs, the EVS closed on June 21, 2018 at the following times: #2 – 10:14 PM; #6 – 11:08 PM; #3 – 11:13 PM; #5 – 11:15 PM and #4 – 11:43 PM. The total venting time associated with this event was 2.42 hours.

SunCoke Energy Environmental RCFA Report

SunCoke Energy
The Higher Degree

Section 3 - Causes

Cause	Description of Root Cause	Analysis of Root Cause (how did this contribute?)	Type of Cause	Cause Class	Repeat?
1734	Loss of feed water supply to HRSGs	The feed water supply from the US Steel Co-Gen facility was interrupted due to an upset condition	Root Cause	Physical Cause	NO

Section 4 - Measures Reasonably Available to Prevent or Reduce Likelihood of Recurrence (Corrective Actions)

CA#	Description of Corrective Action	Analysis of Corrective Action
1105729	Coordinate restart of HRSGs with Co-Gen facility as systems stabilize	Enable HRSGs to be returned to service and enable EVS to be closed

Additional Corrective Action Information:

CA#	Responsible Person	Probable Effectiveness	Estimated Start Date of CA	Estimated Completion Date	Estimated Cost of Implementation	3rd Party Needed for Implementation?
1105729	JRMCLAREN	5) Impact Cannot be Determined	06/21/2018	07/20/2018	0.00	NO

Action Effectiveness Definition

Value	Description
1) Prevent Reoccurrence	Action will Prevent Reoccurrence
2) Reduce Likelihood	Action will Reduce Likelihood of Reoccurrence
3) Lessen Impact	Action will Lessen Impact of Reoccurrence
4) Improvement / Unlikely to Prevent	An Improvement but not Likely to Prevent Reoccurrence
5) Impact Cannot be Determined	Action Impact Cannot be Determined at this Time

SunCoke Energy Environmental RCFA Report

RCFA Name:	20180624_GCO_097_HRSG 01 TUBE LEAK	Report Date:	06/28/2018
Report #:	8339	Site:	GC
RCFA Facilitator:	RSKREMER	Location:	H-6101
RCFA Type:	Environmental	Location name:	HRSG 01, NOOTER, BATTERY A
Date of Occurrence:	Jun 24, 2018, 10:31 PM	Investigation Completed:	07/16/2018

Section1 - General Information

Executive Summary:

On June 24, 2018 Gateway Energy and Coke Company (GECC) experienced a tube leak condition on Heat Recovery Steam Generator (HRSG) #1. The emergency vent stack (EVS) #1 was opened at 10:31 PM. HRSG #1 was removed from service to facilitate repairs. The location of the leaks were found to be in the center of the Economizer section – row 23 tube 10 and 11 and the west side of Superheat #2 – row 10 tube 19. The repair encompassed the replacement of five tubes in the Economizer section – row 22 tube 2 and 3 and row 23 tube 9, 10 and 11 – along with associated u-bends and jumpers and the replacement of the Superheat #2 row 10 tube 19 from the header through the u-bend into row 9. A pressure test was performed on June 27, 2018 that discovered an additional leak on a Superheat #2 u-bend between row 9 and 10 tube 22. The repair included the replacement of the u-bend section between row 9 and 10 tube 22. A successful water pressure test was achieved on June 27, 2018. HRSG #1 was returned to service with EVS #1 closing at 2:27 AM on June 28, 2018. The total venting time associated with this event was 75.93 hours. EVS #6 opened on June 24, 2018 at 11:06 AM for the planned monthly Preventative Maintenance (PM). The total venting time associated with the EVS #6 PM was 0.03 hours. EVS #2 opened on June 28, 2018 at 3:34 PM due to a tube leak condition on HRSG #2. RCFA 8354 addresses the venting time associated with EVS #2. The total venting time associated with the HRSG #2 tube leak was 64.46 hours.

An inspection of the tube leak location in the Economizer section indicated that the failure was the result material wastage due to erosion / corrosion in the soot blower path. The Superheat #2 tube and u-bend failure was related to thermal fatigue cracking. Tubes in proximity to the leaking tubes were inspected prior to determining the final scope of repair.

Corrective actions identified were the replacement of the tube sections, and the future implementation of the redundant HRSG / Gas Sharing project at GECC (per action item #585231 of RCFA 2679).

SunCoke Energy Environmental RCFA Report

SunCoke Energy
The Higher Degree

Environmental Information

Did the stack lid bypass event result from planned FGD or HRSG maintenance?	No
Describe:	

Were charge weights to affected ovens reduced to a 42.5 wet tons/oven average 48 hours prior to venting?	No
If no, provide explanation of why the charge weights were not reduced to a 42.5 wet ton average.	
Explanation: Bypass venting was a result of unplanned maintenance; therefore, charge weights could not be reduced at least 48 hours in advance. Per the PMO plan, coal charge weights are reduced by approximately two tons per charging cycle during bypass venting events that are expected to exceed 24 hours.	

Did the coal charged during the bypass event contain less than 1.1% sulfur content?	Yes
If no, provide explanation of why the coal sulfur content was not reduced to a maximum of 1.1%.	
Explanation:	

Did multiple events involving stack lid open time occur within a 24 period?				Yes
If yes, please list the Maximo RCFA numbers here:	8354			

Vent Stacks Open/Close				
Vent Stack No.	**#1**	**#2**	**#3**	**#4**
Stack Lid Open Date/Time	6/24/18 22:31			
Stack Lid Close Date/Time	6/28/18 02:27			
Total Bypass Venting Time (mins)	4556	0	0	0
Total Bypass Venting Time (hrs)	75.93	0.00	0.00	0.0

Vent Stacks Open/Close		
Vent Stack No.	**#5**	**#6**
Stack Lid Open Date/Time		
Stack Lid Close Date/Time		
Total Bypass Venting Time (mins)	0	0
Total Bypass Venting Time (hrs)	0.00	0.00

Estimated Quantity of Emissions (tons)						
Pollutant:	**Lead**	0.0	**PM**	0.5	**SO_2**	7.8

Estimated Avg Coal Sulfur Content Charged Per Day (applies to all ovens charged each day):			
Date	**Avg S (%):**	**Date**	**Avg S (%):**
6/24/2018	0.99	6/28/2018	0.99
6/25/2018	0.99		
6/26/2018	0.99		
6/27/2018	0.99		

Estimated Avg Charge Tons per Oven Charged (avg over duration of event):			
Affected Oven No.	**Estimated Avg Coal Charge Weight/ Oven:**	**Affected Oven No.**	**Estimated Avg Coal Charge Weight/ Oven:**
1		61	45.60
2		62	45.76
3		63	44.55
4		64	44.66
5		65	46.48
6		66	44.82
7		67	44.91

SunCoke Energy Environmental RCFA Report

8	
9	
10	
11	
12	
13	
14	
15	
16	
17	
18	
19	
20	
21	
22	
23	
24	
25	
26	
27	
28	
29	
30	
31	
32	
33	
34	
35	
36	
37	
38	
39	
40	
41	
42	
43	
44	
45	
46	
47	
48	
49	
50	
51	
52	
53	
54	
55	
56	
57	
58	
59	
60	

68	26.98
69	47.94
70	44.78
71	45.12
72	47.98
73	45.81
74	47.44
75	44.36
76	46.09
77	45.99
78	45.66
79	44.42
80	45.60
81	
82	
83	
84	
85	
86	
87	
88	
89	
90	
91	
92	
93	
94	
95	
96	
97	
98	
99	
100	
101	
102	
103	
104	
105	
106	
107	
108	
109	
110	
111	
112	
113	
114	
115	
116	
117	
118	
119	
120	

Bypass Venting Emissions Calculations for Gateway Energy and Coke Company

Emission Factors (for one bypass vent stack)*:

Lead	0.075	lb/hr	May 2017 Test, GECC, Bypass Vent Stack #5
PM (Filt + Cond)	12.7	lb/hr	May 2017 Test, GECC, Bypass Vent Stack #5
SO2	206	lb/hr	Calculated from 1st half CEMS data

Corresponding RCFA Report: 8339

Start Date/Time of Bypass Venting: 6/24/18 22:31

End Date/Time of Bypass Venting: 6/28/18 02:27

Bypass Vent Stack Lid Open and Close Date/Time:

	#1	#2	#3	#4	#5	#6
Open Date/Time:	6/24/18 22:31					
Close Date/Time:	6/28/18 02:27					

Total Stack Lid Open Time per Bypass Vent Stack:

	#1	#2	#3	#4	#5	#6
Hours:	75.9	0.0	0.0	0.0	0.0	0.0
Minutes:	4556	0	0	0	0	0

Total Bypass Venting Time:

Hours: 75.9 Minutes: 4556.0

Calculation of Bypass Venting Emissions:

Emissions = Emission Factor (lb/hr) x Total Hours of Bypass Venting x 1 ton/2000 lbs

	#1	#2	#3	#4	#5	#6
Lead (lbs)	5.7	0.0	0.0	0.0	0.0	0.0
PM (lbs)	964.4	0.0	0.0	0.0	0.0	0.0
SO2 (lbs)	15642.3	0.0	0.0	0.0	0.0	0.0

Total Emissions from Bypass Venting Event

Total Emissions = Sum of Emissions from Each Affected Bypass Vent Stack

Total tons of Pollutant Emitted During Bypass Venting

Lead (tons)	0.0
PM (tons)	0.5
SO_2 (tons)	7.8

* Please note, most recent stack test data for HNCC No. 1, HNCC No. 2 and GECC was used to calculate estimated emissions. Data used to estimate total PM emissions is from a 2017 GECC bypass vent stack test. No condensable PM test data was available for HNCC No.1 or No. 2. Emission factors will be updated once required testing is completed.

Section 2 - Investigation Information and Summary

Cause and Effect Analysis (include steps taken to minimize emissions, if applicable):
On June 24, 2018 Gateway Energy and Coke Company (GECC) experienced a tube leak condition on Heat Recovery Steam Generator (HRSG) #1. The emergency vent stack (EVS) #1 was opened at 10:31 PM. HRSG #1 was removed from service to facilitate repairs. The location of the leaks were found to be in the center of the Economizer section – row 23 tube 10 and 11 and the west side of Superheat #2 – row 10 tube 19. The repair encompassed the replacement of five tubes in the Economizer section – row 22 tube 2 and 3 and row 23 tube 9, 10 and 11 – along with associated u-bends and jumpers and the replacement of the Superheat #2 row 10 tube 19 from header through the u-bend into row 9. A pressure test was performed on June 27, 2018 that discovered an additional leak on a Superheat #2 u-bend between row 9 and 10 tube 22. The repair included the replacement of the u-bend section between row 9 and 10 tube 22. A successful water pressure test was achieved on June 27, 2018. HRSG #1 was returned to service with EVS #1 closing at 2:27 AM on June 28, 2018. The total venting time associated with this event was 75.93 hours. Corrective actions identified were the replacement of the tube sections, and the future implementation of the redundant HRSG / Gas Sharing project at GECC (per action item #585231 of RCFA 2679). The replacement of the affected tube assemblies allows for the immediate return to service of HRSG #1. Given the potential for other tube leaks to occur, the longer-term corrective action is to install and operate GECC's redundant HRSG. The redundant HRSG will allow for more extensive maintenance to help prevent future tube leaks and will allow for gas to be shifted in order to reduce venting while a tube leak is occurring or associated maintenance in ongoing. While the redundant HRSG / Gas Sharing project is being implemented, GECC will apply other processes and procedures to minimize the frequency of tube leaks and / or venting time that occurs while tube leaks are being repaired. The processes and procedures include but are not limited to the following: · A tube inspection program that identifies areas of the HRSG that are prone to corrosion and may require more thorough tube inspections; · An ultrasonic thickness (UT) testing method to identify thinning tubes and a "map" of the UT readings for each HRSG in order to target specific areas of the HRSG for additional evaluation or tube replacement; · An inventory of spare, upgraded, more corrosion resistant materials for certain HRSG sections; · An orbital welding process that provides a more even, consistent weld quality; and · The use of soda ash solution as a prewash to make cleaning more effective and to protect tubes from low pH conditions. It should be noted that GECC was following the above processes and procedures prior to the venting incident, so the processes and procedures should not be considered as RCFA corrective actions.

SunCoke Energy Environmental RCFA Report

SunCoke Energy
The Higher Degree

Section 3 - Causes

Cause	Description of Root Cause	Analysis of Root Cause (how did this contribute?)	Type of Cause	Cause Class	Repeat?
1735	HRSG #1 - Localized Corrosion Econ R22 T2	The mechanical stresses exceeded the strength of the tube section where the failure occurred due to material wastage / thinning	Root Cause	Physical Cause	NO
1736	HRSG #1 - Localized Corrosion Econ R22 T3	The mechanical stresses exceeded the strength of the tube section where the failure occurred due to material wastage / thinning	Root Cause	Physical Cause	NO
1737	HRSG #1 - Localized Corrosion Econ R23 T9	The mechanical stresses exceeded the strength of the tube section where the failure occurred due to material wastage / thinning	Root Cause	Physical Cause	NO
1738	HRSG #1 - Localized Corrosion Econ R23 T10	The mechanical stresses exceeded the strength of the tube section where the failure occurred due to material wastage / thinning	Root Cause	Physical Cause	NO
1739	HRSG #1 - Localized Corrosion Econ R23 T11	The mechanical stresses exceeded the strength of the tube section where the failure occurred due to material wastage / thinning	Root Cause	Physical Cause	NO
1740	HRSG #1 - Thermal Fatigue SH2 R10 T19	The mechanical stresses exceeded the strength of the tube section where the failure occurred due to thermal stress cracking	Root Cause	Physical Cause	NO
1741	HRSG #1 - Thermal Fatigue SH2 U-bend R9-10 T22	The mechanical stresses exceeded the strength of the tube section where the failure occurred due to thermal stress cracking	Root Cause	Physical Cause	NO

Section 4 - Measures Reasonably Available to Prevent or Reduce Likelihood of Recurrence (Corrective Actions)

CA#	Description of Corrective Action	Analysis of Corrective Action
1105749	HRSG #1 - Replace Econ Row 22 Tube 2 with associated u-bend and jumper	Enable HRSG #1 to be returned to service and EVS #1 to be closed
1105750	HRSG #1 - Replace Econ Row 22 Tube 3 with associated u-bend and jumper	Enable HRSG #1 to be returned to service and EVS #1 to be closed
1105751	HRSG #1 - Replace Econ Row 23 Tube 9 with associated u-bend and jumper	Enable HRSG #1 to be returned to service and EVS #1 to be closed
1105752	HRSG #1 - Replace Econ Row 23 Tube 10 with associated u-bend and jumper	Enable HRSG #1 to be returned to service and EVS #1 to be closed
1105753	HRSG #1 - Replace Econ Row 23 Tube 11 with associated u-bend and jumper	Enable HRSG #1 to be returned to service and EVS #1 to be closed
1105754	HRSG #1 - Replace SH2 Row 10 Tube 19 from header through u-bend	Enable HRSG #1 to be returned to service and EVS #1 to be closed
1105755	HRSG #1 - Replace SH2 U-bend between Row 9 and 10 Tube 22	Enable HRSG #1 to be returned to service and EVS #1 to be closed

Additional Corrective Action Information:

CA#	Responsible Person	Probable Effectiveness	Estimated Start Date of CA	Estimated Completion Date	Estimated Cost of Implementation	3rd Party Needed for Implementation?
1105749	JRMCLAREN	2) Reduce Likelihood	06/24/2018	07/20/2018	5,000.00	YES
1105750	JRMCLAREN	2) Reduce Likelihood	06/24/2018	07/20/2018	5,000.00	YES

1105751	JRMCLAREN	2) Reduce Likelihood	06/24/2018	07/20/2018	5,000.00	YES
1105752	JRMCLAREN	2) Reduce Likelihood	06/24/2018	07/20/2018	5,000.00	YES
1105753	JRMCLAREN	2) Reduce Likelihood	06/24/2018	07/20/2018	5,000.00	YES
1105754	JRMCLAREN	2) Reduce Likelihood	06/24/2018	07/20/2018	5,000.00	YES
1105755	JRMCLAREN	2) Reduce Likelihood	06/27/2018	07/20/2018	5,000.00	YES

Action Effectiveness Definition

Value	Description
1) Prevent Reoccurrence	Action will Prevent Reoccurrence
2) Reduce Likelihood	Action will Reduce Likelihood of Reoccurrence
3) Lessen Impact	Action will Lessen Impact of Reoccurrence
4) Improvement / Unlikely to Prevent	An Improvement but not Likely to Prevent Reoccurrence
5) Impact Cannot be Determined	Action Impact Cannot be Determined at this Time

SunCoke Energy Environmental RCFA Report

RCFA Name:	20180628_GCO_098_HRSG 02 TUBE LEAK	Report Date:	07/06/2018
Report #:	8354	Site:	GC
RCFA Facilitator:	RSKREMER	Location:	H-6102
RCFA Type:	Environmental	Location name:	HRSG 02, NOOTER, BATTERY A
Date of Occurrence:	Jun 28, 2018, 3:34 PM	Investigation Completed:	07/16/2018

Section1 - General Information

Executive Summary:

On June 28, 2018 Gateway Energy and Coke Company (GECC) experienced a tube leak condition on Heat Recovery Steam Generator (HRSG) #2. The emergency vent stack (EVS) #2 was opened at 3:34 PM. HRSG #2 was removed from service to facilitate repairs. The location of the leak was found to be on the west side of Superheat #2 section – row 10 tube 17. The repair encompassed the replacement of Superheat #2 row 10 tube 17 to the header. A pressure test was performed on June 29, 2018 that discovered additional leaks on the west side of Superheat #2 – row 10 tube 1 and row 10 tube 18. The repair included the replacement of row 10 tube 1 and row 10 tube 18 to the header. A successful water pressure test was achieved on June 30, 2018. HRSG #2 was returned to service with EVS #2 closing at 8:02 AM on July 1, 2018. The total venting time associated with this event was 64.46 hours. A tube leak event on HRSG #1 occurred from June 24, 2018 to June 28, 2018 with total venting hours of 75.93 hours. RCFA 8339 addresses the venting time associated with the tube leak on HRSG #1.

An inspection of the tube leak locations in the Superheat #2 section indicated that the failures were related to thermal fatigue cracking. Tubes in proximity to the leaking tubes were inspected prior to determining the final scope of repair.

Corrective actions identified were the replacement of the tube sections, and the future implementation of the redundant HRSG / Gas Sharing project at GECC (per action item #585231 of RCFA 2679).

SunCoke Energy Environmental RCFA Report

SunCoke Energy
The Higher Degree

Environmental Information

Did the stack lid bypass event result from planned FGD or HRSG maintenance?	No
Describe:	

Were charge weights to affected ovens reduced to a 42.5 wet tons/oven average 48 hours prior to venting?	No
If no, provide explanation of why the charge weights were not reduced to a 42.5 wet ton average.	
Explanation: Bypass venting was a result of unplanned maintenance; therefore, charge weights could not be reduced at least 48 hours in advance. Per the PMO plan, coal charge weights are reduced by approximately two tons per charging cycle during bypass venting events that are expected to exceed 24 hours.	

Did the coal charged during the bypass event contain less than 1.1% sulfur content?	Yes
If no, provide explanation of why the coal sulfur content was not reduced to a maximum of 1.1%.	
Explanation:	

Did multiple events involving stack lid open time occur within a 24 period?				Yes
If yes, please list the Maximo RCFA numbers here:	8339			

Vent Stacks Open/Close				
Vent Stack No.	**#1**	**#2**	**#3**	**#4**
Stack Lid Open Date/Time		6/28/18 15:34		
Stack Lid Close Date/Time		7/1/18 08:02		
Total Bypass Venting Time (mins)	0	3868	0	0
Total Bypass Venting Time (hrs)	0.00	64.46	0.00	0.0

Vent Stacks Open/Close		
Vent Stack No.	**#5**	**#6**
Stack Lid Open Date/Time		
Stack Lid Close Date/Time		
Total Bypass Venting Time (mins)	0	0
Total Bypass Venting Time (hrs)	0.00	0.00

Estimated Quantity of Emissions (tons)						
Pollutant:	**Lead**	0.0	**PM**	0.4	**SO_2**	6.6

Estimated Avg Coal Sulfur Content Charged Per Day (applies to all ovens charged each day):			
Date	**Avg S (%):**	**Date**	**Avg S (%):**
6/28/2018	0.97		
6/29/2018	0.97		
6/30/2018	0.97		
7/1/2018	0.93		

Estimated Avg Charge Tons per Oven Charged (avg over duration of event):			
Affected Oven No.	**Estimated Avg Coal Charge Weight/ Oven:**	**Affected Oven No.**	**Estimated Avg Coal Charge Weight/ Oven:**
1		61	
2		62	
3		63	
4		64	
5		65	
6		66	
7		67	

SunCoke Energy Environmental RCFA Report

8	
9	
10	
11	
12	
13	
14	
15	
16	
17	
18	
19	
20	
21	44.03
22	42.50
23	45.10
24	43.28
25	45.11
26	44.06
27	46.52
28	44.09
29	47.19
30	44.13
31	46.51
32	44.19
33	47.02
34	43.99
35	45.61
36	42.64
37	45.56
38	42.45
39	44.55
40	42.58
41	
42	
43	
44	
45	
46	
47	
48	
49	
50	
51	
52	
53	
54	
55	
56	
57	
58	
59	
60	

68	
69	
70	
71	
72	
73	
74	
75	
76	
77	
78	
79	
80	
81	
82	
83	
84	
85	
86	
87	
88	
89	
90	
91	
92	
93	
94	
95	
96	
97	
98	
99	
100	
101	
102	
103	
104	
105	
106	
107	
108	
109	
110	
111	
112	
113	
114	
115	
116	
117	
118	
119	
120	

Bypass Venting Emissions Calculations for Gateway Energy and Coke Company

Emission Factors (for one bypass vent stack)*:

Lead	0.075	lb/hr	May 2017 Test, GECC, Bypass Vent Stack #5
PM (Filt + Cond)	12.7	lb/hr	May 2017 Test, GECC, Bypass Vent Stack #5
SO2	206	lb/hr	Calculated from 1st half CEMS data

Corresponding RCFA Report: 8354

Start Date/Time of Bypass Venting: 6/28/18 15:34

End Date/Time of Bypass Venting: 7/1/18 08:02

Bypass Vent Stack Lid Open and Close Date/Time:

	#1	#2	#3	#4	#5	#6
Open Date/Time:		6/28/18 15:34				
Close Date/Time:		7/1/18 08:02				

Total Stack Lid Open Time per Bypass Vent Stack:

	#1	#2	#3	#4	#5	#6
Hours:	0.0	64.5	0.0	0.0	0.0	0.0
Minutes:	0	3867.5	0	0	0	0

Total Bypass Venting Time:

Hours: 64.5 Minutes: 3867.5

Calculation of Bypass Venting Emissions:

Emissions = Emission Factor (lb/hr) x Total Hours of Bypass Venting x 1 ton/2000 lbs

	#1	#2	#3	#4	#5	#6
Lead (lbs)	0.0	4.8	0.0	0.0	0.0	0.0
PM (lbs)	0.0	818.6	0.0	0.0	0.0	0.0
SO2 (lbs)	0.0	13278.4	0.0	0.0	0.0	0.0

Total Emissions from Bypass Venting Event

Total Emissions = Sum of Emissions from Each Affected Bypass Vent Stack

Total tons of Pollutant Emitted During Bypass Venting

Lead (tons)	0.0
PM (tons)	0.4
SO_2 (tons)	6.6

* Please note, most recent stack test data for HNCC No. 1, HNCC No. 2 and GECC was used to calculate estimated emissions. Data used to estimate total PM emissions is from a 2017 GECC bypass vent stack test. No condensable PM test data was available for HNCC No.1 or No. 2. Emission factors will be updated once required testing is completed.

Section 2 - Investigation Information and Summary

Cause and Effect Analysis (include steps taken to minimize emissions, if applicable):
On June 28, 2018 Gateway Energy and Coke Company (GECC) experienced a tube leak condition on Heat Recovery Steam Generator (HRSG) #2. The emergency vent stack (EVS) #2 was opened at 3:34 PM. HRSG #2 was removed from service to facilitate repairs. The location of the leak was found to be on the west side of Superheat #2 section – row 10 tube 17. The repair encompassed the replacement of Superheat #2 row 10 tube 17 to the header. A pressure test was performed on June 29, 2018 that discovered additional leaks on the west side of Superheat #2 – row 10 tube 1 and row 10 tube 18. The repair included the replacement of row 10 tube 1 and row 10 tube 18 to the header. A successful water pressure test was achieved on June 30, 2018. HRSG #2 was returned to service with EVS #2 closing at 8:02 AM on July 1, 2018. The total venting time associated with this event was 64.46 hours. Corrective actions identified were the replacement of the tube sections, and the future implementation of the redundant HRSG / Gas Sharing project at GECC (per action item #585231 of RCFA 2679). The replacement of the affected tube assemblies allows for the immediate return to service of HRSG #2. Given the potential for other tube leaks to occur, the longer-term corrective action is to install and operate GECC's redundant HRSG. The redundant HRSG will allow for more extensive maintenance to help prevent future tube leaks and will allow for gas to be shifted in order to reduce venting while a tube leak is occurring or associated maintenance in ongoing. While the redundant HRSG / Gas Sharing project is being implemented, GECC will apply other processes and procedures to minimize the frequency of tube leaks and / or venting time that occurs while tube leaks are being repaired. The processes and procedures include but are not limited to the following: · A tube inspection program that identifies areas of the HRSG that are prone to corrosion and may require more thorough tube inspections; · An ultrasonic thickness (UT) testing method to identify thinning tubes and a "map" of the UT readings for each HRSG in order to target specific areas of the HRSG for additional evaluation or tube replacement; · An inventory of spare, upgraded, more corrosion resistant materials for certain HRSG sections; · An orbital welding process that provides a more even, consistent weld quality; and · The use of soda ash solution as a prewash to make cleaning more effective and to protect tubes from low pH conditions. It should be noted that GECC was following the above processes and procedures prior to the venting incident, so the processes and procedures should not be considered as RCFA corrective actions.

SunCoke Energy Environmental RCFA Report

SunCoke Energy
The Higher Degree

Section 3 - Causes

Cause	Description of Root Cause	Analysis of Root Cause (how did this contribute?)	Type of Cause	Cause Class	Repeat?
1742	HRSG #2 - Thermal Fatigue SH2 R10 T17	The mechanical stresses exceeded the strength of the tube section where the failure occurred due to thermal stress cracking	Root Cause	Physical Cause	NO
1743	HRSG #2 - Thermal Fatigue SH2 R10 T1	The mechanical stresses exceeded the strength of the tube section where the failure occurred due to thermal stress cracking	Root Cause	Physical Cause	NO
1744	HRSG #2 - Thermal Fatigue SH2 R10 T18	The mechanical stresses exceeded the strength of the tube section where the failure occurred due to thermal stress cracking	Root Cause	Physical Cause	NO

Section 4 - Measures Reasonably Available to Prevent or Reduce Likelihood of Recurrence (Corrective Actions)

CA#	Description of Corrective Action	Analysis of Corrective Action
1105982	HRSG #2 - Replace SH2 Row 10 Tube 17 to header	Enable HRSG #2 to be returned to service and EVS #2 to be closed
1105983	HRSG #2 - Replace SH2 Row 10 Tube 1 to header	Enable HRSG #2 to be returned to service and EVS #2 to be closed
1105984	HRSG #2 - Replace SH2 Row 10 Tube 18 to header	Enable HRSG #2 to be returned to service and EVS #2 to be closed

Additional Corrective Action Information:

CA#	Responsible Person	Probable Effectiveness	Estimated Start Date of CA	Estimated Completion Date	Estimated Cost of Implementation	3rd Party Needed for Implementation?
1105982	JRMCLAREN	2) Reduce Likelihood	06/28/2018	07/20/2018	10,000.00	YES
1105983	JRMCLAREN	2) Reduce Likelihood	06/29/2018	07/20/2018	10,000.00	YES
1105984	JRMCLAREN	2) Reduce Likelihood	06/29/2018	07/20/2018	10,000.00	YES

Action Effectiveness Definition

Value	Description
1) Prevent Reoccurrence	Action will Prevent Reoccurrence
2) Reduce Likelihood	Action will Reduce Likelihood of Reoccurrence
3) Lessen Impact	Action will Lessen Impact of Reoccurrence
4) Improvement / Unlikely to Prevent	An Improvement but not Likely to Prevent Reoccurrence
5) Impact Cannot be Determined	Action Impact Cannot be Determined at this Time

Attachment A3

Action Item Status for Current RCFA Reports

Action Item Status for Current RCFA Reports

Site	Action Item No.	Description	RCFA Report No.	Estimated Completion Date	Status	Actual Completion Date
GC	1063495	Inspect GECC Main Substation for clearance to restart	7818	2/02/18	COMPLETE	1/18/2018
GC	1063497	Confirm US Steel / Co-Gen able to receive steam from GECC HRSGs	7818	2/02/18	COMPLETE	1/18/2018
GC	1068993	Isolate HRSG #1 secondary phosphate line and lock out	7870	3/03/18	COMPLETE	2/5/2018
GC	1068994	Demo HRSG #1 secondary phosphate line	7870	12/15/18	IN PROGRESS	
GC	1072485	HRSG #3 - Replace U-bend section between Row 9 and 10 Tube 9	7906	3/09/18	COMPLETE	2/15/2018
GC	1072486	HRSG #3 - Replace U-bend section between Row 9 and 10 Tube 16	7906	3/09/18	COMPLETE	2/15/2018
GC	1072487	HRSG #3 - Replace section of SH2 Row 1 into Row 2 Tube 5	7906	3/09/18	COMPLETE	2/15/2018
GC	1072488	HRSG #3 - Replace section of SH2 Row 10 Tube 16	7906	3/09/18	COMPLETE	2/15/2018
GC	1074070	HRSG #2 - Replace U-bend section of SH2 Row 8-9 Tube 4	7924	3/16/18	COMPLETE	2/21/2018
GC	1074071	HRSG #2 - Replace U-bend section of SH2 Row 8-9 Tube 5	7924	3/16/18	COMPLETE	2/21/2018
GC	1074085	HRSG #5 - Replace U-bend section of SH2 Row 9-10 Tube 21	7933	3/16/18	COMPLETE	2/23/2018
GC	1083472	HRSG #1 - Replace Economizer Row 7 Tube 14 and 15	8062	4/20/18	COMPLETE	3/30/2018
GC	1083491	HRSG #1 - Repair Economizer Drain Line Piping	8062	4/20/18	COMPLETE	3/30/2018
GC	1083720	HRSG #1 - Replace Economizer Drain Valves during next planned Outage	8062	10/12/18	IN PROGRESS	
GC	1088603	HRSG #5 - Replace Economizer Row 23 Tube 11	8123	5/11/18	COMPLETE	4/17/2018
GC	1088604	HRSG #5 - Replace Economizer Row 23 Tube 10	8123	5/11/18	COMPLETE	4/17/2018
GC	1088605	HRSG #5 - Replace Economizer Row 22 Tube 6	8123	5/11/18	COMPLETE	4/17/2018
GC	1088606	HRSG #5 - Replace Economizer Row 22 Tube 7	8123	5/11/18	COMPLETE	4/17/2018
GC	1092676	Replace Econ 2 Row 7 Tube 9 with associated ubends and jumpers	8187	5/31/18	COMPLETE	5/11/2018
GC	1092677	Replace Econ 2 Row 7 Tube 10 with associated ubends and jumpers	8187	5/31/18	COMPLETE	5/11/2018
GC	1092678	Replace SH2 Ubend between Row 9 and 10 Tube 5	8187	5/31/18	COMPLETE	5/11/2018
GC	1092679	Replace SH2 Ubend between Row 7 and 8 Tube 5	8187	5/31/18	COMPLETE	5/11/2018
GC	1092680	Plug Evap1 Row 2 Tube 3	8187	5/31/18	COMPLETE	5/11/2018
GC	1092681	Plug Evap1 Row 3 Tube 3	8187	5/31/18	COMPLETE	5/11/2018
GC	1093270	Procure adequately documented and identified plugs	8187	5/31/18	COMPLETE	5/31/2018
GC	1093813	HRSG #6 - Replace Econ Row 23 Tube 11 with associated ubends and jumpers	8214	6/06/18	COMPLETE	5/16/2018
GC	1093814	HRSG #6 - Replace Econ Row 23 Tube 12 with associated ubends and jumpers	8214	6/06/18	COMPLETE	5/16/2018
GC	1093815	HRSG #6 - Replace Econ Row 23 Tube 13 with associated ubends and jumpers	8214	6/06/18	COMPLETE	5/16/2018
GC	1093816	HRSG #6 - Replace SH2 Ubend between Row 9 and 10 Tube 16	8214	6/06/18	COMPLETE	5/16/2018
GC	1094332	Inspect GECC Main Substation for clearance to restart	8219	6/06/18	COMPLETE	5/15/2018
GC	1094333	Confirm US Steel / Co-Gen able to receive steam from GECC HRSGs	8219	6/06/18	COMPLETE	5/15/2018
GC	1102428	HRSG #3 - Replace U-bend sections of SH2 Row 3-4 and Row 1-2 Tube 5	8298	7/13/18	COMPLETE	6/14/2018
GC	1102429	HRSG #3 - Replace Econ Row 7 Tube 11 with associated ubend and jumper	8298	7/13/18	COMPLETE	6/14/2018
GC	1102430	HRSG #3 - Replace Econ Row 7 Tube 3 with associated ubend and jumper	8298	7/13/18	COMPLETE	6/14/2018

GC	1102431	HRSG #3 - Replace Econ Row 6 Tube 1 with associated ubend and jumper	8298	7/13/18	COMPLETE	6/14/2018
GC	1102432	HRSG #3 - Replace Econ Row 6 Tube 2 with associated ubend and jumper	8298	7/13/18	COMPLETE	6/14/2018
GC	1102433	HRSG #3 - Replace Econ Row 6 Tube 3 with associated ubend and jumper	8298	7/13/18	COMPLETE	6/14/2018
GC	1102434	HRSG #3 - Replace Econ Row 6 Tube 4 with associated ubend and jumper	8298	7/13/18	COMPLETE	6/14/2018
GC	1102435	HRSG #3 - Replace Econ Row 6 Tube 5 with associated ubend and jumper	8298	7/13/18	COMPLETE	6/14/2018
GC	1102442	HRSG #5 - Replace Econ Row 22 Tube 8 with associated ubend and jumper	8306	7/13/18	COMPLETE	6/16/2018
GC	1102444	HRSG #5 - Replace Econ Row 21 Tube 8 with associated ubend and jumper	8306	7/13/18	COMPLETE	6/16/2018
GC	1102445	HRSG #5 - Replace Econ Row 22 Tube 9 with associated ubend and jumper	8306	7/13/18	COMPLETE	6/16/2018
GC	1102446	HRSG #5 - Replace SH2 Ubend between Row 9 and 10 Tube 19	8306	7/13/18	COMPLETE	6/16/2018
GC	1102447	HRSG #5 - Replace SH1 Ubend between Row 2 and 3 Tube 18	8306	7/13/18	COMPLETE	6/16/2018
GC	1102448	HRSG #5 - Replace SH2 Ubend between Row 8 and 9 Tube 15	8306	7/13/18	COMPLETE	6/16/2018
GC	1102449	HRSG #5 - Repair SH2 Ubend Weld at Row 8 Tube15	8306	7/13/18	COMPLETE	6/16/2018
GC	1105729	Coordinate restart of HRSGs with Co-Gen facility as systems stabilize	8336	7/20/18	COMPLETE	6/21/2018
GC	1105749	HRSG #1 - Replace Econ Row 22 Tube 2 with associated u-bend and jumper	8339	7/20/18	COMPLETE	6/28/2018
GC	1105750	HRSG #1 - Replace Econ Row 22 Tube 3 with associated u-bend and jumper	8339	7/20/18	COMPLETE	6/28/2018
GC	1105751	HRSG #1 - Replace Econ Row 23 Tube 9 with associated u-bend and jumper	8339	7/20/18	COMPLETE	6/28/2018
GC	1105752	HRSG #1 - Replace Econ Row 23 Tube 10 with associated u-bend and jumper	8339	7/20/18	COMPLETE	6/28/2018
GC	1105753	HRSG #1 - Replace Econ Row 23 Tube 11 with associated u-bend and jumper	8339	7/20/18	COMPLETE	6/28/2018
GC	1105754	HRSG #1 - Replace SH2 Row 10 Tube 19 from header through u-bend	8339	7/20/18	COMPLETE	6/28/2018
GC	1105755	HRSG #1 - Replace SH2 U-bend between Row 9 and 10 Tube 22	8339	7/20/18	COMPLETE	6/28/2018
GC	1105982	HRSG #2 - Replace SH2 Row 10 Tube 17 to header	8354	7/20/18	COMPLETE	7/1/2018
GC	1105983	HRSG #2 - Replace SH2 Row 10 Tube 1 to header	8354	7/20/18	COMPLETE	7/1/2018
GC	1105984	HRSG #2 - Replace SH2 Row 10 Tube 18 to header	8354	7/20/18	COMPLETE	7/1/2018
HH	1085270	CD - Repair the failed HCC2 B air compressor	8097	5/31/18	COMPLETE	5/4/2018
HH	1085271	CD - Lock open the valve between HCC1 and HCC2 air systems	8097	5/31/18	COMPLETE	5/9/2018
HH	1085273	CD - evaluate the fault state for the attemperator valve on loss of air	8097	8/31/18	IN PROGRESS	
HH	1085274	CD - Repair the failed exhaust fan for HCC2 Compressor Room	8097	5/31/18	COMPLETE	5/7/2018
HH	1085371	CD - Consider installing additional ducting in compressor room	8097	12/31/18	IN PROGRESS	
HH	1088826	CD - Evaluate the position of the valve between the HCC1/HCC2 air systems for different scenarios	8097	12/31/18	COMPLETE	6/1/2018
HH	1085099	CD - strip Old insulation and replace with new	8098	6/01/18	COMPLETE	4/26/2018
HH	1085100	CD - Replace B Atomizer Control Cabinet	8098	6/01/18	COMPLETE	6/1/2018
HH	1085102	CD - Replace control and power wiring to B Atomizer Cabinet	8098	6/01/18	COMPLETE	6/1/2018
HH	1085105	CD - Consider adding Fire Detection Alarm system in SDA Penthouse	8098	12/31/18	IN PROGRESS	
HH	1085109	CD - Consider installing a drainage system in the penthouse to reduce fluids getting to roof of SDA.	8098	12/31/18	IN PROGRESS	
HH	1085111	CD - Consider installing secondary containment for atomizer used oil and pump	8098	6/01/18	COMPLETE	5/4/2018
HH	1085113	CD - Consider installing flammable storage cabinet in Penthouse for oil storage	8098	6/01/18	COMPLETE	5/14/2018
HH	1085373	CD - Clean debris from under insluation flashing	8098	8/01/18	COMPLETE	4/26/2018
HH	1085374	CD – Consider installing waste storage and spill clean up kit in Penthouse	8098	8/01/18	COMPLETE	7/9/2018

HH	1085377	CD – Consider installing monitoring camera in Penthouse with view into the control room	8098	12/31/18	IN PROGRESS	
HH	1098695	CD-Repair Leaks/Holes in HH2 SDA	8253	8/01/18	COMPLETE	7/25/2018
HH	1098696	CD-Evaluate and Correct if needed ID Fan Alarm Settings	8253	10/01/18	IN PROGRESS	
HH	1098698	CD-Repair ID Fan Inlet Dampers/Vanes	8253	8/01/18	COMPLETE	7/18/2018
HH	1098699	CD-Clean SDA System Lime Buildup	8253	8/01/18	COMPLETE	7/25/2018
HH	1098700	CD-Repair Auto Pulsing System for FF Baghouse	8253	9/01/18	COMPLETE	7/18/2018

Attachment A4

Action Item Status from Prior Reporting Periods

Corrective Action Item Status from Prior Reporting Periods

Site	Action Item No.	Description of Corrective Action	RCFA Report No.	Reporting Period	Status	Estimated Completion Date	Actual Completion Date
GECC	585231	Implementation of Redundant HRSG / Gas Sharing at GCO	2679	1H15	IN PROGRESS	approx. 6/9/19	
HNCC	539238	CD Implement HH1 gas sharing project	2603	2H14	IN PROGRESS	2/6/2019	
HNCC	586848	CD Implement gas sharing project on HNCC No. 1	2635	2H14	IN PROGRESS	2/6/2019	
HNCC	586851	CD Consider changing design of water wall headers	2635	2H14	IN PROGRESS	2/6/2019	
HNCC	596363	CD Implement HH1 gas sharing project	2915	1H15	IN PROGRESS	2/6/2019	
HNCC	605928	CD Implement HH1 gas sharing project	3180	1H15	IN PROGRESS	2/6/2019	
HNCC	616222	CD Implement HH1 gas sharing project	3205	1H15	IN PROGRESS	2/6/2019	
HNCC	773563	CD - Consider adding programming to allow for automatic swap from 3-element control to 1-element	4695	1H16	IN PROGRESS	11/30/2018	
HNCC	947632	CD - Evaluate the need to upgrade the valve class of the sky vents	6366	2H16	IN PROGRESS	9/30/18	
HNCC	990336	CD - Evaluate data sampling rates and tracking when operator commands are given for other equipment	6630	1H17	COMPLETE - Data sampling rates/tracking of operator commands were evaluated, adjusted and/or removed as needed. Data sampling rates will continue to be evaluated and adjusted as needed going forward.	6/30/18	6/28/18
HNCC	993959	CD - Consider insulating air supply line for ID fans	6683	1H17	IN PROGRESS	11/01/18	
HNCC	993961	CD - Consider adding heat trace to air supply line for ID fans	6683	1H17	IN PROGRESS	11/01/18	
HNCC	993962	CD - Consider adding dew point analyzers/transmitters on instrument air header throughout plant	6683	1H17	IN PROGRESS	11/01/18	
HNCC	993964	CD - Consider adding moisture air blow off valves at ends of air headers	6683	1H17	IN PROGRESS	11/01/18	
HNCC	1030450	CD-Add alarm system for faulted processors	7273	2H17	IN PROGRESS	9/30/18	

Attachment B1

Haverhill Coke Company, Agency Compliance Reports

SUBMITTED VIA AIR SERVICES

April 30, 2018

Ms. Cindy Charles
Ohio EPA – Portsmouth Local Air Agency
605 Washington Street, Third Floor
Portsmouth, Ohio 45662

Subject: *2018 First Quarter Deviation Report*
Haverhill Coke Company – Franklin Furnace, OH
Facility ID No. 07-73-00-0182

Dear Ms. Charles:

Haverhill Coke Company (HCC) operates a coke production facility located in Franklin Furnace, Ohio. The facility currently operates under four Ohio Environmental Protection Agency (OEPA) Permits to Install (PTIs) 07-00511 (modified on November 10, 2008), P0104223 (issued on December 26, 2008), P0106016 (issued on February 19, 2015), P0119427 (issued December 8, 2015), and P0119826 (issued on November 21, 2016).

Pursuant to condition A.4.c)(2) of PTIs 07-00511, P0104223, P0106016, P0119427, and P0119826, HCC is required to submit quarterly deviation reports. According to condition A.4.c)(2),

> *Quarterly written reports of (i) any deviations from federally enforceable emission limitations, operational restrictions, and control device operating parameter limitations, excluding deviations resulting from malfunctions reported in accordance with OAC rule 3745-15-06, that have been detected by the testing, monitoring and recordkeeping requirements specified in this permit, (ii) the probable cause of such deviations, and (iii) any corrective actions or preventive measures taken, shall be made to the Portsmouth City Health Dept., Air Pollution Unit. The written reports shall be submitted (i.e., postmarked) quarterly, by January 31, April 30, July 31, and October 31 of each year and shall cover the previous calendar quarters. See A.15 below if no deviations occurred during the quarter*

Tables A-1 through A-5 in Attachment A describe the deviations from the *emission limitations, operational restrictions, and control device operating parameter limitations* in PTIs 07-00511, P0104223, P0106016, P0119427, and P0119826 that occurred between January 1, 2018 and March 31, 2018. For each deviation, Tables A-1 through A-5 include an identification of the associated emission unit or equipment, a description of the deviation, a description of when the deviation occurred, the cause of the deviation, and the corrective action(s) taken.

A summary of the malfunction events are included in Attachment B. Please note these events have been reported to PLAA in accordance with OAC rule 3745-15-06.

In addition to quarterly deviation report information, HCC has included in this submittal for P901 and P902 the Coal Quality and Quantity Report in Attachment C-1 and C-2, respectively, pursuant to

permit conditions C.1.e)(21) and C.2.e)(21), respectively, in PTI P0119826 and the 1st Quarter HRSG Vent Stack Summaries in Attachment D.

***

If you have any questions concerning this report, please contact Diana Starkweather at 740-355-9823.

I certify that based on information and belief formed after reasonable inquiry, the statements and information in this report are true, accurate, and complete.

Sincerely,

James G. Skipworth
General Manager

Attachment A

DEVIATION SUMMARY TABLES

Table A-1. Permit To Install P0104223 - Quarterly Deviation Report (January 1, 2018 – March 31, 2018)

Permit Citation	Source	Date	Times	Probably Cause of Deviation/Corrective Action(s) Taken
There are no deviations to report for the active terms of this permit.				

Table A-2. Permit To Install P0106016 - Quarterly Deviation Report (January 1, 2018 – March 31, 2018)

Permit Citation	Source	Date	Times	Probably Cause of Deviation/Corrective Action(s) Taken
There are no deviations to report for the active terms of this permit.				

Table A-3. Permit To Install 07-00511 - Quarterly Deviation Report (January 1, 2018 – March 31, 2018)

Permit Citation	Source	Date	Times	Probably Cause of Deviation/Corrective Action(s) Taken
C.5.c)(5)	P001	2/5/2018		Operations personnel are required to clean the baffles each day that the tower is used to quench coke. On February 5, 2018, Operations personnel did not wash the P001 baffles. On February 6, 2018 at 1:20 am, after realizing the baffles had not been cleaned on the preceding calendar day, Operations personnel ran the baffle sprays. To reduce the likelihood of repeated occurrences, the personnel involved have been reminded of the requirements to clean the baffles each day the coke is quenched in the quench tower.
C.6.c)(5)	P002	2/5/2018		Operations personnel are required to clean the baffles each day that the tower is used to quench coke. On February 5, 2018, Operations personnel did not wash the P002 baffles. On February 6, 2018 at 1:20 am, after realizing the baffles had not been cleaned on the preceding calendar day, Operations personnel ran the baffle sprays. To reduce the likelihood of repeated occurrences, the personnel involved have been reminded of the requirements to clean the baffles each day the coke is quenched in the quench tower.

Table A-4. Permit To Install P0119427- Quarterly Deviation Report (January 1, 2018 – March 31, 2018)

Permit Citation	Source	Date	Times	Probably Cause of Deviation/Corrective Action(s) Taken
There are no deviations to report for the active terms of this permit.				

Table A-5. Permit To Install P0119826 - Quarterly Deviation Report (January 1, 2018 – March 31, 2018)

Permit Citation	Source	Date	Times	Probably Cause of Deviation/Corrective Action(s) Taken
C.1.c)(8)	P901	1/18/2018	7:33 AM - 8:03 AM	On January 18, 2018, the bypass vent stacks associated with HRSGs 1 - 5 were open at the same time in conjunction with ongoing testing associated with the Consent Decree (CD) entered in the United States District Court for the Southern District of Illinois on November 7, 2014. The total duration of the bypass venting event was 2.17 hours. The CD testing event has been reported to PLAA in accordance with Ohio EPA's December 31, 2013 and June 30, 2014 enforcement discretion letters to HCC.
C.1.c)(1)	P901	1/18/2018	7:33 AM - 7:52 AM	In addition, during the January 18, 2018 CD testing event, a low fabric filter pressure drop reading of 0.0 inches of water was recorded on the P901 FGD baghouse. The excursion lasted approximately 0.32 hours. During this time, there was no waste gas was being processed through the FGD baghouse due to the CD testing event in which all of the P901 bypass vent stack lids were open. Before and after the bypass venting event, the FGD baghouse pressure drop was within the specified range.
C.1.c)(8)	P901	1/22/2018	11:53 PM - 12:17 AM	On January 22, 2018, the bypass vent stacks associated with HRSGs 1 - 5 were open at the same time in conjunction with ongoing testing associated with the Consent Decree (CD) entered in the United States District Court for the Southern District of Illinois on November 7, 2014. The total duration of the bypass venting event was 1.25 hours. The CD testing event has been reported to PLAA in accordance with Ohio EPA's December 31, 2013 and June 30, 2014 enforcement discretion letters to HCC.
C.1.c)(1)	P901	1/22/2018	11:53 PM - 11:57 PM	In addition, during the January 22, 2018 CD testing event, a low fabric filter pressure drop reading of 0.0 inches of water was recorded on the P901 FGD baghouse. The excursion lasted approximately 0.07 hours. During this time, there was no waste gas was being processed through the FGD baghouse due to the CD testing event in which all of the P901 bypass vent stack lids were open. Before and after the bypass venting event, the FGD baghouse pressure drop was within the specified range.
C.1.c)(12)	P901	1/23/2018	7:22 PM	Per permit condition C.1.c)(12) in PTI P0119826, no oven will be pushed unless visual inspection indicates that there is no smoke in the open space above the coke bed and there is an unobstructed view of the door on the opposite side of the oven. On January 23, 2018, at 7:22 pm, Operations personnel inadvertently pushed oven #40 prior to it being designated coked out by product technician personnel. After inspecting the oven earlier that day, the product technician determined that it was not ready to be pushed and notified plant personnel as usual. However, the product technician inadvertently recorded a coke out time on the push report for oven #40. The PCM operator saw that a coke out time had been recorded for oven #40 and was unaware that the Product Technician had otherwise communicated that the oven was not ready. The PCM operator pushed oven #40 at 7:22 pm. At the time oven #40 was pushed, it had 47.17 hours of coking time with 41.00 tons of coal charged. To reduce the likelihood of repeated occurrences, the operators involved have been reminded of the requirements for properly recording coke out times. HCC is currently implementing an electronic programming interlock on the PCM that will reduce the likelihood an oven from being pushed prior to the visual inspection being completed by Operations personnel. Based on the total coking time and low tonnage, HCC believes this oven met the requirements of being coked out and is reporting this deviation under the requirement for visually inspecting the oven prior to pushing by opening the door damper and observing the bed of coke.

Table A-5. Permit To Install P0119826 - Quarterly Deviation Report (January 1, 2018 – March 31, 2018)

Permit Citation	Source	Date	Times	Probably Cause of Deviation/Corrective Action(s) Taken
C.1.c)(1)	P901	2/10/2018	2:45 AM - 2:47 AM	On February 10, 2018, HCC maintenance personnel isolated Compartment A and removed the door to conduct preventative maintenance on the P901 FGD baghouse. Shortly after the compartment door was removed, HCC experienced a high differential pressure drop of 15.2 inches of water at 2:45 am. Maintenance personnel immediately responded and returned the compartment to service. Operations personnel verified that the A compartment isolation dampers had been placed in the closed position. Although the Compartment F isolation damper proximity switch indicated it was in the closed position, HCC personnel believe it has sustained damage that is not visible due to its location inside the ductwork. As a result, the inlet isolation damper was not properly sealed, which allowed ambient air to leak into the baghouse when the door was removed, briefly increasing the pressure drop. HCC personnel inspected the baghouse ductwork and inlet isolation dampers during the P901 scheduled FGD maintenance and found the compartment inlet isolation dampers to be warped. HCC plant personnel upgraded each damper to reduce the likelihood of an improper seal.
C.2.b)(2)a.ii.	P902	3/15/2018	2:11 PM - 2:13 PM 6:39 PM - 6:44 PM	On March 15, 2018, the P902 Flat Push Hot Car Multiclone shut down at 2:11 pm, during the pushing operation. After receiving the coke loaf from oven #147, the P902 Flat Push Hot Car Generator suddenly shut down. Operations personnel immediately restarted the Multiclone and pushed the coke loaf off at the P902 quench tower. Maintenance personnel were dispatched and found that the hydraulic system temperature was high. In response, they cleaned the radiator and checked hydraulic fluid levels and returned the system to service. At 6:39 pm, after receiving the coke loaf from oven #167, the P902 Flat Push Hot Car Generator received a low oil pressure fault on the Diesel Exhaust Fluid (DEF) system, shutting down the Multiclone and ancillary equipment again. Contractor personnel were notified and cleared the fault by completing a manual purge and restarting the generator. Contractor personnel had previously been scheduled to purge the DEF system due to a known issue in which the self – purge would not properly initiate. However, due to a miscommunication, Operations personnel did not allow sufficient time for the contractor to complete the manual self-purge as scheduled. HCC contractor personnel have updated the DEF control system to restore the automatic self – purge operation and also enhance the manual purge sequence, if it is needed. The total duration of this event was 0.12 hours. The PM10 emissions during that time are estimated to be 0.05 lbs/ton of coke.

Attachment B

OAC RULE 3745-15-06 MALFUNCTIONS SUMMARY

Table B. Malfunctions

Start Date	Source	Permit Condition	Time	Probably Cause of Malfunction/Corrective Action(s) Taken
1/1/2018	F004	Load Out DP Excursion	1/1/2018 5:51 PM - 5:53 PM DP 12.2 1/2/2018 4:42 AM - 4:43 AM DP 12.1 1/2/2018 8:19 AM - 8:26 AM DP 12.8 1/2/2018 8:57 AM - 9:03 AM DP 13.3	On January 1-2, 2018, intermittent high differential pressures drops were recorded across the F004 Screening Plant Baghouse System due to the freezing ambient temperatures. Operations personnel closed the Quench wharf gates to prevent additional coke from going through the Screening Plant, cleared the remaining coke from the conveyors to prevent a fire on the belts, and began directing coke to ground to allow maintenance personnel to inspect the baghouse. Maintenance personnel found that the bags and the hopper chute for the screening plant baghouse had become plugged with frozen dust collector fines, despite having previously insulated the system. In response, HCC personnel have temporarily enclosed the area and installed a heater to help prevent additional freezing from occurring. HCC is reporting this malfunction under the requirement for operating the F004 Screening Plant Baghouse within the specified pressure drop range of 3 – 12 inches of water. The total duration of this event was 0.27 hours.
1/4/2018 1/26/2018	P902	Bypass Vent Stack	HRSG #7 1/4/2018 2:37 AM - 2:38 AM 2:39 AM - 2:40 AM HRSG #8 1/26/2018 11:54 AM - 12:03 PM	On January 4, 2018 and January 26, 2018, malfunctions occurred causing the bypass vent stack lids associated with HRSGs #7 and #8 to open, respectively. HCC operations personnel immediately responded and were able to close the bypass vent stack lids. HCC maintenance personnel investigating the event and found that during each event, the HRSG #7 and #8 pressure transmitters recieved "bad" quality signals causing the bypass vent stack lids to open. The bad quality signals occurred as a result of "noise" inherent to control systems data. HCC personnel have modified the HRSGs #7 and #8 logic to extend the length of time that the bad quality signal must be present before the bypass vent stack lids will open to reduce the likelihood of future events.
1/4/2018	P902	Multiclone Bypass	1/4/2018 1:17 PM - 1:25 PM 1/5/2018 3:52 AM - 3:54 AM	On January 4, 2018, a malfunction occurred, which caused the P902 Flat Push Hot Car Multiclone to shut down at 1:17 pm and again on January 5, 2018 at 3:52 am, during the pushing operation. After receiving the coke loaf from ovens 115 and 110, respectively, the P902 Flat Push Hot Car suddenly lost power, shutting down the Multiclone and ancillary equipment. Following the first shutdown, maintenance personnel immediately responded and found a blown fuse in the control circuit transformer, which caused the P902 Flat Push Hot Car to shut down, including the Multiclone. Maintenance personnel replaced the blown fuse. Maintenance personnel responded following the second shutdown and found that the fuse had again blown. Maintenance personnel inspected the associated wiring and found that the conduit for the control circuit transformer had become damaged, exposing the wiring associated with the Multiclone. The exposed wiring caused a ground fault and the Multiclone to shut down. Maintenance personnel temporarily rewrapped the associated wires and returned the Multiclone to service. Maintenance personnel will replace the conduit associated with the control circuit transformer wires. The total duration of this event was 0.17 hours. The PM10 emissions during that time are estimated to be 0.05 lbs/ton of coke.
1/10/2018	P901	Fugitive Opacity	9:34 AM - 9:53 AM	On January 10, 2018, at 9:34 am, intermittent smoke was observed coming from the P901 common battery tunnel. Contractor personnel were working on patching an area above oven 20 during production. When Operations started charging oven 20, intermittent smoke was observed from the open area. Operations personnel made a hit on the coke side of oven 21 and contractor personnel immediately placed a temporary kaowool insulation patch over the area until permanent repairs can be made. Once adjustments were made and the kaowool insulation was installed, no opacity was observed. Please note that the common tunnel temperature remained above the specified limit. The total duration of this event was approximately 19 minutes.

Table B. Malfunctions

Start Date	Source	Permit Condition	Time	Probably Cause of Malfunction/Corrective Action(s) Taken
1/10/2018	P902	PCM DP Excursion	3:52 PM - 3:54 PM	On January 10, 2018, at 3:52 pm, a malfunction occurred, which caused the P902 PCM to shut down including the baghouse while charging oven 199. Operations personnel immediately responded and found that the breaker associated with the E-stop control cab was faulted. Operations reset the breaker and restarted the PCM baghouse. Maintenance personnel were dispatched and found that the retract proximity switch on the leveler had shorted out, which tripped the breaker. Maintenance personnel replaced the switch. The PCM baghouse was offline for approximately 0.03 hours. The breakdown of the air pollution control equipment did not cause the emission of air contaminants in excess of the applicable emission limit. HCC is reporting this malfunction under the requirement for operating the P901 PCM Baghouse within the specified pressure drop range of 3 – 12 inches of water.
2/10/2018	P901	Multiclone Bypass	9:23 PM - 9:44 PM	On February 10, 2018, a malfunction occurred, which caused the P901 Flat Push Hot Car Multiclone to shut down at 9:23 pm during the pushing operation. While preparing to transfer the coke loaf from oven #40 to the quench car, the P901 Flat Push Hot Car proximity switch had a wire short out, shutting down the Multiclone and ancillary equipment. HCC personnel immediately responded and manually pushed the coke loaf onto the quench car. Maintenance personnel replaced the wire and proximity switch and returned the P901 Flat Push Hot Car to service. The total duration of this event was 0.35 hours. The PM10 emissions during that time are estimated to be 0.08 lbs/ton of coke.
2/18/2018	P902	Common Tunnel Temp. Excursion	5:40 PM - 6:46 PM	While reviewing common tunnel temperature data on March 12, 2018, HCC personnel identified a low common tunnel temperature reading of 1,381 F on the section of the P902 common tunnel associated with the HRSG #8 bypass vent stack. The low temperature occurred on February 18, 2018. Due to the severe weather conditions that week, Haverhill experienced numerous equipment issues, which resulted in extensive production delays. Due to the delays in production, HCC was not able to push/charge ovens as scheduled. On February 18, five ovens associated with the HRSG #8 bypass vent stack were pushed approximately 15 hours late and five additional ovens were skipped. The five skipped ovens were not pushed and charged until the next scheduled production date of February 20, 2018. The common tunnel temperature is maintained at 1400 F through destructive distillation of volatile organic compounds (VOCs) after charging coal to the ovens. The ten ovens had coked out and were no longer contributing volatile matter to be burned in the system. Due to the decreased amount of volatile matter that was available to burn, the common tunnel temperature decreased. On February 18 at 6:47 pm, the common tunnel temperature returned to the specified range upon charging ovens associated with the HRSG #8 bypass vent stack. Please note that all other sections of the common tunnel were within the specified range during this event. The total duration of the common tunnel temperature excursion was 1.10 hours.
2/25/2018	P902	SO2 Exceedance	2/25/18 06:00, 15:00, 21:00 2/26/18 0:00	On February 25, 2018, during the 06:00 3-hr block, the gear box on the P902 slurry storage tank agitator failed. Maintenance personnel were dispatched to replace the gear box assembly. When the agitator is operational, the slakers automatically run to replenish slurry level inside the tank based on the level indication. However, due to the ongoing maintenance, the slakers were not operating (as designed), which allowed the slurry to decrease. As the level inside the tank dropped, residual slurry on the walls of the tank began to harden and plugged the suction lines, strainers, and pumps, which reduced slurry flow to the atomizers. Operations personnel swapped between the A and B slurry pumps and flushed the associated feed lines, removing material buildup throughout the day while maintenance personnel worked to replace the gear box assembly. Maintenance personnel temporarily bypassed the control interlocks to allow the slakers to run while the agitator was offline for repairs, restoring slurry flow to the atomizers. Slurry flow during this time was not sufficient to remove SO2 from the gas stream and an exceedance of the 3-hour block SO2 limit occurred. The February 25, 06:00, 15:00, 21:00, 3-hour block average SO2 emissions are estimated to be 336.6, 286.6, and 297.8, lb/hr, respectively. The February 26, 0:00 3-hour block average SO2 emissions are estimated to be 476.2 lb/hr.
3/6/2018	P902	FGD DP Excursion	1:25 PM	On March 6, 2018, HCC experienced a high differential pressure drop of 15.3 inches of water at 1:25 pm. HCC personnel immediately responded and found that the bottom slide gate of the P902 SDA had become plugged with a large buildup of ash. HCC personnel air lanced the SDA bottom slide gate in order to remove the ash. While cleaning the ash, the slide gate was open for an extended period of time, which allowed ambient air to leak into the system, decreasing draft at the P902 bypass vent stacks. As a result, the P902 ID fans ramped up, increasing flow through the baghouse and subsequently increasing the pressure drop. The FGD baghouse pressure drop was outside of the specified range for approximately one minute.

Table B. Malfunctions

Start Date	Source	Permit Condition	Time	Probably Cause of Malfunction/Corrective Action(s) Taken
3/8/2018	P902	Common Tunnel Temp. Excursion	HRSG 8 3/8/18 10:48 PM - 3/9/18 6:47 AM HRSG 10 3/9/18 1:18 AM - 5:42 AM	While reviewing common tunnel temperature data on March 12, 2018, HCC personnel identified a low common tunnel temperature reading of 1,351 F on the section of the P902 common tunnel associated with the HRSGs #8 and 10 bypass vent stacks. The low temperature occurred on March 8-9, 2018. On March 8, HCC experienced a major breakdown on PCM 2, which required extensive repairs that took several hours to complete. Due to the delay in production, HCC was not able to push/charge ovens as scheduled. On March 9, two ovens associated with the HRSG #8 and five ovens associated with HRSG #10 bypass vent stacks were pushed approximately 12 hours late. Five additional ovens associated with each vent stack were skipped. The ten skipped ovens were not pushed and charged until the next scheduled production date of March 10, 2018. The common tunnel temperature is maintained at 1400 F through destructive distillation of volatile organic compounds (VOCs) after charging coal to the ovens. The ten ovens had coked out and were no longer contributing volatile matter to be burned in the system. Due to the decreased amount of volatile matter that was available to burn, the common tunnel temperature decreased. On March 8 at 6:47 am, the common tunnel temperature returned to the specified range upon charging ovens associated with the HRSGs #8 and 10 bypass vent stacks. Please note that all other sections of the common tunnel were within the specified range during this event. The total duration of the common tunnel temperature excursion was 7.98 hours.
3/27/2018	P902	Bypass Vent Stack	HRSG 6 6:38 PM - 7:10 PM HRSG 7 6:38 PM - 6:54 PM HRSG 8 6:37 PM - 6:57 PM HRSG 9 6:39 PM - 7:03 PM HRSG 10 6:38 PM - 7:05 PM DP: 19.1 6:53 PM - 6:55 PM DP: 16.3 6:57 PM - 6:58 PM FGD Bypass 6:22 PM - 8:01 PM	On March 27, 2018, at 6:37 pm, the HRSGs #6 – 10 bypass vent stack lids opened on high high inlet temperature to the dump condenser. There were several events that occurred leading up to the high high inlet temperature to the dump condenser, as described herein. At approximately 6:15 pm, a low low system air pressure alarm was received in the control room for the HCC2 Plant. Operations personnel were immediately dispatched and found that the "A" compressor had tripped on high high temperature as a result of the exhaust fan motor for the compressor building shorting out. There are three compressor units that provide compressed air to HCC2, A, B and C. "B" compressor had been removed from service earlier that week due to a failed motor and was undergoing repairs at the time. Therefore, when "A" compressor tripped, only "C" compressor remained online. A valve that connects the HCC1 and HCC2 plant air systems is present in order to help maintain the compressed air balance between the HCC1 and HCC2 plants. However, the valve connecting the HCC1 and HCC2 plant air systems had been closed as a precautionary measure to prevent an upset in the plant air going to HCC1 during the "B" compressor maintenance on HCC2. Without either "A" or "B" compressor online and the valve between HCC1 and HCC2 in the closed position, only "C" compressor remained in service. Having only C Compressor in service was insufficient to operate the HCC2 Plant and the air pressure for the unit dropped below 50 psig. With insufficient air available to operate equipment associated with the HCC2 Plant, all control valves and dampers began moving to their failsafe states of "closed", including the Heat Recovery Steam Generator (HRSG) #6 level control valve (LCV) and the HCC2 ID fan control dampers. HRSG 6 is the furthest away from the air compressors and as such was the first to lose air pressure. As a result of the HRSG #6 LCV closing, the steam drum level dropped quickly. Additionally, draft was greatly reduced across the HCC2 ovens when the ID fan dampers began to close. Operations personnel immediately responded and started a portable air compressor and opened the valve on the compressed air line between HCC1 and HCC2, restoring air pressure to HCC2 at approximately 6:30 pm. Once air pressure was reestablished, the HRSG #6 LCV fully opened in order to restore the level in the steam drum, causing a high high steam drum level. Though the equipment responded as intended, the accuracy and response time of the valve resulted in the high high steam drum level when the valve opened too quickly in order restore required level to the steam drum. As a result, the Steam Turbine Generator (STG) tripped offline to prevent potential damage to the turbine blades caused by water intrusion. With the STG offline, the turbine bypass valve opened as designed and began sending steam to the dump condenser. However, due to the previous loss of air pressure, the steam attemperator valve for the dump condenser was in a faulted state and was unable to cool the steam going to the dump condenser, causing the dump condenser to trip on high high inlet temperature, and subsequently opening the bypass vent stack lids #6 – 10. Plant personnel cleared the fault and began closing the P902 bypass vent stacks. In addition, HCC personnel will evaluate the fault state for the attemperator valve on loss of air. The FGD baghouse was bypassed and a high fabric filter pressure drop reading of 19.1 inches of water was recorded on the P902 FGD baghouse in conjunction with the event. The bypass and lasted approximately 1.65 hours and the pressure drop excursion lasted approximately 0.08 hours. During this time, only a portion of the baghouse was in bypass and a portion of the waste gas was being processed through the FGD baghouse due to the P902 bypass vent stack lids being open. Before and after the event, the FGD baghouse pressure drop was within the specified range.
3/28/2018	P902	Multiclone Bypass	1:35 AM - 1:45 AM	On March 28, 2018, a malfunction occurred, which caused the P901 Flat Push Hot Car Multiclone to shut down at 1:35 am during the pushing operation. While transporting the coke loaf from oven #18 to the quench car, the P901 Flat Push Hot Car generator overheated, shutting down the Multiclone and ancillary equipment. Maintenance personnel immediately responded and cleaned the generator, cooling it down and allowing it to be restarted. The total duration of this event was 0.02 hours. The PM10 emissions during that time are estimated to be 0.05 lbs/ton of coke.

Table B. Malfunctions

Start Date	Source	Permit Condition	Time	Probably Cause of Malfunction/Corrective Action(s) Taken
3/28/2018	P902	Bypass Vent Stack SO2 Exceedance FGD DP Excursion FGD Bypass PAC Bypass	HRSG 6 3:05 AM - 7:20 PM HRSG 7 3:06 AM - 6:15 PM HRSG 8 3:08 AM - 9:13 PM HRSG 9 3:09 AM - 7:15 PM HRSG 10 3:10 AM - 6:33 PM SO2 00:00, 15:00, 18:00 195.4, 464.2, 625.3 FGD DP: 0.0 2:12 AM - 5:45 PM FGD Bypass 2:57 AM - 6:35 PM PAC Bypass 5:01 AM - 8:59 PM	On March 28, 2018, at 2:55 am, the control room operator (CRO) lost communication with B atomizer on P902. The Outside Phase Operator responded by going to the motor control center (MCC) electrical building B3 to check the breakers on the atomizers to see if they had tripped. The Outside Phase Operator found that A and C were still running, but B atomizer had tripped. The Outside Phase Operator then went to the Spray Dryer Absorber (SDA) penthouse to investigate. When the Outside Phase Operator arrived, the B atomizer control cabinet was engulfed in flames. This area had just been inspected less than an hour prior to the fire and no fire was noted. He quickly found a fire extinguisher and attempted to extinguish the fire. After discharging two fire extinguishers on the fire, the Outside Phase Operator notified the CRO to contact the guard shack to summon Green Local Fire Department (GLFD). GLFD arrived onsite and extinguished the fire. While waiting for GLFD, the CRO manually bypassed the SDA baghouse to avoid a high temperature in the baghouse, which would have resulted in bypass venting and also manually opened Emergency Bypass Vent Stacks #6-10 to stop process gas flow to the SDA to get the SDA Penthouse into a safe state. The investigation immediately began to make sure the penthouse was in a safe condition, and to determine the needed repairs to return the SDA to service. Haverhill supervision, maintenance, and contractor personnel began assessing the situation. Power was isolated to the penthouse, and damaged equipment and atomizer inlet duct insulation were removed. Once the penthouse was determined to be in a safe state, Operations personnel returned P902 Heat Recovery Steam Generators (HRSGs) #6-11 to service and closed Emergency Vent Stacks #6-10. The SDA was brought online, using just two of three atomizers, and the fabric filter baghouse was returned to service. Prior to the March 28 incident, two contributing incidents occurred. On March 25, 2018, at approximately 3:10 pm, the CRO notified the Outside Phase Operator that B atomizer had tripped. The Outside Phase Operator went to the MCC electrical building B3 and reset the breaker for B atomizer and the atomizer started with no problem. The Outside Phase Operator then went to SDA penthouse and found a fire approximately 18 inches in diameter and about 3-4 inches high in front of the B atomizer control cabinet under the grating. The Outside Phase Operator extinguished the fire with a fire extinguisher. The Outside Phase Operator stated that the the oil pump can used to add oil to the atomizers appeared to be leaking and that the oil leaking from the can caught fire after it came into contact with a heat source that heated the oil above its flash point. After extinguishing the fire, the area was sprayed with a water hose on top of and under the insulation flashing. The leaking oil can was replaced and the fire extinguisher was replaced. Operations began a temporary protocol to make hourly rounds through the penthouse area over the next 24 hrs. The second incident occurred the following morning, March 26, 2018, at approximately 10:26 am, when engineering personnel went to the SDA penthouse to evaluate the incident area. Upon arrival, a smoldering fire was discovered below the P902 B atomizer cabinet on top of the inlet duct where there had been a fire with flames the previous day. The CRO, operations supervision, and the site Safety Manager were notified and investigation and cleanup were started. Several pictures were taken and several surface temperatures were taken of the B atomizer inlet duct with a handheld infrared (IR) thermometer. The smoldering insulation was then sprayed with water. Contractor personnel then began removing insulation flashing and insulating material from the affected area under and just south of B atomizer control cabinet. The process of safely removing the insulation and flashing took a significant amount of time due to its location and the higher temperatures in the incident area. Therefore, operations continued to make hourly rounds through the penthouse area while the insulation removal was ongoing. During the cleanup and investigation of the fire damage, potential contributing factors, other than the suspected leaking oil can, were found that could have caused the fire. A broken 3” conduit supplying power to B atomizer and damaged heat tracing circuit were found, which may have allowed arcing that could have caught the surrounding insulation contaminated with oil on fire. In addition, contact with the hot SDA roof may have heated the insulation contaminated with oil above the flashpoint of oil. During the cleanup, lime was found under the flashing of the insulation that was not visible during the immediate fire response. The application of water to lime can result in an exothermic reaction. The lime was inadvertently sprayed during the March 25th and 26th incident responses. Each of these may have acted as the heat source that ignited the oil and started the fire. Although HCC is unable to determine exactly which of these sources sparked the fires, corrective actions are being evaluated to prevent the potential for these items to start a fire in the future. These potential actions include installation of secondary containments and flammable cabinets for oil in the penthouse, preventing the use of water in this area, and replacing any damaged electrical wiring in the penthouse. The FGD baghouse was bypassed and a low fabric filter pressure drop reading of 0.0 inches of water was recorded on the P902 FGD baghouse in conjunction with the event; however, no waste gas was being processed through the FGD baghouse due to the P902 bypass vent stack lids being open. Before the event, the FGD baghouse pressure drop was within the specified range. Slurry flow during this time was not sufficient to remove SO2 from the gas stream and an exceedance of the 3-hour block SO2 limit occurred. The 0:00, 15:00, and 18:00 3-hour block average SO2 emissions are estimated to be 195.4, 464.2, and 625.3 lb/hr, respectively.

Attachment C-1

P901 COAL QUANTITY AND QUALITY REPORT

Attachment C-1 contains a summary of the coal usage and quality analysis data for the reporting period for P901. Per the reporting requirements of PTI P0119826, permit condition C.1.e)(21) states:

> *The permittee shall submit to the Portsmouth Local Air Agency quarterly reports concerning the quality and quantity of the coal coked in this emissions unit. These reports shall include the following information for the emissions unit for each month during the calendar quarter:*
> *a. The total quantity of wet coal charged (tons);*
> *b. The average mercury content (percent) of the coal charged;*
> *c. The average chlorine content (percent) of the coal charged; and*
> d. *The average sulfur content (weight percent) of the coal charged.*

These reports are due by January 31, April 30, July 31, and October 31 of each year and shall cover the previous calendar quarters. Pursuant to these requirements, the data provided in Attachment C-1 include documentation of the total usage for the reporting period and the average mercury, chlorine, and sulfur content for the coal charged at P901.

HAVERHILL COKE COMPANY
Coal Quantity & Quality Report
2018 1st Quarter
P901 Composition Data

Month	Chlorine Content % Composite	Mercury Content % Composite	Sulfur Content % Composite	Wet Tons	Rolling 12-Month Total
Jan-18	0.137%	0.000006%	0.81%	60,309	758,965
Feb-18	0.126%	0.000006%	0.85%	58,950	757,527
Mar-18	0.136%	0.000004%	0.80%	64,704	755,115

HAVERHILL COKE COMPANY Coal Quantity & Quality Report 2018 1st Quarter P901 Daily Coal Usage		
Date	**Coal Usage**	**Rolling 7 Day Average**
1/1/2018	3134.43	1,995.64
1/2/2018	1012.9	1,856.95
1/3/2018	1431.63	1,759.92
1/4/2018	2348.27	1,806.76
1/5/2018	2299.22	1,843.50
1/6/2018	1737.64	1,853.60
1/7/2018	2044.35	2,001.21
1/8/2018	1960.08	1,833.44
1/9/2018	1917.06	1,962.61
1/10/2018	2303.01	2,087.09
1/11/2018	2074.59	2,047.99
1/12/2018	2092.41	2,018.45
1/13/2018	865.67	1,893.88
1/14/2018	2836.83	2,007.09
1/15/2018	1568.65	1,951.17
1/16/2018	1456.76	1,885.42
1/17/2018	1698.5	1,799.06
1/18/2018	671.99	1,598.69
1/19/2018	2731.42	1,689.97
1/20/2018	1435.18	1,771.33
1/21/2018	2069.47	1,661.71
1/22/2018	2049.61	1,730.42
1/23/2018	2006.14	1,808.90
1/24/2018	2023.67	1,855.35
1/25/2018	2091.57	2,058.15
1/26/2018	2054.13	1,961.40
1/27/2018	2020.92	2,045.07
1/28/2018	2114.93	2,051.57
1/29/2018	2041.42	2,050.40
1/30/2018	2140.51	2,069.59
1/31/2018	2075.73	2,077.03

HAVERHILL COKE COMPANY
Coal Quantity & Quality Report
2018 1st Quarter
P901 Daily Coal Usage

Date	Coal Usage	Rolling 7 Day Average
2/1/2018	2120.46	2,081.16
2/2/2018	2084.19	2,085.45
2/3/2018	2134.97	2,101.74
2/4/2018	2119.98	2,102.47
2/5/2018	2134.03	2,115.70
2/6/2018	2119.2	2,112.65
2/7/2018	2016.96	2,104.26
2/8/2018	2108.82	2,102.59
2/9/2018	2159.03	2,113.28
2/10/2018	2161.09	2,117.02
2/11/2018	2119.09	2,116.89
2/12/2018	2116.65	2,114.41
2/13/2018	2053.11	2,104.96
2/14/2018	2174.01	2,127.40
2/15/2018	2160.03	2,134.72
2/16/2018	2148.66	2,133.23
2/17/2018	2209.27	2,140.12
2/18/2018	1158.9	2,002.95
2/19/2018	2241.84	2,020.83
2/20/2018	2212.13	2,043.55
2/21/2018	2181.73	2,044.65
2/22/2018	2180.68	2,047.60
2/23/2018	2153.27	2,048.26
2/24/2018	2153.63	2,040.31
2/25/2018	2162.09	2,183.62
2/26/2018	2102.69	2,163.75
2/27/2018	2150.22	2,154.90
2/28/2018	2113.12	2,145.10

HAVERHILL COKE COMPANY
Coal Quantity & Quality Report
2018 1st Quarter
P901 Daily Coal Usage

Date	Coal Usage	Rolling 7 Day Average
3/1/2018	2139.72	2,139.25
3/2/2018	2087.11	2,129.80
3/3/2018	2109.39	2,123.48
3/4/2018	2110.05	2,116.04
3/5/2018	2097.1	2,115.24
3/6/2018	2111.97	2,109.78
3/7/2018	2101.85	2,108.17
3/8/2018	2040.77	2,094.03
3/9/2018	2111.45	2,097.51
3/10/2018	2111.34	2,097.79
3/11/2018	2109.93	2,097.77
3/12/2018	2102.91	2,098.60
3/13/2018	2090.04	2,095.47
3/14/2018	2111.83	2,096.90
3/15/2018	2107.02	2,106.36
3/16/2018	2058.29	2,098.77
3/17/2018	2094.13	2,096.31
3/18/2018	2151.29	2,102.22
3/19/2018	2065.85	2,096.92
3/20/2018	2109.43	2,099.69
3/21/2018	2045.2	2,090.17
3/22/2018	2101.65	2,089.41
3/23/2018	1978.23	2,077.97
3/24/2018	2065.75	2,073.91
3/25/2018	2071.55	2,062.52
3/26/2018	2105.5	2,068.19
3/27/2018	2177.06	2,077.85
3/28/2018	2071.28	2,081.57
3/29/2018	1855.17	2,046.36
3/30/2018	2069.26	2,059.37
3/31/2018	2142.16	2,070.28

Attachment C-2

P902 COAL QUANTITY AND QUALITY REPORT

Attachment C-2 contains a summary of the coal usage and quality analysis data for the reporting period for P902. Per the reporting requirements of PTI P0119826, permit condition C.2.e)(21) states:

> *The permittee shall submit to the Portsmouth Local Air Agency quarterly reports concerning the quality and quantity of the coal burned in this emissions unit. These reports shall include the following information for the emissions unit for each day during the calendar quarter:*
>
> *i. The total quantity of wet coal charged (tons);*
> *ii. The average mercury content (percent) of the coal charged;*
> *iii. The average chlorine content (percent) of the coal charged; and*
> iv. *The average sulfur content (weight percent) of the coal charged.*

These reports are due by January 31, April 30, July 31, and October 31 of each year and shall cover the previous calendar quarters. Pursuant to these requirements, the data provided in Attachment C-2 include documentation of the total usage for the reporting period and the average mercury, chlorine, and sulfur content for the coal charged at P902. Please note that although permit condition C.2.e)(21) requires that the average mercury, chlorine, and sulfur content be reported for each day during the calendar quarter, the monitoring and recordkeeping provisions of permit condition C.2.d(37) only require a monthly coal analysis; therefore, the values for mercury, chlorine, and sulfur content reported in Attachment C-2 are monthly composites that represent the daily values.

HAVERHILL COKE COMPANY
Coal Quantity & Quality Report
2018 1st Quarter
P902 Composition Data

Month	Chlorine Content % Composite	Mercury Content % Composite	Sulfur Content % Composite	Wet Tons	Rolling 12-Month Total
Jan-18	0.162%	0.000008%	0.96%	62,718	766,575
Feb-18	0.146%	0.000008%	0.95%	58,920	766,576
Mar-18	0.164%	0.000007%	0.94%	65,800	766,737

HAVERHILL COKE COMPANY Coal Quantity & Quality Report 2018 1st Quarter P902 Daily Coal Usage		
Date	**Coal Usage**	**Rolling 7 Day Average**
1/1/2018	2,013.92	1983.42
1/2/2018	2,174.48	2006.90
1/3/2018	1,033.10	1932.87
1/4/2018	3,109.81	2090.04
1/5/2018	1,958.59	2070.24
1/6/2018	2,047.48	2070.05
1/7/2018	1,421.04	1965.49
1/8/2018	2,597.97	2048.92
1/9/2018	1,421.77	1941.39
1/10/2018	2,244.34	2114.43
1/11/2018	2,025.77	1959.57
1/12/2018	2,110.36	1981.25
1/13/2018	2,032.87	1979.16
1/14/2018	2,091.17	2074.89
1/15/2018	2,040.05	1995.19
1/16/2018	2,083.60	2089.74
1/17/2018	2,051.53	2062.19
1/18/2018	2,111.72	2074.47
1/19/2018	2,039.38	2064.33
1/20/2018	2,084.58	2071.72
1/21/2018	2,050.82	2065.95
1/22/2018	2,096.24	2073.98
1/23/2018	1,974.22	2058.36
1/24/2018	2,031.31	2055.47
1/25/2018	2,023.39	2042.85
1/26/2018	1,608.38	1981.28
1/27/2018	2,003.13	1969.64
1/28/2018	2,031.82	1966.93
1/29/2018	2,030.96	1957.60
1/30/2018	2,079.34	1972.62
1/31/2018	2,095.25	1981.75

HAVERHILL COKE COMPANY Coal Quantity & Quality Report 2018 1st Quarter P902 Daily Coal Usage		
Date	**Coal Usage**	**Rolling 7 Day Average**
2/1/2018	2,071.46	1988.62
2/2/2018	2,095.40	2058.19
2/3/2018	2,055.24	2065.64
2/4/2018	2,128.92	2079.51
2/5/2018	2,074.44	2085.72
2/6/2018	2,123.31	2092.00
2/7/2018	2,026.22	2082.14
2/8/2018	2,127.39	2090.13
2/9/2018	2,101.08	2090.94
2/10/2018	2,158.34	2105.67
2/11/2018	2,070.40	2097.31
2/12/2018	2,403.85	2144.37
2/13/2018	1,940.68	2118.28
2/14/2018	2,187.12	2141.27
2/15/2018	2,160.68	2146.02
2/16/2018	2,186.92	2158.28
2/17/2018	2,226.76	2168.06
2/18/2018	1,150.09	2036.59
2/19/2018	2,235.45	2012.53
2/20/2018	2,096.35	2034.77
2/21/2018	2,179.40	2033.66
2/22/2018	2,122.17	2028.16
2/23/2018	2,183.51	2027.68
2/24/2018	2,089.28	2008.04
2/25/2018	2,190.00	2156.59
2/26/2018	2,138.07	2142.68
2/27/2018	2,210.72	2159.02
2/28/2018	2,187.20	2160.14

HAVERHILL COKE COMPANY Coal Quantity & Quality Report 2018 1st Quarter P902 Daily Coal Usage		
Date	**Coal Usage**	**Rolling 7 Day Average**
3/1/2018	2,209.09	2172.55
3/2/2018	2,190.87	2173.60
3/3/2018	2,234.17	2194.30
3/4/2018	2,141.39	2187.36
3/5/2018	2,235.18	2201.23
3/6/2018	2,162.10	2194.29
3/7/2018	2,271.11	2206.27
3/8/2018	410.28	1949.30
3/9/2018	2,937.91	2056.02
3/10/2018	2,070.14	2032.59
3/11/2018	2,182.61	2038.48
3/12/2018	2,164.62	2028.40
3/13/2018	2,148.76	2026.49
3/14/2018	2,193.07	2015.34
3/15/2018	2,224.56	2274.52
3/16/2018	2,012.46	2142.32
3/17/2018	2,132.17	2151.18
3/18/2018	2,186.54	2151.74
3/19/2018	2,155.88	2150.49
3/20/2018	2,250.74	2165.06
3/21/2018	2,137.60	2157.14
3/22/2018	2,260.42	2162.26
3/23/2018	2,162.63	2183.71
3/24/2018	2,158.98	2187.54
3/25/2018	2,182.12	2186.91
3/26/2018	2,148.03	2185.79
3/27/2018	2,206.97	2179.54
3/28/2018	2,020.42	2162.80
3/29/2018	1,868.05	2106.74
3/30/2018	2,045.65	2090.03
3/31/2018	2,095.27	2080.93

Attachment D

P901 & P902 HRSG VENT STACK SUMMARY REPORTS

HAVERHILL COKE COMPANY
Rolling 12 Month Venting Summary
2018 1st Quarter
P901 and P902

Stack #	January	February	March
1	0.2	0.2	0.2
2	0.3	0.2	0.2
3	0.8	0.6	0.6
4	0.6	0.5	0.5
5	0.4	0.3	0.2
6	0.4	0.2	0.2
7	0.5	0.4	0.4
8	0.5	0.4	0.4
9	0.6	0.6	0.6
10	0.3	0.3	0.3

Rolling 12 Month Totals		Limit
Rolling 12-Month Maintenance Hours - January	4.7	1920
Rolling 12-Month Maintenance Hours - February	3.8	1920
Rolling 12-Month Maintenance Hours - March	3.6	1920

Stack #1

Date & Time							Minutes		
Stack Open	**Stack Closed**	**Month**	**Year**	**Weather**	**Corrective Action**	**Initials**	**Vent Stack Open**	**Malfunction Bypass**	**CD Testing**
1/18/18 7:33	1/18/18 7:55	Jan	2018	Cloudy	Loss of Draft	KRE			22
1/22/18 23:53	1/23/18 0:06	Jan	2018	Cloudy	Loss of Draft	KRE			13
3/4/18 21:22	3/27/18 20:29	Mar	2018	Sunny	FGD Outage	DMS			33067

2018

1/18 - CD Testing

1/22 - CD Testing

3/4 - FGD Outage/CD Tie In Time

Rolling 12-Month Maintenance Hours - January	0.2
Rolling 12-Month Maintenance Hours - February	0.2
Rolling 12-Month Maintenance Hours - March	0.2

Stack #2

Date & Time							Minutes		
Stack Open	**Stack Closed**	**Month**	**Year**	**Weather**	**Corrective Action**	**Initials**	**Vent Stack Open**	**Malfunction Bypass**	**CD Testing**
1/18/18 7:33	1/18/18 7:56	Jan	2018	Cloudy	Loss of Draft	KRE			23
1/22/18 23:53	1/23/18 0:17	Jan	2018	Cloudy	Loss of Draft	KRE			24
3/4/18 20:54	3/27/18 21:23	Mar	2018	Sunny	FGD Outage	DMS			33149

2018

1/18 - CD Testing
1/22 - CD Testing
3/4 - FGD Outage/CD Tie In Time

Rolling 12-Month Maintenance Hours - January	0.3
Rolling 12-Month Maintenance Hours - February	0.2
Rolling 12-Month Maintenance Hours - March	0.2

Stack #3

Date & Time							Minutes		
Stack Open	**Stack Closed**	**Month**	**Year**	**Weather**	**Corrective Action**	**Initials**	**Vent Stack Open**	**Malfunction Bypass**	**CD Testing**
1/18/18 7:33	1/18/18 7:54	Jan	2018	Cloudy	Loss of Draft	KRE			21
1/22/18 23:53	1/23/18 0:01	Jan	2018	Cloudy	Loss of Draft	KRE			8
3/4/18 20:07	3/27/18 22:37	Mar	2018	Sunny	FGD Outage	DMS			33270

2018

1/18 - CD Testing
1/22 - CD Testing
3/4 - FGD Outage/CD Tie In Time

Rolling 12-Month Maintenance Hours - January	0.8
Rolling 12-Month Maintenance Hours - February	0.6
Rolling 12-Month Maintenance Hours - March	0.6

Stack #4

Date & Time							Minutes		
Stack Open	**Stack Closed**	**Month**	**Year**	**Weather**	**Corrective Action**	**Initials**	**Vent Stack Open**	**Malfunction Bypass**	**CD Testing**
1/18/18 7:33	1/18/18 7:56	Jan	2018	Cloudy	Loss of Draft	KRE			23
1/22/18 23:52	1/23/18 0:09	Jan	2018	Cloudy	Loss of Draft	KRE			17
3/1/18 18:59	3/1/18 19:00	Mar	2018	Cloudy	Loss of Draft	DMS			1
3/4/18 18:04	3/27/18 21:55	Mar	2018	Sunny	FGD Outage	DMS			33351

2018

1/18 - CD Testing
1/22 - CD Testing
3/4 - FGD Outage/CD Tie In Time

Rolling 12-Month Maintenance Hours - January	0.6
Rolling 12-Month Maintenance Hours - February	0.5
Rolling 12-Month Maintenance Hours - March	0.5

Stack #5

Date & Time							Minutes		
Stack Open	**Stack Closed**	**Month**	**Year**	**Weather**	**Corrective Action**	**Initials**	**Vent Stack Open**	**Malfunction Bypass**	**CD Testing**
1/18/18 7:35	1/18/18 7:55	Jan	2018	Cloudy	Loss of Draft	KRE			20
1/22/18 23:51	1/23/18 0:04	Jan	2018	Cloudy	Loss of Draft	KRE			13
3/4/18 18:45	3/27/18 20:37	Mar	2018	Sunny	FGD Outage	DMS			33232

2018

1/18 - CD Testing
1/22 - CD Testing
3/4 - FGD Outage/CD Tie In Time

Rolling 12-Month Maintenance Hours - January	0.4
Rolling 12-Month Maintenance Hours - February	0.3
Rolling 12-Month Maintenance Hours - March	0.2

Stack #6

Date & Time							Minutes		
Stack Open	**Stack Closed**	**Month**	**Year**	**Weather**	**Corrective Action**	**Initials**	**Vent Stack Open**	**Malfunction Bypass**	**CD Testing**
1/29/18 11:54	1/29/18 11:56	Jan	2018	Sunny	Exercise Both Lids	KRE	2		
3/27/18 18:38	3/27/18 19:10	Mar	2018	Sunny	Loss of Plant Air	DMS		32	
3/28/18 3:05	3/28/18 19:20	Mar	2018	Sunny	Penthouse Fire	DMS		975	

2018

1/29 - Exercise Both Lids
3/27 - Loss of Plant Air
3/28 - Penthouse Fire

Rolling 12-Month Maintenance Hours - January	0.4
Rolling 12-Month Maintenance Hours - February	0.2
Rolling 12-Month Maintenance Hours - March	0.2

Stack #7

Date & Time							Minutes		
Stack Open	**Stack Closed**	**Month**	**Year**	**Weather**	**Corrective Action**	**Initials**	**Vent Stack Open**	**Malfunction Bypass**	**CD Testing**
1/4/18 2:37	1/4/18 2:38	Jan	2018	Sunny	Control Sys. Maintenance	KRE	1		
1/4/18 2:39	1/4/18 2:40	Jan	2018	Sunny	Control Sys. Maintenance	KRE	1		
1/29/18 11:58	1/29/18 11:59	Jan	2018	Sunny	Exercise Both Lids	KRE	1		
3/27/18 18:38	3/27/18 18:54	Mar	2018	Sunny	Loss of Plant Air	DMS		16	
3/28/18 3:06	3/28/18 18:15	Mar	2018	Sunny	Penthouse Fire	DMS		909	

2018

1/4 - Control System Maintenance
1/29 - Exercise Both Lids
3/27 - Loss of Plant Air
3/28 - Penthouse Fire

Rolling 12-Month Maintenance Hours - January	0.5
Rolling 12-Month Maintenance Hours - February	0.4
Rolling 12-Month Maintenance Hours - March	0.4

Stack #8

Date & Time							Minutes		
Stack Open	**Stack Closed**	**Month**	**Year**	**Weather**	**Corrective Action**	**Initials**	**Vent Stack Open**	**Malfunction Bypass**	**CD Testing**
1/26/18 11:54	1/26/18 12:03	Jan	2018	Sunny	Control Sys. Maintenance	KRE	9		
1/29/18 12:03	1/29/18 12:04	Jan	2018	Sunny	Exercise Both Lids	KRE	1		
3/27/18 18:37	3/27/18 18:57	Mar	2018	Sunny	Loss of Plant Air	DMS		20	
3/28/18 3:08	3/28/18 21:13	Mar	2018	Sunny	Penthouse Fire	DMS		1085	

2018

1/26 - Control System Maintenance
1/29 - Exercise Both Lids
3/27 - Loss of Plant Air
3/28 - Penthouse Fire

Rolling 12-Month Maintenance Hours - January	0.5
Rolling 12-Month Maintenance Hours - February	0.4
Rolling 12-Month Maintenance Hours - March	0.4

Stack #9

Date & Time							Minutes		
Stack Open	**Stack Closed**	**Month**	**Year**	**Weather**	**Corrective Action**	**Initials**	**Vent Stack Open**	**Malfunction Bypass**	**CD Testing**
1/29/18 12:05	1/29/18 12:08	Jan	2018	Sunny	Exercise Both Lids	KRE	3		
3/27/18 18:39	3/27/18 19:03	Mar	2018	Sunny	Loss of Plant Air	DMS		24	
3/28/18 3:09	3/28/18 19:15	Mar	2018	Sunny	Penthouse Fire	DMS		966	

2018

1/29 - Exercise Both Lids
3/27 - Loss of Plant Air
3/28 - Penthouse Fire

Rolling 12-Month Maintenance Hours - January	0.6
Rolling 12-Month Maintenance Hours - February	0.6
Rolling 12-Month Maintenance Hours - March	0.6

Stack #10

Date & Time							Minutes		
Stack Open	**Stack Closed**	**Month**	**Year**	**Weather**	**Corrective Action**	**Initials**	**Vent Stack Open**	**Malfunction Bypass**	**CD Testing**
1/29/18 12:11	1/29/18 12:12	Jan	2018	Sunny	Exercise Both Lids	KRE	1		
3/27/18 18:38	3/27/18 19:05	Mar	2018	Sunny	Loss of Plant Air	DMS		27	
3/28/18 3:10	3/28/18 18:33	Mar	2018	Sunny	Penthouse Fire	DMS		923	

2018

1/29 - Exercise Both Lids
3/27 - Loss of Plant Air
3/28 - Penthouse Fire

Rolling 12-Month Maintenance Hours - January	0.3
Rolling 12-Month Maintenance Hours - February	0.3
Rolling 12-Month Maintenance Hours - March	0.3

Quarterly Excess Emissions and Monitoring System Performance Report

for

Emission Units P901 and P902

1st Quarter 2018 Reporting Period

Prepared for:
Haverhill Coke Company, LLC
Franklin Furnace, Ohio

Prepared by:
AECOM
Oak Ridge, Tennessee

April 2018

P901 MAIN STACK
SO_2 CONTINUOUS EMISSIONS MONITORING SYSTEM
EXCESS EMISSIONS AND MONITORING SYSTEM PERFORMANCE REPORT

CEMS Report for Emission Unit P901

FGD SYSTEM DOWNTIME SUMMARY REPORT
HAVERHILL COKE COMPANY, OH
Reporting Period: 1st Quarter of 2018

Facility ID: 0773000182
Emissions Unit ID: P901
Emissions Unit: Waste Gas Stack

Commencement of FGD System Downtime	Completion of FGD System Downtime	FGD System Downtime Duration (hours)	Reasons for FGD System Downtime
3/4/2018 20:00	3/27/2018 19:59	552	OEPA approved outage for biennial FGD system maintenance
Total FGD System Downtime for the quarter		**552**	**hours**

Emission Unit Operating Time Summary

Start date/time of reporting period =	1/1/2018 0:00
End date/time of reporting period =	3/31/2018 23:59
Total clock hours in the reporting period =	2,160 hours
Total Emission Unit operating time in the reporting period =	2,160 hours
Emission Unit operating time during FGD Bypass =	*552 hours*
Emission Unit operating time during normal operations =	*1,608 hours*

CEMS Report for Emission Unit P901

EMISSION EXCEEDANCES SUMMARY REPORT
HAVERHILL COKE COMPANY, OH
Reporting Period: 1st Quarter of 2018

Facility ID: 0773000182
Emissions Unit ID: P901
Emissions Unit: Waste Gas Stack

SO_2 Emission Limits :
192.0 lb/hr on a 3-hr block average basis
700.8 tpy on a rolling 12-month summation basis

Date/Time of Commencement	Date/Time of Completion	Duration of Exceedance (hours)	Pollutant	Magnitude (lb/hr)	Reason/s for the Excess Emissions	Corrective action/s taken, or measures taken to minimize emissions	Excess Emissions caused by Malfunction	Malfunction reported per OAC 3745-15-06
No excess emissions in this reporting period.								

NOTES:

When measured SO2 values exceeded the normal measurement range (0 - 170 ppm) of the SO2 analyzer (e.g. during FGD malfunction events), data was substituted using a high-range reading from the SO2 analyzer (0 - 800 ppm). Although, the high-range is not strictly quality assured per 40 CFR 60 Appendix F procedures, the high-range is periodically calibrated using an appropriate calibration gas. Regardless, the high-range data is believed to be a very good estimate of the SO2 concentration in the stack gas during full-scale exceedances of the normal operating range of the SO2 analyzer.

CEMS Report for Emission Unit P901

SO2 EMISSIONS SUMMARY REPORT
HAVERHILL COKE COMPANY, OH
Reporting Period: 1st Quarter of 2018

Facility ID: 0773000182
Emissions Unit ID: P901
Emissions Unit: Waste Gas Stack

Parameter	Units	January	February	March
Total clock hours	hours	744	672	744
Emission Unit operating time during FGD downtime	hours	0	0	552
Emission Unit operating time during normal operations	hours	744	672	192
CEMS online time during normal operations	hours	744	672	192
SO_2 emissions during normal operations (based on online CEMS data)	*lbs*	*120,149*	*112,576*	*30,755*
Ave. SO_2 emissions during normal operations	lb/hr	161.5	167.5	160.2
CEMS downtime during normal operations	hours	0	0	0
Est. SO_2 emissions during CEMS downtime	*lbs*	*0*	*0*	*0*
Est. SO_2 emissions during FGD system downtime [a]	*lbs*	*0*	*0*	*0*
TOTAL estimated SO_2 emissions	*lbs*	*120,149*	*112,576*	*30,755*
TOTAL estimated SO_2 emissions	**tons**	**60.1**	**56.3**	**15.4**

Month	Year	Monthly SO_2 Emissions, tons	Rolling 12-month SO_2 Emissions, tpy
April	2017	51.6	588.7
May	2017	57.4	618.1
June	2017	58.6	632.2
July	2017	59.7	640.6
August	2017	59.0	652.9
September	2017	58.5	660.7
October	2017	58.8	667.2
November	2017	53.5	670.0
December	2017	54.9	671.0
January	2018	60.1	677.9
February	2018	56.3	682.8
March	2018	15.4	643.9

NOTES:
When measured SO2 values exceeded the normal measurement range (0 - 170 ppm) of the SO2 analyzer (e.g. during FGD malfunction events), data was substituted using a high-range reading from the SO2 analyzer (0 - 800 ppm). Although, the high-range is not strictly quality assured per 40 CFR 60 Appendix F procedures, the high-range is periodically calibrated using an appropriate calibration gas. Regardless, the high-range data is believed to be a very good estimate of the SO2 concentration in the stack gas during full-scale exceedances of the normal operating range of the SO2 analyzer.

[a] Emissions during OEPA approved outages are not included in this estimate

CEMS Report for Emission Unit P901

CEMS PERFORMANCE SUMMARY REPORT

HAVERHILL COKE COMPANY, OH

Reporting Period: 1st Quarter of 2018

Facility ID: 0773000182
Emissions Unit ID: P901
Emissions Unit: Waste Gas Stack

Performance Summary	SO2 lb/hr
1. Total clock time in reporting period=	2,160 hr
2. Emission Unit operating time during FGD bypass =	552 hr
3. Emission Unit operating time during normal operations =	**1,608 hr**
4. CEMS downtime[1] in reporting period due to:	
a. Monitor equipment malfunctions =	0 hr
b. Non-monitor equipment malfunctions =	0 hr
c. Quality assurance calibration =	0 hr
d. Other known causes =	0 hr
e. Unknown causes =	0 hr
5. Total CEMS downtime[1] =	0 hr
6. Percent Monitor Downtime[1] =	0.0%
7. Percent Monitor Online[1] =	100.0%
8. Percent Monitor Downtime[1] (excluding QA calibration) =	**0.0%**
9. Percent Monitor Online[1] (excluding QA calibration) =	**100.0%**

[1] Reported CEMS downtimes and online times are during normal operating conditions of the Emission Unit, when the FGD system is online and the flue gases are exhausted through the main stack.

CEMS Report for Emission Unit P901

CEMS INSTRUMENT DOWNTIME REPORT
HAVERHILL COKE COMPANY, OH
Reporting Period: 1st Quarter of 2018

Facility ID: 0773000182
Emissions Unit ID: P901
Emissions Unit: Waste Gas Stack

Date	Time of Commencement	Duration of Downtime (hours)	Parameter	Reasons for Downtime	Nature of system repairs and adjustments
NO CEMS downtime in this reporting period					

Note on CEMS downtime

Following the guidance in 40 CFR 60.7(c), Figure 1 - Summary Report, CEMS downtime for SO2 is reported in hours and not minutes.

Invalid or Missing 1-minute average data

This reporting period had a total of 1,966 1-minute average data points (for the parameter SO2 lb/hr) that were not representative of process emissions or missing due to polling problems. A majority of the non-representative 1-minute average data was caused by automated hourly probe blowbacks and daily calibration checks of the CEM system. A majority of these invalid 1-minute data points did not result in any CEMS downtime because, valid 1-hour average data, as described above, was collected during this time.

At PLAA's request, HCC is providing the following summary of CEMS downtime in Minutes. The data presented below is not meant to be used for comparison against any minimum data capture requirements for the CEMS since valid hourly averages can be computed for compliance purposes, despite having several minutes of downtime in an hour.

1. Total clock time in reporting period =	129,600 min
2. Emission Unit operating time during FGD bypass =	33,120 min
3. Emission Unit operating time during normal operations =	96,480 min
4. Total CEMS downtime during normal operations =	1,966 min
4a. Downtime due to QA calibration =	899 min
4b. Downtime due to Other known causes =	1,067 min

P902 MAIN STACK
SO_2 CONTINUOUS EMISSIONS MONITORING SYSTEM
EXCESS EMISSIONS AND MONITORING SYSTEM PERFORMANCE REPORT

CEMS Report for Emission Unit P902

FGD System Downtime SUMMARY REPORT

HAVERHILL COKE COMPANY, OH

Reporting Period: 1st Quarter of 2018

Facility ID: 0773000182
Emissions Unit ID: P902
Emissions Unit: Waste Gas Stack

Commencement of FGD System Downtime	Completion of FGD System Downtime	FGD System Downtime Duration (hours)	Reasons for FGD System Downtime
3/28/2018 3:00	3/28/2018 19:59	17	On March 28, 2018, at 2:55 am, the control room operator (CRO) lost communication with B atomizer on P902. The Outside Phase Operator responded by going to the motor control center (MCC) electrical building B3 to check the breakers on the atomizers to see if they had tripped. The Outside Phase Operator found that A and C were still running, but B atomizer had tripped. The Outside Phase Operator then went to the Spray Dryer Absorber (SDA) penthouse to investigate. When the Outside Phase Operator arrived, the B atomizer control cabinet was engulfed in flames. This area had just been inspected less than an hour prior to the fire and no fire was noted. He quickly found a fire extinguisher and attempted to extinguish the fire. After discharging two fire extinguishers on the fire, the Outside Phase Operator notified the CRO to contact the guard shack to summon Green Local Fire Department (GLFD). GLFD arrived onsite and extinguished the fire. While waiting for GLFD, the CRO manually bypassed the SDA baghouse to avoid a high temperature in the baghouse, which would have resulted in bypass venting and also manually opened Emergency Bypass Vent Stacks #6-10 to stop process gas flow to the SDA to get the SDA Penthouse into a safe state. See quarterly deviation report for additional information.
Total FGD System Downtime for the quarter		**17**	**hours**

Emission Unit Operating Time Summary

Start date/time of reporting period =	1/1/2018 0:00
End date/time of reporting period =	3/31/2018 23:59
Total clock hours in the reporting period =	2,160 hours
Total Emission Unit operating time in the reporting period =	2,160 hours
Emission Unit operating time during FGD Bypass =	*17 hours*
Emission Unit operating time during normal operations =	*2,143 hours*

EMISSION EXCEEDANCES SUMMARY REPORT
HAVERHILL COKE COMPANY, OH
Reporting Period: 1st Quarter of 2018

Facility ID: 0773000182
Emissions Unit ID: P902
Emissions Unit: Waste Gas Stack

SO_2 Emission Limits :
192.0 lb/hr on a 3-hr block average basis
700.8 tpy on a rolling 12-month summation basis

Date/Time of Commencement	Date/Time of Completion	Duration of Exceedance (hours)	Pollutant	Magnitude (lb/hr)	Reason/s for the Excess Emissions	Corrective action/s taken, or measures taken to minimize emissions	Excess Emissions caused by Malfunction	Malfunction reported per OAC 3745-15-06
2/25/18 6:00	2/25/18 8:59	3	SO2	336.6	On February 25, 2018, during the 06:00 3-hr block, the gear box on the P902 slurry storage tank agitator failed. Maintenance personnel were dispatched to replace the gear box assembly. When the agitator is operational, the slakers automatically run to replenish slurry level inside the tank based on the level indication. However, due to the ongoing maintenance, the slakers were not operating (as designed), which allowed the slurry to decrease. As the level inside the tank dropped, residual slurry on the walls of the tank began to harden and plugged the suction lines, strainers, and pumps, which reduced slurry flow to the atomizers.	Operations personnel swapped between the A and B slurry pumps and flushed the associated feed lines, removing material buildup throughout the day while maintenance personnel worked to replace the gear box assembly. Maintenance personnel temporarily bypassed the control interlocks to allow the slakers to run while the agitator was offline for repairs, restoring slurry flow to the atomizers	YES	YES
2/25/18 15:00	2/25/18 17:59	3	SO2	286.6				
2/25/18 21:00	2/26/18 2:59	6	SO2	387.0				
3/28/18 0:00	3/28/18 2:59	3	SO2	195.4	On March 28, 2018, at 2:55 am, the control room operator (CRO) lost communication with B atomizer on P902. The Outside Phase Operator responded by going to the motor control center (MCC) electrical building B3 to check the breakers on the atomizers to see if they had tripped. The Outside Phase Operator found that A and C were still running, but B atomizer had tripped. The Outside Phase Operator then went to the Spray Dryer Absorber (SDA) penthouse to investigate. When the Outside Phase Operator arrived, the B atomizer control cabinet was engulfed in flames. This area had just been inspected less than an hour prior to the fire and no fire was noted. He quickly found a fire extinguisher and attempted to extinguish the fire. After discharging two fire extinguishers on the fire, the Outside Phase Operator notified the CRO to contact the guard shack to summon Green Local Fire Department (GLFD). GLFD arrived onsite and extinguished the fire. While waiting for GLFD, the CRO manually bypassed the SDA baghouse to avoid a high temperature in the baghouse, which would have resulted in bypass venting and also manually opened Emergency Bypass Vent Stacks #6-10 to stop process gas flow to the SDA to get the SDA Penthouse into a safe state. See quarterly deviation report for additional information.	The investigation immediately began to make sure the penthouse was in a safe condition, and to determine the needed repairs to return the SDA to service. Haverhill supervision, maintenance, and contractor personnel began assessing the situation. Power was isolated to the penthouse, and damaged equipment and atomizer inlet duct insulation were removed. Once the penthouse was determined to be in a safe state, Operations personnel returned P902 Heat Recovery Steam Generators (HRSGs) #6-11 to service and closed Emergency Vent Stacks #6-10. The SDA was brought online, using just two of three atomizers, and the fabric filter baghouse was returned to service. See quarterly deviation report for additional information.	YES	YES
3/28/18 15:00	3/28/18 20:59	6	SO2	544.7				

NOTES:

When measured SO2 values exceeded the normal measurement range (0 - 170 ppm) of the SO2 analyzer (e.g. during FGD malfunction events), data was substituted using a high-range reading from the SO2 analyzer (0 - 800 ppm). Although, the high-range is not strictly quality assured per 40 CFR 60 Appendix F procedures, the high-range is periodically calibrated using an appropriate calibration gas. Regardless, the high-range data is believed to be a very good estimate of the SO2 concentration in the stack gas during full-scale exceedances of the normal operating range of the SO2 analyzer.

CEMS Report for Emission Unit P902

SO2 EMISSIONS SUMMARY REPORT
HAVERHILL COKE COMPANY, OH
Reporting Period: 1st Quarter of 2018

Facility ID: 0773000182
Emissions Unit ID: P902
Emissions Unit: Waste Gas Stack

Parameter	Units	January	February	March
Total clock hours	hours	744	672	744
Emission Unit operating time during FGD bypass	hours	0	0	17
Emission Unit operating time during normal operations	hours	744	672	727
CEMS online time during normal operations	hours	734	672	726
SO_2 emissions during normal operations (based on online CEMS data)	*lbs*	*115,444*	*107,909*	*115,822*
Ave. SO_2 emissions during normal operations	lb/hr	157.3	160.6	159.5
CEMS downtime during normal operations	hours	10	0	1
Est. SO_2 emissions during CEMS downtime	*lbs*	*1,573*	*0*	*160*
Est. SO_2 emissions during FGD system downtime [a]	*lbs*	*0*	*0*	*3,231*
TOTAL estimated SO_2 emissions	*lbs*	*117,016*	*107,909*	*119,213*
TOTAL estimated SO_2 emissions	**tons**	**58.5**	**54.0**	**59.6**

Month	Year	Monthly SO_2 Emissions, tons	Rolling 12-month SO_2 Emissions, tpy
April	2017	52.5	571.3
May	2017	54.9	571.2
June	2017	54.3	572.2
July	2017	56.3	578.0
August	2017	57.4	583.7
September	2017	54.9	616.1
October	2017	57.0	632.3
November	2017	55.9	638.3
December	2017	58.3	654.2
January	2018	58.5	663.9
February	2018	54.0	668.5
March	2018	59.6	673.5

NOTES:
When measured SO2 values exceeded the normal measurement range (0 - 170 ppm) of the SO2 analyzer (e.g. during FGD malfunction events), data was substituted using a high-range reading from the SO2 analyzer (0 - 800 ppm). Although, the high-range is not strictly quality assured per 40 CFR 60 Appendix F procedures, the high-range is periodically calibrated using an appropriate calibration gas. Regardless, the high-range data is believed to be a very good estimate of the SO2 concentration in the stack gas during full-scale exceedances of the normal operating range of the SO2 analyzer.

[a] Emissions during OEPA approved outages are not included in this estimate

CEMS Report for Emission Unit P902

CEMS PERFORMANCE SUMMARY REPORT

HAVERHILL COKE COMPANY, OH

Reporting Period: 1st Quarter of 2018

Facility ID: 0773000182
Emissions Unit ID: P902
Emissions Unit: Waste Gas Stack

Performance Summary	SO2 lb/hr
1. Total clock time in reporting period=	2,160 hr
2. Emission Unit operating time during FGD bypass =	17 hr
3. Emission Unit operating time during normal operations =	**2,143 hr**
4. CEMS downtime[1] in reporting period due to:	
a. Monitor equipment malfunctions =	7 hr
b. Non-monitor equipment malfunctions =	0 hr
c. Quality assurance calibration =	0 hr
d. Other known causes =	4 hr
e. Unknown causes =	0 hr
5. Total CEMS downtime[1] =	11 hr
6. Percent Monitor Downtime[1] =	0.5%
7. Percent Monitor Online[1] =	99.5%
8. Percent Monitor Downtime[1] (excluding QA calibration) =	**0.5%**
9. Percent Monitor Online[1] (excluding QA calibration) =	**99.5%**

[1] Reported CEMS downtimes and online times are during normal operating conditions of the Emission Unit, when the FGD system is online and the flue gases are exhausted through the main stack.

CEMS Report for Emission Unit P902

CEMS INSTRUMENT DOWNTIME REPORT

HAVERHILL COKE COMPANY, OH
Reporting Period: 1st Quarter of 2018

Facility ID: 0773000182
Emissions Unit ID: P902
Emissions Unit: Waste Gas Stack

Date	Time of Commencement	Duration of Downtime (hours)	Parameter	Reasons for Downtime	Nature of system repairs and adjustments
01/03/18	7:00	1	SO2 lb/hr	Other known causes	O2 span bottle ran dry. Replaced bottle and reran the calibration check
01/08/18	1:00	7	SO2 lb/hr	Monitor equipment malfunction	Bad O2 pressure sensor resulted in bad O2 values. Replaced pressure sensor and recalibrated the system.
01/26/18	7:00	2	SO2 lb/hr	Other known causes	Low calibration gas pressure. Increase calibration gas pressure and reran the calibration check
03/08/18	3:00	1	SO2 lb/hr	Other known causes	Quarterly preventive maintenance and audits

Note on CEMS downtime

Following the guidance in 40 CFR 60.7(c), Figure 1 - Summary Report, CEMS downtime for SO2 is reported in hours and not minutes.

CEMS downtime was reported for hours in which:
(1) A valid hourly average as defined in 40 CFR 60.13(h)(2)(iii) was not recorded by the CEMS, and
(2) When the monitoring system was out-of-control as defined in 40 CFR 60 Appendix F 4.3.1 and 40 CFR 60 Appendix F 5.2.1.

Invalid or Missing 1-minute average data

This reporting period had a total of 3,545 1-minute average data points (for the parameter SO2 lb/hr) that were not representative of process emissions or missing due to polling problems. A majority of the non-representative 1-minute average data was caused by automated hourly probe blowbacks and daily calibration checks of the CEM system. A majority of these invalid 1-minute data points did not result in any CEMS downtime because, valid 1-hour average data, as described above, was collected during this time.

At PLAA's request, HCC is providing the following summary of CEMS downtime in Minutes. The data presented below is not meant to be used for comparison against any minimum data capture requirements for the CEMS since valid hourly averages can be computed for compliance purposes, despite having several minutes of downtime in an hour.

1. Total clock time in reporting period = 129,600 min
2. Emission Unit operating time during FGD bypass = 1,080 min
3. Emission Unit operating time during normal operations = 128,520 min
4. Total CEMS downtime during normal operations = 3,545 min
    - 4a. Downtime due to QA calibration = 1,580 min
    - 4b. Downtime due to Other known causes = 1,965 min

P902 MAIN STACK
MERCURY SORBENT TRAP MONITORING SYSTEM
EXCESS EMISSIONS AND MONITORING SYSTEM PERFORMANCE REPORT

Sorbent Trap Monitoring System Report for Emission Unit P902

FGD SYSTEM DOWNTIME SUMMARY REPORT

HAVERHILL COKE COMPANY, OH
Reporting Period: 1st Quarter of 2018

Facility ID: 0773000182
Emissions Unit ID: P902
Emissions Unit: Waste Gas Stack

Commencement of FGD System Downtime	Completion of FGD System Downtime	FGD System Downtime Duration (hours)	Reasons for FGD System Downtime
3/28/2018 3:00	3/28/2018 19:59	17	On March 28, 2018, at 2:55 am, the control room operator (CRO) lost communication with B atomizer on P902. The Outside Phase Operator responded by going to the motor control center (MCC) electrical building B3 to check the breakers on the atomizers to see if they had tripped. The Outside Phase Operator found that A and C were still running, but B atomizer had tripped. The Outside Phase Operator then went to the Spray Dryer Absorber (SDA) penthouse to investigate. When the Outside Phase Operator arrived, the B atomizer control cabinet was engulfed in flames. This area had just been inspected less than an hour prior to the fire and no fire was noted. He quickly found a fire extinguisher and attempted to extinguish the fire. After discharging two fire extinguishers on the fire, the Outside Phase Operator notified the CRO to contact the guard shack to summon Green Local Fire Department (GLFD). GLFD arrived onsite and extinguished the fire. While waiting for GLFD, the CRO manually bypassed the SDA baghouse to avoid a high temperature in the baghouse, which would have resulted in bypass venting and also manually opened Emergency Bypass Vent Stacks #6-10 to stop process gas flow to the SDA to get the SDA Penthouse into a safe state. See quarterly deviation report for additional information.
Total FGD System Downtime for the quarter =		**17**	**hours**

Emission Unit Operating Time Summary

Start date/time of reporting period =	1/1/2018 0:00
End date/time of reporting period =	3/31/2018 23:59
Total clock hours in the reporting period =	2,160 hours
Total Emission Unit operating time in the reporting period =	2,160 hours
Emission Unit operating time during FGD Bypass =	*17 hours*
Emission Unit operating time during normal operations =	*2,143 hours*

Sorbent Trap Monitoring System Report for Emission Unit P902

MERCURY EMISSION EXCEEDANCES SUMMARY REPORT

HAVERHILL COKE COMPANY, OH
Reporting Period: 1st Quarter of 2018

Facility ID: 0773000182
Emissions Unit ID: P902
Emissions Unit: Waste Gas Stack

Mercury Emission Limits :
0.01 lb/hr as a one-month average
55.5 lb/rolling, 12-month summation

Date/Time of Commencement	Date/Time of Completion	Duration of Exceedance (hours)	Pollutant	Magnitude (lb/hr)	Reason/s for the Excess Emissions	Corrective action/s taken, or measures taken to minimize emissions
No excess emissions in this reporting period						

Sorbent Trap Monitoring System Report for Emission Unit P902

MERCURY EMISSIONS SUMMARY REPORT
HAVERHILL COKE COMPANY, OH
Reporting Period: 1st Quarter of 2018

Facility ID: 0773000182
Emissions Unit ID: P902
Emissions Unit: Waste Gas Stack

Parameter	Units	January	February	March
Total clock hours	hours	744	672	744
Emission Unit operating time during FGD bypass	hours	0	0	17
Emission Unit operating time during normal operations	hours	744	672	727
Valid STMS hours	hours	734	672	727
Mercury emissions during normal operations (based on valid STMS hours)	*lbs*	*1.06*	*1.33*	*0.74*
Avg. Hg emission rate during valid STMS hours	lb/hr	0.0014	0.0020	0.0010
STMS downtime hours	hours	0	0	0
STMS invalid hours[1]	hours	10	0	0
Est. Hg emissions during STMS downtime/invalid hours[2]	*lbs*	*0.014*	*0.000*	*0.000*
Est. Hg emissions during FGD system downtime[4]	*lbs*	*0.000*	*0.000*	*0.006*
TOTAL estimated mercury emissions[3]	**lbs**	**1.08**	**1.33**	**0.74**

Month	Year	Monthly Mercury Emissions, lbs	Rolling 12-month Mercury Emissions, lbs
April	2017	1.45	20.2
May	2017	1.63	19.6
June	2017	1.79	19.4
July	2017	1.89	18.7
August	2017	2.23	19.1
September	2017	1.69	19.7
October	2017	1.66	20.1
November	2017	1.47	19.9
December	2017	1.32	19.8
January	2018	1.08	19.4
February	2018	1.33	19.2
March	2018	0.74	18.3

STMS = Sorbent Trap Monitoring System

[1] Invalid hours include periods when the STMS was operating but the analytical results were deemed invalid or other constituent parameters (stack flow rate and moisture) were invalid and prevented calculation of Hg mass emission rates.

[2] Estimated emissions during invalid hours in each calendar month were based on the average mercury emission rates in those months.

[3] The carbon injection rate was approximately 2 lb/MMacf in the reporting period.

[4] Emissions during OEPA approved outages are not included in this estimate.

Comments on sorbent trap analysis

a) The B-side trap between 1/4 - 1/11 failed the proportional flow criteria. A-side trap value was used to estimate emissions in this period.

SORBENT TRAP MONITORING SYSTEM PERFORMANCE SUMMARY REPORT

HAVERHILL COKE COMPANY, OH

Reporting Period: 1st Quarter of 2018

Facility ID: 0773000182
Emissions Unit ID: P902
Emissions Unit: Waste Gas Stack

Performance Summary	
1. Total clock time in reporting period=	2,160 hr
2. Emission Unit operating time during FGD bypass =	17 hr
3. Emission Unit operating time during normal operations =	**2,143 hr**
4. CEMS downtime[1] in reporting period due to:	
a. Monitor equipment malfunctions =	0 hr
b. Non-monitor equipment malfunctions =	0 hr
c. Quality assurance calibration =	0 hr
d. Other known causes =	0 hr
e. Unknown causes =	0 hr
5. Total CEMS downtime[1] =	0 hr
6. Percent Monitor Downtime[1] =	0.0%
7. Percent Monitor Online[1] =	100.0%
8. Percent Monitor Downtime[1] (excluding QA calibration) =	**0.0%**
9. Percent Monitor Online[1] (excluding QA calibration) =	**100.0%**

[1] Reported CEMS downtimes and online times are during normal operating conditions of the Emission Unit, when the FGD system is online and the flue gases are exhausted through the main stack.

SORBENT TRAP MONITORING SYSTEM DOWNTIME REPORT

HAVERHILL COKE COMPANY, OH

Reporting Period: 1st Quarter of 2018

Facility ID: 0773000182
Emissions Unit ID: P902
Emissions Unit: Waste Gas Stack

Date	Time of Commencement	Duration of Downtime (hours)	Reasons for Downtime	Nature of system repairs and adjustments
No monitoring system downtime in this reporting period				

QUARTERLY QA/QC ASSESSMENTS

Cylinder Gas Audit

Plant: Haverhill North Coke Company

Report Period: 01/01/2018 00:00 Through 03/31/2018 23:59

Source: UNIT1
Parameter: O2DRY
Instrument Span: 25.000

Test Date/Time: 03/08/18 01:40
Test Result: **Pass**
Aborted?: No

Time	CEMS Value	Audit Value	Difference	% of Audit Value
Low-Level				
03/08/18 01:18	5.500	5.200	0.300	5.8
03/08/18 01:27	5.400	5.200	0.200	3.8
03/08/18 01:36	5.400	5.200	0.200	3.8

CEMS Mean (Cm): 5.433
Audit Mean (Ca): 5.200
Accuracy (A) in %: 4.5
Mean Difference: 0.2
APS Indicator: 0

Cylinder #: CC172107
Cylinder Exp. Date: 06/04/2023

Time	CEMS Value	Audit Value	Difference	% of Audit Value
Mid-Level				
03/08/18 01:22	9.300	9.000	0.300	3.3
03/08/18 01:31	9.300	9.000	0.300	3.3
03/08/18 01:40	9.300	9.000	0.300	3.3

CEMS Mean (Cm): 9.300
Audit Mean (Ca): 9.000
Accuracy (A) in %: 3.3
Mean Difference: 0.3
APS Indicator: 0

Cylinder #: SG9164850BAL
Cylinder Exp. Date: 10/20/2020

Cylinder Gas Audit

Plant: Haverhill North Coke Company

Report Period: 01/01/2018 00:00 Through 03/31/2018 23:59

Source: UNIT1
Parameter: O2WET
Instrument Span: 25.000

Test Date/Time: 03/08/18 01:40
Test Result: **Pass**
Aborted?: No

Time	CEMS Value	Audit Value	Difference	% of Audit Value
Low-Level				
03/08/18 01:18	4.900	5.200	-0.300	-5.8
03/08/18 01:27	4.900	5.200	-0.300	-5.8
03/08/18 01:36	5.000	5.200	-0.200	-3.8

CEMS Mean (Cm): 4.933
Audit Mean (Ca): 5.200
Accuracy (A) in %: -5.1
Mean Difference: -0.3
APS Indicator: 0

Cylinder #: CC172107
Cylinder Exp. Date: 06/04/2023

Time	CEMS Value	Audit Value	Difference	% of Audit Value
Mid-Level				
03/08/18 01:22	8.400	9.000	-0.600	-6.7
03/08/18 01:31	8.500	9.000	-0.500	-5.6
03/08/18 01:40	8.600	9.000	-0.400	-4.4

CEMS Mean (Cm): 8.500
Audit Mean (Ca): 9.000
Accuracy (A) in %: -5.6
Mean Difference: -0.5
APS Indicator: 0

Cylinder #: SG9164850BAL
Cylinder Exp. Date: 10/20/2020

Cylinder Gas Audit

Plant: Haverhill North Coke Company

Report Period: 01/01/2018 00:00 Through 03/31/2018 23:59

Source: UNIT1
Parameter: SO2PPM
Instrument Span: 170.000

Test Date/Time: 03/08/18 02:46
Test Result: **Pass**
Aborted?: No

Time	CEMS Value	Audit Value	Difference	% of Audit Value
Low-Level				
03/08/18 02:19	42.500	44.800	-2.300	-5.1
03/08/18 02:30	42.900	44.800	-1.900	-4.2
03/08/18 02:41	43.000	44.800	-1.800	-4.0

CEMS Mean (Cm): 42.800
Audit Mean (Ca): 44.800
Accuracy (A) in %: -4.5
Mean Difference: -2.0
APS Indicator: 0

Cylinder #: CC249356
Cylinder Exp. Date: 07/13/2021

Time	CEMS Value	Audit Value	Difference	% of Audit Value
Mid-Level				
03/08/18 02:24	93.700	96.400	-2.700	-2.8
03/08/18 02:35	93.500	96.400	-2.900	-3.0
03/08/18 02:46	93.400	96.400	-3.000	-3.1

CEMS Mean (Cm): 93.533
Audit Mean (Ca): 96.400
Accuracy (A) in %: -3.0
Mean Difference: -2.9
APS Indicator: 0

Cylinder #: CC302364
Cylinder Exp. Date: 06/17/2022

Cylinder Gas Audit

Plant: Haverhill North Coke Company

Report Period: 01/01/2018 00:00 Through 03/31/2018 23:59

Source: UNIT2
Parameter: O2DRY
Instrument Span: 25.000

Test Date/Time: 03/08/18 02:35
Test Result: **Pass**
Aborted?: No

Time	CEMS Value	Audit Value	Difference	% of Audit Value
Low-Level				
03/08/18 02:18	5.100	4.900	0.200	4.1
03/08/18 02:25	5.100	4.900	0.200	4.1
03/08/18 02:32	5.100	4.900	0.200	4.1

CEMS Mean (Cm): 5.100
Audit Mean (Ca): 4.900
Accuracy (A) in %: 4.1
Mean Difference: 0.2
APS Indicator: 0

Cylinder #: CC105741
Cylinder Exp. Date: 02/22/2024

Time	CEMS Value	Audit Value	Difference	% of Audit Value
Mid-Level				
03/08/18 02:21	9.200	9.000	0.200	2.2
03/08/18 02:28	9.200	9.000	0.200	2.2
03/08/18 02:35	9.200	9.000	0.200	2.2

CEMS Mean (Cm): 9.200
Audit Mean (Ca): 9.000
Accuracy (A) in %: 2.2
Mean Difference: 0.2
APS Indicator: 0

Cylinder #: CC317469
Cylinder Exp. Date: 06/09/2022

Cylinder Gas Audit

Plant: Haverhill North Coke Company

Report Period: 01/01/2018 00:00 Through 03/31/2018 23:59

Source: UNIT2
Parameter: O2WET
Instrument Span: 25.000

Test Date/Time: 03/08/18 02:35
Test Result: **Pass**
Aborted?: No

Time	CEMS Value	Audit Value	Difference	% of Audit Value
Low-Level				
03/08/18 02:18	4.900	4.900	0.000	0.0
03/08/18 02:25	4.900	4.900	0.000	0.0
03/08/18 02:32	4.900	4.900	0.000	0.0

CEMS Mean (Cm): 4.900
Audit Mean (Ca): 4.900
Accuracy (A) in %: 0.0
Mean Difference: 0.0
APS Indicator: 0

Cylinder #: CC105741
Cylinder Exp. Date: 02/22/2024

Time	CEMS Value	Audit Value	Difference	% of Audit Value
Mid-Level				
03/08/18 02:21	8.800	9.000	-0.200	-2.2
03/08/18 02:28	8.800	9.000	-0.200	-2.2
03/08/18 02:35	8.900	9.000	-0.100	-1.1

CEMS Mean (Cm): 8.833
Audit Mean (Ca): 9.000
Accuracy (A) in %: -1.9
Mean Difference: -0.2
APS Indicator: 0

Cylinder #: CC317469
Cylinder Exp. Date: 06/09/2022

Cylinder Gas Audit

Plant: Haverhill North Coke Company

Report Period: 01/01/2018 00:00 Through 03/31/2018 23:59

Source: UNIT2
Parameter: SO2PPM
Instrument Span: 170.000

Test Date/Time: 03/08/18 04:06
Test Result: **Pass**
Aborted?: No

Time	CEMS Value	Audit Value	Difference	% of Audit Value
Low-Level				
03/08/18 03:39	44.000	44.800	-0.800	-1.8
03/08/18 03:50	46.400	44.800	1.600	3.6
03/08/18 04:01	46.100	44.800	1.300	2.9

CEMS Mean (Cm): 45.500
Audit Mean (Ca): 44.800
Accuracy (A) in %: 1.6
Mean Difference: 0.7
APS Indicator: 0

Cylinder #: CC249356
Cylinder Exp. Date: 07/13/2021

Time	CEMS Value	Audit Value	Difference	% of Audit Value
Mid-Level				
03/08/18 03:44	92.100	91.900	0.200	0.2
03/08/18 03:55	92.300	91.900	0.400	0.4
03/08/18 04:06	93.000	91.900	1.100	1.2

CEMS Mean (Cm): 92.467
Audit Mean (Ca): 91.900
Accuracy (A) in %: 0.6
Mean Difference: 0.6
APS Indicator: 0

Cylinder #: CC258856
Cylinder Exp. Date: 09/24/2021

Quarterly Deviation Rpt. 162606
Haverhill Coke Company LLC
0773000182
April 30, 2018

If I am claiming any information in this submission is a trade secret, I hereby swear or affirm that the trade secret request meets the requirements of Ohio Administrative Code 3745-49-03(B) and that the justification submitted with the trade secret request sets forth the basis for claiming that the information should be considered a trade secret as defined in Ohio Administrative Code 3745-49-02(T).

a) I am a responsible official as defined in OAC 3745-77-01(II) and, as specified in OAC 3745-77-03(D), based on information and belief formed after reasonable inquiry, I hereby affirm that all statements and information in this transmittal are true, accurate and complete; OR
b) I am a designated representative as defined in paragraph 26 of Section 402 of the Clean Air Act, and as per OAC 3745-103-06, I certify under penalty of law that I have personally examined, and am familiar with, the statements and information submitted in this document and all its attachments. Based on my inquiry of those individuals with primary responsibility for obtaining the information, I certify that the statements and information are to the best of my knowledge and belief true, accurate, and complete. I am aware that there are significant penalties for submitting false statements and information or omitting required statements and information, including the possibility of fine or imprisonment. I am authorized to make this submission on behalf of the owners and operators of the source or units for which the submission is made.

Signee Name (please print): James Skipworth **Title:** GM

Signee Signature: James J. Skipworth **Date:** 4/30/18

SUBMITTED VIA AIR SERVICES

July 26, 2018

Ms. Cindy Charles
Ohio EPA – Portsmouth Local Air Agency
605 Washington Street, Third Floor
Portsmouth, Ohio 45662

Subject: *2018 First Quarter Deviation Report*
Haverhill Coke Company – Franklin Furnace, OH
Facility ID No. 07-73-00-0182

Dear Ms. Charles:

Haverhill Coke Company (HCC) operates a coke production facility located in Franklin Furnace, Ohio. During the reporting period, the facility currently operated under six Ohio Environmental Protection Agency (OEPA) Permits to Install (PTIs) 07-00511 (modified on November 10, 2008), P0104223 (issued on December 26, 2008), P0106016 (issued on February 19, 2015), P0119427 (issued December 8, 2015), P0119826 (issued on November 21, 2016), and P0122398 (issued on May 17, 2018).

Pursuant to condition A.4.c)(2) of PTIs 07-00511, P0104223, P0106016, P0119427, P0119826, and P0122398, HCC is required to submit quarterly deviation reports. According to condition A.4.c)(2),

> *Quarterly written reports of (i) any deviations from federally enforceable emission limitations, operational restrictions, and control device operating parameter limitations, excluding deviations resulting from malfunctions reported in accordance with OAC rule 3745-15-06, that have been detected by the testing, monitoring and recordkeeping requirements specified in this permit, (ii) the probable cause of such deviations, and (iii) any corrective actions or preventive measures taken, shall be made to the Portsmouth City Health Dept., Air Pollution Unit. The written reports shall be submitted (i.e., postmarked) quarterly, by January 31, April 30, July 31, and October 31 of each year and shall cover the previous calendar quarters. See A.15 below if no deviations occurred during the quarter*

Furthermore, condition A.4.c)(3) of PTIs 07-00511, P0104223, P0106016, P0119427, P0119826, and P0122398, requires that HCC submit semi-annual reports documenting compliance with the monitoring, recordkeeping, and reporting requirements of the aforementioned permits. According to condition A.4.c)(3),

> *Written reports, which identify any deviations from the federally enforceable monitoring, recordkeeping, and reporting requirements contained in this permit shall be submitted to the Portsmouth City Health Dept., Air Pollution Unit every six months, by January 31 and July 31 of each year for the previous six calendar months. If no deviations occurred during a six-month period, the permittee shall submit a semi-annual report, which states that no deviations occurred during that period.*

Tables A-1 through A-5 in Attachment A describe the deviations from the *emission limitations, operational restrictions, and control device operating parameter limitations* in PTIs 07-00511, P0104223, P0106016, P0119427, and P0119826 that occurred between April 1, 2018 and June 30, 2018. For each deviation, Tables A-1 through A-5 include an identification of the associated emission unit or equipment, a description of the deviation, a description of when the deviation occurred, the cause of the deviation, and the corrective action(s) taken. Also included are any deviations from monitoring, recordkeeping, and reporting requirements that have occurred at HCC during the 2018 first semi-annual compliance period.

A summary of the malfunction events are included in Attachment B. Please note these events have been reported to PLAA in accordance with OAC rule 3745-15-06.

In addition to quarterly deviation report information, HCC has included in this submittal for P901 and P902 the Coal Quality and Quantity Report in Attachment C-1 and C-2, respectively, pursuant to permit conditions C.1.e)(21) and C.2.e)(21), respectively, in PTI P0119826 and conditions C.3.e)(21) and C.4.e)(21) in PTI P0122398 and the 2nd Quarter HRSG Vent Stack Summaries in Attachment D.

***

If you have any questions concerning this report, please contact Diana Starkweather at 740-355-9823.

I certify that based on information and belief formed after reasonable inquiry, the statements and information in this report are true, accurate, and complete.

Sincerely,

James G. Skipworth
General Manager

Attachment A

DEVIATION SUMMARY TABLES

Table A-1. Permit To Install P0104223 (F001) - Quarterly Deviation Report (April 1, 2018 – June 30, 2018)

Permit Citation	Source	Date	Times	Probable Cause of Deviation/Corrective Action(s) Taken
There are no deviations to report for the active terms of this permit.				

Table A-2. Permit To Install P0106016 (F002, F004) - Quarterly Deviation Report (April 1, 2018 – June 30, 2018)

Permit Citation	Source	Date	Times	Probable Cause of Deviation/Corrective Action(s) Taken
C.2.c)(1)	F004	6/11/2018	1:04 pm - 1:12 pm DP: 2.7	On June 11, 2018, a low differential pressure drop of 2.7 was recorded across F004 Screening Plant Baghouse at 1:12 pm. Upon noticing the low pressure drop, Operations personnel closed the Quench wharf gates to prevent additional coke from going through the Screening Plant, cleared the remaining coke from the conveyors to prevent a fire on the belts, and temporarily stopped production to allow personnel to inspect the baghouse. Plant personnel found that the baghouse pulse air system had been placed in manual mode, causing it to pulse continuously. During normal operations, the pulse air system should be operated in auto mode so that pulsing only occurs within a specified pressure drop range, preventing the pressure drop from going below the permitted limit of 3 inches of water. The total duration of this event was 0.13 hours. The F004 Screening Plant Baghouse continued to operate during this event. HCC is reporting this event under the requirement for operating the F004 Screening Plant Baghouse within the specified pressure drop range of 3 – 12 inches of water.

Table A-3. Permit To Install 07-00511 (F003) - Quarterly Deviation Report (April 1, 2018 – June 30, 2018)

Permit Citation	Source	Date	Times	Probable Cause of Deviation/Corrective Action(s) Taken
There are no deviations to report for the active terms of this permit.				

Table A-4. Permit To Install P0119427 (P014) - Quarterly Deviation Report (April 1, 2018 – June 30, 2018)

Permit Citation	Source	Date	Times	Probable Cause of Deviation/Corrective Action(s) Taken
There are no deviations to report for the active terms of this permit.				

Table A-5. Permit To Install P0122398 (P901, P902) - Quarterly Deviation Report (April 1, 2018 – June 30, 2018)

Permit Citation	Source	Date	Times	Probable Cause of Deviation/Corrective Action(s) Taken
C.2.c)(2)	P902	4/13/2018	7:48 AM - 7:50 AM	On April 13, 2018, the P902 PCM shut down on high temperature while charging coal to oven 186. Operations personnel immediately responded and restarted the baghouse. Upon further investigation, HCC personnel found that the "Fresh Air Damper" had been placed into manual mode. As a result, the fresh air damper did not open and close automatically to cool the baghouse at certain temperature setpoints. Operations personnel have been reminded of the requirements to always operate the PCM baghouse fresh air damper in "Auto." The breakdown of the air pollution control equipment did not cause the emission of air contaminants in excess of the applicable emission limit. HCC is reporting this event under the requirement for operating the P902 PCM Baghouse within the specified pressure drop range of 3 – 12 inches of water.
C.2.c)(1)	P902	5/1/2018	15.8 8:44 PM	On May 1, 2018, a high differential pressure drop of 15.8 was recorded across the P902 FGD Baghouse at 8:44 pm. The excursion lasted less than 10 seconds. HCC personnel had removed FGD baghouse compartment C from service in order to conduct maintenance. Due to ongoing material blockages and compartment isolation issues in the P902 FGD, Operations personnel had been advised not to isolate additional compartments; however, E was removed from service at 8:44 pm to manually remove ash build up from the filters, which increased the FGD Baghouse differential pressure above the permit limit. HCC personnel cleaned and inspected the SDA, baghouse, and associated ductwork and inlet isolation dampers during the P902 scheduled FGD maintenance and found the compartment inlet isolation dampers to be warped. HCC engineering personnel designed and had fabricated metal lips for each damper to reduce the likelihood of an improper seal.
40 CFR 63.303(d)3	P901	1/18/2018 1/20/2018 2/3/2018		Per 40 CFR 63.303(d)3, the owner or operator shall observe the exhaust stack of each charging emissions control device at least once each day of operation during charging to determine if visible emissions are present and shall record the results of each daily observation or the reason why conditions did not permit a daily observation. On January 18, 20, and February 3, 2018, Operations personnel were unable to observe the P901 baghouse stack for visible emissions because there was not enough light during the charging operation to make the observation. Under the normal operating cycle, the PCM baghouse stack is observed during the day, while ovens are being charged. However, on January 18 and 20, 2018, there were production delays that held the push cycle over until the next day. On February 3, 2018, there were no ovens pushed during daylight hours.
C.2.b)(1)	P901			On March 7 – 9, 2018, HCC conducted stack testing on bypass vent stack #5 during Scheduled FGD Maintenance. During the stack testing, the facility complied with its HCl pounds per hour emissions limit; however, 2.2 pounds of HCl per ton of coal were detected from the bypass vent stack #5.

Table A-6. Permit To Install P0122398 (P001, P002, P901, P902) - Quarterly Deviation Report (April 1, 2018 – June 30, 2018)

Permit Citation	Source	Date	Times	Probable Cause of Deviation/Corrective Action(s) Taken
C.4.c)(14)	P902	5/24/2018	HRSG 6 10:19 AM - 10:22 AM HRSG 7 10:19 AM - 10:20 AM HRSG 8 10:19 AM - 10:21 AM HRSG 9 10:19 AM - 10:20 AM HRSG 10 10:19 AM - 10:21 AM	On May 24, 2018, operations personnel caused the bypass vent stacks associated with HRSGs 6 – 10 to open on loss of draft after inadvertently removing B ID fan from service. Maintenance personnel were preparing to perform scheduled maintenance on A ID Fan, which required that it be taken offline. Maintenance personnel notified the control room and a control room operator (CRO)-in training began to shut down the ID Fan. Subsequently, draft was lost and the HRSG #6-10 bypass vent stacks began opening at 10:19 am. Operations personnel immediately responded and found that the CRO-in training had inadvertently removed B ID Fan, leaving only C ID Fan in service, which was not sufficient to maintain draft across the HRSG 6-10 bypass vent stacks. Operations personnel immediately restarted B ID Fan. The total duration of the bypass venting event was 0.15 hours. Personnel involved have been reminded of the requirement to ensure that the correct equipment is being removed from service.
C.4.c)(14)	P902	6/3/2018 - 6/30/2018		On June 3, 2018, HCC personnel removed the FGD from service in order to perform Redundant HRSG Tie in Time work, which required all of the P902 bypass vent stack lids were open. The Tie in Time consisted of extensive work on the P902 Spray Dryer Absorber (SDA) vessel, part of the Flue Gas Desulfurization (FGD) Unit. This work was required to ensure long term reliability of the SDA and FGD during gas-sharing operation. Other maintenance work, including Scheduled HRSG Maintenance on four HRSGs and Scheduled FGD Maintenance, was coordinated and conducted concurrently to minimize bypass venting. HCC received OEPA Director's Approval for the Scheduled FGD maintenance on May 10, 2018. During the Redundant HRSG Tie in work and OEPA Director Approved FGD maintenance, more than one bypass vent was open at a time, and the FGD Carbon Injection System, fabric filter, and SDA were offline. Once gas flow was restored to the P902 FGD baghouse, the Carbon Injection System, fabric filter, and SDA were brought online and returned to the normal operating level. Please note that this event extended into the 2018 3rd Quarter reporting period.

Attachment B

OAC RULE 3745-15-06 MALFUNCTIONS SUMMARY

Table B. Malfunctions

Start Date	Source	Permit Condition	Time	Probable Cause of Malfunction/Corrective Action(s) Taken
4/9/2018	P901	SO2 Exceedance	0:00	On April 9, 2018, a malfunction occurred on the P901 SDA system when slurry flow was lost to the atomizers. Operations personnel switched to “B” slurry pump, restoring slurry flow. Operations personnel backflushed “A” slurry pump and the associated piping to remove material buildup and also changed out the strainers, allowing “A” slurry pump to be returned to service. Slurry flow during this time was not sufficient to remove SO2 from the gas stream and an exceedance of the 3-hour block SO2 limit occurred. The 0:00 3-hour block average SO2 emissions are estimated to be 210.7 lb/hr.
4/13/2018	P902	SO2 Exceedance	6:00	On April 13, 2018, a malfunction occurred on the P902 SDA system when slurry flow was lost to the atomizers. Operations personnel immediately responded and found that the strainers at the outlet of “B” slurry pump had become plugged. Operations personnel backflushed “B” slurry pump and the associated piping to remove material buildup and also changed out the strainers, restoring slurry flow. Slurry flow during this time was not sufficient to remove SO2 from the gas stream and an exceedance of the 3-hour block SO2 limit occurred. The 6:00 3-hour block average SO2 emissions are estimated to be 196.4 lb/hr.
4/22/2018	P901	SO2 Exceedance	15:00	On April 22, 2018, a malfunction occurred on the P901 SDA system when slurry flow was lost to the atomizers. Operations personnel backflushed “B” slurry pump and the associated piping to remove material buildup and also checked the strainers. Still unable to operate “B” slurry pump, operations personnel switched to “A” slurry pump, restoring slurry flow. Maintenance personnel were then dispatched and found that the belts on “B” slurry pump had become loose. Maintenance personnel tightened the belts and returned “B” slurry pump to service. Slurry flow during this time was not sufficient to remove SO2 from the gas stream and an exceedance of the 3-hour block SO2 limit occurred. The 15:00 3-hour block average SO2 emissions are estimated to be 282.1 lb/hr.
5/7/2018	P902	SO2 Exceedance	21:00	On May 7, 2018, a malfunction occurred on the P902 SDA system. Maintenance personnel were dispatched and found that “A” atomizer had tripped on high bearing temperature after the dilution water line became disconnected. While swapping out “A” atomizer, “B” atomizer tripped due to a VFD fault. Operations personnel responded, but were unable to reset the fault. “B” atomizer was removed from service until another spare could be brought in. Slurry flow during this time was not sufficient to remove SO2 from the gas stream and an exceedance of the 3-hour block SO2 limit occurred. The 21:00 3-hour block average SO2 emissions are estimated to be 312.6 lb/hr. Please note that this event was originally reported as occurring on May 8. This serves as an update to the report emailed to PLAA on May 8, 2018.
5/15/2018	P902	Stack Opacity	12:30 PM	On May 15, 2018, a malfunction occurred on the P902 PCM baghouse. Around 12:30 pm, Haverhill personnel noted opacity coming from the stack and conducted a Method 9. Opacity during the event was estimated to be 12.5%. The opacity exceedance was caused by damaged bags in the baghouse. Maintenance personnel replaced 16 bags in the PCM baghouse. The PCM baghouse DP was within the specified range of 3-12 inwc during this event.

Table B. Malfunctions

Start Date	Source	Permit Condition	Time	Probable Cause of Malfunction/Corrective Action(s) Taken
5/21/2018	P902	Pressure Drop Excursion Bypass Vent Stack	19.5 7:32 am - 11:38 pm See HRSG 9 Venting Attachment for Times	On May 21, 2018, HCC experienced a malfunction on the P902 FGD Baghouse. HRSG #9 was taken offline as scheduled the morning of May 20, 2018. In addition, two baghouse compartments were scheduled to be isolated so that filter bags could be changed out. The first compartment, Compartment D, was isolated, the filter bags changed out, and the compartment returned to service over the previous weekend. After shutting down HRSG #9 at 11:25 am on May 20th, the second baghouse compartment (compartment B) was isolated at 12:27 pm on May 20th for filter bag replacement. With the FGD system in gas-sharing mode and five of six baghouse compartments online, HCC operators noticed the FGD baghouse differential pressure (DP) increasing, the induced draft (ID) fan amps increasing and low system draft. The operators continued to monitor the situation and make adjustments to keep the parameters in the required ranges the rest of the day and overnight. At 7:32 am on May 21st the FGD baghouse DP went above 15" H2O. Operations personnel tried to lower the DP by manually cleaning baghouse compartments. Maintenance personnel also responded to check the pressure transmitters and check the system for leaks. Due to the low draft condition, the HRSG #9 bypass vent stack lids initially opened from 8:39 am to 8:40 am. Operations continued to experience high baghouse DP, high FGD fan amps and low draft. In an effort to keep the ID fans from tripping offline and opening all five stack lids, operations opened the HRSG #9 bypass vent stack lids from 1:20 pm to 1:48 pm. However, the system fluctuations continued, causing the HRSG #9 stack lids to open intermittently throughout the day. The baghouse continued to experience periods of high DP and the DP was intermittently above 15" until 11:38 pm when the B compartment of the baghouse was returned to normal operation after the filter bag change-out.
5/27/2018	P902	Pressure Drop Excursion	16.0 5/27/2018 1:32 PM - 1:47 PM 16.1 5/27/2018 2:49 PM - 3:50 PM	On May 27, 2018, high fabric filter pressure drop readings of 16.0 and 16.1 inches of water were recorded on the P902 FGD baghouse during a malfunction. Operations personnel immediately responded and identified a pluggage inside the ash hopper associated with F Compartment. Operations personnel rodded out the ash hoppers to remove the ash buildup, verified operation of the air blowers and associated instrumentation, and began manually pulsing the baghouse, which lowered the pressure drop.
5/28/2018	P901	SO2 Exceedance	3:00	On May 28, 2018, a malfunction occurred on the P901 SDA system when slurry flow was lost to the atomizers. Operations personnel immediately responded and discovered the line associated with "B" atomizer had become plugged. Operations personnel reestablished slurry flow on "B" atomizer by cycling the valve open and closed. Slurry flow during this time was not sufficient to remove SO2 from the gas stream and an exceedance of the 3-hour block SO2 limit occurred. The 3:00 3-hour block average SO2 emissions are estimated to be 192.1 lb/hr.

Table B. Malfunctions

Start Date	Source	Permit Condition	Time	Probable Cause of Malfunction/Corrective Action(s) Taken
6/14/2018	P901	Bypass Vent Stack	9:18 AM - 9:34 AM	On June 14, 2018 a malfunction occurred on the P901 HRSG #2 Coke Side Stack Lid. Operations personnel received the Emergency Vent Stack Lid HRSG 2 Open Alarm at 9:18am. Operations personnel visually verified the lid was open, then immediately attempted to close it from the HMI. At 9:34am, operations personnel closed the Coke side lid locally. Maintenance personnel found that one of the coils on the coke side stack lid had failed. The system is designed so that if a problem occurs with the stack lid instrumentation, the stack lids fail open in order to prevent potential damage to the boiler. Maintenance personnel replaced the failed coil.
1/16/2018	P902	Bypass Vent Stack	5:26 PM - 5:29 PM	On January 16, 2018 at 5:26 pm, a malfunction occurred on the XV regulator associated with P902 HRSG #9 causing a loss of draft on the HRSG and opening the associated bypass vent stack lids at 5:26 pm. The CRO immediately responded and tried to close the XV damper but was unsuccessful. The CRO raised the draft and closed the HRSG #9 bypass vent stack lids at 5:29 pm. Maintenance personnel was dispatched and found that the airline regulator associated with the XV damper became frozen due to severe weather conditions. When the XV airline regulator became frozen, it slowly started to close the XV damper. Since the XV didn't immediately close, the HRSG did not show a trip so the system didn't go into gas sharing mode. Maintenance personnel thawed out the lines. Operations personnel wrapped the lines with insulation and left the pet cock open so air will continuously run through the lines. The total duration of the vent stack bypass event was 0.05 hours. This event was reported to PLAA in accordance with OAC rule 3745 15 06, but was inadvertently excluded from the 2018 1st Quarter Report.

Attachment C-1

P901 COAL QUANTITY AND QUALITY REPORT

Attachment C-1 contains a summary of the coal usage and quality analysis data for the reporting period for P901. Per the reporting requirements of PTI P0119826 and PTI P0122398, permit conditions C.1.e)(21) and C.3.e)(21) state:

> *The permittee shall submit to the Portsmouth Local Air Agency quarterly reports concerning the quality and quantity of the coal coked in this emissions unit. These reports shall include the following information for the emissions unit for each month during the calendar quarter:*
> *a. The total quantity of wet coal charged (tons);*
> *b. The average mercury content (percent) of the coal charged;*
> *c. The average chlorine content (percent) of the coal charged; and*
> d. *The average sulfur content (weight percent) of the coal charged.*

These reports are due by January 31, April 30, July 31, and October 31 of each year and shall cover the previous calendar quarters. Pursuant to these requirements, the data provided in Attachment C-1 include documentation of the total usage for the reporting period and the average mercury, chlorine, and sulfur content for the coal charged at P901.

HAVERHILL COKE COMPANY
Coal Quantity & Quality Report
2018 2nd Quarter
P901 Composition Data

Month	Chlorine Content % Composite	Mercury Content % Composite	Sulfur Content % Composite	Wet Tons	Rolling 12-Month Total
Apr-18	0.086%	0.000005%	0.85%	64,434	755,513
May-18	0.072%	0.000004%	0.84%	68,170	759,871
Jun-18	0.066%	0.000004%	0.82%	64,979	762,279

HAVERHILL COKE COMPANY Coal Quantity & Quality Report 2018 2nd Quarter P901 Daily Coal Usage		
Date	**Coal Usage**	**Rolling 7 Day Average**
4/1/2018	2091.7	2,073.16
4/2/2018	2152.33	2,079.85
4/3/2018	2117.54	2,071.35
4/4/2018	2138.19	2,080.91
4/5/2018	1707.98	2,059.88
4/6/2018	2529.93	2,125.69
4/7/2018	2069.63	2,115.33
4/8/2018	2101.1	2,116.67
4/9/2018	1873.35	2,076.82
4/10/2018	2372.06	2,113.18
4/11/2018	2181.2	2,119.32
4/12/2018	2137.13	2,180.63
4/13/2018	2163.06	2,128.22
4/14/2018	2154.16	2,140.29
4/15/2018	2133.83	2,144.97
4/16/2018	2102.79	2,177.75
4/17/2018	2138.95	2,144.45
4/18/2018	2147.25	2,139.60
4/19/2018	2099.53	2,134.22
4/20/2018	2148.64	2,132.16
4/21/2018	2154.15	2,132.16
4/22/2018	2190.55	2,140.27
4/23/2018	2170.36	2,149.92
4/24/2018	2206.25	2,159.53
4/25/2018	2134.93	2,157.77
4/26/2018	2218.85	2,174.82
4/27/2018	2200.92	2,182.29
4/28/2018	2203.62	2,189.35
4/29/2018	2176.24	2,187.31
4/30/2018	2217.59	2,194.06

HAVERHILL COKE COMPANY
Coal Quantity & Quality Report
2018 2nd Quarter
P901 Daily Coal Usage

Date	Coal Usage	Rolling 7 Day Average
5/1/2018	2144.62	2,185.25
5/2/2018	2194.32	2,193.74
5/3/2018	2092.21	2,175.65
5/4/2018	2206.9	2,176.50
5/5/2018	2175.81	2,172.53
5/6/2018	2235.24	2,180.96
5/7/2018	2105.66	2,164.97
5/8/2018	2203.61	2,173.39
5/9/2018	2197.94	2,173.91
5/10/2018	2230.12	2,193.61
5/11/2018	2157.54	2,186.56
5/12/2018	2186.52	2,188.09
5/13/2018	2220.2	2,185.94
5/14/2018	2240.22	2,205.16
5/15/2018	2229.97	2,208.93
5/16/2018	2257.59	2,217.45
5/17/2018	2240.18	2,218.89
5/18/2018	2176.08	2,221.54
5/19/2018	2241.68	2,229.42
5/20/2018	2273.9	2,237.09
5/21/2018	2247.64	2,238.15
5/22/2018	2260.97	2,242.58
5/23/2018	2200.82	2,234.47
5/24/2018	2208.3	2,229.91
5/25/2018	2212.13	2,235.06
5/26/2018	2177.24	2,225.86
5/27/2018	2584.32	2,270.20
5/28/2018	1767.82	2,201.66
5/29/2018	2123.66	2,182.04
5/30/2018	2216.58	2,184.29
5/31/2018	2160.63	2,177.48

HAVERHILL COKE COMPANY Coal Quantity & Quality Report 2018 2nd Quarter P901 Daily Coal Usage		
Date	**Coal Usage**	**Rolling 7 Day Average**
6/1/2018	2233.97	2,180.60
6/2/2018	2204.6	2,184.51
6/3/2018	2157.82	2,123.58
6/4/2018	2193.1	2,184.34
6/5/2018	2204.42	2,195.87
6/6/2018	2211.45	2,195.14
6/7/2018	2184.35	2,198.53
6/8/2018	2271.23	2,203.85
6/9/2018	2149.37	2,195.96
6/10/2018	2180.98	2,199.27
6/11/2018	2168.38	2,195.74
6/12/2018	2142.64	2,186.91
6/13/2018	2181.48	2,182.63
6/14/2018	2230.01	2,189.16
6/15/2018	2201.5	2,179.19
6/16/2018	2226.83	2,190.26
6/17/2018	2201.32	2,193.17
6/18/2018	2189.46	2,196.18
6/19/2018	2183.73	2,202.05
6/20/2018	1951.69	2,169.22
6/21/2018	2363.47	2,188.29
6/22/2018	1945.08	2,151.65
6/23/2018	2164.45	2,142.74
6/24/2018	2053.66	2,121.65
6/25/2018	2183.11	2,120.74
6/26/2018	1943.55	2,086.43
6/27/2018	2197.93	2,121.61
6/28/2018	2075.87	2,080.52
6/29/2018	2199.15	2,116.82
6/30/2018	2183.91	2,119.60

Attachment C-2

P902 COAL QUANTITY AND QUALITY REPORT

Attachment C-2 contains a summary of the coal usage and quality analysis data for the reporting period for P902. Per the reporting requirements of PTI P0119826 and PTI P0122398, permit conditions C.2.e)(21) and C.4.e)(21) state:

> *The permittee shall submit to the Portsmouth Local Air Agency quarterly reports concerning the quality and quantity of the coal burned in this emissions unit. These reports shall include the following information for the emissions unit for each day during the calendar quarter:*
>
> *i. The total quantity of wet coal charged (tons);*
> *ii. The average mercury content (percent) of the coal charged;*
> *iii. The average chlorine content (percent) of the coal charged; and*
> iv. *The average sulfur content (weight percent) of the coal charged.*

These reports are due by January 31, April 30, July 31, and October 31 of each year and shall cover the previous calendar quarters. Pursuant to these requirements, the data provided in Attachment C-2 include documentation of the total usage for the reporting period and the average mercury, chlorine, and sulfur content for the coal charged at P902. Please note that although permit conditions C.2.e)(21) and C.4.e)(21) require that the average mercury, chlorine, and sulfur content be reported for each day during the calendar quarter, the monitoring and recordkeeping provisions of permit conditions C.2.d)(37) and C.4.d)(37) only require a monthly coal analysis; therefore, the values for mercury, chlorine, and sulfur content reported in Attachment C-2 are monthly composites that represent the daily values.

HAVERHILL COKE COMPANY
Coal Quantity & Quality Report
2018 2nd Quarter
P902 Composition Data

Month	Chlorine Content % Composite	Mercury Content % Composite	Sulfur Content % Composite	Wet Tons	Rolling 12-Month Total
Apr-18	0.107%	0.000008%	1.00%	63,883	767,828
May-18	0.103%	0.000007%	0.96%	66,904	770,771
Jun-18	0.101%	0.000006%	0.92%	62,322	773,167

HAVERHILL COKE COMPANY Coal Quantity & Quality Report 2018 2nd Quarter P902 Daily Coal Usage		
Date	**Coal Usage**	**Rolling 7 Day Average**
4/1/2018	2,048.71	2061.87
4/2/2018	2,118.82	2057.70
4/3/2018	2,144.21	2048.73
4/4/2018	2,108.34	2061.29
4/5/2018	2,173.11	2104.87
4/6/2018	2,118.59	2115.29
4/7/2018	2,102.41	2116.31
4/8/2018	2,148.90	2130.63
4/9/2018	2,164.78	2137.19
4/10/2018	2,130.32	2135.21
4/11/2018	2,128.34	2138.06
4/12/2018	2,133.35	2132.38
4/13/2018	1,991.35	2114.21
4/14/2018	2,303.01	2142.86
4/15/2018	2,082.54	2133.38
4/16/2018	2,090.59	2122.79
4/17/2018	2,116.69	2120.84
4/18/2018	2,143.38	2122.99
4/19/2018	2,141.83	2124.20
4/20/2018	2,146.02	2146.29
4/21/2018	2,076.45	2113.93
4/22/2018	2,172.49	2126.78
4/23/2018	2,070.48	2123.91
4/24/2018	2,175.04	2132.24
4/25/2018	2,047.93	2118.61
4/26/2018	2,197.06	2126.50
4/27/2018	2,116.93	2122.34
4/28/2018	2,199.52	2139.92
4/29/2018	2,083.10	2127.15
4/30/2018	2,208.54	2146.87

HAVERHILL COKE COMPANY Coal Quantity & Quality Report 2018 2nd Quarter P902 Daily Coal Usage		
Date	**Coal Usage**	**Rolling 7 Day Average**
5/1/2018	2,084.05	2133.88
5/2/2018	2,214.67	2157.70
5/3/2018	2,036.57	2134.77
5/4/2018	2,194.41	2145.84
5/5/2018	2,163.84	2140.74
5/6/2018	2,178.71	2154.40
5/7/2018	2,153.25	2146.50
5/8/2018	2,046.54	2141.14
5/9/2018	2,247.42	2145.82
5/10/2018	2,046.81	2147.28
5/11/2018	2,234.27	2152.98
5/12/2018	2,121.89	2146.98
5/13/2018	2,178.26	2146.92
5/14/2018	2,146.70	2145.98
5/15/2018	2,205.25	2168.66
5/16/2018	2,217.01	2164.31
5/17/2018	2,172.39	2182.25
5/18/2018	2,121.62	2166.16
5/19/2018	2,186.87	2175.44
5/20/2018	2,222.28	2181.73
5/21/2018	2,172.07	2185.36
5/22/2018	2,225.05	2188.18
5/23/2018	2,142.58	2177.55
5/24/2018	2,167.11	2176.80
5/25/2018	2,205.77	2188.82
5/26/2018	2,144.07	2182.70
5/27/2018	2,164.56	2174.46
5/28/2018	2,134.10	2169.03
5/29/2018	2,159.14	2159.62
5/30/2018	2,068.42	2149.02
5/31/2018	2,148.00	2146.29

HAVERHILL COKE COMPANY Coal Quantity & Quality Report 2018 2nd Quarter P902 Daily Coal Usage		
Date	**Coal Usage**	**Rolling 7 Day Average**
6/1/2018	2,114.37	2133.24
6/2/2018	2,016.91	2115.07
6/3/2018	2,083.92	2103.55
6/4/2018	1,996.62	2083.91
6/5/2018	2,113.04	2077.33
6/6/2018	1,997.13	2067.14
6/7/2018	2,116.04	2062.58
6/8/2018	2,030.64	2050.61
6/9/2018	2,152.62	2070.00
6/10/2018	1,965.06	2053.02
6/11/2018	2,106.59	2068.73
6/12/2018	1,972.08	2048.59
6/13/2018	2,111.53	2064.94
6/14/2018	2,029.70	2052.60
6/15/2018	2,114.07	2064.52
6/16/2018	2,115.75	2059.25
6/17/2018	2,114.53	2080.61
6/18/2018	2,082.39	2077.15
6/19/2018	2,085.13	2093.30
6/20/2018	2,099.09	2091.52
6/21/2018	2,111.42	2103.20
6/22/2018	2,112.46	2102.97
6/23/2018	2,151.42	2108.06
6/24/2018	2,060.67	2100.37
6/25/2018	2,111.63	2104.55
6/26/2018	2,012.87	2094.22
6/27/2018	2,072.40	2090.41
6/28/2018	2,099.40	2088.69
6/29/2018	2,058.95	2081.05
6/30/2018	2,113.56	2075.64

Attachment D

P901 & P902 HRSG VENT STACK SUMMARY REPORTS

HAVERHILL COKE COMPANY
Rolling 12 Month Venting Summary
2018 2nd Quarter
P901 and P902

Stack #	April	May	June
1	0.2	0.2	0.2
2	0.2	0.2	0.2
3	0.7	0.7	0.6
4	0.5	0.5	0.5
5	0.2	0.3	0.2
6	0.2	0.3	0.3
7	0.4	0.4	0.4
8	0.4	0.4	0.4
9	0.5	0.3	0.3
10	0.3	0.3	0.3

Rolling 12 Month Totals		Limit
Rolling 12-Month Maintenance Hours - April	3.6	1920
Rolling 12-Month Maintenance Hours - May	3.4	1920
Rolling 12-Month Maintenance Hours - June	3.3	1920

Stack #1

Date & Time							Minutes		
Stack Open	**Stack Closed**	**Month**	**Year**	**Weather**	**Corrective Action**	**Initials**	**Vent Stack Open**	**Malfunction Bypass**	**CD Testing**
4/30/18 11:53	4/30/18 11:54	Apr	2018	Cloudy	Exercise Both Lids	DMS	1		
5/30/18 11:55	5/30/18 11:57	May	2018	Cloudy	Exercise Both Lids	DMS	2		

2018

4/30 - Stack Lid Exercises
5/30 - Stack Lid Exercises

Rolling 12-Month Maintenance Hours - April	0.2
Rolling 12-Month Maintenance Hours - May	0.2
Rolling 12-Month Maintenance Hours - June	0.2

Stack #2

Date & Time							Minutes		
Stack Open	**Stack Closed**	**Month**	**Year**	**Weather**	**Corrective Action**	**Initials**	**Vent Stack Open**	**Malfunction Bypass**	**CD Testing**
4/30/18 12:12	4/30/18 12:13	Apr	2018	Cloudy	Exercise Both Lids	DMS	1		
5/30/18 12:01	5/30/18 12:02	May	2018	Cloudy	Exercise Both Lids	DMS	1		
6/14/18 9:18	6/14/18 9:34	Jun	2018	Cloudy	Stack Lid Coil Failure	DMS			16

2018

4/30 - Stack Lid Exercises
5/30 - Stack Lid Exercises
6/14 - Stack Lid Coil Malfunction

Rolling 12-Month Maintenance Hours - April	0.2
Rolling 12-Month Maintenance Hours - May	0.2
Rolling 12-Month Maintenance Hours - June	0.2

Stack #3

Date & Time							Minutes		
Stack Open	**Stack Closed**	**Month**	**Year**	**Weather**	**Corrective Action**	**Initials**	**Vent Stack Open**	**Malfunction Bypass**	**CD Testing**
4/30/18 12:18	4/30/18 12:22	Apr	2018	Cloudy	Exercise Both Lids	DMS	4		
5/30/18 12:04	5/30/18 12:05	May	2018	Cloudy	Exercise Both Lids	DMS	1		

2018

4/30 - Stack Lid Exercises

5/30 - Stack Lid Exercises

Rolling 12-Month Maintenance Hours - April	0.7
Rolling 12-Month Maintenance Hours - May	0.7
Rolling 12-Month Maintenance Hours - June	0.6

Stack #4

Date & Time							Minutes		
Stack Open	**Stack Closed**	**Month**	**Year**	**Weather**	**Corrective Action**	**Initials**	**Vent Stack Open**	**Malfunction Bypass**	**CD Testing**
4/30/18 13:02	4/30/18 13:03	Apr	2018	Cloudy	Exercise Both Lids	DMS	1		
5/30/18 12:07	5/30/18 12:08	May	2018	Cloudy	Exercise Both Lids	DMS	1		

2018

4/30 - Stack Lid Exercises
5/30 - Stack Lid Exercises

Rolling 12-Month Maintenance Hours - April	0.5
Rolling 12-Month Maintenance Hours - May	0.5
Rolling 12-Month Maintenance Hours - June	0.5

Stack #5

Date & Time							Minutes		
Stack Open	**Stack Closed**	**Month**	**Year**	**Weather**	**Corrective Action**	**Initials**	**Vent Stack Open**	**Malfunction Bypass**	**CD Testing**
4/30/18 13:09	4/30/18 13:10	Apr	2018	Cloudy	Exercise Both Lids	DMS	1		0
5/30/18 12:11	5/30/18 12:12	May	2018	Cloudy	Exercise Both Lids	DMS	1		0

2018

4/30 - Stack Lid Exercises
5/30 - Stack Lid Exercises

Rolling 12-Month Maintenance Hours - April	0.2
Rolling 12-Month Maintenance Hours - May	0.3
Rolling 12-Month Maintenance Hours - June	0.2

Stack #6

Date & Time							Minutes		
Stack Open	**Stack Closed**	**Month**	**Year**	**Weather**	**Corrective Action**	**Initials**	**Vent Stack Open**	**Malfunction Bypass**	**CD Testing**
4/30/18 13:15	4/30/18 13:17	Apr	2018	Cloudy	Exercise Both Lids	DMS	2		
5/24/18 10:19	5/24/18 10:22	May	2018	Cloudy	Deviation	DMS	3		
6/3/18 18:06	6/30/18 23:59	Jun	2018	Cloudy	FGD Outage	DMS			39233

2018

4/30 - Stack Lid Exercises

5/24 - Deviation

6/3 - Scheduled FGD Maintenance (continued into July)

Rolling 12-Month Maintenance Hours - April	0.2
Rolling 12-Month Maintenance Hours - May	0.3
Rolling 12-Month Maintenance Hours - June	0.3

Stack #7

Date & Time							Minutes		
Stack Open	**Stack Closed**	**Month**	**Year**	**Weather**	**Corrective Action**	**Initials**	**Vent Stack Open**	**Malfunction Bypass**	**CD Testing**
4/30/18 13:18	4/30/18 13:20	Apr	2018	Cloudy	Exercise Both Lids	DMS	2		
5/24/18 10:19	5/24/18 10:20	May	2018	Cloudy	Deviation	DMS	1		
6/3/18 18:34	6/30/18 23:59	Jun	2018	Cloudy	FGD Outage	DMS			39205

2018

4/30 - Stack Lid Exercises

5/24 - Deviation

6/3 - Scheduled FGD Maintenance (continued into July)

Rolling 12-Month Maintenance Hours - April	0.4
Rolling 12-Month Maintenance Hours - May	0.4
Rolling 12-Month Maintenance Hours - June	0.4

Stack #8

Date & Time							Minutes		
Stack Open	**Stack Closed**	**Month**	**Year**	**Weather**	**Corrective Action**	**Initials**	**Vent Stack Open**	**Malfunction Bypass**	**CD Testing**
4/30/18 13:22	4/30/18 13:24	Apr	2018	Cloudy	Exercise Both Lids	DMS	2		
5/24/18 10:19	5/24/18 10:21	May	2018	Cloudy	Deviation	DMS	2		
6/3/18 18:45	6/30/18 23:59	Jun	2018	Cloudy	FGD Outage	DMS			39194

2018

4/30 - Stack Lid Exercises
5/24 - Deviation
6/3 - Scheduled FGD Maintenance (continued into July)

Rolling 12-Month Maintenance Hours - April	0.4
Rolling 12-Month Maintenance Hours - May	0.4
Rolling 12-Month Maintenance Hours - June	0.4

Stack #9

Date & Time							Minutes		
Stack Open	Stack Closed	Month	Year	Weather	Corrective Action	Initials	Vent Stack Open	Malfunction Bypass	CD Testing
4/30/18 13:27	4/30/18 13:28	Apr	2018	Cloudy	Exercise Both Lids	DMS	1		
5/21/18 8:39	5/21/18 8:40	May	2018	Cloudy	High ID Fan Amps	DMS		1	
5/21/18 13:20	5/21/18 13:48	May	2018	Cloudy	High ID Fan Amps	DMS		28	
5/21/18 13:49	5/21/18 13:50	May	2018	Cloudy	High ID Fan Amps	DMS		1	
5/21/18 14:26	5/21/18 14:27	May	2018	Cloudy	High ID Fan Amps	DMS		1	
5/21/18 14:51	5/21/18 14:53	May	2018	Cloudy	High ID Fan Amps	DMS		2	
5/21/18 15:13	5/21/18 15:14	May	2018	Cloudy	High ID Fan Amps	DMS		1	
5/21/18 18:52	5/21/18 18:53	May	2018	Cloudy	High ID Fan Amps	DMS		1	
5/21/18 19:01	5/21/18 19:02	May	2018	Cloudy	High ID Fan Amps	DMS		1	
5/21/18 19:03	5/21/18 19:04	May	2018	Cloudy	High ID Fan Amps	DMS		1	
5/21/18 19:39	5/21/18 19:41	May	2018	Cloudy	High ID Fan Amps	DMS		2	
5/24/18 10:19	5/24/18 10:20	May	2018	Cloudy	Deviation	DMS	1		
6/3/18 18:52	6/30/18 23:59	Jun	2018	Cloudy	FGD Outage	DMS			39187

2018

4/30 - Stack Lid Exercises
5/21 - High ID Fan Amps
5/24 - Deviation
6/3 - Scheduled FGD Maintenance (continued into July)

Rolling 12-Month Maintenance Hours - April	0.5
Rolling 12-Month Maintenance Hours - May	0.3
Rolling 12-Month Maintenance Hours - June	0.3

Stack #10

Date & Time							Minutes		
Stack Open	**Stack Closed**	**Month**	**Year**	**Weather**	**Corrective Action**	**Initials**	**Vent Stack Open**	**Malfunction Bypass**	**CD Testing**
4/30/18 13:31	4/30/18 13:33	Apr	2018	Cloudy	Exercise Both Lids	DMS	2		
5/24/18 10:19	5/24/18 10:21	May	2018	Cloudy	Deviation	DMS	2		
6/3/18 18:25	6/30/18 23:59	Jun	2018	Cloudy	FGD Outage	DMS			39214

2018

4/30 - Stack Lid Exercises
5/24 - Deviation
6/3 - Scheduled FGD Maintenance (continued into July)

Rolling 12-Month Maintenance Hours - April	0.3
Rolling 12-Month Maintenance Hours - May	0.3
Rolling 12-Month Maintenance Hours - June	0.3

Quarterly Excess Emissions and Monitoring System Performance Report

for

Emission Units P901 and P902

2nd Quarter 2018 Reporting Period

Prepared for:
Haverhill Coke Company, LLC
Franklin Furnace, Ohio

Prepared by:
AECOM
Oak Ridge, Tennessee

July 2018

P901 MAIN STACK
SO_2 CONTINUOUS EMISSIONS MONITORING SYSTEM
EXCESS EMISSIONS AND MONITORING SYSTEM PERFORMANCE REPORT

FGD SYSTEM DOWNTIME SUMMARY REPORT

HAVERHILL COKE COMPANY, OH
Reporting Period: 2nd Quarter of 2018

Facility ID: 0773000182
Emissions Unit ID: P901
Emissions Unit: Waste Gas Stack

Commencement of FGD System Downtime	Completion of FGD System Downtime	FGD System Downtime Duration (hours)	Reasons for FGD System Downtime
No FGD system downtime during this reporting period			
Total FGD System Downtime for the quarter		**0**	**hours**

Emission Unit Operating Time Summary

Start date/time of reporting period =	4/1/2018 0:00
End date/time of reporting period =	6/30/2018 23:59
Total clock hours in the reporting period =	2,184 hours
Total Emission Unit operating time in the reporting period =	2,184 hours
Emission Unit operating time during FGD Bypass =	*0 hours*
Emission Unit operating time during normal operations =	*2,184 hours*

CEMS Report for Emission Unit P901

EMISSION EXCEEDANCES SUMMARY REPORT
HAVERHILL COKE COMPANY, OH
Reporting Period: 2nd Quarter of 2018

Facility ID: 0773000182
Emissions Unit ID: P901
Emissions Unit: Waste Gas Stack

SO_2 Emission Limits :
192.0 lb/hr on a 3-hr block average basis
700.8 tpy on a rolling 12-month summation basis

Date/Time of Commencement	Date/Time of Completion	Duration of Exceedance (hours)	Pollutant	Magnitude (lb/hr)	Reason/s for the Excess Emissions	Corrective action/s taken, or measures taken to minimize emissions	Excess Emissions caused by Malfunction	Malfunction reported per OAC 3745-15-06
4/9/18 0:00	4/9/18 2:59	3.0	SO2	210.7	On April 9, 2018, a malfunction occurred on the P901 SDA system when slurry flow was lost to the atomizers.	Operations personnel switched to “B” slurry pump, restoring slurry flow. Operations personnel backflushed “A” slurry pump and the associated piping to remove material buildup and also changed out the strainers, allowing “A” slurry pump to be returned to service.	YES	YES
4/22/18 15:00	4/22/18 17:59	3.0	SO2	282.1	On April 22, 2018, a malfunction occurred on the P901 SDA system when slurry flow was lost to the atomizers.	Operations personnel backflushed “B” slurry pump and the associated piping to remove material buildup and also checked the strainers. Still unable to operate “B” slurry pump, operations personnel switched to “A” slurry pump, restoring slurry flow. Maintenance personnel were then dispatched and found that the belts on “B” slurry pump had become loose. Maintenance personnel tightened the belts and returned “B” slurry pump to service.	YES	YES
5/28/18 3:00	5/28/18 5:59	3.0	SO2	192.1	On May 28, 2018, a malfunction occurred on the P901 SDA system when slurry flow was lost to the atomizers. Operations personnel immediately responded and discovered the line associated with “B” atomizer had become plugged.	Operations personnel reestablished slurry flow on “B” atomizer by cycling the valve open and closed. Slurry flow during this time was not sufficient to remove SO2 from the gas stream and an exceedance of the 3-hour block SO2 limit occurred. The 3:00 3-hour block average SO2 emissions are estimated to be 192.1 lb/hr.	YES	YES

NOTES:

When measured SO2 values exceeded the normal measurement range (0 - 170 ppm) of the SO2 analyzer (e.g. during FGD malfunction events), data was substituted using a high-range reading from the SO2 analyzer (0 - 800 ppm). Although, the high-range is not strictly quality assured per 40 CFR 60 Appendix F procedures, the high-range is periodically calibrated using an appropriate calibration gas. Regardless, the high-range data is believed to be a very good estimate of the SO2 concentration in the stack gas during full-scale exceedances of the normal operating range of the SO2 analyzer.

CEMS Report for Emission Unit P901

SO2 EMISSIONS SUMMARY REPORT
HAVERHILL COKE COMPANY, OH
Reporting Period: 2nd Quarter of 2018

Facility ID: 0773000182
Emissions Unit ID: P901
Emissions Unit: Waste Gas Stack

Parameter	Units	April	May	June
Total clock hours	hours	720	744	720
Emission Unit operating time during FGD downtime	hours	0	0	0
Emission Unit operating time during normal operations	hours	720	744	720
CEMS online time during normal operations	hours	720	744	719
SO_2 emissions during normal operations (based on online CEMS data)	*lbs*	*119,088*	*114,735*	*109,771*
Ave. SO_2 emissions during normal operations	lb/hr	165.4	154.2	152.7
CEMS downtime during normal operations	hours	0	0	1
Est. SO_2 emissions during CEMS downtime	*lbs*	*0*	*0*	*153*
Est. SO_2 emissions during FGD system downtime [a]	*lbs*	*0*	*0*	*0*
TOTAL estimated SO_2 emissions	*lbs*	*119,088*	*114,735*	*109,924*
TOTAL estimated SO_2 emissions	**tons**	**59.5**	**57.4**	**55.0**

Month	Year	Monthly SO_2 Emissions, tons	Rolling 12-month SO_2 Emissions, tpy
July	2017	59.7	640.6
August	2017	59.0	652.9
September	2017	58.5	660.7
October	2017	58.8	667.2
November	2017	53.5	670.0
December	2017	54.9	671.0
January	2018	60.1	677.9
February	2018	56.3	682.8
March	2018	15.4	643.9
April	2018	59.5	651.8
May	2018	57.4	651.7
June	2018	55.0	648.1

NOTES:
When measured SO2 values exceeded the normal measurement range (0 - 170 ppm) of the SO2 analyzer (e.g. during FGD malfunction events), data was substituted using a high-range reading from the SO2 analyzer (0 - 800 ppm). Although, the high-range is not strictly quality assured per 40 CFR 60 Appendix F procedures, the high-range is periodically calibrated using an appropriate calibration gas. Regardless, the high-range data is believed to be a very good estimate of the SO2 concentration in the stack gas during full-scale exceedances of the normal operating range of the SO2 analyzer.

[a] Emissions during OEPA approved outages are not included in this estimate

CEMS Report for Emission Unit P901

CEMS PERFORMANCE SUMMARY REPORT

HAVERHILL COKE COMPANY, OH

Reporting Period: 2nd Quarter of 2018

Facility ID: 0773000182
Emissions Unit ID: P901
Emissions Unit: Waste Gas Stack

Performance Summary	SO2 lb/hr
1. Total clock time in reporting period=	2,184 hr
2. Emission Unit operating time during FGD bypass =	0 hr
3. Emission Unit operating time during normal operations =	**2,184 hr**
4. CEMS downtime[1] in reporting period due to:	
a. Monitor equipment malfunctions =	0 hr
b. Non-monitor equipment malfunctions =	0 hr
c. Quality assurance calibration =	0 hr
d. Other known causes =	1 hr
e. Unknown causes =	0 hr
5. Total CEMS downtime[1] =	1 hr
6. Percent Monitor Downtime[1] =	0.0%
7. Percent Monitor Online[1] =	100.0%
8. Percent Monitor Downtime[1] (excluding QA calibration) =	**0.0%**
9. Percent Monitor Online[1] (excluding QA calibration) =	**100.0%**

[1] Reported CEMS downtimes and online times are during normal operating conditions of the Emission Unit, when the FGD system is online and the flue gases are exhausted through the main stack.

CEMS Report for Emission Unit P901

CEMS INSTRUMENT DOWNTIME REPORT

HAVERHILL COKE COMPANY, OH
Reporting Period: 2nd Quarter of 2018

Facility ID: 0773000182
Emissions Unit ID: P901
Emissions Unit: Waste Gas Stack

Date	Time of Commencement	Duration of Downtime (hours)	Parameter	Reasons for Downtime	Nature of system repairs and adjustments
06/22/18	2:00	1.0	SO2 lb/hr	Other known causes	Temporary power glitch. No corrective actions necessary

Note on CEMS downtime

Following the guidance in 40 CFR 60.7(c), Figure 1 - Summary Report, CEMS downtime for SO2 is reported in hours and not minutes.

Invalid or Missing 1-minute average data

This reporting period had a total of 2,720 1-minute average data points (for the parameter SO2 lb/hr) that were not representative of process emissions or missing due to polling problems. A majority of the non-representative 1-minute average data was caused by automated hourly probe blowbacks and daily calibration checks of the CEM system. A majority of these invalid 1-minute data points did not result in any CEMS downtime because, valid 1-hour average data, as described above, was collected during this time.

At PLAA's request, HCC is providing the following summary of CEMS downtime in Minutes. The data presented below is not meant to be used for comparison against any minimum data capture requirements for the CEMS since valid hourly averages can be computed for compliance purposes, despite having several minutes of downtime in an hour.

1. Total clock time in reporting period =	131,040 min
2. Emission Unit operating time during FGD bypass =	0 min
3. Emission Unit operating time during normal operations =	131,040 min
4. Total CEMS downtime during normal operations =	2,720 min
4a. Downtime due to QA calibration =	1,246 min
4b. Downtime due to Other known causes =	1,474 min

P902 MAIN STACK
SO_2 CONTINUOUS EMISSIONS MONITORING SYSTEM
EXCESS EMISSIONS AND MONITORING SYSTEM PERFORMANCE REPORT

CEMS Report for Emission Unit P902

FGD System Downtime SUMMARY REPORT

HAVERHILL COKE COMPANY, OH

Reporting Period: 2nd Quarter of 2018

Facility ID: 0773000182
Emissions Unit ID: P902
Emissions Unit: Waste Gas Stack

Commencement of FGD System Downtime	Completion of FGD System Downtime	FGD System Downtime Duration (hours)	Reasons for FGD System Downtime
6/3/2018 20:00	6/30/2018 23:59	652	OEPA approved outage for biennial FGD system maintenance
Total FGD System Downtime for the quarter		**652**	**hours**

Emission Unit Operating Time Summary

Start date/time of reporting period =	4/1/2018 0:00
End date/time of reporting period =	6/30/2018 23:59
Total clock hours in the reporting period =	2,184 hours
Total Emission Unit operating time in the reporting period =	2,184 hours
Emission Unit operating time during FGD Bypass =	*652 hours*
Emission Unit operating time during normal operations =	*1,532 hours*

CEMS Report for Emission Unit P902

EMISSION EXCEEDANCES SUMMARY REPORT
HAVERHILL COKE COMPANY, OH
Reporting Period: 2nd Quarter of 2018

Facility ID: 0773000182
Emissions Unit ID: P902
Emissions Unit: Waste Gas Stack

SO_2 Emission Limits :
192.0 lb/hr on a 3-hr block average basis
700.8 tpy on a rolling 12-month summation basis

Date/Time of Commencement	Date/Time of Completion	Duration of Exceedance (hours)	Pollutant	Magnitude (lb/hr)	Reason/s for the Excess Emissions	Corrective action/s taken, or measures taken to minimize emissions	Excess Emissions caused by Malfunction	Malfunction reported per OAC 3745-15-06
4/13/18 6:00	4/13/18 8:59	3	SO2	196.4	On April 13, 2018, a malfunction occurred on the P902 SDA system when slurry flow was lost to the atomizers.	Operations personnel immediately responded and found that the strainers at the outlet of "B" slurry pump had become plugged. Operations personnel backflushed "B" slurry pump and the associated piping to remove material buildup and also changed out the strainers, restoring slurry flow.	YES	YES
5/7/18 21:00	5/7/18 23:59	3	SO2	312.6	On May 8, 2018, a malfunction occurred on the P902 SDA system. Maintenance personnel were dispatched and found that "A" atomizer had tripped on high bearing temperature after the dilution water line became disconnected.	While swapping out "A" atomizer, "B" atomizer tripped due to a VFD fault. Operations personnel responded, but were unable to reset the fault. "B" atomizer was removed from service until another spare could be brought in.	YES	YES

NOTES:

When measured SO2 values exceeded the normal measurement range (0 - 170 ppm) of the SO2 analyzer (e.g. during FGD malfunction events), data was substituted using a high-range reading from the SO2 analyzer (0 - 800 ppm). Although, the high-range is not strictly quality assured per 40 CFR 60 Appendix F procedures, the high-range is periodically calibrated using an appropriate calibration gas. Regardless, the high-range data is believed to be a very good estimate of the SO2 concentration in the stack gas during full-scale exceedances of the normal operating range of the SO2 analyzer.

CEMS Report for Emission Unit P902

SO2 EMISSIONS SUMMARY REPORT
HAVERHILL COKE COMPANY, OH
Reporting Period: 2nd Quarter of 2018

Facility ID: 0773000182
Emissions Unit ID: P902
Emissions Unit: Waste Gas Stack

Parameter	Units	April	May	June
Total clock hours	hours	720	744	720
Emission Unit operating time during FGD bypass	hours	0	0	652
Emission Unit operating time during normal operations	hours	720	744	68
CEMS online time during normal operations	hours	720	727	68
SO_2 emissions during normal operations (based on online CEMS data)	*lbs*	*118,883*	*112,912*	*11,183*
Ave. SO_2 emissions during normal operations	lb/hr	165.1	155.3	164.5
CEMS downtime during normal operations	hours	0	17	0
Est. SO_2 emissions during CEMS downtime	*lbs*	*0*	*2,640*	*0*
Est. SO_2 emissions during FGD system downtime [a]	*lbs*	*0*	*0*	*0*
TOTAL estimated SO_2 emissions	*lbs*	*118,883*	*115,552*	*11,183*
TOTAL estimated SO_2 emissions	**tons**	**59.4**	**57.8**	**5.6**

Month	Year	Monthly SO_2 Emissions, tons	Rolling 12-month SO_2 Emissions, tpy
July	2017	56.3	578.0
August	2017	57.4	583.7
September	2017	54.9	616.1
October	2017	57.0	632.3
November	2017	55.9	638.3
December	2017	58.3	654.2
January	2018	58.5	663.9
February	2018	54.0	668.5
March	2018	59.6	673.5
April	2018	59.4	680.4
May	2018	57.8	683.3
June	2018	5.6	634.6

NOTES:
When measured SO2 values exceeded the normal measurement range (0 - 170 ppm) of the SO2 analyzer (e.g. during FGD malfunction events), data was substituted using a high-range reading from the SO2 analyzer (0 - 800 ppm). Although, the high-range is not strictly quality assured per 40 CFR 60 Appendix F procedures, the high-range is periodically calibrated using an appropriate calibration gas. Regardless, the high-range data is believed to be a very good estimate of the SO2 concentration in the stack gas during full-scale exceedances of the normal operating range of the SO2 analyzer.

[a] Emissions during OEPA approved outages are not included in this estimate

CEMS Report for Emission Unit P902

CEMS PERFORMANCE SUMMARY REPORT

HAVERHILL COKE COMPANY, OH

Reporting Period: 2nd Quarter of 2018

Facility ID: 0773000182
Emissions Unit ID: P902
Emissions Unit: Waste Gas Stack

Performance Summary	SO2 lb/hr
1. Total clock time in reporting period=	2,184 hr
2. Emission Unit operating time during FGD bypass =	652 hr
3. Emission Unit operating time during normal operations =	**1,532 hr**
4. CEMS downtime[1] in reporting period due to:	
a. Monitor equipment malfunctions =	14 hr
b. Non-monitor equipment malfunctions =	0 hr
c. Quality assurance calibration =	0 hr
d. Other known causes =	3 hr
e. Unknown causes =	0 hr
5. Total CEMS downtime[1] =	17 hr
6. Percent Monitor Downtime[1] =	1.1%
7. Percent Monitor Online[1] =	98.9%
8. Percent Monitor Downtime[1] (excluding QA calibration) =	**1.1%**
9. Percent Monitor Online[1] (excluding QA calibration) =	**98.9%**

[1] Reported CEMS downtimes and online times are during normal operating conditions of the Emission Unit, when the FGD system is online and the flue gases are exhausted through the main stack.

CEMS Report for Emission Unit P902

CEMS INSTRUMENT DOWNTIME REPORT

HAVERHILL COKE COMPANY, OH
Reporting Period: 2nd Quarter of 2018

Facility ID: 0773000182
Emissions Unit ID: P902
Emissions Unit: Waste Gas Stack

Date	Time of Commencement	Duration of Downtime (hours)	Parameter	Reasons for Downtime	Nature of system repairs and adjustments
05/28/18	17:00	14	SO2 lb/hr	Monitor equipment malfunction	Wet O2 monitor on the stack malfunctioned during severe weather conditions in the area. Cycled power to the instrument and recalibrated the analyzer.
05/30/18	13:00	3	SO2 lb/hr	Other known causes	Replaced Wet O2 cell and recalibrated the instrument

Note on CEMS downtime

Following the guidance in 40 CFR 60.7(c), Figure 1 - Summary Report, CEMS downtime for SO2 is reported in hours and not minutes.

CEMS downtime was reported for hours in which:
(1) A valid hourly average as defined in 40 CFR 60.13(h)(2)(iii) was not recorded by the CEMS, and
(2) When the monitoring system was out-of-control as defined in 40 CFR 60 Appendix F 4.3.1 and 40 CFR 60 Appendix F 5.2.1.

Invalid or Missing 1-minute average data

This reporting period had a total of 3,495 1-minute average data points (for the parameter SO2 lb/hr) that were not representative of process emissions or missing due to polling problems. A majority of the non-representative 1-minute average data was caused by automated hourly probe blowbacks and daily calibration checks of the CEM system. A majority of these invalid 1-minute data points did not result in any CEMS downtime because, valid 1-hour average data, as described above, was collected during this time.

At PLAA's request, HCC is providing the following summary of CEMS downtime in Minutes. The data presented below is not meant to be used for comparison against any minimum data capture requirements for the CEMS since valid hourly averages can be computed for compliance purposes, despite having several minutes of downtime in an hour.

1. Total clock time in reporting period = 131,040 min
2. Emission Unit operating time during FGD bypass = 39,204 min
3. Emission Unit operating time during normal operations = 91,836 min
4. Total CEMS downtime during normal operations = 3,495 min
    - 4a. Downtime due to QA calibration = 1,180 min
    - 4b. Downtime due to Other known causes = 2,315 min

P902 MAIN STACK
MERCURY SORBENT TRAP MONITORING SYSTEM
EXCESS EMISSIONS AND MONITORING SYSTEM PERFORMANCE REPORT

Sorbent Trap Monitoring System Report for Emission Unit P902

FGD SYSTEM DOWNTIME SUMMARY REPORT

HAVERHILL COKE COMPANY, OH

Reporting Period: 2nd Quarter of 2018

Facility ID: 0773000182
Emissions Unit ID: P902
Emissions Unit: Waste Gas Stack

Commencement of FGD System Downtime	Completion of FGD System Downtime	FGD System Downtime Duration (hours)	Reasons for FGD System Downtime
6/3/2018 20:00	6/30/2018 23:59	652	OEPA approved outage for biennial FGD system maintenance
Total FGD System Downtime for the quarter =		**652**	**hours**

Emission Unit Operating Time Summary

Start date/time of reporting period =	4/1/2018 0:00
End date/time of reporting period =	6/30/2018 23:59
Total clock hours in the reporting period =	2,184 hours
Total Emission Unit operating time in the reporting period =	2,184 hours
Emission Unit operating time during FGD Bypass =	*652 hours*
Emission Unit operating time during normal operations =	*1,532 hours*

Sorbent Trap Monitoring System Report for Emission Unit P902

MERCURY EMISSION EXCEEDANCES SUMMARY REPORT

HAVERHILL COKE COMPANY, OH
Reporting Period: 2nd Quarter of 2018

Facility ID: 0773000182
Emissions Unit ID: P902
Emissions Unit: Waste Gas Stack

Mercury Emission Limits :
0.01 lb/hr as a one-month average
55.5 lb/rolling, 12-month summation

Date/Time of Commencement	Date/Time of Completion	Duration of Exceedance (hours)	Pollutant	Magnitude (lb/hr)	Reason/s for the Excess Emissions	Corrective action/s taken, or measures taken to minimize emissions
No excess emissions in this reporting period						

Sorbent Trap Monitoring System Report for Emission Unit P902

MERCURY EMISSIONS SUMMARY REPORT

HAVERHILL COKE COMPANY, OH

Reporting Period: 2nd Quarter of 2018

Facility ID: 0773000182
Emissions Unit ID: P902
Emissions Unit: Waste Gas Stack

Parameter	Units	April	May	June
Total clock hours	hours	720	744	720
Emission Unit operating time during FGD bypass	hours	0	0	652
Emission Unit operating time during normal operations	hours	720	744	68
Valid STMS hours	hours	720	727	68
Mercury emissions during normal operations (based on valid STMS hours)	*lbs*	*1.22*	*1.56*	*0.26*
Avg. Hg emission rate during valid STMS hours	lb/hr	0.0017	0.0021	0.0039
STMS downtime hours	hours	0	0	0
STMS invalid hours[1]	hours	0	17	0
Est. Hg emissions during STMS downtime/invalid hours[2]	*lbs*	*0.000*	*0.036*	*0.000*
Est. Hg emissions during FGD system downtime[4]	*lbs*	*0.000*	*0.000*	*0.000*
TOTAL estimated mercury emissions[3]	**lbs**	**1.22**	**1.59**	**0.26**

Month	Year	Monthly Mercury Emissions, lbs	Rolling 12-month Mercury Emissions, lbs
July	2017	1.89	18.7
August	2017	2.23	19.1
September	2017	1.69	19.7
October	2017	1.66	20.1
November	2017	1.47	19.9
December	2017	1.32	19.8
January	2018	1.08	19.4
February	2018	1.33	19.2
March	2018	0.74	18.3
April	2018	1.22	18.1
May	2018	1.59	18.0
June	2018	0.26	16.5

STMS = Sorbent Trap Monitoring System

[1] Invalid hours include periods when the STMS was operating but the analytical results were deemed invalid or other constituent parameters (stack flow rate and moisture) were invalid and prevented calculation of Hg mass emission rates.

[2] Estimated emissions during invalid hours in each calendar month were based on the average mercury emission rates in those months.

[3] The carbon injection rate was approximately 2 lb/MMacf in the reporting period.

[4] Emissions during OEPA approved outages are not included in this estimate.

Comments on sorbent trap analysis

None

SORBENT TRAP MONITORING SYSTEM PERFORMANCE SUMMARY REPORT

HAVERHILL COKE COMPANY, OH
Reporting Period: 2nd Quarter of 2018

Facility ID: 0773000182
Emissions Unit ID: P902
Emissions Unit: Waste Gas Stack

Performance Summary	
1. Total clock time in reporting period=	2,184 hr
2. Emission Unit operating time during FGD bypass =	652 hr
3. Emission Unit operating time during normal operations =	**1,532 hr**
4. CEMS downtime[1] in reporting period due to:	
a. Monitor equipment malfunctions =	0 hr
b. Non-monitor equipment malfunctions =	0 hr
c. Quality assurance calibration =	0 hr
d. Other known causes =	0 hr
e. Unknown causes =	0 hr
5. Total CEMS downtime[1] =	0 hr
6. Percent Monitor Downtime[1] =	0.0%
7. Percent Monitor Online[1] =	100.0%
8. Percent Monitor Downtime[1] (excluding QA calibration) =	**0.0%**
9. Percent Monitor Online[1] (excluding QA calibration) =	**100.0%**

[1] Reported CEMS downtimes and online times are during normal operating conditions of the Emission Unit, when the FGD system is online and the flue gases are exhausted through the main stack.

SORBENT TRAP MONITORING SYSTEM DOWNTIME REPORT

HAVERHILL COKE COMPANY, OH

Reporting Period: 2nd Quarter of 2018

Facility ID: 0773000182
Emissions Unit ID: P902
Emissions Unit: Waste Gas Stack

Date	Time of Commencement	Duration of Downtime (hours)	Reasons for Downtime	Nature of system repairs and adjustments
No monitoring system downtime in this reporting period				

QUARTERLY QA/QC ASSESSMENTS

(No Cylinder Gas Audits this quarter. RATA testing was conducted on both units and the test reports were submitted to the OEPA on June 26, 2018)

Quarterly & Semi-Annual Deviation rpt. 165978
Haverhill Coke Company LLC
0773000182
July 26, 2018

If I am claiming any information in this submission is a trade secret, I hereby swear or affirm that the trade secret request meets the requirements of Ohio Administrative Code 3745-49-03(B) and that the justification submitted with the trade secret request sets forth the basis for claiming that the information should be considered a trade secret as defined in Ohio Administrative Code 3745-49-02(T).

a) I am a responsible official as defined in OAC 3745-77-01(II) and, as specified in OAC 3745-77-03(D), based on information and belief formed after reasonable inquiry, I hereby affirm that all statements and information in this transmittal are true, accurate and complete; OR
b) I am a designated representative as defined in paragraph 26 of Section 4C2 of the Clean Air Act, and as per OAC 3745-103-06, I certify under penalty of law that I have personally examined, and am familiar with, the statements and information submitted in this document and all its attachments. Based on my inquiry of those individuals with primary responsibility for obtaining the information, I certify that the statements and information are to the best of my knowledge and belief true, accurate, and complete. I am aware that there are significant penalties for submitting false statements and information or omitting required statements and information, including the possibility of fine or imprisonment. I am authorized to make this submission on behalf of the owners and operators of the source or units for which the submission is made.

Signee Name (please print): James G. Skipworth Title: General Mgr.

Signee Signature: James G. Skipworth Date: 7/26/2018

Haverhill Coke Company
2446 Gallia Pike
Franklin Furnace, Ohio 45629

July 26, 2018

Ms. Cindy Charles
Ohio Environmental Protection Agency
Portsmouth Local Air Agency
605 Washington Street, Third Floor
Portsmouth, Ohio 45662

40 CFR 63, Subparts L and CCCCC
2018 First Semi-Annual Compliance Certification

Dear Ms. Charles:

Haverhill Coke Company (HCC) operates a coke production facility located in Franklin Furnace, Ohio. The facility is subject to the National Emission Standards for Coke Oven Batteries (MACT L) and the National Emissions Standards for Hazardous Air Pollutants for Coke Ovens: Pushing, Quenching, and Battery Stacks (MACT CCCCC).

Per the applicable reporting and recordkeeping provisions of 40 CFR 63.311 (MACT L) and 40 CFR 63.7341 (MACT CCCCC), HCC is providing the following information for the semi-annual compliance period of January 1, 2018 through June 30, 2018.

- **HCC experienced two (2) malfunctions that must be reported in accordance with 40 CFR 63.311(d)(2).**
  - On January 10, 2018, at 3:52 pm, a malfunction occurred, which caused the P902 PCM to shut down including the baghouse while charging oven 199. Operations personnel immediately responded and found that the breaker associated with the E-stop control cab was faulted. Operations reset the breaker and restarted the PCM baghouse. Maintenance personnel were dispatched and found that the retract proximity switch on the leveler had shorted out, which tripped the breaker. Maintenance personnel replaced the switch. The PCM baghouse was offline for approximately 0.03 hours. The breakdown of the air pollution control equipment did not cause the emission of air contaminants in excess of the applicable emission limit. HCC is reporting this malfunction under the requirement for operating the P901 PCM Baghouse within the specified pressure drop range of 3 – 12 inches of water. Please note that this event has been reported to PLAA in accordance with 40 CFR 63.310(e).
  - On May 15, 2018, a malfunction occurred on the P902 PCM2 baghouse. Around 12:30 pm, Haverhill personnel noted opacity coming from the stack and conducted a Method 9. Opacity during the event was estimated to be 12.5%. The opacity exceedance was caused by damaged bags in the baghouse. Maintenance personnel replaced 16 bags in the PCM baghouse. The PCM baghouse DP was within the specified range of 3-12 inwc during this event. Please note that this event has been reported to PLAA in accordance with 40 CFR 63.310(e).
- **HCC experienced one (1) deviation from 40 CFR 63.306 and 40 CFR 63.303(b)(3).**

- On April 13, 2018, the P902 PCM shut down on high temperature while charging coal to oven 186. Operations personnel immediately responded and restarted the baghouse. Upon further investigation, HCC personnel found that the "Fresh Air Damper" had been placed into manual mode. As a result, the fresh air damper did not open and close automatically to cool the baghouse at certain temperature setpoints. Operations personnel have been reminded of the requirements to always operate the PCM baghouse fresh air damper in "Auto." The breakdown of the air pollution control equipment did not cause the emission of air contaminants in excess of the applicable emission limit. HCC is reporting this event under the requirement for operating the P902 PCM Baghouse within the specified pressure drop range of 3 – 12 inches of water.

- **HCC did not experience any deviations in regard to 40 CFR 63.303(c)(1).**
- **HCC did not experience any deviations in regard to 40 CFR 63.303(c)(2).**
- **All opacity emission observations from charging operations were below 20-percent.**
- **HCC experienced three (3) malfunctions pursuant to MACT CCCCC.**
  - On January 4, 2018, a malfunction occurred, which caused the P902 Flat Push Hot Car Multiclone to shut down at 1:17 pm and again on January 5, 2018 at 3:52 am, during the pushing operation. After receiving the coke loaf from ovens 115 and 110, respectively, the P902 Flat Push Hot Car suddenly lost power, shutting down the Multiclone and ancillary equipment. Following the first shutdown, maintenance personnel immediately responded and found a blown fuse in the control circuit transformer, which caused the P902 Flat Push Hot Car to shut down, including the Multiclone. Maintenance personnel replaced the blown fuse. Maintenance personnel responded following the second shutdown and found that the fuse had again blown. Maintenance personnel inspected the associated wiring and found that the conduit for the control circuit transformer had become damaged, exposing the wiring associated with the Multiclone. The exposed wiring caused a ground fault and the Multiclone to shut down. Maintenance personnel temporarily rewrapped the associated wires and returned the Multiclone to service. Maintenance personnel replaced the conduit associated with the control circuit transformer wires. The total duration of this event was 0.17 hours. The PM10 emissions during that time are estimated to be 0.05 lbs/ton of coke. Per 40 CFR 63.10(d)(5)(i), the actions taken during this event were consistent with the Startup, Shutdown, and Malfunction Plan.
  - On February 10, 2018, a malfunction occurred, which caused the P901 Flat Push Hot Car Multiclone to shut down at 9:23 pm during the pushing operation. While preparing to transfer the coke loaf from oven #40 to the quench car, the P901 Flat Push Hot Car proximity switch had a wire short out, shutting down the Multiclone and ancillary equipment. HCC personnel immediately responded and manually pushed the coke loaf onto the quench car. Maintenance personnel replaced the wire and proximity switch and returned the P901 Flat Push Hot Car to service. The total duration of this event was 0.35 hours. The PM10 emissions during that time are estimated to be 0.08 lbs/ton of coke. Per 40 CFR 63.10(d)(5)(i), the actions taken during this event were consistent with the Startup, Shutdown, and Malfunction Plan.
  - On March 28, 2018, a malfunction occurred, which caused the P901 Flat Push Hot Car Multiclone to shut down at 1:35 am during the pushing operation. While transporting the coke loaf from oven #18 to the quench car, the P901 Flat Push Hot Car generator overheated, shutting down the Multiclone and ancillary equipment. Maintenance personnel immediately

responded and cleaned the generator, cooling it down and allowing it to be restarted. The total duration of this event was 0.02 hours. The PM10 emissions during that time are estimated to be 0.05 lbs/ton of coke. Per 40 CFR 63.10(d)(5)(i), the actions taken during this event were consistent with the Startup, Shutdown, and Malfunction Plan.

- **HCC did not conduct any performance testing during the 1st half of 2018 relating to the relevant MACT emissions standards.**
- **HCC did not experience any periods in which the charging emission control device work practices were not implemented per 40 CFR 63.303(d)(3).**
  - HCC did not experience any periods in which the charging emissions control device work practices were not implemented. On January 18, 20, and February 3, 2018, Operations personnel were unable to observe the P901 baghouse stack for visible emissions because there was not enough light during the charging operation to make the observation. Under the normal operating cycle, the PCM baghouse stack is observed during the day, while ovens are being charged. However, on January 18 and 20, 2018, there were production delays that held the push cycle over until the next day. On February 3, 2018, there were no ovens pushed during daylight hours.
- **All work practices for oven dampers were implemented as required in 40 CFR 63.303(d)(4).**
- **There were no periods during which the continuous parameter monitoring system associated with the hotcar multiclones was out of control.**
- **During the current reporting period, HCC experienced three (3) deviations from the emission limitations, work practice standards, and/or operation and maintenance requirements listed in MACT CCCCC.**
  - As required under 40 CFR 63.7293(a)(1), each oven shall be visually inspected prior to pushing by opening the door damper and observing the bed of coke. On January 23, 2018, at 7:22 pm, Operations personnel inadvertently pushed oven #40 prior to it being designated coked out by product technician personnel. After inspecting the oven earlier that day, the product technician determined that it was not ready to be pushed and notified plant personnel as usual. However, the product technician inadvertently recorded a coke out time on the push report for oven #40. The PCM operator saw that a coke out time had been recorded for oven #40 and was unaware that the Product Technician had otherwise communicated that the oven was not ready. The PCM operator pushed oven #40 at 7:22 pm. At the time oven #40 was pushed, it had 47.17 hours of coking time with 41.00 tons of coal charged. To reduce the likelihood of repeated occurrences, the operators involved have been retrained on the requirements for properly recording coke out times. HCC is currently implementing an electronic programming interlock on the PCM that will prevent an oven from being pushed prior to it being designated coked out by Operations personnel. The coke oven batteries operated for 4,344 hours during the first semi-annual compliance period.
  - On March 15, 2018, the P902 Flat Push Hot Car Multiclone shut down at 2:11 pm, during the pushing operation. After receiving the coke loaf from oven #147, the P902 Flat Push Hot Car Generator suddenly shut down. Operations personnel immediately restarted the Multiclone and pushed the coke loaf off at the P902 quench tower. Maintenance personnel were dispatched and found that the hydraulic system temperature was high. In response,

they cleaned the radiator and checked hydraulic fluid levels and returned the system to service. At 6:39 pm, after receiving the coke loaf from oven #167, the P902 Flat Push Hot Car Generator received a low oil pressure fault on the Diesel Exhaust Fluid (DEF) system, shutting down the Multiclone and ancillary equipment again. Contractor personnel were notified and cleared the fault by completing a manual purge and restarting the generator. Contractor personnel had previously been scheduled to purge the DEF system due to a known issue in which the self – purge would not properly initiate. However, due to a miscommunication, Operations personnel did not allow sufficient time for the contractor to complete the manual self-purge as scheduled. HCC contractor personnel have updated the DEF control system to restore the automatic self – purge operation and also enhance the manual purge sequence, if it is needed. The total duration of this event was 0.12 hours. The PM10 emissions during that time are estimated to be 0.05 lbs/ton of coke. Although HCC uses a CPMS to comply with certain emission limits contained in MACT CCCCC, HCC is reporting this deviation according to the requirements of 40 CFR 63.7341(c)(7) rather than 63.7341(c)(8) given that the pressure gauge continued to operate properly during this event (i.e., the CPMS was not inoperative or out of control). The coke oven batteries operated for 4,344 hours during the semi-annual reporting period.

- Operations personnel are required to clean the baffles each day that the tower is used to quench coke. On February 5, 2018, Operations personnel did not wash the P001 and P002 baffles. On February 6, 2018 at 1:20 am, after realizing the baffles had not been cleaned on the preceding calendar day, Operations personnel ran the baffle sprays.

As the responsible official, I certify that based on information and belief formed after reasonable inquiry, the statements and information in the above report are true, accurate, and complete.

Sincerely,

James Skipworth
General Manager

cc: Edward Nam, US EPA Certified Mail #
Robert Hodanbosi, OEPA Certified Mail #

Attachment B2

Haverhill Coke Company, Malfunction Reports

STARKWEATHER, DIANA M.

From: EVANS, KACI K
Sent: Tuesday, January 02, 2018 2:10 PM
To: Cindy Charles (Cindy.Charles@epa.state.oh.us)
Cc: STARKWEATHER, DIANA M; SINGLETON, KRIS E; SKIPWORTH, JIM G.; SCHEESSELE, DAVID G.; BATTEN, KATIE M
Subject: 1-1-2018 Haverhill Coke Company - Malfunction

Haverhill Coke Company

Emission Unit F004

Malfunction – High Pressure Drop Reading

Cindy,

On January 1-2, 2018, intermittent high differential pressures drops were recorded across the F004 Screening Plant Baghouse System due to the freezing ambient temperatures. Operations personnel closed the Quench wharf gates to prevent additional coke from going through the Screening Plant, cleared the remaining coke from the conveyors to prevent a fire on the belts, and began directing coke to ground to allow maintenance personnel to inspect the baghouse. Maintenance personnel found that the bags and the hopper chute for the screening plant baghouse had become plugged with frozen dust collector fines, despite having previously insulated the system. In response, HCC personnel have temporarily enclosed the area and installed a heater to help prevent additional freezing from occurring. HCC is reporting this malfunction under the requirement for operating the F004 Screening Plant Baghouse within the specified pressure drop range of 3 – 12 inches of water. The total duration of this event was 0.27 hours. High Pressure Drop Readings are listed below. Please contact me with any questions.

High Pressure Drop	Start Time	End Time
12.2	1/1/2018 5:51 PM	1/1/2018 5:53 PM
12.1	1/2/2018 4:42 AM	1/2/2018 4:43 AM
12.8	1/2/2018 8:19 AM	1/2/2018 8:26 AM
13.3	12/2/2017 8:57 AM	1/2/2018 9:03 AM

Thanks,

Kaci Evans
Environmental Administrator
SunCoke Energy Partners, L.P.
Haverhill Operations

SXCPartners

2446 Gallia Pike
Franklin Furnace, OH 45629
Office: 740-355-9872
Cell: 740-464-3846

This e-mail and any files transmitted with it may contain confidential information and is intended solely for the use of the individual or entity to whom they are addressed. If you are not the intended recipient, you are notified that disclosing, copying, distributing or taking any action in reliance on the contents of this information is strictly prohibited. Please notify the sender immediately by e-mail if you have received this e-mail by mistake and delete this e-mail from your system. Thank you for your cooperation.

STARKWEATHER, DIANA M.

From: EVANS, KACI K
Sent: Friday, January 05, 2018 12:53 PM
To: Cindy Charles (Cindy.Charles@epa.state.oh.us)
Cc: STARKWEATHER, DIANA M; SCHEESSELE, DAVID G.; SKIPWORTH, JIM G.; SINGLETON, KRIS E; BATTEN, KATIE M
Subject: 1-4-18 Haverhill Coke Company - Malfunction

Haverhill Coke Company

Emission Unit P902

Malfunction – Flat Push Hot Car Multiclone System

Cindy,

On January 4, 2018, a malfunction occurred, which caused the P902 Flat Push Hot Car Multiclone to shut down at 1:17 pm and again on January 5, 2018 at 3:52 am, during the pushing operation. After receiving the coke loaf from ovens 115 and 110, respectively, the P902 Flat Push Hot Car suddenly lost power, shutting down the Multiclone and ancillary equipment. Following the first shutdown, maintenance personnel immediately responded and found a blown fuse in the control circuit transformer, which caused the P902 Flat Push Hot Car to shut down, including the Multiclone. Maintenance personnel replaced the blown fuse. Maintenance personnel responded following the second shutdown and found that the fuse had again blown. Maintenance personnel inspected the associated wiring and found that the conduit for the control circuit transformer had become damaged, exposing the wiring associated with the Multiclone. The exposed wiring caused a ground fault and the Multiclone to shut down. Maintenance personnel temporarily rewrapped the associated wires and returned the Multiclone to service. Maintenance personnel will replace the conduit associated with the control circuit transformer wires. The total duration of this event was 0.17 hours. The PM10 emissions during that time are estimated to be 0.05 lbs/ton of coke. Please contact me with any questions.

Thank you,

Kaci Evans
Environmental Administrator
SunCoke Energy Partners, L.P.
Haverhill Operations

SXCPartners

2446 Gallia Pike
Franklin Furnace, OH 45629
Office: 740-355-9872
Cell: 740-464-3846

This e-mail and any files transmitted with it may contain confidential information and is intended solely for the use of the individual or entity to whom they are addressed. If you are not the intended recipient, you are notified that disclosing, copying, distributing or taking any action in reliance on the contents of this information is strictly prohibited. Please notify the sender immediately by e-mail if you have received this e-mail by mistake and delete this e-mail from your system. Thank you for your cooperation.

STARKWEATHER, DIANA M.

From: EVANS, KACI K
Sent: Thursday, January 04, 2018 5:08 PM
To: Cindy Charles (Cindy.Charles@epa.state.oh.us)
Cc: STARKWEATHER, DIANA M; BATTEN, KATIE M; SINGLETON, KRIS E; SCHEESSELE, DAVID G.; SKIPWORTH, JIM G.; THOMPSON JR, MONTE C.
Subject: 1-4-17 Haverhill Coke Company - Malfunction

Haverhill Coke Company

Emission Unit P902

Malfunction – Stack Lid Opening

Cindy,

On January 4, 2018, a malfunction occurred on the pressure transmitters on the emergency bypass vent stack associated with the P902 HRSG #7, causing stack lids to open. The CRO immediately responded and closed the HRSG #7 bypass vent stack lids. This event is currently under investigation. Vent stack open and close times are shown below. Please contact me with any questions.

Vent Stack	Open Time	Closed Time
#7	1/4/2018 2:37:00 AM	1/4/2018 2:38:00 AM
#7	1/4/2018 2:39:00 AM	1/4/2018 2:40:00 AM

Thank you,

Kaci Evans
Environmental Administrator
SunCoke Energy Partners, L.P.
Haverhill Operations

SXCPartners

2446 Gallia Pike
Franklin Furnace, OH 45629
Office: 740-355-9872
Cell: 740-464-3846

This e-mail and any files transmitted with it may contain confidential information and is intended solely for the use of the individual or entity to whom they are addressed. If you are not the intended recipient, you are notified that disclosing, copying, distributing or taking any action in reliance on the contents of this information is strictly prohibited. Please notify the sender immediately by e-mail if you have received this e-mail by mistake and delete this e-mail from your system. Thank you for your cooperation.

STARKWEATHER, DIANA M.

From: EVANS, KACI K
Sent: Thursday, January 11, 2018 7:57 AM
To: Cindy Charles (Cindy.Charles@epa.state.oh.us)
Cc: STARKWEATHER, DIANA M; SINGLETON, KRIS E; SKIPWORTH, JIM G.; SCHEESSELE, DAVID G.; BATTEN, KATIE M
Subject: 1-10-18 Haverhill Coke Company - Malfunction

Haverhill Coke Company

Emission Unit P901

Malfunction – Common Battery Tunnel

Cindy,

On January 10, 2018, at 9:34 am, intermittent smoke was observed coming from the P901 common battery tunnel. Contractor personnel were working on patching an area above oven 20 during production. When Operations started charging oven 20, intermittent smoke was observed from the open area. Operations personnel made a hit on the coke side of oven 21 and contractor personnel immediately placed a temporary kaowool insulation patch over the area until permanent repairs can be made. Once adjustments were made and the kaowool insulation was installed, no opacity was observed. Please note that the common tunnel temperature remained above the specified limit. The total duration of this event was approximately 19 minutes. Please contact me with any questions.

Thanks,

Kaci Evans
Environmental Administrator
SunCoke Energy Partners, L.P.
Haverhill Operations

SXCPartners

2446 Gallia Pike
Franklin Furnace, OH 45629
Office: 740-355-9872
Cell: 740-464-3846

This e-mail and any files transmitted with it may contain confidential information and is intended solely for the use of the individual or entity to whom they are addressed. If you are not the intended recipient, you are notified that disclosing, copying, distributing or taking any action in reliance on the contents of this information is strictly prohibited. Please notify the sender immediately by e-mail if you have received this e-mail by mistake and delete this e-mail from your system. Thank you for your cooperation.

STARKWEATHER, DIANA M.

From: EVANS, KACI K
Sent: Thursday, January 11, 2018 1:46 PM
To: Cindy Charles (Cindy.Charles@epa.state.oh.us)
Cc: STARKWEATHER, DIANA M; SINGLETON, KRIS E; SKIPWORTH, JIM G.; SCHEESSELE, DAVID G.; BATTEN, KATIE M
Subject: 1-10-18 Haverhill Coke Company - Malfunction

Haverhill Coke Company

Emission Unit P902

Malfunction – PCM Baghouse System

Cindy,

On January 10, 2018, at 3:52 pm, a malfunction occurred, which caused the P902 PCM to shut down including the baghouse while charging oven 199. Operations personnel immediately responded and found that the breaker associated with the E-stop control cab was faulted. Operations reset the breaker and restarted the PCM baghouse. The PCM baghouse was offline for approximately 0.03 hours. The breakdown of the air pollution control equipment did not cause the emission of air contaminants in excess of the applicable emission limit. HCC is reporting this malfunction under the requirement for operating the P901 PCM Baghouse within the specified pressure drop range of 3 – 12 inches of water. This event is currently under investigation. Please contact me if you have any questions.

Thank you,

Kaci Evans
Environmental Administrator
SunCoke Energy Partners, L.P.
Haverhill Operations

SXCPartners

2446 Gallia Pike
Franklin Furnace, OH 45629
Office: 740-355-9872
Cell: 740-464-3846

This e-mail and any files transmitted with it may contain confidential information and is intended solely for the use of the individual or entity to whom they are addressed. If you are not the intended recipient, you are notified that disclosing, copying, distributing or taking any action in reliance on the contents of this information is strictly prohibited. Please notify the sender immediately by e-mail if you have received this e-mail by mistake and delete this e-mail from your system. Thank you for your cooperation.

STARKWEATHER, DIANA M.

From: EVANS, KACI K
Sent: Wednesday, January 17, 2018 2:11 PM
To: STARKWEATHER, DIANA M
Subject: 1-16-18 Haverhill Coke Company - Malfunction

Haverhill Coke Company

Emission Unit P902

Malfunction - Vent Stack Opening

Cindy,

On January 16, 2018 at 5:26 pm, a malfunction occurred on the XV regulator associated with P902 HRSG #9 causing a loss of draft on the HRSG and opening the associated bypass vent stack lids at 5:26 pm. The CRO immediately responded and tried to close the XV damper but was unsuccessful. The CRO raised the draft and closed the HRSG #9 bypass vent stack lids at 5:29 pm. Maintenance personnel was dispatched and found that the airline regulator associated with the XV damper became frozen due to severe weather conditions. When the XV airline regulator became frozen, it slowly started to close the XV damper. Since the XV didn't immediately close, the HRSG did not show a trip so the system didn't go into gas sharing mode. Maintenance personnel thawed out the lines. Operations personnel wrapped the lines with insulation and left the pet cock open so air will continuously run through the lines. The total duration of the vent stack bypass event was 0.05 hours. Please contact me with any questions.

Thank you,

Kaci Evans
Environmental Administrator
SunCoke Energy Partners, L.P.
Haverhill Operations

SXCPartners

2446 Gallia Pike
Franklin Furnace, OH 45629
Office: 740-355-9872
Cell: 740-464-3846

This e-mail and any files transmitted with it may contain confidential information and is intended solely for the use of the individual or entity to whom they are addressed. If you are not the intended recipient, you are notified that disclosing, copying, distributing or taking any action in reliance on the contents of this information is strictly prohibited. Please notify the sender immediately by e-mail if you have received this e-mail by mistake and delete this e-mail from your system. Thank you for your cooperation.

STARKWEATHER, DIANA M.

From: EVANS, KACI K
Sent: Saturday, January 27, 2018 8:56 AM
To: Cindy Charles (Cindy.Charles@epa.state.oh.us)
Cc: STARKWEATHER, DIANA M; SKIPWORTH, JIM G.; SCHEESSELE, DAVID G.; SINGLETON, KRIS E; BATTEN, KATIE M; THOMPSON JR, MONTE C.
Subject: 1-26-18 Haverhill Coke Company - Malfunction

Haverhill Coke Company

Emission Unit P902

Malfunction – Vent Stack Opening

Cindy,

On January 26, 2018, a malfunction occurred, which caused the P902 HRSG #8 stack lids to open at 11:54 am. Operations personnel immediately responded and closed the HRSG #8 bypass vent stack lids at 12:03 pm. This event is currently under investigation.

Thank you,

Kaci Evans
Environmental Administrator
SunCoke Energy Partners, L.P.
Haverhill Operations

SXCPartners

2446 Gallia Pike
Franklin Furnace, OH 45629
Office: 740-355-9872
Cell: 740-464-3846

This e-mail and any files transmitted with it may contain confidential information and is intended solely for the use of the individual or entity to whom they are addressed. If you are not the intended recipient, you are notified that disclosing, copying, distributing or taking any action in reliance on the contents of this information is strictly prohibited. Please notify the sender immediately by e-mail if you have received this e-mail by mistake and delete this e-mail from your system. Thank you for your cooperation.

STARKWEATHER, DIANA M.

From: EVANS, KACI K
Sent: Sunday, February 11, 2018 5:12 PM
To: Cindy Charles (Cindy.Charles@epa.state.oh.us)
Cc: STARKWEATHER, DIANA M; SINGLETON, KRIS E; SKIPWORTH, JIM G.; SCHEESSELE, DAVID G.; BATTEN, KATIE M
Subject: 2-10-18 Haverhill Coke Company - Malfunction

Haverhill Coke Company

Emission Unit P901

Malfunction – Flat Push Hot Car Multiclone System

Cindy,

On February 10, 2018, a malfunction occurred, which caused the P901 Flat Push Hot Car Multiclone to shut down at 9:23 pm during the pushing operation. While preparing to transfer the coke loaf from oven #40 to the quench car, the P901 Flat Push Hot Car proximity switch had a wire short out, shutting down the Multiclone and ancillary equipment. HCC personnel immediately responded and manually pushed the coke loaf onto the quench car by hand. Maintenance personnel replaced the wire and proximity switch and returned the P901 Flat Push Hot Car to service. The total duration of this event was 0.35 hours. The PM10 emissions during that time are estimated to be 0.08 lbs/ton of coke. Please contact me with any questions.

Thank you,

Kaci Evans
Environmental Administrator
SunCoke Energy Partners, L.P.
Haverhill Operations

SXCPartners

2446 Gallia Pike
Franklin Furnace, OH 45629
Office: 740-355-9872
Cell: 740-464-3846

This e-mail and any files transmitted with it may contain confidential information and is intended solely for the use of the individual or entity to whom they are addressed. If you are not the intended recipient, you are notified that disclosing, copying, distributing or taking any action in reliance on the contents of this information is strictly prohibited. Please notify the sender immediately by e-mail if you have received this e-mail by mistake and delete this e-mail from your system. Thank you for your cooperation.

STARKWEATHER, DIANA M.

From: STARKWEATHER, DIANA M
Sent: Monday, March 12, 2018 1:09 PM
To: Cindy.Charles@epa.ohio.gov
Cc: SCHEESSELE, DAVID G. (dscheessele@suncoke.com); SKIPWORTH, JIM G. (JGSKIPWORTH@suncoke.com); BATTEN, KATHERINE M (KMBATTEN@suncoke.com); SINGLETON, KRIS E (KESINGLETON@SUNCOKE.COM); TAYLOR, DANIEL C (DCTAYLOR@suncoke.com)
Subject: 2-18-18 Haverhill Coke Company Malfunction

Haverhill Coke Company

Emission Unit P902

Malfunction – Common Tunnel Temperature Excursion

Cindy,

While reviewing common tunnel temperature data on March 12, 2018, HCC personnel identified a low common tunnel temperature reading of 1,381^{o}F on the section of the P902 common tunnel associated with the HRSG #8 bypass vent stack. The low temperature occurred on February 18, 2018. Due to the severe weather conditions that week, Haverhill experienced numerous equipment issues, which resulted in extensive production delays. Due to the delays in production, HCC was not able to push/charge ovens as scheduled. On February 18, five ovens associated with the HRSG #8 bypass vent stack were pushed approximately 15 hours late and five additional ovens were skipped. The five skipped ovens were not pushed and charged until the next scheduled production date of February 20, 2018. The common tunnel temperature is maintained at 1400°F through destructive distillation of volatile organic compounds (VOCs) after charging coal to the ovens. The ten ovens had coked out and were no longer contributing volatile matter to be burned in the system. Due to the decreased amount of volatile matter that was available to burn, the common tunnel temperature decreased. On February 18 at 6:47 pm, the common tunnel temperature returned to the specified range upon charging ovens associated with the HRSG #8 bypass vent stack. Please note that all other sections of the common tunnel were within the specified range during this event. The total duration of the common tunnel temperature excursion was 1.10 hours. Please contact me with any questions.

Diana Starkweather
Environmental Manager
SunCoke Energy Partners, L.P.
Haverhill Operations

SXCPartners

2446 Gallia Pike
Franklin Furnace, OH 45629
Office: 740-355-9823
Cell: 740-352-2593

This e-mail and any files transmitted with it may contain confidential information and is intended solely for the use of the individual or entity to whom they are addressed. If you are not the intended recipient, you are notified that disclosing, copying, distributing or taking any action in reliance on the contents of this information is strictly prohibited. Please notify the sender immediately by e-mail if you have received this e-mail by mistake and delete this e-mail from your system. Thank you for your cooperation.

STARKWEATHER, DIANA M.

From: STARKWEATHER, DIANA M
Sent: Monday, February 26, 2018 6:58 PM
To: Cindy.Charles@epa.ohio.gov
Cc: SCHEESSELE, DAVID G. (dscheessele@suncoke.com); THOMPSON JR, MONTE C. (MCTHOMPSON@suncoke.com); TAYLOR, DANIEL C (DCTAYLOR@suncoke.com); LONG, CRAIG A (CALONG@suncoke.com); BATTEN, KATHERINE M (KMBATTEN@suncoke.com); SKIPWORTH, JIM G. (JGSKIPWORTH@suncoke.com); SINGLETON, KRIS E (KESINGLETON@SUNCOKE.COM)
Subject: 2-25-18 Haverhill Coke Company Malfunction

Haverhill Coke Company

Emission Unit P902

Malfunction – SO_2 Exceedance

Cindy,

On February 25, 2018, during the 06:00 3-hr block, the gear box on the P902 slurry storage tank agitator failed. Maintenance personnel were dispatched to replace the gear box assembly. When the agitator is operational, the slakers automatically run to replenish slurry level inside the tank based on the level indication. However, due to the ongoing maintenance, the slakers were not operating (as designed), which allowed the slurry to decrease. As the level inside the tank dropped, residual slurry on the walls of the tank began to harden and plugged the suction lines, strainers, and pumps, which reduced slurry flow to the atomizers. Operations personnel swapped between the A and B slurry pumps and flushed the associated feed lines, removing material buildup throughout the day while maintenance personnel worked to replace the gear box assembly. Maintenance personnel temporarily bypassed the control interlocks to allow the slakers to run while the agitator was offline for repairs, restoring slurry flow to the atomizers. Slurry flow during this time was not sufficient to remove SO2 from the gas stream and an exceedance of the 3-hour block SO2 limit occurred. The February 25, 06:00, 15:00, 21:00, 3-hour block average SO2 emissions are estimated to be 336.6, 286.6, and 297.8, lb/hr, respectively. The February 26, 0:00 3-hour block average SO2 emissions are estimated to be 476.2 lb/hr. Please contact me with any questions.

Thanks,

Diana Starkweather
Environmental Manager
SunCoke Energy Partners, L.P.
Haverhill Operations

SXCPartners

2446 Gallia Pike
Franklin Furnace, OH 45629
Office: 740-355-9823
Cell: 740-352-2593

This e-mail and any files transmitted with it may contain confidential information and is intended solely for the use of the individual or entity to whom they are addressed. If you are not the intended recipient, you are notified that disclosing, copying, distributing or taking any action in reliance on the contents of this information

is strictly prohibited. Please notify the sender immediately by e-mail if you have received this e-mail by mistake and delete this e-mail from your system. Thank you for your cooperation.

STARKWEATHER, DIANA M.

From: STARKWEATHER, DIANA M
Sent: Wednesday, March 07, 2018 6:52 PM
To: Cindy.Charles@epa.ohio.gov
Cc: SKIPWORTH, JIM G. (JGSKIPWORTH@suncoke.com); BATTEN, KATHERINE M (KMBATTEN@suncoke.com); SCHEESSELE, DAVID G. (dscheessele@suncoke.com); THOMPSON JR, MONTE C. (MCTHOMPSON@suncoke.com); TAYLOR, DANIEL C (DCTAYLOR@suncoke.com); SINGLETON, KRIS E (KESINGLETON@SUNCOKE.COM)
Subject: 3-6-18 Haverhill Coke Company Malfunction

Haverhill Coke Company

Emission Unit P902

Malfunction – FGD Baghouse Pressure Drop

Cindy,

On March 6, 2018, HCC experienced a high differential pressure drop of 15.3 inches of water at 1:25 pm. HCC personnel immediately responded and found that the bottom slide gate of the P902 SDA had become plugged with a large buildup of ash. HCC personnel air lanced the SDA bottom slide gate in order to remove the ash. While cleaning the ash, the slide gate was open for an extended period of time, which allowed ambient air to leak into the system, decreasing draft at the P902 bypass vent stacks. As a result, the P902 ID fans ramped up, increasing flow through the baghouse and subsequently increasing the pressure drop. The FGD baghouse pressure drop was outside of the specified range for approximately one minute. Please contact me with any questions.

Thanks,

Diana Starkweather
Environmental Manager
SunCoke Energy Partners, L.P.
Haverhill Operations

SXCPartners

2446 Gallia Pike
Franklin Furnace, OH 45629
Office: 740-355-9823
Cell: 740-352-2593

This e-mail and any files transmitted with it may contain confidential information and is intended solely for the use of the individual or entity to whom they are addressed. If you are not the intended recipient, you are notified that disclosing, copying, distributing or taking any action in reliance on the contents of this information is strictly prohibited. Please notify the sender immediately by e-mail if you have received this e-mail by mistake and delete this e-mail from your system. Thank you for your cooperation.

STARKWEATHER, DIANA M.

From: STARKWEATHER, DIANA M
Sent: Tuesday, March 13, 2018 12:54 PM
To: Cindy.Charles@epa.ohio.gov
Cc: SKIPWORTH, JIM G. (JGSKIPWORTH@suncoke.com); BATTEN, KATHERINE M (KMBATTEN@suncoke.com); SCHEESSELE, DAVID G. (dscheessele@suncoke.com); WRIGHT, JOHNNY R. (JJWRIGHT@suncoke.com); THOMPSON JR, MONTE C. (MCTHOMPSON@suncoke.com)
Subject: 3-8-18 Haverhill Coke Company Malfunction

Haverhill Coke Company

Emission Unit P902

Malfunction – Common Tunnel Temperature Excursion

Cindy,

While reviewing common tunnel temperature data on March 12, 2018, HCC personnel identified a low common tunnel temperature reading of 1,351^{o}F on the section of the P902 common tunnel associated with the HRSGs #8 and 10 bypass vent stacks. The low temperature occurred on March 8-9, 2018. On March 8, HCC experienced a major breakdown on PCM 2, which required extensive repairs that took several hours to complete. Due to the delay in production, HCC was not able to push/charge ovens as scheduled. On March 9, two ovens associated with the HRSG #8 and five ovens associated with HRSG #10 bypass vent stacks were pushed approximately 12 hours late. Five additional ovens associated with each vent stack were skipped. The ten skipped ovens were not pushed and charged until the next scheduled production date of March 10, 2018. The common tunnel temperature is maintained at 1400°F through destructive distillation of volatile organic compounds (VOCs) after charging coal to the ovens. The ten ovens had coked out and were no longer contributing volatile matter to be burned in the system. Due to the decreased amount of volatile matter that was available to burn, the common tunnel temperature decreased. On March 9 at 6:47 am, the common tunnel temperature returned to the specified range upon charging ovens associated with the HRSGs #8 and 10 bypass vent stacks. Please note that all other sections of the common tunnel were within the specified range during this event. The total duration of the common tunnel temperature excursion was 7.98 hours. Please contact me with any questions.

Thanks,

Diana Starkweather
Environmental Manager
SunCoke Energy Partners, L.P.
Haverhill Operations

SXCPartners

2446 Gallia Pike
Franklin Furnace, OH 45629
Office: 740-355-9823
Cell: 740-352-2593

This e-mail and any files transmitted with it may contain confidential information and is intended solely for the use of the individual or entity to whom they are addressed. If you are not the intended recipient, you are notified that disclosing, copying, distributing or taking any action in reliance on the contents of this information

is strictly prohibited. Please notify the sender immediately by e-mail if you have received this e-mail by mistake and delete this e-mail from your system. Thank you for your cooperation.

STARKWEATHER, DIANA M.

From: STARKWEATHER, DIANA M.
Sent: Wednesday, March 28, 2018 5:56 PM
To: Cindy.Charles@epa.ohio.gov
Cc: SKIPWORTH, JIM G. (JGSKIPWORTH@suncoke.com); BATTEN, KATHERINE M (KMBATTEN@suncoke.com); SINGLETON, KRIS E (KESINGLETON@SUNCOKE.COM); SCHEESSELE, DAVID G. (dscheessele@suncoke.com); THOMPSON JR, MONTE C. (MCTHOMPSON@suncoke.com)
Subject: 3-27-18 Haverhill Coke Company Malfunction

Haverhill Coke Company

Emission Unit P902

Malfunction – Stack Lid Opening

Cindy,

On March 27, 2018, a malfunction occurred causing the P902 emergency bypass vent stacks to open on loss of draft. This event is currently under investigation.

The FGD baghouse was bypassed and a high fabric filter pressure drop reading of 19.1 inches of water was recorded on the P902 FGD baghouse in conjunction with the event. The bypass and lasted approximately 1.65 hours and the pressure drop excursion lasted approximately 0.08 hours. During this time, only a portion of the baghouse was in bypass and a portion of the waste gas was being processed through the FGD baghouse due to the P902 bypass vent stack lids being open. Before and after the event, the FGD baghouse pressure drop was within the specified range.

Vent stack open and close times are shown below. Please contact me with any questions.

Vent Stack	Open Time	Closed Time
#6	3/27/2018 6:38:00 PM	3/27/2018 7:10:00 PM
#7	3/27/2018 6:38:00 PM	3/27/2018 6:54:00 PM
#8	3/27/2018 6:37:00 PM	3/27/2018 6:57:00 PM
#9	3/27/2018 6:39:00 PM	3/27/2018 7:03:00 PM
#10	3/27/2018 6:38:00 PM	3/27/2018 7:05:00 PM

Thank you,

Diana Starkweather
Environmental Manager
SunCoke Energy Partners, L.P.
Haverhill Operations

SXCPartners

2446 Gallia Pike
Franklin Furnace, OH 45629
Office: 740-355-9823

Cell: 740-352-2593

This e-mail and any files transmitted with it may contain confidential information and is intended solely for the use of the individual or entity to whom they are addressed. If you are not the intended recipient, you are notified that disclosing, copying, distributing or taking any action in reliance on the contents of this information is strictly prohibited. Please notify the sender immediately by e-mail if you have received this e-mail by mistake and delete this e-mail from your system. Thank you for your cooperation.

STARKWEATHER, DIANA M.

From: STARKWEATHER, DIANA M.
Sent: Wednesday, March 28, 2018 6:12 PM
To: Cindy.Charles@epa.ohio.gov
Cc: SKIPWORTH, JIM G. (JGSKIPWORTH@suncoke.com); BATTEN, KATHERINE M (KMBATTEN@suncoke.com); SINGLETON, KRIS E (KESINGLETON@SUNCOKE.COM); SCHEESSELE, DAVID G. (dscheessele@suncoke.com); THOMPSON JR, MONTE C. (MCTHOMPSON@suncoke.com)
Subject: 3-28-18 Haverhill Coke Company Malfunction

Haverhill Coke Company

Emission Unit P902

Malfunction – Stack Lid Opening

Cindy,

On March 28, 2018, a malfunction occurred on the P902 emergency bypass vent stacks as a result of a fire on the "B" Atomizer control panel. This event is currently under investigation.

The FGD baghouse and Carbon Injection System were bypassed and a low fabric filter pressure drop reading of 0.0 inches of water was recorded on the P902 FGD baghouse in conjunction with the event; however, no waste gas was being processed through the FGD baghouse due to the P902 bypass vent stack lids being open. Before the event, the FGD baghouse pressure drop was within the specified range.

Slurry flow during this time was not sufficient to remove SO2 from the gas stream and an exceedance of the 3-hour block SO2 limit occurred. The 0:00 3-hour block average SO2 emissions are estimated to be 195.4 lb/hr.

Vent stack open times are shown below. HCC will provide a follow-up notification describing the total duration of the vent stack bypass event upon completion of the repairs. Please contact me with any questions.

Vent Stack	Open Time	Closed Time
#6	3/28/2018 3:05:00 AM	
#7	3/28/2018 3:06:00 AM	
#8	3/28/2018 3:08:00 AM	
#9	3/28/2018 3:09:00 AM	
#10	3/28/2018 3:10:00 AM	

Thank you,

Diana Starkweather
Environmental Manager
SunCoke Energy Partners, L.P.
Haverhill Operations

SXCPartners

2446 Gallia Pike
Franklin Furnace, OH 45629
Office: 740-355-9823
Cell: 740-352-2593

This e-mail and any files transmitted with it may contain confidential information and is intended solely for the use of the individual or entity to whom they are addressed. If you are not the intended recipient, you are notified that disclosing, copying, distributing or taking any action in reliance on the contents of this information is strictly prohibited. Please notify the sender immediately by e-mail if you have received this e-mail by mistake and delete this e-mail from your system. Thank you for your cooperation.

STARKWEATHER, DIANA M.

From: STARKWEATHER, DIANA M.
Sent: Friday, March 30, 2018 10:07 AM
To: Cindy.Charles@epa.ohio.gov
Cc: SKIPWORTH, JIM G; BATTEN, KATIE M; SINGLETON, KRIS E.; SCHEESSELE, DAVID G.; THOMPSON JR., MONTE C.
Subject: 3-28-18 Haverhill Coke Company Malfunction - Update

Haverhill Coke Company

Emission Unit P902

Malfunction – Stack Lid Opening

Cindy,

On March 28, 2018, a malfunction occurred on the P902 emergency bypass vent stacks as a result of a fire on the "B" Atomizer control panel. This event is currently under investigation. Vent stack open and close times are shown below. Please contact me with any questions.

Vent Stack	Open Time	Closed Time
#6	3/28/2018 3:05:00 AM	3/28/2018 7:20:00 PM
#7	3/28/2018 3:06:00 AM	3/28/2018 6:15:00 PM
#8	3/28/2018 3:08:00 AM	3/28/2018 9:13:00 PM
#9	3/28/2018 3:09:00 AM	3/28/2018 7:15:00 PM
#10	3/28/2018 3:10:00 AM	3/28/2018 6:33:00 PM

Thank you,

Diana Starkweather
Environmental Manager
SunCoke Energy Partners, L.P.
Haverhill Operations

SXCPartners

2446 Gallia Pike
Franklin Furnace, OH 45629
Office: 740-355-9823
Cell: 740-352-2593

This e-mail and any files transmitted with it may contain confidential information and is intended solely for the use of the individual or entity to whom they are addressed. If you are not the intended recipient, you are notified that disclosing, copying, distributing or taking any action in reliance on the contents of this information is strictly prohibited. Please notify the sender immediately by e-mail if you have received this e-mail by mistake and delete this e-mail from your system. Thank you for your cooperation.

STARKWEATHER, DIANA M.

From: STARKWEATHER, DIANA M.
Sent: Wednesday, March 28, 2018 3:40 PM
To: Cindy.Charles@epa.ohio.gov
Cc: SCHEESSELE, DAVID G. (dscheessele@suncoke.com); WRIGHT, JOHNNY R. (JJWRIGHT@suncoke.com); SKIPWORTH, JIM G. (JGSKIPWORTH@suncoke.com); BATTEN, KATHERINE M (KMBATTEN@suncoke.com); SINGLETON, KRIS E (KESINGLETON@SUNCOKE.COM)
Subject: 3-28-18 Haverhill Coke Company Malfunction

Haverhill Coke Company

Emission Unit P901

Malfunction – Flat Push Hot Car Multiclone System

Cindy,

On March 28, 2018, a malfunction occurred, which caused the P901 Flat Push Hot Car Multiclone to shut down at 1:35 am during the pushing operation. While transporting the coke loaf from oven #18 to the quench car, the P901 Flat Push Hot Car generator overheated, shutting down the Multiclone and ancillary equipment. Maintenance personnel immediately responded and cleaned the generator, cooling it down and allowing it to be restarted. The total duration of this event was 0.02 hours. The PM10 emissions during that time are estimated to be 0.05 lbs/ton of coke. Please contact me with any questions.

Thank you,

Diana Starkweather
Environmental Manager
SunCoke Energy Partners, L.P.
Haverhill Operations

SXCPartners

2446 Gallia Pike
Franklin Furnace, OH 45629
Office: 740-355-9823
Cell: 740-352-2593

This e-mail and any files transmitted with it may contain confidential information and is intended solely for the use of the individual or entity to whom they are addressed. If you are not the intended recipient, you are notified that disclosing, copying, distributing or taking any action in reliance on the contents of this information is strictly prohibited. Please notify the sender immediately by e-mail if you have received this e-mail by mistake and delete this e-mail from your system. Thank you for your cooperation.

STARKWEATHER, DIANA M.

From: STARKWEATHER, DIANA M.
Sent: Monday, April 09, 2018 5:48 PM
To: Cindy.Charles@epa.ohio.gov
Cc: THOMPSON JR, MONTE C. (MCTHOMPSON@suncoke.com); SKIPWORTH, JIM G. (JGSKIPWORTH@suncoke.com); BATTEN, KATHERINE M (KMBATTEN@suncoke.com); SINGLETON, KRIS E (KESINGLETON@SUNCOKE.COM); SCHEESSELE, DAVID G. (dscheessele@suncoke.com); LONG, CRAIG A (CALONG@suncoke.com)
Subject: 4-9-18 Haverhill Coke Company Malfunction

Haverhill Coke Company

Emission Unit P901

Malfunction – SO_2 Exceedance

Cindy,

On April 9, 2018, a malfunction occurred on the P901 SDA system when slurry flow was lost to the atomizers. Operations personnel switched to "B" slurry pump, restoring slurry flow. Operations personnel backflushed "A" slurry pump and the associated piping to remove material buildup and also changed out the strainers, allowing "A" slurry pump to be returned to service. Slurry flow during this time was not sufficient to remove SO2 from the gas stream and an exceedance of the 3-hour block SO2 limit occurred. The 0:00 3-hour block average SO2 emissions are estimated to be 210.7 lb/hr. Please contact me with any questions.

Thank you,

Diana Starkweather
Environmental Manager
SunCoke Energy Partners, L.P.
Haverhill Operations

SXCPartners

2446 Gallia Pike
Franklin Furnace, OH 45629
Office: 740-355-9823
Cell: 740-352-2593

This e-mail and any files transmitted with it may contain confidential information and is intended solely for the use of the individual or entity to whom they are addressed. If you are not the intended recipient, you are notified that disclosing, copying, distributing or taking any action in reliance on the contents of this information is strictly prohibited. Please notify the sender immediately by e-mail if you have received this e-mail by mistake and delete this e-mail from your system. Thank you for your cooperation.

STARKWEATHER, DIANA M.

From: STARKWEATHER, DIANA M.
Sent: Saturday, April 14, 2018 7:04 AM
To: Cindy.Charles@epa.ohio.gov
Cc: SKIPWORTH, JIM G. (JGSKIPWORTH@suncoke.com); BATTEN, KATHERINE M (KMBATTEN@suncoke.com); SINGLETON, KRIS E (KESINGLETON@SUNCOKE.COM); SCHEESSELE, DAVID G. (dscheessele@suncoke.com); THOMPSON JR, MONTE C. (MCTHOMPSON@suncoke.com); TAYLOR, DANIEL C (DCTAYLOR@suncoke.com)
Subject: 4-13-18 Haverhill Coke Company - Malfunction

Haverhill Coke Company

Emission Unit P902

Malfunction – SO_2 Exceedance

Cindy,

On April 13, 2018, a malfunction occurred on the P902 SDA system when slurry flow was lost to the atomizers. Operations personnel immediately responded and found that the strainers at the outlet of "B" slurry pump had become plugged. Operations personnel backflushed "B" slurry pump and the associated piping to remove material buildup and also changed out the strainers, restoring slurry flow. Slurry flow during this time was not sufficient to remove SO2 from the gas stream and an exceedance of the 3-hour block SO2 limit occurred. The 6:00 3-hour block average SO2 emissions are estimated to be 196.4 lb/hr. Please contact me with any questions.

Thank you,

Diana Starkweather
Environmental Manager
SunCoke Energy Partners, L.P.
Haverhill Operations

SXCPartners

2446 Gallia Pike
Franklin Furnace, OH 45629
Office: 740-355-9823
Cell: 740-352-2593

This e-mail and any files transmitted with it may contain confidential information and is intended solely for the use of the individual or entity to whom they are addressed. If you are not the intended recipient, you are notified that disclosing, copying, distributing or taking any action in reliance on the contents of this information is strictly prohibited. Please notify the sender immediately by e-mail if you have received this e-mail by mistake and delete this e-mail from your system. Thank you for your cooperation.

STARKWEATHER, DIANA M.

From: STARKWEATHER, DIANA M.
Sent: Monday, April 23, 2018 8:59 PM
To: Cindy.Charles@epa.ohio.gov
Cc: SKIPWORTH, JIM G. (JGSKIPWORTH@suncoke.com); BATTEN, KATHERINE M (KMBATTEN@suncoke.com); SCHEESSELE, DAVID G. (dscheessele@suncoke.com); TAYLOR, DANIEL C (DCTAYLOR@suncoke.com); THOMPSON JR, MONTE C. (MCTHOMPSON@suncoke.com)
Subject: 4-22-18 Haverhill Coke Company Malfunction

Haverhill Coke Company

Emission Unit P901

Malfunction – SO_2 Exceedance

Cindy,

On April 22, 2018, a malfunction occurred on the P901 SDA system when slurry flow was lost to the atomizers. Operations personnel backflushed "B" slurry pump and the associated piping to remove material buildup and also checked the strainers. Still unable to operate "B" slurry pump, operations personnel switched to "A" slurry pump, restoring slurry flow. Maintenance personnel were then dispatched and found that the belts on "B" slurry pump had become loose. Maintenance personnel tightened the belts and returned "B" slurry pump to service. Slurry flow during this time was not sufficient to remove SO2 from the gas stream and an exceedance of the 3-hour block SO2 limit occurred. The 15:00 3-hour block average SO2 emissions are estimated to be 282.1 lb/hr. Please contact me with any questions.

Thank you,

Diana Starkweather
Environmental Manager
SunCoke Energy Partners, L.P.
Haverhill Operations

SXCPartners

2446 Gallia Pike
Franklin Furnace, OH 45629
Office: 740-355-9823
Cell: 740-352-2593

This e-mail and any files transmitted with it may contain confidential information and is intended solely for the use of the individual or entity to whom they are addressed. If you are not the intended recipient, you are notified that disclosing, copying, distributing or taking any action in reliance on the contents of this information is strictly prohibited. Please notify the sender immediately by e-mail if you have received this e-mail by mistake and delete this e-mail from your system. Thank you for your cooperation.

STARKWEATHER, DIANA M.

From: STARKWEATHER, DIANA M.
Sent: Tuesday, May 08, 2018 9:25 PM
To: Cindy.Charles@epa.ohio.gov
Cc: SKIPWORTH, JIM G. (JGSKIPWORTH@suncoke.com); BATTEN, KATHERINE M (KMBATTEN@suncoke.com); SINGLETON, KRIS E (KESINGLETON@SUNCOKE.COM); SCHEESSELE, DAVID G. (dscheessele@suncoke.com); THOMPSON JR, MONTE C. (MCTHOMPSON@suncoke.com)
Subject: 5-7-18 Haverhill Coke Company Malfunction

Haverhill Coke Company

Emission Unit P902

Malfunction – SO_2 Exceedance

Cindy,

On May 8, 2018, a malfunction occurred on the P902 SDA system. Maintenance personnel were dispatched and found that "A" atomizer had tripped on high bearing temperature after the dilution water line became disconnected. While swapping out "A" atomizer, "B" atomizer tripped due to a VFD fault. Operations personnel responded, but were unable to reset the fault. "B" atomizer was removed from service until another spare could be brought in. Slurry flow during this time was not sufficient to remove SO2 from the gas stream and an exceedance of the 3-hour block SO2 limit occurred. The 21:00 3-hour block average SO2 emissions are estimated to be 312.6 lb/hr. Please contact me with any questions.

Thank you,

Diana Starkweather
Environmental Manager
SunCoke Energy Partners, L.P.
Haverhill Operations

SXCPartners

2446 Gallia Pike
Franklin Furnace, OH 45629
Office: 740-355-9823
Cell: 740-352-2593

This e-mail and any files transmitted with it may contain confidential information and is intended solely for the use of the individual or entity to whom they are addressed. If you are not the intended recipient, you are notified that disclosing, copying, distributing or taking any action in reliance on the contents of this information is strictly prohibited. Please notify the sender immediately by e-mail if you have received this e-mail by mistake and delete this e-mail from your system. Thank you for your cooperation.

STARKWEATHER, DIANA M.

From: STARKWEATHER, DIANA M.
Sent: Wednesday, May 16, 2018 10:50 AM
To: Cindy.Charles@epa.ohio.gov
Cc: SKIPWORTH, JIM G. (JGSKIPWORTH@suncoke.com); BATTEN, KATHERINE M (KMBATTEN@suncoke.com); SCHEESSELE, DAVID G. (dscheessele@suncoke.com); WRIGHT, JOHNNY R. (JJWRIGHT@suncoke.com); BOND, STACEY W. (SWBOND@suncoke.com); SINGLETON, KRIS E (KESINGLETON@SUNCOKE.COM)
Subject: 5-15-18 Haverhill Coke Company Malfunction

Haverhill Coke Company

Emission Unit P902

Malfunction – PCM Stack Opacity

Cindy,

On May 15, 2018, a malfunction occurred on the P902 PCM2 baghouse. Around 12:30 pm, Haverhill personnel noted opacity coming from the stack. Opacity during the event was estimated to be 12.5%. The opacity exceedance was caused by damaged bags in the baghouse. Maintenance personnel replaced 16 bags in the PCM baghouse. The PCM baghouse DP was within the specified range of 3-12 inwc during this event. Please contact me with any questions.

Thanks,

Diana Starkweather
Environmental Manager
SunCoke Energy Partners, L.P.
Haverhill Operations

SXCPartners

2446 Gallia Pike
Franklin Furnace, OH 45629
Office: 740-355-9823
Cell: 740-352-2593

This e-mail and any files transmitted with it may contain confidential information and is intended solely for the use of the individual or entity to whom they are addressed. If you are not the intended recipient, you are notified that disclosing, copying, distributing or taking any action in reliance on the contents of this information is strictly prohibited. Please notify the sender immediately by e-mail if you have received this e-mail by mistake and delete this e-mail from your system. Thank you for your cooperation.

STARKWEATHER, DIANA M.

From: SINGLETON, KRIS E.
Sent: Tuesday, May 22, 2018 1:35 PM
To: cindy.charles@epa.state.oh.us
Cc: BATTEN, KATIE M; STARKWEATHER, DIANA M.; THOMPSON JR., MONTE C.; SKIPWORTH, JIM G; SCHEESSELE, DAVID G.
Subject: Haverhill Coke Company - Malfunction

Haverhill Coke Company

Emission Unit P902

Malfunction – FGD Baghouse Pressure Drop & Stack Lid Opening

Cindy,

On May 21, 2018, HCC experienced a malfunction on the P902 FGD Baghouse. HRSG #9 was taken offline as scheduled the morning of May 20, 2018. In addition, two baghouse compartments were scheduled to be isolated so that filter bags could be changed out. The first compartment, Compartment D, was isolated, the filter bags changed out, and the compartment returned to service over the previous weekend. After shutting down HRSG #9 at 11:25 am on May 20th, the second baghouse compartment (compartment B) was isolated at 12:27 pm on May 20th for filter bag replacement. With the FGD system in gas-sharing mode and five of six baghouse compartments online, HCC operators noticed the FGD baghouse differential pressure (DP) increasing, the induced draft (ID) fan amps increasing and low system draft. The operators continued to monitor the situation and make adjustments to keep the parameters in the required ranges the rest of the day and overnight. At 7:32 am on May 21st the FGD baghouse DP went above 15" H2O. Operations personnel tried to lower the DP by manually cleaning baghouse compartments. Maintenance personnel also responded to check the pressure transmitters and check the system for leaks. Due to the low draft condition, the HRSG #9 bypass vent stack lids initially opened from 8:39 am to 8:40 am. Operations continued to experience high baghouse DP, high FGD fan amps and low draft. In an effort to keep the ID fans from tripping offline and opening all five stack lids, operations opened the HRSG #9 bypass vent stack lids from 1:20 pm to 1:48 pm. However, the system fluctuations continued, causing the HRSG #9 stack lids to open intermittently throughout the day. The baghouse continued to experience periods of high DP and the DP was intermittently above 15" until 11:38 pm when the B compartment of the baghouse was returned to normal operation after the filter bag change-out. The cause of this event is currently under investigation. Vent stack open and close times are shown below.

Vent Stack	Open Time	Closed Time
#9	5/21/2018 8:39:00 AM	5/21/2018 8:40:00 AM
	5/21/2018 1:20:00 PM	5/21/2018 1:48:00 PM
	5/21/2018 1:49:00 PM	5/21/2018 1:50:00 PM
	5/21/2018 2:26:00 PM	5/21/2018 2:26:00 PM
	5/21/2018 2:51:00 PM	5/21/2018 2:53:00 PM
	5/21/2018 3:13:00 PM	5/21/2018 3:14:00 PM
	5/21/2018 6:52:00 PM	5/21/2018 6:53:00 PM
	5/21/2018 7:01:00 PM	5/21/2018 7:02:00 PM
	5/21/2018 7:03:00 PM	5/21/2018 7:04:00 PM
	5/21/2018 7:39:00 PM	5/21/2018 7:41:00 PM

Baghouse Pressure Drop

The FGD baghouse DP exceeded 15" multiple times between 7:32 am and 11:38 pm on 5/21/18. The estimated maximum DP was 19.5".

I am submitting this report for Diana as she is out of town today. Please contact me or Diana with any questions.

Thanks,

Kris Singleton
Corporate Environmental Engineer

SunCoke Energy
office: 513-727-5518
cell: 513-649-1371

This e-mail and any files transmitted with it may contain confidential information and is intended solely for the use of the individual or entity to whom they are addressed. If you are not the intended recipient, you are notified that disclosing, copying, distributing or taking any action in reliance on the contents of this information is strictly prohibited. Please notify the sender immediately by e-mail if you have received this e-mail by mistake and delete this e-mail from your system. Thank you for your cooperation.

STARKWEATHER, DIANA M.

From: STARKWEATHER, DIANA M.
Sent: Monday, May 28, 2018 11:35 AM
To: Cindy.Charles@epa.ohio.gov
Cc: THOMPSON JR, MONTE C. (MCTHOMPSON@suncoke.com); SCHEESSELE, DAVID G. (dscheessele@suncoke.com); SKIPWORTH, JIM G. (JGSKIPWORTH@suncoke.com); BATTEN, KATHERINE M (KMBATTEN@suncoke.com); WILHERE, DENNIS
Subject: 5-27-18 Haverhill Coke Company - Malfunction

Haverhill Coke Company

Emission Unit P902

Malfunction - FGD Baghouse Pressure Drop

Cindy,

On May 27, 2018, high fabric filter pressure drop readings of 16.0 and 16.1 inches of water were recorded on the P902 FGD baghouse during a malfunction. Operations personnel immediately responded and identified a pluggage inside the ash hopper associated with F Compartment. Operations personnel rodded out the ash hoppers to remove the ash buildup, verified operation of the air blowers and associated instrumentation, and began manually pulsing the baghouse, which lowered the pressure drop. Pressure drop excursion times are shown below. Please contact me with any questions.

Pressure Drop	Start Time	End Time
16.0	5/27/2018 1:32 pm	5/27/2018 1:47 pm
16.1	5/27/2018 2:49 pm	5/27/2018 3:50 pm

Diana Starkweather
Environmental Manager
SunCoke Energy Partners, L.P.
Haverhill Operations

SXCPartners

2446 Gallia Pike
Franklin Furnace, OH 45629
Office: 740-355-9823
Cell: 740-352-2593

This e-mail and any files transmitted with it may contain confidential information and is intended solely for the use of the individual or entity to whom they are addressed. If you are not the intended recipient, you are notified that disclosing, copying, distributing or taking any action in reliance on the contents of this information is strictly prohibited. Please notify the sender immediately by e-mail if you have received this e-mail by mistake and delete this e-mail from your system. Thank you for your cooperation.

STARKWEATHER, DIANA M.

From: WILHERE, DENNIS
Sent: Tuesday, May 29, 2018 2:22 PM
To: Cindy Charles (Cindy.Charles@epa.state.oh.us)
Cc: STARKWEATHER, DIANA M.; SCHEESSELE, DAVID G.; THOMPSON JR., MONTE C.; BATTEN, KATIE M; SINGLETON, KRIS E.; SKIPWORTH, JIM G
Subject: 5-28-2018 Haverhill Coke Company Malfunction

Haverhill Coke Company

Emission Unit P902

Malfunction – SO_2 Exceedance

Cindy,

On May 28, 2018, a malfunction occurred on the P902 SDA system when slurry flow was lost to the atomizers. Operations personnel immediately responded and discovered the line associated with "B" atomizer had become plugged. Operations personnel reestablished slurry flow on "B" atomizer by cycling the valve open and closed. Slurry flow during this time was not sufficient to remove SO2 from the gas stream and an exceedance of the 3-hour block SO2 limit occurred. The 3:00 3-hour block average SO2 emissions are estimated to be 192.1 lb/hr. Please contact me with any questions.

Thank you,

Dennis Wilhere
Environmental Compliance Specialist
SunCoke Energy Partners, L.P.
Haverhill Operations

SXCPartners

2446 Gallia Pike
Franklin Furnace, OH 45629
Office: 740-355-9872
Cell: 740-464-1012

This e-mail and any files transmitted with it may contain confidential information and is intended solely for the use of the individual or entity to whom they are addressed. If you are not the intended recipient, you are notified that disclosing, copying, distributing or taking any action in reliance on the contents of this information is strictly prohibited. Please notify the sender immediately by e-mail if you have received this e-mail by mistake and delete this e-mail from your system. Thank you for your cooperation.

STARKWEATHER, DIANA M.

From: WILHERE, DENNIS
Sent: Tuesday, May 29, 2018 3:19 PM
To: Cindy Charles (Cindy.Charles@epa.state.oh.us)
Subject: Correction (Malfunction occurred on Unit P901 not P902)

Haverhill Coke Company

Emission Unit P901

Malfunction – SO_2 Exceedance

Cindy,

On May 28, 2018, a malfunction occurred on the P901 SDA system when slurry flow was lost to the atomizers. Operations personnel immediately responded and discovered the line associated with "B" atomizer had become plugged. Operations personnel reestablished slurry flow on "B" atomizer by cycling the valve open and closed. Slurry flow during this time was not sufficient to remove SO2 from the gas stream and an exceedance of the 3-hour block SO2 limit occurred. The 3:00 3-hour block average SO2 emissions are estimated to be 192.1 lb/hr. Please contact me with any questions.

Thank you,

Dennis Wilhere
Environmental Compliance Specialist
SunCoke Energy Partners, L.P.
Haverhill Operations

SXCPartners

2446 Gallia Pike
Franklin Furnace, OH 45629
Office: 740-355-9872
Cell: 740-464-1012

This e-mail and any files transmitted with it may contain confidential information and is intended solely for the use of the individual or entity to whom they are addressed. If you are not the intended recipient, you are notified that disclosing, copying, distributing or taking any action in reliance on the contents of this information is strictly prohibited. Please notify the sender immediately by e-mail if you have received this e-mail by mistake and delete this e-mail from your system. Thank you for your cooperation.

STARKWEATHER, DIANA M.

From: WILHERE, DENNIS
Sent: Tuesday, May 29, 2018 7:22 PM
To: Cindy Charles (Cindy.Charles@epa.state.oh.us); STARKWEATHER, DIANA M. (dmstarkweather@suncoke.com); SCHEESSELE, DAVID G.; THOMPSON JR., MONTE C.; BATTEN, KATIE M; SINGLETON, KRIS E.; SKIPWORTH, JIM G
Subject: 5-28-2018 Haverhill Coke Company Malfunction

Haverhill Coke Company

Emission Unit P902

Malfunction – FGD Baghouse Pressure Drop

While reviewing FGD baghouse pressure drop data on May 28, 2018, HCC personnel identified high FGD baghouse pressure drop readings of 15.8 and 15.9 inches of water. The FGD baghouse pressure drop was outside of the specified range as a result of excess ash buildup in F Compartment that had accumulated due to a suspected issue with the pulse air system. Operations personnel isolated the compartment in order to manually remove the excess ash that had collected on the bags. This caused the pressure drop to briefly increase because the gas flow was constricted. Contractor personnel were dispatched to remove ash from the hoppers, which lowered the pressure drop. HCC will inspect the baghouse ductwork and pulse air system during the next period of scheduled FGD maintenance. Pressure drop excursion times are shown below. Please contact me with any questions.

Pressure Drop	Start Time	Duration
15.8	5/28/2018 2:11 am	< 15 sec.
15.9	5/28/2018 11:31 am	< 20 sec.

Dennis Wilhere
Environmental Compliance Specialist
SunCoke Energy Partners, L.P.
Haverhill Operations

SXCPartners

2446 Gallia Pike
Franklin Furnace, OH 45629
Office: 740-355-9872
Cell: 740-464-1012

This e-mail and any files transmitted with it may contain confidential information and is intended solely for the use of the individual or entity to whom they are addressed. If you are not the intended recipient, you are notified that disclosing, copying, distributing or taking any action in reliance on the contents of this information is strictly prohibited. Please notify the sender immediately by e-mail if you have received this e-mail by mistake and delete this e-mail from your system. Thank you for your cooperation.

STARKWEATHER, DIANA M.

From: WILHERE, DENNIS
Sent: Monday, June 04, 2018 10:51 AM
To: Cindy Charles (Cindy.Charles@epa.state.oh.us)
Cc: STARKWEATHER, DIANA M. (dmstarkweather@suncoke.com)
Subject: Correction 5-28-2018 Haverhill Coke Company Malfunction

Cindy,

Please note that this malfunction was Identified on May 28th. However, it took place on May 25th, 2018. I apologize for any inconvenience.

Haverhill Coke Company

Emission Unit P902

Malfunction – FGD Baghouse Pressure Drop

While reviewing FGD baghouse pressure drop data on May 28, 2018, HCC personnel identified high FGD baghouse pressure drop readings of 15.8 and 15.9 inches of water. The FGD baghouse pressure drop was outside of the specified range as a result of excess ash buildup in F Compartment that had accumulated due to a suspected issue with the pulse air system. Operations personnel isolated the compartment in order to manually remove the excess ash that had collected on the bags. This caused the pressure drop to briefly increase because the gas flow was constricted. Contractor personnel were dispatched to remove ash from the hoppers, which lowered the pressure drop. HCC will inspect the baghouse ductwork and pulse air system during the next period of scheduled FGD maintenance. Pressure drop excursion times are shown below. Please contact me with any questions.

Pressure Drop	Start Time	Duration
15.8	5/25/2018 2:11 am	< 15 sec.
15.9	5/25/2018 11:31 am	< 20 sec.

Dennis Wilhere
Environmental Compliance Specialist
SunCoke Energy Partners, L.P.
Haverhill Operations

SXCPartners

2446 Gallia Pike
Franklin Furnace, OH 45629
Office: 740-355-9872
Cell: 740-464-1012

This e-mail and any files transmitted with it may contain confidential information and is intended solely for the use of the individual or entity to whom they are addressed. If you are not the intended recipient, you are notified that disclosing, copying, distributing or taking any action in reliance on the contents of this information is strictly prohibited. Please notify the sender immediately by e-mail if you have received this e-mail by mistake and delete this e-mail from your system. Thank you for your cooperation.

STARKWEATHER, DIANA M.

From: WILHERE, DENNIS
Sent: Friday, June 08, 2018 9:33 AM
To: STARKWEATHER, DIANA M. (dmstarkweather@suncoke.com)
Subject: 6-8-18 Haverhill Coke Company Malfunction

Haverhill Coke Company

Emission Unit P901

Malfunction – SO_2 Exceedance

Cindy,

On June 8th, 2018, a malfunction occurred on the P901 SDA system. Around 3:11 pm, slurry flow was lost to all atomizers due to a material blockage in the slaker room and grit screen. SO2 was raised to save slurry while maintenance personnel repaired A slaker. Around 9:00 am, A slaker was repaired, restoring slurry flow. Slurry flow during the 12:00 3-hour block was not sufficient to remove SO2 from the gas stream and an exceedance of the 3-hour block SO2 limit occurred. The 12:00 3-hour block average SO2 emissions are estimated to be 193.8 lb/hr. Please contact me with any questions.

Dennis Wilhere
Environmental Compliance Specialist
SunCoke Energy Partners, L.P.
Haverhill Operations

SXCPartners

2446 Gallia Pike
Franklin Furnace, OH 45629
Office: 740-355-9872
Cell: 740-464-1012

This e-mail and any files transmitted with it may contain confidential information and is intended solely for the use of the individual or entity to whom they are addressed. If you are not the intended recipient, you are notified that disclosing, copying, distributing or taking any action in reliance on the contents of this information is strictly prohibited. Please notify the sender immediately by e-mail if you have received this e-mail by mistake and delete this e-mail from your system. Thank you for your cooperation.

STARKWEATHER, DIANA M.

From: WILHERE, DENNIS
Sent: Thursday, June 14, 2018 4:23 PM
To: Cindy Charles (Cindy.Charles@epa.state.oh.us)
Cc: STARKWEATHER, DIANA M. (dmstarkweather@suncoke.com); SCHEESSELE, DAVID G.; SKIPWORTH, JIM G; THOMPSON JR., MONTE C.; BATTEN, KATIE M; SINGLETON, KRIS E.
Subject: Haverhill Coke Company - Malfunction

Haverhill Coke Company

Emission Unit P901

Malfunction – Stack Lid Opening

Cindy,

On June 14, 2018 a malfunction occurred on the P901 HRSG #2 Coke Side Stack Lid. Operations personnel received the Emergency Vent Stack Lid HRSG 2 Open Alarm at 9:18am. Operations personnel visually verified the lid was open, then immediately attempted to close it from the HMI. At 9:34am, operations personnel closed the Coke side lid locally.

Maintenance personnel found that one of the coils on the coke side stack lid had failed. The system is designed so that if a problem occurs with the stack lid instrumentation, the stack lids fail open in order to prevent potential damage to the boiler. Maintenance personnel replaced the failed coil. Stack lid open and close times are shown below. Please contact me with any questions.

Vent Stack	Open Time	Closed Time
#2	6/14/2018 9:18:00 AM	6/14/2018 9:34:00 AM

Dennis Wilhere
Environmental Compliance Specialist
SunCoke Energy Partners, L.P.
Haverhill Operations

SXCPartners

2446 Gallia Pike
Franklin Furnace, OH 45629
Office: 740-355-9872
Cell: 740-464-1012

This e-mail and any files transmitted with it may contain confidential information and is intended solely for the use of the individual or entity to whom they are addressed. If you are not the intended recipient, you are notified that disclosing, copying, distributing or taking any action in reliance on the contents of this information is strictly prohibited. Please notify the sender immediately by e-mail if you have received this e-mail by mistake and delete this e-mail from your system. Thank you for your cooperation.

Attachment B3

Haverhill Coke Company, Weekly Tie-in Time Notifications to PLAA

STARKWEATHER, DIANA M

From: EVANS, KACI K
Sent: Thursday, January 25, 2018 10:07 AM
To: STARKWEATHER, DIANA M
Subject: W/E 1-20-18 Weekly Tie-In Time Notification

Cindy,

CD tie-in time for the week ending 1/20/18 are detailed in the chart below. Please contact me with any questions.

Date of Tie In Time	Time of Tie In Time Bypass Venting Start to End (Hours)	Bypass Vent Stack No.
1/18/18	0.37	1
1/18/18	0.38	2
1/18/18	0.35	3
1/18/18	0.40	4
1/18/18	0.33	5

On January 18, 2018 at 7:33 am, the bypass vent stack associated with HRSGs 1 – 5 were open at the same time in conjunction with ongoing testing associated with the Consent Decree (CD) entered in the United States District Court for the Southern District of Illinois on November 7, 2014. The total duration of the bypass venting event was 1.83 hours.

On January 18, 2018 at 7:33 am, a fabric filter pressure drop reading of 0.0 inches of water was recorded on the P901 FGD baghouse the excursion lasted approximately 0.32 hours. During this time, there was no waste gas being processed through the FGD baghouse due to the CD testing event in which all of the P901 bypass vent stack lids were open. Before and after the bypass venting event, the FGD baghouse pressure drop was within the specified range.

Thank you,

Kaci Evans
Environmental Administrator
SunCoke Energy Partners, L.P.
Haverhill Operations

SXCPartners

2446 Gallia Pike
Franklin Furnace, OH 45629
Office: 740-355-9872
Cell: 740-464-3846

This e-mail and any files transmitted with it may contain confidential information and is intended solely for the use of the individual or entity to whom they are addressed. If you are not the intended recipient, you are notified that disclosing, copying, distributing or taking any action in reliance on the contents of this information is strictly prohibited. Please notify the sender immediately by e-mail if you have received this e-mail by mistake and delete this e-mail from your system. Thank you for your cooperation.

STARKWEATHER, DIANA M

From: STARKWEATHER, DIANA M
Sent: Monday, March 05, 2018 7:49 PM
To: Cindy Charles (Cindy.Charles@epa.state.oh.us)
Cc: SKIPWORTH, JIM G.; SINGLETON, KRIS E; SCHEESSELE, DAVID G.; SKIPWORTH, JIM G.; BATTEN, KATIE M
Subject: W/E 3-3-18 Weekly Tie-In Time Notification

Cindy,

CD tie-in time for the week ending 3/3/18 are detailed in the chart below. Please contact me with any questions.

Date of Tie In Time	Time of Tie In Time Bypass Venting Start to End (Hours)	Bypass Vent Stack No.
3/1/18	0.02	4

Diana Starkweather
Environmental Manager
SunCoke Energy Partners, L.P.
Haverhill Operations

SXCPartners

2446 Gallia Pike
Franklin Furnace, OH 45629
Office: 740-355-9823
Cell: 740-352-2593

This e-mail and any files transmitted with it may contain confidential information and is intended solely for the use of the individual or entity to whom they are addressed. If you are not the intended recipient, you are notified that disclosing, copying, distributing or taking any action in reliance on the contents of this information is strictly prohibited. Please notify the sender immediately by e-mail if you have received this e-mail by mistake and delete this e-mail from your system. Thank you for your cooperation.

STARKWEATHER, DIANA M

From: STARKWEATHER, DIANA M
Sent: Wednesday, March 14, 2018 10:11 AM
To: 'Cindy Charles (Cindy.Charles@epa.state.oh.us)'
Cc: SKIPWORTH, JIM G.; SINGLETON, KRIS E; SCHEESSELE, DAVID G.; SKIPWORTH, JIM G.; BATTEN, KATIE M
Subject: W/E 3-10-18 Weekly Tie-In Time Notification

Cindy,

CD tie-in time for the week ending 3/10/18 are detailed in the chart below. Please contact me with any questions.

Date of Tie In Time	Time of Tie In Time Bypass Venting Start to End (Hours)	Bypass Vent Stack No.
3/4/18 (ongoing)	146.62	1
3/4/18 (ongoing)	147.09	2
3/4/18 (ongoing)	147.87	3
3/4/18 (ongoing)	149.92	4
3/4/18 (ongoing)	149.24	5

Thanks,

Diana Starkweather
Environmental Manager
SunCoke Energy Partners, L.P.
Haverhill Operations

SXCPartners

2446 Gallia Pike
Franklin Furnace, OH 45629
Office: 740-355-9823
Cell: 740-352-2593

This e-mail and any files transmitted with it may contain confidential information and is intended solely for the use of the individual or entity to whom they are addressed. If you are not the intended recipient, you are notified that disclosing, copying, distributing or taking any action in reliance on the contents of this information is strictly prohibited. Please notify the sender immediately by e-mail if you have received this e-mail by mistake and delete this e-mail from your system. Thank you for your cooperation.

STARKWEATHER, DIANA M.

From: STARKWEATHER, DIANA M.
Sent: Monday, April 02, 2018 4:02 PM
To: Cindy Charles (Cindy.Charles@epa.state.oh.us)
Cc: SKIPWORTH, JIM G; SINGLETON, KRIS E.; SCHEESSELE, DAVID G.; SKIPWORTH, JIM G; BATTEN, KATIE M
Subject: P901 FGD Outage/Tie-In Time Notification

Cindy,

CD tie-in time that occurred in conjunction with the P901 FGD Outage is detailed in the chart below. Please note that this includes tie in time previously reported for the week ending 3/10/18. Please contact me with any questions.

Date of Tie In Time	Time of Tie In Time Bypass Venting	Bypass Vent Stack No.
	Start to End (Hours)	
3/4/18 – 3/27/18	551.12	1
3/4/18 – 3/27/18	552.48	2
3/4/18 – 3/27/18	554.50	3
3/4/18 – 3/27/18	555.85	4
3/4/18 – 3/27/18	553.87	5

Thanks,

Diana Starkweather
Environmental Manager
SunCoke Energy Partners, L.P.
Haverhill Operations

SXCPartners

2446 Gallia Pike
Franklin Furnace, OH 45629
Office: 740-355-9823
Cell: 740-352-2593

This e-mail and any files transmitted with it may contain confidential information and is intended solely for the use of the individual or entity to whom they are addressed. If you are not the intended recipient, you are notified that disclosing, copying, distributing or taking any action in reliance on the contents of this information is strictly prohibited. Please notify the sender immediately by e-mail if you have received this e-mail by mistake and delete this e-mail from your system. Thank you for your cooperation.

STARKWEATHER, DIANA M.

From: STARKWEATHER, DIANA M.
Sent: Thursday, May 03, 2018 8:30 AM
To: 'Cindy Charles (Cindy.Charles@epa.state.oh.us)'
Cc: SKIPWORTH, JIM G; SINGLETON, KRIS E.; SCHEESSELE, DAVID G.; BATTEN, KATIE M
Subject: W/E 4-28-18 Weekly Tie-In Time Notification

Cindy,

CD tie-in time for the weeks ending 4/28/18 are detailed in the chart below. Please contact me with any questions.

Date of Tie In Time	Time of Tie In Time Bypass Venting	Bypass Vent Stack No.
	Start to End (Hours)	
4/23/18	0.55	5
4/26/18	0.30	5

Thanks,

Diana Starkweather
Environmental Manager
SunCoke Energy Partners, L.P.
Haverhill Operations

SXCPartners

2446 Gallia Pike
Franklin Furnace, OH 45629
Office: 740-355-9823
Cell: 740-352-2593

This e-mail and any files transmitted with it may contain confidential information and is intended solely for the use of the individual or entity to whom they are addressed. If you are not the intended recipient, you are notified that disclosing, copying, distributing or taking any action in reliance on the contents of this information is strictly prohibited. Please notify the sender immediately by e-mail if you have received this e-mail by mistake and delete this e-mail from your system. Thank you for your cooperation.

Attachment B4

Haverhill Coke Company, Other Agency Notifications and Reports

STARKWEATHER, DIANA M.

From: STARKWEATHER, DIANA M
Sent: Wednesday, January 10, 2018 4:50 PM
To: Brown, Todd (Todd.Brown@epa.ohio.gov); Cindy.Charles@epa.ohio.gov
Cc: Sastry, Chandra (chandra.sastry@aecom.com); Thomas, Bill (Oak Ridge) (bill.c.thomas@aecom.com); BATTEN, KATHERINE M (KMBATTEN@suncoke.com); SKIPWORTH, JIM G. (JGSKIPWORTH@suncoke.com); Carson, John R (Oak Ridge) (john.r.carson@aecom.com); EVANS, KACI K (KKEVANS@suncoke.com)
Subject: Intent to Test Notification - Haverhill Coke Company RATA Testing
Attachments: Bypass Stack 5 CEMS RATA Intent to Test Notification.pdf

Todd and Cindy,

Attached is the Intent to Test Notification for the Relative Accuracy Test Audit (RATA) for the SO_2 CEMS on Bypass Vent Stack 5. This test will be conducted along with other stack tests on Bypass Stack 5 as part of the Consent Decree requirements. The RATA testing is scheduled for March 6, 2018.

If you have any questions regarding this notification or if you need any additional information for this testing please do not hesitate to contact me.

Thanks,

Diana Starkweather
Environmental Manager
SunCoke Energy Partners, L.P.
Haverhill Operations

SXCPartners

2446 Gallia Pike
Franklin Furnace, OH 45629
Office: 740-355-9823
Cell: 740-352-2593

This e-mail and any files transmitted with it may contain confidential information and is intended solely for the use of the individual or entity to whom they are addressed. If you are not the intended recipient, you are notified that disclosing, copying, distributing or taking any action in reliance on the contents of this information is strictly prohibited. Please notify the sender immediately by e-mail if you have received this e-mail by mistake and delete this e-mail from your system. Thank you for your cooperation.

INTENT TO TEST NOTIFICATION (One Emissions Unit Per Sheet)

Agency use only	
Date Received	
Assigned	

Facility Premise No. 0773000182
Emissions Unit PTI No. P0119826
SCC Number NA

Proposed Test Date 3/6/18
Proposed Start Time 09:00

A. Facility Contact Information:

Name: Haverhill Coke Company
Address: 2446 Gallia Pike, Franklin Furnace, OH 45629
Contact Person: Diana Starkweather
Telephone (O): 740-355-9823 (Cell):
E-mail: dmstarkweather@suncoke.com

Testing Firm Information:

Name: AECOM
Address: 105 Mitchell Road, Suite 200, Oak Ridge, TN 37830
Contact Person: Chandra Sastry
Telephone (O): 865-425-7046 (Cell):
E-mail: chandra.sastry@aecom.com

B. Test Location Information:

Name: Haverhill Coke Company
Contact Person: Diana Starkweather
Address: 2446 Gallia Pike, Franklin Furnace, OH 45629
Telephone (O): 740-355-9823 (Cell):

C. Test Plan and Emissions Unit Information Table: List the applicable information under each respective column heading.

Emission Unit # / Description	Control Equipment	Monitoring Equipment	Pollutant(s) to be Tested	EPA Test Method(s)	Number of Sampling Points	Total Time for Sample Run	Number of Sampling Runs
Bypass Stack 5	None	SO2 Analyzer (wet basis)	SO2 Moisture	EPA Method 6C EPA Method 4	3 1	At least 21 min Approx 1 hour	At least 9 At least 3

Are *any* modifications, or alternatives as spelled out within the test methods, being proposed? Yes ☒ No ☐ If "no", then no modifications or alternatives, however minor, will be accepted. If yes, list each test method and section being modified, and attach a detailed modification description and justification: Reference method analyzer bias checks will be conducted after every three RATA runs. samples for moisture determination will be collected from a single point within the stack and a moisture determination will be made approximately every hour.

Source is testing to comply with (check all that apply): State PTI ☐ State PTO ☐ Title V ☐ NSPS ☐ MACT ☐ BIF ☐ Title IV ☐ Other (explain) Consent Decree

D. What is the maximum rated capacity or throughput of the emissions unit given in its permit-to-install or permit-to-operate? 42.5 wet tons coal charged/oven during venting

Has the facility scheduled production or throughput so that the emissions unit can be operated at the maximum capacity given in its permit-to-install or permit-to-operate during the test? Yes ☐ No ☒ If no, attach explanation.

Specify how the operating rate will be demonstrated during testing: Production records

Sampling Location(s): Inlet ☐ Outlet ☒ Simultaneous ☐ Will Cyclonic flow check(s) be conducted? Yes ☐ No ☒

Fuel Sampling: Coal - Proximate ☐ Ultimate ☐ Other ☐ If other, specify: NA

Emission rate to be calculated using: F-Factor ☐ Ultimate Coal Analysis ☐ Other ☒ If other, specify: No emission rate calcs. RATA will be on a conc. basis.

Has any maintenance or parts replacement been performed on the emissions unit or the control equipment within the last year? Yes ☐ No ☒

If yes, briefly describe:

(Note: Some maintenance, such as installing new filter bags in a baghouse, or replacing the activated carbon in an adsorber, may disqualify the emissions unit from a performance test until a sufficient amount of time has elapsed to ensure a test which will be representative of normal operations.)

E. Sample Train Calibration: All affected measuring and monitoring equipment should be calibrated within 60 days of the scheduled testing. *Ohio EPA 12/07*

THE FOLLOWING ADDITIONAL INFORMATION SHALL BE SUBMITTED AS ATTACHMENTS:

F. Sample Train Information:

- A schematic diagram of each sampling train.
- The type or types of capture media to be used to collect each gas stream pollutant. (Include filter specification sheets)

- Sample probe type, (e.g., glass, teflon, stainless steel, etc.)
- Probe cleaning method and solvent to be used, if applicable.

G. Laboratory Analysis:

- A description of the laboratory analysis methods to be used to determine the concentration of each pollutant.

H. Description of Operations:

- A description of any operation, process, or activity that could vent exhaust gases to the stack being tested. This shall include the description and feed rate of all materials capable of producing pollutant emissions used in each separate operation. Maximum process weight rate, or coating rate, and parameters such as line speed, VOC content etc. should be specifically documented with calculations to confirm worst case scenario emissions.

Note 1: All compliance demonstration testing shall be performed at maximum rated capacity as specified by the equipment manufacturer, or at the maximum rate actually used in the emissions unit operation, whichever is greater, or at any other rate as agreed upon with Ohio EPA.

Note 2: If the emissions unit is not operated at maximum capacity, or as close as possible thereto, the emissions unit might be derated to the production capacity achieved during testing.

I. Stack and Vent Description:

- A dimensional sketch or sketches showing the plan and elevation view of the entire ducting and stack arrangement. The sketch should include the relative position of all processed or operations venting to the stack or vent to be tested. It should also include the position of the ports relative to the nearest upstream and downstream gas flow disturbance or duct dimensional change. The sketches should include the relative position, type, and manufacturer's claimed efficiency of all gas cleaning equipment.

- A cross sectional dimensional sketch of the stack or duct at the sampling ports, showing the position of sampling points. In case of a rectangular duct, show division of duct into equal areas.

- For fugitive emissions testing, a sketch illustrating the specific emissions points to be observed must be included.

J. Safety:

- Describe all possible safety hazards including such items as the presence of toxic fumes, high noise levels, areas where eye protection is required, etc. Note: Conditions considered unsafe at the time of the test will cause postponement.

Intent to Test Notification Attachment
Relative Accuracy Test Audit

Date Prepared: January 3, 2018 Proposed Test Date: March 6, 2018
Plant Address: Haverhill Coke Company
2446 Gallia Pike
Franklin Furnace, OH 45629

F. Sample Train Information
F1. See attached diagrams.
F2. Not applicable for SO2 CEMS RATA.
F3. Inconel probe will be used to extract sample for SO2 analysis.
F4. Not applicable.

G. Laboratory Analysis None required.

H. Description of Operations
The Haverhill Coke Company (HCC) utilizes the Jewell-Thompson heat recovery oven to manufacture metallurgical coke. In coke production from heat recovery ovens, the volatile fraction of the coal is driven off in a reducing atmosphere and then oxidized. Heat recovery steam generators recover heat from the process gases. The cooled gases pass through a lime spray dryer/baghouse system prior to being exhausted from the main stack. HCC Phase I includes 100 ovens (Batteries A and B) that operate on a 48-hour coking cycle. HCC Phase I has a daily design coal coking rate of 2400 tons.

During scheduled maintenance, 20 ovens vent process gases directly into the atmosphere through a bypass stack, bypassing the FGD system. The proposed testing will be conducted on one such bypass stack (#5) during the scheduled FGD system outage.

I. Stack and Vent Description
See attached diagrams.

J. Safety
All test personnel will have taken the plant safety orientation program. All plant safety requirements will be complied with during the RATA testing including the wearing of safety vests, hard hats, safety shoes, safety glasses, and hearing protection as appropriate.

K. Test Report
The RATA test report will be submitted within 30 days of conducting the test and will include:

- A summary of the RATA results,
- A description of the technical approach used including EPA reference methods,
- QA/QC procedures,
- All raw data sheets,
- Results of audit samples, if any,
- All calibration data, and
- Formulas used to calculate relative accuracy

Intent to Test Notification Attachment
Relative Accuracy Test Audit

Date Prepared: January 3, 2018 Proposed Test Date: March 6, 2018
Plant Address: Haverhill Coke Company
2446 Gallia Pike
Franklin Furnace, OH 45629

Has the facility scheduled production or throughput so that the emissions unit can be operated at the maximum capacity given in its permit-to-install or permit-to-operate during the test?

Paragraph 19 of the Consent Decree requires coal charge weights be reduced during periods of bypass venting that occur due to Scheduled FGD maintenance. Therefore, coal charge during this testing will be limited to an average of 42.5 wet tons per oven.

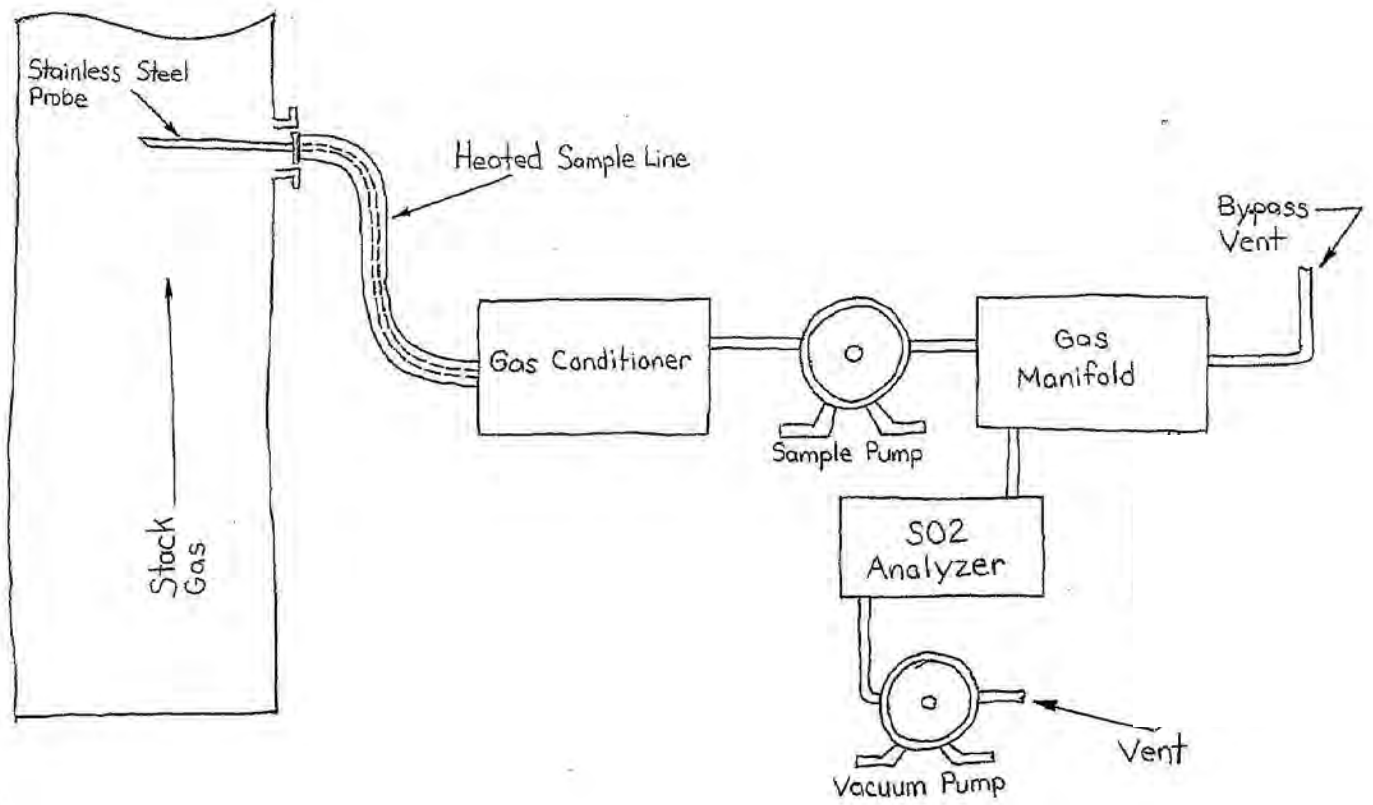

Reference Method
Sampling System - Analyzer Method

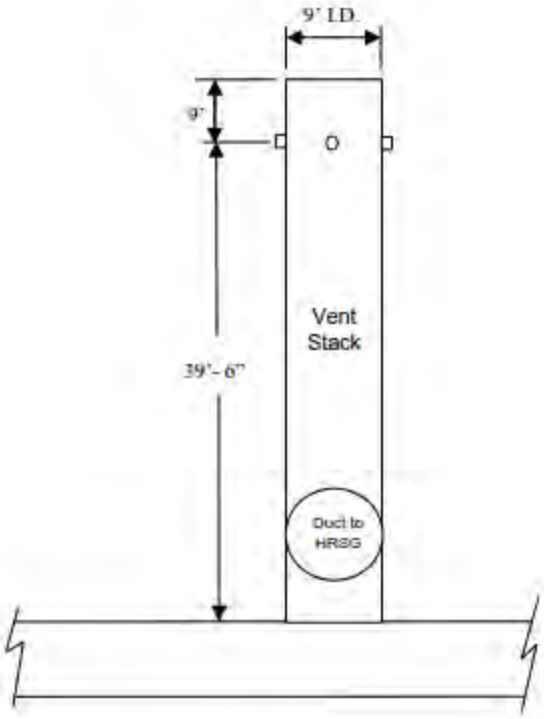

Schematic of Typical Bypass Stack Vent

STARKWEATHER, DIANA M.

From: STARKWEATHER, DIANA M
Sent: Friday, January 05, 2018 5:41 PM
To: 'Harrison, Gina'
Cc: 'morris.james@epa.gov'; GATES, KATHERINE T.; BATTEN, KATIE M; SINGLETON, KRIS E (KESINGLETON@SUNCOKE.COM)
Subject: Notice of Intent to Conduct Stack Testing - HCC No. 1
Attachments: HCC Test Protocol - 2018 HCC No. 1 FGD Scheduled Maintenance.pdf

Gina,

Pursuant to paragraph 31 of the Consent Decree, attached is Haverhill Coke Company's notice of intent to conduct stack testing during Scheduled FGD Maintenance on HCC No. 1. Information regarding the Relative Test Accuracy Audit (RATA) of the SO2 CEMS on Bypass Vent Stack 5 is also enclosed. Hard copies have also been sent via FedEx.

Please let me know if you have any questions.

Thank you,

Diana Starkweather
Environmental Manager
SunCoke Energy Partners, L.P.
Haverhill Operations

SXCPartners

2446 Gallia Pike
Franklin Furnace, OH 45629
Office: 740-355-9823
Cell: 740-352-2593

This e-mail and any files transmitted with it may contain confidential information and is intended solely for the use of the individual or entity to whom they are addressed. If you are not the intended recipient, you are notified that disclosing, copying, distributing or taking any action in reliance on the contents of this information is strictly prohibited. Please notify the sender immediately by e-mail if you have received this e-mail by mistake and delete this e-mail from your system. Thank you for your cooperation.

Test Protocol for the Haverhill Coke Company HRSG Bypass Vent Stack HNCC No. 1

Prepared for:
Haverhill Coke Company
Franklin Furnace, Ohio

Prepared by:
AECOM
Oak Ridge, Tennessee

January 2018

Gateway Energy and Coke Company, LLC
Haverhill Coke Company, LLC

1011 Warrenville Rd
Lisle, IL 60532

January 5, 2018

Chief, Environmental Enforcement Section
Environment and Natural Resources Division
U.S. Department of Justice
Box 7611 Ben Franklin Station
Washington, DC 20044-7611
Re: DOJ #90-5-2-1-09890 & 90-5-2-1-10065

Air Enforcement Division Director
U.S. Environmental Protection Agency
Office of Civil Enforcement
Air Enforcement Division
1200 Pennsylvania Ave, NW Mail Code: 2242A
Washington, DC 20460

Gina Harrison
U.S. Environmental Protection Agency
Region 5, AE-17J
77 West Jackson Blvd.
Chicago, IL 60604
harrison.gina@epa.gov

James Morris
U.S. Environmental Protection Agency
Region 5, C-14J
77 West Jackson Blvd.
Chicago, IL 60604
morris.james@epa.gov

Ohio Environmental Protection Agency
Division of Air Pollution Control, Central Office
50 W. Town Street
Suite 700
Columbus, Ohio 43216-1049
Attention: Bruce Weinberg

Ohio Attorney General's Office
Environmental Enforcement Section
30 East Broad Street, 25th Floor
Columbus, Ohio 43215
Attention: Elizabeth Ewing

Portsmouth Local Air Agency
605 Washington Street, Third Floor
Portsmouth, Ohio 45662
Attention: Cindy Charles

RE: Consent Decree, *United States, et al. v. Gateway Energy & Coke Company LLC, et al.*
Stack Testing Protocol for HNCC No. 1 March 2018 Stack Testing
Haverhill Coke Company, LLC Facility (Ohio EPA Facility ID 0773000182)

To Whom It May Concern,

The United States, the State of Illinois, the State of Ohio, Gateway Energy & Coke Company, LLC (GECC), Haverhill Coke Company, LLC (HNCC) and SunCoke Energy, Inc. (SunCoke) are parties to a Consent Decree (CD) lodged in the U.S. District Court for the Southern District of Illinois with an Effective Date of November 7, 2014.

In accordance with Paragraphs 29, 30, 31, and 32 of the CD, HNCC and GECC are required to conduct stack testing during any Scheduled FGD Maintenance that lasts more than 2 days and notification of that testing must be submitted no less than 60 days prior to beginning the testing. Attached, please find the notification and emissions testing protocol for the stack testing that will be conducted at HNCC No. 1 during Scheduled FGD Maintenance beginning on or about March 4, 2018.

Gateway Energy and Coke Company, LLC
Haverhill Coke Company, LLC

1011 Warrenville Rd
Lisle, IL 60532

Please contact me at 630-824-1786 or kmbatten@suncoke.com if you have any questions or concerns.

Sincerely,

Katie Batten
Corporate Environmental Manager
SunCoke Energy, Inc.

TEST PROTOCOL
FOR THE HAVERHILL COKE COMPANY
HRSG BYPASS VENT STACK
HNCC No. 1

Prepared for:

Haverhill Coke Company
2446 Gallia Pike
Franklin Furnace, Ohio 45629

Prepared by:

AECOM Technical Services
105 Mitchell Road, Suite 200
Oak Ridge, Tennessee 37830

January 2018

PROJECT CONTACT INFORMATION

Plant Name and Address

Haverhill Coke Co.
2446 Gallia Pike
Franklin Furnace, OH 45629

Source Identification

Stack Test – Bypass Vent Stack No. 5

Proposed Test Dates

March 6-8, 2018

Source Contact

Diana Starkweather
Tel: (740) 355-9823
Email: DMSTARKWEATHER@suncoke.com

Test Company Name

AECOM Technical Services
105 Mitchell Road, Suite 200
Oak Ridge, TN 37830

Test Company Contact

John Carson
Tel: (865) 483-9870
Email: john.r.carson@aecom.com

TABLE OF CONTENTS

1. INTRODUCTION/OVERVIEW 1

2. CONSENT DECREE TEST REQUIREMENTS 3

3. STACK TESTING PROTOCOL 4
   - 3.1 Test Requirements and Methods 4
   - 3.2 Description of Sampling Trains 5
     - 3.2.1 Sampling Point Determination – USEPA Method 1 5
     - 3.2.2 Flue Gas Velocity and Volumetric Flow Rate – USEPA Method 2 6
     - 3.2.3 Flue Gas Composition – USEPA Method 3A 6
     - 3.2.4 Flue Gas Moisture Content – USEPA Method 4 6
     - 3.2.5 PM/PM_{10} – USEPA Method 5/202 7
     - 3.2.6 HCl – USEPA Method 26 8
     - 3.2.7 Sulfuric Acid Mist – Conditional Test Method 13 (CTM-13) 9
     - 3.2.8 SO_2 and NO_x – USEPA Methods 6C and 7E 10
     - 3.2.9 Lead and Mercury – USEPA Method 29 11
   - 3.3 Requested Deviation from PM and Lead/Mercury Test Procedures 12

4. TEST SCHEDULE 14

5. TEST REPORT 15

Appendix A: SCHEMATIC OF VENT STACK

Appendix B: SCHEMATIC OF SAMPLE TRAINS

LIST OF ACRONYMS

CD	Consent Decree
CEM	Continuous Emissions Monitoring
CFR	Code of Federal Regulations
CO_2	Carbon Dioxide
CTM	Conditional Test Method
dscf	dry standard cubic feet
FGD	Flue Gas Desulfurization
H_2O_2	Hydrogen Peroxide
H_2SO_4	Sulfuric Acid Mist
HCl	Hydrogen Chloride
HNCC	Haverhill Coke Company
HNO_3	Nitric Acid
HRSG	Heat Recovery Steam Generator
$KMnO_4$	Potassium Permanganate
NOx	Nitrogen Oxides
O_2	Oxygen
PM	Particulate Matter
PM_{10}	Particulate Matter less than 10 microns diameter
RATA	Relative Accuracy Test Audit
SO_2	Sulfur Dioxide
USEPA	U.S. Environmental Protection Agency

1. INTRODUCTION/OVERVIEW

Haverhill Coke Company (HNCC) utilizes SunCoke's Thompson heat recovery type of oven to manufacture metallurgical coke. In coke production from both heat recovery and byproduct ovens, the volatile fraction of the coal is driven off in a reducing atmosphere. Coke is essentially the remaining carbon and ash. With byproduct ovens, the volatiles and combustion products are collected downstream of the oven chamber and refined in a chemical plant to produce coke oven gas and other products such as tar, ammonia, and light oils. In heat recovery ovens, all the coal volatiles are combusted within the oven and the heat from combustion is recovered to generate steam.

Heat recovery steam generators (HRSGs) recover heat from the oven process gases and cool the gases for treatment in downstream pollution control devices. Particulate matter (PM) and sulfur dioxide (SO_2) are removed from the oven gases in a flue gas desulfurization (FGD) system, which incorporates a lime spray dryer and baghouse. All flue gases go through this system except during times of HRSG or FGD maintenance. The ovens are designed to always operate under negative pressure. In order to safely maintain negative pressure for maintenance or during an emergency (such as a severe storm with a major power outage), the stack lids on the bypass vent stacks open and vent the flue gases to the atmosphere using natural draft. During scheduled maintenance, ovens vent process gases directly into the atmosphere through a bypass stack, bypassing the FGD system. These gases still pass through the common tunnel afterburner system, which fully combusts the gases prior to release into the atmosphere.

There are currently 200 ovens at HNCC that operate on a 48-hour coking cycle; 100 ovens at HNCC No. 1 and 100 ovens at HNCC No. 2. Half the ovens are pushed and charged each day. For example, on HNCC No. 1 the 50 even-numbered ovens are charged one day and the 50 odd-numbered ovens are charged the next. The current mode of operation is to divide the pushing and charging of the ovens into two daily production shifts.

SunCoke Energy, Inc.; Haverhill Coke Company, LLC ("HNCC"); and Gateway Energy & Coke Company, LLC (GECC) (collectively, SunCoke) entered into a Consent Decree (CD)

with the United States and the States of Ohio and Illinois to resolve alleged Clean Air Act violations. This CD became effective on November 7, 2014. Paragraph 29 of the CD requires stack testing of one of the bypass vent stacks at HNCC during scheduled FGD maintenance during each period of FGD maintenance that is scheduled to last more than 2 days.

Section 2 of this document lists the CD test requirements; Section 3 contains the stack testing protocol; Section 4 provides the test schedule; and Section 5 lists the information that will be included in the stack test report. Appendix A shows a diagram of the vent stack and Appendix B contains schematics of the sampling trains.

Stack testing was previously performed May 16-18, 2016, on Bypass Vent Stack No. 5 during FGD maintenance at HNCC No. 1. HNCC No. 1 is currently planning to conduct scheduled FGD maintenance beginning on or about March 4, 2018, for a period of 25 days. The HNCC No. 1 stack tests are planned for March 6-8, 2018. Paragraph 31 of the CD requires that, by no later than 60 days before any stack test is conducted, HNCC shall submit for approval its intent to conduct such tests. Paragraph 32 of the CD requires that the notification required in Paragraph 31 include the scheduled date of the testing, an emissions test protocol, a description of the planned operating rate and operating conditions, and the procedures that will be used to measure the maximum charge weight and rate. This document serves as the notification of the upcoming testing and provides all required information regarding the testing.

2. CONSENT DECREE TEST REQUIREMENTS

The CD requires that a series of tests be performed during periods of FGD maintenance scheduled to last more than 2 days. Maintenance is scheduled to be performed on the HNCC No. 1 FGD system (ovens 1 through 100) starting March 4, 2018, for 25 days. The pollutants to be measured are:

- PM and PM_{10} (limited by CD)
- Lead and mercury
- Hydrogen chloride (HCl)
- Sulfuric acid mist
- Nitrogen oxides (NO_x)

A relative accuracy test audit (RATA) of the bypass vent continuous emission monitor (CEM) for sulfur dioxide (SO_2) will be performed during the same FGD outage at HNCC No. 1.

3. STACK TESTING PROTOCOL

The test requirements and test procedures are presented in this section.

3.1 Test Requirements and Methods

Paragraph 19 of the CD requires that emissions be minimized during all bypass venting. This includes restrictions on the maximum average coal charge and the maximum coal sulfur content. Therefore, the target test conditions will be the following (based on limits specified in the CD):

- Coal Charge: no more than 42.5 ton average on a wet weight basis
- Coal Sulfur: no more than 1.1% by weight

HNCC No. 1 will operate under normal conditions during the stack testing. Ovens will be pushed and charged on the normal 48-hour cycle. Coal charge tonnage and coal sulfur content will be reduced in accordance with Paragraph 19 of the CD.

The coal charge to each oven is measured by a calibrated weigh bin, which batches each coal charge prior to charging it to the oven. Charge weights to each oven will be measured and recorded based on the actual weigh bin batch that is sent for charging. The time, date, and amount of coal charged to each oven under the associated vent stack will be recorded. The coal sulfur will be measured from a daily analysis of the coal charged to the ovens during the testing.

The RATA will compare the SO_2 concentrations measured by the bypass vent stack CEMs to an independent Reference Method CEMs. The data will be compared over the same time periods (a minimum of 21 minute test periods). A minimum of nine tests (to a maximum of twelve tests) will be performed to evaluate the bypass vent stack CEMs system performance.

The proposed stack test methods are shown in Table 1. Each proposed test is based on United States Environmental Protection Agency (USEPA) reference methods or alternative

methods approved by USEPA. Sampling, calibration, and calculation of results will be based on the procedures in the methods and as discussed below.

Table 1. Test Methods

Emission Unit	Pollutant	Test Method Reference	Comment
Bypass vent stack No. 5	Traverse point layout	USEPA Method 1	
	Gas flow rate	USEPA Method 2	
	Gas molecular weight	USEPA Method 3A	Measure O_2 and CO_2
	Moisture	USEPA Method 4	
	PM/PM_{10}	USEPA Method 5/202	
	NO_x	USEPA Method 7E	
	SO_2	USEPA Method 6C	RATA CEM pollutant
	Sulfuric Acid Mist	USEPA Conditional Test Method 13	Controlled condensate method
	HCl	USEPA Method 26	Use large impingers
	Lead and Mercury	USEPA Method 29	

A minimum of nine SO_2 tests (Method 6C) will be performed for the RATA. Three sets of tests will be performed for each of the other stack test methods. The sampling time for each PM test run will be approximately 2 hours. The sampling times for the lead and mercury test runs (Method 29) will be sufficient to collect a sample volume ≥45 dry standard cubic feet (dscf) [approximately 90 minutes]. The sulfuric acid and HCl tests will each be approximately 1 hour. The NO_x tests will be performed concurrently with the PM tests.

3.2 Description of Sampling Trains

This section contains a brief description of the sampling and analytical procedures for each method that will be employed during the test program. Any deviations from the methods are also discussed.

3.2.1 Sampling Point Determination – USEPA Method 1

The number and location of the sampling or traverse points will be determined according to the procedures outlined in USEPA Method 1. The sample location will be inspected to ensure USEPA Method 1 criteria are met. All points will be at least 1.0 inch from the stack wall, per

Method 1. Based on previous test information, the bypass vent stack will require a 24 point traverse for isokinetic sampling, which will be spread evenly across four sampling ports.

3.2.2 Flue Gas Velocity and Volumetric Flow Rate – USEPA Method 2

The flue gas velocity and volumetric flow rate will be determined according to the procedures outlined in USEPA Method 2. Velocity measurements will be made using Type S Pitot tubes that have been calibrated according to USEPA Method 2 criteria. Differential pressures will be measured with a fluid inclined manometer. Effluent gas temperatures will be measured with Type K thermocouples equipped with digital readouts.

3.2.3 Flue Gas Composition – USEPA Method 3A

Flue gas analysis for O_2 and CO_2 concentrations to determine the flue gas dry molecular weight will be performed in accordance with USEPA Method 3A. Samples will be collected either by directly extracting and conveying flue gas to a CEMs or by collecting a sample in a gas sampling bag that will then be measured using a CEMs. The concentrations of O_2 and CO_2 will be reported in percent levels.

3.2.4 Flue Gas Moisture Content – USEPA Method 4

The flue gas moisture content will be determined in conjunction with each USEPA Method 5/202, Method 29, and Method 26 sampling train according to the sampling and analytical procedures outlined in USEPA Method 4. The impingers will be connected in series and will contain reagents as described in Section 3.2.5. The impingers will be contained in an ice bath to ensure condensation of the moisture in the flue gas stream. Any moisture that is not condensed in the impingers is captured in the silica gel; therefore, all moisture can be weighed and entered into moisture content calculations.

3.2.5 PM/PM_{10} – USEPA Method 5/202

The CD requires testing for PM and PM_{10}. PM consists of two components – filterable and condensable. The facility limits for HNCC No. 1 were originally established for filterable PM. However, the limits in the CD are for total PM (filterable plus condensable). The PM_{10} limits have been set at the same level. It is not practical to measure filterable PM_{10} in the HNCC bypass vent stacks because the temperature (up to 1,700ºF) is outside the range of the equipment typically used for Method 201A (400ºF) [refer to 40 CFR 60, Appendix A, Method 201A, 8.6.1]. Therefore, PM_{10} emissions will be assumed to be the same as PM emissions.

The sampling probe will be fitted with a calibrated S-type Pitot for measuring exhaust gas flow rates and a K-type thermocouple for measuring the gas stream temperature. Prior to performing the compliance test, a cyclonic flow verification traverse will be performed.

The filterable PM will be measured in accordance with USEPA Reference Method 5. The filterable PM will be performed by extracting a sample of the stack exhaust gas stream through a one-piece quartz nozzle and liner encased in an air cooled probe. The probe will be attached to a heated glass filter holder containing a pre-weighed, glass-fiber filter. The filter heater box will be maintained at a temperature of 248°F +25°F as measured by a K-type thermocouple in a thermowell in the filter holder housing.

At the conclusion of each test run, the sample train will be recovered by rinsing the sample probe and nozzle three times with acetone into a sample container. The filter will be removed from the filter holder and placed into a Petri dish and sealed for transportation. The front half of the glass filter holder and connecting elbow will be rinsed with acetone into the probe wash sample container. A sample of the acetone used in the sample recovery will be collected and analyzed as a reagent blank. The acetone rinses and filters will be analyzed for filterable PM.

The condensable fraction of PM will be measured using the procedures described in USEPA Reference Method 202. The impinger train contains a water-jacketed coil condenser

between the heated filter outlet and inlet to the first impinger. The water condensed in the coil condenser drops into a knockout impinger. The second impinger is initially empty. The cooled gas then passes through a Teflon filter maintained in the range of 65°F to 85°F. The third impinger initially contains 100 mL of distilled water. The fourth impinger contains approximately 200 grams of indicating silica gel. The third and fourth impingers are placed in an ice bath to maintain the impinger train outlet temperature at ≤65°F. Because of limited space at the test ports, a Teflon "jumper" may be used between the heated filter and the impinger train allow the impinger train to be placed where it can be accessed during the test run (e.g., to add ice or access the condensable PM filter).

After testing, the impinger train will be moved to the test trailer and connected to a cylinder of pure nitrogen and purged for 60 minutes at a flow rate of 14 liters per minute. The condensed water in the first two impingers will be recovered. The condenser, first two impingers, connecting glassware, and front-half of the Teflon filter holder will be rinsed with water for the inorganic sample and with acetone followed by hexane for the organic sample. The Teflon filter, organic and inorganic rinses, and reagent blanks will be analyzed for inorganic and organic condensable PM. A field train proof blank and field blank will be collected during the tests.

Method 202 allows a blank correction because of its history of high bias due to various sources of contamination. EPA interim guidance [Memorandum from Steven Page, Office of Air Quality Planning and Standards, to EPA Regional Air Division Directors, Regions 1-10, April 8, 2014] allows proof blank correction of up to 5.1 mg. A field train proof blank and field blank will be collected and the appropriate blank will be used.

3.2.6 HCl – USEPA Method 26

The HCl sampling will be performed using an USEPA Method 26 sampling train. The train will consist of a quartz liner fitted into an air-cooled sampling probe. This is required because the stack temperature will be at least 1,400 °F. The probe will be connected to a heated, glass filter holder containing a quartz filter. The outlet of the filter holder will be connected to a series of ball-joint impingers. The first and second impingers will be the Smith-Greenburg type

and each will contain 100 mL of 0.1N sulfuric acid (H_2SO_4). The third impinger will be an empty modified Smith-Greenburg impinger. The fourth impinger will be a modified Smith-Greenburg impinger containing 200 grams of indicating silica gel. Only the impingers that absorb HCl (the H_2SO_4 impingers) will be analyzed.

3.2.7 Sulfuric Acid Mist – Conditional Test Method 13 (CTM-13)

This method, also known as NCASI Method 8A, was developed as an alternative to USEPA Method 8 for determining H_2SO_4 emissions from Kraft recovery furnaces. It has been observed that the reference method, USEPA Method 8, can be subject to significant interference from SO_2 as well as sulfates if they are present in the PM. This alternative method uses a quartz in-line filter to remove PM from the gas stream prior to capturing H_2SO_4. The use of a controlled condensation technique instead of impingers reduces the potential for interference from SO_2. This conditional test method is proposed because the expected sulfur trioxide concentration is small (less than 10 parts per million), and the alternate test method is likely to be more accurate in this situation.

The CTM-13 sampling train will consist of a quartz tube wrapped in an insulating blanket that will be used as the sampling probe. The exit of the probe will be connected to a quartz filter holder containing a quartz filter, which will be maintained at a temperature of ≥500°F by means of a cylindrical heating mantle. The outlet of the filter holder will be connected to a modified Graham condenser that is constructed with a Type-C glass frit and 200 cm of 5mm ID glass tubing condenser coil. The outer condenser chamber is filled with water and maintained at a temperature between 167°F and 185°F by means of a recirculating water bath. The outlet of the heated coil condenser is connected to a series of glass impingers to remove moisture from the sample gas. The first impinger will be a modified Greenburg-Smith filled with 100 mL of water or 3% hydrogen peroxide (H_2O_2). The second impinger will be a Greenburg-Smith type also filled with 100 mL of water or 3% H_2O_2. The third impinger will be an empty modified Greenburg-Smith type. The fourth impinger will be a modified Greenburg-Smith filled with 200 grams of indicating silica gel. The sampling train will be connected, by means of an

umbilical cord, to the control console. The control console contains the dry gas meter, sampling pump, heat controllers, and sample rate controls.

The CTM-13 sample train will be operated by placing the end of the quartz sample tube approximately 3 feet into the vent stack. A gas sample will then be extracted from a single sampling point in the stack, at a constant sample rate of 10.0 L/min (±10%), for a 1-hour period. Leak checks will be performed at both the beginning and ending of a sample test run.

At the conclusion of the test run, the CTM-13 sample train will be removed from the sampling platform and recovered in the test trailer. The sample recovery will be performed by rinsing the H_2SO_4 condenser with distilled water. The H_2SO_4 condenser rinse will be collected into a sample container. The CTM-13 analysis will be performed using suppressed ion chromatography.

3.2.8 SO_2 and NO_x – USEPA Methods 6C and 7E

SO_2 will be measured during the RATA. NO_x will be measured during the PM stack test runs. The SO_2 and NO_x concentrations will be measured by CEMs according to USEPA Methods 6C and 7E, respectively. The concentrations will be measured continuously and recorded as 1-minute averages by an electronic datalogger.

The CEM sampling will be performed by placing a sample probe in the stack to withdraw a continuous gas sample. The gas sample will be transported through a heated, Teflon sample line to an electric gas chiller that will remove any moisture in the gas stream. Exiting the gas chiller, the dried sample gas will be distributed to each CEM for subsequent analysis.

The CEMs will be calibrated before and after each test run using USEPA protocol gases. The NOx emissions rate will use the gas flow rate data from the PM test runs.

The presence or absence of stratification will be determined before testing based on a 3-point concentration traverse at the test ports.

3.2.9 Lead and Mercury – USEPA Method 29

The lead and mercury sampling will be performed using an USEPA Method 29 sampling train. The sample train will consist of an integrated quartz nozzle and probe liner fitted into an air-cooled sampling probe. This is required because the stack temperature will be at least 1,400°F. The outlet of the probe will be connected to a heated, glass filter holder containing a quartz fiber filter. The outlet of the filter holder will be connected to a series of ball-joint impingers. Because of limited space at the test ports, a Teflon "jumper" may be used between the heated filter and the impinger train to allow the impinger train to be placed where it can be accessed during the test run. The first impinger will be a modified Smith-Greenburg containing 100 mL of a 5% nitric acid (HNO_3)/10% H_2O_2 mixture. The second impinger will be a Smith-Greenburg containing a 5% HNO_3/10% H_2O_2 mixture. The third impinger will be modified Smith-Greenburg and will initially be empty. The fourth and fifth impingers will be a modified Smith-Greenburg containing a mixture of 4% potassium permanganate ($KMnO_4$)/10% H_2SO_4. The sixth impinger will be a modified Smith-Greenburg containing 200 grams of indicating silica gel. The remainder of the sampling train is identical to the Method 5/202 train described in Section 3.2.5.

The Method 29 train will be operated identically to the Method 5 train, except the total sample volume collected will be at least 45 dscf to ensure adequate detection limits of the target metals. At the conclusion of the sample run, the Method 29 sample train will be removed from the stack to the sample recovery trailer for subsequent recovery per Method 29 procedures. The sample probe will be washed on the stack to avoid potential breakage of the probe liner.

At the conclusion of each Method 29 test, the sample train will be recovered by washing the nozzle/probe assembly and front half of the filter holder three times with 0.1N HNO_3 into a sample container. The impinger train will then be disassembled and each impinger weighed to determine the moisture gained during the sample run. The liquid contents of impingers one and two will be transferred into a sample container. Impinger three will be rinsed with 0.1N HNO_3 into a separate sample container. The contents of impingers four and five will be transferred into

a sample container. The impingers will then be rinsed with 100 mL of fresh $KMnO_4$ solution. The rinse will be then be transferred to a separate sample container. Impingers four and five will then be rinsed with 100 mL of deionized water and added to the same sample container. Finally, impingers four and five will be rinsed with 25 mL of 8N HNO_3 and 200 mL of distilled water into a separate sample container.

Samples of the filter, deionized water, impinger solutions, and rinse solutions will be collected along with the actual test samples to serve as blanks for the tests. The blank samples will be analyzed along with the actual test samples.

3.3 Requested Deviation from PM and Lead/Mercury Test Procedures

The following deviation was requested and approved for the May 2016 tests at HNCC No. 1 and for the September 2016 tests at HNCC No. 2.

The design of the test platforms on the bypass vent stacks present several safety issues. These include:

- Small size – approximately 4 ft wide
- Near the top of a hot (up to 1,700°F) stack plume
- The metal on the outside of the stack is hot (>140ºF)
- Limited access – platform partially blocked by the stack lid counterweight

This results in a trip hazard due to equipment and sample lines in a small space; a fall hazard when passing heavy equipment around the stack lid counterweights; a burn hazard due to proximity to the hot metal on the outside of the stack and a hot stack plume that "bends over" on the downwind side. The requested deviation improves the safety for the test crew with negligible error to the measurements.

The ideal probe and nozzle configuration option for collecting the PM, lead, mercury, and HCl samples is to use an integrated (one piece) quartz probe liner and nozzle. This eliminates

any metal from contacting the sample. However, since the stack is hot (up to 1,700ºF) the sample must be cooled prior to reaching the filter. This will be done using an air cooled probe. The disadvantage of this arrangement is that the integrated liner and nozzle is fragile. The risk of breaking the liner and/or nozzle can be reduced by minimizing thermal shock (moving from the hot stack to ambient air) and minimizing the number of times the probe and impingers are moved (port changes).

AECOM suggests the following procedure to minimize the number of times each train is removed from the port and physically moved:

- Perform a complete velocity traverse of 24 points (4 ports)
- Determine the average velocity
- Identify which of the four ports has a representative average velocity (based on an average of the six points)
- Install the isokinetic train (Method 5/202 or Method 29) in the representative port for the entire run
- Measure velocity with a Pitot tube in the other three ports at approximately 30 minute intervals during the run

This procedure ensures that the average velocity is determined for each run by measuring the velocities at each traverse point but protects the integrated probe and nozzle by minimizing the thermal shock and movement of the sample train. This procedure also reduces the burn hazards, trip hazards and fall hazards for the test crew.

4. TEST SCHEDULE

The 200 ovens at HNCC operate on a 48-hour coking cycle. Pushing and charging the ovens is referred to as "production" at HNCC. Half the ovens are pushed and charged each day. For example, the 100 odd-numbered ovens are pushed and charged one day and the 100 even-numbered ovens are pushed and charged the next. Production occurs twice a day – with approximately 1/4 of the ovens charged during each production cycle. Production at HNCC No. 1 typically occurs from approximately 03:00 to 07:00 and then from 11:00 to 15:00. Since the operation is cyclical, previous bypass vent stack tests were performed at different times during the day – typically one run early in the cycle, a second run near mid-cycle, and a third run near the end of the cycle to achieve test results representative of the entire coking cycle over 24 hours. As with the May 2016 tests on HNCC No 1, one test run will be conducted during the first production pass on the ovens under Bypass Vent Stack No. 5, which generally occurs sometime between 6:00 a.m. and 7:00 a.m. The other two runs will be conducted at mid-cycle and late-cycle, respectively. Note that the actual test times will depend on the actual production schedule at the time of the testing. If, for example, equipment issues cause a change in the production schedule, the test times will be modified accordingly.

The RATA and three sets of stack tests will be performed for each target pollutant over a 3 day period. The stack tests are planned for March 6-8, 2018. The proposed tests are:

- Day 1 – Perform SO_2 RATA
- Day 1 – Perform Method 5/202, Method 26, and Method 7E tests
  - Run 1 – Mid-cycle, approximately 20:00-22:00
- Day 2 – Perform two Method 5/202, Method 26, and Method 7E tests
  - Run 2 – Late-cycle, approximately 01:00 - 03:00
  - Run 3 – During first pass under Stack No. 5, approximately 06:00 – 08:00
- Day 2 – Perform Method 29 and Method CTM-13 tests
  - Run 1 – Mid-cycle, approximately 20:00-21:30
- Day 3 – Perform two Method 29 and Method CTM-13 tests
  - Run 2 – Late-cycle, approximately 01:00 - 02:30
  - Run 3 – During first pass under Stack No. 5, approximately 06:00 – 07:30

5. TEST REPORT

At the completion of the stack test project, a final engineering report will be issued to HNCC for subsequent submittal to Ohio EPA and USEPA. The CD requires submission of the test report within 60 days of conducting the test. The report will contain the following:

- Summary of the test results
- Description of the technical approach used, including USEPA reference methods
- Quality assurance/quality control procedures
- All raw data sheets
- Production data during the test period
- All test equipment calibration data
- Formulas used to calculate mass emission rates

Appendix A
SCHEMATIC OF VENT STACK

24 Sample Points Required
4 ports with 6 points each

Traverse Layout

Point	Distance (from wall)
1	2.27
2	7.24
3	12.74
4	19.12
5	27.00
6	38.45

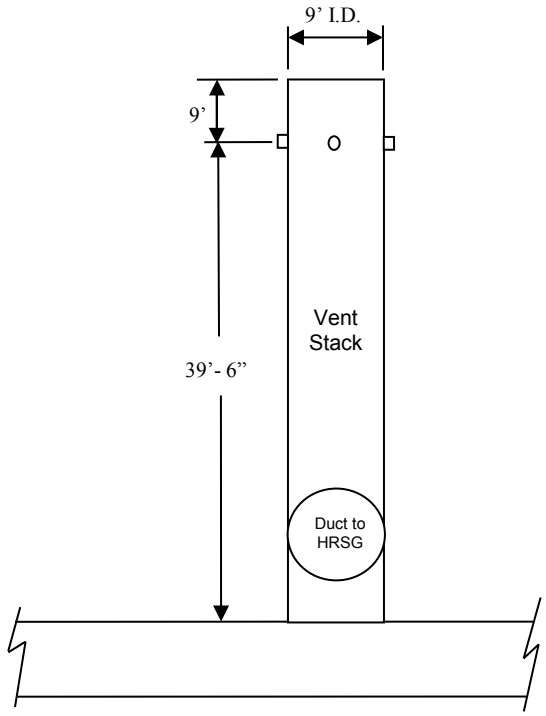

Schematic of Typical Bypass Vent Stack

Appendix B
SCHEMATIC OF SAMPLE TRAINS

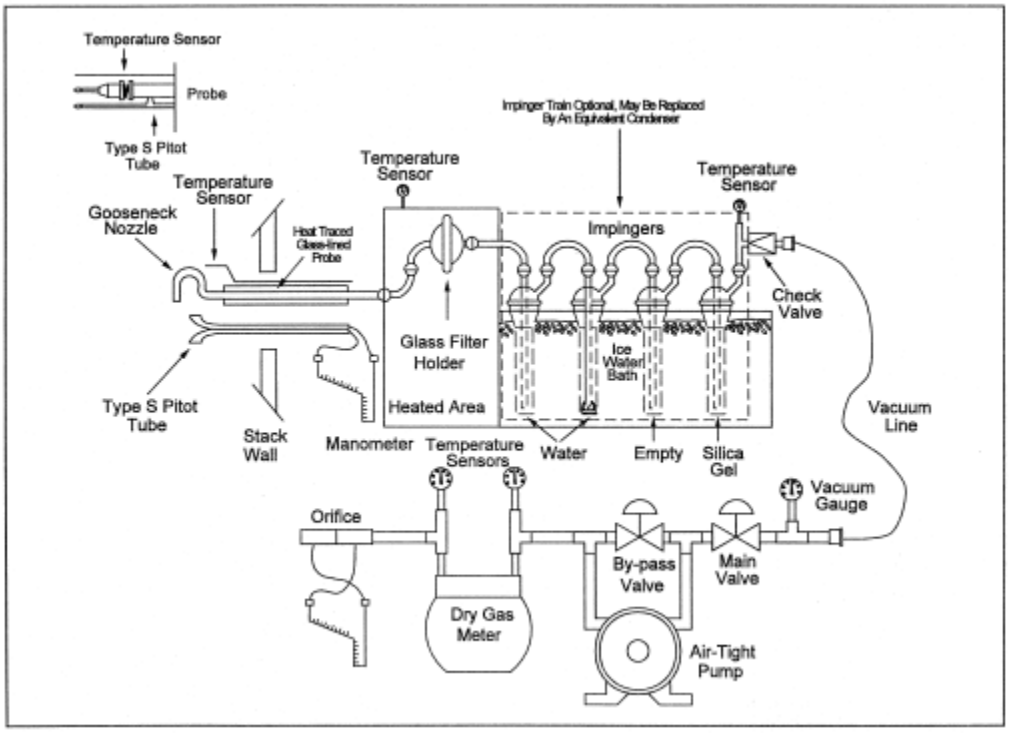

USEPA Method 5 Train (will use front portion)

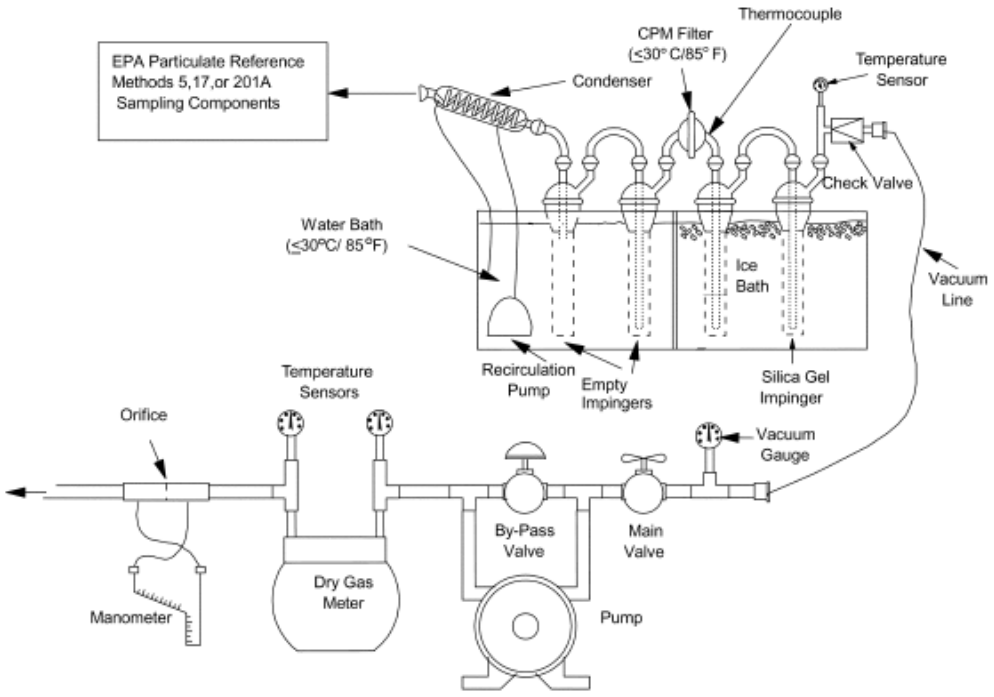

USEPA Method 202 Train (will use back portion)

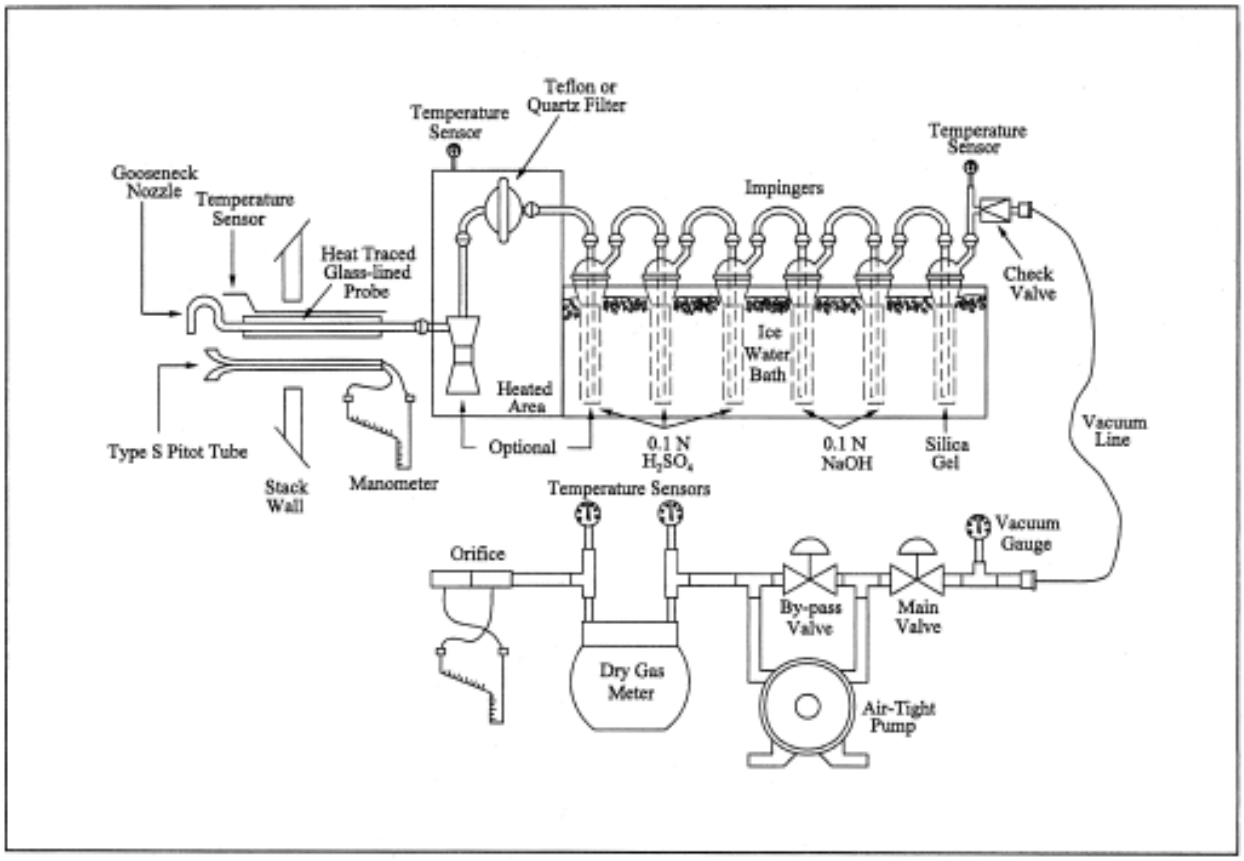

USEPA Method 26 Train (no NaOH in back impingers)

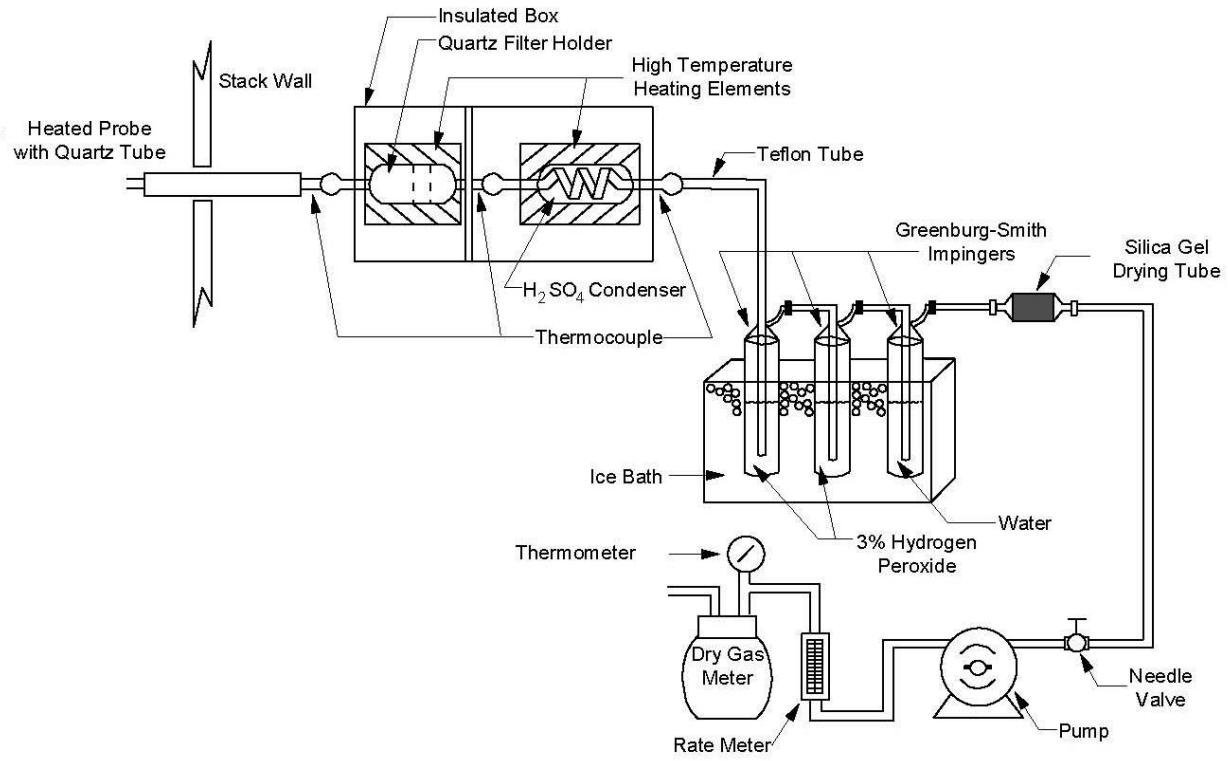

USEPA Method CTM-13 Train

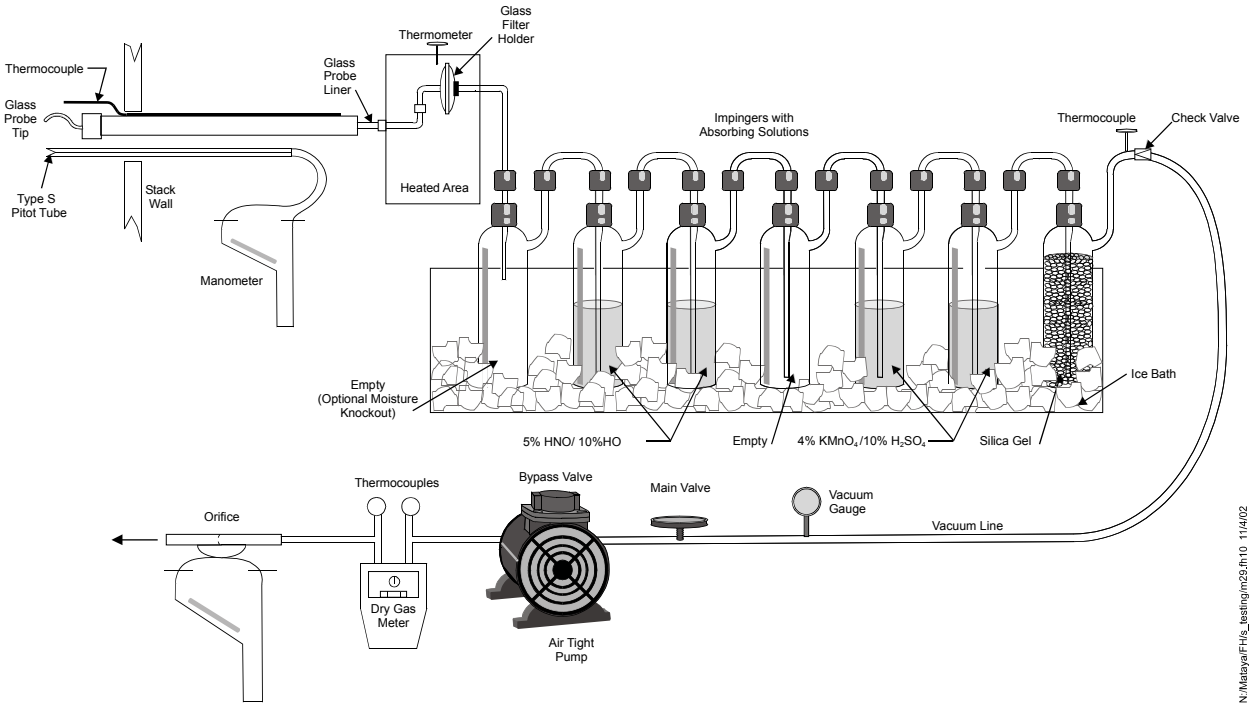

USEPA Method 29 Train

STARKWEATHER, DIANA M.

From: STARKWEATHER, DIANA M
Sent: Thursday, February 22, 2018 11:31 AM
To: 'Harrison, Gina'
Cc: 'morris.james@epa.gov'; GATES, KATHERINE T.; BATTEN, KATIE M; SINGLETON, KRIS E; Rob Brager (rbrager@bdlaw.com) (rbrager@bdlaw.com)
Subject: RE: Notice of Intent to Conduct Stack Testing - HCC No. 1

Gina,

The HCC1 Bypass Vent Stack #5 Stack testing is currently scheduled to begin on March 6 immediately following the RATA. However, HCC was recently notified by AECOM that conducting the RATA and Method 5/202, Method 26, and Method 7E Mid-Cycle tests on March 6 would require the stack testing crew to work 24 hours. Therefore, this Mid-Cycle run has been moved to March 7. Subsequently, all other test runs have been shifted by one day; therefore, testing will conclude on March 9 rather than March 8. Please note that the times of the "First Pass," "Mid-Cycle," and "Late-Cycle" have not changed, only the days on which they are performed. The revised testing schedule is below. We apologize for any inconvenience.

- Day 1 – Perform SO_2 RATA
- Day 2 – Perform two Method 5/202, Method 26, and Method 7E tests
  - Run 1 – During first pass under Stack No. 5, approximately 06:00 – 08:00
  - Run 2 – Mid-cycle, approximately 20:00-22:00
- Day 3 – Perform one Method 5/202, Method 26, and Method 7E tests
  - Run 3 – Late-cycle, approximately 01:00 - 03:00
- Day 3 – Perform Method 29 and Method CTM-13 tests
  - Run 1 – Mid-cycle, approximately 20:00-21:30
- Day 4 – Perform two Method 29 and Method CTM-13 tests
  - Run 2 – Late-cycle, approximately 01:00 - 02:30
  - Run 3 – During first pass under Stack No. 5, approximately 06:00 – 07:30

Thanks,

Diana Starkweather
Environmental Manager

Office: 740-355-9823
Cell: 740-352-2593

From: STARKWEATHER, DIANA M
Sent: Friday, January 05, 2018 5:41 PM
To: 'Harrison, Gina' <harrison.gina@epa.gov>
Cc: 'morris.james@epa.gov' <morris.james@epa.gov>; GATES, KATHERINE T. <KTGATES@suncoke.com>; BATTEN, KATIE

M <KMBATTEN@suncoke.com>; SINGLETON, KRIS E (KESINGLETON@SUNCOKE.COM) <KESINGLETON@SUNCOKE.COM>
Subject: Notice of Intent to Conduct Stack Testing - HCC No. 1

Gina,

Pursuant to paragraph 31 of the Consent Decree, attached is Haverhill Coke Company's notice of intent to conduct stack testing during Scheduled FGD Maintenance on HCC No. 1. Information regarding the Relative Test Accuracy Audit (RATA) of the SO2 CEMS on Bypass Vent Stack 5 is also enclosed. Hard copies have also been sent via FedEx.

Please let me know if you have any questions.

Thank you,

Diana Starkweather
Environmental Manager
SunCoke Energy Partners, L.P.
Haverhill Operations

SXCPartners

2446 Gallia Pike
Franklin Furnace, OH 45629
Office: 740-355-9823
Cell: 740-352-2593

This e-mail and any files transmitted with it may contain confidential information and is intended solely for the use of the individual or entity to whom they are addressed. If you are not the intended recipient, you are notified that disclosing, copying, distributing or taking any action in reliance on the contents of this information is strictly prohibited. Please notify the sender immediately by e-mail if you have received this e-mail by mistake and delete this e-mail from your system. Thank you for your cooperation.

STARKWEATHER, DIANA M

From: STARKWEATHER, DIANA M
Sent: Monday, March 05, 2018 7:55 PM
To: Cindy.Charles@epa.ohio.gov
Cc: SKIPWORTH, JIM G. (JGSKIPWORTH@suncoke.com); THOMPSON JR, MONTE C. (MCTHOMPSON@suncoke.com); BATTEN, KATHERINE M (KMBATTEN@suncoke.com); SINGLETON, KRIS E (KESINGLETON@SUNCOKE.COM); SCHEESSELE, DAVID G. (dscheessele@suncoke.com)
Subject: P901 FGD Maintenance Outage

Cindy,

The P901 FGD maintenance outage began as scheduled yesterday, Sunday, March 4, 2018. The following are the vent stack opening times:

Vent Stack	Open Time
#1	3/4/2018 9:22:00 PM
#2	3/4/2018 8:54:00 PM
#3	3/4/2018 8:07:00 PM
#4	3/4/2018 6:04:00 PM
#5	3/4/2018 6:45:00 PM

The SDA Fabric Filter was bypassed at 9:10 pm.

I will keep you updated if there are any deviations from the planned outage schedule.

Thanks,

Diana Starkweather
Environmental Manager
SunCoke Energy Partners, L.P.
Haverhill Operations

SXCPartners

2446 Gallia Pike
Franklin Furnace, OH 45629
Office: 740-355-9823
Cell: 740-352-2593

This e-mail and any files transmitted with it may contain confidential information and is intended solely for the use of the individual or entity to whom they are addressed. If you are not the intended recipient, you are notified that disclosing, copying, distributing or taking any action in reliance on the contents of this information is strictly prohibited. Please notify the sender immediately by e-mail if you have received this e-mail by mistake and delete this e-mail from your system. Thank you for your cooperation.

STARKWEATHER, DIANA M.

From: STARKWEATHER, DIANA M.
Sent: Wednesday, March 28, 2018 6:20 PM
To: Cindy.Charles@epa.ohio.gov
Cc: BATTEN, KATHERINE M (KMBATTEN@suncoke.com); SKIPWORTH, JIM G. (JGSKIPWORTH@suncoke.com); SINGLETON, KRIS E (KESINGLETON@SUNCOKE.COM); SCHEESSELE, DAVID G. (dscheessele@suncoke.com); THOMPSON JR, MONTE C. (MCTHOMPSON@suncoke.com)
Subject: P901 FGD Maintenance Outage

Cindy,

The P901 FGD maintenance outage began as scheduled on Sunday, March 4, 2018 and was completed on Tuesday, March 27, 2018. The vent stack open and close times are listed below:

Vent Stack	Open Time	Close Time
#1	3/4/2018 9:22:00 PM	3/27/2018 8:29:00 PM
#2	3/4/2018 8:54:00 PM	3/27/2018 9:23:00 PM
#3	3/4/2018 8:07:00 PM	3/27/2018 10:37:00 PM
#4	3/4/2018 6:04:00 PM	3/27/2018 9:55:00 PM
#5	3/4/2018 6:45:00 PM	3/27/2018 8:37:00 PM

HCC brought “B” and “A” ID fans back online at 5:30 am and 6:48 pm, respectively, and the SDA Fabric Filter was brought back online at 6:48 pm.

Thank you,

Diana Starkweather
Environmental Manager
SunCoke Energy Partners, L.P.
Haverhill Operations

SXCPartners

2446 Gallia Pike
Franklin Furnace, OH 45629
Office: 740-355-9823
Cell: 740-352-2593

This e-mail and any files transmitted with it may contain confidential information and is intended solely for the use of the individual or entity to whom they are addressed. If you are not the intended recipient, you are notified that disclosing, copying, distributing or taking any action in reliance on the contents of this information is strictly prohibited. Please notify the sender immediately by e-mail if you have received this e-mail by mistake and delete this e-mail from your system. Thank you for your cooperation.

STARKWEATHER, DIANA M.

From: STARKWEATHER, DIANA M.
Sent: Monday, April 02, 2018 3:55 PM
To: 'Harrison, Gina'
Cc: 'morris.james@epa.gov'; GATES, KATHERINE T; BATTEN, KATIE M; SINGLETON, KRIS E.
Subject: Notice of Intent to Conduct Stack Testing - HCC No. 2
Attachments: HNCC Test Protocol for Unit 2 CD tests.pdf

Gina,

Pursuant to paragraph 31 of the Consent Decree, attached is Haverhill Coke Company's notice of intent to conduct stack testing during Scheduled FGD Maintenance on HCC No. 2. Information regarding the Relative Test Accuracy Audit (RATA) of the SO2 CEMS on Bypass Vent Stack 6 is also enclosed. Hard copies have also been sent via UPS.

Please let me know if you have any questions.

Thank you,

Diana Starkweather
Environmental Manager
SunCoke Energy Partners, L.P.
Haverhill Operations

SXCPartners

2446 Gallia Pike
Franklin Furnace, OH 45629
Office: 740-355-9823
Cell: 740-352-2593

This e-mail and any files transmitted with it may contain confidential information and is intended solely for the use of the individual or entity to whom they are addressed. If you are not the intended recipient, you are notified that disclosing, copying, distributing or taking any action in reliance on the contents of this information is strictly prohibited. Please notify the sender immediately by e-mail if you have received this e-mail by mistake and delete this e-mail from your system. Thank you for your cooperation.

Gateway Energy and Coke Company, LLC
Haverhill Coke Company, LLC

1011 Warrenville Rd
Lisle, IL 60532

April 2, 2018

Chief, Environmental Enforcement Section
Environment and Natural Resources Division
U.S. Department of Justice
Box 7611 Ben Franklin Station
Washington, DC 20044-7611
Re: DOJ #90-5-2-1-09890 & 90-5-2-1-10065

Air Enforcement Division Director
U.S. Environmental Protection Agency
Office of Civil Enforcement
Air Enforcement Division
1200 Pennsylvania Ave, NW Mail Code: 2242A
Washington, DC 20460

Gina Harrison
U.S. Environmental Protection Agency
Region 5, AE-17J
77 West Jackson Blvd.
Chicago, IL 60604
harrison.gina@epa.gov

James Morris
U.S. Environmental Protection Agency
Region 5, C-14J
77 West Jackson Blvd.
Chicago, IL 60604
morris.james@epa.gov

Ohio Environmental Protection Agency
Division of Air Pollution Control, Central Office
50 W. Town Street
Suite 700
Columbus, Ohio 43216-1049
Attention: Bruce Weinberg

Ohio Attorney General's Office
Environmental Enforcement Section
30 East Broad Street, 25th Floor
Columbus, Ohio 43215
Attention: Elizabeth Ewing

Portsmouth Local Air Agency
605 Washington Street, Third Floor
Portsmouth, Ohio 45662
Attention: Cindy Charles

RE: Consent Decree, *United States, et al. v. Gateway Energy & Coke Company LLC, et al.*
Stack Testing Protocol for HNCC No. 1 March 2018 Stack Testing
Haverhill Coke Company, LLC Facility (Ohio EPA Facility ID 0773000182)

To Whom It May Concern,

The United States, the State of Illinois, the State of Ohio, Gateway Energy & Coke Company, LLC (GECC), Haverhill Coke Company, LLC (HNCC) and SunCoke Energy, Inc. (SunCoke) are parties to a Consent Decree (CD) lodged in the U.S. District Court for the Southern District of Illinois with an Effective Date of November 7, 2014.

In accordance with Paragraphs 29, 30, 31, and 32 of the CD , HNCC and GECC are required to conduct stack testing during any Scheduled FGD Maintenance that lasts more than 2 days and notification of that testing must be submitted no less than 60 days prior to beginning the testing. Attached, please find the notification and emissions testing protocol for the stack testing that will be conducted at HNCC No. 2 during Scheduled FGD Maintenance beginning on or about June 4, 2018.

Gateway Energy and Coke Company, LLC
Haverhill Coke Company, LLC

1011 Warrenville Rd
Lisle, IL 60532

Please contact me at 630-824-1786 or kmbatten@suncoke.com if you have any questions or concerns.

Sincerely,

Katie Batten
Corporate Environmental Manager
SunCoke Energy, Inc.

Test Protocol for the Haverhill Coke Company HRSG Bypass Vent Stack HNCC No. 2

Prepared for:
Haverhill Coke Company
Franklin Furnace, Ohio

Prepared by:
AECOM
Oak Ridge, Tennessee

March 2018

TEST PROTOCOL
FOR THE HAVERHILL COKE COMPANY
HRSG BYPASS VENT STACK
HNCC No. 2

Prepared for:

Haverhill Coke Company
2446 Gallia Pike
Franklin Furnace, Ohio 45629

Prepared by:

AECOM Technical Services
105 Mitchell Road, Suite 200
Oak Ridge, Tennessee 37830

March 2018

PROJECT CONTACT INFORMATION

Plant Name and Address

Haverhill Coke Co.
2446 Gallia Pike
Franklin Furnace, OH 45629

Source Identification

Stack Test – Bypass Vent Stack No. 6

Proposed Test Dates

June 12-15, 2018

Source Contact

Diana Starkweather
Tel: (740) 355-9823
Email: DMSTARKWEATHER@suncoke.com

Test Company Name

AECOM Technical Services
105 Mitchell Road, Suite 200
Oak Ridge, TN 37830

Test Company Contact

John Carson
Tel: (865) 483-9870
Email: john.r.carson@aecom.com

TABLE OF CONTENTS

1. INTRODUCTION/OVERVIEW 1

2. CONSENT DECREE TEST REQUIREMENTS 3

3. STACK TESTING PROTOCOL 4
   - 3.1 Test Requirements and Methods 4
   - 3.2 Description of Sampling Trains 5
     - 3.2.1 Sampling Point Determination – USEPA Method 1 5
     - 3.2.2 Flue Gas Velocity and Volumetric Flow Rate – USEPA Method 2 6
     - 3.2.3 Flue Gas Composition – USEPA Method 3A 6
     - 3.2.4 Flue Gas Moisture Content – USEPA Method 4 6
     - 3.2.5 PM/PM_{10} – USEPA Method 5/202 7
     - 3.2.6 HCl – USEPA Method 26 8
     - 3.2.7 Sulfuric Acid Mist – Conditional Test Method 13 (CTM-13) 9
     - 3.2.8 SO_2 and NO_x – USEPA Methods 6C and 7E 10
     - 3.2.9 Lead and Mercury – USEPA Method 29 11

4. TEST SCHEDULE 13

5. TEST REPORT 14

Appendix A: SCHEMATIC OF VENT STACK

Appendix B: SCHEMATIC OF SAMPLE TRAINS

LIST OF ACRONYMS

CD	Consent Decree
CEM	Continuous Emissions Monitor
CFR	Code of Federal Regulations
CO_2	Carbon Dioxide
CTM	Conditional Test Method
dscf	dry standard cubic feet
FGD	Flue Gas Desulfurization
H_2O_2	Hydrogen Peroxide
H_2SO_4	Sulfuric Acid Mist
HCl	Hydrogen Chloride
HNCC	Haverhill Coke Company
HNO_3	Nitric Acid
HRSG	Heat Recovery Steam Generator
$KMnO_4$	Potassium Permanganate
NOx	Nitrogen Oxides
O_2	Oxygen
PM	Particulate Matter
PM_{10}	Particulate Matter less than 10 microns diameter
RATA	Relative Accuracy Test Audit
SO_2	Sulfur Dioxide
USEPA	U.S. Environmental Protection Agency

1. INTRODUCTION/OVERVIEW

Haverhill Coke Company (HNCC) utilizes SunCoke's Thompson heat recovery type of oven to manufacture metallurgical coke. In coke production from both heat recovery and byproduct ovens, the volatile fraction of the coal is driven off in a reducing atmosphere. Coke is essentially the remaining carbon and ash. With byproduct ovens, the volatiles and combustion products are collected downstream of the oven chamber and refined in a chemical plant to produce coke oven gas and other products such as tar, ammonia, and light oils. In heat recovery ovens, all the coal volatiles are combusted within the oven and the heat from combustion is recovered to generate steam.

Heat recovery steam generators (HRSGs) recover heat from the oven process gases and cool the gases for treatment in downstream pollution control devices. Particulate matter (PM) and sulfur dioxide (SO_2) are removed from the oven gases in a flue gas desulfurization (FGD) system, which incorporates a lime spray dryer and baghouse. All flue gases go through this system except during times of HRSG or FGD maintenance. The ovens are designed to always operate under negative pressure. In order to safely maintain negative pressure for maintenance or during an emergency (such as a severe storm with a major power outage), the stack lids on the bypass vent stacks open and vent the flue gases to the atmosphere using natural draft. During scheduled maintenance, ovens vent process gases directly into the atmosphere through a bypass stack, bypassing the FGD system. These gases still pass through the common tunnel afterburner system, which fully combusts the gases prior to release into the atmosphere.

There are currently 200 ovens at HNCC that operate on a 48-hour coking cycle; 100 ovens at HNCC No. 1 and 100 ovens at HNCC No. 2. Half the ovens are pushed and charged each day. For example, on HNCC No. 2 the 50 even-numbered ovens are charged one day and the 50 odd-numbered ovens are charged the next. The current mode of operation is to divide the pushing and charging of the ovens into two daily production shifts.

SunCoke Energy, Inc.; Haverhill Coke Company, LLC ("HNCC"); and Gateway Energy & Coke Company, LLC (GECC) (collectively, SunCoke) entered into a Consent Decree (CD)

with the United States and the States of Ohio and Illinois to resolve alleged Clean Air Act violations. This CD became effective on November 7, 2014. Paragraph 29 of the CD requires stack testing of one of the bypass vent stacks at HNCC during scheduled FGD maintenance during each period of FGD maintenance that is scheduled to last more than 2 days.

Section 2 of this document lists the CD test requirements; Section 3 contains the stack testing protocol; Section 4 provides the test schedule; and Section 5 lists the information that will be included in the stack test report. Appendix A shows a diagram of the vent stack and Appendix B contains schematics of the sampling trains.

Stack testing was previously performed March 6-9, 2018, on Bypass Vent Stack No. 5 during FGD maintenance at HNCC No. 1. HNCC No. 2 is currently planning to conduct scheduled FGD maintenance beginning on or about June 4, 2018, for a period up to 38 days. The HNCC No. 2 stack tests are planned for June 12-15, 2018. Paragraph 31 of the CD requires that, by no later than 60 days before any stack test is conducted, HNCC shall submit for approval its intent to conduct such tests. Paragraph 32 of the CD requires that the notification required in Paragraph 31 include the scheduled date of the testing, an emissions test protocol, a description of the planned operating rate and operating conditions, and the procedures that will be used to measure the maximum charge weight and rate. This document serves as the notification of the upcoming testing and provides all required information regarding the testing.

2. CONSENT DECREE TEST REQUIREMENTS

The CD requires that a series of tests be performed during periods of FGD maintenance scheduled to last more than 2 days. Maintenance is scheduled to be performed on the HNCC No. 2 FGD system (ovens 101 through 200) starting June 4, 2018, for up to 38 days. The pollutants to be measured are:

- PM and PM_{10} (limited by CD)
- Lead and mercury
- Hydrogen chloride (HCl)
- Sulfuric acid mist
- Nitrogen oxides (NO_x)

A relative accuracy test audit (RATA) of the bypass vent continuous emission monitor (CEM) for sulfur dioxide (SO_2) will be performed during the same FGD outage at HNCC No. 2.

3. STACK TESTING PROTOCOL

The test requirements and test procedures are presented in this section.

3.1 Test Requirements and Methods

Paragraph 19 of the CD requires that emissions be minimized during all bypass venting. This includes restrictions on the maximum average coal charge and the maximum coal sulfur content. Therefore, the target test conditions will be the following (based on limits specified in the CD):

- Coal Charge: no more than 42.5 ton average on a wet weight basis
- Coal Sulfur: no more than 1.1% by weight

HNCC No. 2 will operate under normal conditions during the stack testing. Ovens will be pushed and charged on the normal 48-hour cycle. Coal charge tonnage and coal sulfur content will be reduced in accordance with Paragraph 19 of the CD.

The coal charge to each oven is measured by a calibrated weigh bin, which batches each coal charge prior to charging it to the oven. Charge weights to each oven will be measured and recorded based on the actual weigh bin batch that is sent for charging. The time, date, and amount of coal charged to each oven under the associated vent stack will be recorded. The coal sulfur will be measured from a daily analysis of the coal charged to the ovens during the testing.

The RATA will compare the SO_2 concentrations measured by the bypass vent stack CEMs to an independent Reference Method CEMs. The data will be compared over the same time periods (a minimum of 21 minute test periods). A minimum of nine tests (to a maximum of twelve tests) will be performed to evaluate the bypass vent stack CEMs system performance.

The proposed stack test methods are shown in Table 1. Each proposed test is based on United States Environmental Protection Agency (USEPA) reference methods or alternative

methods approved by USEPA. Sampling, calibration, and calculation of results will be based on the procedures in the methods and as discussed below.

Table 1. Test Methods

Emission Unit	Pollutant	Test Method Reference	Comment
Bypass vent stack No. 5	Traverse point layout	USEPA Method 1	
	Gas flow rate	USEPA Method 2	
	Gas molecular weight	USEPA Method 3A	Measure O_2 and CO_2
	Moisture	USEPA Method 4	
	PM/PM_{10}	USEPA Method 5/202	
	NO_x	USEPA Method 7E	
	SO_2	USEPA Method 6C	RATA CEM pollutant
	Sulfuric Acid Mist	USEPA Conditional Test Method 13	Controlled condensate method
	HCl	USEPA Method 26	Use large impingers
	Lead and Mercury	USEPA Method 29	

A minimum of nine SO_2 tests (Method 6C) will be performed for the RATA. Three sets of tests will be performed for each of the other stack test methods. The sampling time for each PM test run will be approximately 2 hours. The sampling times for the lead and mercury test runs (Method 29) will be sufficient to collect a sample volume ≥45 dry standard cubic feet (dscf) [approximately 90 minutes]. The sulfuric acid and HCl tests will each be approximately 1 hour. The NO_x tests will be performed concurrently with the PM tests.

3.2 Description of Sampling Trains

This section contains a brief description of the sampling and analytical procedures for each method that will be employed during the test program. Any deviations from the EPA methods are described in the text.

3.2.1 Sampling Point Determination – USEPA Method 1

The number and location of the sampling or traverse points will be determined according to the procedures outlined in USEPA Method 1. The sample location will be inspected to ensure USEPA Method 1 criteria are met. All points will be at least 1.0 inch from the stack wall, per

Method 1. Based on previous test information, the bypass vent stack will require a 24 point traverse for isokinetic sampling, which will be distributed along two perpendicular axes.

3.2.2 Flue Gas Velocity and Volumetric Flow Rate – USEPA Method 2

The flue gas velocity and volumetric flow rate will be determined according to the procedures outlined in USEPA Method 2. Velocity measurements will be made using Type S Pitot tubes that have been calibrated according to USEPA Method 2 criteria. Differential pressures will be measured with a fluid inclined manometer. Effluent gas temperatures will be measured with Type K thermocouples equipped with digital readouts.

3.2.3 Flue Gas Composition – USEPA Method 3A

Flue gas analysis for O_2 and CO_2 concentrations to determine the flue gas dry molecular weight will be performed in accordance with USEPA Method 3A. Samples will be collected either by directly extracting and conveying flue gas to a CEMs or by collecting a sample in a gas sampling bag that will then be measured using a CEMs. The concentrations of O_2 and CO_2 will be reported in percent levels.

3.2.4 Flue Gas Moisture Content – USEPA Method 4

The flue gas moisture content will be determined in conjunction with each USEPA Method 5/202, Method 29, and Method 26 sampling train according to the sampling and analytical procedures outlined in USEPA Method 4. The impingers will be connected in series and will contain reagents as described in Section 3.2.5. The impingers will be contained in an ice bath to ensure condensation of the moisture in the flue gas stream. Any moisture that is not condensed in the impingers is captured in the silica gel; therefore, all moisture can be weighed and entered into moisture content calculations.

3.2.5 PM/PM_{10} – USEPA Method 5/202

The CD requires testing for PM and PM_{10}. PM consists of two components – filterable and condensable. It is not practical to measure filterable PM_{10} in the HNCC bypass vent stacks because the temperature (up to 1,700ºF) is outside the range of the equipment typically used for Method 201A (400ºF) [refer to 40 CFR 60, Appendix A, Method 201A, 8.6.1]. Therefore, PM_{10} emissions will be assumed to be the same as PM emissions.

The sampling probe will be fitted with a calibrated S-type Pitot for measuring exhaust gas flow rates and a K-type thermocouple for measuring the gas stream temperature. Prior to performing the compliance test, a cyclonic flow verification traverse will be performed.

The filterable PM will be measured in accordance with USEPA Reference Method 5. The filterable PM will be performed by extracting a sample of the stack exhaust gas stream through a one-piece quartz nozzle and liner encased in an air cooled probe. The probe will be attached to a heated glass filter holder containing a pre-weighed, glass-fiber filter. The filter heater box will be maintained at a temperature of 248°F +25°F.

At the conclusion of each test run, the sample train will be recovered by rinsing the sample probe and nozzle three times with acetone into a sample container. The filter will be removed from the filter holder and placed into a Petri dish and sealed for transportation. The front half of the glass filter holder and connecting elbow will be rinsed with acetone into the probe wash sample container. A sample of the acetone used in the sample recovery will be collected and analyzed as a reagent blank. The acetone rinses and filters will be analyzed for filterable PM.

The condensable fraction of PM will be measured using the procedures described in USEPA Reference Method 202. The impinger train contains a water-jacketed coil condenser between the heated filter outlet and inlet to the first impinger. The water condensed in the coil condenser drops into a knockout impinger. The second impinger is initially empty. The cooled gas then passes through a Teflon filter maintained in the range of 65°F to 85°F. The third

impinger initially contains 100 mL of distilled water. The fourth impinger contains approximately 200 grams of indicating silica gel. The third and fourth impingers are placed in an ice bath to maintain the impinger train outlet temperature at ≤65°F. Because of limited space at the test ports, a Teflon "jumper" may be used between the heated filter and the impinger train allow the impinger train to be placed where it can be accessed during the test run (e.g., to add ice or access the condensable PM filter).

After testing, the impinger train will be moved to the test trailer and connected to a cylinder of pure nitrogen and purged for 60 minutes at a flow rate of 14 liters per minute. The condensed water in the first two impingers will be recovered. The condenser, first two impingers, connecting glassware, and front-half of the Teflon filter holder will be rinsed with water for the inorganic sample and with acetone followed by hexane for the organic sample. The Teflon filter, organic and inorganic rinses, and reagent blanks will be analyzed for inorganic and organic condensable PM. A field train proof blank and field blank will be collected during the tests.

Method 202 allows a blank correction because of its history of high bias due to various sources of contamination. EPA interim guidance [Memorandum from Steven Page, Office of Air Quality Planning and Standards, to EPA Regional Air Division Directors, Regions 1-10, April 8, 2014] allows proof blank correction of up to 5.1 mg. A field train proof blank and field blank will be collected and the appropriate blank will be used.

3.2.6 HCl – USEPA Method 26

The HCl sampling will be performed using an USEPA Method 26 sampling train. The train will consist of a quartz liner fitted into an air-cooled sampling probe. This is required because the stack temperature will be at least 1,600 °F. The probe will be connected to a heated, glass filter holder containing a quartz filter. The outlet of the filter holder will be connected to a series of ball-joint impingers. The first and second impingers will be the Smith-Greenburg type and each will contain 100 mL of 0.1N sulfuric acid (H_2SO_4). The third impinger will be an empty modified Smith-Greenburg impinger. The fourth impinger will be a modified Smith-

Greenburg impinger containing 200 grams of indicating silica gel. Only the impingers that absorb HCl (the H_2SO_4 impingers) will be analyzed.

3.2.7 Sulfuric Acid Mist – Conditional Test Method 13 (CTM-13)

This method, also known as NCASI Method 8A, was developed as an alternative to USEPA Method 8 for determining H_2SO_4 emissions from Kraft recovery furnaces. It has been observed that the reference method, USEPA Method 8, can be subject to significant interference from SO_2 as well as sulfates if they are present in the PM. This alternative method uses a quartz in-line filter to remove PM from the gas stream prior to capturing H_2SO_4. The use of a controlled condensation technique instead of impingers reduces the potential for interference from SO_2. This conditional test method is proposed because the expected sulfur trioxide concentration is small (less than 10 parts per million), and the alternate test method is likely to be more accurate in this situation.

The CTM-13 sampling train will consist of a quartz tube wrapped in an insulating blanket that will be used as the sampling probe. The exit of the probe will be connected to a quartz filter holder containing a quartz filter, which will be maintained at a temperature of ≥500°F by means of a cylindrical heating mantle. The outlet of the filter holder will be connected to a modified Graham condenser that is constructed with a Type-C glass frit and 200 cm of 5mm ID glass tubing condenser coil. The outer condenser chamber is filled with water and maintained at a temperature between 167°F and 185°F (or between the acid and water dew points if known) by means of a recirculating water bath. The outlet of the heated coil condenser is connected to a series of glass impingers to remove moisture from the sample gas. The first impinger will be a modified Greenburg-Smith filled with 100 mL of water or 3% hydrogen peroxide (H_2O_2). The second impinger will be a Greenburg-Smith type also filled with 100 mL of water or 3% H_2O_2. The third impinger will be an empty modified Greenburg-Smith type. The fourth impinger will be a modified Greenburg-Smith filled with 200 grams of indicating silica gel. The sampling train will be connected, by means of an umbilical cord, to the control console. The control console contains the dry gas meter, sampling pump, heat controllers, and sample rate controls.

The CTM-13 sample train will be operated by placing the end of the quartz sample tube approximately 3 feet into the vent stack. A gas sample will then be extracted from a single sampling point in the stack, at a constant sample rate of 10.0 L/min (±10%), for a 1-hour period. Leak checks will be performed at both the beginning and ending of a sample test run.

At the conclusion of the test run, the CTM-13 sample train will be removed from the sampling platform and recovered in the test trailer. The sample recovery will be performed by rinsing the H_2SO_4 condenser with distilled water. The H_2SO_4 condenser rinse will be collected into a sample container. The CTM-13 analysis will be performed using suppressed ion chromatography.

3.2.8 SO_2 and NO_x – USEPA Methods 6C and 7E

SO_2 will be measured during the RATA. NO_x will be measured during the PM stack test runs. The SO_2 and NO_x concentrations will be measured by CEMs according to USEPA Methods 6C and 7E, respectively. The concentrations will be measured continuously and recorded as 1-minute averages by an electronic datalogger.

The CEM sampling will be performed by placing a sample probe in the stack to withdraw a continuous gas sample. The gas sample will be transported through a heated, Teflon sample line to an electric gas chiller that will remove any moisture in the gas stream. Exiting the gas chiller, the dried sample gas will be distributed to each CEM for subsequent analysis.

The CEMs will be calibrated before and after each test run using USEPA protocol gases. The NOx emissions rate will use the gas flow rate data from the PM test runs.

The presence or absence of stratification will be determined before testing based on a 3-point concentration traverse at the test ports.

3.2.9 Lead and Mercury – USEPA Method 29

The lead and mercury sampling will be performed using an USEPA Method 29 sampling train. The sample train will consist of an integrated quartz nozzle and probe liner fitted into an air-cooled sampling probe. This is required because the stack temperature will be at least 1,600°F. The outlet of the probe will be connected to a heated, glass filter holder containing a quartz fiber filter. The outlet of the filter holder will be connected to a series of ball-joint impingers. Because of limited space at the test ports, a Teflon "jumper" may be used between the heated filter and the impinger train to allow the impinger train to be placed where it can be accessed during the test run. The first impinger will be a modified Smith-Greenburg containing 100 mL of a 5% nitric acid (HNO_3)/10% H_2O_2 mixture. The second impinger will be a Smith-Greenburg containing a 5% HNO_3/10% H_2O_2 mixture. The third impinger will be modified Smith-Greenburg and will initially be empty. The fourth and fifth impingers will be a modified Smith-Greenburg containing a mixture of 4% potassium permanganate ($KMnO_4$)/10% H_2SO_4. The sixth impinger will be a modified Smith-Greenburg containing 200 grams of indicating silica gel. The remainder of the sampling train is identical to the Method 5/202 train described in Section 3.2.5.

The Method 29 train will be operated identically to the Method 5 train, except the total sample volume collected will be at least 45 dscf to ensure adequate detection limits of the target metals. At the conclusion of the sample run, the Method 29 sample train will be removed from the stack to the sample recovery trailer for subsequent recovery per Method 29 procedures. The sample probe will be rinsed on the stack to avoid potential breakage of the probe liner.

At the conclusion of each Method 29 test, the sample train will be recovered by washing the nozzle/probe assembly and front half of the filter holder three times with 0.1N HNO_3 into a sample container. The impinger train will then be disassembled and each impinger weighed to determine the moisture gained during the sample run. The liquid contents of impingers one and two will be transferred into a sample container. Impinger three will be rinsed with 0.1N HNO_3 into a separate sample container. The contents of impingers four and five will be transferred into a sample container. The impingers will then be rinsed with 100 mL of fresh $KMnO_4$ solution.

The rinse will be then be transferred to a separate sample container. Impingers four and five will then be rinsed with 100 mL of deionized water and added to the same sample container. Finally, impingers four and five will be rinsed with 25 mL of 8N HCl into 200 mL of distilled water into a separate sample container.

Samples of the filter, deionized water, impinger solutions, and rinse solutions will be collected along with the actual test samples to serve as blanks for the tests. The blank samples will be analyzed along with the actual test samples.

4. TEST SCHEDULE

The 200 ovens at HNCC operate on a 48-hour coking cycle. Pushing and charging the ovens is referred to as "production" at HNCC. Half the ovens are pushed and charged each day. For example, the 100 odd-numbered ovens are pushed and charged one day and the 100 even-numbered ovens are pushed and charged the next. Production occurs twice a day – with approximately 1/4 of the ovens charged during each production cycle. Production at HNCC No. 2 typically occurs from approximately midnight to 04:00 and then from 07:00 to 11:00. Since the operation is cyclical, previous bypass vent stack tests were performed at different times during the day – typically one run early in the cycle, a second run near mid-cycle, and a third run near the end of the cycle to achieve test results representative of the entire coking cycle over 24 hours. As with the March 2018 tests on HNCC No 1, one test run will be conducted during the first production pass on the ovens under Bypass Vent Stack No. 6, which generally occurs sometime between midnight and 01:00. The other two runs will be conducted at mid-cycle and late-cycle, respectively. Note that the actual test times will depend on the actual production schedule at the time of the testing. If, for example, equipment issues cause a change in the production schedule, the test times will be modified accordingly.

The RATA and three sets of stack tests will be performed for each target pollutant over a 4 day period. The stack tests are planned for June 12-15, 2018. The proposed tests are:

- Day 1 – Perform SO_2 RATA
- Day 2 – Perform Method 5/202, Method CTM-13, and Method 7E tests
  - Run 1 – Mid-cycle, approximately 13:00-15:00
  - Run 2 – Late-cycle, approximately 19:00-21:00
- Day 3 – Perform Method 5/202, Method CTM-13, and Method 7E tests
  - Run 3 – Production (first pass under Stack No. 6), approximately 00:00-02:00

  Day 3 - Perform Method 29 and Method 26 tests
  - Run 1 – Mid-cycle, approximately 13:00-14:30
  - Run 2 - Late-cycle, approximately 19:00-20:30
- Day 4 – Perform Method 29 and Method 26 tests
  - Run 3 – Production (first pass under Stack No. 6), approximately 00:00-01:30

5. TEST REPORT

At the completion of the stack test project, a final engineering report will be issued to HNCC for subsequent submittal to Ohio EPA and USEPA. The CD requires submission of the test report within 60 days of conducting the test. The report will contain the following:

- Summary of the test results
- Description of the technical approach used, including USEPA reference methods
- Quality assurance/quality control procedures
- All raw data sheets
- Production data during the test period
- All test equipment calibration data
- Formulas used to calculate mass emission rates

Appendix A
SCHEMATIC OF VENT STACK

24 Sample Points Required
4 ports with 6 points each

Traverse Layout

Point	Distance (from wall)
1	2.27
2	7.24
3	12.74
4	19.12
5	27.00
6	38.45

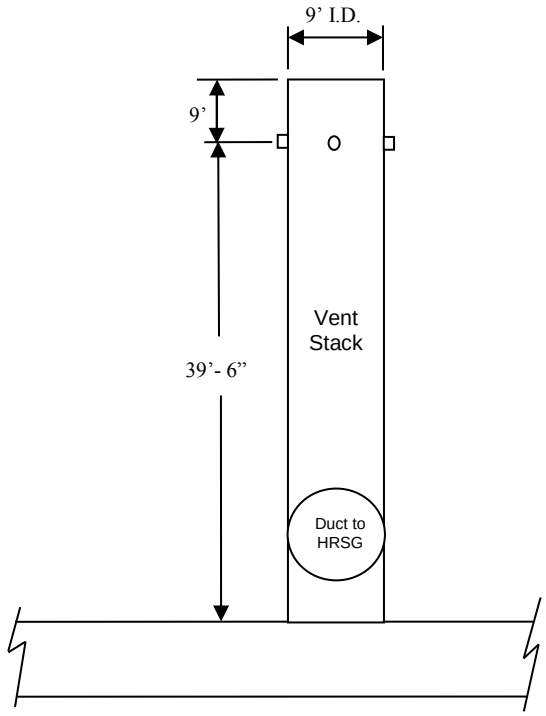

Schematic of Typical Bypass Vent Stack

Appendix B
SCHEMATIC OF SAMPLE TRAINS

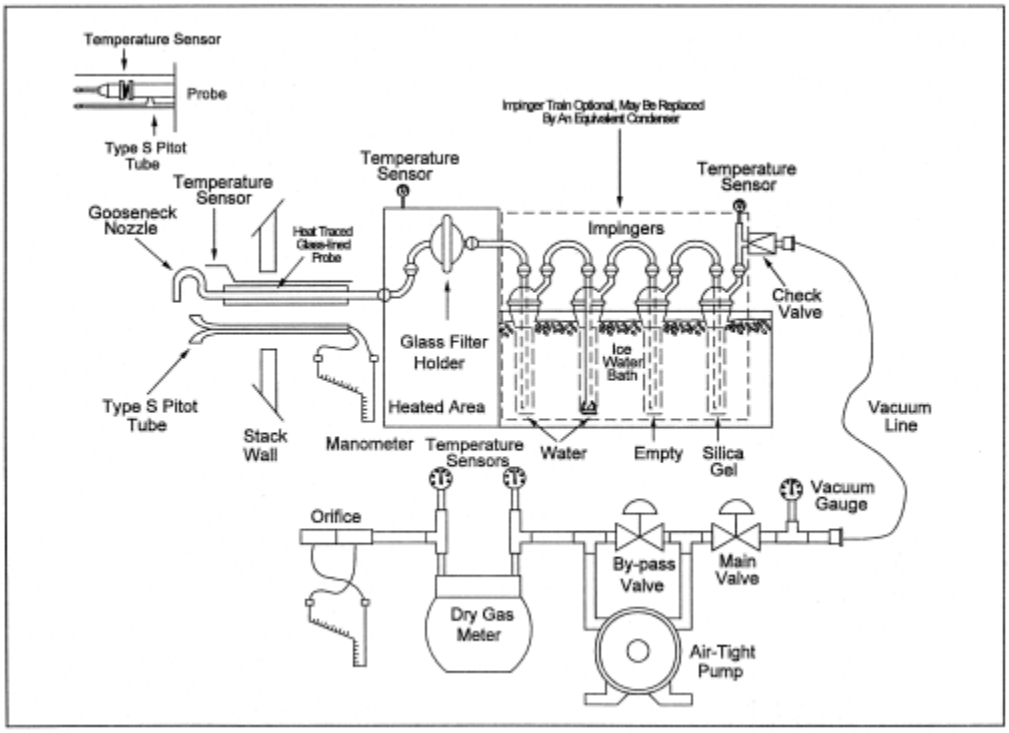

USEPA Method 5 Train (will use front portion)

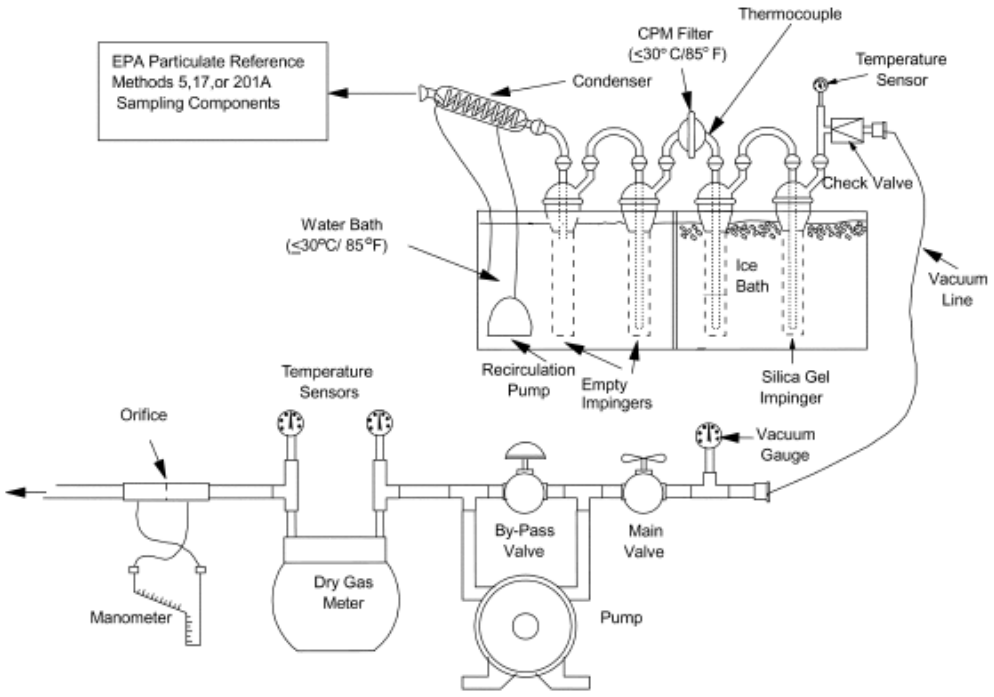

USEPA Method 202 Train (will use back portion)

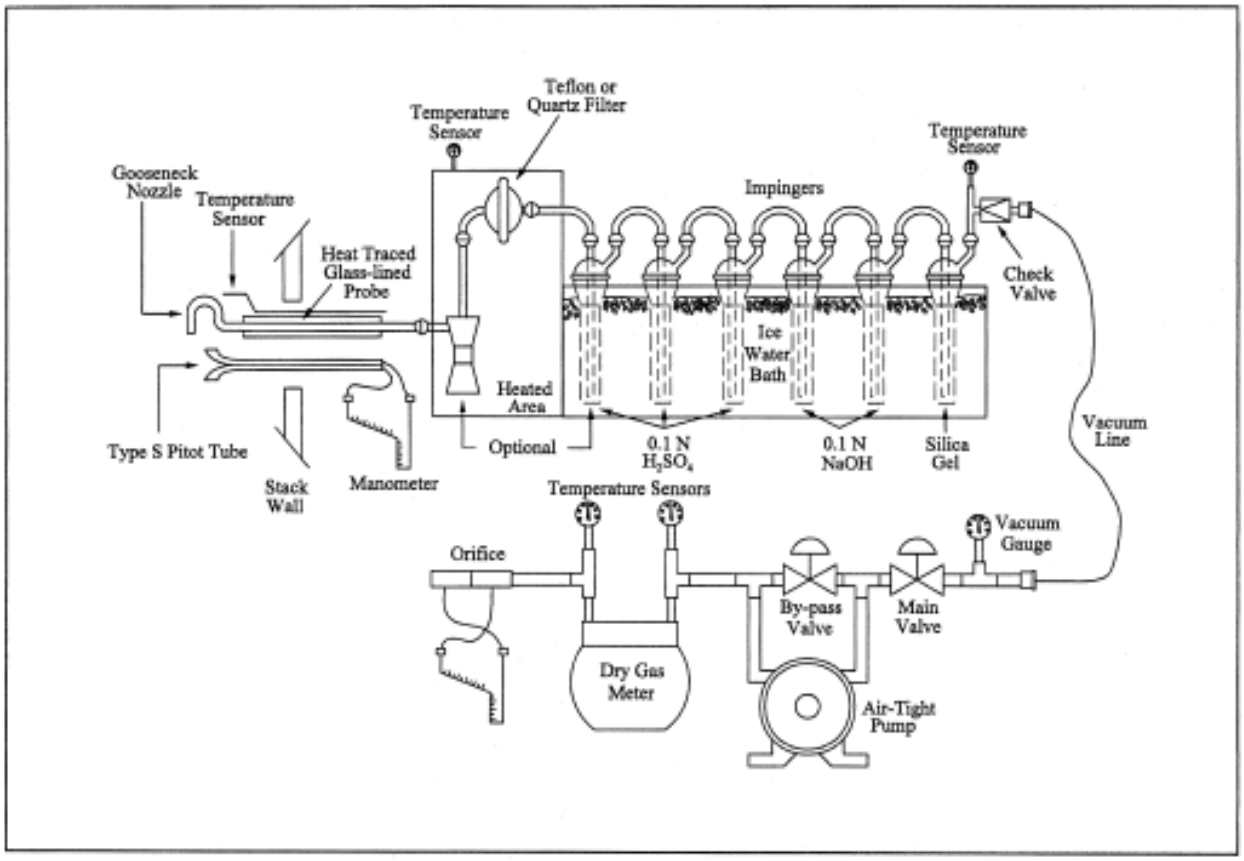

USEPA Method 26 Train (no NaOH in back impingers)

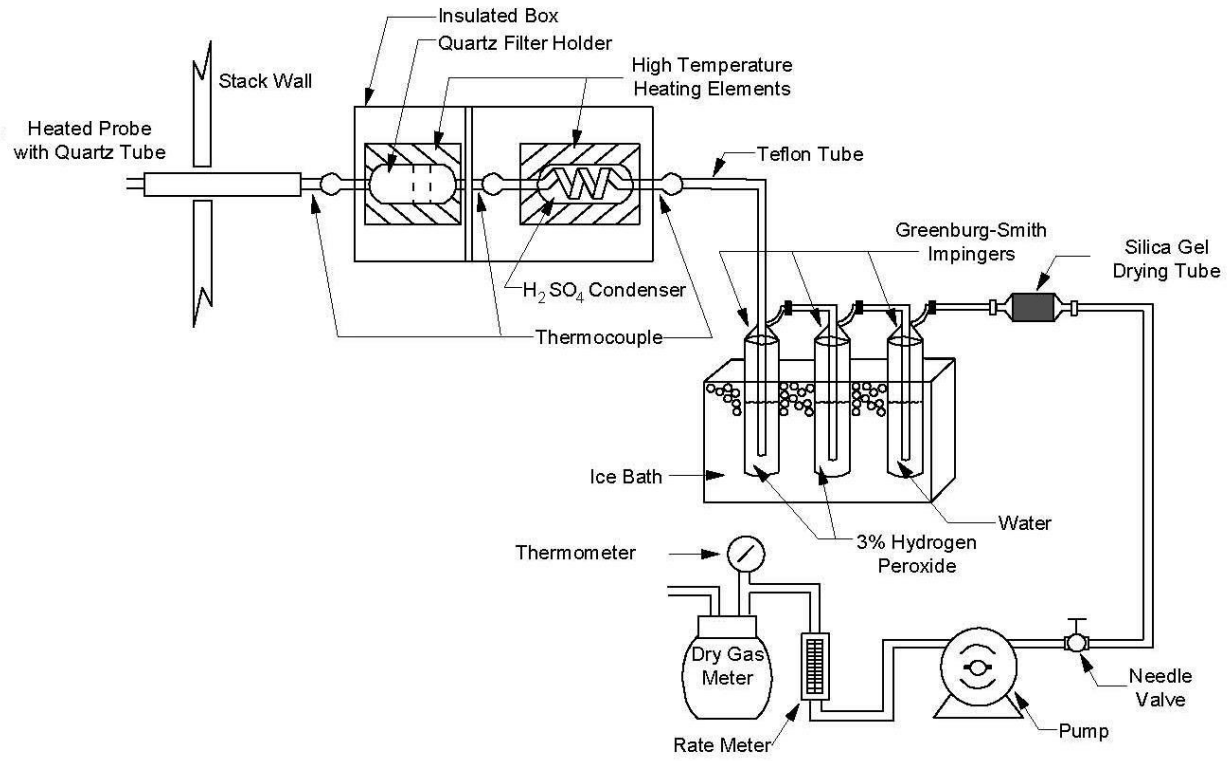

USEPA Method CTM-13 Train

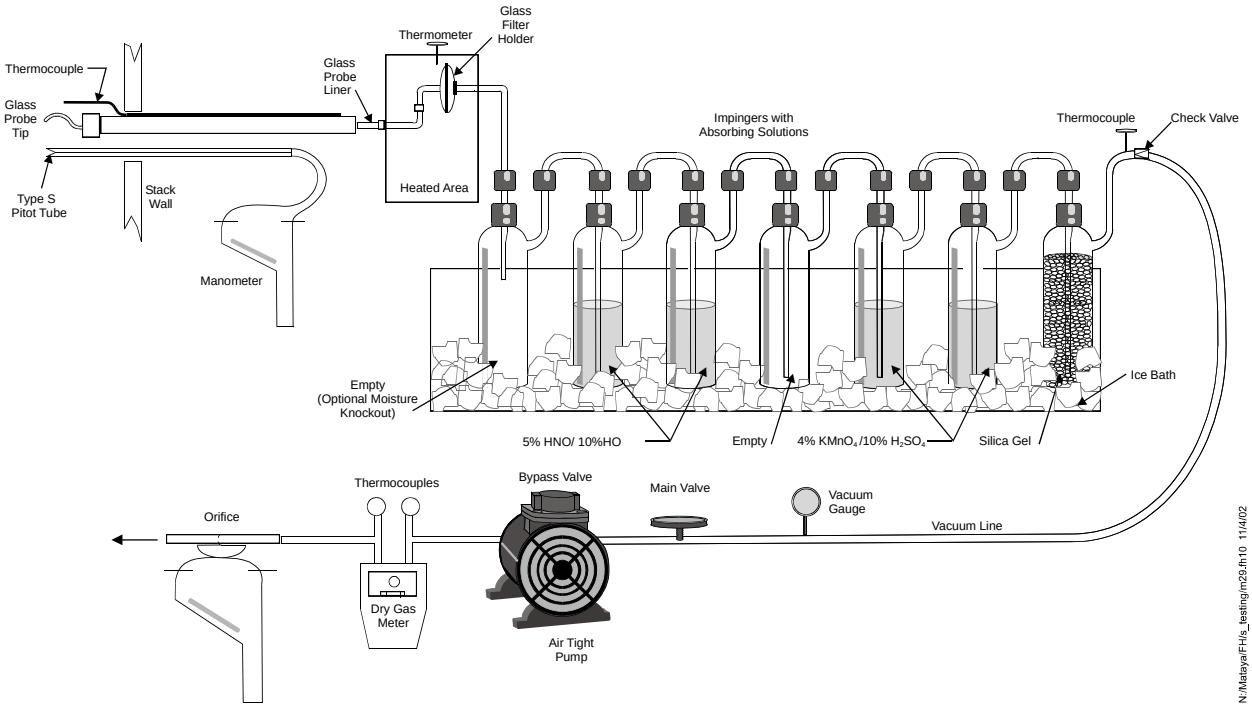

USEPA Method 29 Train

STARKWEATHER, DIANA M.

From: STARKWEATHER, DIANA M.
Sent: Friday, April 06, 2018 1:51 PM
To: Cindy.Charles@epa.ohio.gov
Cc: SKIPWORTH, JIM G. (JGSKIPWORTH@suncoke.com); BATTEN, KATHERINE M (KMBATTEN@suncoke.com)
Subject: FGD Maintenance Outage Request
Attachments: Final 2018 P902 and 2019 P901 FGD Outage Requests.pdf

Cindy,

Please find attached the FGD maintenance outage request for the P901 and P902 emission units. Please feel free to contact me by phone or email with any questions. A hard copy will also be sent via USPS.

Thank you,

Diana Starkweather
Environmental Manager
SunCoke Energy Partners, L.P.
Haverhill Operations

SXCPartners

2446 Gallia Pike
Franklin Furnace, OH 45629
Office: 740-355-9823
Cell: 740-352-2593

This e-mail and any files transmitted with it may contain confidential information and is intended solely for the use of the individual or entity to whom they are addressed. If you are not the intended recipient, you are notified that disclosing, copying, distributing or taking any action in reliance on the contents of this information is strictly prohibited. Please notify the sender immediately by e-mail if you have received this e-mail by mistake and delete this e-mail from your system. Thank you for your cooperation.

Haverhill North Coke Company
2446 Gallia Pike
Franklin Furnace, Ohio 45629

April 6, 2018

Ms. Cindy Charles, Director
Ohio Environmental Protection Agency
Portsmouth Local Air Agency
605 Washington Street, Third Floor
Portsmouth, Ohio 45662

Certified Mail #: 7015 0640 0000 6743 1413

Request for FGD Maintenance – P901 and P902 FGD Units
Facility ID: 0773000182

Dear Ms. Charles:

Haverhill Coke Company LLC (HCC) is submitting the following information under OAC Rule 3745-15-06(A)(3) in request of scheduled maintenance time required for the Flue Gas Desulfurization Unit (FGD), including (a) time necessary to complete the spray dryer absorber ("SDA") Replating project at P901 and P902, (b) scheduled maintenance time required for the FGD on emission unit P902 in 2018, and (c) scheduled maintenance time required for the FGD on emission unit P901 in 2019. These outages are necessary to upgrade the SDAs' metallurgy to make it more corrosion-resistant and assist in effective operation of the SDAs under gas sharing conditions. HCC plans to use both outages to complete the final phase of the SDA replating project, as described below. HCC is also using this request to alternate the P901 and P902 scheduled FGD maintenance outages, so that one outage occurs each year. By conducting scheduled maintenance on P901 and P902 during alternating years, HCC may be able to minimize the risk for potential procurement issues, such as the inability to attain sufficient contract labor and/or material in a condensed timeframe. Because shutdown of HCC's heat recovery coke ovens could result in severe damage to the coke ovens, as further discussed herein, HCC is requesting authorization from OEPA-PLAA to continue operating P901 and P902 during the maintenance outages for the P901 and P902 FGDs.

The FGDs are designated as a component of the control equipment for emission units P901 and P902 in our Permit to Install (PTI) P0119826. The maintenance that HCC plans to conduct on emission units P902 in 2018 and P901 in 2019, including preventative maintenance and equipment upgrades, is described below.

2018 P902 and 2019 P901 SDA Replating

In September 2016, HCC commenced the SDA Replating Project, which includes extensive structural upgrades to both the P901 and P902 SDAs to improve mechanical integrity and reliability. The final phase of the SDA Replating Project on the P902 SDA is expected to conclude in 2018 and will include removal of the SDA cone and associated internal ducting, the SDA roof, and approximately 57% of the SDA vessel wall plates. Material removed will be replaced with the corrosion resistant metallurgy Alloy 20. Furthermore, the final phase of the

SDA Replating Project on the P901 SDA is expected to in 2019. The 2019 P901 FGD Outage work will include removal of the SDA roof and approximately 62% of the SDA vessel wall plates, followed by replacement with the corrosion resistant metallurgy Alloy 20.

These repairs are necessary to mitigate potential failure of the P901 and P902 SDA structures. HCC has experienced SDA wall failures due to internal under-deposit corrosion of the P901 and P902 SDAs. Additional failures have occurred that have been temporarily repaired by plating over the exterior of either SDA, which does not require the unit to be removed from service. However, patching the exterior of the SDA does not stop the internal corrosion. The internal corrosion results from material buildup on the internal wall plates. These deposits are inherent to the process gas and normal operating conditions inside the SDA and the corrosion cannot be completely eliminated by changing any of the process variables. Changing the metallurgy of the vessel wall to a material with a high corrosion resistance is expected to prevent internal corrosion of the SDA walls and to reduce the likelihood of future unplanned bypass venting that is a result of an SDA structural integrity failure.

These structural upgrades to the SDA are necessary to support continued operation at the increased flow required by the Redundant HRSG Project and the Consent Decree. Higher SDA corrosion is expected due to the increased splatter resulting from the increased flow required while in the gas sharing mode. The upgraded SDA vessel metallurgy will minimize corrosion and thus help to ensure reliable and consistent SDA operation through the life of the Consent Decree and beyond.

Prior to removal and replacement of the SDA wall plates, the vessel will be cleaned and exterior insulation will be removed in the repair areas. Scaffolding will be installed inside the SDA vessel in order to conduct maintenance to the interior of the vessel.

HCC is requesting a total of 38 days to complete the above-described maintenance activities on the P902 FGD and critical ancillary equipment in 2018. Additionally, HCC is requesting approximately 30 days to complete the above-described maintenance activities on the P901 FGD and critical ancillary equipment in 2019. The additional outage time is necessary to conduct the extensive structural upgrades required to maintain the integrity of the FGD system, which in turn is required to consistently operate the Redundant HRSG and the Existing HRSGs simultaneously within the meaning of Paragraph 8(kk) of the Consent Decree. To complete this work, HCC will use time allotted under the Consent Decree. OEPA, Illinois Protection Agency and the U.S. Environmental Protection Agency have previously approved HCC's use of time allotted under the Consent Decree for this work.[1]

Scheduling

Major outage work for both P901 and P902 will include inspection, cleaning and repairs of the SDA, the FGD vessel, the FGD baghouse and all associated ancillary systems critical to FGD performance and will be completed during the SDA Replating work, as described above.

[1] Email from C. Rojko, U.S. Department of Justice, to R. Brager, copying R. Burlingham and E. Ewing, dated Nov. 18, 2015.

The tentative schedule for maintenance on the P902 FGD is June 3 – July 11, 2018. HCC will keep your office updated if there are changes to this schedule. The tentative schedule for the maintenance on the P901 FGD is 30 days starting in March 2019. The schedules of work for the P901 and P902 FGD maintenance outages are not yet finalized, but will be provided to your office prior to the outages.

P902 2018 FGD Maintenance Outage

The P902 2018 maintenance outage will occur concurrently with the SDA replating project, and will involve multiple projects that are necessary to minimize the potential for equipment upsets that could lead to future malfunction events and to complete SDA Replating work. Major outage work will include inspection, cleaning, and repairs of the SDA, the FGD vessel, the FGD baghouse and all associated ancillary systems critical to FGD performance. HCC would like to perform this maintenance outage starting on or about June 3, 2018. The most recent scheduled maintenance outage for the P902 FGD occurred in September – October of 2016. Please note that emergency maintenance was completed on the P902 Steam Turbine Generator (STG) system in December of 2016, which required that the P902 FGD be taken offline.

During the 2018 P902 FGD maintenance outage, HCC will utilize the time to conduct preventive maintenance that can only be done when the unit is offline and to install extensive equipment upgrades that will improve the performance of the control equipment. Preventive maintenance will include cleaning, inspection, and repairs of the spray dryer absorber vessel shell, FGD baghouse, ash silo, associated ducts and lines, and the main stack induced draft (ID) fans.

Each FGD baghouse compartment and the associated inlet and outlet dampers will be inspected and repaired as required. The baghouse receiver filter on top of the ash silo will also be inspected and repaired as required.

Additionally, maintenance will be conducted on the dilution water and lime slurry production and distribution equipment including atomizers and pumps, and cleaning and de-scaling of slurry and dilution water supply lines and vessels. The ID fans and the associated inlet and outlet dampers will be inspected and repaired as necessary.

Mechanical integrity inspections of all ductwork and vessels will be completed, as well as maintenance on the Steam Turbine Generator (STG). In addition, testing and repair of all motor control center (MCC) switch gear and components and uninterruptable power supply (UPS) units will be performed.

HCC will also take advantage of this time to conduct annual preventative maintenance, including cleaning, inspection, and repair as needed on certain HRSGs. HCC tentatively plans to conduct this annual scheduled HRSG maintenance on HRSGs 6 and 10.

The maintenance outage on P902 will also be used to install upgraded electrical equipment to complete the final phase (Phase III) of HCC's electrical reliability (ER) project. Phase III of the project will include constructing a new electrical building with a 4160V transfer switch for providing redundant 5kV power to critical electrical components in Power Island and installing

two 480V transfer switches for providing redundant 480V power to critical Motor Control Centers (MCCs) in Power Island.

P901 2019 FGD Maintenance Outage

The P901 2019 maintenance outage will also occur concurrently with the SDA Replating project, and will involve conducting regular preventative maintenance as described in the above **P902 2018 FGD Maintenance Outage Section.** The maintenance outage on P901 will also be used for projects that are necessary to minimize the potential for equipment upsets that could lead to future malfunction events. HCC is currently evaluating these potential upgrade projects and will provide information to your office once the scope of work is complete.

HCC will also take advantage of this time to conduct annual preventative maintenance, including cleaning, inspection, and repair as needed on certain HRSGs. HCC tentatively plans to conduct this annual scheduled HRSG maintenance on HRSGs 2 and 3.

HCC would like to perform this maintenance outage starting on or about March 2019 depending on contractor and specialized workforce availability. The most recent scheduled maintenance outage for the P901 FGD occurred in March 2018.

The following information is being submitted to meet the requirements of OAC Rule 3745-15-06(A)(3) for the planned FGD shutdown.

(a) *Identification and location of the specific source for which air pollution control equipment will be taken out of service. The identification shall include the Ohio environmental protection agency permit application number;*

HCC is located at 2446 Gallia Pike in Franklin Furnace in Scioto County, Ohio, and operates pursuant to PTI P0119826. The P901 and P902 FGD process treats the flue gas from 100 heat recovery coke ovens each. The flue gas from the coking process is cooled in one of twelve HRSGs and then directed through the associated SDA unit to remove sulfur dioxide (SO_2) and finally through a fabric filter baghouse system for particulate collection.

(b) *The expected length of time that the air pollution control equipment will be taken out of service;*

The estimated time required in 2018 to complete the extensive maintenance and SDA replating activities to the P902 FGD and critical ancillary equipment, as described above, is 38 days. The estimated time required in 2019 to complete the extensive maintenance and SDA replating activities to the P901 FGD and critical ancillary equipment, as described above, is 30 days. This includes the time required to cool down the FGD before maintenance can begin and the time to heat the FGD back up to operational temperature and, in the case of P902, start the STG after maintenance work is complete. Please note that additional time is needed to conduct extensive structural repair to the

SDAs to ensure the continued successful operation at the increased flow requirements of the Redundant HRSG Project and the Consent Decree.

(c) *The nature and estimated quantity of emissions of air contaminants which are likely to occur during the shutdown period;*

The predicted SO_2 and PM/PM_{10} emissions from the 2018 P902 FGD Maintenance Outage are 323.5 tons and 40.6 tons, respectively. The predicted SO_2 and PM/PM_{10} emissions from the 2019 P901 FGD Maintenance Outage are 281.0 tons and 32.0 tons, respectively. These estimates are based on the most recent stack testing data available and the total duration of bypass venting. The expected coal sulfur content during the P901 FGD Maintenance Outage is at or around an average of 0.89 percent. This value is based on the 2018 average coal sulfur content through the date that this request was written. Please refer to **Attachment 2, P901 and P902 Bypass Venting Emissions Calculations**, for additional information.

(d) *Measures such as the use of off-shift labor and equipment that will be taken to minimize the length of the shutdown period;*

Because heat recovery coke ovens cannot be shut down due to the risk of severe damage from the temperature change experienced when cooling them to ambient temperature, the most effective way to minimize emissions during FGD downtime is to minimize the time the spray dryer and baghouse are offline. This can be accomplished by using appropriate personnel and scheduling the work to be performed in the shortest possible time.

To facilitate this effort, multiple contractor teams in coordination with HCC operations and maintenance personnel will be working around the clock 24/7 on the SDA Replating Project to maximize the time available and to minimize the overall outage time required. The plant HRSG team will be on standby to bring the HRSGs and FGD back online as soon as the maintenance is completed.

An independent engineering consulting group was contracted to determine the maximum area of the vessel shell that could be removed at one time to best optimize the project schedule. Based on the scope of repairs and results of the structural analysis, the schedule could not be condensed to minimize the outage duration.

(e) *The reasons that it will be impossible or impractical to shut down the source operation during the scheduled maintenance period; and*

A heat recovery coke oven battery cannot be shut down due to the risk of damage caused by thermal spalling and the risk of severe oven structural failure caused by brick contraction from the drastic temperature change required for a shut down. Therefore, HCC must continue operations during the outage time frame on P902 in 2018 and P901 in 2019.

(f) *A demonstration that all feasible interim control measures will be taken to reduce emissions from the source during the shutdown period.*

In accordance with Paragraph 19 of the Consent Decree, HCC will maintain reduced charge weights to an average weight of 42.5 tons per oven on P902 and P901 for the duration of the 2018 and 2019 outages, respectively. Additionally HCC expects coal sulfur content to be at or around an average of 0.89 percent during this timeframe. HCC will also minimize the duration of the bypass venting to the extent practicable, as discussed above.

With the information provided above HCC requests authorization to continue operations during this scheduled maintenance for the P902 and P901 FGD units during the 2018 and 2019 FGD Outages. If you have any questions or concerns, please contact Diana Starkweather at (740) 355-9823.

Sincerely,

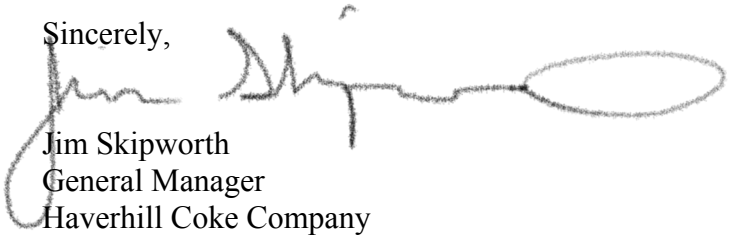

Jim Skipworth
General Manager
Haverhill Coke Company
(740) 355-9860

Attachment 1, P902 Bypass Venting Emissions Calculations

Emission Factors (for one bypass vent stack):

Lead	0.060	lb/hr	September 2016 Test, HNCC No. 2 FGD Outage
PM (Filt + Cond)	17.8	lb/hr	May 2016 Test, HNCC No. 1 FGD Outage
SO2	141.9	lb/hr	Calculated from 2017 2nd Half CEMs Data

Event Description: P902 FGD Maintenance Outage

Start Date/Time of Bypass Venting: 6/3/2018 18:00

End Date/Time of Bypass Venting: 7/11/2018 18:00

Bypass Vent Stack Lid Open and Close Date/Time:

	#6	#7	#8	#9	#10
Open Date/Time:	6/3/2018 18:00	6/3/2018 18:00	6/3/2018 18:00	6/3/2018 18:00	6/3/2018 18:00
Close Date/Time:	7/11/2018 18:00	7/11/2018 18:00	7/11/2018 18:00	7/11/2018 18:00	7/11/2018 18:00

Total Stack Lid Open Time per Bypass Vent Stack:

	#6	#7	#8	#9	#10
Hours:	912.0	912.0	912.0	912.0	912.0
Minutes:	54720.0	54720.0	54720.0	54720.0	54720.0

Total Bypass Venting Time:

Hours: 4560.0 Minutes: 273600

Calculation of Bypass Venting Emissions:

Emissions = Emission Factor (lb/hr) x Total Hours of Bypass Venting x 1 ton/2000 lbs

	#6	#7	#8	#9	#10
Lead (lbs)	54.7	54.7	54.7	54.7	54.7
PM (lbs)	16233.6	16233.6	16233.6	16233.6	16233.6
SO2 (lbs)	129412.8	129412.8	129412.8	129412.8	129412.8

Total Emissions from Bypass Venting Event

Total Emissions = Sum of Emissions from Each Affected Bypass Vent Stack

Total tons of Pollutant Emitted During Bypass Venting

Lead (tons)	0.1
PM (tons)	40.6
SO_2 (tons)	323.5

Attachment 1, P901 Bypass Venting Emissions Calculations

Emission Factors (for one bypass vent stack):

Lead	0.141	lb/hr	May 2016 Test, HNCC No. 1 FGD Outage
PM (Filt + Cond)	17.8	lb/hr	May 2016 Test, HNCC No. 1 FGD Outage
SO2	156.1	lb/hr	Calculated from 2017 2nd Half CEMs Data

Event Description: P901 FGD Maintenance Outage

Start Date/Time of Bypass Venting: 3/1/2019 18:00 *

End Date/Time of Bypass Venting: 3/31/2019 18:00 *

*Start/End Dates based on total duration and are subject to change

Bypass Vent Stack Lid Open and Close Date/Time:

	#1	#2	#3	#4	#5
Open Date/Time:	3/1/2018 18:00	3/1/2018 18:00	3/1/2018 18:00	3/1/2018 18:00	3/1/2018 18:00
Close Date/Time:	3/31/2018 18:00	3/31/2018 18:00	3/31/2018 18:00	3/31/2018 18:00	3/31/2018 18:00

Total Stack Lid Open Time per Bypass Vent Stack:

	#1	#2	#3	#4	#5
Hours:	720.0	720.0	720.0	720.0	720.0
Minutes:	43200	43200	43200	43200	43200

Total Bypass Venting Time:

Hours: 3600.0 Minutes: 216000

Calculation of Bypass Venting Emissions:

Emissions = Emission Factor (lb/hr) x Total Hours of Bypass Venting x 1 ton/2000 lbs

	#1	#2	#3	#4	#5
Lead (lbs)	101.5	101.5	101.5	101.5	101.5
PM (lbs)	12816.0	12816.0	12816.0	12816.0	12816.0
SO2 (lbs)	112392.0	112392.0	112392.0	112392.0	112392.0

Total Emissions from Bypass Venting Event

Total Emissions = Sum of Emissions from Each Affected Bypass Vent Stack

Total lbs of Pollutant Emitted During Bypass Venting

Lead (tons)	0.3
PM (tons)	32.0
SO_2 (tons)	281.0

STARKWEATHER, DIANA M.

From: STARKWEATHER, DIANA M.
Sent: Thursday, April 19, 2018 3:22 PM
To: Cindy.Charles@epa.ohio.gov
Cc: SKIPWORTH, JIM G; BATTEN, KATIE M; John.Paulian@epa.ohio.gov
Subject: RE: FGD Maintenance Outage Request
Attachments: 2018 HH2 Outage Schedule - Final.pdf

Cindy,

Attached is the Schedule of Work. Please contact me with any questions.

Thanks,

Diana Starkweather
Environmental Manager

Office: 740-355-9823
Cell: 740-352-2593

From: Cindy.Charles@epa.ohio.gov <Cindy.Charles@epa.ohio.gov>
Sent: Tuesday, April 17, 2018 1:01 PM
To: STARKWEATHER, DIANA M. <DMSTARKWEATHER@suncoke.com>
Cc: SKIPWORTH, JIM G <JGSKIPWORTH@suncoke.com>; BATTEN, KATIE M <KMBATTEN@SUNCOKE.COM>; John.Paulian@epa.ohio.gov
Subject: RE: FGD Maintenance Outage Request

Diana,

Can you please provide the detailed schedule of work for the proposed 38 day P902 FGD maintenance outage.

Thanks,

Cindy Charles
Director
Portsmouth Local Air Agency
605 Washington Street, Third Floor
Portsmouth, OH 45662
(740)353-5156 Main
(740)354-8934 Direct
(740)353-3638 Fax
cindy.charles@epa.ohio.gov

Our Mission:
Prevent disease, promote optimal health and safety, bridge the gap of unmet health care needs, and respond to public health emergencies for the citizens of Portsmouth.

This e-mail and any attachments may contain confidential and privileged information. If you are not the intended recipient, please notify the sender immediately by return e-mail, delete this e-mail and destroy any copies. Any dissemination or use of this information by a person other than the intended recipient is unauthorized and may be illegal.

From: STARKWEATHER, DIANA M. [mailto:DMSTARKWEATHER@suncoke.com]
Sent: Thursday, April 12, 2018 10:19 AM
To: Charles, Cindy
Cc: SKIPWORTH, JIM G; BATTEN, KATIE M
Subject: RE: FGD Maintenance Outage Request

Cindy,

Please see attached.

Thanks,

Diana Starkweather
Environmental Manager

Office: 740-355-9823
Cell: 740-352-2593

From: Cindy.Charles@epa.ohio.gov <Cindy.Charles@epa.ohio.gov>
Sent: Tuesday, April 10, 2018 1:05 PM
To: STARKWEATHER, DIANA M. <DMSTARKWEATHER@suncoke.com>
Cc: SKIPWORTH, JIM G <JGSKIPWORTH@suncoke.com>; BATTEN, KATIE M <KMBATTEN@SUNCOKE.COM>
Subject: RE: FGD Maintenance Outage Request

Diana,

Upon consultation with Ohio EPA, Central Office, DAPC, we cannot process the FGD maintenance request for emission unit P901 so far in advance.

Please submit a revised Request for FGD Maintenance for P902 and submit the Request for FGD Maintenance for P901 at a later date closer to the proposed dates of scheduled maintenance.

Please contact me with any questions.

Thanks,

Cindy Charles
Director
Portsmouth Local Air Agency
605 Washington Street, Third Floor
Portsmouth, OH 45662
(740)353-5156 Main
(740)354-8934 Direct
(740)353-3638 Fax
cindy.charles@epa.ohio.gov

Our Mission:
Prevent disease, promote optimal health and safety, bridge the gap of unmet health care needs, and respond to public health emergencies for the citizens of Portsmouth.

This e-mail and any attachments may contain confidential and privileged information. If you are not the intended recipient, please notify the sender immediately by return e-mail, delete this e-mail and destroy any copies. Any dissemination or use of this information by a person other than the intended recipient is unauthorized and may be illegal.

From: STARKWEATHER, DIANA M. [mailto:DMSTARKWEATHER@suncoke.com]
Sent: Friday, April 06, 2018 1:51 PM
To: Charles, Cindy
Cc: SKIPWORTH, JIM G; BATTEN, KATIE M
Subject: FGD Maintenance Outage Request

Cindy,

Please find attached the FGD maintenance outage request for the P901 and P902 emission units. Please feel free to contact me by phone or email with any questions. A hard copy will also be sent via USPS.

Thank you,

Diana Starkweather
Environmental Manager
SunCoke Energy Partners, L.P.
Haverhill Operations

SXCPartners

2446 Gallia Pike
Franklin Furnace, OH 45629
Office: 740-355-9823
Cell: 740-352-2593

This e-mail and any files transmitted with it may contain confidential information and is intended solely for the use of the individual or entity to whom they are addressed. If you are not the intended recipient, you are notified that disclosing, copying, distributing or taking any action in reliance on the contents of this information is strictly prohibited. Please notify the sender immediately by e-mail if you have received this e-mail by mistake and delete this e-mail from your system. Thank you for your cooperation.

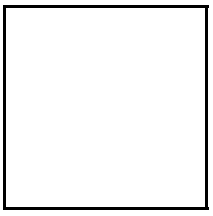

Did You Know: Children of parents who talk to their teens about drugs are
up to 50% less likely to use. Start the conversation:
StartTalking.Ohio.Gov

This email is intended for the sole use of the intended recipient and may contain privileged, sensitive or protected information. If you are not the intended recipient, be advised that the unauthorized use, disclosure, copying, distribution, or action taken in reliance on the contents of this communication is prohibited. If you have received this email in error, please notify the sender via telephone or return email and immediately delete this email.

Attachment 1, Tentative Schedule of Work

Task Name	Duration (hrs)	Start	Finish
FGD Outage Cool Down and Startup			
Phase Two Biennial Outage 2018	912	6/3/2018 18:00	7/11/18 18:00
FGD & SDA Cooldown	12	6/3/2018 18:00	6/4/2018 6:00
Restart of FGD, SDA, and Hrsgs.	24	7/10/18 18:00	7/11/18 18:00
Annual HRSG Outages			
Hrsg 6 Annual Outage	132	6/18/2018 7:00	6/23/18 19:00
Hrsg 10 Annual Outage	132	6/11/2018 7:00	6/16/2018 19:00
Routine Work			
Phase Two A-I.D. Fan Service and Testing	48	6/10/2018 6:00	6/12/2018 18:00
Lime Slurry Storage Tank Internal Cleaning and Inspection	48	6/5/2018 6:00	6/7/2018 6:00
Cold Duct Expansion Joint Repairs	48	6/6/2018 7:00	6/8/18 7:00
Repair C I.D. Fan Inlet Isolation Dampers	48	6/12/18 6:00	6/14/2018 18:00
Ash Silo loading chute panel and chute replacement	108	6/14/2018 6:00	6/18/2018 18:00
Inspect and service Slaker tanks and Slaker Equipment	36	6/18/2018 6:00	6/19/2018 18:00
MCC Inspection and Cleaning (Power Down to Complete)	180	6/10/2018 6:00	6/17/2018 18:00
Cold Duct Internal Inspection (Each Hrsg to SDA)	96	6/11/2018 6:00	6/15/2018 6:00
Repair B I.D. Fan Inlet Isolation Dampers	48	6/15/2018 6:00	6/17/2018 18:00
Repair A I.D. Fan Inlet Isolation Dampers	48	6/17/2018 6:00	6/19/2018 18:00
Phase Two C I.D. Fan Service and Testing	48	6/20/2018 6:00	6/22/2018 6:00
Repair Baghouse Isolation Dampers	504	6/6/2018 7:00	6/27/2018 7:00
SDA to FGD Internal Duct Inspections	48	6/16/2018 6:00	6/18/2018 6:00
UPS Inspection and Cleaning (Back Up Power)	24	6/16/2018 6:00	6/17/2018 6:00
Inspect and Service Blowdown and Swing Arms (Baghouse)	204	6/7/2018 6:00	6/15/2018 18:00
Clean and service Slaker Room vents, ducts, and aspirator fans	72	6/7/2018 6:00	6/10/2018 6:00
Major Project Work			
SDA Internal Cleaning and Inspection	**48**	**6/4/2018 6:00**	**6/6/2018 6:00**
SDA Plate and Roof Replacement and Inspection (UTT as needed)	**660**	**6/6/2018 6:00**	**7/3/18 18:00**
SDA Internal Scaffolding Removal	**48**	**7/3/2018 18:00**	**7/5/2018 18:00**
SDA Cone Installation	**120**	**7/5/2018 18:00**	**7/10/18 18:00**
Phase Two B I.D. Rotor replacement and testing	**396**	**6/5/2018 7:00**	**6/21/18 19:00**
I.D. Fan Outlet Duct Guillotine Replacements (2)	**396**	**6/8/2018 7:00**	**6/24/18 19:00**

STARKWEATHER, DIANA M.

From: STARKWEATHER, DIANA M.
Sent: Thursday, April 19, 2018 3:25 PM
To: Cindy.Charles@epa.ohio.gov
Cc: SKIPWORTH, JIM G; BATTEN, KATIE M; John.Paulian@epa.ohio.gov
Subject: RE: FGD Maintenance Outage Request

Cindy,

As a general practice, HCC calculates an SO2 emission factor for each CD semiannual reporting period. Since coal blends can change, HCC believes that the most recent semiannual SO2 emission factor is more representative of projected emissions than an older factor because the coal charged during that time is more akin to what we are using now. Additionally, the CEMs will be operating during the P902 FGD Outage and actual SO2 emissions from bypass vent #6 will be calculated accordingly.

Please let me know if you have any further questions.

Thanks,

Diana Starkweather
Environmental Manager

Office: 740-355-9823
Cell: 740-352-2593

From: Cindy.Charles@epa.ohio.gov <Cindy.Charles@epa.ohio.gov>
Sent: Thursday, April 19, 2018 2:01 PM
To: STARKWEATHER, DIANA M. <DMSTARKWEATHER@suncoke.com>
Cc: SKIPWORTH, JIM G <JGSKIPWORTH@suncoke.com>; BATTEN, KATIE M <KMBATTEN@SUNCOKE.COM>; John.Paulian@epa.ohio.gov
Subject: RE: FGD Maintenance Outage Request

Diana,

In addition to the request below for the detailed schedule, could you please explain why the SO2 emission factor of 141.9 lb/hr (calculated from 2nd half 2017 CEMS data) is more representative than the SO2 emission factor of 202.3 lb/hr (calculated from 2nd half 2016 CEMS data) which included a longer duration of bypass venting during a similar time frame FGD outage.

Thanks,

Cindy

From: Charles, Cindy
Sent: Tuesday, April 17, 2018 1:01 PM
To: 'STARKWEATHER, DIANA M.'

Cc: SKIPWORTH, JIM G; BATTEN, KATIE M; Paulian, John
Subject: RE: FGD Maintenance Outage Request

Diana,

Can you please provide the detailed schedule of work for the proposed 38 day P902 FGD maintenance outage.

Thanks,

Cindy Charles
Director
Portsmouth Local Air Agency
605 Washington Street, Third Floor
Portsmouth, OH 45662
(740)353-5156 Main
(740)354-8934 Direct
(740)353-3638 Fax
cindy.charles@epa.ohio.gov

Our Mission:
Prevent disease, promote optimal health and safety, bridge the gap of unmet health care needs, and respond to public health emergencies for the citizens of Portsmouth.

This e-mail and any attachments may contain confidential and privileged information. If you are not the intended recipient, please notify the sender immediately by return e-mail, delete this e-mail and destroy any copies. Any dissemination or use of this information by a person other than the intended recipient is unauthorized and may be illegal.

From: STARKWEATHER, DIANA M. [mailto:DMSTARKWEATHER@suncoke.com]
Sent: Thursday, April 12, 2018 10:19 AM
To: Charles, Cindy
Cc: SKIPWORTH, JIM G; BATTEN, KATIE M
Subject: RE: FGD Maintenance Outage Request

Cindy,

Please see attached.

Thanks,

Diana Starkweather
Environmental Manager

Office: 740-355-9823
Cell: 740-352-2593

From: Cindy.Charles@epa.ohio.gov <Cindy.Charles@epa.ohio.gov>
Sent: Tuesday, April 10, 2018 1:05 PM
To: STARKWEATHER, DIANA M. <DMSTARKWEATHER@suncoke.com>
Cc: SKIPWORTH, JIM G <JGSKIPWORTH@suncoke.com>; BATTEN, KATIE M <KMBATTEN@SUNCOKE.COM>
Subject: RE: FGD Maintenance Outage Request

Diana,

Upon consultation with Ohio EPA, Central Office, DAPC, we cannot process the FGD maintenance request for emission unit P901 so far in advance.

Please submit a revised Request for FGD Maintenance for P902 and submit the Request for FGD Maintenance for P901 at a later date closer to the proposed dates of scheduled maintenance.

Please contact me with any questions.

Thanks,

Cindy Charles
Director
Portsmouth Local Air Agency
605 Washington Street, Third Floor
Portsmouth, OH 45662
(740)353-5156 Main
(740)354-8934 Direct
(740)353-3638 Fax
cindy.charles@epa.ohio.gov

Our Mission:
Prevent disease, promote optimal health and safety, bridge the gap of unmet health care needs, and respond to public health emergencies for the citizens of Portsmouth.

This e-mail and any attachments may contain confidential and privileged information. If you are not the intended recipient, please notify the sender immediately by return e-mail, delete this e-mail and destroy any copies. Any dissemination or use of this information by a person other than the intended recipient is unauthorized and may be illegal.

From: STARKWEATHER, DIANA M. [mailto:DMSTARKWEATHER@suncoke.com]
Sent: Friday, April 06, 2018 1:51 PM
To: Charles, Cindy
Cc: SKIPWORTH, JIM G; BATTEN, KATIE M
Subject: FGD Maintenance Outage Request

Cindy,

Please find attached the FGD maintenance outage request for the P901 and P902 emission units. Please feel free to contact me by phone or email with any questions. A hard copy will also be sent via USPS.

Thank you,

Diana Starkweather
Environmental Manager
SunCoke Energy Partners, L.P.
Haverhill Operations

SXCPartners

2446 Gallia Pike
Franklin Furnace, OH 45629
Office: 740-355-9823
Cell: 740-352-2593

This e-mail and any files transmitted with it may contain confidential information and is intended solely for the use of the individual or entity to whom they are addressed. If you are not the intended recipient, you are notified that disclosing, copying, distributing or taking any action in reliance on the contents of this information is strictly prohibited. Please notify the sender immediately by e-mail if you have received this e-mail by mistake and delete this e-mail from your system. Thank you for your cooperation.

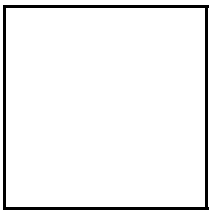

Did You Know: Children of parents who talk to their teens about drugs are
up to 50% less likely to use. Start the conversation:
StartTalking.Ohio.Gov

This email is intended for the sole use of the intended recipient and may contain privileged, sensitive or protected information. If you are not the intended recipient, be advised that the unauthorized use, disclosure, copying, distribution, or action taken in reliance on the contents of this communication is prohibited. If you have received this email in error, please notify the sender via telephone or return email and immediately delete this email.

STARKWEATHER, DIANA M.

From: STARKWEATHER, DIANA M.
Sent: Thursday, April 12, 2018 10:19 AM
To: Cindy.Charles@epa.ohio.gov
Cc: SKIPWORTH, JIM G; BATTEN, KATIE M
Subject: RE: FGD Maintenance Outage Request
Attachments: 2018 P902 FGD Outage Request.pdf

Cindy,

Please see attached.

Thanks,

Diana Starkweather
Environmental Manager

Office: 740-355-9823
Cell: 740-352-2593

From: Cindy.Charles@epa.ohio.gov <Cindy.Charles@epa.ohio.gov>
Sent: Tuesday, April 10, 2018 1:05 PM
To: STARKWEATHER, DIANA M. <DMSTARKWEATHER@suncoke.com>
Cc: SKIPWORTH, JIM G <JGSKIPWORTH@suncoke.com>; BATTEN, KATIE M <KMBATTEN@SUNCOKE.COM>
Subject: RE: FGD Maintenance Outage Request

Diana,

Upon consultation with Ohio EPA, Central Office, DAPC, we cannot process the FGD maintenance request for emission unit P901 so far in advance.

Please submit a revised Request for FGD Maintenance for P902 and submit the Request for FGD Maintenance for P901 at a later date closer to the proposed dates of scheduled maintenance.

Please contact me with any questions.

Thanks,

Cindy Charles
Director
Portsmouth Local Air Agency
605 Washington Street, Third Floor
Portsmouth, OH 45662
(740)353-5156 Main
(740)354-8934 Direct
(740)353-3638 Fax
cindy.charles@epa.ohio.gov

Our Mission:
Prevent disease, promote optimal health and safety, bridge the gap of unmet health care needs, and respond to public health emergencies for the citizens of Portsmouth.

This e-mail and any attachments may contain confidential and privileged information. If you are not the intended recipient, please notify the sender immediately by return e-mail, delete this e-mail and destroy any copies. Any dissemination or use of this information by a person other than the intended recipient is unauthorized and may be illegal.

From: STARKWEATHER, DIANA M. [mailto:DMSTARKWEATHER@suncoke.com]
Sent: Friday, April 06, 2018 1:51 PM
To: Charles, Cindy
Cc: SKIPWORTH, JIM G; BATTEN, KATIE M
Subject: FGD Maintenance Outage Request

Cindy,

Please find attached the FGD maintenance outage request for the P901 and P902 emission units. Please feel free to contact me by phone or email with any questions. A hard copy will also be sent via USPS.

Thank you,

Diana Starkweather
Environmental Manager
SunCoke Energy Partners, L.P.
Haverhill Operations

SXCPartners

2446 Gallia Pike
Franklin Furnace, OH 45629
Office: 740-355-9823
Cell: 740-352-2593

This e-mail and any files transmitted with it may contain confidential information and is intended solely for the use of the individual or entity to whom they are addressed. If you are not the intended recipient, you are notified that disclosing, copying, distributing or taking any action in reliance on the contents of this information is strictly prohibited. Please notify the sender immediately by e-mail if you have received this e-mail by mistake and delete this e-mail from your system. Thank you for your cooperation.

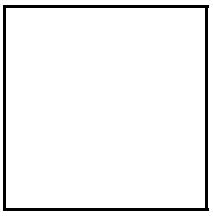

Did You Know: Children of parents who talk to their teens about drugs are
up to 50% less likely to use. Start the conversation:
StartTalking.Ohio.Gov

This email is intended for the sole use of the intended recipient and may contain privileged, sensitive or protected information. If you are not the intended recipient, be advised that the unauthorized use, disclosure, copying, distribution, or action taken in reliance on the contents of this communication is prohibited. If you have received this email in error, please notify the sender via telephone or return email and immediately delete this email.

Haverhill North Coke Company
2446 Gallia Pike
Franklin Furnace, Ohio 45629

April 11, 2018

Ms. Cindy Charles, Director
Ohio Environmental Protection Agency
Portsmouth Local Air Agency
605 Washington Street, Third Floor
Portsmouth, Ohio 45662

Request for FGD Maintenance –P902 FGD Unit
Facility ID: 0773000182

Dear Ms. Charles:

Haverhill Coke Company LLC (HCC) is submitting the following information under OAC Rule 3745-15-06(A)(3) in request of scheduled maintenance time required for the Flue Gas Desulfurization Unit (FGD), including (a) time necessary to complete the spray dryer absorber ("SDA") Replating project at P902 and scheduled maintenance time required for the FGD on emission unit P902. This outage is necessary to upgrade the SDA's metallurgy to make it more corrosion-resistant and assist in effective operation of the SDA under gas sharing conditions. HCC plans to use the outage to complete the final phase of the SDA replating project, as described below. Because shutdown of HCC's heat recovery coke ovens could result in severe damage to the coke ovens, as further discussed herein, HCC is requesting authorization from OEPA-PLAA to continue operating P902 during the maintenance outages for the and P902 FGDs.

The FGD is designated as a component of the control equipment for emission unit P902 in our Permit to Install (PTI) P0119826. The maintenance that HCC plans to conduct on emission unit P902, including preventative maintenance and equipment upgrades, is described below.

P902 SDA Replating

In September 2016, HCC commenced the SDA Replating Project, which includes extensive structural upgrades to the P902 SDA to improve mechanical integrity and reliability. The final phase of the SDA Replating Project on the P902 SDA is expected to conclude in 2018 and will include removal of the SDA cone and associated internal ducting, the SDA roof, and approximately 57% of the SDA vessel wall plates. Material removed will be replaced with the corrosion resistant metallurgy Alloy 20.

These repairs are necessary to mitigate potential failure of the P902 SDA structures. HCC has experienced SDA wall failures due to internal under-deposit corrosion of the P902 SDA. Additional failures have occurred that have been temporarily repaired by plating over the exterior of either SDA, which does not require the unit to be removed from service. However, patching the exterior of the SDA does not stop the internal corrosion. The internal corrosion

results from material buildup on the internal wall plates. These deposits are inherent to the process gas and normal operating conditions inside the SDA and the corrosion cannot be completely eliminated by changing any of the process variables. Changing the metallurgy of the vessel wall to a material with a high corrosion resistance is expected to prevent internal corrosion of the SDA walls and to reduce the likelihood of future unplanned bypass venting that is a result of an SDA structural integrity failure.

These structural upgrades to the SDA are necessary to support continued operation at the increased flow required by the Redundant HRSG Project and the Consent Decree. Higher SDA corrosion is expected due to the increased splatter resulting from the increased flow required while in the gas sharing mode. The upgraded SDA vessel metallurgy will minimize corrosion and thus help to ensure reliable and consistent SDA operation through the life of the Consent Decree and beyond.

Prior to removal and replacement of the SDA wall plates, the vessel will be cleaned and exterior insulation will be removed in the repair areas. Scaffolding will be installed inside the SDA vessel in order to conduct maintenance to the interior of the vessel.

HCC is requesting a total of 38 days to complete the above-described maintenance activities on the P902 FGD and critical ancillary equipment in 2018. The additional outage time is necessary to conduct the extensive structural upgrades required to maintain the integrity of the FGD system, which in turn is required to consistently operate the Redundant HRSG and the Existing HRSGs simultaneously within the meaning of Paragraph 8(kk) of the Consent Decree. To complete this work, HCC will use time allotted under the Consent Decree. OEPA, Illinois Protection Agency and the U.S. Environmental Protection Agency have previously approved HCC's use of time allotted under the Consent Decree for this work.[1]

Scheduling

Major outage work for P902 will include inspection, cleaning and repairs of the SDA, the FGD vessel, the FGD baghouse and all associated ancillary systems critical to FGD performance and will be completed during the SDA Replating work, as described above.

The tentative schedule for maintenance on the P902 FGD is June 3 – July 11, 2018. HCC will keep your office updated if there are changes to this schedule. The schedule of work for the P902 FGD maintenance outage is not yet finalized, but will be provided to your office prior to the outage.

P902 2018 FGD Maintenance Outage

The P902 2018 maintenance outage will occur concurrently with the SDA replating project, and will involve multiple projects that are necessary to minimize the potential for equipment upsets that could lead to future malfunction events and to complete SDA Replating work. Major outage work will include inspection, cleaning, and repairs of the SDA, the FGD vessel, the FGD baghouse and all associated ancillary systems critical to FGD performance. HCC would like to

[1] Email from C. Rojko, U.S. Department of Justice, to R. Brager, copying R. Burlingham and E. Ewing, dated Nov. 18, 2015.

perform this maintenance outage starting on or about June 3, 2018. The most recent scheduled maintenance outage for the P902 FGD occurred in September – October of 2016. Please note that emergency maintenance was completed on the P902 Steam Turbine Generator (STG) system in December of 2016, which required that the P902 FGD be taken offline.

During the 2018 P902 FGD maintenance outage, HCC will utilize the time to conduct preventive maintenance that can only be done when the unit is offline and to install extensive equipment upgrades that will improve the performance of the control equipment. Preventive maintenance will include cleaning, inspection, and repairs of the spray dryer absorber vessel shell, FGD baghouse, ash silo, associated ducts and lines, and the main stack induced draft (ID) fans.

Each FGD baghouse compartment and the associated inlet and outlet dampers will be inspected and repaired as required. The baghouse receiver filter on top of the ash silo will also be inspected and repaired as required.

Additionally, maintenance will be conducted on the dilution water and lime slurry production and distribution equipment including atomizers and pumps, and cleaning and de-scaling of slurry and dilution water supply lines and vessels. The ID fans and the associated inlet and outlet dampers will be inspected and repaired as necessary.

Mechanical integrity inspections of all ductwork and vessels will be completed, as well as maintenance on the Steam Turbine Generator (STG). In addition, testing and repair of all motor control center (MCC) switch gear and components and uninterruptable power supply (UPS) units will be performed.

HCC will also take advantage of this time to conduct annual preventative maintenance, including cleaning, inspection, and repair as needed on certain HRSGs. HCC tentatively plans to conduct this annual scheduled HRSG maintenance on HRSGs 6 and 10.

The maintenance outage on P902 will also be used to install upgraded electrical equipment to complete the final phase (Phase III) of HCC's electrical reliability (ER) project. Phase III of the project will include constructing a new electrical building with a 4160V transfer switch for providing redundant 5kV power to critical electrical components in Power Island and installing two 480V transfer switches for providing redundant 480V power to critical Motor Control Centers (MCCs) in Power Island.

The following information is being submitted to meet the requirements of OAC Rule 3745-15-06(A)(3) for the planned FGD shutdown.

(a) *Identification and location of the specific source for which air pollution control equipment will be taken out of service. The identification shall include the Ohio environmental protection agency permit application number;*

HCC is located at 2446 Gallia Pike in Franklin Furnace in Scioto County, Ohio, and operates pursuant to PTI P0119826. The P902 FGD process treats the flue gas from 100 heat recovery coke ovens. The flue gas from the coking process is cooled in one of six

HRSGs and then directed through the associated SDA unit to remove sulfur dioxide (SO_2) and finally through a fabric filter baghouse system for particulate collection.

(b) *The expected length of time that the air pollution control equipment will be taken out of service;*

The estimated time required to complete the extensive maintenance and SDA replating activities to the P902 FGD and critical ancillary equipment, as described above, is 38 days. This includes the time required to cool down the FGD before maintenance can begin and the time to heat the FGD back up to operational temperature, and start the STG after maintenance work is complete. Please note that additional time is needed to conduct extensive structural repair to the SDAs to ensure the continued successful operation at the increased flow requirements of the Redundant HRSG Project and the Consent Decree.

(c) *The nature and estimated quantity of emissions of air contaminants which are likely to occur during the shutdown period;*

The predicted SO_2 and PM/PM_{10} emissions from the P902 FGD Maintenance Outage are 323.5 tons and 40.6 tons, respectively. These estimates are based on the most recent stack testing data available and the total duration of bypass venting. The expected coal sulfur content during the P902 FGD Maintenance Outage is at or around an average of 0.89 percent. This value is based on the 2018 average coal sulfur content through the date that this request was written. Please refer to **Attachment 2, P902 Bypass Venting Emissions Calculations**, for additional information.

(d) *Measures such as the use of off-shift labor and equipment that will be taken to minimize the length of the shutdown period;*

Because heat recovery coke ovens cannot be shut down due to the risk of severe damage from the temperature change experienced when cooling them to ambient temperature, the most effective way to minimize emissions during FGD downtime is to minimize the time the spray dryer and baghouse are offline. This can be accomplished by using appropriate personnel and scheduling the work to be performed in the shortest possible time.

To facilitate this effort, multiple contractor teams in coordination with HCC operations and maintenance personnel will be working around the clock 24/7 on the SDA Replating Project to maximize the time available and to minimize the overall outage time required. The plant HRSG team will be on standby to bring the HRSGs and FGD back online as soon as the maintenance is completed.

An independent engineering consulting group was contracted to determine the maximum area of the vessel shell that could be removed at one time to best optimize the project schedule. Based on the scope of repairs and results of the structural analysis, the schedule could not be condensed to minimize the outage duration.

(e) *The reasons that it will be impossible or impractical to shut down the source operation during the scheduled maintenance period; and*

A heat recovery coke oven battery cannot be shut down due to the risk of damage caused by thermal spalling and the risk of severe oven structural failure caused by brick contraction from the drastic temperature change required for a shut down. Therefore, HCC must continue operations during the outage time frame on P902.

(f) *A demonstration that all feasible interim control measures will be taken to reduce emissions from the source during the shutdown period.*

In accordance with Paragraph 19 of the Consent Decree, HCC will maintain reduced charge weights to an average weight of 42.5 tons per oven on P902 for the duration of the 2018 outage. Additionally HCC expects coal sulfur content to be at or around an average of 0.89 percent during this timeframe. HCC will also minimize the duration of the bypass venting to the extent practicable, as discussed above.

With the information provided above HCC requests authorization to continue operations during this scheduled maintenance for the P902 FGD unit. If you have any questions or concerns, please contact Diana Starkweather at (740) 355-9823.

Sincerely,

Jim Skipworth
General Manager
Haverhill Coke Company
(740) 355-9860

Attachment 1, P902 Bypass Venting Emissions Calculations

Emission Factors (for one bypass vent stack):

Lead	0.060	lb/hr	September 2016 Test, HNCC No. 2 FGD Outage
PM (Filt + Cond)	17.8	lb/hr	May 2016 Test, HNCC No. 1 FGD Outage
SO2	141.9	lb/hr	Calculated from 2017 2nd Half CEMs Data

Event Description: P902 FGD Maintenance Outage

Start Date/Time of Bypass Venting: 6/3/2018 18:00

End Date/Time of Bypass Venting: 7/11/2018 18:00

Bypass Vent Stack Lid Open and Close Date/Time:

	#6	#7	#8	#9	#10
Open Date/Time:	6/3/2018 18:00	6/3/2018 18:00	6/3/2018 18:00	6/3/2018 18:00	6/3/2018 18:00
Close Date/Time:	7/11/2018 18:00	7/11/2018 18:00	7/11/2018 18:00	7/11/2018 18:00	7/11/2018 18:00

Total Stack Lid Open Time per Bypass Vent Stack:

	#6	#7	#8	#9	#10
Hours:	912.0	912.0	912.0	912.0	912.0
Minutes:	54720.0	54720.0	54720.0	54720.0	54720.0

Total Bypass Venting Time:

Hours: 4560.0 Minutes: 273600

Calculation of Bypass Venting Emissions:

Emissions = Emission Factor (lb/hr) x Total Hours of Bypass Venting x 1 ton/2000 lbs

	#6	#7	#8	#9	#10
Lead (lbs)	54.7	54.7	54.7	54.7	54.7
PM (lbs)	16233.6	16233.6	16233.6	16233.6	16233.6
SO2 (lbs)	129412.8	129412.8	129412.8	129412.8	129412.8

Total Emissions from Bypass Venting Event

Total Emissions = Sum of Emissions from Each Affected Bypass Vent Stack

Total tons of Pollutant Emitted During Bypass Venting

Lead (tons)	0.1
PM (tons)	40.6
SO_2 (tons)	323.5

Facility Profile Report
Facility Name: Haverhill Coke Company LLC
ID: 0773000182

Facility : 0773000182

Apr 18 2018, 15:10:13

- Facility Information

Facility ID: 0773000182

FacilityName: Haverhill Coke Company LLC

Facility Description: Two 100 oven nonrecovery coke batteries, two quench towers, paved roads, coal handling, storage piles, coke processing.

Address1: 2446 Gallia Pike

Address2:

City: Franklin Furnace State: Ohio

Zip Code: 45629-8837

Portable:

Operating Status: Operating

Permitting Classification: TV PER Due Date: None

Transitional Status: None

Title V Permit Status: Pending Initial(inactive) Title V Certification Report Due Date:

Emissions Reporting Category for 2017: TV Status: Submitted

Anticipated Emissions Reporting Category for 2018: TV

Core Place ID: 129411

Latitude: 38.600555

Longtitude: -82.825

- Yearly Emissions Reporting Category

Year	Category	Enabled	Status
2017	TV	X	Submitted
2016	TV	X	Submitted
2015	TV	X	Submitted
2014	TV	X	Submitted
2013	TV	X	Submitted
2012	TV	X	Submitted
2011	TV	X	Submitted
2010	TV	X	Submitted
2009	TV	X	Submitted
2008	TV	X	Submitted
2007	TV	X	Submitted
2006	TV	X	Submitted
2005	TV	X	Submitted
2004	NONE	X	Report Not Required
2001	NONE	X	Report Not Required
2000	NONE	X	Report Not Required

- SIC Codes

3312 Blast Furnaces And Steel Mills

- NAICS Codes

324199 All Other Petroleum and Coal Products Manufacturing

- **Contacts**

Contact Type	Contact Person	Phone Number	Email	Start Date	End Date
On Site	Starkweather, Diana	(740)355-9823	dmstarkweather@suncoke.com	10/31/2014	
Billing	Starkweather, Diana	(740)355-9823	dmstarkweather@suncoke.com	10/31/2014	
Primary	Starkweather, Diana	(740)355-9823	dmstarkweather@suncoke.com	10/31/2014	
Responsible Official	Skipworth, Jim	(740)355-9860	JGSKIPWORTH@suncoke.com	10/23/2014	
Owner	Haverhill Coke Company LLC	(740)355-9800		06/16/2008	
Primary	Batten, Katie	(740)355-9871	kmbatten@suncoke.com	10/29/2014	10/30/2014
Billing	Batten, Katie	(740)355-9871	kmbatten@suncoke.com	10/29/2014	10/30/2014
On Site	Batten, Katie	(740)355-9871	kmbatten@suncoke.com	10/29/2014	10/30/2014
Primary	Laird, Katherine	(740)355-9823	kmlaird@suncoke.com	06/01/2011	10/28/2014
On Site	Laird, Katherine	(740)355-9823	kmlaird@suncoke.com	06/01/2011	10/28/2014
Billing	Laird, Katherine	(740)355-9823	kmlaird@suncoke.com	06/01/2011	10/28/2014
Responsible Official	Essman, John	(740)355-9801	jsessman@suncoke.com	10/27/2008	10/23/2014
On Site	Kinder, Kris K	(740)355-9823	kkkinder@sunocoinc.com	11/24/2008	05/01/2011
Billing	Kinder, Kris K	(740)355-9823	kkkinder@sunocoinc.com	11/24/2008	05/01/2011
Primary	Kinder, Kris K	(740)355-9823	kkkinder@sunocoinc.com	11/24/2008	05/01/2011
Responsible Official	Pruitt, Wayne	(740)355-9801		07/22/2008	10/27/2008
Responsible Official	Wash, Stanley	(740)355-9801		07/22/2008	07/22/2008
Responsible Official	Wash, Stanley	(740)355-9801		03/01/2005	07/21/2008
Billing	Brislin, Robert D	(740)355-9808		03/01/2006	06/16/2008
Primary	Brislin, Robert D	(740)355-9808		03/01/2006	06/16/2008
On Site	Brislin, Robert D	(740)355-9808		03/01/2006	06/16/2008
Primary	ALLEN, CHRISTOPHER	(423)558-3262		01/01/2000	12/31/2001
Owner	ALLEN, CHRISTOPHER	(423)558-3262		01/01/2000	12/31/2001

Contact Detail For : Starkweather, Diana

Prefix:
First Name: Diana
Middle Name:
Last Name: Starkweather
Suffix:

Company Title:	Environmental Manager	Operating Company Name:	Haverhill Coke Company, LLC
Address 1:	2446 Gallia Pike		
Address 2:			
City:	Franklin Furnace	Zip Code:	45629
State:	Ohio		
Work Phone No:	(740)355-9823	Secondary Phone No.:	
Address 2:		Secondary Ext. No.:	
Mobile Phone No.:		Pager No.:	
Fax No:		Pager PIN No.:	
Email:	dmstarkweather@suncoke.com		
Email Pager Address:			

Contact Detail For : Skipworth, Jim

Prefix:	Mr.	First Name:	Jim
Middle Name:		Last Name:	Skipworth
Suffix:			
Company Title:	Interim General Manager	Operating Company Name:	Haverhill Coke Company, LLC
Address 1:	2446 Gallia Pike		
Address 2:			
City:	Franklin Furnace	Zip Code:	45629-8837
State:	Ohio		
Work Phone No:	(740)355-9860	Secondary Phone No.:	
Address 2:		Secondary Ext. No.:	
Mobile Phone No.:		Pager No.:	
Fax No:		Pager PIN No.:	
Email:	JGSKIPWORTH@suncoke.com		
Email Pager Address:			

Contact Detail For : Haverhill Coke Company LLC

Prefix:		First Name:	
Middle Name:		Last Name:	
Suffix:			
Company Title:		Operating Company Name:	Haverhill Coke Company LLC
Address 1:	2446 Gallia Pike		
Address 2:			
City:	Franklin Furnace	Zip Code:	45629-8837
State:	Ohio		
Work Phone No:	(740)355-9800	Secondary Phone No.:	
Address 2:		Secondary Ext. No.:	
Mobile Phone No.:		Pager No.:	
Fax No:		Pager PIN No.:	
Email:			

Email Pager Address:

Contact Detail For : Batten, Katie

Prefix:		First Name:	Katie
Middle Name:		Last Name:	Batten
Suffix:			
Company Title:	Corporate Environmental Manager	Operating Company Name:	Haverhill Coke Company, LLC
Address 1:	2446 Gallia Pike		
Address 2:			
City:	Franklin Furnace	Zip Code:	45629-8837
State:	Ohio		
Work Phone No:	(740)355-9871	Secondary Phone No.:	
Address 2:		Secondary Ext. No.:	
Mobile Phone No.:		Pager No.:	
Fax No:		Pager PIN No.:	
Email:	kmbatten@suncoke.com		
Email Pager Address:			

Contact Detail For : Laird, Katherine

Prefix:		First Name:	Katherine
Middle Name:		Last Name:	Laird
Suffix:			
Company Title:		Operating Company Name:	Haverhill Coke Company LLC
Address 1:	2446 Gallia Pike		
Address 2:			
City:	Franklin Furnace	Zip Code:	45629
State:	Ohio		
Work Phone No:	(740)355-9823	Secondary Phone No.:	
Address 2:		Secondary Ext. No.:	
Mobile Phone No.:		Pager No.:	
Fax No:		Pager PIN No.:	
Email:	kmlaird@suncoke.com		
Email Pager Address:			

Contact Detail For : Essman, John

Prefix:	Mr.	First Name:	John
Middle Name:		Last Name:	Essman
Suffix:			
Company Title:	General Manager	Operating Company Name:	Haverhill Coke Company LLC
Address 1:	2446 Gallia Pike		
Address 2:			
City:	Franklin Furnace	Zip Code:	45629

State:	Ohio		
Work Phone No:	(740)355-9801	Secondary Phone No.:	
Address 2:		Secondary Ext. No.:	
Mobile Phone No.:		Pager No.:	
Fax No:		Pager PIN No.:	
Email:	jsessman@suncoke.com		
Email Pager Address:			

Contact Detail For : Kinder, Kris K

Prefix:	Mr.	First Name:	Kris
Middle Name:	K	Last Name:	Kinder
Suffix:			
Company Title:	Environmental Manager	Operating Company Name:	Haverhill North Coke Company
Address 1:	2446 Gallia Pike		
Address 2:			
City:	Franklin Furnace	Zip Code:	45629
State:	Ohio		
Work Phone No:	(740)355-9823	Secondary Phone No.:	
Address 2:		Secondary Ext. No.:	
Mobile Phone No.:		Pager No.:	
Fax No:		Pager PIN No.:	
Email:	kkkinder@sunocoinc.com		
Email Pager Address:			

Contact Detail For : Pruitt, Wayne

Prefix:	Mr.	First Name:	Wayne
Middle Name:		Last Name:	Pruitt
Suffix:			
Company Title:	Plant Manager	Operating Company Name:	
Address 1:	2446 Gallia Pike`		
Address 2:			
City:	Franklin Furnace	Zip Code:	45629
State:	Ohio		
Work Phone No:	(740)355-9801	Secondary Phone No.:	
Address 2:		Secondary Ext. No.:	
Mobile Phone No.:		Pager No.:	
Fax No:		Pager PIN No.:	
Email:			
Email Pager Address:			

Contact Detail For : Wash, Stanley

Prefix:		First Name:	Stanley
Middle Name:		Last Name:	Wash
Suffix:			
Company Title:	Plant Manager	Operating Company Name:	
Address 1:	2446 Gallia Pike		
Address 2:			
City:	Franklin Furnace	Zip Code:	45629-8837
State:	Ohio		
Work Phone No:	(740)355-9801	Secondary Phone No.:	
Address 2:		Secondary Ext. No.:	
Mobile Phone No.:		Pager No.:	
Fax No:		Pager PIN No.:	
Email:			
Email Pager Address:			

Contact Detail For : Brislin, Robert D

Prefix:		First Name:	Robert
Middle Name:	D	Last Name:	Brislin
Suffix:			
Company Title:		Operating Company Name:	
Address 1:	2446 Gallia Pike		
Address 2:			
City:	Franklin Furnace	Zip Code:	45629-8837
State:	Ohio		
Work Phone No:	(740)355-9808	Secondary Phone No.:	
Address 2:		Secondary Ext. No.:	
Mobile Phone No.:		Pager No.:	
Fax No:		Pager PIN No.:	
Email:			
Email Pager Address:			

Contact Detail For : ALLEN, CHRISTOPHER

Prefix:		First Name:	CHRISTOPHER
Middle Name:		Last Name:	ALLEN
Suffix:			
Company Title:		Operating Company Name:	HAVERHILL NORTH COKE COMPANY
Address 1:	PO BOX 10388		
Address 2:			
City:	KNOXVILLE	Zip Code:	37919-4005
State:	Tennessee		
Work Phone No:	(423)558-3262	Secondary Phone No.:	

Address 2:		Secondary Ext. No.:	
Mobile Phone No.:		Pager No.:	
Fax No:		Pager PIN No.:	
Email:			
Email Pager Address:			

Emission Unit : F001

- Emission Unit Information

DAPC Emissions Unit ID: F001

DAPC Description: Paved Roadways and Parking Areas

Company Equipment ID: Roadways and parking areas

Company Description: Roadways and Parking Areas

Operating Status: Operating

Completion of Initial Installation Date: 03/01/2005

Begin Installation/Modification Date: 12/26/2008

Commence Operation After Installation or Latest Modification Date: 12/26/2008

Title V EU Classification: Significant

Exemption Status: NA

Boiler/Turbine/Generator Design Capacity: Not Applicable

Design Capacity Units:

ORIS Boiler ID:

- Processes

- Emission Process Information

Process ID: F001

Company Process Description: Roadways and Parking areas

Source Classification Code (SCC): S-01-001-01

Control equipment(s) directly associated with this process

Paved Roads & Parking Area

Egress points(s) directly associated with this process

Roadways

- Emission Process Information

Process ID: Unpaved Roadways

Company Process Description:

Source Classification Code (SCC): S-01-002-01

Control equipment(s) directly associated with this process

Unpaved Road

Egress points(s) directly associated with this process

Roadways

Emission Unit : F002

- Emission Unit Information

DAPC Emissions Unit ID: F002

DAPC Description: Coal and coke storage piles

Company Equipment ID: Coal & coke storage piles

Company Description: Wind erosion from coal & coke piles, load-in & load-out operations associated with the storage piles.

Operating Status: Operating

Completion of Initial Installation Date: 03/01/2005

Begin Installation/Modification Date: 12/26/2008

Commence Operation After Installation or Latest Modification Date: 12/26/2008

Title V EU Classification: Significant

Exemption Status: NA

Boiler/Turbine/Generator Design Capacity: Not Applicable

Design Capacity Units:

ORIS Boiler ID:

- Processes

- Emission Process Information

Process ID: F002

Company Process Description: Heat Recovery Coke Manufacturing

Source Classification Code (SCC): 3-03-003-16

Control equipment(s) directly associated with this process

Coal & Coke Storage Piles

Egress points(s) directly associated with this process

Coal/Coke S

Emission Unit : F003

- Emission Unit Information

DAPC Emissions Unit ID: F003

DAPC Description: Coal Handling Processing and Transfer

Company Equipment ID: Coal handling processing and transfer

Company Description: This emission unit includes:1) Coal unloading via rail car bottom dumping2) Coal conveying via belt conveyor3) Coal transfer point via belt conveyor to belt conveyor4) Coal sizing crushing

Operating Status: Operating

Completion of Initial Installation Date: 03/01/2005

Begin Installation/Modification Date: 01/15/2008

Commence Operation After Installation or Latest Modification Date: 01/15/2008

Title V EU Classification: Significant

Exemption Status: NA

Boiler/Turbine/Generator Design Capacity: Not Applicable

Design Capacity Units:

ORIS Boiler ID:

- Processes

- Emission Process Information

Process ID: F003

Company Process Description: Heat Recovery Coke Manufacturing

Source Classification Code (SCC): 3-03-003-07

Control equipment(s) directly associated with this process

Coal Handling & Transfer

Emission Unit : F004

Apr 18 2018, 15:10:14

- Emission Unit Information

DAPC Emissions Unit ID: F004

DAPC Description: Coke and breeze handling and processing

Company Equipment ID: Coke and breeze handling and processing

Company Description: This emission unit includes:1) Coke loading of railcars 2) Coke conveying via belt conveyor3) Coke transfer points (belt conveyor to belt conveyor and crusher to belt conveyor)4) Coke crusher and screening station controlled by a baghouse.

Operating Status: Operating

Completion of Initial Installation Date: 03/01/2005

Begin Installation/Modification Date: 12/26/2008

Commence Operation After Installation or Latest Modification Date: 12/26/2008

Title V EU Classification: Significant

Exemption Status: NA

Boiler/Turbine/Generator Design Capacity: Not Applicable

Design Capacity Units:

ORIS Boiler ID:

- Processes

- Emission Process Information

Process ID: F004

Company Process Description: Heat Recovery Coke Manufacturing

Source Classification Code (SCC): 3-03-003-12

Control equipment(s) directly associated with this process

Coke Crushing

Coke & Breeze Handling

Emission Unit : F005

- Emission Unit Information

DAPC Emissions Unit ID: F005

DAPC Description:

Company Equipment ID: Lime Silo - AB

Company Description: Lime silo exhaust to baghouse

Operating Status: Operating

Completion of Initial Installation Date: 03/01/2005

Begin Installation/Modification Date: 03/01/2005

Commence Operation After Installation or Latest Modification Date: 03/01/2005

Title V EU Classification: Insignificant

Exemption Status: De minimis

Boiler/Turbine/Generator Design Capacity: Not Applicable

Design Capacity Units:

ORIS Boiler ID:

- Processes

- Emission Process Information

Process ID: Z001

Company Process Description: Lime is mixed with water and injected into the SD to remove SO2

Source Classification Code (SCC): 3-03-999-99

Emission Unit : F006

- Emission Unit Information

DAPC Emissions Unit ID: F006

DAPC Description:

Company Equipment ID: Lime Silo - CD

Company Description: Lime silo exhaust to baghouse. .

Operating Status: Operating

Completion of Initial Installation Date: 07/08/2008

Begin Installation/Modification Date: 02/01/2007

Commence Operation After Installation or Latest Modification Date: 07/08/2008

Title V EU Classification: Insignificant

Exemption Status: De minimis

Boiler/Turbine/Generator Design Capacity: Not Applicable

Design Capacity Units:

ORIS Boiler ID:

- Processes

- Emission Process Information

Process ID: Z002

Company Process Description: Lime is mixed with water and injected into the SD to remove SO2

Source Classification Code (SCC): 3-03-999-99

Emission Unit : F007

- Emission Unit Information

DAPC Emissions Unit ID: F007

DAPC Description:

Company Equipment ID: FGD Dust Silo AB

Company Description: FGD (Flue Gas Desulfurization) dust silo exhaust with baghouse.

Operating Status: Operating

Completion of Initial Installation Date: 03/01/2005

Begin Installation/Modification Date: 03/01/2005

Commence Operation After Installation or Latest Modification Date: 03/01/2005

Title V EU Classification: Insignificant

Exemption Status: De minimis

Boiler/Turbine/Generator Design Capacity: Not Applicable

Design Capacity Units:

ORIS Boiler ID:

- Processes

- Emission Process Information

Process ID: Z003

Company Process Description: FGD solid product from SD/BH

Source Classification Code (SCC): 3-03-999-99

Emission Unit : F008

- Emission Unit Information

DAPC Emissions Unit ID: F008

DAPC Description:

Company Equipment ID: FGD Dust Silo CD

Company Description: Z004 - FGD (Flue Gas Desulfurization) dust silo exhaust with baghouse.

Operating Status: Operating

Completion of Initial Installation Date: 07/08/2008

Begin Installation/Modification Date: 02/01/2007

Commence Operation After Installation or Latest Modification Date: 07/08/2008

Title V EU Classification: Insignificant

Exemption Status: De minimis

Boiler/Turbine/Generator Design Capacity: Not Applicable

Design Capacity Units:

ORIS Boiler ID:

- Processes

- Emission Process Information

Process ID: Z004

Company Process Description: FGD solid product from SD/BH

Source Classification Code (SCC): 3-03-999-99

Emission Unit : P001

- Emission Unit Information

DAPC Emissions Unit ID: P001

DAPC Description: Quench Tower for C and D Batteries

Company Equipment ID: Quench Tower AB

Company Description: Quench tower to quench the coke produced from AB battery.

Operating Status: Operating

Completion of Initial Installation Date: 03/01/2005

Begin Installation/Modification Date: 03/01/2005

Commence Operation After Installation or Latest Modification Date: 03/01/2005

Title V EU Classification: Significant

Exemption Status: NA

Boiler/Turbine/Generator Design Capacity: Not Applicable

Design Capacity Units:

ORIS Boiler ID:

- Processes

- Emission Process Information

Process ID: P001

Company Process Description: Heat Recovery Coke Manufacturing

Source Classification Code (SCC): 3-03-003-04

Control equipment(s) directly associated with this process

Quenching AB

Emission Unit : P002

- Emission Unit Information

DAPC Emissions Unit ID: P002

DAPC Description: Quench Tower for A and B Batteries

Company Equipment ID: Quench Tower CD

Company Description: Quench tower to quench the coke produced from CD battery.

Operating Status: Operating

Completion of Initial Installation Date: 05/13/2009

Begin Installation/Modification Date:

Commence Operation After Installation or Latest Modification Date: 05/15/2009

Title V EU Classification: Significant

Exemption Status: NA

Boiler/Turbine/Generator Design Capacity: Not Applicable

Design Capacity Units:

ORIS Boiler ID:

- Processes

- Emission Process Information

Process ID: P002

Company Process Description: Heat Recovery Coke Manufacture

Source Classification Code (SCC): 3-03-003-04

Control equipment(s) directly associated with this process

Quenching CD

Emission Unit : P007

Apr 18 2018, 15:10:14

- Emission Unit Information

DAPC Emissions Unit ID: P007

DAPC Description: 685 HP Electrical Generator (Kohler Model 400 REOZDD)

Company Equipment ID: P007

Company Description: 685 HP Electrical Generator (Kohler Model 400 REOZDD)

Operating Status: Operating

Completion of Initial Installation Date: 07/08/2008

Begin Installation/Modification Date: 02/01/2007

Commence Operation After Installation or Latest Modification Date: 07/08/2008

Title V EU Classification: Insignificant

Exemption Status: NA

Boiler/Turbine/Generator Design Capacity: Not Applicable

Design Capacity Units:

ORIS Boiler ID:

- Processes

Emission Unit : P008

Apr 18 2018, 15:10:14

- Emission Unit Information

DAPC Emissions Unit ID: P008

DAPC Description: 685 HP Electrical Generator (Process Pond Water) Kohler - Model 400 REOZDO)

Company Equipment ID: P008

Company Description: 685 HP Electrical Generator (Process Pond Water) Kohler - Model 400 REOZDO)

Operating Status: Operating

Completion of Initial Installation Date: 07/08/2008

Begin Installation/Modification Date: 02/01/2007

Commence Operation After Installation or Latest Modification Date: 07/08/2008

Title V EU Classification: Insignificant

Exemption Status: NA

Boiler/Turbine/Generator Design Capacity: Not Applicable

Design Capacity Units:

ORIS Boiler ID:

- Processes

Emission Unit : P009

- Emission Unit Information

DAPC Emissions Unit ID: P009

DAPC Description: 180 HP Fire water pump electrical generator (John Deere - Model 6068 H Tier 3)

Company Equipment ID: P009

Company Description: 180 HP Fire water pump electrical generator (John Deere - Model 6068 H Tier 3)

Operating Status: Operating

Completion of Initial Installation Date: 07/08/2008

Begin Installation/Modification Date: 02/01/2007

Commence Operation After Installation or Latest Modification Date: 07/08/2008

Title V EU Classification: Insignificant

Exemption Status: NA

Boiler/Turbine/Generator Design Capacity: Not Applicable

Design Capacity Units:

ORIS Boiler ID:

- Processes

Emission Unit : P010

Apr 18 2018, 15:10:14

- Emission Unit Information

DAPC Emissions Unit ID: P010

DAPC Description:

Company Equipment ID: Cooling Tower CD

Company Description: Z005 - P902 Cooling tower for cooling water associated with power generation.

Operating Status: Operating

Completion of Initial Installation Date: 07/08/2008

Begin Installation/Modification Date: 02/01/2007

Commence Operation After Installation or Latest Modification Date: 07/08/2008

Title V EU Classification: Insignificant

Exemption Status: De minimis

Boiler/Turbine/Generator Design Capacity: Not Applicable

Design Capacity Units:

ORIS Boiler ID:

- Processes

- Emission Process Information

Process ID: Z005

Company Process Description: Cools water associated with power generation.

Source Classification Code (SCC): 3-03-999-99

Emission Unit : P011

- Emission Unit Information

DAPC Emissions Unit ID: P011

DAPC Description:

Company Equipment ID: Natural Gas Lances AB

Company Description: EU ID is Z006. Temporary natural gas lances used during oven maintenance to maintain oven temperature for ovens 1-100 (P901). Up to 10 lances for EU P901.

Operating Status: Operating

Completion of Initial Installation Date: 03/01/2005

Begin Installation/Modification Date: 03/01/2005

Commence Operation After Installation or Latest Modification Date: 03/01/2005

Title V EU Classification: Insignificant

Exemption Status: NA

Boiler/Turbine/Generator Design Capacity: Not Applicable

Design Capacity Units:

ORIS Boiler ID:

- Processes

- Emission Process Information

Process ID: Z006

Company Process Description: Natural gas to keep ovens hot during maintenance or severely cold weather.

Source Classification Code (SCC): 3-90-006-99

Control equipment(s) directly associated with this process

Coking Spray Dryer

Coking Baghouse

Emission Unit : P012

- Emission Unit Information

DAPC Emissions Unit ID: P012

DAPC Description:

Company Equipment ID: Natural Gas Lances CD

Company Description: EU ID is Z007. Temporary natural gas lances used during oven maintenance to maintain oven temperature for ovens 101-200 (P902). Up to 10 lances for EU P902.

Operating Status: Operating

Completion of Initial Installation Date: 07/08/2008

Begin Installation/Modification Date: 02/01/2007

Commence Operation After Installation or Latest Modification Date: 07/08/2008

Title V EU Classification: Insignificant

Exemption Status: NA

Boiler/Turbine/Generator Design Capacity: Not Applicable

Design Capacity Units:

ORIS Boiler ID:

- Processes

- Emission Process Information

Process ID: Z007

Company Process Description: Natural gas to keep ovens hot during maintenance or severely cold weather.

Source Classification Code (SCC): 3-90-006-99

Control equipment(s) directly associated with this process

Coking BH

Coking SD

Emission Unit : P013

Apr 18 2018, 15:10:14

- Emission Unit Information

DAPC Emissions Unit ID: P013

DAPC Description:

Company Equipment ID: Portable Screening

Company Description: EU ID is P013. Portable screen used to separate and recover material at various locations.

Operating Status: Operating

Completion of Initial Installation Date: 07/08/2008

Begin Installation/Modification Date: 07/08/2008

Commence Operation After Installation or Latest Modification Date: 07/08/2008

Title V EU Classification: Insignificant

Exemption Status: NA

Boiler/Turbine/Generator Design Capacity: Not Applicable

Design Capacity Units:

ORIS Boiler ID:

- Processes

- Emission Process Information

Process ID: P013

Company Process Description: Portable Screening

Source Classification Code (SCC): 3-03-999-99

Emission Unit : P014

- Emission Unit Information

DAPC Emissions Unit ID: P014

DAPC Description: sky vent to release a portion of the steam generated in the heat recovery steam generators (HRSG's) associated with coke oven batteries A and B (OEPA EU ID: P901).

Company Equipment ID: SV001

Company Description: Sky Vent with the maximum capacity of venting 450,000 lb/hr of steam to atmosphere

Operating Status: Operating

Completion of Initial Installation Date: 03/03/2017

Begin Installation/Modification Date: 03/03/2017

Commence Operation After Installation or Latest Modification Date: 03/03/2017

Title V EU Classification: Significant

Exemption Status: NA

Boiler/Turbine/Generator Design Capacity: Not Applicable

Design Capacity Units:

ORIS Boiler ID:

- Processes

- Emission Process Information

Process ID: Steam Vent

Company Process Description:

Source Classification Code (SCC): 3-03-003-99

Egress points(s) directly associated with this process

SV001

Emission Unit : P901

- Emission Unit Information

DAPC Emissions Unit ID: P901

DAPC Description: Phase I: 60 oven nonrecovery coke battery (A battery) and 40 oven nonrecovery coke battery (B battery) administrative modification to increase the HRSG by-pass stack PM/PM10 limit and to revise the waste gas stack SO2 limit and avg period

Company Equipment ID: Waste Gas from Coking, Charging, & Pushing (AB Battery)

Company Description: This emission unit (AB Battery) includes:1) Waste gas from coking process with a lime spray dryer, baghouse, staged combustion and gas sparging. 2)Charging operations with traveling hood(s) and baghouse(s). 3)Pushing operation with a flat push hot car (FPHC) vented to mc.

Operating Status: Operating

Completion of Initial Installation Date: 03/01/2005

Begin Installation/Modification Date: 03/01/2005

Commence Operation After Installation or Latest Modification Date: 03/01/2005

Title V EU Classification: Significant

Exemption Status: NA

Boiler/Turbine/Generator Design Capacity: Not Applicable

Design Capacity Units:

ORIS Boiler ID:

- Processes

- Emission Process Information

Process ID: P901-1

Company Process Description: Heat Recovery Coke Manufacturing

Source Classification Code (SCC): 3-03-003-17

Control equipment(s) directly associated with this process

Coking Spray Dryer

Coking Baghouse

Egress points(s) directly associated with this process

VentStacksAB

- Emission Process Information

Process ID: P901-2

Company Process Description: Heat Recovery Coke Manufacturing

Source Classification Code (SCC): 3-03-003-02

Control equipment(s) directly associated with this process

Charging Baghouse

- **Emission Process Information**

Process ID: P901-3
Company Process Description: Heat Recovery Coke Manufacturing
Source Classification Code (SCC): 3-03-003-03

Control equipment(s) directly associated with this process

Pushing Multicyclone

Emission Unit : P902

- Emission Unit Information

DAPC Emissions Unit ID: P902

DAPC Description: 60 oven nonrecovery coke oven battery (C battery) and 40 oven nonrecovery coke oven battery (D battery) administrative modification to increase the HRSG by-pass vent stack PM/PM10 limit and to revise the waste gas stack SO2 limit and avg period

Company Equipment ID: Waste Gas from Coking, Charging, & Pushing (CD Battery)

Company Description: Waste gas from coking, charging, and pushing (CD Battery). This emission unit (CD Battery) includes:1) Waste gas from coking process with a lime spray dryer, baghouse, and staged combustion. 2)Charging operations with traveling hood(s) and baghouse(s). 3) Pushing operations with a flat push hot car (FPHC) vented to multicyclone.

Operating Status: Operating

Completion of Initial Installation Date: 07/08/2008

Begin Installation/Modification Date: 02/01/2007

Commence Operation After Installation or Latest Modification Date: 07/08/2008

Title V EU Classification: Significant

Exemption Status: NA

Boiler/Turbine/Generator Design Capacity: Not Applicable

Design Capacity Units:

ORIS Boiler ID:

- Processes

- Emission Process Information

Process ID: P902-1

Company Process Description: Heat Recovery Coke Manufacturing

Source Classification Code (SCC): 3-03-003-17

Control equipment(s) directly associated with this process

Coking SD

Coking BH

Egress points(s) directly associated with this process

VentStacksCD

- Emission Process Information

Process ID: P902-2

Company Process Description: Heat Recovery Coke Manufacturing

Source Classification Code (SCC): 3-03-003-02

Control equipment(s) directly associated with this process

Charging BH

- **Emission Process Information**

Process ID: P902-3
Company Process Description: Heat Recovery Coke Manufacturing
Source Classification Code (SCC): 3-03-003-03

Control equipment(s) directly associated with this process

Pushing MC

Emission Unit : T001

Apr 18 2018, 15:10:14

- Emission Unit Information

DAPC Emissions Unit ID: T001

DAPC Description:

Company Equipment ID: Tanks > 700 gallons

Company Description: Z008 - Low vapor pressure tanks containing diesel, hydraulic fluid, lubrication fluid, de-icing fluid, and anti-freeze. Tank sizes are between 700-5,500 gallons.

Operating Status: Operating

Completion of Initial Installation Date: 03/01/2005

Begin Installation/Modification Date: 03/01/2005

Commence Operation After Installation or Latest Modification Date: 03/01/2005

Title V EU Classification: Insignificant

Exemption Status: De minimis

Boiler/Turbine/Generator Design Capacity: Not Applicable

Design Capacity Units:

ORIS Boiler ID:

- Processes

- Emission Process Information

Process ID: Z008

Company Process Description: Tanks w/ organic liquids with low vapor pressure (Diesel, Hydraulic, Antifreeze, Deicer, Lubricant)

Source Classification Code (SCC): 3-03-999-99

Emission Unit : P003

Apr 18 2018, 15:10:14

- Emission Unit Information

DAPC Emissions Unit ID:	P003		
DAPC Description:	Quench tower for batteries E & F This EU was never installed.		
Company Equipment ID:			
Company Description:	Quench tower for batteries E & F		
Operating Status:	Permanently Shutdown	Shurdown Date:	09/02/2008
Shutdown Notification Date:	09/02/2008		
Completion of Initial Installation Date:		Begin Installation/Modification Date:	
Commence Operation After Installation or Latest Modification Date:			
Title V EU Classification:	Not Applicable	Exemption Status:	NA
Boiler/Turbine/Generator Design Capacity:	Not Applicable	Design Capacity Units:	
ORIS Boiler ID:			

- Processes

Emission Unit : P004

- Emission Unit Information

DAPC Emissions Unit ID:	P004		
DAPC Description:	Quench Tower for batteries G & H This EU was never installed.		
Company Equipment ID:			
Company Description:	Quench Tower for batteries G & H		
Operating Status:	Permanently Shutdown	Shurdown Date:	09/02/2008
Shutdown Notification Date:	09/02/2008		
Completion of Initial Installation Date:		Begin Installation/Modification Date:	
Commence Operation After Installation or Latest Modification Date:			
Title V EU Classification:	Not Applicable	Exemption Status:	NA
Boiler/Turbine/Generator Design Capacity:	Not Applicable	Design Capacity Units:	
ORIS Boiler ID:			

- Processes

Emission Unit : P005

- Emission Unit Information

DAPC Emissions Unit ID: P005

DAPC Description: Quench tower for batteries I & J

This EU was never installed.

Company Equipment ID:

Company Description: Quench tower for batteries I & J

Operating Status: Permanently Shutdown

Shurdown Date: 09/02/2008

Shutdown Notification Date: 09/02/2008

Completion of Initial Installation Date:

Begin Installation/Modification Date:

Commence Operation After Installation or Latest Modification Date:

Title V EU Classification: Not Applicable

Exemption Status: NA

Boiler/Turbine/Generator Design Capacity: Not Applicable

Design Capacity Units:

ORIS Boiler ID:

- Processes

Emission Unit : P006

- Emission Unit Information

DAPC Emissions Unit ID:	P006		
DAPC Description:	Quench tower for batteries K & L This EU was never installed.		
Company Equipment ID:			
Company Description:	Quench tower for batteries K & L		
Operating Status:	Permanently Shutdown	Shurdown Date:	09/02/2008
Shutdown Notification Date:	09/02/2008		
Completion of Initial Installation Date:		Begin Installation/Modification Date:	
Commence Operation After Installation or Latest Modification Date:			
Title V EU Classification:	Not Applicable	Exemption Status:	NA
Boiler/Turbine/Generator Design Capacity:	Not Applicable	Design Capacity Units:	
ORIS Boiler ID:			

- Processes

Emission Unit : P903

- Emission Unit Information

DAPC Emissions Unit ID: P903

DAPC Description: 268 oven nonrecovery coke battery facility

This EU was never installed.

Company Equipment ID:

Company Description: 268 oven nonrecovery coke battery facility

Operating Status: Permanently Shutdown

Shurdown Date: 09/02/2008

Shutdown Notification Date: 09/02/2008

Completion of Initial Installation Date:

Begin Installation/Modification Date:

Commence Operation After Installation or Latest Modification Date:

Title V EU Classification: Not Applicable

Exemption Status: NA

Boiler/Turbine/Generator Design Capacity: Not Applicable

Design Capacity Units:

ORIS Boiler ID:

- Processes

Control Equipment : Charging BH

Apr 18 2018, 15:10:14

- Control Equipment Information

Equipment Type: Filter/Baghouse

DAPC Description:

Company ID: Charging BH

Company Description: P902 Traveling hood with baghouse

Operating Status: Operating

Initial Installation Date: 02/01/2007

Manufacturer: C.P.E. Filters Inc.

Model: Custom

- Specific Equipment Type information

Filter/Baghouse Type: Pulse Jet

Equipment Description:

Pressure type: negative

Fabric Cleaning Mechanism: PA

Operating Pressure Drop Range: 3-12

Lime Injection/fabric Coating Agent: 3-12

Lime Injection/Fabric Coating Agent Type:

Lime Injection/Fabric Coating Feed Rate:

Bag Leak Detection System:

Inlet Gas Flow Rate: 55000

Outlet Gas Flow Rate: 55000

Inlet Gas Temp: 120

Outlet Gas Temp: 120

- Pollutants Controlled

Pollutant	Design Control Efficiency(%)	Operating Control Efficiency(%)	Capture Efficiency(%)	Total Capture Control(%)
PE (Filt) - Primary PM, Filterable Portion Only	99	99	90	89.1
PM10 (Filt) - Primary PM10, Filterable Portion Only	99	99	90	89.1

- Associated Control Equipments And Egress Points

Egress points(s) directly associated with this control equipment

Charging CD

Control Equipment : Charging Baghouse

- Control Equipment Information

Equipment Type: Filter/Baghouse
DAPC Description: Traveling hood with baghouse
Company ID: Charging Baghouse
Company Description: P901 Traveling hood with baghouse
Operating Status: Operating
Initial Installation Date: 03/01/2005
Manufacturer: C.P.E. Filters Inc.
Model: Custom

- Specific Equipment Type information

Filter/Baghouse Type: Pulse Jet
Equipment Description:
Pressure type: negative
Fabric Cleaning Mechanism: PA
Operating Pressure Drop Range: 3-12
Lime Injection/fabric Coating Agent: 3-12
Lime Injection/Fabric Coating Agent Type:
Lime Injection/Fabric Coating Feed Rate:
Bag Leak Detection System:
Inlet Gas Flow Rate: 55000
Outlet Gas Flow Rate: 55000
Inlet Gas Temp: 120
Outlet Gas Temp: 120

- Pollutants Controlled

Pollutant	Design Control Efficiency(%)	Operating Control Efficiency(%)	Capture Efficiency(%)	Total Capture Control(%)
PE (Filt) - Primary PM, Filterable Portion Only	99	99	90	89.1
PM10 (Filt) - Primary PM10, Filterable Portion Only	99	99	90	89.1

- Associated Control Equipments And Egress Points

Egress points(s) directly associated with this control equipment

Charging AB

Control Equipment : Coal & Coke Storage Piles

- Control Equipment Information

Equipment Type: Other

DAPC Description: Open Coal Pile, Enclosed coal pile & Open coke pil

Company ID: Coal & Coke Storage Piles

Company Description: F002 Open Coal Pile, Enclosed coal pile & Open coke piles

Operating Status: Operating

Initial Installation Date: 03/01/2005

Manufacturer: NA

Model: NA

- Specific Equipment Type information

Equipment Description: Control efficiencies vary. Refer to calculations.

- Pollutants Controlled

Pollutant	Design Control Efficiency(%)	Operating Control Efficiency(%)	Capture Efficiency(%)	Total Capture Control(%)
PE (Filt) - Primary PM, Filterable Portion Only	70	70	100	70
PM10 (Filt) - Primary PM10, Filterable Portion Only	70	70	100	70

- Associated Control Equipments And Egress Points

Control Equipment : Coal Handling & Transfer

- Control Equipment Information

Equipment Type: Other

DAPC Description: Coal Unloading, Coal Sizing & Coal Transfer

Company ID: Coal Handling & Transfer

Company Description: F003 Coal Unloading, Coal Sizing & Coal Transfer

Operating Status: Operating

Initial Installation Date: 03/01/2005

Manufacturer: NA

Model: NA

- Specific Equipment Type information

Equipment Description: Control efficiency (Basis for Efficiency: Ohio RACM):Coal Unloading (Wet Suppression + Enclosure) = 70%Coal Sizing (Enclosure) = 99%Coal Transfer (Wet Suppression + Enclosure) = 95%

- Pollutants Controlled

Pollutant	Design Control Efficiency(%)	Operating Control Efficiency(%)	Capture Efficiency(%)	Total Capture Control(%)
PE (Filt) - Primary PM, Filterable Portion Only	95	95	95	90.25
PM10 (Filt) - Primary PM10, Filterable Portion Only	95	95	95	90.25

- Associated Control Equipments And Egress Points

Egress points(s) directly associated with this control equipment

CoalHandling

Control Equipment : Coke & Breeze Handling

- **Control Equipment Information**

Equipment Type: Other

DAPC Description: Load out & transfer point

Company ID: Coke & Breeze Handling

Company Description: F004 Coke & Breeze Load out & transfer points

Operating Status: Operating

Initial Installation Date: 03/01/2005

Manufacturer: NA

Model: NA

- **Specific Equipment Type information**

Equipment Description: Control efficiency varies. Basis for Efficiency: Ohio RACM) Coke and Breeze Transfer = 70%

- **Pollutants Controlled**

Pollutant	Design Control Efficiency(%)	Operating Control Efficiency(%)	Capture Efficiency(%)	Total Capture Control(%)
PE (Filt) - Primary PM, Filterable Portion Only	70	70	100	70
PM10 (Filt) - Primary PM10, Filterable Portion Only	70	70	100	70

- **Associated Control Equipments And Egress Points**

Egress points(s) directly associated with this control equipment

CokeHandling

Control Equipment : Coke Crushing

- Control Equipment Information

Equipment Type: Filter/Baghouse
DAPC Description: Close capture hood
Company ID: Coke Crushing
Company Description: F004 Close capture hood
Operating Status: Operating
Initial Installation Date: 03/01/2005
Manufacturer: Donaldson
Model: Custom

- Specific Equipment Type information

Filter/Baghouse Type: Pulse Jet
Equipment Description: Fabric Filter
Pressure type: negative
Fabric Cleaning Mechanism: PA
Operating Pressure Drop Range: 3-12
Lime Injection/fabric Coating Agent: No
Lime Injection/Fabric Coating Agent Type:
Lime Injection/Fabric Coating Feed Rate:
Bag Leak Detection System: No
Inlet Gas Flow Rate: 45000
Outlet Gas Flow Rate: 45000
Inlet Gas Temp: 70
Outlet Gas Temp: 70

- Pollutants Controlled

Pollutant	Design Control Efficiency(%)	Operating Control Efficiency(%)	Capture Efficiency(%)	Total Capture Control(%)
PE (Filt) - Primary PM, Filterable Portion Only	99	99	99	98.01
PM10 (Filt) - Primary PM10, Filterable Portion Only	99	99	99	98.01

- Associated Control Equipments And Egress Points

Egress points(s) directly associated with this control equipment

Coke Screen

Control Equipment : Coking BH

- Control Equipment Information

Equipment Type: Filter/Baghouse
DAPC Description:
Company ID: Coking BH
Company Description: P902 Main Baghouse
Operating Status: Operating
Initial Installation Date: 02/01/2007
Manufacturer: Hamon
Model: Custom

- Specific Equipment Type information

Filter/Baghouse Type: Pulse Jet
Equipment Description:
Pressure type: negative
Fabric Cleaning Mechanism: PA
Operating Pressure Drop Range: 3-12
Lime Injection/fabric Coating Agent: 3-12
Lime Injection/Fabric Coating Agent Type:
Lime Injection/Fabric Coating Feed Rate:
Bag Leak Detection System:
Inlet Gas Flow Rate: 415000
Outlet Gas Flow Rate: 415000
Inlet Gas Temp: 240
Outlet Gas Temp: 240

- Pollutants Controlled

Pollutant	Design Control Efficiency(%)	Operating Control Efficiency(%)	Capture Efficiency(%)	Total Capture Control(%)
Pb - Lead	96	96	100	96
PE (Filt) - Primary PM, Filterable Portion Only	99	99	100	99
PM10 (Filt) - Primary PM10, Filterable Portion Only	99	99	100	99
PM2.5 (FILT) - Primary PM2.5, Filterable Portion Only	99	99	100	99

- Associated Control Equipments And Egress Points

Egress points(s) directly associated with this control equipment

MainStack CD

Control Equipment : Coking Baghouse

Apr 18 2018, 15:10:14

- Control Equipment Information

Equipment Type: Filter/Baghouse
DAPC Description: Lead = 96% Operating Control Efficiency
Company ID: Coking Baghouse
Company Description: P901 Main Baghouse
Operating Status: Operating
Initial Installation Date: 03/01/2005
Manufacturer: Alstom
Model: Custom

- Specific Equipment Type information

Filter/Baghouse Type: Pulse Jet
Equipment Description:
Pressure type: negative
Fabric Cleaning Mechanism: PA
Operating Pressure Drop Range: 3-15
Lime Injection/fabric Coating Agent: 3-15
Lime Injection/Fabric Coating Agent Type:
Lime Injection/Fabric Coating Feed Rate:
Bag Leak Detection System:
Inlet Gas Flow Rate: 415000
Outlet Gas Flow Rate: 415000
Inlet Gas Temp: 240
Outlet Gas Temp: 240

- Pollutants Controlled

Pollutant	Design Control Efficiency(%)	Operating Control Efficiency(%)	Capture Efficiency(%)	Total Capture Control(%)
Pb - Lead	96	96	100	96
PE (Filt) - Primary PM, Filterable Portion Only	99	99	100	99
PM10 (Filt) - Primary PM10, Filterable Portion Only	99	99	100	99
PM2.5 (FILT) - Primary PM2.5, Filterable Portion Only	99	99	100	99

- Associated Control Equipments And Egress Points

Egress points(s) directly associated with this control equipment

MainStack AB

Control Equipment : Coking SD

Apr 18 2018, 15:10:14

- **Control Equipment Information**

Equipment Type: Other

DAPC Description:

Company ID: Coking SD

Company Description: P902 Lime spray dryer

Operating Status: Operating

Initial Installation Date: 02/01/2007

Manufacturer: Hamon

Model: Custom

- **Specific Equipment Type information**

Equipment Description: Lime spray dryer for controlling SO2 emission in the waste gas from the coking process

- **Pollutants Controlled**

Pollutant	Design Control Efficiency(%)	Operating Control Efficiency(%)	Capture Efficiency(%)	Total Capture Control(%)
Hydrochloric Acid (Hydrogen Chloride)	95	95	100	95
SO2 - Sulfur Dioxide	92	92	100	92

- **Associated Control Equipments And Egress Points**

Egress points(s) directly associated with this control equipment

MainStack CD

Control Equipment : Coking Spray Dryer

- Control Equipment Information

Equipment Type: Other
DAPC Description:
Company ID: Coking Spray Dryer
Company Description: P901 Coking Spray Dryer
Operating Status: Operating
Initial Installation Date: 03/01/2005
Manufacturer: Alstom
Model: Custom

- Specific Equipment Type information

Equipment Description: Lime spray dryer for controlling SO2 emission in the waste gas from coking process.

- Pollutants Controlled

Pollutant	Design Control Efficiency(%)	Operating Control Efficiency(%)	Capture Efficiency(%)	Total Capture Control(%)
Hydrochloric Acid (Hydrogen Chloride)	95	95	100	95
SO2 - Sulfur Dioxide	92	92	100	92

- Associated Control Equipments And Egress Points

Egress points(s) directly associated with this control equipment

MainStack AB

Control Equipment : Paved Roads & Parking Area

- Control Equipment Information

Equipment Type: Other
DAPC Description:
Company ID: Paved Roads & Parking Area
Company Description: F001 Paved Roads & Parking Area
Operating Status: Operating
Initial Installation Date: 03/01/2005
Manufacturer: NA
Model: NA

- Specific Equipment Type information

Equipment Description: Watering (80% efficiency based on Ohio RACM). Refer to calculations.

- Pollutants Controlled

Pollutant	Design Control Efficiency(%)	Operating Control Efficiency(%)	Capture Efficiency(%)	Total Capture Control(%)
PE (Filt) - Primary PM, Filterable Portion Only	80	80	100	80
PM10 (Filt) - Primary PM10, Filterable Portion Only	80	80	100	80

- Associated Control Equipments And Egress Points

Control Equipment : Pushing MC

- Control Equipment Information

Equipment Type: Cyclone/Multiclone
DAPC Description:
Company ID: Pushing MC
Company Description: P902 Flat car pushing, mobile hood with multicyclone
Operating Status: Operating
Initial Installation Date: 02/01/2007
Manufacturer: SES
Model: Custom

- Specific Equipment Type information

Cyclone Type: Multiclone
Equipment Description:
Operating Pressure Drop Range:
Inlet Gas Flow Rate: 50000
Outlet Gas Flow Rate: 50000

- Pollutants Controlled

Pollutant	Design Control Efficiency(%)	Operating Control Efficiency(%)	Capture Efficiency(%)	Total Capture Control(%)
PE (Filt) - Primary PM, Filterable Portion Only	98	98	100	98
PM10 (Filt) - Primary PM10, Filterable Portion Only	98	98	100	98

- Associated Control Equipments And Egress Points

Egress points(s) directly associated with this control equipment

Pushing CD

Control Equipment : Pushing Multicyclone

Apr 18 2018, 15:10:14

- Control Equipment Information

Equipment Type: Cyclone/Multiclone

DAPC Description: Flat car pushing, mobile hood with multicyclone

Company ID: Pushing Multicyclone

Company Description: P901 Flat car pushing, mobile hood with multicyclone

Operating Status: Operating

Initial Installation Date: 03/01/2005

Manufacturer: SES

Model: Custom

- Specific Equipment Type information

Cyclone Type: Multiclone

Equipment Description:

Operating Pressure Drop Range:

Inlet Gas Flow Rate: 50000

Outlet Gas Flow Rate: 50000

- Pollutants Controlled

Pollutant	Design Control Efficiency(%)	Operating Control Efficiency(%)	Capture Efficiency(%)	Total Capture Control(%)
PE (Filt) - Primary PM, Filterable Portion Only	98	98	100	98
PM10 (Filt) - Primary PM10, Filterable Portion Only	98	98	100	98

- Associated Control Equipments And Egress Points

Egress points(s) directly associated with this control equipment

Pushing AB

Control Equipment : Quenching AB

Apr 18 2018, 15:10:14

- Control Equipment Information

Equipment Type: Other

DAPC Description:

Company ID: Quenching AB

Company Description: P001 Quenching

Operating Status: Operating

Initial Installation Date: 03/01/2005

Manufacturer: Custom

Model: Custom

- Specific Equipment Type information

Equipment Description: Quench tower with baffles as controls for PM and PM10. Control efficiency is included in the emission factor. The emission factor for PE is estimated based on test data (per Ohio EPA's Ed Wojciechowski. PM10 emission factor is 9.8% of TSP (AP-42).

- Pollutants Controlled

Pollutant	Design Control Efficiency(%)	Operating Control Efficiency(%)	Capture Efficiency(%)	Total Capture Control(%)
PE (Filt) - Primary PM, Filterable Portion Only	99.99	99	100	99
PM10 (Filt) - Primary PM10, Filterable Portion Only	99.99	99	100	99

- Associated Control Equipments And Egress Points

Egress points(s) directly associated with this control equipment

Quenching AB

Control Equipment : Quenching CD

Apr 18 2018, 15:10:14

- Control Equipment Information

Equipment Type: Other

DAPC Description:

Company ID: Quenching CD

Company Description: P002 Quenching

Operating Status: Operating

Initial Installation Date: 05/01/2009

Manufacturer: Custom

Model: Custom

- Specific Equipment Type information

Equipment Description: Quench tower with baffles as controls for Pm and PM10. Control efficency is included in the emission factor. The emission factor for PE is based on test data (per Ohio EPA's Ed Wojciechowski. PM10 emission facotr is 9.8% of PM (AP-42).

- Pollutants Controlled

Pollutant	Design Control Efficiency(%)	Operating Control Efficiency(%)	Capture Efficiency(%)	Total Capture Control(%)
PE (Filt) - Primary PM, Filterable Portion Only	99.99	99	100	99
PM10 (Filt) - Primary PM10, Filterable Portion Only	99.99	99	100	99

- Associated Control Equipments And Egress Points

Egress points(s) directly associated with this control equipment

Quenching CD

Control Equipment : Unpaved Road

- Control Equipment Information

Equipment Type: Other
DAPC Description:
Company ID: Unpaved Road
Company Description: F001 Unpaved Roads & Parking Area
Operating Status: Operating
Initial Installation Date: 03/01/2005
Manufacturer: NA
Model: NA

- Specific Equipment Type information

Equipment Description: 15 mph speed limit (80% efficiency based on Ohio RACM). Refer to calculations.

- Pollutants Controlled

Pollutant	Design Control Efficiency(%)	Operating Control Efficiency(%)	Capture Efficiency(%)	Total Capture Control(%)
PE (Filt) - Primary PM, Filterable Portion Only	80	80	100	80
PM10 (Filt) - Primary PM10, Filterable Portion Only	80	80	100	80

- Associated Control Equipments And Egress Points

Egress Point : Charging AB

Apr 18 2018, 15:10:14

- Egress Point Information

Release Type: Stack-Vertical
DAPC Description:
Company ID: Charging AB
Company Description: P901 Charging
Operating Status: Operating
Base Elevation (ft): 550.0
Fenceline Distance (ft): 100.0
Release Height (ft): 25.7

- Building Dimension

Length (ft) 1500.0
Width (ft): 50.0
Height (ft): 15.0

- Egress Latitude and Longitude

Latitude: 38.59889
Longitude: -82.82472

- Stack Details

Shape: Round
Cross Sectional Area (square ft): 15.9
Diameter (ft): 4.5
Temp At Max. Oper (F): 300.0
Flow At Max. Oper (acfm): 65000.0
Temp At Avg. Oper (F): 120.0
Flow At Avg. Oper (acfm): 55000.0

- EIS Information

Horizontal Collection Method: Global Positioning Method, with unspecified parameters
Horizontal Accuracy Measure: 100 Meter Accuracy
Reference Point: Point where a substance is released
Horizontal Reference Datum: World Geodetic System of 1984
Coordinate Data Source Code: An Organization or individual that contracts to perform work

- CEM Data

Description	H2S	SO2	NOX	CO	THC	HCL	HFL	O	TRS	CO2	FLOW	OPACITY	PM

Egress Point : Charging CD

Apr 18 2018, 15:10:14

- Egress Point Information

Release Type: Stack-Vertical
DAPC Description:
Company ID: Charging CD
Company Description: P902 Charging
Operating Status: Operating
Base Elevation (ft): 550.0
Fenceline Distance (ft): 100.0
Release Height (ft): 25.7

- Building Dimension

Length (ft) 1500.0
Width (ft): 50.0
Height (ft): 15.0

- Egress Latitude and Longitude

Latitude: 38.595
Longitude: -82.83111

- Stack Details

Shape: Round
Cross Sectional Area (square ft): 15.9
Diameter (ft): 4.5
Temp At Max. Oper (F): 300.0
Flow At Max. Oper (acfm): 65000.0
Temp At Avg. Oper (F): 120.0
Flow At Avg. Oper (acfm): 55000.0

- EIS Information

Horizontal Collection Method: Global Positioning Method, with unspecified parameters
Horizontal Accuracy Measure: 100 Meter Accuracy
Reference Point: Point where a substance is released
Horizontal Reference Datum: World Geodetic System of 1984
Coordinate Data Source Code: An Organization or individual that contracts to perform work

- CEM Data

Description	H2S	SO2	NOX	CO	THC	HCL	HFL	O	TRS	CO2	FLOW	OPACITY	PM

Egress Point : Coal/Coke S

Apr 18 2018, 15:10:14

- Egress Point Information

Release Type: Fugitive-Area
DAPC Description:
Company ID: Coal/Coke S
Company Description: F002 Coal/Coke Storage Piles
Operating Status: Operating
Base Elevation (ft): 550.0
Fenceline Distance (ft): 100.0

- Building Dimension

Length (ft) 10.0
Width (ft): 10.0
Height (ft): 10.0

- Egress Latitude and Longitude

Latitude: 38.599724
Longitude: -82.82222

- Area Source Dimensions

Length (ft): 10.0
Width (ft): 10.0
Release Height (ft):

- EIS Information

Horizontal Collection Method: Global Positioning Method, with unspecified parameters
Horizontal Accuracy Measure: 100 Meter Accuracy
Reference Point: Point where a substance is released
Horizontal Reference Datum: World Geodetic System of 1984
Coordinate Data Source Code: An Organization or individual that contracts to perform work
Plume Temp (F): 50.0

Egress Point : CoalHandling

Apr 18 2018, 15:10:14

- Egress Point Information

Release Type: Fugitive-Area
DAPC Description:
Company ID: CoalHandling
Company Description: F003 Coal Handling
Operating Status: Operating
Base Elevation (ft): 550.0
Fenceline Distance (ft): 100.0

- Building Dimension

Length (ft) 10.0
Width (ft): 10.0
Height (ft): 10.0

- Egress Latitude and Longitude

Latitude: 38.601112
Longitude: -82.82445

- Area Source Dimensions

Length (ft): 10.0
Width (ft): 10.0
Release Height (ft):

- EIS Information

Horizontal Collection Method: Global Positioning Method, with unspecified parameters
Horizontal Accuracy Measure: 100 Meter Accuracy
Reference Point: Point where a substance is released
Horizontal Reference Datum: World Geodetic System of 1984
Coordinate Data Source Code: An Organization or individual that contracts to perform work
Plume Temp (F): 50.0

Egress Point : Coke Screen

Apr 18 2018, 15:10:14

- Egress Point Information

Release Type: Stack-Vertical
DAPC Description:
Company ID: Coke Screen
Company Description: F004 Coke Screening
Operating Status: Operating
Base Elevation (ft): 550.0
Fenceline Distance (ft): 100.0
Release Height (ft): 100.0

- Building Dimension

Length (ft) 50.0
Width (ft): 50.0
Height (ft): 100.0

- Egress Latitude and Longitude

Latitude: 38.601387
Longitude: -82.818886

- Stack Details

Shape: Round
Cross Sectional Area (square ft): 7.89
Diameter (ft): 3.17
Temp At Max. Oper (F): 70.0
Flow At Max. Oper (acfm): 45000.0
Temp At Avg. Oper (F): 60.0
Flow At Avg. Oper (acfm): 36000.0

- EIS Information

Horizontal Collection Method: Global Positioning Method, with unspecified parameters
Horizontal Accuracy Measure: 100 Meter Accuracy
Reference Point: Point where a substance is released
Horizontal Reference Datum: World Geodetic System of 1984
Coordinate Data Source Code: An Organization or individual that contracts to perform work

- CEM Data

Description	H2S	SO2	NOX	CO	THC	HCL	HFL	O	TRS	CO2	FLOW	OPACITY	PM

Egress Point : CokeHandling

Apr 18 2018, 15:10:14

- Egress Point Information

Release Type: Fugitive-Area
DAPC Description:
Company ID: CokeHandling
Company Description: F004 Coke Handling
Operating Status: Operating
Base Elevation (ft): 550.0
Fenceline Distance (ft): 100.0

- Building Dimension

Length (ft) 10.0
Width (ft): 10.0
Height (ft): 10.0

- Egress Latitude and Longitude

Latitude: 38.601112
Longitude: -82.819725

- Area Source Dimensions

Length (ft): 10.0
Width (ft): 10.0
Release Height (ft): 10.0

- EIS Information

Horizontal Collection Method: Global Positioning Method, with unspecified parameters
Horizontal Accuracy Measure: 100 Meter Accuracy
Reference Point: Point where a substance is released
Horizontal Reference Datum: World Geodetic System of 1984
Coordinate Data Source Code: An Organization or individual that contracts to perform work
Plume Temp (F): 50.0

Egress Point : F009

Apr 18 2018, 15:10:14

- Egress Point Information

Release Type: Fugitive-Area
DAPC Description:
Company ID: F009
Company Description: Fugitive emissions from mobile material screening activity
Operating Status: Operating
Base Elevation (ft):
Fenceline Distance (ft):

- Building Dimension

Length (ft)
Width (ft):
Height (ft):

- Egress Latitude and Longitude

Latitude:
Longitude:

- Area Source Dimensions

Length (ft):
Width (ft):
Release Height (ft):

- EIS Information

Horizontal Collection Method: Global Positioning Method, with unspecified parameters
Horizontal Accuracy Measure: 100 Meter Accuracy
Reference Point: Point where a substance is released
Horizontal Reference Datum: World Geodetic System of 1984
Coordinate Data Source Code: An Organization or individual that contracts to perform work
Plume Temp (F): 60.0

Egress Point : MainStack AB

Apr 18 2018, 15:10:14

- Egress Point Information

Release Type: Stack-Vertical
DAPC Description:
Company ID: MainStack AB
Company Description: P901 Main Stack
Operating Status: Operating
Base Elevation (ft): 550.0
Fenceline Distance (ft): 100.0
Release Height (ft): 213.3

- Building Dimension

Length (ft) 100.0
Width (ft): 50.0
Height (ft): 93.0

- Egress Latitude and Longitude

Latitude: 38.59833
Longitude: -82.82361

- Stack Details

Shape: Round
Cross Sectional Area (square ft): 132.73
Diameter (ft): 13
Temp At Max. Oper (F): 240.0
Flow At Max. Oper (acfm): 415000.0
Temp At Avg. Oper (F): 240.0
Flow At Avg. Oper (acfm): 415000.0

- EIS Information

Horizontal Collection Method: Global Positioning Method, with unspecified parameters
Horizontal Accuracy Measure: 100 Meter Accuracy
Reference Point: Point where a substance is released
Horizontal Reference Datum: World Geodetic System of 1984
Coordinate Data Source Code: An Organization or individual that contracts to perform work

- CEM Data

Description	H2S	SO2	NOX	CO	THC	HCL	HFL	O	TRS	CO2	FLOW	OPACITY	PM

Egress Point : MainStack CD

Apr 18 2018, 15:10:14

- Egress Point Information

Release Type: Stack-Vertical
DAPC Description:
Company ID: MainStack CD
Company Description: P902 Main Stack
Operating Status: Operating
Base Elevation (ft): 550.0
Fenceline Distance (ft): 100.0
Release Height (ft): 213.3

- Building Dimension

Length (ft) 100.0
Width (ft): 50.0
Height (ft): 93.0

- Egress Latitude and Longitude

Latitude: 38.594166
Longitude: -82.82972

- Stack Details

Shape: Round
Cross Sectional Area (square ft): 132.73
Diameter (ft): 13
Temp At Max. Oper (F): 240.0
Flow At Max. Oper (acfm): 415000.0
Temp At Avg. Oper (F): 240.0
Flow At Avg. Oper (acfm): 415000.0

- EIS Information

Horizontal Collection Method: Global Positioning Method, with unspecified parameters
Horizontal Accuracy Measure: 100 Meter Accuracy
Reference Point: Point where a substance is released
Horizontal Reference Datum: World Geodetic System of 1984
Coordinate Data Source Code: An Organization or individual that contracts to perform work

- CEM Data

Description	H2S	SO2	NOX	CO	THC	HCL	HFL	O	TRS	CO2	FLOW	OPACITY	PM

Egress Point : Pushing AB

Apr 18 2018, 15:10:14

- Egress Point Information

Release Type: Stack-Vertical
DAPC Description:
Company ID: Pushing AB
Company Description: P901 Pushing
Operating Status: Operating
Base Elevation (ft): 550.0
Fenceline Distance (ft): 100.0
Release Height (ft): 20.0

- Building Dimension

Length (ft) 1500.0
Width (ft): 50.0
Height (ft): 15.0

- Egress Latitude and Longitude

Latitude: 38.59861
Longitude: -82.82472

- Stack Details

Shape: Round
Cross Sectional Area (square ft): 12.07
Diameter (ft): 3.92
Temp At Max. Oper (F): 400.0
Flow At Max. Oper (acfm): 50000.0
Temp At Avg. Oper (F): 320.0
Flow At Avg. Oper (acfm): 43000.0

- EIS Information

Horizontal Collection Method: Global Positioning Method, with unspecified parameters
Horizontal Accuracy Measure: 100 Meter Accuracy
Reference Point: Point where a substance is released
Horizontal Reference Datum: World Geodetic System of 1984
Coordinate Data Source Code: An Organization or individual that contracts to perform work

- CEM Data

Description	H2S	SO2	NOX	CO	THC	HCL	HFL	O	TRS	CO2	FLOW	OPACITY	PM

Egress Point : Pushing CD

Apr 18 2018, 15:10:14

- Egress Point Information

Release Type: Stack-Vertical
DAPC Description:
Company ID: Pushing CD
Company Description: P902 Pushing
Operating Status: Operating
Base Elevation (ft): 550.0
Fenceline Distance (ft): 100.0
Release Height (ft): 20.0

- Building Dimension

Length (ft) 1500.0
Width (ft): 50.0
Height (ft): 15.0

- Egress Latitude and Longitude

Latitude: 38.594723
Longitude: -82.83083

- Stack Details

Shape: Round
Cross Sectional Area (square ft): 12.07
Diameter (ft): 3.92
Temp At Max. Oper (F): 400.0
Flow At Max. Oper (acfm): 50000.0
Temp At Avg. Oper (F): 320.0
Flow At Avg. Oper (acfm): 43000.0

- EIS Information

Horizontal Collection Method: Global Positioning Method, with unspecified parameters
Horizontal Accuracy Measure: 100 Meter Accuracy
Reference Point: Point where a substance is released
Horizontal Reference Datum: World Geodetic System of 1984
Coordinate Data Source Code: An Organization or individual that contracts to perform work

- CEM Data

Description	H2S	SO2	NOX	CO	THC	HCL	HFL	O	TRS	CO2	FLOW	OPACITY	PM

Egress Point : Quenching AB

Apr 18 2018, 15:10:14

- Egress Point Information

Release Type: Stack-Vertical
DAPC Description:
Company ID: Quenching AB
Company Description: P001 Quenching
Operating Status: Operating
Base Elevation (ft): 550.0
Fenceline Distance (ft): 100.0
Release Height (ft): 60.0

- Building Dimension

Length (ft) 60.0
Width (ft): 20.0
Height (ft): 60.0

- Egress Latitude and Longitude

Latitude: 38.6
Longitude: -82.825554

- Stack Details

Shape: Rectangle
Cross Sectional Area (square ft): 1200.11
Diameter (ft): 39.09
Temp At Max. Oper (F): 200.0
Flow At Max. Oper (acfm): 750000.0
Temp At Avg. Oper (F): 200.0
Flow At Avg. Oper (acfm): 750000.0

- EIS Information

Horizontal Collection Method: Global Positioning Method, with unspecified parameters
Horizontal Accuracy Measure: 100 Meter Accuracy
Reference Point: Point where a substance is released
Horizontal Reference Datum: World Geodetic System of 1984
Coordinate Data Source Code: An Organization or individual that contracts to perform work

- CEM Data

Description	H2S	SO2	NOX	CO	THC	HCL	HFL	O	TRS	CO2	FLOW	OPACITY	PM

Egress Point : Quenching CD

Apr 18 2018, 15:10:14

- Egress Point Information

Release Type: Stack-Vertical
DAPC Description:
Company ID: Quenching CD
Company Description: P002 Quenching
Operating Status: Operating
Base Elevation (ft): 550.0
Fenceline Distance (ft): 100.0
Release Height (ft): 60.0

- Building Dimension

Length (ft) 60.0
Width (ft): 20.0
Height (ft): 60.0

- Egress Latitude and Longitude

Latitude: 38.596943
Longitude: -82.825554

- Stack Details

Shape: Rectangle
Cross Sectional Area (square ft): 1200.11
Diameter (ft): 39.09
Temp At Max. Oper (F): 200.0
Flow At Max. Oper (acfm): 750000.0
Temp At Avg. Oper (F): 200.0
Flow At Avg. Oper (acfm): 750000.0

- EIS Information

Horizontal Collection Method: Global Positioning Method, with unspecified parameters
Horizontal Accuracy Measure: 100 Meter Accuracy
Reference Point: Point where a substance is released
Horizontal Reference Datum: World Geodetic System of 1984
Coordinate Data Source Code: An Organization or individual that contracts to perform work

- CEM Data

Description	H2S	SO2	NOX	CO	THC	HCL	HFL	O	TRS	CO2	FLOW	OPACITY	PM

Egress Point : Roadways

Apr 18 2018, 15:10:14

- Egress Point Information

Release Type: Fugitive-Area
DAPC Description:
Company ID: Roadways
Company Description: F001 Roadways
Operating Status: Operating
Base Elevation (ft): 550.0
Fenceline Distance (ft): 100.0

- Building Dimension

Length (ft) 10.0
Width (ft): 10.0
Height (ft): 10.0

- Egress Latitude and Longitude

Latitude: 38.601387
Longitude: -82.82472

- Area Source Dimensions

Length (ft): 1.0
Width (ft): 1.0
Release Height (ft): 1.0

- EIS Information

Horizontal Collection Method: Global Positioning Method, with unspecified parameters
Horizontal Accuracy Measure: 100 Meter Accuracy
Reference Point: Point where a substance is released
Horizontal Reference Datum: World Geodetic System of 1984
Coordinate Data Source Code: An Organization or individual that contracts to perform work
Plume Temp (F): 50.0

Egress Point : SV001

Apr 18 2018, 15:10:14

- Egress Point Information

Release Type: Stack-Vertical
DAPC Description:
Company ID: SV001
Company Description: Steam Vent
Operating Status: Operating
Base Elevation (ft): 550.0
Fenceline Distance (ft):
Release Height (ft):

- Building Dimension

Length (ft)
Width (ft):
Height (ft):

- Egress Latitude and Longitude

Latitude:
Longitude:

- Stack Details

Shape: Round
Cross Sectional Area (square ft): 0.79
Diameter (ft): 1
Temp At Max. Oper (F):
Flow At Max. Oper (acfm):
Temp At Avg. Oper (F): 471.0
Flow At Avg. Oper (acfm):

- EIS Information

Horizontal Collection Method: Global Positioning Method, with unspecified parameters
Horizontal Accuracy Measure: 100 Meter Accuracy
Reference Point: Point where a substance is released
Horizontal Reference Datum: World Geodetic System of 1984
Coordinate Data Source Code: An Organization or individual that contracts to perform work

- CEM Data

Description	H2S	SO2	NOX	CO	THC	HCL	HFL	O	TRS	CO2	FLOW	OPACITY	PM

Egress Point : VentStacksAB

Apr 18 2018, 15:10:14

- Egress Point Information

Release Type: Stack-Vertical
DAPC Description:
Company ID: VentStacksAB
Company Description: P901 By Pass Vent Stacks
Operating Status: Operating
Base Elevation (ft): 550.0
Fenceline Distance (ft): 100.0
Release Height (ft): 90.0

- Building Dimension

Length (ft) 1500.0
Width (ft): 50.0
Height (ft): 15.0

- Egress Latitude and Longitude

Latitude: 38.599445
Longitude: -82.825

- Stack Details

Shape: Round
Cross Sectional Area (square ft): 63.62
Diameter (ft): 9
Temp At Max. Oper (F): 2000.0
Flow At Max. Oper (acfm): 274000.0
Temp At Avg. Oper (F): 1800.0
Flow At Avg. Oper (acfm): 252000.0

- EIS Information

Horizontal Collection Method: Global Positioning Method, with unspecified parameters
Horizontal Accuracy Measure: 100 Meter Accuracy
Reference Point: Point where a substance is released
Horizontal Reference Datum: World Geodetic System of 1984
Coordinate Data Source Code: An Organization or individual that contracts to perform work

- CEM Data

Description	H2S	SO2	NOX	CO	THC	HCL	HFL	O	TRS	CO2	FLOW	OPACITY	PM

Egress Point : VentStacksCD

Apr 18 2018, 15:10:14

- Egress Point Information

Release Type: Stack-Vertical
DAPC Description:
Company ID: VentStacksCD
Company Description: P902 By Pass Vent Stacks
Operating Status: Operating
Base Elevation (ft): 550.0
Fenceline Distance (ft): 100.0
Release Height (ft): 90.0

- Building Dimension

Length (ft) 1500.0
Width (ft): 50.0
Height (ft): 15.0

- Egress Latitude and Longitude

Latitude: 38.595554
Longitude: -82.82917

- Stack Details

Shape: Round
Cross Sectional Area (square ft): 63.62
Diameter (ft): 9
Temp At Max. Oper (F): 2000.0
Flow At Max. Oper (acfm): 274000.0
Temp At Avg. Oper (F): 1800.0
Flow At Avg. Oper (acfm): 252000.0

- EIS Information

Horizontal Collection Method: Global Positioning Method, with unspecified parameters
Horizontal Accuracy Measure: 100 Meter Accuracy
Reference Point: Point where a substance is released
Horizontal Reference Datum: World Geodetic System of 1984
Coordinate Data Source Code: An Organization or individual that contracts to perform work

- CEM Data

Description	H2S	SO2	NOX	CO	THC	HCL	HFL	O	TRS	CO2	FLOW	OPACITY	PM

Facility Profile Report
Facility Name: Haverhill Coke Company LLC
ID: 0773000182

If I am claiming any information in this submission is a trade secret, I hereby swear or affirm that the trade secret request meets the requirements of Ohio Administrative Code 3745-49-03(B) and that the justification submitted with the trade secret request sets forth the basis for claiming that the information should be considered a trade secret as defined in Ohio Administrative Code 3745-49-02(T).

a) I am a responsible official as defined in OAC 3745-77-01(II) and, as specified in OAC 3745-77-03(D), based on information and belief formed after reasonable inquiry, I hereby affirm that all statements and information in this transmittal are true, accurate and complete; OR
b) I am a designated representative as defined in paragraph 26 of Section 402 of the Clean Air Act, and as per OAC 3745-103-06, I certify under penalty of law that I have personally examined, and am familiar with, the statements and information submitted in this document and all its attachments. Based on my inquiry of those individuals with primary responsibility for obtaining the information, I certify that the statements and information are to the best of my knowledge and belief true, accurate, and complete. I am aware that there are significant penalties for submitting false statements and information or omitting required statements and information, including the possibility of fine or imprisonment. I am authorized to make this submission on behalf of the owners and operators of the source or units for which the submission is made.

Signee Name (please print): James Shipworth **Title:** General Mgr.

Signee Signature: James S. Shipworth **Date:** 4/16/2018

TV FER/EIS Emissions Report (258587) for 2017
Haverhill Coke Company LLC
0773000182
April 17, 2018

2017 Emissions Summary Report : 258587

Apr 18 2018, 15:10:14

- Report Data

Report Category: TV

Submitted Date: 04/17/2018

Reporting Year: 2017

Reporting State Submitted

- Reports Included

FER: X ES: EIS: X

- Facility Emissions

Pollutant	Code	$	Fugitive Amount	Stack Amount	Total	Units
PE (Cond) - Primary PM Condensible Portion Only (All Less than 1 Micron)	PM-CON		0.	69.44	69.44	TONs
SO2 - Sulfur Dioxide	SO2	X	0.023	1,874.71	1,874.73	TONs
NOx - Nitrogen Oxides	NOX	X	0.	768.763	768.763	TONs
Organic Compounds	OC	X	0.1532	10.4637	10.6169	TONs
Pb - Lead	7439921	X	7.66E-06	0.105839	0.105847	TONs
PE (Filt) - Primary PM, Filterable Portion Only	PM-FIL	X	23.7538	410.452	434.206	TONs
PM10 (Filt) - Primary PM10, Filterable Portion Only	PM10-FIL		8.001	104.032	112.033	TONs
PM2.5 (FILT) - Primary PM2.5, Filterable Portion Only	PM25-FIL		1.715	86.412	88.127	TONs
VOC - Volatile Organic Compounds	VOC		0.1532	10.4637	10.6169	TONs
Ammonia	NH3		0.	0.	0.	TONs
CO - Carbon Monoxide	CO		0.2145	62.3385	62.553	TONs
Total of Chargable Pollutants					3,088.42	TONS

The following information was developed using Ohio EPA-generated pollutant emission calculations. The values may be provided to USEPA by Ohio EPA as part of Ohio EPA's federal grant commitments. You may modify these pollutant emission calculations, at the process level, if you have more accurate information. There is no certification of these values as part of the emissions report submission. For more information regarding which pollutants are considered Greenhouse Gas Pollutants see Help.

Pollutant	Code	Fugitive Amount	Stack Amount	Total	Units
Carbon Dioxide	CO2	0.	966,418.	966,418.	TONs
Methane	CH4	0.	1.09	1.09	TONs

Nitrous Oxide	N2O	0.	0.11	0.11	TONs
Acenaphthene	83329	0.	4.1805E-07	4.1805E-07	TONs
Acenaphthylene	208968	0.	4.1805E-07	4.1805E-07	TONs
Acetaldehyde	75070	0.	0.00997988	0.00997988	TONs
Acrolein	107028	0.	0.0085951	0.0085951	TONs
Anthracene	120127	0.	5.574E-07	5.574E-07	TONs
Arsenic	7440382	0.	9.29E-05	9.29E-05	TONs
Benz[A]Anthracene	56553	0.	4.1805E-07	4.1805E-07	TONs
Benzene	71432	0.	9.7545E-04	9.7545E-04	TONs
Benzo[A]Pyrene	50328	1.509E-05	1.36059E-04	1.51149E-04	TONs
Benzo[B]Fluoranthene	205992	0.	4.1805E-07	4.1805E-07	TONs
Benzo[G,H,I,]Perylene	191242	0.	5.574E-07	5.574E-07	TONs
Benzo[K]Fluoranthene	207089	0.	4.1805E-07	4.1805E-07	TONs
Beryllium	7440417	0.	2.787E-06	2.787E-06	TONs
Cadmium	7440439	0.	5.1095E-04	5.1095E-04	TONs
Chromium	7440473	0.	6.503E-04	6.503E-04	TONs
Chrysene	218019	0.	4.1805E-07	4.1805E-07	TONs
Cobalt	7440484	0.	3.9018E-05	3.9018E-05	TONs
Dibenzo[A,H]Anthracene	53703	0.	2.787E-07	2.787E-07	TONs
Dimethylbenz[A]Anthracene, 7,12-	57976	0.	3.716E-06	3.716E-06	TONs
Fluoranthene	206440	0.	1.3935E-06	1.3935E-06	TONs
Fluorene	86737	0.	1.3006E-06	1.3006E-06	TONs
Formaldehyde	50000	0.	0.0348376	0.0348376	TONs
Hexane, N-	110543	0.	0.8361	0.8361	TONs
Hydrochloric Acid (Hydrogen Chloride)	7647010	0.	58.903	58.903	TONs
Indeno[1,2,3-C,D]Pyrene	193395	0.	4.1805E-07	4.1805E-07	TONs
MN - Manganese	7439965	0.	1.7651E-04	1.7651E-04	TONs
Mercury, as HG; Alkyl & Aryl CMPNDS; Elemental & Inorganic Forms	7439976	0.	0.0621208	0.0621208	TONs
Methylcholanthrene, 3-	56495	0.	4.1805E-07	4.1805E-07	TONs
Methylnaphthalene, 2-	91576	0.	1.1148E-05	1.1148E-05	TONs
Naphthalene	91203	0.	2.83344E-04	2.83344E-04	TONs

Nickel	7440020	0.	9.7545E-04	9.7545E-04	TONs
Phenanthrene	85018	0.	7.8965E-06	7.8965E-06	TONs
Pyrene	129000	0.	2.3225E-06	2.3225E-06	TONs
Selenium	7782492	0.	5.574E-06	5.574E-06	TONs
Toluene	108883	0.	0.0015793	0.0015793	TONs

- **Attachments**

Attachment ID	Attachment Type	Description	Public Document	Trade Secret Document	Trade Secret Justification	Event Date
61198	Other	Attestation Document - FER	X			
61199	Calculations	HCC 2017 FEE Emission Report Calculations	X			
61200	Other	Attestation Document - Facility Profile	X			
61201	Responsible Official Signature(inactive)		X			

Emission Units Without Detailed Emissions

Apr 18 2018, 15:10:14

Emission Unit	Why Excluded	Company Equipment ID
F005	Exemption Status = De minimis	Lime Silo - AB
F006	Exemption Status = De minimis	Lime Silo - CD
F007	Exemption Status = De minimis	FGD Dust Silo AB
F008	Exemption Status = De minimis	FGD Dust Silo CD
P007	Less Than Reporting Requirement	P007
P008	Less Than Reporting Requirement	P008
P009	Less Than Reporting Requirement	P009
P010	Exemption Status = De minimis	Cooling Tower CD
P013	Less Than Reporting Requirement	Portable Screening
P014	Did Not Operate	SV001
T001	Exemption Status = De minimis	Tanks > 700 gallons

Report Pollutant Summary: Total Emissions (Tons)

Unit	SCC Id	PM-CON	SO2	NOX	OC	7439921	PM-FIL	PM10-FIL	PM25-FIL	VOC	NH3	CO
F001	**S-01-002-01**											
F001	**S-01-001-01**	0.	0.	0.	0.	0.	11.03	2.21	0.54	0.	0.	0.
F002	**3-03-003-16**	0.	0.	0.	0.	0.	3.31	1.64	0.25	0.	0.	0.
F003	**3-03-003-07**	0.	0.	0.	0.	0.	4.63	2.22	0.43	0.	0.	0.
F004	**3-03-003-12**	0.	0.	0.	0.	0.	4.11	2.59	1.44	0.	0.	0.
P001	**3-03-003-04**	0.	0.	0.	0.	0.033	171.83	19.09	10.31	0.	0.	0.
P002	**3-03-003-04**	0.	0.	0.	0.	0.033	172.89	19.21	10.37	0.	0.	0.
P011	**3-90-006-99**	0.	0.13935	23.225	1.27738	0.	1.7651	1.7651	1.7651	1.27738	0.	19.509
P012	**3-90-006-99**	0.	0.13935	23.225	1.27738	0.	1.7651	1.7651	1.7651	1.27738	0.	19.509
P901	**3-03-003-17**	59.38	672.86	392.24	3.25	0.006	20.74	20.74	20.74	3.25	0.	4.82
P901	**3-03-003-02**	0.	0.115	0.	0.7631	3.822E-05	1.3006	0.6368	0.4938	0.7631	0.	1.069
P901	**3-03-003-03**	0.	10.31	0.53	0.27	0.00447	7.18	7.18	7.18	0.27	0.	6.87
P902	**3-03-003-17**	10.06	1,171.84	328.39	2.78	0.0167	20.61	20.61	20.61	2.78	0.	2.4
P902	**3-03-003-02**	0.	0.115	0.	0.768	3.84E-05	1.915	1.246	1.103	0.768	0.	1.076
P902	**3-03-003-03**	0.	19.21	1.153	0.231	0.0126	11.13	11.13	11.13	0.231	0.	7.3
Total		69.44	1,874.73	768.763	10.6169	0.105847	434.206	112.033	88.127	10.6169	0.	62.553

TV FER/EIS Emissions Report (258587) for 2017
Haverhill Coke Company LLC
0773000182
April 17, 2018

2017 Emissions Summary Report : 258587

Apr 18 2018, 15:10:14

- Report Data

Report Category: TV

Submitted Date: 04/17/2018

Reporting Year: 2017

Reporting State Submitted

- Reports Included

FER: X ES: EIS: X

- Facility Emissions

Pollutant	Code	$	Fugitive Amount	Stack Amount	Total	Units
PE (Cond) - Primary PM Condensible Portion Only (All Less than 1 Micron)	PM-CON		0.	69.44	69.44	TONs
SO2 - Sulfur Dioxide	SO2	X	0.023	1,874.71	1,874.73	TONs
NOx - Nitrogen Oxides	NOX	X	0.	768.763	768.763	TONs
Organic Compounds	OC	X	0.1532	10.4637	10.6169	TONs
Pb - Lead	7439921	X	7.66E-06	0.105839	0.105847	TONs
PE (Filt) - Primary PM, Filterable Portion Only	PM-FIL	X	23.7538	410.452	434.206	TONs
PM10 (Filt) - Primary PM10, Filterable Portion Only	PM10-FIL		8.001	104.032	112.033	TONs
PM2.5 (FILT) - Primary PM2.5, Filterable Portion Only	PM25-FIL		1.715	86.412	88.127	TONs
VOC - Volatile Organic Compounds	VOC		0.1532	10.4637	10.6169	TONs
Ammonia	NH3		0.	0.	0.	TONs
CO - Carbon Monoxide	CO		0.2145	62.3385	62.553	TONs
Total of Chargable Pollutants					3,088.42	TONS

The following information was developed using Ohio EPA-generated pollutant emission calculations. The values may be provided to USEPA by Ohio EPA as part of Ohio EPA's federal grant commitments. You may modify these pollutant emission calculations, at the process level, if you have more accurate information. There is no certification of these values as part of the emissions report submission. For more information regarding which pollutants are considered Greenhouse Gas Pollutants see Help.

Pollutant	Code	Fugitive Amount	Stack Amount	Total	Units
Carbon Dioxide	CO2	0.	966,418.	966,418.	TONs
Methane	CH4	0.	1.09	1.09	TONs

Nitrous Oxide	N2O	0.	0.11	0.11	TONs
Acenaphthene	83329	0.	4.1805E-07	4.1805E-07	TONs
Acenaphthylene	208968	0.	4.1805E-07	4.1805E-07	TONs
Acetaldehyde	75070	0.	0.00997988	0.00997988	TONs
Acrolein	107028	0.	0.0085951	0.0085951	TONs
Anthracene	120127	0.	5.574E-07	5.574E-07	TONs
Arsenic	7440382	0.	9.29E-05	9.29E-05	TONs
Benz[A]Anthracene	56553	0.	4.1805E-07	4.1805E-07	TONs
Benzene	71432	0.	9.7545E-04	9.7545E-04	TONs
Benzo[A]Pyrene	50328	1.509E-05	1.36059E-04	1.51149E-04	TONs
Benzo[B]Fluoranthene	205992	0.	4.1805E-07	4.1805E-07	TONs
Benzo[G,H,I,]Perylene	191242	0.	5.574E-07	5.574E-07	TONs
Benzo[K]Fluoranthene	207089	0.	4.1805E-07	4.1805E-07	TONs
Beryllium	7440417	0.	2.787E-06	2.787E-06	TONs
Cadmium	7440439	0.	5.1095E-04	5.1095E-04	TONs
Chromium	7440473	0.	6.503E-04	6.503E-04	TONs
Chrysene	218019	0.	4.1805E-07	4.1805E-07	TONs
Cobalt	7440484	0.	3.9018E-05	3.9018E-05	TONs
Dibenzo[A,H]Anthracene	53703	0.	2.787E-07	2.787E-07	TONs
Dimethylbenz[A]Anthracene, 7,12-	57976	0.	3.716E-06	3.716E-06	TONs
Fluoranthene	206440	0.	1.3935E-06	1.3935E-06	TONs
Fluorene	86737	0.	1.3006E-06	1.3006E-06	TONs
Formaldehyde	50000	0.	0.0348376	0.0348376	TONs
Hexane, N-	110543	0.	0.8361	0.8361	TONs
Hydrochloric Acid (Hydrogen Chloride)	7647010	0.	58.903	58.903	TONs
Indeno[1,2,3-C,D]Pyrene	193395	0.	4.1805E-07	4.1805E-07	TONs
MN - Manganese	7439965	0.	1.7651E-04	1.7651E-04	TONs
Mercury, as HG; Alkyl & Aryl CMPNDS; Elemental & Inorganic Forms	7439976	0.	0.0621208	0.0621208	TONs
Methylcholanthrene, 3-	56495	0.	4.1805E-07	4.1805E-07	TONs
Methylnaphthalene, 2-	91576	0.	1.1148E-05	1.1148E-05	TONs
Naphthalene	91203	0.	2.83344E-04	2.83344E-04	TONs

Nickel	7440020	0.	9.7545E-04	9.7545E-04	TONs
Phenanthrene	85018	0.	7.8965E-06	7.8965E-06	TONs
Pyrene	129000	0.	2.3225E-06	2.3225E-06	TONs
Selenium	7782492	0.	5.574E-06	5.574E-06	TONs
Toluene	108883	0.	0.0015793	0.0015793	TONs

- **Attachments**

Attachment ID	Attachment Type	Description	Public Document	Trade Secret Document	Trade Secret Justification	Event Date
61198	Other	Attestation Document - FER	X			
61199	Calculations	HCC 2017 FEE Emission Report Calculations	X			
61200	Other	Attestation Document - Facility Profile	X			
61201	Responsible Official Signature(inactive)		X			

Emission Units Without Detailed Emissions

Apr 18 2018, 15:10:14

Emission Unit	Why Excluded	Company Equipment ID
F005	Exemption Status = De minimis	Lime Silo - AB
F006	Exemption Status = De minimis	Lime Silo - CD
F007	Exemption Status = De minimis	FGD Dust Silo AB
F008	Exemption Status = De minimis	FGD Dust Silo CD
P007	Less Than Reporting Requirement	P007
P008	Less Than Reporting Requirement	P008
P009	Less Than Reporting Requirement	P009
P010	Exemption Status = De minimis	Cooling Tower CD
P013	Less Than Reporting Requirement	Portable Screening
P014	Did Not Operate	SV001
T001	Exemption Status = De minimis	Tanks > 700 gallons

Report Pollutant Summary: Total Emissions (Tons)

Unit	SCC Id	PM-CON	SO2	NOX	OC	7439921	PM-FIL	PM10-FIL	PM25-FIL	VOC	NH3	CO
F001	**S-01-002-01**											
F001	**S-01-001-01**	0.	0.	0.	0.	0.	11.03	2.21	0.54	0.	0.	0.
F002	**3-03-003-16**	0.	0.	0.	0.	0.	3.31	1.64	0.25	0.	0.	0.
F003	**3-03-003-07**	0.	0.	0.	0.	0.	4.63	2.22	0.43	0.	0.	0.
F004	**3-03-003-12**	0.	0.	0.	0.	0.	4.11	2.59	1.44	0.	0.	0.
P001	**3-03-003-04**	0.	0.	0.	0.	0.033	171.83	19.09	10.31	0.	0.	0.
P002	**3-03-003-04**	0.	0.	0.	0.	0.033	172.89	19.21	10.37	0.	0.	0.
P011	**3-90-006-99**	0.	0.13935	23.225	1.27738	0.	1.7651	1.7651	1.7651	1.27738	0.	19.509
P012	**3-90-006-99**	0.	0.13935	23.225	1.27738	0.	1.7651	1.7651	1.7651	1.27738	0.	19.509
P901	**3-03-003-17**	59.38	672.86	392.24	3.25	0.006	20.74	20.74	20.74	3.25	0.	4.82
P901	**3-03-003-02**	0.	0.115	0.	0.7631	3.822E-05	1.3006	0.6368	0.4938	0.7631	0.	1.069
P901	**3-03-003-03**	0.	10.31	0.53	0.27	0.00447	7.18	7.18	7.18	0.27	0.	6.87
P902	**3-03-003-17**	10.06	1,171.84	328.39	2.78	0.0167	20.61	20.61	20.61	2.78	0.	2.4
P902	**3-03-003-02**	0.	0.115	0.	0.768	3.84E-05	1.915	1.246	1.103	0.768	0.	1.076
P902	**3-03-003-03**	0.	19.21	1.153	0.231	0.0126	11.13	11.13	11.13	0.231	0.	7.3
Total		69.44	1,874.73	768.763	10.6169	0.105847	434.206	112.033	88.127	10.6169	0.	62.553

Emission Unit Summary: F001

Apr 18 2018, 15:10:14

Emissions Unit ID: F001

Detailed Reporting

DAPC Description:

- Unit Emissions

Pollutant	Code	$	Fugitive Amount	Stack Amount	Total	Units	QA+
PE (Cond) - Primary PM Condensible Portion Only (All Less than 1 Micron)	PM-CON		0	0	0.	TONs	
SO2 - Sulfur Dioxide	SO2	X	0	0	0.	TONs	
NOx - Nitrogen Oxides	NOX	X	0	0	0.	TONs	
Organic Compounds	OC	X	0	0	0.	TONs	
Pb - Lead	7439921	X	0	0	0.	TONs	
PE (Filt) - Primary PM, Filterable Portion Only	PM-FIL	X	11.03	0	11.03	TONs	
PM10 (Filt) - Primary PM10, Filterable Portion Only	PM10-FIL		2.21	0	2.21	TONs	
PM2.5 (FILT) - Primary PM2.5, Filterable Portion Only	PM25-FIL		0.54	0	0.54	TONs	
VOC - Volatile Organic Compounds	VOC		0	0	0.	TONs	
Ammonia	NH3		0	0	0.	TONs	
CO - Carbon Monoxide	CO		0	0	0.	TONs	
Total of Chargable Pollutants					11.03	TONS	

- Processes

- Process & Emissions Detail

Name: Unpaved Roadways

Source Classification Code (SCC): S-01-002-01

- Material Information, Annual Average Operating Schedule & Throughput Percent

Schedule Trade Secret:

Hours Per Day: 0

Days Per Week: 0

Weeks Per Year: 0

Hours Per Year: 0

Winter (Dec - Feb)%: 25

Spring (March-May)%: 25

Summer (June-Aug)%: 25

Fall (Sept-Nov)%: 25

Material	Material Action	Throughput	X Units
Vehicle	Travelled	0	MILES

- **Process Emissions**

Pollutant	Code	$	Method Used	Hours UnCont.	UnCont. Factor (LBS/X)	Fugitive Amount	Stack Amount	Total	Units	Explanation
Total of Chargable Pollutants								0.	TONS	

- **Process & Emissions Detail**

Name: F001

Source Classification Code (SCC): S-01-001-01

- **Material Information, Annual Average Operating Schedule & Throughput Percent**

Schedule Trade Secret:

Hours Per Day: 24

Days Per Week: 7

Weeks Per Year: 52

Hours Per Year: 8760

Winter (Dec - Feb)%: 25

Spring (March-May)%: 25

Summer (June-Aug)%: 25

Fall (Sept-Nov)%: 25

Material	Material Action	Throughput	X Units
Vehicle	Travelled	261332	MILES

- **Process Emissions**

Pollutant	Code	$	Method Used	Hours UnCont.	UnCont. Factor (LBS/X)	Fugitive Amount	Stack Amount	Total	Units	Explanation
PE (Cond) - Primary PM Condensible Portion Only (All Less than 1 Micron)	PM-CON		emissions: ENG. JUDGEMENT			0	0	0.	TONs	

SO2 - Sulfur Dioxide	SO2	X	emissions: ENG. JUDGEMENT			0	0	0.	TONs	
NOx - Nitrogen Oxides	NOX	X	emissions: ENG. JUDGEMENT			0	0	0.	TONs	
Organic Compounds	OC	X	emissions: ENG. JUDGEMENT			0	0	0.	TONs	
Pb - Lead	7439921	X	emissions: ENG. JUDGEMENT			0	0	0.	TONs	
PE (Filt) - Primary PM, Filterable Portion Only	PM-FIL	X	emissions: ENG. JUDGEMENT			11.03	0	11.03	TONs	
PM10 (Filt) - Primary PM10, Filterable Portion Only	PM10-FIL		emissions: ENG. JUDGEMENT			2.21	0	2.21	TONs	
PM2.5 (FILT) - Primary PM2.5, Filterable Portion Only	PM25-FIL		emissions: ENG. JUDGEMENT			0.54	0	0.54	TONs	
VOC - Volatile Organic Compounds	VOC		emissions: ENG. JUDGEMENT			0	0	0.	TONs	
Ammonia	NH3		emissions: ENG. JUDGEMENT			0	0	0.	TONs	
CO - Carbon Monoxide	CO		emissions: ENG. JUDGEMENT			0	0	0.	TONs	
Total of Chargable Pollutants								11.03	TONS	

Emission Unit Summary: F002

Emissions Unit ID: F002

Detailed Reporting

DAPC Description:

- Unit Emissions

Pollutant	Code	$	Fugitive Amount	Stack Amount	Total	Units	QA+
PE (Cond) - Primary PM Condensible Portion Only (All Less than 1 Micron)	PM-CON		0.0	0.0	0.	TONs	
SO2 - Sulfur Dioxide	SO2	X	0.0	0.0	0.	TONs	
NOx - Nitrogen Oxides	NOX	X	0.0	0.0	0.	TONs	
Organic Compounds	OC	X	0.0	0.0	0.	TONs	
Pb - Lead	7439921	X	0.0	0.0	0.	TONs	
PE (Filt) - Primary PM, Filterable Portion Only	PM-FIL	X	3.31	0.0	3.31	TONs	
PM10 (Filt) - Primary PM10, Filterable Portion Only	PM10-FIL		1.64	0.0	1.64	TONs	
PM2.5 (FILT) - Primary PM2.5, Filterable Portion Only	PM25-FIL		0.25	0.0	0.25	TONs	
VOC - Volatile Organic Compounds	VOC		0.0	0.0	0.	TONs	
Ammonia	NH3		0.0	0.0	0.	TONs	
CO - Carbon Monoxide	CO		0.0	0.0	0.	TONs	
Total of Chargable Pollutants					3.31	TONS	

- Processes

- Process & Emissions Detail

Name: F002

Source Classification Code (SCC): 3-03-003-16

- Material Information, Annual Average Operating Schedule & Throughput Percent

Schedule Trade Secret:

Hours Per Day: 24

Days Per Week: 7

Weeks Per Year: 52

Hours Per Year: 8760

Winter (Dec - Feb)%: 25

Spring (March-May)%: 25

Summer (June-Aug)%: 25

Fall (Sept-Nov)%: 25

Material	Material Action	Throughput	X Units
Coal	Charged	1532077	TONs

- **Process Emissions**

Pollutant	Code	$	Method Used	Hours UnCont.	UnCont. Factor (LBS/X)	Fugitive Amount	Stack Amount	Total	Units	Explanation
PE (Cond) - Primary PM Condensible Portion Only (All Less than 1 Micron)	PM-CON		emissions: ENG. JUDGEMENT			0.0	0.0	0.	TONs	
SO2 - Sulfur Dioxide	SO2	X	emissions: ENG. JUDGEMENT			0.0	0.0	0.	TONs	
NOx - Nitrogen Oxides	NOX	X	emissions: ENG. JUDGEMENT			0.0	0.0	0.	TONs	
Organic Compounds	OC	X	emissions: ENG. JUDGEMENT			0.0	0.0	0.	TONs	
Pb - Lead	7439921	X	emissions: ENG. JUDGEMENT			0.0	0.0	0.	TONs	
PE (Filt) - Primary PM, Filterable Portion Only	PM-FIL	X	emissions: ENG. JUDGEMENT			3.31	0.0	3.31	TONs	See attached calculations.
PM10 (Filt) - Primary PM10, Filterable Portion Only	PM10-FIL		emissions: ENG. JUDGEMENT			1.64	0.0	1.64	TONs	See attached calculations.
PM2.5 (FILT) - Primary PM2.5, Filterable Portion Only	PM25-FIL		emissions: ENG. JUDGEMENT			0.25	0.0	0.25	TONs	See attached calculations.
VOC - Volatile Organic Compounds	VOC		emissions: ENG. JUDGEMENT			0.0	0.0	0.	TONs	

Ammonia	NH3		emissions: ENG. JUDGEMENT			0.0	0.0	0.	TONs	
CO - Carbon Monoxide	CO		emissions: ENG. JUDGEMENT			0.0	0.0	0.	TONs	
Total of Chargable Pollutants								3.31	TONS	

Emission Unit Summary: F003

Emissions Unit ID: F003

Detailed Reporting

DAPC Description:

- Unit Emissions

Pollutant	Code	$	Fugitive Amount	Stack Amount	Total	Units	QA+
PE (Cond) - Primary PM Condensible Portion Only (All Less than 1 Micron)	PM-CON		0.0	0.0	0.	TONs	
SO2 - Sulfur Dioxide	SO2	X	0.0	0.0	0.	TONs	
NOx - Nitrogen Oxides	NOX	X	0.0	0.0	0.	TONs	
Organic Compounds	OC	X	0.0	0.0	0.	TONs	
Pb - Lead	7439921	X	0.0	0.0	0.	TONs	
PE (Filt) - Primary PM, Filterable Portion Only	PM-FIL	X	4.63	0.0	4.63	TONs	
PM10 (Filt) - Primary PM10, Filterable Portion Only	PM10-FIL		2.22	0.0	2.22	TONs	
PM2.5 (FILT) - Primary PM2.5, Filterable Portion Only	PM25-FIL		0.43	0.0	0.43	TONs	
VOC - Volatile Organic Compounds	VOC		0.0	0.0	0.	TONs	
Ammonia	NH3		0.0	0.0	0.	TONs	
CO - Carbon Monoxide	CO		0.0	0.0	0.	TONs	
Total of Chargable Pollutants					4.63	TONS	

- Processes

- Process & Emissions Detail

Name: F003

Source Classification Code (SCC): 3-03-003-07

- Material Information, Annual Average Operating Schedule & Throughput Percent

Schedule Trade Secret:

Hours Per Day: 24

Days Per Week: 7

Weeks Per Year: 52

Hours Per Year: 8760

Winter (Dec - Feb)%: 25

Spring (March-May)%: 25

Summer (June-Aug)%: 25

Fall (Sept-Nov)%: 25

Material	Material Action	Throughput	X Units
Coal	Charged	1532077	TONs

- **Process Emissions**

Pollutant	Code	$	Method Used	Hours UnCont.	UnCont. Factor (LBS/X)	Fugitive Amount	Stack Amount	Total	Units	Explanation
PE (Cond) - Primary PM Condensible Portion Only (All Less than 1 Micron)	PM-CON		emissions: ENG. JUDGEMENT			0.0	0.0	0.	TONs	
SO2 - Sulfur Dioxide	SO2	X	emissions: ENG. JUDGEMENT			0.0	0.0	0.	TONs	
NOx - Nitrogen Oxides	NOX	X	emissions: ENG. JUDGEMENT			0.0	0.0	0.	TONs	
Organic Compounds	OC	X	emissions: ENG. JUDGEMENT			0.0	0.0	0.	TONs	
Pb - Lead	7439921	X	emissions: ENG. JUDGEMENT			0.0	0.0	0.	TONs	
PE (Filt) - Primary PM, Filterable Portion Only	PM-FIL	X	emissions: ENG. JUDGEMENT			4.63	0.0	4.63	TONs	See attached calculations.
PM10 (Filt) - Primary PM10, Filterable Portion Only	PM10-FIL		emissions: ENG. JUDGEMENT			2.22	0.0	2.22	TONs	See attached calculations.
PM2.5 (FILT) - Primary PM2.5, Filterable Portion Only	PM25-FIL		emissions: ENG. JUDGEMENT			0.43	0.0	0.43	TONs	See attached calculations.
VOC - Volatile Organic Compounds	VOC		emissions: ENG. JUDGEMENT			0.0	0.0	0.	TONs	

Ammonia	NH3		emissions: ENG. JUDGEMENT			0.0	0.0	0.	TONs	
CO - Carbon Monoxide	CO		emissions: ENG. JUDGEMENT			0.0	0.0	0.	TONs	
Total of Chargable Pollutants								4.63	TONS	

Emission Unit Summary: F004

Emissions Unit ID: F004

Detailed Reporting

DAPC Description:

- Unit Emissions

Pollutant	Code	$	Fugitive Amount	Stack Amount	Total	Units	QA+
PE (Cond) - Primary PM Condensible Portion Only (All Less than 1 Micron)	PM-CON		0.0	0.0	0.	TONs	
SO2 - Sulfur Dioxide	SO2	X	0.0	0.0	0.	TONs	
NOx - Nitrogen Oxides	NOX	X	0.0	0.0	0.	TONs	
Organic Compounds	OC	X	0.0	0.0	0.	TONs	
Pb - Lead	7439921	X	0.0	0.0	0.	TONs	
PE (Filt) - Primary PM, Filterable Portion Only	PM-FIL	X	2.88	1.23	4.11	TONs	
PM10 (Filt) - Primary PM10, Filterable Portion Only	PM10-FIL		1.36	1.23	2.59	TONs	
PM2.5 (FILT) - Primary PM2.5, Filterable Portion Only	PM25-FIL		0.21	1.23	1.44	TONs	
VOC - Volatile Organic Compounds	VOC		0.0	0.0	0.	TONs	
Ammonia	NH3		0.0	0.0	0.	TONs	
CO - Carbon Monoxide	CO		0.0	0.0	0.	TONs	
Total of Chargable Pollutants					4.11	TONS	

- Processes

- Process & Emissions Detail

Name: F004

Source Classification Code (SCC): 3-03-003-12

- Material Information, Annual Average Operating Schedule & Throughput Percent

Schedule Trade Secret:

Hours Per Day: 24

Days Per Week: 7

Weeks Per Year: 52

Hours Per Year: 8760

Winter (Dec - Feb)%: 25

Spring (March-May)%: 25

Summer (June-Aug)%: 25

Fall (Sept-Nov)%: 25

Material	Material Action	Throughput	X Units
Material	Processed	1106284	TONs

- **Process Emissions**

Pollutant	Code	$	Method Used	Hours UnCont.	UnCont. Factor (LBS/X)	Fugitive Amount	Stack Amount	Total	Units	Explanation
PE (Cond) - Primary PM Condensible Portion Only (All Less than 1 Micron)	PM-CON		emissions: ENG. JUDGEMENT			0.0	0.0	0.	TONs	
SO2 - Sulfur Dioxide	SO2	X	emissions: ENG. JUDGEMENT			0.0	0.0	0.	TONs	
NOx - Nitrogen Oxides	NOX	X	emissions: ENG. JUDGEMENT			0.0	0.0	0.	TONs	
Organic Compounds	OC	X	emissions: ENG. JUDGEMENT			0.0	0.0	0.	TONs	
Pb - Lead	7439921	X	emissions: ENG. JUDGEMENT			0.0	0.0	0.	TONs	
PE (Filt) - Primary PM, Filterable Portion Only	PM-FIL	X	emissions: ENG. JUDGEMENT			2.88	1.23	4.11	TONs	See attached calculations.
PM10 (Filt) - Primary PM10, Filterable Portion Only	PM10-FIL		emissions: ENG. JUDGEMENT			1.36	1.23	2.59	TONs	See attached calculations.
PM2.5 (FILT) - Primary PM2.5, Filterable Portion Only	PM25-FIL		emissions: ENG. JUDGEMENT			0.21	1.23	1.44	TONs	See attached calculations.
VOC - Volatile Organic Compounds	VOC		emissions: ENG. JUDGEMENT			0.0	0.0	0.	TONs	

Ammonia	NH3		emissions: ENG. JUDGEMENT			0.0	0.0	0.	TONs	
CO - Carbon Monoxide	CO		emissions: ENG. JUDGEMENT			0.0	0.0	0.	TONs	
Total of Chargable Pollutants								4.11	TONS	

Emission Unit Summary: P001

Apr 18 2018, 15:10:14

Emissions Unit ID: P001

Detailed Reporting

DAPC Description:

- Unit Emissions

Pollutant	Code	$	Fugitive Amount	Stack Amount	Total	Units	QA+
PE (Cond) - Primary PM Condensible Portion Only (All Less than 1 Micron)	PM-CON		0.0	0.0	0.	TONs	
SO2 - Sulfur Dioxide	SO2	X	0.0	0.0	0.	TONs	
NOx - Nitrogen Oxides	NOX	X	0.0	0.0	0.	TONs	
Organic Compounds	OC	X	0.0	0.0	0.	TONs	
Pb - Lead	7439921	X	0.0	0.033	0.033	TONs	
PE (Filt) - Primary PM, Filterable Portion Only	PM-FIL	X	0.0	171.83	171.83	TONs	
PM10 (Filt) - Primary PM10, Filterable Portion Only	PM10-FIL		0.0	19.09	19.09	TONs	
PM2.5 (FILT) - Primary PM2.5, Filterable Portion Only	PM25-FIL		0.0	10.31	10.31	TONs	
VOC - Volatile Organic Compounds	VOC		0.0	0.0	0.	TONs	
Ammonia	NH3		0.0	0.0	0.	TONs	
CO - Carbon Monoxide	CO		0.0	0.0	0.	TONs	
Total of Chargable Pollutants					171.863	TONS	

The following information was developed using Ohio EPA-generated pollutant emission calculations. The values may be provided to USEPA by Ohio EPA as part of Ohio EPA's federal grant commitments. You may modify these pollutant emission calculations, at the process level, if you have more accurate information. There is no certification of these values as part of the emissions report submission. For more information regarding which pollutants are considered Greenhouse Gas Pollutants see Help.

Pollutant	Code	Fugitive Amount	Stack Amount	Total	Units
Benzo[A]Pyrene	50328	0	0	0.	TONs

- Processes

- Process & Emissions Detail

Name: P001

Source Classification Code (SCC): 3-03-003-04

- **Material Information, Annual Average Operating Schedule & Throughput Percent**

Schedule Trade Secret:

Hours Per Day: 24
Days Per Week: 7
Weeks Per Year: 52
Hours Per Year: 8760

Winter (Dec - Feb)%: 25
Spring (March-May)%: 25
Summer (June-Aug)%: 25
Fall (Sept-Nov)%: 25

Material	Material Action	Throughput	X Units
Coal	Charged	763690	TONs

- **Process Emissions**

Pollutant	Code	$	Method Used	Hours UnCont.	UnCont. Factor (LBS/X)	Fugitive Amount	Stack Amount	Total	Units	Explanation
PE (Cond) - Primary PM Condensible Portion Only (All Less than 1 Micron)	PM-CON		emissions: ENG. JUDGEMENT			0.0	0.0	0.	TONs	
SO2 - Sulfur Dioxide	SO2	X	emissions: ENG. JUDGEMENT			0.0	0.0	0.	TONs	
NOx - Nitrogen Oxides	NOX	X	emissions: ENG. JUDGEMENT			0.0	0.0	0.	TONs	
Organic Compounds	OC	X	emissions: ENG. JUDGEMENT			0.0	0.0	0.	TONs	
Pb - Lead	7439921	X	emissions: STACK TEST			0.0	0.033	0.033	TONs	See attached calculations.
PE (Filt) - Primary PM, Filterable Portion Only	PM-FIL	X	emissions: ENG. JUDGEMENT			0.0	171.83	171.83	TONs	See attached calculations.
PM10 (Filt) - Primary PM10, Filterable	PM10-FIL		emissions: ENG. JUDGEMENT			0.0	19.09	19.09	TONs	See attached calculations.

Portion Only										
PM2.5 (FILT) - Primary PM2.5, Filterable Portion Only	PM25-FIL		emissions: ENG. JUDGEMENT			0.0	10.31	10.31	TONs	See attached calculations.
VOC - Volatile Organic Compounds	VOC		emissions: ENG. JUDGEMENT			0.0	0.0	0.	TONs	
Ammonia	NH3		emissions: ENG. JUDGEMENT			0.0	0.0	0.	TONs	
CO - Carbon Monoxide	CO		emissions: ENG. JUDGEMENT			0.0	0.0	0.	TONs	
Total of Chargable Pollutants								171.863	TONS	

-

The following information was developed using Ohio EPA-generated pollutant emission calculations. The values may be provided to USEPA by Ohio EPA as part of Ohio EPA's federal grant commitments. You may modify these pollutant emission calculations, at the process level, if you have more accurate information. There is no certification of these values as part of the emissions report submission. For more information regarding which pollutants are considered Greenhouse Gas Pollutants see Help.

- **Process Emissions**

Pollutant	Code	Method Used	Hours UnCont.	UnCont. Factor (LBS/X)	Fugitive Amount	Stack Amount	Total	Units	Explanation
Benzo[A]Pyrene	50328	emissions: ENG. JUDGEMENT			0	0	0.	TONs	

Emission Unit Summary: P002

Apr 18 2018, 15:10:14

Emissions Unit ID: P002

Detailed Reporting

DAPC Description:

- Unit Emissions

Pollutant	Code	$	Fugitive Amount	Stack Amount	Total	Units	QA+
PE (Cond) - Primary PM Condensible Portion Only (All Less than 1 Micron)	PM-CON		0.0	0.0	0.	TONs	
SO2 - Sulfur Dioxide	SO2	X	0.0	0.0	0.	TONs	
NOx - Nitrogen Oxides	NOX	X	0.0	0.0	0.	TONs	
Organic Compounds	OC	X	0.0	0.0	0.	TONs	
Pb - Lead	7439921	X	0.0	0.033	0.033	TONs	
PE (Filt) - Primary PM, Filterable Portion Only	PM-FIL	X	0.0	172.89	172.89	TONs	
PM10 (Filt) - Primary PM10, Filterable Portion Only	PM10-FIL		0.0	19.21	19.21	TONs	
PM2.5 (FILT) - Primary PM2.5, Filterable Portion Only	PM25-FIL		0.0	10.37	10.37	TONs	
VOC - Volatile Organic Compounds	VOC		0.0	0.0	0.	TONs	
Ammonia	NH3		0.0	0.0	0.	TONs	
CO - Carbon Monoxide	CO		0.0	0.0	0.	TONs	
Total of Chargable Pollutants					172.923	TONS	

The following information was developed using Ohio EPA-generated pollutant emission calculations. The values may be provided to USEPA by Ohio EPA as part of Ohio EPA's federal grant commitments. You may modify these pollutant emission calculations, at the process level, if you have more accurate information. There is no certification of these values as part of the emissions report submission. For more information regarding which pollutants are considered Greenhouse Gas Pollutants see Help.

Pollutant	Code	Fugitive Amount	Stack Amount	Total	Units
Benzo[A]Pyrene	50328	0	0	0.	TONs

- Processes

- Process & Emissions Detail

Name: P002

Source Classification Code (SCC): 3-03-003-04

- **Material Information, Annual Average Operating Schedule & Throughput Percent**

Schedule Trade Secret:

Hours Per Day: 24
Days Per Week: 7
Weeks Per Year: 52
Hours Per Year: 8760

Winter (Dec - Feb)%: 25
Spring (March-May)%: 25
Summer (June-Aug)%: 25
Fall (Sept-Nov)%: 25

Material	Material Action	Throughput	X Units
Coal	Charged	768387	TONs

- **Process Emissions**

Pollutant	Code	$	Method Used	Hours UnCont.	UnCont. Factor (LBS/X)	Fugitive Amount	Stack Amount	Total	Units	Explanation
PE (Cond) - Primary PM Condensible Portion Only (All Less than 1 Micron)	PM-CON		emissions: ENG. JUDGEMENT			0.0	0.0	0.	TONs	
SO2 - Sulfur Dioxide	SO2	X	emissions: ENG. JUDGEMENT			0.0	0.0	0.	TONs	
NOx - Nitrogen Oxides	NOX	X	emissions: ENG. JUDGEMENT			0.0	0.0	0.	TONs	
Organic Compounds	OC	X	emissions: ENG. JUDGEMENT			0.0	0.0	0.	TONs	
Pb - Lead	7439921	X	emissions: STACK TEST			0.0	0.033	0.033	TONs	See attached calculations.
PE (Filt) - Primary PM, Filterable Portion Only	PM-FIL	X	emissions: ENG. JUDGEMENT			0.0	172.89	172.89	TONs	See attached calculations.
PM10 (Filt) - Primary PM10, Filterable	PM10-FIL		emissions: ENG. JUDGEMENT			0.0	19.21	19.21	TONs	See attached calculations.

Portion Only										
PM2.5 (FILT) - Primary PM2.5, Filterable Portion Only	PM25-FIL		emissions: ENG. JUDGEMENT			0.0	10.37	10.37	TONs	See attached calculations.
VOC - Volatile Organic Compounds	VOC		emissions: ENG. JUDGEMENT			0.0	0.0	0.	TONs	
Ammonia	NH3		emissions: ENG. JUDGEMENT			0.0	0.0	0.	TONs	
CO - Carbon Monoxide	CO		emissions: ENG. JUDGEMENT			0.0	0.0	0.	TONs	
Total of Chargable Pollutants								172.923	TONS	

The following information was developed using Ohio EPA-generated pollutant emission calculations. The values may be provided to USEPA by Ohio EPA as part of Ohio EPA's federal grant commitments. You may modify these pollutant emission calculations, at the process level, if you have more accurate information. There is no certification of these values as part of the emissions report submission. For more information regarding which pollutants are considered Greenhouse Gas Pollutants see Help.

- **Process Emissions**

Pollutant	Code	Method Used	Hours UnCont.	UnCont. Factor (LBS/X)	Fugitive Amount	Stack Amount	Total	Units	Explanation
Benzo[A]Pyrene	50328	emissions: ENG. JUDGEMENT			0	0	0.	TONs	

Emission Unit Summary: P011

Apr 18 2018, 15:10:14

Emissions Unit ID: P011

Detailed Reporting

DAPC Description:

- Unit Emissions

Pollutant	Code	$	Fugitive Amount	Stack Amount	Total	Units	QA+
PE (Cond) - Primary PM Condensible Portion Only (All Less than 1 Micron)	PM-CON		0.0	0.0	0.	TONs	
SO2 - Sulfur Dioxide	SO2	X	0.	0.13935	0.13935	TONs	
NOx - Nitrogen Oxides	NOX	X	0.	23.225	23.225	TONs	
Organic Compounds	OC	X	0.	1.27738	1.27738	TONs	
Pb - Lead	7439921	X	0.0	0.0	0.	TONs	
PE (Filt) - Primary PM, Filterable Portion Only	PM-FIL	X	0.	1.7651	1.7651	TONs	
PM10 (Filt) - Primary PM10, Filterable Portion Only	PM10-FIL		0.	1.7651	1.7651	TONs	
PM2.5 (FILT) - Primary PM2.5, Filterable Portion Only	PM25-FIL		0.	1.7651	1.7651	TONs	
VOC - Volatile Organic Compounds	VOC		0.	1.27738	1.27738	TONs	
Ammonia	NH3		0.0	0.0	0.	TONs	
CO - Carbon Monoxide	CO		0.	19.509	19.509	TONs	
Total of Chargable Pollutants					26.4068	TONS	

The following information was developed using Ohio EPA-generated pollutant emission calculations. The values may be provided to USEPA by Ohio EPA as part of Ohio EPA's federal grant commitments. You may modify these pollutant emission calculations, at the process level, if you have more accurate information. There is no certification of these values as part of the emissions report submission. For more information regarding which pollutants are considered Greenhouse Gas Pollutants see Help.

Pollutant	Code	Fugitive Amount	Stack Amount	Total	Units
Carbon Dioxide	CO2	0	28570.07	28,570.1	TONs
Methane	CH4	0	.545	0.545	TONs
Nitrous Oxide	N2O	0	0.055	0.055	TONs
Acenaphthene	83329	0.	2.09025E-07	2.09025E-07	TONs
Acenaphthylene	208968	0.	2.09025E-07	2.09025E-07	TONs
Acetaldehyde	75070	0.	0.00498994	0.00498994	TONs

Acrolein	107028	0.	0.00429755	0.00429755	TONs
Anthracene	120127	0.	2.787E-07	2.787E-07	TONs
Arsenic	7440382	0.	4.645E-05	4.645E-05	TONs
Benz[A]Anthracene	56553	0.	2.09025E-07	2.09025E-07	TONs
Benzene	71432	0.	4.87725E-04	4.87725E-04	TONs
Benzo[A]Pyrene	50328	0.	1.3935E-07	1.3935E-07	TONs
Benzo[B]Fluoranthene	205992	0.	2.09025E-07	2.09025E-07	TONs
Benzo[G,H,I,]Perylene	191242	0.	2.787E-07	2.787E-07	TONs
Benzo[K]Fluoranthene	207089	0.	2.09025E-07	2.09025E-07	TONs
Beryllium	7440417	0.	1.3935E-06	1.3935E-06	TONs
Cadmium	7440439	0.	2.55475E-04	2.55475E-04	TONs
Chromium	7440473	0.	3.2515E-04	3.2515E-04	TONs
Chrysene	218019	0.	2.09025E-07	2.09025E-07	TONs
Cobalt	7440484	0.	1.9509E-05	1.9509E-05	TONs
Dibenzo[A,H]Anthracene	53703	0.	1.3935E-07	1.3935E-07	TONs
Dimethylbenz[A]Anthracene, 7,12-	57976	0.	1.858E-06	1.858E-06	TONs
Fluoranthene	206440	0.	6.9675E-07	6.9675E-07	TONs
Fluorene	86737	0.	6.503E-07	6.503E-07	TONs
Formaldehyde	50000	0.	0.0174188	0.0174188	TONs
Hexane, N-	110543	0.	0.41805	0.41805	TONs
Indeno[1,2,3-C,D]Pyrene	193395	0.	2.09025E-07	2.09025E-07	TONs
MN - Manganese	7439965	0.	8.8255E-05	8.8255E-05	TONs
Mercury, as HG; Alkyl & Aryl CMPNDS; Elemental & Inorganic Forms	7439976	0.	6.0385E-05	6.0385E-05	TONs
Methylcholanthrene, 3-	56495	0.	2.09025E-07	2.09025E-07	TONs
Methylnaphthalene, 2-	91576	0.	5.574E-06	5.574E-06	TONs
Naphthalene	91203	0.	1.41672E-04	1.41672E-04	TONs
Nickel	7440020	0.	4.87725E-04	4.87725E-04	TONs
Phenanthrene	85018	0.	3.94825E-06	3.94825E-06	TONs
Pyrene	129000	0.	1.16125E-06	1.16125E-06	TONs
Selenium	7782492	0.	2.787E-06	2.787E-06	TONs
Toluene	108883	0.	7.8965E-04	7.8965E-04	TONs

- **Processes**
  - **Process & Emissions Detail**

Name: Z006

Source Classification Code (SCC): 3-90-006-99

- **Material Information, Annual Average Operating Schedule & Throughput Percent**

Schedule Trade Secret:

Hours Per Day: 24
Days Per Week: 7
Weeks Per Year: 52
Hours Per Year: 4000

Winter (Dec - Feb)%: 50
Spring (March-May)%: 23
Summer (June-Aug)%: 16
Fall (Sept-Nov)%: 11

Material	Material Action	Throughput	X Units
Natural Gas	Burned	464.5	MILLION CUBIC FEET

Variable	Amount	Meaning
HCg	1028	Gas Heat Content (Btu/Cubic Feet)

- **Process Emissions**

Pollutant	Code	$	Method Used	Hours UnCont.	UnCont. Factor (LBS/X)	Fugitive Amount	Stack Amount	Total	Units	Explanation
PE (Cond) - Primary PM Condensible Portion Only (All Less than 1 Micron)	PM-CON		emissions: ENG. JUDGEMENT			0.0	0.0	0.	TONs	
SO2 - Sulfur Dioxide	SO2	X	factor:ENG. JUDGEMENT	4000	0.6	0.	0.13935	0.13935	TONs	See attached calculations.
NOx - Nitrogen Oxides	NOX	X	factor:ENG. JUDGEMENT	4000	100	0.	23.225	23.225	TONs	See attached calculations.
Organic	OC	X	factor:ENG	4000	5.5	0.	1.27738	1.27738	TONs	See attached calculations.

Compounds			. JUDGEMENT							
Pb - Lead	7439921	X	emissions: ENG. JUDGEMENT			0.0	0.0	0.	TONs	
PE (Filt) - Primary PM, Filterable Portion Only	PM-FIL	X	factor:ENG . JUDGEMENT	4000	7.6	0.	1.7651	1.7651	TONs	See attached calculations.
PM10 (Filt) - Primary PM10, Filterable Portion Only	PM10-FIL		factor:ENG . JUDGEMENT	4000	7.6	0.	1.7651	1.7651	TONs	See attached calculations.
PM2.5 (FILT) - Primary PM2.5, Filterable Portion Only	PM25-FIL		factor:ENG . JUDGEMENT	4000	7.6	0.	1.7651	1.7651	TONs	See attached calculations.
VOC - Volatile Organic Compounds	VOC		factor:ENG . JUDGEMENT	4000	5.5	0.	1.27738	1.27738	TONs	See attached calculations.
Ammonia	NH3		emissions: ENG. JUDGEMENT			0.0	0.0	0.	TONs	
CO - Carbon Monoxide	CO		factor:ENG . JUDGEMENT	4000	84	0.	19.509	19.509	TONs	See attached calculations.
Total of Chargable Pollutants								26.4068	TONS	

The following information was developed using Ohio EPA-generated pollutant emission calculations. The values may be provided to USEPA by Ohio EPA as part of Ohio EPA's federal grant commitments. You may modify these pollutant emission calculations, at the process level, if you have more accurate information. There is no certification of these values as part of the emissions report submission. For more information regarding which pollutants are considered Greenhouse Gas Pollutants see Help.

- **Process Emissions**

Pollutant	Code	Method Used	Hours UnCont.	UnCont. Factor (LBS/X)	Fugitive Amount	Stack Amount	Total	Units	Explanation
Carbon Dioxide	CO2	emissions: MAT. BALANCE			0	28570.07	28,570.1	TONs	Facility greenhouse gas report. Emissions from all natural gas combustion (lancing and other uses) as well as propane combustion are included here.

Methane	CH4	emissions: MAT. BALANCE			0	.545	0.545	TONs	Facility greenhouse gas report. Emissions from all natural gas combustion (lancing and other uses) as well as propane combustion are included here.
Nitrous Oxide	N2O	emissions: MAT. BALANCE			0	0.055	0.055	TONs	Facility greenhouse gas report. Emissions from all natural gas combustion (lancing and other uses) as well as propane combustion are included here.
Acenaphthene	83329	factor:OEPA (auto calculate)	4000	9E-07	0.	2.09025E-07	2.09025E-07	TONs	
Acenaphthylene	208968	factor:OEPA (auto calculate)	4000	9E-07	0.	2.09025E-07	2.09025E-07	TONs	
Acetaldehyde	75070	factor:OEPA (auto calculate)	4000	0.0214852	0.	0.00498994	0.00498994	TONs	
Acrolein	107028	factor:OEPA (auto calculate)	4000	0.018504	0.	0.00429755	0.00429755	TONs	
Anthracene	120127	factor:OEPA (auto calculate)	4000	1.2E-06	0.	2.787E-07	2.787E-07	TONs	
Arsenic	7440382	factor:OEPA (auto calculate)	4000	2E-04	0.	4.645E-05	4.645E-05	TONs	
Benz[A]Anthracene	56553	factor:OEPA (auto calculate)	4000	9E-07	0.	2.09025E-07	2.09025E-07	TONs	
Benzene	71432	factor:OEPA (auto calculate)	4000	0.0021	0.	4.87725E-04	4.87725E-04	TONs	
Benzo[A]Pyrene	50328	factor:OEPA (auto calculate)	4000	6E-07	0.	1.3935E-07	1.3935E-07	TONs	
Benzo[B]Fluoranthene	205992	factor:OEPA (auto calculate)	4000	9E-07	0.	2.09025E-07	2.09025E-07	TONs	
Benzo[G,H,I,]Perylene	191242	factor:ENG. JUDGEMENT	4000	1.2E-06	0.	2.787E-07	2.787E-07	TONs	1.2E-06 Emission Factor from AP 42, 5th Edition Volume I, Chapter 1: External Combustion Sources, Section 1.4 Natural Gas Combustion
Benzo[K]Fluoranthene	207089	factor:OEPA (auto calculate)	4000	9E-07	0.	2.09025E-07	2.09025E-07	TONs	

Beryllium	7440417	factor:OEPA (auto calculate)	4000	6E-06	0.	1.3935E-06	1.3935E-06	TONs	
Cadmium	7440439	factor:OEPA (auto calculate)	4000	0.0011	0.	2.55475E-04	2.55475E-04	TONs	
Chromium	7440473	factor:OEPA (auto calculate)	4000	0.0014	0.	3.2515E-04	3.2515E-04	TONs	
Chrysene	218019	factor:OEPA (auto calculate)	4000	9E-07	0.	2.09025E-07	2.09025E-07	TONs	
Cobalt	7440484	factor:OEPA (auto calculate)	4000	8.4E-05	0.	1.9509E-05	1.9509E-05	TONs	
Dibenzo[A,H]Anthracene	53703	factor:OEPA (auto calculate)	4000	6E-07	0.	1.3935E-07	1.3935E-07	TONs	
Dimethylbenz[A]Anthracene, 7,12-	57976	factor:OEPA (auto calculate)	4000	8E-06	0.	1.858E-06	1.858E-06	TONs	
Fluoranthene	206440	factor:OEPA (auto calculate)	4000	3E-06	0.	6.9675E-07	6.9675E-07	TONs	
Fluorene	86737	factor:OEPA (auto calculate)	4000	2.8E-06	0.	6.503E-07	6.503E-07	TONs	
Formaldehyde	50000	factor:OEPA (auto calculate)	4000	0.075	0.	0.0174188	0.0174188	TONs	
Hexane, N-	110543	factor:OEPA (auto calculate)	4000	1.8	0.	0.41805	0.41805	TONs	
Indeno[1,2,3-C,D]Pyrene	193395	factor:OEPA (auto calculate)	4000	9E-07	0.	2.09025E-07	2.09025E-07	TONs	
MN - Manganese	7439965	factor:OEPA (auto calculate)	4000	3.8E-04	0.	8.8255E-05	8.8255E-05	TONs	
Mercury, as HG; Alkyl & Aryl CMPNDS;	7439976	factor:OEPA (auto calculate)	4000	2.6E-04	0.	6.0385E-05	6.0385E-05	TONs	

Elemental & Inorganic Forms									
Methylcholanthrene, 3-	56495	factor:OEPA (auto calculate)	4000	9E-07	0.	2.09025E-07	2.09025E-07	TONs	
Methylnaphthalene, 2-	91576	factor:OEPA (auto calculate)	4000	2.4E-05	0.	5.574E-06	5.574E-06	TONs	
Naphthalene	91203	factor:OEPA (auto calculate)	4000	6.1E-04	0.	1.41672E-04	1.41672E-04	TONs	
Nickel	7440020	factor:OEPA (auto calculate)	4000	0.0021	0.	4.87725E-04	4.87725E-04	TONs	
Phenanthrene	85018	factor:OEPA (auto calculate)	4000	1.7E-05	0.	3.94825E-06	3.94825E-06	TONs	
Pyrene	129000	factor:OEPA (auto calculate)	4000	5E-06	0.	1.16125E-06	1.16125E-06	TONs	
Selenium	7782492	factor:OEPA (auto calculate)	4000	1.2E-05	0.	2.787E-06	2.787E-06	TONs	
Toluene	108883	factor:OEPA (auto calculate)	4000	0.0034	0.	7.8965E-04	7.8965E-04	TONs	

Emission Unit Summary: P012

Apr 18 2018, 15:10:14

Emissions Unit ID: P012

Detailed Reporting

DAPC Description:

- Unit Emissions

Pollutant	Code	$	Fugitive Amount	Stack Amount	Total	Units	QA+
PE (Cond) - Primary PM Condensible Portion Only (All Less than 1 Micron)	PM-CON		0.0	0.0	0.	TONs	
SO2 - Sulfur Dioxide	SO2	X	0.	0.13935	0.13935	TONs	
NOx - Nitrogen Oxides	NOX	X	0.	23.225	23.225	TONs	
Organic Compounds	OC	X	0.	1.27738	1.27738	TONs	
Pb - Lead	7439921	X	0.0	0.0	0.	TONs	
PE (Filt) - Primary PM, Filterable Portion Only	PM-FIL	X	0.	1.7651	1.7651	TONs	
PM10 (Filt) - Primary PM10, Filterable Portion Only	PM10-FIL		0.	1.7651	1.7651	TONs	
PM2.5 (FILT) - Primary PM2.5, Filterable Portion Only	PM25-FIL		0.	1.7651	1.7651	TONs	
VOC - Volatile Organic Compounds	VOC		0.	1.27738	1.27738	TONs	
Ammonia	NH3		0.0	0.0	0.	TONs	
CO - Carbon Monoxide	CO		0.	19.509	19.509	TONs	
Total of Chargable Pollutants					26.4068	TONS	

The following information was developed using Ohio EPA-generated pollutant emission calculations. The values may be provided to USEPA by Ohio EPA as part of Ohio EPA's federal grant commitments. You may modify these pollutant emission calculations, at the process level, if you have more accurate information. There is no certification of these values as part of the emissions report submission. For more information regarding which pollutants are considered Greenhouse Gas Pollutants see Help.

Pollutant	Code	Fugitive Amount	Stack Amount	Total	Units
Carbon Dioxide	CO2	0	28470.07	28,470.1	TONs
Methane	CH4	0	0.545	0.545	TONs
Nitrous Oxide	N2O	0	0.055	0.055	TONs
Acenaphthene	83329	0.	2.09025E-07	2.09025E-07	TONs
Acenaphthylene	208968	0.	2.09025E-07	2.09025E-07	TONs
Acetaldehyde	75070	0.	0.00498994	0.00498994	TONs

Acrolein	107028	0.	0.00429755	0.00429755	TONs
Anthracene	120127	0.	2.787E-07	2.787E-07	TONs
Arsenic	7440382	0.	4.645E-05	4.645E-05	TONs
Benz[A]Anthracene	56553	0.	2.09025E-07	2.09025E-07	TONs
Benzene	71432	0.	4.87725E-04	4.87725E-04	TONs
Benzo[A]Pyrene	50328	0.	1.3935E-07	1.3935E-07	TONs
Benzo[B]Fluoranthene	205992	0.	2.09025E-07	2.09025E-07	TONs
Benzo[G,H,I,]Perylene	191242	0.	2.787E-07	2.787E-07	TONs
Benzo[K]Fluoranthene	207089	0.	2.09025E-07	2.09025E-07	TONs
Beryllium	7440417	0.	1.3935E-06	1.3935E-06	TONs
Cadmium	7440439	0.	2.55475E-04	2.55475E-04	TONs
Chromium	7440473	0.	3.2515E-04	3.2515E-04	TONs
Chrysene	218019	0.	2.09025E-07	2.09025E-07	TONs
Cobalt	7440484	0.	1.9509E-05	1.9509E-05	TONs
Dibenzo[A,H]Anthracene	53703	0.	1.3935E-07	1.3935E-07	TONs
Dimethylbenz[A]Anthracene, 7,12-	57976	0.	1.858E-06	1.858E-06	TONs
Fluoranthene	206440	0.	6.9675E-07	6.9675E-07	TONs
Fluorene	86737	0.	6.503E-07	6.503E-07	TONs
Formaldehyde	50000	0.	0.0174188	0.0174188	TONs
Hexane, N-	110543	0.	0.41805	0.41805	TONs
Indeno[1,2,3-C,D]Pyrene	193395	0.	2.09025E-07	2.09025E-07	TONs
MN - Manganese	7439965	0.	8.8255E-05	8.8255E-05	TONs
Mercury, as HG; Alkyl & Aryl CMPNDS; Elemental & Inorganic Forms	7439976	0.	6.0385E-05	6.0385E-05	TONs
Methylcholanthrene, 3-	56495	0.	2.09025E-07	2.09025E-07	TONs
Methylnaphthalene, 2-	91576	0.	5.574E-06	5.574E-06	TONs
Naphthalene	91203	0.	1.41672E-04	1.41672E-04	TONs
Nickel	7440020	0.	4.87725E-04	4.87725E-04	TONs
Phenanthrene	85018	0.	3.94825E-06	3.94825E-06	TONs
Pyrene	129000	0.	1.16125E-06	1.16125E-06	TONs
Selenium	7782492	0.	2.787E-06	2.787E-06	TONs
Toluene	108883	0.	7.8965E-04	7.8965E-04	TONs

- **Processes**
  - **Process & Emissions Detail**

Name: Z007

Source Classification Code (SCC): 3-90-006-99

- **Material Information, Annual Average Operating Schedule & Throughput Percent**

Schedule Trade Secret:

Hours Per Day: 24
Days Per Week: 7
Weeks Per Year: 52
Hours Per Year: 4000

Winter (Dec - Feb)%: 50
Spring (March-May)%: 23
Summer (June-Aug)%: 16
Fall (Sept-Nov)%: 11

Material	Material Action	Throughput	X Units
Natural Gas	Burned	464.5	MILLION CUBIC FEET

Variable	Amount	Meaning
HCg	1028	Gas Heat Content (Btu/Cubic Feet)

- **Process Emissions**

Pollutant	Code	$	Method Used	Hours UnCont.	UnCont. Factor (LBS/X)	Fugitive Amount	Stack Amount	Total	Units	Explanation
PE (Cond) - Primary PM Condensible Portion Only (All Less than 1 Micron)	PM-CON		emissions: ENG. JUDGEMENT			0.0	0.0	0.	TONs	
SO2 - Sulfur Dioxide	SO2	X	factor:ENG. JUDGEMENT	4000	0.6	0.	0.13935	0.13935	TONs	See attached calculations.
NOx - Nitrogen Oxides	NOX	X	factor:ENG. JUDGEMENT	4000	100	0.	23.225	23.225	TONs	See attached calculations.
Organic	OC	X	factor:ENG	4000	5.5	0.	1.27738	1.27738	TONs	See attached calculations.

Compounds			. JUDGEMENT							
Pb - Lead	7439921	X	emissions: ENG. JUDGEMENT			0.0	0.0	0.	TONs	
PE (Filt) - Primary PM, Filterable Portion Only	PM-FIL	X	factor:ENG . JUDGEMENT	4000	7.6	0.	1.7651	1.7651	TONs	See attached calculations.
PM10 (Filt) - Primary PM10, Filterable Portion Only	PM10-FIL		factor:ENG . JUDGEMENT	4000	7.6	0.	1.7651	1.7651	TONs	See attached calculations.
PM2.5 (FILT) - Primary PM2.5, Filterable Portion Only	PM25-FIL		factor:ENG . JUDGEMENT	4000	7.6	0.	1.7651	1.7651	TONs	See attached calculations.
VOC - Volatile Organic Compounds	VOC		factor:ENG . JUDGEMENT	4000	5.5	0.	1.27738	1.27738	TONs	See attached calculations.
Ammonia	NH3		emissions: ENG. JUDGEMENT			0.0	0.0	0.	TONs	
CO - Carbon Monoxide	CO		factor:ENG . JUDGEMENT	4000	84	0.	19.509	19.509	TONs	See attached calculations.
Total of Chargable Pollutants								26.4068	TONS	

The following information was developed using Ohio EPA-generated pollutant emission calculations. The values may be provided to USEPA by Ohio EPA as part of Ohio EPA's federal grant commitments. You may modify these pollutant emission calculations, at the process level, if you have more accurate information. There is no certification of these values as part of the emissions report submission. For more information regarding which pollutants are considered Greenhouse Gas Pollutants see Help.

- **Process Emissions**

Pollutant	Code	Method Used	Hours UnCont.	UnCont. Factor (LBS/X)	Fugitive Amount	Stack Amount	Total	Units	Explanation
Carbon Dioxide	CO2	emissions: MAT. BALANCE			0	28470.07	28,470.1	TONs	Facility greenhouse gas report. Emissions from all natural gas combustion (lancing and other uses) as well as propane combustion are included here.

Methane	CH4	emissions: MAT. BALANCE			0	0.545	0.545	TONs	Facility greenhouse gas report. Emissions from all natural gas combustion (lancing and other uses) as well as propane combustion are included here.
Nitrous Oxide	N2O	emissions: MAT. BALANCE			0	0.055	0.055	TONs	Facility greenhouse gas report. Emissions from all natural gas combustion (lancing and other uses) as well as propane combustion are included here.
Acenaphthene	83329	factor:OEPA (auto calculate)	4000	9E-07	0.	2.09025E-07	2.09025E-07	TONs	
Acenaphthylene	208968	factor:OEPA (auto calculate)	4000	9E-07	0.	2.09025E-07	2.09025E-07	TONs	
Acetaldehyde	75070	factor:OEPA (auto calculate)	4000	0.0214852	0.	0.00498994	0.00498994	TONs	
Acrolein	107028	factor:OEPA (auto calculate)	4000	0.018504	0.	0.00429755	0.00429755	TONs	
Anthracene	120127	factor:OEPA (auto calculate)	4000	1.2E-06	0.	2.787E-07	2.787E-07	TONs	
Arsenic	7440382	factor:OEPA (auto calculate)	4000	2E-04	0.	4.645E-05	4.645E-05	TONs	
Benz[A]Anthracene	56553	factor:OEPA (auto calculate)	4000	9E-07	0.	2.09025E-07	2.09025E-07	TONs	
Benzene	71432	factor:OEPA (auto calculate)	4000	0.0021	0.	4.87725E-04	4.87725E-04	TONs	
Benzo[A]Pyrene	50328	factor:OEPA (auto calculate)	4000	6E-07	0.	1.3935E-07	1.3935E-07	TONs	
Benzo[B]Fluoranthene	205992	factor:OEPA (auto calculate)	4000	9E-07	0.	2.09025E-07	2.09025E-07	TONs	
Benzo[G,H,I,]Perylene	191242	factor:ENG. JUDGEMENT	4000	1.2E-06	0.	2.787E-07	2.787E-07	TONs	1.2E-06 Emission Factor from AP 42, 5th Edition Volume I, Chapter 1: External Combustion Sources, Section 1.4 Natural Gas Combustion
Benzo[K]Fluoranthene	207089	factor:OEPA (auto calculate)	4000	9E-07	0.	2.09025E-07	2.09025E-07	TONs	

Beryllium	7440417	factor:OEPA (auto calculate)	4000	6E-06	0.	1.3935E-06	1.3935E-06	TONs	
Cadmium	7440439	factor:OEPA (auto calculate)	4000	0.0011	0.	2.55475E-04	2.55475E-04	TONs	
Chromium	7440473	factor:OEPA (auto calculate)	4000	0.0014	0.	3.2515E-04	3.2515E-04	TONs	
Chrysene	218019	factor:OEPA (auto calculate)	4000	9E-07	0.	2.09025E-07	2.09025E-07	TONs	
Cobalt	7440484	factor:OEPA (auto calculate)	4000	8.4E-05	0.	1.9509E-05	1.9509E-05	TONs	
Dibenzo[A,H]Anthracene	53703	factor:OEPA (auto calculate)	4000	6E-07	0.	1.3935E-07	1.3935E-07	TONs	
Dimethylbenz[A]Anthracene, 7,12-	57976	factor:OEPA (auto calculate)	4000	8E-06	0.	1.858E-06	1.858E-06	TONs	
Fluoranthene	206440	factor:OEPA (auto calculate)	4000	3E-06	0.	6.9675E-07	6.9675E-07	TONs	
Fluorene	86737	factor:OEPA (auto calculate)	4000	2.8E-06	0.	6.503E-07	6.503E-07	TONs	
Formaldehyde	50000	factor:OEPA (auto calculate)	4000	0.075	0.	0.0174188	0.0174188	TONs	
Hexane, N-	110543	factor:OEPA (auto calculate)	4000	1.8	0.	0.41805	0.41805	TONs	
Indeno[1,2,3-C,D]Pyrene	193395	factor:OEPA (auto calculate)	4000	9E-07	0.	2.09025E-07	2.09025E-07	TONs	
MN - Manganese	7439965	factor:OEPA (auto calculate)	4000	3.8E-04	0.	8.8255E-05	8.8255E-05	TONs	
Mercury, as HG; Alkyl & Aryl CMPNDS;	7439976	factor:OEPA (auto calculate)	4000	2.6E-04	0.	6.0385E-05	6.0385E-05	TONs	

Elemental & Inorganic Forms									
Methylcholanthrene, 3-	56495	factor:OEPA (auto calculate)	4000	9E-07	0.	2.09025E-07	2.09025E-07	TONs	
Methylnaphthalene, 2-	91576	factor:OEPA (auto calculate)	4000	2.4E-05	0.	5.574E-06	5.574E-06	TONs	
Naphthalene	91203	factor:OEPA (auto calculate)	4000	6.1E-04	0.	1.41672E-04	1.41672E-04	TONs	
Nickel	7440020	factor:OEPA (auto calculate)	4000	0.0021	0.	4.87725E-04	4.87725E-04	TONs	
Phenanthrene	85018	factor:OEPA (auto calculate)	4000	1.7E-05	0.	3.94825E-06	3.94825E-06	TONs	
Pyrene	129000	factor:OEPA (auto calculate)	4000	5E-06	0.	1.16125E-06	1.16125E-06	TONs	
Selenium	7782492	factor:OEPA (auto calculate)	4000	1.2E-05	0.	2.787E-06	2.787E-06	TONs	
Toluene	108883	factor:OEPA (auto calculate)	4000	0.0034	0.	7.8965E-04	7.8965E-04	TONs	

Emission Unit Summary: P901

Apr 18 2018, 15:10:14

Emissions Unit ID: P901

Detailed Reporting

DAPC Description:

- Unit Emissions

Pollutant	Code	$	Fugitive Amount	Stack Amount	Total	Units	QA+
PE (Cond) - Primary PM Condensible Portion Only (All Less than 1 Micron)	PM-CON		0.	59.38	59.38	TONs	
SO2 - Sulfur Dioxide	SO2	X	0.0115	683.274	683.285	TONs	X
NOx - Nitrogen Oxides	NOX	X	0.	392.77	392.77	TONs	X
Organic Compounds	OC	X	0.0764	4.2067	4.2831	TONs	
Pb - Lead	7439921	X	3.82E-06	0.0105044	0.0105082	TONs	
PE (Filt) - Primary PM, Filterable Portion Only	PM-FIL	X	0.9488	28.2718	29.2206	TONs	
PM10 (Filt) - Primary PM10, Filterable Portion Only	PM10-FIL		0.285	28.2718	28.5568	TONs	
PM2.5 (FILT) - Primary PM2.5, Filterable Portion Only	PM25-FIL		0.142	28.2718	28.4138	TONs	
VOC - Volatile Organic Compounds	VOC		0.0764	4.2067	4.2831	TONs	
Ammonia	NH3		0.	0.	0.	TONs	
CO - Carbon Monoxide	CO		0.1069	12.6521	12.759	TONs	
Total of Chargable Pollutants					1,109.57	TONS	

The following information was developed using Ohio EPA-generated pollutant emission calculations. The values may be provided to USEPA by Ohio EPA as part of Ohio EPA's federal grant commitments. You may modify these pollutant emission calculations, at the process level, if you have more accurate information. There is no certification of these values as part of the emissions report submission. For more information regarding which pollutants are considered Greenhouse Gas Pollutants see Help.

Pollutant	Code	Fugitive Amount	Stack Amount	Total	Units
Carbon Dioxide	CO2	0.	453,380.	453,380.	TONs
Benzo[A]Pyrene	50328	7.52e-6	6.768E-5	7.52E-05	TONs
Hydrochloric Acid (Hydrogen Chloride)	7647010	0	27.83	27.83	TONs
Mercury, as HG; Alkyl & Aryl CMPNDS; Elemental & Inorganic Forms	7439976	0	0.052	0.052	TONs

- **Processes**
  - **Process & Emissions Detail**

Name: P901-1

Source Classification Code (SCC): 3-03-003-17

- **Material Information, Annual Average Operating Schedule & Throughput Percent**

Schedule Trade Secret:

Hours Per Day: 24

Days Per Week: 7

Weeks Per Year: 52

Hours Per Year: 8760

Winter (Dec - Feb)%: 25

Spring (March-May)%: 25

Summer (June-Aug)%: 25

Fall (Sept-Nov)%: 25

Material	Material Action	Throughput	X Units
Coal	Charged	763690	TONs

- **Process Emissions**

Pollutant	Code	$	Method Used	Hours UnCont.	UnCont. Factor (LBS/X)	Fugitive Amount	Stack Amount	Total	Units	Explanation
PE (Cond) - Primary PM Condensible Portion Only (All Less than 1 Micron)	PM-CON		emissions: ENG. JUDGEMENT			0.0	59.38	59.38	TONs	See attached calculations.
SO2 - Sulfur Dioxide	SO2	X	emissions: STACK TEST			0.0	672.86	672.86	TONs	See attached calculations.
NOx - Nitrogen Oxides	NOX	X	emissions: STACK TEST			0.0	392.24	392.24	TONs	See attached calculations.
Organic Compounds	OC	X	emissions: ENG. JUDGEMENT			0.0	3.25	3.25	TONs	See attached calculations.
Pb - Lead	7439921	X	emissions: STACK TEST			0.0	0.0060	0.006	TONs	See attached calculations.
PE (Filt) -	PM-FIL	X	emissions:			0.0	20.74	20.74	TONs	See attached calculations.

Primary PM, Filterable Portion Only			STACK TEST							
PM10 (Filt) - Primary PM10, Filterable Portion Only	PM10-FIL		emissions: STACK TEST			0.0	20.74	20.74	TONs	See attached calculations.
PM2.5 (FILT) - Primary PM2.5, Filterable Portion Only	PM25-FIL		emissions: STACK TEST			0.0	20.74	20.74	TONs	See attached calculations.
VOC - Volatile Organic Compounds	VOC		emissions: ENG. JUDGEMENT			0.0	3.25	3.25	TONs	See attached calculations.
Ammonia	NH3		emissions: ENG. JUDGEMENT			0.0	0.0	0.	TONs	
CO - Carbon Monoxide	CO		emissions: STACK TEST			0.0	4.82	4.82	TONs	See attached calculations.
Total of Chargable Pollutants								1,089.1	TONS	

The following information was developed using Ohio EPA-generated pollutant emission calculations. The values may be provided to USEPA by Ohio EPA as part of Ohio EPA's federal grant commitments. You may modify these pollutant emission calculations, at the process level, if you have more accurate information. There is no certification of these values as part of the emissions report submission. For more information regarding which pollutants are considered Greenhouse Gas Pollutants see Help.

- **Process Emissions**

Pollutant	Code	Method Used	Hours UnCont.	UnCont. Factor (LBS/X)	Fugitive Amount	Stack Amount	Total	Units	Explanation
Carbon Dioxide	CO2	emissions: MAT. BALANCE			0.0	447768.7	447,769.	TONs	Facility greenhouse gas report.
Hydrochloric Acid (Hydrogen Chloride)	7647010	emissions: STACK TEST			0	27.83	27.83	TONs	See attached calculations.
Mercury, as HG; Alkyl & Aryl CMPNDS; Elemental &	7439976	emissions: STACK TEST			0	0.052	0.052	TONs	See attached calculations.

Inorganic Forms									

- Process & Emissions Detail

Name: P901-2

Source Classification Code (SCC): 3-03-003-02

- Material Information, Annual Average Operating Schedule & Throughput Percent

Schedule Trade Secret:

Hours Per Day: 24

Days Per Week: 7

Weeks Per Year: 52

Hours Per Year: 8760

Winter (Dec - Feb)%: 25

Spring (March-May)%: 25

Summer (June-Aug)%: 25

Fall (Sept-Nov)%: 25

Material	Material Action	Throughput	X Units
Coal	Charged	763690	TONs

- Process Emissions

Pollutant	Code	$	Method Used	Hours UnCont.	UnCont. Factor (LBS/X)	Fugitive Amount	Stack Amount	Total	Units	Explanation
PE (Cond) - Primary PM Condensible Portion Only (All Less than 1 Micron)	PM-CON		emissions: ENG. JUDGEMENT			0.0	0.0	0.	TONs	
SO2 - Sulfur Dioxide	SO2	X	emissions: STACK TEST			0.0115	0.1035	0.115	TONs	See attached calculations.
NOx - Nitrogen Oxides	NOX	X	emissions: ENG. JUDGEMENT			0.0	0.0	0.	TONs	
Organic Compounds	OC	X	emissions: STACK TEST			0.0764	0.6867	0.7631	TONs	See attached calculations.
Pb - Lead	7439921	X	emissions: ENG. JUDGEMENT			3.82e-06	3.44e-05	3.822E-05	TONs	See attached calculations.
		X								

PE (Filt) - Primary PM, Filterable Portion Only	PM-FIL		emissions: STACK TEST			0.9488	0.3518	1.3006	TONs	See attached calculations.
PM10 (Filt) - Primary PM10, Filterable Portion Only	PM10-FIL		emissions: STACK TEST			0.285	0.3518	0.6368	TONs	See attached calculations.
PM2.5 (FILT) - Primary PM2.5, Filterable Portion Only	PM25-FIL		emissions: STACK TEST			0.142	0.3518	0.4938	TONs	See attached calculations.
VOC - Volatile Organic Compounds	VOC		emissions: STACK TEST			0.0764	0.6867	0.7631	TONs	See attached calculations.
Ammonia	NH3		emissions: ENG. JUDGEMENT			0.0	0.0	0.	TONs	
CO - Carbon Monoxide	CO		emissions: STACK TEST			0.1069	0.9621	1.069	TONs	See attached calculations.
Total of Chargable Pollutants								2.17874	TONS	

The following information was developed using Ohio EPA-generated pollutant emission calculations. The values may be provided to USEPA by Ohio EPA as part of Ohio EPA's federal grant commitments. You may modify these pollutant emission calculations, at the process level, if you have more accurate information. There is no certification of these values as part of the emissions report submission. For more information regarding which pollutants are considered Greenhouse Gas Pollutants see Help.

- **Process Emissions**

Pollutant	Code	Method Used	Hours UnCont.	UnCont. Factor (LBS/X)	Fugitive Amount	Stack Amount	Total	Units	Explanation
Benzo[A]Pyrene	50328	emissions: ENG. JUDGEMENT			7.52e-6	6.768E-5	7.52E-05	TONs	See attached calculations.

- **Process & Emissions Detail**

Name: P901-3

Source Classification Code (SCC): 3-03-003-03

- **Material Information, Annual Average Operating Schedule & Throughput Percent**

Schedule Trade Secret:

Hours Per Day: 24
Days Per Week: 7
Weeks Per Year: 52
Hours Per Year: 8760

Winter (Dec - Feb)%: 25
Spring (March-May)%: 25
Summer (June-Aug)%: 25
Fall (Sept-Nov)%: 25

Material	Material Action	Throughput	X Units
Coal	Charged	763690	TONs

- **Process Emissions**

Pollutant	Code	$	Method Used	Hours UnCont.	UnCont. Factor (LBS/X)	Fugitive Amount	Stack Amount	Total	Units	Explanation
PE (Cond) - Primary PM Condensible Portion Only (All Less than 1 Micron)	PM-CON		emissions: ENG. JUDGEMENT			0.0	0.0	0.	TONs	
SO2 - Sulfur Dioxide	SO2	X	emissions: STACK TEST			0.0	10.31	10.31	TONs	See attached calculations.
NOx - Nitrogen Oxides	NOX	X	emissions: STACK TEST			0.0	0.53	0.53	TONs	See attached calculations.
Organic Compounds	OC	X	emissions: STACK TEST			0.0	0.27	0.27	TONs	See attached calculations.
Pb - Lead	7439921	X	emissions: STACK TEST			0.0	4.47e-03	0.00447	TONs	See attached calculations.
PE (Filt) - Primary PM, Filterable Portion Only	PM-FIL	X	emissions: STACK TEST			0.0	7.18	7.18	TONs	See attached calculations.
PM10 (Filt) - Primary PM10, Filterable Portion Only	PM10-FIL		emissions: STACK TEST			0.0	7.18	7.18	TONs	See attached calculations.
PM2.5 (FILT) -	PM25-		emissions:			0.0	7.18	7.18	TONs	See attached calculations.

Primary PM2.5, Filterable Portion Only	FIL		STACK TEST							
VOC - Volatile Organic Compounds	VOC		emissions: STACK TEST			0.0	0.27	0.27	TONs	See attached calculations.
Ammonia	NH3		emissions: ENG. JUDGEMENT			0.0	0.0	0.	TONs	
CO - Carbon Monoxide	CO		emissions: STACK TEST			0.0	6.87	6.87	TONs	See attached calculations.
Total of Chargable Pollutants								18.2945	TONS	

The following information was developed using Ohio EPA-generated pollutant emission calculations. The values may be provided to USEPA by Ohio EPA as part of Ohio EPA's federal grant commitments. You may modify these pollutant emission calculations, at the process level, if you have more accurate information. There is no certification of these values as part of the emissions report submission. For more information regarding which pollutants are considered Greenhouse Gas Pollutants see Help.

- **Process Emissions**

Pollutant	Code	Method Used	Hours UnCont.	UnCont. Factor (LBS/X)	Fugitive Amount	Stack Amount	Total	Units	Explanation
Carbon Dioxide	CO2	emissions: MAT. BALANCE			0	5611.0	5,611	TONs	Facility greenhouse gas report.

Emission Unit Summary: P902

Apr 18 2018, 15:10:14

Emissions Unit ID: P902

Detailed Reporting

DAPC Description:

- Unit Emissions

Pollutant	Code	$	Fugitive Amount	Stack Amount	Total	Units	QA+
PE (Cond) - Primary PM Condensible Portion Only (All Less than 1 Micron)	PM-CON		0.	10.06	10.06	TONs	
SO2 - Sulfur Dioxide	SO2	X	0.0115	1,191.15	1,191.16	TONs	X
NOx - Nitrogen Oxides	NOX	X	0.	329.543	329.543	TONs	X
Organic Compounds	OC	X	0.0768	3.7022	3.779	TONs	
Pb - Lead	7439921	X	3.84E-06	0.0293346	0.0293384	TONs	
PE (Filt) - Primary PM, Filterable Portion Only	PM-FIL	X	0.955	32.7	33.655	TONs	
PM10 (Filt) - Primary PM10, Filterable Portion Only	PM10-FIL		0.286	32.7	32.986	TONs	
PM2.5 (FILT) - Primary PM2.5, Filterable Portion Only	PM25-FIL		0.143	32.7	32.843	TONs	
VOC - Volatile Organic Compounds	VOC		0.0768	3.7022	3.779	TONs	
Ammonia	NH3		0.	0.	0.	TONs	
CO - Carbon Monoxide	CO		0.1076	10.6684	10.776	TONs	
Total of Chargable Pollutants					1,558.17	TONS	

The following information was developed using Ohio EPA-generated pollutant emission calculations. The values may be provided to USEPA by Ohio EPA as part of Ohio EPA's federal grant commitments. You may modify these pollutant emission calculations, at the process level, if you have more accurate information. There is no certification of these values as part of the emissions report submission. For more information regarding which pollutants are considered Greenhouse Gas Pollutants see Help.

Pollutant	Code	Fugitive Amount	Stack Amount	Total	Units
Carbon Dioxide	CO2	0.	455,998.	455,998.	TONs
Benzo[A]Pyrene	50328	7.57e-6	6.81E-5	7.567E-05	TONs
Hydrochloric Acid (Hydrogen Chloride)	7647010	0	31.073	31.073	TONs
Mercury, as HG; Alkyl & Aryl CMPNDS; Elemental & Inorganic Forms	7439976	0	0.010	0.01	TONs

- **Processes**
  - **Process & Emissions Detail**

Name: P902-1

Source Classification Code (SCC): 3-03-003-17

- **Material Information, Annual Average Operating Schedule & Throughput Percent**

Schedule Trade Secret:

Hours Per Day: 24

Days Per Week: 7

Weeks Per Year: 52

Hours Per Year: 8760

Winter (Dec - Feb)%: 25

Spring (March-May)%: 25

Summer (June-Aug)%: 25

Fall (Sept-Nov)%: 25

Material	Material Action	Throughput	X Units
Coal	Charged	768387	TONs

- **Process Emissions**

Pollutant	Code	$	Method Used	Hours UnCont.	UnCont. Factor (LBS/X)	Fugitive Amount	Stack Amount	Total	Units	Explanation
PE (Cond) - Primary PM Condensible Portion Only (All Less than 1 Micron)	PM-CON		emissions: ENG. JUDGEMENT			0.0	10.06	10.06	TONs	See attached calculations.
SO2 - Sulfur Dioxide	SO2	X	emissions: ENG. JUDGEMENT			0.0	1171.84	1,171.84	TONs	See attached calculations.
NOx - Nitrogen Oxides	NOX	X	emissions: ENG. JUDGEMENT			0.0	328.39	328.39	TONs	See attached calculations.
Organic Compounds	OC	X	emissions: ENG. JUDGEMENT			0.0	2.78	2.78	TONs	See attached calculations.
Pb - Lead	7439921	X	emissions: ENG.			0.0	0.0167	0.0167	TONs	See attached calculations.

			JUDGEMENT							
PE (Filt) - Primary PM, Filterable Portion Only	PM-FIL	X	emissions: ENG. JUDGEMENT			0.0	20.61	20.61	TONs	See attached calculations.
PM10 (Filt) - Primary PM10, Filterable Portion Only	PM10-FIL		emissions: ENG. JUDGEMENT			0.0	20.61	20.61	TONs	See attached calculations.
PM2.5 (FILT) - Primary PM2.5, Filterable Portion Only	PM25-FIL		emissions: ENG. JUDGEMENT			0.0	20.61	20.61	TONs	See attached calculations.
VOC - Volatile Organic Compounds	VOC		emissions: ENG. JUDGEMENT			0.0	2.78	2.78	TONs	See attached calculations.
Ammonia	NH3		emissions: ENG. JUDGEMENT			0.0	0.0	0.	TONs	
CO - Carbon Monoxide	CO		emissions: ENG. JUDGEMENT			0.0	2.40	2.4	TONs	See attached calculations.
Total of Chargable Pollutants								1,523.64	TONS	

The following information was developed using Ohio EPA-generated pollutant emission calculations. The values may be provided to USEPA by Ohio EPA as part of Ohio EPA's federal grant commitments. You may modify these pollutant emission calculations, at the process level, if you have more accurate information. There is no certification of these values as part of the emissions report submission. For more information regarding which pollutants are considered Greenhouse Gas Pollutants see Help.

- **Process Emissions**

Pollutant	Code	Method Used	Hours UnCont.	UnCont. Factor (LBS/X)	Fugitive Amount	Stack Amount	Total	Units	Explanation
Carbon Dioxide	CO2	emissions: MAT. BALANCE			0	450353.2	450,353.	TONs	Facility greenhouse gas report.
Hydrochloric Acid (Hydrogen Chloride)	7647010	emissions: STACK TEST			0	31.073	31.073	TONs	See attached calculations.

Mercury, as HG; Alkyl & Aryl CMPNDS; Elemental & Inorganic Forms	7439976	emissions: CEM			0	0.010	0.01	TONs	Estimated emissions using the mercury sorbent trap monitoring system installed on the P902 main stack and stack test data from the bypass stacks.

- **Process & Emissions Detail**

Name: P902-2

Source Classification Code (SCC): 3-03-003-02

- **Material Information, Annual Average Operating Schedule & Throughput Percent**

Schedule Trade Secret:

Hours Per Day: 24
Days Per Week: 7
Weeks Per Year: 52
Hours Per Year: 8760

Winter (Dec - Feb)%: 25
Spring (March-May)%: 25
Summer (June-Aug)%: 25
Fall (Sept-Nov)%: 25

Material	Material Action	Throughput	X Units
Coal	Charged	768387	TONs

- **Process Emissions**

Pollutant	Code	$	Method Used	Hours UnCont.	UnCont. Factor (LBS/X)	Fugitive Amount	Stack Amount	Total	Units	Explanation
PE (Cond) - Primary PM Condensible Portion Only (All Less than 1 Micron)	PM-CON		emissions: ENG. JUDGEMENT			0.0	0.0	0.	TONs	
SO2 - Sulfur Dioxide	SO2	X	emissions: STACK TEST			0.0115	0.1035	0.115	TONs	See attached calculations.
NOx - Nitrogen Oxides	NOX	X	emissions: ENG. JUDGEMENT			0.0	0.0	0.	TONs	
Organic Compounds	OC	X	emissions: STACK TEST			0.0768	0.6912	0.768	TONs	See attached calculations.

Pb - Lead	7439921	X	emissions: ENG. JUDGEMENT			3.84e-6	3.456e-05	3.84E-05	TONs	See attached calculations.
PE (Filt) - Primary PM, Filterable Portion Only	PM-FIL	X	emissions: STACK TEST			0.955	0.960	1.915	TONs	See attached calculations.
PM10 (Filt) - Primary PM10, Filterable Portion Only	PM10-FIL		emissions: STACK TEST			0.286	0.960	1.246	TONs	See attached calculations.
PM2.5 (FILT) - Primary PM2.5, Filterable Portion Only	PM25-FIL		emissions: STACK TEST			0.143	0.960	1.103	TONs	See attached calculations.
VOC - Volatile Organic Compounds	VOC		emissions: STACK TEST			0.0768	0.6912	0.768	TONs	See attached calculations.
Ammonia	NH3		emissions: ENG. JUDGEMENT			0.0	0.0	0.	TONs	
CO - Carbon Monoxide	CO		emissions: STACK TEST			0.1076	0.9684	1.076	TONs	See attached calculations.
Total of Chargable Pollutants								2.79804	TONS	

-

The following information was developed using Ohio EPA-generated pollutant emission calculations. The values may be provided to USEPA by Ohio EPA as part of Ohio EPA's federal grant commitments. You may modify these pollutant emission calculations, at the process level, if you have more accurate information. There is no certification of these values as part of the emissions report submission. For more information regarding which pollutants are considered Greenhouse Gas Pollutants see Help.

- **Process Emissions**

Pollutant	Code	Method Used	Hours UnCont.	UnCont. Factor (LBS/X)	Fugitive Amount	Stack Amount	Total	Units	Explanation
Benzo[A]Pyrene	50328	emissions: ENG. JUDGEMENT			7.57e-6	6.81E-5	7.567E-05	TONs	See attached calculations.

- **Process & Emissions Detail**

Name: P902-3

Source Classification Code (SCC): 3-03-003-03

- **Material Information, Annual Average Operating Schedule & Throughput Percent**

Schedule Trade Secret:

Hours Per Day: 24

Days Per Week: 7

Weeks Per Year: 52

Hours Per Year: 8760

Winter (Dec - Feb)%: 25

Spring (March-May)%: 25

Summer (June-Aug)%: 25

Fall (Sept-Nov)%: 25

Material	Material Action	Throughput	X Units
Coal	Charged	768387	TONs

- **Process Emissions**

Pollutant	Code	$	Method Used	Hours UnCont.	UnCont. Factor (LBS/X)	Fugitive Amount	Stack Amount	Total	Units	Explanation
PE (Cond) - Primary PM Condensible Portion Only (All Less than 1 Micron)	PM-CON		emissions: ENG. JUDGEMENT			0.0	0.0	0.	TONs	
SO2 - Sulfur Dioxide	SO2	X	emissions: ENG. JUDGEMENT			0.0	19.210	19.21	TONs	See attached calculations.
NOx - Nitrogen Oxides	NOX	X	emissions: ENG. JUDGEMENT			0.0	1.153	1.153	TONs	See attached calculations.
Organic Compounds	OC	X	emissions: ENG. JUDGEMENT			0.0	0.231	0.231	TONs	See attached calculations.
Pb - Lead	7439921	X	emissions: STACK TEST			0.0	1.26e-02	0.0126	TONs	See attached calculations.
PE (Filt) - Primary PM,	PM-FIL	X	emissions: ENG.			0.0	11.13	11.13	TONs	See attached calculations.

Filterable Portion Only			JUDGEMENT							
PM10 (Filt) - Primary PM10, Filterable Portion Only	PM10-FIL		emissions: ENG. JUDGEMENT			0.0	11.13	11.13	TONs	See attached calculations.
PM2.5 (FILT) - Primary PM2.5, Filterable Portion Only	PM25-FIL		emissions: ENG. JUDGEMENT			0.0	11.13	11.13	TONs	See attached calculations.
VOC - Volatile Organic Compounds	VOC		emissions: ENG. JUDGEMENT			0.0	0.231	0.231	TONs	See attached calculations.
Ammonia	NH3		emissions: ENG. JUDGEMENT			0.0	0.0	0.	TONs	
CO - Carbon Monoxide	CO		emissions: ENG. JUDGEMENT			0.0	7.30	7.3	TONs	See attached calculations.
Total of Chargable Pollutants								31.7366	TONS	

The following information was developed using Ohio EPA-generated pollutant emission calculations. The values may be provided to USEPA by Ohio EPA as part of Ohio EPA's federal grant commitments. You may modify these pollutant emission calculations, at the process level, if you have more accurate information. There is no certification of these values as part of the emissions report submission. For more information regarding which pollutants are considered Greenhouse Gas Pollutants see Help.

- **Process Emissions**

Pollutant	Code	Method Used	Hours UnCont.	UnCont. Factor (LBS/X)	Fugitive Amount	Stack Amount	Total	Units	Explanation
Carbon Dioxide	CO2	emissions: MAT. BALANCE			0	5645.2	5,645.2	TONs	Facility greenhouse gas report.

Haverhill 2017 Fee Emissions Report Summary

Emission Unit	Emission Unit ID	Emissions							
		SO_2	NO_x	PM	OC (VOC)	Lead	CO	Hg	HCl
Paved/Unpaved Roadways & Parking Areas	F001			11.03					
Coal & Coke Storage Piles	F002			3.31					
Coal handling, processing, and transfer	F003			4.63					
Coke and breeze, handling, and processing	F004			4.11					
Quench Tower AB	P001			171.83		3.32E-02			
Natural Gas Lances	P011	0.14	23.23	1.77	1.277		19.51		
Waste Gas from Coking (AB Battery)**	P901	672.86	392.24	20.74	3.253	5.96E-03	4.82	0.05	27.83
Charging (AB Battery)**	P901	0.11		1.30	0.764	3.82E-05	1.07		
Pushing (AB Battery)**	P901	10.31	0.53	7.17	0.271	4.47E-03	6.87		
Waste Gas from Coking (CD Battery)**	P902	1171.84	328.39	20.61	2.784	1.67E-02	2.40	0.010	31.07
Charging (CD Battery)**	P902	0.12		1.91	0.768	3.84E-05	1.08		
Pushing (CD Battery)**	P902	19.21	1.15	11.13	0.231	1.26E-02	7.30		
Quench Tower CD	P002			172.89		3.34E-02			
Natural Gas Lances	P012	0.14	23.23	1.77	1.277		19.51		
	Total	1874.72	768.78	434.19	10.63	0.11	62.56	0.06	58.91
Total Chargeable		3088.42							

** Filterable PM only

HCC **CALCULATION SHEET** **Calc. No. F001-1**

Signature: D. Starkweather Date: 4/10/2018 Checked: Date:
Project: Haverhill Coke Company - Fee Emission Report 2017
Subject: Pollutant Emissions Calculations

Purpose
To estimate criteria pollutant emissions due to travel on paved roads by employees, maintenance, lime delivery, coke hauling, breeze removal and FGD dust removal.

Data
1. Use emission factors developed using Section 13.2.1, AP-42 (01/2011), Paved Roads, Equation (2)

$EF\ (lb/VMT) = k * (sL)^{0.91} * (W)^{1.02} * (1-p/4N)$

where: k = constant

	PM	PM_{10}	$PM_{2.5}$
k	0.011	0.0022	0.00054

sL = road surface silt loading (g/sq. meter) , 9.7 for Iron and Steel Industry, Table 13.2.1-3, AP-42 (01/11)
W = mean vehicle weight (tons)
p = number of "wet" days with at least 0.01 in of precipitation during the averaging period
N = number of days in the averaging period (e.g 365 for annual)

2. Controls:
Watering = 80% efficiency (based on Ohio RACM Table 2.1.1-3)

Emission Factors and Calculation:

Fleet average weight:

	Paved Roads				
	Light Duty Vehicles	Medium Duty Vehicles	Heavy Duty Trucks	Emergency Coke Trucks	Total Miles
Percent Use	33.2%	61.5%	5.3%	0.0%	
Vehicle Weight (tons)	2.0	5	27.5	25.0	
Mileage (miles/year)	86,870	160,600	13,862	0	261,332

Paved Roads Fleet average weight (tons/vehicle) = 0.33 *2.0 tons + 0.61 *5.0 tons + 0.053 *27.5 tons + 0.000 *25.0 tons = 5.20

	sL	W	p	N	Paved Roads		
Vehicle	Paved Roads Silt Loading (g/m^2)	Paved Roads Mean Vehicle Weight (tons)	# days with >= 0.01 in. rain in the averaging period	# days in the averaging period	PM Emission Factor (lb/VMT)	PM_{10} Emission Factor (lb/VMT)	$PM_{2.5}$ Emission Factor (lb/VMT)
Fleet Mix	9.7	5.20	140	365	0.422	0.084	0.021

		Paved Roads					
		Uncontrolled Emissions			Controlled Emissions		
Vehicle	Paved Roads Vehicle Miles Traveled (VMT)	PM Emissions (tons/yr)	PM_{10} Emissions (tons/yr)	$PM_{2.5}$ Emissions (tons/yr)	PM Emissions (tons/yr)	PM_{10} Emissions (tons/yr)	$PM_{2.5}$ Emissions (tons/yr)
Fleet Mix	261,332	55.17	11.03	2.71	11.03	2.21	0.54

Total Emissions
PM = 11.03
PM_{10} = 2.21
$PM_{2.5}$ = 0.54

Example calculations
PM Emissions (tons/yr) = VMT * PM EF (lb/VMT) * (ton/2000 lb) * (1 - control efficiency)
= 261,332 VMT * 0.422 lb/VMT * ton/2000 lb * (1 - 0.80)
= 11.03 tons PM/yr

PM_{10} Emissions (tons/yr) = VMT * PM_{10} EF (lb/VMT) * (ton/2000 lb) * (1 - control efficiency)
= 261,332 VMT * 0.084 lb/VMT * ton/2000 lb * (1 - 0.80)
= 2.21 tons PM_{10}/yr

$PM_{2.5}$ Emissions (tons/yr) = VMT * $PM_{2.5}$ EF (lb/VMT) * (ton/2000 lb) * (1 - control efficiency)
= 261,332 VMT * 0.021 lb/VMT * ton/2000 lb * (1 - 0.80)
= 0.54 tons $PM_{2.5}$yr

Signature: D. Starkweather Date: 4/10/2018 Checked: Date:
Project: Haverhill Coke Company - Fee Emission Report 2017
Subject: Pollutant Emissions Calculations

Purpose
To estimate criteria pollutant emissions from the coal storage piles.
(Includes coal load-in, fugitives from the pile itself, and coal loadout)
Emissions are broken down by part.
Total emissions for all storage piles included in Calc F002-3.

Part I. Coal Load-In

Purpose
To estimate criteria pollutant emissions due to coal load-in.

Basis
Two storage piles (Open storage pile, Domed storage pile)
Alternate storage in coal bins instead of dome

Total number of coal transfer points =	2	enclosed transfer points	(Coal Transfer Points For Coal Bins)
	1	partial control	(Open Storage Pile)
	1	enclosed	(Domed Storage Pile)
Actual annual coal charge =	1,532,077	tons wet coal/yr P901+P902	

Assumptions
Coal load in to Open storage pile and Domed storage pile (or bins)
Assume Open storage pile coal load-in is a partially controlled transfer point (wet material & reduced drop)

Control efficiency for controlled (wet material & reduced drop) points =	70%	(estimated from Ohio RACM Table 2.2.1-2)
Control efficiency for fully enclosed points =	95%	(estimated from Ohio RACM Table 2.2.1-2)

Calculation
Use emission factors for coal handling from AP-42, 5th edition, Section 13.2.4 Equation (1)

$EF\ (lb/ton) = k * 0.0032 * (U/5)^{1.3}/(M/2)^{1.4}$

where:

k, particle size multiplier for PM =	0.74	(from AP-42, 5th edition)
k, particle size multiplier for PM_{10} =	0.35	(from AP-42, 5th edition)
k, particle size multiplier for $PM_{2.5}$ =	0.053	(from AP-42, 5th edition)
U, mean wind speed =	6.6	mph (for Huntington, WV)
M, moisture content =	4.8	% (for coal - max for equation)

PM EF (lb/ton coal) =	0.00100
PM_{10} EF (lb/ton coal) =	0.00047
$PM_{2.5}$ EF (lb/ton coal) =	0.000071

Actual emissions estimation:

PM (tons/yr) = PM EF * # transfer points * tons coal transferred * (1 - control efficiency/100)
= (0.0010 lb/ton coal) * (number transfer points) * (tons coal handled) * (ton/2000 lb) * (1 - control efficiency/100)

=	0.229	tons PM/yr	for the Open storage pile coal transfer and load-in
=	0.115	tons PM/yr	for the Domed storage pile or coal bin coal transfer and load-in

PM_{10} (tons/yr) = PM_{10} EF * # transfer points * tons coal transferred * (1 - control efficiency / 100)
= (0.00047 lb/ton coal) * (number enclosed transfer points) * (tons coal handled) * (ton/2000 lb) * (1- control efficiency / 100)

=	0.108	tons PM_{10}/yr	for the Open storage pile coal transfer and load-in
=	0.054	tons PM_{10}/yr	for the Domed storage pile or coal bin coal transfer and load-in

$PM_{2.5}$ (tons/yr) = $PM_{2.5}$ EF * # transfer points * tons coal transferred * (1 - control efficiency / 100)
= (0.000071 lb/ton coal) * (number enclosed transfer points) * (tons coal handled) * (ton/2000 lb) * (1- control efficiency / 100)

=	0.016	tons $PM_{2.5}$/yr	for the Open storage pile coal transfer and load-in
=	0.008	tons $PM_{2.5}$/yr	for the Domed storage pile or coal bin coal transfer and load-in

Signature: D. Starkweather Date: 4/10/2018 Checked: Date:
Project: Haverhill Coke Company - Fee Emission Report 2017
Subject: Pollutant Emissions Calculations

Part II. Coal Storage Piles

Purpose
To estimate criteria pollutant emissions from the coal storage piles.

Basis

Total Coal Storage acres =	1.5 acre	1 Open Storage Pile
	1 acre	1 Domed Storage Pile

Assumptions

Number days pile worked in =	365	days
Control efficiency for Open storage pile =	50%	(watering)
Control efficiency for Domed storage pile =	95%	(enclosure)

Calculation
Use emission factors for storage pile fugitive emissions from AP-40, Section 4, Fugitive Emissions, p. 136, Equation (5)

EF (lb/day/acre) = k * 1.7 * (s/1.5) * ((365-p)/235) * (f/15)

where:

k, particle size multiplier for PM =	1		
k, particle size multiplier for PM_{10} =	0.5		
k, particle size multiplier for $PM_{2.5}$ =	0.075		
s, silt content for coal =	4.6	% (from AP-42, 5th edition, Table 13.2.4-1)	
f, percentage of time that the unobstructed wind speed exceeds ≥5.4 m/s at mean pile height =			24
p, number of days with ≥0.01 inch of precipitation per year =	140	days	
(for Haverhill, Ohio from AP-42, 5th edition, Figure 13.2.2-1)			

PM EF (lb/day/acre) =	7.99
PM_{10} EF (lb/day/acre) =	3.99
$PM_{2.5}$ EF (lb/day/acre) =	0.60

Actual annual emissions:

PM (tons/yr) = PM EF * Acres of pile * days pile worked in * (1 - control efficiency / 100)
= (7.99 lb/day/acre) * (acres) * (365 days/yr) * (ton/2000 lb) * (1-control efficiency/100)

=	1.09	tons PM/yr	for Open storage pile
=	0.07	tons PM/yr	for Domed storage pile

PM_{10} (tons/yr) = PM_{10} EF * Acres of pile * days pile worked in * (1-control efficiency/100)
= (3.99 lb/day/acre) * (acre) * (365 days/yr) * (ton/2000 lb) * (1-efficiency/100)

=	0.55	tons PM_{10}/yr	for Open storage pile
=	0.04	tons PM_{10}/yr	for Domed storage pile

$PM_{2.5}$ (tons/yr) = $PM_{2.5}$ EF * Acres of pile * days pile worked in * (1-control efficiency/100)
= (0.60 lb/day/acre) * (acre) * (365 days/yr) * (ton/2000 lb) * (1-efficiency/100)

=	0.08	tons $PM_{2.5}$/yr	for Open storage pile
=	0.005	tons $PM_{2.5}$/yr	for Domed storage pile

HCC **CALCULATION SHEET** **Calc. No. F002-1**

Signature: D. Starkweather Date: 4/10/2018 Checked: Date:
Project: Haverhill Coke Company - Fee Emission Report 2017
Subject: Pollutant Emissions Calculations

Part III. Coal Loadout

Purpose
To estimate criteria pollutant emissions due to coal loadout.

Basis
Two storage piles (Open storage pile, Domed storage pile)
Total number of coal transfer points = 1 each (Open storage pile, Domed storage pile or Bins)
Annual annual coal charge = 1,532,077 tons wet coal/yr

Assumptions
Two storage piles (Open storage pile, Domed storage pile alternate storage in coal bins instead of dome)
Assume coal load out to be from conveyor
Control efficiency for load out using Underpile converyor = 95%

Calculation
Use emission factors for coal handling from AP-42, 5th edition, Table 13.2.4-1 Equation (1)

$EF\ (lb/ton) = k * 0.0032 * (U/5)^{1.3}/(M/2)^{1.4}$

where:
k, particle size multiplier for PM = 0.74 (from AP-42, 5th edition)
k, particle size multiplier for PM_{10} = 0.35 (from AP-42, 5th edition)
k, particle size multiplier for $PM_{2.5}$ = 0.053 (from AP-42, 5th edition)
U, mean wind speed = 6.6 mph (for Huntington, WVa)
M, moisture content = 4.8 % (for coal - max for equation)

PM EF (lb/ton coal) = 0.00100
PM_{10} EF (lb/ton coal) = 0.00047
$PM_{2.5}$ EF (lb/ton coal) = 0.00007

Actual emissions estimation:

PM (tons/yr) = PM EF * # transfer points * tons coal transferred * (1 - control efficiency/100)
= (EF lb/ton coal) * (number transfer points) * (tons coal handled) * (ton/2000 lb) * (1 - efficiency/100)
= 0.0382 tons PM/yr for Open storage pile
= 0.0382 tons PM/yr for Domed storage pile or Bins

PM_{10} (tons/yr) = PM_{10} EF * # transfer points * tons coal transferred * (1 - control efficiency/100)
= (EF lb/ton coal) * (number transfer points) * (tons coal handled) * (ton/2000 lb) * (1- efficiency/100)
= 0.0181 tons PM_{10}/yr for Open storage pile
= 0.0181 tons PM_{10}/yr for Domed storage pile or Bins

$PM_{2.5}$ (tons/yr) = $PM_{2.5}$ EF * # transfer points * tons coal transferred * (1 - control efficiency/100)
= (EF lb/ton coal) * (number transfer points) * (tons coal handled) * (ton/2000 lb) * (1- efficiency/100)
= 0.0027 tons $PM_{2.5}$/yr for Open storage pile
= 0.0027 tons $PM_{2.5}$/yr for Domed storage pile or Bins

Part IV. Total Coal Emissions:

Open Storage Pile
PM (tons/yr) = coal load-in (tons/yr) + coal pile (tons/yr) + coal loadout (tons/yr)
= 1.361 tons PM/yr total

PM_{10} (tons/yr) = coal load-in (tons/yr) + coal pile (tons/yr) + coal loadout (tons/yr)
= 0.673 tons PM_{10}/yr total

$PM_{2.5}$ (tons/yr) = coal load-in (tons/yr) + coal pile (tons/yr) + coal loadout (tons/yr)
= 0.101 tons $PM_{2.5}$/yr total

Domed Storage Pile (or bins) and Transfer
PM (tons/yr) = coal load-in (tons/yr) + coal pile (tons/yr) + coal loadout (tons/yr)
= 0.226 tons PM/yr total

PM_{10} (tons/yr) = coal load-in (tons/yr) + coal pile (tons/yr) + coal loadout (tons/yr)
= 0.109 tons PM_{10}/yr total

$PM_{2.5}$ (tons/yr) = coal load-in (tons/yr) + coal pile (tons/yr) + coal loadout (tons/yr)
= 0.016 tons $PM_{2.5}$/yr total

HCC **CALCULATION SHEET** **Calc. No. F002-2**

Signature: D. Starkweather Date: 4/10/2018 Checked: Date:
Project: Haverhill Coke Company - Fee Emission Report 2017
Subject: Pollutant Emissions Calculations

Purpose
To estimate criteria pollutant emissions from coke storage piles.
(Includes coke load-in, fugitives from the pile itself, and coke loadout.)
Emissions for each are broken down by part.

Basis

Run of plant coke storage =	1 acres	Open Pile Tower 2	
	1.3 acres	Open Pile Tower 1	
	2.1 acres	Emergency Pile	(the total area permitted for this pile is 15 acres, but a smaller area was used for coke storage in 2017)

Part I. Coke Load-In

Purpose
To estimate criteria pollutant emissions due to coke loading into coke storage piles.

Basis

Total number of coke transfer points* =		1	Pile Tower 1 or Tower 2
Actual annual coal charge =		1,532,077	tons wet coal/yr
	=	1,106,284	tons wet coke+breeze/yr

*Note: Load-in and Load-out of emergency pile counted in F004 calculations.

Assumptions
Assume 1 load-in transfer point at Tower 1 or Tower 2.
Control efficiency for partially controlled points = 70% (based on Ohio RACM Table 2.2.1-2 for coke handling)

Calculation
Use emission factors for coal handling from AP-42, 5th edition, p.13.2.4-1 Equation (1)

$EF\ (lb/ton) = k * 0.0032 * (U/5)^{1.3}/(M/2)^{1.4}$

where:

k, particle size multiplier for PM =	0.74	(from AP-42, 5th edition)
k, particle size multiplier for PM_{10} =	0.35	(from AP-42, 5th edition)
k, particle size multiplier for $PM_{2.5}$ =	0.053	(from AP-42, 5th edition)
U, mean wind speed =	6.6	mph (for Huntington, WVa)
M, moisture content =	4.8	%

PM EF (lb/ton coke) =	0.00100
PM_{10} EF (lb/ton coke) =	0.00047
$PM_{2.5}$ EF (lb/ton coke) =	0.00007

Actual emissions estimation:

PM (tons/yr) = PM EF * # transfer points * tons coke transferred * (1 - control efficiency/100)
= (0.00100 lb/ton coke) * [(1 transfer points) * (tons coke handled/transfer point)] * (ton/2000 lb) * (1 - efficiency/100)
= 0.165 tons PM/yr

PM_{10} (tons/yr) = PM_{10} EF * # transfer points * tons coke transferred * (1 - control efficiency)
= (0.00047 lb/ton coke) * [(1 transfer points) * (tons coke handled/transfer point)] * (ton/2000 lb) * (1 - efficiency/100)
= 0.078 tons PM_{10}/yr

$PM_{2.5}$ (tons/yr) = PM_{10} EF * # transfer points * tons coke transferred * (1 - control efficiency)
= (0.00007 lb/ton coke) * [(1 transfer points) * (tons coke handled/transfer point)] * (ton/2000 lb) * (1 - efficiency/100)
= 0.012 tons $PM_{2.5}$/yr

Signature: D. Starkweather Date: 4/10/2018 Checked: Date:
Project: Haverhill Coke Company - Fee Emission Report 2017
Subject: Pollutant Emissions Calculations

Part II. Coke Pile

Purpose
To estimate emissions due to the coke storage piles.

Assumptions
Number days pile worked in = 365 days

Calculation
Use emission factors for storage pile fugitive emissions from AP-40, Section 4, Fugitive Emissions, p. 136, Equation (5)

EF (lb/day/acre) = k * 1.7 * (s/1.5) * ((365-p)/235) * (f/15)

where:

k, particle size multiplier for PM =	1
k, particle size multiplier for PM_{10} =	0.5
k, particle size multiplier for $PM_{2.5}$ =	0.075
s, silt content for coke =	1 %
f, percentage of time that the unobstructed wind speed exceeds ≥5.4 m/s at mean pile height =	24 %
p, number of days with ≥0.01 inch of precipitation per year = (for Haverhill, Ohio from AP-42, 5th edition, Figure 13.2.2-1)	140 days

PM EF (lb/day/acre) =	1.74
PM_{10} EF (lb/day/acre) =	0.87
$PM_{2.5}$ EF (lb/day/acre) =	0.13

Actual emissions estimation:

PM (tons/yr) = PM EF * Acres of pile * days pile worked in
= (1.74 lb/day/acre) * (acres) * (365 days/yr) * (ton/2000 lb)

=	0.317	tons PM/yr	Open Pile Tower 2
=	0.412	tons PM/yr	Open Pile Tower 1
=	0.666	tons PM/yr	Emergency Pile

PM_{10} (tons/yr) = PM_{10} EF * Acres of pile * days pile worked in
= (0.87 lb/day/acre) * (acres) * (365 days/yr) * (ton/2000 lb)

=	0.158	tons PM_{10}/yr	Open Pile Tower 2
=	0.206	tons PM_{10}/yr	Open Pile Tower 1
=	0.333	tons PM_{10}/yr	Emergency Pile

$PM_{2.5}$ (tons/yr) = $PM_{2.5}$ EF * Acres of pile * days pile worked in
= (0.13 lb/day/acre) * (acres) * (365 days/yr) * (ton/2000 lb)

=	0.024	tons $PM_{2.5}$/yr	Open Pile Tower 2
=	0.031	tons $PM_{2.5}$/yr	Open Pile Tower 1
=	0.050	tons $PM_{2.5}$/yr	Emergency Pile

Signature: D. Starkweather Date: 4/10/2018 Checked: Date:
Project: Haverhill Coke Company - Fee Emission Report 2017
Subject: Pollutant Emissions Calculations

Part III. Coke Loadout from pile.

Purpose
To estimate criteria pollutant emissions due to coke loadout from coke storage piles.

Basis

Total number of coke transfer points =	1	at Tower 1 or Tower 2
Actual annual coal charge =	1,532,077	tons wet coal/yr
=	1,106,284	tons wet coke+breeze/yr

*Note: Load-in and Load-out of emergency pile counted in F004 calculations.

Assumptions
Control efficiency for partially controlled (wet material & reduced drop height) points
(Open pile at Tower #1 or Tower #2) = 70% (based on Ohio RACM Table 2.2.1-2)

Calculation
Use emission factors for coal handling from AP-42, 5th edition, p.13.2.4-1 Equation (1)

$EF\ (lb/ton) = k * 0.0032 * (U/5)^{1.3}/(M/2)^{1.4}$

where:

k, particle size multiplier for PM =	0.74	(from AP-42, 5th edition)
k, particle size multiplier for PM_{10} =	0.35	(from AP-42, 5th edition)
k, particle size multiplier for $PM_{2.5}$ =	0.053	(from AP-42, 5th edition)
U, mean wind speed =	6.6	mph (for Huntington, WVa)
M, moisture content =	4.8	%

PM EF (lb/ton coke) =	0.00100
PM_{10} EF (lb/ton coke) =	0.00047
$PM_{2.5}$ EF (lb/ton coke) =	0.00007

Actual emissions estimation:

PM (tons/yr) = PM EF * # transfer points * tons coke transferred * (1 - control efficiency/100)
= (EF lb/ton coke) * [(# transfer points) * (tons coke handled/transfer point)] * (ton/2000 lb) * (1 - efficiency/100)
= 0.165 tons PM/yr

PM_{10} (tons/yr) = PM_{10} EF * # transfer points * tons coke transferred * (1 - control efficiency/100)
= (EF lb/ton coke) * [(# transfer points) * (tons coke handled/transfer point)] * (ton/2000 lb) * (1 - efficiency/100)
= 0.078 tons PM_{10}/yr

$PM_{2.5}$ (tons/yr) = $PM_{2.5}$ EF * # transfer points * tons coke transferred * (1 - control efficiency/100)
= (EF lb/ton coke) * [(# transfer points) * (tons coke handled/transfer point)] * (ton/2000 lb) * (1 - efficiency/100)
= 0.012 tons $PM_{2.5}$/yr

Part IV - Total Emissions from Coke Loadin, Coke Pile, and Coke Loadout from Pile:

Annual Emissions:

PM (tons/yr) =	1.726	tons PM/yr
PM_{10} (tons/yr) =	0.854	tons PM_{10}/yr
$PM_{2.5}$ (tons/yr) =	0.13	tons $PM_{2.5}$/yr

HCC **CALCULATION SHEET** **Calc. No. F002-3**

Signature: D. Starkweather Date: 4/10/2018 Checked: Date:
Project: Haverhill Coke Company - Fee Emission Report 2017
Subject: Pollutant Emissions Calculations

Purpose
To estimate criteria pollutant emissions for F002 - Coal and Coke Storage Piles.

PM

Total Coal Storage Piles	=	1.586	tons PM/yr	(from Calculation No. 1)
Total Coke Storage Piles	=	1.726	tons PM/yr	(from Calculation No. 2)
Total F002 Emissions		**3.31**	tons PM/yr	

PM_{10}

Total Coal Storage Piles	=	0.782	tons PM_{10}/yr	(from Calculation No. 1)
Total Coke Storage Piles	=	0.854	tons PM_{10}/yr	(from Calculation No. 2)
Total F002 Emissions		**1.64**	tons PM_{10}/yr	

$PM_{2.5}$

Total Coal Storage Piles	=	0.118	tons $PM_{2.5}$/yr	(from Calculation No. 1)
Total Coke Storage Piles	=	0.128	tons $PM_{2.5}$/yr	(from Calculation No. 2)
Total F002 Emissions		**0.25**	tons $PM_{2.5}$/yr	

HCC **CALCULATION SHEET** **Calc. No. F003-1**

Signature: D. Starkweather Date: 4/10/2018 Checked: Date:
Project: Haverhill Coke Company - Fee Emission Report 2017
Subject: Pollutant Emissions Calculations

Purpose
To estimate criteria pollutant emissions due to coal unloading.

Basis
Total number of coal transfer points = 1
Actual annual coal charge = 1,532,077 tons wet coal/yr

Control method: Partial enclosure and wet suppression. Control efficiency = 70%
(based on Ohio RACM Table 2.2.1-2)

Calculation
Use emission factors for coal handling from AP-42, 5th edition, Table 13.2.4-1 Equation (1)

$EF\ (lb/ton) = k * 0.0032 * (U/5)^{1.3}/(M/2)^{1.4}$

where:

k, particle size multiplier for PM =	0.74	(from AP-42, 5th edition)
k, particle size multiplier for PM_{10} =	0.35	(from AP-42, 5th edition)
k, particle size multiplier for $PM_{2.5}$ =	0.053	(from AP-42, 5th edition)
U, mean wind speed =	6.6	mph (for Huntington, WVa)
M, moisture content =	4.8	% (for coal - max for equation)

PM EF (lb/ton coal) =	0.00100
PM_{10} EF (lb/ton coal) =	0.00047
$PM_{2.5}$ EF (lb/ton coal) =	0.00007

Actual emissions estimation:

PM (tons/yr) = PM EF * # transfer points * tons coal transferred * (1 - control efficiency/100) *(ton/2000 lb)
= (0.0010 lb/ton coal) * [(number transfer points) * (tons coal handled/transfer point)] * (ton/2000 lb) * (1-control efficiency /100)
= 0.23 tons PM/yr

PM_{10} (tons/yr) = PM_{10} EF * # transfer points * tons coal transferred * (100% - control efficiency)/100% * (ton/2000 lb)
= (0.00047 lb/ton coal) * [(number transfer points) * (tons coal handled/transfer point)] * (ton/2000 lb) * (1-control efficiency / 100)
= 0.11 tons PM_{10}/yr

$PM_{2.5}$ (tons/yr) = $PM_{2.5}$ EF * # transfer points * tons coal transferred * (100% - control efficiency)/100% * (ton/2000 lb)
= (0.00007 lb/ton coal) * [(number transfer points) * (tons coal handled/transfer point)] * (ton/2000 lb) * (1-control efficiency / 100)
= 0.016 tons $PM_{2.5}$/yr

HCC **CALCULATION SHEET** **Calc. No. F003-2**

Signature: D. Starkweather Date: 4/10/2018 Checked: Date:
Project: Haverhill Coke Company - Fee Emission Report 2017
Subject: Pollutant Emissions Calculations

Purpose
To estimate criteria pollutant emissions due to coal handling and sizing.

Basis
Total number of coal transfer points = 21 enclosed = 15 unc. = 6
Actual annual coal charge = 1,532,077 tons wet coal/yr
Number of fully enclosed points = 15

Assumptions
Control eff. for fully enclosed transfer points for PM and PM_{10} = 95% (estimated from Ohio RACM Table 2.2.1-2)
Control eff. for fully enclosed coal sizing operations for PM and PM_{10} = 99% (estimated from AP-40 and Ohio RACM)

Calculation
Use emission factors for coal handling from AP-42, 5th edition, Table 13.2.4-1 Equation (1)

$EF\ (lb/ton) = k * 0.0032 * (U/5)^{1.3}/(M/2)^{1.4}$

where:
k, particle size multiplier for PM = 0.74 (from AP-42, 5th edition)
k, particle size multiplier for PM_{10} = 0.35 (from AP-42, 5th edition)
k, particle size multiplier for $PM_{2.5}$ = 0.053 (from AP-42, 5th edition)
U, mean wind speed = 6.6 mph (for Huntington, WV)
M, moisture content = 4.8 % (for coal - max for equation)

PM EF (lb/ton coal) = 0.00100 for Coal Handling
PM_{10} EF (lb/ton coal) = 0.00047 for Coal Handling
$PM_{2.5}$ EF (lb/ton coal) = 0.00007 for Coal Handling

Use emission factors for coal sizing from AP-42, Coal Processing Section, Table 1 (same as RACM)

PM EF (lb/ton coal) = 0.16 for Coal Sizing
PM_{10} EF (lb/ton coal) = 0.08 for Coal Sizing (PM_{10} assumed to be 50% of PM)
$PM_{2.5}$ EF (lb/ton coal) = 0.024 for Coal Sizing ($PM_{2.5}$ assumed to be 15% of PM)

PM Emissions estimation for Coal Handling

No. points	Throughput	Efficiency	Emissions ton/yr
11	100%	95%	0.420
1	100%	0%	0.764
4	50%	95%	0.076
5	50%	0%	1.910
Total			3.171

PM Emissions estimation for Coal Sizing

No. points	Efficiency	Emissions ton/yr
1	99%	1.226
Total		1.226

PM_{10} Emissions estimation for Coal Handling

No. points	Throughput	Efficiency	Emissions ton/yr
11	100%	95%	0.199
1	100%	0%	0.361
4	50%	95%	0.036
5	50%	0%	0.903
Total			1.500

PM_{10} Emissions estimation for Coal Sizing

No. points	Efficiency	Emissions ton/yr
1	99%	0.613
Total		0.613

$PM_{2.5}$ Emissions estimation for Coal Handling

No. points	Throughput	Efficiency	Emissions ton/yr
11	100%	95%	0.030
1	100%	0%	0.055
4	50%	95%	0.005
5	50%	0%	0.137
Total			0.227

$PM_{2.5}$ Emissions estimation for Coal Sizing

No. points	Efficiency	Emissions ton/yr
1	99%	0.184
Total		0.184

HCC **CALCULATION SHEET** **Calc. No. F003-3**

Signature: D. Starkweather Date: 4/10/2018 Checked: Date:
Project: Haverhill Coke Company - Fee Emission Report 2017
Subject: Pollutant Emissions Calculations

Purpose
To estimate criteria pollutant emissions for F003 - Coal handling, processing, and transfer.

PM

Total Coal Unloading	0.229	tons PM/yr	(from Calculation No. 1)
Total Coal Sizing & Handling	4.396	tons PM/yr	(from Calculation No. 2)
Total F003 Emissions	**4.63**	tons PM/yr	

PM_{10}

Total Coal Unloading	0.108	tons PM_{10}/yr	(from Calculation No. 1)
Total Coal Sizing & Handling	2.112	tons PM_{10}/yr	(from Calculation No. 2)
Total F003 Emissions	**2.22**	tons PM_{10}/yr	

$PM_{2.5}$

Total Coal Unloading	0.016	tons $PM_{2.5}$/yr	(from Calculation No. 1)
Total Coal Sizing & Handling	0.411	tons $PM_{2.5}$/yr	(from Calculation No. 2)
Total F003 Emissions	**0.43**	tons $PM_{2.5}$/yr	

HCC **CALCULATION SHEET** **Calc. No. F004-1**

Signature: D. Starkweather Date: 4/10/2018 Checked: Date:
Project: Haverhill Coke Company - Fee Emission Report 2017
Subject: Pollutant Emissions Calculations

Purpose

To estimate criteria pollutant emissions due to coke crushing and screening. The emissions are controlled by a baghouse and are emitted through the baghouse exhaust stack.

Basis

$PM/PM_{10}/PM_{2.5}$ (controlled, lb/hr)	=	0.42	(Haverhill Test Data, Jan 06)	
$PM/PM_{10}/PM_{2.5}$ (uncontrolled, lb/hr)		21.00	Estimated using controlled EF & F004 Baghouse PM removal efficiency c	
2017 Total Operating Hours	=	5,840	hours	(Based on 16 hour Production Cycles)
# APCD malfunction/deviation hours =		0.28	hours	
# Normal operating hours =		5839.72	hours	

Actual emissions estimation:

$PM/PM_{10}/PM_{2.5}$ during Normal Operation

$PM/PM_{10}/PM_{2.5}$ (tons/yr) = (lb $PM/PM_{10}/PM_{2.5}$/hr) * (ton/2000 lb) * (normal operating hrs/yr)

= 1.23 tons $PM/PM_{10}/PM_{2.5}$/yr

$PM/PM_{10}/PM_{2.5}$ during APCD Malfunction/Deviations

$PM/PM_{10}/PM_{2.5}$ (tons/yr) = (lb $PM/PM_{10}/PM_{2.5}$/hr) * (ton/2000 lb) * (APCD malfunction/deviation hrs/yr)

= 0.00 tons $PM/PM_{10}/PM_{2.5}$/yr

$PM/PM_{10}/PM_{2.5}$ (tons/yr) = (lb $PM/PM_{10}/PM_{2.5}$/hr) * (ton/2000 lb) * (operating hrs/yr)

= 1.23 tons $PM/PM_{10}/PM_{2.5}$/yr

HCC **CALCULATION SHEET** **Calc. No. F004-2**

Signature: D. Starkweather Date: 4/10/2018 Checked: Date:
Project: Haverhill Coke Company - Fee Emission Report 2017
Subject: Pollutant Emissions Calculations

Purpose
To estimate criteria pollutant emissions due to coke and breeze handling.

Basis

Total number of coke transfer points =		10	
Number of enclosed transfer points =		4	
Actual annual coal charge =		1,532,077	tons wet coal/yr
	=	1,106,284	tons wet coke + breeze/yr
Emergency Coke Pile			
Total number of coke transfer points =		4	
Number of enclosed transfer points =		0	
Coke tons (emergency pile) =		-	tons run of oven coke

Assumptions
Control efficiency for enclosed points = 70% (based on Ohio RACM Table 2.2.1-2)

Calculation
Use emission factors for coal handling from AP-42, 5th edition, p.13.2.4-1 Equation (1)

$EF\ (lb/ton) = k * 0.0032 * (U/5)^{1.3}/(M/2)^{1.4}$

where:

k, particle size multiplier for PM =	0.74	(from AP-42, 5th edition)
k, particle size multiplier for PM_{10} =	0.35	(from AP-42, 5th edition)
k, particle size multiplier for $PM_{2.5}$ =	0.053	(from AP-42, 5th edition)
U, mean wind speed =	6.6	mph (for Huntington, WVa)
M, moisture content =	4.8	%

PM EF (lb/ton coke) =	0.00100
PM_{10} EF (lb/ton coke) =	0.00047
$PM_{2.5}$ EF (lb/ton coke) =	0.00007

PM Emissions

No. points	Throughput	Efficiency	Emissions tons/yr
2	100%	70%	0.331
2	50%	70%	0.165
2	100%	0%	1.103
4	50%	0%	1.103
Total			2.703

Emergency Coke Pile PM Emissions

No. points	Throughput	Efficiency	Emissions tons/yr
4	100%	0%	0.000
Total			0.000

PM_{10} Emissions

No. points	Throughput	Efficiency	Emissions tons/yr
2	100%	70%	0.157
2	50%	70%	0.078
2	100%	0%	0.522
4	50%	0%	0.522
Total			1.279

PM_{10} Emissions

No. points	Throughput	Efficiency	Emissions tons/yr
4	100%	0%	0.000
Total			0.000

$PM_{2.5}$ Emissions

No. points	Throughput	Efficiency	Emissions tons/yr
2	100%	70%	0.024
2	50%	70%	0.012
2	100%	0%	0.079
4	50%	0%	0.079
Total			0.194

$PM_{2.5}$ Emissions

No. points	Throughput	Efficiency	Emissions tons/yr
4	100%	0%	0.000
Total			0.000

HCC **CALCULATION SHEET** **Calc. No. F004-3**

Signature: D. Starkweather Date: 4/10/2018 Checked: Date:
Project: Haverhill Coke Company - Fee Emission Report 2017
Subject: Pollutant Emissions Calculations

Purpose
To estimate criteria pollutant emissions due to the coke breeze bunker.

Basis
Total number of coke transfer points = 2
Coke breeze = 53,603 tons wet breeze/yr

Assumptions
Assume coke bunker emissions are the same as emissions from two coke transfer points.
The two transfer points represent the loadin and loadout since emissions occur at those times.
Emissions from the bunker are negligible when loadin and loadout are not occuring due to the enclosure.
Control efficiency for enclosed points = 70% (estimated from Ohio RACM Table 2.2.1-2)

Calculation
Use emission factors for coke handling from AP-42, 5th edition, p.13.2.4-1 Equation (1)

$EF\ (lb/ton) = k * 0.0032 * (U/5)^{1.3}/(M/2)^{1.4}$

where:
k, particle size multiplier for PM = 0.74 (from AP-42, 5th edition)
k, particle size multiplier for PM_{10} = 0.35 (from AP-42, 5th edition)
k, particle size multiplier for $PM_{2.5}$ = 0.053 (from AP-42, 5th edition)
U, mean wind speed = 6.6 mph (for Huntington, WVa)
M, moisture content = 4.8 %

PM EF (lb/ton coke) = 0.00100
PM_{10} EF (lb/ton coke) = 0.00047
$PM_{2.5}$ EF (lb/ton coke) = 0.00007

Actual emissions estimation:

PM (tons/yr) = PM EF * # enclosed transfer points * tons coke breeze transferred/yr * (1 - control efficiency) * (tons/2000 lb)
= (EF lb/ton coke) * [(number enclosed transfer points) * (tons coke breeze/yr)/2] * (ton/2000 lb) * (1 - efficiency)
= 0.016 tons PM/yr

PM_{10} (tons/yr) = PM_{10} EF * # enclosed transfer points * tons coke breeze transferred/yr * (1 - control efficiency) * (tons/2000 lb)
= (EF lb/ton coke) * [(number enclosed transfer points) * (tons coke breeze/yr)/2] * (ton/2000 lb) * (1 - efficiency)
= 0.008 tons PM_{10}/yr

$PM_{2.5}$ (tons/yr) = $PM_{2.5}$ EF * # enclosed transfer points * tons coke breeze transferred/yr * (1 - control efficiency) * (tons/2000 lb)
= (EF lb/ton coke) * [(number enclosed transfer points) * (tons coke breeze/yr)/2] * (ton/2000 lb) * (1 - efficiency)
= 0.0011 tons $PM_{2.5}$/yr

HCC **CALCULATION SHEET** **Calc. No. F004-4**

Signature: D. Starkweather Date: 4/10/2018 Checked: Date:
Project: Haverhill Coke Company - Fee Emission Report 2017
Subject: Pollutant Emissions Calculations

Purpose
To estimate criteria pollutant emissions due to coke loadout into railcars.

Basis

Total number of coke loadout points =	1		
Actual annual coal charge =	1,532,077	tons coal/yr	
Actual annual coke production =	1,052,681	tons coke/yr	(for rail loadout)
Control efficiency for partial enclosure and wet suppression=	70%	(based on Ohio RACM Table 2.2.1-2)	

Assumptions
Essentially all emissions are due to furnace coke loadout

Calculation
Use emission factors for coke handling from AP-42, 5th edition, Table 13.2.4-1 Equation (1)

$EF\ (lb/ton) = k * 0.0032 * (U/5)^{1.3}/(M/2)^{1.4}$

where:

k, particle size multiplier for PM =	0.74	(from AP-42, 5th edition)
k, particle size multiplier for PM_{10} =	0.35	(from AP-42, 5th edition)
k, particle size multiplier for $PM_{2.5}$ =	0.053	(from AP-42, 5th edition)
U, mean wind speed =	6.6	mph (for Huntington, WVa)
M, moisture content =	4.8	%

PM EF (lb/ton coke) =	0.00100
PM_{10} EF (lb/ton coke) =	0.00047
$PM_{2.5}$ EF (lb/ton coke) =	0.00007

Actual emissions estimation:

Rail Loadout:
PM (tons/yr) = PM EF * tons coke transferred * (1-% control)
= (EF lb/ton coke) * (tons coke handled) * (ton/2000 lb) * (1-% control)
= 0.157 tons PM/yr

PM_{10} (tons/yr) = PM_{10} EF * tons coke transferred * (1-% control)
= (EF lb/ton coke) * (tons coke handled) * (ton/2000 lb) * (1-% control)
= 0.074 tons PM_{10}/yr

$PM_{2.5}$ (tons/yr) = $PM_{2.5}$ EF * tons coke transferred * (1-% control)
= (EF lb/ton coke) * (tons coke handled) * (ton/2000 lb) * (1-% control)
= 0.011 tons $PM_{2.5}$/yr

HCC **CALCULATION SHEET** **Calc. No. F004-5**

Signature: D. Starkweather Date: 4/10/2018 Checked: Date:
Project: Haverhill Coke Company - Fee Emission Report 2017
Subject: Pollutant Emissions Calculations

Purpose
To estimate criteria pollutant emissions for F004 - Coke and breeze handling, processing, and transfer.

PM

Total Coke Processing	1.229	tons PM/yr	(from Calculation No. 1)
Total Coke Handling	2.703	tons PM/yr	(from Calculation No. 2)
Total Coke Breeze Bunker	0.016	tons PM/yr	(from Calculation No. 3)
Total Coke Load-out	0.157	tons PM/yr	(from Calculation No. 4)
Total F004 Emissions	**4.11**	tons PM/yr	

PM_{10}

Total Coke Processing	1.229	tons PM_{10}/yr	(from Calculation No. 1)
Total Coke Handling	1.279	tons PM_{10}/yr	(from Calculation No. 2)
Total Coke Breeze Bunker	0.008	tons PM_{10}/yr	(from Calculation No. 3)
Total Coke Load-out	0.074	tons PM_{10}/yr	(from Calculation No. 4)
Total F004 Emissions	**2.59**	tons PM_{10}/yr	

$PM_{2.5}$

Total Coke Processing	1.229	tons $PM_{2.5}$/yr	(from Calculation No. 1)
Total Coke Handling	0.194	tons $PM_{2.5}$/yr	(from Calculation No. 2)
Total Coke Breeze Bunker	0.0011	tons $PM_{2.5}$/yr	(from Calculation No. 3)
Total Coke Load-out	0.011	tons $PM_{2.5}$/yr	(from Calculation No. 4)
Total F004 Emissions	**1.44**	tons $PM_{2.5}$/yr	

HCC **CALCULATION SHEET** **Calc. No. P001-1 & P002-1**

Signature: D. Starkweather Date: 4/10/2018 Checked: Date:
Project: Haverhill Coke Company - Fee Emission Report 2017
Subject: Pollutant Emissions Calculations

Purpose
To estimate criteria pollutant emissions due to quenching (P001 & P002).

Basis

Actual annual coal charge		1,532,077	tons wet coal/yr
Tons to	P001	763,690	tons wet coal/yr
	P002	768,387	tons wet coal/yr

PM EF (lb/tons coal charged) = 0.45 (Based on guidance received from Ed Wojciechowski with US EPA and TDS = 1100 mg/L; equation he provided: PM EF (lb/ton coal) = 0.000115 TDS + 0.323, where TDS is dissolved solids content)

PM_{10} EF (lb/tons coal charged) = 0.05 (AP-42, Coke Production Section,Table 12.2-12 with clean water and baffles and Table 12.2-19 with PM_{10} = 9.8% of PM)

$PM_{2.5}$ EF (lb/tons coal charged) = 0.027 (AP-42, Coke Production Section,Table 12.2-12 with clean water and baffles and Table 12.2-19 with PM_{10} = 6.0% of PM)

Lead EF (lb/tons coal charged) = 8.69E-05 (Based on Haverhill quench water data)

POM EF (lb/tons coal charged) = 7.82E-06 (Based on Jewel Test Data)

Actual emissions estimation:

PM
(0.450 lb/ton coal) * (tons coal charged/yr) * (ton/2000 lb) = **171.83** tons PM/yr P001
(0.450 lb/ton coal) * (tons coal charged/yr) * (ton/2000 lb) = **172.89** tons PM/yr P002

PM_{10}
(0.05 lb/ton coal) * (tons coal charged/yr) * (ton/2000 lb) = **19.09** tons PM_{10}/yr P001
(0.05 lb/ton coal) * (tons coal charged/yr) * (ton/2000 lb) = **19.21** tons PM_{10}/yr P002

$PM_{2.5}$
(0.027 lb/ton coal) * (tons coal charged/yr) * (ton/2000 lb) = **10.31** tons $PM_{2.5}$/yr P001
(0.027 lb/ton coal) * (tons coal charged/yr) * (ton/2000 lb) = **10.37** tons $PM_{2.5}$/yr P002

Pb
(0.0000869 lb/ton coal) * (tons coal charged/yr) * (ton/2000 lb) = **0.033** tons Pb/yr P001
(0.0000869 lb/ton coal) * (tons coal charged/yr) * (ton/2000 lb) = **0.033** tons Pb/yr P002

POM
(0.00000782 lb/ton coal) * (tons coal charged/yr) * (ton/2000 lb) = **2.986E-03** tons POM/yr P001
(0.00000782 lb/ton coal) * (tons coal charged/yr) * (ton/2000 lb) = **3.004E-03** tons POM/yr P002

HCC **CALCULATION SHEET** **Calc. No.** **P011-P012 - 1**

Signature: D. Starkweather Date: 4/10/2018 Checked: Date:
Project: Haverhill Coke Company - Fee Emission Report 2017
Subject: Pollutant Emissions Calculations

Purpose

To estimate criteria pollutant emissions due to natural gas lances and heatup of the new common tunnels.
Natural gas lances are inserted into the oven to keep the ovens hot during maintenance or severely cold weather.

Basis

Emission factors for natural gas combustion (AP-42, Tables 1.4-1 & 1.4-2, July 1998):

Total PM/PM10/PM2.5	7.6	lb/MM scf
SO_2	0.6	lb/MM scf
NOx	100	lb/MM scf
CO	84	lb/MM scf
VOC	5.5	lb/MM scf

Calculations

Total gas used in the P901 ovens =	464.5	MMscf	(from plant billing records)
Total gas used in the P902 ovens =	464.5	MMscf	(from plant billing records)

Potential Emissions P901

	ton/year
PM/PM10/PM2.5	1.77
SO2	0.14
NOx	23.23
CO	19.51
VOC	1.28

Potential Emissions P902

	ton/year
PM/PM10/PM2.5	1.77
SO2	0.14
NOx	23.23
CO	19.51
VOC	1.28

HCC CALCULATION SHEET **Calc. No. P901-1a**

Signature: D. Starkweather Date: 4/10/2018 Checked: Date:
Project: Haverhill Coke Company - Fee Emission Report 2017
Subject: Pollutant Emissions Calculations

Purpose
To estimate criteria pollutant emissions due to the coking process.
Waste gases from the ovens go through the HRSGs except during HRSG maintenance and malfunction events
The waste gases from the HRSGs go to a lime spray dryer which then exhausts to a baghouse.

Basis
Coal charge = 763,690 tons wet coal

	Main Stack	Waste Heat Stack	
$PM/PM_{10}/PM_{2.5}$ (lb PM/PM_{10}/hr/20 ovens) =		12.1	(Haverhill Test Data, May 16 - CD Testing Bypass Stack 5
$PM/PM_{10}/PM_{2.5}$(lb PM/PM_{10}/hr) =	4.7		(Haverhill Test Data, Jan 06 - Filterable PM)
$PM/PM_{10}/PM_{2.5}$(lb PM/PM_{10}/hr) =	13.54		(Engineering estimate- Condensible PM)
$PM/PM_{10}/PM_{2.5}$ (lb PM/PM_{10}/hr) =		5.7	(Haverhill Test Data, May 16 - CD Testing Bypass Stack 5
Pb (lbs Pb/hr) =	9.45E-04		(Haverhill Test Data, Jan 06)
Pb (lbs Pb/hr/20 ovens) =		1.41E-01	(Haverhill Test Data, May 16 - CD Testing Bypass Stack 5
NO_x (lbs NO_x/hr) =	89.5		(Haverhill Test Data, Jan 06)
NO_x (lbs NO_x/hr/20 ovens) =		18.2	(Haverhill Test Data, May 16 - CD Testing Bypass Stack 5
CO (lbs CO/hr) =	1.1		(Haverhill Test Data, Jan 06)
CO (lbs CO/hr/20 ovens) =		0.16	(Haverhill Test Data, July 10)
VOC (lbs VOC/hr)=	0.74		(Haverhill Test Data, Jan 06)
VOC (lbs VOC/hr/20ovens)=		0.93	(PTI Allowable VOC)
Hg (lbs Hg/hr) =	0.0118		(Haverhill Test Data, Jan 06)
Hg (lbs Hg/hr/20 ovens) =		0.0026	(Haverhill Test Data, May 16 - CD Testing Bypass Stack 5
HCl (lbs HCl/hr) =	6.26		(Haverhill Test Data, Jan 06)
HCl (lbs HCl/hr/20 ovens) =		32.2	(Haverhill Test Data, May 16 - CD Testing Bypass Stack 5
1st Half SO2 (lbs SO2/hr/20 ovens) =		137.6	(Haverhill BVS #5 CEMs Data, Jan. 1, 2017 - Jun. 30, 2017
2nd Half SO2 (lbs SO2/hr/20 ovens) =		156.1	(Haverhill BVS #5 CEMs Data, Jul. 1, 2017 - Dec. 31, 2017

Schedule

Total Operating Hours	8760	
Total Main Stack Operating Hours	8760	
HRSG Maintenance Bypass Hours (5 stacks)	2.35	
Malfunction and OEPA Approved Bypass Venting Hours (5 stacks)	23.45	
	0.06%	Total gas not routed through SD/BH

Emissions Estimation

Total $PM/PM_{10}/PM_{2.5}$	**Main Stack**	**Waste Heat Stacks**	**Total Emissions from all stacks**	
Filterable $PM/PM_{10}/PM_{2.5}$				
$PM/PM_{10}/PM_{2.5}$ Emissions = Hourly (lbs/hr) * Operating hours / yr * ton/2000 lb	20.59		20.59	TPY $PM/PM_{10}/PM_{2.5}$
$PM/PM_{10}/PM_{2.5}$ Emissions during HRSG Maintenance (Refer to Calculation Sheet 1b)		0.01	0.01	TPY $PM/PM_{10}/PM_{2.5}$
PM/PM10/PM2.5 Emissions during Malfunction and OEPA Approved Bypass Venting (Refer to Calculation Sheet 1b)		0.14	0.14	TPY $PM/PM_{10}/PM_{2.5}$
Total Filterable $PM/PM_{10}/PM_{2.5}$			**20.74**	TPY $PM/PM_{10}/PM_{2.5}$
Condensable $PM/PM_{10}/PM_{2.5}$				
$PM/PM_{10}/PM_{2.5}$ Emissions = Hourly (lbs/hr) * Operating hours / yr * ton/2000 lb	59.31		59.31	TPY $PM/PM_{10}/PM_{2.5}$
PM/PM10/PM2.5 Emissions during HRSG Maintenance (Refer to Calculation Sheet 1b)		0.01	0.01	TPY $PM/PM_{10}/PM_{2.5}$
PM/PM10/PM2.5 Emissions during Malfunction and OEPA Approved Bypass Venting (Refer to Calculation Sheet 1b)		0.07	0.07	TPY $PM/PM_{10}/PM_{2.5}$
Total Condensable $PM/PM_{10}/PM_{2.5}$			**59.38**	TPY $PM/PM_{10}/PM_{2.5}$
Total PM/PM10/PM2.5 Emissions			**80.12**	TPY $PM/PM_{10}/PM_{2.5}$
SO_2				
SO_2 Emission reported by CEM System	671.00		671.00	TPY SO_2
SO2 Emissions during HRSG Maintenance (Refer to Calculation Sheet 1b)		0.17	0.17	TPY SO_2
SO2 Emissions during Malfunction and OEPA Approved Bypass Venting (Refer to Calculation Sheet 1b)		1.69	1.69	TPY SO_2
Total SO2 Emissions			**672.86**	TPY SO_2
NO_x				
NO_x emissions = Hourly (lbs/hr) * Operating hours / yr * ton/2000 lb	392.01		392.01	TPY NO_x
NO_x emissions during HRSG Maintenance = Hourly (lbs/hr) * Operating hours / yr * ton/2000 lb		0.02	0.02	TPY NO_x
NOx emissions during Malfunction and OEPA Approved Bypass Venting = Hourly (lbs/hr) * Operating hours / yr * ton/2000 lb		0.21	0.21	TPY NO_x
Total NOx Emissions			**392.24**	TPY NO_x
CO				
CO emissions = Hourly (lbs/hr) * Operating hours / yr * ton/2000 lb	4.82		4.82	TPY CO
CO emissions during HRSG Maintenance = Hourly (lbs/hr) * Operating hours / yr * ton/2000 lb		0.00	0.00	TPY CO
CO emissions during Malfunction and OEPA Approved Bypass Venting = Hourly (lbs/hr) * Operating hours / yr * ton/2000 lb		0.00	0.00	TPY CO
Total CO Emissions			**4.82**	TPY CO
VOC				
VOC emissions = Hourly (lbs/hr) * Operating hours / yr * ton/2000 lb	3.24		3.24	TPY VOC
VOC emissions during HRSG Maintenance = Hourly (lbs/hr) * Operating hours / yr * ton/2000 lb		0.00	0.00	TPY VOC
VOC emissions during Malfunction and OEPA Approved Bypass Venting = Hourly (lbs/hr) * Operating hours / yr * ton/2000 lb		0.01	0.01	TPY VOC
Total VOC Emissions			**3.25**	TPY VOC

Signature: D. Starkweather Date: 4/10/2018 Checked: Date:
Project: Haverhill Coke Company - Fee Emission Report 2017
Subject: Pollutant Emissions Calculations

Pb				
Pb Emissions = Hourly (lbs/hr) * Operating hours / yr * ton/2000 lb	4.14E-03		0.004	TPY Pb
Pb Emission during HRSG Maintenance = Hourly (lbs/hr) * Operating hours / yr * ton/2000 lb		1.65E-04	0.000	TPY Pb
Pb emissions during Malfunction and OEPA Approved Bypass Venting = Hourly (lbs/hr) * Operating hours / yr * ton/2000 lb		1.65E-03	0.002	TPY Pb
Total Pb Emissions			**0.0060**	TPY Pb
Hg				
Hg emissions = Hourly (lbs/hr) * Operating hours / yr * ton/2000 lb	5.17E-02		0.052	TPY Hg
Hg emissions during HRSG Maintenance = Hourly (lbs/hr) * Operating hours / yr * ton/2000 lb		3.05E-06	0.000	TPY Hg
Hg emissions during Malfunction and OEPA Approved Bypass Venting = Hourly (lbs/hr) * Operating hours / yr * ton/2000 lb		3.05E-05	0.000	TPY Hg
Total Hg Emissions			**0.052**	TPY Hg
HCl				
HCl emissions = Hourly (lbs/hr) * Operating hours / yr * ton/2000 lb	27.42		27.419	TPY HCl
HCl emissions during HRSG Maintenance = Hourly (lbs/hr) * Operating hours / yr * ton/2000 lb		0.04	0.038	TPY HCl
HCl emissions during Malfunction and OEPA Approved Bypass Venting = Hourly (lbs/hr) * Operating hours / yr * ton/2000 lb		0.38	0.378	TPY HCl
Total HCl Emissions			**27.834**	TPY HCl

Estimate of PM and SO_2 Emissions from Haverhill Waste Heat Stacks During HRSG Maintenance and Malfunction
[Excludes emissions reported by CEM system]

Emissions During Maintenance

	Tonnage		Coal Sulfur	Moisture	EF			Stack 1				Stack 2				Stack 3				Stack 4				Stack 5			
Month	(tons/month)	(tons/hr/HRSG)	(%)	(%)	SO_2 (lb/hr)	Filterable $PM/PM_{10}/PM_{2.5}$* (lb/hr)	Condensable $PM/PM_{10}/PM_{2.5}$** (lb/hr)	(Hours)	(tons SO_2)	Filterable (tons $PM/PM_{10}/PM_{2.5}$)	Condensable (tons $PM/PM_{10}/PM_{2.5}$)	(Hours)	(tons SO_2)	Filterable (tons $PM/PM_{10}/PM_{2.5}$)	Condensable (tons $PM/PM_{10}/PM_{2.5}$)	(Hours)	(tons SO_2)	Filterable (tons $PM/PM_{10}/PM_{2.5}$)	Condensable (tons $PM/PM_{10}/PM_{2.5}$)	(Hours)	(tons SO_2)	Filterable (tons $PM/PM_{10}/PM_{2.5}$)	Condensable (tons $PM/PM_{10}/PM_{2.5}$)	(Hours)	(tons SO_2)	Filterable (tons $PM/PM_{10}/PM_{2.5}$)	Condensable (tons $PM/PM_{10}/PM_{2.5}$)
January	65,034	17.48	0.81%	8.87%	137.60	12.10	5.70	0.00	0.0	0.0000	0.0000	0.00	0.0	0.0000	0.0000	0.00	0.0	0.00000	0.00000	0.00	0.0	0.00000	0.00000	0.00	0.0	0.00000	0.00000
February	60,387	17.97	0.81%	7.87%	137.60	12.10	5.70	0.03	0.0	0.0002	0.0001	0.08	0.0	0.0005	0.0002	0.18	0.0	0.00111	0.00052	0.07	0.0	0.00040	0.00019	0.17	0.0	0.00101	0.00047
March	67,117	18.04	0.81%	7.67%	137.60	12.10	5.70	0.02	0.0	0.0001	0.0000	0.03	0.0	0.0002	0.0001	0.02	0.0	0.00010	0.00005	0.02	0.0	0.00010	0.00005	0.03	0.0	0.00020	0.00010
April	64,036	17.79	0.87%	7.90%	137.60	12.10	5.70	0.02	0.0	0.0001	0.0000	0.02	0.0	0.0001	0.0000	0.02	0.0	0.00010	0.00005	0.03	0.0	0.00020	0.00009	0.02	0.0	0.00010	0.00005
May	63,812	17.15	0.80%	7.84%	137.60	12.10	5.70	0.02	0.0	0.0001	0.0000	0.02	0.0	0.0001	0.0000	0.02	0.0	0.00010	0.00005	0.00	0.0	0.00000	0.00000	0.00	0.0	0.00000	0.00000
June	62,571	17.38	0.81%	7.29%	137.60	12.10	5.70	0.02	0.0	0.0001	0.0000	0.02	0.0	0.0001	0.0000	0.02	0.0	0.00010	0.00005	0.02	0.0	0.00010	0.00005	0.03	0.0	0.00020	0.00009
July	64,872	17.44	0.82%	7.75%	156.10	12.10	5.70	0.02	0.0	0.0001	0.0000	0.02	0.0	0.0001	0.0000	0.02	0.0	0.00010	0.00005	0.02	0.0	0.00010	0.00005	0.02	0.0	0.00010	0.00005
August	64,523	17.34	0.88%	8.01%	156.10	12.10	5.70	0.00	0.0	0.0000	0.0000	0.00	0.0	0.0000	0.0000	0.00	0.0	0.00000	0.00000	0.00	0.0	0.00000	0.00000	0.00	0.0	0.00000	0.00000
September	61,905	17.20	0.87%	8.33%	156.10	12.10	5.70	0.02	0.0	0.0001	0.0000	0.02	0.0	0.0001	0.0000	0.07	0.0	0.00040	0.00019	0.02	0.0	0.00010	0.00005	0.03	0.0	0.00020	0.00009
October	64,896	17.45	0.82%	8.05%	156.10	12.10	5.70	0.03	0.0	0.0002	0.0001	0.07	0.0	0.0004	0.0002	0.05	0.0	0.00030	0.00014	0.05	0.0	0.00030	0.00014	0.08	0.0	0.00050	0.00024
November	62,673	17.41	0.81%	8.33%	156.10	12.10	5.70	0.02	0.0	0.0001	0.0000	0.02	0.0	0.0001	0.0000	0.26	0.0	0.00159	0.00075	0.33	0.0	0.00197	0.00093	0.02	0.0	0.00015	0.00007
December	61,864	16.63	0.78%	7.68%	156.10	12.10	5.70	0.02	0.0	0.0001	0.0000	0.02	0.0	0.0001	0.0000	0.17	0.0	0.00101	0.00048	0.05	0.0	0.00030	0.00014	0.03	0.0	0.00020	0.00009
	763,690							0.20	0.01	0.00	0.00	0.30	0.02	0.00	0.00	0.81	0.06	0.00	0.00	0.59	0.05	0.00	0.00	0.44	0.03	0.00	0.00

2017

Total Emissions:

SO_2	**0.17**	tons/yr
Filterable $PM/PM_{10}/PM_{2.5}$	**0.01**	tons/yr
Condensable $PM/PM_{10}/PM_{2.5}$	**0.01**	tons/yr
Total $PM/PM_{10}/PM_{2.5}$	**0.02**	tons/yr

Emissions During Malfunctions and OEPA Approved Bypass Venting

	Tonnage		Coal Sulfur	Moisture	EF			Stack 1				Stack 2				Stack 3				Stack 4				Stack 5			
Month	(tons/month)	(tons/hr/HRSG)	(%)	(%)	SO_2 (lb/hr)	Filterable $PM/PM_{10}/PM_{2.5}$* (lb/hr)	Condensable $PM/PM_{10}/PM_{2.5}$** (lb/hr)	(Hours)	(tons SO_2)	Filterable (tons $PM/PM_{10}/PM_{2.5}$)	Condensable (tons $PM/PM_{10}/PM_{2.5}$)	(Hours)	(tons SO_2)	Filterable (tons $PM/PM_{10}/PM_{2.5}$)	Condensable (tons $PM/PM_{10}/PM_{2.5}$)	(Hours)	(tons SO_2)	Filterable (tons $PM/PM_{10}/PM_{2.5}$)	Condensable (tons $PM/PM_{10}/PM_{2.5}$)	(Hours)	(tons SO_2)	Filterable (tons $PM/PM_{10}/PM_{2.5}$)	Condensable (tons $PM/PM_{10}/PM_{2.5}$)	(Hours)	(tons SO_2)	Filterable (tons $PM/PM_{10}/PM_{2.5}$)	Condensable (tons $PM/PM_{10}/PM_{2.5}$)
January	65,034	17.48	0.81%	8.87%	137.60	12.10	5.70	0.00	0.0	0.0000	0.0000	0.00	0.0	0.0000	0.0000	0.00	0.0	0.00000	0.00000	0.00	0.0	0.00000	0.00000	0.00	0.0	0.00000	0.00000
February	60,387	17.97	0.81%	7.87%	137.60	12.10	5.70	0.00	0.0	0.0000	0.0000	0.00	0.0	0.0000	0.0000	0.00	0.0	0.00000	0.00000	1.93	0.1	0.01170	0.00551	0.00	0.0	0.00000	0.00000
March	67,117	18.04	0.81%	7.67%	137.60	12.10	5.70	0.90	0.1	0.0054	0.0026	1.27	0.1	0.0077	0.0036	1.73	0.1	0.01049	0.00494	1.77	0.1	0.01069	0.00503	1.53	0.1	0.00928	0.00437
April	64,036	17.79	0.87%	7.90%	137.60	12.10	5.70	0.00	0.0	0.0000	0.0000	0.00	0.0	0.0000	0.0000	0.10	0.0	0.00060	0.00028	0.00	0.0	0.00000	0.00000	0.00	0.0	0.00000	0.00000
May	63,812	17.15	0.80%	7.84%	137.60	12.10	5.70	0.20	0.0	0.0012	0.0006	1.17	0.1	0.0071	0.0033	0.48	0.0	0.00292	0.00138	1.62	0.1	0.00978	0.00461	1.67	0.1	0.01008	0.00475
June	62,571	17.38	0.81%	7.29%	137.60	12.10	5.70	0.00	0.0	0.0000	0.0000	0.03	0.0	0.0002	0.0001	1.22	0.1	0.00736	0.00347	0.00	0.0	0.00000	0.00000	0.00	0.0	0.00000	0.00000
July	64,872	17.44	0.82%	7.75%	156.10	12.10	5.70	0.47	0.0	0.0028	0.0013	0.00	0.0	0.0000	0.0000	0.00	0.0	0.00000	0.00000	1.97	0.2	0.01190	0.00560	0.00	0.0	0.00000	0.00000
August	64,523	17.34	0.88%	8.01%	156.10	12.10	5.70	0.25	0.0	0.0015	0.0007	0.77	0.1	0.0046	0.0022	0.37	0.0	0.00222	0.00104	0.22	0.0	0.00131	0.00062	1.25	0.1	0.00756	0.00356
September	61,905	17.20	0.87%	8.33%	156.10	12.10	5.70	0.00	0.0	0.0000	0.0000	0.00	0.0	0.0000	0.0000	0.00	0.0	0.00000	0.00000	0.25	0.0	0.00151	0.00071	0.00	0.0	0.00000	0.00000
October	64,896	17.45	0.82%	8.05%	156.10	12.10	5.70	0.22	0.0	0.0013	0.0006	0.00	0.0	0.0000	0.0000	0.00	0.0	0.00000	0.00000	0.00	0.0	0.00000	0.00000	0.05	0.0	0.00030	0.00014
November	62,673	17.41	0.81%	8.33%	156.10	12.10	5.70	0.00	0.0	0.0000	0.0000	0.00	0.0	0.0000	0.0000	0.00	0.0	0.00000	0.00000	0.00	0.0	0.00000	0.00000	0.00	0.0	0.00000	0.00000
December	61,864	16.63	0.78%	7.68%	156.10	12.10	5.70	0.43	0.0	0.0026	0.0012	0.45	0.0	0.0027	0.0013	0.30	0.0	0.00181	0.00085	0.43	0.0	0.00262	0.00124	0.42	0.0	0.00252	0.00119
	763,690							2.47	0.18	0.01	0.01	3.68	0.26	0.02	0.01	4.20	0.30	0.03	0.01	8.18	0.59	0.05	0.02	4.92	0.35	0.03	0.01

Total Emissions:

SO_2	**1.69**	tons/yr
Filterable $PM/PM_{10}/PM_{2.5}$	**0.14**	tons/yr
Condensable $PM/PM_{10}/PM_{2.5}$	**0.07**	tons/yr
Total $PM/PM_{10}/PM_{2.5}$	**0.21**	tons/yr

HCC **CALCULATION SHEET** **Calc. No.** **P901-2**

Signature: D. Starkweather Date: 4/10/2018 Checked: Date:
Project: Haverhill Coke Company - Fee Emission Report 2017
Subject: Pollutant Emissions Calculations

Purpose
To estimate criteria pollutant emissions due to the charging of the ovens with coal.

Basis

Actual annual coal charge =	763,690	tons wet coal/yr	702,850 tons dry coal/yr

Emission Factors:

VOC EF (lb/ton coal charged) =	0.0020	Jewell stack test data, Vansant, VA
SO_2 EF (lb/ton coal charged) =	0.0003	Jewell stack test data, Vansant, VA
CO EF (lb/ton coal charged) =	0.0028	Jewell stack test data, Vansant, VA
Pb EF (lb/ton coal charged) =	1.00E-07	(from AP-42)
Benzo (a) pyrene =	1.97E-07	(from AP-42)

Stack

Total $PM/PM_{10}/PM_{2.5}$ EF =	0.001	lb/ton dry coal	(Haverhill Test Data, Jan 2006)
Uncontrolled:			
PM EF (lb/tons coal charged) =	0.027	(from AP-42 Coke Prod section, Table 12.2-21 uncontrolled)	

Fugitive
Controlled:

PM EF (lb/tons coal charged) =	0.0027	(assuming 90% capture eff for emissions controlled by traveling hood and baghouse) - See note at bottom of page

PM_{10} : Assume PM_{10} = 30% of PM fugitives
$PM_{2.5}$: Assume $PM_{2.5}$ = 15% of PM fugitives

# Emission Activity hours in the reporting period =	2920	hours	(based on 8 hours of charging per day)
# APCD malfunction/deviation hours =	0.12	hours	
# Normal operating hours =	2919.88	hours	
Fraction of APCD malfunction/deviation hours =	0.00%		
Fraction of Normal operating hours =	100.00%		

Emissions Estimation

Stack Total $PM/PM_{10}/PM_{2.5}$ during Normal Operation
0.001 lb/dry tons coal * # dry tons coal/yr * ton/2000 lbs * Fraction of Normal Operating hours = 0.3514 TPY $PM/PM_{10}/PM_{2.5}$

Stack Total $PM/PM_{10}/PM_{2.5}$ during APCD Malfunction/Deviations
0.027 lb/dry tons coal * # dry tons coal/yr * ton/2000 lbs * Fraction of APCD malf/deviation hours = 0.0004 TPY $PM/PM_{10}/PM_{2.5}$

Fugitive PM
0.027 lb PM / ton coal charged * # tons coal charged/yr * 1 ton / 2000 lbs * (1-.90) = 0.9488 TPY fugitive PM

Fugitive PM_{10} (30% of PM)
0.3 * annual PM 0.285 TPY fugitive PM_{10}

Fugitive $PM_{2.5}$ (15% of PM)
0.15 * annual PM 0.142 TPY fugitive $PM_{2.5}$

SO_2
0.0003 lb SO2/wet ton coal charged * # wet tons coal/yr * 1 ton/2000 lbs = 0.115 TPY SO_2

CO
0.0028 lb CO/wet ton coal charged * # wet tons coal/yr * 1 ton/2000 lbs = 1.069 TPY CO

VOC
0.0020 lb VOC/wet ton coal charged * # wet tons coal/yr * 1 ton/2000 lbs = 0.764 TPY VOC

Pb
0.0000001 lb Pb/wet ton coal charged * # wet tons coal/yr * 1 ton/2000 lbs = 3.82E-05 TPY Pb

Benzo (a) pyrene =
0.000000197 lb BAP/wet ton coal charged * # wet tons coal/yr * 1 ton/2000 lbs = 7.52E-05 TPY BAP

NOTE
The PTI identifies the capture rate for charging as 70%. This was based on tests at Jewell, that was used as a basis for estimating charging emissions in the permit application that was submitted before Haverhill was constructed. The hood at Haverhill encloses more of the area above the oven with larger flow rate. Therefore, 90% capture efficiency is a more reasonable estimate for actual emissions.

HCC **CALCULATION SHEET** **Calc. No. P901-3**

Signature: D. Starkweather Date: 4/10/2018 Checked: Date:
Project: Haverhill Coke Company - Fee Emission Report 2017
Subject: Pollutant Emissions Calculations

Purpose
To estimate criteria pollutant emissions due to the pushing process.

Basis
Actual annual coal charge = 763,690 tons wet coal/yr Actual annual production = 551,438 tons wet coke + breeze/yr

# Emission Activity hours in the reporting period =	2920	hours	(based on 8 hours of pushing per day)
# APCD malfunction/deviation hours =	0.50	hours	
# Normal operating hours =	2919.50	hours	
Fraction of APCD malfunction/deviation hours =	0.02%		
Fraction of Normal operating hours =	99.98%		

Emission Factors:

Total $PM/PM_{10}/PM_{2.5}$ EF (lb/ton coke pushed) [controlled] =	0.026	(Haverhill Test Data, Jan 2006)
Total $PM/PM_{10}/PM_{2.5}$ EF (lb/ton coke pushed) [uncontrolled] =	0.130	(estimated using controlled EF & multicyclone PM removal efficiency of 80%)
CO EF (lb/tons coal charged) =	0.018	(Haverhill Test Data, Jan 2006)
NO_X EF (lb/tons coal charged) =	0.0014	(Haverhill Test Data, Jan 2006)
VOC EF (lb/tons coal charged) =	0.00071	(Haverhill Test Data, Jan 2006)
SO_2 EF (lb/tons coal charged) =	0.027	(Haverhill Test Data, Jan 2006)
Pb EF (lb/tons coal charged) =	1.17E-05	(Haverhill Test Data, Jan 2006)

Actual emissions estimation:

Total $PM/PM_{10}/PM_{2.5}$ during Normal Operations
(0.026 lb/ton coke) * (tons coke pushed/yr) * (ton/2000 lb) * Fraction of Normal Operating Hours = 7.17 tons $PM/PM_{10}/PM_{2.5}$/yr

Total $PM/PM_{10}/PM_{2.5}$ during APCD Malfunction/Deviations
(0.130 lb/ton coke) * (tons coke pushed/yr) * (ton/2000 lb) * Fraction of APCD Malfunction/Deviation Hours = 0.006 tons $PM/PM_{10}/PM_{2.5}$/yr

SO_2
(0.027 lb/ton coal) * (tons coal charged/yr) * (ton/2000 lb) = 10.31 tons SO_2/yr

NO_X
(0.0014 lb/ton coal) * (tons coal charged/yr) * (ton/2000 lb) = 0.53 tons NO_X/yr

CO
(0.018 lb/ton coal) * (tons coal charged/yr) * (ton/2000 lb) = 6.87 tons CO/yr

VOC
(0.00071 lb/ton coal) * (tons coal charged/yr) * (ton/2000 lb) = 0.27 tons VOC/yr

Pb
(0.0000117 lb/ton coal) * (tons coal charged/yr) / (ton/2000lb) = 4.47E-03 tons Pb/yr

HCC CALCULATION SHEET **Calc. No. P902-1a**

Signature: D. Starkweather Date: 4/10/2018 Checked: Date:
Project: Haverhill Coke Company - Fee Emission Report 2017
Subject: Pollutant Emissions Calculations

Purpose
To estimate criteria pollutant emissions due to the coking process.
Waste gases from the ovens go through the HRSGs except during HRSG maintenance and malfunction events.
The waste gases from the HRSGs go to a lime spray dryer which then exhausts to a baghouse.

Basis
Coal charge = 768,387 tons wet coal

	Main Stack	Waste Heat Stack	
$PM/PM_{10}/PM_{2.5}$ (lb PM/PM_{10}/hr/20 ovens) =		12.1	(Haverhill Test Data, May 16 - CD Testing Bypass Stack 5
$PM/PM_{10}/PM_{2.5}$(lb PM/PM_{10}/hr) =	4.2		(Haverhill Test Data, April 09 - Filterable PM)
$PM/PM_{10}/PM_{2.5}$(lb PM/PM_{10}/hr) =	2.06		(Haverhill Test Data, April 09 - Condensable PM)
$PM/PM_{10}/PM_{2.5}$ (lb PM/PM_{10}/hr) =		5.7	(Haverhill Test Data, May 16 - CD Testing Bypass Stack 5
Pb (lbs Pb/hr) =	1.30E-03		(Haverhill Test Data, April 09)
Pb (lbs Pb/hr/20 ovens) =		6.00E-02	(Haverhill Test Data, September 16 CD Testing Bypass Stack 6)
NO_x (lbs NO_x/hr) =	74.25		(Haverhill Test Data, July 09)
NO_x (lbs NO_x/hr/20 ovens) =		18.7	(Haverhill Test Data, September 16 CD Testing Bypass Stack 6)
CO (lbs CO/hr) =	0.365		(Haverhill Test Data, July 09)
CO (lbs CO/hr/20 ovens) =		4.36	(PTI Allowable CO)
VOC (lbs VOC/hr)=	0.597		(Haverhill Test Data, July 09)
VOC (lbs VOC/hr/20ovens)=		0.93	(PTI Allowable VOC)
Hg (lbs Hg/hr/20 ovens) =		0.0022	(Haverhill Test Data, September 16 CD Testing Bypass Stack 6)
HCl (lbs HCl/hr) =	6.26		(Haverhill Test Data, Jan 06 - from P901)
HCl (lbs HCl/hr/20 ovens) =		20.0	(Haverhill Test Data, September 16 CD Testing Bypass Stack 6)
1st Half SO2 (lbs SO2/hr/20 ovens) =		181.8	(Haverhill BVS #6 CEMs Data, Jan. 1, 2017 - Jun. 30, 2017
2nd Half SO2 (lbs SO2/hr/20 ovens) =		141.9	(Haverhill BVS #6 CEMs Data, Jul. 1, 2017 - Dec. 31, 2017

Schedule

Total Operating Hours	8760	
Total Main Stack Operating Hours	8753	
HRSG Maintenance Bypass Hours (5 stacks)	2.13	
Malfunction and OEPA Approved Bypass Venting Hours (5 stacks)	365	
	0.84%	Total gas not routed through SD/BH

Emissions Estimation

Total $PM/PM_{10}/PM_{2.5}$	**Main Stack**	**Waste Heat Stacks**	**Total Emissions from all stacks**	
Filterable $PM/PM_{10}/PM_{2.5}$				
$PM/PM_{10}/PM_{2.5}$ Emissions = Hourly (lbs/hr) * Operating hours / yr * ton/2000 lb	18.38		18.38	TPY $PM/PM_{10}/PM_{2.5}$
PM/PM10/PM2.5 Emissions during HRSG Maintenance (Refer to Calculation Sheet 1b)		0.01	0.01	TPY $PM/PM_{10}/PM_{2.5}$
PM/PM10/PM2.5 Emissions during Malfunction and OEPA Approved Bypass Venting (Refer to Calculation Sheet 1b)		2.21	2.21	TPY $PM/PM_{10}/PM_{2.5}$
Total Filterable $PM/PM_{10}/PM_{2.5}$			**20.61**	TPY $PM/PM_{10}/PM_{2.5}$
Condensable $PM/PM_{10}/PM_{2.5}$				
$PM/PM_{10}/PM_{2.5}$ Emissions = Hourly (lbs/hr) * Operating hours / yr * ton/2000 lb	9.02		9.02	TPY $PM/PM_{10}/PM_{2.5}$
PM/PM10/PM2.5 Emissions during HRSG Maintenance (Refer to Calculation Sheet 1b)		0.01	0.01	TPY $PM/PM_{10}/PM_{2.5}$
PM/PM10/PM2.5 Emissions during Malfunction and OEPA Approved Bypass Venting (Refer to Calculation Sheet 1b)		1.04	1.04	TPY $PM/PM_{10}/PM_{2.5}$
Total Condensable $PM/PM_{10}/PM_{2.5}$			**10.06**	TPY $PM/PM_{10}/PM_{2.5}$
Total PM/PM10/PM2.5 Emissions			**30.67**	TPY $PM/PM_{10}/PM_{2.5}$
SO_2				
SO_2 Emission reported by CEM System	654.20		654.20	TPY SO_2
SO2 Emissions during HRSG Maintenance (Refer to Calculation Sheet 1b)		1.88	1.88	TPY SO_2
SO2 Emissions during Malfunction and OEPA Approved Bypass Venting (Refer to Calculation Sheet 1b)		515.76	515.76	TPY SO_2
Total SO2 Emissions			**1171.84**	TPY SO_2
NO_X				
NO_x emissions = Hourly (lbs/hr) * Operating hours / yr * ton/2000 lb	324.96		324.96	TPY NO_x
NO_x emissions from HRSGs = Hourly (lbs/hr) * Operating hours / yr * ton/2000 lb		0.02	0.02	TPY NO_x
NOx emissions during Malfunction and OEPA Approved Bypass Venting = Hourly (lbs/hr) * Operating hours / yr * ton/2000 lb		3.42	3.42	TPY NO_x
Total NOx Emissions			**328.39**	TPY NO_x
CO				
CO emissions = Hourly (lbs/hr) * Operating hours / yr * ton/2000 lb	1.60		1.60	TPY CO
CO emissions during HRSG Maintenance and Malfunction and OEPA Approved Bypass Venting= Hourly (lbs/hr) * Operating hours / yr * ton/2000 lb		0.00	0.00	TPY CO
CO emissions during Malfunction and OEPA Approved Bypass Venting = Hourly (lbs/hr) * Operating hours / yr * ton/2000 lb		0.80	0.80	TPY CO
Total CO Emissions			**2.40**	TPY CO
VOC				
VOC emissions = Hourly (lbs/hr) * Operating hours / yr * ton/2000 lb	2.61		2.61	TPY VOC
VOC emissions during HRSG Maintenance and Malfunction and OEPA Approved Bypass Venting = Hourly (lbs/hr) * Operating hours / yr * ton/2000 lb		0.00	0.00	TPY VOC
VOC emissions during Malfunction and OEPA Approved Bypass Venting = Hourly (lbs/hr) * Operating hours / yr * ton/2000 lb		0.17	0.17	TPY VOC
Total VOC Emissions			**2.78**	TPY VOC

Signature: D. Starkweather Date: 4/10/2018 Checked: Date:
Project: Haverhill Coke Company - Fee Emission Report 2017
Subject: Pollutant Emissions Calculations

Pb				
Pb Emissions = Hourly (lbs/hr) * Operating hours / yr * ton/2000 lb	5.69E-03		0.006	TPY Pb
Pb Emission during HRSG Maintenance and Malfunction and OEPA Approved Bypass Venting = Hourly (lbs/hr) * Operating hours / yr * ton/2000 lb		6.40E-05	0.000	TPY Pb
Pb emissions during Malfunction and OEPA Approved Bypass Venting = Hourly (lbs/hr) * Operating hours / yr * ton/2000 lb		1.10E-02	0.011	TPY Pb
Total Pb Emissions			**0.0167**	TPY Pb
Hg				
Hg emissions reported by the mercury sorbent trap monitoring system	9.90E-03		0.010	TPY Hg
Hg emissions during HRSG Maintenance = Hourly (lbs/hr) * Operating hours / yr * ton/2000 lb		2.35E-06	0.000	TPY Hg
Hg emissions during Malfunction and OEPA Approved Bypass Venting = Hourly (lbs/hr) * Operating hours / yr * ton/2000 lb		4.02E-04	0.000	TPY Hg
Total Hg Emissions			**0.010**	TPY Hg
HCl				
HCl emissions = Hourly (lbs/hr) * Operating hours / yr * ton/2000 lb	27.40		27.397	TPY HCl
HCl emissions during HRSG Maintenance = Hourly (lbs/hr) * Operating hours / yr * ton/2000 lb		0.02	0.021	TPY HCl
HCl emissions during Malfunction and OEPA Approved Bypass Venting = Hourly (lbs/hr) * Operating hours / yr * ton/2000 lb		3.65	3.654	TPY HCl
Total HCl Emissions			**31.073**	TPY HCl

Estimate of PM and SO_2 Emissions from Haverhill Waste Heat Stacks During Startup, Malfunction and Maintenance
[Excludes emissions reported by CEM system]

Emissions During Maintenance

	Tonnage		Coal Sulfur	Moisture	EF			Stack 6				Stack 7				Stack 8				Stack 9				Stack 10				TOTAL Hours
Month	(tons/month)	(tons/hr/ HRSG)	(%)	(%)	SO_2 (lb/hr)	$PM/PM_{10}/PM_{2.5}$** (lb/hr)	$PM/PM_{10}/PM_{2.5}$*** (lb/hr)	(Hours)	(tons SO_2)	Filterable (tons $PM/PM_{10}/PM_{2.5}$)	Condensable (tons $PM/PM_{10}/PM_{2.5}$)	(Hours)	(tons SO_2)	Filterable (tons $PM/PM_{10}/PM_{2.5}$)	Condensable (tons $PM/PM_{10}/PM_{2.5}$)	(Hours)	(tons SO_2)	Filterable (tons $PM/PM_{10}/PM_{2.5}$)	Condensable (tons $PM/PM_{10}/PM_{2.5}$)	(Hours)	(tons SO_2)	Filterable (tons $PM/PM_{10}/PM_{2.5}$)	Condensable (tons $PM/PM_{10}/PM_{2.5}$)	(Hours)	(tons SO_2)	Filterable (tons $PM/PM_{10}/PM_{2.5}$)	Condensable (tons $PM/PM_{10}/PM_{2.5}$)	
January	64,531	17.35	0.95%	8.87%	181.80	12.10	5.70	0.00	0.0	0.0000	0.0000	0.00	0.0	0.0000	0.0000	0.10	0.2	0.00060	0.00028	0.00	0.0	0.00000	0.00000	0.00	0.0	0.00000	0.00000	0.10
February	58,919	17.54	0.93%	7.87%	181.80	12.10	5.70	0.20	0.3	0.0012	0.0006	0.07	0.1	0.0004	0.0002	0.03	0.1	0.00020	0.00010	0.05	0.1	0.00030	0.00014	0.05	0.1	0.00030	0.00014	0.40
March	65,638	17.64	0.93%	7.67%	181.80	12.10	5.70	0.03	0.1	0.0002	0.0001	0.02	0.0	0.0001	0.0000	0.02	0.0	0.00010	0.00005	0.02	0.0	0.00010	0.00005	0.02	0.0	0.00010	0.00005	0.10
April	62,792	17.44	0.92%	7.90%	181.80	12.10	5.70	0.02	0.0	0.0001	0.0000	0.02	0.0	0.0001	0.0000	0.02	0.0	0.00010	0.00005	0.03	0.1	0.00020	0.00010	0.05	0.1	0.00030	0.00014	0.13
May	63,960	17.19	0.95%	7.84%	181.80	12.10	5.70	0.02	0.0	0.0001	0.0000	0.03	0.1	0.0002	0.0001	0.03	0.1	0.00020	0.00010	0.27	0.4	0.00161	0.00076	0.03	0.1	0.00020	0.00009	0.38
June	59,926	16.65	0.95%	7.29%	181.80	12.10	5.70	0.00	0.0	0.0000	0.0000	0.00	0.0	0.0000	0.0000	0.00	0.0	0.00000	0.00000	0.00	0.0	0.00000	0.00000	0.00	0.0	0.00000	0.00000	0.00
July	65,065	17.49	0.93%	7.75%	141.90	12.10	5.70	0.02	0.0	0.0001	0.0000	0.03	0.0	0.0002	0.0001	0.03	0.0	0.00020	0.00009	0.03	0.0	0.00020	0.00010	0.03	0.0	0.00020	0.00010	0.15
August	65,426	17.59	0.95%	8.01%	141.90	12.10	5.70	0.00	0.0	0.0000	0.0000	0.00	0.0	0.0000	0.0000	0.00	0.0	0.00000	0.00000	0.00	0.0	0.00000	0.00000	0.00	0.0	0.00000	0.00000	0.00
September	65,599	18.22	0.95%	8.33%	141.90	12.10	5.70	0.02	0.0	0.0001	0.0000	0.03	0.0	0.0002	0.0001	0.03	0.0	0.00020	0.00009	0.05	0.0	0.00030	0.00014	0.02	0.0	0.00010	0.00005	0.15
October	67,302	18.09	0.96%	8.05%	141.90	12.10	5.70	0.07	0.0	0.0004	0.0002	0.15	0.0	0.0009	0.0004	0.10	0.0	0.00060	0.00028	0.05	0.0	0.00030	0.00014	0.07	0.0	0.00040	0.00019	0.43
November	65,358	18.16	0.92%	8.33%	141.90	12.10	5.70	0.02	0.0	0.0001	0.0001	0.02	0.0	0.0001	0.0001	0.02	0.0	0.00010	0.00005	0.04	0.0	0.00023	0.00011	0.02	0.0	0.00013	0.00006	0.12
December	63,869	17.17	0.92%	7.68%	141.90	12.10	5.70	0.02	0.0	0.0001	0.0000	0.05	0.0	0.0003	0.0001	0.03	0.0	0.00020	0.00009	0.03	0.0	0.00020	0.00009	0.03	0.0	0.00020	0.00010	0.17
	768,387							0.40	0.4	0.00	0.00	0.42	0.2	0.00	0.00	0.42	0.4	0.00	0.00	0.57	0.6	0.00	0.00	0.32	0.2	0.00	0.00	2.13

Total HRSG Emissions:

SO_2	**1.88**	tons/yr
Filterable $PM/PM_{10}/PM_{2.5}$	**0.01**	tons/yr
Condensable $PM/PM_{10}/PM_{2.5}$	**0.01**	tons/yr
Total $PM/PM_{10}/PM_{2.5}$	**0.02**	tons/yr

Emissions During Malfunction and OEPA Bypass Venting

	Tonnage		Coal Sulfur	Moisture	EF			Stack 6				Stack 7				Stack 8				Stack 9				Stack 10				TOTAL Hours
Month	(tons/month)	(tons/hr/ HRSG)	(%)	(%)	SO_2 (lb/hr)	$PM/PM_{10}/PM_{2.5}$** (lb/hr)	$PM/PM_{10}/PM_{2.5}$*** (lb/hr)	(Hours)	(tons SO_2)	Filterable (tons $PM/PM_{10}/PM_{2.5}$)	Condensable (tons $PM/PM_{10}/PM_{2.5}$)	(Hours)	(tons SO_2)	Filterable (tons $PM/PM_{10}/PM_{2.5}$)	Condensable (tons $PM/PM_{10}/PM_{2.5}$)	(Hours)	(tons SO_2)	Filterable (tons $PM/PM_{10}/PM_{2.5}$)	Condensable (tons $PM/PM_{10}/PM_{2.5}$)	(Hours)	(tons SO_2)	Filterable (tons $PM/PM_{10}/PM_{2.5}$)	Condensable (tons $PM/PM_{10}/PM_{2.5}$)	(Hours)	(tons SO_2)	Filterable (tons $PM/PM_{10}/PM_{2.5}$)	Condensable (tons $PM/PM_{10}/PM_{2.5}$)	
January	64,531	17.35	0.95%	8.87%	181.80	12.10	5.70	0.00	0.0	0.0000	0.0000	0.00	0.0	0.0000	0.0000	271.62	428.3	1.64328	0.77411	0.00	0.0	0.00000	0.00000	0.00	0.0	0.00000	0.00000	271.62
February	58,919	17.54	0.93%	7.87%	181.80	12.10	5.70	7.12	11.3	0.0431	0.0203	6.62	10.5	0.0400	0.0189	4.63	7.4	0.02803	0.01320	5.60	8.9	0.03388	0.01596	5.13	8.2	0.03106	0.01463	29.10
March	65,638	17.64	0.93%	7.67%	181.80	12.10	5.70	0.13	0.2	0.0008	0.0004	0.25	0.4	0.0015	0.0007	21.70	34.8	0.13129	0.06185	0.22	0.3	0.00131	0.00062	0.20	0.3	0.00121	0.00057	22.50
April	62,792	17.44	0.92%	7.90%	181.80	12.10	5.70	0.08	0.1	0.0005	0.0002	0.63	1.0	0.0038	0.0018	0.00	0.0	0.00000	0.00000	0.60	1.0	0.00363	0.00171	0.00	0.0	0.00000	0.00000	1.32
May	63,960	17.19	0.95%	7.84%	181.80	12.10	5.70	0.00	0.0	0.0000	0.0000	0.00	0.0	0.0000	0.0000	0.00	0.0	0.00000	0.00000	0.00	0.0	0.00000	0.00000	0.00	0.0	0.00000	0.00000	0.00
June	59,926	16.65	0.95%	7.29%	181.80	12.10	5.70	0.00	0.0	0.0000	0.0000	0.00	0.0	0.0000	0.0000	0.00	0.0	0.00000	0.00000	0.00	0.0	0.00000	0.00000	0.00	0.0	0.00000	0.00000	0.00
July	65,065	17.49	0.93%	7.75%	141.90	12.10	5.70	0.00	0.0	0.0000	0.0000	0.00	0.0	0.0000	0.0000	0.00	0.0	0.00000	0.00000	0.00	0.0	0.00000	0.00000	0.00	0.0	0.00000	0.00000	0.00
August	65,426	17.59	0.95%	8.01%	141.90	12.10	5.70	0.80	0.1	0.0048	0.0023	0.43	0.0	0.0026	0.0012	0.62	0.0	0.00373	0.00176	0.97	0.1	0.00585	0.00276	0.15	0.0	0.00091	0.00043	2.97
September	65,599	18.22	0.95%	8.33%	141.90	12.10	5.70	0.00	0.0	0.0000	0.0000	0.00	0.0	0.0000	0.0000	0.00	0.0	0.00000	0.00000	0.00	0.0	0.00000	0.00000	0.00	0.0	0.00000	0.00000	0.00
October	67,302	18.09	0.96%	8.05%	141.90	12.10	5.70	0.13	0.0	0.0008	0.0004	0.13	0.0	0.0008	0.0004	0.17	0.0	0.00101	0.00047	0.18	0.0	0.00111	0.00052	0.32	0.0	0.00192	0.00090	0.93
November	65,358	18.16	0.92%	8.33%	141.90	12.10	5.70	0.00	0.0	0.0000	0.0000	0.00	0.0	0.0000	0.0000	0.97	0.1	0.00585	0.00275	0.12	0.0	0.00071	0.00033	35.92	2.5	0.21730	0.10236	37.00
December	63,869	17.17	0.92%	7.68%	141.90	12.10	5.70	0.00	0.0	0.0000	0.0000	0.00	0.0	0.0000	0.0000	0.00	0.0	0.00000	0.00000	0.00	0.0	0.00000	0.00000	0.00	0.0	0.00000	0.00000	0.00
	768,387							8.3	11.8	0.05	0.02	8.1	12.0	0.05	0.02	299.7	470.6	1.81	0.85	7.7	10.3	0.05	0.02	41.7	11.1	0.25	0.12	365.43

Total HRSG Emissions:

SO_2	**515.76**	tons/yr
Filterable $PM/PM_{10}/PM_{2.5}$	**2.21**	tons/yr
Condensable $PM/PM_{10}/PM_{2.5}$	**1.04**	tons/yr
Total $PM/PM_{10}/PM_{2.5}$	**3.25**	tons/yr

HCC **CALCULATION SHEET** **Calc. No.** **P902-2**

Signature: D. Starkweather Date: 4/10/2018 Checked: Date:
Project: Haverhill Coke Company - Fee Emission Report 2017
Subject: Pollutant Emissions Calculations

Purpose
To estimate criteria pollutant emissions due to the charging of the ovens with coal.

Basis

Actual annual coal charge =	768,387	tons wet coal/yr	707,134 tons dry coal/yr

Emission Factors:

SO_2 EF (lb/ton coal charged) =	0.0003	Jewell stack test data, Vansant, VA
CO EF (lb/ton coal charged) =	0.0028	Jewell stack test data, Vansant, VA
VOC EF (lb/ton coal charged) =	0.0020	Jewell stack test data, Vansant, VA
Pb EF (lb/ton coal charged) =	1.00E-07	(from AP-42)
Benzo (a) pyrene =	1.97E-07	(from AP-42)

Stack

Total PM/PM_{10}/$PM_{2.5}$ EF =	0.0027	lb/ton dry coal (Haverhill Test Data, April 2009)

Uncontrolled:

PM EF (lb/tons coal charged) =	0.027	(from AP-42 Coke Prodn section, Table 12.2-21 uncontrolled)

Fugitive
Controlled:

PM EF (lb/tons coal charged) =	0.0027	(assuming 90% capture eff for emissions controlled by traveling hood and baghouse) - See note at bottom of page

PM_{10} : Assume PM_{10} = 30% of PM fugitives
$PM_{2.5}$: Assume $PM_{2.5}$ = 15% of PM fugitives

# Emission Activity hours in the reporting period =	2920	hours	(based on 8 hours of charging per day)
# APCD malfunction/deviation hours =	1.83	hours	
# Normal operating hours =	2918.17	hours	
Fraction of APCD malfunction/deviation hours =	0.063%		
Fraction of Normal operating hours =	99.937%		

Emissions Estimation

Stack Total PM/PM_{10}/$PM_{2.5}$ during Normal Operation
0.0027 lb/dry tons coal * # dry tons coal/yr * ton/2000 lbs * Fraction of Normal Operating hours = 0.9540 TPY PM/PM_{10}/$PM_{2.5}$

Stack Total PM/PM_{10}/$PM_{2.5}$ during APCD Malfunction/Deviations
0.027 lb/dry tons coal * # dry tons coal/yr * ton/2000 lbs * Fraction of APCD malf/deviation hours = 0.0060 TPY PM/PM_{10}/$PM_{2.5}$

Fugitive PM
0.027 lb PM / ton coal charged * # tons coal charged/yr * 1 ton / 2000 lbs * (1-.90) = 0.955 TPY fugitive PM

Fugitive PM_{10} (30% of PM)
0.3 * annual PM 0.286 TPY fugitive PM_{10}

Fugitive $PM_{2.5}$ (15% of PM)
0.15 * annual PM 0.143 TPY fugitive $PM_{2.5}$

SO_2
0.0003 lb SO2/wet ton coal charged * # wet tons coal/yr * 1 ton/2000 lbs = 0.115 TPY SO_2

CO
0.0028 lb CO/wet ton coal charged * # wet tons coal/yr * 1 ton/2000 lbs = 1.076 TPY CO

VOC
0.0020 lb VOC/wet ton coal charged * # wet tons coal/yr * 1 ton/2000 lbs = 0.768 TPY VOC

Pb
0.0000001 lb Pb/wet ton coal charged * # wet tons coal/yr * 1 ton/2000 lbs = 3.84E-05 TPY Pb

Benzo (a) pyrene =
0.000000197 lb BAP/wet ton coal charged * # wet tons coal/yr * 1 ton/2000 lbs = 7.57E-05 TPY BAP

NOTE
The PTI identifies the capture rate for charging as 70%. This was based on tests at Jewell, that was used as a basis for estimating charging emissions in the permit application that was submitted before Haverhill was constructed. The hood at Haverhill encloses more of the area above the oven with larger flow rate. Therefore, 90% capture efficiency is a more reasonable estimate for actual emissions.

HCC **CALCULATION SHEET** **Calc. No.** **P902-3**

Signature: D. Starkweather Date: 4/10/2018 Checked: Date:
Project: Haverhill Coke Company - Fee Emission Report 2017
Subject: Pollutant Emissions Calculations

Purpose
To estimate criteria pollutant emissions due to the pushing process.

Basis
Actual annual coal charge = 768,387 tons wet coal/yr Actual annual production = 554,847 tons wet coke + breeze/yr

# Emission Activity hours in the reporting period =	2920	hours	(based on 8 hours of pushing per day)
# APCD malfunction/deviation hours =	2.17	hours	
# Normal operating hours =	2917.83	hours	
Fraction of APCD malfunction/deviation hours =	0.074%		
Fraction of Normal operating hours =	99.926%		

Emission Factors:

Total $PM/PM_{10}/PM_{2.5}$ EF (lb/ton coke pushed) [controlled] =	0.04	(Haverhill Test Data, April 2009)
Total $PM/PM_{10}/PM_{2.5}$ EF (lb/ton coke pushed) [uncontrolled] =	0.20	(estimated using controlled EF & multicyclone PM removal efficiency of 80%)
SO_2 EF (lb/tons coal charged) =	0.05	(Haverhill Test Data, April 2009)
NO_X EF (lb/tons coal charged) =	0.003	(Haverhill Test Data, April 2009)
CO EF (lb/tons coal charged) =	0.019	(Haverhill Test Data, April 2009)
VOC EF (lb/tons coal charged) =	0.0006	(Haverhill Test Data, April 2009)
Pb EF (lb/tons coal charged) =	3.28E-05	(Haverhill Test Data, April 2009)

Actual emissions estimation:

Total $PM/PM_{10}/PM_{2.5}$ during Normal Operations
(0.04 lb/ton coke) * (tons coke pushed/yr) * (ton/2000 lb) * Fraction of Normal Operating Hours = 11.09 tons $PM/PM_{10}/PM_{2.5}$/yr

Total $PM/PM_{10}/PM_{2.5}$ during APCD Malfunction/Deviations
(0.20 lb/ton coke) * (tons coke pushed/yr) * (ton/2000 lb) * Fraction of APCD Malfunction/Deviation Hours = 0.041 tons $PM/PM_{10}/PM_{2.5}$/yr

SO_2
(0.05 lb/ton coal) * (tons coal charged/yr) * (ton/2000 lb) = 19.210 tons SO_2/yr

NO_X
(0.003 lb/ton coal) * (tons coal charged/yr) * (ton/2000 lb) = 1.153 tons NO_X/yr

CO
(0.019 lb/ton coal) * (tons coal charged/yr) * (ton/2000 lb) = 7.300 tons CO/yr

VOC
(0.0006 lb/ton coal) * (tons coal charged/yr) * (ton/2000 lb) = 0.231 tons VOC/yr

Pb
(0.0000328 lb/ton coal) * (tons coal charged/yr) / (ton/2000lb) = 1.26E-02 tons Pb/yr

TV FER/EIS Emissions Report (258587) for 2017
Haverhill Coke Company LLC
0773000182
April 16, 2018

If I am claiming any information in this submission is a trade secret, I hereby swear or affirm that the trade secret request meets the requirements of Ohio Administrative Code 3745-49-03(B) and that the justification submitted with the trade secret request sets forth the basis for claiming that the information should be considered a trade secret as defined in Ohio Administrative Code 3745-49-02(T).

a) I am a responsible official as defined in OAC 3745-77-01(II), and as specified in OAC 3745-77-03(D), based on information and belief formed after reasonable inquiry, I hereby affirm that all factual statements and information in this transmittal are true, accurate and complete; OR
b) I am a designated representative as defined in paragraph (26) of Section 402 of the Clean Air Act, and as per OAC 3745-103-06, I certify under penalty of law that I have personally examined, and am familiar with, the statements and information submitted in this document and all its attachments. Based on my inquiry of those individuals with primary responsibility for obtaining the information, I certify that the statements and information are to the best of my knowledge and belief true, accurate, and complete. I am aware that there are significant penalties for submitting false statements and information or omitting required statements and information, including the possibility of fine or imprisonment. I am authorized to make this submission on behalf of the owners and operators of the source or units for which the submission is made.

I do not certify the accuracy of hazardous air and greenhouse gas pollutant emission data presented in this Air Services Emissions Report. I understand that some of this information may be provided to USEPA by Ohio EPA as part of Ohio EPA's federal grant commitments.

Signee Name (please print): James Skipworth **Title:** General Mgr.

Signee Signature: James S. Skipworth **Date:** 4/16/18

STARKWEATHER, DIANA M.

From: STARKWEATHER, DIANA M.
Sent: Wednesday, May 02, 2018 1:43 PM
To: Brown, Todd (Todd.Brown@epa.ohio.gov); Cindy.Charles@epa.ohio.gov
Cc: Sastry, Chandra (chandra.sastry@aecom.com); Thomas, Bill (Oak Ridge) (bill.c.thomas@aecom.com); BATTEN, KATHERINE M (KMBATTEN@suncoke.com); SKIPWORTH, JIM G. (JGSKIPWORTH@suncoke.com); Carson, John R (Oak Ridge) (john.r.carson@aecom.com)
Subject: Intent to Test Notification - Haverhill Coke Company RATA Testing
Attachments: P902 Main Stack RATA ITT May31 2018.pdf; P901 Main Stack RATA ITT June 1 2018.pdf; Bypass Stack 6 CEMS RATA ITT June 12 2018.pdf

Todd and Cindy,

Attached are the Intent to Test Notifications for the Relative Accuracy Test Audit (RATA) for the P901 and P902 Main Stack CEMS and the SO_2 CEMS on Bypass Vent Stack 6.

The schedule for the two Main Stack RATAs is outlined below.

Wednesday, May 30: Set up equipment at P902
Thursday, May 31: Perform SO2 Mercury RATA at P902 (start @ 8:00 AM) and move equipment to P901 for set up
Friday, June 1: Perform SO2 RATA on P901 (start @ 8:00 AM)

The Bypass Vent Stack CEMs tests will be conducted along with other stack tests on Bypass Stack 6 as part of the Consent Decree requirements. The CD required RATA testing is scheduled for June 12, 2018.

If you have any questions regarding this notification or if you need any additional information for this testing please do not hesitate to contact me.

Thanks,

Diana Starkweather
Environmental Manager
SunCoke Energy Partners, L.P.
Haverhill Operations

SXCPartners

2446 Gallia Pike
Franklin Furnace, OH 45629
Office: 740-355-9823
Cell: 740-352-2593

This e-mail and any files transmitted with it may contain confidential information and is intended solely for the use of the individual or entity to whom they are addressed. If you are not the intended recipient, you are notified that disclosing, copying, distributing or taking any action in reliance on the contents of this information is strictly prohibited. Please notify the sender immediately by e-mail if you have received this e-mail by mistake and delete this e-mail from your system. Thank you for your cooperation.

INTENT TO TEST NOTIFICATION (One Emissions Unit Per Sheet)

Agency use only	
Date Received	
Assigned	

Facility Premise No. 0773000182
Emissions Unit PTI No. P0119826
SCC Number NA

Proposed Test Date 5/31/18
Proposed Start Time 0800

A. Facility Contact Information:

Name Haverhill Coke Company
Address 2446 Gallia Pike, Franklin Furnace, OH 45629
Contact Person Diana Starkweather
Telephone (O) 740-355-9823 (Cell)
E-mail dmstarkweather@suncoke.com

Testing Firm Information:

Name AECOM
Address 105 Mitchell Road, Suite 200, Oak Ridge, TN 37830
Contact Person Chandra Sastry
Telephone (O) 865-425-7046 (Cell)
E-mail chandra.sastry@aecom.com

B. Test Location Information:

Name Haverhill Coke Company
Contact Person Diana Starkweather

Address 2446 Gallia Pike, Franklin Furnace, OH 45629
Telephone (O) 740-355-9823 (Cell)

C. Test Plan and Emissions Unit Information Table: List the applicable information under each respective column heading.

Emission Unit # / Description	Control Equipment	Monitoring Equipment	Pollutant(s) to be Tested	EPA Test Method(s)	Number of Sampling Points	Total Time for Sample Run	Number of Sampling Runs
P902 Main Stack	Lime Spray Dryer/Baghouse	Dry SO2 and O2 Analyzers, Wet O2 Analyzers, Stack Gas Flow Rate Monitor	SO2 Stack Flow Rate Moisture Molecular Weight	EPA Method 6C EPA Method 2 EPA Method 4 EPA Method 3A	3 Per EPA Method 1 1 3	At least 21 min. Once per M6 Run Appr. 1 hr At least 21 min.	At least 9 At least 9 At least 3 At least 9
	Carbon Injection/Baghouse	Hg Sorbent Trap Monitoring System	Mercury	EPA Method 30 B	3	At least 30 min.	At least 9

Are *any* modifications, or alternatives as spelled out within the test methods, being proposed? Yes ☒ No ☐ If "no", then no modifications or alternatives, however minor, will be accepted. If yes, list each test method and section being modified, and attach a detailed modification description and justification: See Attachment

Source is testing to comply with (check all that apply): State PTI ☒ State PTO ☐ Title V ☐ NSPS ☐ MACT ☐ BIF ☐ Title IV ☐ Other (explain)

D. What is the maximum rated capacity or throughput of the emissions unit given in its permit-to-install or permit-to-operate? 48 wet tons coal charged/oven

Has the facility scheduled production or throughput so that the emissions unit can be operated at the maximum capacity given in its permit-to-install or permit-to-operate during the test? Yes ☐ No ☒ If no, attach explanation.

Specify how the operating rate will be demonstrated during testing: Production records

Sampling Location(s): Inlet ☐ Outlet ☒ Simultaneous ☐ Will Cyclonic flow check(s) be conducted? Yes ☐ No ☒

Fuel Sampling: Coal - Proximate ☐ Ultimate ☐ Other ☐ If other, specify: NA

Emission rate to be calculated using: F-Factor ☐ Ultimate Coal Analysis ☐ Other ☒ If other, specify: SO2 concentration and stack flow rates

Has any maintenance or parts replacement been performed on the emissions unit or the control equipment within the last year? Yes ☐ No ☒

If yes, briefly describe:

(Note: Some maintenance, such as installing new filter bags in a baghouse, or replacing the activated carbon in an adsorber, may disqualify the emissions unit from a performance test until a sufficient amount of time has elapsed to ensure a test which will be representative of normal operations.)

E. Sample Train Calibration: All affected measuring and monitoring equipment should be calibrated within 60 days of the scheduled testing. *Ohio EPA 12/07*

THE FOLLOWING ADDITIONAL INFORMATION SHALL BE SUBMITTED AS ATTACHMENTS:

F. Sample Train Information:

- A schematic diagram of each sampling train.
- The type or types of capture media to be used to collect each gas stream pollutant. (Include filter specification sheets)
- Sample probe type, (e.g., glass, teflon, stainless steel, etc.)
- Probe cleaning method and solvent to be used, if applicable.

G. Laboratory Analysis:

- A description of the laboratory analysis methods to be used to determine the concentration of each pollutant.

H. Description of Operations:

- A description of any operation, process, or activity that could vent exhaust gases to the stack being tested. This shall include the description and feed rate of all materials capable of producing pollutant emissions used in each separate operation. Maximum process weight rate, or coating rate, and parameters such as line speed, VOC content etc. should be specifically documented with calculations to confirm worst case scenario emissions.

Note 1: All compliance demonstration testing shall be performed at maximum rated capacity as specified by the equipment manufacturer, or at the maximum rate actually used in the emissions unit operation, whichever is greater, or at any other rate as agreed upon with Ohio EPA.

Note 2: If the emissions unit is not operated at maximum capacity, or as close as possible thereto, the emissions unit might be derated to the production capacity achieved during testing.

I. Stack and Vent Description:

- A dimensional sketch or sketches showing the plan and elevation view of the entire ducting and stack arrangement. The sketch should include the relative position of all processed or operations venting to the stack or vent to be tested. It should also include the position of the ports relative to the nearest upstream and downstream gas flow disturbance or duct dimensional change. The sketches should include the relative position, type, and manufacturer's claimed efficiency of all gas cleaning equipment.

- A cross sectional dimensional sketch of the stack or duct at the sampling ports, showing the position of sampling points. In case of a rectangular duct, show division of duct into equal areas.

- For fugitive emissions testing, a sketch illustrating the specific emissions points to be observed must be included.

J. Safety:

- Describe all possible safety hazards including such items as the presence of toxic fumes, high noise levels, areas where eye protection is required, etc. Note: Conditions considered unsafe at the time of the test will cause postponement.

Intent to Test Notification Attachment
Relative Accuracy Test Audit

Date Prepared: May 2, 2018 Proposed Test Date: May 31, 2018

Plant Address: Haverhill Coke Company
2446 Gallia Pike
Franklin Furnace, OH 45629

F. Sample Train Information
- F1. See attached diagrams.
- F2. Not applicable for SO_2 CEMS RATA; halogenated carbon will be used in the Method 30B sorbent traps.
- F3. Glass or Stainless Steel probe liners will be used to extract sample for SO_2 analysis. Dual sample line probe will be used for Method 30B sampling.
- F4. Not applicable.

G. Laboratory Analysis None required for SO_2 CEMS RATA. Mercury sorbent traps will be analyzed in an offsite laboratory.

H. Description of Operations

The Haverhill Coke Company (HCC) utilizes the Jewell-Thompson heat recovery oven to manufacture metallurgical coke. In coke production from heat recovery ovens, the volatile fraction of the coal is driven off in a reducing atmosphere and then oxidized. Heat recovery steam generators recover heat from the oven waste gases. The cooled gases pass through a lime spray dryer/baghouse system prior to being exhausted from the main stack. HCC Phase II includes 100 ovens (Batteries A and B) that operate on a 48-hour coking cycle. HCC Phase II has a daily design coal coking rate of 2400 tons.

I. Stack and Vent Description

See attached diagrams.

J. Safety

All test personnel will have taken the plant safety orientation program. All plant safety requirements will be complied with during the RATA testing including the wearing of safety vests, hard hats, safety shoes, safety glasses, and hearing protection as appropriate.

K. Test Report

The RATA test report will be submitted within 30 days of conducting the test and will include:

- A summary of the RATA results,
- A description of the technical approach used including EPA reference methods,
- QA/QC procedures,
- All raw data sheets,
- Production data for the 48-hour period preceding the RATA test period,
- Results of audit samples, if any,
- All calibration data, and
- Formulas used to calculate mass emission rates and relative accuracy

Intent to Test Notification Attachment
Relative Accuracy Test Audit

Date Prepared: May 2, 2018 Proposed Test Date: May 31, 2018

Plant Address: Haverhill Coke Company
2446 Gallia Pike
Franklin Furnace, OH 45629

Are any modifications to USEPA Reference Method(s) proposed?

For the SO2 RATA, samples for moisture determination will be collected from a single point within the stack and a moisture determination will be made approximately every hour.

In all previous testing at this source, the gas stream has been demonstrated to be not stratified. No modifications have been performed to the emission source or the control equipment since the last RATA. Consequently, the stack will be assumed to be unstratified and reference method samples will be taken from three points located at 0.4, 1.2, and 2.0 meters from the stack wall.

Reference method analyzer bias checks will be conducted after every three RATA runs.

Has the facility scheduled production at the maximum capacity during the RATA?

In accordance with Performance Specification 2, the RATA testing will be conducted while the facility is operating at more than 50 percent of normal load.

RATA Performance Specifications: Emission limits in the facility's permit will be used as the applicable standard. For the SO_2 CEMS, relative accuracy will be determined in units of lb SO_2 per hour and the applicable standard is 192 lb/hr. For the mercury sorbent trap system, relative accuracy will be determined on a concentration basis. See the table below for complete list of Performance Specifications.

RATA Performance Specifications

	Relative Accuracy Criteria
SO_2 CEMS	Less than or equal to 20% of mean RM results or 10% of applicable standard
Hg Sorbent Trap System	Less than or equal to 20% of mean RM results or <= 1 ug/m3 difference for low emitters (Low Emitters are sources with average RM Hg <= 5 ug/m3)

Backup Analyzer: A backup SO_2/O_2 analyzer (identical to the primary SO_2/O_2 analyzer and previously certified) will be installed in parallel with the primary analyzer during the RATA and share the sampling system used by the primary analyzer. The backup analyzer RATA will be conducted concurrently with the primary system RATA.

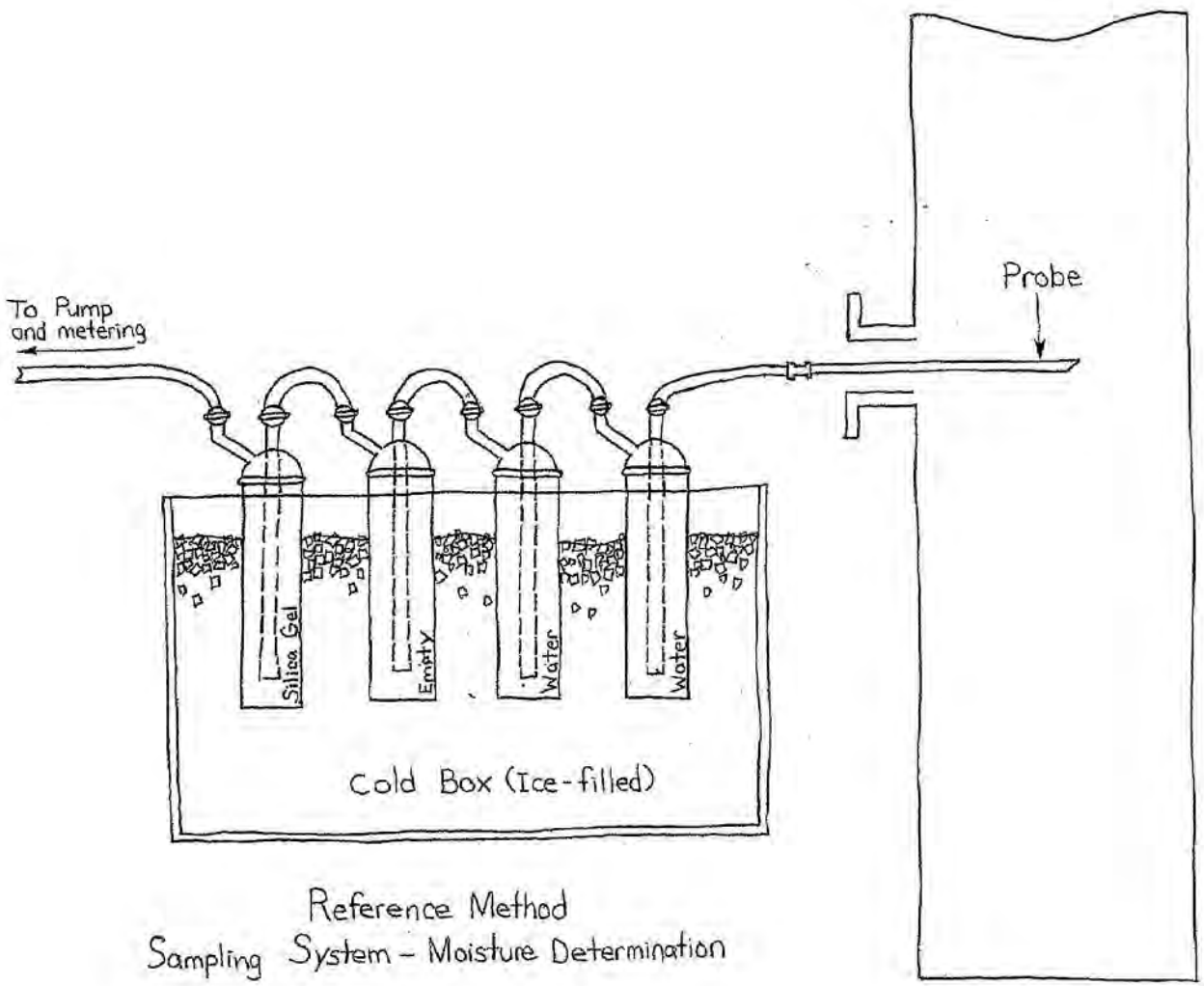

Reference Method
Sampling System – Moisture Determination

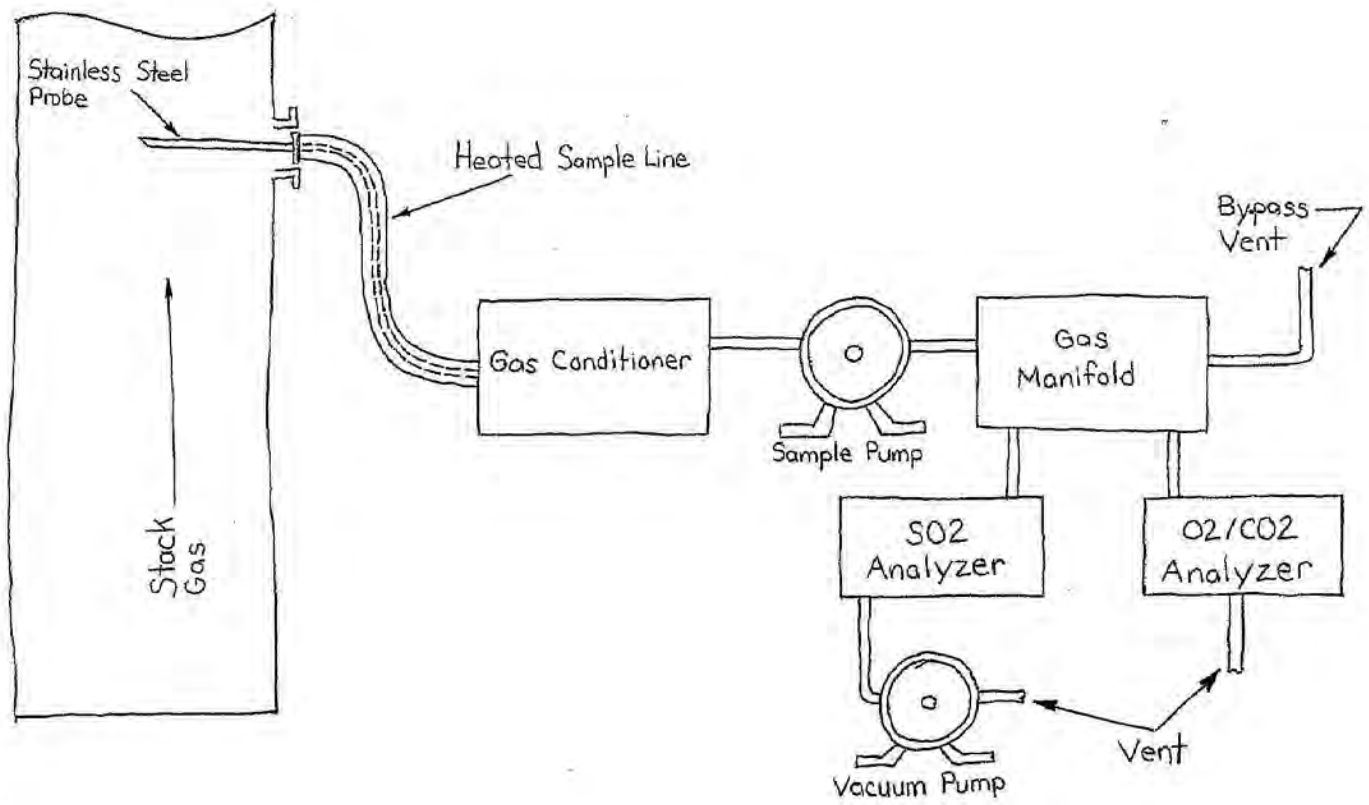

Reference Method
Sampling System - Analyzer Method

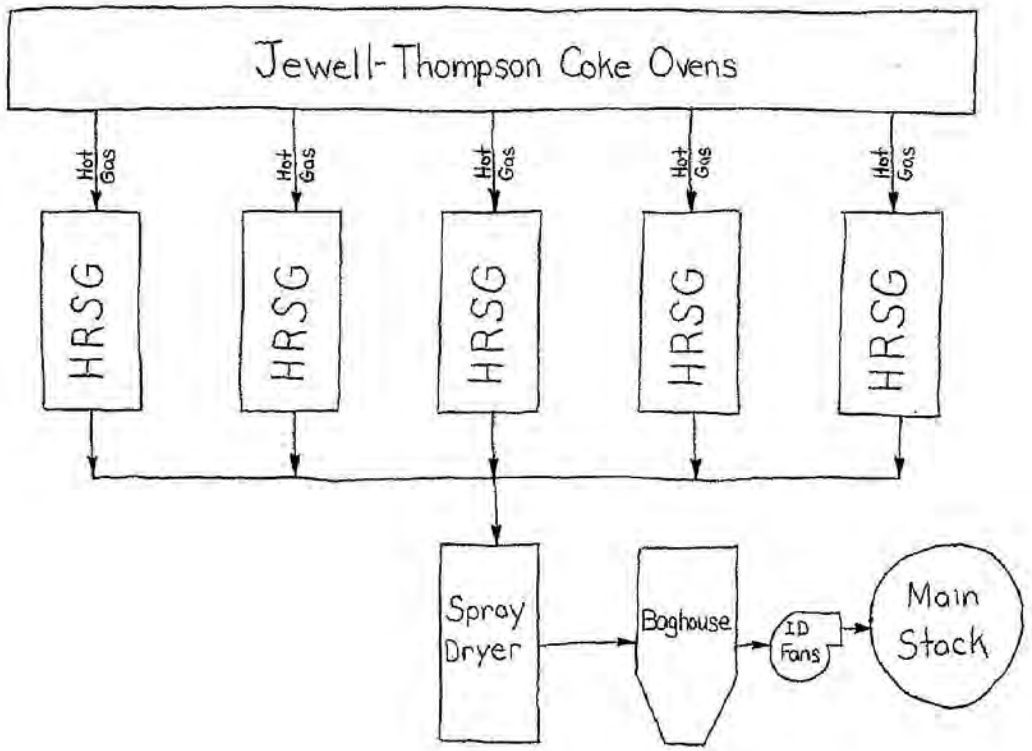

Simplified Schematic - Gas Flow
Haverhill North Coke Company

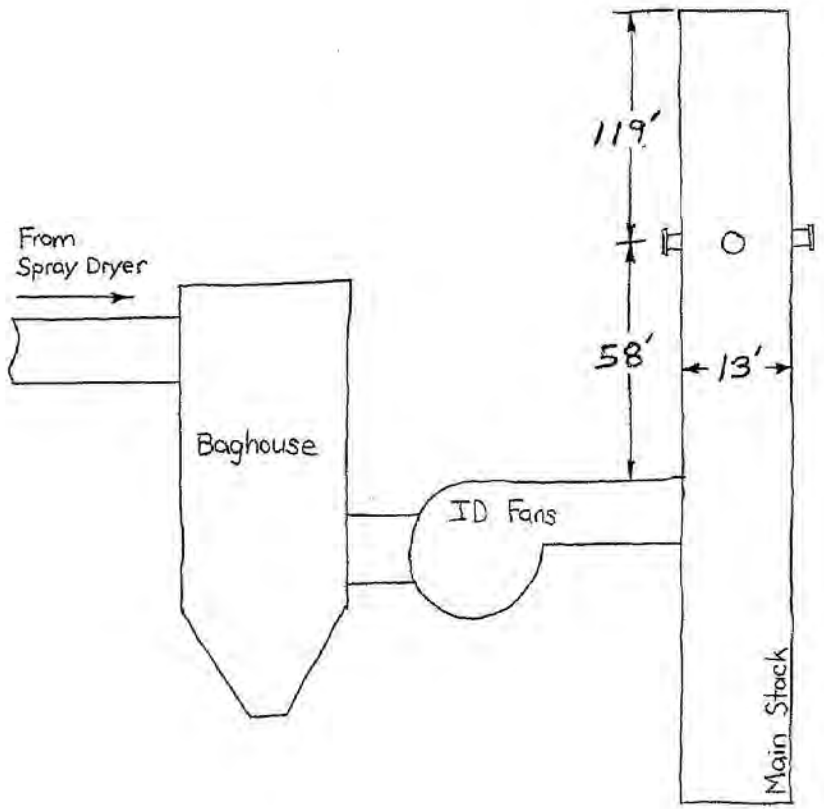

Simplified Schematic - Main Stack
Haverhill North Coke Company

INTENT TO TEST NOTIFICATION (One Emissions Unit Per Sheet)

Agency use only	
Date Received	
Assigned	

Facility Premise No. 0773000182
Emissions Unit PTI No. P0119826
SCC Number NA

Proposed Test Date 6/1/18
Proposed Start Time 08:00

A. Facility Contact Information:

Name Haverhill Coke Company
Address 2446 Gallia Pike, Franklin Furnace, OH 45629
Contact Person Diana Starkweather
Telephone (O) 740-355-9823 (Cell)
E-mail dmstarkweather@suncoke.com

Testing Firm Information:

Name AECOM
Address 105 Mitchell Road, Suite 200, Oak Ridge, TN 37830
Contact Person Chandra Sastry
Telephone (O) 865-425-7046 (Cell)
E-mail chandra.sastry@aecom.com

B. Test Location Information:

Name Haverhill Coke Company
Contact Person Diana Starkweather

Address 2446 Gallia Pike, Franklin Furnace, OH 45629
Telephone (O) 740-355-9823 (Cell)

C. Test Plan and Emissions Unit Information Table: List the applicable information under each respective column heading.

Emission Unit # / Description	Control Equipment	Monitoring Equipment	Pollutant(s) to be Tested	EPA Test Method(s)	Number of Sampling Points	Total Time for Sample Run	Number of Sampling Runs
P901 Main Stack	Lime Spray Dryer/Baghouse	Dry SO2 and O2 Analyzers, Wet O2 Analyzers, Stack Gas Flow Rate Monitor	SO2 Stack Flow Rate Moisture Molecular Weight	EPA Method 6C EPA Method 2 EPA Method 4 EPA Method 3A	3 Per EPA Method 1 1 3	At least 21 min. Once per M6 Run Appr. 1 hr At least 21 min.	At least 9 At least 9 At least 3 At least 9

Are *any* modifications, or alternatives as spelled out within the test methods, being proposed? Yes ☒ No ☐ If "no", then no modifications or alternatives, however minor, will be accepted. If yes, list each test method and section being modified, and attach a detailed modification description and justification: See Attachment

Source is testing to comply with (check all that apply): State PTI ☒ State PTO ☐ Title V ☐ NSPS ☐ MACT ☐ BIF ☐ Title IV ☐ Other (explain)

D. What is the maximum rated capacity or throughput of the emissions unit given in its permit-to-install or permit-to-operate? 48 wet tons coal charged/oven

Has the facility scheduled production or throughput so that the emissions unit can be operated at the maximum capacity given in its permit-to-install or permit-to-operate during the test? Yes ☐ No ☒ If no, attach explanation.

Specify how the operating rate will be demonstrated during testing: Production records

Sampling Location(s): Inlet ☐ Outlet ☒ Simultaneous ☐ Will Cyclonic flow check(s) be conducted? Yes ☐ No ☒

Fuel Sampling: Coal - Proximate ☐ Ultimate ☐ Other ☐ If other, specify: NA

Emission rate to be calculated using: F-Factor ☐ Ultimate Coal Analysis ☐ Other ☒ If other, specify: SO2 concentration and stack flow rates

Has any maintenance or parts replacement been performed on the emissions unit or the control equipment within the last year? Yes ☐ No ☒

If yes, briefly describe:

(Note: Some maintenance, such as installing new filter bags in a baghouse, or replacing the activated carbon in an adsorber, may disqualify the emissions unit from a

performance test until a sufficient amount of time has elapsed to ensure a test which will be representative of normal operations.)

E. Sample Train Calibration: All affected measuring and monitoring equipment should be calibrated within 60 days of the scheduled testing.

THE FOLLOWING ADDITIONAL INFORMATION SHALL BE SUBMITTED AS ATTACHMENTS:

F. Sample Train Information:

- A schematic diagram of each sampling train.
- The type or types of capture media to be used to collect each gas stream pollutant. (Include filter specification sheets)
- Sample probe type, (e.g., glass, teflon, stainless steel, etc.)
- Probe cleaning method and solvent to be used, if applicable.

G. Laboratory Analysis:

- A description of the laboratory analysis methods to be used to determine the concentration of each pollutant.

H. Description of Operations:

- A description of any operation, process, or activity that could vent exhaust gases to the stack being tested. This shall include the description and feed rate of all materials capable of producing pollutant emissions used in each separate operation. Maximum process weight rate, or coating rate, and parameters such as line speed, VOC content etc. should be specifically documented with calculations to confirm worst case scenario emissions.

Note 1: All compliance demonstration testing shall be performed at maximum rated capacity as specified by the equipment manufacturer, or at the maximum rate actually used in the emissions unit operation, whichever is greater, or at any other rate as agreed upon with Ohio EPA.

Note 2: If the emissions unit is not operated at maximum capacity, or as close as possible thereto, the emissions unit might be derated to the production capacity achieved during testing.

I. Stack and Vent Description:

- A dimensional sketch or sketches showing the plan and elevation view of the entire ducting and stack arrangement. The sketch should include the relative position of all processed or operations venting to the stack or vent to be tested. It should also include the position of the ports relative to the nearest upstream and downstream gas flow disturbance or duct dimensional change. The sketches should include the relative position, type, and manufacturer's claimed efficiency of all gas cleaning equipment.

- A cross sectional dimensional sketch of the stack or duct at the sampling ports, showing the position of sampling points. In case of a rectangular duct, show division of duct into equal areas.

- For fugitive emissions testing, a sketch illustrating the specific emissions points to be observed must be included.

J. Safety:

- Describe all possible safety hazards including such items as the presence of toxic fumes, high noise levels, areas where eye protection is required, etc. Note: Conditions considered unsafe at the time of the test will cause postponement.

Intent to Test Notification Attachment
Relative Accuracy Test Audit

Date Prepared: May 2, 2018 Proposed Test Date: June 1, 2018

Plant Address: Haverhill Coke Company
2446 Gallia Pike
Franklin Furnace, OH 45629

F. Sample Train Information
- F1. See attached diagrams.
- F2. Not applicable for SO2 CEMS RATA.
- F3. Glass or Stainless Steel probe liners will be used to extract sample for SO2 analysis.
- F4. Not applicable.

G. Laboratory Analysis None required for SO2 CEMS RATA.

H. Description of Operations

The Haverhill Coke Company (HCC) utilizes the Jewell-Thompson heat recovery oven to manufacture metallurgical coke. In coke production from heat recovery ovens, the volatile fraction of the coal is driven off in a reducing atmosphere and then oxidized. Heat recovery steam generators recover heat from the oven waste gases. The cooled gases pass through a lime spray dryer/baghouse system prior to being exhausted from the main stack. HCC Phase I includes 100 ovens (Batteries A and B) that operate on a 48-hour coking cycle. HCC Phase I has a daily design coal coking rate of 2400 tons.

I. Stack and Vent Description

See attached diagrams.

J. Safety

All test personnel will have taken the plant safety orientation program. All plant safety requirements will be complied with during the RATA testing including the wearing of safety vests, hard hats, safety shoes, safety glasses, and hearing protection as appropriate.

K. Test Report

The RATA test report will be submitted within 30 days of conducting the test and will include:

- A summary of the RATA results,
- A description of the technical approach used including EPA reference methods,
- QA/QC procedures,
- All raw data sheets,
- Production data for the 48-hour period preceding the RATA test period,
- Results of audit samples, if any,
- All calibration data, and
- Formulas used to calculate mass emission rates and relative accuracy

Intent to Test Notification Attachment
Relative Accuracy Test Audit

Date Prepared: May 2, 2018 Proposed Test Date: June 1, 2018

Plant Address: Haverhill Coke Company
2446 Gallia Pike
Franklin Furnace, OH 45629

Are any modifications to USEPA Reference Method(s) proposed?

For the SO2 RATA, samples for moisture determination will be collected from a single point within the stack and a moisture determination will be made approximately every hour.

In all previous testing at this source, the gas stream has been demonstrated to be not stratified. No modifications have been performed to the emission source or the control equipment since the last RATA. Consequently, the stack will be assumed to be unstratified and reference method samples will be taken from three points located at 0.4, 1.2, and 2.0 meters from the stack wall.

Reference method analyzer bias checks will be conducted after every three RATA runs.

Has the facility scheduled production at the maximum capacity during the RATA?

In accordance with Performance Specification 2, the RATA testing will be conducted while the facility is operating at more than 50 percent of normal load.

RATA Performance Specifications: Emission limits in the facility's permit will be used as the applicable standard. For the SO2 CEMS, relative accuracy will be determined in units of lb SO2 per hour and the applicable standard is 192. The criteria for passing the RATA will be a relative accuracy of less than or equal to 20% of the mean RM results or 10% of the applicable standard.

Backup Analyzer: A backup SO_2/O_2 analyzer (identical to the primary SO_2/O_2 analyzer and previously certified) will be installed in parallel with the primary analyzer during the RATA and share the sampling system used by the primary analyzer. The backup analyzer RATA will be conducted concurrently with the primary system RATA.

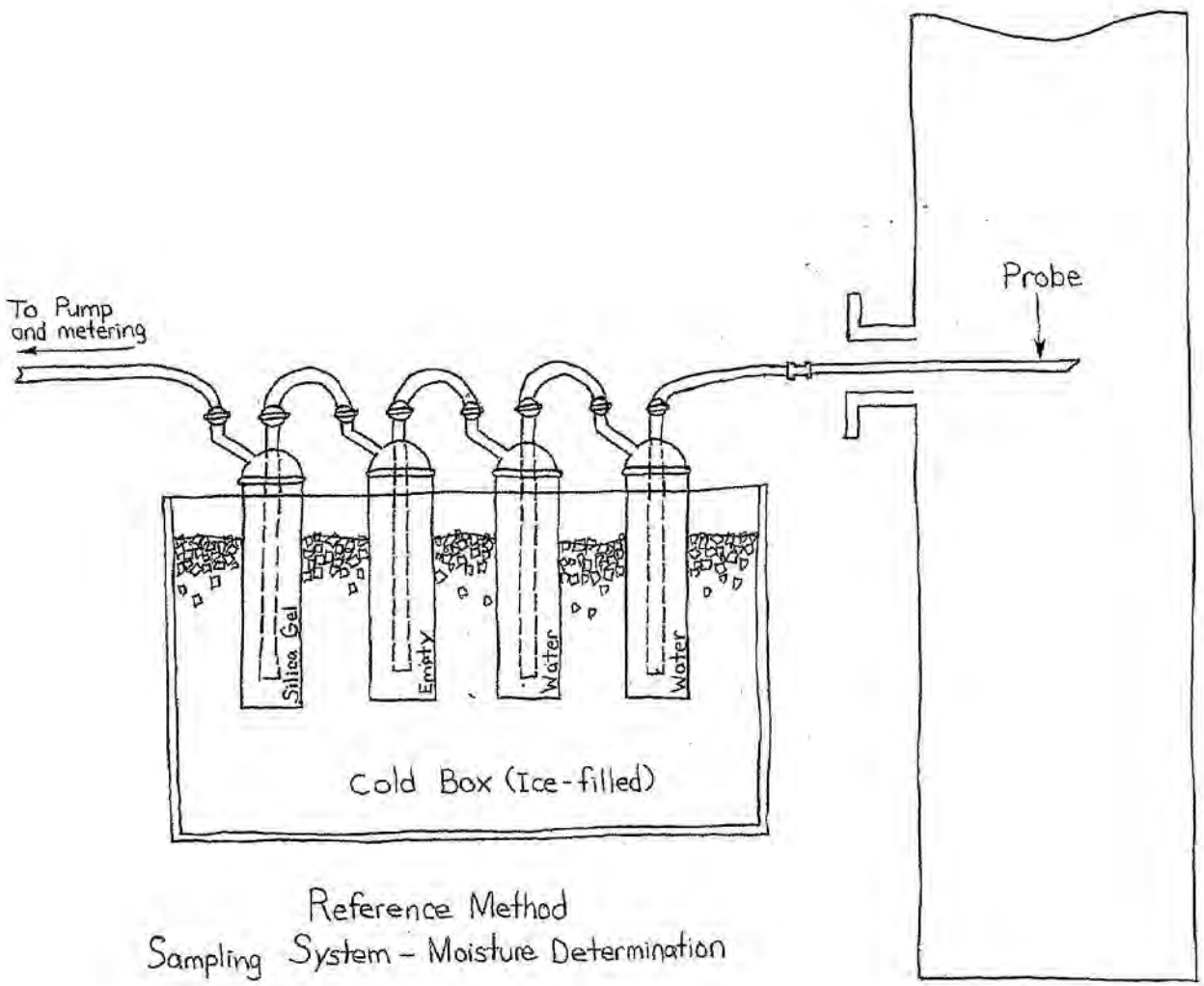

Reference Method
Sampling System – Moisture Determination

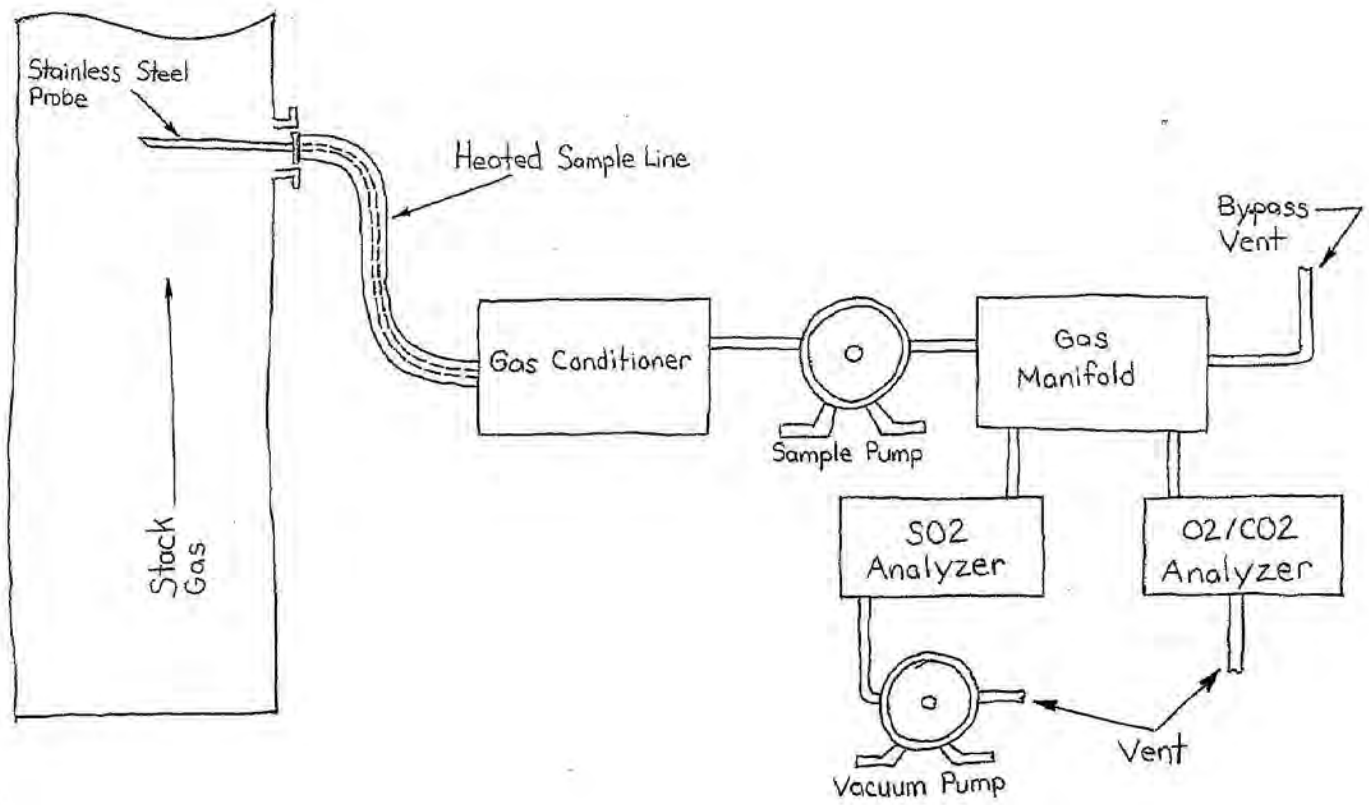

Reference Method
Sampling System - Analyzer Method

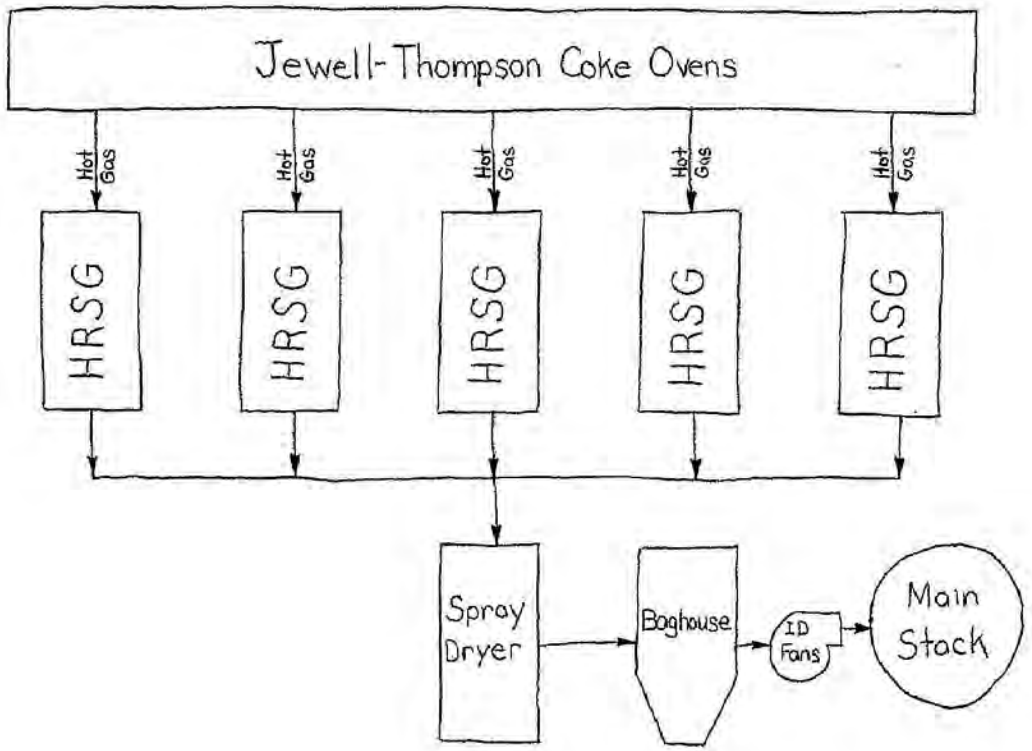

Simplified Schematic - Gas Flow
Haverhill North Coke Company

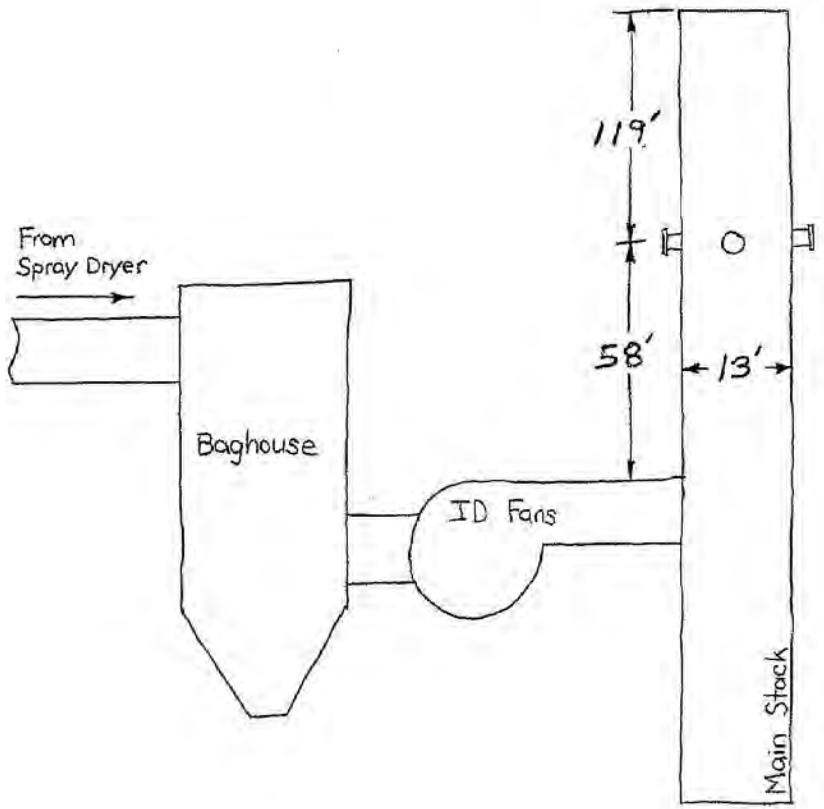

Simplified Schematic - Main Stack
Haverhill North Coke Company

INTENT TO TEST NOTIFICATION (One Emissions Unit Per Sheet)

Agency use only	
Date Received	
Assigned	

Facility Premise No. 0773000182
Emissions Unit PTI No. P0119826
SCC Number NA

Proposed Test Date 6/12/18
Proposed Start Time 09:00

A. Facility Contact Information:

Name: Haverhill Coke Company
Address: 2446 Gallia Pike, Franklin Furnace, OH 45629
Contact Person: Diana Starkweather
Telephone (O): 740-355-9823 (Cell):
E-mail: dmstarkweather@suncoke.com

Testing Firm Information:

Name: AECOM
Address: 105 Mitchell Road, Suite 200, Oak Ridge, TN 37830
Contact Person: Chandra Sastry
Telephone (O): 865-425-7046 (Cell):
E-mail: chandra.sastry@aecom.com

B. Test Location Information:

Name: Haverhill Coke Company
Contact Person: Diana Starkweather

Address: 2446 Gallia Pike, Franklin Furnace, OH 45629
Telephone (O): 740-355-9823 (Cell):

C. Test Plan and Emissions Unit Information Table: List the applicable information under each respective column heading.

Emission Unit # / Description	Control Equipment	Monitoring Equipment	Pollutant(s) to be Tested	EPA Test Method(s)	Number of Sampling Points	Total Time for Sample Run	Number of Sampling Runs
Bypass Stack 6	None	SO2 Analyzer (wet basis)	SO2 Moisture	EPA Method 6C EPA Method 4	3 1	At least 21 min Approx 1 hour	At least 9 At least 3

Are *any* modifications, or alternatives as spelled out within the test methods, being proposed? Yes ☒ No ☐ If "no", then no modifications or alternatives, however minor, will be accepted. If yes, list each test method and section being modified, and attach a detailed modification description and justification: Reference method analyzer bias checks will be conducted after every three RATA runs. samples for moisture determination will be collected from a single point within the stack and a moisture determination will be made approximately every hour.

Source is testing to comply with (check all that apply): State PTI ☐ State PTO ☐ Title V ☐ NSPS ☐ MACT ☐ BIF ☐ Title IV ☐ Other (explain) Consent Decree

D. What is the maximum rated capacity or throughput of the emissions unit given in its permit-to-install or permit-to-operate? 42.5 wet tons coal charged/oven during venting

Has the facility scheduled production or throughput so that the emissions unit can be operated at the maximum capacity given in its permit-to-install or permit-to-operate during the test? Yes ☐ No ☒ If no, attach explanation.

Specify how the operating rate will be demonstrated during testing: Production records

Sampling Location(s): Inlet ☐ Outlet ☒ Simultaneous ☐ Will Cyclonic flow check(s) be conducted? Yes ☐ No ☒

Fuel Sampling: Coal - Proximate ☐ Ultimate ☐ Other ☐ If other, specify: NA

Emission rate to be calculated using: F-Factor ☐ Ultimate Coal Analysis ☐ Other ☒ If other, specify: No emission rate calcs. RATA will be on a conc. basis.

Has any maintenance or parts replacement been performed on the emissions unit or the control equipment within the last year? Yes ☐ No ☒

If yes, briefly describe:

(Note: Some maintenance, such as installing new filter bags in a baghouse, or replacing the activated carbon in an adsorber, may disqualify the emissions unit from a performance test until a sufficient amount of time has elapsed to ensure a test which will be representative of normal operations.)

E. Sample Train Calibration: All affected measuring and monitoring equipment should be calibrated within 60 days of the scheduled testing. *Ohio EPA 12/07*

THE FOLLOWING ADDITIONAL INFORMATION SHALL BE SUBMITTED AS ATTACHMENTS:

F. Sample Train Information:

- A schematic diagram of each sampling train.
- The type or types of capture media to be used to collect each gas stream pollutant. (Include filter specification sheets)

- Sample probe type, (e.g., glass, teflon, stainless steel, etc.)
- Probe cleaning method and solvent to be used, if applicable.

G. Laboratory Analysis:

- A description of the laboratory analysis methods to be used to determine the concentration of each pollutant.

H. Description of Operations:

- A description of any operation, process, or activity that could vent exhaust gases to the stack being tested. This shall include the description and feed rate of all materials capable of producing pollutant emissions used in each separate operation. Maximum process weight rate, or coating rate, and parameters such as line speed, VOC content etc. should be specifically documented with calculations to confirm worst case scenario emissions.

Note 1: All compliance demonstration testing shall be performed at maximum rated capacity as specified by the equipment manufacturer, or at the maximum rate actually used in the emissions unit operation, whichever is greater, or at any other rate as agreed upon with Ohio EPA.

Note 2: If the emissions unit is not operated at maximum capacity, or as close as possible thereto, the emissions unit might be derated to the production capacity achieved during testing.

I. Stack and Vent Description:

- A dimensional sketch or sketches showing the plan and elevation view of the entire ducting and stack arrangement. The sketch should include the relative position of all processed or operations venting to the stack or vent to be tested. It should also include the position of the ports relative to the nearest upstream and downstream gas flow disturbance or duct dimensional change. The sketches should include the relative position, type, and manufacturer's claimed efficiency of all gas cleaning equipment.

- A cross sectional dimensional sketch of the stack or duct at the sampling ports, showing the position of sampling points. In case of a rectangular duct, show division of duct into equal areas.

- For fugitive emissions testing, a sketch illustrating the specific emissions points to be observed must be included.

J. Safety:

- Describe all possible safety hazards including such items as the presence of toxic fumes, high noise levels, areas where eye protection is required, etc. Note: Conditions considered unsafe at the time of the test will cause postponement.

Intent to Test Notification Attachment
Relative Accuracy Test Audit

Date Prepared: May 2, 2018 Proposed Test Date: June12, 2018
Plant Address: Haverhill Coke Company
2446 Gallia Pike
Franklin Furnace, OH 45629

F. Sample Train Information
F1. See attached diagrams.
F2. Not applicable for SO2 CEMS RATA.
F3. Inconel probe will be used to extract sample for SO2 analysis.
F4. Not applicable.

G. Laboratory Analysis None required.

H. Description of Operations
The Haverhill Coke Company (HCC) utilizes the Jewell-Thompson heat recovery oven to manufacture metallurgical coke. In coke production from heat recovery ovens, the volatile fraction of the coal is driven off in a reducing atmosphere and then oxidized. Heat recovery steam generators recover heat from the process gases. The cooled gases pass through a lime spray dryer/baghouse system prior to being exhausted from the main stack. HCC Phase I includes 100 ovens (Batteries A and B) that operate on a 48-hour coking cycle. HCC Phase I has a daily design coal coking rate of 2400 tons.

During scheduled maintenance, 20 ovens vent process gases directly into the atmosphere through a bypass stack, bypassing the FGD system. The proposed testing will be conducted on one such bypass stack (#6) during the scheduled FGD system outage.

I. Stack and Vent Description
See attached diagrams.

J. Safety
All test personnel will have taken the plant safety orientation program. All plant safety requirements will be complied with during the RATA testing including the wearing of safety vests, hard hats, safety shoes, safety glasses, and hearing protection as appropriate.

K. Test Report
The RATA test report will be submitted within 30 days of conducting the test and will include:

- A summary of the RATA results,
- A description of the technical approach used including EPA reference methods,
- QA/QC procedures,
- All raw data sheets,
- Results of audit samples, if any,
- All calibration data, and
- Formulas used to calculate relative accuracy

Intent to Test Notification Attachment
Relative Accuracy Test Audit

Date Prepared: May 2, 2018 Proposed Test Date: June12, 2018
Plant Address: Haverhill Coke Company
2446 Gallia Pike
Franklin Furnace, OH 45629

Has the facility scheduled production or throughput so that the emissions unit can be operated at the maximum capacity given in its permit-to-install or permit-to-operate during the test?

Paragraph 19 of the Consent Decree requires coal charge weights be reduced during periods of bypass venting that occur due to Scheduled FGD maintenance. Therefore, coal charge during this testing will be limited to an average of 42.5 wet tons per oven.

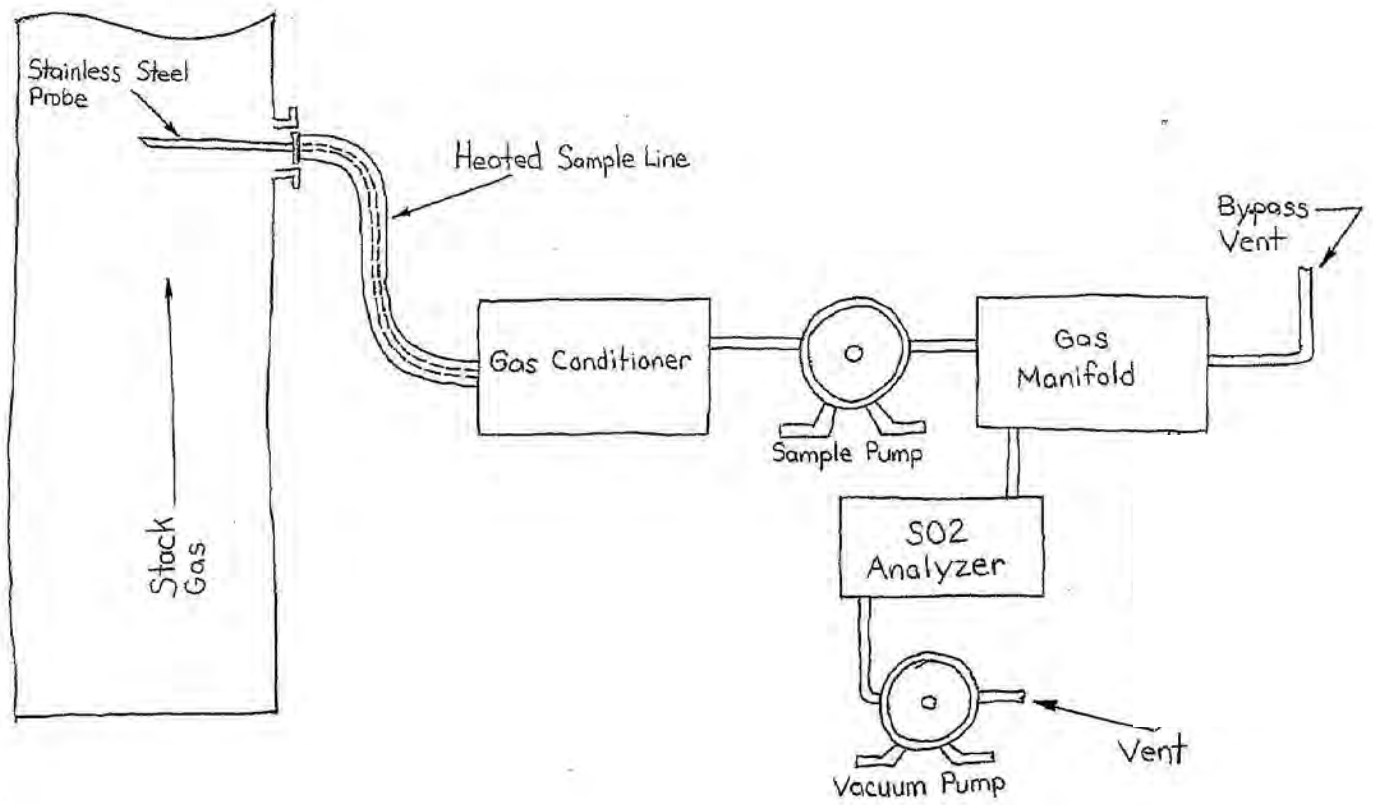

Reference Method
Sampling System - Analyzer Method

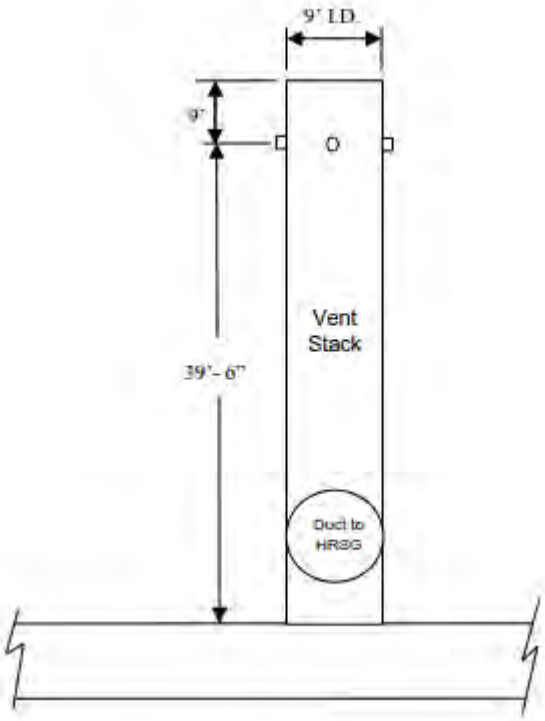

Schematic of Typical Bypass Stack Vent

STARKWEATHER, DIANA M.

From: STARKWEATHER, DIANA M.
Sent: Tuesday, May 08, 2018 5:13 PM
To: 'Harrison, Gina'
Cc: 'morris.james@epa.gov'; GATES, KATHERINE T.; BATTEN, KATIE M; Rob Brager (rbrager@bdlaw.com) (rbrager@bdlaw.com)
Subject: HCC1 HRSG VS 5 Stack Testing Report
Attachments: HHO CD Test Report Unit 1 May 2018.pdf

Gina,

Attached, please find the report documenting the stack test results for stack testing conducted pursuant to paragraphs 29, 30, and 33 of the Consent Decree. This is also being sent via FedEx.

Please let me know if you have any questions.

Thank you,

Diana Starkweather
Environmental Manager

SunCoke Energy

2446 Gallia Pike
Franklin Furnace, OH 45629
cell: 740-352-2593
off: 740-355-9823
fax: 740-355-9815

This e-mail and any files transmitted with it may contain confidential information and is intended solely for the use of the individual or entity to whom they are addressed. If you are not the intended recipient, you are notified that disclosing, copying, distributing or taking any action in reliance on the contents of this information is strictly prohibited. Please notify the sender immediately by e-mail if you have received this e-mail by mistake and delete this e-mail from your system. Thank you for your cooperation.

Haverhill Coke Company, LLC

2446 Gallia Pike
Franklin Furnace, OH 45629

May 8, 2018

Chief, Environmental Enforcement Section
Environment and Natural Resources Division
U.S. Department of Justice
Box 7611 Ben Franklin Station
Washington, DC 20044-7611
Re: DOJ No. 90-5-2-1-06944/1

Air Enforcement Division Director
U.S. Environmental Protection Agency
Office of Civil Enforcement
Air Enforcement Division
1200 Pennsylvania Ave, NW Mail Code: 2242A
Washington, DC 20460

Gina Harrison
U.S. Environmental Protection Agency
Region 5, AE-17J
77 West Jackson Blvd.
Chicago, IL 60604
harrison.gina@epa.gov

Ohio Attorney General's Office
Environmental Enforcement Section
30 East Broad Street, 25th Floor
Columbus, Ohio 43215
Attention: Elizabeth Ewing

James Morris
U.S. Environmental Protection Agency
Region 5, C-14J
77 West Jackson Blvd.
Chicago, IL 60604
morris.james@epa.gov

Portsmouth Local Air Agency
605 Washington Street, Third Floor
Portsmouth, Ohio 45662
Attention: Cindy Charles

Ohio Environmental Protection Agency
Division of Air Pollution Control, Central Office
50 W. Town Street
Suite 700
Columbus, Ohio 43216-1049
Attention: Bruce Weinberg

RE: Consent Decree, *United States, et al. v. Gateway Energy & Coke Company LLC, et al.*
Stack Testing Report for HNCC No. 1 May 2016 Stack Testing
Haverhill Coke Company, LLC Facility (Ohio EPA Facility ID 0773000182)

To Whom It May Concern,

The United States, the State of Illinois, the State of Ohio, Gateway Energy & Coke Company, LLC (GECC), Haverhill Coke Company, LLC (HNCC) and SunCoke Energy, Inc. (SunCoke) are parties to a Consent Decree (CD) lodged in the U.S. District Court for the Southern District of Illinois with an Effective Date of November 7, 2014.

In accordance with Paragraphs 29, 30, and 33 of the CD, HNCC and GECC are required to conduct stack testing during any Scheduled FGD Maintenance that lasts more than 2 days and a report documenting the results of the stack test must be submitted no later than 60 days after conducting the

Haverhill Coke Company, LLC

2446 Gallia Pike
Franklin Furnace, OH 45629

stack test. HNCC No. 1 conducted stack testing pursuant to Paragraphs 29 and 30 on March 7 – 9, 2018, during Scheduled FGD Maintenance. Attached, please find the report documenting the stack test results.

Please contact me at 630-824-1786 or kmbatten@suncoke.com if you have any questions or concerns.

Sincerely,

Katie Batten
Corporate Environmental Manager
SunCoke Energy, Inc.

Test Report for the Haverhill Coke Company Facility ID 0773000182 HRSG Bypass Vent Stack HNCC No. 1

Prepared for:
Haverhill Coke Company
Franklin Furnace, Ohio

Prepared by:
AECOM
Oak Ridge, Tennessee

May 2018

TEST REPORT
FOR THE HAVERHILL COKE COMPANY
FACILITY ID 0773000182
HRSG BYPASS VENT STACK
HNCC No. 1

Test Dates: March 6-9, 2018

Prepared for:

Haverhill Coke Company
2446 Gallia Pike
Franklin Furnace, Ohio 45629

Prepared by:

AECOM Technical Services
105 Mitchell Road, Suite 200
Oak Ridge, Tennessee 37830

May 2018

PROJECT CONTACT INFORMATION

Plant Name and Address

Haverhill Coke Co.
2446 Gallia Pike
Franklin Furnace, OH 45629

Source Identification

Facility ID - 0773000182
Stack Test – Bypass Vent Stack No. 5

Source Contact

Diana Starkweather
Tel: (740) 355-9823
Email: DMSTARKWEATHER@suncoke.com

Test Company Name

AECOM Technical Services
105 Mitchell Road, Suite 200
Oak Ridge, TN 37830

Test Company Contact

John Carson
Tel: (865) 483-9870
Email: john.r.carson@aecom.com

TABLE OF CONTENTS

1. INTRODUCTION/OVERVIEW 1

2. CONSENT DECREE TEST REQUIREMENTS 3

3. STACK TEST RESULTS 4

4. STACK TEST METHODS 8
   - 4.1 Sampling Point Determination – USEPA Method 1 8
   - 4.2 Flue Gas Velocity and Volumetric Flow Rate – USEPA Method 2 8
   - 4.3 Flue Gas Composition – USEPA Method 3A 9
   - 4.4 Flue Gas Moisture Content – USEPA Method 4 9
   - 4.5 PM/PM_{10} – USEPA Methods 5/202 9
   - 4.6 HCl – USEPA Method 26 11
   - 4.7 H_2SO_4 – Conditional Test Method 13 (CTM-13) 12
   - 4.8 $NO_x/SO_2/O_2/CO_2$ – USEPA Methods 7E and 6C 13
   - 4.9 Lead and Mercury – USEPA Method 29 13

Appendix A: SAMPLE TRAIN DIAGRAMS

Appendix B: PRODUCTION DATA

Appendix C: CALCULATIONS AND FIELD DATA

Appendix D: ANALYTICAL REPORTS

Appendix E: CALIBRATION INFORMATION

LIST OF TABLES

Table 1. Comparison of Bypass Vent Stack Hourly Mass Emission Limits and Test Results..... 1
Table 2. HRSG Bypass Vent Stack No. 5 Test Results for PM/PM_{10}, HCl, and NO_x Emissions..... 6
Table 3. HRSG Bypass Vent Stack No. 5 Test Results for Lead, Mercury and H_2SO_4 Emissions..... 7
Table 4. Test Methods..... 8

LIST OF ACRONYMS

ACFM	actual cubic feet per minute
CD	Consent Decree
CEM	Continuous Emissions Monitor
cfm	cubic feet per minute
CFR	Code of Federal Regulations
CO_2	Carbon Dioxide
CTM	Conditional Test Method
dscf	dry standard cubic feet
DSCFM	dry standard cubic feet per minute
FGD	Flue Gas Desulfurization
H_2O_2	Hydrogen Peroxide
H_2SO_4	Sulfuric Acid Mist
HCl	Hydrogen Chloride
HNCC	Haverhill Coke Company
HNO_3	Nitric Acid
HRSG	Heat Recovery Steam Generator
$KMnO_4$	Potassium Permanganate
NOx	Nitrogen Oxides
O_2	Oxygen
PM	Particulate Matter
PM_{10}	Particulate Matter less than 10 microns diameter
ppm	parts per million
scf	standard cubic feet
SCFM	standard cubic feet per minute
RATA	Relative Accuracy Test Audit
SO_2	Sulfur Dioxide
USEPA	U.S. Environmental Protection Agency

1. INTRODUCTION/OVERVIEW

Haverhill Coke Company (HNCC) operates a 200 oven heat recovery coking facility in Franklin Furnace, Ohio. A series of stack tests were performed at HNCC No. 1 on Bypass Vent Stack No. 5 over the period of March 6-9, 2018. This report documents the results of those stack tests.

SunCoke Energy, Inc.; HNCC; and Gateway Energy & Coke Company, LLC (collectively, SunCoke) entered into a Consent Decree (CD) with the United States and the States of Ohio and Illinois to resolve alleged Clean Air Act violations. This CD became effective on November 7, 2014. Paragraph 29 of the CD requires stack testing of one of the bypass vent stacks at HNCC during scheduled flue gas desulfurization (FGD) maintenance during each period of FGD maintenance that is scheduled to last more than 2 days. HNCC No. 1 performed FGD maintenance beginning March 4, 2018, for a period of about 23 days and performed the required tests on Bypass Vent Stack No. 5. HNCC previously submitted notification of the FGD maintenance testing and provided all required information regarding the testing. Paragraph 33 of the CD requires submission of a report documenting the results of the test by no later than 60 days after conducting a stack test. This report satisfies that requirement.

Table 1 compares the results of the tests with the CD limits and hourly mass emission limits in HNCC's current permit (P0106016). The tests demonstrated compliance with all hourly mass emission limits.

Table 1. Comparison of Bypass Vent Stack Hourly Mass Emission Limits and Test Results

Pollutant	Basis of Limit	Limit	Test Result	Comply?
Lead (pounds/hour)	Permit	0.30	0.08	Yes
HCl (pounds/hour)	Permit	48.24	39.2	Yes
NO_x (pounds/hour)	Permit	24.0	14.9	Yes
Total PM/PM_{10} (filterable plus condensable)	Permit	35.57	12.5	Yes
Total PM/PM_{10} (filterable plus condensable)	CD	34.3	12.5	Yes

The remainder of this report contains CD requirements (Section 2), test results (Section 3), test methods (Section 4), Sample Train Diagrams (Appendix A), Production Data (Appendix B), Calculations and Field Data (Appendix C), Analytical Reports (Appendix D), and Calibration Information (Appendix E).

2. CONSENT DECREE TEST REQUIREMENTS

The CD requires that a series of tests be performed during periods of scheduled FGD maintenance of more than 2 days in duration. These tests were performed March 6-9, 2018. The measured pollutants were:

- Particulate matter (PM) and particulate matter less than 10 microns diameter (PM_{10}) – limited by CD
- Lead
- Mercury
- Hydrogen chloride (HCl)
- Sulfuric acid mist (H_2SO_4)
- Nitrogen oxides (NO_x)

A relative accuracy test audit (RATA) of the bypass vent continuous emission monitor (CEM) for sulfur dioxide (SO_2) was also performed during the same FGD outage at HNCC No. 1.

3. STACK TEST RESULTS

The bypass vent stacks at HNCC No. 1 were opened for FGD maintenance on March 4, 2018. The RATA was performed on March 6, 2018 from approximately 2:00 p.m. to 6:30 p.m. [Note that the RATA results were submitted separately.] The stack tests started March 7, 2018, at approximately 8:30 a.m. and were completed on March 9, 2018, at approximately 3:00 a.m. Paragraph 19 of the CD requires that emissions be minimized during all bypass venting. This includes restrictions on the maximum average coal charge and the maximum coal sulfur content. The coal charge tonnage and coal sulfur were:

- Average coal charged to the test ovens during the test period: 42.1 wet tons (maximum allowed under CD of 42.5 ton average during bypass venting events)
- Coal sulfur during tests: 0.80% – 0.97% by weight

The coal charge to each oven is measured by a calibrated weigh bin, which batches each coal charge prior to charging it to the oven. The average charge weight of 42.1 wet tons per oven represents 99% of the 42.5 ton limit. Charge weights to each oven were measured and recorded based on the actual weigh bin batch that was sent for charging. The time, date, and amount of coal charged to each oven during the tests are shown in Appendix B. The daily coal sulfur analysis during the tests is also included in Appendix B.

The 200 ovens at HNCC operate on a 48-hour coking cycle. Pushing and charging the ovens is referred to as "production" at HNCC. Half the ovens are pushed and charged each day. For example, the 100 odd-numbered ovens are pushed and charged one day and the 100 even-numbered ovens are pushed and charged the next. Production occurs twice a day – with approximately 1/4 of the ovens charged during each production cycle. Production at HNCC No. 1 typically occurs from approximately 3:00 a.m. to 7:00 a.m. and then from 11:00 a.m. to 3:00 p.m. Since the operation is cyclical, previous bypass vent stack tests were performed at different times during the day – typically one run early in the cycle, a second run near mid-cycle, and a third run near the end of the cycle – to achieve test results representative of the entire coking cycle over 24 hours. As requested by the U.S. Environmental Protection Agency (USEPA), one

run was performed during production (conducted during or immediately after the first pass on the heat recovery steam generator [HRSG] Stack No. 5 ovens). The other two runs were performed at mid-cycle and late cycle.

The stack tests for PM, HCl, and NO_x were performed on March 7 (production and mid-cycle) and March 8 (late cycle). The test results are summarized in Table 2. Filterable PM was used to conservatively represent PM_{10} since it was not practical to measure filterable PM_{10} in the HNCC bypass vent stacks because the temperature (>1,600ºF) was outside the range of the equipment typically used (see additional discussion in Section 4).

The tests demonstrated compliance with hourly emission limits for all pollutants. Note, however, that there are two permit requirements applicable to HCl. One is a pound per hour emission rate; the other is pounds of HCl per ton of coal. As shown in Table 2, the tests demonstrated compliance with the pound per hour emission rate but not the ratio of pounds of HCl per ton of coal. The pounds per ton of coal limit is based on the level of chlorine in the coal anticipated when HNCC started operations in 2005. HNCC has recently encountered variable chlorine concentrations in some coal sources that may exceed the original value. However, even at the higher ratio of HCl per ton of coal measured during this test, HNCC will not exceed the hourly emission limit (48.24 pounds HCl per hour) because the hourly limit was conservatively based on maximum potential operations that included a contingency for higher hourly HCl emissions.

The stack tests for lead, mercury, and H_2SO_4 were performed on March 8 (production and mid-cycle) and March 9 (late cycle). The results of these tests are summarized in Table 3. The tests demonstrated compliance with all pollutant limits.

Table 2. HRSG Bypass Vent Stack No. 5 Test Results for PM/PM_{10}, HCl, and NO_x Emissions

Sampling Train	Parameters				Average
PM/PM10	Run No.	**1**	**2**	**3**	
	Date	3/7/2018	3/7/2018	3/8/2018	
	Run times	08:45-10:52	20:08-22:16	00:34-02:40	
	Sample time (minutes)	120	120	120	120
	Volume sampled (dscf)	64.68	73.97	76.34	71.66
	Moisture Content (% Vol.)	12.4	12.4	10.0	11.6
	Percent Isokinetic	98.9	99.3	97.2	98.5
HCl	Run No.	**1**	**2**	**3**	
	Date	3/7/2018	3/7/2018	3/8/2018	
	Run times	09:24-10:24	20:45-21:45	01:09-02:09	
	Sample time (minutes)	60	60	60	60
	Volume sampled (dscf)	35.52	35.14	35.80	35.49
	Moisture Content (% Vol.)	12.1	11.7	10.2	11.4
Combined Results	Average charge/oven (wet tons coal)	42.0			
	Time in cycle	**production**	**mid**	**late**	
	O2 (%)	8.90	8.80	10.30	9.3
	CO2 (%)	7.20	7.60	6.20	7.0
	Stack Gas Temperature (^oF)	1,579	1,565	1,489	1,544
	Stack Velocity (ft/sec.)	53.5	60.1	59.3	57.7
	Gas Flow Rate (ACFM)	204,211	229,536	226,413	220,053
	Gas Flow Rate (SCFM)	51,610	58,798	60,286	56,898
	Gas Flow Rate (DSCFM)	45,221	51,504	54,257	50,327
	Concentration total PM/PM10 (gr/dscf)	0.030	0.031	0.026	0.029
	Particulate Mass Rate (pounds/hour)				
	Filterable PM/PM10	3.0	3.3	1.7	2.7
	Total PM/PM10 (filterable plus condensable)	11.6	13.8	12.1	12.5
	NOx concentration (ppm)	44.2	38.5	41.7	41.5
	NOx Mass Rate (pounds/hour)	14.3	14.2	16.2	14.9
	HCl concentration (ppm)	139	148	126	137
	HCl mass rate (pounds/hour)	35.7	43.2	38.7	39.2
	HCl normalized emission rate (pounds/ton coal)	2.0	2.5	2.2	2.2
Compliance Evaluation	Permit Particulate Emission Limit (filterable plus condensable) - pounds/hour				35.57
	Future CD Particulate Emission Limit (filterable plus condensable) - pounds/hour				34.3
	Comply with limit?				Yes
	NOx Emission Limit (pounds/hour)				24
	Comply with limit?				Yes
	HCl Emission Limit (pounds/hour)				48.24
	Comply with limit?				Yes
	HCl Emission Limit (pounds/ton coal)				2.01
	Comply with limit?				No

Table 3. HRSG Bypass Vent Stack No. 5 Test Results for Lead, Mercury and H_2SO_4 Emissions

Sampling Train	Parameters				Average
Metals	Run No.	**1**	**2**	**3**	
	Date	3/8/2018	3/8/2018	3/9/2018	
	Run times	06:04-07:45	19:50-21:32	01:10-02:53	
	Sample time (minutes)	96	96	96	96
	Volume sampled (dscf)	56.91	53.76	50.26	53.64
	Percent Isokinetic	99.4	98.8	98.0	98.7
	Moisture content (%Vol.)	11.5	10.9	10.0	10.8
H2SO4	Run No.	**1**	**2**	**3**	
	Date	3/8/2018	3/8/2018	3/9/2018	
	Run times	06:29-07:29	21:00-22:00	01:43-02:43	
	Sample time (minutes)	60	60	60	60
	Volume sampled (dscf)	18.82	19.23	19.04	19.03
Combined Results	Average charge/oven (wet tons coal)	42.2			
	Time in cycle	**production**	**mid**	**late**	
	O2 (%)	9.6	9.2	10.5	9.8
	CO2 (%)	6.5	7.1	6.0	6.5
	Stack Gas Temperature (^oF)	1,550	1,617	1,569	1,579
	Stack Velocity (ft/sec.)	56.7	55.2	50.4	54.1
	Gas Flow Rate (ACFM)	216,614	210,857	192,257	206,576
	Gas Flow Rate (SCFM)	55,885	52,730	49,268	52,627
	Gas Flow Rate (DSCFM)	49,456	46,988	44,320	46,922
	Lead concentration (ug/m3)	595	445	308	449
	Lead emission rate (lb/hour)	0.110	0.078	0.051	0.080
	Mercury concentration (ug/m3)	6.0	10.0	9.1	8.4
	Mercury emission rate (lb/hour)	0.0011	0.0018	0.0015	0.0015
	H2SO4 concentration (ppm)	14.6	14.6	16.1	15.1
	H2SO4 mass rate (pounds/hr)	11.0	10.5	10.9	10.8
Compliance Evaluation	Lead emission limit (pounds/hour)				0.3
	Comply with limit?				Yes
	Unit 2 Mercury emission limit (pounds/hour)				0.008
	Comply with limit?				Yes

4. STACK TEST METHODS

The test methods are shown in Table 4. Each test was based on USEPA reference methods or alternative methods approved by USEPA.

Table 4. Test Methods

Emission Unit	Pollutant	Test Method Reference	Comment
Bypass vent stack No. 5	Traverse point layout	USEPA Method 1	
	Gas flow rate	USEPA Method 2	
	Gas molecular weight	USEPA Method 3A	Measured O_2 and CO_2
	Moisture	USEPA Method 4	
	PM/PM_{10}	USEPA Method 5/202	
	NO_x	USEPA Method 7E	
	SO_2	USEPA Method 6C	RATA CEM pollutant
	H_2SO_4	USEPA Conditional Test Method (CTM)-13	Controlled condensate method
	HCl	USEPA Method 26	Use large impingers
	Lead and Mercury	USEPA Method 29	

This section contains a brief description of the sampling and analytical procedures for each method that was employed during the test program. Any deviations from the methods are also discussed.

4.1 Sampling Point Determination – USEPA Method 1

The number and location of the sampling or traverse points was determined according to the procedures outlined in USEPA Method 1. The sample location was inspected to ensure USEPA Method 1 criteria were met. All points were at least 1.0 inch from the stack wall, per Method 1. The bypass vent stack required a 24 point traverse for isokinetic sampling, which was distributed between two sampling ports.

4.2 Flue Gas Velocity and Volumetric Flow Rate – USEPA Method 2

The flue gas velocity and volumetric flow rate were determined according to the procedures outlined in USEPA Method 2. Velocity measurements were made using S-type Pitot tubes that had been calibrated according to USEPA Method 2 criteria. Differential pressures

were measured with a fluid inclined manometer. Flue gas temperatures were measured with Type K thermocouples equipped with digital readouts.

4.3 Flue Gas Composition – USEPA Method 3A

Flue gas analysis for oxygen (O_2) and carbon dioxide (CO_2) concentrations to determine the flue gas dry molecular weight was performed in accordance with USEPA Method 3A utilizing CEMs for each gas. The concentrations of O_2 and CO_2 were reported in percent levels.

4.4 Flue Gas Moisture Content – USEPA Method 4

The flue gas moisture content was determined in conjunction with each USEPA Method 5/202, Method 29, and Method 26A sampling trains and according to the sampling and analytical procedures outlined in USEPA Method 4. The impingers were connected in series and contained reagents as described in the discussion of specific sampling trains. The impingers were contained in an ice bath to ensure condensation of the moisture in the flue gas stream. Any moisture that was not condensed in the impingers was captured in the silica gel; therefore, all moisture was weighed and entered into moisture content calculations.

4.5 PM/PM_{10} – USEPA Methods 5/202

The CD requires testing for PM and PM_{10}. PM consists of two components – filterable and condensable. The facility limits for HNCC No. 1 were originally established for filterable PM. However, the limits in the CD are for total PM (filterable plus condensable). The PM_{10} limits have been set at the same level. It is not practical to measure filterable PM_{10} in the HNCC bypass vent stacks because the temperature (>1,600ºF) was outside the range of the equipment typically used for Method 201A (400ºF). Certain modifications to the method may be used to extend the range to 500ºF. The equipment described in Method 201A cannot be used above this temperature without alternate construction techniques and the use of exotic materials (40 CFR 60, Appendix A, Method 201A, 8.6.1). In any event, Method 201A uses an in-stack filter after

the cyclone, which limits the temperature to approximately 1,000ºF. Therefore, PM_{10} emissions were assumed to be the same as PM emissions.

The sampling probe was fitted with a calibrated S-type Pitot for measuring exhaust gas flow rates and a K-type thermocouple for measuring the gas stream temperature. The absence of cyclonic flow was verified prior to performing the compliance tests.

The filterable PM was measured in accordance with USEPA Reference Method 5. The filterable PM was performed by extracting a sample of the stack exhaust gas stream through a one-piece quartz nozzle and liner encased in an air cooled probe. The probe was attached to a heated, glass filter holder containing a pre-weighed, glass-fiber filter. The filter heater box was maintained at a temperature of 248°F +25°F as measured by a K-type thermocouple.

At the conclusion of each test run, the sample train was recovered by rinsing the sample probe and nozzle three times with acetone into a sample container. The filter was removed from the filter holder and placed into a Petri dish and sealed for transportation. The front half of the glass filter holder and connecting elbow were rinsed with acetone into the probe wash sample container. A sample of the acetone used in the sample recovery was collected and analyzed as a reagent blank. The acetone rinses and filters were analyzed for filterable PM.

The condensable fraction of PM was measured using the procedures described in USEPA Reference Method 202. The heated filter outlet was connected to a water-jacketed coil condenser by a Teflon transfer line. The water-jacketed coil condenser was placed at the inlet to the first impinger. The water condensed in the coil condenser drops into a knockout impinger. The second impinger is initially empty. The cooled gas then passes through a Teflon filter maintained in the range of 65°F to 85°F. The third impinger initially contains 100 mL of distilled water. The fourth impinger contains approximately 200 grams of indicating silica gel. The third and fourth impingers are placed in an ice bath to maintain the impinger train outlet temperature at ≤65°F.

After testing, the impinger train was moved to the test trailer and connected to a cylinder of pure nitrogen and purged for 60 minutes at a flow rate of 14 liters per minute. The transfer

line, condenser, first two impingers, connecting glassware, and front-half of the Teflon filter holder were rinsed with water for the inorganic sample and with acetone followed by hexane for the organic sample. The Teflon filter, organic and inorganic rinses, and reagent blanks were analyzed for inorganic and organic condensable PM. A field train proof blank and field blank were collected during the tests.

One minor deviation occurred during the post-test leak check of Run 2 of the lead and mercury tests. The first impinger connection was "bumped" and slightly shifted as the lead and mercury train was removed from the stack. The measured leak rate (0.070 cubic feet per minute [cfm]) was larger than the leak rate considered negligible (0.02 cfm). When the connection was straightened, the leak rate was acceptable (0.009 cfm). A conservative approach was taken. USEPA test methods establish a procedure for this situation – adjust the sample volume assuming the leak occurred throughout the run (40 CFR 60, Appendix A, Method 5, *12.0 Data Analysis and Calculations*). This conservative adjustment was made to the lead and mercury concentrations used to determine mass emission rates. Since it is likely that the leak was introduced after the test, this adjustment is conservative in that it may cause a small high bias to the reported lead and mercury values for Run 2.

4.6 HCl – USEPA Method 26

The HCl sampling was performed using an USEPA Method 26 sampling train. The train consisted of a quartz liner fitted into an air-cooled sampling probe. This is required because the stack temperature was at least 1,100°F. The probe was connected to a heated, glass filter holder containing a quartz filter. The outlet of the filter holder was connected to a series of ball-joint impingers. The first and second impingers were the Smith-Greenburg type and each contained 100 mL of 0.1N sulfuric acid (H_2SO_4). The third impinger was a modified Smith-Greenburg impinger containing water. The fourth impinger was a modified Smith-Greenburg impinger containing 200 grams of indicating silica gel. Only the impingers that absorb HCl (the H_2SO_4 impingers) were analyzed.

4.7 H_2SO_4 – Conditional Test Method 13 (CTM-13)

This method, also known as NCASI Method 8A, was developed as an alternative to USEPA Method 8 for determining H_2SO_4 emissions from kraft recovery furnaces. It has been observed that the reference method, USEPA Method 8, can be subject to significant interference from SO_2 as well as sulfates if they are present in the PM. This alternative method uses a quartz in-line filter to remove PM from the gas stream prior to capturing H_2SO_4. The use of a controlled condensation technique instead of impingers reduces the potential for positive bias from SO_2. This conditional test method was used because the expected sulfur trioxide concentration was small (less than 15 parts per million), and the alternate test method is likely to be more accurate in this situation.

The CTM-13 sampling train consisted of a quartz tube wrapped in an insulating blanket that was used as the sampling probe. The exit of the probe was connected to a filter holder containing a quartz filter, which was maintained at a temperature of approximately 500°F by means of a cylindrical heating mantle. The outlet of the filter holder was connected to a modified Graham condenser that was constructed with a Type-C glass frit and 200 cm of 5-mm ID glass tubing condenser coil. The outer condenser chamber contained water maintained at a temperature between 165°F and 185°F by means of a recirculating water bath. The outlet of the heated coil condenser was connected to a series of glass impingers. The first impinger was a Greenburg-Smith filled with 100 mL of 3% hydrogen peroxide (H_2O_2). The second impinger was a modified Greenburg-Smith filled also with 100 mL of 3% H_2O_2. The third impinger was a Greenburg-Smith filled with 100 mL of distilled water. The fourth impinger was a modified Greenburg-Smith filled with 200 grams of indicating silica gel. The sampling train was connected, by means of an umbilical cord, to the control console. The control console contained the dry gas meter, sampling pump, heat controllers, and sample rate controls.

The CTM-13 sample train was operated by placing the end of the quartz sample tube approximately 3 feet into the vent stack. A gas sample was then extracted from a single sampling point in the stack at a constant sample rate of 10.0 L/min (±10%) for a 1-hour period. Leak checks were performed at both the beginning and ending of a sample test run.

At the conclusion of the test run, the CTM-13 sample train was removed from the sampling platform and recovered in the test trailer. The sample recovery was performed by rinsing the H_2SO_4 condenser with distilled water. The H_2SO_4 condenser rinse was collected into sample containers. The impingers were discarded since they are designed to collect SO_2, which was not a target pollutant for these tests. The H_2SO_4 sample containers were then sealed at the site for subsequent analysis. The CTM-13 analysis was performed by suppressed ion chromatography.

4.8 $NO_x/SO_2/O_2/CO_2$ – USEPA Methods 7E and 6C

AECOM operated a CEM for SO_2 according to USEPA Method 6C during the RATA. Nine SO_2 tests were performed for the RATA. AECOM operated CEMs for NO_x and O_2/CO_2 according to USEPA Methods 7E and 3A, respectively, for the stack tests. The CEM analyzers were calibrated before the start of testing. System bias checks were performed before and after each test run. The calibration and bias checks used USEPA protocol gases according to USEPA Method 7E and Method 3A guidelines. The gases were measured continuously, and an electronic datalogger recorded 1-minute averages for the test runs.

The CEM sampling was performed by placing a sample probe in the stack to withdraw a continuous gas sample. The gas sample was transported through a heated, Teflon sample line to an electric gas chiller that removed moisture from the gas stream. Exiting the gas chiller, the dried sample gas was distributed to each CEM for subsequent analysis.

Stratification was determined before testing based on a three-point concentration traverse at the test ports.

4.9 Lead and Mercury – USEPA Method 29

The lead and mercury sampling was performed using an USEPA Method 29 sampling train. The sample train consisted of an integrated quartz nozzle and probe liner fitted into an air-

cooled sampling probe. This is required because the stack temperature was at least 1,400°F. The outlet of the probe was connected to a heated, glass filter holder containing a quartz fiber filter. The outlet of the filter holder was connected to a series of ball-joint impingers. The first impinger was a modified Smith-Greenburg containing 100 mL of a 5% nitric acid (HNO_3)/10% H_2O_2 mixture. The second impinger was a Smith-Greenburg containing a 5% HNO_3/10% H_2O_2 mixture. The third impinger was modified Smith-Greenburg and was initially empty. The fourth and fifth impingers were modified Smith-Greenburg types containing a mixture of 4% potassium permanganate ($KMnO_4$)/10% H_2SO_4. The sixth impinger was a modified Smith-Greenburg containing 200 grams of indicating silica gel. The remainder of the sampling train was identical to the previously described Method 5/202 train.

The Method 29 train was operated identically to the Method 5 train, except the total sample volume collected was at least 45 dry standard cubic feet to ensure adequate detection limits of the target metals. At the conclusion of the sample run, the Method 29 sample train was removed from the stack to the sample recovery trailer for subsequent recovery per Method 29 procedures. The sample probe was washed on the stack to avoid potential breakage of the probe liner.

At the conclusion of each Method 29 test run, the sample train was recovered by washing the nozzle/probe assembly and front half of the filter holder three times with 0.1N HNO_3 into a sample container. The impinger train was then disassembled and each impinger weighed to determine the moisture gained during the sample run. The liquid contents of impingers one and two were transferred into a sample container along with a 0.1N HNO_3 rinse. Impinger three was rinsed with 0.1N HNO_3 into a separate sample container. The contents of impingers four and five were transferred into a separate sample container. The impingers were then rinsed with 100 mL of fresh $KMnO_4$ solution. The impingers were then rinsed with 100 mL of deionized water and added to the same sample container. A 25 mL rinse of 8N HNO_3 was performed and collected into a separate sample container. The silica gel in the last impinger was recovered for subsequent reconditioning.

Samples of the filter, deionized water, impinger solutions, and rinse solutions were collected along with the actual test samples to serve as blanks for the tests. The blank samples were analyzed along with the actual test samples.

Appendix A
SAMPLE TRAIN DIAGRAMS

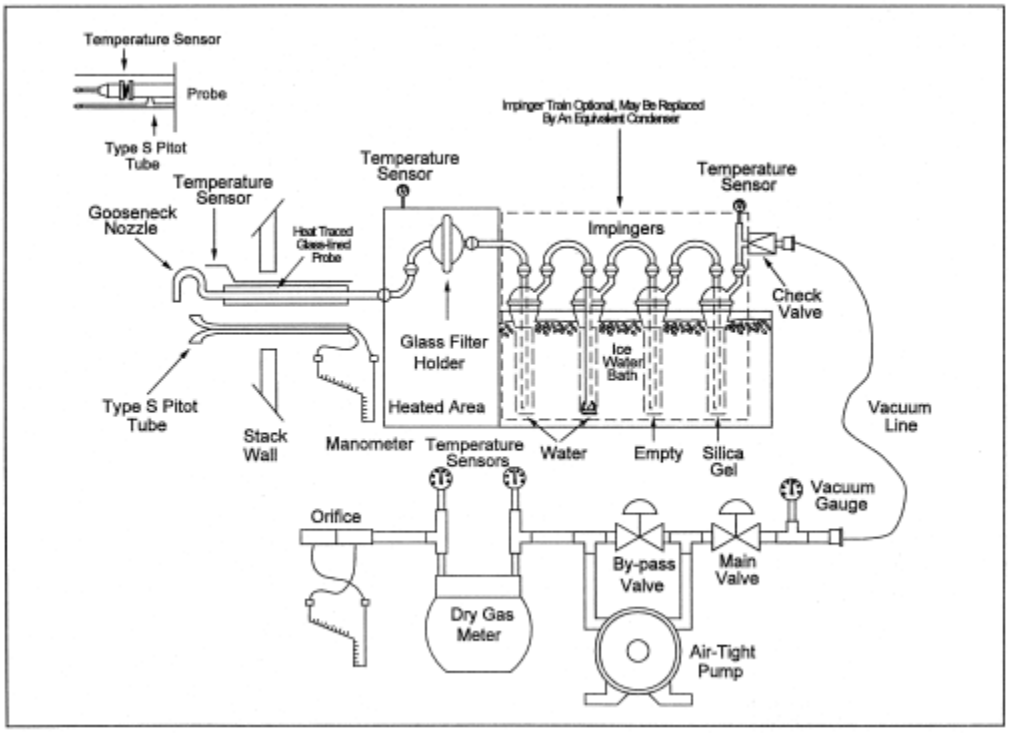

USEPA Method 5 Train (front portion)

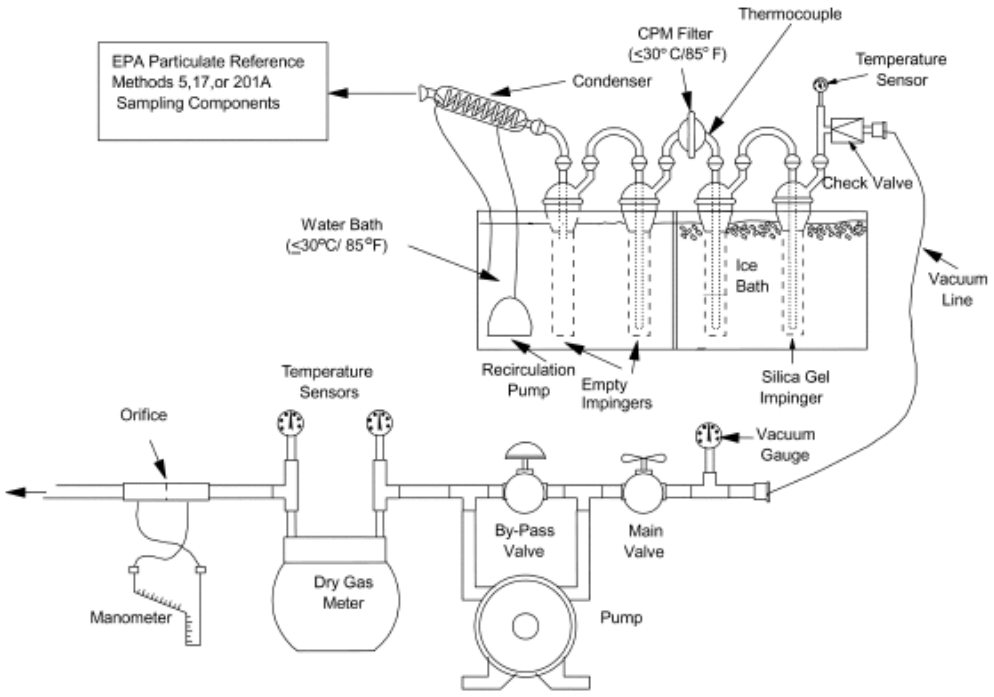

USEPA Method 202 Train (back portion)

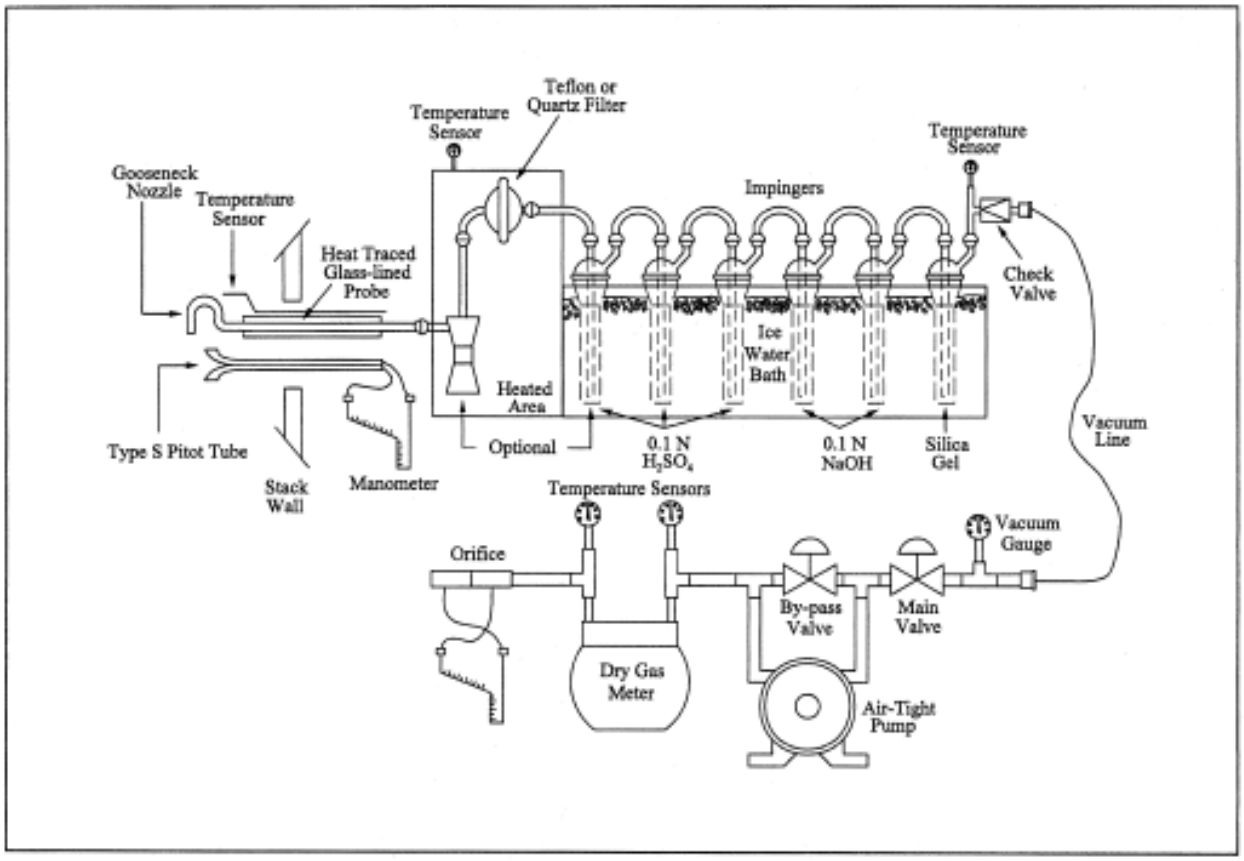

USEPA Method 26 Train (no NaOH in back impingers)

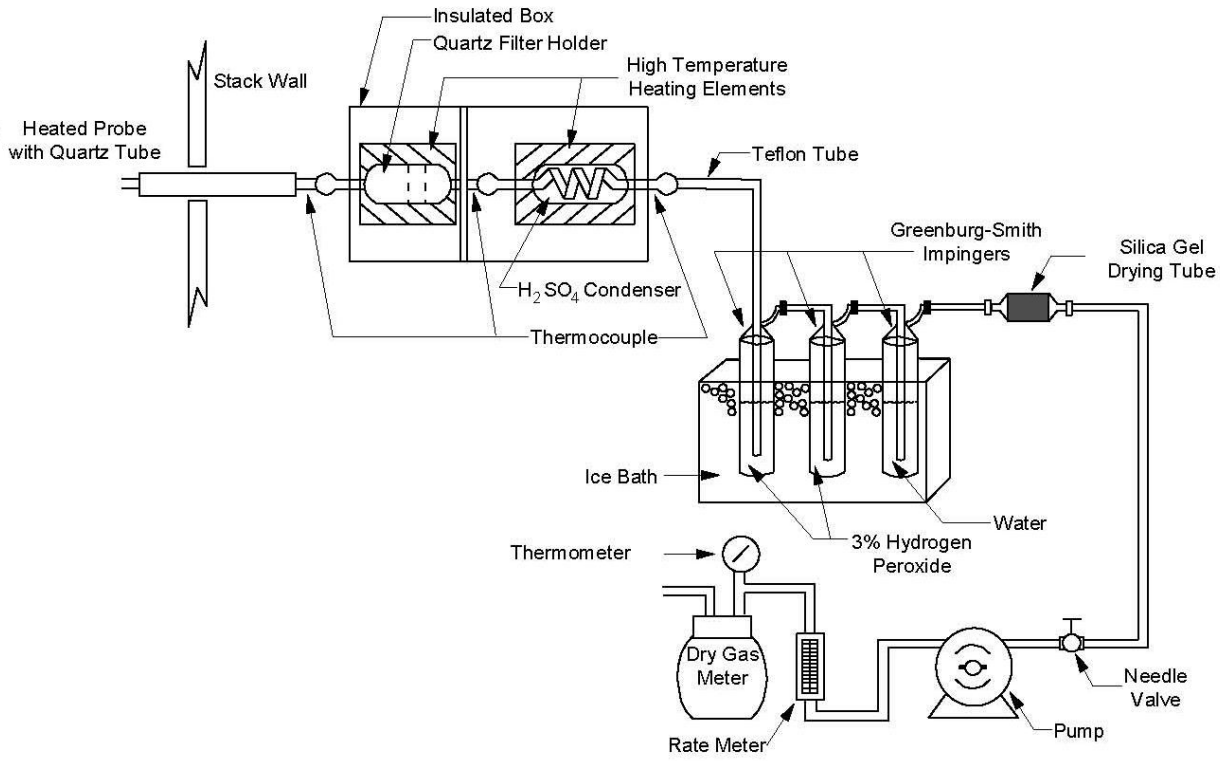

USEPA Method CTM-13 Train

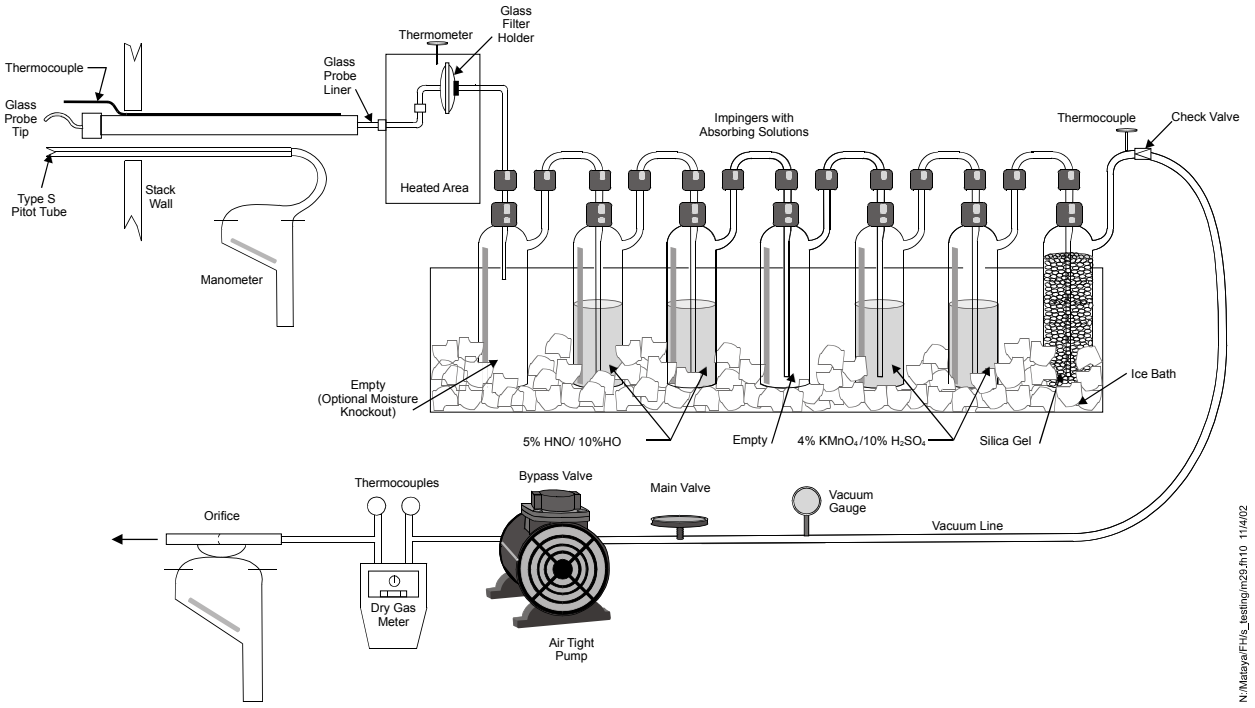

USEPA Method 29 Train

Appendix B
PRODUCTION DATA

Production Data
HHO Ovens 81 - 100

	Tons Coal Charged				
Oven No.	3/6/2018	3/7/2018		3/8/2018	
	2nd pass	1st pass	2nd pass	1st pass	2nd pass
81		41.23			
82	42.24				42.22
83			42.13		
84				42.25	
85		41.27			
86	42.24				42.23
87			42.20		
88				42.22	
89		41.93			
90	42.19				42.14
91			42.22		
92				42.24	
93		41.97			
94	42.23				42.24
95			42.95		
96				42.08	
97		42.10			
98	42.24				42.21
99			41.84		
100				42.23	

Average

PM/HCl/NOx

Run 1	41.96 tons coal
Run 2	41.98 tons coal
Run 3	41.98 tons coal

Metals/H2SO4

Run 1	42.24 tons coal
Run 2	42.21 tons coal
Run 3	42.21 tons coal

HNCC PUSHING REPORT
DATE: 03/06/18

Target Push Times: 3hrs 20 mins
Initials JH/JB/NB/HL

Total Push Time: _____

Time Lost : _____

OVEN	PREV TIME	PREV WEIGHT	DATE	CHG TIME	AM/PM CIRCLE	DATE	TONS GHG	SPILL >250 LBS	DOOR FIRE - PUSHER SIDE: DOOR OBS	DOOR FIRE	Fire Out Time	PCM Pressure Readings: Pressure Reading	Fan Amp Reading	Cor Act Required	Oven Inspection: CO Time	PT Intial	Operator / Maintenance / Corrective Action Comments
4	12:03 AM	42.17	3/4	1207	AM/PM	3/6	4229	Y // N	Y // N	Y // N		4.5	135	Y // N	0001	DHT	TO Charge 42.2
8	12:11 AM	42.15	3/4	1215	AM/PM		4241	Y // N	Y // N	Y // N				Y // N	0002	DHT	waiting on coke toget CO Charge 42.2
12	12:58 AM	42.17	3/4	1223	AM/PM		4222	Y // N	Y // N	Y // N				Y // N	0003	DHT	Charge 42.2
16	1:14 AM	42.29	3/4	1232	AM/PM		4258	Y // N	Y // N	Y // N				Y // N	0004	DHT	Charge 42.2
20	1:29 AM	42.11	3/4	1239	AM/PM		4211	Y // N	Y // N	Y // N				Y // N	0005	DHT	Charge 42.2
24	1:46 AM	42.10	3/4	1245	AM/PM		4220	Y // N	Y // N	Y // N				Y // N	0006	DHT	Charge 42.2
28	2:01 AM	42.25	3/4	1252	AM/PM		4223	Y // N	Y // N	Y // N				Y // N	0007	DHT	Charge 42.2
32	2:16 AM	42.23	3/4	1258	AM/PM		4217	Y // N	Y // N	Y // N				Y // N	0008	DHT	Charge 42.2
36	2:30 AM	42.20	3/4	105	AM/PM		4239	Y // N	Y // N	Y // N				Y // N	0009	DHT	Charge 42.2
40	2:44 AM	42.25	3/4	112	AM/PM		4225	Y // N	Y // N	Y // N				Y // N	0010	DHT	Charge 42.2
44	2:58 AM	42.20	3/4	118	AM/PM		4218	Y // N	Y // N	Y // N				Y // N	0011	DHT	Charge 42.2
48	3:18 AM	42.29	3/4	125	AM/PM		4205	Y // N	Y // N	Y // N				Y // N	0012	DHT	Charge 42.2
52	3:31 AM	42.11	3/4	131	AM/PM		4215	Y // N	Y // N	Y // N				Y // N	0013	DHT	Charge 42.2
56	3:45 AM	42.18	3/4	138	AM/PM		4220	Y // N	Y // N	Y // N				Y // N	0014	DHT	Charge 42.2
60	3:58 AM	42.20	3/4	145	AM/PM		4222	Y // N	Y // N	Y // N		5.1	124	Y // N	0015	DHT	DMS Charge 42.2
64	7:44 AM	42.34	3/4	659	AM/PM		4218	Y // N	Y // N	Y // N		4.2	138	Y // N	521	USD	Charge 42.2
68	7:55 AM	42.23	3/4	708	AM/PM		4206	Y // N	Y // N	Y // N				Y // N	522	SD	Charge 42.2
72	8:13 AM	42.29	3/4	715	AM/PM		4210	Y // N	Y // N	Y // N				Y // N	523	SD	Charge 42.2
76 X	12:43 PM	42.06	3/4	1243	PM		42.24	Y // N	Y // N	Y // N		5.5	125	Y // N	9:05	JB	Charge time 12:41pm Charge 42.2
80 X	12:58 PM	42.27	3/4	1:58	AM/PM		42.19	Y // N	Y // N	Y // N		5.2	117	Y // N	1:05	JB	Charge 42.2
84	8:26 AM	42.20	3/4	723	AM/PM		4217	Y // N	Y // N	Y // N				Y // N	524	SD	Charge 42.2
88 X	8:36 AM	42.25	3/4	7:48	AM/PM		4223	Y // N	Y // N	Y // N				Y // N	525	SD	Kan Retract light Charge 42.2
92 X	8:45 AM	42.25	3/4	7:56	AM/PM		42.29	Y // N	Y // N	Y // N				Y // N	526	SD	Charge 42.2
96 X	1:33 PM	42.13	3/4	2:07	AM/PM		42.14	Y // N	Y // N	Y // N				Y // N	1:09	JB	Charge 42.2
100 X	1:48 PM	42.25	3/4	2:15	AM/PM		42.26	Y // N	Y // N	Y // N		5.5	117	Y // N	1:11	JB	Charge 42.2
																	Increase Tons/Charge(crtl 'Y'&'C' charge back)
					AM/PM			Y // N	Y // N	Y // N				Y // N			Decarbed Ovens (crtl 'O')
					AM/PM			Y // N	Y // N	Y // N				Y // N			Empty Ovens (crtl 'R' & 'L' push only)
					AM/PM			Y // N	Y // N	Y // N				Y // N			Keep Tonnage Low (crtl 'B')
																	Different Coal/Coke (crtl 'P')

PCM Inspection	
Charged Fire Ext.	YES-NO
Hydraulic Oil Spill	YES-NO
Windows Good Condition.	YES-NO
Doors Good Condition.	YES-NO

Door fire corrections:
Tighten door — Place K-Wool
Open uptake — Raise draft
Check blocks — Adjust Sole flue
Verify up take setting — Adjust door holes

Comments

Record Review	
✓ C/O & Chg Times	✓ DP Readings
8 Max Ovens/Hr	✓ Comments Review
✓ Door Fire Obs	✓ Door Fire CAs
0 # Ops Deviations	NO Rev'd w/ Operator?
TM Signature Stacey Bond	
NO Deviations	DMS(DW) Enviro Review

PCM Pressure Readings

Must be between 3.0 and 9.0 before operating. If the pressure isn't within the required range at any time, notify your Supervisor immediately. Write the corrective actions in the comment section. Record a Pressure & Fan Amps reading on the 1st oven you push, the last oven you push, and the 1st oven pushed after a 1 hour delay. Record all out of sequence and skipped ovens in the comment section

Daily Time Audits must be done on the 2nd Prod. Run

Baghouse Settings Daily Audit

Delay to Hood: _____ Coal to feed: _____
Delay to Fresh: _____ Tons Charged: _____

76

HNCC PUSHING REPORT Target Push Times: 3hrs 20 mins Total Push Time: _____ Time Lost : _____

DATE: 03/06/18 Initials JH/BC

OVEN	PREV TIME	PREV WEIGHT	DATE	CHG TIME	AM/PM CIRCLE	DATE	TONS GHG	SPILL >250 LBS	DOOR FIRE - PUSHER SIDE: DOOR OBS.	DOOR FIRE	Fire Out Time	PCM Pressure Readings: Pressure Reading	Fan Amp Reading	Cor Act Required	Oven Inspection: CO Time	PT Intial	Operator / Maintenance / Corrective Action Comments
(2)	9:09 AM	42.25	3/4	1042	AM/PM	3/10	4213	Y // N	Y // N	Y // N				Y // N	9:03AM	JMc	Charge 42.2
(6)	9:17 AM	42.32	3/4	1154	AM/PM		4220	Y // N	Y // N	Y // N				Y // N	10:40AM	JMc	H.C. Coasting Charge 42.2
10 X	9:33 AM	42.23	3/4	8:20	AM/PM		42.20	Y // N	Y // N	Y // N		4.9	122	Y // N	0707	JMc	Charge 42.2
14 X	9:41 AM	42.11	3/4	8:33	AM/PM		42.12	Y // N	Y // N	Y // N				Y // N	0708	JMc	Stat Ram Retract light Charge 42.2
(18)	9:50 AM	42.13	3/4	1144	AM/PM		4213	Y // N	Y // N	Y // N				Y // N	11:30AM	JMc	Charge 42.2
(22)	10:57 AM	42.20	3/4	1103	AM/PM		4217	Y // N	Y // N	Y // N				Y // N	9:21AM	JMc	Charge 42.2
(26)	11:05 AM	42.20	3/4	1117	AM/PM		4218	Y // N	Y // N	Y // N				Y // N	9:05AM	JMc	Stat Ram " " H.C. Coasting Charge 42.2
30 X	11:13 AM	42.15	3/4	8:54	AM/PM		42.80	Y // N	Y // N	Y // N				Y // N	0709	JMc	Stat Ram Retract light Charge 42.2
34 X	11:21 AM	42.18	3/4	9:13	AM/PM		42.8	Y // N	Y // N	Y // N				Y // N	0710	JMc	" " " " Charge 42.2
(38)	11:28 AM	42.22	3/4	1153	AM/PM		4220	Y // N	Y // N	Y // N				Y // N	11:31AM	JMc	Charge 42.2
42 X	11:34 AM	42.25	3/4	9:20	AM/PM		42.14	Y // N	Y // N	Y // N				Y // N	0711	JMc	Charge 42.2
(46)	11:41 AM	42.17	3/4	1129	AM/PM		4220	Y // N	Y // N	Y // N				Y // N	11:30AM	JMc	Charge 42.2
(50)	11:48 AM	42.11	3/4	1025	AM/PM		4205	Y // N	Y // N	Y // N				Y // N	9:34AM	JMc	Charge 42.2
54	11:54 AM	42.17	3/4	928	AM/PM		4242	Y // N	Y // N	Y // N				Y // N	0712	JMc	Charge 42.2
(58)	12:05 PM	42.06	3/4	1020	AM/PM		4234	Y // N	Y // N	Y // N				Y // N	9:03AM	JMc	H.C. Coasting - sh.m Charge 42.2
62 X	12:14 PM	42.37	3/4	12:07	AM/PM		4228	Y // N	Y // N	Y // N				Y // N	9:05	JB	Charge 42.2
66 X	12:22 PM	42.13	3/4	12:26	AM/PM		42.33	Y // N	Y // N	Y // N				Y // N	9:07	JB	Switching Decks Charge 42.2
70 X	12:31 PM	42.17	3/4	12:34	AM/PM		42.26	Y // N	Y // N	Y // N				Y // N	9:09	JB	NC Rolling Charge 42.2
(74) X	12:38 PM	42.25	3/4	1:49	AM/PM		4227	Y // N	Y // N	Y // N		5.1	122	Y // N	1:01	JB	Charge 42.2
(78) X	12:51 PM	42.18	3/4	12:50	AM/PM		42.26	Y // N	Y // N	Y // N				Y // N	9:33	JB	Charge 42.2
(82) X	1:04 PM	42.23	3/4	12:58	AM/PM		42.24	Y // N	Y // N	Y // N				Y // N	9:35	JK	Charge 42.2
86 X	1:11 PM	42.15	3/4	1:05	AM/PM		42.24	Y // N	Y // N	Y // N				Y // N	9:13	JB	Charge 42.2
90 X	1:18 PM	42.17	3/4	1:13	AM/PM		42.19	Y // N	Y // N	Y // N				Y // N	9:15	JB	Charge 42.2
94 X	1:26 PM	42.30	3/4	1:22	AM/PM		42.23	Y // N	Y // N	Y // N				Y // N	9:17	JB	Charge 42.2
(98) X	1:40 PM	42.18	3/4	1:38	AM/PM		42.24	Y // N	Y // N	Y // N		5.1	120	Y // N	12:58	JB	Paper stand issue Charge 42.2
																	Increase Tons/Charge(crtl 'Y'&'C' charge back)
					AM/PM			Y // N	Y // N	Y // N				Y // N			Decarbed Ovens (crtl 'O')
					AM/PM			Y // N	Y // N	Y // N				Y // N			Empty Ovens (crtl 'R' & 'L' push only)
					AM/PM			Y // N	Y // N	Y // N				Y // N			Keep Tonnage Low (crtl 'B')
																	Different Coal/Coke (crtl 'P')

PCM Inspection

Charged Fire Ext.	YES NO
Hydraulic Oil Spill	YES NO
Windows Good Condition.	YES NO
Doors Good Condition.	YES NO

Door fire corrections:

Tighten door	Place K-Wool
Open uptake	Raise draft
Check blocks	Adjust Sole flue
Verify up take setting	Adjust door holes

Comments

Record Review

✓	C/O & Chg Times	✓	DP Readings
5	Max Ovens/Hr	✓	Comments Review
✓	Door Fire Obs	✓	Door Fire CAs
0	# Ops Deviations	NO	Rev'd w/ Operator?
TM Signature	Stacey Bond		
_____	Deviations	_____	Enviro Review

PCM Pressure Readings

Must be between 3.0 and 9.0 before operating. If the pressure isn't within the required range at any time, notify your Supervisor immediately. Write the corrective actions in the comment section. Record a Pressure & Fan Amps reading on the 1st oven you push, the last oven you push, and the 1st oven pushed after a 1 hour delay. Record all out of sequence and skipped ovens in the comment section

Daily Time Audits must be done on the 2nd Prod. Run

Baghouse Settings Daily Audit

Delay to Hood: 40 Coal to feed: 2m40s

Delay to Fresh: 60 Tons Charged: 42.2

74 80 96 100

HNCC PUSHING REPORT — **Target Push Times: 3hrs 20 mins** — Total Push Time: _____ — Time Lost: _____

DATE: 03/07/18 — Initials DB/JH

OVEN	PREV TIME	PREV WEIGHT	DATE	CHG TIME	AM/PM CIRCLE	DATE	TONS GHG	SPILL >250 LBS	DOOR FIRE - PUSHER SIDE: DOOR OBS.	DOOR FIRE	Fire Out Time	PCM Pressure Readings: Pressure Reading	Fan Amp Reading	Cor Act Required	Oven Inspection: CO Time	PT Intial	Operator / Maintenance / Corrective Action Comments
~~1~~	2:59 AM	42.20	3/5	1:49	AM/PM	3/7	42.20	Y // N	Y // N	Y // N		4.6	134	Y // N	1:30	BH	3001 issue won't stay charge 42.2
~~5~~	3:28 AM	42.18	3/5	2:02	AM/PM		42.22	Y // N	Y // N	Y // N				Y // N	1:31	BH	Double push charge 42.2
~~9~~	3:36 AM	42.18	3/5	2:15	AM/PM		42.35	Y // N	Y // N	Y // N				Y // N	1:32	BH	charge 42.2
~~13~~	3:45 AM	42.22	3/5	2:28	AM/PM		41.84	Y // N	Y // N	Y // N				Y // N	1:33	BH	charge 42.2
~~17~~	4:05 AM	42.08	3/5	2:45	AM/PM		42.29	Y // N	Y // N	Y // N				Y // N	1:34	BH	charge 42.2
~~21~~	4:26 AM	42.15	3/5	2:59	AM/PM		42.22	Y // N	Y // N	Y // N				Y // N	1:35	BH	charge 42.2
~~25~~	4:35 AM	42.19	3/5	3:19	AM/PM		42.13	Y // N	Y // N	Y // N		5.3	123	Y // N	1:36	BH	charge 42.2
~~29~~	4:54 AM	42.15	3/5	4:37	AM/PM		42.18	Y // N	Y // N	Y // N		4.8	131	Y // N	1:37	BH	charge 42.2
~~33~~	5:03 AM	42.19	3/5	4:44	AM/PM		42.14	Y // N	Y // N	Y // N				Y // N	1:38	BH	charge 42.2
~~37~~	5:14 AM	42.23	3/5	4:50	AM/PM		42.20	Y // N	Y // N	Y // N				Y // N	1:39	BH	charge 42.2
~~41~~	5:22 AM	42.22	3/5	5:04	AM/PM		42.27	Y // N	Y // N	Y // N				Y // N	1:40	BH	Quench needed a min. charge 42.2
~~45~~	5:31 AM	42.10	3/5	5:11	AM/PM		42.25	Y // N	Y // N	Y // N				Y // N	1:41	BH	charge 42.2
~~49~~	5:38 AM	42.25	3/5	5:18	AM/PM		42.17	Y // N	Y // N	Y // N				Y // N	1:43	BH	charge 42.2
~~53~~	5:45 AM	42.18	3/5	5:26	AM/PM		42.22	Y // N	Y // N	Y // N				Y // N	1:43	BH	charge 42.2
~~57~~	5:52 AM	42.06	3/5	5:33	AM/PM		42.27	Y // N	Y // N	Y // N				Y // N	1:44	BH	charge 42.2
~~61~~	6:00 AM	42.22	3/5	5:40	AM/PM		42.23	Y // N	Y // N	Y // N				Y // N	0407	Shut	charge 42.2
~~65~~	6:08 AM	42.25	3/5	547	AM/PM		42.20	Y // N	Y // N	Y // N				Y // N	0408	Shut	charge 42.2
~~69~~	6:15 AM	42.15	3/5	554	AM/PM		4227	Y // N	Y // N	Y // N				Y // N	0409	Shut	charge 42.2
~~73~~	6:24 AM	42.11	3/5	600	AM/PM		4182	Y // N	Y // N	Y // N				Y // N	0410	Shut	charge 42.2
~~77~~	6:32 AM	42.08	3/5	607	AM/PM		4181	Y // N	Y // N	Y // N				Y // N	0411	Shut	charge 42.2
~~81~~	6:39 AM	42.10	3/5	613	AM/PM		4123	Y // N	Y // N	Y // N				Y // N	0412	Shut	coal feeders slow charge 42.2
~~85~~	6:47 AM	42.23	3/5	625	AM/PM		4127	Y // N	Y // N	Y // N				Y // N	0413	Shut	charge 42.2
~~89~~	6:55 AM	42.30	3/5	632	AM/PM		4193	Y // N	Y // N	Y // N				Y // N	0414	Shut	charge 42.2
~~93~~	7:02 AM	42.23	3/5	648	AM/PM		4191	Y // N	Y // N	Y // N				Y // N	0415	Shut	ram retract charge 42.2
~~97~~	7:10 AM	42.11	3/5	655	AM/PM		4210	Y // N	Y // N	Y // N		5.7	127	Y // N	0416	Shut	charge 42.2
					AM/PM			Y // N	Y // N	Y // N				Y // N			
					AM/PM			Y // N	Y // N	Y // N				Y // N			
					AM/PM			Y // N	Y // N	Y // N				Y // N			

Increase Tons/Charge(crtl 'Y'&'C' charge back)
Decarbed Ovens (crtl 'O')
Empty Ovens (crtl 'R' & 'L' push only)
Keep Tonnage Low (crtl 'B')
Different Coal/Coke (crtl 'P')

PCM Inspection

Charged Fire Ext.	YES-NO
Hydraulic Oil Spill	YES-NO
Windows Good Condition.	YES-NO
Doors Good Condition.	YES-NO

Door fire corrections:

Tighten door	Place K-Wool
Open uptake	Raise draft
Check blocks	Adjust Sole flue
Verify up take setting	Adjust door holes

Comments

Record Review

✓ C/O & Chg Times	✓ DP Readings
4 Max Ovens/Hr	✓ Comments Review
✓ Door Fire Obs	✓ Door Fire CAs
0 # Ops Deviations	10 Rev'd w/ Operator?
TM Signature: L. Lutz	L. Lutz
_____ Deviations	_____ Enviro Review

PCM Pressure Readings

Must be between 3.0 and 9.0 before operating. If the pressure isn't within the required range at any time, notify your Supervisor immediately. Write the corrective actions in the comment section. Record a Pressure & Fan Amps reading on the 1st oven you push, the last oven you push, and the 1st oven pushed after a 1 hour delay. Record all out of sequence and skipped ovens in the comment section

Daily Time Audits must be done on the 2nd Prod. Run

Baghouse Settings Daily Audit

Delay to Hood: _____ Coal to feed: _____
Delay to Fresh: _____ Tons Charged: _____

HNCC PUSHING REPORT

DATE: 03/07/18

Target Push Times: 3hrs 20 mins

Initials BC

Total Push Time: _____

Time Lost : _____

OVEN	PREV TIME	PREV WEIGHT	DATE	CHG TIME	AM/PM CIRCLE	DATE	TONS GHG	SPILL >250 LBS	DOOR FIRE - PUSHER SIDE: DOOR OBS.	DOOR FIRE - PUSHER SIDE: DOOR FIRE	DOOR FIRE - PUSHER SIDE: Fire Out Time	PCM Pressure Readings: Pressure Reading	PCM Pressure Readings: Fan Amp Reading	PCM Pressure Readings: Cor Act Required	Oven Inspection: CO Time	Oven Inspection: PT Intial	Operator / Maintenance / Corrective Action Comments
3	1:10 PM	42.13	3/5	838	AM/PM	3/7	4211	Y // N	Y // N	Y // N		4.9	134	Y // N	8:03AM	JM	charge 42.2
7	12:18 PM	42.27	3/5	848	AM/PM		4220	Y // N	Y // N	Y // N				Y // N	8:03AM	JM	charge 42.2
11	12:28 PM	42.25	3/5	1017	AM/PM		4230	Y // N	Y // N	Y // N				Y // N	[redacted]10:03	JM	C/T 2Tons of Coal/oven Not Charged charge 42.2
15	12:38 PM	42.23	3/5	855	AM/PM		4225	Y // N	Y // N	Y // N				Y // N	8:04AM	JM	charge 42.2
19	12:49 PM	42.24	3/5	904	AM/PM		4223	Y // N	Y // N	Y // N				Y // N	8:05AM	JM	charge 42.2
23	1:31 PM	42.34	3/5	1253	AM/PM		4217	Y // N	Y // N	Y // N		5.0	133	Y // N	12:40PM	JM	C/T charge 42.2
27	1:39 PM	42.24	3/5	913	AM/PM		4217	Y // N	Y // N	Y // N				Y // N	8:06AM	JM	charge 42.2
31	1:47 PM	42.09	3/5	1026	AM/PM		4227	Y // N	Y // N	Y // N				Y // N	10:04AM	JM	C/T charge 42.2
35	1:55 PM	42.26	3/5	921	AM/PM		4223	Y // N	Y // N	Y // N				Y // N	8:07AM	JM	charge 42.2
39	2:03 PM	42.24	3/5	930	AM/PM		4223	Y // N	Y // N	Y // N				Y // N	8:08AM	JM	Check ? charge 42.2
43	2:44 PM	42.32	3/5	937	AM/PM		4297	Y // N	Y // N	Y // N				Y // N	8:09AM	JM	charge 42.2
47	2:11 PM	42.31	3/5	103	AM/PM		4223	Y // N	Y // N	Y // N				Y // N	12:31PM	JM	C/T charge 42.2
51	2:19 PM	42.15	3/5	945	AM/PM		4227	Y // N	Y // N	Y // N				Y // N	8:10AM	JM	charge 42.2
55	2:26 PM	42.27	3/5	953	AM/PM		4235	Y // N	Y // N	Y // N				Y // N	8:11AM	JM	charge 42.2
59	2:33 PM	42.23	3/5	1001	AM/PM		4229	Y // N	Y // N	Y // N				Y // N	8:12AM	JM	charge 42.2
63	4:35 PM	42.15	3/5	115	AM/PM		4220	Y // N	Y // N	Y // N				Y // N	12:18	JB	C/T AK ~~Charge Mittal Coal~~ charge 42.2
67	2:55 PM	42.27	3/5	1043	AM/PM		4220	Y // N	Y // N	Y // N				Y // N	10:35	JB	~~Charge Mittal Coal~~ charge 42.2
71	3:03 PM	42.20	3/5	1051	AM/PM		4225	Y // N	Y // N	Y // N				Y // N	10:37	JB	~~Charge Mittal Coal~~ charge 42.2
75	4:55 PM	42.29	3/5	124	AM/PM		4218	Y // N	Y // N	Y // N				Y // N	12:20	JB	C/T ~~Charge Mittal Coal~~ charge 42.2
79	5:03 PM	42.11	3/5	131	AM/PM		4225	Y // N	Y // N	Y // N				Y // N	1:16	JB	~~Charge Mittal Coal~~ charge 42.2
83	5:10 PM	42.18	3/5	145	AM/PM		4213	Y // N	Y // N	Y // N				Y // N	12:23	JB	~~Charge Mittal Coal~~ charge 42.2
87	5:25 PM	42.27	3/5	153	AM/PM		4220	Y // N	Y // N	Y // N				Y // N	12:25	JB	~~Charge Mittal Coal~~ charge 42.2
91	5:41 PM	42.29	3/5	1101	AM/PM		4222	Y // N	Y // N	Y // N				Y // N	10:41	JB	~~Charge Mittal Coal~~ charge 42.2
95	6:04 PM	42.20	3/5	1109	AM/PM		4295	Y // N	Y // N	Y // N				Y // N	10:45	JB	~~Charge Mittal Coal~~ charge 42.2
99	5:52 PM	42.22	3/5	208	AM/PM		4184	Y // N	Y // N	Y // N		5.6	132	Y // N	1:59	JB	C/T ~~Charge Mittal Coal~~ charge 42.2
					AM/PM			Y // N	Y // N	Y // N				Y // N			
					AM/PM			Y // N	Y // N	Y // N				Y // N			
					AM/PM			Y // N	Y // N	Y // N				Y // N			

Increase Tons/Charge(crtl 'Y'&'C' charge back)

Decarbed Ovens (crtl 'O')

Empty Ovens (crtl 'R' & 'L' push only)

Keep Tonnage Low (crtl 'B')

Different Coal/Coke (crtl 'P')

PCM Inspection

Charged Fire Ext.	YES-NO
Hydraulic Oil Spill	YES-NO
Windows Good Condition.	YES-NO
Doors Good Condition.	YES-NO

Door fire corrections:

Tighten door — Place K-Wool

Open uptake — Raise draft

Check blocks — Adjust Sole flue

Verify up take setting — Adjust door holes

Comments

Record Review

- ✓ C/O & Chg Times
- ✓ DP Readings
- 6 Max Ovens/Hr
- ✓ Comments Review
- ✓ Door Fire Obs
- ✓ Door Fire CAs
- 0 # Ops Deviations
- NO Rev'd w/ Operator?
- TM Signature Stacey Bond
- _____ Deviations
- _____ Enviro Review

PCM Pressure Readings

Must be between 3.0 and 9.0 before operating. If the pressure isn't within the required range at any time, notify your Supervisor immediately. Write the corrective actions in the comment section. Record a Pressure & Fan Amps reading on the 1st oven you push, the last oven you push, and the 1st oven pushed after a 1 hour delay. Record all out of sequence and skipped ovens in the comment section

Daily Time Audits must be done on the 2nd Prod. Run

Baghouse Settings Daily Audit

Delay to Hood: - Coal to feed: 3m

Delay to Fresh: - Tons Charged: 42.2

HNCC PUSHING REPORT

DATE: 03/08/18

Target Push Times: 3hrs 20 mins

Initials SM / MB / DH

Total Push Time: _____

Time Lost: _____

OVEN	PREV TIME	PREV WEIGHT	DATE	CHG TIME	AM/PM CIRCLE	DATE	TONS CHG	SPILL >250 LBS	DOOR FIRE - PUSHER SIDE: DOOR OBS.	DOOR FIRE	Fire Out Time	PCM Pressure Readings: Pressure Reading	Fan Amp Reading	Cor Act Required	Oven Inspection: CO Time	PT Intial	Operator / Maintenance / Corrective Action Comments
~~4~~	12:01 AM	42.29	3/6	2354	AM/PM	3/7	4212	Y // N	Y // N	Y // N		4.9	134	Y // N	11:15	BH	
~~8~~	12:15 AM	42.41	3/6	1205	AM/PM	3/8	4237	Y // N	Y // N	Y // N		5.1	135	Y // N	11:16	BH	
~~12~~	12:23 AM	42.22	3/6	1212	AM/PM	"	4211	Y // N	Y // N	Y // N				Y // N	11:17	BH	
~~16~~	12:32 AM	42.50	3/6	1220	AM/PM	"	4215	Y // N	Y // N	Y // N				Y // N	11:18	BH	
~~20~~	12:39 AM	42.11	3/6	1227	AM/PM	"	421	Y // N	Y // N	Y // N				Y // N	11:19	BH	
~~24~~	12:45 AM	42.20	3/6	1233	AM/PM	"	4217	Y // N	Y // N	Y // N				Y // N	11:20	BH	
~~28~~	12:52 AM	42.23	3/6	1239	AM/PM	"	4217	Y // N	Y // N	Y // N				Y // N	11:21	BH	
~~32~~	12:58 AM	42.17	3/6	1246	AM/PM	"	4215	Y // N	Y // N	Y // N				Y // N	11:22	BH	
~~36~~	1:05 AM	42.39	3/6	1252	AM/PM	"	4213	Y // N	Y // N	Y // N				Y // N	11:23	BH	
~~40~~	1:12 AM	42.25	3/6	1259	AM/PM	"	422	Y // N	Y // N	Y // N				Y // N	11:24	BH	
~~44~~	1:18 AM	42.18	3/6	104	AM/PM	"	4225	Y // N	Y // N	Y // N				Y // N	11:25	BH	
~~48~~	1:25 AM	42.05	3/6	110	AM/PM	"	4225	Y // N	Y // N	Y // N				Y // N	11:26	BH	
~~52~~	1:31 AM	42.15	3/6	116	AM/PM	"	4215	Y // N	Y // N	Y // N				Y // N	11:27	BH	
~~56~~	1:38 AM	42.20	3/6	122	AM/PM	"	4227	Y // N	Y // N	Y // N				Y // N	11:28	BH	
~~60~~	1:45 AM	42.22	3/6	128	AM/PM	"	4213	Y // N	Y // N	Y // N				Y // N	11:29	BH	
~~64~~	6:59 AM	42.18	3/6	216	AM/PM	"	4225	Y // N	Y // N	Y // N		5.1	124	Y // N	0215	DH	
~~68~~	7:08 AM	42.06	3/6	223	AM/PM	"	42.10	Y // N	Y // N	Y // N				Y // N	0216	DH	
~~72~~	7:15 AM	42.10	3/6	229	AM/PM	"	42.06	Y // N	Y // N	Y // N				Y // N	0217	DH	
(76)	12:41 PM	42.24	3/6	1133	AM/PM	"	42.15	Y // N	Y // N	Y // N		5.7	136	Y // N	1127	MM	C/T
(80)	1:58 PM	42.19	3/6	1140	AM/PM	"	42.30	Y // N	Y // N	Y // N				Y // N	1128	MM	C/T
~~84~~	7:23 AM	42.17	3/6	236	AM/PM	"	42.25	Y // N	Y // N	Y // N				Y // N	0218	DH	
~~88~~	7:48 AM	42.23	3/6	243	AM/PM	"	42.22	Y // N	Y // N	Y // N				Y // N	0219	DH	
~~92~~	7:56 AM	42.29	3/6	250	AM/PM	"	42.24	Y // N	Y // N	Y // N		5.6	129	Y // N	0220	DH	
(96)	2:07 PM	42.14	3/6	1151	AM/PM	"	42.08	Y // N	Y // N	Y // N				Y // N	1129	MM	C/T
(100)	2:15 PM	42.26	3/6	1159	AM/PM	"	42.23	Y // N	Y // N	Y // N		5.8	132	Y // N	1130	MM	C/T
					AM/PM			Y // N	Y // N	Y // N				Y // N			
					AM/PM			Y // N	Y // N	Y // N				Y // N			
					AM/PM			Y // N	Y // N	Y // N				Y // N			

Increase Tons/Charge(crtl 'Y'&'C' charge back)

Decarbed Ovens (crtl 'O')

Empty Ovens (crtl 'R' & 'L' push only)

Keep Tonnage Low (crtl 'B')

Different Coal/Coke (crtl 'P')

PCM Inspection

Charged Fire Ext.	(YES) NO
Hydraulic Oil Spill	YES (NO)
Windows Good Condition.	(YES) NO
Doors Good Condition.	(YES) NO

Door fire corrections:

Tighten door — Place K-Wool

Open uptake — Raise draft

Check blocks — Adjust Sole flue

Verify up take setting — Adjust door holes

Comments

Record Review

- ✓ C/O & Chg Times
- ✓ DP Readings
- 9 Max Ovens/Hr
- ✓ Comments Review
- ✓ Door Fire Obs
- ✓ Door Fire CAs
- 8 # Ops Deviations
- NO Rev'd w/ Operator?
- TM Signature
- _____ Deviations
- _____ Enviro Review

PCM Pressure Readings

Must be between 3.0 and 9.0 before operating. If the pressure isn't within the required range at any time, notify your Supervisor immediately. Write the corrective actions in the comment section. Record a Pressure & Fan Amps reading on the 1st oven you push, the last oven you push, and the 1st oven pushed after a 1 hour delay. Record all out of sequence and skipped ovens in the comment section

Daily Time Audits must be done on the 2nd Prod. Run

Baghouse Settings Daily Audit

Delay to Hood: _____ Coal to feed: _____

Delay to Fresh: _____ Tons Charged: _____

HNCC PUSHING REPORT

DATE: 03/08/18

Target Push Times: 3hrs 20 mins

Initials BC/DU

Total Push Time: _____

Time Lost: _____

OVEN	PREV TIME	PREV WEIGHT	DATE	CHG TIME	AM/PM CIRCLE	DATE	TONS GHG	SPILL >250 LBS	DOOR FIRE - PUSHER SIDE: DOOR OBS.	DOOR FIRE	Fire Out Time	PCM Pressure Readings: Pressure Reading	Fan Amp Reading	Cor Act Required	Oven Inspection: CO Time	PT Intial	Operator / Maintenance / Corrective Action Comments
2	10:42 AM	42.13	3/6	832	AM/PM	3/8	4229	Y // N	Y // N	Y // N		4.9	139	Y // N	6:15 A	BH	Both Ends
6	10:54 AM	42.20	3/6	841	AM/PM		4213	Y // N	Y // N	Y // N				Y // N	6:16	BH	
10	8:20 AM	42.20	3/6	850	AM/PM		4218	Y // N	Y // N	Y // N				Y // N	6:17	BH	
14	8:33 AM	42.12	3/6	902	AM/PM		4218	Y // N	Y // N	Y // N				Y // N	6:18	BH	
18	11:44 AM	42.13	3/6	911	AM/PM		4220	Y // N	Y // N	Y // N				Y // N	6:19	BH	
22	11:03 AM	42.17	3/6	920	AM/PM		4211	Y // N	Y // N	Y // N				Y // N	6:20	BH	
26	11:17 AM	42.18	3/6	930	AM/PM		4223	Y // N	Y // N	Y // N				Y // N	6:21	BH	
30	8:54 AM	42.80	3/6	938	AM/PM		4218	Y // N	Y // N	Y // N				Y // N	6:22	BH	
34	9:13 AM	42.80	3/6	947	AM/PM		4223	Y // N	Y // N	Y // N				Y // N	6:23	BH	Pull Coed
38	11:53 AM	42.20	3/6	955	AM/PM		4213	Y // N	Y // N	Y // N				Y // N	6:24	BH	
42	9:20 AM	42.14	3/6	1002	AM/PM		4215	Y // N	Y // N	Y // N				Y // N	6:25	BH	
46	11:29 AM	42.20	3/6	1010	AM/PM		4213	Y // N	Y // N	Y // N				Y // N	6:26	BH	
50	10:28 AM	42.05	3/6	1023	AM/PM		4217	Y // N	Y // N	Y // N				Y // N	6:27	BH	Stat. Ram
54	9:28 AM	42.42	3/6	1030	AM/PM		4211	Y // N	Y // N	Y // N				Y // N	6:28	BH	
58	10:20 AM	42.34	3/6	1053	AM/PM		4211	Y // N	Y // N	Y // N				Y // N	6:29	BH	H.C. lock Pin
62	12:07 PM	42.20	3/6	1103	AM/PM		4218	Y // N	Y // N	Y // N				Y // N	1026	MM	
66	12:26 PM	42.33	3/6	1111	AM/PM		4222	Y // N	Y // N	Y // N				Y // N	1027	MM	
70 ✓	12:34 PM	42.26	3/6	1119	AM/PM		4213	Y // N	Y // N	Y // N				Y // N	1028	MM	
74 ✓	1:49 PM	42.27	3/6	1211	AM/PM		42.18	Y // N	Y // N	Y // N		5.6	137	Y // N	1127	MM	checking ovens / pushed over 5 on what to P
78 ✓	12:50 PM	42.26	3/6	1220	AM/PM		42.23	Y // N	Y // N	Y // N				Y // N	1128	MM	
82 ✓	12:58 PM	42.24	3/6	1227	AM/PM		42.22	Y // N	Y // N	Y // N				Y // N	1129	MM	
86 ✗	1:05 PM	42.24	3/6	12:35	AM/PM		42.23	Y // N	Y // N	Y // N				Y // N	1130	MM	
90 ✗	1:13 PM	42.19	3/6	12:43	AM/PM		42.14	Y // N	Y // N	Y // N				Y // N	1131	MM	
94 ✗	1:22 PM	42.23	3/6	12:50	AM/PM		42.24	Y // N	Y // N	Y // N				Y // N	1132	MM	
98 ✗	1:38 PM	42.24	3/6	12:57	AM/PM	✓	42.21	Y // N	Y // N	Y // N		5.7	132	Y // N	1029	MM	
					AM/PM			Y // N	Y // N	Y // N				Y // N			
					AM/PM			Y // N	Y // N	Y // N				Y // N			
					AM/PM			Y // N	Y // N	Y // N				Y // N			

Increase Tons/Charge(crtl 'Y'&'C' charge back)

Decarbed Ovens (crtl 'O')

Empty Ovens (crtl 'R' & 'L' push only)

Keep Tonnage Low (crtl 'B')

Different Coal/Coke (crtl 'P')

PCM Inspection

Charged Fire Ext.	YES-NO
Hydraulic Oil Spill	YES-NO
Windows Good Condition.	YES-NO
Doors Good Condition.	YES-NO

Door fire corrections:

Tighten door — Place K-Wool

Open uptake — Raise draft

Check blocks — Adjsut Sole flue

Verify up take setting — Adjust door holes

Comments

Record Review

✓ C/O & Chg Times

✓ DP Readings

7 Max Ovens/Hr

✓ Comments Review

✓ Door Fire Obs

✓ Door Fire CAs

0 # Ops Deviations

✓ Rev'd w/ Operator?

TM Signature

_____ Deviations

_____ Enviro Review

PCM Pressure Readings

Must be between 3.0 and 9.0 before operating. If the pressure isn't within the required range at any time, notify your Supervisor immediately. Write the corrective actions in the comment section. Record a Pressure & Fan Amps reading on the 1st oven you push, the last oven you push, and the 1st oven pushed after a 1 hour delay. Record all out of sequence and skipped ovens in the comment section

Daily Time Audits must be done on the 2nd Prod. Run

Baghouse Settings Daily Audit

Delay to Hood: _____ Coal to feed: 3.m

Delay to Fresh: _____ Tons Charged: 42.2

Daily Coal Sulfur Analyses

Date	Coal Sulfur (%)
3/5/2018	0.97
3/6/2018	0.83
3/7/2018	0.89
3/8/2018	0.80

Appendix C
CALCULATIONS AND FIELD DATA

Calculation Summary

Project Name	**PM and HCl**
Project Number	**60562829**
Facility	**Haverhill Operaions**

Sample Type	PM	PM	PM	HCl	HCl	HCl	0	0	Averages
Source	BVS 5	BVS 5	BVS 5	BVS 5	BVS 5	BVS 5	0	0	
Condition	0	0	0	0	0	0	0	0	
Run	1	2	3	1	2	3	0	0	
Date	3/7/2018	3/7/2018	3/8/2018	3/7/2018	3/7/2018	3/8/2018	1/0/1900	1/0/1900	
Time Start	08:45	20:08	00:34	09:24	20:45	01:09	00:00	00:00	
Time Stop	10:52	22:16	02:40	10:24	21:45	02:09	00:00	00:00	
Sampling Times	08:45-10:52	20:08-22:16	00:34-02:40	09:24-10:24	20:45-21:45	01:09-02:09	00:00-00:00	00:00-00:00	
Duct Diameter (ft) *(equivolent if square duct)*	9.00	9.00	9.00	0.00	0.00	0.00	0.00	0.00	
Pitot Tube Correction Factor	0.84	0.84	0.84	0.00	0.00	0.00	0.00	0.00	
Nozzle Diameter (inches)	0.375	0.375	0.375	0.000	0.000	0.000	0.000	0.000	
DGMCF (Y_d)	0.989	0.989	0.989	0.975	0.975	0.975	0.000	0.000	
Orifice Factor ("wc) ($\Delta H_@$)	1.723	1.723	1.723	1.939	1.939	1.939	0.000	0.000	
Console Identification	URS-005	URS-005	URS-005	URS 001	URS 001	URS 001	0	0	
Standard Temperature (°F) (T_{std})	68	68	68	68	68	68	68	68	
Barometric Pressure Measured ("Hg)	29.80	29.99	30.01	29.80	29.99	30.01	0.00	0.00	
Stack Elevation (ft) (relative to Barometer)	585	585	585	585	585	585	0	0	
Barometric Pressure ("Hg) (P_{bar})	29.215	29.405	29.425	29.215	29.405	29.425	0	0	
Average Stack Temperature (°F) (T_s)	1579.0	1564.7	1489.2	#DIV/0!	#DIV/0!	#DIV/0!	#DIV/0!	#DIV/0!	1544.3
Average DGM Temp (°F) (T_m)	40.5	45.9	43.1	40.5	45.6	39.6	#DIV/0!	#DIV/0!	
Average Delta H ("wc) (ΔH_{avR})	0.93	1.16	1.24	1.20	1.19	1.20	#DIV/0!	#DIV/0!	
Condensed Water (g)	193.8	222.2	179.9	104.1	98.8	86.6	0.0	0.0	
Test Duration (minutes) (Θ)	120	120	120	60	60	60	0	0	
Static Pressure ("wc) (P_g)	-0.20	-0.20	-0.20	-0.20	-0.20	-0.20	0.00	0.00	
Carbon Monoxide Content (%) (%CO)	0	0	0	0	0	0	0	0	
Carbon Dioxide Content (%) (%CO_2)	7.20	7.60	6.20	0.00	0.00	0.00	0.00	0.00	
Oxygen Content (%) (%O_2)	8.90	8.80	10.30	0.00	0.00	0.00	0.00	0.00	
Hydrogen Content (%) (%H_2)	0.0	0.0	0.0	0.0	0.0	0.0	0.0	0.0	
Methane Content (%) (%CH_4)	0.0	0.0	0.0	0.0	0.0	0.0	0.0	0.0	
Nitrogen Content (%) (%N_2)	83.90	83.60	83.50	100.00	100.00	100.00	100.00	100.00	
Meter Volume (dcf) (V_m)	63.343	72.710	74.550	35.265	35.012	35.223	0.000	0.000	
Average square root of ΔP ($(\sqrt{\Delta P})_{avg}$)	0.472	0.535	0.539	#DIV/0!	#DIV/0!	#DIV/0!	#DIV/0!	#DIV/0!	
Absolute Stack Pressure ("Hg) (P_s)	29.20	29.39	29.41	29.20	29.39	29.41	0.00	0.00	
Absolute Stack Temperature (°R) (T_s)	2039.0	2024.7	1949.2	#DIV/0!	#DIV/0!	#DIV/0!	#DIV/0!	#DIV/0!	2004.3
Flue Gas Moisture (%) (B_{WS})	12.38	12.41	10.00	12.14	11.70	10.24	#DIV/0!	#DIV/0!	11.48
Moisture at saturation	N/A	N/A	N/A	#DIV/0!	#DIV/0!	#DIV/0!	#DIV/0!	#DIV/0!	
Moisture used in Calculation	12.38	12.41	10.00	#DIV/0!	#DIV/0!	#DIV/0!	#DIV/0!	#DIV/0!	11.59
Gas Molecular Wt (Wet) (g/g-mole) (M_s)	28.08	28.13	28.26	#DIV/0!	#DIV/0!	#DIV/0!	#DIV/0!	#DIV/0!	
Corrected Vol of Gas Sample (dcf) ($V_{m(std)}$)	62.646	71.910	73.730	34.383	34.137	34.342	0.000	0.000	
Volume at Meter (dscf) (V_M)	64.682	73.972	76.337	35.525	35.141	35.802	#DIV/0!	#DIV/0!	
Average Gas Velocity (ft/sec) (V_s)	53.50	60.13	59.32	#DIV/0!	#DIV/0!	#DIV/0!	#DIV/0!	#DIV/0!	57.65
Avg Flow Rate (acfh)	12,252,650	13,772,168	13,584,774	#DIV/0!	#DIV/0!	#DIV/0!	#DIV/0!	#DIV/0!	13,203,197
Avg Flow Rate (acfm)	204,211	229,536	226,413	#DIV/0!	#DIV/0!	#DIV/0!	#DIV/0!	#DIV/0!	220,053
Avg Flow Rate (scfh)	3,096,572	3,527,899	3,617,144	#DIV/0!	#DIV/0!	#DIV/0!	#DIV/0!	#DIV/0!	3,413,872
Avg Flow Rate (scfm)	51,610	58,798	60,286	#DIV/0!	#DIV/0!	#DIV/0!	#DIV/0!	#DIV/0!	56,898
Avg Flow Rate (dscfh) (Q_{sd})	2,713,267	3,090,225	3,255,417	#DIV/0!	#DIV/0!	#DIV/0!	#DIV/0!	#DIV/0!	3,019,636
Avg Flow Rate (dscfm) (Q_{sd})	45,221	51,504	54,257	#DIV/0!	#DIV/0!	#DIV/0!	#DIV/0!	#DIV/0!	50,327
Isokinetic Sampling Rate (%) (I)	98.87	99.27	97.25	#DIV/0!	#DIV/0!	#DIV/0!	#DIV/0!	#DIV/0!	

Average square root of ΔH ($(\sqrt{\Delta H})_{avg}$)	0.94	1.07	1.11	1.10	1.09	1.10		
Gas Molecular Weight (Dry) (M_d) (g/g-mole)	29.5	29.6	29.4					

Filter Weight Gain (mg)	31.8	26	17.3						
PNR Weight Gain (mg)	0.67	9.38	0.84						
Impinger Residue (mg)	92.5	114.9	110.6						
Front-Half Particulate Loading (gr/dscf)	0.00775	0.00738	0.00367	#VALUE!	#VALUE!	#VALUE!	#VALUE!	#VALUE!	0.00376
Back-Half Particulate Loading (gr/dscf)	0.0221	0.0240	0.0224	NA	NA	NA	NA	NA	0.0171
Total Particulate Loading (gr/dscf)	0.0298	0.0313	0.0260	#VALUE!	#VALUE!	#VALUE!	#VALUE!	#VALUE!	0.0174
Front-Half Particulate Loading (mg/dscm)	17.7	16.9	8.39	#VALUE!	#VALUE!	#VALUE!	#VALUE!	#VALUE!	8.60
Back-Half Particulate Loading (mg/dscm)	50.5	54.8	51.2	NA	NA	NA	NA	NA	52.2
Total Particulate Loading (mg/dscm)	68.2	71.7	59.5	#VALUE!	#VALUE!	#VALUE!	#VALUE!	#VALUE!	39.9
Front-Half Particulate Loading O_2 Corr (gr/dscf)	0.00897	0.00848	0.00481	#VALUE!	#VALUE!	#VALUE!	#VALUE!	#VALUE!	0.00445
Back-Half Particulate Loading O_2 Corrected (gr/dscf)	0.0256	0.0275	0.0293	NA	NA	NA	NA	NA	0.0275
Total Particulate Loading O_2 Corrected (gr/dscf)	0.0345	0.0360	0.0341	#VALUE!	#VALUE!	#VALUE!	#VALUE!	#VALUE!	0.0209
Front-Half Particulate Loading O_2 Corrected (mg/dscm)	20.5	19.4	11.0	#VALUE!	#VALUE!	#VALUE!	#VALUE!	#VALUE!	10.2
Back-Half Particulate Loading O_2 Corrected (mg/dscm)	58.5	63.0	67.1	NA	NA	NA	NA	NA	62.9
Total Particulate Loading O_2 Corrected (mg/dscm)	79.0	82.4	78.1	#VALUE!	#VALUE!	#VALUE!	#VALUE!	#VALUE!	47.9
Front-Half Particulate Emission (lbs/hr)	3.00	3.26	1.71	#VALUE!	#VALUE!	#VALUE!	#VALUE!	#VALUE!	2.66
Total Particulate Emission (lbs/hr)	11.6	13.8	12.1	#VALUE!	#VALUE!	#VALUE!	#VALUE!	#VALUE!	12.5

Checked by
Steve Bellas
4/26/2018

Calculation Summary

Data Entry Area

Sample Type	PM	Pitot Tube Correction Factor	0.84	Entered By (initials)	JC
Source	BVS 5	Console ID	URS-005	Checked by (initials)	SB
Condition		DGMCF	0.989	Corrected by (initials)	
Run	1	$\Delta H_@$	1.723		
Date	7-Mar	Nozzle Diameter (in)	0.3750		
Duct Diameter (ft)	9	Std Temp (°F)	68		
Duct Depth (ft)		Bar Press ("Hg, meas)	29.8		
Duct Width (ft)		Meter Elev (ft) (rel to Brmtr)	585		
		Static Press ("H_2O)	-0.2		

	Value	Link Checked
% CO		
% CO_2	7.2	
% O_2	8.9	
% H_2		
% CH_4		

Times		DGM Volumes (as read)	
start	08:45	start	143.924
stop	09:45	stop	207.267
start	09:52	start	
stop	10:52	stop	
start		start	
stop		stop	
start		start	
stop		stop	
start		start	
stop		stop	
start		start	
stop		stop	
start		start	
stop		stop	
start		start	
stop		stop	
start		start	
stop		stop	
Duration	120	Total	63.343

Impinger Catch (g)			
	Initial	Final	
1	372.1	547.8	175.7
2	598.5	598.5	0
3	709.3	708.2	-1.1
4	801.0	820.2	19.2
5			
6			
7			
8			
9			
10			
		Total Wt Gain	193.8

	ΔP ("H_2O)	ΔH ("H_2O)	Stack Temp (°F)	DGM Temp (°F)	√ΔP	√ΔH
Averages	0.23	0.93	1579	40.5	0.4725	0.9449
Individual Readings	0.18	0.72	1622	38	0.4242641	0.84853
	0.16	0.63	1618	37	0.4	0.79373
	0.18	0.71	1615	38	0.4242641	0.84261
	0.24	0.95	1610	38	0.4898979	0.97468
	0.15	0.62	1607	39	0.3872983	0.7874
	0.16	0.64	1601	39	0.4	0.8
	0.35	1.40	1595	40	0.591608	1.18322
	0.35	1.40	1591	41	0.591608	1.18322
	0.31	1.30	1584	41	0.5567764	1.14018
	0.28	1.10	1577	41	0.5291503	1.04881
	0.22	0.92	1566	41	0.4690416	0.95917
	0.22	0.92	1560	41	0.4690416	0.95917
	0.16	0.66	1580	40	0.4	0.8124
	0.16	0.66	1579	40	0.4	0.8124
	0.13	0.53	1574	40	0.3605551	0.72801
	0.10	0.41	1568	41	0.3162278	0.64031
	0.10	0.41	1571	41	0.3162278	0.64031
	0.10	0.41	1567	41	0.3162278	0.64031
	0.37	1.40	1558	42	0.6082763	1.18322
	0.36	1.40	1558	42	0.6	1.18322
	0.34	1.30	1554	42	0.5830952	1.14018
	0.33	1.30	1551	43	0.5744563	1.14018
	0.31	1.20	1546	43	0.5567764	1.09545
	0.33	1.30	1543	43	0.5744563	1.14018

Calculation Summary

Data Entry Area

Sample Type	PM	Pitot Tube Correction Factor	0.84	Entered By (initials)	JC
Source	BVS 5	Console ID	URS-005	Checked by (initials)	SB
Condition		DGMCF	0.989	Corrected by (initials)	
Run	2	$\Delta H_@$	1.723		
Date	7-Mar	Nozzle Diameter (in)	0.3750		
Duct Diameter (ft)	9	Std Temp (°F)	68		
Duct Depth (ft)		Bar Press ("Hg, meas)	29.99		
Duct Width (ft)		Meter Elev (ft) (rel to Brmtr)	585		
		Static Press ("H_2O)	-0.2		

	Value	Lab Checked
% CO		
% CO_2	7.6	
% O_2	8.8	
% H_2		
% CH_4		

Times		DGM Volumes (as read)		Impinger Catch (g)			
					Initial	Final	
start	20:08	start	208.250	1	359.5	554.9	195.4
stop	21:08	stop	280.960	2	610.1	610.2	0.1
start	21:16	start		3	697.7	697.2	-0.5
stop	22:16	stop		4	823.3	850.5	27.2
start		start		5			
stop		stop		6			
start		start		7			
stop		stop		8			
start		start		9			
stop		stop		10			
start		start					
stop		stop					
start		start					
stop		stop					
start		start					
stop		stop					
start		start					
stop		stop					
						Total Wt Gain	222.2
Duration	120	Total	72.710				

	ΔP ("H_2O)	ΔH ("H_2O)	Stack Temp (°F)	DGM Temp (°F)	√ΔP	√ΔH
Averages	0.29	1.16	1565	45.9	0.5351	1.0702
Individual Readings	0.28	1.10	1587	40	0.5291503	1.04881
	0.26	1.00	1588	40	0.509902	1
	0.25	1.00	1589	41	0.5	1
	0.26	1.00	1589	41	0.509902	1
	0.26	1.00	1588	42	0.509902	1
	0.26	1.00	1586	43	0.509902	1
	0.34	1.40	1583	44	0.5830952	1.18322
	0.35	1.40	1575	45	0.591608	1.18322
	0.37	1.50	1572	45	0.6082763	1.22474
	0.33	1.30	1569	45	0.5744563	1.14018
	0.30	1.20	1562	46	0.5477226	1.09545
	0.15	0.62	1476	46	0.3872983	0.7874
	0.23	1.00	1570	48	0.4795832	1
	0.22	0.95	1569	48	0.4690416	0.97468
	0.18	0.77	1566	47	0.4242641	0.8775
	0.20	0.83	1563	47	0.4472136	0.91104
	0.20	0.83	1562	49	0.4472136	0.91104
	0.25	1.00	1561	47	0.5	1
	0.39	1.50	1555	48	0.6244998	1.22474
	0.39	1.50	1552	49	0.6244998	1.22474
	0.39	1.50	1551	49	0.6244998	1.22474
	0.39	1.50	1548	50	0.6244998	1.22474
	0.37	1.50	1546	51	0.6082763	1.22474
	0.37	1.50	1546	51	0.6082763	1.22474

Calculation Summary

Data Entry Area

Sample Type	PM	Pitot Tube Correction Factor	0.84	Entered By (initials)	JC		
Source	BVS 5	Console ID	URS-005	Checked by (initials)	SB		
Condition		DGMCF	0.989	Corrected by (initials)	JC		
Run	3	$\Delta H_@$	1.723			Value	Lnk Checked
Date	8-Mar	Nozzle Diameter (in)	0.3750	% CO			
Duct Diameter (ft)	9	Std Temp (°F)	68	% CO_2		6.2	
Duct Depth (ft)		Bar Press ("Hg, meas)	30.01	% O_2		10.3	
Duct Width (ft)		Meter Elev (ft) (rel to Brmtr)	585	% H_2			
		Static Press ("H_2O)	-0.2	% CH_4			

Times		DGM Volumes (as read)		Impinger Catch (g)			
start	00:34	start	281.343		Initial	Final	
stop	01:34	stop	355.893	1	372.4	534.5	162.1
start	01:40	start		2	601.0	598.8	-2.2
stop	02:40	stop		3	706.3	708.3	2
start		start		4	820.6	838.6	18
stop		stop		5			
start		start		6			
stop		stop		7			
start		start		8			
stop		stop		9			
start		start		10			
stop		stop					
start		start					
stop		stop					
start		start					
stop		stop					
start		start					
stop		stop					
						Total Wt Gain	179.9
Duration	120	Total	74.550				

	ΔP ("H_2O)	ΔH ("H_2O)	Stack Temp (°F)	DGM Temp (°F)	√ΔP	√ΔH
Averages	0.29	1.24	1489	43.1	0.5394	1.1076

Individual Readings	0.28	1.10	1504		38	0.5291503	1.04881
	0.33	1.40	1504		38	0.5744563	1.18322
	0.34	1.40	1501		38	0.5830952	1.18322
	0.33	1.40	1500		39	0.5744563	1.18322
	0.28	1.10	1500		40	0.5291503	1.04881
	0.23	0.97	1500		40	0.4795832	0.98489
	0.35	1.50	1493		41	0.591608	1.22474
	0.28	1.10	1497		42	0.5291503	1.04881
	0.32	1.40	1492		43	0.5656854	1.18322
	0.27	1.10	1486		44	0.5196152	1.04881
	0.21	0.90	1476		44	0.4582576	0.94868
	0.22	0.95	1472		45	0.4690416	0.97468
	0.21	0.90	1492		44	0.4582576	0.94868
	0.20	0.85	1494		44	0.4472136	0.92195
	0.23	0.98	1491		45	0.4795832	0.98995
	0.37	1.60	1488		46	0.6082763	1.26491
	0.24	1.00	1490		45	0.4898979	1
	0.22	0.94	1490		45	0.4690416	0.96954
	0.37	1.60	1483		45	0.6082763	1.26491
	0.38	1.60	1482		45	0.6164414	1.26491
	0.37	1.60	1481		45	0.6082763	1.26491
	0.37	1.60	1476		45	0.6082763	1.26491
	0.33	1.40	1475		46	0.5744563	1.18322
	0.33	1.40	1474		47	0.5744563	1.18322

Calculation Summary

Data Entry Area

Sample Type	HCl	Pitot Tube Correction Factor		Entered By (initials)	JC
Source	BVS 5	Console ID	URS 001	Checked by (initials)	SB
Condition		DGMCF	0.975	Corrected by (initials)	
Run	1	$\Delta H_@$	1.939		
Date	7-Mar	Nozzle Diameter (in)			
Duct Diameter (ft)		Std Temp (°F)	68		
Duct Depth (ft)		Bar Press ("Hg, meas)	29.8		
Duct Width (ft)		Meter Elev (ft) (rel to Brmtr)	585		
		Static Press ("H_2O)	-0.2		

	Value	Lnk Checked
% CO		
% CO_2		
% O_2		
% H_2		
% CH_4		

Times		DGM Volumes (as read)		Impinger Catch (g)			
					Initial	Final	
start	09:24	start	801.234	1	709.0	762.8	53.8
stop	10:24	stop	836.499	2	702.4	734.6	32.2
start		start		3	616.8	621.9	5.1
stop		stop		4	838.3	851.3	13
start		start		5			
stop		stop		6			
start		start		7			
stop		stop		8			
start		start		9			
stop		stop		10			
start		start					
stop		stop					
start		start					
stop		stop					
start		start					
stop		stop					
start		start					
stop		stop					
						Total Wt Gain	104.1
Duration	60	Total	35.265				

	ΔP ("H_2O)	ΔH ("H_2O)	Stack Temp (°F)	DGM Temp (°F)	√ΔP	√ΔH
Averages	#DIV/0!	1.20	#DIV/0!	40.5	#DIV/0!	1.0954

Individual Readings	1.20	38	1.095445
		39	
		39	
		39	
		40	
		40	
		40	
		41	
		42	
		43	
		42	
		43	

Calculation Summary

Data Entry Area

Sample Type	HCl	Pitot Tube Correction Factor		Entered By (initials)	JC
Source	BVS 5	Console ID	URS 001	Checked by (initials)	SB
Condition		DGMCF	0.975	Corrected by (initials)	
Run	2	$\Delta H_@$	1.939		
Date	7-Mar	Nozzle Diameter (in)			
Duct Diameter (ft)		Std Temp (°F)	68		
Duct Depth (ft)		Bar Press ("Hg, meas)	29.99		
Duct Width (ft)		Meter Elev (ft) (rel to Brmtr)	585		
		Static Press ("H_2O)	-0.2		

	Value	Link Checked
% CO		
% CO_2		
% O_2		
% H_2		
% CH_4		

Times		DGM Volumes (as read)		Impinger Catch (g)			
					Initial	Final	
start	20:45	start	837.600	1	675.1	707.3	32.2
stop	21:45	stop	872.612	2	695.2	730.7	35.5
start		start		3	622.0	636.6	14.6
stop		stop		4	850.7	867.2	16.5
start		start		5			
stop		stop		6			
start		start		7			
stop		stop		8			
start		start		9			
stop		stop		10			
start		start					
stop		stop					
start		start					
stop		stop					
start		start					
stop		stop					
start		start					
stop		stop				Total Wt Gain	98.8
Duration	60	Total	35.012				

	ΔP ("H_2O)	ΔH ("H_2O)	Stack Temp (°F)	DGM Temp (°F)	√ΔP	√ΔH
Averages	#DIV/0!	1.19	#DIV/0!	45.6	#DIV/0!	1.0916

Individual	1.20	40	1.09545
Readings	1.20	45	1.09545
	1.20	42	1.09545
	1.20	43	1.09545
	1.20	45	1.09545
	1.20	46	1.09545
	1.10	47	1.04881
	1.20	50	1.09545
	1.20	47	1.09545
	1.20	47	1.09545
	1.20	47	1.09545
	1.20	48	1.09545

Calculation Summary

Data Entry Area

Sample Type	HCl	Pitot Tube Correction Factor		Entered By (initials)	JC
Source	BVS 5	Console ID	URS 001	Checked by (initials)	SB
Condition		DGMCF	0.975	Corrected by (initials)	
Run	3	$\Delta H_@$	1.939		
Date	8-Mar	Nozzle Diameter (in)			
Duct Diameter (ft)		Std Temp (°F)	68		
Duct Depth (ft)		Bar Press ("Hg, meas)	30.01		
Duct Width (ft)		Meter Elev (ft) (rel to Brmtr)	585		
		Static Press ("H_2O)	-0.2		

	Value	Unit Checked
% CO		
% CO_2		
% O_2		
% H_2		
% CH_4		

Times		DGM Volumes (as read)		Impinger Catch (g)			
					Initial	Final	
start	01:09	start	872.725	1	687.6	713.1	25.5
stop	02:09	stop	907.948	2	691.6	728.3	36.7
start		start		3	616.4	628.4	12
stop		stop		4	868.2	880.6	12.4
start		start		5			
stop		stop		6			
start		start		7			
stop		stop		8			
start		start		9			
stop		stop		10			
start		start					
stop		stop					
start		start					
stop		stop					
start		start					
stop		stop					
start		start					
stop		stop					
						Total Wt Gain	86.6
Duration	60	Total	35.223				

	ΔP ("H_2O)	ΔH ("H_2O)	Stack Temp (°F)	DGM Temp (°F)	√ΔP	√ΔH
Averages	#DIV/0!	1.20	#DIV/0!	39.6	#DIV/0!	1.0954

Individual Readings				
	1.20		36	1.09545
	1.20		36	1.09545
	1.20		37	1.09545
	1.20		38	1.09545
	1.20		39	1.09545
	1.20		40	1.09545
	1.20		40	1.09545
	1.20		40	1.09545
	1.20		41	1.09545
	1.20		45	1.09545
	1.20		41	1.09545
	1.20		42	1.09545

Condensable PM Results

Parameter	Run 1	Run 2	Run 3	Field blank	Proof blank
Inorganic (mg)	87.80	115.00	108.00	1.37	1.67
Organic (mg)	8.49	3.73	6.40	2.39	2.67
Total (mg)	96.3	118.7	114.4	3.8	4.3
Proof blank correction (mg) *	3.8	3.8	3.8		
Net condensable PM	92.5	114.9	110.6		

* Allowed by Memorandum to: EPA Regional Air Division Directors, Regions 1-10; from: Stephen Page, Director OAQPS; subject: Interim Guidance on the Treatment of Condensable Particulate Matter Test Results in the Prevention of Significant Deterioration and Nonattainment New Source Review Permitting Programs; April 8, 2014

Filterable PM Results

Parameter	Run 1	Run 2	Run 3
Filter (mg)	31.8	26	17.3
Probe/nozzle rinse (mg)	1.69	10.4	1.86
Acetone blank (mg)	1.02	1.02	1.02
Net probe/nozzle rinse (mg)	0.67	9.38	0.84
Total filterable PM (mg)	32.5	35.4	18.1

HCl Results

Parameter	Run 1	Run 2	Run 3
Sample volume (dscf)	35.52	35.14	35.80
Sample volume (dscm)	1.006	0.995	1.014
HCl in sample (ug)	212,000	223,000	193,000
Conc. (ug/ft3)	5,968	6,346	5,391
Conc. (ug/m3)	210,745	224,101	190,370
Molecular weight	36.5	36.5	36.5
Conc. (ppm)	138.9	147.8	125.5

RM Sample Data

Plant Name	Haverhill Coke Company
Sampling Location	Bypass Stack 5
Date	March 7-9, 2018
CEM Operator	Chandra Sastry
Project Number	60562829

Observed Values

Run No.	Date	Start Time	Stop Time	Start - Stop Time	Reference Method Obs. Value		
					O_2	CO_2	NOX
1	3/7/18	0840	1030	0840 - 1030	8.9	7.0	43.87
2	3/7/18	2000	2158	2000 - 2158	8.8	7.5	38.11
3	3/8/18	0025	0225	0025 - 0225	10.4	6.1	41.09
4	3/8/18	0600	0730	0600 - 0730	9.7	6.3	NA
5	3/8/18	1950	2150	1950 - 2150	9.4	6.9	NA
6	3/9/18	0100	0240	0100 - 0240	10.8	5.9	NA

Bias-Adjusted Values

Run No.	Date	Start Time	Stop Time	Start - Stop Time	Reference Method Adj. Value		
					O_2	CO_2	NOX
1	3/7/18	0840	1030	0840 - 1030	8.9	7.2	44.23
2	3/7/18	2000	2158	2000 - 2158	8.8	7.6	38.52
3	3/8/18	0025	0225	0025 - 0225	10.3	6.2	41.73
4	3/8/18	0600	0730	0600 - 0730	9.6	6.5	NA
5	3/8/18	1950	2150	1950 - 2150	9.2	7.1	NA
6	3/9/18	0100	0240	0100 - 0240	10.5	6.0	NA

Sample Type: **Filt and Cond PM (M5/M202)**	Date: 3/7/18	Nozzle Dia (in): 0.375	Page: 1 of 1		
Project Name: Haverhill Vent Stack Tests	Cond	Run 1	Barometer ID: Weather Channel	**Train Leak Rate** (cfm @ "Hg)	
Project Number: 60562829	Console ID: URS-005	Bar. Press. ("Hg): 29.80	Initial: 0.015 @ 11"		
Facility: SunCoke Energy Haverhill Operations	ΔH@: 1.723	Stat. Press. ("H_2O): -0.20	Final: 0.010 @ 9"		
Source: Vent Stack #5	K_f: 4.0	Probe ID: 180177	**Pitot Tube Leak Check** ("H_2O@"H_2O)		
Operator: WCT / FC	DGMCF: 0.989	Pitot ID	Initial (-): ✓ @ 7"		
Duct Dimension(s) Circular: 9 ft diameter	Filter No.	PTCF: 0.84	Initial (+): ✓ @ 7"		
Nozzle Calibration		Meter Elevation (ft) (relative to Barometer): 585 600	Final (-): ✓ @ 7"		
Caliper ID: ultra tech -01 — 0.375 — 0.375 — 0.375			Final (+): ✓ @ 7"		
Post-Test Stack TC Check	Reference Thermometer ID: 2490	Ref Thermometer Exp Date: Cal 5/22/17 (NIST)	Thermometer and TC agree within 2°F: (Y) / N	Post-Test: Are Pitots Damaged? Y / (N)	

Point	Clock Time	DGM Reading (ft^3)	ΔP ("H_2O)	ΔH ("H_2O)	Temperature (°F)						Vacuum ("Hg)
					Stack	Probe Target 248±25	Filter Target 248±25	CPM Filter [1] Target: near but <85	Imp Exit Target <68	DGM Outlet	
A-1	0	143.924	0.18	0.72	1622	NA	228	38	40	38	<1
2	5	146.3	0.16	0.63	1618		227	38	45	37	<1
3	10	148.5	0.18	0.71	1615		238	41	55	38	<1
4	15	150.9	0.24	0.95	1610		232	43	57	38	<1
5	20	153.5	0.15	0.62	1607		242	46	63	39	<1
6	25	155.8	0.16	0.64	1601		243	45	54	39	<1
7	30	158.0	0.35	1.4	1595		246	45	51	40	5
8	35	161.0	0.35	1.4	1591		240	46	51	41	6
9	40	164.2	0.31	1.3	1584		255	46	49	41	8
10	45	167.2	0.28	1.1	1577		233	48	48	41	8
11	50	170.2	0.22	0.92	1566		228	56	47	41	7½
12	55	173.0	0.22	0.92	1560		238	59	47	41	7½
Stop	0947 60	175.839									
B-1	0934 60	175.839	0.16	0.66	1580		247	81	45	40	<1
2	65	178.1	0.16	0.66	1579		239	82	45	40	<1
3	70	180.4	0.13	0.53	1574		255	90	45	40	<1
4	75	182.6	0.10	0.41	1568		251	82	44	41	<1
5	80	184.4	0.10	0.41	1571		243	83	44	41	<1
6	85	186.3	0.10	0.41	1567		256	83	43	41	<1
7	90	188.2	0.37	1.4	1558		252	83	46	42	2½
8	95	191.3	0.36	1.4	1559		246	78	47	42	2½
9	100	194.6	0.34	1.3	1554		248	76	49	42	2½
10	105	197.8	0.33	1.3	1551		245	77	51	43	2½
11	110	201.0	0.31	1.2	1546		251	78	51	43	2
12	115	204.1	0.33	1.3	1543		250	77	50	43	2½
Stop	1052 120	207.267									

Notes:

[1] Remember to record Final CPM Filter Temperature

SDS-36: PM (Filt & Cond) by EPA Methods 5/202
Per: EM SOP-047
Issued: November 2015

Project Name	Haverhill Vent Stack Tests
Project Number	60562829
Date	3/7/18
Source	Vent Stack #5

Particulate Matter (incl. Condensable)
EPA Method 5/202

Condition No.	
Run No.	1
Balance ID	URS-01
Recovered by	JC

Moisture Determination

reweigh 598.5

Imp No.	Contents	Vol (mL)	Configuration	Initial Wt (g)	Final Wt (g)
1	empty	--	K/O	372.1	547.8
2	empty	--	Mod	~~606.9~~	598.5 ∅
3	Water	100	Mod	709.3	708.2
4	Silica Gel	~300g	Mod	801.0	820.2
5					

Filter

Filter ID Number	

Sample Log

Sample ID Number	Sample Container	Description
-M5/202-PNR	250 ml	Probe and Nozzle Rinse
-M5/202-Filt	Petri Dish	Filter
-M5/202-WtRns	1000 ml	Water Rinse
-M5/202-OrgRns	250 ml	Organic Rinse
-M5/202-CPMFilt	Petri Dish	CPM Filter

Sample Recovery Checklist

_____ Rinse and brush probe and nozzle with acetone (three times) into PNR sample bottle.

_____ Disconnect transfer line. Rinse with water (two times) into water rinse sample bottle. Rinse with acetone (one time) and hexane (two times) into the organic rinse sample bottle.

_____ Transfer water from knockout impinger to second impinger. Ensure that water level is at least 1 cm above stem tip. Add water if necessary.

Volume of water added: _____

_____ If all water in knockout impinger will not fit in second impinger, replace stem on knockout impinger. Ensure that the water level in the first impinger is at least 1 cm above stem tip. Add water if necessary.

Volume of water added: _____.

_____ Purge with nitrogen for one hour at >14 liters per minute. Record start and end times on the data sheet.

Start _____ Stop _____

_____ Separate filter holder and place filter in clean pre-rinsed glass petri dish. Complete Filt sample label.

_____ Rinse front half of filter holder with acetone (three times) into PNR bottle. Complete probe and nozzle rinse (PNR) sample label.

_____ Rinse the back half of the filter holder and any connecting glassware with water (two times) into the water rinse sample bottle.

_____ Rinse the back half of the filter holder and any connecting glassware with acetone (one time) and with hexane (two times) into the organic rinse sample bottle.

_____ Separate CPM filter holder and place CPM filter in clean pre-rinsed glass petri dish. Complete CPM-Filt sample label.

_____ Disassemble sample train, wipe off excess water and weigh each impinger. Record the final weights in the Moisture Determination section of this data sheet

Note condition of the silica gel impinger. ____% spent

_____ Pour the contents of the first two impingers into the water rinse catch bottle(s). Rinse impingers, connecting glassware. And the front half of the CPM filter holder two times with water into the same bottles. Complete water rinse sample label.

_____ Rinse the first two impingers, connecting glassware, and the front half of the CPM filter holder acetone (one time) and hexane (two times) into the organic rinse sample bottle(s)

_____ Log samples into logbook and store appropriately.

Notes:

Sample Type	**Filt and Cond PM (M5/M202)**	Date	3/7/18	Nozzle Dia (in)	0.375	Page	1 of 1
Project Name	Haverhill Vent Stack Tests	Cond	Run 2	Barometer ID	Weather Channel	**Train Leak Rate** (cfm @ "Hg)	
Project Number	60562829	Console ID	VRS-005	Bar. Press. ("Hg)	29.99	Initial	0.015 @ 11"
Facility	SunCoke Energy Haverhill Operations	ΔH@	1.723	Stat. Press. ("H_2O)	-0.20	Final	0.014 @ 9"
Source	Vent Stack #5	K_r		Probe ID	180177	**Pitot Tube Leak Check** ("H_2O@"H_2O)	
Operator	MCT/FC	DGMCF	0.989	Pitot ID		Initial (-)	✓ @ 7"
Duct Dimension(s)	Circular: 9 ft diameter	Filter No.		PTCF	0.84	Initial (+)	✓ @ 7"
Nozzle Calibration				Meter Elevation (ft) (relative to Barometer)	585 600	Final (-)	✓ @ 7"
Caliper ID						Final (+)	✓ @ 7"

Post-Test Stack TC Check	Reference Thermometer ID	Ref Thermometer Exp Date	Thermometer and TC agree within 2°F Y / N	Post-Test: Are Pitots Damaged? Y (N)

Point	Clock Time	DGM Reading (ft^3)	ΔP ("H_2O)	ΔH ("H_2O)	Temperature (°F)						Vacuum ("Hg)
					Stack	Probe Target 248±25	Filter Target 248±25	CPM Filter [1] Target: near but <85	Imp Exit Target <68	DGM Outlet	
A-1	0	208.250	0.28	1.1	1587	NA	225	68	50	40	<1
2	5	211.2	0.26	1.0	1580		226	73	56	40	<1
3	10	214.0	0.25	1.0	1589		229	77	63	41	<1
4	15	216.9	0.26	1.0	1589		229	85	70	41	<1
5	20	219.7	0.26	1.0	1588		228	79	73	42	<1
6	25	222.4	0.26	1.0	1586		233	69	65	43	<1
7	30	225.103	0.26	1.0	1583		240	64	61	44	3
8	35	228.2	0.35	1.4	1575		246	57	61	45	3 1/2
9	40	231.5	0.37	1.5	1572		253	60	63	45	4 1/2
10	45	234.9	0.33	1.3	1569		250	66	64	45	4
11	50	238.3	0.30	1.2	1562		250	74	66	46	3
12	55	241.4	0.15	0.62	1476		248	71	58	46	<1
STOP	2008 60	243.836									
B-1	2216 60	243.836	0.23	1.0	1570		248	67	52	48	1
2	65	246.6	0.22	0.95	1569		253	61	53	48	1 1/2
3	70	249.4	0.18	0.77	1566		251	56	53	47	1
4	75	252.0	0.20	0.83	1563		251	60	58	47	2
5	80	254.6	0.20	0.83	1562		251	66	61	49	2
6	85	257.3	0.25	1.0	1561		248	76	64	47	3
7	90	260.1	0.39	1.5	1555		250	83	67	48	5
8	95	263.5	0.39	1.5	1552		248	85	67	49	5
9	100	266.9	0.39	1.5	1551		250	79	65	49	5
10	105	270.4	0.39	1.5	1548		250	70	56	50	5
11	110	274.0	0.37	1.5	1546		249	63	53	51	5
12	115	277.5	0.37	1.5	1546		251	57	51	51	5
B Stop	120 2216	280.960									

Notes:

1 Remember to record Final CPM Filter Temperature

SDS-36: PM (Filt & Cond) by EPA Methods 5/202 Per: EM SOP-047 Issued: November 2015

Project Name	Haverhill Vent Stack Tests
Project Number	60562829
Date	3/7/18
Source	Vent Stack #5

Particulate Matter (incl. Condensable)
EPA Method 5/202

Condition No.	
Run No.	2
Balance ID	WRS-01
Recovered by	JK

Moisture Determination

Imp No.	Contents	Vol (mL)	Configuration	Initial Wt (g)	Final Wt (g)
1	empty	--	K/O	359.5	554.9
2	empty	--	Mod	610.1	610.2
3	Water	100	Mod	697.7	697.2
4	Silica Gel	~300g	Mod	823.3	850.5
5					

Filter

Filter ID Number	

Sample Log

Sample ID Number	Sample Container	Description
-M5/202-PNR	250 ml	Probe and Nozzle Rinse
-M5/202-Filt	Petri Dish	Filter
-M5/202-WtRns	1000 ml	Water Rinse
-M5/202-OrgRns	250 ml	Organic Rinse
-M5/202-CPMFilt	Petri Dish	CPM Filter

Sample Recovery Checklist

____ Rinse and brush probe and nozzle with acetone (three times) into PNR sample bottle.

____ Disconnect transfer line. Rinse with water (two times) into water rinse sample bottle. Rinse with acetone (one time) and hexane (two times) into the organic rinse sample bottle.

____ Transfer water from knockout impinger to second impinger. Ensure that water level is at least 1 cm above stem tip. Add water if necessary.

Volume of water added: _____

____ If all water in knockout impinger will not fit in second impinger, replace stem on knockout impinger. Ensure that the water level in the first impinger is at least 1 cm above stem tip. Add water if necessary.

Volume of water added: _____.

____ Purge with nitrogen for one hour at >14 liters per minute. Record start and end times on the data sheet.

Start _____ Stop _____

____ Separate filter holder and place filter in clean pre-rinsed glass petri dish. Complete Filt sample label.

____ Rinse front half of filter holder with acetone (three times) into PNR bottle. Complete probe and nozzle rinse (PNR) sample label.

____ Rinse the back half of the filter holder and any connecting glassware with water (two times) into the water rinse sample bottle.

____ Rinse the back half of the filter holder and any connecting glassware with acetone (one time) and with hexane (two times) into the organic rinse sample bottle.

____ Separate CPM filter holder and place CPM filter in clean pre-rinsed glass petri dish. Complete CPM-Filt sample label.

____ Disassemble sample train, wipe off excess water and weigh each impinger. Record the final weights in the Moisture Determination section of this data sheet

Note condition of the silica gel impinger. ____% spent

____ Pour the contents of the first two impingers into the water rinse catch bottle(s). Rinse impingers, connecting glassware. And the front half of the CPM filter holder two times with water into the same bottles. Complete water rinse sample label.

____ Rinse the first two impingers, connecting glassware, and the front half of the CPM filter holder acetone (one time) and hexane (two times) into the organic rinse sample bottle(s)

____ Log samples into logbook and store appropriately.

Notes:

Sample Type: **Filt and Cond PM (M5/M202)**	Date: 3/8/18	Nozzle Dia (in): 0.375	Page: 1 of 1		
Project Name: Haverhill Vent Stack Tests	Cond	Run: 3	Barometer ID: LMT Channel	**Train Leak Rate** (cfm @ "Hg)	
Project Number: 60562829	Console ID: MRS-005	Bar. Press. ("Hg): 30.01	Initial: 0.014 @ 15"		
Facility: SunCoke Energy Haverhill Operations	ΔH@: 1.723	Stat. Press. ("H_2O): -0.20	Final: 0.012 @ 7"		
Source: Vent Stack #5	K_r: 4.1	Probe ID: 180177	**Pitot Tube Leak Check** ("H_2O@"H_2O)		
Operator: WCT/FC	DGMCF: 0.989	Pitot ID	Initial (-): ✓ @ 5"		
Duct Dimension(s): Circular: 9 ft diameter	Filter No.	PTCF: 0.84	Initial (+): ✓ @ 5"		
Nozzle Calibration		Meter Elevation (ft) (relative to Barometer): 585 ~~1000~~	Final (-): ✓ @ 7"		
Caliper ID:			Final (+): ✓ @ 7"		
Post-Test Stack TC Check	Reference Thermometer ID	Ref Thermometer Exp Date	Thermometer and TC agree within 2°F: Y / N	Post-Test: Are Pitots Damaged? Y / (N)	

Point	Clock Time 00:34	DGM Reading (ft^3)	ΔP ("H_2O)	ΔH ("H_2O)	Temperature (°F)						Vacuum ("Hg)
					Stack	Probe Target 248±25	Filter Target 248±25	CPM Filter [1] Target: near but <85	Imp Exit Target <68	DGM Outlet	
A-1	0	281.343	0.28	1.1	1504	NA	257	56	53	38	<1
2	5	284.2	0.33	1.4	1504		257	54	56	38	<1
3	10	287.4	0.34	1.4	1501		257	57	59	38	<1
4	15	290.7	0.33	1.4	1500		246	61	61	39	<1
5	20	293.9	0.28	1.1	1500		252	64	65	40	<1
6	25	296.9	0.23	0.97	1500		251	68	57	40	<1
7	30	299.7	0.35	1.5	1493		249	69	58	41	2
8	35	303.0	0.28	1.1	1497		253	67	56	42	1½
9	40	306.0	0.32	1.4	1492		250	68	58	43	2½
10	45	309.2	0.27	1.1	1486		251	69	58	44	2
11	50	312.3	0.21	0.90	1476		249	70	58	44	1
12	55	315.1	0.22	0.96	1472		248	69	56	45	
Stop	60	317.970									
B-1	60	317.970	0.21	0.90	1492		248	72	53	44	<1
2	65	320.7	0.20	0.85	1494		252	68	53	44	<1
3	70	323.4	0.23	0.98	1491		252	69	63	45	1
4	75	326.2	0.37	1.6	1488		252	63	54	46	3
5	80	329.6	0.24	1.0	1490		251	58	53	45	2½
6	85	332.6	0.22	0.94	1490		248	56	54	45	2½
7	90	335.4	0.37	1.6	1483		245	57	57	45	5½
8	95	338.7	0.38	1.6	1482		250	58	57	45	6
9	100	342.0	0.37	1.6	1481		246	59	57	45	6
10	105	345.6	0.37	1.6	1476		252	59	55	46	6½
11	110	349.1	0.33	1.4	1475		246	59	63	46	6
12	115	352.4	0.33	1.4	1474		252	62	56	47	6
Stop	120	355.893									
	02140										

Notes:

[1] Remember to record Final CPM Filter Temperature

SDS-36: PM (Filt & Cond) by EPA Methods 5/202
Per: EM SOP-047
Issued: November 2015

Project Name	Haverhill Vent Stack Tests
Project Number	60562829
Date	3/8/18
Source	Vent Stack #5

Particulate Matter (incl. Condensable)
EPA Method 5/202

Condition No.	
Run No.	3
Balance ID	UR501
Recovered by	JC

Moisture Determination

Imp No.	Contents	Vol (mL)	Configuration	Initial Wt (g)	Final Wt (g)	Final
1	empty	--	K/O	372.4	~~554.9~~	534.5
2	empty	--	Mod	661.0	~~660.2~~	598.8
3	Water	100	Mod	706.3	~~697.2~~	708.3
4	Silica Gel	~300g	Mod	820.6	~~850.5~~	838.6
5						

Filter

Filter ID Number	

Sample Log

Sample ID Number	Sample Container	Description
-M5/202-PNR	250 ml	Probe and Nozzle Rinse
-M5/202-Filt	Petri Dish	Filter
-M5/202-WtRns	1000 ml	Water Rinse
-M5/202-OrgRns	250 ml	Organic Rinse
-M5/202-CPMFilt	Petri Dish	CPM Filter

Sample Recovery Checklist

- ____ Rinse and brush probe and nozzle with acetone (three times) into PNR sample bottle.
- ____ Disconnect transfer line. Rinse with water (two times) into water rinse sample bottle. Rinse with acetone (one time) and hexane (two times) into the organic rinse sample bottle.
- ____ Transfer water from knockout impinger to second impinger. Ensure that water level is at least 1 cm above stem tip. Add water if necessary.
  Volume of water added: _____
- ____ If all water in knockout impinger will not fit in second impinger, replace stem on knockout impinger. Ensure that the water level in the first impinger is at least 1 cm above stem tip. Add water if necessary.
  Volume of water added: _____.
- ____ Purge with nitrogen for one hour at >14 liters per minute. Record start and end times on the data sheet.
  Start _____ Stop _____
- ____ Separate filter holder and place filter in clean pre-rinsed glass petri dish. Complete Filt sample label.
- ____ Rinse front half of filter holder with acetone (three times) into PNR bottle. Complete probe and nozzle rinse (PNR) sample label.
- ____ Rinse the back half of the filter holder and any connecting glassware with water (two times) into the water rinse sample bottle.
- ____ Rinse the back half of the filter holder and any connecting glassware with acetone (one time) and with hexane (two times) into the organic rinse sample bottle.
- ____ Separate CPM filter holder and place CPM filter in clean pre-rinsed glass petri dish. Complete CPM-Filt sample label.
- ____ Disassemble sample train, wipe off excess water and weigh each impinger. Record the final weights in the Moisture Determination section of this data sheet
  Note condition of the silica gel impinger. ____% spent
- ____ Pour the contents of the first two impingers into the water rinse catch bottle(s). Rinse impingers, connecting glassware. And the front half of the CPM filter holder two times with water into the same bottles. Complete water rinse sample label.
- ____ Rinse the first two impingers, connecting glassware, and the front half of the CPM filter holder acetone (one time) and hexane (two times) into the organic rinse sample bottle(s)
- ____ Log samples into logbook and store appropriately.

Notes:

Sample Type	**HCl, Cl_2 (EPA Method 26)**	Date	3/7/15		Page 1 of 1
Project Name	Haverhill Vent Stack Tests	Condition			**Sampling Train Leak Rate (lpm@"Hg)**
Project Number	60562829	Run	1	Barometer ID	Initial 0.015 @ 7"
Facility	SunCoke Energy Haverhill Operations	Console ID	VRS-001	Bar. Press. ("Hg)	29.26 (local) Final 0.0 @ 3
Source	Vent Stack #5	DGMCF	0.975	Stat. Press. ("H_2O)	-0.20
Operator	CS			Meter Elevation (ft) (relative to Barometer)	585
Duct Dimension(s)	Circular: 9 ft diameter				AH

Point	Clock Time	DGM Reading (L)	Temperature (°F)			Vacuum (in. Hg)	Flow Meter
			Probe Target 248-273	Filter Target 248-273	DGM Outlet		
0	9:24	801.234	~~154~~ NA	243	38	2	1.2
5	9:29	803.510	"	246	39	2	
10	9:34	806.50	"	243	39	2	
15	9:39	809.40	"	242	39	2	
20	9:44	812.20	"	245	40	2	
25	9:49	815.10		245	40	2	
30	9:54	818.10		244	40	2	
35	9:59	821.10		245	41	2	
40	10:04	824.21		247	42	2	
45	1009	827.84		246	43	3	
50	1014	830.41		245	42	3	
55	1019	833.62		245	43	3	
60	1024	836.499	—	—	—	—	—

Notes: Probe tripped for 2 min. between 9:22 - 9:24

Project Name	**Haverhill Vent Stack Tests**
Project Number	**60562829**
Date	3/7/18
Source	

HCl/Cl2
EPA Method 26A

Condition No.	
Run No.	1
Balance ID	URS-01
Recovered by	JC

Moisture Determination

Imp No.	Contents	Vol (mL)	Configuration	Initial Wt (g)	Final Wt (g)
~~1~~ [a]	~~0.1 N H_2SO_4~~	~~50~~	~~KO~~		
1	0.1 N H_2SO_4	100	G/S	709.0	762.8
2	0.1 N H_2SO_4	100	G/S	702.4	734.6
3	Empty	--	Mod	616.8	621.9
~~5~~	~~0.1 N NaOH~~	~~100~~	~~Mod~~		
4	Silica Gel	~200g	Mod	838.3	851.3

[a] this impinger optional, per Method 26A

Sample Recovery Checklist

____ (Only if transfer line is used). Disconnect transfer line, and rinse three times with DI water into acid impinger catch bottle. Transfer bottle to laboratory with impinger train.

____ Using water, rinse filter support, back half of filter holder and any connecting glassware into the acid impinger catch bottle.

____ Disassemble sample train, wipe off excess water and weigh each impinger. Record the final weights in the Moisture Determination section of this data sheet.

Note condition of the silica gel impinger. ____% spent

____ Pour contents of the 1st and 2nd (containing acid) impingers into the Acid impinger catch bottle(s). Rinse impingers and connecting glassware with deionized water into the same bottle(s). Complete acid impinger sample label.

____ ~~Pour the contents of the 4th and 5th impingers (containing NaOH) into the alkaline impinger catch bottle(s). Rinse impingers and connecting glassware with deionized water into the same bottle(s). Complete alkaline impinger sample label.~~

____ Log samples into logbook and store appropriately.

Notes:

Balance check 500g wt → 500.2g reading

Sample Log

Sample ID Number	Sample Container	Description
-M26A-AcdImp	1 L Nalgene	Acid Impinger Catch & Rinse
~~-M26A-AlkImp~~	~~500 mL Nalgene~~	~~Alkaline Impinger Catch & Rinse~~

Sample Type	HCl, Cl_2 (EPA Method 26)	Date	3.7.18		Page	1 of 1
Project Name	Haverhill Vent Stack Tests	Condition			Sampling Train Leak Rate (lpm@"Hg)	
Project Number	60562829	Run	2	Barometer ID	WC	Initial 0.0 @ 6
Facility	SunCoke Energy Haverhill Operations	Console ID	LRS 001	Bar. Press. ("Hg)	29.99	Final 0.0 @ 3
Source	Vent Stack #5	DGMCF	0.975	Stat. Press. ("H_2O)	-0.20	
Operator	JC FC			Meter Elevation (ft) (relative to Barometer)	~~600~~ 585	
Duct Dimension(s)	Circular: 9 ft diameter					

Point	Clock Time	DGM Reading (L)	Temperature (°F) Probe Target 248-273	Filter Target 248-273	DGM Outlet	Vacuum (in. Hg)	Flow Meter
0	20:45	837.600	44	251	40	1	1.2
5		840.5	40	275	45	1	1.2
10		843.4	49	275	49 42	2	1.2
15		846.3	54	268	43	2	1.2
20		849.2	61	275	45	2	1.2
25		852.1	67	240	46	2	1.2
30		855.1	68	237	47	2	1.1
35		857.9	68	275	50	2	1.2
40		860.9	68	245	47	2	1.2
45		863.9	68	251	47	2	1.2
50		866.9	68	237	47	3	1.2
55		869.9	68	241	48	2.5	1.2
60	21:45	872.612					

Notes:

SDS-20: HCl, Cl_2 by EPA Method 26
Per EM SOP-064
Issued: August 2017

Project Name	**Haverhill Vent Stack Tests**
Project Number	**60562829**
Date	3/7/18
Source	

HCl/Cl2
EPA Method 26A

Condition No.	
Run No.	2
Balance ID	WS 01
Recovered by	JC

Moisture Determination

Imp No.	Contents	Vol (mL)	Configuration	Initial Wt (g)	Final Wt (g)
~~1~~[a]	~~0.1 N H_2SO_4~~	~~50~~	~~KO~~	675.1	
1	0.1 N H_2SO_4	100	G/S	~~704.2~~	707.3
2	0.1 N H_2SO_4	100	G/S	695.2	730.7
3	Empty	–	Mod	622.0	636.6
~~5~~	~~0.1 N NaOH~~	~~100~~	~~Mod~~		
4	Silica Gel	~200g	Mod	850.7	867.2

[a] this impinger optional, per Method 26A

Sample Log

Sample ID Number	Sample Container	Description
-M26A-AcdImp	1 L Nalgene	Acid Impinger Catch & Rinse
~~-M26A-AlkImp~~	~~500 mL Nalgene~~	~~Alkaline Impinger Catch & Rinse~~

Sample Recovery Checklist

____ (Only if transfer line is used). Disconnect transfer line, and rinse three times with DI water into acid impinger catch bottle. Transfer bottle to laboratory with impinger train.

____ Using water, rinse filter support, back half of filter holder and any connecting glassware into the acid impinger catch bottle.

____ Disassemble sample train, wipe off excess water and weigh each impinger. Record the final weights in the Moisture Determination section of this data sheet.

Note condition of the silica gel impinger. ____% spent

____ Pour contents of the 1st and 2nd (containing acid) impingers into the Acid impinger catch bottle(s). Rinse impingers and connecting glassware with deionized water into the same bottle(s). Complete acid impinger sample label.

____ ~~Pour the contents of the 4th and 5th impingers (containing NaOH) into the alkaline impinger catch bottle(s). Rinse impingers and connecting glassware with deionized water into the same bottle(s). Complete alkaline impinger sample label.~~

____ Log samples into logbook and store appropriately.

Notes:

HCl, Cl_2 (EPA Method 26)	Date 3/8/18		Page 1 of 1
Haverhill Vent Stack Tests	Condition		Sampling Train Leak Rate (lpm@"Hg)
60562829	Run 3	Barometer ID VC	Initial 0.0 @ 4
SunCoke Energy Haverhill Operations	Console ID 001	Bar. Press. ("Hg) 30.01	Final 0.0 @ 3
Vent Stack #5	DGMCF 0.975	Stat. Press. ("H_2O) -0.20	
JC / RC		Meter Elevation (ft) (relative to Barometer) 585	
ion(s) Circular: 9 ft diameter			

nt	Clock Time	DGM Reading (L)	Temperature (°F) Probe Target 248-273 (Exit)	Filter Target 248-273	DGM Outlet	Vacuum (in. Hg)	Flow Meter (ΔH)
0	1:09	872.725	41	231	36	2	1.2
5		875.7	41	257	36	2	1.2
10		878.6	43	225	37	2	1.2
15		881.5	47	268	38	3	1.2
20		884.5	50	250	39	3	1.2
25		887.3	52	275	40	2.5	1.2
30		890.2	55	235	40	2.5	1.2
35		893.2	58	261	40	2.5	1.2
40		896.2	60	260	41	3	1.2
45		899.1	62	274	45	3	1.2
50		902.0	64	264	41	3	1.2
55		905.0	65	255	42	2.5	1.2
60		907.948					
	2:09						

Notes:

SDS-20: HCl, Cl_2 by

Iss

Project Name	**Haverhill Vent Stack Tests**
Project Number	**60562829**
Date	3/8/18
Source	

HCl/Cl2
EPA Method 26A

Condition No.	
Run No.	3
Balance ID	UR501
Recovered by	JC

Moisture Determination

Imp No.	Contents	Vol (mL)	Configuration	~~Initial Wt~~ Initial wt (g)	~~Final Wt~~ Final wt. (g)
~~1[a]~~	~~0.1 N H_2SO_4~~	~~50~~	~~KO~~		
1	0.1 N H_2SO_4	100	G/S	~~685.6~~ 687.6	713.1
2	0.1 N H_2SO_4	100	G/S	~~695.0~~ 691.6	728.3
3	Empty	--	Mod	~~616.0~~ 616.4	628.4
~~5~~	~~0.1 N NaOH~~	~~100~~	~~Mod~~		
4	Silica Gel	~200g	Mod	~~868.1~~ 868.2	880.6

[a] this impinger optional, per Method 26A

Sample Recovery Checklist

(Only if transfer line is used). Disconnect transfer line, and rinse three times with DI water into acid impinger catch bottle. Transfer bottle to laboratory with impinger train.

Using water, rinse filter support, back half of filter holder and any connecting glassware into the acid impinger catch bottle.

Disassemble sample train, wipe off excess water and weigh each impinger. Record the final weights in the Moisture Determination section of this data sheet.

Note condition of the silica gel impinger. ____% spent

Pour contents of the 1st and 2nd (containing acid) impingers into the Acid impinger catch bottle(s). Rinse impingers and connecting glassware with deionized water into the same bottle(s). Complete acid impinger sample label.

~~Pour the contents of the 4th and 5th impingers (containing NaOH) into the alkaline impinger catch bottle(s). Rinse impingers and connecting glassware with deionized water into the same bottle(s). Complete alkaline impinger sample label.~~

Log samples into logbook and store appropriately.

Sample Log

Sample ID Number	Sample Container	Description
-M26A-AcdImp	1 L Nalgene	Acid Impinger Catch & Rinse
~~-M26A-AlkImp~~	~~500 mL Nalgene~~	~~Alkaline Impinger Catch & Rinse~~

Notes:

Calculation Summary

Project Name	**Metals and Controlled Condensation**
Project Number	**60562829**
Facility	**Haverhill Operaions**

Sample Type	Metals	Metals	Metals	CCS	CCS	CCS	0	0	Averages
Source	BVS 5	BVS 5	BVS 5	BVS 5	BVS 5	BVS 5	0	0	
Condition	0	0	0	0	0	0	0	0	
Run	1	2	3	1	2	3	0	0	
Date	3/8/2018	3/8/2018	3/9/2018	3/8/2018	3/8/2018	3/9/2018	1/0/1900	1/0/1900	
Time Start	06:04	19:50	01:10	06:29	21:00	01:43	00:00	00:00	
Time Stop	07:45	21:32	02:53	07:29	22:00	02:43	00:00	00:00	
Sampling Times	06:04-07:45	19:50-21:32	01:10-02:53	06:29-07:29	21:00-22:00	01:43-02:43	00:00-00:00	00:00-00:00	
Duct Diameter (ft) *(equivalent if square duct)*	9.00	9.00	9.00	0.00	0.00	0.00	0.00	0.00	
Pitot Tube Correction Factor	0.84	0.84	0.84	0.00	0.00	0.00	0.00	0.00	
Nozzle Diameter (inches)	0.375	0.375	0.375	0.000	0.000	0.000	0.000	0.000	
DGMCF (Y_d)	0.989	0.989	0.989	0.975	0.975	0.975	0.000	0.000	
Orifice Factor ("wc) ($\Delta H_@$)	1.723	1.723	1.723	1.939	1.939	1.939	0.000	0.000	
Console Identification	URS-005	URS-005	URS-005	URS 001	URS 001	URS 001	0	0	
Standard Temperature (°F) (T_{std})	68	68	68	68	68	68	68	68	
Barometric Pressure Measured ("Hg)	29.98	30.03	30.07	29.98	30.03	30.07	0.00	0.00	
Stack Elevation (ft) (relative to Barometer)	585	585	585	585	585	585	0	0	
Barometric Pressure ("Hg) (P_{bar})	29.395	29.445	29.485	29.395	29.445	29.485	0	0	
Average Stack Temperature (°F) (T_S)	1549.7	1616.8	1569.4	#DIV/0!	#DIV/0!	#DIV/0!	#DIV/0!	#DIV/0!	1578.6
Average DGM Temp (°F) (T_m)	42.3	37.6	37.0	44.8	36.1	37.0	#DIV/0!	#DIV/0!	
Average Delta H ("wc) (ΔH_{avR})	1.07	0.98	0.87	0.35	0.35	0.35	#DIV/0!	#DIV/0!	
Condensed Water (g)	156.9	139.3	119.0	0.0	0.0	0.0	0.0	0.0	
Test Duration (minutes) (Θ)	96	96	96	60	60	60	0	0	
Static Pressure ("wc) (P_g)	-0.20	-0.20	-0.20	-0.20	-0.20	-0.20	0.00	0.00	
Carbon Monoxide Content (%) (%CO)	0	0	0	0	0	0	0	0	
Carbon Dioxide Content (%) (%CO_2)	6.50	7.10	6.00	0.00	0.00	0.00	0.00	0.00	
Oxygen Content (%) (%O_2)	9.60	9.20	10.50	0.00	0.00	0.00	0.00	0.00	
Hydrogen Content (%) (%H_2)	0.0	0.0	0.0	0.0	0.0	0.0	0.0	0.0	
Methane Content (%) (%CH_4)	0.0	0.0	0.0	0.0	0.0	0.0	0.0	0.0	
Nitrogen Content (%) (%N_2)	83.90	83.70	83.50	100.00	100.00	100.00	100.00	100.00	
Meter Volume (dcf) (V_m)	55.577	51.926	48.433	18.765	18.818	18.640	0.000	0.000	
Average square root of ΔP ($(\sqrt{\Delta P})_{avg}$)	0.507	0.487	0.449	#DIV/0!	#DIV/0!	#DIV/0!	#DIV/0!	#DIV/0!	
Absolute Stack Pressure ("Hg) (P_S)	29.38	29.43	29.47	29.38	29.43	29.47	0.00	0.00	
Absolute Stack Temperature (°R) (T_S)	2009.7	2076.8	2029.4	#DIV/0!	#DIV/0!	#DIV/0!	#DIV/0!	#DIV/0!	2038.6
Flue Gas Moisture (%) (B_{WS})	11.50	10.89	10.04	0.00	0.00	0.00	#DIV/0!	#DIV/0!	5.41
Moisture at saturation	N/A	N/A	N/A	#DIV/0!	#DIV/0!	#DIV/0!	#DIV/0!	#DIV/0!	
Moisture used in Calculation	11.50	10.89	10.04	#DIV/0!	#DIV/0!	#DIV/0!	#DIV/0!	#DIV/0!	10.81
Gas Molecular Wt (Wet) (g/g-mole) (M_S)	28.11	28.25	28.24	#DIV/0!	#DIV/0!	#DIV/0!	#DIV/0!	#DIV/0!	
Corrected Vol of Gas Sample (dcf) ($V_{m(actual)}$)	54.966	51.355	47.900	18.296	18.348	18.174	0.000	0.000	
Volume at Meter (dscf) (V_M)	56.912	53.755	50.257	18.816	19.235	19.043	#DIV/0!	#DIV/0!	
Average Gas Velocity (ft/sec) (V_S)	56.75	55.24	50.37	#DIV/0!	#DIV/0!	#DIV/0!	#DIV/0!	#DIV/0!	54.12
Avg Flow Rate (acfh)	12,996,865	12,651,449	11,535,403	#DIV/0!	#DIV/0!	#DIV/0!	#DIV/0!	#DIV/0!	12,394,572
Avg Flow Rate (acfm)	216,614	210,857	192,257	#DIV/0!	#DIV/0!	#DIV/0!	#DIV/0!	#DIV/0!	206,576
Avg Flow Rate (scfh)	3,353,073	3,163,775	2,956,095	#DIV/0!	#DIV/0!	#DIV/0!	#DIV/0!	#DIV/0!	3,157,648
Avg Flow Rate (scfm)	55,885	52,730	49,268	#DIV/0!	#DIV/0!	#DIV/0!	#DIV/0!	#DIV/0!	52,627
Avg Flow Rate (dscfh) (Q_{sd})	2,967,357	2,819,302	2,659,212	#DIV/0!	#DIV/0!	#DIV/0!	#DIV/0!	#DIV/0!	2,815,290
Avg Flow Rate (dscfm) (Q_{sd})	49,456	46,988	44,320	#DIV/0!	#DIV/0!	#DIV/0!	#DIV/0!	#DIV/0!	46,922
Isokinetic Sampling Rate (%) (I)	99.43	98.84	97.97	#DIV/0!	#DIV/0!	#DIV/0!	#DIV/0!	#DIV/0!	

Average square root of ΔH ($(\sqrt{\Delta H})_{avg}$)	1.02	0.96	0.90	0.59	0.59	0.59
Gas Molecular Weight (Dry) (M_d) (g/g-mole)	29.4	29.5	29.4			

Checked by
Steve Bolduc
4/26/2018

Calculation Summary

Data Entry Area

Sample Type	Metals	Pitot Tube Correction Factor	0.84	Entered By (initials)		JC
Source	BVS 5	Console ID	URS-005	Checked by (initials)		SB
Condition		DGMCF	0.989	Corrected by (initials)		
Run	1	$\Delta H_@$	1.723		Value	Link Checked
Date	8-Mar	Nozzle Diameter (in)	0.3750	% CO		
Duct Diameter (ft)	9	Std Temp (°F)	68	% CO_2	6.5	
Duct Depth (ft)		Bar Press ("Hg, meas)	29.98	% O_2	9.6	
Duct Width (ft)		Meter Elev (ft) (rel to Brmtr)	585	% H_2		
		Static Press ("H_2O)	-0.2	% CH_4		

Times		DGM Volumes (as read)	
start	06:04	start	356.243
stop	06:52	stop	411.820
start	06:57	start	
stop	07:45	stop	
start		start	
stop		stop	
start		start	
stop		stop	
start		start	
stop		stop	
start		start	
stop		stop	
start		start	
stop		stop	
start		start	
stop		stop	
start		start	
stop		stop	
start		start	
stop		stop	
Duration	96	Total	55.577

Impinger Catch (g)			
	Initial	Final	
1	713.3	859.4	146.1
2	680.4	680.8	0.4
3	579.3	579.3	0
4	727.5	727.2	-0.3
5	721.9	721.7	-0.2
6	788.8	799.7	10.9
7			
8			
9			
10			
		Total Wt Gain	156.9

	ΔP ("H_2O)	ΔH ("H_2O)	Stack Temp (°F)	DGM Temp (°F)	√ΔP	√ΔH
Averages	0.26	1.07	1550	42.3	0.5066	1.0227
Individual Readings	0.17	0.70	1564	37	0.41231056	0.83666
	0.18	0.73	1563	37	0.42426407	0.8544
	0.20	0.81	1564	40	0.4472136	0.9
	0.23	0.94	1564	38	0.47958315	0.969536
	0.21	0.86	1564	40	0.45825757	0.927362
	0.24	0.98	1560	40	0.48989795	0.989949
	0.35	1.40	1562	41	0.59160798	1.183216
	0.34	1.40	1554	42	0.58309519	1.183216
	0.31	1.20	1552	42	0.55677644	1.095445
	0.21	0.86	1537	43	0.45825757	0.927362
	0.17	0.70	1517	44	0.41231056	0.83666
	0.16	0.68	1508	44	0.4	0.824621
	0.22	0.93	1555	45	0.46904158	0.964365
	0.20	0.81	1556	43	0.4472136	0.9
	0.21	0.86	1553	44	0.45825757	0.927362
	0.21	0.86	1553	44	0.45825757	0.927362
	0.21	0.86	1552	44	0.45825757	0.927362
	0.20	0.81	1549	44	0.4472136	0.9
	0.37	1.50	1548	45	0.60827625	1.224745
	0.39	1.60	1546	44	0.6244998	1.264911
	0.39	1.60	1545	45	0.6244998	1.264911
	0.39	1.60	1544	43	0.6244998	1.264911
	0.38	1.50	1541	43	0.6164414	1.224745
	0.37	1.50	1541	44	0.60827625	1.224745

Calculation Summary

Data Entry Area

Sample Type	Metals	Pitot Tube Correction Factor	0.84	Entered By (initials)	JC	
Source	BVS 5	Console ID	URS-005	Checked by (initials)	SB	
Condition		DGMCF	0.989	Corrected by (initials)		
Run	2	$\Delta H_@$	1.723		Value	Link Checked
Date	8-Mar	Nozzle Diameter (in)	0.3750	% CO		
Duct Diameter (ft)	9	Std Temp (°F)	68	% CO_2	7.1	
Duct Depth (ft)		Bar Press ("Hg, meas)	30.03	% O_2	9.2	
Duct Width (ft)		Meter Elev (ft) (rel to Brmtr)	585	% H_2		
		Static Press ("H_2O)	-0.2	% CH_4		

Times		DGM Volumes (as read)	
start	19:50	start	412.135
stop	20:38	stop	464.061
start	20:44	start	
stop	21:32	stop	
start		start	
stop		stop	
start		start	
stop		stop	
start		start	
stop		stop	
start		start	
stop		stop	
start		start	
stop		stop	
start		start	
stop		stop	
start		start	
stop		stop	
start		start	
stop		stop	
Duration	96	Total	51.926

Impinger Catch (g)			
	Initial	Final	
1	730.3	859.2	128.9
2	690.0	690.1	0.1
3	571.1	571.2	0.1
4	713.0	713.1	0.1
5	717.8	717.8	0
6	785.3	795.4	10.1
7			
8			
9			
10			
		Total Wt Gain	139.3

	ΔP ("H_2O)	ΔH ("H_2O)	Stack Temp (°F)	DGM Temp (°F)	√ΔP	√ΔH
Averages	0.25	0.98	1617	37.6	0.4867	0.9601
Individual Readings	0.10	0.41	1614	34	0.31622777	0.640312
	0.10	0.41	1614	34	0.31622777	0.640312
	0.08	0.32	1612	35	0.28284271	0.565685
	0.07	0.28	1611	34	0.26457513	0.52915
	0.09	0.36	1612	34	0.3	0.6
	0.11	0.43	1609	35	0.33166248	0.655744
	0.34	1.30	1608	35	0.58309519	1.140175
	0.37	1.40	1605	37	0.60827625	1.183216
	0.36	1.40	1603	36	0.6	1.183216
	0.35	1.30	1599	37	0.59160798	1.140175
	0.35	1.30	1603	38	0.59160798	1.140175
	0.35	1.30	1599	38	0.59160798	1.140175
	0.24	0.96	1622	38	0.48989795	0.979796
	0.23	0.91	1623	38	0.47958315	0.953939
	0.23	0.91	1625	38	0.47958315	0.953939
	0.19	0.75	1627	39	0.43588989	0.866025
	0.17	0.67	1628	39	0.41231056	0.818535
	0.23	0.91	1625	40	0.47958315	0.953939
	0.38	1.50	1629	39	0.6164414	1.224745
	0.38	1.50	1631	40	0.6164414	1.224745
	0.38	1.50	1629	41	0.6164414	1.224745
	0.35	1.30	1633	42	0.59160798	1.140175
	0.31	1.20	1623	41	0.55677644	1.095445
	0.28	1.10	1620	41	0.52915026	1.048809

Calculation Summary

Data Entry Area

Sample Type	Metals	Pitot Tube Correction Factor	0.84	Entered By (initials)	JC	
Source	BVS 5	Console ID	URS-005	Checked by (initials)	SB	
Condition		DGMCF	0.989	Corrected by (initials)		
Run	3	$\Delta H_@$	1.723		Value	Link Checked
Date	9-Mar	Nozzle Diameter (in)	0.3750	% CO		
Duct Diameter (ft)	9	Std Temp (°F)	68	% CO_2	6	
Duct Depth (ft)		Bar Press ("Hg, meas)	30.07	% O_2	10.5	
Duct Width (ft)		Meter Elev (ft) (rel to Brmtr)	585	% H_2		
		Static Press ("H_2O)	-0.2	% CH_4		

Times		DGM Volumes (as read)	
start	01:10	start	467.504
stop	01:58	stop	515.937
start	02:05	start	
stop	02:53	stop	
start		start	
stop		stop	
start		start	
stop		stop	
start		start	
stop		stop	
start		start	
stop		stop	
start		start	
stop		stop	
start		start	
stop		stop	
start		start	
stop		stop	
start		start	
stop		stop	
Duration	96	Total	48.433

Impinger Catch (g)			
	Initial	Final	
1	715.6	825.7	110.1
2	686.6	686.7	0.1
3	583.5	583.5	0
4	725.1	725.5	0.4
5	728.6	728.5	-0.1
6	799.9	808.4	8.5
7			
8			
9			
10			
		Total Wt Gain	119.0

	ΔP ("H_2O)	ΔH ("H_2O)	Stack Temp (°F)	DGM Temp (°F)	√ΔP	√ΔH
Averages	0.22	0.87	1569	37.0	0.4491	0.8974
Individual Readings	0.07	0.29	1588	33	0.26457513	0.538516
	0.08	0.32	1588	33	0.28284271	0.565685
	0.08	0.32	1586	34	0.28284271	0.565685
	0.07	0.29	1584	34	0.26457513	0.538516
	0.09	0.36	1582	35	0.3	0.6
	0.12	0.48	1583	35	0.34641016	0.69282
	0.34	1.30	1582	36	0.58309519	1.140175
	0.35	1.40	1576	36	0.59160798	1.183216
	0.35	1.40	1573	37	0.59160798	1.183216
	0.33	1.30	1569	37	0.57445626	1.140175
	0.22	0.89	1562	39	0.46904158	0.943398
	0.20	0.82	1550	39	0.4472136	0.905539
	0.15	0.62	1573	38	0.38729833	0.787401
	0.13	0.53	1572	38	0.36055513	0.728011
	0.14	0.57	1573	38	0.37416574	0.754983
	0.16	0.65	1570	38	0.4	0.806226
	0.10	0.41	1569	38	0.31622777	0.640312
	0.13	0.53	1565	38	0.36055513	0.728011
	0.35	1.40	1560	38	0.59160798	1.183216
	0.39	1.50	1557	38	0.6244998	1.224745
	0.37	1.50	1556	39	0.60827625	1.224745
	0.35	1.40	1552	39	0.59160798	1.183216
	0.34	1.30	1548	39	0.58309519	1.140175
	0.34	1.30	1548	39	0.58309519	1.140175

Calculation Summary

Data Entry Area

Sample Type	CCS	Pitot Tube Correction Factor		Entered By (initials)	JC
Source	BVS 5	Console ID	URS 001	Checked by (initials)	SB
Condition		DGMCF	0.975	Corrected by (initials)	
Run	1	$\Delta H_@$	1.939		
Date	8-Mar	Nozzle Diameter (in)			
Duct Diameter (ft)		Std Temp (°F)	68		
Duct Depth (ft)		Bar Press ("Hg, meas)	29.98		
Duct Width (ft)		Meter Elev (ft) (rel to Brmtr)	585		
		Static Press ("H_2O)	-0.2		

	Value	Link Checked
% CO		
% CO_2		
% O_2		
% H_2		
% CH_4		

Times		DGM Volumes (as read)	
start	06:29	start	911.010
stop	07:29	stop	929.775
start		start	
stop		stop	
start		start	
stop		stop	
start		start	
stop		stop	
start		start	
stop		stop	
start		start	
stop		stop	
start		start	
stop		stop	
start		start	
stop		stop	
start		start	
stop		stop	
start		start	
stop		stop	
Duration	60	Total	18.765

Impinger Catch (g)		
	Initial	Final
1		
2		
3		
4		
5		
6		
7		
8		
9		
10		
Total Wt Gain		0.0

	ΔP ("H_2O)	ΔH ("H_2O)	Stack Temp (°F)	DGM Temp (°F)	√ΔP	√ΔH
Averages	#DIV/0!	0.35	#DIV/0!	44.8	#DIV/0!	0.5923

Individual Readings			
	0.35	44	0.591608
	0.35	45	0.591608
	0.35	45	0.591608
	0.35	46	0.591608
	0.35	46	0.591608
	0.35	47	0.591608
	0.35	46	0.591608
	0.35	45	0.591608
	0.35	44	0.591608
	0.35	44	0.591608
	0.36	43	0.6
	0.35	43	0.591608

Calculation Summary

Data Entry Area

Sample Type	CCS	Pitot Tube Correction Factor		Entered By (initials)	JC
Source	BVS 5	Console ID	URS 001	Checked by (initials)	SB
Condition		DGMCF	0.975	Corrected by (initials)	
Run	2	$\Delta H_@$	1.939		
Date	8-Mar	Nozzle Diameter (in)			
Duct Diameter (ft)		Std Temp (°F)	68		
Duct Depth (ft)		Bar Press ("Hg, meas)	30.03		
Duct Width (ft)		Meter Elev (ft) (rel to Brmtr)	585		
		Static Press ("H_2O)	-0.2		

	Value	Link Checked
% CO		
% CO_2		
% O_2		
% H_2		
% CH_4		

Times		DGM Volumes (as read)	
start	21:00	start	931.410
stop	22:00	stop	950.228
start		start	
stop		stop	
start		start	
stop		stop	
start		start	
stop		stop	
start		start	
stop		stop	
start		start	
stop		stop	
start		start	
stop		stop	
start		start	
stop		stop	
start		start	
stop		stop	
start		start	
stop		stop	
Duration	60	Total	18.818

Impinger Catch (g)		
	Initial	Final
1		
2		
3		
4		
5		
6		
7		
8		
9		
10		
Total Wt Gain		0.0

	ΔP ("H_2O)	ΔH ("H_2O)	Stack Temp (°F)	DGM Temp (°F)	$\sqrt{\Delta P}$	$\sqrt{\Delta H}$
Averages	#DIV/0!	0.35	#DIV/0!	36.1	#DIV/0!	0.5895

Individual Readings	0.35	34	0.591608
	0.35	35	0.591608
	0.35	35	0.591608
	0.35	35	0.591608
	0.35	36	0.591608
	0.34	36	0.583095
	0.34	36	0.583095
	0.35	37	0.591608
	0.34	37	0.583095
	0.35	37	0.591608
	0.35	38	0.591608
	0.35	37	0.591608

Calculation Summary

Data Entry Area

Sample Type	CCS	Pitot Tube Correction Factor		Entered By (initials)	JC
Source	BVS 5	Console ID	URS 001	Checked by (initials)	SB
Condition		DGMCF	0.975	Corrected by (initials)	
Run	3	$\Delta H_@$	1.939		
Date	9-Mar	Nozzle Diameter (in)			
Duct Diameter (ft)		Std Temp (°F)	68		
Duct Depth (ft)		Bar Press ("Hg, meas)	30.07		
Duct Width (ft)		Meter Elev (ft) (rel to Brmtr)	585		
		Static Press ("H_2O)	-0.2		

	Value	Link Checked
% CO		
% CO_2		
% O_2		
% H_2		
% CH_4		

Times		DGM Volumes (as read)	
start	01:43	start	950.320
stop	02:43	stop	968.960
start		start	
stop		stop	
start		start	
stop		stop	
start		start	
stop		stop	
start		start	
stop		stop	
start		start	
stop		stop	
start		start	
stop		stop	
start		start	
stop		stop	
start		start	
stop		stop	
start		start	
stop		stop	
Duration	60	Total	18.640

Impinger Catch (g)		
	Initial	Final
1		
2		
3		
4		
5		
6		
7		
8		
9		
10		
Total Wt Gain		0.0

	ΔP ("H_2O)	ΔH ("H_2O)	Stack Temp (°F)	DGM Temp (°F)	√ΔP	√ΔH
Averages	#DIV/0!	0.35	#DIV/0!	37.0	#DIV/0!	0.5901
Individual Readings		0.35		37		0.591608
		0.32		37		0.565685
		0.36		36		0.6
		0.35		37		0.591608
		0.37		37		0.608276
		0.35		37		0.591608
		0.35		37		0.591608
		0.35		37		0.591608
		0.35		37		0.591608
		0.34		38		0.583095
		0.34		37		0.583095
		0.35		37		0.591608

Metals Results

Parameter	Run 1	Run 2	Run 3
Sample volume (dscf) [A]	56.91	48.79	50.26
Sample volume (dscm)	1.612	1.381	1.423
Lead in filter/PNR (ug)	958	613	437
Lead in Imp 1&2 (ug)	1.60	1.44	1.67
Lead in sample (ug)	959.6	614.4	438.7
Lead Conc. (ug/ft3)	16.861	12.595	8.729
Lead Conc. (ug/m3)	595.4	444.8	308.2
Mercury in filter/PNR (ug)	ND	ND	ND
Mercury in Imp 1&2 (ug)	7.24	11.9	9.84
Mercury in Imp 3 (ug)	ND	ND	0.0931
Mercury in Imp 4&5 (ug)	ND	ND	2.78
Mercury in HCl rinse (ug)	2.49	1.95	0.293
Mercury in sample (ug)	9.7	13.9	13.0
Mercury Conc. (ug/ft3)	0.1710	0.2839	0.2588
Mercury Conc. (ug/m3)	6.04	10.03	9.14

[A] - Note: Slight leak possible during Run 2. Calculated as though leak present during entire run using procedure in 40 CFR 60, Appendix A, Method 5 *12.0 Data Analysis and Calculations*

H2SO4 Results

Parameter	Run 1	Run 2	Run 3
Sample volume (dscf)	18.82	19.23	19.04
Sample volume (dscm)	0.533	0.545	0.539
H2SO4 in sample (ug)	31,700	32,400	35,400
Conc. (ug/ft3)	1685	1684	1859
Conc. (ug/m3)	59495	59486	65646
Molecular weight	98	98	98
Conc. (ppm)	14.6	14.6	16.1

Sample Type	**Multi Metals (Method 29)**	Date 3/8/18		Nozzle Dia (in) 0.375	Page 1 of 1
Project Name	Haverhill Vent Stack Tests	Cond	Run 1	Barometer ID Weather Channel	**Train Leak Rate** (cfm @ "Hg)
Project Number	60562829	Console ID URS-005		Bar. Press. ("Hg) 29.98	Initial 0.01 @ 10"
Facility	SunCoke Energy Haverhill Operations	ΔH@ 1.723		Stat. Press ("H_2O) -0.20	Final 0.0 @ 5"
Source	Vent Stack #5	K_f		Probe ID 1801771	**Pitot Tube Leak Check** ("H_2O@"H_2O)
Operator	WCT/FC	DGMCF 0.989		Pitot ID	Initial (-) ✓ @ 7"
Duct Dimension(s)	Circular: 9 ft diameter			PTCF 0.84	Initial (+) ✓ @ 7"
Nozzle Calibration				Meter Elevation (ft) (relative to Barometer) 600	Final (-) ✓ @ 3
Caliper ID					Final (+) ✓ @ 3
Post-Test Stack TC Check	Reference Thermometer ID 2490	Ref Thermometer ~~Exp Date~~ Cal. 5/22/17 (NIST)		Thermometer and TC agree within 2°F (Y) / N	Post-Test: Are Pitots Damaged? Y / (N)

Point	Clock Time 6:04	DGM Reading (ft³)	ΔP ("H_2O)	ΔH ("H_2O)	Temperature (°F) Stack	Probe Target 248±25	Filter Target 248±25	Imp Exit Target <68	DGM Outlet	Vacuum ("Hg)
A-1	0	356.243	0.17	0.70	1564	NA	243	36	37	<1
2	4	358.2	0.18	0.73	1563		253	37	37	<1
3	8	360.1	0.20	0.81	1564		253	39	40	<1
4	12	362.2	0.23	0.94	1564		253	40	38	<1
5	16	364.4	0.21	0.86	1564		252	42	40	<1
6	20	366.6	0.24	0.98	1560		253	43	40	<1
7	24	368.8	0.35	1.4	1562		251	44	41	<1
8	28	371.2	0.34	1.4	1554		251	44	42	<1
9	32	373.9	0.31	1.2	1552		250	43	42	<1
10	36	376.4	0.21	0.86	1537		243	44	43	<1
11	40	378.6	0.17	0.70	1517		248	43	44	<1
12	44	380.5	0.16	0.68	1508		251	43	44	<1
Stop	48	382.459								
B-1	48	382.459	0.22	0.93	1555		253	44	45	<1
2	52	384.6	0.20	0.81	1556		251	41	43	<1
3	56	386.8	0.21	0.86	1553		251	41	44	<1
4	60	388.9	0.21	0.86	1553		252	41	44	<1
5	64	391.0	0.21	0.86	1552		250	41	44	<1
6	68	393.2	0.20	0.81	1549		251	40	44	<1
7	72	395.2	0.37	1.5	1548		251	40	45	1
8	76	397.8	0.39	1.6	1546		251	41	44	1
9	80	400.6	0.39	1.6	1545		253	42	45	1
10	84	403.4	0.39	1.6	1544		252	41	43	1
11	88	406.3	0.38	1.5	1541		250	41	43	1
12	92	409.1	0.37	1.5	1541		250	40	44	1
Stop	96	411.820								
	7:45									

Notes

SDS-07 Metals by EPA Method 29
Per EM SOP-017
Issued: *January 2018*

Project Name	Haverhill Vent Stack Tests
Project Number	60562829
Date	3/8/18
Source	Vent Stack #5

Multi-Metals
EPA Method 29
No Determination of PM

Condition No.	
Run No.	1
Balance ID	URS 01
Recovered by	JC

Moisture Determination

Imp No.	Contents	Vol (mL)	Configuration	Initial Wt (g)	Final Wt (g)
~~1~~	-[1]	-	~~Mod~~		
1	HNO_3/H_2O_2 Soln	100	Mod	713.3	859.4
2	HNO_3/H_2O_2 Soln	100	G/S	680.4	680.8
3	-	-	Mod	579.3	579.3
4	$H_2SO_4/KMnO_4$ Soln	100	Mod	727.5	727.2
5	$H_2SO_4/KMnO_4$ Soln	100	Mod	721.9	721.7
6	Silica Gel	~200g	Mod	788.8	799.7

[1] Per the method, this first impinger is optional and may be excluded for sources with moisture catch anticipated to be less than 100 g (Section 8.1.3.2)

Sample Log

Sample ID Number	Sample Container	Description
-M29-PNR	250 ml	Probe and Nozzle Rinse
-M29-Filt	Petri Dish	Filter
-M29-NPI	1000 ml	Nitric Peroxide Impinger
-M29-EIR	250 ml	Empty Impinger Rinse
-M29-Perm	1000 ml	Permanganate Impinger
-M29-HClRns	250 ml	HCl Rinse of Permanganate Impinger

Sample Recovery Checklist

____ Rinse and brush probe and nozzle with 0.1 M Nitric Acid into PNR bottle.
Note – use Teflon brush.

____ Rinse the (optional) Teflon transfer line with 0.1M nitric acid into NPI bottle.

____ Separate filter holder and place filter in clean Petri dish. Complete Filt sample label.

____ Rinse front half of filter holder with 0.1 M nitric acic into PNR bottle. Complete PNR sample label.

____ Disassemble sample train, wipe off excess water and weigh each impinger. Record the final weights in the Moisture Determination section.

Note condition of silica gel. _____% spent.

____ Pour contents of first 2 impingers into the NPI catch bottle(s). Rinse the impingers, filter support, back-half of the filter holder and connecting glassware with 0.1 M nitric acid same bottle(s). Complete NPI sample label(s).

____ Rinse the 3rd (initially empty) impinger with 0.1 M nitric acid into the empty impinger rinse (EIR) bottle. Complete EIR sample label.

____ Pour the contents of the 4th and 5th impingers (permanganate impingers) into the permanganate impinger catch bottle (Perm). Rinse with a total of 100 ml of permanganate solution and 100 ml of DI water. Complete Perm sample label

____ Rinse the permanganate impingers with a total of 25 mL of 8N HCl into the HClRns bottle. Rinse impingers with 200 ml DI water into the same bottle. Complete HClRns sample label.
(Note, this is not required if there is no visible solid residue)

____ Log samples into logbook and store appropriately.

Notes

RDS-22; Metals by EPA M29, no PM
Per EM SOP-017
Issued: *May 2017*

Sample Type: **Multi Metals (Method 29)**	Date: 3/8/18		Nozzle Dia (in): 0.375	Page: 1 of 1	
Project Name: Haverhill Vent Stack Tests	Cond	Run: 2	Barometer ID: Weather Monitor	**Train Leak Rate** (cfm @ "Hg)	
Project Number: 60562829	Console ID: HRS-005		Bar. Press. ("Hg): 30.03	Initial: 0.014 @ 7"	
Facility: SunCoke Energy Haverhill Operations	ΔH@: 1.723		Stat. Press. ("H_2O): -0.20	Final: 0.009 @ 3" *	
Source: Vent Stack #5	K_r:		Probe ID: 1801771	**Pitot Tube Leak Check** ("H_2O@"H_2O)	
Operator: WCT/AFC	DGMCF: 0.989		Pitot ID:	Initial (-): ✓ @ 7"	
Duct Dimension(s): Circular: 9 ft diameter			PTCF: 0.84	Initial (+): ✓ @ 7"	
Nozzle Calibration			Meter Elevation (ft) (relative to Barometer): 600 586	Final (-): ✓ @ 5	
Caliper ID:				Final (+): ✓ @ 5	
Post-Test Stack TC Check	Reference Thermometer ID	Ref Thermometer Exp Date	Thermometer and TC agree within 2°F: Y / N	Post-Test: Are Pitots Damaged? Y / (N)	

Point	Clock Time	DGM Reading (ft^3)	ΔP ("H_2O)	ΔH ("H_2O)	Temperature (°F) Stack	Probe Target 248±25	Filter Target 248±25	Imp Exit Target <68	DGM Outlet	Vacuum ("Hg)
A-1	0	412.135	0.10	0.41	1614	NA	230	36	34	<1
2	4	413.6	0.10	0.41	1614		229	34	31	<1
3	8	415.1	0.08	0.32	1612		236	33	35	<1
4	12	416.4	0.07	0.28	1611		241	33	34	<1
5	16	417.6	0.09	0.36	1613		229	33	34	<1
6	20	419.0	0.11	0.43	1609		255	33	35	<1
7	24	420.5	0.34	1.3	1609		254	36	35	<1
8	28	422.9	0.37	1.4	1605		242	36	37	<1
9	32	425.4	0.36	1.4	1603		256	42	36	<1
10	36	428.0	0.35	1.3	1599		240	39	37	<1
11	40	430.6	0.36	1.3	1603		251	36	38	<1
12	~~44~~ 0:28	433.2	0.35	1.3	1597		251	36	38	<1
Stop	~~48~~ 0:30	435.817							-	
B-1	~~48~~ 0:44	435.817	0.24	0.96	1623		256	35	38	<1
2	~~52~~ 0:48	438.0	0.23	0.91	1623		245	35	38	<1
3	56 ~~60~~ 0:52	440.2	0.23	0.91	1625		258	35	38	<1
4	60 ~~64~~ 0:56	442.4	0.19	0.75	1627		249	36	39	<1
5	64 ~~68~~ 1:00	444.5	0.17	0.67	1628		253	36	37	<1
6	68 ~~72~~ 1:04	446.4	0.23	0.91	1625		251	36	40	<1
7	72 ~~76~~ 1:08	448.5	0.36	1.5	1629		251	37	39	<1
8	76 ~~80~~ 1:12	451.1	0.38	1.5	1631		250	39	40	<1
9	80 ~~84~~ 1:16	453.9	0.38	1.5	1629		247	39	41	<1
10	84 ~~88~~ 1:20	456.5	0.35	1.3	1633		249	37	42	<1
11	88 ~~92~~ 1:24	459.2	0.31	1.2	1623		253	39	41	<1
12	92 ~~96~~ 1:28	461.7	0.28	1.1	1620		248	39	41	<1
Stop	96 1:32	464.061								

Notes * Impinger set only; nozzle ~0.070

Leak probably introduced when removing probe. But conservatively include in calculation per method.

Project Name	Haverhill Vent Stack Tests
Project Number	60562829
Date	3/8/18
Source	Vent Stack #5

Multi-Metals
EPA Method 29
No Determination of PM

Condition No.	
Run No.	2
Balance ID	URS 01
Recovered by	JC

Moisture Determination

Imp No.	Contents	Vol (mL)	Configuration	Initial Wt (g)	Final Wt (g)
~~1~~	-[1]	-	~~Mod~~		
1	HNO_3/H_2O_2 Soln	100	Mod	730.3	859.2
2	HNO_3/H_2O_2 Soln	100	G/S	690.0	690.1
3	-	-	Mod	571.1	571.2
4	$H_2SO_4/KMnO_4$ Soln	100	Mod	713.0	713.1
5	$H_2SO_4/KMnO_4$ Soln	100	Mod	717.8	717.8
6	Silica Gel	~200g	Mod	785.3	795.4

[1] Per the method, this first impinger is optional and may be excluded for sources with moisture catch anticipated to be less than 100 g (Section 8.1.3.2)

Sample Log

Sample ID Number	Sample Container	Description
-M29-PNR	250 ml	Probe and Nozzle Rinse
-M29-Filt	Petri Dish	Filter
-M29-NPI	1000 ml	Nitric Peroxide Impinger
-M29-EIR	250 ml	Empty Impinger Rinse
-M29-Perm	1000 ml	Permanganate Impinger
-M29-HClRns	250 ml	HCl Rinse of Permanganate Impinger

Sample Recovery Checklist

____ Rinse and brush probe and nozzle with 0.1 M Nitric Acid into PNR bottle.
Note – use Teflon brush.

____ Rinse the (optional) Teflon transfer line with 0.1M nitric acid into NPI bottle.

____ Separate filter holder and place filter in clean Petri dish. Complete Filt sample label.

____ Rinse front half of filter holder with 0.1 M nitric acid into PNR bottle. Complete PNR sample label.

____ Disassemble sample train, wipe off excess water and weigh each impinger. Record the final weights in the Moisture Determination section.

Note condition of silica gel. _____% spent.

____ Pour contents of first 2 impingers into the NPI catch bottle(s). Rinse the impingers, filter support, back-half of the filter holder and connecting glassware with 0.1 M nitric acid same bottle(s). Complete NPI sample label(s).

____ Rinse the 3rd (initially empty) impinger with 0.1 M nitric acid into the empty impinger rinse (EIR) bottle. Complete EIR sample label.

____ Pour the contents of the 4th and 5th impingers (permanganate impingers) into the permanganate impinger catch bottle (Perm). Rinse with a total of 100 ml of permanganate solution and 100 ml of DI water. Complete Perm sample label

____ Rinse the permanganate impingers with a total of 25 mL of 8N HCl into the HClRns bottle. Rinse impingers with 200 ml DI water into the same bottle. Complete HClRns sample label.
(Note, this is not required if there is no visible solid residue)

____ Log samples into logbook and store appropriately.

Notes

RDS-22; Metals by EPA M29, no PM
Per EM SOP-017
Issued: May 2017

Sample Type: **Multi Metals (Method 29)**	Date: 3/9/18	Nozzle Dia (in): 0.375	Page: 1 of 1		
Project Name: Haverhill Vent Stack Tests	Cond	Run: 3	Barometer ID: Weather Channel	**Train Leak Rate** (cfm @ "Hg)	
Project Number: 60562829	Console ID: URS-005	Bar. Press. ("Hg): 30.01	Initial: 0.013 @ 8"		
Facility: SunCoke Energy Haverhill Operations	ΔH@: 1.783	Stat. Press. ("H_2O): -0.12	Final: 0.005 @ 5"		
Source: Vent Stack #5	K_f	Probe ID: 180177	**Pitot Tube Leak Check** ("H_2O@"H_2O)		
Operator: WCT/EC	DGMCF: 0.989	Pitot ID	Initial (-): ✓ @ 7"		
Duct Dimension(s): Circular: 9 ft diameter		PTCF: 0.84	Initial (+): ✓ @ 7"		
Nozzle Calibration		Meter Elevation (ft) (relative to Barometer): ~~595~~ 600	Final (-): ✓ @ 7"		
Caliper ID			Final (+): ✓ @ 7"		
Post-Test Stack TC Check	Reference Thermometer ID	Ref Thermometer Exp Date	Thermometer and TC agree within 2°F: Y / N	Post-Test: Are Pitots Damaged? Y / N	

Point	Clock Time	DGM Reading (ft^3)	ΔP ("H_2O)	ΔH ("H_2O)	Temperature (°F)					Vacuum ("Hg)
					Stack	Probe Target 248±25	Filter Target 248±25	Imp Exit Target <68	DGM Outlet	
A-1	0	467.504	0.07	0.29	1588	NA	228	33	33	<1
2	4	468.7	0.08	0.32	1586		226	33	33	<1
3	8	470.0	0.08	0.32	1586		238	33	34	<1
4	12	471.3	0.07	0.29	1584		234	34	34	<1
5	16	472.5	0.09	0.36	1582		242	34	35	<1
6	20	473.9	0.12	0.48	1583		244	34	35	<1
7	24	475.5	0.34	1.3	1582		239	36	36	<1
8	28	477.9	0.35	1.4	1576		249	37	36	<1
9	32	480.4	0.35	1.4	1573		260	37	37	<1
10	36	483.1	0.33	1.3	1569		247	39	37	<1
11	40	485.6	0.22	0.89	1562		245	39	39	<1
12	44	487.8	0.20	0.82	1550		250	39	39	<1
Stop	0955 48	489.721	0.15	0.62	1573		249	35	38	<1
B-1	1002 28	491.7	0.13	0.53	1572		250	36	38	<1
2	52	493.4	0.14	0.57	1573		246	36	38	<1
3	56	495.1	0.16	0.65	1570		248	36	38	<1
4	60	497.0	0.10	0.41	1569		250	36	38	<1
5	64	498.5	0.13	0.53	1565		249	36	38	<1
6	68	500.0	0.35	1.4	1560		247	36	38	<1
7	72	502.5	0.39	1.5	1557		249	36	38	<1
8	76	505.1	0.37	1.5	1556		244	38	37	<1
9	80								38	
10	84	508.0	0.35	1.4	1552		250	38	39	<1
11	88	510.7	0.34	1.3	1548		249	39	39	<1
12	92	513.3	0.34	1.3	1548		253	40	39	<1
Stop	96	515.737								
	0955									

Notes

Project Name	Haverhill Vent Stack Tests
Project Number	60562829
Date	3/9/18
Source	Vent Stack #5

Multi-Metals
EPA Method 29
No Determination of PM

Condition No.	
Run No.	3
Balance ID	URS 01
Recovered by	JC

Moisture Determination

Imp No.	Contents	Vol (mL)	Configuration	Initial Wt (g)	Final Wt (g)
~~1~~	-[1]	-	~~Mod~~		
1	HNO_3/H_2O_2 Soln	100	Mod	715.6	825.7
2	HNO_3/H_2O_2 Soln	100	G/S	686.6	686.7
3	-	-	Mod	583.5	583.5
4	$H_2SO_4/KMnO_4$ Soln	100	Mod	725.1	725.5
5	$H_2SO_4/KMnO_4$ Soln	100	Mod	728.6	728.5
6	Silica Gel	~200g	Mod	799.9	808.4

[1] Per the method, this first impinger is optional and may be excluded for sources with moisture catch anticipated to be less than 100 g (Section 8.1.3.2)

Sample Log

Sample ID Number	Sample Container	Description
-M29-PNR	250 ml	Probe and Nozzle Rinse
-M29-Filt	Petri Dish	Filter
-M29-NPI	1000 ml	Nitric Peroxide Impinger
-M29-EIR	250 ml	Empty Impinger Rinse
-M29-Perm	1000 ml	Permanganate Impinger
-M29-HClRns	250 ml	HCl Rinse of Permanganate Impinger

Sample Recovery Checklist

_____ Rinse and brush probe and nozzle with 0.1 M Nitric Acid into PNR bottle.
Note – use Teflon brush.

_____ Rinse the (optional) Teflon transfer line with 0.1M nitric acid into NPI bottle.

_____ Separate filter holder and place filter in clean Petri dish. Complete Filt sample label.

_____ Rinse front half of filter holder with 0.1 M nitric acid into PNR bottle. Complete PNR sample label.

_____ Disassemble sample train, wipe off excess water and weigh each impinger. Record the final weights in the Moisture Determination section.

Note condition of silica gel. _____% spent.

_____ Pour contents of first 2 impingers into the NPI catch bottle(s). Rinse the impingers, filter support, back-half of the filter holder and connecting glassware with 0.1 M nitric acid same bottle(s). Complete NPI sample label(s).

_____ Rinse the 3rd (initially empty) impinger with 0.1 M nitric acid into the empty impinger rinse (EIR) bottle. Complete EIR sample label.

_____ Pour the contents of the 4th and 5th impingers (permanganate impingers) into the permanganate impinger catch bottle (Perm). Rinse with a total of 100 ml of permanganate solution and 100 ml of DI water. Complete Perm sample label

_____ Rinse the permanganate impingers with a total of 25 mL of 8N HCl into the HClRns bottle. Rinse impingers with 200 ml DI water into the same bottle. Complete HClRns sample label.
(Note, this is not required if there is no visible solid residue)

_____ Log samples into logbook and store appropriately.

Notes

RDS-22: Metals by EPA M29, no PM
Per EM SOP-017
Issued: May 2017

FIELD SAMPLING DATA SHEET

TEST METHOD: CCS

PAGE 1 OF 1

Client/Plant: FMO	Project #: 605628829	Date: 3/8/18	Operator(s): JC/CT
Location: BVS #5	Condition:	Run #: 1	Duration (min): 60
DGM#: URS 001	CF (Yd): 0.975	$\Delta H_@$: 1.939	Cp: 0.84
IGS (Y/N):	P_{bar} ("Hg): 29.98	Height w.r.t. Barometer (ft): 585	P_{static} ("H_2O): −0.28

Initial Leak ✓ 0 @ 5 in Hg		Source Height (ft):	Duct Diameter ("): 9"
Final Leak ✓ 0.0 @ 4 in Hg		Duct Width ("):	Duct Length ("):

Sample Point/ Coil #	Time: Clock	Time: Run (min)	DGM Volume (ft^3)	Frosting Y/N	ΔH ("H_2O)	Duct temp	IGS skin: Probe 650±25	IGS annular: Filter	Impinger Exit ≤68	Coil Exit ≤ 150 (140-150)	DGM Inlet	DGM Outlet	O2 %	Pump Vac ("Hg)
0	6:29	0	911.010		0.35		N/A	534	50	125		44		3
5		5	912.5		0.35			608	51	125		45		4
		10	914.1		0.35			582	51	125		45		4
		15	915.7		0.35			595	49	125		46		4
		20	917.2		0.35			585	50	127		46		4
		25	918.8		0.35			515	46	125		47		3
		30			0.35			485	43	120		46		4
		35	921.9		0.35			488	41	120		45		4
		40	923.5		0.35			569	40	120		44		3.5
		45	925.0		0.35			629	39	120		44		3.5
		50	926.6		0.36			558	38	120		43		3.5
		55	928.2		0.35			520	38	121		43		3.5
	7:29	60	929.775											

* Coil TC influenced by ambient. Water Temp OK
System OK (145-185°F)

COMMENTS: Pull @ a ΔHe of 0.35 for 60 minutes
Note water temp ~180 °F, so coil Temp higher than TC

FIELD SAMPLING DATA SHEET

TEST METHOD: CCS

PAGE 1 OF 1

Client/Plant:	Project #: 605 02829	Date: 3/8	Operator(s): JC
Location: BVS 5	Condition:	Run #: 2	Duration (min): 60
DGM#: URS 001	CF (Yd): 0.975	$\Delta H_@$: 1.939	Cp: 0.84
IGS (Y/N):	P_{bar} ("Hg): 30.03	Height w.r.t. Barometer (ft): 585	P_{static} ("H_2O): -0.20

Initial Leak ✓ 0 @ 5 in Hg		Source Height (ft):	Duct Diameter ("): 9
Final Leak ✓ 0 @ 3 in Hg		Duct Width ("):	Duct Length ("):

Sample Point/ Coil #	Time: Clock	Time: Run (min)	DGM Volume (ft^3)	Frosting Y/N	ΔH ("H_2O)	N/A Duct temp	IGS skin Probe 650±25	IGS annular Filter	Impinger Exit ≤68	140-150 * Coil Exit ≤ 150	DGM Inlet	DGM Outlet	O_2 %	Pump Vac. ("Hg)
2/100	21:40	0	931.410		0.35		N/A	364	31	115		34		3
		5	932.0		0.35			443	32	115		35		3
		10	934.6		0.35			469	32	115		35		3
		15	936.1		0.35			473	32	115		35		2.5
		20	937.7		0.35			417	32	115		36		3
		25	939.3		0.34			447	32	116		36		3
		30	940.8		0.34			449	32	116		36		3
		35	942.3		0.35			543	33	119		37		3
		40	943.9		0.34			504	33	119		37		3
		45	945.5		0.35			614	33	120		37		3
		50	947.0		0.35			561	34	122		38		2.5
		55	948.6		0.35			499	34	120		37		2.5
22:00		60	950.228											

Note: coil TC near outside - water temp OK (not influenced by ambient) - 5/5 cm OK (165-185°F)

COMMENTS: * Bulk water temp 165°F

Note coil TC ~~at~~ near end of coil

FIELD SAMPLING DATA SHEET

TEST METHOD: CCS
PAGE 1 OF 1

Client/Plant: HHO	Project #: 60562809	Date: 3/9/18	Operator(s): JC
Location: BVS 5	Condition:	Run #: 3	Duration (min): 60
DGM#: URS 001	CF (Yd): 0.975	$\Delta H_@$: 1.939	Cp: 0.84
IGS (Y/N):	P_{bar} ("Hg): 30.07	Height w.r.t. Barometer (ft):	P_{static} ("H_2O): 0.20
Initial Leak ✓ 0.0 @ 5 in Hg		Source Height (ft): 1	Duct Diameter ("): 9'
Final Leak ✓ 0.0 @ 4 in Hg		Duct Width ("): 5-8-1	Duct Length ("):

Sample Point/ Coil #	Time: Clock	Time: Run (min)	DGM Volume (ft^3)	Frosting Y/N	ΔH ("H_2O)	Duct temp	IGS skin Probe 650±25	IGS annular Filter	Impinger Exit ≤68	Coil Exit ≤ 150 (140-150)	DGM Inlet	DGM Outlet	O2 %	Pump Vac. ("Hg)
	1:43	0	950.320		0.35		N/A	355	31	135		37		2
		5	951.8		0.32			433	31	140		37		2
		10	953.4		0.36			527	31	141		36		2
		15	955.1		0.35			576	32	141		37		2.5
		20	956.6		0.37			360	32	141		37		2
		25	958.2		0.35			582	33	141		37		2
		30	959.7		0.35			568	33	141		37		2
		35	961.3		0.35			569	33	142		37		2
		40	962.6		0.35			563	33	142		37		2
		45	964.4		0.34			569	33	143		38		3
		50	965.9		0.34			557	33	142		37		2.5
		55	967.4		0.35			544	33	142		37		2.5
	2:43	60	968.960											

COMMENTS: Note: moved coil TC ~~+ inside~~ + near coil & insulated better

24 Sample Points Required
2 ports with 12 points each

Traverse Layout

Point	Distance (from wall - in)
1	2.27
2	7.24
3	12.74
4	19.12
5	27.00
6	38.45
7	69.55
8	81.00
9	88.88
10	95.26
11	100.8
12	105.7

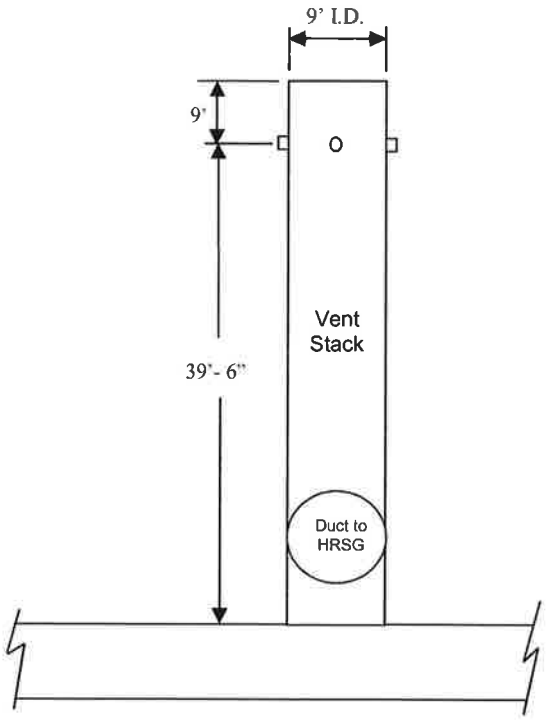

Schematic of Typical Bypass Vent Stack

Determination of Cyclonic Flow
Preliminary Velocity/Temperature Traverse
EPA Methods 1 and 2

Project: ByPass Stack Testing for GE | Console (or Temperature Readout) ID: URS-005
Project Number: ~~B0503935605~~ 62829 | Barometric Pressure (" Hg): 30.32
Facility: Haverhill Operations | Elevation (Relative to Barometer) (ft): 555
Source: HRSG #5 Stack | Static Pressure (" wc):
Operator: WCT / JE
Date: 5/16/16
Time: 1200 EST
Pitot Tube No.: HST-8
PTCF: 0.83

Pitot Tube Leak Check ("H_2O@"H_2O)

Initial (-)	✓	@	5"
Initial (+)	✓	@	5"
Final (-)	✓	@	6
Final (+)	✓	@	6

Traverse Point	Yaw Angle (°)	Velocity Head (ΔP) (in. wc)	Temperature (°F)
A1	0		
A3	+10		
A5	+5		
B1	0		
B3	+10		
B5	+5		
C1	+5		
C3	+5		
C5	0		
D1	+3		
D3	+5		
D5	+12		

Traverse Point	Yaw Angle (°)	Velocity Head (ΔP) (in. wc)	Temperature (°F)

All points < 20°

Average Yaw Angle: ~5 .(This is the average of the absolute value of the measurements)

If the average yaw angle exceeds 20°, Method 2 is not applicable for the determination of gas velocity.

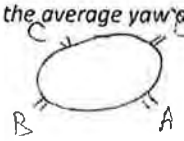

HRSG

RM Sample Data

Plant Name	Haverhill Coke Company
Sampling Location	Bypass Stack 5
Date	March 7-9, 2018
CEM Operator	Chandra Sastry
Project Number	60562829

Observed Values

Run No.	Date	Start Time	Stop Time	Start - Stop Time	Reference Method Obs. Value		
					O_2	CO_2	NOX
1	3/7/18	0840	1030	0840 - 1030	8.9	7.0	43.87
2	3/7/18	2000	2158	2000 - 2158	8.8	7.5	38.11
3	3/8/18	0025	0225	0025 - 0225	10.4	6.1	41.09
4	3/8/18	0600	0730	0600 - 0730	9.7	6.3	NA
5	3/8/18	1950	2150	1950 - 2150	9.4	6.9	NA
6	3/9/18	0100	0240	0100 - 0240	10.8	5.9	NA

Bias-Adjusted Values

Run No.	Date	Start Time	Stop Time	Start - Stop Time	Reference Method Adj. Value		
					O_2	CO_2	NOX
1	3/7/18	0840	1030	0840 - 1030	8.9	7.2	44.23
2	3/7/18	2000	2158	2000 - 2158	8.8	7.6	38.52
3	3/8/18	0025	0225	0025 - 0225	10.3	6.2	41.73
4	3/8/18	0600	0730	0600 - 0730	9.6	6.5	NA
5	3/8/18	1950	2150	1950 - 2150	9.2	7.1	NA
6	3/9/18	0100	0240	0100 - 0240	10.5	6.0	NA

CEM Data Correction Data Sheet

Plant Name	Haverhill Coke Company
Sampling Location	Bypass Stack 5
Date	7-Mar-18
CEM Operator	Chandra Sastry
Project Number	60562829
Pollutant	O_2

Run No.	Start Time	Stop Time	Obs. Conc. (% or ppm)	Calibration Data			Calibration Corrected Data (% or ppm)
				Cma	Co	Cm	
1	0840	1030	8.9	9.8	0.0	9.9	8.9
2	2000	2158	8.8	9.8	0.0	9.9	8.8
3	0025	0225	10.4	9.8	0.1	9.9	10.3
4	0600	0730	9.7	9.8	0.2	10.0	9.6
5	1950	2150	9.4	9.8	0.3	10.1	9.2
6	0100	0240	10.8	9.8	0.3	10.1	10.5

Calibration Error Correction

Cgas=(Cobs-Co)*(Cma/(Cm-Co))

CEM Data Correction Data Sheet

Plant Name	Haverhill Coke Company
Sampling Location	Bypass Stack 5
Date	7-Mar-18
CEM Operator	Chandra Sastry
Project Number	60562829
Pollutant	CO_2

Run No.	Start Time	Stop Time	Obs. Conc. (% or ppm)	Calibration Data			Calibration Corrected Data (% or ppm)
				Cma	Co	Cm	
1	0840	1030	7.0	10.0	0.1	9.6	7.2
2	2000	2158	7.5	10.0	0.2	9.7	7.6
3	0025	0225	6.1	10.0	0.2	9.7	6.2
4	0600	0730	6.3	10.0	0.2	9.6	6.5
5	1950	2150	6.9	10.0	0.2	9.5	7.1
6	0100	0240	5.9	10.0	0.2	9.6	6.0

Calibration Error Correction

Cgas=(Cobs-Co)*(Cma/(Cm-Co))

CEM Data Correction Data Sheet

Plant Name	Haverhill Coke Company
Sampling Location	Bypass Stack 5
Date	7-Mar-18
CEM Operator	Chandra Sastry
Project Number	60562829
Pollutant	NOX

Run No.	Start Time	Stop Time	Obs. Conc. (% or ppm)	Calibration Data			Calibration Corrected Data (% or ppm)
				Cma	Co	Cm	
1	0840	1030	43.9	45.8	0.3	45.4	44.2
2	2000	2158	38.1	45.8	0.2	45.3	38.5
3	0025	0225	41.1	45.8	0.3	45.1	41.7

Calibration Error Correction

Cgas=(Cobs-Co)*(Cma/(Cm-Co))

CEM CALIBRATION DATA

Sampling Location	Bypass Stack 5
Date	7-Mar-18
Run Number	1
Start Time	0840
Stop Time	1030

Plant Name	Haverhill Coke Company
Plant Rep.	Diana Starkweather
Team Leader	John Carson
CEM Operator	Chandra Sastry
Project Number	60562829

	Analyzer Number	Calibration Span
O2	05230A1	20.99
CO2	11047	20.67
NOX		90.9
SO2		
CO		

	Calibration Gas Specification (% of Span)	CALIBRATION ERROR CHECK				SYSTEM CAL CHECK					
		Calibration Value (% or ppm)	Cylinder Number (1)	Analyzer Calibration Response	Difference (% of Span)	Pre Run 1 System Response	Pre Run 1 Syst. Bias (% of Span)	Post Run 1 System Response	Post Run 1 Syst. Bias (% of Span)	Drift (% of Span)	Calibration Correction Factors
O2 Zero	0	0	UHP Nitrogen	-0.06	-0.29%	-0.02	0.19%	-0.01	0.24%	0.05%	Co=0.0
O2 Low	NR										
O2 Mid	40-60	9.84	ALM011065	9.91	0.33%	9.86	-0.24%	9.87	-0.19%	0.05%	Cm=9.9
O2 High	100	20.99	CC126166	21.02	0.14%						
CO2 Zero	0	0	UHP Nitrogen	0.03	0.15%	0.1	0.34%	0.15	0.58%	0.24%	Co=0.1
CO2 Low	NR										
CO2 Mid	40-60	9.95	ALM011065	9.73	-1.06%	9.56	-0.82%	9.65	-0.39%	0.44%	Cm=9.6
CO2 High	100	20.67	CC126166	20.66	-0.05%						
NOX Zero	0	0	UHP Nitrogen	0	0.00%	0.3	0.33%	0.2	0.22%	-0.11%	Co=0.3
NOX Low	NR										
NOX Mid	40-60	45.78	CC415347	45	-0.86%	45.7	0.77%	45.1	0.11%	-0.66%	Cm=45.4
NOX High	100	90.9	CC199922	91.5	0.66%						

$$Calibration\ Error = \left(\frac{Analyzer\ Response\ -Calibration\ Value}{Analyzer\ Span}\right) \times 100\ ;\text{allowable error} = \pm 2\%$$

$$System\ Bias = \left(\frac{System\ Response\ -Analyzer\ Response}{Analyzer\ Span}\right) \times 100\ ;\text{allowable error} = \pm 5\%$$

$$Drift = \left(\frac{Post\ Test\ System\ Response\ -Pre\ Test\ System\ Response}{Analyzer\ Span}\right) \times 100\ ;\text{allowable error} = \pm 3\%$$

$$C_0 = \left(\frac{Pre\ Test\ System\ Zero\ Response + Post\ Test\ System\ Zero\ Response}{2}\right)$$

$$C_m = \left(\frac{Pre\ Test\ System\ Upscale\ Response + Post\ Test\ System\ Upscale\ Response}{2}\right)$$

CEM CALIBRATION DATA

Sampling Location	Bypass Stack 5
Date	7-Mar-18
Run Number	2
Start Time	2000
Stop Time	2158

Plant Name	Haverhill Coke Company
Plant Rep.	Diana Starkweather
Team Leader	John Carson
CEM Operator	Chandra Sastry
Project Number	60562829

	Analyzer Number	Calibration Span
O2	05230A1	20.99
CO2	11047	20.67
NOX		90.9
SO2		
CO		

	Calibration Gas Specification (% of Span)	CALIBRATION ERROR CHECK				SYSTEM CAL CHECK					
		Calibration Value (% or ppm)	Cylinder Number (1)	Analyzer Calibration Response	Difference (% of Span)	Pre Run 2 System Response	Pre Run 2 Syst. Bias (% of Span)	Post Run 2 System Response	Post Run 2 Syst. Bias (% of Span)	Drift (% of Span)	Calibration Correction Factors
O2 Zero	0	0	UHP Nitrogen	-0.06	-0.29%	-0.01	0.24%	-0.02	0.19%	-0.05%	Co=0.0
O2 Low	NR										
O2 Mid	40-60	9.84	ALM011065	9.91	0.33%	9.87	-0.19%	9.89	-0.10%	0.10%	Cm=9.9
O2 High	100	20.99	CC126166	21.02	0.14%						
CO2 Zero	0	0	UHP Nitrogen	0.03	0.15%	0.15	0.58%	0.2	0.82%	0.24%	Co=0.2
CO2 Low	NR										
CO2 Mid	40-60	9.95	ALM011065	9.73	-1.06%	9.65	-0.39%	9.74	0.05%	0.44%	Cm=9.7
CO2 High	100	20.67	CC126166	20.66	-0.05%						
NOX Zero	0	0	UHP Nitrogen	0	0.00%	0.2	0.22%	0.2	0.22%	0.00%	Co=0.2
NOX Low	NR										
NOX Mid	40-60	45.78	CC415347	45	-0.86%	45.1	0.11%	45.4	0.44%	0.33%	Cm=45.3
NOX High	100	90.9	CC199922	91.5	0.66%						

$$Calibration\ Error = \left(\frac{Analyzer\ Response\ - Calibration\ Value}{Analyzer\ Span}\right) \times 100\ ;\ \text{allowable error} = \pm 2\%$$

$$System\ Bias = \left(\frac{System\ Response\ - Analyzer\ Response}{Analyzer\ Span}\right) \times 100\ ;\ \text{allowable error} = \pm 5\%$$

$$Drift = \left(\frac{Post\ Test\ System\ Response\ - Pre\ Test\ System\ Response}{Analyzer\ Span}\right) \times 100\ ;\ \text{allowable error} = \pm 3\%$$

$$C_0 = \left(\frac{Pre\ Test\ System\ Zero\ Response + Post\ Test\ System\ Zero\ Response}{2}\right)$$

$$C_m = \left(\frac{Pre\ Test\ System\ Upscale\ Response + Post\ Test\ System\ Upscale\ Response}{2}\right)$$

CEM CALIBRATION DATA

Sampling Location	Bypass Stack 5
Date	8-Mar-18
Run Number	3
Start Time	0025
Stop Time	0225

Plant Name	Haverhill Coke Company
Plant Rep.	Diana Starkweather
Team Leader	John Carson
CEM Operator	Chandra Sastry
Project Number	60562829

	Analyzer Number	Calibration Span
O2	05230A1	20.99
CO2	11047	20.67
NOX		90.9
SO2		
CO		

	Calibration Gas Specification (% of Span)	CALIBRATION ERROR CHECK				SYSTEM CAL CHECK					
		Calibration Value (% or ppm)	Cylinder Number (1)	Analyzer Calibration Response	Difference (% of Span)	Pre Run 3 System Response	Pre Run 3 Syst. Bias (% of Span)	Post Run 3 System Response	Post Run 3 Syst. Bias (% of Span)	Drift (% of Span)	Calibration Correction Factors
O2 Zero	0	0	UHP Nitrogen	-0.06	-0.29%	-0.02	0.19%	0.14	0.95%	0.76%	Co=0.1
O2 Low	NR										
O2 Mid	40-60	9.84	ALM011065	9.91	0.33%	9.89	-0.10%	9.99	0.38%	0.48%	Cm=9.9
O2 High	100	20.99	CC126166	21.02	0.14%						
CO2 Zero	0	0	UHP Nitrogen	0.03	0.15%	0.2	0.82%	0.26	1.11%	0.29%	Co=0.2
CO2 Low	NR										
CO2 Mid	40-60	9.95	ALM011065	9.73	-1.06%	9.74	0.05%	9.63	-0.48%	-0.53%	Cm=9.7
CO2 High	100	20.67	CC126166	20.66	-0.05%						
NOX Zero	0	0	UHP Nitrogen	0	0.00%	0.2	0.22%	0.3	0.33%	0.11%	Co=0.3
NOX Low	NR										
NOX Mid	40-60	45.78	CC415347	45	-0.86%	45.4	0.44%	44.7	-0.33%	-0.77%	Cm=45.1
NOX High	100	90.9	CC199922	91.5	0.66%						

$$Calibration\ Error = \left(\frac{Analyzer\ Response\ - Calibration\ Value}{Analyzer\ Span}\right) \times 100\ ;\ \text{allowable error} = \pm 2\%$$

$$System\ Bias = \left(\frac{System\ Response\ - Analyzer\ Response}{Analyzer\ Span}\right) \times 100\ ;\ \text{allowable error} = \pm 5\%$$

$$Drift = \left(\frac{Post\ Test\ System\ Response\ - Pre\ Test\ System\ Response}{Analyzer\ Span}\right) \times 100\ ;\ \text{allowable error} = \pm 3\%$$

$$C_0 = \left(\frac{Pre\ Test\ System\ Zero\ Response + Post\ Test\ System\ Zero\ Response}{2}\right)$$

$$C_m = \left(\frac{Pre\ Test\ System\ Upscale\ Response + Post\ Test\ System\ Upscale\ Response}{2}\right)$$

CEM CALIBRATION DATA

Sampling Location	Bypass Stack 5
Date	8-Mar-18
Run Number	4
Start Time	0600
Stop Time	0730

Plant Name	Haverhill Coke Company
Plant Rep.	Diana Starkweather
Team Leader	John Carson
CEM Operator	Chandra Sastry
Project Number	60562829

	Analyzer Number	Calibration Span
O2	05230A1	20.99
CO2	11047	20.67
NOX		90.9
SO2		
CO		

	Calibration Gas Specification (% of Span)	CALIBRATION ERROR CHECK				SYSTEM CAL CHECK					
		Calibration Value (% or ppm)	Cylinder Number (1)	Analyzer Calibration Response	Difference (% of Span)	Pre Run 4		Post Run 4		Drift (% of Span)	Calibration Correction Factors
						System Response	Syst. Bias (% of Span)	System Response	Syst. Bias (% of Span)		
O2 Zero	0	0	UHP Nitrogen	-0.06	-0.29%	0.14	0.95%	0.26	1.52%	0.57%	Co=0.2
O2 Low	NR										
O2 Mid	40-60	9.84	ALM011065	9.91	0.33%	9.99	0.38%	10.05	0.67%	0.29%	Cm=10.0
O2 High	100	20.99	CC126166	21.02	0.14%						
CO2 Zero	0	0	UHP Nitrogen	0.03	0.15%	0.26	1.11%	0.17	0.68%	-0.44%	Co=0.2
CO2 Low	NR										
CO2 Mid	40-60	9.95	ALM011065	9.73	-1.06%	9.63	-0.48%	9.49	-1.16%	-0.68%	Cm=9.6
CO2 High	100	20.67	CC126166	20.66	-0.05%						

$$Calibration\ Error = \left(\frac{Analyzer\ Response\ -Calibration\ Value}{Analyzer\ Span}\right) \times 100\ ;\text{allowable error} = \pm 2\%$$

$$System\ Bias = \left(\frac{System\ Response\ -Analyzer\ Response}{Analyzer\ Span}\right) \times 100\ ;\text{allowable error} = \pm 5\%$$

$$Drift = \left(\frac{Post\ Test\ System\ Response\ -Pre\ Test\ System\ Response}{Analyzer\ Span}\right) \times 100\ ;\text{allowable error} = \pm 3\%$$

$$C_0 = \left(\frac{Pre\ Test\ System\ Zero\ Response + Post\ Test\ System\ Zero\ Response}{2}\right)$$

$$C_m = \left(\frac{Pre\ Test\ System\ Upscale\ Response + Post\ Test\ System\ Upscale\ Response}{2}\right)$$

CEM CALIBRATION DATA

Sampling Location	Bypass Stack 5
Date	8-Mar-18
Run Number	5
Start Time	1950
Stop Time	2150

Plant Name	Haverhill Coke Company
Plant Rep.	Diana Starkweather
Team Leader	John Carson
CEM Operator	Chandra Sastry
Project Number	60562829

	Analyzer Number	Calibration Span
O2	05230A1	20.99
CO2	11047	20.67
NOX		90.9
SO2		
CO		

	Calibration Gas Specification (% of Span)	CALIBRATION ERROR CHECK				SYSTEM CAL CHECK					
		Calibration Value (% or ppm)	Cylinder Number (1)	Analyzer Calibration Response	Difference (% of Span)	Pre Run 5 System Response	Pre Run 5 Syst. Bias (% of Span)	Post Run 5 System Response	Post Run 5 Syst. Bias (% of Span)	Drift (% of Span)	Calibration Correction Factors
O2 Zero	0	0	UHP Nitrogen	-0.06	-0.29%	0.26	1.52%	0.29	1.67%	0.14%	Co=0.3
O2 Low	NR										
O2 Mid	40-60	9.84	ALM011065	9.91	0.33%	10.05	0.67%	10.09	0.86%	0.19%	Cm=10.1
O2 High	100	20.99	CC126166	21.02	0.14%						
CO2 Zero	0	0	UHP Nitrogen	0.03	0.15%	0.17	0.68%	0.22	0.92%	0.24%	Co=0.2
CO2 Low	NR										
CO2 Mid	40-60	9.95	ALM011065	9.73	-1.06%	9.49	-1.16%	9.57	-0.77%	0.39%	Cm=9.5
CO2 High	100	20.67	CC126166	20.66	-0.05%						

$$Calibration\ Error = \left(\frac{Analyzer\ Response\ -\ Calibration\ Value}{Analyzer\ Span}\right) \times 100\ ;\ \text{allowable error} = \pm 2\%$$

$$System\ Bias = \left(\frac{System\ Response\ -\ Analyzer\ Response}{Analyzer\ Span}\right) \times 100\ ;\ \text{allowable error} = \pm 5\%$$

$$Drift = \left(\frac{Post\ Test\ System\ Response\ -\ Pre\ Test\ System\ Response}{Analyzer\ Span}\right) \times 100\ ;\ \text{allowable error} = \pm 3\%$$

$$C_0 = \left(\frac{Pre\ Test\ System\ Zero\ Response + Post\ Test\ System\ Zero\ Response}{2}\right)$$

$$C_m = \left(\frac{Pre\ Test\ System\ Upscale\ Response + Post\ Test\ System\ Upscale\ Response}{2}\right)$$

CEM CALIBRATION DATA

Sampling Location	Bypass Stack 5
Date	9-Mar-18
Run Number	6
Start Time	0100
Stop Time	0240

Plant Name	Haverhill Coke Company
Plant Rep.	Diana Starkweather
Team Leader	John Carson
CEM Operator	Chandra Sastry
Project Number	60562829

	Analyzer Number	Calibration Span
O2	05230A1	20.99
CO2	11047	20.67
NOX		90.9
SO2		
CO		

	Calibration Gas Specification (% of Span)	CALIBRATION ERROR CHECK				SYSTEM CAL CHECK					
		Calibration Value (% or ppm)	Cylinder Number (1)	Analyzer Calibration Response	Difference (% of Span)	Pre Run 6		Post Run 6		Drift (% of Span)	Calibration Correction Factors
						System Response	Syst. Bias (% of Span)	System Response	Syst. Bias (% of Span)		
O2 Zero	0	0	UHP Nitrogen	-0.06	-0.29%	0.29	1.67%	0.37	2.05%	0.38%	Co=0.3
O2 Low	NR										
O2 Mid	40-60	9.84	ALM011065	9.91	0.33%	10.09	0.86%	10.12	1.00%	0.14%	Cm=10.1
O2 High	100	20.99	CC126166	21.02	0.14%						
CO2 Zero	0	0	UHP Nitrogen	0.03	0.15%	0.22	0.92%	0.22	0.92%	0.00%	Co=0.2
CO2 Low	NR										
CO2 Mid	40-60	9.95	ALM011065	9.73	-1.06%	9.57	-0.77%	9.58	-0.73%	0.05%	Cm=9.6
CO2 High	100	20.67	CC126166	20.66	-0.05%						

$$Calibration\ Error = \left(\frac{Analyzer\ Response\ -\ Calibration\ Value}{Analyzer\ Span}\right) \times 100\ ;\ \text{allowable error} = \pm 2\%$$

$$System\ Bias = \left(\frac{System\ Response\ -\ Analyzer\ Response}{Analyzer\ Span}\right) \times 100\ ;\ \text{allowable error} = \pm 5\%$$

$$Drift = \left(\frac{Post\ Test\ System\ Response\ -\ Pre\ Test\ System\ Response}{Analyzer\ Span}\right) \times 100\ ;\ \text{allowable error} = \pm 3\%$$

$$C_0 = \left(\frac{Pre\ Test\ System\ Zero\ Response + Post\ Test\ System\ Zero\ Response}{2}\right)$$

$$C_m = \left(\frac{Pre\ Test\ System\ Upscale\ Response + Post\ Test\ System\ Upscale\ Response}{2}\right)$$

NO_2-NO Converter Efficiency Test (NO_2 Cylinder Method)

Date:	3/7/2018	Location:	Bypass Stack 5
Project:	CD Testing	Technician:	Chandra Sastry
Analyzer:	Thermo Environmental	Operating Range:	0-100
Model:	42i-HL		
S/N:	828232281		

Cylinder Number	Cal Gas Concentration	NO_x Analyzer Response in Direct Cal Mode
CC504828	50.19	45.4

$$\text{Converter Efficiency} = \frac{C_{Dir}}{C_v} \times 100$$

Converter Efficiency = **<u>90.5</u>** % (Must be greater than or equal to 90 percent)

Procedures

1. Calibrate analyzer
2. Introduce a 40 to 60 ppmv NO_2 calibration gas cylinder to the analyzer in direct cal mode and record the NO_x response.
3. Calculate efficiency.

3/7/18 - Direct Cal

Time	O2	CO2	NOX
6:42	-0.06	0.03	0
6:43	-0.12	0.03	-0.1
6:44	-0.08	0.03	-0.1
6:45	18.27	18.05	0
6:46	21.02	20.66	-0.1
6:47	21.04	20.63	-0.1
6:48	15.07	14.6	-0.1
6:49	9.91	9.73	-0.1
6:50	9.89	9.66	-0.1
6:51	4.84	4.5	19.7
6:52	-0.01	0.09	88.9
6:53	-0.03	0.06	88.6
6:54	-0.04	0.05	92.3
6:55	-0.05	0.05	91.5
6:56	0.09	0.19	90.5
6:57	-0.05	0.04	50.1
6:58	-0.06	0.03	45
6:59	-0.06	0.03	44.8

3/7/18 - NOX Conv Test

Time	O2	CO2	NOX
7:01	5.89	0.1	5.0
7:02	21.05	0.02	32.6
7:03	21.09	0.02	36.1
7:04	21.1	0.01	39.1
7:05	21.1	0.01	39.4
7:06	21.11	0.01	39.4
7:07	21.12	0.01	40.4
7:08	21.12	0.01	41.4
7:09	21.13	0.02	42.1
7:10	21.13	0.03	42.7
7:11	21.13	0.03	43.1
7:12	21.14	0.02	43.6
7:13	21.14	0.02	43.9
7:14	21.14	0.02	44.2
7:15	21.14	0.02	44.5
7:16	21.14	0.02	44.8
7:17	21.13	0.02	45.0
7:18	21.31	0.02	45.1
7:19	21.3	0.01	45.3
7:20	21.72	0.01	45.4

3/7/18 - System Cal

Time	O2	CO2	NOX
7:30	-0.01	0.12	0.4
7:31	-0.02	0.1	0.3
7:32	1.09	1.24	4.3
7:33	0.28	0.53	42.8
7:34	0.26	0.5	46.1
7:35	0.27	0.5	44.8
7:36	0.28	0.5	45.7
7:37	0.26	0.48	45.7
7:38	2.07	2.18	47.1
7:39	9.81	9.3	12.8
7:40	9.85	9.49	0.5
7:41	9.86	9.56	0.2

3/7/18 - Run 1

Time	O2	CO2	NOX
8:40	8.08	7.65	42.8
8:41	8.14	7.59	43.8
8:42	8.27	7.47	44.2
8:43	8.41	7.35	44.2
8:44	8.46	7.31	43.7
8:45	8.45	7.33	43.7
8:46	8.37	7.4	43.3
8:47	8.39	7.37	43.5
8:48	8.35	7.4	43.3
8:49	8.38	7.38	43.2
8:50	8.53	7.25	43.6
8:51	8.51	7.27	43.9
8:52	8.48	7.29	43.6
8:53	8.39	7.35	43.7
8:54	8.44	7.31	43.4
8:55	8.4	7.33	43.8
8:56	8.43	7.32	44.1
8:57	8.52	7.23	43.2
8:58	8.67	7.07	43.5
8:59	8.61	7.13	44.2
9:00	8.62	7.12	43.9
9:01	8.63	7.11	43.9
9:02	8.63	7.11	43.5
9:03	8.61	7.14	43.4
9:04	8.61	7.14	43.2
9:05	8.63	7.12	43.3
9:06	8.62	7.14	43.7
9:07	8.81	6.97	43.8
9:08	8.7	7.09	44.3
9:09	8.66	7.13	43.5
9:10	8.69	7.1	43.7
9:11	8.7	7.09	43.6
9:12	8.66	7.14	43.7
9:13	8.55	7.24	43.6
9:14	8.71	7.08	43.2
9:15	8.74	7.06	43.8
9:16	8.76	7.05	43.8
9:17	8.9	6.93	43.8
9:18	8.83	6.99	43.9
9:19	8.84	6.99	43.6
9:20	8.8	7.02	43.6
9:21	8.8	7.04	44
9:22	8.65	7.16	43.4
9:23	8.72	7.1	43.5
9:24	8.88	6.95	43.8
9:25	8.79	7.04	44.4
9:26	8.95	6.9	44.1
9:27	8.95	6.9	44.1
9:28	8.95	6.9	43.8
9:29	8.88	6.96	43.8
9:30	8.74	7.09	43.7
9:31	8.85	6.99	43
9:32	8.89	6.95	43.4
9:33	8.88	6.97	44.1

3/7/18 - Run 1

Time	O2	CO2	NOX
9:34	8.78	7.06	44.4
9:35	8.87	6.98	43.7
9:36	8.88	6.97	44.2
9:37	8.95	6.92	43.5
9:38	8.95	6.91	43.7
9:39	9.02	6.84	44.7
9:40	9.07	6.81	44.8
9:41	9.18	6.71	43.6
9:42	9.18	6.7	43.9
9:43	9.11	6.78	43.9
9:44	9	6.89	44.2
9:45	9.15	6.73	44
9:46	9.14	6.76	44.1
9:47	8.97	6.92	43.6
9:48	8.94	6.94	44.1
9:49	9.03	6.86	44.1
9:50	9.11	6.79	45
9:51	9.1	6.79	44.1
9:52	9.14	6.76	44.1
9:53	9.01	6.88	44.9
9:54	9.1	6.8	44.7
9:55	9.18	6.72	44.6
9:56	9.13	6.78	44.7
9:57	9.26	6.66	45.1
9:58	9.26	6.65	44.6
9:59	9.2	6.72	44.3
10:00	9.21	6.71	43.9
10:01	9.24	6.69	44.6
10:02	9.24	6.7	44.4
10:03	9.25	6.7	44.2
10:04	9.33	6.64	44.3
10:05	9.24	6.74	44.3
10:06	9.3	6.66	44.3
10:07	9.11	6.83	43.8
10:08	9.05	6.89	45
10:09	9.2	6.75	45
10:10	9.09	6.86	45.1
10:11	9.1	6.84	44.7
10:12	9.11	6.83	44.6
10:13	9.12	6.83	44.5
10:14	9.2	6.74	44.4
10:15	9.23	6.76	44.2
10:16	9.14	6.85	44
10:17	9.16	6.82	44.4
10:18	9.27	6.7	44.7
10:19	9.22	6.73	44.4
10:20	9.25	6.7	44.3
10:21	9.32	6.64	43.8
10:22	9.04	6.9	43.7
10:23	9.13	6.83	43.7
10:24	9.19	6.78	43.5
10:25	9.2	6.79	42.9
10:26	9.31	6.69	41.5
10:27	9.31	6.68	42.7

3/7/18 - Run 1

Time	O2	CO2	NOX
10:28	9.39	6.58	41.5
10:29	9.38	6.59	42.2
10:30	9.46	6.52	41.7
Average	**8.90**	**6.96**	**43.87**

3/7/18 - Post Cal Run 1

Time	O2	CO2	NOX
10:35	7.97	3	34.5
10:36	0.04	0.26	1.9
10:37	0	0.18	0.3
10:38	-0.01	0.15	0.2
10:39	-0.02	0.13	0.2
10:40	0.94	0.83	15.7
10:41	-0.02	0.12	44.6
10:42	-0.03	0.1	45
10:43	-0.03	0.1	45.1
10:44	-0.03	0.09	45
10:45	5.92	5.55	34.5
10:46	9.84	9.46	0.9
10:47	9.86	9.58	0.3
10:48	9.87	9.65	0.2

3/7/18 - Run 2

Time	O2	CO2	NOX
20:00	8.54	7.65	37.8
20:01	8.47	7.73	37.9
20:02	8.5	7.69	37.8
20:03	8.55	7.69	37.7
20:04	8.51	7.77	38.1
20:05	8.56	7.71	37.5
20:06	8.62	7.63	38.7
20:07	8.61	7.64	38.4
20:08	8.68	7.65	38.4
20:09	8.56	7.75	38.1
20:10	8.59	7.7	37.5
20:11	8.66	7.57	37.8
20:12	8.62	7.62	38
20:13	8.66	7.59	37.7
20:14	8.6	7.64	37.9
20:15	8.6	7.63	37.5
20:16	8.61	7.62	37.5
20:17	8.73	7.52	37.4
20:18	8.6	7.64	38.2
20:19	8.54	7.71	37.7
20:20	8.6	7.66	38.2
20:21	8.59	7.66	37.9
20:22	8.59	7.65	37.3
20:23	8.67	7.58	37.4
20:24	8.56	7.68	37.2
20:25	8.57	7.68	37.2
20:26	8.57	7.68	37.5
20:27	8.66	7.61	38
20:28	8.65	7.61	38.2
20:29	8.61	7.66	38.3
20:30	8.62	7.67	38.1
20:31	8.67	7.63	38.4
20:32	8.64	7.64	38.1
20:33	8.67	7.62	37.9
20:34	8.66	7.62	38.2
20:35	8.67	7.6	37.8
20:36	8.68	7.58	38
20:37	8.66	7.61	38.5
20:38	8.69	7.59	38.3
20:39	8.69	7.59	38.2
20:40	8.74	7.53	38.3
20:41	8.71	7.57	38.5
20:42	8.72	7.57	38
20:43	8.71	7.58	37.8
20:44	8.72	7.56	38
20:45	8.7	7.6	38.1
20:46	8.86	7.45	37.9
20:47	8.81	7.5	38.3
20:48	8.89	7.45	38.1
20:49	8.83	7.48	38.3
20:50	8.78	7.49	37.9
20:51	8.74	7.57	38.1
20:52	8.81	7.51	38
20:53	8.82	7.48	37.6

3/7/18 - Run 2

Time	O2	CO2	NOX
20:54	8.86	7.43	37.6
20:55	8.78	7.51	37.7
20:56	8.79	7.49	37.6
20:57	8.8	7.48	38
20:58	9.05	7.25	38.3
20:59	8.9	7.39	38.4
21:00	8.85	7.44	38
21:01	8.85	7.44	37.7
21:02	8.85	7.44	37.9
21:03	8.95	7.35	37.9
21:04	9.09	7.21	38.1
21:05	9.04	7.24	38.2
21:06	8.98	7.31	38.2
21:07	9.05	7.25	38.6
21:08	8.94	7.35	38.1
21:09	8.9	7.39	37.6
21:10	8.98	7.31	37.6
21:11	9.09	7.21	37.7
21:12	8.92	7.37	38.1
21:13	8.91	7.38	38
21:14	8.87	7.41	38.1
21:15	8.9	7.39	38
21:16	8.88	7.41	37.9
21:17	8.92	7.37	38
21:18	8.89	7.4	37.9
21:19	8.87	7.42	37.7
21:20	8.87	7.41	37.7
21:21	8.93	7.37	38.1
21:22	8.96	7.34	38
21:23	8.92	7.37	37.7
21:24	8.93	7.36	37.8
21:25	8.91	7.39	37.6
21:26	8.95	7.35	37.4
21:27	9.07	7.23	37.9
21:28	8.89	7.4	38
21:29	8.93	7.37	37.7
21:30	8.9	7.4	38.2
21:31	8.97	7.34	37.9
21:32	8.9	7.4	38
21:33	8.91	7.39	37.8
21:34	8.99	7.32	37.9
21:35	8.98	7.33	38.5
21:36	8.99	7.33	38.4
21:37	9.1	7.22	38.4
21:38	9.34	7.01	39
21:39	9.04	7.29	40
21:40	9.01	7.32	38.3
21:41	8.97	7.35	38
21:42	9.04	7.28	38.2
21:43	9	7.32	38.6
21:44	9.23	7.1	38.7
21:45	9.08	7.25	39.5
21:46	9.03	7.29	38.3
21:47	9.09	7.24	38.8

3/7/18 - Run 2

Time	O2	CO2	NOX
21:48	9.09	7.25	38.8
21:49	9.16	7.19	39
21:50	9.1	7.25	39.2
21:51	9.14	7.21	39
21:52	9.11	7.24	38.9
21:53	9.08	7.26	38.3
21:54	9.11	7.24	38.8
21:55	9.15	7.2	38.6
21:56	9.19	7.15	39.1
21:57	9.11	7.23	39.3
21:58	9.14	7.21	39.1
Average	**8.84**	**7.45**	**38.11**

3/7/18 - Post Cal Run 2

Time	O2	CO2	NOX
22:00	8.79	5.18	39
22:01	0.07	0.39	9.1
22:02	0	0.25	0.4
22:03	-0.02	0.2	0.2
22:04	-0.03	0.18	0.2
22:05	-0.04	0.16	0.1
22:06	0.03	0.23	0.5
22:07	-0.04	0.14	41.7
22:08	-0.04	0.13	45.5
22:09	-0.05	0.13	45.4
22:10	-0.05	0.14	45.3
22:11	4.63	4.41	40.8
22:12	9.86	9.55	2.9
22:13	9.88	9.68	0.3
22:14	9.89	9.74	0.2

3/8/18 - Run 3

Time	O2	CO2	NOX
0:25	10.14	6.4	41.5
0:26	10.28	6.26	40.9
0:27	10.14	6.4	40.9
0:28	10.35	6.2	40.1
0:29	10.37	6.17	40.7
0:30	10.29	6.26	40.8
0:31	10.17	6.39	40
0:32	10.06	6.49	39.4
0:33	10.14	6.4	39.6
0:34	10.03	6.51	40
0:35	10.11	6.42	39.9
0:36	10.27	6.28	40
0:37	10.06	6.5	41.2
0:38	10.09	6.46	40
0:39	10.07	6.48	41
0:40	10.01	6.53	40.2
0:41	10.11	6.43	40.1
0:42	10.14	6.4	40.7
0:43	10.24	6.3	40.5
0:44	10.2	6.34	40.3
0:45	10.29	6.25	40.7
0:46	10.28	6.26	41.5
0:47	10.15	6.41	41.9
0:48	10.14	6.42	40.8
0:49	10.21	6.36	40.1
0:50	10.21	6.34	40.9
0:51	10.2	6.36	41.3
0:52	10.02	6.53	41.1
0:53	10.15	6.38	40.2
0:54	10.16	6.37	40.5
0:55	10.02	6.5	40.9
0:56	10.12	6.4	40.1
0:57	10.2	6.32	40
0:58	10.15	6.37	40.3
0:59	10.25	6.27	40.3
1:00	10.31	6.22	40.4
1:01	10.44	6.08	41.8
1:02	10.3	6.23	42.3
1:03	10.38	6.17	41.5
1:04	10.41	6.13	42
1:05	10.26	6.3	41.3
1:06	10.23	6.34	41.3
1:07	10.23	6.33	41.3
1:08	10.17	6.38	40.8
1:09	10.24	6.31	41
1:10	10.29	6.26	41.7
1:11	10.35	6.19	41.9
1:12	10.26	6.27	41.9
1:13	10.28	6.25	42
1:14	10.31	6.22	41.8
1:15	10.32	6.2	41.3
1:16	10.36	6.15	41.7
1:17	10.44	6.07	42.4
1:18	10.27	6.24	42.5

3/8/18 - Run 3

Time	O2	CO2	NOX
1:19	10.32	6.2	41.6
1:20	10.25	6.27	41.6
1:21	10.24	6.28	41.4
1:22	10.22	6.29	41
1:23	10.29	6.21	41.5
1:24	10.38	6.13	41.8
1:25	10.4	6.11	41.8
1:26	10.42	6.08	40.9
1:27	10.52	5.98	41.4
1:28	10.54	5.97	41.7
1:29	10.55	5.95	41.6
1:30	10.78	5.73	41.6
1:31	10.66	5.84	42.2
1:32	10.8	5.73	41.7
1:33	10.53	5.98	42.8
1:34	10.5	6.01	41.9
1:35	10.57	5.94	42.1
1:36	10.41	6.1	42.3
1:37	10.3	6.21	41.8
1:38	10.36	6.15	41.2
1:39	10.35	6.16	41.5
1:40	10.58	5.92	41
1:41	10.58	5.93	42
1:42	10.38	6.13	41.5
1:43	10.39	6.13	40.9
1:44	10.39	6.13	40.9
1:45	10.3	6.2	40.9
1:46	10.58	5.92	40.8
1:47	10.53	5.98	41.8
1:48	10.41	6.1	41.4
1:49	10.6	5.91	41
1:50	10.61	5.91	41.7
1:51	10.63	5.87	41.6
1:52	10.74	5.79	41.4
1:53	10.82	5.73	42.2
1:54	10.7	5.8	42.7
1:55	10.5	6.01	42.3
1:56	10.7	5.81	41.3
1:57	10.68	5.84	42.1
1:58	10.57	5.95	41.9
1:59	10.56	6	41.4
2:00	10.49	6.05	41.3
2:01	10.8	5.75	41.1
2:02	10.62	5.93	42
2:03	10.44	6.17	40.7
2:04	10.48	6.1	39.9
2:05	10.66	5.88	40.5
2:06	10.83	5.72	41.1
2:07	10.81	5.73	41.5
2:08	10.64	5.89	42.1
2:09	10.58	5.94	40.7
2:10	10.64	5.86	40.5
2:11	10.59	5.89	40.9
2:12	10.76	5.75	40.7

3/8/18 - Run 3

Time	O2	CO2	NOX
2:13	10.63	5.84	41.5
2:14	10.65	5.82	40.6
2:15	10.69	5.78	41
2:16	10.55	5.91	40.6
2:17	10.6	5.85	39.7
2:18	10.73	5.74	39.8
2:19	10.88	5.67	39.9
2:20	10.59	5.86	40.8
2:21	10.83	5.7	39.6
2:22	10.71	5.75	40.9
2:23	10.63	5.82	39.8
2:24	10.81	5.69	39.4
2:25	10.96	5.64	39.6
Average	**10.41**	**6.11**	**41.09**

3/8/18 - Post Cal Run 3

Time	O2	CO2	NOX
2:35	10.85	5.69	37
2:36	12.51	5.24	37.5
2:37	10.05	9.4	7.2
2:38	10	9.57	0.4
2:39	9.99	9.63	0.3
2:40	9.4	8.9	0.3
2:41	0.3	0.71	28.1
2:42	0.16	0.34	44.6
2:43	0.14	0.26	44.7

3/8/18 - Run 4

Time	O2	CO2
6:00	9.38	6.59
6:01	9.43	6.56
6:02	9.39	6.62
6:03	9.42	6.6
6:04	9.51	6.53
6:05	9.45	6.55
6:06	9.48	6.53
6:07	9.53	6.49
6:08	9.46	6.57
6:09	9.46	6.56
6:10	9.48	6.55
6:11	9.47	6.57
6:12	9.49	6.56
6:13	9.48	6.55
6:14	9.5	6.55
6:15	9.51	6.55
6:16	9.53	6.53
6:17	9.48	6.59
6:18	9.5	6.56
6:19	9.5	6.57
6:20	9.61	6.46
6:21	9.59	6.47
6:22	9.65	6.41
6:23	9.7	6.37
6:24	9.58	6.47
6:25	9.59	6.46
6:26	9.58	6.47
6:27	9.56	6.48
6:28	9.66	6.4
6:29	9.69	6.36
6:30	9.71	6.35
6:31	9.64	6.43
6:32	9.73	6.35
6:33	9.68	6.39
6:34	9.7	6.39
6:35	9.71	6.36
6:36	10.01	6.05
6:37	9.73	6.33
6:38	9.69	6.36
6:39	9.7	6.39
6:40	9.74	6.33
6:41	9.7	6.34
6:42	9.71	6.34
6:43	9.75	6.31
6:44	9.79	6.26
6:45	9.76	6.28
6:46	9.83	6.22
6:47	9.77	6.3
6:48	9.72	6.33
6:49	9.78	6.27
6:50	9.72	6.32
6:51	9.8	6.24
6:52	9.78	6.28
6:53	9.73	6.33

3/8/18 - Run 4

Time	O2	CO2
6:54	9.73	6.35
6:55	9.83	6.26
6:56	9.77	6.35
6:57	9.81	6.3
6:58	9.8	6.31
6:59	9.85	6.24
7:00	9.83	6.25
7:01	9.83	6.27
7:02	9.88	6.22
7:03	9.85	6.25
7:04	9.84	6.25
7:05	9.93	6.15
7:06	9.85	6.23
7:07	9.86	6.25
7:08	9.9	6.2
7:09	9.89	6.21
7:10	9.92	6.21
7:11	9.91	6.21
7:12	9.91	6.21
7:13	9.91	6.21
7:14	9.92	6.2
7:15	9.92	6.22
7:16	10.02	6.13
7:17	9.95	6.22
7:18	9.99	6.17
7:19	10.01	6.14
7:20	10.0	6.1
7:21	9.99	6.16
7:22	9.99	6.16
7:23	10.03	6.11
7:24	10.04	6.12
7:25	10.09	6.07
7:26	10.11	6.05
7:27	10.02	6.12
7:28	10.09	6.06
7:29	10.08	6.06
7:30	10.11	6.03
Average	**9.75**	**6.33**

3/8/18 - Post Cal Run 4

Time	O2	CO2
7:35	11.58	5.2
7:36	2.03	0.6
7:37	0.3	0.26
7:38	0.27	0.2
7:39	0.26	0.17
7:40	6.01	5.24
7:41	10.03	9.26
7:42	10.04	9.42
7:43	10.05	9.49

3/8/18 - Run 5

Time	O2	CO2
19:50	9.44	6.77
19:51	9.7	6.53
19:52	9.5	6.72
19:53	9.37	6.83
19:54	9.5	6.7
19:55	9.64	6.59
19:56	9.52	6.7
19:57	9.46	6.76
19:58	9.55	6.69
19:59	9.48	6.73
20:00	9.48	6.74
20:01	9.49	6.73
20:02	9.39	6.83
20:03	9.64	6.58
20:04	9.65	6.59
20:05	9.43	6.79
20:06	9.44	6.78
20:07	9.42	6.79
20:08	9.47	6.75
20:09	9.44	6.78
20:10	9.51	6.73
20:11	9.46	6.77
20:12	9.4	6.8
20:13	9.45	6.76
20:14	9.43	6.77
20:15	9.37	6.82
20:16	9.57	6.64
20:17	9.64	6.58
20:18	9.67	6.55
20:19	9.61	6.62
20:20	9.57	6.65
20:21	9.62	6.61
20:22	9.58	6.63
20:23	10.06	6.18
20:24	9.75	6.49
20:25	9.59	6.64
20:26	9.57	6.65
20:27	9.5	6.72
20:28	9.55	6.69
20:29	9.51	6.75
20:30	9.69	6.61
20:31	9.67	6.64
20:32	9.65	6.65
20:33	9.8	6.53
20:34	9.62	6.7
20:35	9.6	6.69
20:36	9.67	6.62
20:37	9.58	6.71
20:38	9.54	6.76
20:39	9.54	6.76
20:40	9.51	6.8
20:41	9.61	6.7
20:42	9.43	6.87
20:43	9.25	7.06

3/8/18 - Run 5

Time	O2	CO2
20:44	9.19	7.13
20:45	9.21	7.11
20:46	9.17	7.14
20:47	9.25	7.08
20:48	9.38	6.98
20:49	9.32	7.04
20:50	9.28	7.09
20:51	9.34	7.06
20:52	9.25	7.12
20:53	9.39	6.99
20:54	9.68	6.71
20:55	9.39	6.99
20:56	9.35	7
20:57	9.63	6.77
20:58	9.31	7.06
20:59	9.31	7.07
21:00	9.37	7.02
21:01	9.3	7.07
21:02	9.39	6.99
21:03	9.71	6.69
21:04	9.58	6.81
21:05	9.39	7
21:06	9.34	7.04
21:07	9.32	7.06
21:08	9.37	7.01
21:09	9.46	6.91
21:10	9.4	6.9
21:11	9.21	7.12
21:12	9.25	7.13
21:13	9.25	7.11
21:14	9.35	7
21:15	9.36	7.02
21:16	9.38	6.99
21:17	9.39	6.98
21:18	9.39	6.96
21:19	9.35	7
21:20	9.29	7.08
21:21	9.29	7.07
21:22	9.33	7.04
21:23	9.41	6.96
21:24	9.35	7.02
21:25	9.31	7.06
21:26	9.26	7.1
21:27	9.31	7.07
21:28	9.3	7.08
21:29	9.32	7.06
21:30	9.39	7.01
21:31	9.35	7.04
21:32	9.47	6.94
21:33	9.46	6.94
21:34	9.31	7.09
21:35	9.31	7.1
21:36	9.32	7.12
21:37	9.36	7.08

3/8/18 - Run 5

Time	O2	CO2
21:38	9.54	6.92
21:39	9.54	6.95
21:40	9.49	6.98
21:41	9.37	7.09
21:42	9.31	7.14
21:43	9.3	7.15
21:44	9.24	7.2
21:45	9.32	7.13
21:46	9.41	7.06
21:47	9.4	7.06
21:48	9.36	7.1
21:49	9.42	7.05
21:50	9.39	7.1
Average	**9.44**	**6.88**

3/8/18 - Post Cal Run 5

Time	O2	CO2
21:53	9.47	7.06
21:54	4.82	2.87
21:55	0.35	0.41
21:56	0.31	0.3
21:57	0.3	0.25
21:58	0.29	0.22
21:59	2.62	2.2
22:00	10.05	9.15
22:01	10.08	9.45
22:02	10.09	9.53
22:03	10.09	9.57

3/9/18 - Run 6

Time	O2	CO2
1:00	10.4	6.15
1:01	10.45	6.12
1:02	10.44	6.13
1:03	10.41	6.17
1:04	10.5	6.1
1:05	10.65	5.99
1:06	10.61	6
1:07	10.67	5.91
1:08	10.69	5.89
1:09	10.55	6.04
1:10	10.45	6.14
1:11	10.46	6.13
1:12	10.48	6.1
1:13	10.46	6.1
1:14	10.52	6.06
1:15	10.57	6.03
1:16	10.51	6.1
1:17	10.54	6.08
1:18	10.58	6.03
1:19	10.63	5.98
1:20	10.59	6.03
1:21	10.61	5.98
1:22	10.56	6.04
1:23	10.56	6.04
1:24	10.58	6.01
1:25	10.71	5.9
1:26	10.71	5.9
1:27	10.72	5.9
1:28	10.66	5.97
1:29	10.62	6.01
1:30	10.66	5.94
1:31	10.65	5.93
1:32	10.63	5.96
1:33	10.67	5.91
1:34	10.7	5.87
1:35	10.73	5.87
1:36	10.68	5.9
1:37	10.71	5.89
1:38	10.71	5.9
1:39	10.7	5.89
1:40	10.79	5.83
1:41	10.8	5.83
1:42	10.77	5.86
1:43	10.77	5.87
1:44	10.8	5.86
1:45	10.79	5.86
1:46	10.82	5.84
1:47	10.8	5.85
1:48	10.86	5.8
1:49	10.87	5.78
1:50	10.81	5.84
1:51	10.74	5.92
1:52	10.77	5.89
1:53	10.71	5.94

3/9/18 - Run 6

Time	O2	CO2
1:54	10.76	5.88
1:55	10.81	5.83
1:56	10.79	5.83
1:57	10.84	5.79
1:58	10.91	5.73
1:59	10.94	5.73
2:00	10.87	5.76
2:01	10.85	5.75
2:02	10.81	5.8
2:03	10.81	5.81
2:04	10.81	5.81
2:05	10.83	5.78
2:06	10.86	5.76
2:07	10.83	5.77
2:08	10.88	5.71
2:09	10.86	5.72
2:10	10.84	5.74
2:11	10.84	5.77
2:12	10.87	5.73
2:13	10.85	5.75
2:14	10.89	5.71
2:15	10.92	5.7
2:16	11	5.67
2:17	10.93	5.69
2:18	10.93	5.7
2:19	10.96	5.69
2:20	11.0	5.7
2:21	10.93	5.7
2:22	10.96	5.69
2:23	10.98	5.69
2:24	10.99	5.69
2:25	10.98	5.69
2:26	10.99	5.69
2:27	11	5.68
2:28	11	5.68
2:29	10.99	5.69
2:30	11.01	5.67
2:31	11.03	5.67
2:32	11.06	5.67
2:33	11.05	5.67
2:34	11.1	5.66
2:35	11.1	5.65
2:36	11.06	5.67
2:37	11.03	5.67
2:38	11.07	5.67
2:39	11.04	5.68
2:40	11.04	5.68
Average	**10.78**	**5.85**

3/9/18 - Post Cal Run 6

Time	O2	CO2
2:43	11.51	5.49
2:44	2.16	0.95
2:45	0.43	0.39
2:46	0.4	0.3
2:47	0.38	0.25
2:48	0.37	0.22
2:49	0.49	0.38
2:50	9.56	8.32
2:51	10.1	9.29
2:52	10.11	9.48
2:53	10.12	9.52
2:54	10.12	9.58

Airgas

Airgas Specialty Gases
12722 South Wentworth Avenue
Chicago, IL 60628
(773) 785-3000 Fax: (773) 785-1928
www.airgas.com

CERTIFICATE OF ANALYSIS
Grade of Product: EPA Protocol

Part Number:	E03NI58E15A02X7	Reference Number:	54-124417638-2
Cylinder Number:	CC126166	Cylinder Volume:	160.6 CF
Laboratory:	ASG - Chicago - IL	Cylinder Pressure:	2014 PSIG
PGVP Number:	B12014	Valve Outlet:	590
Gas Code:	CO2,O2,BALN	Certification Date:	Feb 10, 2014

Expiration Date: Feb 10, 2022

Certification performed in accordance with "EPA Traceability Protocol for Assay and Certification of Gaseous Calibration Standards (May 2012)" document EPA 600/R-12/531, using the assay procedures listed. Analytical Methodology does not require correction for analytical interference. This cylinder has a total analytical uncertainty as stated below with a confidence level of 95%. There are no significant impurities which affect the use of this calibration mixture. All concentrations are on a volume/volume basis unless otherwise noted.

Do Not Use This Cylinder below 100 psig, i.e. 0.7 megapascals.

ANALYTICAL RESULTS

Component	Requested Concentration	Actual Concentration	Protocol Method	Total Relative Uncertainty	Assay Dates
CARBON DIOXIDE	21.00 %	20.67 %	G2	+/- 2% NIST Traceable	02/10/2014
OXYGEN	21.00 %	20.99 %	G1	+/- 1.0% NIST Traceable	02/08/2014
NITROGEN	Balance				

CALIBRATION STANDARDS

Type	Lot ID	Cylinder No	Concentration	Uncertainty	Expiration Date
NTRM	08061321	CC255428	20.09 % CARBON DIOXIDE/NITROGEN	+/- 0.6%	Jun 28, 2018
NTRM	06120210	CC195743	20.90 % OXYGEN/NITROGEN	+/- 0.4%	Dec 01, 2015

ANALYTICAL EQUIPMENT

Instrument/Make/Model	Analytical Principle	Last Multipoint Calibration
CO2-1 HORIBA VIA-510 V1E3H7P5	NDIR	Feb 10, 2014
O2-1 HORIBA MPA-510 3VUYL9NR	Paramagnetic	Jan 21, 2014

Triad Data Available Upon Request

Notes:

Approved for Release

Airgas
an Air Liquide company

Airgas Specialty Gases
Airgas USA, LLC
12722 S. Wentworth Ave.
Chicago, IL 60628
Airgas.com

CERTIFICATE OF ANALYSIS

Grade of Product: EPA Protocol

Part Number:	E03NI80E15A0138	Reference Number:	54-124605895-1
Cylinder Number:	ALM011065	Cylinder Volume:	150.9 CF
Laboratory:	124 - Chicago - IL	Cylinder Pressure:	2015 PSIG
PGVP Number:	B12017	Valve Outlet:	590
Gas Code:	CO2,O2,BALN	Certification Date:	Mar 07, 2017

Expiration Date: Mar 07, 2025

Certification performed in accordance with "EPA Traceability Protocol for Assay and Certification of Gaseous Calibration Standards (May 2012)" document EPA 600/R-12/531, using the assay procedures listed. Analytical Methodology does not require correction for analytical interference. This cylinder has a total analytical uncertainty as stated below with a confidence level of 95%. There are no significant impurities which affect the use of this calibration mixture. All concentrations are on a volume/volume basis unless otherwise noted.

Do Not Use This Cylinder below 100 psig, i.e. 0.7 megapascals.

ANALYTICAL RESULTS

Component	Requested Concentration	Actual Concentration	Protocol Method	Total Relative Uncertainty	Assay Dates
CARBON DIOXIDE	10.00 %	9.948 %	G1	+/- 0.7% NIST Traceable	03/07/2017
OXYGEN	10.00 %	9.842 %	G1	+/- 0.9% NIST Traceable	03/06/2017
NITROGEN	Balance				

CALIBRATION STANDARDS

Type	Lot ID	Cylinder No	Concentration	Uncertainty	Expiration Date
NTRM	13060635	CC413759	13.359 % CARBON DIOXIDE/NITROGEN	+/- 0.6%	May 09, 2019
NTRM	06120102	CC195613	9.898 % OXYGEN/NITROGEN	+/- 0.7%	Jul 26, 2018

ANALYTICAL EQUIPMENT

Instrument/Make/Model	Analytical Principle	Last Multipoint Calibration
Nicolet 6700 AHR0801332	FTIR	Feb 23, 2017
O2-1 HORIBA MPA-510 3VUYL9NR	Paramagnetic	Mar 03, 2017

Triad Data Available Upon Request

Approved for Release

Airgas
an Air Liquide company

Airgas Specialty Gases
Airgas USA, LLC
12722 S. Wentworth Ave.
Chicago, IL 60628
Airgas.com

CERTIFICATE OF ANALYSIS

Grade of Product: EPA Protocol

Part Number:	E02NI99E15A0163	Reference Number:	54-401115674-1
Cylinder Number:	CC415347	Cylinder Volume:	144.3 CF
Laboratory:	124 - Chicago (SAP) - IL	Cylinder Pressure:	2015 PSIG
PGVP Number:	B12018	Valve Outlet:	660
Gas Code:	NO,NOX,BALN	Certification Date:	Feb 13, 2018

Expiration Date: Feb 13, 2021

Certification performed in accordance with "EPA Traceability Protocol for Assay and Certification of Gaseous Calibration Standards (May 2012)" document EPA 600/R-12/531, using the assay procedures listed. Analytical Methodology does not require correction for analytical interference. This cylinder has a total analytical uncertainty as stated below with a confidence level of 95%. There are no significant impurities which affect the use of this calibration mixture. All concentrations are on a volume/volume basis unless otherwise noted.

Do Not Use This Cylinder below 100 psig, i.e. 0.7 megapascals.

ANALYTICAL RESULTS

Component	Requested Concentration	Actual Concentration	Protocol Method	Total Relative Uncertainty	Assay Dates
NOX	45.00 PPM	45.78 PPM	G1	+/- 1.0% NIST Traceable	02/05/2018, 02/13/2018
NITRIC OXIDE	45.00 PPM	45.77 PPM	G1	+/- 1.0% NIST Traceable	02/05/2018, 02/13/2018
NITROGEN	Balance				

CALIBRATION STANDARDS

Type	Lot ID	Cylinder No	Concentration	Uncertainty	Expiration Date
NTRM	16060606	CC442563	50.42 PPM NITRIC OXIDE/NITROGEN	+/- 0.8%	Jun 27, 2020
PRM	12367	APEX1099237	10.0 PPM NITROGEN DIOXIDE/AIR	+/- 1.5%	Jun 02, 2017
GMIS	1114201605	CC506716	4.995 PPM NITROGEN DIOXIDE/NITROGEN	+/- 2.0%	Nov 14, 2019

The SRM, PRM or RGM noted above is only in reference to the GMIS used in the assay and not part of the analysis.

ANALYTICAL EQUIPMENT

Instrument/Make/Model	Analytical Principle	Last Multipoint Calibration
Nicolet 6700 AMP0900100	FTIR	Jan 21, 2018
Nicolet 6700 AMP0900100	FTIR	Jan 21, 2018

Triad Data Available Upon Request

Approved for Release

Airgas
an Air Liquide company

Airgas Specialty Gases
Airgas USA, LLC
12722 S. Wentworth Ave.
Chicago, IL 60628
Airgas.com

CERTIFICATE OF ANALYSIS

Grade of Product: EPA Protocol

Part Number:	E02NI99E15A3576	Reference Number:	54-124602191-5
Cylinder Number:	CC199922	Cylinder Volume:	144.3 CF
Laboratory:	124 - Chicago - IL	Cylinder Pressure:	2015 PSIG
PGVP Number:	B12017	Valve Outlet:	660
Gas Code:	NO,NOX,BALN	Certification Date:	Mar 01, 2017

Expiration Date: Mar 01, 2025

Certification performed in accordance with "EPA Traceability Protocol for Assay and Certification of Gaseous Calibration Standards (May 2012)" document EPA 600/R-12/531, using the assay procedures listed. Analytical Methodology does not require correction for analytical interference. This cylinder has a total analytical uncertainty as stated below with a confidence level of 95%. There are no significant impurities which affect the use of this calibration mixture. All concentrations are on a volume/volume basis unless otherwise noted.

Do Not Use This Cylinder below 100 psig, i.e. 0.7 megapascals.

ANALYTICAL RESULTS

Component	Requested Concentration	Actual Concentration	Protocol Method	Total Relative Uncertainty	Assay Dates
NOX	90.00 PPM	90.90 PPM	G1	+/- 1.0% NIST Traceable	02/21/2017, 03/01/2017
NITRIC OXIDE	90.00 PPM	90.90 PPM	G1	+/- 1.0% NIST Traceable	02/21/2017, 03/01/2017
NITROGEN	Balance				

CALIBRATION STANDARDS

Type	Lot ID	Cylinder No	Concentration	Uncertainty	Expiration Date
NTRM	030212	KAL004026	97.60 PPM NITRIC OXIDE/NITROGEN	+/- 0.8%	May 09, 2019
PRM	12312	680179	10.01 PPM NITROGEN DIOXIDE/NITROGEN	+/- 2.0%	Oct 15, 2014
GMIS	812201405	CC502159	4.861 PPM NITROGEN DIOXIDE/NITROGEN	+/- 2.0%	Aug 12, 2017

The SRM, PRM or RGM noted above is only in reference to the GMIS used in the assay and not part of the analysis.

ANALYTICAL EQUIPMENT

Instrument/Make/Model	Analytical Principle	Last Multipoint Calibration
Nicolet 6700 AMP0900100	FTIR	Feb 21, 2017
Nicolet 6700 AMP0900100	FTIR	Feb 21, 2017

Triad Data Available Upon Request

Approved for Release

Airgas

CERTIFICATE OF ANALYSIS

Grade of Product: EPA Protocol

Airgas Specialty Gases
630 United Drive
Durham , NC 27713
919-544-3773 Fax: 919-544-3774
Airgas.com

Part Number:	E02AI99E15A1704	Reference Number:	122-124532724-1
Cylinder Number:	CC504828	Cylinder Volume:	146.2 Cubic Feet
Laboratory:	ASG - Durham - NC	Cylinder Pressure:	2015 PSIG
PGVP Number:	B22016	Valve Outlet:	660
Gas Code:	NO2,BALA	Certification Date:	Feb 02, 2016

Expiration Date: Feb 02, 2019

Certification performed in accordance with "EPA Traceability Protocol for Assay and Certification of Gaseous Calibration Standards (May 2012)" document EPA 600/R-12/531, using the assay procedures listed. Analytical Methodology does not require correction for analytical interference. This cylinder has a total analytical uncertainty as stated below with a confidence level of 95%. There are no significant impurities which affect the use of this calibration mixture. All concentrations are on a volume/volume basis unless otherwise noted.

Do Not Use This Cylinder below 100 psig, i.e. 0.7 megapascals.

ANALYTICAL RESULTS

Component	Requested Concentration	Actual Concentration	Protocol Method	Total Relative Uncertainty	Assay Dates
NITROGEN DIOXIDE	50.00 PPM	50.19 PPM	G1	+/- 2.1%	01/18/2016, 02/02/2016
AIR	Balance				

CALIBRATION STANDARDS

Type	Lot ID	Cylinder No	Concentration	Uncertainty	Expiration Date
GMIS	415201401	CC345255	50.06 PPM NITROGEN DIOXIDE/NITROGEN	+/- 2.0%	Jul 25, 2017
PRM	12325	APEX1099251	50.00 PPM NITROGEN DIOXIDE/NITROGEN	+/- 2.0%	Jul 26, 2014

The SRM, PRM or RGM noted above is only in reference to the GMIS used in the assay and not part of the analysis.

ANALYTICAL EQUIPMENT

Instrument/Make/Model	Analytical Principle	Last Multipoint Calibration
TECO NO 42CHL-63965-341	Chemiluminescence	Jan 07, 2016

Triad Data Available Upon Request

CS Williams

Approved for Release

Appendix D
ANALYTICAL REPORTS

TestAmerica
THE LEADER IN ENVIRONMENTAL TESTING

ANALYTICAL REPORT

Job Number: 140-10937-1

Job Description: Haverhill - M5/M202

For:
URS Corporation
105 Mitchell Road, Suite 200
Oak Ridge, TN 37830

Attention: John Carson

Approved for release.
Courtney M Adkins
Project Manager I
3/30/2018 10:16 AM

Courtney M Adkins, Project Manager I
5815 Middlebrook Pike, Knoxville, TN, 37921
(865)291-3000
courtney.adkins@testamericainc.com
03/30/2018

This report may not be reproduced except in full, and with written approval from the laboratory. For questions please contact the Project Manager at the e-mail address or telephone number listed on this page.

Table of Contents

Cover Title Page 1

Data Summaries 3

- Definitions 3
- Method Summary 4
- Sample Summary 5
- Case Narrative 6
- QC Association 7
- Client Sample Results 8
- Default Detection Limits 12
- Chronicle 13
- Certification Summary 17

Inorganic Sample Data 18

- General Chemistry Data 18
  - Gen Chem Cover Page 19
  - Gen Chem Sample Data 20
  - Gen Chem MDL 41
  - Gen Chem Analysis Run Log 47
  - Gen Chem Prep Data 50
  - Gen Chem Raw Data 54

Shipping and Receiving Documents 58

- Client Chain of Custody 59

Definitions/Glossary

Client: URS Corporation
Project/Site: Haverhill - M5/M202

TestAmerica Job ID: 140-10937-1

Qualifiers

General Chemistry

Qualifier	Qualifier Description
J	Result is less than the RL but greater than or equal to the MDL and the concentration is an approximate value.

Glossary

Abbreviation	These commonly used abbreviations may or may not be present in this report.
¤	Listed under the "D" column to designate that the result is reported on a dry weight basis
%R	Percent Recovery
CFL	Contains Free Liquid
CNF	Contains No Free Liquid
DER	Duplicate Error Ratio (normalized absolute difference)
Dil Fac	Dilution Factor
DL	Detection Limit (DoD/DOE)
DL, RA, RE, IN	Indicates a Dilution, Re-analysis, Re-extraction, or additional Initial metals/anion analysis of the sample
DLC	Decision Level Concentration (Radiochemistry)
EDL	Estimated Detection Limit (Dioxin)
LOD	Limit of Detection (DoD/DOE)
LOQ	Limit of Quantitation (DoD/DOE)
MDA	Minimum Detectable Activity (Radiochemistry)
MDC	Minimum Detectable Concentration (Radiochemistry)
MDL	Method Detection Limit
ML	Minimum Level (Dioxin)
NC	Not Calculated
ND	Not Detected at the reporting limit (or MDL or EDL if shown)
PQL	Practical Quantitation Limit
QC	Quality Control
RER	Relative Error Ratio (Radiochemistry)
RL	Reporting Limit or Requested Limit (Radiochemistry)
RPD	Relative Percent Difference, a measure of the relative difference between two points
TEF	Toxicity Equivalent Factor (Dioxin)
TEQ	Toxicity Equivalent Quotient (Dioxin)

Method Summary

Client: URS Corporation
Project/Site: Haverhill - M5/M202

TestAmerica Job ID: 140-10937-1

Method	Method Description	Protocol	Laboratory
202 InOrg CPM	Inorganic Condensable Particulate Matter	EPA	TAL KNX
202 Org CPM	Organic Condensable Particulate Matter	EPA	TAL KNX
5	Particulates	EPA	TAL KNX

Protocol References:

EPA = US Environmental Protection Agency

Laboratory References:

TAL KNX = TestAmerica Knoxville, 5815 Middlebrook Pike, Knoxville, TN 37921, TEL (865)291-3000

Sample Summary

Client: URS Corporation
Project/Site: Haverhill - M5/M202

TestAmerica Job ID: 140-10937-1

Lab Sample ID	Client Sample ID	Matrix	Collected	Received
140-10937-1	M5-FILT-1	Air	03/07/18 00:00	03/12/18 15:40
140-10937-2	M5-FILT-2	Air	03/07/18 00:00	03/12/18 15:40
140-10937-3	M5-FILT-3	Air	03/08/18 00:00	03/12/18 15:40
140-10937-4	M5-FILT-BLANK	Air	03/09/18 00:00	03/12/18 15:40
140-10937-5	M5-PNR-1	Air	03/07/18 00:00	03/12/18 15:40
140-10937-6	M5-PNR-2	Air	03/07/18 00:00	03/12/18 15:40
140-10937-7	M5-PNR-3	Air	03/08/18 00:00	03/12/18 15:40
140-10937-8	M5/M202-ACETONE REAGENT BLANK	Air	03/09/18 00:00	03/12/18 15:40
140-10937-9	M202-H2O-1	Air	03/07/18 00:00	03/12/18 15:40
140-10937-10	M202-ORG-1	Air	03/07/18 00:00	03/12/18 15:40
140-10937-12	M202-H2O-2	Air	03/07/18 00:00	03/12/18 15:40
140-10937-13	M202-ORG-2	Air	03/07/18 00:00	03/12/18 15:40
140-10937-15	M202-H2O-3	Air	03/08/18 00:00	03/12/18 15:40
140-10937-16	M202-ORG-3	Air	03/08/18 00:00	03/12/18 15:40
140-10937-18	M202-H2O-FIELD	Air	03/08/18 00:00	03/12/18 15:40
140-10937-19	M202-ORG-FIELD	Air	03/08/18 00:00	03/12/18 15:40
140-10937-21	M202-H2O-PROOF	Air	03/07/18 00:00	03/12/18 15:40
140-10937-22	M202-ORG-PROOF	Air	03/07/18 00:00	03/12/18 15:40
140-10937-24	M202-WATER REAGENT BLANK	Air	03/09/18 00:00	03/12/18 15:40
140-10937-25	M202-HEXANE REAGENT BLANK	Air	03/09/18 00:00	03/12/18 15:40
140-10937-26	A-6340 M5 MEDIA CHECK FILTER	Air	03/07/18 00:00	03/12/18 15:40

Job Narrative
140-10937-1

Sample Receipt

The samples were received on March 12, 2018 at 3:40 PM in good condition and properly preserved. and, where required, on ice. The temperature of the cooler at receipt was 22.4º C.

General Chemistry

Total Particulates: The measurement of the mass of particulate matter trapped by the particulate filter and probe rinse derived from an M-5 sampling train was performed using SOP number KNOX-WC-0006 (based on EPA Methods 0050 and 5). Microfiber filters and 150 mL beakers are carefully inspected and tare weighed to constant weight. After sample collection, the filters are dried, and then carefully weighed to constant weight to determine the mass of particulate matter trapped on the filters. The acetone probe rinse solution is evaporated to dryness, and then weighed to constant weight to determine the total particulate mass collected in the rinse. The total particulate mass collected by an M-5 train is the sum of the particulate filter and the acetone probe rinse residue weights.

Particulate by Method 202 (December 2010): Samples derived from Method 202 require special handling. The CPE filters were extracted three times with water, which was then combined with the corresponding aqueous fraction. The filters were then extracted with hexane three times, and the extracts were combined with the solvent rinses. The aqueous fractions were then extracted three times with hexane, and the extracts were combined with the solvent rinses. The organic fractions, including the acetone and hexane reagent blanks, were air dried in a hood. The aqueous fractions, including the deionized water reagent blank, were simmered to near dryness, and then allowed to air dry.

Aqueous samples having a pH < 6 were reconstituted with boiled deionized water, and then titrated with 0.1N ammonium hydroxide to a pH 7 endpoint. The samples were again simmered to near dryness, and then allowed to air dry. Titration to a pH 7 endpoint was not required for samples with a pH of 6 or higher upon receipt. Where applicable, the contribution from added ammonia was calculated and subtracted from the residue weight to obtain the final result for the aqueous fractions.

Residual water from both the aqueous samples and the organic solvent samples were further air dried in a forced draft oven at 28°C before transferring them to a desiccator. The air dried samples were transferred to a desiccator and dried over calcium sulfate to constant weight.

No additional analytical or quality issues were noted, other than those described above or in the Definitions/Glossary page.

General Chemistry

Analysis Batch: 18965

Lab Sample ID	Client Sample ID	Prep Type	Matrix	Method	Prep Batch
140-10937-9	M202-H2O-1	Total/NA	Air	202 InOrg CPM	
140-10937-12	M202-H2O-2	Total/NA	Air	202 InOrg CPM	
140-10937-15	M202-H2O-3	Total/NA	Air	202 InOrg CPM	
140-10937-18	M202-H2O-FIELD	Total/NA	Air	202 InOrg CPM	
140-10937-21	M202-H2O-PROOF	Total/NA	Air	202 InOrg CPM	
140-10937-24	M202-WATER REAGENT BLANK	Total/NA	Air	202 InOrg CPM	

Analysis Batch: 18969

Lab Sample ID	Client Sample ID	Prep Type	Matrix	Method	Prep Batch
140-10937-8	M5/M202-ACETONE REAGENT BLANK	Total/NA	Air	202 Org CPM	
140-10937-10	M202-ORG-1	Total/NA	Air	202 Org CPM	
140-10937-13	M202-ORG-2	Total/NA	Air	202 Org CPM	
140-10937-16	M202-ORG-3	Total/NA	Air	202 Org CPM	
140-10937-19	M202-ORG-FIELD	Total/NA	Air	202 Org CPM	
140-10937-22	M202-ORG-PROOF	Total/NA	Air	202 Org CPM	
140-10937-25	M202-HEXANE REAGENT BLANK	Total/NA	Air	202 Org CPM	

Analysis Batch: 19053

Lab Sample ID	Client Sample ID	Prep Type	Matrix	Method	Prep Batch
140-10937-1	M5-FILT-1	Total/NA	Air	5	
140-10937-2	M5-FILT-2	Total/NA	Air	5	
140-10937-3	M5-FILT-3	Total/NA	Air	5	
140-10937-4	M5-FILT-BLANK	Total/NA	Air	5	
140-10937-5	M5-PNR-1	Total/NA	Air	5	
140-10937-6	M5-PNR-2	Total/NA	Air	5	
140-10937-7	M5-PNR-3	Total/NA	Air	5	
140-10937-8	M5/M202-ACETONE REAGENT BLANK	Total/NA	Air	5	
140-10937-26	A-6340 M5 MEDIA CHECK FILTER	Total/NA	Air	5	

Client Sample ID: M5-FILT-1
Lab Sample ID: 140-10937-1
Date Collected: 03/07/18 00:00
Matrix: Air
Date Received: 03/12/18 15:40
Sample Container: Petri/Filter

General Chemistry

Analyte	Result	Qualifier	RL	MDL	Unit	D	Prepared	Analyzed	Dil Fac
Particulates, Total	31.8		0.500	0.500	mg/sample			03/26/18 12:18	1

Client Sample ID: M5-FILT-2
Lab Sample ID: 140-10937-2
Date Collected: 03/07/18 00:00
Matrix: Air
Date Received: 03/12/18 15:40
Sample Container: Petri/Filter

General Chemistry

Analyte	Result	Qualifier	RL	MDL	Unit	D	Prepared	Analyzed	Dil Fac
Particulates, Total	26.0		0.500	0.500	mg/sample			03/26/18 12:18	1

Client Sample ID: M5-FILT-3
Lab Sample ID: 140-10937-3
Date Collected: 03/08/18 00:00
Matrix: Air
Date Received: 03/12/18 15:40
Sample Container: Petri/Filter

General Chemistry

Analyte	Result	Qualifier	RL	MDL	Unit	D	Prepared	Analyzed	Dil Fac
Particulates, Total	17.3		0.500	0.500	mg/sample			03/26/18 12:18	1

Client Sample ID: M5-FILT-BLANK
Lab Sample ID: 140-10937-4
Date Collected: 03/09/18 00:00
Matrix: Air
Date Received: 03/12/18 15:40
Sample Container: Petri/Filter

General Chemistry

Analyte	Result	Qualifier	RL	MDL	Unit	D	Prepared	Analyzed	Dil Fac
Particulates, Total	ND		0.500	0.500	mg/sample			03/26/18 12:18	1

Client Sample ID: M5-PNR-1
Lab Sample ID: 140-10937-5
Date Collected: 03/07/18 00:00
Matrix: Air
Date Received: 03/12/18 15:40
Sample Container: Amber Glass 250ml - unpreserved

General Chemistry

Analyte	Result	Qualifier	RL	MDL	Unit	D	Prepared	Analyzed	Dil Fac
Particulates, Total	1.69		0.500	0.500	mg/sample			03/26/18 12:18	1

Client Sample ID: M5-PNR-2
Lab Sample ID: 140-10937-6
Date Collected: 03/07/18 00:00
Matrix: Air
Date Received: 03/12/18 15:40
Sample Container: Amber Glass 250ml - unpreserved

General Chemistry

Analyte	Result	Qualifier	RL	MDL	Unit	D	Prepared	Analyzed	Dil Fac
Particulates, Total	10.4		0.500	0.500	mg/sample			03/26/18 12:18	1

Client Sample ID: M5-PNR-3

Lab Sample ID: 140-10937-7

Date Collected: 03/08/18 00:00
Matrix: Air
Date Received: 03/12/18 15:40
Sample Container: Amber Glass 250ml - unpreserved

General Chemistry

Analyte	Result	Qualifier	RL	MDL	Unit	D	Prepared	Analyzed	Dil Fac
Particulates, Total	1.86		0.500	0.500	mg/sample			03/26/18 12:18	1

Client Sample ID: M5/M202-ACETONE REAGENT BLANK

Lab Sample ID: 140-10937-8

Date Collected: 03/09/18 00:00
Matrix: Air
Date Received: 03/12/18 15:40
Sample Container: Amber Glass 250ml - unpreserved

General Chemistry

Analyte	Result	Qualifier	RL	MDL	Unit	D	Prepared	Analyzed	Dil Fac
Organic Condensible Particulate Matter	1.02		1.00	0.500	mg/sample			03/21/18 10:29	1
Particulates, Total	ND		0.500	0.500	mg/sample			03/26/18 12:18	1

Client Sample ID: M202-H2O-1

Lab Sample ID: 140-10937-9

Date Collected: 03/07/18 00:00
Matrix: Air
Date Received: 03/12/18 15:40
Sample Container: Amber Glass 500mL - unpreserved

General Chemistry

Analyte	Result	Qualifier	RL	MDL	Unit	D	Prepared	Analyzed	Dil Fac
Inorganic Condensible Particulate Matter	87.8		1.00	0.500	mg/sample			03/21/18 10:23	1

Client Sample ID: M202-ORG-1

Lab Sample ID: 140-10937-10

Date Collected: 03/07/18 00:00
Matrix: Air
Date Received: 03/12/18 15:40
Sample Container: Amber Glass 250ml - unpreserved

General Chemistry

Analyte	Result	Qualifier	RL	MDL	Unit	D	Prepared	Analyzed	Dil Fac
Organic Condensible Particulate Matter	8.49		1.00	0.500	mg/sample			03/21/18 10:29	1

Client Sample ID: M202-H2O-2

Lab Sample ID: 140-10937-12

Date Collected: 03/07/18 00:00
Matrix: Air
Date Received: 03/12/18 15:40
Sample Container: Amber Glass 500mL - unpreserved

General Chemistry

Analyte	Result	Qualifier	RL	MDL	Unit	D	Prepared	Analyzed	Dil Fac
Inorganic Condensible Particulate Matter	115		1.00	0.500	mg/sample			03/21/18 10:23	1

Client Sample ID: M202-ORG-2
Lab Sample ID: 140-10937-13
Date Collected: 03/07/18 00:00
Matrix: Air
Date Received: 03/12/18 15:40
Sample Container: Amber Glass 250ml - unpreserved

General Chemistry

Analyte	Result	Qualifier	RL	MDL	Unit	D	Prepared	Analyzed	Dil Fac
Organic Condensible Particulate Matter	3.73		1.00	0.500	mg/sample			03/21/18 10:29	1

Client Sample ID: M202-H2O-3
Lab Sample ID: 140-10937-15
Date Collected: 03/08/18 00:00
Matrix: Air
Date Received: 03/12/18 15:40
Sample Container: Amber Glass 500mL - unpreserved

General Chemistry

Analyte	Result	Qualifier	RL	MDL	Unit	D	Prepared	Analyzed	Dil Fac
Inorganic Condensible Particulate Matter	108		1.00	0.500	mg/sample			03/21/18 10:23	1

Client Sample ID: M202-ORG-3
Lab Sample ID: 140-10937-16
Date Collected: 03/08/18 00:00
Matrix: Air
Date Received: 03/12/18 15:40
Sample Container: Amber Glass 250ml - unpreserved

General Chemistry

Analyte	Result	Qualifier	RL	MDL	Unit	D	Prepared	Analyzed	Dil Fac
Organic Condensible Particulate Matter	6.40		1.00	0.500	mg/sample			03/21/18 10:29	1

Client Sample ID: M202-H2O-FIELD
Lab Sample ID: 140-10937-18
Date Collected: 03/08/18 00:00
Matrix: Air
Date Received: 03/12/18 15:40
Sample Container: Amber Glass 250ml - unpreserved

General Chemistry

Analyte	Result	Qualifier	RL	MDL	Unit	D	Prepared	Analyzed	Dil Fac
Inorganic Condensible Particulate Matter	1.37		1.00	0.500	mg/sample			03/21/18 10:23	1

Client Sample ID: M202-ORG-FIELD
Lab Sample ID: 140-10937-19
Date Collected: 03/08/18 00:00
Matrix: Air
Date Received: 03/12/18 15:40
Sample Container: Amber Glass 250ml - unpreserved

General Chemistry

Analyte	Result	Qualifier	RL	MDL	Unit	D	Prepared	Analyzed	Dil Fac
Organic Condensible Particulate Matter	2.39		1.00	0.500	mg/sample			03/21/18 10:29	1

Client Sample ID: M202-H2O-PROOF
Lab Sample ID: 140-10937-21
Date Collected: 03/07/18 00:00
Matrix: Air
Date Received: 03/12/18 15:40
Sample Container: Amber Glass 250ml - unpreserved

General Chemistry

Analyte	Result	Qualifier	RL	MDL	Unit	D	Prepared	Analyzed	Dil Fac
Inorganic Condensible Particulate Matter	1.67		1.00	0.500	mg/sample			03/21/18 10:23	1

Client Sample ID: M202-ORG-PROOF
Lab Sample ID: 140-10937-22
Date Collected: 03/07/18 00:00
Matrix: Air
Date Received: 03/12/18 15:40
Sample Container: Amber Glass 250ml - unpreserved

General Chemistry

Analyte	Result	Qualifier	RL	MDL	Unit	D	Prepared	Analyzed	Dil Fac
Organic Condensible Particulate Matter	2.67		1.00	0.500	mg/sample			03/21/18 10:29	1

Client Sample ID: M202-WATER REAGENT BLANK
Lab Sample ID: 140-10937-24
Date Collected: 03/09/18 00:00
Matrix: Air
Date Received: 03/12/18 15:40
Sample Container: Amber Glass 250ml - unpreserved

General Chemistry

Analyte	Result	Qualifier	RL	MDL	Unit	D	Prepared	Analyzed	Dil Fac
Inorganic Condensible Particulate Matter	0.990	J	1.00	0.500	mg/sample			03/21/18 10:23	1

Client Sample ID: M202-HEXANE REAGENT BLANK
Lab Sample ID: 140-10937-25
Date Collected: 03/09/18 00:00
Matrix: Air
Date Received: 03/12/18 15:40
Sample Container: Amber Glass 250ml - unpreserved

General Chemistry

Analyte	Result	Qualifier	RL	MDL	Unit	D	Prepared	Analyzed	Dil Fac
Organic Condensible Particulate Matter	0.635	J	1.00	0.500	mg/sample			03/21/18 10:29	1

Client Sample ID: A-6340 M5 MEDIA CHECK FILTER
Lab Sample ID: 140-10937-26
Date Collected: 03/07/18 00:00
Matrix: Air
Date Received: 03/12/18 15:40
Sample Container: Petri/Filter

General Chemistry

Analyte	Result	Qualifier	RL	MDL	Unit	D	Prepared	Analyzed	Dil Fac
Particulates, Total	ND		0.500	0.500	mg/sample			03/26/18 12:18	1

Default Detection Limits

Client: URS Corporation
Project/Site: Haverhill - M5/M202

TestAmerica Job ID: 140-10937-1

General Chemistry

Analyte	RL	MDL	Units	Method
Inorganic Condensible Particulate Matter	1.00	0.500	mg/sample	202 InOrg CPM
Organic Condensible Particulate Matter	1.00	0.500	mg/sample	202 Org CPM
Particulates, Total	0.500	0.500	mg/sample	5

Client Sample ID: M5-FILT-1
Date Collected: 03/07/18 00:00
Date Received: 03/12/18 15:40

Lab Sample ID: 140-10937-1
Matrix: Air

Prep Type	Batch Type	Batch Method	Run	Dil Factor	Initial Amount	Final Amount	Batch Number	Prepared or Analyzed	Analyst	Lab
Total/NA	Analysis	5		1			19053	03/26/18 12:18	TSN	TAL KNX
	Instrument ID: FT_Gross									

Client Sample ID: M5-FILT-2
Date Collected: 03/07/18 00:00
Date Received: 03/12/18 15:40

Lab Sample ID: 140-10937-2
Matrix: Air

Prep Type	Batch Type	Batch Method	Run	Dil Factor	Initial Amount	Final Amount	Batch Number	Prepared or Analyzed	Analyst	Lab
Total/NA	Analysis	5		1			19053	03/26/18 12:18	TSN	TAL KNX
	Instrument ID: FT_Gross									

Client Sample ID: M5-FILT-3
Date Collected: 03/08/18 00:00
Date Received: 03/12/18 15:40

Lab Sample ID: 140-10937-3
Matrix: Air

Prep Type	Batch Type	Batch Method	Run	Dil Factor	Initial Amount	Final Amount	Batch Number	Prepared or Analyzed	Analyst	Lab
Total/NA	Analysis	5		1			19053	03/26/18 12:18	TSN	TAL KNX
	Instrument ID: FT_Gross									

Client Sample ID: M5-FILT-BLANK
Date Collected: 03/09/18 00:00
Date Received: 03/12/18 15:40

Lab Sample ID: 140-10937-4
Matrix: Air

Prep Type	Batch Type	Batch Method	Run	Dil Factor	Initial Amount	Final Amount	Batch Number	Prepared or Analyzed	Analyst	Lab
Total/NA	Analysis	5		1			19053	03/26/18 12:18	TSN	TAL KNX
	Instrument ID: FT_Gross									

Client Sample ID: M5-PNR-1
Date Collected: 03/07/18 00:00
Date Received: 03/12/18 15:40

Lab Sample ID: 140-10937-5
Matrix: Air

Prep Type	Batch Type	Batch Method	Run	Dil Factor	Initial Amount	Final Amount	Batch Number	Prepared or Analyzed	Analyst	Lab
Total/NA	Analysis	5		1			19053	03/26/18 12:18	TSN	TAL KNX
	Instrument ID: FT_Gross									

Client Sample ID: M5-PNR-2
Date Collected: 03/07/18 00:00
Date Received: 03/12/18 15:40

Lab Sample ID: 140-10937-6
Matrix: Air

Prep Type	Batch Type	Batch Method	Run	Dil Factor	Initial Amount	Final Amount	Batch Number	Prepared or Analyzed	Analyst	Lab
Total/NA	Analysis	5		1			19053	03/26/18 12:18	TSN	TAL KNX
	Instrument ID: FT_Gross									

Lab Chronicle

Client: URS Corporation
Project/Site: Haverhill - M5/M202

TestAmerica Job ID: 140-10937-1

Client Sample ID: M5-PNR-3
Lab Sample ID: 140-10937-7
Date Collected: 03/08/18 00:00
Matrix: Air
Date Received: 03/12/18 15:40

Prep Type	Batch Type	Batch Method	Run	Dil Factor	Initial Amount	Final Amount	Batch Number	Prepared or Analyzed	Analyst	Lab
Total/NA	Analysis	5		1			19053	03/26/18 12:18	TSN	TAL KNX
	Instrument ID: FT_Gross									

Client Sample ID: M5/M202-ACETONE REAGENT BLANK
Lab Sample ID: 140-10937-8
Date Collected: 03/09/18 00:00
Matrix: Air
Date Received: 03/12/18 15:40

Prep Type	Batch Type	Batch Method	Run	Dil Factor	Initial Amount	Final Amount	Batch Number	Prepared or Analyzed	Analyst	Lab
Total/NA	Analysis	202 Org CPM		1			18969	03/21/18 10:29	TSN	TAL KNX
	Instrument ID: B3									
Total/NA	Analysis	5		1			19053	03/26/18 12:18	TSN	TAL KNX
	Instrument ID: FT_Gross									

Client Sample ID: M202-H2O-1
Lab Sample ID: 140-10937-9
Date Collected: 03/07/18 00:00
Matrix: Air
Date Received: 03/12/18 15:40

Prep Type	Batch Type	Batch Method	Run	Dil Factor	Initial Amount	Final Amount	Batch Number	Prepared or Analyzed	Analyst	Lab
Total/NA	Analysis	202 InOrg CPM		1			18965	03/21/18 10:23	TSN	TAL KNX
	Instrument ID: B3									

Client Sample ID: M202-ORG-1
Lab Sample ID: 140-10937-10
Date Collected: 03/07/18 00:00
Matrix: Air
Date Received: 03/12/18 15:40

Prep Type	Batch Type	Batch Method	Run	Dil Factor	Initial Amount	Final Amount	Batch Number	Prepared or Analyzed	Analyst	Lab
Total/NA	Analysis	202 Org CPM		1			18969	03/21/18 10:29	TSN	TAL KNX
	Instrument ID: B3									

Client Sample ID: M202-H2O-2
Lab Sample ID: 140-10937-12
Date Collected: 03/07/18 00:00
Matrix: Air
Date Received: 03/12/18 15:40

Prep Type	Batch Type	Batch Method	Run	Dil Factor	Initial Amount	Final Amount	Batch Number	Prepared or Analyzed	Analyst	Lab
Total/NA	Analysis	202 InOrg CPM		1			18965	03/21/18 10:23	TSN	TAL KNX
	Instrument ID: B3									

Client Sample ID: M202-ORG-2
Date Collected: 03/07/18 00:00
Date Received: 03/12/18 15:40

Lab Sample ID: 140-10937-13
Matrix: Air

Prep Type	Batch Type	Batch Method	Run	Dil Factor	Initial Amount	Final Amount	Batch Number	Prepared or Analyzed	Analyst	Lab
Total/NA	Analysis	202 Org CPM		1			18969	03/21/18 10:29	TSN	TAL KNX
	Instrument ID: B3									

Client Sample ID: M202-H2O-3
Date Collected: 03/08/18 00:00
Date Received: 03/12/18 15:40

Lab Sample ID: 140-10937-15
Matrix: Air

Prep Type	Batch Type	Batch Method	Run	Dil Factor	Initial Amount	Final Amount	Batch Number	Prepared or Analyzed	Analyst	Lab
Total/NA	Analysis	202 InOrg CPM		1			18965	03/21/18 10:23	TSN	TAL KNX
	Instrument ID: B3									

Client Sample ID: M202-ORG-3
Date Collected: 03/08/18 00:00
Date Received: 03/12/18 15:40

Lab Sample ID: 140-10937-16
Matrix: Air

Prep Type	Batch Type	Batch Method	Run	Dil Factor	Initial Amount	Final Amount	Batch Number	Prepared or Analyzed	Analyst	Lab
Total/NA	Analysis	202 Org CPM		1			18969	03/21/18 10:29	TSN	TAL KNX
	Instrument ID: B3									

Client Sample ID: M202-H2O-FIELD
Date Collected: 03/08/18 00:00
Date Received: 03/12/18 15:40

Lab Sample ID: 140-10937-18
Matrix: Air

Prep Type	Batch Type	Batch Method	Run	Dil Factor	Initial Amount	Final Amount	Batch Number	Prepared or Analyzed	Analyst	Lab
Total/NA	Analysis	202 InOrg CPM		1			18965	03/21/18 10:23	TSN	TAL KNX
	Instrument ID: B3									

Client Sample ID: M202-ORG-FIELD
Date Collected: 03/08/18 00:00
Date Received: 03/12/18 15:40

Lab Sample ID: 140-10937-19
Matrix: Air

Prep Type	Batch Type	Batch Method	Run	Dil Factor	Initial Amount	Final Amount	Batch Number	Prepared or Analyzed	Analyst	Lab
Total/NA	Analysis	202 Org CPM		1			18969	03/21/18 10:29	TSN	TAL KNX
	Instrument ID: B3									

Client Sample ID: M202-H2O-PROOF
Date Collected: 03/07/18 00:00
Date Received: 03/12/18 15:40

Lab Sample ID: 140-10937-21
Matrix: Air

Prep Type	Batch Type	Batch Method	Run	Dil Factor	Initial Amount	Final Amount	Batch Number	Prepared or Analyzed	Analyst	Lab
Total/NA	Analysis	202 InOrg CPM		1			18965	03/21/18 10:23	TSN	TAL KNX
	Instrument ID: B3									

Client Sample ID: M202-ORG-PROOF — Lab Sample ID: 140-10937-22

Date Collected: 03/07/18 00:00 — **Matrix: Air**
Date Received: 03/12/18 15:40

Prep Type	Batch Type	Batch Method	Run	Dil Factor	Initial Amount	Final Amount	Batch Number	Prepared or Analyzed	Analyst	Lab
Total/NA	Analysis	202 Org CPM		1			18969	03/21/18 10:29	TSN	TAL KNX
	Instrument ID: B3									

Client Sample ID: M202-WATER REAGENT BLANK — Lab Sample ID: 140-10937-24

Date Collected: 03/09/18 00:00 — **Matrix: Air**
Date Received: 03/12/18 15:40

Prep Type	Batch Type	Batch Method	Run	Dil Factor	Initial Amount	Final Amount	Batch Number	Prepared or Analyzed	Analyst	Lab
Total/NA	Analysis	202 InOrg CPM		1			18965	03/21/18 10:23	TSN	TAL KNX
	Instrument ID: B3									

Client Sample ID: M202-HEXANE REAGENT BLANK — Lab Sample ID: 140-10937-25

Date Collected: 03/09/18 00:00 — **Matrix: Air**
Date Received: 03/12/18 15:40

Prep Type	Batch Type	Batch Method	Run	Dil Factor	Initial Amount	Final Amount	Batch Number	Prepared or Analyzed	Analyst	Lab
Total/NA	Analysis	202 Org CPM		1			18969	03/21/18 10:29	TSN	TAL KNX
	Instrument ID: B3									

Client Sample ID: A-6340 M5 MEDIA CHECK FILTER — Lab Sample ID: 140-10937-26

Date Collected: 03/07/18 00:00 — **Matrix: Air**
Date Received: 03/12/18 15:40

Prep Type	Batch Type	Batch Method	Run	Dil Factor	Initial Amount	Final Amount	Batch Number	Prepared or Analyzed	Analyst	Lab
Total/NA	Analysis	5		1			19053	03/26/18 12:18	TSN	TAL KNX
	Instrument ID: FT_Gross									

Laboratory References:

TAL KNX = TestAmerica Knoxville, 5815 Middlebrook Pike, Knoxville, TN 37921, TEL (865)291-3000

Accreditation/Certification Summary

Client: URS Corporation
Project/Site: Haverhill - M5/M202

TestAmerica Job ID: 140-10937-1

Laboratory: TestAmerica Knoxville

All accreditations/certifications held by this laboratory are listed. Not all accreditations/certifications are applicable to this report.

Authority	Program	EPA Region	Identification Number	Expiration Date
	AFCEE		N/A	
ANAB	DoD ELAP		L2311	02-13-19
Arkansas DEQ	State Program	6	88-0688	06-16-18
California	State Program	9	2423	06-30-18
Colorado	State Program	8	TN00009	02-28-19
Connecticut	State Program	1	PH-0223	09-30-19
Florida	NELAP	4	E87177	06-30-18
Georgia	State Program	4	906	04-13-20
Hawaii	State Program	9	N/A	04-13-18
Kansas	NELAP	7	E-10349	10-31-18
Kentucky (DW)	State Program	4	90101	12-31-18
Louisiana	NELAP	6	83979	06-30-18
Louisiana (DW)	NELAP	6	LA160005	12-31-18
Maryland	State Program	3	277	03-31-19
Michigan	State Program	5	9933	04-13-20
Nevada	State Program	9	TN00009	07-31-18
New Jersey	NELAP	2	TN001	06-30-18
New York	NELAP	2	10781	03-31-18 *
North Carolina (DW)	State Program	4	21705	07-31-18
North Carolina (WW/SW)	State Program	4	64	12-31-18
Ohio VAP	State Program	5	CL0059	11-22-18
Oklahoma	State Program	6	9415	08-31-18
Oregon	NELAP	10	TNI0189	01-01-19
Pennsylvania	NELAP	3	68-00576	12-31-18
Tennessee	State Program	4	2014	04-13-20
Texas	NELAP	6	T104704380-16-9	08-31-18
US Fish & Wildlife	Federal		LE-058448-0	07-31-18
USDA	Federal		P330-16-00262	08-20-19
Utah	NELAP	8	TN00009	07-31-18
Virginia	NELAP	3	460176	09-14-18
Washington	State Program	10	C593	01-19-19
West Virginia (DW)	State Program	3	9955C	12-31-18
West Virginia DEP	State Program	3	345	04-30-18
Wisconsin	State Program	5	998044300	08-31-18

* Accreditation/Certification renewal pending - accreditation/certification considered valid.

Shipping and Receiving Documents

AECOM

Chain of Custody Record

Project	Haverhill
Site	Bypass Vent Stack No. 5
	60562829.103
Prepared by:	

Test America
5815 Middlebrook Pike
Knoxville, TN 37921

Sample ID	Sample Matrix	Date/Time	Method 5 post test weight	Residue by Method 202					Comments
M5-filt-1	Quartz Filter	3/7/18	X						
M5-filt-2	Quartz Filter	3/7/18	X						
M5-filt-3	Quartz Filter	3/8/18	X						
M5-filt-blank	Quartz Filter	3/9/18	X						
M5-PNR-1	Probe and nozzle acetone rinse	3/7/18	X						
M5-PNR-2	Probe and nozzle acetone rinse	3/7/18	X						
M5-PNR-3	Probe and nozzle acetone rinse	3/8/18	X						
M5/M202-acetone reagent blank	Reagent blank	3/9/18	X	X					Reagent blank for M5 and M202

140-10937 Chain of Custody

Contact: John Carson 865.425.7014; john.r.carson@aecom.com; Courtney Adkins 865.291.3019

Relinquished by:	Date	Time	Received by:	Date	Time	Relinquished by:	Date	Time
	3/12/18	3:40						
Received by:	Date	Time	Relinquished by:	Date	Time			
Received for Laboratory by:	Date	Time	Air bill No.	Opened by:	Seal #	Date	Time	Temp (C)
	3-12-18	15:40						
Seal #	Condition							

Remarks

HAND DELIVERED
NO CUSTODY SEALS
RECEIVED AMBIENT RT 22.5/CT 22.4°C
BDS 3-12-18

AECOM

Chain of Custody Record

Project	Haverhill
Site	Bypass Vent Stack No. 5
Purchase Order	60562829.103
Prepared by:	

Test America
5815 Middlebrook Pike
Knoxville, TN 37921

60562829

Sample ID	Sample Matrix	Date/Time	Residue by Method 202						Comments
M202-H2O-1	Water rinse	3/7/18	X						
M202-H2O-2	Water rinse	3/7/18	X						
M202-H2O-3	Water rinse	3/8/18	X						
M202-H2O-field	Water rinse	3/6/18	X						Field blank
M202-H2O-proof	Water rinse	3/7/18	X						Proof blank
M202-water reagent blank	Water	3/9/18	X						Reagent blank

Contact: John Carson 865.425.7014; john.r.carson@aecom.com; Courtney Adkins 865.291.3019

Relinquished by:	Date	Time	Received by:	Date	Time	Relinquished by:	Date	Time
	3/12/18	1540						
Received by:	Date	Time	Relinquished by:	Date	Time			

Received for Laboratory by:	Date	Time	Air bill No.	Opened by:	Seal #	Date	Time	Temp (C)
	3-12-18	15:40						

Seal #	Condition	

Remarks

AECOM

Chain of Custody Record

Project	Haverhill
Site	Bypass Vent Stack No. 5
Purchase Order	60562829.103
Prepared by:	

Test America
5815 Middlebrook Pike
Knoxville, TN 37921

Sample ID	Sample Matrix	Date/Time	Residue by Method 202	Comments
M202-org-1	Acetone/hexane rinse	3/7/18	X	
M202-org-2	Acetone/hexane rinse	3/7/18	X	
M202-org-3	Acetone/hexane rinse	3/8/18	X	
M202-org-field	Acetone/hexane rinse	3/8/18	X	Field blank
M202-org-proof	Acetone/hexane rinse	3/7/18	X	Proof blank
M202-hexane reagent blank	Hexane	3/9/18	X	Reagent blank

Contact: John Carson 865.425.7014; john.r.carson@aecom.com; Courtney Adkins 865.291.3019

Relinquished by:	Date	Time	Received by:	Date	Time	Relinquished by:	Date	Time
[signature]	3/17/18	1510						
Received by:	Date	Time	Relinquished by:	Date	Time			
Received for Laboratory by:	Date	Time	Air bill No.	Opened by:	Seal #	Date	Time	Temp (C)
[signature]	3-12-18	15:40						

Seal #	Condition

Remarks

AECOM

Chain of Custody Record

Project	Haverhill
Site	Bypass Vent Stack No. 5
Purchase Order	60562829.103
Prepared by:	

Test America
5815 Middlebrook Pike
Knoxville, TN 37921

Sample ID	Sample Matrix	Date/Time	Residue by Method 202						Comments
M202-filt-1	Teflon filter	3/7/18	X						
M202-filt-2	Teflon filter	3/7/18	X						
M202-filt-3	Teflon filter	3/8/18	X						
M202-filt-field	Teflon filter	3/8/18	X						Field blank
M202-filt-proof	Teflon filter	3/7/18	X						Proof blank

Contact: John Carson 865.425.7014; john.r.carson@aecom.com; Courtney Adkins 865.291.3019

Relinquished by:	Date 3/12/18	Time 3:40	Received by:	Date	Time	Relinquished by:	Date	Time			
Received by:	Date	Time	Relinquished by:	Date	Time						
Received for Laboratory by:	Date 3-12-18	Time 15:40	Air bill No.	Opened by:		Seal #	Date	Time	Temp (C)		
Seal #	Condition										

Remarks

TESTAMERICA KNOXVILLE SAMPLE RECEIPT/CONDITION UPON RECEIPT ANOMALY CHECKLIST

Log In Number:

Review Items	Yes	No	NA	If No, what was the problem?
1. Are the shipping containers intact?	/		/	☐ Containers, Broken
2. Were ambient air containers received intact?			/	☐ Checked in lab
3. The coolers/containers custody seal if present, is it intact?			/	☐ Yes ☐ NA
4. Is the cooler temperature within limits? (> freezing temp. of water to 6 °C, VOST: 10°C) Thermometer ID :_____ Correction factor: _____	/		/	☐ Cooler Out of Temp, Client Contacted, Proceed/Cancel ☐ Cooler Out of Temp, Same Day Receipt
5. Were all of the sample containers received intact?	/			☐ Containers, Broken
6. Were samples received in appropriate containers?	/			☐ Containers, Improper; Client Contacted; Proceed/Cancel
7. Do sample container labels match COC? (IDs, Dates, Times)	/			☐ COC & Samples Do Not Match ☐ COC Incorrect/Incomplete ☐ COC Not Received
8. Were all of the samples listed on the COC received?	/			☐ Sample Received, Not on COC ☐ Sample on COC, Not Received
9. Is the date/time of sample collection noted?	/			☐ COC; No Date/Time; Client Contacted
10. Was the sampler identified on the COC?	/		/	☐ Sampler Not Listed on COC
11. Is the client and project name/# identified?	/			☐ COC Incorrect/Incomplete
12. Are tests/parameters listed for each sample?	/			☐ COC No tests on COC
13. Is the matrix of the samples noted?	/			☐ COC Incorrect/Incomplete
14. Was COC relinquished? (Signed/Dated/Timed)	/			☐ COC Incorrect/Incomplete
15. Were samples received within holding time?	/			☐ Holding Time - Receipt
16. Were samples received with correct chemical preservative (excluding Encore)?			/	☐ pH Adjusted, pH Included (See box 16A) ☐ Incorrect Preservative
17. Were VOA samples received without headspace?			/	☐ Headspace (VOA only)
18. Did you check for residual chlorine, if necessary? (e.g. 1613B, 1668) Chlorine test strip lot number:			/	☐ Residual Chlorine
19. For 1613B water samples is pH<9?			/	☐ If no, lab will adjust
20. For rad samples was sample activity info. Provided?			/	☐ Project missing info

Comments/Actions Taken

Labeling Verified by: **Date:**

pH test strip lot number:

	Box 16A: pH Preservation	Box 18A: Residual Chlorine
Preservative:		
Lot Number:		
Exp Date:		
Analyst:		
Date:		
Time:		

Project #: 14004550 PM Instructions: _____

Sample Receiving Associate: _____ Date: 3-13-18

QA026R30.doc, 080916

TestAmerica
THE LEADER IN ENVIRONMENTAL TESTING

ANALYTICAL REPORT

Job Number: 140-10932-1

Job Description: Haverhill - M26/CTM-13

For:
URS Corporation
105 Mitchell Road, Suite 200
Oak Ridge, TN 37830

Attention: John Carson

Approved for release.
Courtney M Adkins
Project Manager I
3/28/2018 6:07 PM

Courtney M Adkins, Project Manager I
5815 Middlebrook Pike, Knoxville, TN, 37921
(865)291-3000
courtney.adkins@testamericainc.com
03/28/2018

This report may not be reproduced except in full, and with written approval from the laboratory. For questions please contact the Project Manager at the e-mail address or telephone number listed on this page.

Table of Contents

Cover Title Page 1

Data Summaries 4

Definitions 4

Method Summary 5

Sample Summary 6

Case Narrative 7

QC Association 8

Client Sample Results 9

Default Detection Limits 11

QC Sample Results 12

Chronicle 14

Certification Summary 18

Manual Integration Summary 19

Organic Sample Data 27

HPLC/IC 27

Method 0050_26A 27

Method 0050_26A QC Summary 28

Method 0050_26A Sample Data 33

Standards Data 45

Method 0050_26A ICAL Data 45

Method 0050_26A CCAL Data 85

Raw QC Data 104

Method 0050_26A Blank Data 104

Method 0050_26A LCS/LCSD Data 119

Method 0050_26A MS/MSD Data 125

Method 0050_26A Run Logs 131

Table of Contents

Method 0050_26A Prep Data 140

Method 8A 142

Method 8A QC Summary 143

Method 8A Sample Data 148

Standards Data 164

Method 8A ICAL Data 164

Method 8A CCAL Data 188

Raw QC Data 202

Method 8A Blank Data 202

Method 8A LCS/LCSD Data 215

Method 8A MS/MSD Data 222

Method 8A Run Logs 230

Method 8A Prep Data 239

Shipping and Receiving Documents 241

Client Chain of Custody 242

Glossary

Abbreviation	These commonly used abbreviations may or may not be present in this report.
¤	Listed under the "D" column to designate that the result is reported on a dry weight basis
%R	Percent Recovery
CFL	Contains Free Liquid
CNF	Contains No Free Liquid
DER	Duplicate Error Ratio (normalized absolute difference)
Dil Fac	Dilution Factor
DL	Detection Limit (DoD/DOE)
DL, RA, RE, IN	Indicates a Dilution, Re-analysis, Re-extraction, or additional Initial metals/anion analysis of the sample
DLC	Decision Level Concentration (Radiochemistry)
EDL	Estimated Detection Limit (Dioxin)
LOD	Limit of Detection (DoD/DOE)
LOQ	Limit of Quantitation (DoD/DOE)
MDA	Minimum Detectable Activity (Radiochemistry)
MDC	Minimum Detectable Concentration (Radiochemistry)
MDL	Method Detection Limit
ML	Minimum Level (Dioxin)
NC	Not Calculated
ND	Not Detected at the reporting limit (or MDL or EDL if shown)
PQL	Practical Quantitation Limit
QC	Quality Control
RER	Relative Error Ratio (Radiochemistry)
RL	Reporting Limit or Requested Limit (Radiochemistry)
RPD	Relative Percent Difference, a measure of the relative difference between two points
TEF	Toxicity Equivalent Factor (Dioxin)
TEQ	Toxicity Equivalent Quotient (Dioxin)

Method Summary

Client: URS Corporation
Project/Site: Haverhill - M26/CTM-13

TestAmerica Job ID: 140-10932-1

Method	Method Description	Protocol	Laboratory
0050/26A	Hydrogen Halide and Halogen Emissions/Stationary Sources (Mod)	SW846	TAL KNX
8A	Determination of Sulfuric Acid and Sulfur Dioxide Emissions	EPA	TAL KNX

Protocol References:

EPA = US Environmental Protection Agency

SW846 = "Test Methods For Evaluating Solid Waste, Physical/Chemical Methods", Third Edition, November 1986 And Its Updates.

Laboratory References:

TAL KNX = TestAmerica Knoxville, 5815 Middlebrook Pike, Knoxville, TN 37921, TEL (865)291-3000

Sample Summary

Client: URS Corporation
Project/Site: Haverhill - M26/CTM-13

TestAmerica Job ID: 140-10932-1

Lab Sample ID	Client Sample ID	Matrix	Collected	Received
140-10932-1	M26-1	Air	03/07/18 00:00	03/12/18 15:40
140-10932-2	M26-2	Air	03/07/18 00:00	03/12/18 15:40
140-10932-3	M26-3	Air	03/08/18 00:00	03/12/18 15:40
140-10932-4	M26- REAGENT BLANK	Air	03/09/18 00:00	03/12/18 15:40
140-10932-5	CCM-1	Air	03/08/18 00:00	03/12/18 15:40
140-10932-6	CCM-2	Air	03/08/18 00:00	03/12/18 15:40
140-10932-7	CCM-3	Air	03/09/18 00:00	03/12/18 15:40
140-10932-8	CCM-REAGENT BLANK	Air	03/09/18 00:00	03/12/18 15:40

Job Narrative
140-10932-1

Sample Receipt

The samples were received on March 12, 2018 at 3:40 PM in good condition and properly preserved. The temperature of the cooler at receipt was 22.4º C.

Quality Control and Data Interpretation

Unless otherwise noted, all holding times, and QC criteria were met and the test results shown in this report meet all applicable NELAC requirements.

General Chemistry

Analysis of Stationary Source Emission Samples by Ion Chromatography: Samples were analyzed for chloride by ion chromatography using SOP number KNOX- WC-005 (based on EPA methods 9056, 9057 and 26A). All sample results were reported as total µg hydrogen chloride. Results were calculated using the following equation:

Hydrogen Chloride, µg = (Chloride, µg/mL) × (Sample Volume, mL) × (Molecular Weight HCl / Molecular Weight Cl) × Bench DF

Note: A sample volume of 100 mL was used to convert the results to total µg for the method blanks, laboratory control samples, and client reagent blanks.

For demonstration of analytical method performance on these samples, TestAmerica Knoxville analyzed matrix spikes (MS) and matrix spike duplicates (MSD). Acceptable recoveries of these spikes demonstrate that quantitation from this particular stack gas matrix is accurate and acceptable. Impinger samples containing 0.1N sulfuric acid and 0.1N sodium hydroxide often display matrix interference effects causing poor method performance and possibly giving unreliable data unless the interference is dealt with. Therefore, the samples were diluted in the lab to reduce the interference for a more accurate anion response. The samples may be analyzed at increasing dilutions along with matrix spikes until matrix spikes display acceptable recoveries.

Analysis of Stationary Source Emission Samples by Ion Chromatography: Samples were analyzed for sulfate by ion chromatography using SOP number KNOX-WC-005 (based on EPA methods 9056, 9057 and 26A). Results were reported as total µg sulfate.

Results were calculated using the following equation:

Sulfate, µg = (Sulfate, µg/mL) × (Sample Volume, mL) × Bench DF

Note: A sample volume of 100 mL was used to convert the results to total µg for the method blanks, laboratory control samples, and client reagent blanks.

No additional analytical or quality issues were noted, other than those described above or in the Definitions/Glossary page.

HPLC/IC

Prep Batch: 19014

Lab Sample ID	Client Sample ID	Prep Type	Matrix	Method	Prep Batch
140-10932-1	M26-1	Total/NA	Air	0050/26A	
140-10932-2	M26-2	Total/NA	Air	0050/26A	
140-10932-3	M26-3	Total/NA	Air	0050/26A	
140-10932-4	M26- REAGENT BLANK	Total/NA	Air	0050/26A	
MB 140-19014/3-A	Method Blank	Total/NA	Air	0050/26A	
LCS 140-19014/1-A	Lab Control Sample	Total/NA	Air	0050/26A	
LCSD 140-19014/2-A	Lab Control Sample Dup	Total/NA	Air	0050/26A	
140-10932-2 MS	M26-2	Total/NA	Air	0050/26A	
140-10932-2 MSD	M26-2	Total/NA	Air	0050/26A	

Analysis Batch: 19015

Lab Sample ID	Client Sample ID	Prep Type	Matrix	Method	Prep Batch
140-10932-1	M26-1	Total/NA	Air	0050/26A	19014
140-10932-2	M26-2	Total/NA	Air	0050/26A	19014
140-10932-3	M26-3	Total/NA	Air	0050/26A	19014
140-10932-4	M26- REAGENT BLANK	Total/NA	Air	0050/26A	19014
MB 140-19014/3-A	Method Blank	Total/NA	Air	0050/26A	19014
LCS 140-19014/1-A	Lab Control Sample	Total/NA	Air	0050/26A	19014
LCSD 140-19014/2-A	Lab Control Sample Dup	Total/NA	Air	0050/26A	19014
140-10932-2 MS	M26-2	Total/NA	Air	0050/26A	19014
140-10932-2 MSD	M26-2	Total/NA	Air	0050/26A	19014

Prep Batch: 19093

Lab Sample ID	Client Sample ID	Prep Type	Matrix	Method	Prep Batch
140-10932-5	CCM-1	Total/NA	Air	8A	
140-10932-6	CCM-2	Total/NA	Air	8A	
140-10932-7	CCM-3	Total/NA	Air	8A	
140-10932-8	CCM-REAGENT BLANK	Total/NA	Air	8A	
MB 140-19093/3-A	Method Blank	Total/NA	Air	8A	
LCS 140-19093/1-A	Lab Control Sample	Total/NA	Air	8A	
LCSD 140-19093/2-A	Lab Control Sample Dup	Total/NA	Air	8A	
140-10932-6 MS	CCM-2	Total/NA	Air	8A	
140-10932-6 MSD	CCM-2	Total/NA	Air	8A	

Analysis Batch: 19105

Lab Sample ID	Client Sample ID	Prep Type	Matrix	Method	Prep Batch
140-10932-5	CCM-1	Total/NA	Air	8A	19093
140-10932-6	CCM-2	Total/NA	Air	8A	19093
140-10932-7	CCM-3	Total/NA	Air	8A	19093
140-10932-8	CCM-REAGENT BLANK	Total/NA	Air	8A	19093
MB 140-19093/3-A	Method Blank	Total/NA	Air	8A	19093
LCS 140-19093/1-A	Lab Control Sample	Total/NA	Air	8A	19093
LCSD 140-19093/2-A	Lab Control Sample Dup	Total/NA	Air	8A	19093
140-10932-6 MS	CCM-2	Total/NA	Air	8A	19093
140-10932-6 MSD	CCM-2	Total/NA	Air	8A	19093

Client Sample ID: M26-1
Lab Sample ID: 140-10932-1
Date Collected: 03/07/18 00:00
Matrix: Air
Date Received: 03/12/18 15:40
Sample Container: Amber Glass 500mL - unpreserved

Method: 0050/26A - Hydrogen Halide and Halogen Emissions/Stationary Sources (Mod)

Analyte	Result	Qualifier	RL	MDL	Unit	D	Prepared	Analyzed	Dil Fac
Hydrogen Chloride	212000		33400	14000	ug/Sample		03/22/18 00:00	03/22/18 16:04	1000

Client Sample ID: M26-2
Lab Sample ID: 140-10932-2
Date Collected: 03/07/18 00:00
Matrix: Air
Date Received: 03/12/18 15:40
Sample Container: Amber Glass 500mL - unpreserved

Method: 0050/26A - Hydrogen Halide and Halogen Emissions/Stationary Sources (Mod)

Analyte	Result	Qualifier	RL	MDL	Unit	D	Prepared	Analyzed	Dil Fac
Hydrogen Chloride	223000		31900	13400	ug/Sample		03/22/18 00:00	03/22/18 16:21	1000

Client Sample ID: M26-3
Lab Sample ID: 140-10932-3
Date Collected: 03/08/18 00:00
Matrix: Air
Date Received: 03/12/18 15:40
Sample Container: Amber Glass 500mL - unpreserved

Method: 0050/26A - Hydrogen Halide and Halogen Emissions/Stationary Sources (Mod)

Analyte	Result	Qualifier	RL	MDL	Unit	D	Prepared	Analyzed	Dil Fac
Hydrogen Chloride	193000		31400	13200	ug/Sample		03/22/18 00:00	03/22/18 17:13	1000

Client Sample ID: M26- REAGENT BLANK
Lab Sample ID: 140-10932-4
Date Collected: 03/09/18 00:00
Matrix: Air
Date Received: 03/12/18 15:40
Sample Container: Amber Glass 250ml - unpreserved

Method: 0050/26A - Hydrogen Halide and Halogen Emissions/Stationary Sources (Mod)

Analyte	Result	Qualifier	RL	MDL	Unit	D	Prepared	Analyzed	Dil Fac
Hydrogen Chloride	ND		20.6	8.64	ug/Sample		03/22/18 00:00	03/22/18 17:31	2

Client Sample ID: CCM-1
Lab Sample ID: 140-10932-5
Date Collected: 03/08/18 00:00
Matrix: Air
Date Received: 03/12/18 15:40
Sample Container: Soil jar 2oz

Method: 8A - Determination of Sulfuric Acid and Sulfur Dioxide Emissions

Analyte	Result	Qualifier	RL	MDL	Unit	D	Prepared	Analyzed	Dil Fac
Sulfate	31700		2100	378	ug/Sample		03/27/18 00:00	03/27/18 15:13	100

Client Sample ID: CCM-2
Lab Sample ID: 140-10932-6
Date Collected: 03/08/18 00:00
Matrix: Air
Date Received: 03/12/18 15:40
Sample Container: Soil jar 2oz

Method: 8A - Determination of Sulfuric Acid and Sulfur Dioxide Emissions

Analyte	Result	Qualifier	RL	MDL	Unit	D	Prepared	Analyzed	Dil Fac
Sulfate	32400		2200	396	ug/Sample		03/27/18 00:00	03/27/18 15:35	100

Client Sample ID: CCM-3

Lab Sample ID: 140-10932-7

Date Collected: 03/09/18 00:00
Matrix: Air
Date Received: 03/12/18 15:40
Sample Container: Soil jar 2oz

Method: 8A - Determination of Sulfuric Acid and Sulfur Dioxide Emissions

Analyte	Result	Qualifier	RL	MDL	Unit	D	Prepared	Analyzed	Dil Fac
Sulfate	**35400**		2000	360	ug/Sample		03/27/18 00:00	03/27/18 16:34	100

Client Sample ID: CCM-REAGENT BLANK

Lab Sample ID: 140-10932-8

Date Collected: 03/09/18 00:00
Matrix: Air
Date Received: 03/12/18 15:40
Sample Container: Soil jar 2oz

Method: 8A - Determination of Sulfuric Acid and Sulfur Dioxide Emissions

Analyte	Result	Qualifier	RL	MDL	Unit	D	Prepared	Analyzed	Dil Fac
Sulfate	ND		100	18.0	ug/Sample		03/27/18 00:00	03/27/18 16:54	1

Default Detection Limits

Client: URS Corporation
Project/Site: Haverhill - M26/CTM-13

TestAmerica Job ID: 140-10932-1

Method: 0050/26A - Hydrogen Halide and Halogen Emissions/Stationary Sources (Mod)

Prep: 0050/26A

Analyte	RL	MDL	Units	Method
Hydrogen Chloride	10.3	4.32	ug/Sample	0050/26A

Method: 8A - Determination of Sulfuric Acid and Sulfur Dioxide Emissions

Prep: 8A

Analyte	RL	MDL	Units	Method
Sulfate	100	18.0	ug/Sample	8A

Method: 0050/26A - Hydrogen Halide and Halogen Emissions/Stationary Sources (Mod)

Lab Sample ID: MB 140-19014/3-A — **Client Sample ID: Method Blank**
Matrix: Air — **Prep Type: Total/NA**
Analysis Batch: 19015 — **Prep Batch: 19014**

Analyte	MB Result	MB Qualifier	RL	MDL	Unit	D	Prepared	Analyzed	Dil Fac
Hydrogen Chloride	ND		10.3	4.32	ug/Sample		03/22/18 00:00	03/22/18 15:28	1

Lab Sample ID: LCS 140-19014/1-A — **Client Sample ID: Lab Control Sample**
Matrix: Air — **Prep Type: Total/NA**
Analysis Batch: 19015 — **Prep Batch: 19014**

Analyte	Spike Added	LCS Result	LCS Qualifier	Unit	D	%Rec	%Rec. Limits
Hydrogen Chloride	77.1	77.59		ug/Sample		101	90 - 110

Lab Sample ID: LCSD 140-19014/2-A — **Client Sample ID: Lab Control Sample Dup**
Matrix: Air — **Prep Type: Total/NA**
Analysis Batch: 19015 — **Prep Batch: 19014**

Analyte	Spike Added	LCSD Result	LCSD Qualifier	Unit	D	%Rec	%Rec. Limits	RPD	RPD Limit
Hydrogen Chloride	77.1	76.37		ug/Sample		99	90 - 110	2	20

Lab Sample ID: 140-10932-2 MS — **Client Sample ID: M26-2**
Matrix: Air — **Prep Type: Total/NA**
Analysis Batch: 19015 — **Prep Batch: 19014**

Analyte	Sample Result	Sample Qualifier	Spike Added	MS Result	MS Qualifier	Unit	D	%Rec	%Rec. Limits
Hydrogen Chloride	223000		319000	529500		ug/Sample		96	75 - 125

Lab Sample ID: 140-10932-2 MSD — **Client Sample ID: M26-2**
Matrix: Air — **Prep Type: Total/NA**
Analysis Batch: 19015 — **Prep Batch: 19014**

Analyte	Sample Result	Sample Qualifier	Spike Added	MSD Result	MSD Qualifier	Unit	D	%Rec	%Rec. Limits	RPD	RPD Limit
Hydrogen Chloride	223000		319000	534400		ug/Sample		98	75 - 125	1	20

Method: 8A - Determination of Sulfuric Acid and Sulfur Dioxide Emissions

Lab Sample ID: MB 140-19093/3-A — **Client Sample ID: Method Blank**
Matrix: Air — **Prep Type: Total/NA**
Analysis Batch: 19105 — **Prep Batch: 19093**

Analyte	MB Result	MB Qualifier	RL	MDL	Unit	D	Prepared	Analyzed	Dil Fac
Sulfate	ND		100	18.0	ug/Sample		03/27/18 00:00	03/27/18 14:14	1

Lab Sample ID: LCS 140-19093/1-A — **Client Sample ID: Lab Control Sample**
Matrix: Air — **Prep Type: Total/NA**
Analysis Batch: 19105 — **Prep Batch: 19093**

Analyte	Spike Added	LCS Result	LCS Qualifier	Unit	D	%Rec	%Rec. Limits
Sulfate	250	266.8		ug/Sample		107	90 - 110

Method: 8A - Determination of Sulfuric Acid and Sulfur Dioxide Emissions (Continued)

Lab Sample ID: LCSD 140-19093/2-A
Matrix: Air
Analysis Batch: 19105

Client Sample ID: Lab Control Sample Dup
Prep Type: Total/NA
Prep Batch: 19093

Analyte			Spike Added	LCSD Result	LCSD Qualifier	Unit	D	%Rec	%Rec. Limits	RPD	RPD Limit
Sulfate			250	262.0		ug/Sample		105	90 - 110	2	20

Lab Sample ID: 140-10932-6 MS
Matrix: Air
Analysis Batch: 19105

Client Sample ID: CCM-2
Prep Type: Total/NA
Prep Batch: 19093

Analyte	Sample Result	Sample Qualifier	Spike Added	MS Result	MS Qualifier	Unit	D	%Rec	%Rec. Limits		
Sulfate	32400		11000	43080		ug/Sample		97	75 - 125		

Lab Sample ID: 140-10932-6 MSD
Matrix: Air
Analysis Batch: 19105

Client Sample ID: CCM-2
Prep Type: Total/NA
Prep Batch: 19093

Analyte	Sample Result	Sample Qualifier	Spike Added	MSD Result	MSD Qualifier	Unit	D	%Rec	%Rec. Limits	RPD	RPD Limit
Sulfate	32400		11000	43160		ug/Sample		98	75 - 125	0	20

Client Sample ID: M26-1
Date Collected: 03/07/18 00:00
Date Received: 03/12/18 15:40

Lab Sample ID: 140-10932-1
Matrix: Air

Prep Type	Batch Type	Batch Method	Run	Dil Factor	Initial Amount	Final Amount	Batch Number	Prepared or Analyzed	Analyst	Lab
Total/NA	Prep	0050/26A			1 Sample	325 mL	19014	03/22/18 00:00	JMH	TAL KNX
Total/NA	Analysis	0050/26A		1000	10 mL	10 mL	19015	03/22/18 16:04	JMH	TAL KNX
	Instrument ID: 1500									

Client Sample ID: M26-2
Date Collected: 03/07/18 00:00
Date Received: 03/12/18 15:40

Lab Sample ID: 140-10932-2
Matrix: Air

Prep Type	Batch Type	Batch Method	Run	Dil Factor	Initial Amount	Final Amount	Batch Number	Prepared or Analyzed	Analyst	Lab
Total/NA	Prep	0050/26A			1 Sample	310 mL	19014	03/22/18 00:00	JMH	TAL KNX
Total/NA	Analysis	0050/26A		1000	10 mL	10 mL	19015	03/22/18 16:21	JMH	TAL KNX
	Instrument ID: 1500									

Client Sample ID: M26-3
Date Collected: 03/08/18 00:00
Date Received: 03/12/18 15:40

Lab Sample ID: 140-10932-3
Matrix: Air

Prep Type	Batch Type	Batch Method	Run	Dil Factor	Initial Amount	Final Amount	Batch Number	Prepared or Analyzed	Analyst	Lab
Total/NA	Prep	0050/26A			1 Sample	305 mL	19014	03/22/18 00:00	JMH	TAL KNX
Total/NA	Analysis	0050/26A		1000	10 mL	10 mL	19015	03/22/18 17:13	JMH	TAL KNX
	Instrument ID: 1500									

Client Sample ID: M26- REAGENT BLANK
Date Collected: 03/09/18 00:00
Date Received: 03/12/18 15:40

Lab Sample ID: 140-10932-4
Matrix: Air

Prep Type	Batch Type	Batch Method	Run	Dil Factor	Initial Amount	Final Amount	Batch Number	Prepared or Analyzed	Analyst	Lab
Total/NA	Prep	0050/26A			1 Sample	100 mL	19014	03/22/18 00:00	JMH	TAL KNX
Total/NA	Analysis	0050/26A		2	10 mL	10 mL	19015	03/22/18 17:31	JMH	TAL KNX
	Instrument ID: 1500									

Client Sample ID: CCM-1
Date Collected: 03/08/18 00:00
Date Received: 03/12/18 15:40

Lab Sample ID: 140-10932-5
Matrix: Air

Prep Type	Batch Type	Batch Method	Run	Dil Factor	Initial Amount	Final Amount	Batch Number	Prepared or Analyzed	Analyst	Lab
Total/NA	Prep	8A			1 Sample	21 mL	19093	03/27/18 00:00	JMH	TAL KNX
Total/NA	Analysis	8A		100	10 mL	10 mL	19105	03/27/18 15:13	JMH	TAL KNX
	Instrument ID: 320									

Client Sample ID: CCM-2

Lab Sample ID: 140-10932-6

Date Collected: 03/08/18 00:00

Matrix: Air

Date Received: 03/12/18 15:40

Prep Type	Batch Type	Batch Method	Run	Dil Factor	Initial Amount	Final Amount	Batch Number	Prepared or Analyzed	Analyst	Lab
Total/NA	Prep	8A			1 Sample	22 mL	19093	03/27/18 00:00	JMH	TAL KNX
Total/NA	Analysis	8A		100	10 mL	10 mL	19105	03/27/18 15:35	JMH	TAL KNX
	Instrument ID: 320									

Client Sample ID: CCM-3

Lab Sample ID: 140-10932-7

Date Collected: 03/09/18 00:00

Matrix: Air

Date Received: 03/12/18 15:40

Prep Type	Batch Type	Batch Method	Run	Dil Factor	Initial Amount	Final Amount	Batch Number	Prepared or Analyzed	Analyst	Lab
Total/NA	Prep	8A			1 Sample	20 mL	19093	03/27/18 00:00	JMH	TAL KNX
Total/NA	Analysis	8A		100	10 mL	10 mL	19105	03/27/18 16:34	JMH	TAL KNX
	Instrument ID: 320									

Client Sample ID: CCM-REAGENT BLANK

Lab Sample ID: 140-10932-8

Date Collected: 03/09/18 00:00

Matrix: Air

Date Received: 03/12/18 15:40

Prep Type	Batch Type	Batch Method	Run	Dil Factor	Initial Amount	Final Amount	Batch Number	Prepared or Analyzed	Analyst	Lab
Total/NA	Prep	8A			1 Sample	100 mL	19093	03/27/18 00:00	JMH	TAL KNX
Total/NA	Analysis	8A		1	10 mL	10 mL	19105	03/27/18 16:54	JMH	TAL KNX
	Instrument ID: 320									

Client Sample ID: Method Blank

Lab Sample ID: MB 140-19014/3-A

Date Collected: N/A

Matrix: Air

Date Received: N/A

Prep Type	Batch Type	Batch Method	Run	Dil Factor	Initial Amount	Final Amount	Batch Number	Prepared or Analyzed	Analyst	Lab
Total/NA	Prep	0050/26A			1 Sample	100 mL	19014	03/22/18 00:00	JMH	TAL KNX
Total/NA	Analysis	0050/26A		1	10 mL	10 mL	19015	03/22/18 15:28	JMH	TAL KNX
	Instrument ID: 1500									

Client Sample ID: Method Blank

Lab Sample ID: MB 140-19093/3-A

Date Collected: N/A

Matrix: Air

Date Received: N/A

Prep Type	Batch Type	Batch Method	Run	Dil Factor	Initial Amount	Final Amount	Batch Number	Prepared or Analyzed	Analyst	Lab
Total/NA	Prep	8A			1 Sample	100 mL	19093	03/27/18 00:00	JMH	TAL KNX
Total/NA	Analysis	8A		1	10 mL	10 mL	19105	03/27/18 14:14	JMH	TAL KNX
	Instrument ID: 320									

Client Sample ID: Lab Control Sample
Date Collected: N/A
Date Received: N/A

Lab Sample ID: LCS 140-19014/1-A
Matrix: Air

Prep Type	Batch Type	Batch Method	Run	Dil Factor	Initial Amount	Final Amount	Batch Number	Prepared or Analyzed	Analyst	Lab
Total/NA	Prep	0050/26A			1 Sample	100 mL	19014	03/22/18 00:00	JMH	TAL KNX
Total/NA	Analysis	0050/26A		1	10 mL	10 mL	19015	03/22/18 14:53	JMH	TAL KNX
	Instrument ID: 1500									

Client Sample ID: Lab Control Sample
Date Collected: N/A
Date Received: N/A

Lab Sample ID: LCS 140-19093/1-A
Matrix: Air

Prep Type	Batch Type	Batch Method	Run	Dil Factor	Initial Amount	Final Amount	Batch Number	Prepared or Analyzed	Analyst	Lab
Total/NA	Prep	8A			1 Sample	100 mL	19093	03/27/18 00:00	JMH	TAL KNX
Total/NA	Analysis	8A		1	10 mL	10 mL	19105	03/27/18 14:33	JMH	TAL KNX
	Instrument ID: 320									

Client Sample ID: Lab Control Sample Dup
Date Collected: N/A
Date Received: N/A

Lab Sample ID: LCSD 140-19014/2-A
Matrix: Air

Prep Type	Batch Type	Batch Method	Run	Dil Factor	Initial Amount	Final Amount	Batch Number	Prepared or Analyzed	Analyst	Lab
Total/NA	Prep	0050/26A			1 Sample	100 mL	19014	03/22/18 00:00	JMH	TAL KNX
Total/NA	Analysis	0050/26A		1	10 mL	10 mL	19015	03/22/18 15:11	JMH	TAL KNX
	Instrument ID: 1500									

Client Sample ID: Lab Control Sample Dup
Date Collected: N/A
Date Received: N/A

Lab Sample ID: LCSD 140-19093/2-A
Matrix: Air

Prep Type	Batch Type	Batch Method	Run	Dil Factor	Initial Amount	Final Amount	Batch Number	Prepared or Analyzed	Analyst	Lab
Total/NA	Prep	8A			1 Sample	100 mL	19093	03/27/18 00:00	JMH	TAL KNX
Total/NA	Analysis	8A		1	10 mL	10 mL	19105	03/27/18 14:53	JMH	TAL KNX
	Instrument ID: 320									

Client Sample ID: M26-2
Date Collected: 03/07/18 00:00
Date Received: 03/12/18 15:40

Lab Sample ID: 140-10932-2 MS
Matrix: Air

Prep Type	Batch Type	Batch Method	Run	Dil Factor	Initial Amount	Final Amount	Batch Number	Prepared or Analyzed	Analyst	Lab
Total/NA	Prep	0050/26A			1 Sample	310 mL	19014	03/22/18 00:00	JMH	TAL KNX
Total/NA	Analysis	0050/26A		1000	10 mL	10 mL	19015	03/22/18 16:39	JMH	TAL KNX
	Instrument ID: 1500									

Lab Chronicle

Client: URS Corporation
Project/Site: Haverhill - M26/CTM-13

TestAmerica Job ID: 140-10932-1

Client Sample ID: M26-2
Date Collected: 03/07/18 00:00
Date Received: 03/12/18 15:40

Lab Sample ID: 140-10932-2 MSD
Matrix: Air

Prep Type	Batch Type	Batch Method	Run	Dil Factor	Initial Amount	Final Amount	Batch Number	Prepared or Analyzed	Analyst	Lab
Total/NA	Prep	0050/26A			1 Sample	310 mL	19014	03/22/18 00:00	JMH	TAL KNX
Total/NA	Analysis	0050/26A		1000	10 mL	10 mL	19015	03/22/18 16:56	JMH	TAL KNX
	Instrument ID: 1500									

Client Sample ID: CCM-2
Date Collected: 03/08/18 00:00
Date Received: 03/12/18 15:40

Lab Sample ID: 140-10932-6 MS
Matrix: Air

Prep Type	Batch Type	Batch Method	Run	Dil Factor	Initial Amount	Final Amount	Batch Number	Prepared or Analyzed	Analyst	Lab
Total/NA	Prep	8A			1 Sample	22 mL	19093	03/27/18 00:00	JMH	TAL KNX
Total/NA	Analysis	8A		100	10 mL	10 mL	19105	03/27/18 15:54	JMH	TAL KNX
	Instrument ID: 320									

Client Sample ID: CCM-2
Date Collected: 03/08/18 00:00
Date Received: 03/12/18 15:40

Lab Sample ID: 140-10932-6 MSD
Matrix: Air

Prep Type	Batch Type	Batch Method	Run	Dil Factor	Initial Amount	Final Amount	Batch Number	Prepared or Analyzed	Analyst	Lab
Total/NA	Prep	8A			1 Sample	22 mL	19093	03/27/18 00:00	JMH	TAL KNX
Total/NA	Analysis	8A		100	10 mL	10 mL	19105	03/27/18 16:14	JMH	TAL KNX
	Instrument ID: 320									

Laboratory References:

TAL KNX = TestAmerica Knoxville, 5815 Middlebrook Pike, Knoxville, TN 37921, TEL (865)291-3000

Accreditation/Certification Summary

Client: URS Corporation
TestAmerica Job ID: 140-10932-1
Project/Site: Haverhill - M26/CTM-13

Laboratory: TestAmerica Knoxville

All accreditations/certifications held by this laboratory are listed. Not all accreditations/certifications are applicable to this report.

Authority	Program	EPA Region	Identification Number	Expiration Date
	AFCEE		N/A	
ANAB	DoD ELAP		L2311	02-13-19
Arkansas DEQ	State Program	6	88-0688	06-16-18
California	State Program	9	2423	06-30-18
Colorado	State Program	8	TN00009	02-28-19
Connecticut	State Program	1	PH-0223	09-30-19
Florida	NELAP	4	E87177	06-30-18
Georgia	State Program	4	906	04-13-20
Hawaii	State Program	9	N/A	04-13-18
Kansas	NELAP	7	E-10349	10-31-18
Kentucky (DW)	State Program	4	90101	12-31-18
Louisiana	NELAP	6	83979	06-30-18
Louisiana (DW)	NELAP	6	LA160005	12-31-18
Maryland	State Program	3	277	03-31-19
Michigan	State Program	5	9933	04-13-20
Nevada	State Program	9	TN00009	07-31-18
New Jersey	NELAP	2	TN001	06-30-18
New York	NELAP	2	10781	03-31-18 *
North Carolina (DW)	State Program	4	21705	07-31-18
North Carolina (WW/SW)	State Program	4	64	12-31-18
Ohio VAP	State Program	5	CL0059	11-22-18
Oklahoma	State Program	6	9415	08-31-18
Oregon	NELAP	10	TNI0189	01-01-19
Pennsylvania	NELAP	3	68-00576	12-31-18
Tennessee	State Program	4	2014	04-13-20
Texas	NELAP	6	T104704380-16-9	08-31-18
US Fish & Wildlife	Federal		LE-058448-0	07-31-18
USDA	Federal		P330-16-00262	08-20-19
Utah	NELAP	8	TN00009	07-31-18
Virginia	NELAP	3	460176	09-14-18
Washington	State Program	10	C593	01-19-19
West Virginia (DW)	State Program	3	9955C	12-31-18
West Virginia DEP	State Program	3	345	04-30-18
Wisconsin	State Program	5	998044300	08-31-18

* Accreditation/Certification renewal pending - accreditation/certification considered valid.

Shipping and Receiving Documents

AECOM

Chain of Custody Record

Project	Haverhill
Site	Bypass Vent Stack No. 5
Purchase Order	60562829.103
Prepared by:	

Test America
5815 Middlebrook Pike
Knoxville, TN 37921

Sample ID	Sample Matrix	Date/Time	HCl by Method 26A	Method CTM-13 (SO4 by IC)					Comments
M26-1	0.1N H2SO4	3/7/18	X						
M26-2	0.1N H2SO4	3/7/18	X						
M26-3	0.1N H2SO4	3/8/18	X						
M26-reagent blank	0.1N H2SO4	3/9/18	X						
CCM-1	Water	3/8/18		X					
CCM-2	Water	3/8/18		X					
CCM-3	Water	3/9/18		X					
CCM-reagent blank	Water	3/9/18		X					

140-10932 Chain of Custody

Contact: John Carson 865.425.7014; john.r.carson@aecom.com; Courtney Adkins 865.291.3019

Relinquished by:	Date	Time	Received by:	Date	Time	Relinquished by:	Date	Time
John Carson	3/12/18	15[illegible]						
Received by:	Date	Time	Relinquished by:	Date	Time			

Received for Laboratory by:	Date	Time	Air bill No.	Opened by:	Seal #	Date	Time	Temp (C)
[illegible]	3-12-18	16:40						

Seal #	Condition

Remarks

HAND DELIVERED
NO CUSTODY SEALS
RECEIVED AMBIENT RT 22.5/CT 22.4°C
BYA 3-12-18

Loc: 140
10932

TESTAMERICA KNOXVILLE SAMPLE RECEIPT/CONDITION UPON RECEIPT ANOMALY CHECKLIST

Log In Number:

Review Items	Yes	No	NA	If No, what was the problem?
1. Are the shipping containers intact?	/		/	☐ **Containers, Broken**
2. Were ambient air containers received intact?			/	☐ Checked in lab
3. The coolers/containers custody seal if present, is it intact?			/	☐ Yes ☐ NA
4. Is the cooler temperature within limits? (> freezing temp. of water to 6 °C, VOST: 10°C) Thermometer ID :_____ Correction factor: _____			/	☐ **Cooler Out of Temp, Client Contacted, Proceed/Cancel** ☐ **Cooler Out of Temp, Same Day Receipt**
5. Were all of the sample containers received intact?	/			☐ **Containers, Broken**
6. Were samples received in appropriate containers?	/			☐ **Containers, Improper; Client Contacted; Proceed/Cancel**
7. Do sample container labels match COC? (IDs, Dates, Times)	/			☐ **COC & Samples Do Not Match** ☐ **COC Incorrect/Incomplete** ☐ **COC Not Received**
8. Were all of the samples listed on the COC received?	/			☐ **Sample Received, Not on COC** ☐ **Sample on COC, Not Received**
9. Is the date/time of sample collection noted?	/		/	☐ **COC; No Date/Time; Client Contacted**
10. Was the sampler identified on the COC?	/			☐ **Sampler Not Listed on COC**
11. Is the client and project name/# identified?	/			☐ **COC Incorrect/Incomplete**
12. Are tests/parameters listed for each sample?	/			☐ **COC No tests on COC**
13. Is the matrix of the samples noted?	/			☐ **COC Incorrect/Incomplete**
14. Was COC relinquished? (Signed/Dated/Timed)	/			☐ **COC Incorrect/Incomplete**
15. Were samples received within holding time?	/			☐ **Holding Time - Receipt**
16. Were samples received with correct chemical preservative (excluding Encore)?			/	☐ **pH Adjusted, pH Included (See box 16A)** ☐ **Incorrect Preservative**
17. Were VOA samples received without headspace?			/	☐ **Headspace (VOA only)**
18. Did you check for residual chlorine, if necessary? (e.g. 1613B, 1668) Chlorine test strip lot number:			/	☐ **Residual Chlorine**
19. For 1613B water samples is pH<9?			/	☐ If no, lab will adjust
20. For rad samples was sample activity info. Provided?			/	☐ Project missing info

Comments/Actions Taken

Labeling Verified by: **Date:**

pH test strip lot number:

Box 16A: pH Preservation	Box 18A: Residual Chlorine
Preservative:	
Lot Number:	
Exp Date:	
Analyst:	
Date:	
Time:	

Project #: 14004550 PM Instructions: _____

Sample Receiving Associate: _____ Date: 3-13-18

QA026R30.doc, 080916

03/28/2018

TestAmerica
THE LEADER IN ENVIRONMENTAL TESTING

ANALYTICAL REPORT

Job Number: 140-10931-1

Job Description: Haverhill - M29

For:
URS Corporation
105 Mitchell Road, Suite 200
Oak Ridge, TN 37830

Attention: John Carson

Approved for release.
Courtney M Adkins
Project Manager I
3/26/2018 3:18 PM

Courtney M Adkins, Project Manager I
5815 Middlebrook Pike, Knoxville, TN, 37921
(865)291-3000
courtney.adkins@testamericainc.com
03/26/2018

This report may not be reproduced except in full, and with written approval from the laboratory. For questions please contact the Project Manager at the e-mail address or telephone number listed on this page.

Table of Contents

Cover Title Page 1

Data Summaries 4

Definitions 4

Method Summary 5

Sample Summary 6

Case Narrative 7

QC Association 8

Client Sample Results 12

Default Detection Limits 17

QC Sample Results 18

Chronicle 22

Certification Summary 33

Inorganic Sample Data 34

Metals Data 34

Met Cover Page 35

Met Sample Data 36

Met QC Data 57

Met ICV/CCV 57

Met CRQL 63

Met Blanks 65

Met ICSA/ICSAB 76

Met MS/MSD/PDS 78

Met LCS/LCSD 90

Met Serial Dilution 100

Met MDL 102

Met IECF 116

Table of Contents

Met Linear Ranges 119

Met Preparation Log 120

Met Analysis Run Log 127

Met Prep Data 131

Met Raw Data 154

Shipping and Receiving Documents 410

Client Chain of Custody 411

Qualifiers

Metals

Qualifier	Qualifier Description
J	Result is less than the RL but greater than or equal to the MDL and the concentration is an approximate value.
L	A negative instrument reading had an absolute value greater than the reporting limit
4	MS, MSD: The analyte present in the original sample is greater than 4 times the matrix spike concentration; therefore, control limits are not applicable.

Glossary

Abbreviation	These commonly used abbreviations may or may not be present in this report.
¤	Listed under the "D" column to designate that the result is reported on a dry weight basis
%R	Percent Recovery
CFL	Contains Free Liquid
CNF	Contains No Free Liquid
DER	Duplicate Error Ratio (normalized absolute difference)
Dil Fac	Dilution Factor
DL	Detection Limit (DoD/DOE)
DL, RA, RE, IN	Indicates a Dilution, Re-analysis, Re-extraction, or additional Initial metals/anion analysis of the sample
DLC	Decision Level Concentration (Radiochemistry)
EDL	Estimated Detection Limit (Dioxin)
LOD	Limit of Detection (DoD/DOE)
LOQ	Limit of Quantitation (DoD/DOE)
MDA	Minimum Detectable Activity (Radiochemistry)
MDC	Minimum Detectable Concentration (Radiochemistry)
MDL	Method Detection Limit
ML	Minimum Level (Dioxin)
NC	Not Calculated
ND	Not Detected at the reporting limit (or MDL or EDL if shown)
PQL	Practical Quantitation Limit
QC	Quality Control
RER	Relative Error Ratio (Radiochemistry)
RL	Reporting Limit or Requested Limit (Radiochemistry)
RPD	Relative Percent Difference, a measure of the relative difference between two points
TEF	Toxicity Equivalent Factor (Dioxin)
TEQ	Toxicity Equivalent Quotient (Dioxin)

Method Summary

Client: URS Corporation
Project/Site: Haverhill - M29

TestAmerica Job ID: 140-10931-1

Method	Method Description	Protocol	Laboratory
29/6010C	Metals (ICP), Stationary Source	EPA	TAL KNX
29/7470A	Mercury (CVAA), Stationary Source	EPA	TAL KNX

Protocol References:

EPA = US Environmental Protection Agency

Laboratory References:

TAL KNX = TestAmerica Knoxville, 5815 Middlebrook Pike, Knoxville, TN 37921, TEL (865)291-3000

Sample Summary

Client: URS Corporation
Project/Site: Haverhill - M29

TestAmerica Job ID: 140-10931-1

Lab Sample ID	Client Sample ID	Matrix	Collected	Received
140-10931-1	M29-FILT/PNR-1	Air	03/08/18 00:00	03/12/18 15:40
140-10931-2	M29-IMP 1&2-1	Air	03/08/18 00:00	03/12/18 15:40
140-10931-3	M29-IMP 3-1	Air	03/08/18 00:00	03/12/18 15:40
140-10931-4	M29-IMP 4&5-1	Air	03/08/18 00:00	03/12/18 15:40
140-10931-5	M29-HCL-1	Air	03/08/18 00:00	03/12/18 15:40
140-10931-6	M29-FILT/PNR-2	Air	03/08/18 00:00	03/12/18 15:40
140-10931-7	M29-IMP 1&2-2	Air	03/08/18 00:00	03/12/18 15:40
140-10931-8	M29-IMP 3-2	Air	03/08/18 00:00	03/12/18 15:40
140-10931-9	M29-IMP 4&5-2	Air	03/08/18 00:00	03/12/18 15:40
140-10931-10	M29-HCL-2	Air	03/08/18 00:00	03/12/18 15:40
140-10931-11	M29-FILT/PNR-3	Air	03/09/18 00:00	03/12/18 15:40
140-10931-12	M29-IMP 1&2-3	Air	03/09/18 00:00	03/12/18 15:40
140-10931-13	M29-IMP 3-3	Air	03/09/18 00:00	03/12/18 15:40
140-10931-14	M29-IMP 4&5-3	Air	03/09/18 00:00	03/12/18 15:40
140-10931-15	M29-HCL-3	Air	03/09/18 00:00	03/12/18 15:40
140-10931-16	M29-FILT/0.1N HNO3-BLANK	Air	03/09/18 00:00	03/12/18 15:40
140-10931-17	M29-HNO3/H2O2 BLANK	Air	03/09/18 00:00	03/12/18 15:40
140-10931-18	M29-KMNO4-BLANK	Air	03/09/18 00:00	03/12/18 15:40
140-10931-19	M29-8N HCL BLANK	Air	03/09/18 00:00	03/12/18 15:40
140-10931-20	A-6420 M29 MEDIA CHECK FILTER	Air	03/08/18 00:00	03/12/18 15:40
140-10931-21	M29-WATER-BLANK	Air	03/09/18 00:00	03/12/18 15:40

Job Narrative
140-10931-1

Sample Receipt

The samples were received on March 12, 2018 at 3:40 PM in good condition and properly preserved. The temperature of the cooler at receipt was 22.4º C.

Quality Control and Data Interpretation

Unless otherwise noted, all holding times, and QC criteria were met and the test results shown in this report meet all applicable NELAC requirements.

Metals

Multi-Metals Train Preparation and Analysis

These stack gas samples were prepared and analyzed using TestAmerica Knoxville standard operating procedure KNOX-MT-0006 which is based on EPA SW-846 Method 0060, “Determination of Metals in Stack Emissions” and Method 29, “Determination of Metals Emissions from Stationary Sources”. SW-846 Methods 6010C and 7470A as incorporated in TestAmerica Knoxville standard operating procedures KNOX-MT-0007 and KNOX-MT-0009 were used to perform the final instrument analysis.

Acid digestion was performed on the front half particulate filter and the nitric acid probe rinse fractions separately using HNO3 and HF. After digestion, these two fractions were combined, and the HF was sequestered using H3BO3 followed by another heating cycle. This digestate was adjusted to final volume and analyzed by ICP. A portion of the ICP digestate was prepared for CVAA analysis in order to determine the particle-bound mercury. Results were calculated using the following equations:

ICP Analyte, µg/sample = (Raw Sample Concentration, µg/L) x (Bench DF) x (Final Volume ICP Digestate, L)

Hg, µg/sample = (Raw Sample Concentration, µg/L) x (Bench DF) x (Final Volume ICP Digestate, L) x (Final Volume Hg Digestate, mL / Volume ICP Digestate Used, mL)

The 5%HNO3/10%H2O2 impinger samples were reduced in volume to 100 mL. A 20 milliliter portion of the concentrated sample was removed and processed for mercury. The remaining 80 mL of concentrated sample was digested using HNO3 and H2O2, adjusted to a final volume of 80 mL, and analyzed by ICP. Results were calculated using the following equations:

ICP Analyte, µg/sample = (Raw Sample Concentration, µg/L) x (Bench DF) x (Final Volume Concentrated Sample, L) x (Final Volume ICP Digestate, mL / Volume Conc. Sample Digested, mL)

Hg, µg/sample = (Raw Sample Concentration, µg/L) x (Bench DF) x (Final Volume Concentrated Sample, L) x (Final Volume Hg Digestate, mL / Volume Conc. Sample Digested, mL)

For the 0.1N HNO3 rinse samples (empty impingers), a 2.5 milliliter portion of the sample as received was removed and processed for mercury.

The 4% KMnO4/10%H2SO4 impinger samples were filtered to remove MnO2, followed by removal of a 25 mL portion of filtrate for mercury processing. The filtered MnO2 residue was digested in HCl, combined with the HCl rinse sample and analyzed for mercury.

Results for the 0.1N HNO3 rinse samples and the KMnO4 filtrate were calculated using the following equation:

Hg, µg/sample = (Raw Sample Concentration, µg/L) x (Bench DF) x (Total Sample Volume, L) x (Final Volume Hg Digestate, mL / Volume Sample Digested, mL)

Results for the combined MnO2 residue HCl digestates and HCl rinse samples were calculated as follows:

Hg, µg/sample = (Raw Sample Concentration, µg/L) x (Bench DF) x (Total Sample Volume, L + MnO2 HCl Volume, L) x (Final Volume Hg Digestate, mL / Volume Sample Digested, mL)

Note: The total sample volume for the 5%HNO3/10%H2O2 impinger samples is the final volume of the concentrated sample. The total sample volume for the combined MnO2 residue HCl digestates and HCl rinse samples is equal to the total sample volume plus the MnO2 HCl volume.

Method 29/6010C: The following samples were diluted due to the presence of Silicon which interferes with Lead: M29-FILT/PNR-2 (140-10931-6), M29-FILT/PNR-3 (140-10931-11), M29-FILT/0.1N HNO3-BLANK (140-10931-16), A-6420 M29 MEDIA CHECK FILTER (140-10931-20), (140-10931-A-6-A PDS) and (140-10931-A-6-A PDSD). Elevated reporting limits (RLs) are provided.

No additional analytical or quality issues were noted, other than those described above or in the Definitions/Glossary page.

Metals

Prep Batch: 18870

Lab Sample ID	Client Sample ID	Prep Type	Matrix	Method	Prep Batch
140-10931-1	M29-FILT/PNR-1	Total/NA	Air	AT Prep (FH)	
140-10931-6	M29-FILT/PNR-2	Total/NA	Air	AT Prep (FH)	
140-10931-11	M29-FILT/PNR-3	Total/NA	Air	AT Prep (FH)	
140-10931-16	M29-FILT/0.1N HNO3-BLANK	Total/NA	Air	AT Prep (FH)	
140-10931-20	A-6420 M29 MEDIA CHECK FILTER	Total/NA	Air	AT Prep (FH)	
MB 140-18870/8-A	Method Blank	Total/NA	Air	AT Prep (FH)	
MB 140-18870/8-B	Method Blank	Total/NA	Air	AT Prep (FH)	
LCS 140-18870/9-A	Lab Control Sample	Total/NA	Air	AT Prep (FH)	
LCS 140-18870/9-B	Lab Control Sample	Total/NA	Air	AT Prep (FH)	
LCSD 140-18870/10-A	Lab Control Sample Dup	Total/NA	Air	AT Prep (FH)	
LCSD 140-18870/10-B	Lab Control Sample Dup	Total/NA	Air	AT Prep (FH)	

Prep Batch: 18872

Lab Sample ID	Client Sample ID	Prep Type	Matrix	Method	Prep Batch
140-10931-2	M29-IMP 1&2-1	Total/NA	Air	AT Prep (BH)	
140-10931-7	M29-IMP 1&2-2	Total/NA	Air	AT Prep (BH)	
140-10931-12	M29-IMP 1&2-3	Total/NA	Air	AT Prep (BH)	
140-10931-17	M29-HNO3/H2O2 BLANK	Total/NA	Air	AT Prep (BH)	
MB 140-18872/5-A	Method Blank	Total/NA	Air	AT Prep (BH)	
LCS 140-18872/6-A	Lab Control Sample	Total/NA	Air	AT Prep (BH)	
LCSD 140-18872/7-A	Lab Control Sample Dup	Total/NA	Air	AT Prep (BH)	

Pre Prep Batch: 18940

Lab Sample ID	Client Sample ID	Prep Type	Matrix	Method	Prep Batch
140-10931-2	M29-IMP 1&2-1	Total/NA	Air	Air Train Vol.	
140-10931-7	M29-IMP 1&2-2	Total/NA	Air	Air Train Vol.	
140-10931-12	M29-IMP 1&2-3	Total/NA	Air	Air Train Vol.	
140-10931-17	M29-HNO3/H2O2 BLANK	Total/NA	Air	Air Train Vol.	
MB 140-18940/7-B	Method Blank	Total/NA	Air	Air Train Vol.	
LCS 140-18940/8-B	Lab Control Sample	Total/NA	Air	Air Train Vol.	
140-10931-7 MS	M29-IMP 1&2-2	Total/NA	Air	Air Train Vol.	
140-10931-7 MSD	M29-IMP 1&2-2	Total/NA	Air	Air Train Vol.	

Pre Prep Batch: 18941

Lab Sample ID	Client Sample ID	Prep Type	Matrix	Method	Prep Batch
140-10931-3	M29-IMP 3-1	Total/NA	Air	Air Train Vol.	
140-10931-8	M29-IMP 3-2	Total/NA	Air	Air Train Vol.	
140-10931-13	M29-IMP 3-3	Total/NA	Air	Air Train Vol.	
MB 140-18941/6-B	Method Blank	Total/NA	Air	Air Train Vol.	
LCS 140-18941/7-B	Lab Control Sample	Total/NA	Air	Air Train Vol.	
140-10931-8 MS	M29-IMP 3-2	Total/NA	Air	Air Train Vol.	
140-10931-8 MSD	M29-IMP 3-2	Total/NA	Air	Air Train Vol.	

Pre Prep Batch: 18942

Lab Sample ID	Client Sample ID	Prep Type	Matrix	Method	Prep Batch
140-10931-4	M29-IMP 4&5-1	Total/NA	Air	Air Train Vol.	
140-10931-9	M29-IMP 4&5-2	Total/NA	Air	Air Train Vol.	
140-10931-14	M29-IMP 4&5-3	Total/NA	Air	Air Train Vol.	
140-10931-18	M29-KMNO4-BLANK	Total/NA	Air	Air Train Vol.	
140-10931-21	M29-WATER-BLANK	Total/NA	Air	Air Train Vol.	
MB 140-18942/8-B	Method Blank	Total/NA	Air	Air Train Vol.	

Metals (Continued)

Pre Prep Batch: 18942 (Continued)

Lab Sample ID	Client Sample ID	Prep Type	Matrix	Method	Prep Batch
LCS 140-18942/9-B	Lab Control Sample	Total/NA	Air	Air Train Vol.	
140-10931-9 MS	M29-IMP 4&5-2	Total/NA	Air	Air Train Vol.	
140-10931-9 MSD	M29-IMP 4&5-2	Total/NA	Air	Air Train Vol.	

Pre Prep Batch: 18943

Lab Sample ID	Client Sample ID	Prep Type	Matrix	Method	Prep Batch
140-10931-5	M29-HCL-1	Total/NA	Air	Air Train Vol.	
140-10931-10	M29-HCL-2	Total/NA	Air	Air Train Vol.	
140-10931-15	M29-HCL-3	Total/NA	Air	Air Train Vol.	
140-10931-19	M29-8N HCL BLANK	Total/NA	Air	Air Train Vol.	
MB 140-18943/7-B	Method Blank	Total/NA	Air	Air Train Vol.	
LCS 140-18943/8-B	Lab Control Sample	Total/NA	Air	Air Train Vol.	
140-10931-10 MS	M29-HCL-2	Total/NA	Air	Air Train Vol.	
140-10931-10 MSD	M29-HCL-2	Total/NA	Air	Air Train Vol.	

Cleanup Batch: 18970

Lab Sample ID	Client Sample ID	Prep Type	Matrix	Method	Prep Batch
140-10931-1	M29-FILT/PNR-1	Total/NA	Air	AT Prep FH	18870
140-10931-6	M29-FILT/PNR-2	Total/NA	Air	AT Prep FH	18870
140-10931-11	M29-FILT/PNR-3	Total/NA	Air	AT Prep FH	18870
140-10931-16	M29-FILT/0.1N HNO3-BLANK	Total/NA	Air	AT Prep FH	18870
140-10931-20	A-6420 M29 MEDIA CHECK FILTER	Total/NA	Air	AT Prep FH	18870
MB 140-18870/8-B	Method Blank	Total/NA	Air	AT Prep FH	18870
LCS 140-18870/9-B	Lab Control Sample	Total/NA	Air	AT Prep FH	18870
LCSD 140-18870/10-B	Lab Control Sample Dup	Total/NA	Air	AT Prep FH	18870

Prep Batch: 18971

Lab Sample ID	Client Sample ID	Prep Type	Matrix	Method	Prep Batch
140-10931-2	M29-IMP 1&2-1	Total/NA	Air	AT Prep (BH)	18940
140-10931-7	M29-IMP 1&2-2	Total/NA	Air	AT Prep (BH)	18940
140-10931-12	M29-IMP 1&2-3	Total/NA	Air	AT Prep (BH)	18940
140-10931-17	M29-HNO3/H2O2 BLANK	Total/NA	Air	AT Prep (BH)	18940
MB 140-18940/7-B	Method Blank	Total/NA	Air	AT Prep (BH)	18940
LCS 140-18940/8-B	Lab Control Sample	Total/NA	Air	AT Prep (BH)	18940
140-10931-7 MS	M29-IMP 1&2-2	Total/NA	Air	AT Prep (BH)	18940
140-10931-7 MSD	M29-IMP 1&2-2	Total/NA	Air	AT Prep (BH)	18940

Prep Batch: 18972

Lab Sample ID	Client Sample ID	Prep Type	Matrix	Method	Prep Batch
140-10931-3	M29-IMP 3-1	Total/NA	Air	AT Prep (Empty)	18941
140-10931-8	M29-IMP 3-2	Total/NA	Air	AT Prep (Empty)	18941
140-10931-13	M29-IMP 3-3	Total/NA	Air	AT Prep (Empty)	18941
MB 140-18941/6-B	Method Blank	Total/NA	Air	AT Prep (Empty)	18941
LCS 140-18941/7-B	Lab Control Sample	Total/NA	Air	AT Prep (Empty)	18941
140-10931-8 MS	M29-IMP 3-2	Total/NA	Air	AT Prep (Empty)	18941
140-10931-8 MSD	M29-IMP 3-2	Total/NA	Air	AT Prep (Empty)	18941

Prep Batch: 18973

Lab Sample ID	Client Sample ID	Prep Type	Matrix	Method	Prep Batch
140-10931-4	M29-IMP 4&5-1	Total/NA	Air	AT Prep (KMnO4)	18942

Metals (Continued)

Prep Batch: 18973 (Continued)

Lab Sample ID	Client Sample ID	Prep Type	Matrix	Method	Prep Batch
140-10931-9	M29-IMP 4&5-2	Total/NA	Air	AT Prep (KMnO4)	18942
140-10931-14	M29-IMP 4&5-3	Total/NA	Air	AT Prep (KMnO4)	18942
140-10931-18	M29-KMNO4-BLANK	Total/NA	Air	AT Prep (KMnO4)	18942
140-10931-21	M29-WATER-BLANK	Total/NA	Air	AT Prep (KMnO4)	18942
MB 140-18942/8-B	Method Blank	Total/NA	Air	AT Prep (KMnO4)	18942
LCS 140-18942/9-B	Lab Control Sample	Total/NA	Air	AT Prep (KMnO4)	18942
140-10931-9 MS	M29-IMP 4&5-2	Total/NA	Air	AT Prep (KMnO4)	18942
140-10931-9 MSD	M29-IMP 4&5-2	Total/NA	Air	AT Prep (KMnO4)	18942

Prep Batch: 18974

Lab Sample ID	Client Sample ID	Prep Type	Matrix	Method	Prep Batch
140-10931-5	M29-HCL-1	Total/NA	Air	AT Prep (HCl)	18943
140-10931-10	M29-HCL-2	Total/NA	Air	AT Prep (HCl)	18943
140-10931-15	M29-HCL-3	Total/NA	Air	AT Prep (HCl)	18943
140-10931-19	M29-8N HCL BLANK	Total/NA	Air	AT Prep (HCl)	18943
MB 140-18943/7-B	Method Blank	Total/NA	Air	AT Prep (HCl)	18943
LCS 140-18943/8-B	Lab Control Sample	Total/NA	Air	AT Prep (HCl)	18943
140-10931-10 MS	M29-HCL-2	Total/NA	Air	AT Prep (HCl)	18943
140-10931-10 MSD	M29-HCL-2	Total/NA	Air	AT Prep (HCl)	18943

Analysis Batch: 18986

Lab Sample ID	Client Sample ID	Prep Type	Matrix	Method	Prep Batch
140-10931-1	M29-FILT/PNR-1	Total/NA	Air	29/6010C	18870
140-10931-2	M29-IMP 1&2-1	Total/NA	Air	29/6010C	18872
140-10931-6	M29-FILT/PNR-2	Total/NA	Air	29/6010C	18870
140-10931-7	M29-IMP 1&2-2	Total/NA	Air	29/6010C	18872
140-10931-11	M29-FILT/PNR-3	Total/NA	Air	29/6010C	18870
140-10931-12	M29-IMP 1&2-3	Total/NA	Air	29/6010C	18872
140-10931-16	M29-FILT/0.1N HNO3-BLANK	Total/NA	Air	29/6010C	18870
140-10931-17	M29-HNO3/H2O2 BLANK	Total/NA	Air	29/6010C	18872
140-10931-20	A-6420 M29 MEDIA CHECK FILTER	Total/NA	Air	29/6010C	18870
MB 140-18870/8-A	Method Blank	Total/NA	Air	29/6010C	18870
MB 140-18872/5-A	Method Blank	Total/NA	Air	29/6010C	18872
LCS 140-18870/9-A	Lab Control Sample	Total/NA	Air	29/6010C	18870
LCS 140-18872/6-A	Lab Control Sample	Total/NA	Air	29/6010C	18872
LCSD 140-18870/10-A	Lab Control Sample Dup	Total/NA	Air	29/6010C	18870
LCSD 140-18872/7-A	Lab Control Sample Dup	Total/NA	Air	29/6010C	18872

Analysis Batch: 19008

Lab Sample ID	Client Sample ID	Prep Type	Matrix	Method	Prep Batch
140-10931-1	M29-FILT/PNR-1	Total/NA	Air	29/7470A	18970
140-10931-2	M29-IMP 1&2-1	Total/NA	Air	29/7470A	18971
140-10931-3	M29-IMP 3-1	Total/NA	Air	29/7470A	18972
140-10931-4	M29-IMP 4&5-1	Total/NA	Air	29/7470A	18973
140-10931-5	M29-HCL-1	Total/NA	Air	29/7470A	18974

Metals (Continued)

Analysis Batch: 19008 (Continued)

Lab Sample ID	Client Sample ID	Prep Type	Matrix	Method	Prep Batch
140-10931-6	M29-FILT/PNR-2	Total/NA	Air	29/7470A	18970
140-10931-7	M29-IMP 1&2-2	Total/NA	Air	29/7470A	18971
140-10931-8	M29-IMP 3-2	Total/NA	Air	29/7470A	18972
140-10931-9	M29-IMP 4&5-2	Total/NA	Air	29/7470A	18973
140-10931-10	M29-HCL-2	Total/NA	Air	29/7470A	18974
140-10931-11	M29-FILT/PNR-3	Total/NA	Air	29/7470A	18970
140-10931-12	M29-IMP 1&2-3	Total/NA	Air	29/7470A	18971
140-10931-13	M29-IMP 3-3	Total/NA	Air	29/7470A	18972
140-10931-14	M29-IMP 4&5-3	Total/NA	Air	29/7470A	18973
140-10931-15	M29-HCL-3	Total/NA	Air	29/7470A	18974
140-10931-16	M29-FILT/0.1N HNO3-BLANK	Total/NA	Air	29/7470A	18970
140-10931-17	M29-HNO3/H2O2 BLANK	Total/NA	Air	29/7470A	18971
140-10931-18	M29-KMNO4-BLANK	Total/NA	Air	29/7470A	18973
140-10931-19	M29-8N HCL BLANK	Total/NA	Air	29/7470A	18974
140-10931-20	A-6420 M29 MEDIA CHECK FILTER	Total/NA	Air	29/7470A	18970
140-10931-21	M29-WATER-BLANK	Total/NA	Air	29/7470A	18973
MB 140-18870/8-B	Method Blank	Total/NA	Air	29/7470A	18970
MB 140-18940/7-B	Method Blank	Total/NA	Air	29/7470A	18971
MB 140-18941/6-B	Method Blank	Total/NA	Air	29/7470A	18972
MB 140-18942/8-B	Method Blank	Total/NA	Air	29/7470A	18973
MB 140-18943/7-B	Method Blank	Total/NA	Air	29/7470A	18974
LCS 140-18870/9-B	Lab Control Sample	Total/NA	Air	29/7470A	18970
LCS 140-18940/8-B	Lab Control Sample	Total/NA	Air	29/7470A	18971
LCS 140-18941/7-B	Lab Control Sample	Total/NA	Air	29/7470A	18972
LCS 140-18942/9-B	Lab Control Sample	Total/NA	Air	29/7470A	18973
LCS 140-18943/8-B	Lab Control Sample	Total/NA	Air	29/7470A	18974
LCSD 140-18870/10-B	Lab Control Sample Dup	Total/NA	Air	29/7470A	18970
140-10931-7 MS	M29-IMP 1&2-2	Total/NA	Air	29/7470A	18971
140-10931-7 MSD	M29-IMP 1&2-2	Total/NA	Air	29/7470A	18971
140-10931-8 MS	M29-IMP 3-2	Total/NA	Air	29/7470A	18972
140-10931-8 MSD	M29-IMP 3-2	Total/NA	Air	29/7470A	18972
140-10931-9 MS	M29-IMP 4&5-2	Total/NA	Air	29/7470A	18973
140-10931-9 MSD	M29-IMP 4&5-2	Total/NA	Air	29/7470A	18973
140-10931-10 MS	M29-HCL-2	Total/NA	Air	29/7470A	18974
140-10931-10 MSD	M29-HCL-2	Total/NA	Air	29/7470A	18974

Client Sample ID: M29-FILT/PNR-1

Lab Sample ID: 140-10931-1
Date Collected: 03/08/18 00:00
Matrix: Air
Date Received: 03/12/18 15:40
Sample Container: Petri/Filter

Method: 29/6010C - Metals (ICP), Stationary Source

Analyte	Result	Qualifier	RL	MDL	Unit	D	Prepared	Analyzed	Dil Fac
Lead	**958**		1.00	0.520	ug/Sample		03/19/18 08:00	03/21/18 12:43	1

Method: 29/7470A - Mercury (CVAA), Stationary Source

Analyte	Result	Qualifier	RL	MDL	Unit	D	Prepared	Analyzed	Dil Fac
Mercury	ND		0.200	0.0800	ug/Sample		03/19/18 08:00	03/22/18 11:38	1

Client Sample ID: M29-IMP 1&2-1

Lab Sample ID: 140-10931-2
Date Collected: 03/08/18 00:00
Matrix: Air
Date Received: 03/12/18 15:40
Sample Container: Amber Glass 1 liter Wide - unpreserved

Method: 29/6010C - Metals (ICP), Stationary Source

Analyte	Result	Qualifier	RL	MDL	Unit	D	Prepared	Analyzed	Dil Fac
Lead	**1.60**		1.00	0.280	ug/Sample		03/19/18 08:00	03/21/18 11:42	1

Method: 29/7470A - Mercury (CVAA), Stationary Source

Analyte	Result	Qualifier	RL	MDL	Unit	D	Prepared	Analyzed	Dil Fac
Mercury	**7.24**		0.400	0.120	ug/Sample		03/21/18 10:35	03/22/18 12:10	1

Client Sample ID: M29-IMP 3-1

Lab Sample ID: 140-10931-3
Date Collected: 03/08/18 00:00
Matrix: Air
Date Received: 03/12/18 15:40
Sample Container: Amber Glass 250ml - unpreserved

Method: 29/7470A - Mercury (CVAA), Stationary Source

Analyte	Result	Qualifier	RL	MDL	Unit	D	Prepared	Analyzed	Dil Fac
Mercury	ND		0.132	0.0396	ug/Sample		03/21/18 10:37	03/22/18 12:39	1

Client Sample ID: M29-IMP 4&5-1

Lab Sample ID: 140-10931-4
Date Collected: 03/08/18 00:00
Matrix: Air
Date Received: 03/12/18 15:40
Sample Container: Amber Glass 500mL - unpreserved

Method: 29/7470A - Mercury (CVAA), Stationary Source

Analyte	Result	Qualifier	RL	MDL	Unit	D	Prepared	Analyzed	Dil Fac
Mercury	ND		0.160	0.0480	ug/Sample		03/21/18 10:39	03/22/18 12:58	1

Client Sample ID: M29-HCL-1

Lab Sample ID: 140-10931-5
Date Collected: 03/08/18 00:00
Matrix: Air
Date Received: 03/12/18 15:40
Sample Container: Amber Glass 250ml - unpreserved

Method: 29/7470A - Mercury (CVAA), Stationary Source

Analyte	Result	Qualifier	RL	MDL	Unit	D	Prepared	Analyzed	Dil Fac
Mercury	**2.49**		0.275	0.0825	ug/Sample		03/21/18 10:41	03/22/18 13:30	1

Client Sample ID: M29-FILT/PNR-2

Lab Sample ID: 140-10931-6

Date Collected: 03/08/18 00:00
Matrix: Air
Date Received: 03/12/18 15:40
Sample Container: Petri/Filter

Method: 29/6010C - Metals (ICP), Stationary Source

Analyte	Result	Qualifier	RL	MDL	Unit	D	Prepared	Analyzed	Dil Fac
Lead	613		2.00	1.04	ug/Sample		03/19/18 08:00	03/21/18 14:02	2

Method: 29/7470A - Mercury (CVAA), Stationary Source

Analyte	Result	Qualifier	RL	MDL	Unit	D	Prepared	Analyzed	Dil Fac
Mercury	ND		0.200	0.0800	ug/Sample		03/19/18 08:00	03/22/18 11:41	1

Client Sample ID: M29-IMP 1&2-2

Lab Sample ID: 140-10931-7

Date Collected: 03/08/18 00:00
Matrix: Air
Date Received: 03/12/18 15:40
Sample Container: Amber Glass 1 liter Wide - unpreserved

Method: 29/6010C - Metals (ICP), Stationary Source

Analyte	Result	Qualifier	RL	MDL	Unit	D	Prepared	Analyzed	Dil Fac
Lead	1.44		1.00	0.280	ug/Sample		03/19/18 08:00	03/21/18 11:47	1

Method: 29/7470A - Mercury (CVAA), Stationary Source

Analyte	Result	Qualifier	RL	MDL	Unit	D	Prepared	Analyzed	Dil Fac
Mercury	11.9		0.400	0.120	ug/Sample		03/21/18 10:35	03/22/18 12:13	1

Client Sample ID: M29-IMP 3-2

Lab Sample ID: 140-10931-8

Date Collected: 03/08/18 00:00
Matrix: Air
Date Received: 03/12/18 15:40
Sample Container: Amber Glass 250ml - unpreserved

Method: 29/7470A - Mercury (CVAA), Stationary Source

Analyte	Result	Qualifier	RL	MDL	Unit	D	Prepared	Analyzed	Dil Fac
Mercury	ND		0.140	0.0420	ug/Sample		03/21/18 10:37	03/22/18 12:41	1

Client Sample ID: M29-IMP 4&5-2

Lab Sample ID: 140-10931-9

Date Collected: 03/08/18 00:00
Matrix: Air
Date Received: 03/12/18 15:40
Sample Container: Amber Glass 500mL - unpreserved

Method: 29/7470A - Mercury (CVAA), Stationary Source

Analyte	Result	Qualifier	RL	MDL	Unit	D	Prepared	Analyzed	Dil Fac
Mercury	ND		0.150	0.0450	ug/Sample		03/21/18 10:39	03/22/18 13:07	1

Client Sample ID: M29-HCL-2

Lab Sample ID: 140-10931-10

Date Collected: 03/08/18 00:00
Matrix: Air
Date Received: 03/12/18 15:40
Sample Container: Amber Glass 250ml - unpreserved

Method: 29/7470A - Mercury (CVAA), Stationary Source

Analyte	Result	Qualifier	RL	MDL	Unit	D	Prepared	Analyzed	Dil Fac
Mercury	1.95		0.280	0.0840	ug/Sample		03/21/18 10:41	03/22/18 13:33	1

Client Sample ID: M29-FILT/PNR-3

Lab Sample ID: 140-10931-11

Date Collected: 03/09/18 00:00
Matrix: Air
Date Received: 03/12/18 15:40
Sample Container: Petri/Filter

Method: 29/6010C - Metals (ICP), Stationary Source

Analyte	Result	Qualifier	RL	MDL	Unit	D	Prepared	Analyzed	Dil Fac
Lead	437		2.00	1.04	ug/Sample		03/19/18 08:00	03/21/18 14:22	2

Method: 29/7470A - Mercury (CVAA), Stationary Source

Analyte	Result	Qualifier	RL	MDL	Unit	D	Prepared	Analyzed	Dil Fac
Mercury	ND		0.200	0.0800	ug/Sample		03/19/18 08:00	03/22/18 11:49	1

Client Sample ID: M29-IMP 1&2-3

Lab Sample ID: 140-10931-12

Date Collected: 03/09/18 00:00
Matrix: Air
Date Received: 03/12/18 15:40
Sample Container: Amber Glass 1 liter Wide - unpreserved

Method: 29/6010C - Metals (ICP), Stationary Source

Analyte	Result	Qualifier	RL	MDL	Unit	D	Prepared	Analyzed	Dil Fac
Lead	1.67		1.00	0.280	ug/Sample		03/19/18 08:00	03/21/18 12:17	1

Method: 29/7470A - Mercury (CVAA), Stationary Source

Analyte	Result	Qualifier	RL	MDL	Unit	D	Prepared	Analyzed	Dil Fac
Mercury	9.84		0.400	0.120	ug/Sample		03/21/18 10:35	03/22/18 12:21	1

Client Sample ID: M29-IMP 3-3

Lab Sample ID: 140-10931-13

Date Collected: 03/09/18 00:00
Matrix: Air
Date Received: 03/12/18 15:40
Sample Container: Amber Glass 250ml - unpreserved

Method: 29/7470A - Mercury (CVAA), Stationary Source

Analyte	Result	Qualifier	RL	MDL	Unit	D	Prepared	Analyzed	Dil Fac
Mercury	0.0931	J	0.140	0.0420	ug/Sample		03/21/18 10:37	03/22/18 12:49	1

Client Sample ID: M29-IMP 4&5-3

Lab Sample ID: 140-10931-14

Date Collected: 03/09/18 00:00
Matrix: Air
Date Received: 03/12/18 15:40
Sample Container: Amber Glass 500mL - unpreserved

Method: 29/7470A - Mercury (CVAA), Stationary Source

Analyte	Result	Qualifier	RL	MDL	Unit	D	Prepared	Analyzed	Dil Fac
Mercury	2.78		0.164	0.0492	ug/Sample		03/21/18 10:39	03/22/18 13:16	1

Client Sample ID: M29-HCL-3

Lab Sample ID: 140-10931-15

Date Collected: 03/09/18 00:00
Matrix: Air
Date Received: 03/12/18 15:40
Sample Container: Amber Glass 250ml - unpreserved

Method: 29/7470A - Mercury (CVAA), Stationary Source

Analyte	Result	Qualifier	RL	MDL	Unit	D	Prepared	Analyzed	Dil Fac
Mercury	0.293		0.280	0.0840	ug/Sample		03/21/18 10:41	03/22/18 13:46	1

Client Sample ID: M29-FILT/0.1N HNO3-BLANK

Lab Sample ID: 140-10931-16
Matrix: Air
Date Collected: 03/09/18 00:00
Date Received: 03/12/18 15:40
Sample Container: Petri/Filter

Method: 29/6010C - Metals (ICP), Stationary Source

Analyte	Result	Qualifier	RL	MDL	Unit	D	Prepared	Analyzed	Dil Fac
Lead	ND		2.00	1.04	ug/Sample		03/19/18 08:00	03/21/18 14:27	2

Method: 29/7470A - Mercury (CVAA), Stationary Source

Analyte	Result	Qualifier	RL	MDL	Unit	D	Prepared	Analyzed	Dil Fac
Mercury	ND		0.200	0.0800	ug/Sample		03/19/18 08:00	03/22/18 11:52	1

Client Sample ID: M29-HNO3/H2O2 BLANK

Lab Sample ID: 140-10931-17
Matrix: Air
Date Collected: 03/09/18 00:00
Date Received: 03/12/18 15:40
Sample Container: Amber Glass 250ml - unpreserved

Method: 29/6010C - Metals (ICP), Stationary Source

Analyte	Result	Qualifier	RL	MDL	Unit	D	Prepared	Analyzed	Dil Fac
Lead	ND		1.00	0.280	ug/Sample		03/19/18 08:00	03/21/18 12:22	1

Method: 29/7470A - Mercury (CVAA), Stationary Source

Analyte	Result	Qualifier	RL	MDL	Unit	D	Prepared	Analyzed	Dil Fac
Mercury	ND		0.400	0.120	ug/Sample		03/21/18 10:35	03/22/18 12:25	1

Client Sample ID: M29-KMNO4-BLANK

Lab Sample ID: 140-10931-18
Matrix: Air
Date Collected: 03/09/18 00:00
Date Received: 03/12/18 15:40
Sample Container: Amber Glass 250ml - unpreserved

Method: 29/7470A - Mercury (CVAA), Stationary Source

Analyte	Result	Qualifier	RL	MDL	Unit	D	Prepared	Analyzed	Dil Fac
Mercury	ND		0.0360	0.0108	ug/Sample		03/21/18 10:39	03/22/18 13:18	1

Client Sample ID: M29-8N HCL BLANK

Lab Sample ID: 140-10931-19
Matrix: Air
Date Collected: 03/09/18 00:00
Date Received: 03/12/18 15:40
Sample Container: Amber Glass 250ml - unpreserved

Method: 29/7470A - Mercury (CVAA), Stationary Source

Analyte	Result	Qualifier	RL	MDL	Unit	D	Prepared	Analyzed	Dil Fac
Mercury	ND		0.150	0.0450	ug/Sample		03/21/18 10:41	03/22/18 13:55	1

Client Sample ID: A-6420 M29 MEDIA CHECK FILTER

Lab Sample ID: 140-10931-20
Matrix: Air
Date Collected: 03/08/18 00:00
Date Received: 03/12/18 15:40
Sample Container: Petri/Filter

Method: 29/6010C - Metals (ICP), Stationary Source

Analyte	Result	Qualifier	RL	MDL	Unit	D	Prepared	Analyzed	Dil Fac
Lead	ND	L	2.00	1.04	ug/Sample		03/19/18 08:00	03/21/18 14:32	2

Method: 29/7470A - Mercury (CVAA), Stationary Source

Analyte	Result	Qualifier	RL	MDL	Unit	D	Prepared	Analyzed	Dil Fac
Mercury	ND		0.200	0.0800	ug/Sample		03/19/18 08:00	03/22/18 12:02	1

Client: URS Corporation
Project/Site: Haverhill - M29

TestAmerica Job ID: 140-10931-1

Client Sample ID: M29-WATER-BLANK — **Lab Sample ID: 140-10931-21**
Date Collected: 03/09/18 00:00 — **Matrix: Air**
Date Received: 03/12/18 15:40
Sample Container: Amber Glass 250ml - unpreserved

Method: 29/7470A - Mercury (CVAA), Stationary Source

Analyte	Result	Qualifier	RL	MDL	Unit	D	Prepared	Analyzed	Dil Fac
Mercury	ND		0.0200	0.00600	ug/Sample		03/21/18 10:39	03/22/18 13:21	1

Default Detection Limits

Client: URS Corporation
Project/Site: Haverhill - M29

TestAmerica Job ID: 140-10931-1

Method: 29/6010C - Metals (ICP), Stationary Source
Prep: AT Prep (BH)

Analyte	RL	MDL	Units	Method
Lead	1.00	0.280	ug/Sample	29/6010C

Method: 29/6010C - Metals (ICP), Stationary Source
Prep: AT Prep (FH)

Analyte	RL	MDL	Units	Method
Lead	1.00	0.520	ug/Sample	29/6010C

Method: 29/7470A - Mercury (CVAA), Stationary Source
Prep: AT Prep (BH)

Analyte	RL	MDL	Units	Method
Mercury	0.400	0.120	ug/Sample	29/7470A

Method: 29/7470A - Mercury (CVAA), Stationary Source
Prep: AT Prep (Empty)

Analyte	RL	MDL	Units	Method
Mercury	0.200	0.0600	ug/Sample	29/7470A

Method: 29/7470A - Mercury (CVAA), Stationary Source
Prep: AT Prep (FH)

Analyte	RL	MDL	Units	Method
Mercury	0.200	0.0800	ug/Sample	29/7470A

Method: 29/7470A - Mercury (CVAA), Stationary Source
Prep: AT Prep (HCl)

Analyte	RL	MDL	Units	Method
Mercury	0.0500	0.0150	ug/Sample	29/7470A

Method: 29/7470A - Mercury (CVAA), Stationary Source
Prep: AT Prep (KMnO4)

Analyte	RL	MDL	Units	Method
Mercury	0.0200	0.00600	ug/Sample	29/7470A

Method: 29/6010C - Metals (ICP), Stationary Source

Lab Sample ID: MB 140-18870/8-A
Matrix: Air
Analysis Batch: 18986

Client Sample ID: Method Blank
Prep Type: Total/NA
Prep Batch: 18870

Analyte	MB Result	MB Qualifier	RL	MDL	Unit	D	Prepared	Analyzed	Dil Fac
Lead	ND		1.00	0.520	ug/Sample		03/19/18 08:00	03/21/18 11:22	1

Lab Sample ID: LCS 140-18870/9-A
Matrix: Air
Analysis Batch: 18986

Client Sample ID: Lab Control Sample
Prep Type: Total/NA
Prep Batch: 18870

Analyte	Spike Added	LCS Result	LCS Qualifier	Unit	D	%Rec	%Rec. Limits
Lead	10.0	10.48		ug/Sample		105	80 - 120

Lab Sample ID: LCSD 140-18870/10-A
Matrix: Air
Analysis Batch: 18986

Client Sample ID: Lab Control Sample Dup
Prep Type: Total/NA
Prep Batch: 18870

Analyte	Spike Added	LCSD Result	LCSD Qualifier	Unit	D	%Rec	%Rec. Limits	RPD	RPD Limit
Lead	10.0	10.78		ug/Sample		108	80 - 120	3	20

Lab Sample ID: MB 140-18872/5-A
Matrix: Air
Analysis Batch: 18986

Client Sample ID: Method Blank
Prep Type: Total/NA
Prep Batch: 18872

Analyte	MB Result	MB Qualifier	RL	MDL	Unit	D	Prepared	Analyzed	Dil Fac
Lead	ND		1.00	0.280	ug/Sample		03/19/18 08:00	03/21/18 11:08	1

Lab Sample ID: LCS 140-18872/6-A
Matrix: Air
Analysis Batch: 18986

Client Sample ID: Lab Control Sample
Prep Type: Total/NA
Prep Batch: 18872

Analyte	Spike Added	LCS Result	LCS Qualifier	Unit	D	%Rec	%Rec. Limits
Lead	10.0	10.18		ug/Sample		102	80 - 120

Lab Sample ID: LCSD 140-18872/7-A
Matrix: Air
Analysis Batch: 18986

Client Sample ID: Lab Control Sample Dup
Prep Type: Total/NA
Prep Batch: 18872

Analyte	Spike Added	LCSD Result	LCSD Qualifier	Unit	D	%Rec	%Rec. Limits	RPD	RPD Limit
Lead	10.0	10.20		ug/Sample		102	80 - 120	0	20

Method: 29/7470A - Mercury (CVAA), Stationary Source

Lab Sample ID: MB 140-18870/8-B
Matrix: Air
Analysis Batch: 19008

Client Sample ID: Method Blank
Prep Type: Total/NA
Prep Batch: 18870

Analyte	MB Result	MB Qualifier	RL	MDL	Unit	D	Prepared	Analyzed	Dil Fac
Mercury	ND		0.200	0.0800	ug/Sample		03/19/18 08:00	03/22/18 11:28	1

Method: 29/7470A - Mercury (CVAA), Stationary Source (Continued)

Lab Sample ID: LCS 140-18870/9-B
Matrix: Air
Analysis Batch: 19008

Client Sample ID: Lab Control Sample
Prep Type: Total/NA
Prep Batch: 18870

Analyte	Spike Added	LCS Result	LCS Qualifier	Unit	D	%Rec	%Rec. Limits
Mercury	5.00	4.990		ug/Sample		100	80 - 120

Lab Sample ID: LCSD 140-18870/10-B
Matrix: Air
Analysis Batch: 19008

Client Sample ID: Lab Control Sample Dup
Prep Type: Total/NA
Prep Batch: 18870

Analyte	Spike Added	LCSD Result	LCSD Qualifier	Unit	D	%Rec	%Rec. Limits	RPD	RPD Limit
Mercury	5.00	4.820		ug/Sample		96	80 - 120	3	20

Lab Sample ID: MB 140-18940/7-B
Matrix: Air
Analysis Batch: 19008

Client Sample ID: Method Blank
Prep Type: Total/NA
Prep Batch: 18971

Analyte	MB Result	MB Qualifier	RL	MDL	Unit	D	Prepared	Analyzed	Dil Fac
Mercury	ND		0.400	0.120	ug/Sample		03/21/18 10:35	03/22/18 12:05	1

Lab Sample ID: LCS 140-18940/8-B
Matrix: Air
Analysis Batch: 19008

Client Sample ID: Lab Control Sample
Prep Type: Total/NA
Prep Batch: 18971

Analyte	Spike Added	LCS Result	LCS Qualifier	Unit	D	%Rec	%Rec. Limits
Mercury	10.0	10.02		ug/Sample		100	80 - 120

Lab Sample ID: 140-10931-7 MS
Matrix: Air
Analysis Batch: 19008

Client Sample ID: M29-IMP 1&2-2
Prep Type: Total/NA
Prep Batch: 18971

Analyte	Sample Result	Sample Qualifier	Spike Added	MS Result	MS Qualifier	Unit	D	%Rec	%Rec. Limits
Mercury	11.9		2.00	14.02	4	ug/Sample		108	80 - 120

Lab Sample ID: 140-10931-7 MSD
Matrix: Air
Analysis Batch: 19008

Client Sample ID: M29-IMP 1&2-2
Prep Type: Total/NA
Prep Batch: 18971

Analyte	Sample Result	Sample Qualifier	Spike Added	MSD Result	MSD Qualifier	Unit	D	%Rec	%Rec. Limits	RPD	RPD Limit
Mercury	11.9		2.00	13.80	4	ug/Sample		97	80 - 120	2	20

Lab Sample ID: MB 140-18941/6-B
Matrix: Air
Analysis Batch: 19008

Client Sample ID: Method Blank
Prep Type: Total/NA
Prep Batch: 18972

Analyte	MB Result	MB Qualifier	RL	MDL	Unit	D	Prepared	Analyzed	Dil Fac
Mercury	ND		0.200	0.0600	ug/Sample		03/21/18 10:37	03/22/18 12:33	1

Lab Sample ID: LCS 140-18941/7-B
Matrix: Air
Analysis Batch: 19008

Client Sample ID: Lab Control Sample
Prep Type: Total/NA
Prep Batch: 18972

Analyte	Spike Added	LCS Result	LCS Qualifier	Unit	D	%Rec	%Rec. Limits
Mercury	5.00	4.890		ug/Sample		98	80 - 120

Lab Sample ID: 140-10931-8 MS
Matrix: Air
Analysis Batch: 19008

Client Sample ID: M29-IMP 3-2
Prep Type: Total/NA
Prep Batch: 18972

Analyte	Sample Result	Sample Qualifier	Spike Added	MS Result	MS Qualifier	Unit	D	%Rec	%Rec. Limits
Mercury	ND		0.700	0.6286		ug/Sample		90	80 - 120

Lab Sample ID: 140-10931-8 MSD
Matrix: Air
Analysis Batch: 19008

Client Sample ID: M29-IMP 3-2
Prep Type: Total/NA
Prep Batch: 18972

Analyte	Sample Result	Sample Qualifier	Spike Added	MSD Result	MSD Qualifier	Unit	D	%Rec	%Rec. Limits	RPD	RPD Limit
Mercury	ND		0.700	0.6356		ug/Sample		91	80 - 120	1	20

Lab Sample ID: MB 140-18942/8-B
Matrix: Air
Analysis Batch: 19008

Client Sample ID: Method Blank
Prep Type: Total/NA
Prep Batch: 18973

Analyte	MB Result	MB Qualifier	RL	MDL	Unit	D	Prepared	Analyzed	Dil Fac
Mercury	ND		0.0200	0.00600	ug/Sample		03/21/18 10:39	03/22/18 12:52	1

Lab Sample ID: LCS 140-18942/9-B
Matrix: Air
Analysis Batch: 19008

Client Sample ID: Lab Control Sample
Prep Type: Total/NA
Prep Batch: 18973

Analyte	Spike Added	LCS Result	LCS Qualifier	Unit	D	%Rec	%Rec. Limits
Mercury	0.500	0.4950		ug/Sample		99	80 - 120

Lab Sample ID: 140-10931-9 MS
Matrix: Air
Analysis Batch: 19008

Client Sample ID: M29-IMP 4&5-2
Prep Type: Total/NA
Prep Batch: 18973

Analyte	Sample Result	Sample Qualifier	Spike Added	MS Result	MS Qualifier	Unit	D	%Rec	%Rec. Limits
Mercury	ND		0.750	0.6600		ug/Sample		88	80 - 120

Lab Sample ID: 140-10931-9 MSD
Matrix: Air
Analysis Batch: 19008

Client Sample ID: M29-IMP 4&5-2
Prep Type: Total/NA
Prep Batch: 18973

Analyte	Sample Result	Sample Qualifier	Spike Added	MSD Result	MSD Qualifier	Unit	D	%Rec	%Rec. Limits	RPD	RPD Limit
Mercury	ND		0.750	0.6630		ug/Sample		88	80 - 120	0	20

Lab Sample ID: MB 140-18943/7-B
Matrix: Air
Analysis Batch: 19008

Client Sample ID: Method Blank
Prep Type: Total/NA
Prep Batch: 18974

Analyte	MB Result	MB Qualifier	RL	MDL	Unit	D	Prepared	Analyzed	Dil Fac
Mercury	ND		0.0500	0.0150	ug/Sample		03/21/18 10:41	03/22/18 13:24	1

Lab Sample ID: LCS 140-18943/8-B
Matrix: Air
Analysis Batch: 19008

Client Sample ID: Lab Control Sample
Prep Type: Total/NA
Prep Batch: 18974

Analyte	Spike Added	LCS Result	LCS Qualifier	Unit	D	%Rec	%Rec. Limits
Mercury	1.25	1.205		ug/Sample		96	80 - 120

Method: 29/7470A - Mercury (CVAA), Stationary Source (Continued)

Lab Sample ID: 140-10931-10 MS
Matrix: Air
Analysis Batch: 19008

Client Sample ID: M29-HCL-2
Prep Type: Total/NA
Prep Batch: 18974

Analyte	Sample Result	Sample Qualifier	Spike Added	MS Result	MS Qualifier	Unit	D	%Rec	%Rec. Limits
Mercury	1.95		1.40	3.318		ug/Sample		98	80 - 120

Lab Sample ID: 140-10931-10 MSD
Matrix: Air
Analysis Batch: 19008

Client Sample ID: M29-HCL-2
Prep Type: Total/NA
Prep Batch: 18974

Analyte	Sample Result	Sample Qualifier	Spike Added	MSD Result	MSD Qualifier	Unit	D	%Rec	%Rec. Limits	RPD	RPD Limit
Mercury	1.95		1.40	3.276		ug/Sample		95	80 - 120	1	20

Client Sample ID: M29-FILT/PNR-1

Lab Sample ID: 140-10931-1

Date Collected: 03/08/18 00:00

Matrix: Air

Date Received: 03/12/18 15:40

Prep Type	Batch Type	Batch Method	Run	Dil Factor	Initial Amount	Final Amount	Batch Number	Prepared or Analyzed	Analyst	Lab
Total/NA	Prep	AT Prep (FH)			1 Sample	100 mL	18870	03/19/18 08:00	KNC	TAL KNX
Total/NA	Analysis	29/6010C		1			18986	03/21/18 12:43	KNC	TAL KNX
	Instrument ID: DUO									
Total/NA	Prep	AT Prep (FH)			1 Sample	100 mL	18870	03/19/18 08:00	KNC	TAL KNX
Total/NA	Cleanup	AT Prep FH			5.0 mL	50.0 mL	18970	03/21/18 10:30	DKW	TAL KNX
Total/NA	Analysis	29/7470A		1			19008	03/22/18 11:38	DKW	TAL KNX
	Instrument ID: HG									

Client Sample ID: M29-IMP 1&2-1

Lab Sample ID: 140-10931-2

Date Collected: 03/08/18 00:00

Matrix: Air

Date Received: 03/12/18 15:40

Prep Type	Batch Type	Batch Method	Run	Dil Factor	Initial Amount	Final Amount	Batch Number	Prepared or Analyzed	Analyst	Lab
Total/NA	Prep	AT Prep (BH)			1 Sample	100 mL	18872	03/19/18 08:00	KNC	TAL KNX
Total/NA	Analysis	29/6010C		1			18986	03/21/18 11:42	KNC	TAL KNX
	Instrument ID: DUO									
Total/NA	Pre Prep	Air Train Vol.			1 Sample	100 mL	18940	03/20/18 14:02	DKW	TAL KNX
Total/NA	Prep	AT Prep (BH)			2.5 mL	50.0 mL	18971	03/21/18 10:35	DKW	TAL KNX
Total/NA	Analysis	29/7470A		1			19008	03/22/18 12:10	DKW	TAL KNX
	Instrument ID: HG									

Client Sample ID: M29-IMP 3-1

Lab Sample ID: 140-10931-3

Date Collected: 03/08/18 00:00

Matrix: Air

Date Received: 03/12/18 15:40

Prep Type	Batch Type	Batch Method	Run	Dil Factor	Initial Amount	Final Amount	Batch Number	Prepared or Analyzed	Analyst	Lab
Total/NA	Pre Prep	Air Train Vol.			1 Sample	33.0 mL	18941	03/20/18 14:06	DKW	TAL KNX
Total/NA	Prep	AT Prep (Empty)			2.5 mL	50.0 mL	18972	03/21/18 10:37	DKW	TAL KNX
Total/NA	Analysis	29/7470A		1			19008	03/22/18 12:39	DKW	TAL KNX
	Instrument ID: HG									

Client Sample ID: M29-IMP 4&5-1

Lab Sample ID: 140-10931-4

Date Collected: 03/08/18 00:00

Matrix: Air

Date Received: 03/12/18 15:40

Prep Type	Batch Type	Batch Method	Run	Dil Factor	Initial Amount	Final Amount	Batch Number	Prepared or Analyzed	Analyst	Lab
Total/NA	Pre Prep	Air Train Vol.			1 Sample	400 mL	18942	03/20/18 14:08	DKW	TAL KNX
Total/NA	Prep	AT Prep (KMnO4)			25.0 mL	50.0 mL	18973	03/21/18 10:39	DKW	TAL KNX
Total/NA	Analysis	29/7470A		1			19008	03/22/18 12:58	DKW	TAL KNX
	Instrument ID: HG									

Client Sample ID: M29-HCL-1

Lab Sample ID: 140-10931-5

Date Collected: 03/08/18 00:00

Matrix: Air

Date Received: 03/12/18 15:40

Prep Type	Batch Type	Batch Method	Run	Dil Factor	Initial Amount	Final Amount	Batch Number	Prepared or Analyzed	Analyst	Lab
Total/NA	Pre Prep	Air Train Vol.			1 Sample	275 mL	18943	03/20/18 14:10	DKW	TAL KNX
Total/NA	Prep	AT Prep (HCl)			10.0 mL	50.0 mL	18974	03/21/18 10:41	DKW	TAL KNX
Total/NA	Analysis	29/7470A		1			19008	03/22/18 13:30	DKW	TAL KNX
	Instrument ID: HG									

Client Sample ID: M29-FILT/PNR-2

Lab Sample ID: 140-10931-6

Date Collected: 03/08/18 00:00

Matrix: Air

Date Received: 03/12/18 15:40

Prep Type	Batch Type	Batch Method	Run	Dil Factor	Initial Amount	Final Amount	Batch Number	Prepared or Analyzed	Analyst	Lab
Total/NA	Prep	AT Prep (FH)			1 Sample	100 mL	18870	03/19/18 08:00	KNC	TAL KNX
Total/NA	Analysis	29/6010C		2			18986	03/21/18 14:02	KNC	TAL KNX
	Instrument ID: DUO									
Total/NA	Prep	AT Prep (FH)			1 Sample	100 mL	18870	03/19/18 08:00	KNC	TAL KNX
Total/NA	Cleanup	AT Prep FH			5.0 mL	50.0 mL	18970	03/21/18 10:30	DKW	TAL KNX
Total/NA	Analysis	29/7470A		1			19008	03/22/18 11:41	DKW	TAL KNX
	Instrument ID: HG									

Client Sample ID: M29-IMP 1&2-2

Lab Sample ID: 140-10931-7

Date Collected: 03/08/18 00:00

Matrix: Air

Date Received: 03/12/18 15:40

Prep Type	Batch Type	Batch Method	Run	Dil Factor	Initial Amount	Final Amount	Batch Number	Prepared or Analyzed	Analyst	Lab
Total/NA	Prep	AT Prep (BH)			1 Sample	100 mL	18872	03/19/18 08:00	KNC	TAL KNX
Total/NA	Analysis	29/6010C		1			18986	03/21/18 11:47	KNC	TAL KNX
	Instrument ID: DUO									
Total/NA	Pre Prep	Air Train Vol.			1 Sample	100 mL	18940	03/20/18 14:02	DKW	TAL KNX
Total/NA	Prep	AT Prep (BH)			2.5 mL	50.0 mL	18971	03/21/18 10:35	DKW	TAL KNX
Total/NA	Analysis	29/7470A		1			19008	03/22/18 12:13	DKW	TAL KNX
	Instrument ID: HG									

Client Sample ID: M29-IMP 3-2

Lab Sample ID: 140-10931-8

Date Collected: 03/08/18 00:00

Matrix: Air

Date Received: 03/12/18 15:40

Prep Type	Batch Type	Batch Method	Run	Dil Factor	Initial Amount	Final Amount	Batch Number	Prepared or Analyzed	Analyst	Lab
Total/NA	Pre Prep	Air Train Vol.			1 Sample	35.0 mL	18941	03/20/18 14:06	DKW	TAL KNX
Total/NA	Prep	AT Prep (Empty)			2.5 mL	50.0 mL	18972	03/21/18 10:37	DKW	TAL KNX
Total/NA	Analysis	29/7470A		1			19008	03/22/18 12:41	DKW	TAL KNX
	Instrument ID: HG									

Client Sample ID: M29-IMP 4&5-2

Lab Sample ID: 140-10931-9

Date Collected: 03/08/18 00:00

Matrix: Air

Date Received: 03/12/18 15:40

Prep Type	Batch Type	Batch Method	Run	Dil Factor	Initial Amount	Final Amount	Batch Number	Prepared or Analyzed	Analyst	Lab
Total/NA	Pre Prep	Air Train Vol.			1 Sample	375 mL	18942	03/20/18 14:08	DKW	TAL KNX
Total/NA	Prep	AT Prep (KMnO4)			25.0 mL	50.0 mL	18973	03/21/18 10:39	DKW	TAL KNX
Total/NA	Analysis	29/7470A		1			19008	03/22/18 13:07	DKW	TAL KNX
	Instrument ID: HG									

Client Sample ID: M29-HCL-2

Lab Sample ID: 140-10931-10

Date Collected: 03/08/18 00:00

Matrix: Air

Date Received: 03/12/18 15:40

Prep Type	Batch Type	Batch Method	Run	Dil Factor	Initial Amount	Final Amount	Batch Number	Prepared or Analyzed	Analyst	Lab
Total/NA	Pre Prep	Air Train Vol.			1 Sample	280 mL	18943	03/20/18 14:10	DKW	TAL KNX
Total/NA	Prep	AT Prep (HCl)			10.0 mL	50.0 mL	18974	03/21/18 10:41	DKW	TAL KNX
Total/NA	Analysis	29/7470A		1			19008	03/22/18 13:33	DKW	TAL KNX
	Instrument ID: HG									

Client Sample ID: M29-FILT/PNR-3

Lab Sample ID: 140-10931-11

Date Collected: 03/09/18 00:00

Matrix: Air

Date Received: 03/12/18 15:40

Prep Type	Batch Type	Batch Method	Run	Dil Factor	Initial Amount	Final Amount	Batch Number	Prepared or Analyzed	Analyst	Lab
Total/NA	Prep	AT Prep (FH)			1 Sample	100 mL	18870	03/19/18 08:00	KNC	TAL KNX
Total/NA	Analysis	29/6010C		2			18986	03/21/18 14:22	KNC	TAL KNX
	Instrument ID: DUO									
Total/NA	Prep	AT Prep (FH)			1 Sample	100 mL	18870	03/19/18 08:00	KNC	TAL KNX
Total/NA	Cleanup	AT Prep FH			5.0 mL	50.0 mL	18970	03/21/18 10:30	DKW	TAL KNX
Total/NA	Analysis	29/7470A		1			19008	03/22/18 11:49	DKW	TAL KNX
	Instrument ID: HG									

Client Sample ID: M29-IMP 1&2-3

Lab Sample ID: 140-10931-12

Date Collected: 03/09/18 00:00

Matrix: Air

Date Received: 03/12/18 15:40

Prep Type	Batch Type	Batch Method	Run	Dil Factor	Initial Amount	Final Amount	Batch Number	Prepared or Analyzed	Analyst	Lab
Total/NA	Prep	AT Prep (BH)			1 Sample	100 mL	18872	03/19/18 08:00	KNC	TAL KNX
Total/NA	Analysis	29/6010C		1			18986	03/21/18 12:17	KNC	TAL KNX
	Instrument ID: DUO									
Total/NA	Pre Prep	Air Train Vol.			1 Sample	100 mL	18940	03/20/18 14:02	DKW	TAL KNX
Total/NA	Prep	AT Prep (BH)			2.5 mL	50.0 mL	18971	03/21/18 10:35	DKW	TAL KNX
Total/NA	Analysis	29/7470A		1			19008	03/22/18 12:21	DKW	TAL KNX
	Instrument ID: HG									

Client Sample ID: M29-IMP 3-3
Date Collected: 03/09/18 00:00
Date Received: 03/12/18 15:40

Lab Sample ID: 140-10931-13
Matrix: Air

Prep Type	Batch Type	Batch Method	Run	Dil Factor	Initial Amount	Final Amount	Batch Number	Prepared or Analyzed	Analyst	Lab
Total/NA	Pre Prep	Air Train Vol.			1 Sample	35.0 mL	18941	03/20/18 14:06	DKW	TAL KNX
Total/NA	Prep	AT Prep (Empty)			2.5 mL	50.0 mL	18972	03/21/18 10:37	DKW	TAL KNX
Total/NA	Analysis	29/7470A		1			19008	03/22/18 12:49	DKW	TAL KNX
	Instrument ID: HG									

Client Sample ID: M29-IMP 4&5-3
Date Collected: 03/09/18 00:00
Date Received: 03/12/18 15:40

Lab Sample ID: 140-10931-14
Matrix: Air

Prep Type	Batch Type	Batch Method	Run	Dil Factor	Initial Amount	Final Amount	Batch Number	Prepared or Analyzed	Analyst	Lab
Total/NA	Pre Prep	Air Train Vol.			1 Sample	410 mL	18942	03/20/18 14:08	DKW	TAL KNX
Total/NA	Prep	AT Prep (KMnO4)			25.0 mL	50.0 mL	18973	03/21/18 10:39	DKW	TAL KNX
Total/NA	Analysis	29/7470A		1			19008	03/22/18 13:16	DKW	TAL KNX
	Instrument ID: HG									

Client Sample ID: M29-HCL-3
Date Collected: 03/09/18 00:00
Date Received: 03/12/18 15:40

Lab Sample ID: 140-10931-15
Matrix: Air

Prep Type	Batch Type	Batch Method	Run	Dil Factor	Initial Amount	Final Amount	Batch Number	Prepared or Analyzed	Analyst	Lab
Total/NA	Pre Prep	Air Train Vol.			1 Sample	280 mL	18943	03/20/18 14:10	DKW	TAL KNX
Total/NA	Prep	AT Prep (HCl)			10.0 mL	50.0 mL	18974	03/21/18 10:41	DKW	TAL KNX
Total/NA	Analysis	29/7470A		1			19008	03/22/18 13:46	DKW	TAL KNX
	Instrument ID: HG									

Client Sample ID: M29-FILT/0.1N HNO3-BLANK
Date Collected: 03/09/18 00:00
Date Received: 03/12/18 15:40

Lab Sample ID: 140-10931-16
Matrix: Air

Prep Type	Batch Type	Batch Method	Run	Dil Factor	Initial Amount	Final Amount	Batch Number	Prepared or Analyzed	Analyst	Lab
Total/NA	Prep	AT Prep (FH)			1 Sample	100 mL	18870	03/19/18 08:00	KNC	TAL KNX
Total/NA	Analysis	29/6010C		2			18986	03/21/18 14:27	KNC	TAL KNX
	Instrument ID: DUO									
Total/NA	Prep	AT Prep (FH)			1 Sample	100 mL	18870	03/19/18 08:00	KNC	TAL KNX
Total/NA	Cleanup	AT Prep FH			5.0 mL	50.0 mL	18970	03/21/18 10:30	DKW	TAL KNX
Total/NA	Analysis	29/7470A		1			19008	03/22/18 11:52	DKW	TAL KNX
	Instrument ID: HG									

Client Sample ID: M29-HNO3/H2O2 BLANK
Date Collected: 03/09/18 00:00
Date Received: 03/12/18 15:40

Lab Sample ID: 140-10931-17
Matrix: Air

Prep Type	Batch Type	Batch Method	Run	Dil Factor	Initial Amount	Final Amount	Batch Number	Prepared or Analyzed	Analyst	Lab
Total/NA	Prep	AT Prep (BH)			1 Sample	100 mL	18872	03/19/18 08:00	KNC	TAL KNX

Client Sample ID: M29-HNO3/H2O2 BLANK — Lab Sample ID: 140-10931-17

Date Collected: 03/09/18 00:00 — **Matrix: Air**
Date Received: 03/12/18 15:40

Prep Type	Batch Type	Batch Method	Run	Dil Factor	Initial Amount	Final Amount	Batch Number	Prepared or Analyzed	Analyst	Lab
Total/NA	Analysis	29/6010C		1			18986	03/21/18 12:22	KNC	TAL KNX
	Instrument ID: DUO									
Total/NA	Pre Prep	Air Train Vol.			1 Sample	100 mL	18940	03/20/18 14:02	DKW	TAL KNX
Total/NA	Prep	AT Prep (BH)			2.5 mL	50.0 mL	18971	03/21/18 10:35	DKW	TAL KNX
Total/NA	Analysis	29/7470A		1			19008	03/22/18 12:25	DKW	TAL KNX
	Instrument ID: HG									

Client Sample ID: M29-KMNO4-BLANK — Lab Sample ID: 140-10931-18

Date Collected: 03/09/18 00:00 — **Matrix: Air**
Date Received: 03/12/18 15:40

Prep Type	Batch Type	Batch Method	Run	Dil Factor	Initial Amount	Final Amount	Batch Number	Prepared or Analyzed	Analyst	Lab
Total/NA	Pre Prep	Air Train Vol.			1 Sample	90.0 mL	18942	03/20/18 14:08	DKW	TAL KNX
Total/NA	Prep	AT Prep (KMnO4)			25.0 mL	50.0 mL	18973	03/21/18 10:39	DKW	TAL KNX
Total/NA	Analysis	29/7470A		1			19008	03/22/18 13:18	DKW	TAL KNX
	Instrument ID: HG									

Client Sample ID: M29-8N HCL BLANK — Lab Sample ID: 140-10931-19

Date Collected: 03/09/18 00:00 — **Matrix: Air**
Date Received: 03/12/18 15:40

Prep Type	Batch Type	Batch Method	Run	Dil Factor	Initial Amount	Final Amount	Batch Number	Prepared or Analyzed	Analyst	Lab
Total/NA	Pre Prep	Air Train Vol.			1 Sample	150 mL	18943	03/20/18 14:10	DKW	TAL KNX
Total/NA	Prep	AT Prep (HCl)			10.0 mL	50.0 mL	18974	03/21/18 10:41	DKW	TAL KNX
Total/NA	Analysis	29/7470A		1			19008	03/22/18 13:55	DKW	TAL KNX
	Instrument ID: HG									

Client Sample ID: A-6420 M29 MEDIA CHECK FILTER — Lab Sample ID: 140-10931-20

Date Collected: 03/08/18 00:00 — **Matrix: Air**
Date Received: 03/12/18 15:40

Prep Type	Batch Type	Batch Method	Run	Dil Factor	Initial Amount	Final Amount	Batch Number	Prepared or Analyzed	Analyst	Lab
Total/NA	Prep	AT Prep (FH)			1 Sample	100 mL	18870	03/19/18 08:00	KNC	TAL KNX
Total/NA	Analysis	29/6010C		2			18986	03/21/18 14:32	KNC	TAL KNX
	Instrument ID: DUO									
Total/NA	Prep	AT Prep (FH)			1 Sample	100 mL	18870	03/19/18 08:00	KNC	TAL KNX
Total/NA	Cleanup	AT Prep FH			5.0 mL	50.0 mL	18970	03/21/18 10:30	DKW	TAL KNX
Total/NA	Analysis	29/7470A		1			19008	03/22/18 12:02	DKW	TAL KNX
	Instrument ID: HG									

Client Sample ID: M29-WATER-BLANK
Lab Sample ID: 140-10931-21

Date Collected: 03/09/18 00:00
Matrix: Air
Date Received: 03/12/18 15:40

Prep Type	Batch Type	Batch Method	Run	Dil Factor	Initial Amount	Final Amount	Batch Number	Prepared or Analyzed	Analyst	Lab
Total/NA	Pre Prep	Air Train Vol.			1 Sample	100 mL	18942	03/20/18 14:08	DKW	TAL KNX
Total/NA	Prep	AT Prep (KMnO4)			50.0 mL	50.0 mL	18973	03/21/18 10:39	DKW	TAL KNX
Total/NA	Analysis	29/7470A		1			19008	03/22/18 13:21	DKW	TAL KNX
	Instrument ID: HG									

Client Sample ID: Method Blank
Lab Sample ID: MB 140-18870/8-A

Date Collected: N/A
Matrix: Air
Date Received: N/A

Prep Type	Batch Type	Batch Method	Run	Dil Factor	Initial Amount	Final Amount	Batch Number	Prepared or Analyzed	Analyst	Lab
Total/NA	Prep	AT Prep (FH)			1 Sample	100 mL	18870	03/19/18 08:00	KNC	TAL KNX
Total/NA	Analysis	29/6010C		1			18986	03/21/18 11:22	KNC	TAL KNX
	Instrument ID: DUO									

Client Sample ID: Method Blank
Lab Sample ID: MB 140-18870/8-B

Date Collected: N/A
Matrix: Air
Date Received: N/A

Prep Type	Batch Type	Batch Method	Run	Dil Factor	Initial Amount	Final Amount	Batch Number	Prepared or Analyzed	Analyst	Lab
Total/NA	Prep	AT Prep (FH)			1 Sample	100 mL	18870	03/19/18 08:00	KNC	TAL KNX
Total/NA	Cleanup	AT Prep FH			5.0 mL	50.0 mL	18970	03/21/18 10:30	DKW	TAL KNX
Total/NA	Analysis	29/7470A		1			19008	03/22/18 11:28	DKW	TAL KNX
	Instrument ID: HG									

Client Sample ID: Method Blank
Lab Sample ID: MB 140-18872/5-A

Date Collected: N/A
Matrix: Air
Date Received: N/A

Prep Type	Batch Type	Batch Method	Run	Dil Factor	Initial Amount	Final Amount	Batch Number	Prepared or Analyzed	Analyst	Lab
Total/NA	Prep	AT Prep (BH)			1 Sample	100 mL	18872	03/19/18 08:00	KNC	TAL KNX
Total/NA	Analysis	29/6010C		1			18986	03/21/18 11:08	KNC	TAL KNX
	Instrument ID: DUO									

Client Sample ID: Method Blank
Lab Sample ID: MB 140-18940/7-B

Date Collected: N/A
Matrix: Air
Date Received: N/A

Prep Type	Batch Type	Batch Method	Run	Dil Factor	Initial Amount	Final Amount	Batch Number	Prepared or Analyzed	Analyst	Lab
Total/NA	Pre Prep	Air Train Vol.			1 Sample	100 mL	18940	03/20/18 14:02	DKW	TAL KNX
Total/NA	Prep	AT Prep (BH)			2.5 mL	50.0 mL	18971	03/21/18 10:35	DKW	TAL KNX
Total/NA	Analysis	29/7470A		1			19008	03/22/18 12:05	DKW	TAL KNX
	Instrument ID: HG									

Client Sample ID: Method Blank — Lab Sample ID: MB 140-18941/6-B

Date Collected: N/A — **Matrix: Air**
Date Received: N/A

Prep Type	Batch Type	Batch Method	Run	Dil Factor	Initial Amount	Final Amount	Batch Number	Prepared or Analyzed	Analyst	Lab
Total/NA	Pre Prep	Air Train Vol.			1 Sample	50.0 mL	18941	03/20/18 14:06	DKW	TAL KNX
Total/NA	Prep	AT Prep (Empty)			2.5 mL	50.0 mL	18972	03/21/18 10:37	DKW	TAL KNX
Total/NA	Analysis	29/7470A		1			19008	03/22/18 12:33	DKW	TAL KNX
	Instrument ID: HG									

Client Sample ID: Method Blank — Lab Sample ID: MB 140-18942/8-B

Date Collected: N/A — **Matrix: Air**
Date Received: N/A

Prep Type	Batch Type	Batch Method	Run	Dil Factor	Initial Amount	Final Amount	Batch Number	Prepared or Analyzed	Analyst	Lab
Total/NA	Pre Prep	Air Train Vol.			1 Sample	50 mL	18942	03/20/18 14:08	DKW	TAL KNX
Total/NA	Prep	AT Prep (KMnO4)			25.0 mL	50.0 mL	18973	03/21/18 10:39	DKW	TAL KNX
Total/NA	Analysis	29/7470A		1			19008	03/22/18 12:52	DKW	TAL KNX
	Instrument ID: HG									

Client Sample ID: Method Blank — Lab Sample ID: MB 140-18943/7-B

Date Collected: N/A — **Matrix: Air**
Date Received: N/A

Prep Type	Batch Type	Batch Method	Run	Dil Factor	Initial Amount	Final Amount	Batch Number	Prepared or Analyzed	Analyst	Lab
Total/NA	Pre Prep	Air Train Vol.			1 Sample	50 mL	18943	03/20/18 14:10	DKW	TAL KNX
Total/NA	Prep	AT Prep (HCl)			10.0 mL	50.0 mL	18974	03/21/18 10:41	DKW	TAL KNX
Total/NA	Analysis	29/7470A		1			19008	03/22/18 13:24	DKW	TAL KNX
	Instrument ID: HG									

Client Sample ID: Lab Control Sample — Lab Sample ID: LCS 140-18870/9-A

Date Collected: N/A — **Matrix: Air**
Date Received: N/A

Prep Type	Batch Type	Batch Method	Run	Dil Factor	Initial Amount	Final Amount	Batch Number	Prepared or Analyzed	Analyst	Lab
Total/NA	Prep	AT Prep (FH)			1 Sample	100 mL	18870	03/19/18 08:00	KNC	TAL KNX
Total/NA	Analysis	29/6010C		1			18986	03/21/18 11:27	KNC	TAL KNX
	Instrument ID: DUO									

Client Sample ID: Lab Control Sample — Lab Sample ID: LCS 140-18870/9-B

Date Collected: N/A — **Matrix: Air**
Date Received: N/A

Prep Type	Batch Type	Batch Method	Run	Dil Factor	Initial Amount	Final Amount	Batch Number	Prepared or Analyzed	Analyst	Lab
Total/NA	Prep	AT Prep (FH)			1 Sample	100 mL	18870	03/19/18 08:00	KNC	TAL KNX
Total/NA	Cleanup	AT Prep FH			5.0 mL	50.0 mL	18970	03/21/18 10:30	DKW	TAL KNX
Total/NA	Analysis	29/7470A		1			19008	03/22/18 11:31	DKW	TAL KNX
	Instrument ID: HG									

Client Sample ID: Lab Control Sample
Lab Sample ID: LCS 140-18872/6-A
Date Collected: N/A
Matrix: Air
Date Received: N/A

Prep Type	Batch Type	Batch Method	Run	Dil Factor	Initial Amount	Final Amount	Batch Number	Prepared or Analyzed	Analyst	Lab
Total/NA	Prep	AT Prep (BH)			1 Sample	100 mL	18872	03/19/18 08:00	KNC	TAL KNX
Total/NA	Analysis	29/6010C		1			18986	03/21/18 11:13	KNC	TAL KNX
	Instrument ID: DUO									

Client Sample ID: Lab Control Sample
Lab Sample ID: LCS 140-18940/8-B
Date Collected: N/A
Matrix: Air
Date Received: N/A

Prep Type	Batch Type	Batch Method	Run	Dil Factor	Initial Amount	Final Amount	Batch Number	Prepared or Analyzed	Analyst	Lab
Total/NA	Pre Prep	Air Train Vol.			1 Sample	100 mL	18940	03/20/18 14:02	DKW	TAL KNX
Total/NA	Prep	AT Prep (BH)			2.5 mL	50.0 mL	18971	03/21/18 10:35	DKW	TAL KNX
Total/NA	Analysis	29/7470A		1			19008	03/22/18 12:07	DKW	TAL KNX
	Instrument ID: HG									

Client Sample ID: Lab Control Sample
Lab Sample ID: LCS 140-18941/7-B
Date Collected: N/A
Matrix: Air
Date Received: N/A

Prep Type	Batch Type	Batch Method	Run	Dil Factor	Initial Amount	Final Amount	Batch Number	Prepared or Analyzed	Analyst	Lab
Total/NA	Pre Prep	Air Train Vol.			1 Sample	50.0 mL	18941	03/20/18 14:06	DKW	TAL KNX
Total/NA	Prep	AT Prep (Empty)			2.5 mL	50.0 mL	18972	03/21/18 10:37	DKW	TAL KNX
Total/NA	Analysis	29/7470A		1			19008	03/22/18 12:36	DKW	TAL KNX
	Instrument ID: HG									

Client Sample ID: Lab Control Sample
Lab Sample ID: LCS 140-18942/9-B
Date Collected: N/A
Matrix: Air
Date Received: N/A

Prep Type	Batch Type	Batch Method	Run	Dil Factor	Initial Amount	Final Amount	Batch Number	Prepared or Analyzed	Analyst	Lab
Total/NA	Pre Prep	Air Train Vol.			1 Sample	50 mL	18942	03/20/18 14:08	DKW	TAL KNX
Total/NA	Prep	AT Prep (KMnO4)			25.0 mL	50.0 mL	18973	03/21/18 10:39	DKW	TAL KNX
Total/NA	Analysis	29/7470A		1			19008	03/22/18 12:55	DKW	TAL KNX
	Instrument ID: HG									

Client Sample ID: Lab Control Sample
Lab Sample ID: LCS 140-18943/8-B
Date Collected: N/A
Matrix: Air
Date Received: N/A

Prep Type	Batch Type	Batch Method	Run	Dil Factor	Initial Amount	Final Amount	Batch Number	Prepared or Analyzed	Analyst	Lab
Total/NA	Pre Prep	Air Train Vol.			1 Sample	50 mL	18943	03/20/18 14:10	DKW	TAL KNX
Total/NA	Prep	AT Prep (HCl)			10.0 mL	50.0 mL	18974	03/21/18 10:41	DKW	TAL KNX
Total/NA	Analysis	29/7470A		1			19008	03/22/18 13:27	DKW	TAL KNX
	Instrument ID: HG									

Client Sample ID: Lab Control Sample Dup
Lab Sample ID: LCSD 140-18870/10-A
Date Collected: N/A
Matrix: Air
Date Received: N/A

Prep Type	Batch Type	Batch Method	Run	Dil Factor	Initial Amount	Final Amount	Batch Number	Prepared or Analyzed	Analyst	Lab
Total/NA	Prep	AT Prep (FH)			1 Sample	100 mL	18870	03/19/18 08:00	KNC	TAL KNX
Total/NA	Analysis	29/6010C		1			18986	03/21/18 11:32	KNC	TAL KNX
	Instrument ID: DUO									

Client Sample ID: Lab Control Sample Dup
Lab Sample ID: LCSD 140-18870/10-B
Date Collected: N/A
Matrix: Air
Date Received: N/A

Prep Type	Batch Type	Batch Method	Run	Dil Factor	Initial Amount	Final Amount	Batch Number	Prepared or Analyzed	Analyst	Lab
Total/NA	Prep	AT Prep (FH)			1 Sample	100 mL	18870	03/19/18 08:00	KNC	TAL KNX
Total/NA	Cleanup	AT Prep FH			5.0 mL	50.0 mL	18970	03/21/18 10:30	DKW	TAL KNX
Total/NA	Analysis	29/7470A		1			19008	03/22/18 11:33	DKW	TAL KNX
	Instrument ID: HG									

Client Sample ID: Lab Control Sample Dup
Lab Sample ID: LCSD 140-18872/7-A
Date Collected: N/A
Matrix: Air
Date Received: N/A

Prep Type	Batch Type	Batch Method	Run	Dil Factor	Initial Amount	Final Amount	Batch Number	Prepared or Analyzed	Analyst	Lab
Total/NA	Prep	AT Prep (BH)			1 Sample	100 mL	18872	03/19/18 08:00	KNC	TAL KNX
Total/NA	Analysis	29/6010C		1			18986	03/21/18 11:17	KNC	TAL KNX
	Instrument ID: DUO									

Client Sample ID: M29-IMP 1&2-2
Lab Sample ID: 140-10931-7 MS
Date Collected: 03/08/18 00:00
Matrix: Air
Date Received: 03/12/18 15:40

Prep Type	Batch Type	Batch Method	Run	Dil Factor	Initial Amount	Final Amount	Batch Number	Prepared or Analyzed	Analyst	Lab
Total/NA	Pre Prep	Air Train Vol.			1 Sample	100 mL	18940	03/20/18 14:02	DKW	TAL KNX
Total/NA	Prep	AT Prep (BH)			2.5 mL	50.0 mL	18971	03/21/18 10:35	DKW	TAL KNX
Total/NA	Analysis	29/7470A		1			19008	03/22/18 12:16	DKW	TAL KNX
	Instrument ID: HG									

Client Sample ID: M29-IMP 1&2-2
Lab Sample ID: 140-10931-7 MSD
Date Collected: 03/08/18 00:00
Matrix: Air
Date Received: 03/12/18 15:40

Prep Type	Batch Type	Batch Method	Run	Dil Factor	Initial Amount	Final Amount	Batch Number	Prepared or Analyzed	Analyst	Lab
Total/NA	Pre Prep	Air Train Vol.			1 Sample	100 mL	18940	03/20/18 14:02	DKW	TAL KNX
Total/NA	Prep	AT Prep (BH)			2.5 mL	50.0 mL	18971	03/21/18 10:35	DKW	TAL KNX
Total/NA	Analysis	29/7470A		1			19008	03/22/18 12:19	DKW	TAL KNX
	Instrument ID: HG									

Client Sample ID: M29-IMP 3-2
Date Collected: 03/08/18 00:00
Date Received: 03/12/18 15:40

Lab Sample ID: 140-10931-8 MS
Matrix: Air

Prep Type	Batch Type	Batch Method	Run	Dil Factor	Initial Amount	Final Amount	Batch Number	Prepared or Analyzed	Analyst	Lab
Total/NA	Pre Prep	Air Train Vol.			1 Sample	35.0 mL	18941	03/20/18 14:06	DKW	TAL KNX
Total/NA	Prep	AT Prep (Empty)			2.5 mL	50.0 mL	18972	03/21/18 10:37	DKW	TAL KNX
Total/NA	Analysis	29/7470A		1			19008	03/22/18 12:44	DKW	TAL KNX
	Instrument ID: HG									

Client Sample ID: M29-IMP 3-2
Date Collected: 03/08/18 00:00
Date Received: 03/12/18 15:40

Lab Sample ID: 140-10931-8 MSD
Matrix: Air

Prep Type	Batch Type	Batch Method	Run	Dil Factor	Initial Amount	Final Amount	Batch Number	Prepared or Analyzed	Analyst	Lab
Total/NA	Pre Prep	Air Train Vol.			1 Sample	35.0 mL	18941	03/20/18 14:06	DKW	TAL KNX
Total/NA	Prep	AT Prep (Empty)			2.5 mL	50.0 mL	18972	03/21/18 10:37	DKW	TAL KNX
Total/NA	Analysis	29/7470A		1			19008	03/22/18 12:47	DKW	TAL KNX
	Instrument ID: HG									

Client Sample ID: M29-IMP 4&5-2
Date Collected: 03/08/18 00:00
Date Received: 03/12/18 15:40

Lab Sample ID: 140-10931-9 MS
Matrix: Air

Prep Type	Batch Type	Batch Method	Run	Dil Factor	Initial Amount	Final Amount	Batch Number	Prepared or Analyzed	Analyst	Lab
Total/NA	Pre Prep	Air Train Vol.			1 Sample	375 mL	18942	03/20/18 14:08	DKW	TAL KNX
Total/NA	Prep	AT Prep (KMnO4)			25.0 mL	50.0 mL	18973	03/21/18 10:39	DKW	TAL KNX
Total/NA	Analysis	29/7470A		1			19008	03/22/18 13:10	DKW	TAL KNX
	Instrument ID: HG									

Client Sample ID: M29-IMP 4&5-2
Date Collected: 03/08/18 00:00
Date Received: 03/12/18 15:40

Lab Sample ID: 140-10931-9 MSD
Matrix: Air

Prep Type	Batch Type	Batch Method	Run	Dil Factor	Initial Amount	Final Amount	Batch Number	Prepared or Analyzed	Analyst	Lab
Total/NA	Pre Prep	Air Train Vol.			1 Sample	375 mL	18942	03/20/18 14:08	DKW	TAL KNX
Total/NA	Prep	AT Prep (KMnO4)			25.0 mL	50.0 mL	18973	03/21/18 10:39	DKW	TAL KNX
Total/NA	Analysis	29/7470A		1			19008	03/22/18 13:13	DKW	TAL KNX
	Instrument ID: HG									

Client Sample ID: M29-HCL-2
Date Collected: 03/08/18 00:00
Date Received: 03/12/18 15:40

Lab Sample ID: 140-10931-10 MS
Matrix: Air

Prep Type	Batch Type	Batch Method	Run	Dil Factor	Initial Amount	Final Amount	Batch Number	Prepared or Analyzed	Analyst	Lab
Total/NA	Pre Prep	Air Train Vol.			1 Sample	280 mL	18943	03/20/18 14:10	DKW	TAL KNX
Total/NA	Prep	AT Prep (HCl)			10.0 mL	50.0 mL	18974	03/21/18 10:41	DKW	TAL KNX
Total/NA	Analysis	29/7470A		1			19008	03/22/18 13:41	DKW	TAL KNX
	Instrument ID: HG									

Lab Chronicle

Client: URS Corporation
Project/Site: Haverhill - M29

TestAmerica Job ID: 140-10931-1

Client Sample ID: M29-HCL-2
Date Collected: 03/08/18 00:00
Date Received: 03/12/18 15:40

Lab Sample ID: 140-10931-10 MSD
Matrix: Air

Prep Type	Batch Type	Batch Method	Run	Dil Factor	Initial Amount	Final Amount	Batch Number	Prepared or Analyzed	Analyst	Lab
Total/NA	Pre Prep	Air Train Vol.			1 Sample	280 mL	18943	03/20/18 14:10	DKW	TAL KNX
Total/NA	Prep	AT Prep (HCl)			10.0 mL	50.0 mL	18974	03/21/18 10:41	DKW	TAL KNX
Total/NA	Analysis	29/7470A		1			19008	03/22/18 13:43	DKW	TAL KNX
	Instrument ID: HG									

Laboratory References:

TAL KNX = TestAmerica Knoxville, 5815 Middlebrook Pike, Knoxville, TN 37921, TEL (865)291-3000

Accreditation/Certification Summary

Client: URS Corporation
Project/Site: Haverhill - M29

TestAmerica Job ID: 140-10931-1

Laboratory: TestAmerica Knoxville

All accreditations/certifications held by this laboratory are listed. Not all accreditations/certifications are applicable to this report.

Authority	Program	EPA Region	Identification Number	Expiration Date
	AFCEE		N/A	
ANAB	DoD ELAP		L2311	02-13-19
Arkansas DEQ	State Program	6	88-0688	06-16-18
California	State Program	9	2423	06-30-18
Colorado	State Program	8	TN00009	02-28-19
Connecticut	State Program	1	PH-0223	09-30-19
Florida	NELAP	4	E87177	06-30-18
Georgia	State Program	4	906	04-13-20
Hawaii	State Program	9	N/A	04-13-18
Kansas	NELAP	7	E-10349	10-31-18
Kentucky (DW)	State Program	4	90101	12-31-18
Louisiana	NELAP	6	83979	06-30-18
Louisiana (DW)	NELAP	6	LA160005	12-31-18
Maryland	State Program	3	277	03-31-19
Michigan	State Program	5	9933	04-13-20
Nevada	State Program	9	TN00009	07-31-18
New Jersey	NELAP	2	TN001	06-30-18
New York	NELAP	2	10781	03-31-18
North Carolina (DW)	State Program	4	21705	07-31-18
North Carolina (WW/SW)	State Program	4	64	12-31-18
Ohio VAP	State Program	5	CL0059	11-22-18
Oklahoma	State Program	6	9415	08-31-18
Oregon	NELAP	10	TNI0189	01-01-19
Pennsylvania	NELAP	3	68-00576	12-31-18
Tennessee	State Program	4	2014	04-13-20
Texas	NELAP	6	T104704380-16-9	08-31-18
US Fish & Wildlife	Federal		LE-058448-0	07-31-18
USDA	Federal		P330-16-00262	08-20-19
Utah	NELAP	8	TN00009	07-31-18
Virginia	NELAP	3	460176	09-14-18
Washington	State Program	10	C593	01-19-19
West Virginia (DW)	State Program	3	9955C	12-31-18
West Virginia DEP	State Program	3	345	04-30-18
Wisconsin	State Program	5	998044300	08-31-18

Shipping and Receiving Documents

AECOM

Chain of Custody Record

Project	Haverhill
Site	Bypass Vent Stack No. 5
Purchase Order	60562829.103
Prepared by: John Carson	

Test America
5815 Middlebrook Pike
Knoxville, TN 37921

Sample ID	Sample Matrix	Date/Time	Lead and mercury by EPA Method 29						Comments
M29-filt-1	Quartz filter	3/8/18	X						
M29-filt-2	Quartz filter	3/8/18	X						
M29-filt-3	Quartz filter	3/9/18	X						
M29-filt-blank	Quartz filter	3/9/18	X						
M29-PNR-1	Probe and nozzle rinse w 0.1 N HNO3	3/5/18	X						
M29-PNR-2	Probe and nozzle rinse w 0.1 N HNO3	3/8/18	X						
M29-PNR-3	Probe and nozzle rinse w 0.1 N HNO3	3/9/18	X						

140-10931 Chain of Custody

Contact: John Carson 865.425.7014; john.r.carson@aecom.com; Courtney Adkins 865.291.3019

Relinquished by:	Date	Time	Received by:	Date	Time	Relinquished by:	Date	Time
John Carson	3/9/18	15:40						
Received by:	Date	Time	Relinquished by:	Date	Time			

Received for Laboratory by:	Date	Time	Air bill No.	Opened by:	Seal #	Date	Time	Temp (C)
	3-12-18	15:40						

Seal #	Condition

Remarks

HAND DELIVERED
NO CUSTODY SEALS
RECEIVED AMBIENT RT 22.5/CT 22.4°C
BKD 3-12-18

AECOM

Chain of Custody Record

Project	Haverhill
Site	Bypass Vent Stack No. 5
Purchase Order	60562829.103
Prepared by:	

Test America
5815 Middlebrook Pike
Knoxville, TN 37921

Sample ID	Sample Matrix	Date/Time	Lead and mercury by EPA Method 29	Mercury by EPA Method 29					Comments
M29-Imp 1&2-1	Impingers 1-2, 5% HNO3/10% H2O2	3/8/18	X						
M29-Imp 1&2-2	Impingers 1-2, 5% HNO3/10% H2O2	〃	X						
M29-Imp 1&2-3	Impingers 1-2, 5% HNO3/10% H2O2	3/9/18	X						
M29-Imp 3-1	Impinger 3 HNO3 rinse	3/8/18		X					
M29-Imp 3-2	Impinger 3 HNO3 rinse	〃		X					
M29-Imp 3-3	Impinger 3 HNO3 rinse	3/9/18		X					

Contact: John Carson 865.425.7014; john.r.carson@aecom.com; Courtney Adkins 865.291.3019

Relinquished by:	Date	Time	Received by:	Date	Time	Relinquished by:	Date	Time
[signature]	3/8/18	15:45						
Received by:	Date	Time	Relinquished by:	Date	Time			
Received for Laboratory by:	Date	Time	Air bill No.	Opened by:	Seal #	Date	Time	Temp (C)
[signature]	3/9/18	10:40						
Seal #	Condition							

Remarks

AECOM

Chain of Custody Record

Project	Haverhill
Site	Bypass Vent Stack No. 5
Purchase Order	60562829.103
Prepared by:	

Test America
5815 Middlebrook Pike
Knoxville, TN 37921

Sample ID	Sample Matrix	Date/Time	Mercury by EPA method 29						Comments
M29-Imp 4&5-1	Impingers 4-5, KMnO4 solution	3/8/18	X						
M29-Imp 4&5-2	Impingers 4-5, KMnO4 solution	"	X						
M29-Imp 4&5-3	Impingers 4-5, KMnO4 solution	3/9/18	X						
M29-HCl-1	Impinger 4-5 HCl rinse	3/8/18	X						
M29-HCl-2	Impinger 4-5 HCl rinse	"	X						
M29-HCl-3	Impinger 4-5 HCl rinse	3/9/18	X						

Contact: John Carson 865.425.7014; john.r.carson@aecom.com; Courtney Adkins 865.291.3019

Relinquished by:	Date	Time	Received by:	Date	Time	Relinquished by:	Date	Time
	3/12/18	1540						
Received by:	Date	Time	Relinquished by:	Date	Time			

Received for Laboratory by:	Date	Time	Air bill No.	Opened by:	Seal #	Date	Time	Temp (C)
	3-12-18	15:40						

Seal #	Condition	

Remarks

AECOM

Chain of Custody Record

Project	Haverhill		Lead and mercury by EPA method 29	Mercury by EPA method 29					Test America 5815 Middlebrook Pike Knoxville, TN 37921
Site	Bypass Vent Stack No. 5								
Purchase Order	60562829.103								
Prepared by:									Comments
Sample ID	Sample Matrix	Date/Time							
M29-0.1N HNO3 blank	0.1N HNO3	3/9/18	X						
M29-8N HCl blank	8N HCl	"		X					
M29-water blank	Water		X						
M29-HNO3/H2O2 blank	5% HNO3/10% H2O2		X						
M29-KMnO4 blank	KMnO4 solution			X					

Contact: John Carson 865.425.7014; john.r.carson@aecom.com; Courtney Adkins 865.291.3019

Relinquished by:	Date	Time	Received by:	Date	Time	Relinquished by:	Date	Time
	3/12/18	1540						
Received by:	Date	Time	Relinquished by:	Date	Time			
Received for laboratory by:	Date	Time	Air bill No.	Opened by:	Seal #	Date	Time	Temp (C)
	3-12-18	15:40						

Seal #	Condition
	OK 3/12/18

Remarks

Loc: 140
10931

TESTAMERICA KNOXVILLE SAMPLE RECEIPT/CONDITION UPON RECEIPT ANOMALY CHECKLIST

Log In Number:

Review Items	Yes	No	NA	If No, what was the problem?
1. Are the shipping containers intact?	/		/	☐ **Containers, Broken**
2. Were ambient air containers received intact?			/	☐ Checked in lab
3. The coolers/containers custody seal if present, is it intact?			/	☐ Yes ☐ NA
4. Is the cooler temperature within limits? (> freezing temp. of water to 6 °C, VOST: 10°C) Thermometer ID :_____ Correction factor: _____			/	☐ **Cooler Out of Temp, Client Contacted, Proceed/Cancel** ☐ **Cooler Out of Temp, Same Day Receipt**
5. Were all of the sample containers received intact?	/			☐ **Containers, Broken**
6. Were samples received in appropriate containers?	/			☐ **Containers, Improper; Client Contacted; Proceed/Cancel**
7. Do sample container labels match COC? (IDs, Dates, Times)	/			☐ **COC & Samples Do Not Match** ☐ **COC Incorrect/Incomplete** ☐ **COC Not Received**
8. Were all of the samples listed on the COC received?	/			☐ **Sample Received, Not on COC** ☐ **Sample on COC, Not Received**
9. Is the date/time of sample collection noted?	/			☐ **COC; No Date/Time; Client Contacted**
10. Was the sampler identified on the COC?			/	☐ **Sampler Not Listed on COC**
11. Is the client and project name/# identified?	/			☐ **COC Incorrect/Incomplete**
12. Are tests/parameters listed for each sample?	/			☐ **COC No tests on COC**
13. Is the matrix of the samples noted?	/			☐ **COC Incorrect/Incomplete**
14. Was COC relinquished? (Signed/Dated/Timed)	/			☐ **COC Incorrect/Incomplete**
15. Were samples received within holding time?	/			☐ **Holding Time - Receipt**
16. Were samples received with correct chemical preservative (excluding Encore)?			/	☐ **pH Adjusted, pH Included (See box 16A)** ☐ **Incorrect Preservative**
17. Were VOA samples received without headspace?			/	☐ **Headspace (VOA only)**
18. Did you check for residual chlorine, if necessary? (e.g. 1613B, 1668) Chlorine test strip lot number:			/	☐ **Residual Chlorine**
19. For 1613B water samples is pH<9?			/	☐ If no, lab will adjust
20. For rad samples was sample activity info. Provided?			/	☐ Project missing info

Comments/Actions Taken

Labeling Verified by: **Date:**

pH test strip lot number:

Box 16A: pH Preservation	Box 18A: Residual Chlorine
Preservative:	
Lot Number:	
Exp Date:	
Analyst:	
Date:	
Time:	

Project #: 14004550 PM Instructions: _____

Sample Receiving Associate: _____ Date: 3-13-18

QA026R30.doc, 080916

Appendix E
CALIBRATION INFORMATION

CDS-04S
5 Point Console Dry Gas Meter Calibration

Console ID
URS-001

		Initials	Date
Calibrated by		CS	2/21/18
Reviewed by		WCT	3/11/18
Console Sticker	Prepared		
	Reviewed		
	Affixed		
MCL-01 or MCL-33 Prepared		CS	2/21/18

Console Calibration Expiration Date
21-Feb-2019

Orifice ID:	IX-40		IX-48		IX-55		IX-63		IX-73	
Orifice K':	0.2378		0.3467		0.4564		0.5840		0.8042	
Dry Gas Meter	Run #1a	Run #1b	Run #2a	Run #2b	Run #3a	Run #3b	Run #4a	Run #4b	Run #5a	Run #5b
Initial Reading, (ft^3)	527.500	532.855	559.945	566.002	572.058	578.200	584.351	592.242	538.237	549.060
Final Reading, (ft^3)	532.855	538.237	566.002	572.058	578.200	584.351	592.242	600.138	549.060	559.945
Difference, (ft^3)	5.355	5.382	6.057	6.056	6.142	6.151	7.891	7.896	10.823	10.885
Initial Meter Temp., (°F)	70	72	76	76	75	75	76	76	73	75
Final Meter Temp., (°F)	72	73	76	76	75	76	76	77	75	76
Average Meter Temp., (°F)	71.0	72.5	76.0	76.0	75.0	75.5	76.0	76.5	74.0	75.5
Test Time (min.)	17	17	13	13	10	10	10	10	10	10
Orifice Manometer Reading, ("H_2O)	0.34	0.34	0.70	0.70	1.20	1.20	1.90	1.90	3.60	3.60
Barometric Pressure, ("Hg)	29.43		29.43		29.43		29.43		29.43	
Ambient Temperature, (°F)	71		71		71		71		71	
Pump Vacuum, ("Hg)	24	24	22.5	22.5	21	21	19.5	19.5	17	17
Standard Volume of the Meter, (V_{mstd})	5.240	5.251	5.877	5.876	5.978	5.981	7.679	7.677	10.617	10.647
Standard Volume of Critical Orifice, (V_{crstd})	5.163	5.163	5.756	5.756	5.829	5.829	7.459	7.459	10.271	10.271
Flow Rate (cfm)	0.308	0.309	0.452	0.452	0.598	0.598	0.768	0.768	1.062	1.065
DGM Calibration Factor, (Y)	0.985	0.983	0.979	0.980	0.975	0.975	0.971	0.972	0.967	0.965
Average DGM Calibration Factor (Y)	0.984		0.980		0.975		0.971		0.966	
Delta H@, ("H_2O)	2.031	2.026	1.953	1.953	1.940	1.938	1.879	1.877	1.901	1.895
Average ΔH@, ("H_2O)	2.029		1.953		1.939		1.878		1.898	

Current Average Y	0.975
All Individual Y within 2% of mean?	TRUE
Average Delta $H_@$	1.939
All individual $\Delta H_@$ within 0.20"H_2O of mean	TRUE

CDS-04S DGM 5 point against orifice
Per EM SOP-002
Issued: January 2018

Temperature Readout Calibration
Isokinetic Sampling Consoles

Calibrated by	Initials	CS
	Date	2/20/18
Reviewed by	Initials	WCT
	Date	3/11/18

Readout ID Number
URS-001

Reference Thermometer	ID Number	2490
	Calibration Exp Date	5/22/18
Reference Thermocouple	ID Number	SR 2
	Calibration Exp Date	2/9/19
Voltage Generator	ID Number	T-311348
	Calibration Exp Date	

Temperature Readout Calibration		
Reference Thermometer (°F)	70	
Temperature Readout (°F)	70	
Was readout adjusted?	N	Y (N)
Do these agree within 2°F	Y	(Y) / N

Temperature Readout Linearity Check

Channel	Voltage (mV)	Temperature (°F)		
		Theoretical	Observed	Difference [1]
1 STACK	-0.0	32	32	0
	-1.0	-10	-8	2
	0.0	32	32	0
	1.0	77	77	0
	3.0	165	165	0
	5.0	251	252	1
	7.0	341	342	1
	10.0	475	474	-1
	15.0	692	693	1
	20.0	905	906	1
	30.0	1329	1328	-1
	40.0	1772	1770	-2

Channel	Voltage (mV)	Temperature (°F)		
		Theoretical	Observed	Difference [1]
2 PROBE	0.0	32	33	1
	5.0	251	253	2
3 FILTER	0.0	32	33	1
	5.0	251	253	2
4 EXIT	0.0	32	32	0
	1.0	77	77	0
5	0.0	32		
	1.0	77		
6 AUX	0.0	32	32	0
	2.0	121	121	0
7	0.0	32		
	2.0	121		

[1] Difference is calculated as follows:

Difference = Observed - Theoretical

Acceptable difference is ±5 °F for temperatures below 1000 °F and ±10 °F for temperatures above 1000 °F

Are these met?

(Y) / N

CDS-04S
5 Point Console Dry Gas Meter Calibration

Console ID
URS-005

		Initials	Date
Calibrated by		CS	2/21/18
Reviewed by		WCT	3/11/18
Console Sticker	Prepared		
	Reviewed		
	Affixed		
MCL-01 or MCL-33 Prepared		CS	2/21/18

Console Calibration Expiration Date
21-Feb-2019

Orifice ID:	IX-40		IX-48		IX-55		IX-63		IX-73	
Orifice K':	0.2378		0.3467		0.4564		0.5840		0.8042	
Dry Gas Meter	Run #1a	Run #1b	Run #2a	Run #2b	Run #3a	Run #3b	Run #4a	Run #4b	Run #5a	Run #5b
Initial Reading, (ft^3)	92.879	98.258	103.636	109.170	64.600	70.615	76.662	84.365	114.700	125.272
Final Reading, (ft^3)	98.258	103.636	109.170	114.700	70.615	76.662	84.365	92.200	125.272	135.858
Difference, (ft^3)	5.379	5.378	5.534	5.530	6.015	6.047	7.703	7.835	10.572	10.586
Initial Meter Temp., (°F)	75	75	75	75	72	73	74	75	75	77
Final Meter Temp., (°F)	75	75	75	75	73	74	75	75	77	78
Average Meter Temp., (°F)	75.0	75.0	75.0	75.0	72.5	73.5	74.5	75.0	76.0	77.5
Test Time (min.)	17	17	12	12	10	10	10	10	10	10
Orifice Manometer Reading, ("H_2O)	0.27	0.27	0.60	0.59	1.10	1.10	1.80	1.80	3.40	3.40
Barometric Pressure, ("Hg)	29.43		29.43		29.43		29.43		29.43	
Ambient Temperature, (°F)	71		71		71		71		71	
Pump Vacuum, ("Hg)	22	22	21	21	19.5	19.5	18	18	15.5	15.5
Standard Volume of the Meter, (V_{mstd})	5.223	5.222	5.378	5.374	5.880	5.900	7.515	7.637	10.327	10.311
Standard Volume of Critical Orifice, (V_{crstd})	5.163	5.163	5.313	5.313	5.829	5.829	7.459	7.459	10.271	10.271
Flow Rate (cfm)	0.307	0.307	0.448	0.448	0.588	0.590	0.752	0.764	1.033	1.031
DGM Calibration Factor, (Y)	0.988	0.989	0.988	0.989	0.991	0.988	0.992	0.977	0.995	0.996
Average DGM Calibration Factor (Y)	0.989		0.988		0.990		0.985		0.995	
Delta H@, ("H_2O)	1.601	1.601	1.676	1.648	1.786	1.783	1.784	1.783	1.787	1.782
Average ΔH@, ("H_2O)	1.601		1.662		1.784		1.784		1.784	

Current Average Y	0.989
All Individual Y within 2% of mean?	TRUE
Average Delta $H_@$	1.723
All individual $\Delta H_@$ within 0.20"H_2O of mean	TRUE

CDS-04S DGM 5 point against orifice
Per EM SOP-002
Issued: January 2018

Temperature Readout Calibration
Isokinetic Sampling Consoles

Calibrated by	Initials	CS
	Date	2/20/18
Reviewed by	Initials	WCT
	Date	3/14/18

Readout ID Number
URS-005

Reference Thermometer	ID Number	2490
	Calibration Exp Date	5/22/18
Reference Thermocouple	ID Number	SR 2
	Calibration Exp Date	2/9/19
Voltage Generator	ID Number	T-311348
	Calibration Exp Date	

Temperature Readout Calibration		
Reference Thermometer (°F)	70	
Temperature Readout (°F)	69	
Was readout adjusted?	N	Y / (N)
Do these agree within 2°F	Y	(Y) / N

Temperature Readout Linearity Check

Channel	Voltage (mV)	Temperature (°F)		
		Theoretical	Observed	Difference [1]
1 STACK	-0.0	32	31	-1
	-1.0	-10	-8	2
	0.0	32	31	-1
	1.0	77	75	-2
	3.0	165	164	-1
	5.0	251	252	1
	7.0	341	341	0
	10.0	475	473	-2
	15.0	692	693	1
	20.0	905	905	0
	30.0	1329	1329	0
	40.0	1772	1771	-1

Channel	Voltage (mV)	Temperature (°F)		
		Theoretical	Observed	Difference [1]
2 PROBE	0.0	32	32	0
	5.0	251	252	1
3 FILTER	0.0	32	31	-1
	5.0	251	252	1
4 EXIT	0.0	32	32	0
	1.0	77	76	-1
5	0.0	32		
	1.0	77		
6 AUX	0.0	32	31	-1
	2.0	121	120	-1
7	0.0	32		
	2.0	121		

[1] Difference is calculated as follows:

Difference = Observed - Theoretical

Acceptable difference is ±5 °F for temperatures below 1000 °F and ±10 °F for temperatures above 1000 °F

Are these met?

(Y) / N

Post Test Method 5 Post Test Calibration (Alternative Method)

	HHO Bypass Vent Stack 5 March 7-8, 2018 Control Box 005				HHO Bypass Vent Stack 5 March 7-8, 2018 Control Box 001			
Run	**1**	**2**	**3**	**Average**	**1**	**2**	**3**	**Average**
Run time (min)	120	120	120	120	60	60	60	60
Vm (dcf)	63.343	72.710	74.550	70.201	35.265	35.012	35.223	35.167
Tm(F)	40.5	45.9	43.1	43.2	40.5	45.6	39.6	41.9
Tm (R)	500.5	505.9	503.1	503.2	500.5	505.6	499.6	501.9
DH@	1.723	1.723	1.723	1.723	1.939	1.939	1.939	1.939
Pbar	29.215	29.405	29.425	29.348	29.215	29.405	29.425	29.348
Avg DH	0.929	1.163	1.241	1.111	1.200	1.192	1.200	1.197
Avg Sq Rt DH	0.94	1.07	1.11	1.04	1.10	1.09	1.10	1.09
Md	29.508	29.568	29.404	29.493	29.508	29.568	29.404	29.493
Yqa	1.00	0.99	0.99	0.99	0.98	0.98	0.98	0.98
Y cal				0.989				0.975
Yqa max				1.04				1.02
Yqa min				0.94				0.93
Pass/Fail				**Pass**				**Pass**

Post Test Method 5 Post Test Calibration (Alternative Method)

	HHO Bypass Vent Stack 5 March 8-9, 2018 Control Box 005				HHO Bypass Vent Stack 5 March 8-9, 2018 Control Box 001			
Run	**1**	**2**	**3**	**Average**	**1**	**2**	**3**	**Average**
Run time (min)	96	96	96	96	60	60	60	60
Vm (dcf)	55.577	51.926	48.433	51.979	18.765	18.818	18.640	18.741
Tm(F)	42.3	37.6	37.0	39.0	44.8	36.1	37.0	39.3
Tm (R)	502.3	497.6	497.0	499.0	504.8	496.1	497.0	499.3
DH@	1.723	1.723	1.723	1.723	1.939	1.939	1.939	1.939
Pbar	29.395	29.445	29.485	29.442	29.395	29.445	29.485	29.442
Avg DH	1.070	0.976	0.870	0.972	0.351	0.348	0.348	0.349
Avg Sq Rt DH	1.02	0.96	0.90	0.96	0.59	0.59	0.59	0.59
Md	29.424	29.504	29.380	29.436	29.424	29.504	29.380	29.436
Yqa	0.99	0.98	0.99	0.98	1.00	0.98	0.99	0.99
Y cal				0.989				0.975
Yqa max				1.04				1.02
Yqa min				0.94				0.93
Pass/Fail				**Pass**				**Pass**

APEX INSTRUMENTS SOURCE TESTING EQUIPMENT

Type S Pitot Tube Inspection Form

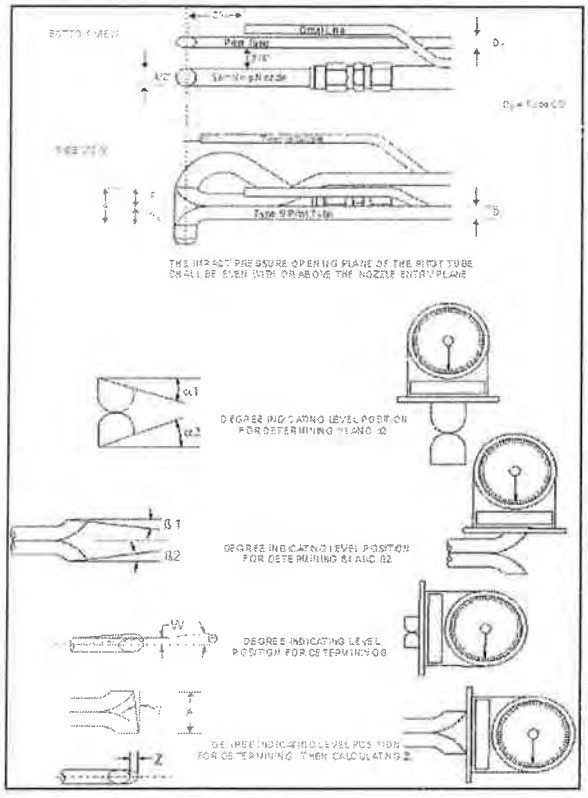

PITOT TUBE/PROBE # 180 1771

Parameter	Value	Allowable Range	Check
Assembly Level?	yes	Yes	OK
Ports Damaged?	no	No	OK
$\alpha 1$	0	$-10° < \alpha 1 < +10°$	OK
$\alpha 2$	0	$-10° < \alpha 2 < +10°$	OK
1	0	$-5° < b1 < +5°$	OK
1	1	$-5° < \beta 2 < +5°$	OK
γ	1		
0	0		
$Z = A \tan \gamma$	0.000	$Z \leq .125"$	OK
$W = A \tan \theta$	0.000	$W \leq .031"$	OK
Dt	0.375	.188" to .375"	OK
A/2Dt	1.233333	$1.05 \leq P_A/D_t \leq 1.5$	OK
A	0.925	$2.1D_t \leq A \leq 3D_t$	OK

Certification

I certify that pitot tube/probe numbe IM **meets or exceeds all specifications, criteria and/or applicable design features and is hereby assigned a pitot tube certification factor of 0.84. See 40 CFR Pt. 60, App. A, EPA Method 2.**

Certified by: JP 2-22-18

Personnel (Signature/Date)

CDS-09

Temperature Sensor Calibration

Readout ID Number	URS Merc-001
Thermometer ID Number	2490
Thermometer Cal Date	5/22/2017 (NIST)
Sensor ID Number	AC probe 1801771

Calibrated by	Initials	JC
	Date	5/1/18
Reviewed by	Initials	CS
	Date	5/2/18

Thermometer Reading (°F)	Temperature Readout and Sensor Reading (°F)	Error
68	66	-0.4%
325	324	-0.1%
402	403	0.1%
468	469	0.1%
236	240	0.6%

Error is calculated according to the following equation:

CDS-09: Temperature Sensor
Per: EM SOP-001
Revised: April 2018

$$\text{Error} = \frac{T_{Sens} - T_{Ref}}{T_{Ref} + 460} \times 100\%$$

Where

T_{sens} is the temperature reading from the sensor and
T_{ref} is the temperature reading from the reference thermometer

Acceptance criteria: Error is less than ±1.5%, absolute

S-Type Pitot Tube Inspection

Pitot ID	HST 8
Caliper ID	HK23407
Caliper Calibration Expiration Date	

Calibrated by	Initials	CS
	Date	2/8/18
Reviewed by	Initials	WCT
	Date	3/11/18

General Pitot Tube Alignment

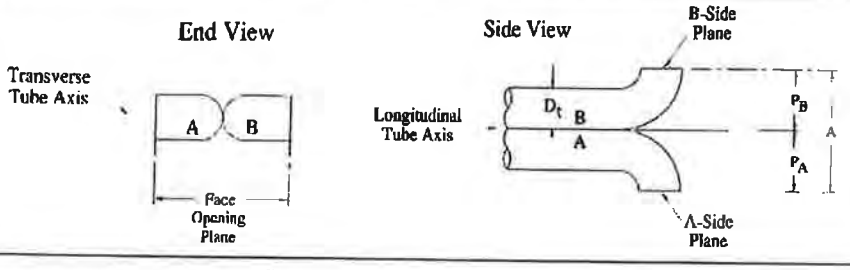

A = 0.830"

D_t = 0.375"

$0.188" \le D_t \le 0.375"$? Y (y/n)

$1.05 \le A/2D_t \le 1.50$? Y (y/n)

Misalignment

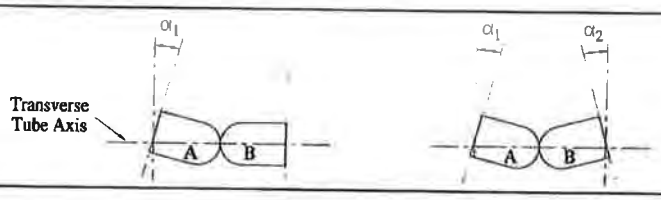

α_1 = 3 °

α_2 = 2 °

$\alpha_1 \le 10°$? Y (y/n)

$\alpha_2 \le 10°$? Y (y/n)

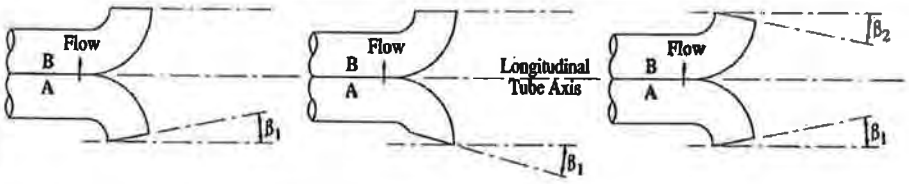

β_1 = 0

β_2 = 0

$\beta_1 \le 5°$? Y (y/n)

$\beta_2 \le 5°$? Y (y/n)

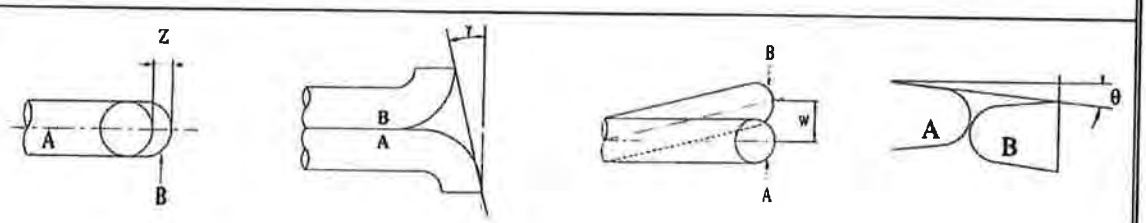

γ = 0 °

θ = 0 °

Z = A tan(γ) = 0

W = A tan(θ) = 0

$Z \le 0.125"$? Y (y/n)

$W \le 0.031"$? Y (y/n)

Acceptability for Use (Circle Selection)	If all answers are "Y", this pitot tube is available for use, and may be assigned a correction factor of 0.84	If all answers except the first (D_t) are "Y", this pitot tube is available for use, but needs to be calibrated using a wind tunnel.	Any other situation, the pitot tube must be removed from service.

CDS-15: Pitot Tube Inspection
Per: EM SOP-009
Revised: March 2016

Temperature Sensor Calibration

Readout ID Number	T-311348
Thermometer ID Number	2490
Thermometer Expiration Date	5/22/18
Sensor ID Number	HST-8

Calibrated by	Initials	CS
	Date	2/9/18
Reviewed by	Initials	WCT
	Date	3/11/18

Thermometer Reading (°F)	Temperature Readout and Sensor Reading (°F)	Error
50	52.0	0.39 %
212	210.0	0.30 %

Error is calculated according to the following equation:

CDS-09: Temperature Sensor
Per: EM SOP-001
Revised: March 2016

$$\text{Error} = \frac{T_{Sens} - T_{Ref}}{T_{Ref} + 460} \times 100\%$$

Where

T_{sens} is the temperature reading from the sensor and
T_{ref} is the temperature reading from the reference thermometer

Acceptance criteria: Error is less than ±1.5%, absolute

Field Balance Calibration Check

Project Name	Unit 1 FGD bypass
Project Number	60562829
Balance ID	URS 01
Calibration Weight ID	Troemner 92945

Date	Actual Mass (g)	Balance Reading (g)	Difference [a] (g)	Initials
3/6/18	500	500.0	0	JC
3/7/18	500	500.2	+0.2	JC
3/8/18	500	499.9	-0.1	JC
3/9/18	500	500.1	+0.1	JC

[a] - The acceptance criteria for difference is ±0.5 grams.

Airgas
an Air Liquide company

Airgas Specialty Gases
Airgas USA, LLC
12722 S. Wentworth Ave.
Chicago, IL 60628
Airgas.com

CERTIFICATE OF ANALYSIS

Grade of Product: EPA Protocol

Part Number:	E03NI80E15A0138	Reference Number:	54-124605895-1
Cylinder Number:	ALM011065	Cylinder Volume:	150.9 CF
Laboratory:	124 - Chicago - IL	Cylinder Pressure:	2015 PSIG
PGVP Number:	B12017	Valve Outlet:	590
Gas Code:	CO2,O2,BALN	Certification Date:	Mar 07, 2017

Expiration Date: Mar 07, 2025

Certification performed in accordance with "EPA Traceability Protocol for Assay and Certification of Gaseous Calibration Standards (May 2012)" document EPA 600/R-12/531, using the assay procedures listed. Analytical Methodology does not require correction for analytical interference. This cylinder has a total analytical uncertainty as stated below with a confidence level of 95%. There are no significant impurities which affect the use of this calibration mixture. All concentrations are on a volume/volume basis unless otherwise noted.

Do Not Use This Cylinder below 100 psig, i.e. 0.7 megapascals.

ANALYTICAL RESULTS

Component	Requested Concentration	Actual Concentration	Protocol Method	Total Relative Uncertainty	Assay Dates
CARBON DIOXIDE	10.00 %	9.948 %	G1	+/- 0.7% NIST Traceable	03/07/2017
OXYGEN	10.00 %	9.842 %	G1	+/- 0.9% NIST Traceable	03/06/2017
NITROGEN	Balance				

CALIBRATION STANDARDS

Type	Lot ID	Cylinder No	Concentration	Uncertainty	Expiration Date
NTRM	13060635	CC413759	13.359 % CARBON DIOXIDE/NITROGEN	+/- 0.6%	May 09, 2019
NTRM	06120102	CC195613	9.898 % OXYGEN/NITROGEN	+/- 0.7%	Jul 26, 2018

ANALYTICAL EQUIPMENT

Instrument/Make/Model	Analytical Principle	Last Multipoint Calibration
Nicolet 6700 AHR0801332	FTIR	Feb 23, 2017
O2-1 HORIBA MPA-510 3VUYL9NR	Paramagnetic	Mar 03, 2017

Triad Data Available Upon Request

Approved for Release

Airgas

Airgas Specialty Gases
12722 South Wentworth Avenue
Chicago, IL 60628
(773) 785-3000 Fax: (773) 785-1928
www.airgas.com

CERTIFICATE OF ANALYSIS
Grade of Product: EPA Protocol

Part Number:	E03NI58E15A02X7	Reference Number:	54-124417638-2
Cylinder Number:	CC126166	Cylinder Volume:	160.6 CF
Laboratory:	ASG - Chicago - IL	Cylinder Pressure:	2014 PSIG
PGVP Number:	B12014	Valve Outlet:	590
Gas Code:	CO2,O2,BALN	Certification Date:	Feb 10, 2014

Expiration Date: Feb 10, 2022

Certification performed in accordance with "EPA Traceability Protocol for Assay and Certification of Gaseous Calibration Standards (May 2012)" document EPA 600/R-12/531, using the assay procedures listed. Analytical Methodology does not require correction for analytical interference. This cylinder has a total analytical uncertainty as stated below with a confidence level of 95%. There are no significant impurities which affect the use of this calibration mixture. All concentrations are on a volume/volume basis unless otherwise noted.

Do Not Use This Cylinder below 100 psig, i.e. 0.7 megapascals.

ANALYTICAL RESULTS

Component	Requested Concentration	Actual Concentration	Protocol Method	Total Relative Uncertainty	Assay Dates
CARBON DIOXIDE	21.00 %	20.67 %	G2	+/- 2% NIST Traceable	02/10/2014
OXYGEN	21.00 %	20.99 %	G1	+/- 1.0% NIST Traceable	02/08/2014
NITROGEN	Balance				

CALIBRATION STANDARDS

Type	Lot ID	Cylinder No	Concentration	Uncertainty	Expiration Date
NTRM	08061321	CC255428	20.09 % CARBON DIOXIDE/NITROGEN	+/- 0.6%	Jun 28, 2018
NTRM	06120210	CC195743	20.90 % OXYGEN/NITROGEN	+/- 0.4%	Dec 01, 2015

ANALYTICAL EQUIPMENT

Instrument/Make/Model	Analytical Principle	Last Multipoint Calibration
CO2-1 HORIBA VIA-510 V1E3H7P5	NDIR	Feb 10, 2014
O2-1 HORIBA MPA-510 3VUYL9NR	Paramagnetic	Jan 21, 2014

Triad Data Available Upon Request

Notes:

Approved for Release

Airgas
an Air Liquide company

Airgas Specialty Gases
Airgas USA, LLC
12722 S. Wentworth Ave.
Chicago, IL 60628
Airgas.com

CERTIFICATE OF ANALYSIS

Grade of Product: EPA Protocol

Part Number:	E02NI99E15A0163	Reference Number:	54-401115674-1
Cylinder Number:	CC415347	Cylinder Volume:	144.3 CF
Laboratory:	124 - Chicago (SAP) - IL	Cylinder Pressure:	2015 PSIG
PGVP Number:	B12018	Valve Outlet:	660
Gas Code:	NO,NOX,BALN	Certification Date:	Feb 13, 2018

Expiration Date: Feb 13, 2021

Certification performed in accordance with "EPA Traceability Protocol for Assay and Certification of Gaseous Calibration Standards (May 2012)" document EPA 600/R-12/531, using the assay procedures listed. Analytical Methodology does not require correction for analytical interference. This cylinder has a total analytical uncertainty as stated below with a confidence level of 95%. There are no significant impurities which affect the use of this calibration mixture. All concentrations are on a volume/volume basis unless otherwise noted.

Do Not Use This Cylinder below 100 psig, i.e. 0.7 megapascals.

ANALYTICAL RESULTS

Component	Requested Concentration	Actual Concentration	Protocol Method	Total Relative Uncertainty	Assay Dates
NOX	45.00 PPM	45.78 PPM	G1	+/- 1.0% NIST Traceable	02/05/2018, 02/13/2018
NITRIC OXIDE	45.00 PPM	45.77 PPM	G1	+/- 1.0% NIST Traceable	02/05/2018, 02/13/2018
NITROGEN	Balance				

CALIBRATION STANDARDS

Type	Lot ID	Cylinder No	Concentration	Uncertainty	Expiration Date
NTRM	16060606	CC442563	50.42 PPM NITRIC OXIDE/NITROGEN	+/- 0.8%	Jun 27, 2020
PRM	12367	APEX1099237	10.0 PPM NITROGEN DIOXIDE/AIR	+/- 1.5%	Jun 02, 2017
GMIS	1114201605	CC506716	4.995 PPM NITROGEN DIOXIDE/NITROGEN	+/- 2.0%	Nov 14, 2019

The SRM, PRM or RGM noted above is only in reference to the GMIS used in the assay and not part of the analysis.

ANALYTICAL EQUIPMENT

Instrument/Make/Model	Analytical Principle	Last Multipoint Calibration
Nicolet 6700 AMP0900100	FTIR	Jan 21, 2018
Nicolet 6700 AMP0900100	FTIR	Jan 21, 2018

Triad Data Available Upon Request

Approved for Release

Airgas
an Air Liquide company

Airgas Specialty Gases
Airgas USA, LLC
12722 S. Wentworth Ave.
Chicago, IL 60628
Airgas.com

CERTIFICATE OF ANALYSIS

Grade of Product: EPA Protocol

Part Number:	E02NI99E15A3576	Reference Number:	54-124602191-5
Cylinder Number:	CC199922	Cylinder Volume:	144.3 CF
Laboratory:	124 - Chicago - IL	Cylinder Pressure:	2015 PSIG
PGVP Number:	B12017	Valve Outlet:	660
Gas Code:	NO,NOX,BALN	Certification Date:	Mar 01, 2017

Expiration Date: Mar 01, 2025

Certification performed in accordance with "EPA Traceability Protocol for Assay and Certification of Gaseous Calibration Standards (May 2012)" document EPA 600/R-12/531, using the assay procedures listed. Analytical Methodology does not require correction for analytical interference. This cylinder has a total analytical uncertainty as stated below with a confidence level of 95%. There are no significant impurities which affect the use of this calibration mixture. All concentrations are on a volume/volume basis unless otherwise noted.

Do Not Use This Cylinder below 100 psig, i.e. 0.7 megapascals.

ANALYTICAL RESULTS

Component	Requested Concentration	Actual Concentration	Protocol Method	Total Relative Uncertainty	Assay Dates
NOX	90.00 PPM	90.90 PPM	G1	+/- 1.0% NIST Traceable	02/21/2017, 03/01/2017
NITRIC OXIDE	90.00 PPM	90.90 PPM	G1	+/- 1.0% NIST Traceable	02/21/2017, 03/01/2017
NITROGEN	Balance				

CALIBRATION STANDARDS

Type	Lot ID	Cylinder No	Concentration	Uncertainty	Expiration Date
NTRM	030212	KAL004026	97.60 PPM NITRIC OXIDE/NITROGEN	+/- 0.8%	May 09, 2019
PRM	12312	680179	10.01 PPM NITROGEN DIOXIDE/NITROGEN	+/- 2.0%	Oct 15, 2014
GMIS	812201405	CC502159	4.861 PPM NITROGEN DIOXIDE/NITROGEN	+/- 2.0%	Aug 12, 2017

The SRM, PRM or RGM noted above is only in reference to the GMIS used in the assay and not part of the analysis.

ANALYTICAL EQUIPMENT

Instrument/Make/Model	Analytical Principle	Last Multipoint Calibration
Nicolet 6700 AMP0900100	FTIR	Feb 21, 2017
Nicolet 6700 AMP0900100	FTIR	Feb 21, 2017

Triad Data Available Upon Request

Approved for Release

Airgas

CERTIFICATE OF ANALYSIS

Grade of Product: EPA Protocol

Airgas Specialty Gases
630 United Drive
Durham , NC 27713
919-544-3773 Fax: 919-544-3774
Airgas.com

Part Number:	E02AI99E15A1704	Reference Number:	122-124532724-1
Cylinder Number:	CC504828	Cylinder Volume:	146.2 Cubic Feet
Laboratory:	ASG - Durham - NC	Cylinder Pressure:	2015 PSIG
PGVP Number:	B22016	Valve Outlet:	660
Gas Code:	NO2,BALA	Certification Date:	Feb 02, 2016

Expiration Date: Feb 02, 2019

Certification performed in accordance with "EPA Traceability Protocol for Assay and Certification of Gaseous Calibration Standards (May 2012)" document EPA 600/R-12/531, using the assay procedures listed. Analytical Methodology does not require correction for analytical interference. This cylinder has a total analytical uncertainty as stated below with a confidence level of 95%. There are no significant impurities which affect the use of this calibration mixture. All concentrations are on a volume/volume basis unless otherwise noted.

Do Not Use This Cylinder below 100 psig, i.e. 0.7 megapascals.

ANALYTICAL RESULTS

Component	Requested Concentration	Actual Concentration	Protocol Method	Total Relative Uncertainty	Assay Dates
NITROGEN DIOXIDE	50.00 PPM	50.19 PPM	G1	+/- 2.1%	01/18/2016, 02/02/2016
AIR	Balance				

CALIBRATION STANDARDS

Type	Lot ID	Cylinder No	Concentration	Uncertainty	Expiration Date
GMIS	415201401	CC345255	50.06 PPM NITROGEN DIOXIDE/NITROGEN	+/- 2.0%	Jul 25, 2017
PRM	12325	APEX1099251	50.00 PPM NITROGEN DIOXIDE/NITROGEN	+/- 2.0%	Jul 26, 2014

The SRM, PRM or RGM noted above is only in reference to the GMIS used in the assay and not part of the analysis.

ANALYTICAL EQUIPMENT

Instrument/Make/Model	Analytical Principle	Last Multipoint Calibration
TECO NO 42CHL-63965-341	Chemiluminescence	Jan 07, 2016

Triad Data Available Upon Request

C S Williams

Approved for Release

Ohio EPA MAY 10 '18
Entered Directors Journal

Ohio Environmental Protection Agency

John R. Kasich, Governor
Mary Taylor, Lt. Governor
Craig W. Butler, Director

I certify this to be a true and accurate copy of the official documents as filed in the records of the Ohio Environmental Protection Agency.

By Jennifer Dassetter Date: 5-10-18

May 10, 2018

CERTIFIED MAIL

Mr. Jim Skipworth
General Manager
Haverhill Coke Company, LLC
2446 Gallia Pike
Franklin Furnace, Ohio 45629

RE: Request for scheduled maintenance at Haverhill Coke Company, LLC (premise number 0773000182)

Dear Mr. Skipworth:

On April 12, 2018, the Portsmouth Local Air Agency ("PLAA") received Haverhill Coke Company, LLC's ("HCC") written request dated April 11, 2018, to continue operating an emissions unit while performing maintenance of control equipment at the facility. Pursuant to the provisions of Ohio Administrative Code ("OAC") Rule 3745-15-06(A)(3), this request is for authorization to continue operating the coke oven battery emissions unit P902 during the planned shutdown and scheduled maintenance of the Flue Gas Desulfurization Unit ("FGD") that controls emissions from this source.

The PLAA and Ohio EPA's Division of Air Pollution Control ("DAPC") have reviewed the information that was submitted, have taken environmental and economic factors into consideration, and have determined that your request for temporary shutdown of the emissions control equipment described above is acceptable.

Based on the information that was submitted, and the recommendations from the PLAA and DAPC, I hereby authorize HCC to operate the coke oven battery while the FGD is shut down, provided HCC complies with the conditions, stipulations, restrictions, and time frames regarding the scheduled maintenance program, as contained in your April 11, 2018 letter and subsequent tentative work schedule provided in your April 19, 2018 email to the PLAA. If there is any deviation from the expressed program, such deviation must be reported immediately to the PLAA so that this authorization may be reevaluated.

This authorization may be revoked at any time by written notice from the PLAA or this office should the situation no longer justify continued operation of the source.

You are hereby notified that this action of the Director is final and may be appealed to the Environmental Review Appeals Commission pursuant to Section 3745.04 of the Ohio Revised Code. The appeal must be in writing and set forth the action complained of and the grounds upon which the appeal is based. The appeal must be filed with the Commission within thirty (30) days after notice of the Director's action.

The appeal must be accompanied by a filing fee of $70.00 which the Commission, in its discretion, may reduce if by affidavit you demonstrate that payment of the full amount of the fee would cause extreme hardship. Notice of the filing of the appeal shall be filed with the Director within three (3) days of filing with the Commission. Ohio EPA requests that a copy of the appeal be served upon the Ohio Attorney General's Office, Environmental Enforcement Section. An appeal may be filed with the Environmental Review Appeals Commission at the following address:

Environmental Review Appeals Commission
30 East Broad St. 4th Floor
Columbus, Ohio 43215

This authorization does not exempt HCC of any liability for any violation of Ohio law and does not limit the Director's authority to take action pursuant to the provisions of OAC Rule 3745-15-06(C).

Please notify PLAA prior to beginning the maintenance event and again when the air pollution control equipment is in full operation immediately upon completion of the scheduled maintenance.

If you have any questions regarding this approval, please contact Cindy Charles, PLAA, at (740) 353-5156.

Please complete a survey at www.epa.ohio.gov/survey.aspx and give us feedback on how we did processing your request. We value your opinion.

Sincerely,

Craig W. Butler
Director

CWB/jp

xc: James Kavalec, DAPC
John Paulian, DAPC
Cindy Charles, PLAA

STARKWEATHER, DIANA M.

From: WILHERE, DENNIS
Sent: Monday, July 09, 2018 4:08 PM
To: Cindy Charles (Cindy.Charles@epa.state.oh.us)
Cc: STARKWEATHER, DIANA M.; BALL, MARK A.; SKIPWORTH, JIM G; THOMPSON JR., MONTE C.; BATTEN, KATIE M; SINGLETON, KRIS E.
Subject: P902 FGD Maintenance Outage

Cindy,

The P902 FGD maintenance outage began as scheduled on Sunday, June 4, 2018 and was completed Saturday, July 7, 2018. The vent stack open and close times are listed below:

Vent Stack	Open Time	Close Time	Open Time	Close Time	Open Time	Close Time
#6	06/4/2018 6:06:00 PM	07/7/2018 4:30:00 PM				
#7	06/4/2018 6:34:00 PM	07/7/2018 4:33:00 PM				
#8	06/4/2018 6:45:00 PM	07/7/2018 4:43:00 PM	07/7/2018 5:20:00 PM	07/7/2018 5:25:00 PM		
#9	06/4/2018 6:52:00 PM	07/7/2018 5:03:00 PM	07/7/2018 5:20:00 PM	07/7/2018 5:29:00 PM	07/7/2018 5:33:00 PM	07/7/2018 5:37:00 PM
#10	06/4/2018 6:24:00 PM	07/7/2018 4:57:00 PM	07/7/2018 5:20:00 PM	07/7/2018 5:56:00 PM	07/7/2018 6:29:00 PM	07/7/2018 6:45:00 PM

The SDA Fabric Filter was brought back online at 4:17:00 PM and the PAC injection system was returned to service at 4:47 PM.

Please contact me with any questions.

Thanks,

Dennis Wilhere
Environmental Compliance Specialist
SunCoke Energy Partners, L.P.
Haverhill Operations

SXCPartners

2446 Gallia Pike
Franklin Furnace, OH 45629
Office: 740-355-9872
Cell: 740-464-1012

This e-mail and any files transmitted with it may contain confidential information and is intended solely for the use of the individual or entity to whom they are addressed. If you are not the intended recipient, you are notified that disclosing, copying, distributing or taking any action in reliance on the contents of this information

is strictly prohibited. Please notify the sender immediately by e-mail if you have received this e-mail by mistake and delete this e-mail from your system. Thank you for your cooperation.

STARKWEATHER, DIANA M.

From: WILHERE, DENNIS
Sent: Tuesday, July 10, 2018 10:41 AM
To: Cindy Charles (Cindy.Charles@epa.state.oh.us)
Cc: STARKWEATHER, DIANA M.
Subject: Date Correction: P902 FGD Maintenance Outage

Cindy,

Please note: the P902 FGD Maintenance Outage began on June 3, 2018 not June 4, 2018 as originally stated. This serves as an update to the original notice.

The P902 FGD maintenance outage began as scheduled on Sunday, June 3, 2018 and was completed Saturday, July 7, 2018. The vent stack open and close times are listed below:

Vent Stack	Open Time	Close Time	Open Time	Close Time	Open Time	Close Time
#6	06/3/2018 6:06:00 PM	07/7/2018 4:30:00 PM				
#7	06/3/2018 6:34:00 PM	07/7/2018 4:33:00 PM				
#8	06/3/2018 6:45:00 PM	07/7/2018 4:43:00 PM	07/7/2018 5:20:00 PM	07/7/2018 5:25:00 PM		
#9	06/3/2018 6:52:00 PM	07/7/2018 5:03:00 PM	07/7/2018 5:20:00 PM	07/7/2018 5:29:00 PM	07/7/2018 5:33:00 PM	07/7/2018 5:37:00 PM
#10	06/3/2018 6:24:00 PM	07/7/2018 4:57:00 PM	07/7/2018 5:20:00 PM	07/7/2018 5:56:00 PM	07/7/2018 6:29:00 PM	07/7/2018 6:45:00 PM

The SDA Fabric Filter was brought back online at 4:17:00 PM and the PAC injection system was returned to service at 4:47 PM.

Please contact me with any questions.

Thanks,

Dennis Wilhere
Environmental Compliance Specialist
SunCoke Energy Partners, L.P.
Haverhill Operations

SXCPartners

2446 Gallia Pike
Franklin Furnace, OH 45629
Office: 740-355-9872
Cell: 740-464-1012

This e-mail and any files transmitted with it may contain confidential information and is intended solely for the use of the individual or entity to whom they are addressed. If you are not the intended recipient, you are notified that disclosing, copying, distributing or taking any action in reliance on the contents of this information is strictly prohibited. Please notify the sender immediately by e-mail if you have received this e-mail by mistake and delete this e-mail from your system. Thank you for your cooperation.

Attachment C1

Gateway Energy and Coke Company, Agency Compliance Reports

Gateway Energy and Coke Company, LLC
2585 Edwardsville Rd
Granite City, IL 62040

July 30, 2018

Mr. Andy Jankowski
Illinois Environmental Protection Agency
2009 Mall Street
Collinsville, IL 62234
Fed Ex: 771362543483

Facility ID 119040ATN, Construction Permit 06070020
2018 First Half Semi-Annual Deviation Report

Mr. Jankowski:

Gateway Energy and Coke Company, LLC (GECC) operates a coke production facility located in Granite City, Illinois. Currently, this facility operates under Illinois Environmental Protection Agency (IEPA) Construction Permit 06070020 which was modified on April 28, 2010. An application to revise this permit was submitted on October 26, 2010, but has yet to be approved. Pursuant to permit conditions 4.1.10(a)(iii) and 4.2.10(b), GECC is required to submit semi-annual deviation reports. Permit condition 4.1.10(a)(iii) states:

> *Other deviations shall be reported with the periodic compliance reports required by the NESHAP. These reports shall also include a listing of the above deviations, for which individual deviation notices have been submitted, with the date of the deviation notice.*

Permit conditions 4.2.10(b)(i) and (ii) state:

> *The Permittee shall submit semi-annual reports to the Illinois EPA for all deviations from emission standards, including standards for visible emissions and opacity, and operating requirements set by this permit. These notifications shall include the information specified by Condition 3.5.2.*
>
> *These reports shall also address any deviations from applicable compliance procedures established by this permit for affected units.*

Additionally, permit condition 3.5.2(a) states:

> *Except as specified in a particular provision of this permit or in a subsequent CAAPP Permit for the plant, notifications and reports for deviation from applicable emission standards and control requirements shall include at least the following information: the date and time of the event, a description of the event, information on the magnitude of the deviation, a description of the corrective measures taken, and a description of any preventative measures taken to prevent future occurrences.*

In accordance with the aforementioned permit conditions, Attachment A describes deviations from the emission standards, control requirements, monitoring requirements, recordkeeping

requirements, and reporting requirements established under Construction Permit 06070020 that occurred at GECC during the 1st Half of 2018.

Construction Permit 06070020 establishes additional reporting requirements for the continuous emissions monitoring systems (CEMS) for sulfur dioxide (SO_2) and particulate matter (PM), the mercury sorbent trap monitoring system, and the waste heat bypass stacks. Therefore, GECC is including the SO_2 CEMS report in Attachment B pursuant to permit condition 4.1.8-1(a)(iv), the PM CEMS report in Attachment C pursuant to permit condition 4.1.8-1(b)(iv), the mercury sorbent trap monitoring system report in Attachment D pursuant to permit condition 4.1.8-1(c)(i), and the waste heat bypass stack summary in Attachment E pursuant to permit conditions 4.1.10(f)(i)-(iii).

I certify that based on information and belief formed after reasonable inquiry, the statements and information in this report are true, accurate, and complete.

Sincerely,

Matthew Lester
General Manager

cc: Bureau of Air
Compliance Section
PO Box 19276
Springfield, IL 62794-9276
FedEx No: 771362558269

Table A-1: 1st Half 2018 Deviation Events

Equipment	Date of Occurrence	Duration (minutes)	Permit Condition / Regulatory Citation	Description of Event/Probable Cause	Corrective Actions
PAC Injection System	1/1/2018-6/30/2018	NA	4.1.5(b)(ii)	GECC is operating an activated carbon injection system but cannot guarantee 90% removal at all times, due to the very small amount of mercury that is present in the coal.	GECC submitted a permit modification application to IEPA on 7/11/17 to propose mercury emission limits for the PAC system.
Stack 2	1/8/2018	9.92	4.1.5(a)(i)(D)	HRSG #2 stack lids opened due incorrect pressure transmitter valve closed. Total of 9.92 minutes.	Reselected correct transmitter and closed lid.
Oven 86	1/9/2018	1st: 5 min 2nd: 6 min	4.1.3-1 (c)(ii)	Two door fires on Oven 86 during the same coking cycle.	1st: Adjusted sole flue damper. 2nd: Adjusted uptake dampers, increased draft.
Oven 94	1/10/2018	1st: 7 min 2nd: 5 min	4.1.3-1 (c)(ii)	Two door fires on Oven 94 during the same coking cycle.	1st: Adjusted sole flue damper. 2nd: Adjusted sole flue damper.
Oven 18	1/23/2018	1st: 8 min 2nd: 8 min	4.1.3-1 (c)(ii)	Two door fires on Oven 18 during the same coking cycle. (1952-2000, 2002-2010)	1st: Adjusted sole flue damper, 2nd: Adjusted uptake dampers, increased draft.
Oven 18	1/31/2018	31	4.1.3-1 (c)(ii)	Door fire > 15 minutes on Oven 18 (0835-0906).	Adjusted sole flue damper.
Oven 22	1/31/2018	16	4.1.3-1 (c)(ii)	Door fire > 15 minutes on Oven 22 (0850-0906).	Adjusted sole flue damper, reseated oven door.
Oven 40	2/10/2018	55	4.1.3-1 (c)(ii)	Door fire > 15 minutes on Oven 40 (0625-0720).	Closed gas sharing ports and door holes on Oven 39
Oven 19	3/12/2018	1st: 2 min 2nd: 13 min	4.1.3-1 (c)(ii)	Two door fires on Oven 19 during the same coking cycle. (0547-0549, 0726-0739)	1st: Opened door holes 2nd: Adjusted uptake dampers, increased draft.
Oven 120	3/20/2018	1st: 8 min 2nd: 7 min	4.1.3-1 (c)(ii)	Two door fires on Oven 120 during the same coking cycle. (0653-0701, 1215-1222)	1st: Adjusted sole flue damper. 2nd: Unstuck uptake damper.
Oven 39	3/30/2018	1st: 2 min 2nd: 7 min	4.1.3-1 (c)(ii)	Two door fires on Oven 39 during the same coking cycle. (0552-0554, 0719-0726)	1st: Adjusted sole flue damper. 2nd: Adjusted sole flue dampers.
Oven 40	5/4/2018	1st: 4 min 2nd: 11 min	4.1.3-1 (c)(ii)	Two door fires on Oven 40 during the same coking cycle. (0503-0507, 1425-1436)	1st: Adjusted sole flue damper. 2nd: Adjusted sole flue dampers.
Oven 58	6/26/2018	22	4.1.3-1 (c)(ii)	Door fire > 15 minutes on Oven 58 (0538-0600).	Adjusted sole flue damper.
Oven 60	6/26/2018	22	4.1.3-1 (c)(ii)	Door fire > 15 minutes on Oven 60 (0538-0600).	Adjusted sole flue damper.
Roadways	2nd Qtr 2018	NA	4.3.9.a.i. 4.3.9.c.i.	Weekly records for implementation of control measures for plant roadways were not kept for the weeks of 2/11, 4/22, 4/29, 5/6, 6/3 and 6/24.	Reviewed plant recordkeeping processes to ensure proper recordkeeping.

ATTACHMENT B. SO_2 CEMS REPORT

Attachment B contains a summary of the SO_2 CEMS monitoring data for the 2018 1st Half. Permit condition 4.1.8-1(a)(iv) states:

> *The Permittee shall submit semi-annual monitoring reports to the Illinois EPA for this emission monitoring system in accordance with relevant reporting requirements of the NSPS for continuous emissions monitoring systems, 40 CFR 60.7(c) or (d).*

Accordingly, 40 CFR 60.7(c) requires that the following information be included in the semi-annual report:

> *The magnitude of excess emissions computed in accordance with §60.13(h), any conversion factor(s) used, and the date and time of commencement and completion of each time period of excess emissions.*
>
> *The process operating time during the reporting period.*
>
> *Specific identification of each period of excess emissions that occurs during startups, shutdowns, and malfunctions of the affected facility.*
>
> *The nature and cause of any malfunction (if known), the corrective action taken or preventative measures adopted.*
>
> *The date and time identifying each period during which the continuous monitoring system was inoperative except for zero and span checks and the nature of the system repairs or adjustments.*
>
> *When no excess emissions have occurred or the continuous monitoring system(s) have not been inoperative, repaired, or adjusted, such information shall be stated in the report.*

Pursuant to these requirements, the CEMS report provided in this attachment includes documentation of excess emissions of SO_2 and a summary of CEMS downtime for the current reporting period.

During Flue Gas Desulfurization (FGD) bypass and malfunction events, the raw SO_2 data recorded by the CEMS reached the upper range of the data logger. In these instances, SO_2 emissions and 30-day rolling averages were estimated by substituting the actual concentrations stored in the analyzer's internal memory. Concentrations above 240 ppm are outside the calibrated range of the analyzer (0-240 ppm) but are believed to be reasonable estimates of the actual concentration of SO_2 in the sample gas.

GECC CEMS Report for the Main Stack

GATEWAY ENERGY & COKE COMPANY, LLC
EMISSION UNIT DOWNTIME SUMMARY REPORT
Reporting Period : January 2018 - June 2018

Facility ID: 119040ATN
Emission Unit: Main Stack

Commencement of Emission Unit Downtime	Completion of Emission Unit Downtime	Emission Unit Downtime Duration (hours)	Reasons for Emission Unit Downtime
No emission unit downtime in this reporting period			
Total Emission Unit downtime for the reporting period =		**0**	**hours**

Emission Unit Time Online Summary

Start date of reporting period =	1/1/2018 0:00
End date of reporting period =	6/30/2018 23:59
Total clock hours in reporting period =	4344
Total Emission Unit time online for the reporting period =	4344
Total Emission Unit downtime for the reporting period =	0
% Emission Unit time online for the reporting period =	100.0%
% Emission Unit downtime for the reporting period =	0.0%

GECC CEMS Report for the Main Stack

GATEWAY ENERGY & COKE COMPANY, LLC

SO_2 EMISSION EXCEEDANCES SUMMARY REPORT

Reporting Period : January 2018 - June 2018

Facility ID: 119040ATN
Emission Unit: Main Stack

SO_2 Emission Limits :

227.7 lb/hr on a 30-day rolling average basis
84.7 tons per month
997.33 tons per year on a rolling 12-month summation basis

Date of Commencement	Time of Commencement	Date of Completion	Time of Completion	Duration of Exceedance (days)	Pollutant	Magnitude (lb/hr)	Reason/s for the Excess Emissions	Corrective action/s taken, or measures taken to minimize emissions	Excess Emissions caused by Malfunction
There were no SO2 emission exceedances during the reporting period.									

NOTES:

GATEWAY ENERGY & COKE COMPANY, LLC
SO_2 EMISSIONS SUMMARY REPORT
Reporting Period : January 2018 - June 2018

Facility ID: 119040ATN
Emission Unit: Main Stack

Parameter	Units	January	February	March	April	May	June
(A) Total hours in month	hours	744	672	744	720	744	720
(B) Emission unit downtime	hours	0	0	0	0	0	0
(C) Total emission unit operating hours	hours	744	672	744	720	744	720
(D) Valid CEMS hours	hours	742	663	741	717	738	720
(E) SO_2 emissions during valid CEMS hours	lbs	158,561	142,442	159,728	155,842	161,590	158,344
(F) Ave. SO_2 emissions during valid CEMS hours	lb/hr	213.7	214.8	215.6	217.4	219.0	219.9
(G) CEMS downtime hours	hours	2	9	3	3	6	0
(H) Est. SO_2 emissions during invalid hours	lbs	427.4	1933.6	646.7	652.1	1313.7	0
(I) TOTAL estimated SO_2 emissions	lbs	158,989	144,375	160,374	156,494	162,903	158,344
(J) TOTAL estimated SO_2 emissions	**tons**	**79.5**	**72.2**	**80.2**	**78.2**	**81.5**	**79.2**

Month	Year	Monthly SO_2 Emissions, tons	Rolling 12-month SO_2 Emissions, tpy
January	2017	81.1	946.8
February	2017	71.7	943.1
March	2017	80.5	944.5
April	2017	77.6	944.3
May	2017	32.1	895.9
June	2017	73.6	892.1
July	2017	79.5	891.6
August	2017	80.4	892.3
September	2017	77.7	892.2
October	2017	80.5	893.0
November	2017	77.7	893.0
December	2017	81.1	893.2
January	2018	79.5	891.6
February	2018	72.2	892.2
March	2018	80.2	891.9
April	2018	78.2	892.6
May	2018	81.5	941.9
June	2018	79.2	947.5

NOTES:

1) During FGD bypass and malfunction events, the raw SO_2 data recorded by the CEMS can be at the data logger upper range of 240 ppm. In these instances, SO_2 emissions may be estimated by substituting the actual concentrations stored in the analyzer's internal memory. Concentrations above 240 ppm are outside the calibrated range of the analyzer (0-240 ppm) but are believed to be reasonable estimates of the actual concentration of SO_2 in the sample gas.

GECC CEMS Report for the Main Stack

GATEWAY ENERGY & COKE COMPANY, LLC
SO_2 CEMS INSTRUMENT DOWNTIME REPORT
Reporting Period : January 2018 - June 2018

Facility ID: 119040ATN
Emission Unit: Main Stack

Date	Time of Commencement	Duration of Downtime (hours)	Parameter	Reasons for Downtime	Nature of system repairs and adjustments
1/31/18	13:00	1	SO2 lb/hr	Conducting quarterly maintenance	None
1/31/18	14:00	1	SO2 lb/hr	Invalid stack moisture due to loss of wet O2 data.	None; system resumed normal operation on its own.
2/1/18	8:00	2	SO2 lb/hr	Conducting quarterly maintenance and audits	None
2/1/18	10:00	3	SO2 lb/hr	Invalid stack moisture due to loss of wet O2 data.	None; wet O2 analyzer operating temp was OK; ran cal gases and system resumed normal operation.
2/2/18	3:00	3	SO2 lb/hr	low sample flow caused air inleakage	Increased sample flow.
2/2/18	8:00	1	SO2 lb/hr	Maintenance on sample gas manifold	Reran calibration gases to confirm proper calibration of system; no adjustments made.
3/31/18	12:00	3	SO2 lb/hr	Performing maintenance on gas conditioner and sample manifold	Rebuilt sample pump; replaced peristaltic pump tubing; cleaned sample manifold.
4/26/18	9:00	1	SO2 lb/hr	Conducting quarterly maintenance and audits	None
4/27/18	9:00	2	SO2 lb/hr	Maintenance on gas conditioner	Replaced heat sink.
5/1/18	2:00	5	SO2 lb/hr	loss of power to gas conditioner	Replaced power supply.
5/30/18	11:00	1	SO2 lb/hr	Manual calibration of wet O2 analyzer	None

NOTES:

GECC CEMS Report for the Main Stack

GATEWAY ENERGY & COKE COMPANY, LLC

SO_2 CEMS PERFORMANCE SUMMARY REPORT

Reporting Period : January 2018 - June 2018

Facility ID: 119040ATN
Emission Unit: Main Stack

Performance Summary	SO2 lb/hr
1. Total Emission Unit operating time =	4344
2. CEMS downtime in reporting period due to:	
a. Monitor equipment malfunctions =	18 hr
b. Non-monitor equipment malfunctions =	
c. Quality assurance calibration =	5 hr
d. Other known causes =	
e. Unknown causes =	
3. Total CEMS downtime =	23 hr
4. Percent Monitor Downtime =	0.53%
5. Percent Monitor Online =	99.47%

NOTES:

ATTACHMENT C. PM CEMS REPORT

Attachment C contains a summary of the PM CEMS monitoring data for the 2017 2nd Half. Permit condition 4.1.8-1(b)(iv) states:

The Permittee shall submit all PM CEMS and emission test data (including but not limited to emission test data to calibrate this CEMS) in electronic format (or other format specified by the Illinois EPA) to the Illinois EPA on a semi-annual basis, together with the semi-annual reports regarding its PM and $PM_{2.5}$ monitoring.

Pursuant to these requirements, the CEMS report provided in this attachment includes documentation of all PM CEMS data and a summary of CEMS downtime for the current reporting period. Please note that pursuant to Condition 4.1.8-1(b)(ii), the PM CEMS was operated on a trial basis until March 13, 2013. After the trial period the CEMS must continue to operate unless the Illinois EPA determines that the system does not provide reliable and accurate data. As indicated in the previous semi-annual report, several attempts to correlate raw backscatter data from the PM CEMS have failed to produce accurate, reliable data in accordance with United States Environmental Protection Agency (USEPA) approved performance specifications. Therefore, during the current reporting period, only the PM CEMS backscatter energy data is being included.

An application to remove the PM CEMS from the permit has been submitted to IEPA and an application removal has yet to be approved.

GATEWAY ENERGY & COKE COMPANY, LLC

PARTICULATE MATTER (PM) CEMS DATA

Reporting Period : January 2018 - June 2018

Facility ID: 119040ATN

Emission Unit: Main Stack

Date/Time	Main Stack Online (mins)	PM CEMS Backscatter Energy (% of full scale)	Comments
		PM CEMS output is backscatter energy. Since a successful correlation test has not been performed, accurate PM concentrations cannot be calculated.	
01/01/2018 00	60	34.1	
01/01/2018 01	60	36.2	
01/01/2018 02	60	35.2	
01/01/2018 03	60	36.7	
01/01/2018 04	60	42.1	
01/01/2018 05	60	47.1	
01/01/2018 06	60	41.7	
01/01/2018 07	60	41.9	
01/01/2018 08	60	34.4	
01/01/2018 09	60	26.7	
01/01/2018 10	60	15.3	
01/01/2018 11	60	15.8	
01/01/2018 12	60	17.2	
01/01/2018 13	60	16	
01/01/2018 14	60	13.4	
01/01/2018 15	60	10.5	
01/01/2018 16	60	8.6	
01/01/2018 17	60	9.2	
01/01/2018 18	60	8.3	
01/01/2018 19	60	6.2	
01/01/2018 20	60	6.5	
01/01/2018 21	60	6.5	
01/01/2018 22	60	8.7	
01/01/2018 23	60	14.5	
01/02/2018 00	60	13.1	
01/02/2018 01	60	19.2	
01/02/2018 02	60	18.1	
01/02/2018 03	60	14.6	
01/02/2018 04	60	13.5	
01/02/2018 05	60	21.8	
01/02/2018 06	60	29.6	
01/02/2018 07	60	13.4	
01/02/2018 08	60	6.5	
01/02/2018 09	60	6.3	
01/02/2018 10	60	5.8	
01/02/2018 11	60	5.7	
01/02/2018 12	60	4.8	
01/02/2018 13	60	4	
01/02/2018 14	60	4.5	
01/02/2018 15	60	5	
01/02/2018 16	60	5.4	
01/02/2018 17	60	5.4	

GECC PM CEMS Report for the Main Stack

Date/Time	Main Stack Online (mins)	PM CEMS Backscatter Energy (% of full scale)	Comments
		PM CEMS output is backscatter energy. Since a successful correlation test has not been performed, accurate PM concentrations cannot be calculated.	
01/02/2018 18	60	5.4	
01/02/2018 19	60	6.8	
01/02/2018 20	60	7.8	
01/02/2018 21	60	8.1	
01/02/2018 22	60	7.7	
01/02/2018 23	60	6.7	
01/03/2018 00	60	6.6	
01/03/2018 01	60	6.7	
01/03/2018 02	60	5.7	
01/03/2018 03	60	7	
01/03/2018 04	60	7.4	
01/03/2018 05	60	7.7	
01/03/2018 06	60	6.6	
01/03/2018 07	60	6.8	
01/03/2018 08	60	8.1	
01/03/2018 09	60	6.9	
01/03/2018 10	60	8.8	
01/03/2018 11	60	9	
01/03/2018 12	60	8.7	
01/03/2018 13	60	7	
01/03/2018 14	60	5.3	
01/03/2018 15	60	4.5	
01/03/2018 16	60	4	
01/03/2018 17	60	3.7	
01/03/2018 18	60	4.1	
01/03/2018 19	60	4.4	
01/03/2018 20	60	6.4	
01/03/2018 21	60	8.7	
01/03/2018 22	60	11.7	
01/03/2018 23	60	13.5	
01/04/2018 00	60	19.3	
01/04/2018 01	60	22	
01/04/2018 02	60	30.7	
01/04/2018 03	60	31.6	
01/04/2018 04	60	24.5	
01/04/2018 05	60	25.6	
01/04/2018 06	60	19.9	
01/04/2018 07	60	18.4	
01/04/2018 08	60	10.1	
01/04/2018 09	60	8.9	
01/04/2018 10	60	5	
01/04/2018 11	60	3.8	
01/04/2018 12	60	3.4	
01/04/2018 13	60	3.8	
01/04/2018 14	60	3.8	
01/04/2018 15	60	3.7	
01/04/2018 16	60	3.3	
01/04/2018 17	60	3.5	
01/04/2018 18	60	3.7	

GECC PM CEMS Report for the Main Stack

Date/Time	Main Stack Online (mins)	PM CEMS Backscatter Energy (% of full scale)	Comments
		PM CEMS output is backscatter energy. Since a successful correlation test has not been performed, accurate PM concentrations cannot be calculated.	
01/04/2018 19	60	3.6	
01/04/2018 20	60	3.8	
01/04/2018 21	60	5.3	
01/04/2018 22	60	7.2	
01/04/2018 23	60	8.1	
01/05/2018 00	60	6.9	
01/05/2018 01	60	6.7	
01/05/2018 02	60	4.1	
01/05/2018 03	60	3.9	
01/05/2018 04	60	3.5	
01/05/2018 05	60	2.8	
01/05/2018 06	60	3	
01/05/2018 07	60	3	
01/05/2018 08	60	3.3	
01/05/2018 09	60	3	
01/05/2018 10	60	2.9	
01/05/2018 11	60	2.5	
01/05/2018 12	60	2.6	
01/05/2018 13	60	2.6	
01/05/2018 14	60	3.1	
01/05/2018 15	60	3.1	
01/05/2018 16	60	3.4	
01/05/2018 17	60	3.3	
01/05/2018 18	60	3.4	
01/05/2018 19	60	3	
01/05/2018 20	60	3.2	
01/05/2018 21	60	4.8	
01/05/2018 22	60	8.7	
01/05/2018 23	60	16.4	
01/06/2018 00	60	17.1	
01/06/2018 01	60	20.9	
01/06/2018 02	60	17.2	
01/06/2018 03	60	19.5	
01/06/2018 04	60	20.4	
01/06/2018 05	60	20.6	
01/06/2018 06	60	18.5	
01/06/2018 07	60	14.6	
01/06/2018 08	60	4	
01/06/2018 09	60	2.4	
01/06/2018 10	60	2.3	
01/06/2018 11	60	2.5	
01/06/2018 12	60	2.4	
01/06/2018 13	60	2.4	
01/06/2018 14	60	2.6	
01/06/2018 15	60	2.5	
01/06/2018 16	60	2.8	
01/06/2018 17	60	2.8	
01/06/2018 18	60	3	
01/06/2018 19	60	2.8	

GECC PM CEMS Report for the Main Stack

Date/Time	Main Stack Online (mins)	PM CEMS Backscatter Energy (% of full scale)	Comments
		PM CEMS output is backscatter energy. Since a successful correlation test has not been performed, accurate PM concentrations cannot be calculated.	
01/06/2018 20	60	2.8	
01/06/2018 21	60	2.4	
01/06/2018 22	60	2.6	
01/06/2018 23	60	2.6	
01/07/2018 00	60	2.7	
01/07/2018 01	60	2.6	
01/07/2018 02	60	2.8	
01/07/2018 03	60	2.8	
01/07/2018 04	60	2.7	
01/07/2018 05	60	2.7	
01/07/2018 06	60	2.7	
01/07/2018 07	60	2.6	
01/07/2018 08	60	2.8	
01/07/2018 09	60	2.9	
01/07/2018 10	60	3.1	
01/07/2018 11	60	2.9	
01/07/2018 12	60	2.8	
01/07/2018 13	60	3	
01/07/2018 14	60	2.9	
01/07/2018 15	60	2.6	
01/07/2018 16	60	2.6	
01/07/2018 17	60	2.3	
01/07/2018 18	60	2.3	
01/07/2018 19	60	2.2	
01/07/2018 20	60	2.7	
01/07/2018 21	60	2.7	
01/07/2018 22	60	2.7	
01/07/2018 23	60	2.7	
01/08/2018 00	60	2.6	
01/08/2018 01	60	2.6	
01/08/2018 02	60	2.7	
01/08/2018 03	60	2.7	
01/08/2018 04	60	2.8	
01/08/2018 05	60	2.9	
01/08/2018 06	60	2.5	
01/08/2018 07	60	2.7	
01/08/2018 08	60	2.8	
01/08/2018 09	60	3.1	
01/08/2018 10	60	2.9	
01/08/2018 11	60	2.5	
01/08/2018 12	60	2.5	
01/08/2018 13	60	2.8	
01/08/2018 14	60	3.1	
01/08/2018 15	60	2.9	
01/08/2018 16	60	2.8	
01/08/2018 17	60	2.8	
01/08/2018 18	60	2.6	
01/08/2018 19	60	3	
01/08/2018 20	60	3	

GECC PM CEMS Report for the Main Stack

Date/Time	Main Stack Online (mins)	PM CEMS Backscatter Energy (% of full scale)	Comments
		PM CEMS output is backscatter energy. Since a successful correlation test has not been performed, accurate PM concentrations cannot be calculated.	
01/08/2018 21	60	3.1	
01/08/2018 22	60	2.9	
01/08/2018 23	60	3	
01/09/2018 00	60	3.1	
01/09/2018 01	60	3.2	
01/09/2018 02	60	3.1	
01/09/2018 03	60	3.2	
01/09/2018 04	60	3	
01/09/2018 05	60	3.3	
01/09/2018 06	60	3.2	
01/09/2018 07	60	3.6	
01/09/2018 08	60	4	
01/09/2018 09	60	3.2	
01/09/2018 10	60	3.7	
01/09/2018 11	60	3.5	
01/09/2018 12	60	3.4	
01/09/2018 13	60	3.5	
01/09/2018 14	60	3.6	
01/09/2018 15	60	3.6	
01/09/2018 16	60	3.4	
01/09/2018 17	60	3.4	
01/09/2018 18	60	3.3	
01/09/2018 19	60	3.1	
01/09/2018 20	60	3.1	
01/09/2018 21	60	3	
01/09/2018 22	60	3.2	
01/09/2018 23	60	3.2	
01/10/2018 00	60	3.5	
01/10/2018 01	60	3.4	
01/10/2018 02	60	3.5	
01/10/2018 03	60	3.3	
01/10/2018 04	60	3.6	
01/10/2018 05	60	3.5	
01/10/2018 06	60	3.2	
01/10/2018 07	60	3.6	
01/10/2018 08	60	3.4	
01/10/2018 09	60	3.9	
01/10/2018 10	60	4	
01/10/2018 11	60	3.7	
01/10/2018 12	60	3.6	
01/10/2018 13	60	3.4	
01/10/2018 14	60	3.3	
01/10/2018 15	60	3.5	
01/10/2018 16	60	3.2	
01/10/2018 17	60	3	
01/10/2018 18	60	3.2	
01/10/2018 19	60	3.2	
01/10/2018 20	60	3	
01/10/2018 21	60	3.1	

GECC PM CEMS Report for the Main Stack

Date/Time	Main Stack Online (mins)	PM CEMS Backscatter Energy (% of full scale)	Comments
		PM CEMS output is backscatter energy. Since a successful correlation test has not been performed, accurate PM concentrations cannot be calculated.	
01/10/2018 22	60	3.5	
01/10/2018 23	60	3.1	
01/11/2018 00	60	3.7	
01/11/2018 01	60	3.4	
01/11/2018 02	60	3.9	
01/11/2018 03	60	4.3	
01/11/2018 04	60	4.4	
01/11/2018 05	60	4.4	
01/11/2018 06	60	4.1	
01/11/2018 07	60	3.8	
01/11/2018 08	60	3.8	
01/11/2018 09	60	3.4	
01/11/2018 10	60	3.6	
01/11/2018 11	60	3.7	
01/11/2018 12	60	4.1	
01/11/2018 13	60	4.2	
01/11/2018 14	60	3.7	
01/11/2018 15	60	3.4	
01/11/2018 16	60	3.6	
01/11/2018 17	60	3	
01/11/2018 18	60	2.9	
01/11/2018 19	60	3	
01/11/2018 20	60	2.9	
01/11/2018 21	60	3.6	
01/11/2018 22	60	4.6	
01/11/2018 23	60	5.6	
01/12/2018 00	60	4.6	
01/12/2018 01	60	6.5	
01/12/2018 02	60	7.9	
01/12/2018 03	60	14.9	
01/12/2018 04	60	26.7	
01/12/2018 05	60	23.1	
01/12/2018 06	60	13.2	
01/12/2018 07	60	7.9	
01/12/2018 08	60	4.8	
01/12/2018 09	60	5	
01/12/2018 10	60	4.1	
01/12/2018 11	60	4.1	
01/12/2018 12	60	4.2	
01/12/2018 13	60	4.7	
01/12/2018 14	60	4.4	
01/12/2018 15	60	4.3	
01/12/2018 16	60	4.6	
01/12/2018 17	60	4	
01/12/2018 18	60	3.2	
01/12/2018 19	60	3.3	
01/12/2018 20	60	3.9	
01/12/2018 21	60	4.7	
01/12/2018 22	60	4.8	

GECC PM CEMS Report for the Main Stack

Date/Time	Main Stack Online (mins)	PM CEMS Backscatter Energy (% of full scale)	Comments
		PM CEMS output is backscatter energy. Since a successful correlation test has not been performed, accurate PM concentrations cannot be calculated.	
01/12/2018 23	60	7.7	
01/13/2018 00	60	5.7	
01/13/2018 01	60	5.1	
01/13/2018 02	60	7.4	
01/13/2018 03	60	8.5	
01/13/2018 04	60	10.3	
01/13/2018 05	60	8.6	
01/13/2018 06	60	7.2	
01/13/2018 07	60	3.6	
01/13/2018 08	60	3.9	
01/13/2018 09	60	3.1	
01/13/2018 10	60	2.7	
01/13/2018 11	60	2.8	
01/13/2018 12	60	2.3	
01/13/2018 13	60	2.2	
01/13/2018 14	60	2.3	
01/13/2018 15	60	2.2	
01/13/2018 16	60	2.4	
01/13/2018 17	60	2.2	
01/13/2018 18	60	2.1	
01/13/2018 19	60	2.2	
01/13/2018 20	60	2.2	
01/13/2018 21	60	2.1	
01/13/2018 22	60	2.1	
01/13/2018 23	60	2.1	
01/14/2018 00	60	2.1	
01/14/2018 01	60	2.1	
01/14/2018 02	60	2.1	
01/14/2018 03	60	2	
01/14/2018 04	60	2	
01/14/2018 05	60	2	
01/14/2018 06	60	2	
01/14/2018 07	60	2	
01/14/2018 08	60	2.1	
01/14/2018 09	60	2	
01/14/2018 10	60	2	
01/14/2018 11	60	2	
01/14/2018 12	60	2	
01/14/2018 13	60	1.9	
01/14/2018 14	60	2	
01/14/2018 15	60	1.9	
01/14/2018 16	60	2	
01/14/2018 17	60	2.1	
01/14/2018 18	60	2.1	
01/14/2018 19	60	2.2	
01/14/2018 20	60	2.3	
01/14/2018 21	60	2.3	
01/14/2018 22	60	2.4	
01/14/2018 23	60	2.2	

GECC PM CEMS Report for the Main Stack

Date/Time	Main Stack Online (mins)	PM CEMS Backscatter Energy (% of full scale)	Comments
		PM CEMS output is backscatter energy. Since a successful correlation test has not been performed, accurate PM concentrations cannot be calculated.	
01/15/2018 00	60	2.5	
01/15/2018 01	60	2.5	
01/15/2018 02	60	2.6	
01/15/2018 03	60	2.3	
01/15/2018 04	60	2.4	
01/15/2018 05	60	2.3	
01/15/2018 06	60	2.2	
01/15/2018 07	60	2.5	
01/15/2018 08	60	2.5	
01/15/2018 09	60	2.6	
01/15/2018 10	60	2.6	
01/15/2018 11	60	2.5	
01/15/2018 12	60	2.7	
01/15/2018 13	60	2.6	
01/15/2018 14	60	2.7	
01/15/2018 15	60	2.9	
01/15/2018 16	60	3.2	
01/15/2018 17	60	3.6	
01/15/2018 18	60	6.7	
01/15/2018 19	60	4.9	
01/15/2018 20	60	4.7	
01/15/2018 21	60	4.8	
01/15/2018 22	60	14.7	
01/15/2018 23	60	30.9	
01/16/2018 00	60	31.3	
01/16/2018 01	60	31.4	
01/16/2018 02	60	33.2	
01/16/2018 03	60	32.3	
01/16/2018 04	60	31.2	
01/16/2018 05	60	36.4	
01/16/2018 06	60	30.7	
01/16/2018 07	60	33.2	
01/16/2018 08	60	30.4	
01/16/2018 09	60	27.5	
01/16/2018 10	60	17.9	
01/16/2018 11	60	10.2	
01/16/2018 12	60	8.3	
01/16/2018 13	60	5.8	
01/16/2018 14	60	5.3	
01/16/2018 15	60	4.7	
01/16/2018 16	60	5.4	
01/16/2018 17	60	5.4	
01/16/2018 18	60	4.4	
01/16/2018 19	60	4.9	
01/16/2018 20	60	4.6	
01/16/2018 21	60	4.5	
01/16/2018 22	60	4	
01/16/2018 23	60	3.8	
01/17/2018 00	60	3.8	

GECC PM CEMS Report for the Main Stack

Date/Time	Main Stack Online (mins)	PM CEMS Backscatter Energy (% of full scale)	Comments
		PM CEMS output is backscatter energy. Since a successful correlation test has not been performed, accurate PM concentrations cannot be calculated.	
01/17/2018 01	60	4.1	
01/17/2018 02	60	4.5	
01/17/2018 03	60	5	
01/17/2018 04	60	5	
01/17/2018 05	60	5.1	
01/17/2018 06	60	5.8	
01/17/2018 07	60	7.8	
01/17/2018 08	60	5	
01/17/2018 09	60	4	
01/17/2018 10	60	4.1	
01/17/2018 11	60	3.8	
01/17/2018 12	60	2.5	
01/17/2018 13	60	2.3	
01/17/2018 14	60	2.4	
01/17/2018 15	60	2.5	
01/17/2018 16	60	2.3	
01/17/2018 17	60	2.5	
01/17/2018 18	60	2.6	
01/17/2018 19	60	2.8	
01/17/2018 20	60	3	
01/17/2018 21	60	2.8	
01/17/2018 22	60	2.7	
01/17/2018 23	60	2.7	
01/18/2018 00	60	2.7	
01/18/2018 01	60	2.5	
01/18/2018 02	60	2.3	
01/18/2018 03	60	2.3	
01/18/2018 04	60	2.3	
01/18/2018 05	60	2.2	
01/18/2018 06	60	2.4	
01/18/2018 07	60	2.7	
01/18/2018 08	60	2.6	
01/18/2018 09	60	2.6	
01/18/2018 10	44	2.8	
01/18/2018 11	60	43.3	
01/18/2018 12	60	14	
01/18/2018 13	60	6.2	
01/18/2018 14	60	4.2	
01/18/2018 15	60	3.3	
01/18/2018 16	60	2.4	
01/18/2018 17	60	2.5	
01/18/2018 18	60	2.4	
01/18/2018 19	60	2.5	
01/18/2018 20	60	2.7	
01/18/2018 21	60	2.9	
01/18/2018 22	60	2.8	
01/18/2018 23	60	2.7	
01/19/2018 00	60	3	
01/19/2018 01	60	3	

GECC PM CEMS Report for the Main Stack

Date/Time	Main Stack Online (mins)	PM CEMS Backscatter Energy (% of full scale)	Comments
		PM CEMS output is backscatter energy. Since a successful correlation test has not been performed, accurate PM concentrations cannot be calculated.	
01/19/2018 02	60	2.6	
01/19/2018 03	60	2.7	
01/19/2018 04	60	2.4	
01/19/2018 05	60	2.6	
01/19/2018 06	60	2.5	
01/19/2018 07	60	2.5	
01/19/2018 08	60	2.6	
01/19/2018 09	60	2.6	
01/19/2018 10	60	2.5	
01/19/2018 11	60	2.4	
01/19/2018 12	60	2.6	
01/19/2018 13	60	2.6	
01/19/2018 14	60	3	
01/19/2018 15	60	2.5	
01/19/2018 16	60	2.6	
01/19/2018 17	60	3	
01/19/2018 18	60	3.2	
01/19/2018 19	60	3.1	
01/19/2018 20	60	3	
01/19/2018 21	60	3.1	
01/19/2018 22	60	3	
01/19/2018 23	60	3.2	
01/20/2018 00	60	3.2	
01/20/2018 01	60	3	
01/20/2018 02	60	2.5	
01/20/2018 03	60	2.6	
01/20/2018 04	60	2.6	
01/20/2018 05	60	2.8	
01/20/2018 06	60	2.8	
01/20/2018 07	60	2.9	
01/20/2018 08	60	2.7	
01/20/2018 09	60	2.9	
01/20/2018 10	60	3.5	
01/20/2018 11	60	3.2	
01/20/2018 12	60	3.1	
01/20/2018 13	60	3.1	
01/20/2018 14	60	3.1	
01/20/2018 15	60	3	
01/20/2018 16	60	3.3	
01/20/2018 17	60	3.3	
01/20/2018 18	60	2.8	
01/20/2018 19	60	3.1	
01/20/2018 20	60	2.6	
01/20/2018 21	60	2.5	
01/20/2018 22	60	2.5	
01/20/2018 23	60	2.6	
01/21/2018 00	60	2.8	
01/21/2018 01	60	2.7	
01/21/2018 02	60	2.5	

GECC PM CEMS Report for the Main Stack

Date/Time	Main Stack Online (mins)	PM CEMS Backscatter Energy (% of full scale)	Comments
		PM CEMS output is backscatter energy. Since a successful correlation test has not been performed, accurate PM concentrations cannot be calculated.	
01/21/2018 03	60	2.7	
01/21/2018 04	60	2.7	
01/21/2018 05	60	2.8	
01/21/2018 06	60	2.8	
01/21/2018 07	60	2.6	
01/21/2018 08	60	2.6	
01/21/2018 09	60	2.9	
01/21/2018 10	60	2.9	
01/21/2018 11	60	2.8	
01/21/2018 12	60	2.9	
01/21/2018 13	60	2.8	
01/21/2018 14	60	3.1	
01/21/2018 15	60	3	
01/21/2018 16	60	3.1	
01/21/2018 17	60	3	
01/21/2018 18	60	2.9	
01/21/2018 19	60	2.7	
01/21/2018 20	60	3.1	
01/21/2018 21	60	3	
01/21/2018 22	60	3.1	
01/21/2018 23	60	3	
01/22/2018 00	60	2.8	
01/22/2018 01	60	3.1	
01/22/2018 02	60	2.8	
01/22/2018 03	60	2.5	
01/22/2018 04	60	2.5	
01/22/2018 05	60	2.6	
01/22/2018 06	60	2.7	
01/22/2018 07	60	2.9	
01/22/2018 08	60	3.2	
01/22/2018 09	60	3.2	
01/22/2018 10	60	2.9	
01/22/2018 11	60	2.9	
01/22/2018 12	60	3.1	
01/22/2018 13	60	2.9	
01/22/2018 14	60	2.9	
01/22/2018 15	60	3	
01/22/2018 16	60	3.1	
01/22/2018 17	60	3.1	
01/22/2018 18	60	3	
01/22/2018 19	60	3.3	
01/22/2018 20	60	3.2	
01/22/2018 21	60	3.1	
01/22/2018 22	60	3.4	
01/22/2018 23	60	3	
01/23/2018 00	60	3	
01/23/2018 01	60	3	
01/23/2018 02	60	3.1	
01/23/2018 03	60	3.2	

GECC PM CEMS Report for the Main Stack

Date/Time	Main Stack Online (mins)	PM CEMS Backscatter Energy (% of full scale)	Comments
		PM CEMS output is backscatter energy. Since a successful correlation test has not been performed, accurate PM concentrations cannot be calculated.	
01/23/2018 04	60	2.8	
01/23/2018 05	60	2.7	
01/23/2018 06	60	2.8	
01/23/2018 07	60	2.8	
01/23/2018 08	60	2.5	
01/23/2018 09	60	2.8	
01/23/2018 10	60	2.7	
01/23/2018 11	60	2.8	
01/23/2018 12	60	2.8	
01/23/2018 13	60	2.8	
01/23/2018 14	60	2.8	
01/23/2018 15	60	2.7	
01/23/2018 16	60	2.8	
01/23/2018 17	60	2.9	
01/23/2018 18	60	3	
01/23/2018 19	60	3.3	
01/23/2018 20	60	3	
01/23/2018 21	60	3	
01/23/2018 22	60	3.3	
01/23/2018 23	60	3.4	
01/24/2018 00	60	3.1	
01/24/2018 01	60	2.9	
01/24/2018 02	60	2.9	
01/24/2018 03	60	2.9	
01/24/2018 04	60	3.1	
01/24/2018 05	60	3	
01/24/2018 06	60	2.9	
01/24/2018 07	60	2.9	
01/24/2018 08	60	3.4	
01/24/2018 09	60	3.3	
01/24/2018 10	60	3.1	
01/24/2018 11	60	3.1	
01/24/2018 12	60	3.1	
01/24/2018 13	60	3.1	
01/24/2018 14	60	3.1	
01/24/2018 15	60	31.6	
01/24/2018 16	60	3.1	
01/24/2018 17	60	3	
01/24/2018 18	60	3.1	
01/24/2018 19	60	3	
01/24/2018 20	60	4	
01/24/2018 21	60	3.4	
01/24/2018 22	60	3.5	
01/24/2018 23	60	3.5	
01/25/2018 00	60	3.3	
01/25/2018 01	60	3.1	
01/25/2018 02	60	3.2	
01/25/2018 03	60	3.3	
01/25/2018 04	60	3.3	

GECC PM CEMS Report for the Main Stack

Date/Time	Main Stack Online (mins)	PM CEMS Backscatter Energy (% of full scale)	Comments
		PM CEMS output is backscatter energy. Since a successful correlation test has not been performed, accurate PM concentrations cannot be calculated.	
01/25/2018 05	60	3.1	
01/25/2018 06	60	3.1	
01/25/2018 07	60	2.9	
01/25/2018 08	60	3.1	
01/25/2018 09	60	3.4	
01/25/2018 10	60	3.2	
01/25/2018 11	60	3.4	
01/25/2018 12	60	3	
01/25/2018 13	60	3	
01/25/2018 14	60	3	
01/25/2018 15	60	3.1	
01/25/2018 16	60	2.8	
01/25/2018 17	60	3.1	
01/25/2018 18	60	3.2	
01/25/2018 19	60	3.5	
01/25/2018 20	60	3.9	
01/25/2018 21	60	3.4	
01/25/2018 22	60	3.4	
01/25/2018 23	60	3.6	
01/26/2018 00	60	3.7	
01/26/2018 01	60	3.4	
01/26/2018 02	60	3.3	
01/26/2018 03	60	3.4	
01/26/2018 04	60	3.2	
01/26/2018 05	60	3.6	
01/26/2018 06	60	3.6	
01/26/2018 07	60	4	
01/26/2018 08	60	3.7	
01/26/2018 09	60	2.9	
01/26/2018 10	60	3.3	
01/26/2018 11	60	3.2	
01/26/2018 12	60	3.2	
01/26/2018 13	60	3.4	
01/26/2018 14	60	3.3	
01/26/2018 15	60	3.2	
01/26/2018 16	60	3.2	
01/26/2018 17	60	3.1	
01/26/2018 18	60	3.2	
01/26/2018 19	60	3.2	
01/26/2018 20	60	3.6	
01/26/2018 21	60	3.6	
01/26/2018 22	60	3.8	
01/26/2018 23	60	3.5	
01/27/2018 00	60	3.5	
01/27/2018 01	60	4	
01/27/2018 02	60	4.3	
01/27/2018 03	60	3.5	
01/27/2018 04	60	3.3	
01/27/2018 05	60	3.1	

GECC PM CEMS Report for the Main Stack

Date/Time	Main Stack Online (mins)	PM CEMS Backscatter Energy (% of full scale)	Comments
		PM CEMS output is backscatter energy. Since a successful correlation test has not been performed, accurate PM concentrations cannot be calculated.	
01/27/2018 06	60	3.3	
01/27/2018 07	60	3.3	
01/27/2018 08	60	3.1	
01/27/2018 09	60	3.2	
01/27/2018 10	60	3.1	
01/27/2018 11	60	3	
01/27/2018 12	60	3.3	
01/27/2018 13	60	3	
01/27/2018 14	60	3.4	
01/27/2018 15	60	3.4	
01/27/2018 16	60	2.5	
01/27/2018 17	60	2.1	
01/27/2018 18	60	2.3	
01/27/2018 19	60	2.3	
01/27/2018 20	60	2.3	
01/27/2018 21	60	2.3	
01/27/2018 22	60	2.5	
01/27/2018 23	60	2.3	
01/28/2018 00	60	2.4	
01/28/2018 01	60	2.4	
01/28/2018 02	60	2.4	
01/28/2018 03	60	2.2	
01/28/2018 04	60	2.4	
01/28/2018 05	60	2.4	
01/28/2018 06	60	2.4	
01/28/2018 07	60	2.4	
01/28/2018 08	60	2.4	
01/28/2018 09	60	2.4	
01/28/2018 10	60	2.4	
01/28/2018 11	60	2.3	
01/28/2018 12	60	2.3	
01/28/2018 13	60	2.4	
01/28/2018 14	60	2.4	
01/28/2018 15	60	2.3	
01/28/2018 16	60	2.4	
01/28/2018 17	60	2.5	
01/28/2018 18	60	2.5	
01/28/2018 19	60	2.6	
01/28/2018 20	60	2.6	
01/28/2018 21	60	2.5	
01/28/2018 22	60	2.5	
01/28/2018 23	60	2.5	
01/29/2018 00	60	2.5	
01/29/2018 01	60	2.7	
01/29/2018 02	60	2.9	
01/29/2018 03	60	2.9	
01/29/2018 04	60	2.8	
01/29/2018 05	60	2.9	
01/29/2018 06	60	3.1	

GECC PM CEMS Report for the Main Stack

Date/Time	Main Stack Online (mins)	PM CEMS Backscatter Energy (% of full scale)	Comments
		PM CEMS output is backscatter energy. Since a successful correlation test has not been performed, accurate PM concentrations cannot be calculated.	
01/29/2018 07	60	2.4	
01/29/2018 08	60	2.8	
01/29/2018 09	60	2.5	
01/29/2018 10	60	2.2	
01/29/2018 11	60	1.7	
01/29/2018 12	60	1.7	
01/29/2018 13	60	1.7	
01/29/2018 14	60	1.8	
01/29/2018 15	60	1.8	
01/29/2018 16	60	1.8	
01/29/2018 17	60	1.8	
01/29/2018 18	60	1.8	
01/29/2018 19	60	1.8	
01/29/2018 20	60	1.9	
01/29/2018 21	60	7.2	
01/29/2018 22	60	2.5	
01/29/2018 23	60	2.9	
01/30/2018 00	60	2.6	
01/30/2018 01	60	2.4	
01/30/2018 02	60	2.4	
01/30/2018 03	60	2.5	
01/30/2018 04	60	2	
01/30/2018 05	60	2.3	
01/30/2018 06	60	2	
01/30/2018 07	60	2	
01/30/2018 08	60	2	
01/30/2018 09	60	1.9	
01/30/2018 10	60	1.9	
01/30/2018 11	60	1.8	
01/30/2018 12	60	1.8	
01/30/2018 13	60	1.8	
01/30/2018 14	60	1.8	
01/30/2018 15	60	1.8	
01/30/2018 16	60	1.8	
01/30/2018 17	60	1.8	
01/30/2018 18	60	1.8	
01/30/2018 19	60	1.9	
01/30/2018 20	60	1.8	
01/30/2018 21	60	1.9	
01/30/2018 22	60	1.9	
01/30/2018 23	60	1.8	
01/31/2018 00	60	1.9	
01/31/2018 01	60	1.8	
01/31/2018 02	60	1.8	
01/31/2018 03	60	1.8	
01/31/2018 04	60	1.8	
01/31/2018 05	60	1.9	
01/31/2018 06	60	1.8	
01/31/2018 07	60	1.8	

GECC PM CEMS Report for the Main Stack

Date/Time	Main Stack Online (mins)	PM CEMS Backscatter Energy (% of full scale)	Comments
		PM CEMS output is backscatter energy. Since a successful correlation test has not been performed, accurate PM concentrations cannot be calculated.	
01/31/2018 08	60	1.8	
01/31/2018 09	60	1.9	
01/31/2018 10	60	1.9	
01/31/2018 11	60	1.8	
01/31/2018 12	60	1.9	
01/31/2018 13	60	Invalid	Quarterly QA activities
01/31/2018 14	60	1.4	
01/31/2018 15	60	1.5	
01/31/2018 16	60	1.4	
01/31/2018 17	60	1.4	
01/31/2018 18	60	1.4	
01/31/2018 19	60	1.4	
01/31/2018 20	60	1.5	
01/31/2018 21	60	1.5	
01/31/2018 22	60	1.5	
01/31/2018 23	60	1.4	
02/01/2018 00	60	1.5	
02/01/2018 01	60	1.4	
02/01/2018 02	60	1.3	
02/01/2018 03	60	1.4	
02/01/2018 04	60	1.5	
02/01/2018 05	60	1.4	
02/01/2018 06	60	1.4	
02/01/2018 07	60	1.4	
02/01/2018 08	60	1.4	
02/01/2018 09	60	1.4	
02/01/2018 10	60	1.4	
02/01/2018 11	60	1.4	
02/01/2018 12	60	1.4	
02/01/2018 13	60	1.4	
02/01/2018 14	60	1.4	
02/01/2018 15	60	1.4	
02/01/2018 16	60	1.5	
02/01/2018 17	60	1.4	
02/01/2018 18	60	1.4	
02/01/2018 19	60	1.4	
02/01/2018 20	60	1.5	
02/01/2018 21	60	1.4	
02/01/2018 22	60	1.6	
02/01/2018 23	60	1.5	
02/02/2018 00	60	4.6	
02/02/2018 01	60	4.7	
02/02/2018 02	60	1.6	
02/02/2018 03	60	10.3	
02/02/2018 04	60	17.1	
02/02/2018 05	60	22.3	
02/02/2018 06	60	53.2	
02/02/2018 07	60	47.6	
02/02/2018 08	60	7.9	

GECC PM CEMS Report for the Main Stack

Date/Time	Main Stack Online (mins)	PM CEMS Backscatter Energy (% of full scale)	Comments
		PM CEMS output is backscatter energy. Since a successful correlation test has not been performed, accurate PM concentrations cannot be calculated.	
02/02/2018 09	60	2.4	
02/02/2018 10	60	1.5	
02/02/2018 11	60	1.4	
02/02/2018 12	60	1.4	
02/02/2018 13	60	1.5	
02/02/2018 14	60	1.4	
02/02/2018 15	60	1.4	
02/02/2018 16	60	1.4	
02/02/2018 17	60	1.5	
02/02/2018 18	60	1.4	
02/02/2018 19	60	1.4	
02/02/2018 20	60	1.4	
02/02/2018 21	60	1.5	
02/02/2018 22	60	1.4	
02/02/2018 23	60	1.4	
02/03/2018 00	60	1.4	
02/03/2018 01	60	1.4	
02/03/2018 02	60	1.4	
02/03/2018 03	60	1.5	
02/03/2018 04	60	1.5	
02/03/2018 05	60	1.5	
02/03/2018 06	60	1.5	
02/03/2018 07	60	1.5	
02/03/2018 08	60	1.6	
02/03/2018 09	60	1.5	
02/03/2018 10	60	1.5	
02/03/2018 11	60	1.5	
02/03/2018 12	60	1.6	
02/03/2018 13	60	1.5	
02/03/2018 14	60	1.5	
02/03/2018 15	60	1.5	
02/03/2018 16	60	1.5	
02/03/2018 17	60	1.4	
02/03/2018 18	60	1.4	
02/03/2018 19	60	1.4	
02/03/2018 20	60	1.4	
02/03/2018 21	60	1.4	
02/03/2018 22	60	1.4	
02/03/2018 23	60	1.4	
02/04/2018 00	60	1.5	
02/04/2018 01	60	1.5	
02/04/2018 02	60	1.5	
02/04/2018 03	60	1.5	
02/04/2018 04	60	1.5	
02/04/2018 05	60	1.5	
02/04/2018 06	60	1.5	
02/04/2018 07	60	1.4	
02/04/2018 08	60	1.5	
02/04/2018 09	60	1.5	

GECC PM CEMS Report for the Main Stack

Date/Time	Main Stack Online (mins)	PM CEMS Backscatter Energy (% of full scale)	Comments
		PM CEMS output is backscatter energy. Since a successful correlation test has not been performed, accurate PM concentrations cannot be calculated.	
02/04/2018 10	60	1.5	
02/04/2018 11	60	1.5	
02/04/2018 12	60	1.5	
02/04/2018 13	60	1.4	
02/04/2018 14	60	1.5	
02/04/2018 15	60	1.4	
02/04/2018 16	60	1.4	
02/04/2018 17	60	1.5	
02/04/2018 18	60	1.4	
02/04/2018 19	60	1.4	
02/04/2018 20	60	2.9	
02/04/2018 21	60	1.8	
02/04/2018 22	60	2.2	
02/04/2018 23	60	1.8	
02/05/2018 00	60	2.5	
02/05/2018 01	60	14.2	
02/05/2018 02	60	14.8	
02/05/2018 03	60	21.2	
02/05/2018 04	60	31.5	
02/05/2018 05	60	69.1	
02/05/2018 06	60	47.5	
02/05/2018 07	60	57.5	
02/05/2018 08	60	11.3	
02/05/2018 09	60	1.5	
02/05/2018 10	60	1.4	
02/05/2018 11	60	1.4	
02/05/2018 12	60	1.4	
02/05/2018 13	60	1.4	
02/05/2018 14	60	1.3	
02/05/2018 15	60	1.3	
02/05/2018 16	60	1.3	
02/05/2018 17	60	1.3	
02/05/2018 18	60	1.4	
02/05/2018 19	60	1.3	
02/05/2018 20	60	1.4	
02/05/2018 21	60	1.4	
02/05/2018 22	60	1.5	
02/05/2018 23	60	1.4	
02/06/2018 00	60	1.4	
02/06/2018 01	60	1.5	
02/06/2018 02	60	1.5	
02/06/2018 03	60	1.5	
02/06/2018 04	60	3.7	
02/06/2018 05	60	6.8	
02/06/2018 06	60	7.8	
02/06/2018 07	60	11.2	
02/06/2018 08	60	33.4	
02/06/2018 09	60	12.4	
02/06/2018 10	60	1.9	

GECC PM CEMS Report for the Main Stack

Date/Time	Main Stack Online (mins)	PM CEMS Backscatter Energy (% of full scale)	Comments
		PM CEMS output is backscatter energy. Since a successful correlation test has not been performed, accurate PM concentrations cannot be calculated.	
02/06/2018 11	60	1.6	
02/06/2018 12	60	1.5	
02/06/2018 13	60	1.5	
02/06/2018 14	60	1.5	
02/06/2018 15	60	1.5	
02/06/2018 16	60	1.6	
02/06/2018 17	59	1.6	
02/06/2018 18	60	1.5	
02/06/2018 19	60	1.6	
02/06/2018 20	60	1.6	
02/06/2018 21	60	1.6	
02/06/2018 22	60	2.6	
02/06/2018 23	60	5	
02/07/2018 00	60	4.4	
02/07/2018 01	60	3.4	
02/07/2018 02	60	3.2	
02/07/2018 03	60	2.3	
02/07/2018 04	60	2.5	
02/07/2018 05	60	2.6	
02/07/2018 06	60	5.1	
02/07/2018 07	60	11.6	
02/07/2018 08	60	2	
02/07/2018 09	60	1.7	
02/07/2018 10	60	1.7	
02/07/2018 11	60	1.7	
02/07/2018 12	60	1.7	
02/07/2018 13	60	1.6	
02/07/2018 14	60	1.7	
02/07/2018 15	60	1.6	
02/07/2018 16	60	1.5	
02/07/2018 17	60	1.5	
02/07/2018 18	60	1.4	
02/07/2018 19	60	1.4	
02/07/2018 20	60	1.4	
02/07/2018 21	60	1.5	
02/07/2018 22	60	1.5	
02/07/2018 23	60	1.5	
02/08/2018 00	60	1.5	
02/08/2018 01	60	1.4	
02/08/2018 02	60	1.5	
02/08/2018 03	60	1.5	
02/08/2018 04	60	1.5	
02/08/2018 05	60	1.5	
02/08/2018 06	60	1.5	
02/08/2018 07	60	1.5	
02/08/2018 08	60	1.5	
02/08/2018 09	60	1.5	
02/08/2018 10	60	1.4	
02/08/2018 11	60	1.4	

GECC PM CEMS Report for the Main Stack

Date/Time	Main Stack Online (mins)	PM CEMS Backscatter Energy (% of full scale)	Comments
		PM CEMS output is backscatter energy. Since a successful correlation test has not been performed, accurate PM concentrations cannot be calculated.	
02/08/2018 12	60	1.4	
02/08/2018 13	60	1.4	
02/08/2018 14	60	1.4	
02/08/2018 15	60	1.4	
02/08/2018 16	60	1.4	
02/08/2018 17	60	1.4	
02/08/2018 18	60	1.4	
02/08/2018 19	60	1.5	
02/08/2018 20	60	1.4	
02/08/2018 21	60	1.5	
02/08/2018 22	60	1.5	
02/08/2018 23	60	1.5	
02/09/2018 00	60	1.4	
02/09/2018 01	60	1.5	
02/09/2018 02	60	1.5	
02/09/2018 03	60	1.5	
02/09/2018 04	60	1.5	
02/09/2018 05	60	1.4	
02/09/2018 06	60	1.4	
02/09/2018 07	60	1.4	
02/09/2018 08	60	1.4	
02/09/2018 09	60	1.4	
02/09/2018 10	60	1.4	
02/09/2018 11	60	1.4	
02/09/2018 12	60	1.4	
02/09/2018 13	60	1.4	
02/09/2018 14	60	1.4	
02/09/2018 15	60	1.4	
02/09/2018 16	60	1.5	
02/09/2018 17	60	1.4	
02/09/2018 18	60	1.3	
02/09/2018 19	60	1.4	
02/09/2018 20	60	1.5	
02/09/2018 21	60	1.5	
02/09/2018 22	60	1.4	
02/09/2018 23	60	1.5	
02/10/2018 00	60	1.4	
02/10/2018 01	60	1.4	
02/10/2018 02	60	1.4	
02/10/2018 03	60	1.4	
02/10/2018 04	60	1.5	
02/10/2018 05	60	1.5	
02/10/2018 06	60	1.5	
02/10/2018 07	60	1.5	
02/10/2018 08	60	1.5	
02/10/2018 09	60	1.4	
02/10/2018 10	60	1.5	
02/10/2018 11	60	1.4	
02/10/2018 12	60	1.5	

GECC PM CEMS Report for the Main Stack

Date/Time	Main Stack Online (mins)	PM CEMS Backscatter Energy (% of full scale)	Comments
		PM CEMS output is backscatter energy. Since a successful correlation test has not been performed, accurate PM concentrations cannot be calculated.	
02/10/2018 13	60	1.5	
02/10/2018 14	60	1.4	
02/10/2018 15	60	1.4	
02/10/2018 16	60	1.4	
02/10/2018 17	60	1.4	
02/10/2018 18	60	1.4	
02/10/2018 19	60	1.5	
02/10/2018 20	60	1.5	
02/10/2018 21	60	1.5	
02/10/2018 22	60	1.5	
02/10/2018 23	60	1.5	
02/11/2018 00	60	1.4	
02/11/2018 01	60	1.4	
02/11/2018 02	60	1.4	
02/11/2018 03	60	1.4	
02/11/2018 04	60	1.2	
02/11/2018 05	60	1.3	
02/11/2018 06	60	1.6	
02/11/2018 07	60	2.8	
02/11/2018 08	60	3.8	
02/11/2018 09	60	2	
02/11/2018 10	60	3	
02/11/2018 11	60	1.5	
02/11/2018 12	60	1.4	
02/11/2018 13	60	1.4	
02/11/2018 14	60	1.3	
02/11/2018 15	60	1.2	
02/11/2018 16	60	1.7	
02/11/2018 17	60	1.6	
02/11/2018 18	60	1.6	
02/11/2018 19	60	1.8	
02/11/2018 20	60	1.7	
02/11/2018 21	60	1.4	
02/11/2018 22	60	1.5	
02/11/2018 23	60	1.5	
02/12/2018 00	60	1.4	
02/12/2018 01	60	1.4	
02/12/2018 02	60	1.5	
02/12/2018 03	60	1.5	
02/12/2018 04	60	2.4	
02/12/2018 05	60	1.8	
02/12/2018 06	60	1.7	
02/12/2018 07	60	10	
02/12/2018 08	60	1.5	
02/12/2018 09	60	1.5	
02/12/2018 10	60	1.5	
02/12/2018 11	60	1.5	
02/12/2018 12	60	1.5	
02/12/2018 13	60	1.4	

GECC PM CEMS Report for the Main Stack

Date/Time	Main Stack Online (mins)	PM CEMS Backscatter Energy (% of full scale)	Comments
		PM CEMS output is backscatter energy. Since a successful correlation test has not been performed, accurate PM concentrations cannot be calculated.	
02/12/2018 14	60	1.5	
02/12/2018 15	60	1.5	
02/12/2018 16	60	1.5	
02/12/2018 17	60	1.5	
02/12/2018 18	60	1.6	
02/12/2018 19	60	1.5	
02/12/2018 20	60	1.5	
02/12/2018 21	60	1.6	
02/12/2018 22	60	1.6	
02/12/2018 23	60	1.6	
02/13/2018 00	60	1.6	
02/13/2018 01	60	1.6	
02/13/2018 02	60	1.6	
02/13/2018 03	60	1.6	
02/13/2018 04	60	1.6	
02/13/2018 05	60	1.6	
02/13/2018 06	60	1.6	
02/13/2018 07	60	1.6	
02/13/2018 08	60	1.6	
02/13/2018 09	60	1.6	
02/13/2018 10	60	1.6	
02/13/2018 11	60	1.6	
02/13/2018 12	60	1.6	
02/13/2018 13	60	1.6	
02/13/2018 14	60	1.6	
02/13/2018 15	60	1.7	
02/13/2018 16	60	1.7	
02/13/2018 17	60	1.6	
02/13/2018 18	60	1.7	
02/13/2018 19	60	1.6	
02/13/2018 20	60	1.7	
02/13/2018 21	60	1.6	
02/13/2018 22	60	1.6	
02/13/2018 23	60	1.5	
02/14/2018 00	60	1.6	
02/14/2018 01	60	3.7	
02/14/2018 02	60	1.2	
02/14/2018 03	60	1.1	
02/14/2018 04	60	1.1	
02/14/2018 05	60	1.1	
02/14/2018 06	60	1.3	
02/14/2018 07	60	1.3	
02/14/2018 08	60	1.4	
02/14/2018 09	60	1.5	
02/14/2018 10	60	1.4	
02/14/2018 11	60	1.4	
02/14/2018 12	60	1.5	
02/14/2018 13	60	1.5	
02/14/2018 14	60	1.5	

GECC PM CEMS Report for the Main Stack

Date/Time	Main Stack Online (mins)	PM CEMS Backscatter Energy (% of full scale)	Comments
		PM CEMS output is backscatter energy. Since a successful correlation test has not been performed, accurate PM concentrations cannot be calculated.	
02/14/2018 15	60	1.4	
02/14/2018 16	60	1.4	
02/14/2018 17	60	1.5	
02/14/2018 18	60	1.5	
02/14/2018 19	60	1.4	
02/14/2018 20	60	1.5	
02/14/2018 21	60	1.6	
02/14/2018 22	60	1.6	
02/14/2018 23	60	1.6	
02/15/2018 00	60	1.7	
02/15/2018 01	60	1.5	
02/15/2018 02	60	1.6	
02/15/2018 03	60	1.6	
02/15/2018 04	60	1.5	
02/15/2018 05	60	1.5	
02/15/2018 06	60	1.5	
02/15/2018 07	60	1.5	
02/15/2018 08	60	1.5	
02/15/2018 09	60	1.5	
02/15/2018 10	60	1.5	
02/15/2018 11	60	1.5	
02/15/2018 12	60	1.4	
02/15/2018 13	60	1.5	
02/15/2018 14	60	1.5	
02/15/2018 15	60	1.5	
02/15/2018 16	60	1.5	
02/15/2018 17	60	1.4	
02/15/2018 18	60	1.5	
02/15/2018 19	60	1.4	
02/15/2018 20	60	1.4	
02/15/2018 21	60	1.4	
02/15/2018 22	60	1.4	
02/15/2018 23	60	1.4	
02/16/2018 00	60	1.4	
02/16/2018 01	60	1.4	
02/16/2018 02	60	1.4	
02/16/2018 03	60	1.4	
02/16/2018 04	60	1.4	
02/16/2018 05	60	1.4	
02/16/2018 06	60	1.4	
02/16/2018 07	60	1.4	
02/16/2018 08	60	1.4	
02/16/2018 09	60	1.4	
02/16/2018 10	60	1.4	
02/16/2018 11	60	1.4	
02/16/2018 12	60	1.4	
02/16/2018 13	60	1.4	
02/16/2018 14	60	1.4	
02/16/2018 15	60	1.4	

GECC PM CEMS Report for the Main Stack

Date/Time	Main Stack Online (mins)	PM CEMS Backscatter Energy (% of full scale)	Comments
		PM CEMS output is backscatter energy. Since a successful correlation test has not been performed, accurate PM concentrations cannot be calculated.	
02/16/2018 16	60	1.5	
02/16/2018 17	60	1.4	
02/16/2018 18	60	1.4	
02/16/2018 19	60	1.4	
02/16/2018 20	60	1.4	
02/16/2018 21	60	1.4	
02/16/2018 22	60	1.4	
02/16/2018 23	60	1.4	
02/17/2018 00	60	1.4	
02/17/2018 01	60	1.4	
02/17/2018 02	60	1.4	
02/17/2018 03	60	1.5	
02/17/2018 04	60	1.4	
02/17/2018 05	60	1.5	
02/17/2018 06	60	1.5	
02/17/2018 07	60	1.5	
02/17/2018 08	60	1.1	
02/17/2018 09	60	1.2	
02/17/2018 10	60	1.2	
02/17/2018 11	60	1.4	
02/17/2018 12	60	1.5	
02/17/2018 13	60	1.1	
02/17/2018 14	60	1.4	
02/17/2018 15	60	1.5	
02/17/2018 16	60	1.4	
02/17/2018 17	60	1.4	
02/17/2018 18	60	1.4	
02/17/2018 19	60	1.4	
02/17/2018 20	60	1.4	
02/17/2018 21	60	1.4	
02/17/2018 22	60	1.4	
02/17/2018 23	60	1.4	
02/18/2018 00	60	1.4	
02/18/2018 01	60	1.4	
02/18/2018 02	60	1.4	
02/18/2018 03	60	1.4	
02/18/2018 04	60	1.4	
02/18/2018 05	60	1.4	
02/18/2018 06	60	1.4	
02/18/2018 07	60	1.4	
02/18/2018 08	60	1.4	
02/18/2018 09	60	1.4	
02/18/2018 10	60	1.4	
02/18/2018 11	60	1.4	
02/18/2018 12	60	1.4	
02/18/2018 13	60	1.4	
02/18/2018 14	60	1.4	
02/18/2018 15	60	1.4	
02/18/2018 16	60	1.4	

GECC PM CEMS Report for the Main Stack

Date/Time	Main Stack Online (mins)	PM CEMS Backscatter Energy (% of full scale)	Comments
		PM CEMS output is backscatter energy. Since a successful correlation test has not been performed, accurate PM concentrations cannot be calculated.	
02/18/2018 17	60	1.4	
02/18/2018 18	60	1.4	
02/18/2018 19	60	1.4	
02/18/2018 20	60	1.4	
02/18/2018 21	60	1.4	
02/18/2018 22	60	1.4	
02/18/2018 23	60	1.5	
02/19/2018 00	60	1.5	
02/19/2018 01	60	1.4	
02/19/2018 02	60	1.4	
02/19/2018 03	60	1.4	
02/19/2018 04	60	1.5	
02/19/2018 05	60	1.5	
02/19/2018 06	60	1.2	
02/19/2018 07	60	1.4	
02/19/2018 08	60	1.3	
02/19/2018 09	60	1.3	
02/19/2018 10	60	1.2	
02/19/2018 11	60	1.2	
02/19/2018 12	60	1.1	
02/19/2018 13	60	1.1	
02/19/2018 14	60	1.2	
02/19/2018 15	60	1.4	
02/19/2018 16	60	1.4	
02/19/2018 17	60	1.5	
02/19/2018 18	60	1.5	
02/19/2018 19	60	1.5	
02/19/2018 20	60	1.5	
02/19/2018 21	60	1.5	
02/19/2018 22	60	1.5	
02/19/2018 23	60	1.5	
02/20/2018 00	60	1.4	
02/20/2018 01	60	1.4	
02/20/2018 02	60	1.4	
02/20/2018 03	60	1.5	
02/20/2018 04	60	1.6	
02/20/2018 05	60	1.6	
02/20/2018 06	60	1.6	
02/20/2018 07	60	1.6	
02/20/2018 08	60	1.4	
02/20/2018 09	60	1.2	
02/20/2018 10	60	1.2	
02/20/2018 11	60	1.2	
02/20/2018 12	60	1.3	
02/20/2018 13	60	1.4	
02/20/2018 14	60	1.5	
02/20/2018 15	60	1.5	
02/20/2018 16	60	1.3	
02/20/2018 17	60	1.2	

GECC PM CEMS Report for the Main Stack

Date/Time	Main Stack Online (mins)	PM CEMS Backscatter Energy (% of full scale)	Comments
		PM CEMS output is backscatter energy. Since a successful correlation test has not been performed, accurate PM concentrations cannot be calculated.	
02/20/2018 18	60	1.1	
02/20/2018 19	60	1.2	
02/20/2018 20	60	1.1	
02/20/2018 21	60	1.1	
02/20/2018 22	60	1.1	
02/20/2018 23	60	1.1	
02/21/2018 00	60	1.1	
02/21/2018 01	60	1.1	
02/21/2018 02	60	1.1	
02/21/2018 03	60	1.1	
02/21/2018 04	60	1.1	
02/21/2018 05	60	1.1	
02/21/2018 06	60	1.4	
02/21/2018 07	60	1.4	
02/21/2018 08	60	1.4	
02/21/2018 09	60	1.4	
02/21/2018 10	60	1.5	
02/21/2018 11	60	1.4	
02/21/2018 12	60	1.4	
02/21/2018 13	60	1.5	
02/21/2018 14	60	1.5	
02/21/2018 15	60	1.6	
02/21/2018 16	60	1.6	
02/21/2018 17	60	1.6	
02/21/2018 18	60	1.6	
02/21/2018 19	60	1.5	
02/21/2018 20	60	1.6	
02/21/2018 21	60	1.6	
02/21/2018 22	60	1.6	
02/21/2018 23	60	1.5	
02/22/2018 00	60	1.4	
02/22/2018 01	60	1.4	
02/22/2018 02	60	1.4	
02/22/2018 03	60	1.4	
02/22/2018 04	60	1.5	
02/22/2018 05	60	1.6	
02/22/2018 06	60	1.5	
02/22/2018 07	60	1.5	
02/22/2018 08	60	1.4	
02/22/2018 09	60	1.4	
02/22/2018 10	60	1.5	
02/22/2018 11	60	1.4	
02/22/2018 12	60	1.4	
02/22/2018 13	60	1.4	
02/22/2018 14	60	1.4	
02/22/2018 15	60	1.4	
02/22/2018 16	60	1.4	
02/22/2018 17	60	1.4	
02/22/2018 18	60	1.4	

GECC PM CEMS Report for the Main Stack

Date/Time	Main Stack Online (mins)	PM CEMS Backscatter Energy (% of full scale)	Comments
		PM CEMS output is backscatter energy. Since a successful correlation test has not been performed, accurate PM concentrations cannot be calculated.	
02/22/2018 19	60	1.4	
02/22/2018 20	60	1.4	
02/22/2018 21	60	1.3	
02/22/2018 22	60	1.4	
02/22/2018 23	60	1.4	
02/23/2018 00	60	1.5	
02/23/2018 01	60	1.5	
02/23/2018 02	60	1.5	
02/23/2018 03	60	1.2	
02/23/2018 04	60	1.2	
02/23/2018 05	60	1.5	
02/23/2018 06	60	1.5	
02/23/2018 07	60	1.5	
02/23/2018 08	60	1.5	
02/23/2018 09	60	1.5	
02/23/2018 10	60	1.5	
02/23/2018 11	60	1.5	
02/23/2018 12	60	1.5	
02/23/2018 13	60	1.5	
02/23/2018 14	60	1.4	
02/23/2018 15	60	1.5	
02/23/2018 16	60	1.4	
02/23/2018 17	60	1.5	
02/23/2018 18	60	1.4	
02/23/2018 19	60	1.4	
02/23/2018 20	60	1.4	
02/23/2018 21	60	1.5	
02/23/2018 22	60	1.4	
02/23/2018 23	60	1.5	
02/24/2018 00	60	1.5	
02/24/2018 01	60	1.5	
02/24/2018 02	60	1.4	
02/24/2018 03	60	1.5	
02/24/2018 04	60	1.4	
02/24/2018 05	60	1.5	
02/24/2018 06	60	1.2	
02/24/2018 07	60	1.2	
02/24/2018 08	60	1.5	
02/24/2018 09	60	1.4	
02/24/2018 10	60	1.4	
02/24/2018 11	60	1.4	
02/24/2018 12	60	1.5	
02/24/2018 13	60	1.5	
02/24/2018 14	60	1.4	
02/24/2018 15	60	1.1	
02/24/2018 16	60	1.3	
02/24/2018 17	60	1.4	
02/24/2018 18	60	1.4	
02/24/2018 19	60	1.4	

GECC PM CEMS Report for the Main Stack

Date/Time	Main Stack Online (mins)	PM CEMS Backscatter Energy (% of full scale)	Comments
		PM CEMS output is backscatter energy. Since a successful correlation test has not been performed, accurate PM concentrations cannot be calculated.	
02/24/2018 20	60	1.3	
02/24/2018 21	60	1.3	
02/24/2018 22	60	1.2	
02/24/2018 23	60	1.3	
02/25/2018 00	60	1.5	
02/25/2018 01	60	1.4	
02/25/2018 02	60	1.4	
02/25/2018 03	60	1.4	
02/25/2018 04	60	1.4	
02/25/2018 05	60	1.4	
02/25/2018 06	60	1.4	
02/25/2018 07	60	1.4	
02/25/2018 08	60	1.4	
02/25/2018 09	60	1.5	
02/25/2018 10	60	1.4	
02/25/2018 11	60	1.4	
02/25/2018 12	60	1.4	
02/25/2018 13	60	1.4	
02/25/2018 14	60	1.5	
02/25/2018 15	60	1.4	
02/25/2018 16	60	1.4	
02/25/2018 17	60	1.4	
02/25/2018 18	60	1.5	
02/25/2018 19	60	1.4	
02/25/2018 20	60	1.5	
02/25/2018 21	60	1.4	
02/25/2018 22	60	1.4	
02/25/2018 23	60	1.5	
02/26/2018 00	60	1.4	
02/26/2018 01	60	1.4	
02/26/2018 02	60	1.5	
02/26/2018 03	60	1.5	
02/26/2018 04	60	1.4	
02/26/2018 05	60	1.4	
02/26/2018 06	60	1.4	
02/26/2018 07	60	1.4	
02/26/2018 08	60	1.5	
02/26/2018 09	60	1.5	
02/26/2018 10	60	1.4	
02/26/2018 11	60	1.5	
02/26/2018 12	60	1.6	
02/26/2018 13	60	1.5	
02/26/2018 14	60	1.5	
02/26/2018 15	60	1.5	
02/26/2018 16	60	1.5	
02/26/2018 17	60	1.5	
02/26/2018 18	60	1.5	
02/26/2018 19	60	1.5	
02/26/2018 20	60	1.5	

GECC PM CEMS Report for the Main Stack

Date/Time	Main Stack Online (mins)	PM CEMS Backscatter Energy (% of full scale)	Comments
		PM CEMS output is backscatter energy. Since a successful correlation test has not been performed, accurate PM concentrations cannot be calculated.	
02/26/2018 21	60	1.5	
02/26/2018 22	60	1.6	
02/26/2018 23	60	1.6	
02/27/2018 00	60	1.5	
02/27/2018 01	60	1.5	
02/27/2018 02	60	1.5	
02/27/2018 03	60	1.4	
02/27/2018 04	60	1.7	
02/27/2018 05	60	1.8	
02/27/2018 06	60	1.7	
02/27/2018 07	60	1.6	
02/27/2018 08	60	1.6	
02/27/2018 09	60	1.6	
02/27/2018 10	60	1.8	
02/27/2018 11	60	1.7	
02/27/2018 12	60	1.8	
02/27/2018 13	60	1.8	
02/27/2018 14	60	1.8	
02/27/2018 15	60	1.9	
02/27/2018 16	60	1.6	
02/27/2018 17	60	1.6	
02/27/2018 18	60	1.5	
02/27/2018 19	60	1.5	
02/27/2018 20	60	1.5	
02/27/2018 21	60	1.5	
02/27/2018 22	60	1.5	
02/27/2018 23	60	1.5	
02/28/2018 00	60	1.5	
02/28/2018 01	60	1.5	
02/28/2018 02	60	1.5	
02/28/2018 03	60	1.3	
02/28/2018 04	60	1.2	
02/28/2018 05	60	1.4	
02/28/2018 06	60	1.5	
02/28/2018 07	60	1.4	
02/28/2018 08	60	1.5	
02/28/2018 09	60	1.4	
02/28/2018 10	60	1.4	
02/28/2018 11	60	1.4	
02/28/2018 12	60	1.4	
02/28/2018 13	60	1.5	
02/28/2018 14	60	1.5	
02/28/2018 15	60	1.5	
02/28/2018 16	60	1.5	
02/28/2018 17	60	1.5	
02/28/2018 18	60	1.4	
02/28/2018 19	60	1.4	
02/28/2018 20	60	1.5	
02/28/2018 21	60	1.5	

GECC PM CEMS Report for the Main Stack

Date/Time	Main Stack Online (mins)	PM CEMS Backscatter Energy (% of full scale)	Comments
		PM CEMS output is backscatter energy. Since a successful correlation test has not been performed, accurate PM concentrations cannot be calculated.	
02/28/2018 22	60	1.5	
02/28/2018 23	60	1.5	
03/01/2018 00	60	1.5	
03/01/2018 01	60	1.4	
03/01/2018 02	60	1.4	
03/01/2018 03	60	1.4	
03/01/2018 04	60	1.4	
03/01/2018 05	60	1.4	
03/01/2018 06	60	1.4	
03/01/2018 07	60	1.4	
03/01/2018 08	60	1.5	
03/01/2018 09	60	1.5	
03/01/2018 10	60	1.5	
03/01/2018 11	60	1.4	
03/01/2018 12	60	1.4	
03/01/2018 13	60	1.4	
03/01/2018 14	60	1.4	
03/01/2018 15	60	1.4	
03/01/2018 16	60	1.4	
03/01/2018 17	60	1.4	
03/01/2018 18	60	1.4	
03/01/2018 19	60	1.4	
03/01/2018 20	60	1.4	
03/01/2018 21	60	1.4	
03/01/2018 22	60	1.4	
03/01/2018 23	60	1.4	
03/02/2018 00	60	1.4	
03/02/2018 01	60	1.4	
03/02/2018 02	60	1.5	
03/02/2018 03	60	1.4	
03/02/2018 04	60	1.5	
03/02/2018 05	60	1.5	
03/02/2018 06	60	1.5	
03/02/2018 07	60	1.3	
03/02/2018 08	60	1.4	
03/02/2018 09	60	1.4	
03/02/2018 10	60	1.4	
03/02/2018 11	60	1.4	
03/02/2018 12	60	1.4	
03/02/2018 13	60	1.4	
03/02/2018 14	60	1.4	
03/02/2018 15	60	1.4	
03/02/2018 16	60	1.5	
03/02/2018 17	60	1.4	
03/02/2018 18	60	1.4	
03/02/2018 19	60	1.4	
03/02/2018 20	60	1.4	
03/02/2018 21	60	1.4	
03/02/2018 22	60	1.4	

GECC PM CEMS Report for the Main Stack

Date/Time	Main Stack Online (mins)	PM CEMS Backscatter Energy (% of full scale)	Comments
		PM CEMS output is backscatter energy. Since a successful correlation test has not been performed, accurate PM concentrations cannot be calculated.	
03/02/2018 23	60	1.5	
03/03/2018 00	60	1.4	
03/03/2018 01	60	1.4	
03/03/2018 02	60	1.4	
03/03/2018 03	60	1.4	
03/03/2018 04	60	1.4	
03/03/2018 05	60	1.4	
03/03/2018 06	60	1.5	
03/03/2018 07	60	1.5	
03/03/2018 08	60	1.4	
03/03/2018 09	60	1.4	
03/03/2018 10	60	1.4	
03/03/2018 11	60	1.4	
03/03/2018 12	60	1.4	
03/03/2018 13	60	1.4	
03/03/2018 14	60	1.4	
03/03/2018 15	60	1.4	
03/03/2018 16	60	1.4	
03/03/2018 17	60	1.4	
03/03/2018 18	60	1.4	
03/03/2018 19	60	1.4	
03/03/2018 20	60	1.4	
03/03/2018 21	60	1.5	
03/03/2018 22	60	1.4	
03/03/2018 23	60	1.4	
03/04/2018 00	60	1.4	
03/04/2018 01	60	1.5	
03/04/2018 02	60	1.4	
03/04/2018 03	60	1.5	
03/04/2018 04	60	1.5	
03/04/2018 05	60	1.5	
03/04/2018 06	60	1.5	
03/04/2018 07	60	1.4	
03/04/2018 08	60	1.4	
03/04/2018 09	60	1.4	
03/04/2018 10	60	1.4	
03/04/2018 11	60	1.5	
03/04/2018 12	60	1.4	
03/04/2018 13	60	1.4	
03/04/2018 14	60	1.4	
03/04/2018 15	60	1.4	
03/04/2018 16	60	1.4	
03/04/2018 17	60	1.4	
03/04/2018 18	60	1.4	
03/04/2018 19	60	1.5	
03/04/2018 20	60	1.5	
03/04/2018 21	60	1.5	
03/04/2018 22	60	1.5	
03/04/2018 23	60	1.5	

GECC PM CEMS Report for the Main Stack

Date/Time	Main Stack Online (mins)	PM CEMS Backscatter Energy (% of full scale)	Comments
		PM CEMS output is backscatter energy. Since a successful correlation test has not been performed, accurate PM concentrations cannot be calculated.	
03/05/2018 00	60	1.4	
03/05/2018 01	60	1.4	
03/05/2018 02	60	1.5	
03/05/2018 03	60	1.5	
03/05/2018 04	60	1.2	
03/05/2018 05	60	1.3	
03/05/2018 06	60	1.4	
03/05/2018 07	60	1.4	
03/05/2018 08	60	1.5	
03/05/2018 09	60	1.3	
03/05/2018 10	60	1.4	
03/05/2018 11	60	1.4	
03/05/2018 12	60	1.4	
03/05/2018 13	60	1.4	
03/05/2018 14	60	1.4	
03/05/2018 15	60	1.5	
03/05/2018 16	60	1.4	
03/05/2018 17	60	1.2	
03/05/2018 18	60	1.4	
03/05/2018 19	60	1.4	
03/05/2018 20	60	1.4	
03/05/2018 21	60	1.4	
03/05/2018 22	60	1.4	
03/05/2018 23	60	1.4	
03/06/2018 00	60	1.9	
03/06/2018 01	60	1.7	
03/06/2018 02	60	1.9	
03/06/2018 03	60	1.9	
03/06/2018 04	60	1.9	
03/06/2018 05	60	1.9	
03/06/2018 06	60	1.7	
03/06/2018 07	60	1.7	
03/06/2018 08	60	1.8	
03/06/2018 09	60	1.8	
03/06/2018 10	60	1.8	
03/06/2018 11	60	1.8	
03/06/2018 12	60	1.8	
03/06/2018 13	60	1.8	
03/06/2018 14	60	1.8	
03/06/2018 15	60	1.8	
03/06/2018 16	60	1.5	
03/06/2018 17	60	1.4	
03/06/2018 18	60	1.4	
03/06/2018 19	60	1.3	
03/06/2018 20	60	1.2	
03/06/2018 21	60	1.4	
03/06/2018 22	60	1.4	
03/06/2018 23	60	1.4	
03/07/2018 00	60	1.4	

GECC PM CEMS Report for the Main Stack

Date/Time	Main Stack Online (mins)	PM CEMS Backscatter Energy (% of full scale)	Comments
		PM CEMS output is backscatter energy. Since a successful correlation test has not been performed, accurate PM concentrations cannot be calculated.	
03/07/2018 01	60	1.5	
03/07/2018 02	60	1.4	
03/07/2018 03	60	1.5	
03/07/2018 04	60	1.5	
03/07/2018 05	60	1.4	
03/07/2018 06	60	1.4	
03/07/2018 07	60	1.4	
03/07/2018 08	60	1.4	
03/07/2018 09	60	1.5	
03/07/2018 10	60	1.4	
03/07/2018 11	60	1.5	
03/07/2018 12	60	1.5	
03/07/2018 13	60	1.4	
03/07/2018 14	60	1.5	
03/07/2018 15	60	1.4	
03/07/2018 16	60	1.5	
03/07/2018 17	60	1.4	
03/07/2018 18	60	1.4	
03/07/2018 19	60	1.4	
03/07/2018 20	60	1.4	
03/07/2018 21	60	1.5	
03/07/2018 22	60	1.4	
03/07/2018 23	60	1.4	
03/08/2018 00	60	1.5	
03/08/2018 01	60	1.4	
03/08/2018 02	60	1.4	
03/08/2018 03	60	1.4	
03/08/2018 04	60	1.4	
03/08/2018 05	60	1.4	
03/08/2018 06	60	1.5	
03/08/2018 07	60	1.5	
03/08/2018 08	60	1.5	
03/08/2018 09	60	1.5	
03/08/2018 10	60	1.5	
03/08/2018 11	60	1.4	
03/08/2018 12	60	1.4	
03/08/2018 13	60	1.4	
03/08/2018 14	60	1.5	
03/08/2018 15	60	1.4	
03/08/2018 16	60	1.4	
03/08/2018 17	60	1.4	
03/08/2018 18	60	1.5	
03/08/2018 19	60	1.5	
03/08/2018 20	60	1.4	
03/08/2018 21	60	1.5	
03/08/2018 22	60	1.4	
03/08/2018 23	60	1.5	
03/09/2018 00	60	1.4	
03/09/2018 01	60	1.5	

GECC PM CEMS Report for the Main Stack

Date/Time	Main Stack Online (mins)	PM CEMS Backscatter Energy (% of full scale)	Comments
		PM CEMS output is backscatter energy. Since a successful correlation test has not been performed, accurate PM concentrations cannot be calculated.	
03/09/2018 02	60	1.4	
03/09/2018 03	60	1.4	
03/09/2018 04	60	1.4	
03/09/2018 05	60	1.4	
03/09/2018 06	60	1.4	
03/09/2018 07	60	1.4	
03/09/2018 08	60	1.4	
03/09/2018 09	60	1.4	
03/09/2018 10	60	1.4	
03/09/2018 11	60	1.5	
03/09/2018 12	60	1.4	
03/09/2018 13	60	1.4	
03/09/2018 14	60	1.4	
03/09/2018 15	60	1.4	
03/09/2018 16	60	1.4	
03/09/2018 17	60	1.4	
03/09/2018 18	60	1.4	
03/09/2018 19	60	1.5	
03/09/2018 20	60	1.4	
03/09/2018 21	60	1.5	
03/09/2018 22	60	1.4	
03/09/2018 23	60	1.5	
03/10/2018 00	60	1.5	
03/10/2018 01	60	1.4	
03/10/2018 02	60	1.5	
03/10/2018 03	60	1.5	
03/10/2018 04	60	1.5	
03/10/2018 05	60	1.5	
03/10/2018 06	60	1.5	
03/10/2018 07	60	1.5	
03/10/2018 08	60	1.5	
03/10/2018 09	60	1.5	
03/10/2018 10	60	1.5	
03/10/2018 11	60	1.5	
03/10/2018 12	60	1.4	
03/10/2018 13	60	1.4	
03/10/2018 14	60	1.5	
03/10/2018 15	60	1.5	
03/10/2018 16	60	1.5	
03/10/2018 17	60	1.5	
03/10/2018 18	60	1.5	
03/10/2018 19	60	1.5	
03/10/2018 20	60	1.5	
03/10/2018 21	60	1.5	
03/10/2018 22	60	1.4	
03/10/2018 23	60	1.5	
03/11/2018 00	60	1.5	
03/11/2018 01	60	1.5	
03/11/2018 02	60	1.5	

GECC PM CEMS Report for the Main Stack

Date/Time	Main Stack Online (mins)	PM CEMS Backscatter Energy (% of full scale)	Comments
		PM CEMS output is backscatter energy. Since a successful correlation test has not been performed, accurate PM concentrations cannot be calculated.	
03/11/2018 03	60	1.5	
03/11/2018 04	60	1.5	
03/11/2018 05	60	1.5	
03/11/2018 06	60	1.4	
03/11/2018 07	60	1.4	
03/11/2018 08	60	1.5	
03/11/2018 09	60	1.5	
03/11/2018 10	60	1.5	
03/11/2018 11	60	1.6	
03/11/2018 12	60	1.5	
03/11/2018 13	60	1.5	
03/11/2018 14	60	1.5	
03/11/2018 15	60	1.5	
03/11/2018 16	60	1.5	
03/11/2018 17	60	1.4	
03/11/2018 18	60	1.4	
03/11/2018 19	60	1.4	
03/11/2018 20	60	1.4	
03/11/2018 21	60	1.4	
03/11/2018 22	60	1.4	
03/11/2018 23	60	1.4	
03/12/2018 00	60	1.5	
03/12/2018 01	60	1.5	
03/12/2018 02	60	1.4	
03/12/2018 03	60	1.4	
03/12/2018 04	60	1.4	
03/12/2018 05	60	1.4	
03/12/2018 06	60	1.4	
03/12/2018 07	60	1.5	
03/12/2018 08	60	1.5	
03/12/2018 09	60	1.5	
03/12/2018 10	60	1.5	
03/12/2018 11	60	1.5	
03/12/2018 12	60	1.5	
03/12/2018 13	60	1.5	
03/12/2018 14	60	1.4	
03/12/2018 15	60	1.4	
03/12/2018 16	60	1.4	
03/12/2018 17	60	1.4	
03/12/2018 18	60	1.4	
03/12/2018 19	60	1.4	
03/12/2018 20	60	1.4	
03/12/2018 21	60	1.4	
03/12/2018 22	60	1.4	
03/12/2018 23	60	1.4	
03/13/2018 00	60	1.5	
03/13/2018 01	60	1.5	
03/13/2018 02	60	1.5	
03/13/2018 03	60	1.5	

GECC PM CEMS Report for the Main Stack

Date/Time	Main Stack Online (mins)	PM CEMS Backscatter Energy (% of full scale)	Comments
		PM CEMS output is backscatter energy. Since a successful correlation test has not been performed, accurate PM concentrations cannot be calculated.	
03/13/2018 04	60	1.5	
03/13/2018 05	60	1.5	
03/13/2018 06	60	1.4	
03/13/2018 07	60	1.5	
03/13/2018 08	60	1.5	
03/13/2018 09	60	1.5	
03/13/2018 10	60	1.5	
03/13/2018 11	60	1.5	
03/13/2018 12	60	1.5	
03/13/2018 13	60	1.4	
03/13/2018 14	60	1.5	
03/13/2018 15	60	1.5	
03/13/2018 16	60	1.5	
03/13/2018 17	60	1.5	
03/13/2018 18	60	1.5	
03/13/2018 19	60	1.5	
03/13/2018 20	60	1.5	
03/13/2018 21	60	1.5	
03/13/2018 22	60	1.6	
03/13/2018 23	60	1.5	
03/14/2018 00	60	1.5	
03/14/2018 01	60	1.5	
03/14/2018 02	60	1.6	
03/14/2018 03	60	1.5	
03/14/2018 04	60	1.5	
03/14/2018 05	60	1.5	
03/14/2018 06	60	1.6	
03/14/2018 07	60	1.5	
03/14/2018 08	60	1.5	
03/14/2018 09	60	1.5	
03/14/2018 10	60	1.5	
03/14/2018 11	60	1.5	
03/14/2018 12	60	1.5	
03/14/2018 13	60	1.5	
03/14/2018 14	60	1.5	
03/14/2018 15	60	1.5	
03/14/2018 16	60	1.6	
03/14/2018 17	60	1.5	
03/14/2018 18	60	1.5	
03/14/2018 19	60	1.5	
03/14/2018 20	60	1.5	
03/14/2018 21	60	1.5	
03/14/2018 22	60	1.5	
03/14/2018 23	60	1.6	
03/15/2018 00	60	1.5	
03/15/2018 01	60	1.5	
03/15/2018 02	60	1.5	
03/15/2018 03	60	1.5	
03/15/2018 04	60	1.5	

GECC PM CEMS Report for the Main Stack

Date/Time	Main Stack Online (mins)	PM CEMS Backscatter Energy (% of full scale)	Comments
		PM CEMS output is backscatter energy. Since a successful correlation test has not been performed, accurate PM concentrations cannot be calculated.	
03/15/2018 05	60	1.5	
03/15/2018 06	60	1.6	
03/15/2018 07	60	1.6	
03/15/2018 08	60	1.6	
03/15/2018 09	60	1.6	
03/15/2018 10	60	1.5	
03/15/2018 11	60	1.7	
03/15/2018 12	60	1.8	
03/15/2018 13	60	1.7	
03/15/2018 14	60	1.8	
03/15/2018 15	60	1.7	
03/15/2018 16	60	1.7	
03/15/2018 17	60	1.7	
03/15/2018 18	60	1.7	
03/15/2018 19	60	1.7	
03/15/2018 20	60	1.7	
03/15/2018 21	60	1.6	
03/15/2018 22	60	1.6	
03/15/2018 23	60	1.6	
03/16/2018 00	60	1.6	
03/16/2018 01	60	1.5	
03/16/2018 02	60	1.5	
03/16/2018 03	60	1.5	
03/16/2018 04	60	1.5	
03/16/2018 05	60	1.5	
03/16/2018 06	60	1.6	
03/16/2018 07	60	1.6	
03/16/2018 08	60	1.6	
03/16/2018 09	60	1.5	
03/16/2018 10	60	1.5	
03/16/2018 11	60	1.5	
03/16/2018 12	60	1.5	
03/16/2018 13	60	1.5	
03/16/2018 14	60	1.5	
03/16/2018 15	60	1.5	
03/16/2018 16	60	1.5	
03/16/2018 17	60	1.5	
03/16/2018 18	60	1.5	
03/16/2018 19	60	1.5	
03/16/2018 20	60	1.5	
03/16/2018 21	60	1.4	
03/16/2018 22	60	1.5	
03/16/2018 23	60	1.5	
03/17/2018 00	60	1.5	
03/17/2018 01	60	1.5	
03/17/2018 02	60	1.5	
03/17/2018 03	60	1.5	
03/17/2018 04	60	1.5	
03/17/2018 05	60	1.4	

GECC PM CEMS Report for the Main Stack

Date/Time	Main Stack Online (mins)	PM CEMS Backscatter Energy (% of full scale)	Comments
		PM CEMS output is backscatter energy. Since a successful correlation test has not been performed, accurate PM concentrations cannot be calculated.	
03/17/2018 06	60	1.5	
03/17/2018 07	60	1.5	
03/17/2018 08	60	1.5	
03/17/2018 09	60	1.5	
03/17/2018 10	60	1.5	
03/17/2018 11	60	1.5	
03/17/2018 12	60	1.5	
03/17/2018 13	60	1.5	
03/17/2018 14	60	1.5	
03/17/2018 15	60	1.5	
03/17/2018 16	60	1.5	
03/17/2018 17	60	1.6	
03/17/2018 18	60	1.6	
03/17/2018 19	60	1.6	
03/17/2018 20	60	1.6	
03/17/2018 21	60	1.6	
03/17/2018 22	60	1.6	
03/17/2018 23	60	1.6	
03/18/2018 00	60	1.6	
03/18/2018 01	60	1.6	
03/18/2018 02	60	1.6	
03/18/2018 03	60	1.6	
03/18/2018 04	60	1.6	
03/18/2018 05	60	1.6	
03/18/2018 06	60	1.5	
03/18/2018 07	60	1.5	
03/18/2018 08	60	1.6	
03/18/2018 09	60	1.5	
03/18/2018 10	60	1.5	
03/18/2018 11	60	1.5	
03/18/2018 12	60	1.5	
03/18/2018 13	60	1.5	
03/18/2018 14	60	1.5	
03/18/2018 15	60	1.5	
03/18/2018 16	60	1.5	
03/18/2018 17	60	1.5	
03/18/2018 18	60	1.5	
03/18/2018 19	60	1.5	
03/18/2018 20	60	1.5	
03/18/2018 21	60	1.5	
03/18/2018 22	60	1.5	
03/18/2018 23	60	1.5	
03/19/2018 00	60	1.5	
03/19/2018 01	60	1.6	
03/19/2018 02	60	1.6	
03/19/2018 03	60	1.5	
03/19/2018 04	60	1.6	
03/19/2018 05	60	1.7	
03/19/2018 06	60	1.7	

GECC PM CEMS Report for the Main Stack

Date/Time	Main Stack Online (mins)	PM CEMS Backscatter Energy (% of full scale)	Comments
		PM CEMS output is backscatter energy. Since a successful correlation test has not been performed, accurate PM concentrations cannot be calculated.	
03/19/2018 07	60	1.7	
03/19/2018 08	60	1.7	
03/19/2018 09	60	1.7	
03/19/2018 10	60	1.6	
03/19/2018 11	60	1.6	
03/19/2018 12	60	1.6	
03/19/2018 13	60	1.5	
03/19/2018 14	60	1.4	
03/19/2018 15	60	1.6	
03/19/2018 16	60	1.6	
03/19/2018 17	60	1.6	
03/19/2018 18	60	1.6	
03/19/2018 19	60	1.6	
03/19/2018 20	60	1.6	
03/19/2018 21	60	1.6	
03/19/2018 22	60	1.6	
03/19/2018 23	60	1.7	
03/20/2018 00	60	1.7	
03/20/2018 01	60	1.6	
03/20/2018 02	60	1.7	
03/20/2018 03	60	1.6	
03/20/2018 04	60	1.6	
03/20/2018 05	60	1.6	
03/20/2018 06	60	1.6	
03/20/2018 07	60	1.7	
03/20/2018 08	60	1.7	
03/20/2018 09	60	1.7	
03/20/2018 10	60	1.7	
03/20/2018 11	60	1.8	
03/20/2018 12	60	2.1	
03/20/2018 13	60	1.6	
03/20/2018 14	60	1.5	
03/20/2018 15	60	1.5	
03/20/2018 16	60	1.5	
03/20/2018 17	60	1.5	
03/20/2018 18	60	1.6	
03/20/2018 19	60	1.6	
03/20/2018 20	60	1.6	
03/20/2018 21	60	1.5	
03/20/2018 22	60	1.5	
03/20/2018 23	60	1.6	
03/21/2018 00	60	1.6	
03/21/2018 01	60	1.6	
03/21/2018 02	60	1.6	
03/21/2018 03	60	1.6	
03/21/2018 04	60	1.6	
03/21/2018 05	60	1.5	
03/21/2018 06	60	1.6	
03/21/2018 07	60	1.6	

GECC PM CEMS Report for the Main Stack

Date/Time	Main Stack Online (mins)	PM CEMS Backscatter Energy (% of full scale)	Comments
		PM CEMS output is backscatter energy. Since a successful correlation test has not been performed, accurate PM concentrations cannot be calculated.	
03/21/2018 08	60	1.7	
03/21/2018 09	60	1.7	
03/21/2018 10	60	1.6	
03/21/2018 11	60	1.6	
03/21/2018 12	60	1.6	
03/21/2018 13	60	1.6	
03/21/2018 14	60	1.6	
03/21/2018 15	60	1.6	
03/21/2018 16	60	1.6	
03/21/2018 17	60	1.6	
03/21/2018 18	60	1.5	
03/21/2018 19	60	1.5	
03/21/2018 20	60	1.6	
03/21/2018 21	60	1.6	
03/21/2018 22	60	1.6	
03/21/2018 23	60	1.6	
03/22/2018 00	60	1.7	
03/22/2018 01	60	1.6	
03/22/2018 02	60	1.6	
03/22/2018 03	60	1.6	
03/22/2018 04	60	1.6	
03/22/2018 05	60	1.6	
03/22/2018 06	60	1.6	
03/22/2018 07	60	1.6	
03/22/2018 08	60	1.6	
03/22/2018 09	60	1.6	
03/22/2018 10	60	1.7	
03/22/2018 11	60	1.6	
03/22/2018 12	60	1.6	
03/22/2018 13	60	1.7	
03/22/2018 14	60	1.7	
03/22/2018 15	60	1.7	
03/22/2018 16	60	1.6	
03/22/2018 17	60	1.7	
03/22/2018 18	60	1.6	
03/22/2018 19	60	1.6	
03/22/2018 20	60	1.6	
03/22/2018 21	60	1.7	
03/22/2018 22	60	1.6	
03/22/2018 23	60	1.7	
03/23/2018 00	60	1.7	
03/23/2018 01	60	1.6	
03/23/2018 02	60	1.7	
03/23/2018 03	60	1.7	
03/23/2018 04	60	1.7	
03/23/2018 05	60	1.7	
03/23/2018 06	60	1.7	
03/23/2018 07	60	1.7	
03/23/2018 08	60	1.8	

GECC PM CEMS Report for the Main Stack

Date/Time	Main Stack Online (mins)	PM CEMS Backscatter Energy (% of full scale)	Comments
		PM CEMS output is backscatter energy. Since a successful correlation test has not been performed, accurate PM concentrations cannot be calculated.	
03/23/2018 09	60	1.8	
03/23/2018 10	60	1.8	
03/23/2018 11	60	1.8	
03/23/2018 12	60	1.8	
03/23/2018 13	60	1.7	
03/23/2018 14	60	1.7	
03/23/2018 15	60	1.7	
03/23/2018 16	60	1.6	
03/23/2018 17	60	1.6	
03/23/2018 18	60	1.6	
03/23/2018 19	60	1.7	
03/23/2018 20	60	1.7	
03/23/2018 21	60	1.8	
03/23/2018 22	60	1.7	
03/23/2018 23	60	1.7	
03/24/2018 00	60	1.7	
03/24/2018 01	60	1.7	
03/24/2018 02	60	1.7	
03/24/2018 03	60	1.7	
03/24/2018 04	60	1.7	
03/24/2018 05	60	1.7	
03/24/2018 06	60	1.7	
03/24/2018 07	60	1.6	
03/24/2018 08	60	1.7	
03/24/2018 09	60	1.6	
03/24/2018 10	60	1.6	
03/24/2018 11	60	1.6	
03/24/2018 12	60	1.6	
03/24/2018 13	60	1.6	
03/24/2018 14	60	1.6	
03/24/2018 15	60	1.6	
03/24/2018 16	60	1.6	
03/24/2018 17	60	1.6	
03/24/2018 18	60	1.7	
03/24/2018 19	60	1.6	
03/24/2018 20	60	1.7	
03/24/2018 21	60	1.7	
03/24/2018 22	60	1.7	
03/24/2018 23	60	1.7	
03/25/2018 00	60	1.6	
03/25/2018 01	60	1.7	
03/25/2018 02	60	1.6	
03/25/2018 03	60	1.6	
03/25/2018 04	60	1.6	
03/25/2018 05	60	1.6	
03/25/2018 06	60	1.6	
03/25/2018 07	60	1.7	
03/25/2018 08	60	1.6	
03/25/2018 09	60	1.6	

GECC PM CEMS Report for the Main Stack

Date/Time	Main Stack Online (mins)	PM CEMS Backscatter Energy (% of full scale)	Comments
		PM CEMS output is backscatter energy. Since a successful correlation test has not been performed, accurate PM concentrations cannot be calculated.	
03/25/2018 10	60	1.5	
03/25/2018 11	60	1.6	
03/25/2018 12	60	1.6	
03/25/2018 13	60	1.5	
03/25/2018 14	60	1.5	
03/25/2018 15	60	1.6	
03/25/2018 16	60	1.6	
03/25/2018 17	60	1.6	
03/25/2018 18	60	1.6	
03/25/2018 19	60	1.7	
03/25/2018 20	60	1.6	
03/25/2018 21	60	1.7	
03/25/2018 22	60	1.7	
03/25/2018 23	60	1.7	
03/26/2018 00	60	1.6	
03/26/2018 01	60	1.7	
03/26/2018 02	60	1.7	
03/26/2018 03	60	1.7	
03/26/2018 04	60	1.7	
03/26/2018 05	60	1.7	
03/26/2018 06	60	1.8	
03/26/2018 07	60	1.8	
03/26/2018 08	60	1.8	
03/26/2018 09	60	1.8	
03/26/2018 10	60	1.9	
03/26/2018 11	60	1.9	
03/26/2018 12	60	1.6	
03/26/2018 13	60	1.5	
03/26/2018 14	60	1.5	
03/26/2018 15	60	1.6	
03/26/2018 16	60	1.6	
03/26/2018 17	60	1.5	
03/26/2018 18	60	1.6	
03/26/2018 19	60	1.6	
03/26/2018 20	60	1.6	
03/26/2018 21	60	1.6	
03/26/2018 22	60	1.6	
03/26/2018 23	60	1.5	
03/27/2018 00	60	1.5	
03/27/2018 01	60	1.6	
03/27/2018 02	60	1.5	
03/27/2018 03	60	1.5	
03/27/2018 04	60	1.5	
03/27/2018 05	60	1.5	
03/27/2018 06	60	1.5	
03/27/2018 07	60	1.7	
03/27/2018 08	60	1.7	
03/27/2018 09	60	1.7	
03/27/2018 10	60	1.5	

GECC PM CEMS Report for the Main Stack

Date/Time	Main Stack Online (mins)	PM CEMS Backscatter Energy (% of full scale)	Comments
		PM CEMS output is backscatter energy. Since a successful correlation test has not been performed, accurate PM concentrations cannot be calculated.	
03/27/2018 11	60	1.5	
03/27/2018 12	60	1.5	
03/27/2018 13	60	1.5	
03/27/2018 14	60	1.8	
03/27/2018 15	60	1.8	
03/27/2018 16	60	1.8	
03/27/2018 17	60	1.7	
03/27/2018 18	60	1.7	
03/27/2018 19	60	1.8	
03/27/2018 20	60	1.8	
03/27/2018 21	60	1.8	
03/27/2018 22	60	1.8	
03/27/2018 23	60	1.8	
03/28/2018 00	60	1.8	
03/28/2018 01	60	1.8	
03/28/2018 02	60	1.8	
03/28/2018 03	60	1.7	
03/28/2018 04	60	1.7	
03/28/2018 05	60	1.7	
03/28/2018 06	60	1.8	
03/28/2018 07	60	1.8	
03/28/2018 08	60	1.8	
03/28/2018 09	60	1.9	
03/28/2018 10	60	1.8	
03/28/2018 11	60	1.8	
03/28/2018 12	60	1.8	
03/28/2018 13	60	1.8	
03/28/2018 14	60	1.8	
03/28/2018 15	60	1.9	
03/28/2018 16	60	2.1	
03/28/2018 17	60	2.2	
03/28/2018 18	60	2.1	
03/28/2018 19	60	1.9	
03/28/2018 20	60	1.9	
03/28/2018 21	60	1.8	
03/28/2018 22	60	1.8	
03/28/2018 23	60	1.8	
03/29/2018 00	60	1.8	
03/29/2018 01	60	1.8	
03/29/2018 02	60	1.8	
03/29/2018 03	60	1.8	
03/29/2018 04	60	1.8	
03/29/2018 05	60	1.8	
03/29/2018 06	60	1.9	
03/29/2018 07	60	1.9	
03/29/2018 08	60	1.9	
03/29/2018 09	60	1.8	
03/29/2018 10	60	1.8	
03/29/2018 11	60	1.8	

GECC PM CEMS Report for the Main Stack

Date/Time	Main Stack Online (mins)	PM CEMS Backscatter Energy (% of full scale)	Comments
		PM CEMS output is backscatter energy. Since a successful correlation test has not been performed, accurate PM concentrations cannot be calculated.	
03/29/2018 12	60	1.9	
03/29/2018 13	60	1.8	
03/29/2018 14	60	1.9	
03/29/2018 15	60	1.9	
03/29/2018 16	60	1.8	
03/29/2018 17	60	1.8	
03/29/2018 18	60	1.8	
03/29/2018 19	60	1.8	
03/29/2018 20	60	1.8	
03/29/2018 21	60	1.8	
03/29/2018 22	60	1.9	
03/29/2018 23	60	1.9	
03/30/2018 00	60	1.8	
03/30/2018 01	60	2	
03/30/2018 02	60	2	
03/30/2018 03	60	1.9	
03/30/2018 04	60	1.9	
03/30/2018 05	60	1.9	
03/30/2018 06	60	1.9	
03/30/2018 07	60	1.9	
03/30/2018 08	60	2	
03/30/2018 09	60	1.9	
03/30/2018 10	60	1.9	
03/30/2018 11	60	2	
03/30/2018 12	60	2.1	
03/30/2018 13	60	2.1	
03/30/2018 14	60	2.1	
03/30/2018 15	60	2.1	
03/30/2018 16	60	2.1	
03/30/2018 17	60	2.1	
03/30/2018 18	60	2	
03/30/2018 19	60	2	
03/30/2018 20	60	2	
03/30/2018 21	60	2	
03/30/2018 22	60	2	
03/30/2018 23	60	2	
03/31/2018 00	60	1.9	
03/31/2018 01	60	2	
03/31/2018 02	60	1.9	
03/31/2018 03	60	1.9	
03/31/2018 04	60	1.9	
03/31/2018 05	60	2	
03/31/2018 06	60	2	
03/31/2018 07	60	2	
03/31/2018 08	60	1.9	
03/31/2018 09	60	2	
03/31/2018 10	60	2.1	
03/31/2018 11	60	2	
03/31/2018 12	60	2.1	

GECC PM CEMS Report for the Main Stack

Date/Time	Main Stack Online (mins)	PM CEMS Backscatter Energy (% of full scale)	Comments
		PM CEMS output is backscatter energy. Since a successful correlation test has not been performed, accurate PM concentrations cannot be calculated.	
03/31/2018 13	60	2.1	
03/31/2018 14	60	2	
03/31/2018 15	60	2.1	
03/31/2018 16	60	2.4	
03/31/2018 17	60	2.6	
03/31/2018 18	60	2.7	
03/31/2018 19	60	2.6	
03/31/2018 20	60	2.2	
03/31/2018 21	60	2.1	
03/31/2018 22	60	2	
03/31/2018 23	60	1.8	
04/01/2018 00	60	1.7	
04/01/2018 01	60	1.6	
04/01/2018 02	60	1.5	
04/01/2018 03	60	1.5	
04/01/2018 04	60	1.5	
04/01/2018 05	60	1.5	
04/01/2018 06	60	1.5	
04/01/2018 07	60	1.5	
04/01/2018 08	60	1.4	
04/01/2018 09	60	1.5	
04/01/2018 10	60	1.5	
04/01/2018 11	60	1.5	
04/01/2018 12	60	1.5	
04/01/2018 13	60	1.5	
04/01/2018 14	60	1.5	
04/01/2018 15	60	1.5	
04/01/2018 16	60	1.5	
04/01/2018 17	60	1.5	
04/01/2018 18	60	1.4	
04/01/2018 19	60	1.4	
04/01/2018 20	60	1.5	
04/01/2018 21	60	1.4	
04/01/2018 22	60	1.5	
04/01/2018 23	60	1.4	
04/02/2018 00	60	1.5	
04/02/2018 01	60	1.4	
04/02/2018 02	60	1.5	
04/02/2018 03	60	1.5	
04/02/2018 04	60	1.5	
04/02/2018 05	60	1.5	
04/02/2018 06	60	1.5	
04/02/2018 07	60	1.6	
04/02/2018 08	60	1.5	
04/02/2018 09	60	1.4	
04/02/2018 10	60	1.5	
04/02/2018 11	60	1.5	
04/02/2018 12	60	1.5	
04/02/2018 13	60	1.5	

GECC PM CEMS Report for the Main Stack

Date/Time	Main Stack Online (mins)	PM CEMS Backscatter Energy (% of full scale)	Comments
		PM CEMS output is backscatter energy. Since a successful correlation test has not been performed, accurate PM concentrations cannot be calculated.	
04/02/2018 14	60	1.4	
04/02/2018 15	60	1.4	
04/02/2018 16	60	1.5	
04/02/2018 17	60	1.5	
04/02/2018 18	60	1.5	
04/02/2018 19	60	1.5	
04/02/2018 20	60	1.5	
04/02/2018 21	60	1.5	
04/02/2018 22	60	1.5	
04/02/2018 23	60	1.5	
04/03/2018 00	60	1.3	
04/03/2018 01	60	1.4	
04/03/2018 02	60	1.4	
04/03/2018 03	60	1.4	
04/03/2018 04	60	1.4	
04/03/2018 05	60	1.4	
04/03/2018 06	60	1.5	
04/03/2018 07	60	1.5	
04/03/2018 08	60	1.4	
04/03/2018 09	60	1.4	
04/03/2018 10	60	1.5	
04/03/2018 11	60	1.7	
04/03/2018 12	60	1.7	
04/03/2018 13	60	1.9	
04/03/2018 14	60	1.8	
04/03/2018 15	60	1.6	
04/03/2018 16	60	1.5	
04/03/2018 17	60	1.5	
04/03/2018 18	60	1.6	
04/03/2018 19	60	1.5	
04/03/2018 20	60	1.6	
04/03/2018 21	60	1.6	
04/03/2018 22	60	1.6	
04/03/2018 23	60	1.6	
04/04/2018 00	60	1.6	
04/04/2018 01	60	1.6	
04/04/2018 02	60	1.5	
04/04/2018 03	60	1.6	
04/04/2018 04	60	1.9	
04/04/2018 05	60	1.8	
04/04/2018 06	60	1.8	
04/04/2018 07	60	1.9	
04/04/2018 08	60	1.8	
04/04/2018 09	60	1.8	
04/04/2018 10	60	1.7	
04/04/2018 11	60	1.6	
04/04/2018 12	60	1.5	
04/04/2018 13	60	1.5	
04/04/2018 14	60	1.6	

GECC PM CEMS Report for the Main Stack

Date/Time	Main Stack Online (mins)	PM CEMS Backscatter Energy (% of full scale)	Comments
		PM CEMS output is backscatter energy. Since a successful correlation test has not been performed, accurate PM concentrations cannot be calculated.	
04/04/2018 15	60	1.6	
04/04/2018 16	60	1.5	
04/04/2018 17	60	1.5	
04/04/2018 18	60	1.5	
04/04/2018 19	60	1.5	
04/04/2018 20	60	1.5	
04/04/2018 21	60	1.5	
04/04/2018 22	60	1.6	
04/04/2018 23	60	1.6	
04/05/2018 00	60	1.6	
04/05/2018 01	60	1.5	
04/05/2018 02	60	1.6	
04/05/2018 03	60	1.6	
04/05/2018 04	60	1.6	
04/05/2018 05	60	1.6	
04/05/2018 06	60	1.6	
04/05/2018 07	60	1.6	
04/05/2018 08	60	1.5	
04/05/2018 09	60	1.6	
04/05/2018 10	60	1.5	
04/05/2018 11	60	1.5	
04/05/2018 12	60	1.6	
04/05/2018 13	60	1.6	
04/05/2018 14	60	1.8	
04/05/2018 15	60	1.9	
04/05/2018 16	60	1.9	
04/05/2018 17	60	2	
04/05/2018 18	60	2	
04/05/2018 19	60	2	
04/05/2018 20	60	1.8	
04/05/2018 21	60	1.7	
04/05/2018 22	60	1.7	
04/05/2018 23	60	1.7	
04/06/2018 00	60	1.7	
04/06/2018 01	60	1.7	
04/06/2018 02	60	1.7	
04/06/2018 03	60	1.7	
04/06/2018 04	60	1.7	
04/06/2018 05	60	1.7	
04/06/2018 06	60	1.7	
04/06/2018 07	60	1.7	
04/06/2018 08	60	1.7	
04/06/2018 09	60	1.7	
04/06/2018 10	60	1.7	
04/06/2018 11	60	1.6	
04/06/2018 12	60	1.7	
04/06/2018 13	60	1.7	
04/06/2018 14	60	1.7	
04/06/2018 15	60	1.7	

GECC PM CEMS Report for the Main Stack

Date/Time	Main Stack Online (mins)	PM CEMS Backscatter Energy (% of full scale)	Comments
		PM CEMS output is backscatter energy. Since a successful correlation test has not been performed, accurate PM concentrations cannot be calculated.	
04/06/2018 16	60	1.7	
04/06/2018 17	60	1.7	
04/06/2018 18	60	1.7	
04/06/2018 19	60	1.7	
04/06/2018 20	60	1.7	
04/06/2018 21	60	1.7	
04/06/2018 22	60	1.7	
04/06/2018 23	60	1.7	
04/07/2018 00	60	1.6	
04/07/2018 01	60	1.6	
04/07/2018 02	60	1.6	
04/07/2018 03	60	1.6	
04/07/2018 04	60	1.6	
04/07/2018 05	60	1.7	
04/07/2018 06	60	1.7	
04/07/2018 07	60	1.7	
04/07/2018 08	60	1.6	
04/07/2018 09	60	1.6	
04/07/2018 10	60	1.6	
04/07/2018 11	60	1.5	
04/07/2018 12	60	1.6	
04/07/2018 13	60	1.5	
04/07/2018 14	60	1.5	
04/07/2018 15	60	1.5	
04/07/2018 16	60	1.5	
04/07/2018 17	60	1.5	
04/07/2018 18	60	1.6	
04/07/2018 19	60	1.6	
04/07/2018 20	60	1.5	
04/07/2018 21	60	1.5	
04/07/2018 22	60	1.6	
04/07/2018 23	60	1.5	
04/08/2018 00	60	1.6	
04/08/2018 01	60	1.6	
04/08/2018 02	60	1.6	
04/08/2018 03	60	1.6	
04/08/2018 04	60	1.6	
04/08/2018 05	60	1.6	
04/08/2018 06	60	1.6	
04/08/2018 07	60	5	
04/08/2018 08	60	1.7	
04/08/2018 09	60	1.6	
04/08/2018 10	60	1.5	
04/08/2018 11	60	1.5	
04/08/2018 12	60	1.5	
04/08/2018 13	60	1.5	
04/08/2018 14	60	1.5	
04/08/2018 15	60	1.5	
04/08/2018 16	60	1.6	

GECC PM CEMS Report for the Main Stack

Date/Time	Main Stack Online (mins)	PM CEMS Backscatter Energy (% of full scale)	Comments
		PM CEMS output is backscatter energy. Since a successful correlation test has not been performed, accurate PM concentrations cannot be calculated.	
04/08/2018 17	60	1.5	
04/08/2018 18	60	1.5	
04/08/2018 19	60	1.6	
04/08/2018 20	60	1.6	
04/08/2018 21	60	1.6	
04/08/2018 22	60	1.6	
04/08/2018 23	60	1.6	
04/09/2018 00	60	1.6	
04/09/2018 01	60	1.6	
04/09/2018 02	60	1.6	
04/09/2018 03	60	1.6	
04/09/2018 04	60	1.6	
04/09/2018 05	60	1.7	
04/09/2018 06	60	1.6	
04/09/2018 07	60	1.8	
04/09/2018 08	60	4.8	
04/09/2018 09	60	4.5	
04/09/2018 10	60	4.5	
04/09/2018 11	60	11.2	
04/09/2018 12	60	5.3	
04/09/2018 13	60	1.7	
04/09/2018 14	60	1.6	
04/09/2018 15	60	1.6	
04/09/2018 16	60	1.6	
04/09/2018 17	60	1.6	
04/09/2018 18	60	1.6	
04/09/2018 19	60	1.6	
04/09/2018 20	60	1.6	
04/09/2018 21	60	1.6	
04/09/2018 22	60	1.6	
04/09/2018 23	60	1.6	
04/10/2018 00	60	1.7	
04/10/2018 01	60	1.6	
04/10/2018 02	60	1.6	
04/10/2018 03	60	1.7	
04/10/2018 04	60	1.7	
04/10/2018 05	60	1.7	
04/10/2018 06	60	1.7	
04/10/2018 07	60	1.7	
04/10/2018 08	60	1.8	
04/10/2018 09	60	1.7	
04/10/2018 10	60	1.6	
04/10/2018 11	60	1.6	
04/10/2018 12	60	1.5	
04/10/2018 13	60	1.5	
04/10/2018 14	60	1.5	
04/10/2018 15	60	1.5	
04/10/2018 16	60	1.5	
04/10/2018 17	60	1.7	

GECC PM CEMS Report for the Main Stack

Date/Time	Main Stack Online (mins)	PM CEMS Backscatter Energy (% of full scale)	Comments
		PM CEMS output is backscatter energy. Since a successful correlation test has not been performed, accurate PM concentrations cannot be calculated.	
04/10/2018 18	60	1.8	
04/10/2018 19	60	1.8	
04/10/2018 20	60	1.6	
04/10/2018 21	60	1.6	
04/10/2018 22	60	1.6	
04/10/2018 23	60	1.6	
04/11/2018 00	60	1.5	
04/11/2018 01	60	1.6	
04/11/2018 02	60	1.6	
04/11/2018 03	60	1.6	
04/11/2018 04	60	1.6	
04/11/2018 05	60	1.6	
04/11/2018 06	60	1.6	
04/11/2018 07	60	1.6	
04/11/2018 08	60	1.6	
04/11/2018 09	60	2	
04/11/2018 10	60	2.2	
04/11/2018 11	60	2.1	
04/11/2018 12	60	2.1	
04/11/2018 13	60	2	
04/11/2018 14	60	2	
04/11/2018 15	60	2.1	
04/11/2018 16	60	2.1	
04/11/2018 17	60	2.1	
04/11/2018 18	60	2.1	
04/11/2018 19	60	2.1	
04/11/2018 20	60	2.1	
04/11/2018 21	60	2.1	
04/11/2018 22	60	2.1	
04/11/2018 23	60	2.1	
04/12/2018 00	60	2.1	
04/12/2018 01	60	2.1	
04/12/2018 02	60	2.1	
04/12/2018 03	60	2.1	
04/12/2018 04	60	2.1	
04/12/2018 05	60	2	
04/12/2018 06	60	2	
04/12/2018 07	60	2.1	
04/12/2018 08	60	2.1	
04/12/2018 09	60	2.1	
04/12/2018 10	60	2.1	
04/12/2018 11	60	2.1	
04/12/2018 12	60	2.1	
04/12/2018 13	60	2.1	
04/12/2018 14	60	2.1	
04/12/2018 15	60	2.2	
04/12/2018 16	60	2.2	
04/12/2018 17	60	2.1	
04/12/2018 18	60	2.1	

GECC PM CEMS Report for the Main Stack

Date/Time	Main Stack Online (mins)	PM CEMS Backscatter Energy (% of full scale)	Comments
		PM CEMS output is backscatter energy. Since a successful correlation test has not been performed, accurate PM concentrations cannot be calculated.	
04/12/2018 19	60	2	
04/12/2018 20	60	2	
04/12/2018 21	60	2.1	
04/12/2018 22	60	2.1	
04/12/2018 23	60	2.1	
04/13/2018 00	60	2.1	
04/13/2018 01	60	2.1	
04/13/2018 02	60	2.2	
04/13/2018 03	60	2.3	
04/13/2018 04	60	2.2	
04/13/2018 05	60	2.2	
04/13/2018 06	60	2.2	
04/13/2018 07	60	2.2	
04/13/2018 08	60	2.1	
04/13/2018 09	60	2.1	
04/13/2018 10	60	2.1	
04/13/2018 11	60	2.2	
04/13/2018 12	60	2.1	
04/13/2018 13	60	2.1	
04/13/2018 14	60	2.2	
04/13/2018 15	60	2.1	
04/13/2018 16	60	2.1	
04/13/2018 17	60	2.1	
04/13/2018 18	60	2	
04/13/2018 19	60	2.1	
04/13/2018 20	60	2	
04/13/2018 21	60	1.9	
04/13/2018 22	60	1.6	
04/13/2018 23	60	1.5	
04/14/2018 00	60	1.5	
04/14/2018 01	60	1.5	
04/14/2018 02	60	1.7	
04/14/2018 03	60	1.7	
04/14/2018 04	60	1.7	
04/14/2018 05	60	1.7	
04/14/2018 06	60	1.7	
04/14/2018 07	60	1.7	
04/14/2018 08	60	1.7	
04/14/2018 09	60	1.8	
04/14/2018 10	60	2.1	
04/14/2018 11	60	2	
04/14/2018 12	60	1.9	
04/14/2018 13	60	1.6	
04/14/2018 14	60	1.5	
04/14/2018 15	60	1.4	
04/14/2018 16	60	1.6	
04/14/2018 17	60	1.6	
04/14/2018 18	60	1.6	
04/14/2018 19	60	1.6	

GECC PM CEMS Report for the Main Stack

Date/Time	Main Stack Online (mins)	PM CEMS Backscatter Energy (% of full scale)	Comments
		PM CEMS output is backscatter energy. Since a successful correlation test has not been performed, accurate PM concentrations cannot be calculated.	
04/14/2018 20	60	1.6	
04/14/2018 21	60	1.6	
04/14/2018 22	60	1.6	
04/14/2018 23	60	1.6	
04/15/2018 00	60	1.6	
04/15/2018 01	60	1.6	
04/15/2018 02	60	1.6	
04/15/2018 03	60	1.6	
04/15/2018 04	60	1.5	
04/15/2018 05	60	1.5	
04/15/2018 06	60	1.4	
04/15/2018 07	60	1.5	
04/15/2018 08	60	1.5	
04/15/2018 09	60	1.5	
04/15/2018 10	60	1.5	
04/15/2018 11	60	1.5	
04/15/2018 12	60	1.5	
04/15/2018 13	60	1.5	
04/15/2018 14	60	1.5	
04/15/2018 15	60	1.5	
04/15/2018 16	60	1.6	
04/15/2018 17	60	1.6	
04/15/2018 18	60	1.5	
04/15/2018 19	60	1.5	
04/15/2018 20	60	1.4	
04/15/2018 21	60	1.4	
04/15/2018 22	60	1.4	
04/15/2018 23	60	1.4	
04/16/2018 00	60	1.5	
04/16/2018 01	60	1.5	
04/16/2018 02	60	1.5	
04/16/2018 03	60	1.5	
04/16/2018 04	60	1.5	
04/16/2018 05	60	1.5	
04/16/2018 06	60	1.5	
04/16/2018 07	60	1.4	
04/16/2018 08	60	1.5	
04/16/2018 09	60	1.5	
04/16/2018 10	60	1.5	
04/16/2018 11	60	1.5	
04/16/2018 12	60	1.5	
04/16/2018 13	60	1.5	
04/16/2018 14	60	1.5	
04/16/2018 15	60	1.5	
04/16/2018 16	60	1.5	
04/16/2018 17	60	1.4	
04/16/2018 18	60	1.5	
04/16/2018 19	60	1.5	
04/16/2018 20	60	1.5	

GECC PM CEMS Report for the Main Stack

Date/Time	Main Stack Online (mins)	PM CEMS Backscatter Energy (% of full scale)	Comments
		PM CEMS output is backscatter energy. Since a successful correlation test has not been performed, accurate PM concentrations cannot be calculated.	
04/16/2018 21	60	1.5	
04/16/2018 22	60	1.5	
04/16/2018 23	60	1.5	
04/17/2018 00	60	1.5	
04/17/2018 01	60	1.5	
04/17/2018 02	60	1.5	
04/17/2018 03	60	1.5	
04/17/2018 04	60	1.6	
04/17/2018 05	60	1.5	
04/17/2018 06	60	1.5	
04/17/2018 07	60	1.4	
04/17/2018 08	60	1.5	
04/17/2018 09	60	1.5	
04/17/2018 10	60	1.4	
04/17/2018 11	60	1.6	
04/17/2018 12	60	1.7	
04/17/2018 13	60	1.7	
04/17/2018 14	60	1.7	
04/17/2018 15	60	1.7	
04/17/2018 16	60	1.7	
04/17/2018 17	60	1.8	
04/17/2018 18	60	1.8	
04/17/2018 19	60	1.8	
04/17/2018 20	60	1.8	
04/17/2018 21	60	1.7	
04/17/2018 22	60	1.7	
04/17/2018 23	60	1.8	
04/18/2018 00	60	1.7	
04/18/2018 01	60	1.6	
04/18/2018 02	60	1.6	
04/18/2018 03	60	1.6	
04/18/2018 04	60	1.6	
04/18/2018 05	60	1.6	
04/18/2018 06	60	1.6	
04/18/2018 07	60	1.7	
04/18/2018 08	60	1.7	
04/18/2018 09	60	1.7	
04/18/2018 10	60	1.9	
04/18/2018 11	60	2	
04/18/2018 12	60	2	
04/18/2018 13	60	2	
04/18/2018 14	60	2	
04/18/2018 15	60	1.9	
04/18/2018 16	60	1.9	
04/18/2018 17	60	1.7	
04/18/2018 18	60	1.7	
04/18/2018 19	60	1.7	
04/18/2018 20	60	1.7	
04/18/2018 21	60	1.7	

GECC PM CEMS Report for the Main Stack

Date/Time	Main Stack Online (mins)	PM CEMS Backscatter Energy (% of full scale)	Comments
		PM CEMS output is backscatter energy. Since a successful correlation test has not been performed, accurate PM concentrations cannot be calculated.	
04/18/2018 22	60	1.7	
04/18/2018 23	60	1.7	
04/19/2018 00	60	1.6	
04/19/2018 01	60	1.7	
04/19/2018 02	60	1.6	
04/19/2018 03	60	1.7	
04/19/2018 04	60	1.6	
04/19/2018 05	60	1.6	
04/19/2018 06	60	1.6	
04/19/2018 07	60	1.7	
04/19/2018 08	60	1.6	
04/19/2018 09	60	1.6	
04/19/2018 10	60	1.6	
04/19/2018 11	60	1.6	
04/19/2018 12	60	1.6	
04/19/2018 13	60	1.6	
04/19/2018 14	60	1.6	
04/19/2018 15	60	1.6	
04/19/2018 16	60	1.6	
04/19/2018 17	60	1.7	
04/19/2018 18	60	1.7	
04/19/2018 19	60	1.8	
04/19/2018 20	60	1.8	
04/19/2018 21	60	1.6	
04/19/2018 22	60	1.6	
04/19/2018 23	60	1.6	
04/20/2018 00	60	1.6	
04/20/2018 01	60	1.6	
04/20/2018 02	60	1.6	
04/20/2018 03	60	1.7	
04/20/2018 04	60	1.7	
04/20/2018 05	60	1.7	
04/20/2018 06	60	1.7	
04/20/2018 07	60	1.6	
04/20/2018 08	60	1.6	
04/20/2018 09	60	1.6	
04/20/2018 10	60	1.7	
04/20/2018 11	60	1.8	
04/20/2018 12	60	1.9	
04/20/2018 13	60	1.8	
04/20/2018 14	60	1.8	
04/20/2018 15	60	1.9	
04/20/2018 16	60	1.9	
04/20/2018 17	60	1.9	
04/20/2018 18	60	1.9	
04/20/2018 19	60	1.8	
04/20/2018 20	60	1.8	
04/20/2018 21	60	1.9	
04/20/2018 22	60	2	

GECC PM CEMS Report for the Main Stack

Date/Time	Main Stack Online (mins)	PM CEMS Backscatter Energy (% of full scale)	Comments
		PM CEMS output is backscatter energy. Since a successful correlation test has not been performed, accurate PM concentrations cannot be calculated.	
04/20/2018 23	60	1.9	
04/21/2018 00	60	1.8	
04/21/2018 01	60	1.7	
04/21/2018 02	60	1.7	
04/21/2018 03	60	1.8	
04/21/2018 04	60	1.7	
04/21/2018 05	60	1.7	
04/21/2018 06	60	1.7	
04/21/2018 07	60	1.7	
04/21/2018 08	60	1.7	
04/21/2018 09	60	1.6	
04/21/2018 10	60	1.8	
04/21/2018 11	60	1.8	
04/21/2018 12	60	1.9	
04/21/2018 13	60	1.9	
04/21/2018 14	60	1.9	
04/21/2018 15	60	1.9	
04/21/2018 16	60	1.9	
04/21/2018 17	60	1.9	
04/21/2018 18	60	1.9	
04/21/2018 19	60	1.9	
04/21/2018 20	60	1.9	
04/21/2018 21	60	2	
04/21/2018 22	60	1.9	
04/21/2018 23	60	1.9	
04/22/2018 00	60	1.9	
04/22/2018 01	60	1.9	
04/22/2018 02	60	1.8	
04/22/2018 03	60	1.7	
04/22/2018 04	60	1.7	
04/22/2018 05	60	1.7	
04/22/2018 06	60	1.7	
04/22/2018 07	60	1.7	
04/22/2018 08	60	1.6	
04/22/2018 09	60	1.7	
04/22/2018 10	60	1.6	
04/22/2018 11	60	1.8	
04/22/2018 12	60	1.9	
04/22/2018 13	60	1.9	
04/22/2018 14	60	2	
04/22/2018 15	60	1.9	
04/22/2018 16	60	1.9	
04/22/2018 17	60	1.8	
04/22/2018 18	60	1.7	
04/22/2018 19	60	1.8	
04/22/2018 20	60	1.9	
04/22/2018 21	60	1.8	
04/22/2018 22	60	1.7	
04/22/2018 23	60	1.7	

GECC PM CEMS Report for the Main Stack

Date/Time	Main Stack Online (mins)	PM CEMS Backscatter Energy (% of full scale)	Comments
		PM CEMS output is backscatter energy. Since a successful correlation test has not been performed, accurate PM concentrations cannot be calculated.	
04/23/2018 00	60	1.8	
04/23/2018 01	60	1.8	
04/23/2018 02	60	1.7	
04/23/2018 03	60	1.7	
04/23/2018 04	60	1.7	
04/23/2018 05	60	1.7	
04/23/2018 06	60	1.7	
04/23/2018 07	60	1.6	
04/23/2018 08	60	1.6	
04/23/2018 09	60	1.6	
04/23/2018 10	60	1.6	
04/23/2018 11	60	1.6	
04/23/2018 12	60	1.5	
04/23/2018 13	60	1.6	
04/23/2018 14	60	1.5	
04/23/2018 15	60	1.6	
04/23/2018 16	60	1.6	
04/23/2018 17	60	1.6	
04/23/2018 18	60	1.6	
04/23/2018 19	60	1.6	
04/23/2018 20	60	1.6	
04/23/2018 21	60	1.6	
04/23/2018 22	60	1.6	
04/23/2018 23	60	1.6	
04/24/2018 00	60	1.6	
04/24/2018 01	60	1.6	
04/24/2018 02	60	1.7	
04/24/2018 03	60	1.6	
04/24/2018 04	60	1.6	
04/24/2018 05	60	1.6	
04/24/2018 06	60	1.6	
04/24/2018 07	60	1.7	
04/24/2018 08	60	1.6	
04/24/2018 09	60	1.6	
04/24/2018 10	60	1.6	
04/24/2018 11	60	1.6	
04/24/2018 12	60	1.6	
04/24/2018 13	60	1.6	
04/24/2018 14	60	1.7	
04/24/2018 15	60	1.9	
04/24/2018 16	60	1.9	
04/24/2018 17	60	1.9	
04/24/2018 18	60	2	
04/24/2018 19	60	1.9	
04/24/2018 20	60	1.9	
04/24/2018 21	60	1.9	
04/24/2018 22	60	1.9	
04/24/2018 23	60	2	
04/25/2018 00	60	2	

GECC PM CEMS Report for the Main Stack

Date/Time	Main Stack Online (mins)	PM CEMS Backscatter Energy (% of full scale)	Comments
		PM CEMS output is backscatter energy. Since a successful correlation test has not been performed, accurate PM concentrations cannot be calculated.	
04/25/2018 01	60	1.9	
04/25/2018 02	60	2	
04/25/2018 03	60	2	
04/25/2018 04	60	1.9	
04/25/2018 05	60	1.9	
04/25/2018 06	60	1.9	
04/25/2018 07	60	1.9	
04/25/2018 08	60	1.9	
04/25/2018 09	60	1.9	
04/25/2018 10	60	1.9	
04/25/2018 11	60	1.9	
04/25/2018 12	60	2	
04/25/2018 13	60	2	
04/25/2018 14	60	2	
04/25/2018 15	60	2	
04/25/2018 16	60	1.9	
04/25/2018 17	60	2	
04/25/2018 18	60	1.9	
04/25/2018 19	60	2	
04/25/2018 20	60	1.9	
04/25/2018 21	60	1.9	
04/25/2018 22	60	1.9	
04/25/2018 23	60	1.8	
04/26/2018 00	60	1.9	
04/26/2018 01	60	1.9	
04/26/2018 02	60	1.9	
04/26/2018 03	60	1.9	
04/26/2018 04	60	1.8	
04/26/2018 05	60	1.8	
04/26/2018 06	60	1.8	
04/26/2018 07	60	1.9	
04/26/2018 08	60	1.8	
04/26/2018 09	60	2	
04/26/2018 10	60	2.1	
04/26/2018 11	60	2	
04/26/2018 12	60	Invalid	Quarterly QA activities
04/26/2018 13	60	Invalid	Quarterly QA activities
04/26/2018 14	60	Invalid	Quarterly QA activities
04/26/2018 15	60	1.3	
04/26/2018 16	60	1.2	
04/26/2018 17	60	1.3	
04/26/2018 18	60	1.2	
04/26/2018 19	60	1.3	
04/26/2018 20	60	1.3	
04/26/2018 21	60	1.3	
04/26/2018 22	60	1.3	
04/26/2018 23	60	1.3	
04/27/2018 00	60	1.3	
04/27/2018 01	60	1.4	

GECC PM CEMS Report for the Main Stack

Date/Time	Main Stack Online (mins)	PM CEMS Backscatter Energy (% of full scale)	Comments
		PM CEMS output is backscatter energy. Since a successful correlation test has not been performed, accurate PM concentrations cannot be calculated.	
04/27/2018 02	60	1.3	
04/27/2018 03	60	1.3	
04/27/2018 04	60	1.3	
04/27/2018 05	60	1.3	
04/27/2018 06	60	1.3	
04/27/2018 07	60	1.3	
04/27/2018 08	60	1.3	
04/27/2018 09	60	1.3	
04/27/2018 10	60	1.3	
04/27/2018 11	60	1.3	
04/27/2018 12	60	1.2	
04/27/2018 13	60	1.2	
04/27/2018 14	60	1.3	
04/27/2018 15	60	1.3	
04/27/2018 16	60	1.3	
04/27/2018 17	60	1.2	
04/27/2018 18	60	1.2	
04/27/2018 19	60	1.2	
04/27/2018 20	60	1.3	
04/27/2018 21	60	1.3	
04/27/2018 22	60	1.3	
04/27/2018 23	60	1.3	
04/28/2018 00	60	1.3	
04/28/2018 01	60	1.3	
04/28/2018 02	60	1.3	
04/28/2018 03	60	1.3	
04/28/2018 04	60	1.3	
04/28/2018 05	60	1.3	
04/28/2018 06	60	1.3	
04/28/2018 07	60	1.3	
04/28/2018 08	60	1.3	
04/28/2018 09	60	1.3	
04/28/2018 10	60	1.3	
04/28/2018 11	60	1.3	
04/28/2018 12	60	1.3	
04/28/2018 13	60	1.3	
04/28/2018 14	60	1.3	
04/28/2018 15	60	1.3	
04/28/2018 16	60	1.3	
04/28/2018 17	60	1.2	
04/28/2018 18	60	1.3	
04/28/2018 19	60	1.3	
04/28/2018 20	60	1.4	
04/28/2018 21	60	1.3	
04/28/2018 22	60	1.3	
04/28/2018 23	60	1.3	
04/29/2018 00	60	1.3	
04/29/2018 01	60	1.3	
04/29/2018 02	60	1.3	

GECC PM CEMS Report for the Main Stack

Date/Time	Main Stack Online (mins)	PM CEMS Backscatter Energy (% of full scale)	Comments
		PM CEMS output is backscatter energy. Since a successful correlation test has not been performed, accurate PM concentrations cannot be calculated.	
04/29/2018 03	60	1.3	
04/29/2018 04	60	1.3	
04/29/2018 05	60	1.2	
04/29/2018 06	60	1.3	
04/29/2018 07	60	1.3	
04/29/2018 08	60	1.3	
04/29/2018 09	60	1.3	
04/29/2018 10	60	1.3	
04/29/2018 11	60	1.3	
04/29/2018 12	60	1.2	
04/29/2018 13	60	1.2	
04/29/2018 14	60	1.2	
04/29/2018 15	60	1.3	
04/29/2018 16	60	1.3	
04/29/2018 17	60	1.3	
04/29/2018 18	60	1.2	
04/29/2018 19	60	1.2	
04/29/2018 20	60	1.3	
04/29/2018 21	60	1.3	
04/29/2018 22	60	1.3	
04/29/2018 23	60	1.3	
04/30/2018 00	60	1.3	
04/30/2018 01	60	1.3	
04/30/2018 02	60	1.4	
04/30/2018 03	60	1.3	
04/30/2018 04	60	1.3	
04/30/2018 05	60	1.3	
04/30/2018 06	60	1.3	
04/30/2018 07	60	1.3	
04/30/2018 08	60	1.2	
04/30/2018 09	60	1.3	
04/30/2018 10	60	1.3	
04/30/2018 11	60	1.3	
04/30/2018 12	60	1.3	
04/30/2018 13	60	1.3	
04/30/2018 14	60	1.2	
04/30/2018 15	60	1.2	
04/30/2018 16	60	1.2	
04/30/2018 17	60	1.2	
04/30/2018 18	60	1.2	
04/30/2018 19	60	1.3	
04/30/2018 20	60	1.4	
04/30/2018 21	60	1.3	
04/30/2018 22	60	1.3	
04/30/2018 23	60	1.3	
05/01/2018 00	60	1.4	
05/01/2018 01	60	1.4	
05/01/2018 02	60	1.3	
05/01/2018 03	60	1.3	

GECC PM CEMS Report for the Main Stack

Date/Time	Main Stack Online (mins)	PM CEMS Backscatter Energy (% of full scale)	Comments
		PM CEMS output is backscatter energy. Since a successful correlation test has not been performed, accurate PM concentrations cannot be calculated.	
05/01/2018 04	60	1.4	
05/01/2018 05	60	1.3	
05/01/2018 06	60	1.4	
05/01/2018 07	60	1.4	
05/01/2018 08	60	1.4	
05/01/2018 09	60	1.3	
05/01/2018 10	60	1.3	
05/01/2018 11	60	1.3	
05/01/2018 12	60	1.4	
05/01/2018 13	60	1.4	
05/01/2018 14	60	1.4	
05/01/2018 15	60	1.5	
05/01/2018 16	60	1.4	
05/01/2018 17	60	1.4	
05/01/2018 18	60	1.4	
05/01/2018 19	60	1.3	
05/01/2018 20	60	1.4	
05/01/2018 21	60	1.4	
05/01/2018 22	60	1.3	
05/01/2018 23	60	1.3	
05/02/2018 00	60	1.3	
05/02/2018 01	60	1.4	
05/02/2018 02	60	1.4	
05/02/2018 03	60	1.4	
05/02/2018 04	60	1.4	
05/02/2018 05	60	1.3	
05/02/2018 06	60	1.4	
05/02/2018 07	60	1.4	
05/02/2018 08	60	1.4	
05/02/2018 09	60	1.4	
05/02/2018 10	60	1.4	
05/02/2018 11	60	1.5	
05/02/2018 12	60	1.5	
05/02/2018 13	60	1.4	
05/02/2018 14	60	1.5	
05/02/2018 15	60	1.4	
05/02/2018 16	60	1.5	
05/02/2018 17	60	1.5	
05/02/2018 18	60	1.4	
05/02/2018 19	60	1.4	
05/02/2018 20	60	1.4	
05/02/2018 21	60	1.3	
05/02/2018 22	60	1.4	
05/02/2018 23	60	1.4	
05/03/2018 00	60	1.3	
05/03/2018 01	60	1.3	
05/03/2018 02	60	1.3	
05/03/2018 03	60	1.3	
05/03/2018 04	60	1.1	

GECC PM CEMS Report for the Main Stack

Date/Time	Main Stack Online (mins)	PM CEMS Backscatter Energy (% of full scale)	Comments
		PM CEMS output is backscatter energy. Since a successful correlation test has not been performed, accurate PM concentrations cannot be calculated.	
05/03/2018 05	60	1.2	
05/03/2018 06	60	1.2	
05/03/2018 07	60	1.3	
05/03/2018 08	60	1.3	
05/03/2018 09	60	1.3	
05/03/2018 10	60	1.2	
05/03/2018 11	60	1.1	
05/03/2018 12	60	1.1	
05/03/2018 13	60	1.3	
05/03/2018 14	60	1.3	
05/03/2018 15	60	1.2	
05/03/2018 16	60	1.3	
05/03/2018 17	60	1.3	
05/03/2018 18	60	1.2	
05/03/2018 19	60	1.2	
05/03/2018 20	60	1.3	
05/03/2018 21	60	1.3	
05/03/2018 22	60	1.3	
05/03/2018 23	60	1.3	
05/04/2018 00	60	1.3	
05/04/2018 01	60	1.3	
05/04/2018 02	60	1.2	
05/04/2018 03	60	1.3	
05/04/2018 04	60	1.3	
05/04/2018 05	60	1.3	
05/04/2018 06	60	1.3	
05/04/2018 07	60	1.3	
05/04/2018 08	60	1.3	
05/04/2018 09	60	1.3	
05/04/2018 10	60	1.3	
05/04/2018 11	60	1.3	
05/04/2018 12	60	1.3	
05/04/2018 13	60	1.3	
05/04/2018 14	60	1.3	
05/04/2018 15	60	1.3	
05/04/2018 16	60	1.3	
05/04/2018 17	60	1.2	
05/04/2018 18	60	1.2	
05/04/2018 19	60	1.3	
05/04/2018 20	60	1.3	
05/04/2018 21	60	1.3	
05/04/2018 22	60	1.3	
05/04/2018 23	60	1.3	
05/05/2018 00	60	1.3	
05/05/2018 01	60	1.3	
05/05/2018 02	60	1.3	
05/05/2018 03	60	1.3	
05/05/2018 04	60	1.2	
05/05/2018 05	60	1.3	

GECC PM CEMS Report for the Main Stack

Date/Time	Main Stack Online (mins)	PM CEMS Backscatter Energy (% of full scale)	Comments
		PM CEMS output is backscatter energy. Since a successful correlation test has not been performed, accurate PM concentrations cannot be calculated.	
05/05/2018 06	60	1.3	
05/05/2018 07	60	1.3	
05/05/2018 08	60	1.3	
05/05/2018 09	60	1.3	
05/05/2018 10	60	1.4	
05/05/2018 11	60	1.5	
05/05/2018 12	60	1.4	
05/05/2018 13	60	1.4	
05/05/2018 14	60	1.3	
05/05/2018 15	60	1.3	
05/05/2018 16	60	1.4	
05/05/2018 17	60	1.3	
05/05/2018 18	60	1.3	
05/05/2018 19	60	1.3	
05/05/2018 20	60	1.3	
05/05/2018 21	60	1.4	
05/05/2018 22	60	1.3	
05/05/2018 23	60	1.3	
05/06/2018 00	60	1.3	
05/06/2018 01	60	1.3	
05/06/2018 02	60	1.3	
05/06/2018 03	60	1.4	
05/06/2018 04	60	1.3	
05/06/2018 05	60	1.3	
05/06/2018 06	60	1.4	
05/06/2018 07	60	1.3	
05/06/2018 08	60	1.3	
05/06/2018 09	60	1.3	
05/06/2018 10	60	1.5	
05/06/2018 11	60	1.4	
05/06/2018 12	60	1.4	
05/06/2018 13	60	1.5	
05/06/2018 14	60	1.5	
05/06/2018 15	60	1.4	
05/06/2018 16	60	1.5	
05/06/2018 17	60	1.5	
05/06/2018 18	60	1.5	
05/06/2018 19	60	1.3	
05/06/2018 20	60	1.4	
05/06/2018 21	60	1.3	
05/06/2018 22	60	1.4	
05/06/2018 23	60	1.4	
05/07/2018 00	60	1.4	
05/07/2018 01	60	1.4	
05/07/2018 02	60	1.4	
05/07/2018 03	60	1.3	
05/07/2018 04	60	1.3	
05/07/2018 05	60	1.3	
05/07/2018 06	60	1.3	

GECC PM CEMS Report for the Main Stack

Date/Time	Main Stack Online (mins)	PM CEMS Backscatter Energy (% of full scale)	Comments
		PM CEMS output is backscatter energy. Since a successful correlation test has not been performed, accurate PM concentrations cannot be calculated.	
05/07/2018 07	60	1.4	
05/07/2018 08	60	1.4	
05/07/2018 09	60	1.4	
05/07/2018 10	60	1.4	
05/07/2018 11	60	1.4	
05/07/2018 12	60	1.3	
05/07/2018 13	60	1.4	
05/07/2018 14	60	1.4	
05/07/2018 15	60	1.4	
05/07/2018 16	60	1.4	
05/07/2018 17	60	1.4	
05/07/2018 18	60	1.5	
05/07/2018 19	60	1.4	
05/07/2018 20	60	1.4	
05/07/2018 21	60	1.3	
05/07/2018 22	60	1.4	
05/07/2018 23	60	1.3	
05/08/2018 00	60	1.3	
05/08/2018 01	60	1.2	
05/08/2018 02	60	1.2	
05/08/2018 03	60	1.3	
05/08/2018 04	60	1.3	
05/08/2018 05	60	1.4	
05/08/2018 06	60	1.3	
05/08/2018 07	60	1.5	
05/08/2018 08	60	1.4	
05/08/2018 09	60	1.3	
05/08/2018 10	60	1.3	
05/08/2018 11	60	1.4	
05/08/2018 12	60	1.4	
05/08/2018 13	60	1.3	
05/08/2018 14	60	1.4	
05/08/2018 15	60	1.3	
05/08/2018 16	60	1.4	
05/08/2018 17	60	1.4	
05/08/2018 18	60	1.4	
05/08/2018 19	60	1.4	
05/08/2018 20	60	1.3	
05/08/2018 21	60	1.3	
05/08/2018 22	60	1.3	
05/08/2018 23	60	1.3	
05/09/2018 00	60	1.3	
05/09/2018 01	60	1.3	
05/09/2018 02	60	1.3	
05/09/2018 03	60	1.3	
05/09/2018 04	60	1.4	
05/09/2018 05	60	1.3	
05/09/2018 06	60	1.3	
05/09/2018 07	60	1.3	

GECC PM CEMS Report for the Main Stack

Date/Time	Main Stack Online (mins)	PM CEMS Backscatter Energy (% of full scale)	Comments
		PM CEMS output is backscatter energy. Since a successful correlation test has not been performed, accurate PM concentrations cannot be calculated.	
05/09/2018 08	60	25.9	
05/09/2018 09	60	39.2	
05/09/2018 10	60	2	
05/09/2018 11	60	1.9	
05/09/2018 12	60	1.7	
05/09/2018 13	60	1.8	
05/09/2018 14	60	1.7	
05/09/2018 15	60	1.7	
05/09/2018 16	60	1.7	
05/09/2018 17	60	1.6	
05/09/2018 18	60	1.6	
05/09/2018 19	60	1.5	
05/09/2018 20	60	1.5	
05/09/2018 21	60	1.4	
05/09/2018 22	60	1.5	
05/09/2018 23	60	1.4	
05/10/2018 00	60	1.3	
05/10/2018 01	60	1.3	
05/10/2018 02	60	1.4	
05/10/2018 03	60	1.4	
05/10/2018 04	60	1.4	
05/10/2018 05	60	1.4	
05/10/2018 06	60	1.4	
05/10/2018 07	60	1.3	
05/10/2018 08	60	1.4	
05/10/2018 09	60	1.4	
05/10/2018 10	60	1.4	
05/10/2018 11	60	1.5	
05/10/2018 12	60	1.4	
05/10/2018 13	60	1.4	
05/10/2018 14	60	1.4	
05/10/2018 15	60	1.4	
05/10/2018 16	60	1.4	
05/10/2018 17	60	1.4	
05/10/2018 18	60	1.4	
05/10/2018 19	60	1.4	
05/10/2018 20	60	1.5	
05/10/2018 21	60	1.4	
05/10/2018 22	60	1.4	
05/10/2018 23	60	1.4	
05/11/2018 00	60	1.5	
05/11/2018 01	60	1.5	
05/11/2018 02	60	1.5	
05/11/2018 03	60	1.6	
05/11/2018 04	60	1.5	
05/11/2018 05	60	1.4	
05/11/2018 06	60	1.7	
05/11/2018 07	60	1.5	
05/11/2018 08	60	1.6	

GECC PM CEMS Report for the Main Stack

Date/Time	Main Stack Online (mins)	PM CEMS Backscatter Energy (% of full scale)	Comments
		PM CEMS output is backscatter energy. Since a successful correlation test has not been performed, accurate PM concentrations cannot be calculated.	
05/11/2018 09	60	1.6	
05/11/2018 10	60	1.7	
05/11/2018 11	60	1.7	
05/11/2018 12	60	1.7	
05/11/2018 13	60	1.6	
05/11/2018 14	60	1.5	
05/11/2018 15	60	1.5	
05/11/2018 16	60	1.5	
05/11/2018 17	60	1.5	
05/11/2018 18	60	1.4	
05/11/2018 19	60	1.4	
05/11/2018 20	60	1.5	
05/11/2018 21	60	1.5	
05/11/2018 22	60	1.5	
05/11/2018 23	60	1.4	
05/12/2018 00	60	1.4	
05/12/2018 01	60	1.4	
05/12/2018 02	60	1.4	
05/12/2018 03	60	1.5	
05/12/2018 04	60	1.5	
05/12/2018 05	60	1.5	
05/12/2018 06	60	1.5	
05/12/2018 07	60	1.6	
05/12/2018 08	60	1.6	
05/12/2018 09	60	1.7	
05/12/2018 10	60	1.7	
05/12/2018 11	60	1.7	
05/12/2018 12	60	1.7	
05/12/2018 13	60	1.7	
05/12/2018 14	60	1.7	
05/12/2018 15	60	1.6	
05/12/2018 16	60	1.5	
05/12/2018 17	60	1.6	
05/12/2018 18	60	1.6	
05/12/2018 19	60	1.8	
05/12/2018 20	60	1.7	
05/12/2018 21	60	1.7	
05/12/2018 22	60	1.7	
05/12/2018 23	60	1.7	
05/13/2018 00	60	1.6	
05/13/2018 01	60	1.5	
05/13/2018 02	60	1.7	
05/13/2018 03	60	1.6	
05/13/2018 04	60	1.7	
05/13/2018 05	60	1.7	
05/13/2018 06	60	1.7	
05/13/2018 07	60	1.7	
05/13/2018 08	60	1.7	
05/13/2018 09	60	1.7	

GECC PM CEMS Report for the Main Stack

Date/Time	Main Stack Online (mins)	PM CEMS Backscatter Energy (% of full scale)	Comments
		PM CEMS output is backscatter energy. Since a successful correlation test has not been performed, accurate PM concentrations cannot be calculated.	
05/13/2018 10	60	1.7	
05/13/2018 11	60	1.6	
05/13/2018 12	60	1.6	
05/13/2018 13	60	1.5	
05/13/2018 14	60	1.5	
05/13/2018 15	60	1.5	
05/13/2018 16	60	1.5	
05/13/2018 17	60	1.4	
05/13/2018 18	60	1.5	
05/13/2018 19	60	1.6	
05/13/2018 20	60	1.6	
05/13/2018 21	60	1.7	
05/13/2018 22	60	1.6	
05/13/2018 23	60	1.6	
05/14/2018 00	60	1.6	
05/14/2018 01	60	1.6	
05/14/2018 02	60	1.6	
05/14/2018 03	60	1.6	
05/14/2018 04	60	1.6	
05/14/2018 05	60	1.6	
05/14/2018 06	60	1.7	
05/14/2018 07	60	1.7	
05/14/2018 08	60	1.7	
05/14/2018 09	60	1.6	
05/14/2018 10	60	1.6	
05/14/2018 11	60	1.6	
05/14/2018 12	60	1.5	
05/14/2018 13	60	1.5	
05/14/2018 14	60	1.5	
05/14/2018 15	60	1.5	
05/14/2018 16	60	1.4	
05/14/2018 17	60	1.8	
05/14/2018 18	60	1.4	
05/14/2018 19	60	1.5	
05/14/2018 20	60	1.5	
05/14/2018 21	60	13.5	
05/14/2018 22	60	1.5	
05/14/2018 23	60	1.5	
05/15/2018 00	60	1.4	
05/15/2018 01	60	1.3	
05/15/2018 02	60	1.4	
05/15/2018 03	60	1.3	
05/15/2018 04	60	1.4	
05/15/2018 05	60	1.3	
05/15/2018 06	60	1.4	
05/15/2018 07	60	1.3	
05/15/2018 08	60	1.4	
05/15/2018 09	60	1.4	
05/15/2018 10	60	1.5	

GECC PM CEMS Report for the Main Stack

Date/Time	Main Stack Online (mins)	PM CEMS Backscatter Energy (% of full scale)	Comments
		PM CEMS output is backscatter energy. Since a successful correlation test has not been performed, accurate PM concentrations cannot be calculated.	
05/15/2018 11	60	1.4	
05/15/2018 12	60	1.4	
05/15/2018 13	60	1.4	
05/15/2018 14	60	1.5	
05/15/2018 15	60	1.4	
05/15/2018 16	60	1.5	
05/15/2018 17	60	1.5	
05/15/2018 18	60	1.5	
05/15/2018 19	60	1.4	
05/15/2018 20	60	1.4	
05/15/2018 21	60	1.4	
05/15/2018 22	60	1.4	
05/15/2018 23	60	1.4	
05/16/2018 00	60	1.3	
05/16/2018 01	60	1.4	
05/16/2018 02	60	1.4	
05/16/2018 03	60	1.4	
05/16/2018 04	60	1.4	
05/16/2018 05	60	1.4	
05/16/2018 06	60	1.4	
05/16/2018 07	60	1.3	
05/16/2018 08	60	1.3	
05/16/2018 09	60	1.3	
05/16/2018 10	60	1.3	
05/16/2018 11	60	1.4	
05/16/2018 12	60	1.4	
05/16/2018 13	60	1.4	
05/16/2018 14	60	1.4	
05/16/2018 15	60	1.4	
05/16/2018 16	60	1.4	
05/16/2018 17	60	1.5	
05/16/2018 18	60	1.5	
05/16/2018 19	60	1.5	
05/16/2018 20	60	1.5	
05/16/2018 21	60	1.5	
05/16/2018 22	60	1.4	
05/16/2018 23	60	1.4	
05/17/2018 00	60	1.4	
05/17/2018 01	60	1.4	
05/17/2018 02	60	1.4	
05/17/2018 03	60	1.4	
05/17/2018 04	60	1.4	
05/17/2018 05	60	1.5	
05/17/2018 06	60	1.4	
05/17/2018 07	60	1.4	
05/17/2018 08	60	1.3	
05/17/2018 09	60	1.3	
05/17/2018 10	60	1.5	
05/17/2018 11	60	1.4	

GECC PM CEMS Report for the Main Stack

Date/Time	Main Stack Online (mins)	PM CEMS Backscatter Energy (% of full scale)	Comments
		PM CEMS output is backscatter energy. Since a successful correlation test has not been performed, accurate PM concentrations cannot be calculated.	
05/17/2018 12	60	1.4	
05/17/2018 13	60	1.5	
05/17/2018 14	60	1.5	
05/17/2018 15	60	1.5	
05/17/2018 16	60	1.4	
05/17/2018 17	60	1.5	
05/17/2018 18	60	1.5	
05/17/2018 19	60	1.4	
05/17/2018 20	60	1.4	
05/17/2018 21	60	1.3	
05/17/2018 22	60	1.4	
05/17/2018 23	60	1.3	
05/18/2018 00	60	1.2	
05/18/2018 01	60	1.3	
05/18/2018 02	60	1.3	
05/18/2018 03	60	1.5	
05/18/2018 04	60	1.4	
05/18/2018 05	60	1.4	
05/18/2018 06	60	1.4	
05/18/2018 07	60	1.3	
05/18/2018 08	60	1.3	
05/18/2018 09	60	1.3	
05/18/2018 10	60	1.3	
05/18/2018 11	60	1.3	
05/18/2018 12	60	1.3	
05/18/2018 13	60	1.4	
05/18/2018 14	60	1.4	
05/18/2018 15	60	1.3	
05/18/2018 16	60	1.4	
05/18/2018 17	60	1.3	
05/18/2018 18	60	1.3	
05/18/2018 19	60	1.3	
05/18/2018 20	60	1.3	
05/18/2018 21	60	1.3	
05/18/2018 22	60	1.3	
05/18/2018 23	60	1.4	
05/19/2018 00	60	1.3	
05/19/2018 01	60	1.4	
05/19/2018 02	60	1.3	
05/19/2018 03	60	1.3	
05/19/2018 04	60	1.3	
05/19/2018 05	60	1.3	
05/19/2018 06	60	1.3	
05/19/2018 07	60	1.4	
05/19/2018 08	60	1.4	
05/19/2018 09	60	1.4	
05/19/2018 10	60	1.4	
05/19/2018 11	60	1.5	
05/19/2018 12	60	1.6	

GECC PM CEMS Report for the Main Stack

Date/Time	Main Stack Online (mins)	PM CEMS Backscatter Energy (% of full scale)	Comments
		PM CEMS output is backscatter energy. Since a successful correlation test has not been performed, accurate PM concentrations cannot be calculated.	
05/19/2018 13	60	1.5	
05/19/2018 14	60	1.5	
05/19/2018 15	60	1.5	
05/19/2018 16	60	1.4	
05/19/2018 17	60	1.5	
05/19/2018 18	60	1.6	
05/19/2018 19	60	1.5	
05/19/2018 20	60	1.5	
05/19/2018 21	60	1.5	
05/19/2018 22	60	1.5	
05/19/2018 23	60	1.5	
05/20/2018 00	60	1.4	
05/20/2018 01	60	1.4	
05/20/2018 02	60	1.5	
05/20/2018 03	60	1.4	
05/20/2018 04	60	1.4	
05/20/2018 05	60	1.4	
05/20/2018 06	60	1.3	
05/20/2018 07	60	1.3	
05/20/2018 08	60	1.3	
05/20/2018 09	60	1.4	
05/20/2018 10	60	1.4	
05/20/2018 11	60	1.4	
05/20/2018 12	60	1.4	
05/20/2018 13	60	1.4	
05/20/2018 14	60	1.5	
05/20/2018 15	60	1.4	
05/20/2018 16	60	1.4	
05/20/2018 17	60	1.4	
05/20/2018 18	60	1.6	
05/20/2018 19	60	1.7	
05/20/2018 20	60	1.7	
05/20/2018 21	60	1.6	
05/20/2018 22	60	1.6	
05/20/2018 23	60	1.5	
05/21/2018 00	60	1.3	
05/21/2018 01	60	1.3	
05/21/2018 02	60	1.4	
05/21/2018 03	60	1.4	
05/21/2018 04	60	1.4	
05/21/2018 05	60	1.4	
05/21/2018 06	60	1.4	
05/21/2018 07	60	1.4	
05/21/2018 08	60	1.4	
05/21/2018 09	60	1.4	
05/21/2018 10	60	1.3	
05/21/2018 11	60	1.4	
05/21/2018 12	60	1.5	
05/21/2018 13	60	1.5	

GECC PM CEMS Report for the Main Stack

Date/Time	Main Stack Online (mins)	PM CEMS Backscatter Energy (% of full scale)	Comments
		PM CEMS output is backscatter energy. Since a successful correlation test has not been performed, accurate PM concentrations cannot be calculated.	
05/21/2018 14	60	1.5	
05/21/2018 15	60	1.5	
05/21/2018 16	60	1.5	
05/21/2018 17	60	1.5	
05/21/2018 18	60	1.5	
05/21/2018 19	60	1.5	
05/21/2018 20	60	1.5	
05/21/2018 21	60	1.4	
05/21/2018 22	60	1.3	
05/21/2018 23	60	1.4	
05/22/2018 00	60	1.3	
05/22/2018 01	60	1.4	
05/22/2018 02	60	1.3	
05/22/2018 03	60	1.3	
05/22/2018 04	60	1.3	
05/22/2018 05	60	1.3	
05/22/2018 06	60	1.4	
05/22/2018 07	60	1.4	
05/22/2018 08	60	1.5	
05/22/2018 09	60	1.5	
05/22/2018 10	60	1.5	
05/22/2018 11	60	1.5	
05/22/2018 12	60	1.5	
05/22/2018 13	60	1.5	
05/22/2018 14	60	1.5	
05/22/2018 15	60	1.5	
05/22/2018 16	60	1.5	
05/22/2018 17	60	1.6	
05/22/2018 18	60	1.6	
05/22/2018 19	60	1.7	
05/22/2018 20	60	1.7	
05/22/2018 21	60	1.5	
05/22/2018 22	60	1.4	
05/22/2018 23	60	1.3	
05/23/2018 00	60	1.3	
05/23/2018 01	60	1.4	
05/23/2018 02	60	1.3	
05/23/2018 03	60	1.4	
05/23/2018 04	60	1.4	
05/23/2018 05	60	1.4	
05/23/2018 06	60	1.4	
05/23/2018 07	60	1.3	
05/23/2018 08	60	1.4	
05/23/2018 09	60	1.5	
05/23/2018 10	60	1.5	
05/23/2018 11	60	1.5	
05/23/2018 12	60	1.5	
05/23/2018 13	60	1.5	
05/23/2018 14	60	1.5	

GECC PM CEMS Report for the Main Stack

Date/Time	Main Stack Online (mins)	PM CEMS Backscatter Energy (% of full scale)	Comments
		PM CEMS output is backscatter energy. Since a successful correlation test has not been performed, accurate PM concentrations cannot be calculated.	
05/23/2018 15	60	1.6	
05/23/2018 16	60	1.5	
05/23/2018 17	60	1.4	
05/23/2018 18	60	1.4	
05/23/2018 19	60	1.9	
05/23/2018 20	60	2.2	
05/23/2018 21	60	1.9	
05/23/2018 22	60	1.6	
05/23/2018 23	60	1.5	
05/24/2018 00	60	1.4	
05/24/2018 01	60	1.5	
05/24/2018 02	60	1.5	
05/24/2018 03	60	1.6	
05/24/2018 04	60	1.5	
05/24/2018 05	60	1.4	
05/24/2018 06	60	1.4	
05/24/2018 07	60	1.7	
05/24/2018 08	60	5.7	
05/24/2018 09	60	2.9	
05/24/2018 10	60	1.6	
05/24/2018 11	60	1.5	
05/24/2018 12	60	1.6	
05/24/2018 13	60	1.5	
05/24/2018 14	60	1.5	
05/24/2018 15	60	1.4	
05/24/2018 16	60	1.5	
05/24/2018 17	60	1.4	
05/24/2018 18	60	1.4	
05/24/2018 19	60	1.5	
05/24/2018 20	60	1.5	
05/24/2018 21	60	1.5	
05/24/2018 22	60	1.5	
05/24/2018 23	60	1.5	
05/25/2018 00	60	1.4	
05/25/2018 01	60	1.5	
05/25/2018 02	60	1.4	
05/25/2018 03	60	1.4	
05/25/2018 04	60	1.4	
05/25/2018 05	60	1.3	
05/25/2018 06	60	1.4	
05/25/2018 07	60	1.5	
05/25/2018 08	60	1.4	
05/25/2018 09	60	1.4	
05/25/2018 10	60	1.4	
05/25/2018 11	60	1.4	
05/25/2018 12	60	1.4	
05/25/2018 13	60	1.4	
05/25/2018 14	60	1.5	
05/25/2018 15	60	1.4	

GECC PM CEMS Report for the Main Stack

Date/Time	Main Stack Online (mins)	PM CEMS Backscatter Energy (% of full scale)	Comments
		PM CEMS output is backscatter energy. Since a successful correlation test has not been performed, accurate PM concentrations cannot be calculated.	
05/25/2018 16	60	1.4	
05/25/2018 17	60	1.4	
05/25/2018 18	60	1.3	
05/25/2018 19	60	1.3	
05/25/2018 20	60	1.3	
05/25/2018 21	60	1.3	
05/25/2018 22	60	1.3	
05/25/2018 23	60	1.4	
05/26/2018 00	60	1.3	
05/26/2018 01	60	1.3	
05/26/2018 02	60	1.4	
05/26/2018 03	60	1.3	
05/26/2018 04	60	1.4	
05/26/2018 05	60	1.3	
05/26/2018 06	60	1.4	
05/26/2018 07	60	1.5	
05/26/2018 08	60	1.5	
05/26/2018 09	60	1.5	
05/26/2018 10	60	1.4	
05/26/2018 11	60	1.5	
05/26/2018 12	60	1.5	
05/26/2018 13	60	1.4	
05/26/2018 14	60	1.4	
05/26/2018 15	60	1.4	
05/26/2018 16	60	1.4	
05/26/2018 17	60	1.4	
05/26/2018 18	60	1.3	
05/26/2018 19	60	1.4	
05/26/2018 20	60	1.3	
05/26/2018 21	60	1.4	
05/26/2018 22	60	1.4	
05/26/2018 23	60	1.4	
05/27/2018 00	60	1.4	
05/27/2018 01	60	1.3	
05/27/2018 02	60	1.3	
05/27/2018 03	60	1.3	
05/27/2018 04	60	1.3	
05/27/2018 05	60	1.4	
05/27/2018 06	60	1.4	
05/27/2018 07	60	1.5	
05/27/2018 08	60	1.5	
05/27/2018 09	60	1.5	
05/27/2018 10	60	1.5	
05/27/2018 11	60	1.6	
05/27/2018 12	60	1.5	
05/27/2018 13	60	1.4	
05/27/2018 14	60	1.5	
05/27/2018 15	60	1.4	
05/27/2018 16	60	1.4	

GECC PM CEMS Report for the Main Stack

Date/Time	Main Stack Online (mins)	PM CEMS Backscatter Energy (% of full scale)	Comments
		PM CEMS output is backscatter energy. Since a successful correlation test has not been performed, accurate PM concentrations cannot be calculated.	
05/27/2018 17	60	1.5	
05/27/2018 18	60	1.5	
05/27/2018 19	60	1.5	
05/27/2018 20	60	1.4	
05/27/2018 21	60	1.4	
05/27/2018 22	60	1.5	
05/27/2018 23	60	1.5	
05/28/2018 00	60	1.5	
05/28/2018 01	60	1.4	
05/28/2018 02	60	1.7	
05/28/2018 03	60	1.5	
05/28/2018 04	60	1.5	
05/28/2018 05	60	1.5	
05/28/2018 06	60	1.5	
05/28/2018 07	60	1.6	
05/28/2018 08	60	1.6	
05/28/2018 09	60	1.5	
05/28/2018 10	60	1.5	
05/28/2018 11	60	1.5	
05/28/2018 12	60	1.5	
05/28/2018 13	60	1.4	
05/28/2018 14	60	1.3	
05/28/2018 15	60	1.3	
05/28/2018 16	60	1.3	
05/28/2018 17	60	1.3	
05/28/2018 18	60	1.4	
05/28/2018 19	60	1.3	
05/28/2018 20	60	1.4	
05/28/2018 21	60	1.5	
05/28/2018 22	60	1.5	
05/28/2018 23	60	1.4	
05/29/2018 00	60	1.4	
05/29/2018 01	60	1.6	
05/29/2018 02	60	1.7	
05/29/2018 03	60	1.6	
05/29/2018 04	60	1.6	
05/29/2018 05	60	1.5	
05/29/2018 06	60	1.4	
05/29/2018 07	60	1.3	
05/29/2018 08	60	1.5	
05/29/2018 09	60	1.4	
05/29/2018 10	60	1.5	
05/29/2018 11	60	1.6	
05/29/2018 12	60	1.6	
05/29/2018 13	60	1.5	
05/29/2018 14	60	1.5	
05/29/2018 15	60	1.5	
05/29/2018 16	60	1.6	
05/29/2018 17	60	1.6	

GECC PM CEMS Report for the Main Stack

Date/Time	Main Stack Online (mins)	PM CEMS Backscatter Energy (% of full scale)	Comments
		PM CEMS output is backscatter energy. Since a successful correlation test has not been performed, accurate PM concentrations cannot be calculated.	
05/29/2018 18	60	1.6	
05/29/2018 19	60	1.6	
05/29/2018 20	60	1.4	
05/29/2018 21	60	1.5	
05/29/2018 22	60	1.6	
05/29/2018 23	60	1.5	
05/30/2018 00	60	1.5	
05/30/2018 01	60	1.5	
05/30/2018 02	60	1.4	
05/30/2018 03	60	1.4	
05/30/2018 04	60	1.5	
05/30/2018 05	60	1.4	
05/30/2018 06	60	1.4	
05/30/2018 07	60	1.5	
05/30/2018 08	60	1.5	
05/30/2018 09	60	1.5	
05/30/2018 10	60	1.5	
05/30/2018 11	60	1.5	
05/30/2018 12	60	1.6	
05/30/2018 13	60	1.5	
05/30/2018 14	60	1.4	
05/30/2018 15	60	1.5	
05/30/2018 16	60	1.4	
05/30/2018 17	60	1.4	
05/30/2018 18	60	1.4	
05/30/2018 19	60	1.4	
05/30/2018 20	60	1.4	
05/30/2018 21	60	1.4	
05/30/2018 22	60	1.4	
05/30/2018 23	60	1.3	
05/31/2018 00	60	1.4	
05/31/2018 01	60	1.4	
05/31/2018 02	60	1.4	
05/31/2018 03	60	1.4	
05/31/2018 04	60	1.4	
05/31/2018 05	60	1.4	
05/31/2018 06	60	1.4	
05/31/2018 07	60	1.4	
05/31/2018 08	60	1.5	
05/31/2018 09	60	1.4	
05/31/2018 10	60	1.4	
05/31/2018 11	60	1.4	
05/31/2018 12	60	1.4	
05/31/2018 13	60	1.4	
05/31/2018 14	60	1.4	
05/31/2018 15	60	1.4	
05/31/2018 16	60	1.4	
05/31/2018 17	60	1.4	
05/31/2018 18	60	1.4	

GECC PM CEMS Report for the Main Stack

Date/Time	Main Stack Online (mins)	PM CEMS Backscatter Energy (% of full scale)	Comments
		PM CEMS output is backscatter energy. Since a successful correlation test has not been performed, accurate PM concentrations cannot be calculated.	
05/31/2018 19	60	1.4	
05/31/2018 20	60	1.4	
05/31/2018 21	60	1.4	
05/31/2018 22	60	1.4	
05/31/2018 23	60	1.4	
06/01/2018 00	60	1.4	
06/01/2018 01	60	1.4	
06/01/2018 02	60	1.4	
06/01/2018 03	60	1.4	
06/01/2018 04	60	1.4	
06/01/2018 05	60	1.4	
06/01/2018 06	60	1.4	
06/01/2018 07	60	1.5	
06/01/2018 08	60	1.5	
06/01/2018 09	60	1.5	
06/01/2018 10	60	1.4	
06/01/2018 11	60	1.5	
06/01/2018 12	60	1.5	
06/01/2018 13	60	1.4	
06/01/2018 14	60	1.4	
06/01/2018 15	60	1.4	
06/01/2018 16	60	1.5	
06/01/2018 17	60	1.4	
06/01/2018 18	60	1.4	
06/01/2018 19	60	1.4	
06/01/2018 20	60	1.4	
06/01/2018 21	60	1.4	
06/01/2018 22	60	1.3	
06/01/2018 23	60	1.4	
06/02/2018 00	60	1.4	
06/02/2018 01	60	1.3	
06/02/2018 02	60	1.3	
06/02/2018 03	60	1.4	
06/02/2018 04	60	1.4	
06/02/2018 05	60	1.4	
06/02/2018 06	60	1.4	
06/02/2018 07	60	1.5	
06/02/2018 08	60	1.4	
06/02/2018 09	60	1.5	
06/02/2018 10	60	1.5	
06/02/2018 11	60	1.4	
06/02/2018 12	60	1.3	
06/02/2018 13	60	1.4	
06/02/2018 14	60	1.5	
06/02/2018 15	60	1.4	
06/02/2018 16	60	1.4	
06/02/2018 17	60	1.4	
06/02/2018 18	60	1.5	
06/02/2018 19	60	1.5	

GECC PM CEMS Report for the Main Stack

Date/Time	Main Stack Online (mins)	PM CEMS Backscatter Energy (% of full scale)	Comments
		PM CEMS output is backscatter energy. Since a successful correlation test has not been performed, accurate PM concentrations cannot be calculated.	
06/02/2018 20	60	1.4	
06/02/2018 21	60	1.4	
06/02/2018 22	60	1.4	
06/02/2018 23	60	1.3	
06/03/2018 00	60	1.4	
06/03/2018 01	60	1.3	
06/03/2018 02	60	1.3	
06/03/2018 03	60	1.3	
06/03/2018 04	60	1.3	
06/03/2018 05	60	1.3	
06/03/2018 06	60	1.3	
06/03/2018 07	60	1.4	
06/03/2018 08	60	1.3	
06/03/2018 09	60	1.4	
06/03/2018 10	60	1.5	
06/03/2018 11	60	1.5	
06/03/2018 12	60	1.5	
06/03/2018 13	60	1.5	
06/03/2018 14	60	1.4	
06/03/2018 15	60	1.5	
06/03/2018 16	60	1.4	
06/03/2018 17	60	1.4	
06/03/2018 18	60	1.4	
06/03/2018 19	60	1.4	
06/03/2018 20	60	1.4	
06/03/2018 21	60	1.4	
06/03/2018 22	60	1.3	
06/03/2018 23	60	1.4	
06/04/2018 00	60	1.4	
06/04/2018 01	60	1.3	
06/04/2018 02	60	1.3	
06/04/2018 03	60	1.4	
06/04/2018 04	60	1.4	
06/04/2018 05	60	1.3	
06/04/2018 06	60	1.4	
06/04/2018 07	60	1.4	
06/04/2018 08	60	1.5	
06/04/2018 09	60	1.3	
06/04/2018 10	60	1.3	
06/04/2018 11	60	1.4	
06/04/2018 12	60	1.5	
06/04/2018 13	60	1.5	
06/04/2018 14	60	1.5	
06/04/2018 15	60	1.6	
06/04/2018 16	60	1.5	
06/04/2018 17	60	1.5	
06/04/2018 18	60	1.5	
06/04/2018 19	60	1.5	
06/04/2018 20	60	1.5	

GECC PM CEMS Report for the Main Stack

Date/Time	Main Stack Online (mins)	PM CEMS Backscatter Energy (% of full scale)	Comments
		PM CEMS output is backscatter energy. Since a successful correlation test has not been performed, accurate PM concentrations cannot be calculated.	
06/04/2018 21	60	1.5	
06/04/2018 22	60	1.4	
06/04/2018 23	60	1.4	
06/05/2018 00	60	1.4	
06/05/2018 01	60	1.4	
06/05/2018 02	60	1.4	
06/05/2018 03	60	1.4	
06/05/2018 04	60	1.4	
06/05/2018 05	60	1.3	
06/05/2018 06	60	1.4	
06/05/2018 07	60	1.5	
06/05/2018 08	60	1.6	
06/05/2018 09	60	1.5	
06/05/2018 10	60	1.5	
06/05/2018 11	60	1.5	
06/05/2018 12	60	1.4	
06/05/2018 13	60	1.4	
06/05/2018 14	60	1.5	
06/05/2018 15	60	1.5	
06/05/2018 16	60	1.4	
06/05/2018 17	60	1.5	
06/05/2018 18	60	1.4	
06/05/2018 19	60	1.4	
06/05/2018 20	60	1.5	
06/05/2018 21	60	1.6	
06/05/2018 22	60	1.5	
06/05/2018 23	60	1.5	
06/06/2018 00	60	1.6	
06/06/2018 01	60	1.5	
06/06/2018 02	60	1.4	
06/06/2018 03	60	1.4	
06/06/2018 04	60	1.6	
06/06/2018 05	60	1.5	
06/06/2018 06	60	1.5	
06/06/2018 07	60	1.5	
06/06/2018 08	60	1.5	
06/06/2018 09	60	1.6	
06/06/2018 10	60	1.5	
06/06/2018 11	60	1.5	
06/06/2018 12	60	1.5	
06/06/2018 13	60	8.5	
06/06/2018 14	60	5.6	
06/06/2018 15	60	1.5	
06/06/2018 16	60	1.6	
06/06/2018 17	60	1.5	
06/06/2018 18	60	1.6	
06/06/2018 19	60	1.6	
06/06/2018 20	60	1.4	
06/06/2018 21	60	1.6	

GECC PM CEMS Report for the Main Stack

Date/Time	Main Stack Online (mins)	PM CEMS Backscatter Energy (% of full scale)	Comments
		PM CEMS output is backscatter energy. Since a successful correlation test has not been performed, accurate PM concentrations cannot be calculated.	
06/06/2018 22	60	1.6	
06/06/2018 23	60	1.6	
06/07/2018 00	60	1.5	
06/07/2018 01	60	1.5	
06/07/2018 02	60	1.6	
06/07/2018 03	60	1.5	
06/07/2018 04	60	1.5	
06/07/2018 05	60	1.5	
06/07/2018 06	60	1.6	
06/07/2018 07	60	1.6	
06/07/2018 08	60	1.5	
06/07/2018 09	60	1.5	
06/07/2018 10	60	1.4	
06/07/2018 11	60	1.5	
06/07/2018 12	60	1.5	
06/07/2018 13	60	1.4	
06/07/2018 14	60	1.4	
06/07/2018 15	60	1.4	
06/07/2018 16	60	1.3	
06/07/2018 17	60	1.4	
06/07/2018 18	60	1.4	
06/07/2018 19	60	1.4	
06/07/2018 20	60	1.4	
06/07/2018 21	60	1.4	
06/07/2018 22	60	1.4	
06/07/2018 23	60	1.5	
06/08/2018 00	60	1.5	
06/08/2018 01	60	1.5	
06/08/2018 02	60	1.5	
06/08/2018 03	60	1.5	
06/08/2018 04	60	1.4	
06/08/2018 05	60	1.4	
06/08/2018 06	60	1.4	
06/08/2018 07	60	1.5	
06/08/2018 08	60	1.5	
06/08/2018 09	60	1.4	
06/08/2018 10	60	1.5	
06/08/2018 11	60	1.4	
06/08/2018 12	60	1.4	
06/08/2018 13	60	1.4	
06/08/2018 14	60	1.4	
06/08/2018 15	60	1.4	
06/08/2018 16	60	1.4	
06/08/2018 17	60	1.5	
06/08/2018 18	60	1.4	
06/08/2018 19	60	1.4	
06/08/2018 20	60	1.4	
06/08/2018 21	60	1.4	
06/08/2018 22	60	1.5	

GECC PM CEMS Report for the Main Stack

Date/Time	Main Stack Online (mins)	PM CEMS Backscatter Energy (% of full scale)	Comments
		PM CEMS output is backscatter energy. Since a successful correlation test has not been performed, accurate PM concentrations cannot be calculated.	
06/08/2018 23	60	1.5	
06/09/2018 00	60	1.4	
06/09/2018 01	60	1.4	
06/09/2018 02	60	1.5	
06/09/2018 03	60	1.4	
06/09/2018 04	60	1.4	
06/09/2018 05	60	1.5	
06/09/2018 06	60	1.5	
06/09/2018 07	60	1.5	
06/09/2018 08	60	1.5	
06/09/2018 09	60	1.5	
06/09/2018 10	60	1.8	
06/09/2018 11	60	1.5	
06/09/2018 12	60	1.2	
06/09/2018 13	60	1.3	
06/09/2018 14	60	1.4	
06/09/2018 15	60	1.4	
06/09/2018 16	60	1.4	
06/09/2018 17	60	1.5	
06/09/2018 18	60	1.4	
06/09/2018 19	60	1.4	
06/09/2018 20	60	1.5	
06/09/2018 21	60	1.4	
06/09/2018 22	60	1.3	
06/09/2018 23	60	1.4	
06/10/2018 00	60	1.4	
06/10/2018 01	60	1.3	
06/10/2018 02	60	1.3	
06/10/2018 03	60	1.4	
06/10/2018 04	60	1.4	
06/10/2018 05	60	1.5	
06/10/2018 06	60	1.4	
06/10/2018 07	60	1.5	
06/10/2018 08	60	1.5	
06/10/2018 09	60	1.5	
06/10/2018 10	60	1.5	
06/10/2018 11	60	1.4	
06/10/2018 12	60	1.5	
06/10/2018 13	60	1.5	
06/10/2018 14	60	1.3	
06/10/2018 15	60	1.4	
06/10/2018 16	60	1.4	
06/10/2018 17	60	1.4	
06/10/2018 18	60	1.4	
06/10/2018 19	60	1.4	
06/10/2018 20	60	1.4	
06/10/2018 21	60	1.3	
06/10/2018 22	60	1.3	
06/10/2018 23	60	1.3	

GECC PM CEMS Report for the Main Stack

Date/Time	Main Stack Online (mins)	PM CEMS Backscatter Energy (% of full scale)	Comments
		PM CEMS output is backscatter energy. Since a successful correlation test has not been performed, accurate PM concentrations cannot be calculated.	
06/11/2018 00	60	1.3	
06/11/2018 01	60	1.4	
06/11/2018 02	60	1.3	
06/11/2018 03	60	1.4	
06/11/2018 04	60	1.4	
06/11/2018 05	60	1.3	
06/11/2018 06	60	1.3	
06/11/2018 07	60	1.3	
06/11/2018 08	60	1.4	
06/11/2018 09	60	1.3	
06/11/2018 10	60	1.4	
06/11/2018 11	60	1.4	
06/11/2018 12	60	1.3	
06/11/2018 13	60	1.3	
06/11/2018 14	60	1.3	
06/11/2018 15	60	1.3	
06/11/2018 16	60	1.3	
06/11/2018 17	60	1.4	
06/11/2018 18	60	1.4	
06/11/2018 19	60	1.4	
06/11/2018 20	60	1.3	
06/11/2018 21	60	1.3	
06/11/2018 22	60	1.4	
06/11/2018 23	60	1.4	
06/12/2018 00	60	1.4	
06/12/2018 01	60	1.4	
06/12/2018 02	60	1.3	
06/12/2018 03	60	1.4	
06/12/2018 04	60	1.4	
06/12/2018 05	60	1.4	
06/12/2018 06	60	1.4	
06/12/2018 07	60	1.4	
06/12/2018 08	60	1.5	
06/12/2018 09	60	1.3	
06/12/2018 10	60	1.4	
06/12/2018 11	60	1.3	
06/12/2018 12	60	1.3	
06/12/2018 13	60	1.4	
06/12/2018 14	60	1.3	
06/12/2018 15	60	1.3	
06/12/2018 16	60	1.3	
06/12/2018 17	60	1.4	
06/12/2018 18	60	1.4	
06/12/2018 19	60	1.4	
06/12/2018 20	60	1.4	
06/12/2018 21	60	1.4	
06/12/2018 22	60	1.4	
06/12/2018 23	60	1.3	
06/13/2018 00	60	1.4	

GECC PM CEMS Report for the Main Stack

Date/Time	Main Stack Online (mins)	PM CEMS Backscatter Energy (% of full scale)	Comments
		PM CEMS output is backscatter energy. Since a successful correlation test has not been performed, accurate PM concentrations cannot be calculated.	
06/13/2018 01	60	1.5	
06/13/2018 02	60	1.4	
06/13/2018 03	60	1.4	
06/13/2018 04	60	1.3	
06/13/2018 05	60	1.3	
06/13/2018 06	60	1.4	
06/13/2018 07	60	1.4	
06/13/2018 08	60	1.4	
06/13/2018 09	60	1.4	
06/13/2018 10	60	1.4	
06/13/2018 11	60	1.3	
06/13/2018 12	60	1.3	
06/13/2018 13	60	1.3	
06/13/2018 14	60	1.4	
06/13/2018 15	60	1.4	
06/13/2018 16	60	1.5	
06/13/2018 17	60	1.4	
06/13/2018 18	60	1.4	
06/13/2018 19	60	1.4	
06/13/2018 20	60	1.3	
06/13/2018 21	60	1.3	
06/13/2018 22	60	1.4	
06/13/2018 23	60	1.4	
06/14/2018 00	60	1.3	
06/14/2018 01	60	1.4	
06/14/2018 02	60	1.4	
06/14/2018 03	60	1.3	
06/14/2018 04	60	1.3	
06/14/2018 05	60	1.3	
06/14/2018 06	60	1.3	
06/14/2018 07	60	1.3	
06/14/2018 08	60	1.3	
06/14/2018 09	60	1.4	
06/14/2018 10	60	1.4	
06/14/2018 11	60	1.4	
06/14/2018 12	60	1.3	
06/14/2018 13	60	1.3	
06/14/2018 14	60	1.4	
06/14/2018 15	60	1.4	
06/14/2018 16	60	1.6	
06/14/2018 17	60	1.4	
06/14/2018 18	60	1.4	
06/14/2018 19	60	1.4	
06/14/2018 20	60	1.4	
06/14/2018 21	60	1.5	
06/14/2018 22	60	1.4	
06/14/2018 23	60	1.5	
06/15/2018 00	60	1.3	
06/15/2018 01	60	1.3	

GECC PM CEMS Report for the Main Stack

Date/Time	Main Stack Online (mins)	PM CEMS Backscatter Energy (% of full scale)	Comments
		PM CEMS output is backscatter energy. Since a successful correlation test has not been performed, accurate PM concentrations cannot be calculated.	
06/15/2018 02	60	1.3	
06/15/2018 03	60	1.4	
06/15/2018 04	60	1.3	
06/15/2018 05	60	1.3	
06/15/2018 06	60	1.3	
06/15/2018 07	60	1.4	
06/15/2018 08	60	1.3	
06/15/2018 09	60	1.4	
06/15/2018 10	60	1.4	
06/15/2018 11	60	1.3	
06/15/2018 12	60	1.3	
06/15/2018 13	60	1.3	
06/15/2018 14	60	1.3	
06/15/2018 15	60	1.3	
06/15/2018 16	60	1.4	
06/15/2018 17	60	1.4	
06/15/2018 18	60	1.4	
06/15/2018 19	60	1.3	
06/15/2018 20	60	1.4	
06/15/2018 21	60	1.4	
06/15/2018 22	60	1.4	
06/15/2018 23	60	1.4	
06/16/2018 00	60	1.5	
06/16/2018 01	60	1.5	
06/16/2018 02	60	1.4	
06/16/2018 03	60	1.4	
06/16/2018 04	60	1.4	
06/16/2018 05	60	1.4	
06/16/2018 06	60	1.4	
06/16/2018 07	60	1.4	
06/16/2018 08	60	1.4	
06/16/2018 09	60	1.4	
06/16/2018 10	60	1.4	
06/16/2018 11	60	1.4	
06/16/2018 12	60	1.4	
06/16/2018 13	60	1.3	
06/16/2018 14	60	1.3	
06/16/2018 15	60	1.4	
06/16/2018 16	60	1.4	
06/16/2018 17	60	1.4	
06/16/2018 18	60	1.5	
06/16/2018 19	60	1.4	
06/16/2018 20	60	1.4	
06/16/2018 21	60	1.4	
06/16/2018 22	60	1.4	
06/16/2018 23	60	1.5	
06/17/2018 00	60	1.5	
06/17/2018 01	60	1.5	
06/17/2018 02	60	1.5	

GECC PM CEMS Report for the Main Stack

Date/Time	Main Stack Online (mins)	PM CEMS Backscatter Energy (% of full scale)	Comments
		PM CEMS output is backscatter energy. Since a successful correlation test has not been performed, accurate PM concentrations cannot be calculated.	
06/17/2018 03	60	1.5	
06/17/2018 04	60	1.5	
06/17/2018 05	60	1.4	
06/17/2018 06	60	1.5	
06/17/2018 07	60	1.5	
06/17/2018 08	60	1.5	
06/17/2018 09	60	1.5	
06/17/2018 10	60	1.4	
06/17/2018 11	60	1.4	
06/17/2018 12	60	1.5	
06/17/2018 13	60	1.5	
06/17/2018 14	60	1.5	
06/17/2018 15	60	1.6	
06/17/2018 16	60	1.6	
06/17/2018 17	60	1.6	
06/17/2018 18	60	1.5	
06/17/2018 19	60	1.5	
06/17/2018 20	60	1.5	
06/17/2018 21	60	1.4	
06/17/2018 22	60	1.5	
06/17/2018 23	60	1.4	
06/18/2018 00	60	1.4	
06/18/2018 01	60	1.5	
06/18/2018 02	60	1.5	
06/18/2018 03	60	1.4	
06/18/2018 04	60	1.4	
06/18/2018 05	60	1.5	
06/18/2018 06	60	1.5	
06/18/2018 07	60	1.5	
06/18/2018 08	60	1.5	
06/18/2018 09	60	1.3	
06/18/2018 10	60	1.5	
06/18/2018 11	60	1.4	
06/18/2018 12	60	1.4	
06/18/2018 13	60	1.4	
06/18/2018 14	60	1.4	
06/18/2018 15	60	1.4	
06/18/2018 16	60	1.4	
06/18/2018 17	60	1.5	
06/18/2018 18	60	1.4	
06/18/2018 19	60	1.4	
06/18/2018 20	60	1.4	
06/18/2018 21	60	1.5	
06/18/2018 22	60	1.4	
06/18/2018 23	60	1.4	
06/19/2018 00	60	1.4	
06/19/2018 01	60	1.4	
06/19/2018 02	60	1.4	
06/19/2018 03	60	1.4	

GECC PM CEMS Report for the Main Stack

Date/Time	Main Stack Online (mins)	PM CEMS Backscatter Energy (% of full scale)	Comments
		PM CEMS output is backscatter energy. Since a successful correlation test has not been performed, accurate PM concentrations cannot be calculated.	
06/19/2018 04	60	1.4	
06/19/2018 05	60	1.4	
06/19/2018 06	60	1.4	
06/19/2018 07	60	1.4	
06/19/2018 08	60	1.5	
06/19/2018 09	60	1.3	
06/19/2018 10	60	1.4	
06/19/2018 11	60	1.4	
06/19/2018 12	60	7.1	
06/19/2018 13	60	1.6	
06/19/2018 14	60	8.6	
06/19/2018 15	60	1.6	
06/19/2018 16	60	1.4	
06/19/2018 17	60	1.5	
06/19/2018 18	60	1.5	
06/19/2018 19	60	1.2	
06/19/2018 20	60	1.3	
06/19/2018 21	60	1.4	
06/19/2018 22	60	1.4	
06/19/2018 23	60	1.4	
06/20/2018 00	60	1.4	
06/20/2018 01	60	1.4	
06/20/2018 02	60	1.3	
06/20/2018 03	60	1.4	
06/20/2018 04	60	1.3	
06/20/2018 05	60	1.3	
06/20/2018 06	60	1.4	
06/20/2018 07	60	1.5	
06/20/2018 08	60	1.3	
06/20/2018 09	60	1.5	
06/20/2018 10	60	1.4	
06/20/2018 11	60	1.4	
06/20/2018 12	60	1.6	
06/20/2018 13	60	1.6	
06/20/2018 14	60	1.3	
06/20/2018 15	60	1.4	
06/20/2018 16	60	1.3	
06/20/2018 17	60	1.3	
06/20/2018 18	60	1.4	
06/20/2018 19	60	1.4	
06/20/2018 20	60	1.3	
06/20/2018 21	60	1.4	
06/20/2018 22	60	1.4	
06/20/2018 23	60	1.4	
06/21/2018 00	60	1.4	
06/21/2018 01	60	1.4	
06/21/2018 02	60	1.4	
06/21/2018 03	60	1.4	
06/21/2018 04	60	1.4	

GECC PM CEMS Report for the Main Stack

Date/Time	Main Stack Online (mins)	PM CEMS Backscatter Energy (% of full scale)	Comments
		PM CEMS output is backscatter energy. Since a successful correlation test has not been performed, accurate PM concentrations cannot be calculated.	
06/21/2018 05	60	1.4	
06/21/2018 06	60	1.7	
06/21/2018 07	60	2	
06/21/2018 08	60	2	
06/21/2018 09	60	1.9	
06/21/2018 10	60	1.7	
06/21/2018 11	60	1.7	
06/21/2018 12	60	1.9	
06/21/2018 13	60	1.7	
06/21/2018 14	60	2.8	
06/21/2018 15	60	1.5	
06/21/2018 16	60	1.6	
06/21/2018 17	60	1.7	
06/21/2018 18	60	1.5	
06/21/2018 19	60	1.3	
06/21/2018 20	60	1.4	
06/21/2018 21	60	1.3	
06/21/2018 22	60	1.3	
06/21/2018 23	60	1.3	
06/22/2018 00	60	1.4	
06/22/2018 01	60	1.4	
06/22/2018 02	60	1.3	
06/22/2018 03	60	1.3	
06/22/2018 04	60	1.3	
06/22/2018 05	60	1.3	
06/22/2018 06	60	1.4	
06/22/2018 07	60	1.3	
06/22/2018 08	60	1.4	
06/22/2018 09	60	1.4	
06/22/2018 10	60	1.4	
06/22/2018 11	60	1.5	
06/22/2018 12	60	1.4	
06/22/2018 13	60	2	
06/22/2018 14	60	1.7	
06/22/2018 15	60	1.5	
06/22/2018 16	60	1.2	
06/22/2018 17	60	1.3	
06/22/2018 18	60	1.3	
06/22/2018 19	60	1.3	
06/22/2018 20	60	1.3	
06/22/2018 21	60	1.3	
06/22/2018 22	60	1.3	
06/22/2018 23	60	1.3	
06/23/2018 00	60	1.3	
06/23/2018 01	60	1.3	
06/23/2018 02	60	1.3	
06/23/2018 03	60	1.3	
06/23/2018 04	60	1.3	
06/23/2018 05	60	1.3	

GECC PM CEMS Report for the Main Stack

Date/Time	Main Stack Online (mins)	PM CEMS Backscatter Energy (% of full scale)	Comments
		PM CEMS output is backscatter energy. Since a successful correlation test has not been performed, accurate PM concentrations cannot be calculated.	
06/23/2018 06	60	1.3	
06/23/2018 07	60	1.3	
06/23/2018 08	60	1.3	
06/23/2018 09	60	1.3	
06/23/2018 10	60	1.4	
06/23/2018 11	60	1.5	
06/23/2018 12	60	1.4	
06/23/2018 13	60	1.5	
06/23/2018 14	60	1.5	
06/23/2018 15	60	1.4	
06/23/2018 16	60	1.4	
06/23/2018 17	60	1.5	
06/23/2018 18	60	1.5	
06/23/2018 19	60	1.5	
06/23/2018 20	60	1.4	
06/23/2018 21	60	1.4	
06/23/2018 22	60	1.4	
06/23/2018 23	60	1.4	
06/24/2018 00	60	1.4	
06/24/2018 01	60	1.4	
06/24/2018 02	60	1.4	
06/24/2018 03	60	1.4	
06/24/2018 04	60	1.7	
06/24/2018 05	60	1.6	
06/24/2018 06	60	1.6	
06/24/2018 07	60	1.5	
06/24/2018 08	60	1.7	
06/24/2018 09	60	1.6	
06/24/2018 10	60	1.6	
06/24/2018 11	60	1.5	
06/24/2018 12	60	1.6	
06/24/2018 13	60	1.7	
06/24/2018 14	60	1.4	
06/24/2018 15	60	1.4	
06/24/2018 16	60	1.5	
06/24/2018 17	60	1.5	
06/24/2018 18	60	1.5	
06/24/2018 19	60	1.5	
06/24/2018 20	60	1.5	
06/24/2018 21	60	1.4	
06/24/2018 22	60	1.3	
06/24/2018 23	60	1.3	
06/25/2018 00	60	1.3	
06/25/2018 01	60	1.3	
06/25/2018 02	60	1.3	
06/25/2018 03	60	1.4	
06/25/2018 04	60	1.3	
06/25/2018 05	60	1.3	
06/25/2018 06	60	1.4	

GECC PM CEMS Report for the Main Stack

Date/Time	Main Stack Online (mins)	PM CEMS Backscatter Energy (% of full scale)	Comments
		PM CEMS output is backscatter energy. Since a successful correlation test has not been performed, accurate PM concentrations cannot be calculated.	
06/25/2018 07	60	1.4	
06/25/2018 08	60	1.3	
06/25/2018 09	60	1.4	
06/25/2018 10	60	1.5	
06/25/2018 11	60	1.5	
06/25/2018 12	60	1.5	
06/25/2018 13	60	1.5	
06/25/2018 14	60	1.4	
06/25/2018 15	60	1.4	
06/25/2018 16	60	1.4	
06/25/2018 17	60	1.4	
06/25/2018 18	60	1.4	
06/25/2018 19	60	1.4	
06/25/2018 20	60	1.4	
06/25/2018 21	60	1.5	
06/25/2018 22	60	1.4	
06/25/2018 23	60	1.4	
06/26/2018 00	60	1.3	
06/26/2018 01	60	1.3	
06/26/2018 02	60	1.4	
06/26/2018 03	60	1.4	
06/26/2018 04	60	1.4	
06/26/2018 05	60	1.3	
06/26/2018 06	60	1.4	
06/26/2018 07	60	1.2	
06/26/2018 08	60	1.3	
06/26/2018 09	60	1.3	
06/26/2018 10	60	1.3	
06/26/2018 11	60	1.4	
06/26/2018 12	60	1.4	
06/26/2018 13	60	1.4	
06/26/2018 14	60	1.4	
06/26/2018 15	60	1.4	
06/26/2018 16	60	1.4	
06/26/2018 17	60	1.2	
06/26/2018 18	60	1.2	
06/26/2018 19	60	1.2	
06/26/2018 20	60	1.2	
06/26/2018 21	60	1.2	
06/26/2018 22	60	1.3	
06/26/2018 23	60	1.3	
06/27/2018 00	60	1.3	
06/27/2018 01	60	1.3	
06/27/2018 02	60	1.3	
06/27/2018 03	60	1.3	
06/27/2018 04	60	1.3	
06/27/2018 05	60	1.3	
06/27/2018 06	60	1.3	
06/27/2018 07	60	1.3	

GECC PM CEMS Report for the Main Stack

Date/Time	Main Stack Online (mins)	PM CEMS Backscatter Energy (% of full scale)	Comments
		PM CEMS output is backscatter energy. Since a successful correlation test has not been performed, accurate PM concentrations cannot be calculated.	
06/27/2018 08	60	1.3	
06/27/2018 09	60	1.3	
06/27/2018 10	60	1.3	
06/27/2018 11	60	1.4	
06/27/2018 12	60	1.4	
06/27/2018 13	60	1.3	
06/27/2018 14	60	1.3	
06/27/2018 15	60	1.3	
06/27/2018 16	60	1.4	
06/27/2018 17	60	1.4	
06/27/2018 18	60	1.4	
06/27/2018 19	60	1.5	
06/27/2018 20	60	1.4	
06/27/2018 21	60	1.5	
06/27/2018 22	60	1.4	
06/27/2018 23	60	1.5	
06/28/2018 00	60	1.5	
06/28/2018 01	60	1.5	
06/28/2018 02	60	1.4	
06/28/2018 03	60	1.5	
06/28/2018 04	60	1.5	
06/28/2018 05	60	1.5	
06/28/2018 06	60	1.4	
06/28/2018 07	60	1.6	
06/28/2018 08	60	1.4	
06/28/2018 09	60	1.4	
06/28/2018 10	60	1.5	
06/28/2018 11	60	1.4	
06/28/2018 12	60	1.4	
06/28/2018 13	60	1.3	
06/28/2018 14	60	1.4	
06/28/2018 15	60	1.3	
06/28/2018 16	60	1.7	
06/28/2018 17	60	1.4	
06/28/2018 18	60	1.3	
06/28/2018 19	60	1.2	
06/28/2018 20	60	1.2	
06/28/2018 21	60	1.2	
06/28/2018 22	60	1.2	
06/28/2018 23	60	1.3	
06/29/2018 00	60	1.3	
06/29/2018 01	60	1.3	
06/29/2018 02	60	1.3	
06/29/2018 03	60	1.4	
06/29/2018 04	60	1.3	
06/29/2018 05	60	1.3	
06/29/2018 06	60	1.4	
06/29/2018 07	60	1.3	
06/29/2018 08	60	1.3	

GECC PM CEMS Report for the Main Stack

Date/Time	Main Stack Online (mins)	PM CEMS Backscatter Energy (% of full scale)	Comments
		PM CEMS output is backscatter energy. Since a successful correlation test has not been performed, accurate PM concentrations cannot be calculated.	
06/29/2018 09	60	1.3	
06/29/2018 10	60	1.3	
06/29/2018 11	60	1.2	
06/29/2018 12	60	1.3	
06/29/2018 13	60	1.3	
06/29/2018 14	60	1.3	
06/29/2018 15	60	1.4	
06/29/2018 16	60	1.4	
06/29/2018 17	60	1.5	
06/29/2018 18	60	1.5	
06/29/2018 19	60	1.4	
06/29/2018 20	60	1.3	
06/29/2018 21	60	1.4	
06/29/2018 22	60	1.4	
06/29/2018 23	60	1.4	
06/30/2018 00	60	1.4	
06/30/2018 01	60	1.3	
06/30/2018 02	60	1.4	
06/30/2018 03	60	1.4	
06/30/2018 04	60	1.4	
06/30/2018 05	60	1.3	
06/30/2018 06	60	1.4	
06/30/2018 07	60	1.4	
06/30/2018 08	60	1.4	
06/30/2018 09	60	1.4	
06/30/2018 10	60	1.4	
06/30/2018 11	60	1.4	
06/30/2018 12	60	1.3	
06/30/2018 13	60	1.3	
06/30/2018 14	60	1.3	
06/30/2018 15	60	1.3	
06/30/2018 16	60	1.3	
06/30/2018 17	60	1.3	
06/30/2018 18	60	1.3	
06/30/2018 19	60	1.4	
06/30/2018 20	60	1.3	
06/30/2018 21	60	1.3	
06/30/2018 22	60	1.4	
06/30/2018 23	60	1.3	

ATTACHMENT D. MERCURY SORBENT TRAP MONITORING REPORT

Attachment D contains a summary of the mercury sorbent trap monitoring system data for the 2018 1st Half. Per the reporting requirements of Construction Permit 06070020, permit condition 4.1.8-1(c)(i), states:

> *This monitoring shall be conducted with a mercury sorbent trap monitoring system in accordance with 40 CFR 75.15 (as adopted by USEPA, even if subsequently vacated) or, alternatively, with an approved continuous mercury emissions monitoring system in accordance with 40 CFR 75.81 (as adopted by USEPA, even if subsequently vacated). In addition to other applicable requirements of 40 CFR Part 75, the Permittee shall submit semi-annual monitoring reports to the Illinois EPA for this monitoring in accordance with relevant reporting requirements of 40 CFR Part 75.*

In accordance with the mercury sorbent trap monitoring plan submitted to IEPA in October 2009, the monitoring system report provided in this attachment includes the total monthly mercury emissions, the rolling 12-month total, and a summary of monitoring system downtime. There were no exceedances of mercury emission limits during this semi-annual period since mercury emission limits have yet to be established.

An application to change the permit limits from a % removal emission limit to a pound/hr and tons/year emission limit has been submitted to IEPA and has yet to be approved.

GECC Sorbent Trap Monitoring System Report for the Main Stack

GATEWAY ENERGY & COKE COMPANY, LLC
EMISSION UNIT DOWNTIME SUMMARY REPORT
Reporting Period : January 2018 - June 2018

Facility ID: 119040ATN
Emission Unit: Main Stack

Commencement of Emission Unit Downtime	Completion of Emission Unit Downtime	Emission Unit Downtime Duration (hours)	Reasons for Emission Unit Downtime
No emission unit downtime in this reporting period			
Total Emission Unit downtime for the reporting period =		**0**	**hours**

Emission Unit Time Online Summary

Start date of reporting period =	1/1/2018 0:00
End date of reporting period =	6/30/2018 23:59
Total clock hours in reporting period =	4344
Total Emission Unit time online for the reporting period =	4344
Total Emission Unit downtime for the reporting period =	0
% Emission Unit time online for the reporting period =	100.0%
% Emission Unit downtime for the reporting period =	0.0%

GECC Sorbent Trap Monitoring System Report for the Main Stack

GATEWAY ENERGY & COKE COMPANY, LLC
MERCURY EMISSION EXCEEDANCES SUMMARY REPORT
Reporting Period : January 2018 - June 2018

Facility ID: 119040ATN
Emission Unit: Main Stack

Mercury Emission Limits :
To be determined

Date of Commencement	Time of Commencement	Date of Completion	Time of Completion	Duration of Exceedance (hours)	Pollutant	Magnitude (lb/hr)	Reason/s for the Excess Emissions	Corrective action/s taken, or measures taken to minimize emissions	Excess Emissions caused by Malfunction	Malfunction reported per permit condition 3.5.2
Mercury emission limits yet to be established.										

GATEWAY ENERGY & COKE COMPANY, LLC
MERCURY EMISSIONS SUMMARY REPORT
Reporting Period : January 2018 - June 2018

Facility ID: 119040ATN
Emission Unit: Main Stack

Parameter	Units	January	February	March	April	May	June
(A) Total hours in month	hours	744	672	744	720	744	720
(B) Emission unit downtime	hours	0	0	0	0	0	0
(C) Total emission unit operating hours	hours	744	672	744	720	744	720
(D) Valid STMS hours	hours	742	663	741	717	738	717
(E) Hg emissions during valid STMS hours	lbs	3.943	2.389	2.896	3.477	3.156	2.623
(F) Ave. Hg emissions during valid STMS hours	lb/hr	0.0053	0.0036	0.0039	0.0048	0.0043	0.0037
(G) STMS downtime hours	hours	0	0	0	0	0	3
(H) STMS invalid hours [(a)]	hours	2	9	3	3	6	0
(I) Est. Hg emissions during downtime & invalid hours [(b)]	lbs	0.011	0.032	0.012	0.015	0.026	0.011
(J) TOTAL estimated Hg emissions	**lbs**	**3.95**	**2.42**	**2.91**	**3.49**	**3.18**	**2.63**

STMS = Sorbent Trap Monitoring System

[(a)] Invalid hours include periods when the STMS was operating but data was invalidated because of failed QA/QC checks or other constituent parameters (stack flow rate or stack gas moisture content) being invalid.

[(b)] Estimated emissions during downtime & invalid hours in each calendar month were based on the average mercury emission rates in those months during valid hours.

NOTES:

The QA/QC criteria in 40 CFR 75 Appendix K were generally followed in validating the results from the sorbent trap analysis with some exceptions as shown below:

1) If flow control issues didn't allow proportional sampling, the larger of the two concentrations was used.

2) If one of the paired traps was lost during sampling or transport to the lab, the results of the other trap were used.

3) If the paired trap agreement failed the acceptance criteria, the larger of the two concentrations was used.

4) If the pre-leak check was not performed or failed, but the post-leak check passed, the trap results were assumed to be valid.

Month	Year	Monthly Mercury Emissions, lbs	Rolling 12-month Mercury Emissions, lbs
January	2017	2.90	21.3
February	2017	1.65	19.8
March	2017	1.46	19.9
April	2017	1.69	20.1
May	2017	0.78	19.4
June	2017	3.00	20.7
July	2017	2.98	21.7
August	2017	3.21	23.8
September	2017	2.49	24.7
October	2017	2.24	25.1
November	2017	2.27	25.9
December	2017	2.65	27.3
January	2018	3.95	28.4
February	2018	2.42	29.1
March	2018	2.91	30.6
April	2018	3.49	32.4
May	2018	3.18	34.8
June	2018	2.63	34.4

NOTES:

GECC Sorbent Trap Monitoring System Report for the Main Stack

GATEWAY ENERGY & COKE COMPANY, LLC

SORBENT TRAP MONITORING SYSTEM DOWNTIME REPORT

Reporting Period : January 2018 - June 2018

Facility ID: 119040ATN

Emission Unit: Main Stack

Date	Time of Commencement	Duration of Downtime (hours)	Parameter	Reasons for Downtime	Nature of system repairs and adjustments
1/31/18	13:00	2	Hg lb/hr	Invalid stack moisture due to maintenance activities and audits on SO2 CEMS	None
2/1/18	8:00	5	Hg lb/hr	Invalid stack moisture due to maintenance activities and audits on SO2 CEMS	None
2/2/18	3:00	3	Hg lb/hr	Invalid stack moisture due to low SO2 CEMS sample gas flow	Increased sample gas flow
2/2/18	8:00	1	Hg lb/hr	Invalid stack moisture due to maintenance activities on SO2 CEMS	None
3/31/18	12:00	3	Hg lb/hr	Invalid stack moisture due to SO2 CEMS maintenance on gas conditioner and sample manifold	Rebuilt sample pump; replaced peristaltic pump tubing; cleaned sample manifold.
4/26/18	9:00	1	Hg lb/hr	Invalid stack moisture due to maintenance and audit activities on SO2 CEMS	None
4/27/18	9:00	2	Hg lb/hr	Invalid stack moisture due to maintenance activities on SO2 CEMS	Replaced heat sink.
5/1/18	2:00	5	Hg lb/hr	Invalid stack moisture due to loss of power to gas conditioner on SO2 CEMS	Replaced power supply on gas conditioner.
5/30/18	11:00	1	Hg lb/hr	Invalid stack moisture due to calibration of wet O2 monitor	None
6/21/18	11:00	3	Hg lb/hr	Difficulty getting successful pre-run leak check to pass.	Tightened fittings

NOTES:

GECC Sorbent Trap Monitoring System Report for the Main Stack

GATEWAY ENERGY & COKE COMPANY, LLC

SORBENT TRAP MONITORING SYSTEM PERFORMANCE SUMMARY REPORT

Reporting Period : January 2018 - June 2018

Facility ID: 119040ATN
Emission Unit: Main Stack

Performance Summary	
1. Total Emission Unit operating time =	4344
2. STMS downtime in reporting period due to:	
a. Monitor equipment malfunctions =	3 hr
b. Non-monitor equipment malfunctions =	23 hr
c. Quality assurance calibration =	
d. Other known causes =	
e. Unknown causes =	
3. Total STMS downtime =	26 hr
4. Percent Monitor Downtime =	0.6%
5. Percent Monitor Online =	99.4%

NOTES:

ATTACHMENT E. WASTE HEAT STACK DATA

Attachment E contains a summary of the waste heat stack data for the 2018 1st Half. Per the reporting requirements of Construction Permit 06070020, permit conditions 4.1.10(f)(i)-(iii) state:

> *For each waste heat stack, the total duration of venting during the reporting period and a listing of each period when venting occurred, with date, time, duration (minutes), description and reason for venting.*
>
> *For each period in which venting from waste heat stack(s) occurred as part of inspection and maintenance of a heat recovery steam generator or control equipment, the date, time and duration of venting, the waste heat stack(s) that were involved, a general description of the inspection and maintenance activity that was performed, a description of aspects of or events during inspection and maintenance that acted to prolong venting, a description of measures that the Permittee took to address such circumstances, a description of actions that the Permittee plans to address the potential for such circumstances in the future, and other relevant information to demonstrate that the duration of venting associated with the inspection and maintenance activity was not excessive.*
>
> *For each operational limit that applies to venting from waste heat stacks, information that addresses compliance with such limit.*

Therefore, the waste heat stack summary provided in this attachment includes the information required under permit conditions 4.1.10(f)(i)-(iii) as listed above. In accordance with permit condition 4.1.10(f)(i), Table E-1 provides a summary of the total bypass time for each waste heat stack during the 2018 1st Half.

TABLE E-1. VENT STACK USAGE SUMMARY

Waste Heat Stack	Usage During FGD Maintenance (hours)	Usage During HRSG Maintenance (hours)	Other Vent Stack Usage (hours)	Total Vent Stack Usage (hours)
#1	0.0	0.2	133.9	134.1
#2	0.0	0.2	99.8	100.0
#3	0.0	0.2	253.0	253.2
#4	0.0	0.1	6.3	6.4
#5	0.0	0.2	162.0	162.2
#6	0.0	0.1	48.4	48.5

Please refer to Tables E-2 and E-3 for detailed descriptions of each unplanned and planned vent stack usage event which occurred during the 2018 1st Half.

Table E-2: Unplanned Venting Events

Waste Heat Stack	Open Time	Duration (minutes)	Date of Notification	Description of Event/Probable Cause	Corrective Actions
2	1/8/2018	10	Semi-Annual	HRSG #2 stack lids opened due incorrect pressure transmitter valve closed. Total of 9.92 minutes.	Personnel reselected the correct transmitter and closed the stack lid.
1,2,3,4,5,6	1/18/2018	912.12	Sent 1/26/18	Plant wide power outage caused all six stack lids to open.	Once power was restored, plant was brought back online and stack lids closed.
1	2/5/2018	456.75	Sent 2/12/18	Failure of secondary phosphate injection line resulted in EVS 1 opening. Total of 456.75 minutes.	Phosphate injection was restored via the main phosphate injection line and the vent stack was closed. Long term corrective action to permanently remove secondary phosphate line.
3	2/11/2018	4518	Sent 2/22/18	HRSG #3 stack lids opened due to a tube leak. Total of 4518 minutes.	GECC personnel closed the vent stack lids as soon as possible.
2	2/20/2018	2385	Sent 2/27/18	HRSG #2 stack lids opened due to a tube leak. Total of 2385 minutes.	GECC personnel closed the vent stack lids as soon as possible.
5	2/22/2018	1574	Sent 2/27/18	HRSG #5 stack lids opened due to a tube leak. Total of 1574 minutes.	GECC personnel closed the vent stack lids as soon as possible.
1	3/28/2018	2769.25	Sent 4/5/18	HRSG #1 stack lids opened due to a tube leak. Total of 2769.25 minutes.	GECC personnel closed the vent stack lids as soon as possible.
5	4/15/2018	3016	Sent 4/24/18	HRSG #5 stack lids opened due to a tube leak. Total of 3016 minutes.	GECC personnel closed the vent stack lids as soon as possible.
3	5/8/2018	4421	Sent 5/16/18	HRSG #3 stack lids opened due to a tube leak. Total of 4421 minutes.	GECC personnel closed the vent stack lids as soon as possible.
6	5/14/2018	2756	Sent 5/24/18	HRSG #6 stack lids opened due to a tube leak. Total of 2756 minutes.	GECC personnel closed the vent stack lids as soon as possible.
1,2,3,4,5,6	5/14/2018	400	Sent 5/24/18	Plantwide power failure due to severe weather resulted in all lids opening. Total of 399.89 minutes.	GECC personnel monitored conditions and closed the vent stack lids as soon as power was restored.
3	6/10/2018	6020	Sent 6/20/18	HRSG #3 stack lids opened due to a tube leak. Total of 6020 minutes.	GECC personnel closed the vent stack lids as soon as possible.
5	6/12/2018	4872	Sent 6/22/18	HRSG #5 stack lids opened due to a tube leak. Total of 4872 minutes.	GECC personnel closed the vent stack lids as soon as possible.
2,3,4,5,6	6/21/2018	145.16	Sent 6/29/18	Loss of HRSG feedwater. Total of 145.16 minutes	GECC personnel monitored conditions and closed the vent stack lids as soon as feedwater was restored.
1	6/24/2018	4556	Sent 7/3/18	HRSG #1 stack lids opened due to a tube leak. Total of 4556 minutes.	GECC personnel closed the vent stack lids as soon as possible.
2	6/28/2018	3867.59	Sent 7/6/18	HRSG #2 stack lids opened due to a tube leak. Total of 3867.59 minutes.	GECC personnel closed the vent stack lids as soon as possible.

Table E-3 Scheduled Maintenance Events

Waste Heat Stack	Open Time	Closed Time	Duration (minutes)	Description of Inspection/Maintenance Activity	Description/Probable Cause of Prolonged Outages	Corrective Actions
1	1/8/2018 10:29	1/8/2018 10:30	1	Monthly preventive maintenance check of the stack lids.	N/A	N/A
2	1/9/2018 10:57	1/9/2018 10:58	1	Monthly preventive maintenance check of the stack lids.	N/A	N/A
3	1/10/2018 11:43	1/10/2018 11:47	4	Monthly preventive maintenance check of the stack lids.	N/A	N/A
4	1/11/2018 12:13	1/11/2018 12:14	1	Monthly preventive maintenance check of the stack lids.	N/A	N/A
5	1/12/2018 13:12	1/12/2018 13:17	5	Monthly preventive maintenance check of the stack lids.		
	1/12/2018 13:21	1/12/2018 13:23	2			
	1/12/2018 13:26	1/12/2018 13:27	1		N/A	N/A
6	1/18/2018 9:53	1/18/2018 9:54	1	Monthly preventive maintenance check of the stack lids.	N/A	N/A
1	2/5/2018 11:41	2/5/2018 11:42	1	Monthly preventive maintenance check of the stack lids.	N/A	N/A
2	2/7/2018 10:02	2/7/2018 10:03	1	Monthly preventive maintenance check of the stack lids.	N/A	N/A
3	2/8/2018 11:41	2/8/2018 11:42	1	Monthly preventive maintenance check of the stack lids.	N/A	N/A
4	2/9/2018 12:58	2/9/2018 12:59	1	Monthly preventive maintenance check of the stack lids.	N/A	N/A
5	2/10/2018 14:16	2/10/2018 14:17	1	Monthly preventive maintenance check of the stack lids.	N/A	N/A
6	2/11/2018 15:35	2/11/2018 15:36	1	Monthly preventive maintenance check of the stack lids.	N/A	N/A
1	3/5/2018 10:01	3/5/2018 10:02	1	Monthly preventive maintenance check of the stack lids.	N/A	N/A
2	3/6/2018 10:31	3/6/2018 10:33	2	Monthly preventive maintenance check of the stack lids.	N/A	N/A
3	3/7/2018 13:27	3/7/2018 13:28	1	Monthly preventive maintenance check of the stack lids.	N/A	N/A
4	3/8/2018 13:49	3/8/2018 13:51	2	Monthly preventive maintenance check of the stack lids.	N/A	N/A
5	3/9/2018 14:07	3/9/2018 14:08	1	Monthly preventive maintenance check of the stack lids.	N/A	N/A
6	3/10/2018 14:34	3/10/2018 14:36	2	Monthly preventive maintenance check of the stack lids.	N/A	N/A
1	4/3/2018 10:06	4/3/2018 10:08	1	Monthly preventive maintenance check of the stack lids.	N/A	N/A
2	4/4/2018 12:58	4/4/2018 12:59	1	Monthly preventive maintenance check of the stack lids.	N/A	N/A
3	4/5/2018 13:33	4/5/2018 13:34	1	Monthly preventive maintenance check of the stack lids.	N/A	N/A
4	4/6/2018 14:01	4/6/2018 14:02	1	Monthly preventive maintenance check of the stack lids.	N/A	N/A
5	4/9/2018 11:30	4/9/2018 11:32	2	Monthly preventive maintenance check of the stack lids.	N/A	N/A
6	4/10/2018 13:49	4/10/2018 13:50	1	Monthly preventive maintenance check of the stack lids.	N/A	N/A
1	5/7/2018 8:13	5/7/2018 8:21	8	Monthly preventive maintenance check of the stack lids.	N/A	N/A
2	5/12/2018 8:16	5/12/2018 8:17	1	Monthly preventive maintenance check of the stack lids.	N/A	N/A
3	5/13/2018 9:09	5/13/2018 9:10	1	Monthly preventive maintenance check of the stack lids.	N/A	N/A
4	5/18/2018 13:09	5/18/2018 13:10	1	Monthly preventive maintenance check of the stack lids.	N/A	N/A
6	5/19/2018 14:15	5/19/2018 14:16	1	Monthly preventive maintenance check of the stack lids.	N/A	N/A
5	5/22/2018 13:39	5/22/2018 13:40	1	Monthly preventive maintenance check of the stack lids.	N/A	N/A
2	6/17/2018 8:26	6/17/2018 8:29	3	Monthly preventive maintenance check of the stack lids.	N/A	N/A

Waste Heat Stack	Open Time	Closed Time	Duration (minutes)	Description of Inspection/Maintenance Activity	Description/Probable Cause of Prolonged Outages	Corrective Actions
1	6/19/2018 7:48	6/19/2018 7:49	1	Monthly preventive maintenance check of the stack lids.	N/A	N/A
3	6/20/2018 8:13	6/20/2018 8:15	2	Monthly preventive maintenance check of the stack lids.	N/A	N/A
4	6/21/2018 8:41	6/21/2018 8:43	2	Monthly preventive maintenance check of the stack lids.	N/A	N/A
6	6/24/2018 11:04	6/24/2018 11:06	2	Monthly preventive maintenance check of the stack lids.	N/A	N/A

Gateway Energy and Coke Company, LLC
2585 Edwardsville Rd
Granite City, IL 62040

July 30, 2018

Raymond Pilapil
Illinois Environmental Protection Agency
Bureau of Air, Compliance Section
1021 North Grand Avenue East
Springfield, IL 62794

40 CFR Part 63, Subparts L and CCCCC
2018 1st Half Semi-Annual Compliance Certification

Dear Mr. Pilapil:

Gateway Energy and Coke Company, LLC (GECC) operates a coke production facility located in Granite City, Illinois. The facility is subject to the National Emission Standards for Coke Oven Batteries (MACT L) and the National Emissions Standards for Hazardous Air Pollutants for Coke Ovens: Pushing, Quenching, and Battery Stacks (MACT CCCCC).

Per the applicable reporting and recordkeeping provisions of 40 CFR 63.311 (MACT L) and 40 CFR 63.7341 (MACT CCCCC), GECC is providing the following information for the semi-annual compliance period of January 1, 2018 through June 30, 2018.

- GECC did not experience any startup, shutdown, or malfunction events as defined in 40 CFR 63.301 with respect to the standards of MACT L.
- All nonrecovery coke oven work practices were implemented under 40 CFR 63.306 and 40 CFR 63.303(b)(3).
- All coke oven doors were observed and leaks stopped according to the requirements in 40 CFR 63.303(c)(1) and 40 CFR 63.303(c)(2), except for the ovens identified in Attachment 1. The coke oven door leaks experienced are reported according to 40 CFR 63.311(d)(5) in Attachment 1.
- All opacity observations from charging operations were below 20 percent.
- No stack testing was required to be completed during this reporting period by 40 CFR 63.309(l). Stack testing was conducted on the PCM baghouse but that testing was not required by 63.309(l); therefore, it is not included here. Stack test results for this testing were provided to Illinois EPA in accordance with State and permit requirements.
- All charging emission control device work practices were implemented per 40 CFR 63.303(d)(3), except for the event listed below, and opacity observations did not exceed ten percent.
- All work practices for oven dampers were implemented as required in 40 CFR 63.303(d)(4).

- The hot car multiclone differential pressure continuous monitoring system was in proper control in accordance with 40 CFR 63.7331(k).
- GECC did not experience any malfunctions pursuant to MACT CCCCC. GECC experienced malfunctions involving equipment that is unrelated to the operational restrictions of MACT L and MACT CCCCC. None of these malfunctions resulted in excess emissions under the relevant MACT emission standards.
- During the current reporting period, GECC did not experience any deviations from the emission limitations, work practice standards, or operation and maintenance requirements listed in MACT CCCCC.

As the responsible official, I certify that based on information and belief formed after reasonable inquiry, the statements and information in the above report are true, accurate, and complete.

Sincerely,

Matthew Lester
General Manager

cc:

George Czerniak
USEPA Region 5
77 W Jackson Blvd
Chicago, IL 60604
FedEx:

Andy Jankowski
IEPA
2009 Mall Street
Collinsville, IL 62234
FedEx:

Attachment 1. 40 CFR 63, SUBPART L OVEN DOOR LEAKS

Equipment	Date of Occurrence	Duration (minutes)	Cause	Corrective Actions
Oven 86	1/9/2018	1st: 5 min 2nd: 6 min	Two door fires on Oven 86 during the same coking cycle due to lack of draft.	1st: Adjusted sole flue damper. 2nd: Adjusted uptake dampers, increased draft.
Oven 94	1/10/2018	1st: 7 min 2nd: 5 min	Two door fires on Oven 94 during the same coking cycle due to lack of draft.	1st: Adjusted sole flue damper. 2nd: Adjusted sole flue damper.
Oven 18	1/23/2018	1st: 8 min 2nd: 8 min	Two door fires on Oven 18 during the same coking cycle due to lack of draft.	1st: Adjusted sole flue damper, 2nd: Adjusted uptake dampers, increased draft.
Oven 18	1/31/2018	31	Door fire > 15 minutes on Oven 18 due to lack of draft.	Adjusted sole flue damper.
Oven 22	1/31/2018	16	Door fire > 15 minutes on Oven 22 due to lack of draft.	Adjusted sole flue damper, reseated oven door.
Oven 40	2/10/2018	55	Door fire > 15 minutes on Oven 40.	Closed gas sharing ports and door holes on Oven 39
Oven 19	3/12/2018	1st: 2 min 2nd: 13min	Two door fires on Oven 19 during the same coking cycle due to lack of draft.	1st: Opened door holes 2nd: Adjusted uptake dampers, increased draft.
Oven 120	3/20/2018	1st: 8 min 2nd: 7 min	Two door fires on Oven 120 during the same coking cycle due to lack of draft.	1st: Adjusted sole flue damper. 2nd: Unstuck uptake damper.
Oven 39	3/30/2018	1st: 2 min 2nd: 7 min	Two door fires on Oven 39 during the same coking cycle due to lack of draft.	1st: Adjusted sole flue damper. 2nd: Adjusted sole flu dampers.
Oven 40	5/4/2018	1st: 4 min 2nd: 11 min	Two door fires on Oven 40 during the same coking cycle due to lack of draft.	1st: Adjusted sole flue damper. 2nd: Adjusted sole flu dampers.
Oven 58	6/26/2018	22	Door fire > 15 minutes on Oven 58 (0538-0600) due to lack of draft.	Adjusted sole flue damper.
Oven 60	6/26/2018	22	Door fire > 15 minutes on Oven 60 (0538-0600) due to lack of draft.	Adjusted sole flue damper.

Attachment C2

Gateway Energy and Coke Company, Malfunction Reports

Gateway Energy Coke Company
2585 Edwardsville Rd
Granite City, IL 62040

January 26, 2018

Andy Jankowski
Illinois Environment Protection Agency
2009 Mall Street
Collinsville, IL 62234
FedEx: 771333942172

SunCoke Energy
Stack Lid Openings (Stack Lids #1, 2, 3, 4, 5, 6) January 18, 2018.
Facility ID: 119040ATN

Mr. Jankowski:

SunCoke Energy - (GECC) operates a coke production facility located at 2585 Edwardsville Road, Granite City, IL. The facility operates under the construction permit 119040ATN, modified April 28, 2010.

Pursuant to permit condition 4.1.10 (a)(ii), GECC is required to submit written notification of stack lid openings which last longer than sixty (60) minutes that are not part of scheduled maintenance. According to Condition 4.1.10 (a)(ii);

> *Any event in which the duration of venting through a waste heat stack is 60 minutes or longer, other than for scheduled inspection and maintenance of heat recovery steam generators or control equipment shall be reported within 10 days of such occurrence.*

The general reporting provisions provided in Condition 3.5.2(a) require that each notification include the following additional information:

> *Except as specified in a particular provision of this permit or in a subsequent CAAPP Permit for the plant, notifications and reports for a deviation from applicable emission standards and control requirements shall include at least the following information: the date and time of the event, a description of the event, information on the magnitude of the deviation, a description of the corrective measures taken, and a description of any preventative measures taken to prevent future occurrences.*

Date: Waste Heat Stack #1: 01/18/2018 1034 – 1302,
Waste Heat Stack #2: 01/18/2018 1034 – 1303,
Waste Heat Stack #3: 01/18/2018 1034 – 1245,
Waste Heat Stack #4: 01/18/2018 1034 – 1309,
Waste Heat Stack #5: 01/18/2018 1034 – 1341,
Waste Heat Stack #6: 01/18/2018 1034 – 1253,

Gateway Energy Coke Company
2585 Edwardsville Rd
Granite City, IL 62040

Total Event Time: Waste Heat Stack #1: 148.5 minutes
Waste Heat Stack #2: 150 minutes
Waste Heat Stack #3: 131.5 minutes
Waste Heat Stack #4: 155 minutes
Waste Heat Stack #5: 187.5 minutes
Waste Heat Stack #6: 139.5 minutes

Description: On Janauray 18, 2018 at approx. 1030, GECC experienced an interruption in the main power supply to the plant resulting in both Induced Draft (ID) fans shutting down. The initial investigation from GECC's electrical utility provider indicates that the interruption in power was caused by a failure of a lightening arrestor at a transformer located in a utility-owned substation west of the GECC facility.

Magnitude: The vent stack lids associated with HRSG #1, 2, 3, 4, 5, 6 were open for the cumulative total of 912 minutes.

Corrective Measures Taken: The Control Room Operator (CRO) restarted both ID fans and brought them online to restore the system to normal operating conditions. Once the ID Fans were started, the CRO increased draft to close the vent stack lids.

Preventative Measures: As this event was due to a lightening arrestor failure external to GECC, an RCFA will be performed to identify actions that relate to ensuring GECC is clear to restart safely.

If you have any questions or comments, please feel free to contact me at (618) 512-4918.

Sincerely,

Chris DeCicecio
Environmental Manager

Matthew Lester
General Manager

cc: Bureau of Air
Compliance Section
P.O. Box 19276
Springfield, Illinois 62794-9276
FedEx: 771333956135

Gateway Energy Coke Company
2585 Edwardsville Rd
Granite City, IL 62040

February 12, 2018

Andy Jankowski
Illinois Environment Protection Agency
2009 Mall Street
Collinsville, IL 62234
FedEx: 771458351497

SunCoke Energy
Stack Lid Openings Stack Lid #1 February 5, 2018.
Facility ID: 119040ATN

Mr. Jankowski:

SunCoke Energy - (GECC) operates a coke production facility located at 2585 Edwardsville Road, Granite City, IL. The facility operates under the construction permit 119040ATN, modified April 28, 2010.

Pursuant to permit condition 4.1.10 (a)(ii), GECC is required to submit written notification of stack lid openings which last longer than sixty (60) minutes that are not part of scheduled maintenance. According to Condition 4.1.10 (a)(ii);

> *Any event in which the duration of venting through a waste heat stack is 60 minutes or longer, other than for scheduled inspection and maintenance of heat recovery steam generators or control equipment shall be reported within 10 days of such occurrence.*

The general reporting provisions provided in Condition 3.5.2(a) require that each notification include the following additional information:

> *Except as specified in a particular provision of this permit or in a subsequent CAAPP Permit for the plant, notifications and reports for a deviation from applicable emission standards and control requirements shall include at least the following information: the date and time of the event, a description of the event, information on the magnitude of the deviation, a description of the corrective measures taken, and a description of any preventative measures taken to prevent future occurrences.*

Date: Waste Heat Stack #1: 01/18/2018 1407 – 2144

Total Event Time: Waste Heat Stack #1: 456.75 minutes

Gateway Energy Coke Company
2585 Edwardsville Rd
Granite City, IL 62040

Description: On February 5, 2018 at approx. 1400, GECC personnel reported that an abnormal amount of steam/noise was coming from Heat Recovery Steam Generator (HRSG) #1. Upon further investigation, it was discovered that the secondary phosphate injection line had failed.

Magnitude: The vent stack lids associated with HRSG #1 were open for the cumulative total of 456.75 minutes.

Corrective Measures Taken: The HRSG had to be taken offline and vent stack lids opened to allow the internal pressure to drop low enough to safely lock out the phosphate line in order to swap over to the primary line. Once the pressure was lowered to a safe level, the double block valves to the failed phosphate line were able to be closed and the primary injection line was put into service.

Preventative Measures: A RCFA will be performed to determine the root cause of the failure.

If you have any questions or comments, please feel free to contact me at (618) 512-4918.

Sincerely,

Chris DeCioccio
Environmental Manager

Matthew Lester
General Manager

cc: Bureau of Air
Compliance Section
P.O. Box 19276
Springfield, Illinois 62794-9276
FedEx: 771458400065

Gateway Energy Coke Company
2585 Edwardsville Rd
Granite City, IL 62040

February 12, 2018

Andy Jankowski
Illinois Environment Protection Agency
2009 Mall Street
Collinsville, IL 62234
FedEx: 771546207692

SunCoke Energy
Stack Lid Openings Stack Lid #3 - February 11, 2018 through February 15, 2018.
Facility ID: 119040ATN

Mr. Jankowski:

SunCoke Energy - (GECC) operates a coke production facility located at 2585 Edwardsville Road, Granite City, IL. The facility operates under the construction permit 119040ATN, modified April 28, 2010.

Pursuant to permit condition 4.1.10 (a)(ii), GECC is required to submit written notification of stack lid openings which last longer than sixty (60) minutes that are not part of scheduled maintenance. According to Condition 4.1.10 (a)(ii);

> *Any event in which the duration of venting through a waste heat stack is 60 minutes or longer, other than for scheduled inspection and maintenance of heat recovery steam generators or control equipment shall be reported within 10 days of such occurrence.*

The general reporting provisions provided in Condition 3.5.2(a) require that each notification include the following additional information:

> *Except as specified in a particular provision of this permit or in a subsequent CAAPP Permit for the plant, notifications and reports for a deviation from applicable emission standards and control requirements shall include at least the following information: the date and time of the event, a description of the event, information on the magnitude of the deviation, a description of the corrective measures taken, and a description of any preventative measures taken to prevent future occurrences.*

Date: Waste Heat Stack #3: 2/11/2018 2052 – 2/15/2018 0010

Total Event Time: Waste Heat Stack #3: 4518 minutes

Gateway Energy Coke Company
2585 Edwardsville Rd
Granite City, IL 62040

Description: On February 11, 2018 GECC opened Waste Heat Stack #3 in response to a suspected tube leak.

Magnitude: The vent stack lids associated with HRSG #3 were open for the cumulative total of 4518 minutes.

Corrective Measures Taken: GECC maintenance personnel and multiple contractors worked continuously to prepare the HRSG and repair the tube leak as expeditiously as possible in order to reduce excess emissions. Upon inspection of HRSG #3, two leaks in the Superheat section were identified, removed, and replaced. During the water pressure test, additional leaks in the Superheat section were identified, removed, and replaced. GECC and contractors inspected all repairs and performed a water pressure test before HRSG #3 was brought back online.

Preventative Measures: A RCFA will be performed to determine the root cause of the failure.

If you have any questions or comments, please feel free to contact me at (618) 512-4918.

Sincerely,

Chris DeCioccio
Environmental Manager

Matthew Lester
General Manager

cc: Bureau of Air
Compliance Section
P.O. Box 19276
Springfield, Illinois 62794-9276
FedEx: 771546225452

Gateway Energy Coke Company
2585 Edwardsville Rd
Granite City, IL 62040

February 27, 2018

Andy Jankowski
Illinois Environment Protection Agency
2009 Mall Street
Collinsville, IL 62234
FedEx: 771604384244

SunCoke Energy
Stack Lid Openings Stack Lid #2 - February 20, 2018 through February 21, 2018.
Facility ID: 119040ATN

Mr. Jankowski:

SunCoke Energy - (GECC) operates a coke production facility located at 2585 Edwardsville Road, Granite City, IL. The facility operates under the construction permit 119040ATN, modified April 28, 2010.

Pursuant to permit condition 4.1.10 (a)(ii), GECC is required to submit written notification of stack lid openings which last longer than sixty (60) minutes that are not part of scheduled maintenance. According to Condition 4.1.10 (a)(ii);

> *Any event in which the duration of venting through a waste heat stack is 60 minutes or longer, other than for scheduled inspection and maintenance of heat recovery steam generators or control equipment shall be reported within 10 days of such occurrence.*

The general reporting provisions provided in Condition 3.5.2(a) require that each notification include the following additional information:

> *Except as specified in a particular provision of this permit or in a subsequent CAAPP Permit for the plant, notifications and reports for a deviation from applicable emission standards and control requirements shall include at least the following information: the date and time of the event, a description of the event, information on the magnitude of the deviation, a description of the corrective measures taken, and a description of any preventative measures taken to prevent future occurrences.*

Date: Waste Heat Stack #2: 2/20/2018 0000 – 2/21/2018 1545

Total Event Time: Waste Heat Stack #2: 2385 minutes

Gateway Energy Coke Company
2585 Edwardsville Rd
Granite City, IL 62040

Description: On February 20, 2018 GECC opened Waste Heat Stack #2 in response to a suspected tube leak.

Magnitude: The vent stack lids associated with HRSG #2 were open for the cumulative total of 2385 minutes.

Corrective Measures Taken: GECC maintenance personnel and multiple contractors worked continuously to prepare the HRSG and repair the tube leak as expeditiously as possible in order to reduce excess emissions. Upon inspection of HRSG #2, leaks in two separate U-bends in the Superheat section were identified, removed, and replaced. GECC and contractors inspected all repairs and performed a water pressure test before HRSG #2 was brought back online.

Preventative Measures: A RCFA will be performed to determine the root cause of the failure.

If you have any questions or comments, please feel free to contact me at (618) 512-4918.

Sincerely,

Chris DeCioccio
Environmental Manager

Matthew Lester
General Manager

cc: Bureau of Air
Compliance Section
P.O. Box 19276
Springfield, Illinois 62794-9276
FedEx: 771604421460

Gateway Energy Coke Company
2585 Edwardsville Rd
Granite City, IL 62040

February 27, 2018

Andy Jankowski
Illinois Environment Protection Agency
2009 Mall Street
Collinsville, IL 62234
FedEx: 771604634925

SunCoke Energy
Stack Lid Openings Stack Lid #5 - February 22, 2018 through February 23, 2018.
Facility ID: 119040ATN

Mr. Jankowski:

SunCoke Energy - (GECC) operates a coke production facility located at 2585 Edwardsville Road, Granite City, IL. The facility operates under the construction permit 119040ATN, modified April 28, 2010.

Pursuant to permit condition 4.1.10 (a)(ii), GECC is required to submit written notification of stack lid openings which last longer than sixty (60) minutes that are not part of scheduled maintenance. According to Condition 4.1.10 (a)(ii);

> *Any event in which the duration of venting through a waste heat stack is 60 minutes or longer, other than for scheduled inspection and maintenance of heat recovery steam generators or control equipment shall be reported within 10 days of such occurrence.*

The general reporting provisions provided in Condition 3.5.2(a) require that each notification include the following additional information:

> *Except as specified in a particular provision of this permit or in a subsequent CAAPP Permit for the plant, notifications and reports for a deviation from applicable emission standards and control requirements shall include at least the following information: the date and time of the event, a description of the event, information on the magnitude of the deviation, a description of the corrective measures taken, and a description of any preventative measures taken to prevent future occurrences.*

Date: Waste Heat Stack #5: 2/22/2018 0002 – 2/23/2018 0216

Total Event Time: Waste Heat Stack #5: 1574 minutes

Gateway Energy Coke Company
2585 Edwardsville Rd
Granite City, IL 62040

Description: On February 22, 2018 GECC opened Waste Heat Stack #5 in response to a suspected tube leak.

Magnitude: The vent stack lids associated with HRSG #5 were open for the cumulative total of 1574 minutes.

Corrective Measures Taken: GECC maintenance personnel and multiple contractors worked continuously to prepare the HRSG and repair the tube leak as expeditiously as possible in order to reduce excess emissions. Upon inspection of HRSG #5, a leak in a U-bend in the Superheat section was identified, removed, and replaced. GECC and contractors inspected all repairs and performed a water pressure test before HRSG #5 was brought back online.

Preventative Measures: A RCFA will be performed to determine the root cause of the failure.

If you have any questions or comments, please feel free to contact me at (618) 512-4918.

Sincerely,

Chris DeCioccio
Environmental Manager

Matthew Lester
General Manager

cc: Bureau of Air
Compliance Section
P.O. Box 19276
Springfield, Illinois 62794-9276
FedEx: 771604664034

Gateway Energy Coke Company
2585 Edwardsville Rd
Granite City, IL 62040

April 5, 2018

Andy Jankowski
Illinois Environment Protection Agency
2009 Mall Street
Collinsville, IL 62234
FedEx: 771928824833

SunCoke Energy
Stack Lid Openings Stack Lid #1 – March 28, 2018 through March 30, 2018.
Facility ID: 119040ATN

Mr. Jankowski:

SunCoke Energy - (GECC) operates a coke production facility located at 2585 Edwardsville Road, Granite City, IL. The facility operates under the construction permit 119040ATN, modified April 28, 2010.

Pursuant to permit condition 4.1.10 (a)(ii), GECC is required to submit written notification of stack lid openings which last longer than sixty (60) minutes that are not part of scheduled maintenance. According to Condition 4.1.10 (a)(ii);

> *Any event in which the duration of venting through a waste heat stack is 60 minutes or longer, other than for scheduled inspection and maintenance of heat recovery steam generators or control equipment shall be reported within 10 days of such occurrence.*

The general reporting provisions provided in Condition 3.5.2(a) require that each notification include the following additional information:

> *Except as specified in a particular provision of this permit or in a subsequent CAAPP Permit for the plant, notifications and reports for a deviation from applicable emission standards and control requirements shall include at least the following information: the date and time of the event, a description of the event, information on the magnitude of the deviation, a description of the corrective measures taken, and a description of any preventative measures taken to prevent future occurrences.*

Date: Waste Heat Stack #1: 3/28/2018 0343 – 3/30/2018 0153

Total Event Time: Waste Heat Stack #1: 2769.25 minutes

Gateway Energy Coke Company
2585 Edwardsville Rd
Granite City, IL 62040

Description: On March 28, 2018 GECC opened Waste Heat Stack #1 in response to a suspected tube leak.

Magnitude: The vent stack lids associated with HRSG #1 were open for the cumulative total of 2769.25 minutes.

Corrective Measures Taken: GECC maintenance personnel and multiple contractors worked continuously to prepare the HRSG and repair the tube leak as expeditiously as possible in order to reduce excess emissions. Upon inspection of HRSG #1, a leak in a tube in the Economizer section was identified, removed, and replaced. GECC and contractors inspected all repairs and performed a water pressure test before HRSG #1 was brought back online.

Preventative Measures: A RCFA will be performed to determine the root cause of the failure.

If you have any questions or comments, please feel free to contact me at (618) 512-4918.

Sincerely,

Chris DeCioccio
Environmental Manager

Matthew Lester
General Manager

cc: Bureau of Air
Compliance Section
P.O. Box 19276
Springfield, Illinois 62794-9276
FedEx: 771928836469

Gateway Energy Coke Company
2585 Edwardsville Rd
Granite City, IL 62040

April 24, 2018

Andy Jankowski
Illinois Environment Protection Agency
2009 Mall Street
Collinsville, IL 62234
FedEx: 780659335707

SunCoke Energy
Stack Lid Openings Stack Lid #5 – April 15, 2018 through April 17, 2018.
Facility ID: 119040ATN

Mr. Jankowski:

SunCoke Energy - (GECC) operates a coke production facility located at 2585 Edwardsville Road, Granite City, IL. The facility operates under the construction permit 119040ATN, modified April 28, 2010.

Pursuant to permit condition 4.1.10 (a)(ii), GECC is required to submit written notification of stack lid openings which last longer than sixty (60) minutes that are not part of scheduled maintenance. According to Condition 4.1.10 (a)(ii);

> *Any event in which the duration of venting through a waste heat stack is 60 minutes or longer, other than for scheduled inspection and maintenance of heat recovery steam generators or control equipment shall be reported within 10 days of such occurrence.*

The general reporting provisions provided in Condition 3.5.2(a) require that each notification include the following additional information:

> *Except as specified in a particular provision of this permit or in a subsequent CAAPP Permit for the plant, notifications and reports for a deviation from applicable emission standards and control requirements shall include at least the following information: the date and time of the event, a description of the event, information on the magnitude of the deviation, a description of the corrective measures taken, and a description of any preventative measures taken to prevent future occurrences.*

Date: Waste Heat Stack #5: 4/15/2018 2103 – 4/17/2018 2319

Total Event Time: Waste Heat Stack #5: 3016 minutes

Gateway Energy Coke Company
2585 Edwardsville Rd
Granite City, IL 62040

Description: On April 15, 2018 GECC opened Waste Heat Stack #5 in response to a suspected tube leak.

Magnitude: The vent stack lids associated with HRSG #5 were open for the cumulative total of 3016 minutes.

Corrective Measures Taken: GECC maintenance personnel and multiple contractors worked continuously to prepare the HRSG and repair the tube leak as expeditiously as possible in order to reduce excess emissions. Upon inspection of HRSG #5, a leak in a tube in the Economizer section was identified, removed, and replaced. Three additional tubes in the proximity of the failed tube were found to have thinned walls and were removed and replaced as a precaution. GECC and contractors inspected all repairs and performed a water pressure test before HRSG #5 was brought back online.

Preventative Measures: A RCFA will be performed to determine the root cause of the failure.

If you have any questions or comments, please feel free to contact me at (618) 512-4918.

Sincerely,

Chris DeCioccio
Environmental Manager

Matthew Lester
General Manager

cc: Bureau of Air
Compliance Section
P.O. Box 19276
Springfield, Illinois 62794-9276
FedEx: 780659364450

Gateway Energy Coke Company
2585 Edwardsville Rd
Granite City, IL 62040

May 16, 2018

Andy Jankowski
Illinois Environment Protection Agency
2009 Mall Street
Collinsville, IL 62234
FedEx: 772244599664

SunCoke Energy
Stack Lid Openings Stack Lid #3 – May 8, 2018 through May 11, 2018.
Facility ID: 119040ATN

Mr. Jankowski:

SunCoke Energy - (GECC) operates a coke production facility located at 2585 Edwardsville Road, Granite City, IL. The facility operates under the construction permit 119040ATN, modified April 28, 2010.

Pursuant to permit condition 4.1.10 (a)(ii), GECC is required to submit written notification of stack lid openings which last longer than sixty (60) minutes that are not part of scheduled maintenance. According to Condition 4.1.10 (a)(ii);

> *Any event in which the duration of venting through a waste heat stack is 60 minutes or longer, other than for scheduled inspection and maintenance of heat recovery steam generators or control equipment shall be reported within 10 days of such occurrence.*

The general reporting provisions provided in Condition 3.5.2(a) require that each notification include the following additional information:

> *Except as specified in a particular provision of this permit or in a subsequent CAAPP Permit for the plant, notifications and reports for a deviation from applicable emission standards and control requirements shall include at least the following information: the date and time of the event, a description of the event, information on the magnitude of the deviation, a description of the corrective measures taken, and a description of any preventative measures taken to prevent future occurrences.*

Date: Waste Heat Stack #3: 5/8/2018 0115 – 5/11/2018 0256

Total Event Time: Waste Heat Stack #3: 4421 minutes

Gateway Energy Coke Company
2585 Edwardsville Rd
Granite City, IL 62040

Description: On May 8, 2018 GECC opened Waste Heat Stack #3 in response to a suspected tube leak.

Magnitude: The vent stack lids associated with HRSG #3 were open for the cumulative total of 4421 minutes.

Corrective Measures Taken: GECC maintenance personnel and multiple contractors worked continuously to prepare the HRSG and repair the tube leak as expeditiously as possible in order to reduce excess emissions. Upon inspection of HRSG #3, leaks in two tubes in the Economizer section were identified, removed, and replaced. During the water pressure test, an additional leak in the Evaporator section and an additional leak in the Superheat section were identified, removed, and replaced. GECC and contractors inspected all repairs and performed another water pressure test before HRSG #3 was brought back online.

Preventative Measures: A RCFA will be performed to determine the root cause of the failure.

If you have any questions or comments, please feel free to contact me at (618) 512-4918.

Sincerely,

Chris DeCioccio
Environmental Manager

Matthew Lester
General Manager

cc: Bureau of Air
Compliance Section
P.O. Box 19276
Springfield, Illinois 62794-9276
FedEx: 772244610136

Gateway Energy Coke Company
2585 Edwardsville Rd
Granite City, IL 62040

May 24, 2018

Andy Jankowski
Illinois Environment Protection Agency
2009 Mall Street
Collinsville, IL 62234
FedEx: 772318033971

SunCoke Energy
Stack Lid Openings (Stack Lids #1, 2, 3, 4, 5, 6) May 14, 2018.
Facility ID: 119040ATN

Mr. Jankowski:

SunCoke Energy - (GECC) operates a coke production facility located at 2585 Edwardsville Road, Granite City, IL. The facility operates under the construction permit 119040ATN, modified April 28, 2010.

Pursuant to permit condition 4.1.10 (a)(ii), GECC is required to submit written notification of stack lid openings which last longer than sixty (60) minutes that are not part of scheduled maintenance. According to Condition 4.1.10 (a)(ii);

> *Any event in which the duration of venting through a waste heat stack is 60 minutes or longer, other than for scheduled inspection and maintenance of heat recovery steam generators or control equipment shall be reported within 10 days of such occurrence.*

The general reporting provisions provided in Condition 3.5.2(a) require that each notification include the following additional information:

> *Except as specified in a particular provision of this permit or in a subsequent CAAPP Permit for the plant, notifications and reports for a deviation from applicable emission standards and control requirements shall include at least the following information: the date and time of the event, a description of the event, information on the magnitude of the deviation, a description of the corrective measures taken, and a description of any preventative measures taken to prevent future occurrences.*

Date: Waste Heat Stack #1: 05/14/2018 2228 – 05/15/18 0014,
Waste Heat Stack #2: 05/14/2018 2228 – 2320,
Waste Heat Stack #3: 05/14/2018 2229 – 2342,
Waste Heat Stack #4: 05/14/2018 2228 – 05/15/18 0025,
Waste Heat Stack #5: 05/14/2018 2229 – 2328,
Waste Heat Stack #6: Open for tube leak

Gateway Energy Coke Company
2585 Edwardsville Rd
Granite City, IL 62040

Total Event Time: Waste Heat Stack #1: 103.42 minutes
Waste Heat Stack #2: 51.65 minutes
Waste Heat Stack #3: 73.42 minutes
Waste Heat Stack #4: 116.65 minutes
Waste Heat Stack #5: 54.75 minutes
Waste Heat Stack #6: Open for tube leak

Description: On May 14, 2018 at approx. 2228, GECC experienced an interruption in the main power supply to the plant resulting in both Induced Draft (ID) fans shutting down. The initial investigation from GECC's electrical utility provider indicates that the interruption in power was caused by a failure at a transformer located at a utility-owned substation in the vicinity of the GECC facility.

Magnitude: The vent stack lids associated with HRSG #1, 2, 3, 4, 5 were open for the cumulative total of 399.89 minutes. The stack lid associated with HRSG #6 was already open due to a tube leak.

Corrective Measures Taken: Once power was restored, the Control Room Operator (CRO) restarted both ID fans and brought them online to bring the system to normal operating conditions. Once the ID Fans were started, the CRO increased draft to close the vent stack lids.

Preventative Measures: As this event was due to a transformer failure external to GECC, an RCFA will be performed to identify actions that relate to ensuring GECC is clear to restart safely.

If you have any questions or comments, please feel free to contact me at (618) 512-4918.

Sincerely,

Chris DeCioccio
Environmental Manager

Matthew Lester
General Manager

cc: Bureau of Air
Compliance Section
P.O. Box 19276
Springfield, Illinois 62794-9276
FedEx: 772318054340

Gateway Energy Coke Company
2585 Edwardsville Rd
Granite City, IL 62040

May 24, 2018

Andy Jankowski
Illinois Environment Protection Agency
2009 Mall Street
Collinsville, IL 62234
FedEx: 772314420120

SunCoke Energy
Stack Lid Openings Stack Lid #6 – May 14, 2018 through May 16, 2018.
Facility ID: 119040ATN

Mr. Jankowski:

SunCoke Energy - (GECC) operates a coke production facility located at 2585 Edwardsville Road, Granite City, IL. The facility operates under the construction permit 119040ATN, modified April 28, 2010.

Pursuant to permit condition 4.1.10 (a)(ii), GECC is required to submit written notification of stack lid openings which last longer than sixty (60) minutes that are not part of scheduled maintenance. According to Condition 4.1.10 (a)(ii);

> *Any event in which the duration of venting through a waste heat stack is 60 minutes or longer, other than for scheduled inspection and maintenance of heat recovery steam generators or control equipment shall be reported within 10 days of such occurrence.*

The general reporting provisions provided in Condition 3.5.2(a) require that each notification include the following additional information:

> *Except as specified in a particular provision of this permit or in a subsequent CAAPP Permit for the plant, notifications and reports for a deviation from applicable emission standards and control requirements shall include at least the following information: the date and time of the event, a description of the event, information on the magnitude of the deviation, a description of the corrective measures taken, and a description of any preventative measures taken to prevent future occurrences.*

Date: Waste Heat Stack #6: 5/14/2018 2200 – 5/16/2018 1956

Total Event Time: Waste Heat Stack #6: 2756 minutes

Gateway Energy Coke Company
2585 Edwardsville Rd
Granite City, IL 62040

Description: On May 14, 2018 GECC opened Waste Heat Stack #6 in response to a suspected tube leak.

Magnitude: The vent stack lids associated with HRSG #6 were open for the cumulative total of 2756 minutes.

Corrective Measures Taken: GECC maintenance personnel and multiple contractors worked continuously to prepare the HRSG and repair the tube leak as expeditiously as possible in order to reduce excess emissions. Upon inspection of HRSG #6, a leak in a tube in the Economizer section and a leak in a U-Bend in the Superheat section were identified, removed, and replaced. GECC and contractors inspected all repairs and performed a water pressure test before HRSG #6 was brought back online.

Preventative Measures: A RCFA will be performed to determine the root cause of the failure.

If you have any questions or comments, please feel free to contact me at (618) 512-4918.

Sincerely,

Chris DeCioccio
Environmental Manager

Matthew Lester
General Manager

cc: Bureau of Air
Compliance Section
P.O. Box 19276
Springfield, Illinois 62794-9276
FedEx: 772314432319

Gateway Energy Coke Company
2585 Edwardsville Rd
Granite City, IL 62040

June 20, 2018

Andy Jankowski
Illinois Environment Protection Agency
2009 Mall Street
Collinsville, IL 62234
FedEx: 772526160662

SunCoke Energy
Stack Lid Openings Stack Lid #3 – June 10, 2018 through June 14, 2018.
Facility ID: 119040ATN

Mr. Jankowski:

SunCoke Energy - (GECC) operates a coke production facility located at 2585 Edwardsville Road, Granite City, IL. The facility operates under the construction permit 119040ATN, modified April 28, 2010.

Pursuant to permit condition 4.1.10 (a)(ii), GECC is required to submit written notification of stack lid openings which last longer than sixty (60) minutes that are not part of scheduled maintenance. According to Condition 4.1.10 (a)(ii);

> *Any event in which the duration of venting through a waste heat stack is 60 minutes or longer, other than for scheduled inspection and maintenance of heat recovery steam generators or control equipment shall be reported within 10 days of such occurrence.*

The general reporting provisions provided in Condition 3.5.2(a) require that each notification include the following additional information:

> *Except as specified in a particular provision of this permit or in a subsequent CAAPP Permit for the plant, notifications and reports for a deviation from applicable emission standards and control requirements shall include at least the following information: the date and time of the event, a description of the event, information on the magnitude of the deviation, a description of the corrective measures taken, and a description of any preventative measures taken to prevent future occurrences.*

Date: Waste Heat Stack #3: 6/10/2018 1502 – 6/14/2018 1922

Total Event Time: Waste Heat Stack #3: 6020 minutes

Gateway Energy Coke Company
2585 Edwardsville Rd
Granite City, IL 62040

Description: On June 10, 2018 GECC opened Waste Heat Stack #3 in response to a suspected tube leak.

Magnitude: The vent stack lids associated with HRSG #3 were open for the cumulative total of 6020 minutes.

Corrective Measures Taken: GECC maintenance personnel and multiple contractors worked continuously to prepare the HRSG and repair the tube leak as expeditiously as possible in order to reduce excess emissions. Upon inspection of HRSG #3, leaks in tubes in the Economizer section and in the Superheat section were identified, removed, and replaced. During the water pressure test, an additional leak in the Economizer section was identified, removed, and replaced. During a second water pressure test, another leak in the Economizer section was identified, removed, and replaced. GECC and contractors inspected all repairs and performed another water pressure test before HRSG #3 was brought back online.

Preventative Measures: A RCFA will be performed to determine the root cause of the failure.

If you have any questions or comments, please feel free to contact me at (618) 512-4918.

Sincerely,

Chris DeCioccio
Environmental Manager

Matthew Lester
General Manager

cc: Bureau of Air
Compliance Section
P.O. Box 19276
Springfield, Illinois 62794-9276
FedEx: 772526178230

Gateway Energy Coke Company
2585 Edwardsville Rd
Granite City, IL 62040

June 22, 2018

Andy Jankowski
Illinois Environment Protection Agency
2009 Mall Street
Collinsville, IL 62234
FedEx: 772544550488

SunCoke Energy
Stack Lid Openings Stack Lid #5 – June 12, 2018 through June 16, 2018.
Facility ID: 119040ATN

Mr. Jankowski:

SunCoke Energy - (GECC) operates a coke production facility located at 2585 Edwardsville Road, Granite City, IL. The facility operates under the construction permit 119040ATN, modified April 28, 2010.

Pursuant to permit condition 4.1.10 (a)(ii), GECC is required to submit written notification of stack lid openings which last longer than sixty (60) minutes that are not part of scheduled maintenance. According to Condition 4.1.10 (a)(ii);

> *Any event in which the duration of venting through a waste heat stack is 60 minutes or longer, other than for scheduled inspection and maintenance of heat recovery steam generators or control equipment shall be reported within 10 days of such occurrence.*

The general reporting provisions provided in Condition 3.5.2(a) require that each notification include the following additional information:

> *Except as specified in a particular provision of this permit or in a subsequent CAAPP Permit for the plant, notifications and reports for a deviation from applicable emission standards and control requirements shall include at least the following information: the date and time of the event, a description of the event, information on the magnitude of the deviation, a description of the corrective measures taken, and a description of any preventative measures taken to prevent future occurrences.*

Date: Waste Heat Stack #5: 6/12/2018 1554 – 6/16/2018 0106

Total Event Time: Waste Heat Stack #5: 4872 minutes

Gateway Energy Coke Company
2585 Edwardsville Rd
Granite City, IL 62040

Description: On June 12, 2018 GECC opened Waste Heat Stack #5 in response to a suspected tube leak.

Magnitude: The vent stack lids associated with HRSG #5 were open for the cumulative total of 4872 minutes.

Corrective Measures Taken: GECC maintenance personnel and multiple contractors worked continuously to prepare the HRSG and repair the tube leak as expeditiously as possible in order to reduce excess emissions. Upon inspection of HRSG #5, leaks in tubes in the Economizer section and in the Superheat section were identified, removed, and replaced. During the water pressure test, an additional leak in the Superheat section was identified, removed, and replaced. During the next water pressure test, a newly repaired weld on a tube in the Superheat section failed and was repaired. GECC and contractors inspected all repairs and performed a water pressure test before HRSG #5 was brought back online.

Preventative Measures: A RCFA will be performed to determine the root cause of the failure.

If you have any questions or comments, please feel free to contact me at (618) 512-4918.

Sincerely,

Chris DeCioccio
Environmental Manager

Matthew Lester
General Manager

cc: Bureau of Air
Compliance Section
P.O. Box 19276
Springfield, Illinois 62794-9276
FedEx: 772544567152

Gateway Energy Coke Company
2585 Edwardsville Rd
Granite City, IL 62040

June 29, 2018

Andy Jankowski
Illinois Environment Protection Agency
2009 Mall Street
Collinsville, IL 62234
FedEx: 772603800072

SunCoke Energy
Stack Lid Openings (Stack Lids #2, 3, 4, 5, 6) June 21, 2018.
Facility ID: 119040ATN

Mr. Jankowski:

SunCoke Energy - (GECC) operates a coke production facility located at 2585 Edwardsville Road, Granite City, IL. The facility operates under the construction permit 119040ATN, modified April 28, 2010.

Pursuant to permit condition 4.1.10 (a)(ii), GECC is required to submit written notification of stack lid openings which last longer than sixty (60) minutes that are not part of scheduled maintenance. According to Condition 4.1.10 (a)(ii);

> *Any event in which the duration of venting through a waste heat stack is 60 minutes or longer, other than for scheduled inspection and maintenance of heat recovery steam generators or control equipment shall be reported within 10 days of such occurrence.*

The general reporting provisions provided in Condition 3.5.2(a) require that each notification include the following additional information:

> *Except as specified in a particular provision of this permit or in a subsequent CAAPP Permit for the plant, notifications and reports for a deviation from applicable emission standards and control requirements shall include at least the following information: the date and time of the event, a description of the event, information on the magnitude of the deviation, a description of the corrective measures taken, and a description of any preventative measures taken to prevent future occurrences.*

Date: Waste Heat Stack #2: 06/21/2018 2207 – 2214,
Waste Heat Stack #3: 06/21/2018 2218 – 2222, 2301 – 2313,
Waste Heat Stack #4: 06/21/2018 2204 – 2343
Waste Heat Stack #5: 06/21/2018 2300 – 2315,
Waste Heat Stack #6: 06/21/2018 2300 – 2308

Gateway Energy Coke Company
2585 Edwardsville Rd
Granite City, IL 62040

Total Event Time: Waste Heat Stack #2: 7 minutes
Waste Heat Stack #3: 15.42 minutes
Waste Heat Stack #4: 99.33 minutes
Waste Heat Stack #5: 15.58 minutes
Waste Heat Stack #6: 7.83 minutes

Description: On June 21, 2018 at approx. 2200, GECC experienced an interruption in the HRSG feedwater supply to the plant resulting in five of the six HRSGs tripping offline and their associated vent stacks opening.

Magnitude: The vent stack lids associated with HRSG #2, 3, 4, 5, 6 were open for the cumulative total of 145.16 minutes.

Corrective Measures Taken: Once feedwater was restored, the Control Room Operator (CRO) brought the HRSGs back online and increased draft to close the vent stack lids.

Preventative Measures: As this event was due to incoming feedwater external to GECC, an RCFA will be performed to identify actions that relate to ensuring GECC is clear to restart safely.

If you have any questions or comments, please feel free to contact me at (618) 512-4918.

Sincerely,

Chris DeCioccio
Environmental Manager

Matthew Lester
General Manager

cc: Bureau of Air
Compliance Section
P.O. Box 19276
Springfield, Illinois 62794-9276
FedEx: 772603821883

Gateway Energy Coke Company
2585 Edwardsville Rd
Granite City, IL 62040

July 3, 2018

Andy Jankowski
Illinois Environment Protection Agency
2009 Mall Street
Collinsville, IL 62234
FedEx: 772626274881

SunCoke Energy
Stack Lid Openings Stack Lid #1 – June 24, 2018 through June 28, 2018.
Facility ID: 119040ATN

Mr. Jankowski:

SunCoke Energy - (GECC) operates a coke production facility located at 2585 Edwardsville Road, Granite City, IL. The facility operates under the construction permit 06070020, modified April 28, 2010.

Pursuant to permit condition 4.1.10 (a)(ii), GECC is required to submit written notification of stack lid openings which last longer than sixty (60) minutes that are not part of scheduled maintenance. According to Condition 4.1.10 (a)(ii);

> *Any event in which the duration of venting through a waste heat stack is 60 minutes or longer, other than for scheduled inspection and maintenance of heat recovery steam generators or control equipment shall be reported within 10 days of such occurrence.*

The general reporting provisions provided in Condition 3.5.2(a) require that each notification include the following additional information:

> *Except as specified in a particular provision of this permit or in a subsequent CAAPP Permit for the plant, notifications and reports for a deviation from applicable emission standards and control requirements shall include at least the following information: the date and time of the event, a description of the event, information on the magnitude of the deviation, a description of the corrective measures taken, and a description of any preventative measures taken to prevent future occurrences.*

Date: Waste Heat Stack #1: 6/24/2018 2231 – 6/28/2018 0227

Total Event Time: Waste Heat Stack #1: 4556 minutes

Gateway Energy Coke Company
2585 Edwardsville Rd
Granite City, IL 62040

Description: On June 24, 2018 GECC opened Waste Heat Stack #1 in response to a suspected tube leak.

Magnitude: The vent stack lids associated with HRSG #1 were open for the cumulative total of 4556 minutes.

Corrective Measures Taken: GECC maintenance personnel and multiple contractors worked continuously to prepare the HRSG and repair the tube leak as expeditiously as possible in order to reduce excess emissions. Upon inspection of HRSG #1, multiple leaks in tubes in the Economizer section and in the Superheat section were identified, removed, and replaced. During the water pressure test, an additional leak in a U-Bend in the Superheat section was identified, removed, and replaced. GECC and contractors inspected all repairs and performed a water pressure test before HRSG #1 was brought back online.

Preventative Measures: A RCFA will be performed to determine the root cause of the failure.

If you have any questions or comments, please feel free to contact me at (618) 512-4918.

Sincerely,

Chris DeCioccio
Environmental Manager

Matthew Lester
General Manager

cc: Bureau of Air
Compliance Section
P.O. Box 19276
Springfield, Illinois 62794-9276
FedEx: 772626297621

Gateway Energy Coke Company
2585 Edwardsville Rd
Granite City, IL 62040

July 6, 2018

Andy Jankowski
Illinois Environment Protection Agency
2009 Mall Street
Collinsville, IL 62234
FedEx: 772646526824

SunCoke Energy
Stack Lid Openings Stack Lid #2 - June 28, 2018 through July 1, 2018.
Facility ID: 119040ATN

Mr. Jankowski:

SunCoke Energy - (GECC) operates a coke production facility located at 2585 Edwardsville Road, Granite City, IL. The facility operates under the construction permit 119040ATN, modified April 28, 2010.

Pursuant to permit condition 4.1.10 (a)(ii), GECC is required to submit written notification of stack lid openings which last longer than sixty (60) minutes that are not part of scheduled maintenance. According to Condition 4.1.10 (a)(ii);

> *Any event in which the duration of venting through a waste heat stack is 60 minutes or longer, other than for scheduled inspection and maintenance of heat recovery steam generators or control equipment shall be reported within 10 days of such occurrence.*

The general reporting provisions provided in Condition 3.5.2(a) require that each notification include the following additional information:

> *Except as specified in a particular provision of this permit or in a subsequent CAAPP Permit for the plant, notifications and reports for a deviation from applicable emission standards and control requirements shall include at least the following information: the date and time of the event, a description of the event, information on the magnitude of the deviation, a description of the corrective measures taken, and a description of any preventative measures taken to prevent future occurrences.*

Date: Waste Heat Stack #2: 6/28/2018 1534 – 7/1/2018 0802

Total Event Time: Waste Heat Stack #2: 3868 minutes

Gateway Energy Coke Company
2585 Edwardsville Rd
Granite City, IL 62040

Description: On June 28, 2018 GECC opened Waste Heat Stack #2 in response to a suspected tube leak.

Magnitude: The vent stack lids associated with HRSG #2 were open for the cumulative total of 3868 minutes.

Corrective Measures Taken: GECC maintenance personnel and multiple contractors worked continuously to prepare the HRSG and repair the tube leak as expeditiously as possible in order to reduce excess emissions. Upon inspection of HRSG #2, a leak in the Superheat section were identified, removed, and replaced. GECC and contractors inspected all repairs and performed a water pressure test before HRSG #2 was brought back online.

Preventative Measures: A RCFA will be performed to determine the root cause of the failure.

If you have any questions or comments, please feel free to contact me at (618) 512-4918.

Sincerely,

Chris DeCioccio
Environmental Manager

Matthew Lester
General Manager

cc: Bureau of Air
Compliance Section
P.O. Box 19276
Springfield, Illinois 62794-9276
FedEx: 772646537773

Attachment C3

Gateway Energy and Coke Company, Other Agency Notifications and Reports

PCM Emissions Test Report
Gateway Energy and Coke Company, LLC
Facility ID: 119040ATN

Test Dates: April 3-5, 2018

Prepared for:
Gateway Energy and Coke Company, LLC
Granite City, Illinois

Prepared by:
AECOM Technical Services, Inc.
Oak Ridge, Tennessee

PCM EMISSIONS TEST REPORT
GATEWAY ENERGY AND COKE COMPANY, LLC

FACILITY ID: 119040ATN

TEST DATES: APRIL 3-5, 2018

Prepared for:
Gateway Energy and Coke Company, LLC
2585 Edwardsville Road
Granite City, Illinois 62040

Prepared by:

AECOM Technical Services, Inc.
105 Mitchell Road, Suite 200
Oak Ridge, Tennessee 37830
1805141

May 2018

TABLE OF CONTENTS

LIST OF TABLES iii
ACRONYMS iv

1.0 INTRODUCTION 1-1

2.0 PROCESS DESCRIPTION 2-1

3.0 TEST RESULTS 3-1

4.0 TEST METHODS 4-1

4.1 EPA Reference Methods 1 and 2 – Volumetric Flow Rate 4-1
4.2 EPA Reference Method 3 – Stack Gas Molecular Weight 4-2
4.3 EPA Reference Method 4 – Stack Gas Moisture Content 4-2
4.4 EPA Reference Method 5 – Filterable Particulate Matter 4-3
4.5 EPA Reference Method 202 – Condensable Particulate Matter 4-3

Appendix A PROCESS DATA

Appendix B STACK EMISSION CALCULATIONS AND DATA

Appendix C ANALYTICAL REPORT

Appendix D EQUIPMENT CALIBRATION INFORMATION

LIST OF TABLES

Table 3-1. Test Results from PCM Stack Tests 3-2
Table 4-1. Test Method Summary 4-1

ACRONYMS

CFR	Code of Federal Regulations
CO_2	Carbon Dioxide
dscf	dry standard cubic feet
EPA	Environmental Protection Agency
GECC	Gateway Energy and Coke Company, LLC
IEPA	Illinois Environmental Protection Agency
MACT	Maximum Achievable Control Technology
O_2	Oxygen
PCM	Pushing/Charging Machine
PM	Particulate Matter

1.0 INTRODUCTION

Gateway Energy and Coke Company, LLC (GECC) performed particulate matter (PM) air emissions tests on the Pushing/Charging Machine (PCM) Stack at GECC's Granite City, Illinois, facility on April 3-5, 2018. The purpose of the testing was to verify that the PM emissions are in compliance with the emission limits in the construction permit (Permit No. 06070020) while utilizing the west door extractor. The tests measured emissions of both filterable PM and total PM (filterable plus condensable). All tests were performed as described in the Intent to Test Notification submitted to Illinois EPA (IEPA).

The stack testing was coordinated by Chris DeCioccio (GECC's environmental manager) and performed by AECOM. IEPA did not witness the tests. The AECOM test team included Bill Thomas and Hayden Orr.

The test results are presented in this report along with a description of the test procedures. The appendices contain supporting information: Appendix A contains process data; Appendix B contains stack emission calculations and data; Appendix C contains the analytical report; and Appendix D contains equipment calibration information.

2.0 PROCESS DESCRIPTION

GECC utilizes SunCoke Energy's heat recovery type of oven to manufacture metallurgical coke. In coke production, the volatile fraction of the coal is driven off in a reducing atmosphere. Coke is essentially the remaining carbon and ash. Flue gases are generated during the coking process as the coal volatiles are combusted within the oven. The flue gases from coking are discharged into a common afterburner tunnel and directed to a heat recovery steam generator. The cooled gases pass through a lime spray dryer/baghouse system prior to being exhausted from the main stack.

The length of the coking cycle is approximately 48 hours. During production, a PCM is used to remove the coal-side oven door, push the coke product out of the oven and onto a flat-push hot car, recharge the oven with coal and replace the coal-side oven door. The charging equipment is equipped with a hood to collect emissions that escape from the oven when coal is being charged. The hood is connected to a baghouse located on the PCM. An induced draft fan draws air into the hood and baghouse and exhausts it to the atmosphere through a stack. The PCM baghouse contains cartridge-type filters that are cleaned by pulses of compressed air.

There are 120 ovens at GECC. The production operating schedule is arranged such that half the ovens are pushed/charged each day. The typical daily production cycle consists of pushing and charging 60 ovens starting at 7:00 p.m. Every fourth oven is pushed/charged starting in A battery (ovens 1 through 40). After A battery, the production operation moves to B battery (ovens 41 through 80) and then C battery (ovens 81 through 120). Production is typically paused after the first 30 ovens. Production is resumed at A battery and continues at B and C batteries until the second 30 ovens are pushed and recharged.

During the first two days of testing approximately 44 wet tons coal per oven were charged; on the third day of testing approximately 46 wet tons coal per oven were charged. Charging 44 to 46 tons per oven was a representative level for testing at approximately 88% to 92% of maximum production (50 tons per oven is the maximum allowable).

3.0 TEST RESULTS

The PCM baghouse exhaust stack was sampled for both filterable and total (filterable plus condensable) PM. The tests were performed using the test procedure from the Maximum Achievable Control Technology (MACT) standard for nonrecovery charging in 40 Code of Federal Regulations (CFR) 63.309(k). Sampling was only performed while the hood was over the oven door and coal was being charged. The sampling train was operated at one traverse point for the first oven then moved to the next traverse point for the next oven. This procedure was repeated until a 24-point traverse was completed and 24 ovens were charged. This same procedure was followed for each test run. The PM emissions were sampled for three tests runs, one run during the production cycle on three consecutive days (April 3-5, 2018).

The PCM has three PM limits: a normalized filterable PM emission rate (pound filterable PM per dry ton coal charged); a normalized total PM emission rate (pound total PM per dry ton coal charged); and an average daily emissions PM rate (pound PM per hour). Table 3-1 lists the measured gas parameters and PM emissions for the test runs along with the PM emissions limits. The test results demonstrated compliance with all PM limits.

The filterable PM and total PM emission rates were determined using the equation in the MACT standard:

$$Ep = \frac{C \times Q \times T}{P \times K}$$

Where:

Ep (Emission factor) = Process weighted mass emissions of PM, lb/ton dry coal;

C = Concentration of PM, grains per dry standard cubic foot (gr/dscf);

Q = Volumetric flow rate of stack gas, dscf/min;

T = Total time during a run that a sample is withdrawn from the stack during charging, min;

P = Total amount of dry coal charged during the test run, tons;

K = Conversion factor, 7,000 grains per pound (gr/lb).

Table 3-1. Test Results from PCM Stack Tests

Parameters	Run - 1	Run - 2	Run - 3	Average
Date	4/3/2018	4/4/2018	4/5/2018	
Test Times	19:25-23:29	20:37-23:54	19:11-23:01	
Sampling duration (minutes)	75	79	81	79
Coal charged during test run (dry tons)	986	965	1005	985
Volume sampled (dscf)	46.15	50.90	51.70	49.59
Moisture Content (% Vol.)	1.9	1.5	1.6	1.6
O2 (%)	20.9	20.9	21.0	20.9
CO2 (%)	0.2	0.2	0.2	0.2
Stack Gas Temperature (^{o}F)	138	123	128	129
Stack Velocity (ft/sec.)	48.4	48.5	48.9	48.6
Gas Flow Rate (acfm)	46,143.0	46,278.0	46,688.6	46,370
Gas Flow Rate (scfm)	39,892.4	41,792.2	41,378.6	41,021
Gas Flow Rate (dscfm)	39,135.5	41,184.6	40,720.3	40,347
Percent Isokinetic	100.5	100.8	100.4	100.6
Filterable PM concentration (gr/dscf)	<0.0006	<0.0004	<0.0003	<0.0004
Total PM concentration (gr/dscf)	<0.0066	<0.0036	<0.0026	<0.0042
Filterable PM emission rate (lb/dry ton coal)	<0.0002	<0.0002	<0.0001	<0.0002
MACT Filterable Particulate Limit (lb/dry ton coal)				0.0081
Comply with limit?				Yes
Total PM emission rate (lb/dry ton coal)	<0.0028	<0.0018	<.00012	<0.0019
Permit Total Particulate Limit (lb/dry ton coal)				0.016
Comply with limit?				Yes
Total tons charged in all ovens (dry tons coal/day)	2,338	2,380	2,467	2,395
Daily average particulate rate (lb/hour)	<0.27	<0.17	<0.12	<0.19
Daily average total particulate rate limit (lb/hour)				1.8
Comply with limit?				Yes
PCM Baghouse pressure drop (inches water)	4.0-5.6	4.6-5.5	4.2-5.6	

Note: "<" indicates one or more sample fractions were below method detection limit (MDL). MDL was used in calculations.

The baghouse pressure drop ranges, observed during the charging of each oven while sampling was ongoing, were similar during all test runs as shown above. The observed pressure drops are listed in Appendix B.

4.0 TEST METHODS

The sampling methods used during the tests are summarized in Table 4-1.

Table 4-1. Test Method Summary

Emission Unit	Pollutant	Test Method	Comment
PCM Baghouse Exhaust Stack	Filterable Particulates	EPA Method 5	Sample per MACT standard – only during coal charging.
	Condensable Particulates	EPA Method 202	Collected with Method 5 sample
	Traverse point layout	EPA Method 1	24 traverse points; 1 point per oven.
	Gas flowrate	EPA Method 2	Determined with Method 5/202 sample
	Gas molecular weight	EPA Method 3A	Bag samples collected and analyzed using an oxygen and a carbon dioxide analyzer
	Moisture	EPA Method 4	Determined with Method 5/202 sample

Each test method used for this test program was based on standard methodology taken from the latest version of 40 CFR 60, Appendix A. These test methods were presented in the Intent to Test Notification submitted to IEPA prior to the compliance test. Detailed descriptions of the sampling trains and methods used are provided below.

4.1 EPA Reference Methods 1 and 2 – Volumetric Flow Rate

U.S. Environmental Protection Agency (EPA) Methods 1 and 2 were used to determine the sampling traverse layout and stack gas volumetric flow rate at the sampling location. A velocity traverse was conducted at discrete points during each test run at each designated traverse point. A calibrated S-type Pitot tube and an inclined manometer were used to measure the velocity pressure. A calibrated type "K" thermocouple was used to measure the stack gas temperature at each traverse point. Utilizing the measured stack gas molecular weight and the moisture content, the standard (Q_{std}) and actual volumetric flow rates were calculated in accordance with the formulas found in EPA Reference Method 2.

As part of the pre-test activities, measurements were made to determine whether cyclonic flow conditions were present in the stack. In order to determine the presence of cyclonic flow a cyclonic flow check was performed according to EPA Method 1 sampling procedures. The cyclonic flow measurements performed on the stack indicated that minimal cyclonic flow was present.

Based on physical measurements of the stack, it was determined that the maximum required 24 points should be used for the sampling traverses. In order to perform testing at each of the 24 traverse points, the points were divided between 24 ovens. Prior to starting the test run the sample nozzle was placed at the first traverse test point within the stack. Sampling was performed at that point for the duration of charging activities for that particular oven. When the PCM was relocated to the next oven, the sample train was moved to the second traverse point, and the process repeated. This was accomplished over a total of 24 ovens for each test run.

4.2 EPA Reference Method 3 – Stack Gas Molecular Weight

The stack gas oxygen (O_2) and carbon dioxide (CO_2) concentrations were determined by collecting samples in a Tedlar bag. The samples were subsequently analyzed using the instrumental analyzer procedures in EPA Reference Method 3A. The resulting O_2 and CO_2 concentrations were used to calculate the molecular weight of the stack gas.

4.3 EPA Reference Method 4 – Stack Gas Moisture Content

The moisture content (%), B_{wo}, was determined for stack gas in accordance with EPA Reference Method 4. The Method 4 sampling was incorporated with each Method 5 isokinetic sampling train used for the testing. The detailed description of this sampling is included in Section 4.4.

4.4 EPA Reference Method 5 – Filterable Particulate Matter

The filterable PM testing was performed in accordance with EPA Reference Method 5. The PM sample was collected using a Teflon-coated nozzle connected to a heated glass probe liner. The probe liner was connected to a glass filter holder containing a pre-weighed glass-fiber filter. The probe and filter heater box were maintained at a temperature of 248°F ±25°F.

At the conclusion of each test run, the sample train was recovered by rinsing the sample probe liner and nozzle three times with acetone into a sample container. The filter was removed from the filter holder and placed into a Petri dish and sealed for transportation. The front half of the glass filter holder and connecting elbow were washed with acetone into the probe wash sample container. A sample of the acetone used in the sample recovery was collected and analyzed as a reagent blank. The acetone rinses and filters were analyzed for filterable PM. The laboratory report is included in Appendix C of this report.

4.5 EPA Reference Method 202 – Condensable Particulate Matter

The condensable PM was measured using the procedures described in EPA Reference Method 202. The impinger train contains a water-jacketed coil condenser between the heated filter outlet and inlet to the first knockout impinger. Any water condensed in the coil condenser drops into the knockout impinger, which is initially empty. The second impinger is also initially empty. The cooled gas then passes through a Teflon filter (CPM filter) and into the third impinger, which initially contains 100 mL of distilled water. The fourth impinger contains approximately 200 grams of indicating silica gel. The third and fourth impingers are placed in an ice bath to maintain the impinger train outlet temperature ≤68°F.

The objective of Method 202 is to collect materials that pass through the heated filterable PM filter (maintained at 248°F ±25°F) but then condense to form PM in ambient air. The sample gas is cooled to a target range of 65°F to 85°F in the condenser and first two impingers to allow any additional particulates to condense before passing through the CPM filter. The primary objective of Method 202 testing is to keep the CPM filter ≤85°F during the tests. However, due

to very cold ambient temperatures (in the 30s°F) and windy conditions, the measured CPM temperature was <65°F. Although the measured CPM concentration values were similar to the CPM concentration values measured in previous tests, the CPM filter temperature of <65°F may have allowed condensation of material that would not have condensed at 65°F. Thus, the CPM concentration results for the April 2018 tests could be biased high.

After testing, the impinger train was moved to the test trailer. For Runs 1 and 2, the water collected in the knockout impinger was quantitatively transferred to the second impinger. Deionized water was added to the second impinger as needed to raise the water level until the impinger tip was at least 1 centimeter below the surface of the water. The second impinger and the CPM filter were then connected to a cylinder of ultra-high purity nitrogen and purged for 60 minutes at a flow rate of 14 liters per minute. Run 3 had an immaterial amount of water collected in the first two impingers. In accordance with the test method, a purge of the system was not performed prior to recovery of the samples.

The back half of the filterable PM filter holder, condenser, first two impingers, connecting glassware, and front-half of the CPM filter holder were rinsed with water for recovery of the inorganic sample and with acetone followed by hexane for recovery of the organic sample. A field train proof blank was collected prior to the collection of Run 1 and a train blank was collected by recovering the Run 2 glassware after the Run 2 samples were recovered. The CPM filter, organic and inorganic rinses, were analyzed for inorganic and organic condensable PM. The laboratory report is included in Appendix C of this report.

Appendix A
PROCESS DATA

April 3, 2018; Run 1

Oven	Wet tons Charged	Charge Time	Comment	Tons charged
2	45.53	19:25	1st oven sampled; Port B	45.53
6	47.83	19:34		47.83
10	48.02	19:42		48.02
14	47.81	19:50		47.81
18	45.56	19:58		45.56
22	45.25	20:06		45.25
26	47.67	20:14		47.67
30	47.69	20:22		47.69
34	45.01	20:29	9th oven sampled; Port B	45.01
38	43.32	22:25	6th oven sampled; Port A	43.32
42	46.76	21:04	10th oven sampled; Port B	46.76
46	45.28	21:13		45.28
50	47.57	21:21	12th oven sampled; Port B	47.57
54	48.64	21:35	1st oven sampled; Port A	48.64
58	44.80	22:33	7th oven sampled; Port A	44.80
62	44.31	22:41	8th oven sampled; Port A	44.31
66	47.73	21:43	2nd oven sampled; Port A	47.73
70	47.78	21:51		47.78
74	46.42	21:59		46.42
78	45.63	22:07	5th oven sampled; Port A	45.63
83	45.88	22:59	9th oven sampled; Port A	45.88
87	48.43	23:07		48.43
91	48.08	23:15		48.08
95	47.24	23:23	12th oven sampled; Port A	47.24
99	46.19	23:31	Test run completed	
103	47.34	23:40	Test run completed	
107	48.26	23:47	Test run completed	
111	48.01	23:54	Test run completed	
115	46.99	0:01	Test run completed	
119	45.85	0:09	Test run completed	

Total wet tons charged during test =	1118.24	
Coal Moisture %=	11.80	
Dry tons coal charged =	986.3	
Sampling Start Time =	19:25	
Sampling Stop Time =	23:29	
Elapsed Sampling Time =	4:04	hr:min
Elapsed Sampling Time =	4.07	hrs

April 4, 2018; Run 2

Oven	Wet tons Charged	Charge Time	Comment	Tons charged
1	45.33	20:37	1st oven sampled; Port B	45.33
5	45.76	20:46		45.76
9	46.64	20:55		46.64
13	46.06	21:03		46.06
17	43.58	21:11		43.58
21	43.78	21:19		43.78
25	44.55	21:26		44.55
29	46.26	21:34		46.26
33	46.26	21:42		46.26
37	44.42	21:51		44.42
41	44.03	22:00		44.03
45	45.30	22:08	12th oven sampled; Port B	45.30
49	45.95	22:22	1st oven sampled; Port A	45.95
53	46.09	22:29		46.09
57	43.99	22:37		43.99
61	43.84	22:45		43.84
65	45.31	22:53		45.31
69	45.68	23:01		45.68
73	43.64	23:10		43.64
77	44.06	23:17		44.06
84	43.75	23:27		43.75
88	45.91	23:33		45.91
92	46.58	23:42		46.58
96	43.67	23:48	12th oven sampled; Port A	43.67
100	44.02	0:16	Test run completed	
104	43.96	0:24	Test run completed	
108	45.68	0:32	Test run completed	
112	45.59	0:40	Test run completed	
116	43.86	0:49	Test run completed	
120	43.67	0:56	Test run completed	

Total wet tons charged during test =	1080.44	
Coal Moisture %=	10.70	
Dry tons coal charged =	964.8	
Sampling Start Time =	20:37	
Sampling Stop Time =	23:54	
Elapsed Sampling Time =	3:17	hr:min
Elapsed Sampling Time =	3.28	hrs

April 5, 2018; Run 3

Oven	Wet tons Charged	Charge Time	Comment	Tons charged
2	45.30	19:11	1st oven sampled; Port B	45.30
6	48.27	19:20		48.27
10	47.79	19:28		47.79
14	47.65	19:36		47.65
18	46.62	19:47		46.62
22	45.05	19:56		45.05
26	48.56	20:04		48.56
30	48.17	20:11		48.17
34	45.52	20:20		45.52
38	44.18	20:28		44.18
42	46.04	20:39		46.04
46	45.33	20:47	12th oven sampled; Port B	45.33
50	47.85	21:03	1st oven sampled; Port A	47.85
54	49.12	21:11		49.12
58	46.48	21:19		46.48
62	44.60	21:27		44.60
66	48.33	21:34		48.33
70	48.17	21:42		48.17
74	47.25	21:50		47.25
78	45.12	21:58		45.12
83	46.07	22:32		46.07
87	47.63	22:40		47.63
91	48.37	22:47		48.37
95	47.78	22:55	12th oven sampled; Port A	47.78
99	47.02	23:03	Test run completed	
103	47.32	23:11	Test run completed	
107	47.67	23:19	Test run completed	
111	48.58	23:31	Test run completed	
115	47.25	23:39	Test run completed	
119	46.30	23:47	Test run completed	

Total wet tons charged during test =	1125.25	
Coal Moisture %=	10.70	
Dry tons coal charged =	1004.8	
Sampling Start Time =	19:11	
Sampling Stop Time =	23:01	
Elapsed Sampling Time =	3:50	hr:min
Elapsed Sampling Time =	3.83	hrs

Oven Charge Weights, wet tons

Oven Number	4/3/2018	4/4/2018	4/5/2018
1		45.33	
2	45.53		45.30
3		43.77	
4	44.93		44.80
5		45.76	
6	47.83		48.27
7		44.03	
8	47.37		48.30
9		46.64	
10	48.02		47.79
11		45.97	
12	46.06		48.51
13		46.06	
14	47.81		47.65
15		44.69	
16			37.57
17		43.58	
18	45.56		46.62
19		43.81	
20	46.09		45.97
21		43.78	
22	45.25		45.05
23		43.61	
24	44.72		45.08
25		44.55	
26	47.67		48.56
27		46.16	
28	47.21		47.88
29		46.26	
30	47.69		48.17
31		45.69	
32	47.69		48.02
33		46.26	
34	45.01		45.52
35		44.72	
36	45.71		45.37
37		44.42	
38	43.32		44.18
39		43.87	
40	45.56		46.03
41		44.03	
42	46.76		46.04
43		43.26	
44			38.53
45		45.30	

Oven Charge Weights, wet tons

Oven Number	4/3/2018	4/4/2018	4/5/2018
46	45.28		45.33
47		43.81	
48	44.79		44.92
49		45.95	
50	47.57		47.85
51		45.84	
52	47.78		47.81
53		46.09	
54	48.64		49.12
55		43.23	
56	47.09		47.38
57		43.99	
58	44.80		46.48
59		43.05	
60	45.59		45.43
61		43.84	
62	44.31		44.60
63		43.18	
64	44.72		44.67
65		45.31	
66	47.73		48.33
67		45.25	
68	47.59		48.08
69		45.68	
70	47.78		48.17
71		45.39	
72	48.01		48.02
73		43.64	
74	46.42		47.25
75		43.18	
76	46.06		46.20
77		44.06	
78	45.63		45.12
79		43.58	
80	45.59		45.50
81		43.14	
82	45.76		46.17
83	45.88		46.07
84		43.75	
85		43.33	
86	47.28		48.23
87	48.43		47.63
88		45.91	
89		43.61	
90	47.91		48.08

Oven Charge Weights, wet tons

Oven Number	4/3/2018	4/4/2018	4/5/2018
91	48.08		48.37
92		46.58	
93		43.58	
94	47.81		48.13
95	47.24		47.78
96		43.67	
97		42.21	
98	44.86		43.18
99	46.19		47.02
100		44.02	
101		42.30	
102	44.89		43.78
103	47.34		47.32
104		43.96	
105		42.98	
106	47.83		45.93
107	48.26		47.67
108		45.68	
109		44.02	
110	46.79		45.75
111	48.01		48.58
112		45.59	
113		44.26	
114			27.30
115	46.99		47.25
116		43.86	
117		42.59	
118	43.77		42.70
119	45.85		46.30
120		43.67	

Total tons, wet	2650.34	2665.33	2762.71
moisture, %	11.8	10.7	10.7
Total tons, dry	2337.6	2380.14	2467.1

Appendix B
STACK EMISSION CALCULATIONS AND DATA

Method 2– Determination of Cyclonic Flow

Project	GCO PCM Compliance Tests
Project Number	60566151
Facility	SunCoke Energy Granite City Operations
Source	PCM Stack
Operator	WCT / HO
Date	4/2/18
Time	~1500

Pitot Tube No.	AQS PC1
PTCF	0.84

Pitot Tube Leak Check			
Initial (+)	✓	Initial (-)	✓
Final (+)	✓	Final (-)	✓

Traverse Point	Yaw Angle (°)
A-1	~~WCT +25~~ +10
2	+10
3	+10
4	5
5	+5
6	+5
7	-14
8	10
9	-10
10	5
11	0
12	-10

Traverse Point	Yaw Angle (°)
B-1	10
2	15
3	10
4	0
5	0
6	0
7	5
8	5
9	5
10	5
11	5
12	5

Average Yaw Angle: _____. (This is the average of the absolute value of the measurements)

If the average yaw angle exceeds 20°, Method 2 is not applicable for the determination of gas velocity.

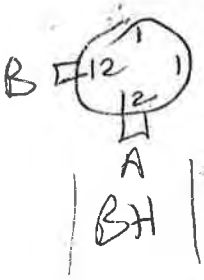

Calculation Summary

Project Name	**GCO PCM Tests**
Project Number	**60566151**
Facility	**Granite City, Illinois**

Sample Type	M5/202	M5/202	M5/202	Averages
Source	PCM Stack	PCM Stack	PCM Stack	
Condition	West Extractor	West Extractor	West Extractor	
Run	1	2	3	
Date	4/3/2018	4/4/2018	4/5/2018	
Time Start	19:25	20:37	19:11	
Time Stop	23:29	23:54	23:01	
Sampling Times	19:25-23:29	20:37-23:54	19:11-23:01	
Duct Diameter (ft) *(equivalent if square duct)*	4.50	4.50	4.50	
Pitot Tube Correction Factor	0.84	0.84	0.84	
Nozzle Diameter (inches)	0.213	0.213	0.213	
DGMCF (Y_d)	0.971	0.971	0.971	
Orifice Factor ("wc) ($\Delta H_@$)	1.902	1.902	1.902	
Console Identification	URS-002	URS-002	URS-002	
Standard Temperature (°F)	68	68	68	
Barometric Pressure Measured ("Hg)	29.73	30.28	29.97	
Stack Elevation (ft) (relative to Barometer)	430	430	430	
Barometric Pressure ("Hg) (P_b)	29.30	29.85	29.54	
Average Stack Temperature (°F)	137.6	122.9	127.8	129.4
Average DGM Temp (°F)	56.1	50.7	64.8	
Average Delta H ("wc) (ΔH_{avg})	1.33	1.42	1.43	
Condensed Water (g)	18.9	15.9	17.7	
Test Duration (minutes) (Θ)	75	78.8	81.3	79
Static Pressure ("wc)	-0.30	-0.30	-0.30	
Carbon Monoxide (CO) Content (%)	0	0	0	
Carbon Dioxide (CO_2) Content (%)	0.20	0.20	0.20	
Oxygen (O_2) Content (%)	20.90	20.90	21.00	
Hydrogen (H_2) Content (%)	0.0	0.0	0.0	
Methane (CH_4) Content (%)	0.0	0.0	0.0	
Nitrogen (N_2) Content (%)	78.90	78.90	78.80	
Meter Volume (dcf) (V_m)	47.288	50.644	53.407	
Average square root of ΔP ($(\sqrt{\Delta P})_{avg}$)	0.798	0.819	0.818	
Absolute Stack Pressure ("Hg)	29.28	29.83	29.52	
Absolute Stack Temperature (°R)	597.6	582.9	587.8	589.4
Flue Gas Moisture (%)	1.90	1.45	1.59	1.65
Moisture at saturation	18.90	12.51	14.44	
Moisture used in Calculation	1.90	1.45	1.59	1.65
Gas Molecular Weight (Wet) (g/g-mole)	28.66	28.71	28.70	
Corrected Vol of Gas Sample (dcf) ($V_{m(actual)}$)	45.917	49.175	51.858	
Volume at Meter (dscf)	46.154	50.902	51.700	
Average Gas Velocity (ft/sec)	48.35	48.50	48.93	48.59
Avg Flow Rate (acfh)	2,768,579	2,776,681	2,801,313	2,782,191

Calculation Summary

Project Name	**GCO PCM Tests**
Project Number	**60566151**
Facility	**Granite City, Illinois**

Sample Type	M5/202	M5/202	M5/202	Averages
Source	PCM Stack	PCM Stack	PCM Stack	
Condition	West Extractor	West Extractor	West Extractor	
Run	1	2	3	
Avg Flow Rate (acfm)	46,143	46,278	46,689	46,370
Avg Flow Rate (scfh)	2,393,542	2,507,530	2,482,718	2,461,263
Avg Flow Rate (scfm)	39,892	41,792	41,379	41,021
Avg Flow Rate (dscfh)	2,348,131	2,471,078	2,443,216	2,420,808
Avg Flow Rate (dscfm)	39,136	41,185	40,720	40,347
Isokinetic Sampling Rate (%)	100.53	100.77	100.39	

Console Calibration Check

Console Identification	URS-002	URS-002	URS-002
Average square root of ΔH ($(\sqrt{\Delta H})_{avg}$)	1.11	1.15	1.16
Gas Molecular Weight (Dry) (M_d) (g/g-mole)	28.9	28.9	28.9
Dry Gas Meter Calibration Check Value (Y_{QA})	0.966	0.959	0.962
Deviation Y_{QA} to Y_d (%)	-0.505	-1.278	-0.895

Filter Weight Gain (mg)	0.50	0.50	0.50	
PNR Weight Gain (mg)	1.21	0.80	0.50	
Condensible PM (mg)	17.89	10.72	7.55	
Filterable Particulate Loading (gr/dscf)	0.00057	0.00039	0.00030	0.00042
Condensible Particulate Loading (gr/dscf)	0.00598	0.00325	0.00225	0.00383
Total Particulate Loading (gr/dscf)	0.00655	0.00364	0.00255	0.0042
Coal charged during test run (dry tons)	986	965	1005	985
Filterable PM Emissions (lb/ton dry coal)	0.00024	0.00019	0.00014	0.00019
Total PM Emissions (lb/ton dry coal)	0.00280	0.00175	0.00120	0.00192
Charge hours during sampling, hours	4.07	3.28	3.83	
Total tons charged in all ovens (dry tons coal/day)	2338	2380	2467	2395
Average Daily Total PM Emissions (lb/hr)	0.27	0.17	0.12	0.19

Summary of Analytical Results

Filterable PM Results

Parameter	Run 1	Run 2	Run 3	MDL
Filter (mg)	ND	ND	ND	0.5
Filter Blank Correction (mg	ND	ND	ND	0.5
Net Filter (mg)	0.5	0.5	0.5	
Probe/Nozzle Rinse (mg)	1.21	0.8	ND	0.5
PNR Blank Correction (mg)	ND	ND	ND	0.5
Net PNR PM (mg)	1.21	0.8	0.5	
Net Filterable PM (mg)	1.71	1.3	1	

Orange highlights indicated < values due to ND in a sample fraction

Condensable PM Results

Parameter	Run 1	Run 2	Run 3	Field Blank	Proof Blank
Aqueous Rinse CPM (mg)	5.59	3.51	3.96	2.14	2.23
Organic Rinse CPM (mg)	14.3	9.21	5.59	6.84	2.48
Total CPM (mg)	19.89	12.72	9.55	8.98	4.71
Blank Correction (mg)	2	2	2		
Net Condensable PM (mg)	17.89	10.72	7.55		

Calculation Summary

Da+S4+K1:AK2+S4+K1:K1:AK27

Sample Type	M5/202	Pitot Tube Correction Factor	0.84	Entered By (initials)	WCT
Source	PCM Stack	Console ID	URS-002	Checked by (initials)	CS
Condition	West Extractor	DGMCF	0.971	Corrected by (initials)	
Run	1	$\Delta H_@$	1.902		
Date	3-Apr-18	Nozzle Diameter (in)	0.2130	% CO	
Duct Diameter (ft)	4.50	Std Temp (°F)	68	% CO_2	0.2
Duct Depth (ft)		Bar Press ("Hg, meas)	29.73	% O_2	20.9
Duct Width (ft)		Meter Elev (ft) (rel to Brmtr)	430	% H_2	
		Static Press ("H_2O)	-0.3	% CH_4	

Times		DGM Volumes (as read)		Impinger Catch (g)			
					Initial	Final	
start	19:25	start	857.037	1	371.5	373.1	1.6
stop	23:29	stop	904.325	2	605.3	605.7	0.4
start		start		3	706.1	712.3	6.2
stop		stop		4	891.1	901.8	10.7
start		start		5			
stop		stop		6			
start		start		7			
stop		stop		8			
start		start		9			
stop		stop		10			
start		start					
stop		stop					
start		start					
stop		stop					
start		start					
stop		stop					
start		start					
stop		stop					
						Total Wt Gain	18.9
Duration		Total	47.288				

	ΔP ("H_2O)	ΔH ("H_2O)	Stack Temp (°F)	DGM Temp (°F)	√ΔP	√ΔH
Averages	0.68	1.33	138	56.1	0.7979	1.1140
Individual Readings	0.36	0.69	103	52	0.6	0.83066
	0.44	0.91	127	52	0.66332496	0.95394
	0.42	0.83	137	52	0.64807407	0.91104
	0.42	0.83	142	54	0.64807407	0.91104
	0.38	0.74	146	53	0.6164414	0.86023
	0.36	0.69	150	54	0.6	0.83066
	0.70	1.30	149	56	0.83666003	1.14018
	1.10	2.10	151	57	1.04880885	1.44914
	1.30	2.50	159	58	1.14017543	1.58114
	1.40	2.70	130	58	1.18321596	1.64317
	1.30	2.60	136	58	1.14017543	1.61245
	0.62	1.20	123	59	0.78740079	1.09545
	0.98	2.00	130	59	0.98994949	1.41421
	1.30	2.60	145	60	1.14017543	1.61245
	1.10	2.10	136	58	1.04880885	1.44914
	0.88	1.70	139	58	0.93808315	1.30384
	0.63	1.20	156	58	0.79372539	1.09545
	0.50	0.95	135	57	0.70710678	0.97468
	0.44	0.87	140	57	0.66332496	0.93274
	0.45	0.88	147	57	0.67082039	0.93808
	0.46	0.89	133	55	0.678233	0.9434
	0.44	0.87	141	55	0.66332496	0.93274
	0.27	0.52	129	55	0.51961524	0.72111
	0.18	0.36	119	55	0.42426407	0.6

Calculation Summary

Data Entry Area

Sample Type	M5/202	Pitot Tube Correction Factor	0.84	Entered By (initials)	WCT
Source	PCM Stack	Console ID	URS-002	Checked by (initials)	CS
Condition	West Extractor	DGMCF	0.971	Corrected by (initials)	
Run	2	$\Delta H_@$	1.902		
Date	4-Apr-18	Nozzle Diameter (in)	0.2130	% CO	
Duct Diameter (ft)	4.50	Std Temp (°F)	68	% CO_2	0.2
Duct Depth (ft)		Bar Press ("Hg, meas)	30.28	% O_2	20.9
Duct Width (ft)		Meter Elev (ft) (rel to Brmtr)	430	% H_2	
		Static Press ("H_2O)	-0.3	% CH_4	

Times		DGM Volumes (as read)		Impinger Catch (g)			
					Initial	Final	
start	20:37	start	904.608	1	359.4	360.6	1.2
stop	23:54	stop	955.252	2	607.9	607.8	-0.1
start		start		3	712.2	718.4	6.2
stop		stop		4	901.9	910.5	8.6
start		start		5			
stop		stop		6			
start		start		7			
stop		stop		8			
start		start		9			
stop		stop		10			
start		start					
stop		stop					
start		start					
stop		stop					
start		start					
stop		stop					
start		start					
stop		stop					
						Total Wt Gain	15.9
Duration		Total	50.644				

	ΔP ("H_2O)	ΔH ("H_2O)	Stack Temp (°F)	DGM Temp (°F)	√ΔP	√ΔH
Averages	0.72	1.42	123	50.7	0.8186	1.1490

Individual Readings	0.35	0.68	87	49	0.59160798	0.82462
	0.52	1.10	107	49	0.72111026	1.04881
	0.52	1.10	103	50	0.72111026	1.04881
	0.45	0.92	115	51	0.67082039	0.95917
	0.43	0.87	118	52	0.65574385	0.93274
	0.37	0.74	116	52	0.60827625	0.86023
	0.60	1.20	129	53	0.77459667	1.09545
	1.00	2.00	114	52	1	1.41421
	1.20	2.40	129	52	1.09544512	1.54919
	1.20	2.40	132	52	1.09544512	1.54919
	1.30	2.50	124	51	1.14017543	1.58114
	1.30	2.50	132	51	1.14017543	1.58114
	1.20	2.30	114	51	1.09544512	1.51658
	1.40	2.80	130	50	1.18321596	1.67332
	1.10	2.10	133	51	1.04880885	1.44914
	0.92	1.80	139	51	0.9591663	1.34164
	0.70	1.30	137	51	0.83666003	1.14018
	0.48	0.93	130	50	0.69282032	0.96437
	0.42	0.82	137	50	0.64807407	0.90554
	0.45	0.87	140	50	0.67082039	0.93274
	0.47	0.90	130	50	0.68556546	0.94868
	0.44	0.86	128	50	0.66332496	0.92736
	0.25	0.49	112	49	0.5	0.7
	0.20	0.40	112	49	0.4472136	0.63246

Calculation Summary

Data Entry Area

Sample Type	M5/202	Pitot Tube Correction Factor	0.84	Entered By (initials)	WCT
Source	PCM Stack	Console ID	URS-002	Checked by (initials)	CS
Condition	West Extractor	DGMCF	0.971	Corrected by (initials)	
Run	3	$\Delta H_@$	1.902		
Date	5-Apr-18	Nozzle Diameter (in)	0.2130	% CO	
Duct Diameter (ft)	4.50	Std Temp (°F)	68	% CO_2	0.2
Duct Depth (ft)		Bar Press ("Hg, meas)	29.97	% O_2	21
Duct Width (ft)		Meter Elev (ft) (rel to Brmtr)	430	% H_2	
		Static Press ("H_2O)	-0.3	% CH_4	

Times		DGM Volumes (as read)		Impinger Catch (g)			
					Initial	Final	
start	19:11	start	955.817				
stop	23:01	stop	1009.224	1	360.1	360.0	-0.1
start		start		2	609.9	608.2	-1.7
stop		stop		3	718.2	721.7	3.5
start		start		4	910.4	926.4	16
stop		stop		5			
start		start		6			
stop		stop		7			
start		start		8			
stop		stop		9			
start		start		10			
stop		stop					
start		start					
stop		stop					
start		start					
stop		stop					
start		start					
stop		stop					
						Total Wt Gain	17.7
Duration		Total	53.407				

	ΔP ("H_2O)	ΔH ("H_2O)	Stack Temp (°F)	DGM Temp (°F)	√ΔP	√ΔH
Averages	0.71	1.43	128	64.8	0.8180	1.1579

Individual Readings	0.40	0.80	108	62	0.63245553	0.894427
	0.43	0.90	116	62	0.65574385	0.948683
	0.47	0.97	132	63	0.68556546	0.984886
	0.44	0.88	130	64	0.66332496	0.938083
	0.41	0.82	131	65	0.64031242	0.905539
	0.40	0.80	121	65	0.63245553	0.894427
	0.70	1.40	136	65	0.83666003	1.183216
	1.10	2.20	131	66	1.04880885	1.48324
	1.50	3.00	135	66	1.22474487	1.732051
	1.40	2.80	148	66	1.18321596	1.67332
	1.30	2.60	136	67	1.14017543	1.612452
	0.75	1.50	114	66	0.8660254	1.224745
	1.10	2.20	122	65	1.04880885	1.48324
	1.20	2.40	138	65	1.09544512	1.549193
	1.10	2.20	140	65	1.04880885	1.48324
	0.85	1.70	141	65	0.92195445	1.30384
	0.70	1.40	135	65	0.83666003	1.183216
	0.48	0.95	121	68	0.69282032	0.974679
	0.40	0.80	141	66	0.63245553	0.894427
	0.49	0.97	140	66	0.7	0.984886
	0.45	0.90	113	63	0.67082039	0.948683
	0.46	0.92	117	63	0.678233	0.959166
	0.30	0.60	107	63	0.54772256	0.774597
	0.30	0.60	113	63	0.54772256	0.774597

Sample Type	Filt and Cond PM (M5/M202)	Date 4/3/18	Nozzle Dia (in) 0.213	Page 1 of	
Project Name	GCO PCM Compliance Tests	Cond / Run 1	Barometer ID Weather channel	Train Leak Rate (cfm @ "Hg)	
Project Number	60566151	Console ID YRS-002	Bar. Press. ("Hg) 29.73	Initial 0.0 @ 11"	
Facility	SunCoke Energy Granite City Operations	ΔH@ 1.902	Stat. Press. ("H_2O) -0.30	Final 0.0 @ 5"	
Source	PCM Stack	K_r 1.93	Probe ID S-002	Pitot Tube Leak Check ("H_2O@"H_2O)	
Operator	WCT/HO	DGMCF 0.971	Pitot ID S-002	Initial (-) ✓ @ 5	
Duct Dimension(s)	Circular: 54 inch diameter	Filter No. A-1	PTCF 0.84	Initial (+) ✓ @ 5	
Nozzle Calibration	0.2130 / 0.2125 / 0.2125		Meter Elevation (ft) (relative to Barometer) 430	Final (-) ✓ @ 5	
Caliper ID				Final (+) ✓ @ 5	
Post-Test Stack TC Check	Reference Thermometer ID	Ref Thermometer Exp Date	Thermometer and TC agree within 2°F Y / N	Post-Test: Are Pitots Damaged? Y / N	

Point	Clock Time 1925	DGM Reading (ft^3)	ΔP ("H_2O)	ΔH ("H_2O)	Temperature (°F) Stack	Probe Target 248±25	Filter Target 248±25	CPM Filter [1] Target: near but <85	Imp Exit Target <68	DGM Outlet	Vacuum ("Hg)
B-1	0	857.037	0.36	0.69	103	244	240	49	45	52	1
2	3:02	858.428	0.44	0.91	127	243	249	52	44	52	1 1/2
3	6:19	860.137	0.42	0.83	137	244	241	57	45	52	1 1/2
4	9:38	861.815	0.42	0.83	142	249	247	59	46	54	1 1/2
5	12:55	863.466	0.38	0.74	146	242	245	59	46	53	1 1/2
6	16:02	864.953	0.36	0.69	150	245	248	60	47	54	1 1/2
7	19:10	866.375	0.70	1.3	149	249	243	62	47	56	2
8	22:23	868.375	1.1	2.1	151	247	239	64	47	57	3 1/2
9	25:33	870.918	1.3	2.5	159	250	247	64	47	58	4
10	28:39	873.738	1.4	2.7	130	247	247	60	47	58	4 1/2
11	31:51	876.795	1.3	2.6	136	245	244	59	46	58	4
12 Blk	35:03	879.739	0.62	1.2	123	247	241	59	47	59	2 1/2
STOP	38:26	881.794									
2135 A-1	38:26	881.794	0.98	2.0	130	246	247	59	47	59	3 1/2
2	41:35	884.357	1.3	2.6	145	246	249	59	47	60	4 1/2
3	44:46	887.245	1.1	2.1	136	248	246	59	44	58	3 1/2
4	48:16	890.157	0.88	1.7	139	249	246	59	45	58	3
5	50:55	892.110	0.63	1.2	156	248	248	59	45	58	2 1/2
6	53:59	894.042	0.50	0.95	135	249	246	57	45	57	1 1/2
7	56:54	895.655	0.44	0.87	140	248	248	57	45	57	1 1/2
8	59:53	897.208	0.45	0.88	147	248	245	57	45	57	1 1/2
9	62:52	898.761	0.46	0.89	133	250	245	57	47	55	1 1/2
10	65:51	900.334	0.44	0.87	141	250	249	55	44	55	1 1/2
11	68:57	901.927	0.27	0.52	129	250	248	54	44	55	1
12	72:15	903.257	0.18	0.36	119	250	241	54	45	55	1
STOP	75:24	904.325									
	2329										

Notes:

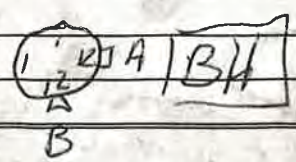

1 Remember to record Final CPM Filter Temperature

SDS-36: PM (Filt & Cond) by EPA Methods 5/202
Per: EM SOP-047
Issued: November 2015

Granite City Operations--PCM Stack Testing

Date: 4/3/18

Point	Oven #	Clock Time @ Start	Timer Reading	BH Delta P	
1	2	1925	0.00	4.0-4.5	
2	6	1933	3.02	4.2-4.6	
3	10	1942	6:19	4.4-4.7	
4	14	1950	9:38	4.4-4.7	
5	18	1958	12:55	4.4-4.7	
6	22	2006	16:02	4.4-4.7	
7	26	2014	19:10	4.4-4.7	
8	30	2022	22:23	4.6-4.9	
9	34	2030	25:33	4.6-5.0	
10	42 38	2104	28:39	4.6-5.0	38 wasn't ready
11	46	2113	31:51	4.7-5.2	
12	50	2121	35:03	4.6-5.2	
Stop		2125	38:26		
1	54	2135	38:26	4.6-5.3	
2	66	2144	41:35	4.8-5.2	skipped 58 & 62 not ready
3	70	2152	44:46	4.8-5.2	
4	74	2201	48:16	4.8-5.2	
5	78	2209	50:55	4.8-5.2	
6	82	2225	53:59	4.8-5.2	
7	58	2234	56:54	4.9-5.3	
8	62	2242	59:53	5.0-5.3	
9	83	2301	62:52	5.0-5.3	
10	87	2309	65:51	5.0-5.3	
11	91	2317	68:57	5.1-5.5	
12	95	2325	72:15	5.1-5.6	
Stop		2329			

Project Name	GCO PCM Compliance Tests
Project Number	60566151
Date	4/3/18
Source	PCM Stack

Particulate Matter (incl. Condensable)

EPA Method 5/202

check wt = 500.2

Condition No.	
Run No.	1
Balance ID	
Recovered by	

Moisture Determination

Imp No.	Contents	Vol (mL)	Configuration	Initial Wt (g)	Final Wt (g)
1	empty	--	K/O	371.5	373.1
2	empty	--	Mod	605.3	605.7
3	Water	100	Mod	706.1	712.3
4	Silica Gel	~300g	Mod	891.1	901.8
5					

Filter

Filter ID Number	140-10871-A-1

Sample Log

Sample ID Number	Sample Container	Description
-M5/202-PNR	250 ml	Probe and Nozzle Rinse
-M5/202-Filt	Petri Dish	Filter
-M5/202-WtRns	1000 ml	Water Rinse
-M5/202-OrgRns	250 ml	Organic Rinse
-M5/202-CPMFilt	Petri Dish	CPM Filter

Sample Recovery Checklist

____ Rinse and brush probe and nozzle with acetone (three times) into PNR sample bottle.

____ Disconnect transfer line. Rinse with water (two times) into water rinse sample bottle. Rinse with acetone (one time) and hexane (two times) into the organic rinse sample bottle.

____ Transfer water from knockout impinger to second impinger. Ensure that water level is at least 1 cm above stem tip. Add water if necessary.

Volume of water added: 67.1 ml

____ If all water in knockout impinger will not fit in second impinger, replace stem on knockout impinger. Ensure that the water level in the first impinger is at least 1 cm above stem tip. Add water if necessary.

Volume of water added: _____.

____ Purge with nitrogen for one hour at >14 liters per minute. Record start and end times on the data sheet.

Start 0019 Stop 0120

____ Separate filter holder and place filter in clean pre-rinsed glass petri dish. Complete Filt sample label.

____ Rinse front half of filter holder with acetone (three times) into PNR bottle. Complete probe and nozzle rinse (PNR) sample label.

____ Rinse the back half of the filter holder and any connecting glassware with water (two times) into the water rinse sample bottle.

____ Rinse the back half of the filter holder and any connecting glassware with acetone (one time) and with hexane (two times) into the organic rinse sample bottle.

____ Separate CPM filter holder and place CPM filter in clean pre-rinsed glass petri dish. Complete CPM-Filt sample label.

____ Disassemble sample train, wipe off excess water and weigh each impinger. Record the final weights in the Moisture Determination section of this data sheet

Note condition of the silica gel impinger. ____% spent

____ Pour the contents of the first two impingers into the water rinse catch bottle(s). Rinse impingers, connecting glassware. And the front half of the CPM filter holder two times with water into the same bottles. Complete water rinse sample label.

____ Rinse the first two impingers, connecting glassware, and the front half of the CPM filter holder acetone (one time) and hexane (two times) into the organic rinse sample bottle(s)

____ Log samples into logbook and store appropriately.

Notes:

Sample Type: Filt and Cond PM (M5/M202)	Date: 4/4/18	Nozzle Dia (in): 0.213	Page: 1 of		
Project Name: GCO PCM Compliance Tests	Cond: west extractor / Run: 2	Barometer ID: weather channel	Train Leak Rate (cfm @ "Hg)		
Project Number: 60566151	Console ID: URS-002	Bar. Press. ("Hg): 30.28	Initial: 0.019 @ 10"		
Facility: SunCoke Energy Granite City Operations	ΔH@: 1.902	Stat. Press. ("H_2O): -0.30	Final: 0.019 @ 7"		
Source: PCM Stack	K_r: 1.93	Probe ID: S-002	Pitot Tube Leak Check ("H_2O@"H_2O)		
Operator: WCT/HO	DGMCF: 0.971	Pitot ID: S-002	Initial (-): ✓ @ 5"		
Duct Dimension(s) Circular: 54 inch diameter	Filter No.: A-2	PTCF: 0.84	Initial (+): ✓ @ 5"		
Nozzle Calibration		Meter Elevation (ft) (relative to Barometer): 430	Final (-): ✓ @ 5"		
Caliper ID:			Final (+): ✓ @ 5"		

Post-Test Stack TC Check	Reference Thermometer ID	Ref Thermometer Exp Date	Thermometer and TC agree within 2°F Y / N	Post-Test: Are Pitots Damaged? Y / N

Point	Clock Time	DGM Reading (ft³)	ΔP ("H_2O)	ΔH ("H_2O)	Temperature (°F)						Vacuum ("Hg)
					Stack	Probe Target 248±25	Filter Target 248±25	CPM Filter [1] Target: near but <85	Imp Exit Target <68	DGM Outlet	
	2037										
B-1	0	904.608	0.35	0.68	87	253	248	43	37	49	1
2	3:18	906.098	0.52	1.1	107	253	248	43	36	49	2
3	6:35	908.015	0.52	1.1	103	253	248	43	36	50	2
4	10:01	910.023	0.45	0.92	115	253	248	44	36	51	1½
5	13:40	911.930	0.43	0.87	118	251	247	45	37	52	1½
6	16:58	913.639	0.37	0.74	116	251	249	47	38	52	1½
7	20:16	915.184	0.60	1.2	129	251	249	50	39	53	2
8	23:36	917.222	1.0	2.0	114	250	250	52	39	52	3
9	26:59	919.846	1.2	2.4	129	251	249	52	39	52	3½
10	30:17	922.736	1.2	2.4	132	251	250	54	40	52	3½
11	33:31	925.552	1.3	2.5	124	255	249	54	39	51	4
12	36:41	928.409	1.3	2.5	132	253	249	54	40	51	4
Stop	39:58	931.316									
A-1	39:58	931.316	1.2	2.3	114	251	249	53	40	51	3½
2	43:20	934.195	1.4	2.8	130	254	250	53	39	50	4
3	46:44	937.322	1.1	2.1	133	248	249	54	39	51	3
4	49:59	939.998	0.92	1.8	139	250	249	56	39	51	2½
5	53:14	942.406	0.70	1.3	137	250	248	55	40	51	2
6	56:24	944.472	0.48	0.93	130	250	248	55	39	50	1½
7	59:59	946.405	0.42	0.82	137	250	250	55	40	50	1½
8	63:09	947.990	0.45	0.87	140	251	249	56	40	50	1½
9	66:19	949.602	0.47	0.90	130	249	248	56	40	50	1½
10	69:25	951.237	0.44	0.86	128	249	250	56	39	50	1½
11	72:56	953.047	0.25	0.49	112	251	250	57	40	49	1
12	75:51	954.178	0.20	0.40	112	250	249	56	40	49	1
Stop	2354	955.252									
	78:50										

2223 2212

Notes:

[1] Remember to record Final CPM Filter Temperature

SDS-36: PM (Filt & Cond) by EPA Methods 5/202
Per: EM SOP-047
Issued: November 2015

Granite City Operations--PCM Stack Testing

Date: 4/4/18

Point	Oven #	Clock Time @ Start	Timer Reading	BH Delta P
1	1	2037	0	4.7-5.1
2	5	2046	3:18	4.8-5.1
3	9	2055	6:35	4.7-5.2
4	13	2103	10:01	4.7-5.1
5	17	2111	13:40	4.6-5.1
6	21	2119	16:58	4.8-5.2
7	25	2127	20:16	4.8-5.3
8	29	2135	23:36	4.9-5.4
9	33	2143	26:59	4.9-5.4
10	37	2151	30:17	4.9-5.4
11	41	2201	33:31	4.8-5.3
12	45	2209	36:41	4.7-5.3
Stop		2212	39:58	
1	49	2253	39:58	4.8-5.3
2	53	2231	43:20	4.8-5.4
3	57	2239	46:44	4.9-5.4
4	61	2247	49:59	5.0-5.5
5	65	2254	53:14	5.0-5.4
6	69	2303	56:24	4.7-5.4
7	73	2311	59:59	4.9-5.4
8	77	2314	63:09	5.0-5.5
9	84	2329	66:19	5.0-5.4
10	88	2336	69:25	5.1-5.5
11	92	2349	72:56	5.1-5.5
12	96	2351	75:51	5.1-5.5
Stop		2354		

Project Name	GCO PCM Compliance Tests
Project Number	60566151
Date	4/4/18
Source	PCM Stack

Particulate Matter (incl. Condensable)

EPA Method 5/202

check wt = 500.2

Condition No.	
Run No.	2
Balance ID	
Recovered by	

Moisture Determination

Imp No.	Contents	Vol (mL)	Configuration	Initial Wt (g)	Final Wt (g)
1	empty	--	K/O	359.4	360.6
2	empty	--	Mod	607.9	607.8
3	Water	100	Mod	712.2	718.4
4	Silica Gel	~300g	Mod	901.9	910.5
5					

Filter

Filter ID Number: 140-10871-A-2

Sample Log

Sample ID Number	Sample Container	Description
-M5/202-PNR	250 ml	Probe and Nozzle Rinse
-M5/202-Filt	Petri Dish	Filter
-M5/202-WtRns	1000 ml	Water Rinse
-M5/202-OrgRns	250 ml	Organic Rinse
-M5/202-CPMFilt	Petri Dish	CPM Filter

Sample Recovery Checklist

____ Rinse and brush probe and nozzle with acetone (three times) into PNR sample bottle.

____ Disconnect transfer line. Rinse with water (two times) into water rinse sample bottle. Rinse with acetone (one time) and hexane (two times) into the organic rinse sample bottle.

____ Transfer water from knockout impinger to second impinger. Ensure that water level is at least 1 cm above stem tip. Add water if necessary.

Volume of water added: 95.6gm

____ If all water in knockout impinger will not fit in second impinger, replace stem on knockout impinger. Ensure that the water level in the first impinger is at least 1 cm above stem tip. Add water if necessary.

Volume of water added: _____.

____ Purge with nitrogen for one hour at >14 liters per minute. Record start and end times on the data sheet.

Start 0043 Stop _____

____ Separate filter holder and place filter in clean pre-rinsed glass petri dish. Complete Filt sample label.

____ Rinse front half of filter holder with acetone (three times) into PNR bottle. Complete probe and nozzle rinse (PNR) sample label.

____ Rinse the back half of the filter holder and any connecting glassware with water (two times) into the water rinse sample bottle.

____ Rinse the back half of the filter holder and any connecting glassware with acetone (one time) and with hexane (two times) into the organic rinse sample bottle.

____ Separate CPM filter holder and place CPM filter in clean pre-rinsed glass petri dish. Complete CPM-Filt sample label.

____ Disassemble sample train, wipe off excess water and weigh each impinger. Record the final weights in the Moisture Determination section of this data sheet

Note condition of the silica gel impinger. ____% spent

____ Pour the contents of the first two impingers into the water rinse catch bottle(s). Rinse impingers, connecting glassware. And the front half of the CPM filter holder two times with water into the same bottles. Complete water rinse sample label.

____ Rinse the first two impingers, connecting glassware, and the front half of the CPM filter holder acetone (one time) and hexane (two times) into the organic rinse sample bottle(s)

____ Log samples into logbook and store appropriately.

Notes:

Sample Type: Filt and Cond PM (M5/M202)	Date: 4/5/18	Nozzle Dia (in): 0.213	Page: 1 of		
Project Name: GCO PCM Compliance Tests	Cond: West extractor / Run: 3	Barometer ID: Weather Channel	Train Leak Rate (cfm @ "Hg)		
Project Number: 60566151	Console ID: URS-002	Bar. Press. ("Hg): 29.97	Initial: 0.010 @ 14"		
Facility: SunCoke Energy Granite City Operations	ΔH@: 1.902	Stat. Press. ("H_2O): -0.30	Final: 0.003 @ 5"		
Source: PCM Stack	Kr: 1.97	Probe ID: S-002	Pitot Tube Leak Check ("H_2O@"H_2O)		
Operator: WCT / HO	DGMCF: 0.971	Pitot ID: S-002	Initial (-): ✓ @ 5"		
Duct Dimension(s): Circular: 54 inch diameter	Filter No.: A-3	PTCF: 0.84	Initial (+): ✓ @ 5"		
Nozzle Calibration		Meter Elevation (ft) (relative to Barometer): 430	Final (-): ✓ @ 5"		
Caliper ID:			Final (+): ✓ @ 5"		

Post-Test Stack TC Check	Reference Thermometer ID	Ref Thermometer Exp Date	Thermometer and TC agree within 2°F Y / N	Post-Test: Are Pitots Damaged? Y / N

Point	Clock Time	DGM Reading (ft^3)	ΔP ("H_2O)	ΔH ("H_2O)	Temperature (°F)						Vacuum ("Hg)
					Stack	Probe Target 248±25	Filter Target 248±25	CPM Filter [1] Target: near but <85	Imp Exit Target <68	DGM Outlet	
B-1	1911 0	955.817	0.40	0.80	108	247	250	62	61	62	1½
2	3:13	957.420	0.43	0.90	116	251	243	62	61	62	1½
3	6:56	959.421	0.47	0.97	132	252	248	62	61	63	1½
4	10:43	961.520	0.44	0.88	130	252	250	62	62	64	1½
5	14:04	963.287	0.41	0.82	131	253	249	63	58	65	1½
6	17:26	964.983	0.40	0.80	121	252	249	62	53	65	1½
7	20:44	966.622	0.70	1.4	136	251	247	62	51	65	2
8	24:01	968.843	1.1	2.2	131	253	246	62	50	66	3½
9	27:26	971.723	1.5	3.0	135	251	250	62	50	66	4
10	31:11	974.390	1.4	2.8	148	250	247	62	51	66	4
11	34:19	978.403	1.3	2.6	136	243	246	63	52	67	4
12	37:42	981.509	0.75	1.5	114	249	245	61	51	66	2½
Stop	41:08	983.849									
A-1	41:08	983.849	1.1	2.2	122	250	246	61	51	65	3
2	44:48	986.972	1.2	2.4	138	250	234	61	50	65	3½
3	48:06	989.906	1.1	2.2	140	248	247	61	50	65	3
4	51:29	992.772	0.85	1.7	141	247	249	65	50	65	2½
5	54:47	995.233	0.70	1.4	135	247	247	61	51	65	2½
6	58:01	997.375	0.48	0.95	121	249	250	63	54	68	1½
7	61:23	999.237	0.40	0.80	141	250	250	64	54	66	1½
8	64:42	1000.914	0.49	0.97	140	249	247	61	51	66	1½
9	68:08	1002.804	0.45	0.90	113	249	248	57	49	63	1½
10	71:16	1004.488	0.46	0.92	117	250	249	57	48	63	1½
11	74:30	1006.237	0.30	0.60	107	248	247	58	48	63	1
12	77:52	1007.922	0.30	0.60	113	247	248	61	49	63	1
Stop	81:17	1009.224									
	2301										

2104 2051

Notes:

1 Remember to record Final CPM Filter Temperature

SDS-36: PM (Filt & Cond) by EPA Methods 5/202
Per: EM SOP-047
Issued: November 2015

Granite City Operations--PCM Stack Testing

Date: 4/5/18

Point	Oven #	Clock Time @ Start	Timer Reading	BH Delta P
1	2	1911	0.0	4.2-4.6
2	6	1920	3:13	4.3-4.7
3	10	1928	6:56	4.4-4.8
4	14	1936	10:43	4.4-5.0
5	18	1948	14:04	4.4-5.1
6	22	1957	17:25	4.6-5.1
7	26	2005	20:44	4.7-5.1
8	30	2012	24:01	4.8-5.0
9	34	2020	27:26	4.7-5.1
10	38	2029	31:11	4.8-5.1
11	42	2039	34:19	4.8-5.2
12	46	2048	37:42	4.9-5.3
Stop		2051	41:08	
1	50	2104	41:08	4.8-5.3
2	54	2112	44:48	4.9-5.3
3	58	2120	48:06	5.0-5.3
4	62	2128	51:29	4.9-5.4
5	66	2136	54:47	5.0-5.4
6	70	2144	58:01	5.1-5.5
7	74	2152	61:23	5.0-5.4
8	78	2200	64:42	5.0-5.4
9	83	2235	68:08	5.0-5.5
10	87	2243	71:16	5.2-5.6
11	91	2251	74:30	5.2-5.6
12	95	2258	77:52	5.2-5.6
Stop		2301	81:17	

Project Name	GCO PCM Compliance Tests
Project Number	60566151
Date	4/5/18
Source	PCM Stack

Particulate Matter (incl. Condensable)

EPA Method 5/202

check wt = 500.2

Condition No.	
Run No.	3
Balance ID	
Recovered by	

Moisture Determination

Imp No.	Contents	Vol (mL)	Configuration	Initial Wt (g)	Final Wt (g)
1	empty	--	K/O	360.1	360.0
2	empty	--	Mod	609.9	608.2
3	Water	100	Mod	718.2	721.7
4	Silica Gel	~300g	Mod	910.4	926.4
5					

Filter

Filter ID Number	140-1087HA-3

Sample Log

Sample ID Number	Sample Container	Description
-M5/202-PNR	250 ml	Probe and Nozzle Rinse
-M5/202-Filt	Petri Dish	Filter
-M5/202-WtRns	1000 ml	Water Rinse
-M5/202-OrgRns	250 ml	Organic Rinse
-M5/202-CPMFilt	Petri Dish	CPM Filter

Sample Recovery Checklist

____ Rinse and brush probe and nozzle with acetone (three times) into PNR sample bottle.

____ Disconnect transfer line. Rinse with water (two times) into water rinse sample bottle. Rinse with acetone (one time) and hexane (two times) into the organic rinse sample bottle.

____ Transfer water from knockout impinger to second impinger. Ensure that water level is at least 1 cm above stem tip. Add water if necessary.

Volume of water added: _____

____ If all water in knockout impinger will not fit in second impinger, replace stem on knockout impinger. Ensure that the water level in the first impinger is at least 1 cm above stem tip. Add water if necessary.

Volume of water added: _____.

____ Purge with nitrogen for one hour at >14 liters per minute. Record start and end times on the data sheet.

Start _____ Stop _____

____ Separate filter holder and place filter in clean pre-rinsed glass petri dish. Complete Filt sample label.

____ Rinse front half of filter holder with acetone (three times) into PNR bottle. Complete probe and nozzle rinse (PNR) sample label.

____ Rinse the back half of the filter holder and any connecting glassware with water (two times) into the water rinse sample bottle.

____ Rinse the back half of the filter holder and any connecting glassware with acetone (one time) and with hexane (two times) into the organic rinse sample bottle.

____ Separate CPM filter holder and place CPM filter in clean pre-rinsed glass petri dish. Complete CPM-Filt sample label.

____ Disassemble sample train, wipe off excess water and weigh each impinger. Record the final weights in the Moisture Determination section of this data sheet

Note condition of the silica gel impinger. ____% spent

____ Pour the contents of the first two impingers into the water rinse catch bottle(s). Rinse impingers, connecting glassware. And the front half of the CPM filter holder two times with water into the same bottles. Complete water rinse sample label.

____ Rinse the first two impingers, connecting glassware, and the front half of the CPM filter holder acetone (one time) and hexane (two times) into the organic rinse sample bottle(s)

____ Log samples into logbook and store appropriately.

Notes:

4/5/18

Bag Sample Analysis

Dir Cal

		O_2	CO_2
1744	Zero		
1749	Hi O_2/CO_2 CC126166 (20.99/20.67)	-0.02	0.00
1755	Mid O_2/CO_2 ALM011065 (9.842/9.948)	21.11	20.64
		9.94	9.85
1759	Stop		

Run 3 21.00% 0.2% CO_2

Run 1 20.9 O_2 0.2% CO_2

Run 2 20.9 O_2 0.2% CO_2

2223 Zero 0.0/0.0

2225 Mid 9.87/9.55

22 Stop

Airgas
an Air Liquide company

Airgas Specialty Gases
Airgas USA, LLC
12722 S. Wentworth Ave.
Chicago, IL 60628
Airgas.com

CERTIFICATE OF ANALYSIS

Grade of Product: EPA Protocol

Part Number:	E03NI80E15A0138	Reference Number:	54-124605895-1
Cylinder Number:	ALM011065	Cylinder Volume:	150.9 CF
Laboratory:	124 - Chicago - IL	Cylinder Pressure:	2015 PSIG
PGVP Number:	B12017	Valve Outlet:	590
Gas Code:	CO2,O2,BALN	Certification Date:	Mar 07, 2017

Expiration Date: Mar 07, 2025

Certification performed in accordance with "EPA Traceability Protocol for Assay and Certification of Gaseous Calibration Standards (May 2012)" document EPA 600/R-12/531, using the assay procedures listed. Analytical Methodology does not require correction for analytical interference. This cylinder has a total analytical uncertainty as stated below with a confidence level of 95%. There are no significant impurities which affect the use of this calibration mixture. All concentrations are on a volume/volume basis unless otherwise noted.

Do Not Use This Cylinder below 100 psig, i.e. 0.7 megapascals.

ANALYTICAL RESULTS

Component	Requested Concentration	Actual Concentration	Protocol Method	Total Relative Uncertainty	Assay Dates
CARBON DIOXIDE	10.00 %	9.948 %	G1	+/- 0.7% NIST Traceable	03/07/2017
OXYGEN	10.00 %	9.842 %	G1	+/- 0.9% NIST Traceable	03/08/2017
NITROGEN	Balance				

CALIBRATION STANDARDS

Type	Lot ID	Cylinder No	Concentration	Uncertainty	Expiration Date
NTRM	13060635	CC413759	13.359 % CARBON DIOXIDE/NITROGEN	+/- 0.6%	May 09, 2019
NTRM	06120102	CC195613	9.898 % OXYGEN/NITROGEN	+/- 0.7%	Jul 26, 2018

ANALYTICAL EQUIPMENT

Instrument/Make/Model	Analytical Principle	Last Multipoint Calibration
Nicolet 6700 AHR0801332	FTIR	Feb 23, 2017
O2-1 HORIBA MPA-510 3VUYL9NR	Paramagnetic	Mar 03, 2017

Triad Data Available Upon Request

Approved for Release

Airgas

Airgas Specialty Gases
12722 South Wentworth Avenue
Chicago, IL 60628
(773) 785-3000 Fax: (773) 785-1928
www.airgas.com

CERTIFICATE OF ANALYSIS
Grade of Product: EPA Protocol

Part Number:	E03NI58E15A02X7	Reference Number:	54-124417638-2
Cylinder Number:	CC126166	Cylinder Volume:	160.6 CF
Laboratory:	ASG - Chicago - IL	Cylinder Pressure:	2014 PSIG
PGVP Number:	B12014	Valve Outlet:	590
Gas Code:	CO2,O2,BALN	Certification Date:	Feb 10, 2014

Expiration Date: Feb 10, 2022

Certification performed in accordance with "EPA Traceability Protocol for Assay and Certification of Gaseous Calibration Standards (May 2012)" document EPA 600/R-12/531, using the assay procedures listed. Analytical Methodology does not require correction for analytical interference. This cylinder has a total analytical uncertainty as stated below with a confidence level of 95%. There are no significant impurities which affect the use of this calibration mixture. All concentrations are on a volume/volume basis unless otherwise noted.

Do Not Use This Cylinder below 100 psig, i.e. 0.7 megapascals

ANALYTICAL RESULTS

Component	Requested Concentration	Actual Concentration	Protocol Method	Total Relative Uncertainty	Assay Dates
CARBON DIOXIDE	21.00 %	20.67 %	G2	+/- 2% NIST Traceable	02/10/2014
OXYGEN	21.00 %	20.99 %	G1	+/- 1.0% NIST Traceable	02/08/2014
NITROGEN	Balance				

CALIBRATION STANDARDS

Type	Lot ID	Cylinder No	Concentration	Uncertainty	Expiration Date
NTRM	08061321	CC255428	20.09 % CARBON DIOXIDE/NITROGEN	+/- 0.6%	Jun 26, 2018
NTRM	06120210	CC195743	20.90 % OXYGEN/NITROGEN	+/- 0.4%	Dec 01, 2015

ANALYTICAL EQUIPMENT

Instrument/Make/Model	Analytical Principle	Last Multipoint Calibration
CO2-1 HORIBA VIA-510 V1E3H7P5	NDIR	Feb 10, 2014
O2-1 HORIBA MPA-510 3VUYL9NR	Paramagnetic	Jan 21, 2014

Triad Data Available Upon Request

Notes:

Approved for Release

CDS-08D

Field Balance Calibration Check

Project Name	GCO Compliance Tests
Project Number	60566151
Balance ID	
Calibration Weight ID	92945

Date	Actual Mass (g)	Balance Reading (g)	Difference [a] (g)	Initials
4/2/18	500	500.2	0.2	WCT
4/3	"	500.2	0.2	WCT
4/4	"	500.2	0.2	WCT
4/5	"	500.1	0.0	WCT

[a] - The acceptance criteria for difference is ±0.5 grams.

Appendix C
ANALYTICAL REPORT

ANALYTICAL REPORT

Job Number: 140-11257-1

Job Description: SunCoke GCO - Method 5

For:
URS Corporation
105 Mitchell Road, Suite 200
Oak Ridge, TN 37830

Attention: Mr. Bill Thomas

Approved for release.
Courtney M Adkins
Project Manager I
4/23/2018 10:48 AM

Courtney M Adkins, Project Manager I
5815 Middlebrook Pike, Knoxville, TN, 37921
(865)291-3000
courtney.adkins@testamericainc.com
04/23/2018

This report may not be reproduced except in full, and with written approval from the laboratory. For questions please contact the Project Manager at the e-mail address or telephone number listed on this page.

Table of Contents

Cover Title Page 1

Data Summaries 3

- Definitions 3
- Method Summary 4
- Sample Summary 5
- Case Narrative 6
- QC Association 7
- Client Sample Results 8
- Default Detection Limits 10
- Chronicle 11
- Certification Summary 13

Inorganic Sample Data 14

- General Chemistry Data 14
  - Gen Chem Cover Page 15
  - Gen Chem Sample Data 16
  - Gen Chem MDL 25
  - Gen Chem Analysis Run Log 27
  - Gen Chem Prep Data 28
  - Gen Chem Raw Data 29

Shipping and Receiving Documents 31

- Client Chain of Custody 32

Glossary

Abbreviation	These commonly used abbreviations may or may not be present in this report.
¤	Listed under the "D" column to designate that the result is reported on a dry weight basis
%R	Percent Recovery
CFL	Contains Free Liquid
CNF	Contains No Free Liquid
DER	Duplicate Error Ratio (normalized absolute difference)
Dil Fac	Dilution Factor
DL	Detection Limit (DoD/DOE)
DL, RA, RE, IN	Indicates a Dilution, Re-analysis, Re-extraction, or additional Initial metals/anion analysis of the sample
DLC	Decision Level Concentration (Radiochemistry)
EDL	Estimated Detection Limit (Dioxin)
LOD	Limit of Detection (DoD/DOE)
LOQ	Limit of Quantitation (DoD/DOE)
MDA	Minimum Detectable Activity (Radiochemistry)
MDC	Minimum Detectable Concentration (Radiochemistry)
MDL	Method Detection Limit
ML	Minimum Level (Dioxin)
NC	Not Calculated
ND	Not Detected at the reporting limit (or MDL or EDL if shown)
PQL	Practical Quantitation Limit
QC	Quality Control
RER	Relative Error Ratio (Radiochemistry)
RL	Reporting Limit or Requested Limit (Radiochemistry)
RPD	Relative Percent Difference, a measure of the relative difference between two points
TEF	Toxicity Equivalent Factor (Dioxin)
TEQ	Toxicity Equivalent Quotient (Dioxin)

Method Summary

Client: URS Corporation
Project/Site: SunCoke GCO - Method 5

TestAmerica Job ID: 140-11257-1

Method	Method Description	Protocol	Laboratory
5	Particulates	EPA	TAL KNX

Protocol References:

EPA = US Environmental Protection Agency

Laboratory References:

TAL KNX = TestAmerica Knoxville, 5815 Middlebrook Pike, Knoxville, TN 37921, TEL (865)291-3000

Sample Summary

Client: URS Corporation
Project/Site: SunCoke GCO - Method 5

TestAmerica Job ID: 140-11257-1

Lab Sample ID	Client Sample ID	Matrix	Collected	Received
140-11257-1	R1-M5-PNR	Air	04/03/18 00:00	04/10/18 15:00
140-11257-2	R1-M5-FILT	Air	04/03/18 00:00	04/10/18 15:00
140-11257-3	R2-M5-PNR	Air	04/04/18 00:00	04/10/18 15:00
140-11257-4	R2-M5-FILT	Air	04/04/18 00:00	04/10/18 15:00
140-11257-5	R3-M5-PNR	Air	04/05/18 00:00	04/10/18 15:00
140-11257-6	R3-M5-FILT	Air	04/05/18 00:00	04/10/18 15:00
140-11257-7	AC-BLANK	Air	04/05/18 00:00	04/10/18 15:00
140-11257-8	M5-FILT-BLANK	Air	04/05/18 00:00	04/10/18 15:00
140-11257-9	A 6436	Air	04/03/18 00:00	04/10/18 15:00

Job Narrative
140-11257-1

Sample Receipt

The samples were received on April 10, 2018 at 3:00 PM in good condition and properly preserved. The temperature of the cooler at receipt was 19.8º C.

Quality Control and Data Interpretation

Unless otherwise noted, all holding times, and QC criteria were met and the test results shown in this report meet all applicable NELAC requirements.

General Chemistry

Total Particulates: The measurement of the mass of particulate matter trapped by the particulate filter and probe rinse derived from an M-5 sampling train was performed using SOP number KNOX-WC-0006 (based on EPA Methods 0050 and 5). Microfiber filters and 150 mL beakers are carefully inspected and tare weighed to constant weight. After sample collection, the filters are dried, and then carefully weighed to constant weight to determine the mass of particulate matter trapped on the filters. The acetone probe rinse solution is evaporated to dryness, and then weighed to constant weight to determine the total particulate mass collected in the rinse. The total particulate mass collected by an M-5 train is the sum of the particulate filter and the acetone probe rinse residue weights.

Method 5: There is visible discoloration of the sample filters, but the results are ND. The collected material may be of low density and/or there may be a low bias to the results. The affected samples are: R1-M5-FILT (140-11257-2), R2-M5-FILT (140-11257-4) and R3-M5-FILT (140-11257-6).

No additional analytical or quality issues were noted, other than those described above or in the Definitions/Glossary page.

QC Association Summary

Client: URS Corporation
Project/Site: SunCoke GCO - Method 5

TestAmerica Job ID: 140-11257-1

General Chemistry

Analysis Batch: 19727

Lab Sample ID	Client Sample ID	Prep Type	Matrix	Method	Prep Batch
140-11257-1	R1-M5-PNR	Total/NA	Air	5	
140-11257-2	R1-M5-FILT	Total/NA	Air	5	
140-11257-3	R2-M5-PNR	Total/NA	Air	5	
140-11257-4	R2-M5-FILT	Total/NA	Air	5	
140-11257-5	R3-M5-PNR	Total/NA	Air	5	
140-11257-6	R3-M5-FILT	Total/NA	Air	5	
140-11257-7	AC-BLANK	Total/NA	Air	5	
140-11257-8	M5-FILT-BLANK	Total/NA	Air	5	
140-11257-9	A 6436	Total/NA	Air	5	

Client Sample ID: R1-M5-PNR
Lab Sample ID: 140-11257-1
Date Collected: 04/03/18 00:00
Matrix: Air
Date Received: 04/10/18 15:00
Sample Container: Amber Glass 125mL - unpreserved

General Chemistry

Analyte	Result	Qualifier	RL	MDL	Unit	D	Prepared	Analyzed	Dil Fac
Particulates, Total	**1.21**		0.500	0.500	mg/sample			04/20/18 11:52	1

Client Sample ID: R1-M5-FILT
Lab Sample ID: 140-11257-2
Date Collected: 04/03/18 00:00
Matrix: Air
Date Received: 04/10/18 15:00
Sample Container: Petri/Filter

General Chemistry

Analyte	Result	Qualifier	RL	MDL	Unit	D	Prepared	Analyzed	Dil Fac
Particulates, Total	ND		0.500	0.500	mg/sample			04/20/18 11:52	1

Client Sample ID: R2-M5-PNR
Lab Sample ID: 140-11257-3
Date Collected: 04/04/18 00:00
Matrix: Air
Date Received: 04/10/18 15:00
Sample Container: Amber Glass 125mL - unpreserved

General Chemistry

Analyte	Result	Qualifier	RL	MDL	Unit	D	Prepared	Analyzed	Dil Fac
Particulates, Total	**0.800**		0.500	0.500	mg/sample			04/20/18 11:52	1

Client Sample ID: R2-M5-FILT
Lab Sample ID: 140-11257-4
Date Collected: 04/04/18 00:00
Matrix: Air
Date Received: 04/10/18 15:00
Sample Container: Petri/Filter

General Chemistry

Analyte	Result	Qualifier	RL	MDL	Unit	D	Prepared	Analyzed	Dil Fac
Particulates, Total	ND		0.500	0.500	mg/sample			04/20/18 11:52	1

Client Sample ID: R3-M5-PNR
Lab Sample ID: 140-11257-5
Date Collected: 04/05/18 00:00
Matrix: Air
Date Received: 04/10/18 15:00
Sample Container: Amber Glass 125mL - unpreserved

General Chemistry

Analyte	Result	Qualifier	RL	MDL	Unit	D	Prepared	Analyzed	Dil Fac
Particulates, Total	ND		0.500	0.500	mg/sample			04/20/18 11:52	1

Client Sample ID: R3-M5-FILT
Lab Sample ID: 140-11257-6
Date Collected: 04/05/18 00:00
Matrix: Air
Date Received: 04/10/18 15:00
Sample Container: Petri/Filter

General Chemistry

Analyte	Result	Qualifier	RL	MDL	Unit	D	Prepared	Analyzed	Dil Fac
Particulates, Total	ND		0.500	0.500	mg/sample			04/20/18 11:52	1

Client Sample ID: AC-BLANK

Lab Sample ID: 140-11257-7

Date Collected: 04/05/18 00:00
Matrix: Air
Date Received: 04/10/18 15:00
Sample Container: Amber Glass 125mL - unpreserved

General Chemistry

Analyte	Result	Qualifier	RL	MDL	Unit	D	Prepared	Analyzed	Dil Fac
Particulates, Total	ND		0.500	0.500	mg/sample			04/20/18 11:52	1

Client Sample ID: M5-FILT-BLANK

Lab Sample ID: 140-11257-8

Date Collected: 04/05/18 00:00
Matrix: Air
Date Received: 04/10/18 15:00
Sample Container: Petri/Filter

General Chemistry

Analyte	Result	Qualifier	RL	MDL	Unit	D	Prepared	Analyzed	Dil Fac
Particulates, Total	ND		0.500	0.500	mg/sample			04/20/18 11:52	1

Client Sample ID: A 6436

Lab Sample ID: 140-11257-9

Date Collected: 04/03/18 00:00
Matrix: Air
Date Received: 04/10/18 15:00
Sample Container: Petri/Filter

General Chemistry

Analyte	Result	Qualifier	RL	MDL	Unit	D	Prepared	Analyzed	Dil Fac
Particulates, Total	ND		0.500	0.500	mg/sample			04/20/18 11:52	1

Default Detection Limits

Client: URS Corporation
Project/Site: SunCoke GCO - Method 5

TestAmerica Job ID: 140-11257-1

General Chemistry

Analyte	RL	MDL	Units	Method
Particulates, Total	0.500	0.500	mg/sample	5

Client Sample ID: R1-M5-PNR
Date Collected: 04/03/18 00:00
Date Received: 04/10/18 15:00

Lab Sample ID: 140-11257-1
Matrix: Air

Prep Type	Batch Type	Batch Method	Run	Dil Factor	Initial Amount	Final Amount	Batch Number	Prepared or Analyzed	Analyst	Lab
Total/NA	Analysis	5		1			19727	04/20/18 11:52	TSN	TAL KNX
	Instrument ID: FT_Gross									

Client Sample ID: R1-M5-FILT
Date Collected: 04/03/18 00:00
Date Received: 04/10/18 15:00

Lab Sample ID: 140-11257-2
Matrix: Air

Prep Type	Batch Type	Batch Method	Run	Dil Factor	Initial Amount	Final Amount	Batch Number	Prepared or Analyzed	Analyst	Lab
Total/NA	Analysis	5		1			19727	04/20/18 11:52	TSN	TAL KNX
	Instrument ID: FT_Gross									

Client Sample ID: R2-M5-PNR
Date Collected: 04/04/18 00:00
Date Received: 04/10/18 15:00

Lab Sample ID: 140-11257-3
Matrix: Air

Prep Type	Batch Type	Batch Method	Run	Dil Factor	Initial Amount	Final Amount	Batch Number	Prepared or Analyzed	Analyst	Lab
Total/NA	Analysis	5		1			19727	04/20/18 11:52	TSN	TAL KNX
	Instrument ID: FT_Gross									

Client Sample ID: R2-M5-FILT
Date Collected: 04/04/18 00:00
Date Received: 04/10/18 15:00

Lab Sample ID: 140-11257-4
Matrix: Air

Prep Type	Batch Type	Batch Method	Run	Dil Factor	Initial Amount	Final Amount	Batch Number	Prepared or Analyzed	Analyst	Lab
Total/NA	Analysis	5		1			19727	04/20/18 11:52	TSN	TAL KNX
	Instrument ID: FT_Gross									

Client Sample ID: R3-M5-PNR
Date Collected: 04/05/18 00:00
Date Received: 04/10/18 15:00

Lab Sample ID: 140-11257-5
Matrix: Air

Prep Type	Batch Type	Batch Method	Run	Dil Factor	Initial Amount	Final Amount	Batch Number	Prepared or Analyzed	Analyst	Lab
Total/NA	Analysis	5		1			19727	04/20/18 11:52	TSN	TAL KNX
	Instrument ID: FT_Gross									

Client Sample ID: R3-M5-FILT
Date Collected: 04/05/18 00:00
Date Received: 04/10/18 15:00

Lab Sample ID: 140-11257-6
Matrix: Air

Prep Type	Batch Type	Batch Method	Run	Dil Factor	Initial Amount	Final Amount	Batch Number	Prepared or Analyzed	Analyst	Lab
Total/NA	Analysis	5		1			19727	04/20/18 11:52	TSN	TAL KNX
	Instrument ID: FT_Gross									

Lab Chronicle

Client: URS Corporation
Project/Site: SunCoke GCO - Method 5

TestAmerica Job ID: 140-11257-1

Client Sample ID: AC-BLANK
Date Collected: 04/05/18 00:00
Date Received: 04/10/18 15:00

Lab Sample ID: 140-11257-7
Matrix: Air

Prep Type	Batch Type	Batch Method	Run	Dil Factor	Initial Amount	Final Amount	Batch Number	Prepared or Analyzed	Analyst	Lab
Total/NA	Analysis	5		1			19727	04/20/18 11:52	TSN	TAL KNX
	Instrument ID: FT_Gross									

Client Sample ID: M5-FILT-BLANK
Date Collected: 04/05/18 00:00
Date Received: 04/10/18 15:00

Lab Sample ID: 140-11257-8
Matrix: Air

Prep Type	Batch Type	Batch Method	Run	Dil Factor	Initial Amount	Final Amount	Batch Number	Prepared or Analyzed	Analyst	Lab
Total/NA	Analysis	5		1			19727	04/20/18 11:52	TSN	TAL KNX
	Instrument ID: FT_Gross									

Client Sample ID: A 6436
Date Collected: 04/03/18 00:00
Date Received: 04/10/18 15:00

Lab Sample ID: 140-11257-9
Matrix: Air

Prep Type	Batch Type	Batch Method	Run	Dil Factor	Initial Amount	Final Amount	Batch Number	Prepared or Analyzed	Analyst	Lab
Total/NA	Analysis	5		1			19727	04/20/18 11:52	TSN	TAL KNX
	Instrument ID: FT_Gross									

Laboratory References:

TAL KNX = TestAmerica Knoxville, 5815 Middlebrook Pike, Knoxville, TN 37921, TEL (865)291-3000

Accreditation/Certification Summary

Client: URS Corporation
TestAmerica Job ID: 140-11257-1
Project/Site: SunCoke GCO - Method 5

Laboratory: TestAmerica Knoxville

All accreditations/certifications held by this laboratory are listed. Not all accreditations/certifications are applicable to this report.

Authority	Program	EPA Region	Identification Number	Expiration Date
	AFCEE		N/A	
ANAB	DoD ELAP		L2311	02-13-19
Arkansas DEQ	State Program	6	88-0688	06-16-18
California	State Program	9	2423	06-30-18
Colorado	State Program	8	TN00009	02-28-19
Connecticut	State Program	1	PH-0223	09-30-19
Florida	NELAP	4	E87177	06-30-18
Georgia	State Program	4	906	04-13-20
Hawaii	State Program	9	N/A	04-13-19
Kansas	NELAP	7	E-10349	10-31-18
Kentucky (DW)	State Program	4	90101	12-31-18
Louisiana	NELAP	6	83979	06-30-18
Louisiana (DW)	NELAP	6	LA160005	12-31-18
Maryland	State Program	3	277	03-31-19
Michigan	State Program	5	9933	04-13-20
Nevada	State Program	9	TN00009	07-31-18
New Jersey	NELAP	2	TN001	06-30-18
New York	NELAP	2	10781	03-31-19
North Carolina (DW)	State Program	4	21705	07-31-18
North Carolina (WW/SW)	State Program	4	64	12-31-18
Ohio VAP	State Program	5	CL0059	11-22-18
Oklahoma	State Program	6	9415	08-31-18
Oregon	NELAP	10	TNI0189	01-01-19
Pennsylvania	NELAP	3	68-00576	12-31-18
Tennessee	State Program	4	2014	04-13-20
Texas	NELAP	6	T104704380-16-9	08-31-18
US Fish & Wildlife	Federal		LE-058448-0	07-31-18
USDA	Federal		P330-16-00262	08-20-19
Utah	NELAP	8	TN00009	07-31-18
Virginia	NELAP	3	460176	09-14-18
Washington	State Program	10	C593	01-19-19
West Virginia (DW)	State Program	3	9955C	12-31-18
West Virginia DEP	State Program	3	345	04-30-18
Wisconsin	State Program	5	998044300	08-31-18

GENERAL CHEMISTRY

COVER PAGE
GENERAL CHEMISTRY

Lab Name: TestAmerica Knoxville Job Number: 140-11257-1

SDG No.:

Project: SunCoke GCO - Method 5

Client Sample ID	Lab Sample ID
R1-M5-PNR	140-11257-1
R1-M5-FILT	140-11257-2
R2-M5-PNR	140-11257-3
R2-M5-FILT	140-11257-4
R3-M5-PNR	140-11257-5
R3-M5-FILT	140-11257-6
AC-BLANK	140-11257-7
M5-FILT-BLANK	140-11257-8
A 6436	140-11257-9

Comments:

1B-IN
INORGANIC ANALYSIS DATA SHEET
GENERAL CHEMISTRY

Client Sample ID: R1-M5-PNR
Lab Sample ID: 140-11257-1
Lab Name: TestAmerica Knoxville
Job No.: 140-11257-1
SDG ID.:
Matrix: Air
Date Sampled: 04/03/2018 00:00
Reporting Basis: WET
Date Received: 04/10/2018 15:00

CAS No.	Analyte	Result	RL	MDL	Units	C	Q	DIL	Method
	Particulates, Total	1.21	0.500	0.500	mg/sample			1	5

1B-IN
INORGANIC ANALYSIS DATA SHEET
GENERAL CHEMISTRY

Client Sample ID: R1-M5-FILT
Lab Sample ID: 140-11257-2
Lab Name: TestAmerica Knoxville
Job No.: 140-11257-1
SDG ID.:
Matrix: Air
Date Sampled: 04/03/2018 00:00
Reporting Basis: WET
Date Received: 04/10/2018 15:00

CAS No.	Analyte	Result	RL	MDL	Units	C	Q	DIL	Method
	Particulates, Total	ND	0.500	0.500	mg/sample			1	5

1B-IN
INORGANIC ANALYSIS DATA SHEET
GENERAL CHEMISTRY

Client Sample ID: R2-M5-PNR
Lab Sample ID: 140-11257-3
Lab Name: TestAmerica Knoxville
Job No.: 140-11257-1
SDG ID.:
Matrix: Air
Date Sampled: 04/04/2018 00:00
Reporting Basis: WET
Date Received: 04/10/2018 15:00

CAS No.	Analyte	Result	RL	MDL	Units	C	Q	DIL	Method
	Particulates, Total	0.800	0.500	0.500	mg/sample			1	5

1B-IN
INORGANIC ANALYSIS DATA SHEET
GENERAL CHEMISTRY

Client Sample ID: R2-M5-FILT
Lab Sample ID: 140-11257-4
Lab Name: TestAmerica Knoxville
Job No.: 140-11257-1
SDG ID.:
Matrix: Air
Date Sampled: 04/04/2018 00:00
Reporting Basis: WET
Date Received: 04/10/2018 15:00

CAS No.	Analyte	Result	RL	MDL	Units	C	Q	DIL	Method
	Particulates, Total	ND	0.500	0.500	mg/sample			1	5

1B-IN
INORGANIC ANALYSIS DATA SHEET
GENERAL CHEMISTRY

Client Sample ID: R3-M5-PNR
Lab Sample ID: 140-11257-5
Lab Name: TestAmerica Knoxville
Job No.: 140-11257-1
SDG ID.:
Matrix: Air
Date Sampled: 04/05/2018 00:00
Reporting Basis: WET
Date Received: 04/10/2018 15:00

CAS No.	Analyte	Result	RL	MDL	Units	C	Q	DIL	Method
	Particulates, Total	ND	0.500	0.500	mg/sample			1	5

1B-IN
INORGANIC ANALYSIS DATA SHEET
GENERAL CHEMISTRY

Client Sample ID: R3-M5-FILT
Lab Sample ID: 140-11257-6
Lab Name: TestAmerica Knoxville
Job No.: 140-11257-1
SDG ID.:
Matrix: Air
Date Sampled: 04/05/2018 00:00
Reporting Basis: WET
Date Received: 04/10/2018 15:00

CAS No.	Analyte	Result	RL	MDL	Units	C	Q	DIL	Method
	Particulates, Total	ND	0.500	0.500	mg/sample			1	5

1B-IN
INORGANIC ANALYSIS DATA SHEET
GENERAL CHEMISTRY

Client Sample ID: AC-BLANK
Lab Sample ID: 140-11257-7
Lab Name: TestAmerica Knoxville
Job No.: 140-11257-1
SDG ID.:
Matrix: Air
Date Sampled: 04/05/2018 00:00
Reporting Basis: WET
Date Received: 04/10/2018 15:00

CAS No.	Analyte	Result	RL	MDL	Units	C	Q	DIL	Method
	Particulates, Total	ND	0.500	0.500	mg/sample			1	5

1B-IN
INORGANIC ANALYSIS DATA SHEET
GENERAL CHEMISTRY

Client Sample ID: M5-FILT-BLANK
Lab Sample ID: 140-11257-8
Lab Name: TestAmerica Knoxville
Job No.: 140-11257-1
SDG ID.:
Matrix: Air
Date Sampled: 04/05/2018 00:00
Reporting Basis: WET
Date Received: 04/10/2018 15:00

CAS No.	Analyte	Result	RL	MDL	Units	C	Q	DIL	Method
	Particulates, Total	ND	0.500	0.500	mg/sample			1	5

1B-IN
INORGANIC ANALYSIS DATA SHEET
GENERAL CHEMISTRY

Client Sample ID: A 6436 Lab Sample ID: 140-11257-9

Lab Name: TestAmerica Knoxville Job No.: 140-11257-1

SDG ID.:

Matrix: Air Date Sampled: 04/03/2018 00:00

Reporting Basis: WET Date Received: 04/10/2018 15:00

CAS No.	Analyte	Result	RL	MDL	Units	C	Q	DIL	Method
	Particulates, Total	ND	0.500	0.500	mg/sample			1	5

9-IN
DETECTION LIMITS
GENERAL CHEMISTRY

Lab Name: TestAmerica Knoxville Job Number: 140-11257-1

SDG Number:

Matrix: Air Instrument ID: FT_Gross

Method: 5 RL Date: 01/11/2016 09:38

Analyte	Wavelength/ Mass	RL (mg/sample)	
Particulates, Total		0.5	

9-IN
CALIBRATION BLANK DETECTION LIMITS
GENERAL CHEMISTRY

Lab Name: TestAmerica Knoxville Job Number: 140-11257-1

SDG Number:

Matrix: Air Instrument ID: FT_Gross

Method: 5 XRL Date: 01/11/2016 10:18

Analyte	Wavelength/ Mass	XRL (mg/sample)	
Particulates, Total		0.5	

13-IN
ANALYSIS RUN LOG
GENERAL CHEMISTRY

Lab Name: TestAmerica Knoxville Job No.: 140-11257-1

SDG No.:

Instrument ID: FT_Gross Analysis Method: 5

Start Date: 04/20/2018 11:52 End Date: 04/20/2018 11:52

Lab Sample Id	D/F	Type	Time	Analytes																								
				TPM																								
140-11257-1	1	T	11:52	X																								
140-11257-3	1	T	11:52	X																								
140-11257-5	1	T	11:52	X																								
140-11257-7	1	T	11:52	X																								
140-11257-2	1	T	11:52	X																								
140-11257-4	1	T	11:52	X																								
140-11257-6	1	T	11:52	X																								
140-11257-8	1	T	11:52	X																								
140-11257-9	1	T	11:52	X																								

Prep Types:
T = Total/NA

GENERAL CHEMISTRY BATCH WORKSHEET

Lab Name: TestAmerica Knoxville Job No.: 140-11257-1

SDG No.:

Batch Number: 19727 Batch Start Date: 04/20/18 11:52 Batch Analyst: Nedkova, Teodora S

Batch Method: 5 Batch End Date:

Lab Sample ID	Client Sample ID	Method Chain	Basis	SampleVolume					
140-11257-A-1	R1-M5-PNR	5	T	80 mL					
140-11257-A-3	R2-M5-PNR	5	T	70 mL					
140-11257-A-5	R3-M5-PNR	5	T	85 mL					
140-11257-A-7	AC-BLANK	5	T	190 mL					

Batch Notes	

Basis	Basis Description
T	Total/NA

The pound sign (#) in the amount added field denotes that the reagent was used undiluted. All calculations are performed using the stated concentration for this reagent.

TestAmerica Knoxville
High Volume Particulate Filter Gross Weight Data

Analyst: TSN
Temp °C: 21.2
% Humidity: 38

weight date:	04/18/2018	04/20/2018	04/20/2018	
weight time	14:01	09:21	11:52	

Balance Model: Mettler-Toledo XSE205DU B3
Balance SN: 412417296
Method: 5 method 5
Particulates

Weight Type	LIMS Sample ID	LIMS Tare Sample ID	Filter ID Number	Tare Weight (g)	Gross Weight (g) 1	Gross Weight (g) 2	Gross Weight (g) 3	Gross Weight (g) 4	Gross Weight (g)	Reference Δ (mg)	Δ OK	Temp during Tare	Temp within Tolerance	Humid during Tare	Humidity within Tolerance	Particulate Weight (total µg)
Rererence Weight 1g				0.99998	0.99993	0.99992			0.99992	0.08	OK					-60
Rererence Weight 5g				4.99996	4.99993	4.99992			4.99992	0.08	OK					-40
Reference Weight 100g				99.99970	99.99970	99.99970			99.99970	0.30	OK					0
Filter Weight	140-11257-A-1			65.25058	65.25170	65.25187			65.25179	0.17	OK					1205
Filter Weight	140-11257-A-3			64.72890	64.72963	64.72977			64.72970	0.14	OK					800
Filter Weight	140-11257-A-5			63.01687	63.01731	63.01735			63.01733	0.04	OK					460
Filter Weight	140-11257-A-7			64.59882	64.59886	64.59892			64.59889	0.06	OK					70.00000001
Filter Weight	140-11257-A-2	144989		0.32593	0.32613	0.32619			0.32616	0.06	OK	21.2	OK	38	OK	230
Filter Weight	140-11257-A-4	144990		0.32513	0.32509	0.32510			0.32510	0.01	OK	21.2	OK	38	OK	-35
Filter Weight	140-11257-A-6	144991		0.32781	0.32802	0.32806			0.32804	0.04	OK	21.2	OK	38	OK	230
Filter Weight	140-11257-A-8	144992		0.32521	0.32496	0.32500			0.32498	0.04	OK	21.2	OK	38	OK	-230
Filter Weight	140-11257-A-9	144995		0.33319	0.33324	0.33326			0.33325	0.02	OK	21.2	OK	38	OK	60
Zero Check				0.00000	0.00000	0.00000			0.00000	0.00	OK					0
Reference Weight 100g				99.99970	99.99970	99.99980			99.99980	0.20	OK					99.99999999

TestAmerica Knoxville Particulate Matter Determination Data Review/Narrative Checklist
Method: SW-846 Method 0050 by SOP KNOX-WC-0006, Rev. 11

Batch Number:	19727	**Job Number(s):**	140 – 11257
Analyst Name:	TBN	**Method Citation**	☒M5 ☐M5B ☐M5I ☐M17 ☐M201A ☐Other _____
Drying Temperature	Filters ☐ Ambient ☒ 105ºC ☐ 160ºC ☐ Other_____ Probe & Nozzle Rinses ☐ Ambient ☒ 105ºC ☐ 160ºC ☐ Other_____		

Review Items **Section 1: Calibration**	N/A	Y	N	If No, why is data reportable?	2nd √
1. Was the daily balance calibration check performed and recorded in the balance calibration check log book?		✓			✓
2. Was the balance zero and calibration checked with three weights that bracket the range to be measured immediately prior to use?		✓			✓
3. Was balance calibration checked with a bracketing weight above the highest sample weight once per 10 samples and at end of weighing session?		✓		☐ Another weight was used.(_____ grams)	✓
4. Was balance zero checked per 10 samples and at end of weighing session?		✓			✓
5. Was the balance tared before each weighing?		✓			✓
6. Was the balance ID documented?		✓			✓
7. If used, was the oven ID documented? ACSOV1		✓			✓
Section 2: Tare Weight Procedure					
1. Were filters and/or beakers weighed in FilterTracIV?		✓			✓
2. Was a TALS job created for tracking the tared filters and their weights?		✓			✓
3. Was tare weight data uploaded to TALS?		✓			✓
4. Were all sample weights performed in duplicate (at least)?		✓			✓
Section 3: Sample Procedure					
5. Were all special project requirements met? ***(Review all Backlog Comments and Project Documents.)***		✓			✓
6. Were sample IDs verified? ***(Review Filter ID, Job Numbers and Client IDs on sample labels.)***		✓			✓
7. Was tare weight data entered directly from TALS?		✓		***If no, scan documents for tare weights.***	✓
8. Were all sample weights performed in duplicate (at least)?		✓			✓
9. Was the average of the last two weights used?		✓			✓
10. Calculations checked for error? Sample 11257-1 4/20/18 (Weight 1 + Weight 2) / 2 = TBN ~~65.25058~~ (65.25170+65.25187)/2=65.25179 Gross Weight Averqge – Tare Weight Average = 1205 µg		✓			✓
Section 4: TALS Reporting					
1. Was Equipment ID entered?		✓			✓
2. Is the correct analyst name recorded?		✓			✓
3. Does analytical date time match last weighing sequence in FilterTracIV?		✓			✓
4. Did FilterTracIV correctly upload data to TALS?		✓			✓
5. Were applicable documents scanned and added? 4-20-18		✓			✓
6. Are all non-conformances documented?	✓	✓		NCM No.: 12148	✓
7. Was appropriate narrative NCM added?		✓		NCM No.: ✓ [5893] [6053] [Other]_____	✓
8. Final report acceptable? (Results, units, analysis dates are correct. Flags and/or errors were addressed.)		✓			✓

1st Level Reviewer: TBN (by DW)	**Date:** 4-20-18	**2nd Level Reviewer:** [signature]	**Date:** 4-20-18
Comments:		**Comments:**	

WC107R0, 7/31/17

Shipping and Receiving Documents

140-11257 Chain of Custody

AECOM

Chain of Custody Record

PROJECT: GCO PCM Compliance Test

SunCoke Energy--Granite City Operations

COLLECTED BY (*Signature*)

FIELD SAMPLE ID	SAMPLE MATRIX	DATE/TIME	# OF CONTAINERS	ANALYSES: PM via M5	REMARKS	ID NO. (lab use only)
R1-M5-PNR	Acetone	4/3/2018	1	x	250 ml	
R1-M5-Filt	Filter	4/3/2018	1	x	Filter 140-10871-A-1	
R2-M5-PNR	Acetone	4/4/2018	1	x	250 ml	
R2-M5-Filt	Filter	4/4/2018	1	x	Filter 140-10871-A-2	
R3-M5-PNR	Acetone	4/5/2018	1	x	250 ml	
R3-M5-Filt	Filter	4/5/2018	1	x	Filter 140-10871-A-3	
Ac-Blank	Acetone	4/5/2018	1	x	250 ml	
M5-Filt-Blank	Filter	4/5/2018	1	x	Filter 140-10871-A-4	

REMARKS

Technical Contact: Bill Thomas 865-425-7073(w) or 865-607-3997(m)

PROJECT #	RELINQUISHED BY	DATE	TIME
60566151	WC Thomas	4/10/18	1500

RECEIVED BY	DATE	TIME	RELINQUISHED BY	DATE	TIME	RECEIVED BY	DATE	TIME	RELINQUISHED BY	DATE	TIME
	4/10/18	1500									

RECEIVED FOR LABORATORY BY	DATE	TIME	AIRBILL#	OPENED BY	DATE	TIME	TEMP (degC)	SEAL #	CONDITION

REMARKS

HAND DELIVERED
NO CUSTODY SEALS
RECEIVED AMBIENT RT 19.9/CT 19.8°C
BKD 4-10-18

AECOM

Chain of Custody Record

PROJECT: GCO PCM Compliance Test

SITE: SunCoke Energy--Granite City Operations

COLLECTED BY (*Signature*)

FIELD SAMPLE ID	SAMPLE MATRIX	DATE/TIME	# OF CONTAINERS	ANALYSES: PM via M202	REMARKS	ID NO. (lab use only)
R1-M202-WtRns	Water	4/3/2018	1	x	500 ml	
R1-M202-OrgRns	Acetone/hexane	4/3/2018	1	x	500 ml	
R1-M202-CPMFilt	Filter	4/3/2018	1	x	Petri Dish	
R2-M202-WtRns	Water	4/4/2018	1	x	500 ml	
R2-M202-OrgRns	Acetone/hexane	4/4/2018	1	x	500 ml	
R2-M202-CPMFilt	Filter	4/4/2018	1	x	Petri Dish	
R3-M202-WtRns	Water	4/5/2018	1	x	500 ml	
R3-M202-OrgRns	Acetone/hexane	4/5/2018	1	x	500 ml	
R3-M202-CPMFilt	Filter	4/5/2018	1	x	Petri Dish	

REMARKS

Technical Contact: Bill Thomas 865-425-7073(w) or 865-607-3997(m)

PROJECT #	RELINQUISHED BY	DATE	TIME
60566151	W C Thomas	4/9/18	1500

RECEIVED BY	DATE	TIME	RELINQUISHED BY	DATE	TIME	RECEIVED BY	DATE	TIME	RELINQUISHED BY	DATE	TIME
	4/10/18	1509									

RECEIVED FOR LABORATORY BY	DATE	TIME	AIRBILL#	OPENED BY	DATE	TIME	TEMP (degC)	SEAL #	CONDITION

REMARKS

AECOM

Chain of Custody Record

PROJECT: GCO PCM Compliance Test

SITE: SunCoke Energy--Granite City Operations

COLLECTED BY (*Signature*)

FIELD SAMPLE ID	SAMPLE MATRIX	DATE/TIME	# OF CONTAINERS	ANALYSES: PM via M202	REMARKS	ID NO. (lab use only)
PB-M202-WtRns	Water	4/2/2018	1	x	500 ml	
PB-M202-OrgRns	Acetone/hexane	4/2/2018	1	x	500 ml	
PB-M202-CPMFilt	Filter	4/2/2018	1	x	Petri Dish	
TB-M202-WtRns	Water	4/4/2018	1	x	500 ml	
TB-M202-OrgRns	Acetone/hexane	4/4/2018	1	x	500 ml	
TB-M202-CPMFilt	Filter	4/4/2018	1	x	Petri Dish	
DI H2O-Blank	Water	4/5/2018	1		Hold; 250 ml	
Hex-Blank	Hexane	4/5/2018	1		Hold; 250 ml	
CPMFilt-Blank	Filter	4/5/2018	1		Hold; Petri Dish	

REMARKS

Technical Contact: Bill Thomas 865-425-7073(w) or 865-607-3997(m)

PROJECT #	RELINQUISHED BY	DATE	TIME
60566151	WC Thomas	4/10/18	1500

RECEIVED BY	DATE	TIME	RELINQUISHED BY	DATE	TIME	RECEIVED BY	DATE	TIME	RELINQUISHED BY	DATE	TIME
	4/10/18	1500									

RECEIVED FOR LABORATORY BY	DATE	TIME	AIRBILL#	OPENED BY	DATE	TIME	TEMP (degC)	SEAL #	CONDITION

REMARKS

Loc: 140
11257

TESTAMERICA KNOXVILLE SAMPLE RECEIPT/CONDITION UPON RECEIPT ANOMALY CHECKLIST

Log In Number:

Review Items	Yes	No	NA	If No, what was the problem?	Comments/Actions Taken
1. Are the shipping containers intact?	/		/	☐ Containers, Broken	
2. Were ambient air containers received intact?			/	☐ Checked in lab	
3. The coolers/containers custody seal if present, is it intact?			/	☐ Yes ☐ NA	
4. Is the cooler temperature within limits? (> freezing temp. of water to 6 °C, VOST: 10°C) Thermometer ID :_____ Correction factor: _____	/		/	☐ Cooler Out of Temp, Client Contacted, Proceed/Cancel ☐ Cooler Out of Temp, Same Day Receipt	
5. Were all of the sample containers received intact?	/			☐ Containers, Broken	
6. Were samples received in appropriate containers?	/			☐ Containers, Improper; Client Contacted; Proceed/Cancel	
7. Do sample container labels match COC? (IDs, Dates, Times)	/			☐ COC & Samples Do Not Match ☐ COC Incorrect/Incomplete ☐ COC Not Received	
8. Were all of the samples listed on the COC received?	/			☐ Sample Received, Not on COC ☐ Sample on COC, Not Received	
9. Is the date/time of sample collection noted?	/		KWM	☐ COC; No Date/Time; Client Contacted	
10. Was the sampler identified on the COC?		/		☐ Sampler Not Listed on COC	Labeling Verified by: Date:
11. Is the client and project name/# identified?	/			☐ COC Incorrect/Incomplete	
12. Are tests/parameters listed for each sample?	/			☐ COC No tests on COC	pH test strip lot number:
13. Is the matrix of the samples noted?	/			☐ COC Incorrect/Incomplete	
14. Was COC relinquished? (Signed/Dated/Timed)	/			☐ COC Incorrect/Incomplete	
15. Were samples received within holding time?	/			☐ Holding Time - Receipt	
16. Were samples received with correct chemical preservative (excluding Encore)?			/	☐ pH Adjusted, pH Included (See box 16A) ☐ Incorrect Preservative	
17. Were VOA samples received without headspace?			/	☐ Headspace (VOA only)	
18. Did you check for residual chlorine, if necessary? (e.g. 1613B, 1668) Chlorine test strip lot number:_____			/	☐ Residual Chlorine	
19. For 1613B water samples is pH<9?			/	☐ If no, lab will adjust	
20. For rad samples was sample activity info. Provided?			/	☐ Project missing info	

Box ~~16~~A: pH Preservation	Box 18A: Residual Chlorine
Preservative:	
Lot Number:	
Exp Date:	
Analyst:	
Date:	
Time:	

Project #: 140045 5a PM Instructions: _____

Sample Receiving Associate: _____ Date: 4-10-18

QA026R30.doc, 080916

04/23/2018

ANALYTICAL REPORT

Job Number: 140-11258-1

Job Description: SunCoke Energy - M202

For:
URS Corporation
105 Mitchell Road, Suite 200
Oak Ridge, TN 37830

Attention: Mr. Bill Thomas

Approved for release.
Courtney M Adkins
Project Manager I
4/26/2018 9:51 AM

Courtney M Adkins, Project Manager I
5815 Middlebrook Pike, Knoxville, TN, 37921
(865)291-3000
courtney.adkins@testamericainc.com
04/26/2018

This report may not be reproduced except in full, and with written approval from the laboratory. For questions please contact the Project Manager at the e-mail address or telephone number listed on this page.

Table of Contents

Cover Title Page 1

Data Summaries 3

- Definitions 3
- Method Summary 4
- Sample Summary 5
- Case Narrative 6
- QC Association 7
- Client Sample Results 8
- Default Detection Limits 10
- Chronicle 11
- Certification Summary 13

Inorganic Sample Data 14

- General Chemistry Data 14
  - Gen Chem Cover Page 15
  - Gen Chem Sample Data 16
  - Gen Chem MDL 26
  - Gen Chem Analysis Run Log 30
  - Gen Chem Prep Data 32
  - Gen Chem Raw Data 35

Shipping and Receiving Documents 37

- Client Chain of Custody 38

Glossary

Abbreviation	These commonly used abbreviations may or may not be present in this report.
¤	Listed under the "D" column to designate that the result is reported on a dry weight basis
%R	Percent Recovery
CFL	Contains Free Liquid
CNF	Contains No Free Liquid
DER	Duplicate Error Ratio (normalized absolute difference)
Dil Fac	Dilution Factor
DL	Detection Limit (DoD/DOE)
DL, RA, RE, IN	Indicates a Dilution, Re-analysis, Re-extraction, or additional Initial metals/anion analysis of the sample
DLC	Decision Level Concentration (Radiochemistry)
EDL	Estimated Detection Limit (Dioxin)
LOD	Limit of Detection (DoD/DOE)
LOQ	Limit of Quantitation (DoD/DOE)
MDA	Minimum Detectable Activity (Radiochemistry)
MDC	Minimum Detectable Concentration (Radiochemistry)
MDL	Method Detection Limit
ML	Minimum Level (Dioxin)
NC	Not Calculated
ND	Not Detected at the reporting limit (or MDL or EDL if shown)
PQL	Practical Quantitation Limit
QC	Quality Control
RER	Relative Error Ratio (Radiochemistry)
RL	Reporting Limit or Requested Limit (Radiochemistry)
RPD	Relative Percent Difference, a measure of the relative difference between two points
TEF	Toxicity Equivalent Factor (Dioxin)
TEQ	Toxicity Equivalent Quotient (Dioxin)

Method Summary

Client: URS Corporation
Project/Site: SunCoke Energy - M202

TestAmerica Job ID: 140-11258-1

Method	Method Description	Protocol	Laboratory
202 InOrg CPM	Inorganic Condensable Particulate Matter	EPA	TAL KNX
202 Org CPM	Organic Condensable Particulate Matter	EPA	TAL KNX

Protocol References:

EPA = US Environmental Protection Agency

Laboratory References:

TAL KNX = TestAmerica Knoxville, 5815 Middlebrook Pike, Knoxville, TN 37921, TEL (865)291-3000

Sample Summary

Client: URS Corporation
Project/Site: SunCoke Energy - M202

TestAmerica Job ID: 140-11258-1

Lab Sample ID	Client Sample ID	Matrix	Collected	Received
140-11258-1	R1-M202-WTRNS	Air	04/03/18 00:00	04/10/18 15:00
140-11258-2	R1-M202-ORGRNS	Air	04/03/18 00:00	04/10/18 15:00
140-11258-4	R2-M202-WTRNS	Air	04/04/18 00:00	04/10/18 15:00
140-11258-5	R2-M202-ORGRNS	Air	04/04/18 00:00	04/10/18 15:00
140-11258-7	R3-M202-WTRNS	Air	04/05/18 00:00	04/10/18 15:00
140-11258-8	R3-M202-ORGRNS	Air	04/05/18 00:00	04/10/18 15:00
140-11258-10	PB-M202-WTRNS	Air	04/02/18 00:00	04/10/18 15:00
140-11258-11	PB-M202-ORGRNS	Air	04/02/18 00:00	04/10/18 15:00
140-11258-13	TB-M202-WTRNS	Air	04/04/18 00:00	04/10/18 15:00
140-11258-14	TB-M202-ORGRNS	Air	04/04/18 00:00	04/10/18 15:00

Job Narrative
140-11258-1

Sample Receipt

The samples were received on April 10, 2018 at 3:00 PM in good condition and properly preserved. The temperature of the cooler at receipt was 19.8º C.

Quality Control and Data Interpretation

Unless otherwise noted, all holding times, and QC criteria were met and the test results shown in this report meet all applicable NELAC requirements.

Receipt Exceptions

The Field Sampler was not listed on the Chain of Custody.

General Chemistry

Particulate by Method 202 (December 2010): Samples derived from Method 202 require special handling. The CPE filters were extracted three times with water, which was then combined with the corresponding aqueous fraction. The filters were then extracted with hexane three times, and the extracts were combined with the solvent rinses. The aqueous fractions were then extracted three times with hexane, and the extracts were combined with the solvent rinses. The organic fractions, including the acetone and hexane reagent blanks, were air dried in a hood. The aqueous fractions, including the deionized water reagent blank, were simmered to near dryness, and then allowed to air dry.

Aqueous samples having a pH < 6 were reconstituted with boiled deionized water, and then titrated with 0.1N ammonium hydroxide to a pH 7 endpoint. The samples were again simmered to near dryness, and then allowed to air dry. Titration to a pH 7 endpoint was not required for samples with a pH of 6 or higher upon receipt. Where applicable, the contribution from added ammonia was calculated and subtracted from the residue weight to obtain the final result for the aqueous fractions.

Residual water from both the aqueous samples and the organic solvent samples were further air dried in a forced draft oven at 28°C before transferring them to a desiccator. The air dried samples were transferred to a desiccator and dried over calcium sulfate to constant weight.

No additional analytical or quality issues were noted, other than those described above or in the Definitions/Glossary page.

QC Association Summary

Client: URS Corporation
Project/Site: SunCoke Energy - M202

TestAmerica Job ID: 140-11258-1

General Chemistry

Analysis Batch: 19667

Lab Sample ID	Client Sample ID	Prep Type	Matrix	Method	Prep Batch
140-11258-1	R1-M202-WTRNS	Total/NA	Air	202 InOrg CPM	
140-11258-4	R2-M202-WTRNS	Total/NA	Air	202 InOrg CPM	
140-11258-7	R3-M202-WTRNS	Total/NA	Air	202 InOrg CPM	
140-11258-10	PB-M202-WTRNS	Total/NA	Air	202 InOrg CPM	
140-11258-13	TB-M202-WTRNS	Total/NA	Air	202 InOrg CPM	

Analysis Batch: 19668

Lab Sample ID	Client Sample ID	Prep Type	Matrix	Method	Prep Batch
140-11258-2	R1-M202-ORGRNS	Total/NA	Air	202 Org CPM	
140-11258-5	R2-M202-ORGRNS	Total/NA	Air	202 Org CPM	
140-11258-8	R3-M202-ORGRNS	Total/NA	Air	202 Org CPM	
140-11258-11	PB-M202-ORGRNS	Total/NA	Air	202 Org CPM	
140-11258-14	TB-M202-ORGRNS	Total/NA	Air	202 Org CPM	

Client Sample ID: R1-M202-WTRNS
Lab Sample ID: 140-11258-1
Date Collected: 04/03/18 00:00
Matrix: Air
Date Received: 04/10/18 15:00
Sample Container: Amber Glass 500mL - unpreserved

General Chemistry

Analyte	Result	Qualifier	RL	MDL	Unit	D	Prepared	Analyzed	Dil Fac
Inorganic Condensible Particulate Matter	5.59		1.00	0.500	mg/sample			04/18/18 14:13	1

Client Sample ID: R1-M202-ORGRNS
Lab Sample ID: 140-11258-2
Date Collected: 04/03/18 00:00
Matrix: Air
Date Received: 04/10/18 15:00
Sample Container: Amber Glass 500mL - unpreserved

General Chemistry

Analyte	Result	Qualifier	RL	MDL	Unit	D	Prepared	Analyzed	Dil Fac
Organic Condensible Particulate Matter	14.3		1.00	0.500	mg/sample			04/18/18 14:15	1

Client Sample ID: R2-M202-WTRNS
Lab Sample ID: 140-11258-4
Date Collected: 04/04/18 00:00
Matrix: Air
Date Received: 04/10/18 15:00
Sample Container: Amber Glass 500mL - unpreserved

General Chemistry

Analyte	Result	Qualifier	RL	MDL	Unit	D	Prepared	Analyzed	Dil Fac
Inorganic Condensible Particulate Matter	3.51		1.00	0.500	mg/sample			04/18/18 14:13	1

Client Sample ID: R2-M202-ORGRNS
Lab Sample ID: 140-11258-5
Date Collected: 04/04/18 00:00
Matrix: Air
Date Received: 04/10/18 15:00
Sample Container: Amber Glass 500mL - unpreserved

General Chemistry

Analyte	Result	Qualifier	RL	MDL	Unit	D	Prepared	Analyzed	Dil Fac
Organic Condensible Particulate Matter	9.21		1.00	0.500	mg/sample			04/18/18 14:15	1

Client Sample ID: R3-M202-WTRNS
Lab Sample ID: 140-11258-7
Date Collected: 04/05/18 00:00
Matrix: Air
Date Received: 04/10/18 15:00
Sample Container: Amber Glass 500mL - unpreserved

General Chemistry

Analyte	Result	Qualifier	RL	MDL	Unit	D	Prepared	Analyzed	Dil Fac
Inorganic Condensible Particulate Matter	3.96		1.00	0.500	mg/sample			04/18/18 14:13	1

Client Sample ID: R3-M202-ORGRNS

Lab Sample ID: 140-11258-8

Date Collected: 04/05/18 00:00
Matrix: Air
Date Received: 04/10/18 15:00
Sample Container: Amber Glass 500mL - unpreserved

General Chemistry

Analyte	Result	Qualifier	RL	MDL	Unit	D	Prepared	Analyzed	Dil Fac
Organic Condensible Particulate Matter	5.59		1.00	0.500	mg/sample			04/18/18 14:15	1

Client Sample ID: PB-M202-WTRNS

Lab Sample ID: 140-11258-10

Date Collected: 04/02/18 00:00
Matrix: Air
Date Received: 04/10/18 15:00
Sample Container: Amber Glass 500mL - unpreserved

General Chemistry

Analyte	Result	Qualifier	RL	MDL	Unit	D	Prepared	Analyzed	Dil Fac
Inorganic Condensible Particulate Matter	2.23		1.00	0.500	mg/sample			04/18/18 14:13	1

Client Sample ID: PB-M202-ORGRNS

Lab Sample ID: 140-11258-11

Date Collected: 04/02/18 00:00
Matrix: Air
Date Received: 04/10/18 15:00
Sample Container: Amber Glass 500mL - unpreserved

General Chemistry

Analyte	Result	Qualifier	RL	MDL	Unit	D	Prepared	Analyzed	Dil Fac
Organic Condensible Particulate Matter	2.48		1.00	0.500	mg/sample			04/18/18 14:15	1

Client Sample ID: TB-M202-WTRNS

Lab Sample ID: 140-11258-13

Date Collected: 04/04/18 00:00
Matrix: Air
Date Received: 04/10/18 15:00
Sample Container: Amber Glass 500mL - unpreserved

General Chemistry

Analyte	Result	Qualifier	RL	MDL	Unit	D	Prepared	Analyzed	Dil Fac
Inorganic Condensible Particulate Matter	2.14		1.00	0.500	mg/sample			04/18/18 14:13	1

Client Sample ID: TB-M202-ORGRNS

Lab Sample ID: 140-11258-14

Date Collected: 04/04/18 00:00
Matrix: Air
Date Received: 04/10/18 15:00
Sample Container: Amber Glass 500mL - unpreserved

General Chemistry

Analyte	Result	Qualifier	RL	MDL	Unit	D	Prepared	Analyzed	Dil Fac
Organic Condensible Particulate Matter	6.84		1.00	0.500	mg/sample			04/18/18 14:15	1

Default Detection Limits

Client: URS Corporation
Project/Site: SunCoke Energy - M202

TestAmerica Job ID: 140-11258-1

General Chemistry

Analyte	RL	MDL	Units	Method
Inorganic Condensible Particulate Matter	1.00	0.500	mg/sample	202 InOrg CPM
Organic Condensible Particulate Matter	1.00	0.500	mg/sample	202 Org CPM

Client Sample ID: R1-M202-WTRNS
Lab Sample ID: 140-11258-1
Date Collected: 04/03/18 00:00
Matrix: Air
Date Received: 04/10/18 15:00

Prep Type	Batch Type	Batch Method	Run	Dil Factor	Initial Amount	Final Amount	Batch Number	Prepared or Analyzed	Analyst	Lab
Total/NA	Analysis	202 InOrg CPM		1			19667	04/18/18 14:13	TSN	TAL KNX
	Instrument ID: B3									

Client Sample ID: R1-M202-ORGRNS
Lab Sample ID: 140-11258-2
Date Collected: 04/03/18 00:00
Matrix: Air
Date Received: 04/10/18 15:00

Prep Type	Batch Type	Batch Method	Run	Dil Factor	Initial Amount	Final Amount	Batch Number	Prepared or Analyzed	Analyst	Lab
Total/NA	Analysis	202 Org CPM		1			19668	04/18/18 14:15	TSN	TAL KNX
	Instrument ID: B3									

Client Sample ID: R2-M202-WTRNS
Lab Sample ID: 140-11258-4
Date Collected: 04/04/18 00:00
Matrix: Air
Date Received: 04/10/18 15:00

Prep Type	Batch Type	Batch Method	Run	Dil Factor	Initial Amount	Final Amount	Batch Number	Prepared or Analyzed	Analyst	Lab
Total/NA	Analysis	202 InOrg CPM		1			19667	04/18/18 14:13	TSN	TAL KNX
	Instrument ID: B3									

Client Sample ID: R2-M202-ORGRNS
Lab Sample ID: 140-11258-5
Date Collected: 04/04/18 00:00
Matrix: Air
Date Received: 04/10/18 15:00

Prep Type	Batch Type	Batch Method	Run	Dil Factor	Initial Amount	Final Amount	Batch Number	Prepared or Analyzed	Analyst	Lab
Total/NA	Analysis	202 Org CPM		1			19668	04/18/18 14:15	TSN	TAL KNX
	Instrument ID: B3									

Client Sample ID: R3-M202-WTRNS
Lab Sample ID: 140-11258-7
Date Collected: 04/05/18 00:00
Matrix: Air
Date Received: 04/10/18 15:00

Prep Type	Batch Type	Batch Method	Run	Dil Factor	Initial Amount	Final Amount	Batch Number	Prepared or Analyzed	Analyst	Lab
Total/NA	Analysis	202 InOrg CPM		1			19667	04/18/18 14:13	TSN	TAL KNX
	Instrument ID: B3									

Client Sample ID: R3-M202-ORGRNS
Lab Sample ID: 140-11258-8
Date Collected: 04/05/18 00:00
Matrix: Air
Date Received: 04/10/18 15:00

Prep Type	Batch Type	Batch Method	Run	Dil Factor	Initial Amount	Final Amount	Batch Number	Prepared or Analyzed	Analyst	Lab
Total/NA	Analysis	202 Org CPM		1			19668	04/18/18 14:15	TSN	TAL KNX
	Instrument ID: B3									

Lab Chronicle

Client: URS Corporation
Project/Site: SunCoke Energy - M202

TestAmerica Job ID: 140-11258-1

Client Sample ID: PB-M202-WTRNS
Lab Sample ID: 140-11258-10
Date Collected: 04/02/18 00:00
Matrix: Air
Date Received: 04/10/18 15:00

Prep Type	Batch Type	Batch Method	Run	Dil Factor	Initial Amount	Final Amount	Batch Number	Prepared or Analyzed	Analyst	Lab
Total/NA	Analysis	202 InOrg CPM		1			19667	04/18/18 14:13	TSN	TAL KNX
	Instrument ID: B3									

Client Sample ID: PB-M202-ORGRNS
Lab Sample ID: 140-11258-11
Date Collected: 04/02/18 00:00
Matrix: Air
Date Received: 04/10/18 15:00

Prep Type	Batch Type	Batch Method	Run	Dil Factor	Initial Amount	Final Amount	Batch Number	Prepared or Analyzed	Analyst	Lab
Total/NA	Analysis	202 Org CPM		1			19668	04/18/18 14:15	TSN	TAL KNX
	Instrument ID: B3									

Client Sample ID: TB-M202-WTRNS
Lab Sample ID: 140-11258-13
Date Collected: 04/04/18 00:00
Matrix: Air
Date Received: 04/10/18 15:00

Prep Type	Batch Type	Batch Method	Run	Dil Factor	Initial Amount	Final Amount	Batch Number	Prepared or Analyzed	Analyst	Lab
Total/NA	Analysis	202 InOrg CPM		1			19667	04/18/18 14:13	TSN	TAL KNX
	Instrument ID: B3									

Client Sample ID: TB-M202-ORGRNS
Lab Sample ID: 140-11258-14
Date Collected: 04/04/18 00:00
Matrix: Air
Date Received: 04/10/18 15:00

Prep Type	Batch Type	Batch Method	Run	Dil Factor	Initial Amount	Final Amount	Batch Number	Prepared or Analyzed	Analyst	Lab
Total/NA	Analysis	202 Org CPM		1			19668	04/18/18 14:15	TSN	TAL KNX
	Instrument ID: B3									

Laboratory References:
TAL KNX = TestAmerica Knoxville, 5815 Middlebrook Pike, Knoxville, TN 37921, TEL (865)291-3000

Accreditation/Certification Summary

Client: URS Corporation
Project/Site: SunCoke Energy - M202

TestAmerica Job ID: 140-11258-1

Laboratory: TestAmerica Knoxville

All accreditations/certifications held by this laboratory are listed. Not all accreditations/certifications are applicable to this report.

Authority	Program	EPA Region	Identification Number	Expiration Date
	AFCEE		N/A	
ANAB	DoD ELAP		L2311	02-13-19
Arkansas DEQ	State Program	6	88-0688	06-16-18
California	State Program	9	2423	06-30-18
Colorado	State Program	8	TN00009	02-28-19
Connecticut	State Program	1	PH-0223	09-30-19
Florida	NELAP	4	E87177	06-30-18
Georgia	State Program	4	906	04-13-20
Hawaii	State Program	9	N/A	04-13-19
Kansas	NELAP	7	E-10349	10-31-18
Kentucky (DW)	State Program	4	90101	12-31-18
Louisiana	NELAP	6	83979	06-30-18
Louisiana (DW)	NELAP	6	LA160005	12-31-18
Maryland	State Program	3	277	03-31-19
Michigan	State Program	5	9933	04-13-20
Nevada	State Program	9	TN00009	07-31-18
New Jersey	NELAP	2	TN001	06-30-18
New York	NELAP	2	10781	03-31-19
North Carolina (DW)	State Program	4	21705	07-31-18
North Carolina (WW/SW)	State Program	4	64	12-31-18
Ohio VAP	State Program	5	CL0059	11-22-18
Oklahoma	State Program	6	9415	08-31-18
Oregon	NELAP	10	TNI0189	01-01-19
Pennsylvania	NELAP	3	68-00576	12-31-18
Tennessee	State Program	4	2014	04-13-20
Texas	NELAP	6	T104704380-16-9	08-31-18
US Fish & Wildlife	Federal		LE-058448-0	07-31-18
USDA	Federal		P330-16-00262	08-20-19
Utah	NELAP	8	TN00009	07-31-18
Virginia	NELAP	3	460176	09-14-18
Washington	State Program	10	C593	01-19-19
West Virginia (DW)	State Program	3	9955C	12-31-18
West Virginia DEP	State Program	3	345	04-30-18 *
Wisconsin	State Program	5	998044300	08-31-18

* Accreditation/Certification renewal pending - accreditation/certification considered valid.

GENERAL CHEMISTRY

COVER PAGE
GENERAL CHEMISTRY

Lab Name: TestAmerica Knoxville Job Number: 140-11258-1

SDG No.:

Project: SunCoke Energy - M202

Client Sample ID	Lab Sample ID
R1-M202-WTRNS	140-11258-1
R1-M202-ORGRNS	140-11258-2
R2-M202-WTRNS	140-11258-4
R2-M202-ORGRNS	140-11258-5
R3-M202-WTRNS	140-11258-7
R3-M202-ORGRNS	140-11258-8
PB-M202-WTRNS	140-11258-10
PB-M202-ORGRNS	140-11258-11
TB-M202-WTRNS	140-11258-13
TB-M202-ORGRNS	140-11258-14

Comments:

1B-IN
INORGANIC ANALYSIS DATA SHEET
GENERAL CHEMISTRY

Client Sample ID: R1-M202-WTRNS
Lab Sample ID: 140-11258-1
Lab Name: TestAmerica Knoxville
Job No.: 140-11258-1
SDG ID.:
Matrix: Air
Date Sampled: 04/03/2018 00:00
Reporting Basis: WET
Date Received: 04/10/2018 15:00

CAS No.	Analyte	Result	RL	MDL	Units	C	Q	DIL	Method
	Inorganic Condensible Particulate Matter	5.59	1.00	0.500	mg/sample			1	202 InOrg CPM

1B-IN
INORGANIC ANALYSIS DATA SHEET
GENERAL CHEMISTRY

Client Sample ID: R1-M202-ORGRNS
Lab Sample ID: 140-11258-2
Lab Name: TestAmerica Knoxville
Job No.: 140-11258-1
SDG ID.:
Matrix: Air
Date Sampled: 04/03/2018 00:00
Reporting Basis: WET
Date Received: 04/10/2018 15:00

CAS No.	Analyte	Result	RL	MDL	Units	C	Q	DIL	Method
	Organic Condensible Particulate Matter	14.3	1.00	0.500	mg/sample			1	202 Org CPM

1B-IN
INORGANIC ANALYSIS DATA SHEET
GENERAL CHEMISTRY

Client Sample ID: R2-M202-WTRNS
Lab Sample ID: 140-11258-4
Lab Name: TestAmerica Knoxville
Job No.: 140-11258-1
SDG ID.:
Matrix: Air
Date Sampled: 04/04/2018 00:00
Reporting Basis: WET
Date Received: 04/10/2018 15:00

CAS No.	Analyte	Result	RL	MDL	Units	C	Q	DIL	Method
	Inorganic Condensible Particulate Matter	3.51	1.00	0.500	mg/sample			1	202 InOrg CPM

1B-IN
INORGANIC ANALYSIS DATA SHEET
GENERAL CHEMISTRY

Client Sample ID: R2-M202-ORGRNS
Lab Sample ID: 140-11258-5
Lab Name: TestAmerica Knoxville
Job No.: 140-11258-1
SDG ID.:
Matrix: Air
Date Sampled: 04/04/2018 00:00
Reporting Basis: WET
Date Received: 04/10/2018 15:00

CAS No.	Analyte	Result	RL	MDL	Units	C	Q	DIL	Method
	Organic Condensible Particulate Matter	9.21	1.00	0.500	mg/sample			1	202 Org CPM

1B-IN
INORGANIC ANALYSIS DATA SHEET
GENERAL CHEMISTRY

Client Sample ID: R3-M202-WTRNS
Lab Sample ID: 140-11258-7
Lab Name: TestAmerica Knoxville
Job No.: 140-11258-1
SDG ID.:
Matrix: Air
Date Sampled: 04/05/2018 00:00
Reporting Basis: WET
Date Received: 04/10/2018 15:00

CAS No.	Analyte	Result	RL	MDL	Units	C	Q	DIL	Method
	Inorganic Condensible Particulate Matter	3.96	1.00	0.500	mg/sample			1	202 InOrg CPM

1B-IN
INORGANIC ANALYSIS DATA SHEET
GENERAL CHEMISTRY

Client Sample ID: R3-M202-ORGRNS
Lab Sample ID: 140-11258-8
Lab Name: TestAmerica Knoxville
Job No.: 140-11258-1
SDG ID.:
Matrix: Air
Date Sampled: 04/05/2018 00:00
Reporting Basis: WET
Date Received: 04/10/2018 15:00

CAS No.	Analyte	Result	RL	MDL	Units	C	Q	DIL	Method
	Organic Condensible Particulate Matter	5.59	1.00	0.500	mg/sample			1	202 Org CPM

1B-IN
INORGANIC ANALYSIS DATA SHEET
GENERAL CHEMISTRY

Client Sample ID: PB-M202-WTRNS
Lab Sample ID: 140-11258-10
Lab Name: TestAmerica Knoxville
Job No.: 140-11258-1
SDG ID.:
Matrix: Air
Date Sampled: 04/02/2018 00:00
Reporting Basis: WET
Date Received: 04/10/2018 15:00

CAS No.	Analyte	Result	RL	MDL	Units	C	Q	DIL	Method
	Inorganic Condensible Particulate Matter	2.23	1.00	0.500	mg/sample			1	202 InOrg CPM

1B-IN
INORGANIC ANALYSIS DATA SHEET
GENERAL CHEMISTRY

Client Sample ID: PB-M202-ORGRNS
Lab Sample ID: 140-11258-11
Lab Name: TestAmerica Knoxville
Job No.: 140-11258-1
SDG ID.:
Matrix: Air
Date Sampled: 04/02/2018 00:00
Reporting Basis: WET
Date Received: 04/10/2018 15:00

CAS No.	Analyte	Result	RL	MDL	Units	C	Q	DIL	Method
	Organic Condensible Particulate Matter	2.48	1.00	0.500	mg/sample			1	202 Org CPM

1B-IN
INORGANIC ANALYSIS DATA SHEET
GENERAL CHEMISTRY

Client Sample ID: TB-M202-WTRNS
Lab Sample ID: 140-11258-13
Lab Name: TestAmerica Knoxville
Job No.: 140-11258-1
SDG ID.:
Matrix: Air
Date Sampled: 04/04/2018 00:00
Reporting Basis: WET
Date Received: 04/10/2018 15:00

CAS No.	Analyte	Result	RL	MDL	Units	C	Q	DIL	Method
	Inorganic Condensible Particulate Matter	2.14	1.00	0.500	mg/sample			1	202 InOrg CPM

1B-IN
INORGANIC ANALYSIS DATA SHEET
GENERAL CHEMISTRY

Client Sample ID: TB-M202-ORGRNS
Lab Sample ID: 140-11258-14
Lab Name: TestAmerica Knoxville
Job No.: 140-11258-1
SDG ID.:
Matrix: Air
Date Sampled: 04/04/2018 00:00
Reporting Basis: WET
Date Received: 04/10/2018 15:00

CAS No.	Analyte	Result	RL	MDL	Units	C	Q	DIL	Method
	Organic Condensible Particulate Matter	6.84	1.00	0.500	mg/sample			1	202 Org CPM

9-IN
DETECTION LIMITS
GENERAL CHEMISTRY

Lab Name: TestAmerica Knoxville Job Number: 140-11258-1

SDG Number:

Matrix: Air Instrument ID: B3

Method: 202 InOrg CPM MDL Date: 01/01/2015 17:11

Analyte	Wavelength/ Mass	RL (mg/sample)	MDL (mg/sample)
Inorganic Condensible Particulate Matter		1	0.5

9-IN
CALIBRATION BLANK DETECTION LIMITS
GENERAL CHEMISTRY

Lab Name: TestAmerica Knoxville Job Number: 140-11258-1

SDG Number:

Matrix: Air Instrument ID: B3

Method: 202 InOrg CPM XMDL Date: 01/01/2015 17:44

Analyte	Wavelength/ Mass	XRL (mg/sample)	XMDL (mg/sample)
Inorganic Condensible Particulate Matter		1	0.5

9-IN
DETECTION LIMITS
GENERAL CHEMISTRY

Lab Name: TestAmerica Knoxville Job Number: 140-11258-1

SDG Number:

Matrix: Air Instrument ID: B3

Method: 202 Org CPM MDL Date: 01/01/2015 17:11

Analyte	Wavelength/ Mass	RL (mg/sample)	MDL (mg/sample)
Organic Condensible Particulate Matter		1	0.5

9-IN
CALIBRATION BLANK DETECTION LIMITS
GENERAL CHEMISTRY

Lab Name: TestAmerica Knoxville Job Number: 140-11258-1

SDG Number:

Matrix: Air Instrument ID: B3

Method: 202 Org CPM XMDL Date: 01/01/2015 17:44

Analyte	Wavelength/ Mass	XRL (mg/sample)	XMDL (mg/sample)
Organic Condensible Particulate Matter		1	0.5

13-IN
ANALYSIS RUN LOG
GENERAL CHEMISTRY

Lab Name: TestAmerica Knoxville Job No.: 140-11258-1

SDG No.:

Instrument ID: B3 Analysis Method: 202 InOrg CPM

Start Date: 04/18/2018 14:13 End Date: 04/18/2018 14:13

Lab Sample Id	D/F	Type	Time	Analytes																								
				ICPM																								
ZZZZZZ			14:13																									
ZZZZZZ			14:13																									
ZZZZZZ			14:13																									
140-11258-1	1	T	14:13	X																								
140-11258-4	1	T	14:13	X																								
140-11258-7	1	T	14:13	X																								
140-11258-10	1	T	14:13	X																								
140-11258-13	1	T	14:13	X																								
ZZZZZZ			14:13																									
ZZZZZZ			14:13																									

Prep Types:
T = Total/NA

13-IN
ANALYSIS RUN LOG
GENERAL CHEMISTRY

Lab Name: TestAmerica Knoxville Job No.: 140-11258-1

SDG No.:

Instrument ID: B3 Analysis Method: 202 Org CPM

Start Date: 04/18/2018 14:15 End Date: 04/18/2018 14:15

Lab Sample Id	D/F	Type	Time	Analytes																								
				OCPM																								
ZZZZZZ			14:15																									
ZZZZZZ			14:15																									
ZZZZZZ			14:15																									
140-11258-2	1	T	14:15	X																								
140-11258-5	1	T	14:15	X																								
140-11258-8	1	T	14:15	X																								
140-11258-11	1	T	14:15	X																								
140-11258-14	1	T	14:15	X																								
ZZZZZZ			14:15																									
ZZZZZZ			14:15																									

Prep Types:
T = Total/NA

GENERAL CHEMISTRY BATCH WORKSHEET

Lab Name: TestAmerica Knoxville Job No.: 140-11258-1

SDG No.:

Batch Number: 19667 Batch Start Date: 04/18/18 14:13 Batch Analyst: Nedkova, Teodora S

Batch Method: 202 InOrg CPM Batch End Date: 04/24/18 16:00

Lab Sample ID	Client Sample ID	Method Chain	Basis	TareWeight	TareDateTime	InitialAmount	Initial pH	BuretStart1	BuretStop1
140-11258-A-1	R1-M202-WTRNS	202 InOrg CPM	T	65.67938 g	04/19/2018 11:50	198 mL	5 SU	1 mL	1 mL
140-11258-A-4	R2-M202-WTRNS	202 InOrg CPM	T	67.79441 g	04/19/2018 11:50	200 mL	6 SU	1 mL	1 mL
140-11258-A-7	R3-M202-WTRNS	202 InOrg CPM	T	65.08328 g	04/19/2018 11:50	275 mL	6 SU	1 mL	1 mL
140-11258-A-10	PB-M202-WTRNS	202 InOrg CPM	T	65.53710 g	04/19/2018 11:50	195 mL	6 SU	1 mL	1 mL
140-11258-A-13	TB-M202-WTRNS	202 InOrg CPM	T	66.91690 g	04/19/2018 11:50	186 mL	6 SU	1 mL	1 mL

Lab Sample ID	Client Sample ID	Method Chain	Basis	TitrantVolume1	DesDateTime	Weight1	WT1DateTime	Weight2	WT2DateTime
140-11258-A-1	R1-M202-WTRNS	202 InOrg CPM	T	0 mL	04/20/2018 11:30	65.68491 g	04/23/2018 22:00	65.68504 g	04/24/2018 09:20
140-11258-A-4	R2-M202-WTRNS	202 InOrg CPM	T	0 mL	04/20/2018 11:30	67.79789 g	04/23/2018 22:00	67.79795 g	04/24/2018 09:20
140-11258-A-7	R3-M202-WTRNS	202 InOrg CPM	T	0 mL	04/20/2018 11:30	65.08718 g	04/23/2018 22:00	65.08730 g	04/24/2018 09:20
140-11258-A-10	PB-M202-WTRNS	202 InOrg CPM	T	0 mL	04/20/2018 11:30	65.53915 g	04/23/2018 22:00	65.53952 g	04/24/2018 09:20
140-11258-A-13	TB-M202-WTRNS	202 InOrg CPM	T	0 mL	04/20/2018 11:30	66.91890 g	04/23/2018 22:00	66.91918 g	04/24/2018 09:20

Lab Sample ID	Client Sample ID	Method Chain	Basis	WT3DateTime	AvgWeight	CalcMsg			
140-11258-A-1	R1-M202-WTRNS	202 InOrg CPM	T	04/24/2018 09:20	65.684975 g	OK			
140-11258-A-4	R2-M202-WTRNS	202 InOrg CPM	T	04/24/2018 09:20	67.79792 g	OK			
140-11258-A-7	R3-M202-WTRNS	202 InOrg CPM	T	04/24/2018 09:20	65.08724 g	OK			
140-11258-A-10	PB-M202-WTRNS	202 InOrg CPM	T	04/24/2018 09:20	65.539335 g	OK			
140-11258-A-13	TB-M202-WTRNS	202 InOrg CPM	T	04/24/2018 09:20	66.91904 g	OK			

The pound sign (#) in the amount added field denotes that the reagent was used undiluted. All calculations are performed using the stated concentration for this reagent.

GENERAL CHEMISTRY BATCH WORKSHEET

Lab Name: TestAmerica Knoxville Job No.: 140-11258-1

SDG No.:

Batch Number: 19667 Batch Start Date: 04/18/18 14:13 Batch Analyst: Nedkova, Teodora S

Batch Method: 202 InOrg CPM Batch End Date: 04/24/18 16:00

Batch Notes	
Balance ID	B3
Normality of Base	0.1 N
Field Volume Marked (Y/N)	N
Volume of H2SO4	1 mL
Leakage Noted (Y/N)	N
Volume of NH4OH	1 mL
Oven, Bath or Block Temperature 1	29 Degrees C
Oven ID	ACSOV1

Basis	Basis Description
T	Total/NA

The pound sign (#) in the amount added field denotes that the reagent was used undiluted. All calculations are performed using the stated concentration for this reagent.

GENERAL CHEMISTRY BATCH WORKSHEET

Lab Name: TestAmerica Knoxville Job No.: 140-11258-1

SDG No.:

Batch Number: 19668 Batch Start Date: 04/18/18 14:15 Batch Analyst: Nedkova, Teodora S

Batch Method: 202 Org CPM Batch End Date: 04/24/18 16:00

Lab Sample ID	Client Sample ID	Method Chain	Basis	TareWeight	TareDateTime	DesDateTime	Weight1	WT1DateTime	Weight2
140-11258-A-2	R1-M202-ORGRNS	202 Org CPM	T	64.66065 g	04/18/2018 21:30	04/20/2018 11:30	64.67490 g	04/23/2018 22:20	64.67508 g
140-11258-A-5	R2-M202-ORGRNS	202 Org CPM	T	64.71866 g	04/18/2018 21:30	04/20/2018 11:30	64.72782 g	04/23/2018 22:20	64.72792 g
140-11258-A-8	R3-M202-ORGRNS	202 Org CPM	T	65.44205 g	04/18/2018 21:30	04/20/2018 11:30	65.44763 g	04/23/2018 22:20	65.44766 g
140-11258-A-11	PB-M202-ORGRNS	202 Org CPM	T	66.22802 g	04/18/2018 21:30	04/20/2018 11:30	66.23041 g	04/23/2018 22:20	66.23058 g
140-11258-A-14	TB-M202-ORGRNS	202 Org CPM	T	66.29371 g	04/18/2018 21:30	04/20/2018 11:30	66.30053 g	04/23/2018 22:20	66.30058 g

Lab Sample ID	Client Sample ID	Method Chain	Basis	WT2DateTime	WT3DateTime	AvgWeight	CalcMsg	AnalysisComment	
140-11258-A-2	R1-M202-ORGRNS	202 Org CPM	T	04/24/2018 09:35	04/24/2018 09:35	64.67499 g	OK	240 ml	
140-11258-A-5	R2-M202-ORGRNS	202 Org CPM	T	04/24/2018 09:35	04/24/2018 09:35	64.72787 g	OK	186ml	
140-11258-A-8	R3-M202-ORGRNS	202 Org CPM	T	04/24/2018 09:35	04/24/2018 09:35	65.447645 g	OK	310ml	
140-11258-A-11	PB-M202-ORGRNS	202 Org CPM	T	04/24/2018 09:35	04/24/2018 09:35	66.230495 g	OK	240ml	
140-11258-A-14	TB-M202-ORGRNS	202 Org CPM	T	04/24/2018 09:35	04/24/2018 09:35	66.300555 g	OK	250ml	

Batch Notes	
Balance ID	B3
Oven, Bath or Block Temperature 1	29 Degrees C
Oven ID	ACSOV1

Basis	Basis Description
T	Total/NA

The pound sign (#) in the amount added field denotes that the reagent was used undiluted. All calculations are performed using the stated concentration for this reagent.

TestAmerica Knoxville Particulate Matter Determination Data Review/Narrative Checklist
Method: EPA Method 202 by SOP KNOX-WC-0006, Rev. 11

Batch Number:	19667	**Job Number(s):**	140 - 11258
Analyst Name:	TBN	**Method Citation:**	M202
Drying Temperature	Filters Inorganic CPE (202) Organic CPE (202)	☐ Ambient ☒ Ambient ☐ Ambient	☐ Other_____ ☐ Other_____ ☐ Other_____ ☐ Extracted and Combined per Method_____

Review Items **Section 1: Calibration**	N/A	Y	N	If No, why is data reportable?	2nd √
1. Was the daily balance calibration check performed and recorded in the balance calibration check log book?		✓			✓
2. Was the balance zero and calibration checked with three weights that bracket the range to be measured prior to use?		✓		☐ Other weights bracketing weight range were used.	✓
3. Was the balance checked with 100 gram weight per 10 samples and at the end of weighing session?		✓		☐ Another weight was used.(_____ grams)	✓
4. Was the balance zero checked per 10 samples and at the end of weighing session?		✓			✓
5. Was the balance tared before each weighing?		✓			✓
6. Was the balance ID documented?		✓			✓
7. Was the oven ID documented? ACSOM		✓			✓
Section 2: Tare Weight Procedure					
1. Were the beakers weighed in TALS batch?		~~TBN~~ 04/24/18	✓	☑ FilterTracIV	✓
2. Were the beakers baked before weighing?		✓			✓
3. Were all tare weights performed in duplicate?			✓	☑ Duplicate weights not required for baked beakers.	✓
4. Were all tare weights averaged?	✓				NK
Section 3: Procedure					
1. Were all special project requirements met? **(Review all Backlog Comments and Project Documents.)**		✓			✓
2. Were sample IDs verified? **(Review Job Numbers and Client IDs on sample labels.)**		✓			✓
3. Were all sample weights performed in duplicate (at least)?		✓			✓
4. Was the average of the last two weights used?		✓			✓
5. Calculations checked for error? Sample 11258-2 (Weight 1 + Weight 2) / 2 = 64.67499 g Gross Weight Average – Tare Weight Average = 14.3 mg		✓			✓
Section 4: TALS Reporting					
1. Was Batch Information added? Correct analyst name recorded?		✓			✓
2. Does the analytical time match the beginning of the last set of weights?		✓			✓
3. Were applicable documents scanned and added?		✓			✓
4. Are all non-conformances documented?	✓			**NCM No.:**	NA
5. Was appropriate narrative NCM added?		✓		**NCM No:** ✓ **[6054]**	✓
6. Final report acceptable? (Results, units, analysis dates are correct. Flags and/or errors were addressed.)		✓			✓

1st Level Reviewer: Nedkord	**Date:** 04/24/18	**2nd Level Reviewer:** [signature]	**Date:** 4-25-18
Comments:		**Comments:**	

WC106R0, 09/08/17

TestAmerica Knoxville Particulate Matter Determination Data Review/Narrative Checklist
Method: EPA Method 202 by SOP KNOX-WC-0006, Rev. 11

Batch Number:	19668	**Job Number(s):**	140- 11258	
Analyst Name:	TJN	**Method Citation:**	M202	
Drying Temperature	Filters	☐ Ambient	☐ Other_____	☐ Extracted and Combined per Method_____
	Inorganic CPE (202)	☐ Ambient	☐ Other_____	
	Organic CPE (202)	☑ Ambient	☐ Other_____	

Review Items **Section 1: Calibration**	N/A	Y	N	If No, why is data reportable?	2nd √
1. Was the daily balance calibration check performed and recorded in the balance calibration check log book?		√			√
2. Was the balance zero and calibration checked with three weights that bracket the range to be measured prior to use?		√		☐ Other weights bracketing weight range were used.	√
3. Was the balance checked with 100 gram weight per 10 samples and at the end of weighing session?		√		☐ Another weight was used.(_____ grams)	√
4. Was the balance zero checked per 10 samples and at the end of weighing session?		√			√
5. Was the balance tared before each weighing?		√			√
6. Was the balance ID documented?		√			√
7. Was the oven ID documented? AC5001		√			√
Section 2: Tare Weight Procedure					
1. Were the beakers weighed in TALS batch?			√	☑ FilterTracIV	√
2. Were the beakers baked before weighing?		√			√
3. Were all tare weights performed in duplicate?			√	☑ Duplicate weights not required for baked beakers.	√
4. Were all tare weights averaged?	√				NK
Section 3: Procedure					
1. Were all special project requirements met? **(Review all Backlog Comments and Project Documents.)**		√			√
2. Were sample IDs verified? **(Review Job Numbers and Client IDs on sample labels.)**		√			√
3. Were all sample weights performed in duplicate (at least)?		√			√
4. Was the average of the last two weights used?		√			√
5. Calculations checked for error? Sample 11258-1. (Weight 1 + Weight 2) / 2 = (65.68491 + 65.68504) / 2 = 65.684975 Gross Weight Average – Tare Weight Average = (65.684975 - 65.67938) = 5.59 mg		√			√
Section 4: TALS Reporting					
1. Was Batch Information added? Correct analyst name recorded?		√			√
2. Does the analytical time match the beginning of the last set of weights?		√			√
3. Were applicable documents scanned and added?		√			√
4. Are all non-conformances documented?	√			NCM No.:	NK
5. Was appropriate narrative NCM added?		√		NCM No: √ [6054]	√
6. Final report acceptable? (Results, units, analysis dates are correct. Flags and/or errors were addressed.)		√			√

1st Level Reviewer:	Date: 04/24/18	2nd Level Reviewer:	Date: 4-25-18
Comments:		Comments:	

Shipping and Receiving Documents

AECOM

Chain of Custody Record

PROJECT			# OF CONTAINERS	ANALYSES										
GCO PCM Compliance Test				PM via M5										
SunCoke Energy--Granite City Operations														
COLLECTED BY (*Signature*)														
FIELD SAMPLE ID	SAMPLE MATRIX	DATE/TIME											REMARKS	ID NO. (lab use only)
R1-M5-PNR	Acetone	4/3/2018	1	x									250 ml	
R1-M5-Filt	Filter	4/3/2018	1	x									Filter 140-10871-A-1	
R2-M5-PNR	Acetone	4/4/2018	1	x									250 ml	
R2-M5-Filt	Filter	4/4/2018	1	x									Filter 140-10871-A-2	
R3-M5-PNR	Acetone	4/5/2018	1	x									250 ml	
R3-M5-Filt	Filter	4/5/2018	1	x									Filter 140-10871-A-3	
Ac-Blank	Acetone	4/5/2018	1	x									250 ml	
M5-Filt-Blank	Filter	4/5/2018	1	x									Filter 140-10871-A-4	

REMARKS

Technical Contact: Bill Thomas 865-425-7073(w) or 865-607-3997(m)

PROJECT #	RELINQUISHED BY	DATE	TIME
60566151	W C Thomas	4/10/18	1500

RECEIVED BY	DATE	TIME	RELINQUISHED BY	DATE	TIME	RECEIVED BY	DATE	TIME	RELINQUISHED BY	DATE	TIME
	4/10/18	1500									

RECEIVED FOR LABORATORY BY	DATE	TIME	AIRBILL#	OPENED BY	DATE	TIME	TEMP (degC)	SEAL #	CONDITION

REMARKS

HAND DELIVERED
NO CUSTODY SEALS
RECEIVED AMBIENT RT 19.9/CT 19.8°C
BKD 4-10-18

140-11258 Chain of Custody

AECOM

Chain of Custody Record

PROJECT: GCO PCM Compliance Test

SITE: SunCoke Energy--Granite City Operations

COLLECTED BY (*Signature*)

FIELD SAMPLE ID	SAMPLE MATRIX	DATE/TIME	# OF CONTAINERS	ANALYSES: PM via M202	REMARKS	ID NO. (lab use only)
R1-M202-WtRns	Water	4/3/2018	1	x	500 ml	
R1-M202-OrgRns	Acetone/hexane	4/3/2018	1	x	500 ml	
R1-M202-CPMFilt	Filter	4/3/2018	1	x	Petri Dish	
R2-M202-WtRns	Water	4/4/2018	1	x	500 ml	
R2-M202-OrgRns	Acetone/hexane	4/4/2018	1	x	500 ml	
R2-M202-CPMFilt	Filter	4/4/2018	1	x	Petri Dish	
R3-M202-WtRns	Water	4/5/2018	1	x	500 ml	
R3-M202-OrgRns	Acetone/hexane	4/5/2018	1	x	500 ml	
R3-M202-CPMFilt	Filter	4/5/2018	1	x	Petri Dish	

REMARKS

Technical Contact: Bill Thomas 865-425-7073(w) or 865-607-3997(m)

PROJECT #	RELINQUISHED BY	DATE	TIME
60566151	W C Thomas	4/9/18	1500

RECEIVED BY	DATE	TIME	RELINQUISHED BY	DATE	TIME	RECEIVED BY	DATE	TIME	RELINQUISHED BY	DATE	TIME
	4/10/18	1509									

RECEIVED FOR LABORATORY BY	DATE	TIME	AIRBILL#	OPENED BY	DATE	TIME	TEMP (degC)	SEAL #	CONDITION

REMARKS

AECOM

Chain of Custody Record

PROJECT			# OF CONTAINERS	ANALYSES									
GCO PCM Compliance Test						PM via M202							
SITE: SunCoke Energy--Granite City Operations													
COLLECTED BY (*Signature*)													
FIELD SAMPLE ID	SAMPLE MATRIX	DATE/TIME										REMARKS	ID NO. (lab use only)
PB-M202-WtRns	Water	4/2/2018	1			x						500 ml	
PB-M202-OrgRns	Acetone/hexane	4/2/2018	1			x						500 ml	
PB-M202-CPMFilt	Filter	4/2/2018	1			x						Petri Dish	
TB-M202-WtRns	Water	4/4/2018	1			x						500 ml	
TB-M202-OrgRns	Acetone/hexane	4/4/2018	1			x						500 ml	
TB-M202-CPMFilt	Filter	4/4/2018	1			x						Petri Dish	
DI H2O-Blank	Water	4/5/2018	1									Hold; 250 ml	
Hex-Blank	Hexane	4/5/2018	1									Hold; 250 ml	
CPMFilt-Blank	Filter	4/5/2018	1									Hold; Petri Dish	

REMARKS

Technical Contact: Bill Thomas 865-425-7073(w) or 865-607-3997(m)

PROJECT # **60566151**

RELINQUISHED BY	DATE	TIME
WC Thomas	4/10/18	1502

RECEIVED BY	DATE	TIME	RELINQUISHED BY	DATE	TIME	RECEIVED BY	DATE	TIME	RELINQUISHED BY	DATE	TIME
	4/10/18	1500									

RECEIVED FOR LABORATORY BY	DATE	TIME	AIRBILL#	OPENED BY	DATE	TIME	TEMP (degC)	SEAL #	CONDITION

REMARKS

Loc: 140
11258

TESTAMERICA KNOXVILLE SAMPLE RECEIPT/CONDITION UPON RECEIPT ANOMALY CHECKLIST **Log In Number:**

Review Items	Yes	No	NA	If No, what was the problem?
1. Are the shipping containers intact?	✓		✓	☐ **Containers, Broken**
2. Were ambient air containers received intact?			✓	☐ Checked in lab
3. The coolers/containers custody seal if present, is it intact?			✓	☐ Yes ☐ NA
4. Is the cooler temperature within limits? (> freezing temp. of water to 6 °C, VOST: 10°C) Thermometer ID :_____ Correction factor: _____	✓		✓	☐ **Cooler Out of Temp, Client Contacted, Proceed/Cancel** ☐ **Cooler Out of Temp, Same Day Receipt**
5. Were all of the sample containers received intact?	✓			☐ **Containers, Broken**
6. Were samples received in appropriate containers?	✓			☐ **Containers, Improper; Client Contacted; Proceed/Cancel**
7. Do sample container labels match COC? (IDs, Dates, Times)	✓			☐ **COC & Samples Do Not Match** ☐ **COC Incorrect/Incomplete** ☐ **COC Not Received**
8. Were all of the samples listed on the COC received?	✓			☐ **Sample Received, Not on COC** ☐ **Sample on COC, Not Received**
9. Is the date/time of sample collection noted?	✓		✓	☐ **COC; No Date/Time; Client Contacted**
10. Was the sampler identified on the COC?		✓	✓	☐ **Sampler Not Listed on COC**
11. Is the client and project name/# identified?	✓			☐ **COC Incorrect/Incomplete**
12. Are tests/parameters listed for each sample?	✓			☐ **COC No tests on COC**
13. Is the matrix of the samples noted?	✓			☐ **COC Incorrect/Incomplete**
14. Was COC relinquished? (Signed/Dated/Timed)	✓			☐ **COC Incorrect/Incomplete**
15. Were samples received within holding time?	✓			☐ **Holding Time - Receipt**
16. Were samples received with correct chemical preservative (excluding Encore)?			✓	☐ **pH Adjusted, pH Included (See box 16A)** ☐ **Incorrect Preservative**
17. Were VOA samples received without headspace?			✓	☐ **Headspace (VOA only)**
18. Did you check for residual chlorine, if necessary? (e.g. 1613B, 1668) Chlorine test strip lot number:_____			✓	☐ **Residual Chlorine**
19. For 1613B water samples is pH<9?			✓	☐ If no, lab will adjust
20. For rad samples was sample activity info. Provided?			✓	☐ Project missing info

Comments/Actions Taken

10.

Labeling Verified by: **Date:**

pH test strip lot number:

	Box 16A: pH Preservation	Box 18A: Residual Chlorine
Preservative:		
Lot Number:		
Exp Date:		
Analyst:		
Date:		
Time:		

Project #: 14004550 PM Instructions: _____

Sample Receiving Associate: _____ Date: 4-10-18

QA026R30.doc, 080916

Appendix D
EQUIPMENT CALIBRATION INFORMATION

CDS-04S
5 Point Console Dry Gas Meter Calibration

Console ID
URS-002

		Initials	Date
Calibrated by		CS	2/21/18
Reviewed by		WCT	3/1/18
Console Sticker	Prepared		
	Reviewed		
	Affixed		
MCL-01 or MCL-33 Prepared		CS	2/21/18

Console Calibration Expiration Date
21-Feb-2019

Orifice ID:	IX-40		IX-48		IX-55		IX-63		IX-73	
Orifice K':	0.2378		0.3467		0.4564		0.5840		0.8042	
Dry Gas Meter	Run #1a	Run #1b	Run #2a	Run #2b	Run #3a	Run #3b	Run #4a	Run #4b	Run #5a	Run #5b
Initial Reading, (ft^3)	839.970	845.432	778.000	784.035	790.094	796.242	802.393	810.270	818.150	829.040
Final Reading, (ft^3)	845.432	850.890	784.035	790.094	796.242	802.393	810.270	818.150	829.040	839.970
Difference, (ft^3)	5.462	5.458	6.035	6.059	6.148	6.151	7.877	7.880	10.890	10.930
Initial Meter Temp., (°F)	77	77	70	72	73	74	74	75	75	76
Final Meter Temp., (°F)	77	77	72	73	74	74	75	75	76	77
Average Meter Temp., (°F)	77.0	77.0	71.0	72.5	73.5	74.0	74.5	75.0	75.5	76.5
Test Time (min.)	17	17	13	13	10	10	10	10	10	10
Orifice Manometer Reading, ("H_2O)	0.34	0.34	0.69	0.69	1.10	1.10	1.90	1.90	3.60	3.60
Barometric Pressure, ("Hg)	29.43		29.43		29.43		29.43		29.43	
Ambient Temperature, (°F)	71		71		71		71		71	
Pump Vacuum, ("Hg)	22.5	22.5	21	21	19.5	19.5	17.5	17.5	14.5	14.5
Standard Volume of the Meter, (V_{mstd})	5.285	5.281	5.910	5.917	5.999	5.996	7.687	7.683	10.652	10.672
Standard Volume of Critical Orifice, (V_{crstd})	5.163	5.163	5.756	5.756	5.829	5.829	7.459	7.459	10.271	10.271
Flow Rate (cfm)	0.311	0.311	0.455	0.455	0.600	0.600	0.769	0.768	1.065	1.067
DGM Calibration Factor, (Y)	0.977	0.978	0.974	0.973	0.972	0.972	0.970	0.971	0.964	0.962
Average DGM Calibration Factor (Y)	0.977		0.973		0.972		0.971		0.963	
Delta H@, ("H_2O)	2.009	2.009	1.943	1.937	1.783	1.781	1.884	1.883	1.895	1.892
Average ΔH@, ("H_2O)	2.009		1.940		1.782		1.884		1.894	

Current Average Y	0.971
All Individual Y within 2% of mean?	TRUE
Average Delta $H_@$	1.902
All individual $\Delta H_@$ within 0.20"H_2O of mean	TRUE

CDS-04S DGM 5 point against orifice
Per EM SOP-002
Issued: January 2018

CDS-04

Five-Point Dry Gas Meter Calibration
(Against Critical Orifice)

Calibrated by	Initials: CS
	Date: 2/21/18
Reviewed by	Initials: WCT
	Date: 3/11/18

Console ID	URS-002

Leak Check	(+)	0
	(-)	0

Thermometer ID	
Thermometer Expiration Date	
Barometer ID	
Barometer Expiration Date	

		Run 1A	Run 1B	Run 2A	Run 2B	Run 3A	Run 3B	Run 4A	Run 4B	Run 5A	Run 5B
Critical Orifice	Identification Number	IX-40		IX-48		IX-55		IX-63		IX-73	
	Expiration Date										
	K Factor	0.2378		0.3467		0.4564		0.5840		0.8402	
Subject DGM	DGM Initial Reading (ft^3)	839.970	845.432	778.000	784.035	790.094	796.242	802.393	810.270	818.150	829.040
	DGM Final Reading (ft^3)	845.432	850.890	784.035	790.094	796.242	802.393	810.270	818.150	829.040	839.970
	Initial DGM Temperature (°F)	77	77	70	72	73	74	74	75	75	76
	Final DGM Temperature (°F)	77	77	72	73	74	74	75	75	76	77
Test Time (minutes)		17	17	13	13	10	10	10	10	10	10
Orifice Manometer, ΔH ("H_2O)		0.34	0.34	0.69	0.69	1.10	1.10	1.90	1.90	3.60	3.60
Barometric Pressure ("Hg)		29.43		29.43		29.43		29.43		29.43	
Ambient Temperature (°F)		71		71		71		71		71	
Pump Vacuum ("Hg)		22.5	22.5	21	21	19.5	19.5	17.5	17.5	14.5	14.5

Notes:

MCL-01

Console Inspection Checklist

Performed with Calibration Activities

Console ID	URS-002
Operator	CS
Date	2/21/18

Things to do Before Calibration	
NA	Clean pump oil from the muffler in the back of the console (wipe out with a paper towel is fine)
✓	Check to make sure manometer fluid levels are OK, and try to not have the adjustment valves close to one extreme or the other
✓	Check integrity of ΔH lines running from manometer to dry gas meter orifice (especially where these lines connect to DGM exit).
✓	Make sure console has 4 rubber feet. These sometimes fall off with field use.
✓	Inspect power cord for nicks, rubs or separated plug. Replace cord or plug as necessary.
✓	Inspect female 120V receptacles (pump, aux) for signs of melting, charring or other issues. Replace as necessary.
✓	Inspect rotary thermocouple selection switch. If it is old or worn, replace it.
✓	Inspect fuse connectors for signs of melting, charring or other issues. Replace as necessary.

Things to do During Calibration:	
✓	General cleanliness of the console. We have degreaser in a spray bottle for this purpose.
NA	Make sure spare fuses are readily available for when the console is in the field.
NA	Check that fuses are of the correct size.
✓	Make sure console has spare manometer fluid.
✓	Check readout selector switch for operation on all channels (1-7). First try to clean with aerosol spray. If this doesn't work easily, replace the switch. Make sure selector knob is fastened securely.
✓	Check that Amphenol connector is tight to the console front panel. If not, tighten it.
✓	Check for power from Amphenol connection for probe and filter box (make sure aux is switched for Chrome VI ready consoles). We have handy Amphenol to outlet converters we can use for this, just test with a work light)
✓	Verify all places where there should be a screw, have a screw. If not, put one in. (especially the handles and the shell, we frequently use these to hoist).
✓	Check that manometer valves are complete and that set screws are tightened.
NA	If performing a 3-pt. cal, check condition of the 5-pt. cal label. If it is faded or torn, replace it.
✓	Check console ID label. If it is illegible, replace it.
✓	Check that the timer works properly. If not, replace it.

Notes:

Temperature Readout Calibration
Isokinetic Sampling Consoles

Calibrated by	Initials	CS
	Date	2/20/18
Reviewed by	Initials	WCT
	Date	3/11/18

Readout ID Number
URS-002

Reference Thermometer	ID Number	2490
	Calibration Exp Date	5/22/18
Reference Thermocouple	ID Number	SR 2
	Calibration Exp Date	2/9/19
Voltage Generator	ID Number	T-311348
	Calibration Exp Date	

Temperature Readout Calibration		
Reference Thermometer (°F)	70	
Temperature Readout (°F)	69	
Was readout adjusted?	N	Y/(N)
Do these agree within 2°F	Y	(Y)/N

Temperature Readout Linearity Check

Channel	Voltage (mV)	Temperature (°F)		
		Theoretical	Observed	Difference [1]
1 STACK	-0.0	32	31	-1
	-1.0	-10	-9	1
	0.0	32	31	-1
	1.0	77	75	-2
	3.0	165	164	-1
	5.0	251	251	0
	7.0	341	341	0
	10.0	475	473	-2
	15.0	692	693	1
	20.0	905	905	0
	30.0	1329	1328	-1
	40.0	1772	1772	0

Channel	Voltage (mV)	Temperature (°F)		
		Theoretical	Observed	Difference [1]
2 PROBE	0.0	32	31	-1
	5.0	251	252	+1 Q WCT
3 FILTER	0.0	32	31	-1
	5.0	251	251	0
4 EXIT	0.0	32	31	-1
	1.0	77	75	-2
5	0.0	32		
	1.0	77		
6 AUX	0.0	32	32	0
	2.0	121	120	-1
7	0.0	32		
	2.0	121		

[1] Difference is calculated as follows:

Difference = Observed - Theoretical

Acceptable difference is ±5 °F for temperatures below 1000 °F and ±10 °F for temperatures above 1000 °F

Are these met? (Y)/ N

Pre/Post Test Console Calibration Check

Console ID		URS-002
Calibrated by	Initials	WCT
	Date	4/15/18
Reviewed by	Initials	CS
	Date	

Orifice ID:	IX-48		IX-55		IX-63	
Orifice K':	0.3467		0.4564		0.5840	
Dry Gas Meter	Run #1a	Run #1b	Run #2a	Run #2b	Run #3a	Run #3b
Initial Reading, (ft^3)	10.871	16.438	22.000	28.100	34.220	42.038
Final Reading, (ft^3)	16.438	22.000	28.100	34.220	42.038	49.890
Difference, (ft^3)	5.567	5.562	6.100	6.120	7.818	7.852
Initial Meter Temp., (°F)	67	67	68	69	69	70
Final Meter Temp., (°F)	67	68	69	69	70	71
Average Meter Temp., (°F)	67.0	67.5	68.5	69.0	69.5	70.5
Test Time (min.)	12	12	10	10	10	10
Orifice Manometer Reading, ("H_2O)	0.67	0.67	1.10	1.10	1.85	1.85
Barometric Pressure, ("Hg)	28.83		28.83		28.83	
Ambient Temperature, (°F)	70		70		70	
Pump Vacuum, ("Hg)	20.5	20.5	19	19	17.5	17.5
Standard Volume of the Meter, (V_{mstd})	5.381	5.371	5.886	5.900	7.544	7.563
Standard Volume of Critical Orifice, (V_{crstd})	5.210	5.210	5.715	5.715	7.313	7.313
DGM Calibration Factor, (Y)	0.968	0.970	0.971	0.969	0.969	0.967
Delta H@	1.94	1.93	1.83	1.83	1.89	1.88

Average Y =	0.969
Reference Y_d =	0.971
Percent Difference =	-0.2
Is Measured Y within 5% of Reference Y_d?	TRUE
Average Delta H@ =	1.885

CDS-0451: *DGM 3 point cal check against orifice*
Per *EM SOP-003*
Issued: *August 2017*

S-Type Pitot Tube Inspection

Pitot ID	5-002
Caliper ID	HK23407
Caliper Calibration Expiration Date	

Calibrated by	Initials	CS
	Date	2/8/18
Reviewed by	Initials	WCT
	Date	3/11/18

General Pitot Tube Alignment

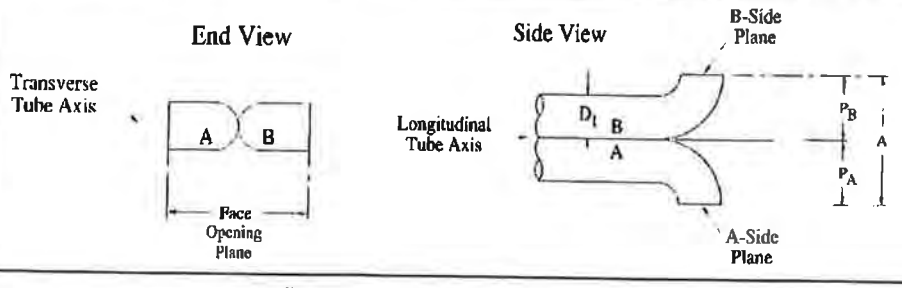

A = 0.870"

D_t = 0.375"

$0.188" \le D_t \le 0.375"$? Y (y/n)

$1.05 \le A/2D_t \le 1.50$? Y (y/n)

Misalignment

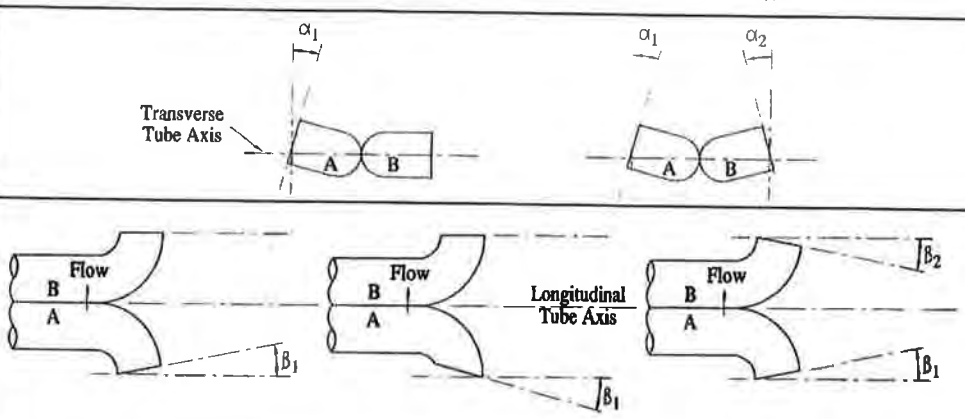

α_1 = 2° °

α_2 = 0.5 °

$\alpha_1 \le 10°$? Y (y/n)

$\alpha_2 \le 10°$? Y (y/n)

β_1 = 2°

β_2 = 1°

$\beta_1 \le 5°$? Y (y/n)

$\beta_2 \le 5°$? Y (y/n)

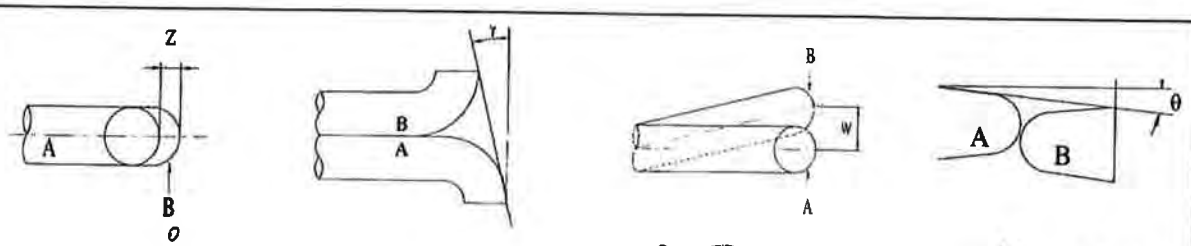

γ = 1° °

θ = 0 °

Z = A tan(γ) = 0.015

W = A tan(θ) = 0

$Z \le 0.125"$? Y (y/n)

$W \le 0.031"$? Y (y/n)

Acceptability for Use (Circle Selection)	If all answers are "Y", this pitot tube is available for use, and may be assigned a correction factor of 0.84	If all answers except the first (D_t) are "Y", this pitot tube is available for use, but needs to be calibrated using a wind tunnel.	Any other situation, the pitot tube must be removed from service.

CDS-15: Pitot Tube Inspection
Per: EM SOP-009
Revised: March 2016

Temperature Sensor Calibration

Readout ID Number	T-311348
Thermometer ID Number	2490
Thermometer Expiration Date	5/22/18
Sensor ID Number	5-002

Calibrated by	Initials	CS
	Date	2/9/18
Reviewed by	Initials	WCT
	Date	3/11/18

Thermometer Reading (°F)	Temperature Readout and Sensor Reading (°F)	Error
69	68.0	0.19%
212.0	211.0	0.15%

Error is calculated according to the following equation:

$$\text{Error} = \frac{T_{Sens} - T_{Ref}}{T_{Ref} + 460} \times 100\%$$

CDS-09: Temperature Sensor
Per: EM SOP-001
Revised: March 2016

Where

T_{sens} is the temperature reading from the sensor and
T_{ref} is the temperature reading from the reference thermometer

Acceptance criteria: Error is less than ±1.5%, absolute

Illinois Environmental Protection Agency
Division of Air Pollution Control
DAPC - ANNUAL EMISSIONS REPORT - 2017

119040ATN - Gateway Energy & Coke Co LLC

- SOURCE DATA -

SOURCE IDS AND LOCATION

AIRS:	17-119-0040	IEPA USE ONLY	SIC 1:	3312		NAICS 1:	324199
FINDS:		IEPA USE ONLY	SIC 2:			NAICS 2:	
FEIN:			SIC 3:			NAICS 3:	
D&B:	83-156-4401		SIC 4:			NAICS 4:	
LATITUDE:	38:41:45.1644		SIC 5:			NAICS 5:	
LONGITUDE:	90:07:54.5160		SIC 6:			NAICS 6:	

SOURCE ADDRESS

Gateway Energy & Coke Co LLC
2585 Edwardsville Rd
Granite City, IL 62040-6320

CONTACT: Chris DeCioccio
PHONE: 618-512-4918 EXT:
FAX:
ALT PHONE:
E-Mail: cmdecioccio@suncoke.com

ANNUAL EMISSION REPORT MAILING ADDRESS

SunCoke Engergy Inc
2585 Edwardsville Rd
Granite City, IL 62040-6320

CONTACT: Chris DeCioccio
PHONE: 618-512-4918 EXT:
FAX:
ALT PHONE:
E-MAIL: cmdecioccio@suncoke.com

Any person who knowingly makes a false, fictitious, or fraudulent material statement, orally or in writing, to the Illinois EPA commits a Class 4 felony. A second or subsequent offense after conviction is a Class 3 felony. (415 ILCS 5/44(h))

I certify under penalty of law that this document and all attachments were prepared under my direction or supervision in accordance with a system designed to assure that qualified personnel properly gather and evaluate the information submitted. Based on my inquiry of the person or persons directly responsible for gathering the information, the information submitted is, to the best of my knowledge and belief, true, accurate and complete.

_____ _____
AUTHORIZED SIGNATURE DATE

_____ _____
TYPED OR PRINTED NAME AND TITLE TELEPHONE NUMBER

The Illinois EPA is authorized to require, and you must disclose, the information on this form pursuant to 35 Ill. Adm. Code 201.302(a, b) and 254. It is not necessary to use this form in providing the information. Failure to disclose the information may result in penalties as provided for in the Environmental Protection Act, 415 ILCS 5/24-45.

119040ATN - Gateway Energy & Coke Co LLC

- ANNUAL SOURCE EMISSIONS -

POLLUTANT CODE	SOURCES REPORTED EMISSIONS FOR 2017 (TONS/YEAR)	EMISSIONS REPORTED FOR 2016 (TONS/YEAR)	IEPA 2017 ESTIMATED EMISSIONS (TONS/YEAR)
CO	19.086450	13.923767	13.983876
CO2	613608.641519	676,469.883992	672,480.157442
COG		14.009000	14.247072
H2SO4	46.037327	21.826971	22.879360
HCL	117.501819	81.141974	84.123648
LEAD	0.234540	0.126251	0.081261
MERCURY	0.021241	0.013731	0.013709
METHANE	0.000158	0.000597	
N2O	0.000016	0.005966	
NOX	382.807161	378.376252	377.302014
P	0.860283	0.605644	0.619026
PART	162.712987	140.318133	143.809177
PM10	93.369193	70.362291	69.046460
PM2.5	85.120097	61.364649	62.756540
SO2	1470.371348	1,190.736902	1,200.541330
VOM	3.582723	2.459405	2.517988

119040ATN - Gateway Energy & Coke Co LLC

- PERMIT LISTING -

PERMIT NUMBER	TYPE OF PERMIT	OPERATION NAME	STATUS	STATUS DATE	EXPIRES
06070020	CONSTRUCTION	Heat Recovery Coke Mfg	GRANTED	04-28-2010	
09090002	CONSTRUCTION	Temporary Boilers	GRANTED	09-08-2009	
10100041	CONSTRUCTION	Revised Lead Emissions and ACI Study			
10100044	TITLE V	Coke Mfg Facility			
11040012	CONSTRUCTION	Temp. Coal Dryer	GRANTED	04-15-2011	
15090012	CONSTRUCTION	Coke Trucking	GRANTED	03-08-2017	
15110013	CONSTRUCTION	Construction of Redundant HRSG	GRANTED	02-19-2016	

119040ATN - Gateway Energy & Coke Co LLC

- PROCESS DATA -

POINT 0001 - Coal handling

PERMIT:

BEGAN OPERATION: 10 / 2009 10/09

CEASED OPERATION: /

SCC: 30399999

MODE 01 -

DESCRIPTION CORRECTION:

PERCENT THROUGHPUTS: DEC - FEB: 24.10 %25.3 MAR - MAY: 25.00 %24.3
JUN - AUG: 25.30 %25.2 SEP - NOV: 25.60 %25.3

BEGAN OPERATION: / 10/09

CEASED OPERATION: /

UNITS: TONS PROCESSED

UNITS: TONS PROCESSED

ANNUAL OPERATION			PEAK OZONE SEASON OPERATION	
HOURS/DAY:	24.0	24.0	HOURS/DAY:	24
DAYS/WEEK:	7.0	7.0	DAYS/WEEK:	7
WEEKS/YEAR:	52	52	WEEKS/SEASON:	13
HOURS/YEAR:	8,760	8,760	HOURS/SEASON:	2,208
			START TIME:	0:00
PWR (LB/HR):	220,653.6000	221,966.75	END TIME:	23:59
			PWR (LB/HR):	221,505.63
RATE/HR:	110.3300	110.98	RATE/HR:	110.75

119040ATN - Gateway Energy & Coke Co LLC

- PROCESS DATA -

POINT 0001 - Coal handling

PERMIT:

BEGAN OPERATION: 10 / 2009

CEASED OPERATION: /

SCC: 30399999

MODE 01 -

POLLUTANT CODE	METHOD IEPA	METHOD REP	EMISSION FACTOR IEPA	EMISSION FACTOR REPORTED	EMISSION RATE (LB/HR) IEPA	EMISSION RATE (LB/HR) REPORTED
PART	3	3	3		1.04	.18 .20
PM10	3	3	3		.5	.08 .09
PM2.5	3	3	3		.5	.01 .01

POLLUTANT CODE	METHOD IEPA	METHOD REP	EMISSION FACTOR IEPA	EMISSION FACTOR REPORTED	OZONE SEASON EMISSION RATE (LB/HR) IEPA	OZONE SEASON EMISSION RATE (LB/HR) REPORTED

CAPTURING CONTROLS:

CAPTURING STACKS:

STACK 0001 CAPTURE EFFICIENCY: 100.00 % 100.00

119040ATN - Gateway Energy & Coke Co LLC

- PROCESS DATA -

POINT 0002 - Coke crushing and screening

PERMIT:

BEGAN OPERATION: 10 / 2009 10/09

CEASED OPERATION: /

SCC: 30300312

MODE 01 -

DESCRIPTION CORRECTION:

PERCENT THROUGHPUTS: DEC - FEB: 24.90 % 24.7 MAR - MAY: 25.10 %25.2
JUN - AUG: 25.10 %25.2 SEP - NOV: 24.90 %24.9

BEGAN OPERATION: / 10/09

CEASED OPERATION: /

UNITS: TONS PROCESSED

UNITS: TONS PROCESSED

ANNUAL OPERATION			PEAK OZONE SEASON OPERATION	
HOURS/DAY:	24.0	24.0	HOURS/DAY:	24
DAYS/WEEK:	7.0	7.0	DAYS/WEEK:	7
WEEKS/YEAR:	52	52	WEEKS/SEASON:	13
HOURS/YEAR:	8,760	8,760	HOURS/SEASON:	2,208
			START TIME:	0:00
			END TIME:	23:59
PWR (LB/HR):	142,623.4000	145,234.54	PWR (LB/HR):	147,295.19
RATE/HR:	71.3100	72.62	RATE/HR:	73.65

119040ATN - Gateway Energy & Coke Co LLC

- PROCESS DATA -

POINT 0002 - Coke crushing and screening

PERMIT:

BEGAN OPERATION: 10 / 2009 10/09

CEASED OPERATION: /

SCC: 30300312

MODE 01 -

POLLUTANT CODE	METHOD IEPA	METHOD REP		EMISSION FACTOR IEPA	EMISSION FACTOR REPORTED	EMISSION RATE (LB/HR) IEPA	EMISSION RATE (LB/HR) REPORTED	
PART	4	3	3			.39	.45	.45
PM10	4	3	3			.39	.42	.42
PM2.5	4	3	3			.39	.4	.39

POLLUTANT CODE	METHOD IEPA	METHOD REP	EMISSION FACTOR IEPA	EMISSION FACTOR REPORTED	OZONE SEASON EMISSION RATE (LB/HR) IEPA	OZONE SEASON EMISSION RATE (LB/HR) REPORTED

CAPTURING CONTROLS:

CONTROL 0001 CAPTURE EFFICIENCY: 100.00 % 100.00

CAPTURING STACKS:

119040ATN - Gateway Energy & Coke Co LLC

- PROCESS DATA -

POINT 0003 - Coke storage pile

PERMIT:

BEGAN OPERATION: 10 / 2009 10/09

CEASED OPERATION: /

SCC: 30300312

MODE 01 -

DESCRIPTION CORRECTION:

PERCENT THROUGHPUTS: DEC - FEB: 23.70 %24.6 MAR - MAY: 25.20 %24.0
JUN - AUG: 25.40 %25.6 SEP - NOV: 25.70 %25.8

BEGAN OPERATION: / 10/09

CEASED OPERATION: /

UNITS: TONS PROCESSED

UNITS: TONS PROCESSED

ANNUAL OPERATION			PEAK OZONE SEASON OPERATION	
HOURS/DAY:	24.0	24.0	HOURS/DAY:	24
DAYS/WEEK:	7.0	7.0	DAYS/WEEK:	7
WEEKS/YEAR:	52	52	WEEKS/SEASON:	13
HOURS/YEAR:	8,760	8,760	HOURS/SEASON:	2,208
			START TIME:	0:00
			END TIME:	23:59
PWR (LB/HR):	142,623.4000	145,234.54	PWR (LB/HR):	147,295.19
RATE/HR:	71.3100	72.62	RATE/HR:	73.65

119040ATN - Gateway Energy & Coke Co LLC

- PROCESS DATA -

POINT 0003 - Coke storage pile

PERMIT:

BEGAN OPERATION: 10 / 2009 10/09

CEASED OPERATION: /

SCC: 30300312

MODE 01 -

POLLUTANT CODE	METHOD IEPA	METHOD REP	EMISSION FACTOR IEPA	EMISSION FACTOR REPORTED	EMISSION RATE (LB/HR) IEPA	EMISSION RATE (LB/HR) REPORTED
PART	3	3			.04	.05 .05
PM10	3	3			.02	.02 .03
PM2.5	3	3			.02	0 0

POLLUTANT CODE	METHOD IEPA	METHOD REP	EMISSION FACTOR IEPA	EMISSION FACTOR REPORTED	OZONE SEASON EMISSION RATE (LB/HR) IEPA	OZONE SEASON EMISSION RATE (LB/HR) REPORTED

CAPTURING CONTROLS:

CAPTURING STACKS:

STACK 0003 CAPTURE EFFICIENCY: 100.00 % 100.00

119040ATN - Gateway Energy & Coke Co LLC

- PROCESS DATA -

POINT 0004 - Coke ovens: Charging

PERMIT:

BEGAN OPERATION: 10 / 2009 10/09

CEASED OPERATION: /

SCC: 30300302

MODE 01 -

DESCRIPTION CORRECTION:

PERCENT THROUGHPUTS: DEC - FEB: 24.10 %25.3 MAR - MAY: 25.00 %24.3
JUN - AUG: 25.30 %25.2 SEP - NOV: 25.60 %25.3

BEGAN OPERATION: / 10/09

CEASED OPERATION: /

UNITS: TONS PROCESSED

UNITS: TONS PROCESSED

ANNUAL OPERATION			PEAK OZONE SEASON OPERATION		
HOURS/DAY:	24.0	24.0	HOURS/DAY:	24.0	24
DAYS/WEEK:	7.0	7.0	DAYS/WEEK:	7.0	7
WEEKS/YEAR:	52	52	WEEKS/SEASON:	13	13
HOURS/YEAR:	8,760	8,760	HOURS/SEASON:	2,208	2,208
			START TIME:		0:00
			END TIME:		23:59
PWR (LB/HR):	220,653.6000	221,966.75	PWR (LB/HR):	221,866.3000	221,505.63
RATE/HR:	110.3300	110.98	RATE/HR:	110.9300	110.75

119040ATN - Gateway Energy & Coke Co LLC

- PROCESS DATA -

POINT 0004 - Coke ovens: Charging

PERMIT:

BEGAN OPERATION: 10 / 2009 10/09

CEASED OPERATION: /

SCC: 30300302

MODE 01 -

POLLUTANT CODE	METHOD IEPA	METHOD REP	EMISSION FACTOR IEPA	EMISSION FACTOR REPORTED	EMISSION RATE (LB/HR) IEPA	EMISSION RATE (LB/HR) REPORTED	
CO	1	1	1		.32	.3098	0.3108
CO2	3	3			.01	0	
COG	3	3			.66	.632	
LEAD	1	3	3		.000012	.00011	0.000011
PART	4	1	1		.13	.8251	0.8290
PM10	4	1	1		.13	.8251	0.8290
PM2.5	4	4	4		.13	.6597	0.6628
SO2	1	1	1		.035	.0332	0.0333
VOM	1	1	1		.23	.2213	0.2220

POLLUTANT CODE	METHOD IEPA	METHOD REP	EMISSION FACTOR IEPA	EMISSION FACTOR REPORTED	OZONE SEASON EMISSION RATE (LB/HR) IEPA	OZONE SEASON EMISSION RATE (LB/HR) REPORTED	
VOM	1	1	1		.22	.22	.22

CAPTURING CONTROLS:

CAPTURING STACKS:

STACK 0004 CAPTURE EFFICIENCY: 16.70 % 100

STACK 0022 CAPTURE EFFICIENCY: 16.70 %

119040ATN - Gateway Energy & Coke Co LLC

- PROCESS DATA -

POINT 0004 - Coke ovens: Charging

PERMIT:

BEGAN OPERATION: 10 / 2009 10/09

CEASED OPERATION: /

SCC: 30300302

MODE 01 -

CAPTURING STACKS:

STACK	0023	CAPTURE EFFICIENCY:	16.60	%
STACK	0024	CAPTURE EFFICIENCY:	16.70	%
STACK	0025	CAPTURE EFFICIENCY:	16.70	%
STACK	0026	CAPTURE EFFICIENCY:	16.60	%

119040ATN - Gateway Energy & Coke Co LLC

- PROCESS DATA -

POINT 0005 - Coke ovens: Coking

PERMIT:

BEGAN OPERATION: 10 / 2009 — 10/09

CEASED OPERATION: /

SCC: 30300314

MODE 01 -

DESCRIPTION CORRECTION:

PERCENT THROUGHPUTS: DEC - FEB: 24.90 %24.7 MAR - MAY: 25.10 %25.2
JUN - AUG: 25.10 % 25.2 SEP - NOV: 24.90 %24.9

BEGAN OPERATION: / 10/09

CEASED OPERATION: /

UNITS: TONS PROCESSED

UNITS: TONS PROCESSED

ANNUAL OPERATION			PEAK OZONE SEASON OPERATION		
HOURS/DAY:	24.0	24.0	HOURS/DAY:	24.0	24
DAYS/WEEK:	7.0	7.0	DAYS/WEEK:	7.0	7
WEEKS/YEAR:	52	52	WEEKS/SEASON:	13	13
HOURS/YEAR:	8,760	8,760	HOURS/SEASON:	2,208	2,208
			START TIME:		0:00
			END TIME:		23:59
PWR (LB/HR):	220,653.6000	221,966.75	PWR (LB/HR):	221,866.3000	221,505.63
RATE/HR:	110.3300	110.98	RATE/HR:	110.9300	110.75

119040ATN - Gateway Energy & Coke Co LLC

- PROCESS DATA -

POINT 0005 - Coke ovens: Coking

PERMIT:

BEGAN OPERATION: 10 / 2009 10/09

CEASED OPERATION: /

SCC: 30300314

MODE 01 -

POLLUTANT CODE	METHOD IEPA	METHOD REP	EMISSION FACTOR IEPA	EMISSION FACTOR REPORTED	EMISSION RATE (LB/HR) IEPA	EMISSION RATE (LB/HR) REPORTED	
CO	4	1	1		.73	.7278	0.7399
CO2	3	3	3		152186	152186	152,603
COC	3	3			.024	.0236	
H2SO4	4	1	1		.83	.8499	0.8662
HCL	2	1	1		10.97	10.8492	11.0973
LEAD	3	1	1		.00049	.00049	0.00050
MERCURY	1	1	1		.0026	.0024	0.0024
NOX	5	1	1		81.64	81.6368	83.0023
P	3	3	3		.08	.0759	0.0777
PART	4	1	1		10.84	10.8377	11.0190
PM10	4	1	1		7.4	7.3956	7.5193
PM2.5	4	1	1		6.49	6.4908	6.5994
SO2	2	1	1		213.53	213.5324	214.1174
VOM	4	1	1		.14	.1377	0.1400

POLLUTANT CODE	METHOD IEPA	METHOD REP	EMISSION FACTOR IEPA	EMISSION FACTOR REPORTED	OZONE SEASON EMISSION RATE (LB/HR) IEPA	OZONE SEASON EMISSION RATE (LB/HR) REPORTED	
NOX	1	1	1		81.6368	81.6368	83.0023
VOM	1	1	1		.1377	.1377	0.1400

119040ATN - Gateway Energy & Coke Co LLC

- PROCESS DATA -

POINT 0005 - Coke ovens: Coking

PERMIT:

BEGAN OPERATION: 10 / 2009 10/09

CEASED OPERATION: /

SCC: 30300314

MODE 01 -

CAPTURING CONTROLS:

CAPTURING STACKS:

STACK 0021 CAPTURE EFFICIENCY: 100.00 %

119040ATN - Gateway Energy & Coke Co LLC

- PROCESS DATA -

POINT 0006 - Coke ovens: Waste heat stacks

PERMIT:

BEGAN OPERATION: 10 / 2009 10/09

CEASED OPERATION: /

SCC: 30300314

MODE 01 -

DESCRIPTION CORRECTION:

PERCENT THROUGHPUTS: DEC - FEB: 21.50 %3.6 MAR - MAY: 29.60 %92.1
JUN - AUG: 33.90 %1.5 SEP - NOV: 15.00 %2.9

BEGAN OPERATION: / 10/09

CEASED OPERATION: /

UNITS: TONS PROCESSED

UNITS: TONS PROCESSED

ANNUAL OPERATION			PEAK OZONE SEASON OPERATION		
HOURS/DAY:	24.0	24.0	HOURS/DAY:	24.0	24
DAYS/WEEK:	7.0	7.0	DAYS/WEEK:	7.0	7
WEEKS/YEAR:	5	23	WEEKS/SEASON:	2	0
HOURS/YEAR:	872	3841	HOURS/SEASON:	316	0
			START TIME:		0:00
			END TIME:		23:59
PWR (LB/HR):	220,653.6000	221,966.75	PWR (LB/HR):	221,866.3000	221,505.63
RATE/HR:	1,111.1500	253.13	RATE/HR:	775.0900	490,556.09

119040ATN - Gateway Energy & Coke Co LLC

- PROCESS DATA -

POINT 0006 - Coke ovens: Waste heat stacks

PERMIT:

BEGAN OPERATION: 10 / 2009 10/09

CEASED OPERATION: /

SCC: 30300314

MODE 01 -

POLLUTANT CODE	METHOD IEPA	METHOD REP	EMISSION FACTOR IEPA	EMISSION FACTOR REPORTED	EMISSION RATE (LB/HR) IEPA	EMISSION RATE (LB/HR) REPORTED	
CO	4	1	1		4.36	4.36	4.3600
COG	3	3			.18	.24	
H2SO4	4	4	4		19.4	19.4	19.4
HCL	2	1	1		37.59	36.9102	33.2848
LEAD	3	1	1		.065	.086	.086
MERCURY	1	1	1		.003502	.0035	.0035
NOX	5	5	5		20.8	20.83	20.83
P	3	3	3		.23	.2584	0.2330
PART	4	1	1		20.15	20.15	20.15
PM10	4	1	1		20.15	20.15	20.15
PM2.5	4	1	1		20.15	20.15	20.15
SO2	2	1	1		267.94	267.94	267.9400
VOM	4	1	1		.9	.93	.93

POLLUTANT CODE	METHOD IEPA	METHOD REP	EMISSION FACTOR IEPA	EMISSION FACTOR REPORTED	OZONE SEASON EMISSION RATE (LB/HR) IEPA	OZONE SEASON EMISSION RATE (LB/HR) REPORTED	
NOX	5	5	5		20.83	20.83	20.83
VOM	1	1	1		.93	.93	.93

CAPTURING CONTROLS:

119040ATN - Gateway Energy & Coke Co LLC

- PROCESS DATA -

POINT 0006 - Coke ovens: Waste heat stacks

PERMIT:

BEGAN OPERATION: 10 / 2009 10/09

CEASED OPERATION: /

SCC: 30300314

MODE 01 -

CAPTURING STACKS:

STACK	0006	CAPTURE EFFICIENCY:	16.60	%	16.60
STACK	0011	CAPTURE EFFICIENCY:	16.70	%	16.70
STACK	0012	CAPTURE EFFICIENCY:	16.60	%	16.60
STACK	0013	CAPTURE EFFICIENCY:	16.70	%	16.70
STACK	0014	CAPTURE EFFICIENCY:	16.70	%	16.70
STACK	0015	CAPTURE EFFICIENCY:	16.70	%	16.70

119040ATN - Gateway Energy & Coke Co LLC

- PROCESS DATA -

POINT 0007 - Coke ovens: Pushing

PERMIT:

BEGAN OPERATION: 10 / 2009 10/09

CEASED OPERATION: /

SCC: 30300303

MODE 01 -

DESCRIPTION CORRECTION:

PERCENT THROUGHPUTS: DEC - FEB: 23.70 %24.6 MAR - MAY: 25.20 %24.0
JUN - AUG: 25.40 % 25.6 SEP - NOV: 25.70 %25.8

BEGAN OPERATION: / 10/09

CEASED OPERATION: /

UNITS: TONS PROCESSED

UNITS: TONS PROCESSED

ANNUAL OPERATION			PEAK OZONE SEASON OPERATION		
HOURS/DAY:	24.0	24.0	HOURS/DAY:	24.0	24.0
DAYS/WEEK:	7.0	7.0	DAYS/WEEK:	7.0	7.0
WEEKS/YEAR:	52	52	WEEKS/SEASON:	13	13
HOURS/YEAR:	8,760	8,760	HOURS/SEASON:	2,208	2,208
			START TIME:		00:00
PWR (LB/HR):	142,623.4000	145,234.54	END TIME:		23:59
			PWR (LB/HR):	144,170.3000	147,295.19
RATE/HR:	71.3100	72.62	RATE/HR:	72.0900	73.65

119040ATN - Gateway Energy & Coke Co LLC

- PROCESS DATA -

POINT 0007 - Coke ovens: Pushing

PERMIT:

BEGAN OPERATION: 10 / 2009 10/09

CEASED OPERATION: /

SCC: 30300303

MODE 01 -

POLLUTANT CODE	METHOD IEPA	METHOD REP	EMISSION FACTOR IEPA	EMISSION FACTOR REPORTED	EMISSION RATE (LB/HR) IEPA	EMISSION RATE (LB/HR) REPORTED	
CO	3	1	1		1.19	1.1853	1.2037
CO2	3	3	3		1770.07	1770.065	1,775.7340
COG	3	3			1.28	1.282	
H2SO4	4	4	4		.13	.1122	0.1140
LEAD	1	1	1		.001	.0009	.0009
NOX	3	1	1		.15	.1511	0.1534
PART	4	1	1		1.43	1.4301	1.4523
PM10	4	1	1		1.43	1.4301	1.4523
PM2.5	3	4	4		1.43	1.4301	1.4523
SO2	3	1	1		2.2	2.2002	2.2344
VOM	4	1	1		.006	.0062	.0063

POLLUTANT CODE	METHOD IEPA	METHOD REP	EMISSION FACTOR IEPA	EMISSION FACTOR REPORTED	OZONE SEASON EMISSION RATE (LB/HR) IEPA	OZONE SEASON EMISSION RATE (LB/HR) REPORTED	
NOX	1	1	1		.1511	.1511	0.1534
VOM	1	1	1		.0062	.0062	0.0063

CAPTURING CONTROLS:

CAPTURING STACKS:

119040ATN - Gateway Energy & Coke Co LLC

- PROCESS DATA -

POINT 0007 - Coke ovens: Pushing

PERMIT:

BEGAN OPERATION: 10 / 2009 10/09

CEASED OPERATION: /

SCC: 30300303

MODE 01 -

CAPTURING STACKS:

STACK	0007	CAPTURE EFFICIENCY:	16.60	%
STACK	0016	CAPTURE EFFICIENCY:	16.70	%
STACK	0017	CAPTURE EFFICIENCY:	16.70	%
STACK	0018	CAPTURE EFFICIENCY:	16.60	%
STACK	0019	CAPTURE EFFICIENCY:	16.70	%
STACK	0020	CAPTURE EFFICIENCY:	16.70	%

119040ATN - Gateway Energy & Coke Co LLC

- PROCESS DATA -

POINT 0008 - Coke ovens: Quenching

PERMIT:

BEGAN OPERATION: 10 / 2009 10/09

CEASED OPERATION: /

SCC: 30300304

MODE 01 -

DESCRIPTION CORRECTION:

PERCENT THROUGHPUTS: DEC - FEB: 24.10 % 25.3 MAR - MAY: 25.00 % 24.3
JUN - AUG: 25.30 % 25.2 SEP - NOV: 25.60 % 25.3

BEGAN OPERATION: / 10/09

CEASED OPERATION: /

UNITS: TONS PROCESSED

UNITS: TONS PROCESSED

ANNUAL OPERATION			PEAK OZONE SEASON OPERATION	
HOURS/DAY:	24.0	24.0	HOURS/DAY:	24.0
DAYS/WEEK:	7.0	7.0	DAYS/WEEK:	7.0
WEEKS/YEAR:	52	52	WEEKS/SEASON:	52
HOURS/YEAR:	8,760	8,760	HOURS/SEASON:	8,760
			START TIME:	00:00
PWR (LB/HR):	220,653.6000	221,966.75	END TIME:	23:59
			PWR (LB/HR):	221,505.63
RATE/HR:	110.3300	110.98	RATE/HR:	110.75

119040ATN - Gateway Energy & Coke Co LLC

- PROCESS DATA -

POINT 0008 - Coke ovens: Quenching

PERMIT:

BEGAN OPERATION: 10 / 2009 10/09

CEASED OPERATION: /

SCC: 30300304

MODE 01 -

POLLUTANT CODE	METHOD IEPA	METHOD REP	EMISSION FACTOR IEPA	EMISSION FACTOR REPORTED	EMISSION RATE (LB/HR) IEPA	EMISSION RATE (LB/HR) REPORTED	
COG	3	3			1.27	1.237	
LEAD	4	1	1		.0011	.0096	.0096
P	1	1	1		.009	.0086	.0086
PART	4	3	3		13.97	13.3817	13.4245
PM10	4	3	3		1.37	1.3114	1.3156
PM2.5	4	3	3		.84	.8029	0.8055

POLLUTANT CODE	METHOD IEPA	METHOD REP	EMISSION FACTOR IEPA	EMISSION FACTOR REPORTED	OZONE SEASON EMISSION RATE (LB/HR) IEPA	OZONE SEASON EMISSION RATE (LB/HR) REPORTED

CAPTURING CONTROLS:

CAPTURING STACKS:

STACK 0008 CAPTURE EFFICIENCY: 100.00 %____100_____

119040ATN - Gateway Energy & Coke Co LLC

- PROCESS DATA -

POINT 0011 - Malfunctions

PERMIT:

BEGAN OPERATION: 10 / 2009 10/09

CEASED OPERATION: /

SCC: 30300314

MODE 01 -

DESCRIPTION CORRECTION:

PERCENT THROUGHPUTS: DEC - FEB: 41.50 %27.0 MAR - MAY: 18.40 % 12.2
JUN - AUG: 18.60 % 43.3 SEP - NOV: 21.50 %17.5

BEGAN OPERATION: / 10/09

CEASED OPERATION: /

UNITS: TONS PROCESSED

UNITS: TONS PROCESSED

ANNUAL OPERATION			PEAK OZONE SEASON OPERATION		
HOURS/DAY:	2.6	1.35	HOURS/DAY:	1.9	2.3
DAYS/WEEK:	7.0	7.0	DAYS/WEEK:	7.0	7.0
WEEKS/YEAR:	52	52	WEEKS/SEASON:	13	13
HOURS/YEAR:	943	491	HOURS/SEASON:	175	213
			START TIME:		
PWR (LB/HR):	0.0000		END TIME:		
			PWR (LB/HR):	0.0000	
RATE/HR:	0.0000		RATE/HR:	0.0000	

119040ATN - Gateway Energy & Coke Co LLC

- PROCESS DATA -

POINT 0011 - Malfunctions

PERMIT:

BEGAN OPERATION: 10 / 2009 10/09

CEASED OPERATION: /

SCC: 30300314

MODE 01 -

POLLUTANT CODE	METHOD IEPA	METHOD REP	EMISSION FACTOR IEPA	EMISSION FACTOR REPORTED	EMISSION RATE (LB/HR) IEPA	EMISSION RATE (LB/HR) REPORTED	
CO	4	4	4		4.36	4.36	4.36
H2SO4	4	4	4		19.4	19.4	19.4
HCL	4	4	4		37.59	36.91	37.17
LEAD	4	4	4		.09	.09	.09
NOX	4	4	4		20.83	20.83	20.83
P	4	4	4		.26	.26	.26
PART	4	4	4		20.15	20.15	20.15
PM10	4	4	4		20.15	20.15	20.15
PM2.5	4	4	4		20.15	20.15	20.15
SO2	4	4	4		267.94	267.94	267.94
VOM	4	4	4		.93	.93	.93

POLLUTANT CODE	METHOD IEPA	METHOD REP	EMISSION FACTOR IEPA	EMISSION FACTOR REPORTED	OZONE SEASON EMISSION RATE (LB/HR) IEPA	OZONE SEASON EMISSION RATE (LB/HR) REPORTED	
NOX	4	4	4		20.83	20.83	20.83
VOM	4	4	4		.93	.93	.93

CAPTURING CONTROLS:

CAPTURING STACKS:

119040ATN - Gateway Energy & Coke Co LLC

- PROCESS DATA -

POINT 0011 - Malfunctions

PERMIT:

BEGAN OPERATION: 10 / 2009 10/09

CEASED OPERATION: /

SCC: 30300314

MODE 01 -

CAPTURING STACKS:

STACK 0027 CAPTURE EFFICIENCY: 100.00 % 100

119040ATN - Gateway Energy & Coke Co LLC

- PROCESS DATA -

POINT 0012 - Truck loading station

PERMIT:

BEGAN OPERATION: 02 / 2016 Not constructed

CEASED OPERATION: /

SCC: 30300312

MODE 01 -

DESCRIPTION CORRECTION:

PERCENT THROUGHPUTS: DEC - FEB: 25.00 MAR - MAY: 25.00

BEGAN OPERATION: / JUN - AUG: 25.00 SEP - NOV: 25.00

CEASED OPERATION: /

UNITS: TONS PROCESSED

UNITS: TONS PROCESSED

ANNUAL OPERATION			PEAK OZONE SEASON OPERATION	
HOURS/DAY:	0.0	24.0	HOURS/DAY:	
DAYS/WEEK:	0.0	7.0	DAYS/WEEK:	
WEEKS/YEAR:	0	52	WEEKS/SEASON:	
HOURS/YEAR:	0	8,760	HOURS/SEASON:	
			START TIME:	
PWR (LB/HR):	0.0000	220,653.6000	END TIME:	
RATE/HR:	0.0000	110.3300	PWR (LB/HR):	
			RATE/HR:	

119040ATN - Gateway Energy & Coke Co LLC

- PROCESS DATA -

POINT 0012 - Truck loading station PERMIT:

BEGAN OPERATION: 02 / 2016 Not constructed

CEASED OPERATION: /

SCC: 30300312

MODE 01 -

POLLUTANT CODE	METHOD IEPA	METHOD REP	EMISSION FACTOR IEPA	EMISSION FACTOR REPORTED	EMISSION RATE (LB/HR) IEPA	EMISSION RATE (LB/HR) REPORTED
PART	2	3			.114	0
PM10	2	3			.055	0
PM2.5	2	3			.055	0

POLLUTANT CODE	METHOD IEPA	METHOD REP	EMISSION FACTOR IEPA	EMISSION FACTOR REPORTED	OZONE SEASON EMISSION RATE (LB/HR) IEPA	OZONE SEASON EMISSION RATE (LB/HR) REPORTED

CAPTURING CONTROLS:

CONTROL 0002 CAPTURE EFFICIENCY: 100.00 %

CAPTURING STACKS:

119040ATN - Gateway Energy & Coke Co LLC

- OTHER SOURCE DATA -

POINT 0009 - Fugitive emissions: Roads

PERMIT:

BEGAN OPERATION: 10 / 2009 10/09

CEASED OPERATION: /

SCC: 30388801

MODE 01 -

DESCRIPTION CORRECTION:

PERCENT THROUGHPUTS: DEC - FEB: 24.80 %24.7 MAR - MAY: 25.10 %_25.2
JUN - AUG: 25.00 %25.2 SEP - NOV: 25.10 %24.9

BEGAN OPERATION: / 10/09

CEASED OPERATION: /

UNITS: VEHICLE-MILES

ANNUAL OPERATION			PEAK OZONE SEASON OPERATION	
HOURS/DAY:	24.0	24	HOURS/DAY:	24
DAYS/WEEK:	7.0	7	DAYS/WEEK:	7
WEEKS/YEAR:	52	52	WEEKS/SEASON:	13
HOURS/YEAR:	8,706	8,784	HOURS/SEASON:	2,208
			START TIME:	0:00
			END TIME:	23:59
RATE/HR:	9.8700	9.99	RATE/HR:	10.0

UNITS: VEHICLE-MILES

119040ATN - Gateway Energy & Coke Co LLC

- OTHER SOURCE DATA -

POINT 0009 - Fugitive emissions: Roads PERMIT:

BEGAN OPERATION: 10 / 2009 10/09

CEASED OPERATION: /

SCC: 30388801

MODE 01 -

POLLUTANT CODE	METHOD IEPA	METHOD REP	EMISSION FACTOR IEPA	EMISSION FACTOR REPORTED	EMISSION RATE (LB/HR) IEPA	EMISSION RATE (LB/HR) REPORTED
PART	4	3	3		.64	.37 0.39
PM10	4	3	3		.124	.07 0.08
PM2.5	4	3	3		.124	.02 0.02

POLLUTANT CODE	METHOD IEPA	METHOD REP	EMISSION FACTOR IEPA	EMISSION FACTOR REPORTED	OZONE SEASON EMISSION RATE (LB/HR) IEPA	OZONE SEASON EMISSION RATE (LB/HR) REPORTED

CAPTURING CONTROLS:

CAPTURING STACKS:

STACK 0009 CAPTURE EFFICIENCY: 100.00 % 100

119040ATN - Gateway Energy & Coke Co LLC

- CONTROL DEVICE DATA -

CONTROL 0001 - Coke crushing/screening baghouse

PERMIT:

BEGAN OPERATION: / 10/09

CEASED OPERATION: /

CONTROL CODE: 127

DESCRIPTION CORRECTION:

REMOVAL EFFICIENCY

POLLUTANT	ANNUAL OPERATION EFFICIENCY IEPA	ANNUAL OPERATION EFFICIENCY REPORTED	ANNUAL OPERATION METHOD IEPA	ANNUAL OPERATION METHOD REPORTED	PEAK OZONE SEASON OPERATION EFFICIENCY IEPA	PEAK OZONE SEASON OPERATION EFFICIENCY REPORTED	PEAK OZONE SEASON OPERATION METHOD IEPA	PEAK OZONE SEASON OPERATION METHOD REPORTED
PART	99.000	99.0				99.0		
PM10	99.000	99.0				99.0		

CAPTURING CONTROLS:

CAPTURING STACKS:

STACK 0002 CAPTURE EFFICIENCY: 100.00 % 100

119040ATN - Gateway Energy & Coke Co LLC

- CONTROL DEVICE DATA -

CONTROL 0002 - Water Spray: Truck Loadout Station: Coke Handling PERMIT:

BEGAN OPERATION: 02 / 2016 Not constructed
CEASED OPERATION: /

CONTROL CODE: 086

DESCRIPTION CORRECTION:

REMOVAL EFFICIENCY

POLLUTANT	ANNUAL OPERATION EFFICIENCY IEPA	ANNUAL OPERATION EFFICIENCY REPORTED	ANNUAL OPERATION METHOD IEPA	ANNUAL OPERATION METHOD REPORTED	PEAK OZONE SEASON OPERATION EFFICIENCY IEPA	PEAK OZONE SEASON OPERATION EFFICIENCY REPORTED	PEAK OZONE SEASON OPERATION METHOD IEPA	PEAK OZONE SEASON OPERATION METHOD REPORTED
PART	90.000							
PM10	90.000							
VOM	90.000							

CAPTURING CONTROLS:

CAPTURING STACKS:

STACK 0028 CAPTURE EFFICIENCY: 100.00 %

119040ATN - Gateway Energy & Coke Co LLC

- STACK DATA -

STACK	DIAMETER (FT)	HEIGHT (FT)	FLOW RATE (ACFM)	TEMPERATURE (F)
0001 - Coal handling	2.08 2.08	47 47	6060 6060	119 119
0002 - Coke crushing/screening	4.20 4.20	20 20	50000 50000	80 80
0003 - Coke storage pile	2.06 2.06	64 64	4680 4680	118 118
0004 - Charging - Stack 1 of 6	4.50 4.50	26 26	65000 65000	300 300
0006 - Waste heat stack 1	9.00 9.00	85 85	285000 285000	2000 2000
0007 - Pushing - Stack 1 of 6	5.00 5.00	20 20	82000 82000	400 400
0008 - Quenching	13.00 13.00	78 78	700000 700000	200 200
0009 - Roads		1 1	2 2	69 69
0011 - Waste heat stack 2	9.00 9.00	85 85	285000 285000	2000 2000
0012 - Waste heat stack 3	9.00 9.00	85 85	285000 285000	2000 2000

119040ATN - Gateway Energy & Coke Co LLC

- STACK DATA -

STACK	DIAMETER (FT)	HEIGHT (FT)	FLOW RATE (ACFM)	TEMPERATURE (F)
0013 - Waste heat stack 4	9.00 9.00	85 85	285000 285000	2000 2000
0014 - Waste heat stack 5	9.00 9.00	85 85	285000 285000	2000 2000
0015 - Waste heat stack 6	9.00 9.00	85 85	285000 285000	2000 2000
0016 - Pushing - Stack 2 of 6	5.00 5.00	20 20	82000 82000	400 400
0017 - Pushing - Stack 3 of 6	5.00 5.00	20 20	82000 82000	400 400
0018 - Pushing - Stack 4 of 6	5.00 5.00	20 20	82000 82000	400 400
0019 - Pushing - Stack 5 of 6	5.00 5.00	20 20	82000 82000	400 400
0020 - Pushing - Stack 6 of 6	5.00 5.00	20 20	82000 82000	400 400
0021 - Coking (New Main Stack)	13.00 13.00	200 200	309279 309279	272 272
0022 - Charging - Stack 2 of 6	4.50 4.50	26 26	65000 65000	300 300

119040ATN - Gateway Energy & Coke Co LLC

- STACK DATA -

STACK	DIAMETER (FT)		HEIGHT (FT)		FLOW RATE (ACFM)		TEMPERATURE (F)	
0023 - Charging - Stack 3 of 6								
	4.50	4.50	26	26	65000	65000	300	300
0024 - Charging - Stack 4 of 6								
	4.50	4.50	26	26	65000	65000	300	300
0025 - Charging - Stack 5 of 6								
	4.50	4.50	26	26	65000	65000	300	300
0026 - Charging - Stack 6 of 6								
	4.50	4.50	26	26	65000	65000	300	300
0027 - Malfunctions								
	4.36	4.50	113	113	8700	8700	166	166
0028 - Truck Loadout Station: Coke Handling								
	2.06		64		4680		118	

Illinois Environmental Protection Agency
Division of Air Pollution Control
DAPC - ANNUAL EMISSIONS REPORT - 2017

119040ATN - Gateway Energy & Coke Co LLC

- SOURCE DATA -

SOURCE IDS AND LOCATION

AIRS:	17-119-0040	IEPA USE ONLY	SIC 1:	3312		NAICS 1:	324199
FINDS:		IEPA USE ONLY	SIC 2:			NAICS 2:	
FEIN:			SIC 3:			NAICS 3:	
D&B:	83-156-4401		SIC 4:			NAICS 4:	
LATITUDE:	38:41:45.1644		SIC 5:			NAICS 5:	
LONGITUDE:	90:07:54.5160		SIC 6:			NAICS 6:	

SOURCE ADDRESS

Gateway Energy & Coke Co LLC
2585 Edwardsville Rd
Granite City, IL 62040-6320

CONTACT: Chris DeCioccio
PHONE: 618-512-4918 EXT:
FAX:
ALT PHONE:
E-Mail: cmdecioccio@suncoke.com

ANNUAL EMISSION REPORT MAILING ADDRESS

SunCoke Engergy Inc
2585 Edwardsville Rd
Granite City, IL 62040-6320

CONTACT: Chris DeCioccio
PHONE: 618-512-4918 EXT:
FAX:
ALT PHONE:
E-MAIL: cmdecioccio@suncoke.com

Any person who knowingly makes a false, fictitious, or fraudulent material statement, orally or in writing, to the Illinois EPA commits a Class 4 felony. A second or subsequent offense after conviction is a Class 3 felony. (415 ILCS 5/44(h))

I certify under penalty of law that this document and all attachments were prepared under my direction or supervision in accordance with a system designed to assure that qualified personnel properly gather and evaluate the information submitted. Based on my inquiry of the person or persons directly responsible for gathering the information, the information submitted is, to the best of my knowledge and belief, true, accurate and complete.

_____ _____
AUTHORIZED SIGNATURE DATE

_____ _____
TYPED OR PRINTED NAME AND TITLE TELEPHONE NUMBER

The Illinois EPA is authorized to require, and you must disclose, the information on this form pursuant to 35 Ill. Adm. Code 201.302(a, b) and 254. It is not necessary to use this form in providing the information. Failure to disclose the information may result in penalties as provided for in the Environmental Protection Act, 415 ILCS 5/24-45.

119040ATN - Gateway Energy & Coke Co LLC

- ANNUAL SOURCE EMISSIONS -

POLLUTANT CODE	SOURCES REPORTED EMISSIONS FOR 2017 (TONS/YEAR)	EMISSIONS REPORTED FOR 2016 (TONS/YEAR)	IEPA 2017 ESTIMATED EMISSIONS (TONS/YEAR)
CO	19.086450	13.923767	13.983876
CO2	613608.641519	676,469.883992	672,480.157442
COG		14.009000	14.247072
H2SO4	46.037327	21.826971	22.879360
HCL	117.501819	81.141974	84.123648
LEAD	0.234540	0.126251	0.081261
MERCURY	0.021241	0.013731	0.013709
METHANE	0.000158	0.000597	
N2O	0.000016	0.005966	
NOX	382.807161	378.376252	377.302014
P	0.860283	0.605644	0.619026
PART	162.712987	140.318133	143.809177
PM10	93.369193	70.362291	69.046460
PM2.5	85.120097	61.364649	62.756540
SO2	1470.371348	1,190.736902	1,200.541330
VOM	3.582723	2.459405	2.517988

119040ATN - Gateway Energy & Coke Co LLC

- PERMIT LISTING -

PERMIT NUMBER	TYPE OF PERMIT	OPERATION NAME	STATUS	STATUS DATE	EXPIRES
06070020	CONSTRUCTION	Heat Recovery Coke Mfg	GRANTED	04-28-2010	
09090002	CONSTRUCTION	Temporary Boilers	GRANTED	09-08-2009	
10100041	CONSTRUCTION	Revised Lead Emissions and ACI Study			
10100044	TITLE V	Coke Mfg Facility			
11040012	CONSTRUCTION	Temp. Coal Dryer	GRANTED	04-15-2011	
15090012	CONSTRUCTION	Coke Trucking	GRANTED	03-08-2017	
15110013	CONSTRUCTION	Construction of Redundant HRSG	GRANTED	02-19-2016	

119040ATN - Gateway Energy & Coke Co LLC

- PROCESS DATA -

POINT 0001 - Coal handling

PERMIT:

BEGAN OPERATION: 10 / 2009 10/09

CEASED OPERATION: /

SCC: 30399999

MODE 01 -

DESCRIPTION CORRECTION:

PERCENT THROUGHPUTS: DEC - FEB: 24.10 %25.3 MAR - MAY: 25.00 %24.3
JUN - AUG: 25.30 %25.2 SEP - NOV: 25.60 %25.3

BEGAN OPERATION: / 10/09

CEASED OPERATION: /

UNITS: TONS PROCESSED

UNITS: TONS PROCESSED

ANNUAL OPERATION			PEAK OZONE SEASON OPERATION	
HOURS/DAY:	24.0	24.0	HOURS/DAY:	24
DAYS/WEEK:	7.0	7.0	DAYS/WEEK:	7
WEEKS/YEAR:	52	52	WEEKS/SEASON:	13
HOURS/YEAR:	8,760	8,760	HOURS/SEASON:	2,208
			START TIME:	0:00
PWR (LB/HR):	220,653.6000	221,966.75	END TIME:	23:59
			PWR (LB/HR):	221,505.63
RATE/HR:	110.3300	110.98	RATE/HR:	110.75

119040ATN - Gateway Energy & Coke Co LLC

- PROCESS DATA -

POINT 0001 - Coal handling

PERMIT:

BEGAN OPERATION: 10 / 2009

CEASED OPERATION: /

SCC: 30399999

MODE 01 -

POLLUTANT CODE	METHOD IEPA	METHOD REP	EMISSION FACTOR IEPA	EMISSION FACTOR REPORTED	EMISSION RATE (LB/HR) IEPA	EMISSION RATE (LB/HR) REPORTED
PART	3	3	3		1.04	.18 .20
PM10	3	3	3		.5	.08 .09
PM2.5	3	3	3		.5	.01 .01

POLLUTANT CODE	METHOD IEPA	METHOD REP	EMISSION FACTOR IEPA	EMISSION FACTOR REPORTED	OZONE SEASON EMISSION RATE (LB/HR) IEPA	OZONE SEASON EMISSION RATE (LB/HR) REPORTED

CAPTURING CONTROLS:

CAPTURING STACKS:

STACK 0001 CAPTURE EFFICIENCY: 100.00 % 100.00

119040ATN - Gateway Energy & Coke Co LLC

- PROCESS DATA -

POINT 0002 - Coke crushing and screening

PERMIT:

BEGAN OPERATION: 10 / 2009 10/09

CEASED OPERATION: /

SCC: 30300312

MODE 01 -

DESCRIPTION CORRECTION:

PERCENT THROUGHPUTS: DEC - FEB: 24.90 % 24.7 MAR - MAY: 25.10 %25.2
JUN - AUG: 25.10 %25.2 SEP - NOV: 24.90 %24.9

BEGAN OPERATION: / 10/09

CEASED OPERATION: /

UNITS: TONS PROCESSED

UNITS: TONS PROCESSED

ANNUAL OPERATION			PEAK OZONE SEASON OPERATION	
HOURS/DAY:	24.0	24.0	HOURS/DAY:	24
DAYS/WEEK:	7.0	7.0	DAYS/WEEK:	7
WEEKS/YEAR:	52	52	WEEKS/SEASON:	13
HOURS/YEAR:	8,760	8,760	HOURS/SEASON:	2,208
			START TIME:	0:00
			END TIME:	23:59
PWR (LB/HR):	142,623.4000	145,234.54	PWR (LB/HR):	147,295.19
RATE/HR:	71.3100	72.62	RATE/HR:	73.65

119040ATN - Gateway Energy & Coke Co LLC

- PROCESS DATA -

POINT 0002 - Coke crushing and screening

PERMIT:

BEGAN OPERATION: 10 / 2009 10/09

CEASED OPERATION: /

SCC: 30300312

MODE 01 -

POLLUTANT CODE	METHOD IEPA	METHOD REP		EMISSION FACTOR IEPA	EMISSION FACTOR REPORTED	EMISSION RATE (LB/HR) IEPA	EMISSION RATE (LB/HR) REPORTED	
PART	4	3	3			.39	.45	.45
PM10	4	3	3			.39	.42	.42
PM2.5	4	3	3			.39	.4	.39

POLLUTANT CODE	METHOD IEPA	METHOD REP	EMISSION FACTOR IEPA	EMISSION FACTOR REPORTED	OZONE SEASON EMISSION RATE (LB/HR) IEPA	OZONE SEASON EMISSION RATE (LB/HR) REPORTED

CAPTURING CONTROLS:

CONTROL 0001 CAPTURE EFFICIENCY: 100.00 % 100.00

CAPTURING STACKS:

119040ATN - Gateway Energy & Coke Co LLC

- PROCESS DATA -

POINT 0003 - Coke storage pile

PERMIT:

BEGAN OPERATION: 10 / 2009 10/09

CEASED OPERATION: /

SCC: 30300312

MODE 01 -

DESCRIPTION CORRECTION:

PERCENT THROUGHPUTS: DEC - FEB: 23.70 %24.6 MAR - MAY: 25.20 %24.0
JUN - AUG: 25.40 %25.6 SEP - NOV: 25.70 %25.8

BEGAN OPERATION: / 10/09

CEASED OPERATION: /

UNITS: TONS PROCESSED

UNITS: TONS PROCESSED

ANNUAL OPERATION			PEAK OZONE SEASON OPERATION	
HOURS/DAY:	24.0	24.0	HOURS/DAY:	24
DAYS/WEEK:	7.0	7.0	DAYS/WEEK:	7
WEEKS/YEAR:	52	52	WEEKS/SEASON:	13
HOURS/YEAR:	8,760	8,760	HOURS/SEASON:	2,208
			START TIME:	0:00
			END TIME:	23:59
PWR (LB/HR):	142,623.4000	145,234.54	PWR (LB/HR):	147,295.19
RATE/HR:	71.3100	72.62	RATE/HR:	73.65

119040ATN - Gateway Energy & Coke Co LLC

- PROCESS DATA -

POINT 0003 - Coke storage pile

PERMIT:

BEGAN OPERATION: 10 / 2009 10/09

CEASED OPERATION: /

SCC: 30300312

MODE 01 -

POLLUTANT CODE	METHOD IEPA	METHOD REP	EMISSION FACTOR IEPA	EMISSION FACTOR REPORTED	EMISSION RATE (LB/HR) IEPA	EMISSION RATE (LB/HR) REPORTED
PART	3	3			.04	.05 .05
PM10	3	3			.02	.02 .03
PM2.5	3	3			.02	0 0

POLLUTANT CODE	METHOD IEPA	METHOD REP	EMISSION FACTOR IEPA	EMISSION FACTOR REPORTED	OZONE SEASON EMISSION RATE (LB/HR) IEPA	OZONE SEASON EMISSION RATE (LB/HR) REPORTED

CAPTURING CONTROLS:

CAPTURING STACKS:

STACK 0003 CAPTURE EFFICIENCY: 100.00 % 100.00

119040ATN - Gateway Energy & Coke Co LLC

- PROCESS DATA -

POINT 0004 - Coke ovens: Charging

PERMIT:

BEGAN OPERATION: 10 / 2009 10/09

CEASED OPERATION: /

SCC: 30300302

MODE 01 -

DESCRIPTION CORRECTION:

PERCENT THROUGHPUTS: DEC - FEB: 24.10 %25.3 MAR - MAY: 25.00 %24.3
JUN - AUG: 25.30 %25.2 SEP - NOV: 25.60 %25.3

BEGAN OPERATION: / 10/09

CEASED OPERATION: /

UNITS: TONS PROCESSED

UNITS: TONS PROCESSED

ANNUAL OPERATION			PEAK OZONE SEASON OPERATION		
HOURS/DAY:	24.0	24.0	HOURS/DAY:	24.0	24
DAYS/WEEK:	7.0	7.0	DAYS/WEEK:	7.0	7
WEEKS/YEAR:	52	52	WEEKS/SEASON:	13	13
HOURS/YEAR:	8,760	8,760	HOURS/SEASON:	2,208	2,208
			START TIME:		0:00
			END TIME:		23:59
PWR (LB/HR):	220,653.6000	221,966.75	PWR (LB/HR):	221,866.3000	221,505.63
RATE/HR:	110.3300	110.98	RATE/HR:	110.9300	110.75

119040ATN - Gateway Energy & Coke Co LLC

- PROCESS DATA -

POINT 0004 - Coke ovens: Charging

PERMIT:

BEGAN OPERATION: 10 / 2009 10/09

CEASED OPERATION: /

SCC: 30300302

MODE 01 -

POLLUTANT CODE	METHOD IEPA	METHOD REP	EMISSION FACTOR IEPA	EMISSION FACTOR REPORTED	EMISSION RATE (LB/HR) IEPA	EMISSION RATE (LB/HR) REPORTED	
CO	1	1	1		.32	.3098	0.3108
CO2	3	3			.01	0	
COG	3	3			.66	.632	
LEAD	1	3	3		.000012	.00011	0.000011
PART	4	1	1		.13	.8251	0.8290
PM10	4	1	1		.13	.8251	0.8290
PM2.5	4	4	4		.13	.6597	0.6628
SO2	1	1	1		.035	.0332	0.0333
VOM	1	1	1		.23	.2213	0.2220

POLLUTANT CODE	METHOD IEPA	METHOD REP	EMISSION FACTOR IEPA	EMISSION FACTOR REPORTED	OZONE SEASON EMISSION RATE (LB/HR) IEPA	OZONE SEASON EMISSION RATE (LB/HR) REPORTED	
VOM	1	1	1		.22	.22	.22

CAPTURING CONTROLS:

CAPTURING STACKS:

STACK 0004 CAPTURE EFFICIENCY: 16.70 % 100

STACK 0022 CAPTURE EFFICIENCY: 16.70 %

119040ATN - Gateway Energy & Coke Co LLC

- PROCESS DATA -

POINT 0004 - Coke ovens: Charging

PERMIT:

BEGAN OPERATION: 10 / 2009 10/09

CEASED OPERATION: /

SCC: 30300302

MODE 01 -

CAPTURING STACKS:

STACK	0023	CAPTURE EFFICIENCY:	16.60	%
STACK	0024	CAPTURE EFFICIENCY:	16.70	%
STACK	0025	CAPTURE EFFICIENCY:	16.70	%
STACK	0026	CAPTURE EFFICIENCY:	16.60	%

119040ATN - Gateway Energy & Coke Co LLC

- PROCESS DATA -

POINT 0005 - Coke ovens: Coking

PERMIT:

BEGAN OPERATION: 10 / 2009 — 10/09

CEASED OPERATION: /

SCC: 30300314

MODE 01 -

DESCRIPTION CORRECTION:

PERCENT THROUGHPUTS: DEC - FEB: 24.90 %24.7 MAR - MAY: 25.10 %25.2
JUN - AUG: 25.10 % 25.2 SEP - NOV: 24.90 %24.9

BEGAN OPERATION: / 10/09

CEASED OPERATION: /

UNITS: TONS PROCESSED

UNITS: TONS PROCESSED

ANNUAL OPERATION			PEAK OZONE SEASON OPERATION		
HOURS/DAY:	24.0	24.0	HOURS/DAY:	24.0	24
DAYS/WEEK:	7.0	7.0	DAYS/WEEK:	7.0	7
WEEKS/YEAR:	52	52	WEEKS/SEASON:	13	13
HOURS/YEAR:	8,760	8,760	HOURS/SEASON:	2,208	2,208
			START TIME:		0:00
			END TIME:		23:59
PWR (LB/HR):	220,653.6000	221,966.75	PWR (LB/HR):	221,866.3000	221,505.63
RATE/HR:	110.3300	110.98	RATE/HR:	110.9300	110.75

119040ATN - Gateway Energy & Coke Co LLC

- PROCESS DATA -

POINT 0005 - Coke ovens: Coking

PERMIT:

BEGAN OPERATION: 10 / 2009 10/09

CEASED OPERATION: /

SCC: 30300314

MODE 01 -

POLLUTANT CODE	METHOD IEPA	METHOD REP	EMISSION FACTOR IEPA	EMISSION FACTOR REPORTED	EMISSION RATE (LB/HR) IEPA	EMISSION RATE (LB/HR) REPORTED	
CO	4	1	1		.73	.7278	0.7399
CO2	3	3	3		152186	152186	138316
COC	3	3			.024	.0236	
H2SO4	4	1	1		.83	.8499	0.8662
HCL	2	1	1		10.97	10.8492	11.0973
LEAD	3	1	1		.00049	.00049	0.00050
MERCURY	1	1	1		.0026	.0024	0.0024
NOX	5	1	1		81.64	81.6368	76.9441
P	3	3	3		.08	.0759	0.0777
PART	4	1	1		10.84	10.8377	11.0190
PM10	4	1	1		7.4	7.3956	7.5193
PM2.5	4	1	1		6.49	6.4908	6.5994
SO2	2	1	1		213.53	213.5324	200.9460
VOM	4	1	1		.14	.1377	0.1400

POLLUTANT CODE	METHOD IEPA	METHOD REP	EMISSION FACTOR IEPA	EMISSION FACTOR REPORTED	OZONE SEASON EMISSION RATE (LB/HR) IEPA	OZONE SEASON EMISSION RATE (LB/HR) REPORTED	
NOX	1	1	1		81.6368	81.6368	83.0023
VOM	1	1	1		.1377	.1377	0.1400

119040ATN - Gateway Energy & Coke Co LLC

- PROCESS DATA -

POINT 0005 - Coke ovens: Coking

PERMIT:

BEGAN OPERATION: 10 / 2009 10/09

CEASED OPERATION: /

SCC: 30300314

MODE 01 -

CAPTURING CONTROLS:

CAPTURING STACKS:

STACK 0021 CAPTURE EFFICIENCY: 100.00 %

119040ATN - Gateway Energy & Coke Co LLC

- PROCESS DATA -

POINT 0006 - Coke ovens: Waste heat stacks

PERMIT:

BEGAN OPERATION: 10 / 2009 10/09

CEASED OPERATION: /

SCC: 30300314

MODE 01 -

DESCRIPTION CORRECTION:

PERCENT THROUGHPUTS: DEC - FEB: 21.50 %3.6 MAR - MAY: 29.60 %92.1
JUN - AUG: 33.90 %1.5 SEP - NOV: 15.00 %2.9

BEGAN OPERATION: / 10/09

CEASED OPERATION: /

UNITS: TONS PROCESSED

UNITS: TONS PROCESSED

ANNUAL OPERATION			PEAK OZONE SEASON OPERATION		
HOURS/DAY:	24.0	24.0	HOURS/DAY:	24.0	24
DAYS/WEEK:	7.0	7.0	DAYS/WEEK:	7.0	7
WEEKS/YEAR:	5	23	WEEKS/SEASON:	2	0
HOURS/YEAR:	872	3841	HOURS/SEASON:	316	0
			START TIME:		0:00
			END TIME:		23:59
PWR (LB/HR):	220,653.6000	221,966.75	PWR (LB/HR):	221,866.3000	221,505.63
RATE/HR:	1,111.1500	253.13	RATE/HR:	775.0900	490,556.09

119040ATN - Gateway Energy & Coke Co LLC

- PROCESS DATA -

POINT 0006 - Coke ovens: Waste heat stacks

PERMIT:

BEGAN OPERATION: 10 / 2009 10/09

CEASED OPERATION: /

SCC: 30300314

MODE 01 -

POLLUTANT CODE	METHOD IEPA	METHOD REP	EMISSION FACTOR IEPA	EMISSION FACTOR REPORTED	EMISSION RATE (LB/HR) IEPA	EMISSION RATE (LB/HR) REPORTED	
CO	4	1	1		4.36	4.36	4.3600
COG	3	3			.18	.24	
H2SO4	4	4	4		19.4	19.4	19.4
HCL	2	1	1		37.59	36.9102	33.2848
LEAD	3	1	1		.065	.086	.086
MERCURY	1	1	1		.003502	.0035	.0035
NOX	5	5	5		20.8	20.83	20.83
P	3	3	3		.23	.2584	0.2330
PART	4	1	1		20.15	20.15	20.15
PM10	4	1	1		20.15	20.15	20.15
PM2.5	4	1	1		20.15	20.15	20.15
SO2	2	1	1		267.94	267.94	267.9400
VOM	4	1	1		.9	.93	.93

POLLUTANT CODE	METHOD IEPA	METHOD REP	EMISSION FACTOR IEPA	EMISSION FACTOR REPORTED	OZONE SEASON EMISSION RATE (LB/HR) IEPA	OZONE SEASON EMISSION RATE (LB/HR) REPORTED	
NOX	5	5	5		20.83	20.83	20.83
VOM	1	1	1		.93	.93	.93

CAPTURING CONTROLS:

119040ATN - Gateway Energy & Coke Co LLC

- PROCESS DATA -

POINT 0006 - Coke ovens: Waste heat stacks

PERMIT:

BEGAN OPERATION: 10 / 2009 10/09

CEASED OPERATION: /

SCC: 30300314

MODE 01 -

CAPTURING STACKS:

STACK	0006	CAPTURE EFFICIENCY:	16.60	%	16.60
STACK	0011	CAPTURE EFFICIENCY:	16.70	%	16.70
STACK	0012	CAPTURE EFFICIENCY:	16.60	%	16.60
STACK	0013	CAPTURE EFFICIENCY:	16.70	%	16.70
STACK	0014	CAPTURE EFFICIENCY:	16.70	%	16.70
STACK	0015	CAPTURE EFFICIENCY:	16.70	%	16.70

119040ATN - Gateway Energy & Coke Co LLC

- PROCESS DATA -

POINT 0007 - Coke ovens: Pushing

PERMIT:

BEGAN OPERATION: 10 / 2009 10/09

CEASED OPERATION: /

SCC: 30300303

MODE 01 -

DESCRIPTION CORRECTION:

PERCENT THROUGHPUTS: DEC - FEB: 23.70 %24.6 MAR - MAY: 25.20 %24.0
JUN - AUG: 25.40 % 25.6 SEP - NOV: 25.70 %25.8

BEGAN OPERATION: / 10/09

CEASED OPERATION: /

UNITS: TONS PROCESSED

UNITS: TONS PROCESSED

ANNUAL OPERATION			PEAK OZONE SEASON OPERATION		
HOURS/DAY:	24.0	24.0	HOURS/DAY:	24.0	24.0
DAYS/WEEK:	7.0	7.0	DAYS/WEEK:	7.0	7.0
WEEKS/YEAR:	52	52	WEEKS/SEASON:	13	13
HOURS/YEAR:	8,760	8,760	HOURS/SEASON:	2,208	2,208
			START TIME:		00:00
PWR (LB/HR):	142,623.4000	145,234.54	END TIME:		23:59
			PWR (LB/HR):	144,170.3000	147,295.19
RATE/HR:	71.3100	72.62	RATE/HR:	72.0900	73.65

119040ATN - Gateway Energy & Coke Co LLC

- PROCESS DATA -

POINT 0007 - Coke ovens: Pushing

PERMIT:

BEGAN OPERATION: 10 / 2009 10/09

CEASED OPERATION: /

SCC: 30300303

MODE 01 -

POLLUTANT CODE	METHOD IEPA	METHOD REP	EMISSION FACTOR IEPA	EMISSION FACTOR REPORTED	EMISSION RATE (LB/HR) IEPA	EMISSION RATE (LB/HR) REPORTED	
CO	3	1	1		1.19	1.1853	1.2037
CO2	3	3	3		1770.07	1770.065	1,775.7340
COG	3	3			1.28	1.282	
H2SO4	4	4	4		.13	.1122	0.1140
LEAD	1	1	1		.001	.0009	.0009
NOX	3	1	1		.15	.1511	0.1534
PART	4	1	1		1.43	1.4301	1.4523
PM10	4	1	1		1.43	1.4301	1.4523
PM2.5	3	4	4		1.43	1.4301	1.4523
SO2	3	1	1		2.2	2.2002	2.2344
VOM	4	1	1		.006	.0062	.0063

POLLUTANT CODE	METHOD IEPA	METHOD REP	EMISSION FACTOR IEPA	EMISSION FACTOR REPORTED	OZONE SEASON EMISSION RATE (LB/HR) IEPA	OZONE SEASON EMISSION RATE (LB/HR) REPORTED	
NOX	1	1	1		.1511	.1511	0.1534
VOM	1	1	1		.0062	.0062	0.0063

CAPTURING CONTROLS:

CAPTURING STACKS:

119040ATN - Gateway Energy & Coke Co LLC

- PROCESS DATA -

POINT 0007 - Coke ovens: Pushing

PERMIT:

BEGAN OPERATION: 10 / 2009 10/09

CEASED OPERATION: /

SCC: 30300303

MODE 01 -

CAPTURING STACKS:

STACK	0007	CAPTURE EFFICIENCY:	16.60	%
STACK	0016	CAPTURE EFFICIENCY:	16.70	%
STACK	0017	CAPTURE EFFICIENCY:	16.70	%
STACK	0018	CAPTURE EFFICIENCY:	16.60	%
STACK	0019	CAPTURE EFFICIENCY:	16.70	%
STACK	0020	CAPTURE EFFICIENCY:	16.70	%

119040ATN - Gateway Energy & Coke Co LLC

- PROCESS DATA -

POINT 0008 - Coke ovens: Quenching

PERMIT:

BEGAN OPERATION: 10 / 2009 10/09

CEASED OPERATION: /

SCC: 30300304

MODE 01 -

DESCRIPTION CORRECTION:

PERCENT THROUGHPUTS: DEC - FEB: 24.10 % 25.3 MAR - MAY: 25.00 % 24.3
JUN - AUG: 25.30 % 25.2 SEP - NOV: 25.60 % 25.3

BEGAN OPERATION: / 10/09

CEASED OPERATION: /

UNITS: TONS PROCESSED

UNITS: TONS PROCESSED

ANNUAL OPERATION			PEAK OZONE SEASON OPERATION	
HOURS/DAY:	24.0	24.0	HOURS/DAY:	24.0
DAYS/WEEK:	7.0	7.0	DAYS/WEEK:	7.0
WEEKS/YEAR:	52	52	WEEKS/SEASON:	52
HOURS/YEAR:	8,760	8,760	HOURS/SEASON:	8,760
			START TIME:	00:00
PWR (LB/HR):	220,653.6000	221,966.75	END TIME:	23:59
			PWR (LB/HR):	221,505.63
RATE/HR:	110.3300	110.98	RATE/HR:	110.75

119040ATN - Gateway Energy & Coke Co LLC

- PROCESS DATA -

POINT 0008 - Coke ovens: Quenching

PERMIT:

BEGAN OPERATION: 10 / 2009 10/09

CEASED OPERATION: /

SCC: 30300304

MODE 01 -

POLLUTANT CODE	METHOD IEPA	METHOD REP	EMISSION FACTOR IEPA	EMISSION FACTOR REPORTED	EMISSION RATE (LB/HR) IEPA	EMISSION RATE (LB/HR) REPORTED	
COG	3	3			1.27	1.237	
LEAD	4	1	1		.0011	.0096	.0096
P	1	1	1		.009	.0086	.0086
PART	4	3	3		13.97	13.3817	13.4245
PM10	4	3	3		1.37	1.3114	1.3156
PM2.5	4	3	3		.84	.8029	0.8055

POLLUTANT CODE	METHOD IEPA	METHOD REP	EMISSION FACTOR IEPA	EMISSION FACTOR REPORTED	OZONE SEASON EMISSION RATE (LB/HR) IEPA	OZONE SEASON EMISSION RATE (LB/HR) REPORTED

CAPTURING CONTROLS:

CAPTURING STACKS:

STACK 0008 CAPTURE EFFICIENCY: 100.00 %____100_____

119040ATN - Gateway Energy & Coke Co LLC

- PROCESS DATA -

POINT 0011 - Malfunctions

PERMIT:

BEGAN OPERATION: 10 / 2009 10/09

CEASED OPERATION: /

SCC: 30300314

MODE 01 -

DESCRIPTION CORRECTION:

PERCENT THROUGHPUTS: DEC - FEB: 41.50 %27.0 MAR - MAY: 18.40 % 12.2
JUN - AUG: 18.60 % 43.3 SEP - NOV: 21.50 %17.5

BEGAN OPERATION: / 10/09

CEASED OPERATION: /

UNITS: TONS PROCESSED

UNITS: TONS PROCESSED

ANNUAL OPERATION			PEAK OZONE SEASON OPERATION		
HOURS/DAY:	2.6	1.35	HOURS/DAY:	1.9	2.3
DAYS/WEEK:	7.0	7.0	DAYS/WEEK:	7.0	7.0
WEEKS/YEAR:	52	52	WEEKS/SEASON:	13	13
HOURS/YEAR:	943	491	HOURS/SEASON:	175	213
			START TIME:		
PWR (LB/HR):	0.0000		END TIME:		
			PWR (LB/HR):	0.0000	
RATE/HR:	0.0000		RATE/HR:	0.0000	

119040ATN - Gateway Energy & Coke Co LLC

- PROCESS DATA -

POINT 0011 - Malfunctions

PERMIT:

BEGAN OPERATION: 10 / 2009 10/09

CEASED OPERATION: /

SCC: 30300314

MODE 01 -

POLLUTANT CODE	METHOD IEPA	METHOD REP	EMISSION FACTOR IEPA	EMISSION FACTOR REPORTED	EMISSION RATE (LB/HR) IEPA	EMISSION RATE (LB/HR) REPORTED	
CO	4	4	4		4.36	4.36	4.36
H2SO4	4	4	4		19.4	19.4	19.4
HCL	4	4	4		37.59	36.91	37.17
LEAD	4	4	4		.09	.09	.09
NOX	4	4	4		20.83	20.83	20.83
P	4	4	4		.26	.26	.26
PART	4	4	4		20.15	20.15	20.15
PM10	4	4	4		20.15	20.15	20.15
PM2.5	4	4	4		20.15	20.15	20.15
SO2	4	4	4		267.94	267.94	267.94
VOM	4	4	4		.93	.93	.93

POLLUTANT CODE	METHOD IEPA	METHOD REP	EMISSION FACTOR IEPA	EMISSION FACTOR REPORTED	OZONE SEASON EMISSION RATE (LB/HR) IEPA	OZONE SEASON EMISSION RATE (LB/HR) REPORTED	
NOX	4	4	4		20.83	20.83	20.83
VOM	4	4	4		.93	.93	.93

CAPTURING CONTROLS:

CAPTURING STACKS:

119040ATN - Gateway Energy & Coke Co LLC

- PROCESS DATA -

POINT 0011 - Malfunctions

PERMIT:

BEGAN OPERATION: 10 / 2009 10/09

CEASED OPERATION: /

SCC: 30300314

MODE 01 -

CAPTURING STACKS:

STACK 0027 CAPTURE EFFICIENCY: 100.00 % 100

119040ATN - Gateway Energy & Coke Co LLC

- PROCESS DATA -

POINT 0012 - Truck loading station

PERMIT:

BEGAN OPERATION: 02 / 2016 Not constructed

CEASED OPERATION: /

SCC: 30300312

MODE 01 -

DESCRIPTION CORRECTION:

PERCENT THROUGHPUTS: DEC - FEB: 25.00 MAR - MAY: 25.00

BEGAN OPERATION: / JUN - AUG: 25.00 SEP - NOV: 25.00

CEASED OPERATION: /

UNITS: TONS PROCESSED

UNITS: TONS PROCESSED

ANNUAL OPERATION			PEAK OZONE SEASON OPERATION	
HOURS/DAY:	0.0	24.0	HOURS/DAY:	
DAYS/WEEK:	0.0	7.0	DAYS/WEEK:	
WEEKS/YEAR:	0	52	WEEKS/SEASON:	
HOURS/YEAR:	0	8,760	HOURS/SEASON:	
			START TIME:	
PWR (LB/HR):	0.0000	220,653.6000	END TIME:	
RATE/HR:	0.0000	110.3300	PWR (LB/HR):	
			RATE/HR:	

119040ATN - Gateway Energy & Coke Co LLC

- PROCESS DATA -

POINT 0012 - Truck loading station PERMIT:

BEGAN OPERATION: 02 / 2016 Not constructed

CEASED OPERATION: /

SCC: 30300312

MODE 01 -

POLLUTANT CODE	METHOD IEPA	METHOD REP	EMISSION FACTOR IEPA	EMISSION FACTOR REPORTED	EMISSION RATE (LB/HR) IEPA	EMISSION RATE (LB/HR) REPORTED
PART	2	3			.114	0
PM10	2	3			.055	0
PM2.5	2	3			.055	0

POLLUTANT CODE	METHOD IEPA	METHOD REP	EMISSION FACTOR IEPA	EMISSION FACTOR REPORTED	OZONE SEASON EMISSION RATE (LB/HR) IEPA	OZONE SEASON EMISSION RATE (LB/HR) REPORTED

CAPTURING CONTROLS:

CONTROL 0002 CAPTURE EFFICIENCY: 100.00 %

CAPTURING STACKS:

119040ATN - Gateway Energy & Coke Co LLC

- OTHER SOURCE DATA -

POINT 0009 - Fugitive emissions: Roads

PERMIT:

BEGAN OPERATION: 10 / 2009 10/09

CEASED OPERATION: /

SCC: 30388801

MODE 01 -

DESCRIPTION CORRECTION:

PERCENT THROUGHPUTS: DEC - FEB: 24.80 %24.7 MAR - MAY: 25.10 %_25.2
JUN - AUG: 25.00 %25.2 SEP - NOV: 25.10 %24.9

BEGAN OPERATION: / 10/09

CEASED OPERATION: /

UNITS: VEHICLE-MILES

ANNUAL OPERATION			PEAK OZONE SEASON OPERATION	
HOURS/DAY:	24.0	24	HOURS/DAY:	24
DAYS/WEEK:	7.0	7	DAYS/WEEK:	7
WEEKS/YEAR:	52	52	WEEKS/SEASON:	13
HOURS/YEAR:	8,706	8,784	HOURS/SEASON:	2,208
			START TIME:	0:00
			END TIME:	23:59
RATE/HR:	9.8700	9.99	RATE/HR:	10.0

UNITS: VEHICLE-MILES

119040ATN - Gateway Energy & Coke Co LLC

- OTHER SOURCE DATA -

POINT 0009 - Fugitive emissions: Roads PERMIT:

BEGAN OPERATION: 10 / 2009 10/09

CEASED OPERATION: /

SCC: 30388801

MODE 01 -

POLLUTANT CODE	METHOD IEPA	METHOD REP	EMISSION FACTOR IEPA	EMISSION FACTOR REPORTED	EMISSION RATE (LB/HR) IEPA	EMISSION RATE (LB/HR) REPORTED
PART	4	3	3		.64	.37 0.39
PM10	4	3	3		.124	.07 0.08
PM2.5	4	3	3		.124	.02 0.02

POLLUTANT CODE	METHOD IEPA	METHOD REP	EMISSION FACTOR IEPA	EMISSION FACTOR REPORTED	OZONE SEASON EMISSION RATE (LB/HR) IEPA	OZONE SEASON EMISSION RATE (LB/HR) REPORTED

CAPTURING CONTROLS:

CAPTURING STACKS:

STACK 0009 CAPTURE EFFICIENCY: 100.00 % 100

119040ATN - Gateway Energy & Coke Co LLC

- CONTROL DEVICE DATA -

CONTROL 0001 - Coke crushing/screening baghouse

PERMIT:

BEGAN OPERATION: / 10/09

CEASED OPERATION: /

CONTROL CODE: 127

DESCRIPTION CORRECTION:

REMOVAL EFFICIENCY

POLLUTANT	ANNUAL OPERATION EFFICIENCY IEPA	ANNUAL OPERATION EFFICIENCY REPORTED	ANNUAL OPERATION METHOD IEPA	ANNUAL OPERATION METHOD REPORTED	PEAK OZONE SEASON OPERATION EFFICIENCY IEPA	PEAK OZONE SEASON OPERATION EFFICIENCY REPORTED	PEAK OZONE SEASON OPERATION METHOD IEPA	PEAK OZONE SEASON OPERATION METHOD REPORTED
PART	99.000	99.0				99.0		
PM10	99.000	99.0				99.0		

CAPTURING CONTROLS:

CAPTURING STACKS:

STACK 0002 CAPTURE EFFICIENCY: 100.00 % 100

119040ATN - Gateway Energy & Coke Co LLC

- CONTROL DEVICE DATA -

CONTROL 0002 - Water Spray: Truck Loadout Station: Coke Handling PERMIT:

BEGAN OPERATION: 02 / 2016 Not constructed
CEASED OPERATION: /

CONTROL CODE: 086

DESCRIPTION CORRECTION:

REMOVAL EFFICIENCY

POLLUTANT	ANNUAL OPERATION EFFICIENCY IEPA	ANNUAL OPERATION EFFICIENCY REPORTED	ANNUAL OPERATION METHOD IEPA	ANNUAL OPERATION METHOD REPORTED	PEAK OZONE SEASON OPERATION EFFICIENCY IEPA	PEAK OZONE SEASON OPERATION EFFICIENCY REPORTED	PEAK OZONE SEASON OPERATION METHOD IEPA	PEAK OZONE SEASON OPERATION METHOD REPORTED
PART	90.000							
PM10	90.000							
VOM	90.000							

CAPTURING CONTROLS:

CAPTURING STACKS:

STACK 0028 CAPTURE EFFICIENCY: 100.00 %

119040ATN - Gateway Energy & Coke Co LLC

- STACK DATA -

STACK	DIAMETER (FT)	HEIGHT (FT)	FLOW RATE (ACFM)	TEMPERATURE (F)
0001 - Coal handling	2.08 2.08	47 47	6060 6060	119 119
0002 - Coke crushing/screening	4.20 4.20	20 20	50000 50000	80 80
0003 - Coke storage pile	2.06 2.06	64 64	4680 4680	118 118
0004 - Charging - Stack 1 of 6	4.50 4.50	26 26	65000 65000	300 300
0006 - Waste heat stack 1	9.00 9.00	85 85	285000 285000	2000 2000
0007 - Pushing - Stack 1 of 6	5.00 5.00	20 20	82000 82000	400 400
0008 - Quenching	13.00 13.00	78 78	700000 700000	200 200
0009 - Roads		1 1	2 2	69 69
0011 - Waste heat stack 2	9.00 9.00	85 85	285000 285000	2000 2000
0012 - Waste heat stack 3	9.00 9.00	85 85	285000 285000	2000 2000

119040ATN - Gateway Energy & Coke Co LLC

- STACK DATA -

STACK	DIAMETER (FT)	HEIGHT (FT)	FLOW RATE (ACFM)	TEMPERATURE (F)
0013 - Waste heat stack 4	9.00 9.00	85 85	285000 285000	2000 2000
0014 - Waste heat stack 5	9.00 9.00	85 85	285000 285000	2000 2000
0015 - Waste heat stack 6	9.00 9.00	85 85	285000 285000	2000 2000
0016 - Pushing - Stack 2 of 6	5.00 5.00	20 20	82000 82000	400 400
0017 - Pushing - Stack 3 of 6	5.00 5.00	20 20	82000 82000	400 400
0018 - Pushing - Stack 4 of 6	5.00 5.00	20 20	82000 82000	400 400
0019 - Pushing - Stack 5 of 6	5.00 5.00	20 20	82000 82000	400 400
0020 - Pushing - Stack 6 of 6	5.00 5.00	20 20	82000 82000	400 400
0021 - Coking (New Main Stack)	13.00 13.00	200 200	309279 309279	272 272
0022 - Charging - Stack 2 of 6	4.50 4.50	26 26	65000 65000	300 300

119040ATN - Gateway Energy & Coke Co LLC

- STACK DATA -

STACK	DIAMETER (FT)		HEIGHT (FT)		FLOW RATE (ACFM)		TEMPERATURE (F)	
0023 - Charging - Stack 3 of 6								
	4.50	4.50	26	26	65000	65000	300	300
0024 - Charging - Stack 4 of 6								
	4.50	4.50	26	26	65000	65000	300	300
0025 - Charging - Stack 5 of 6								
	4.50	4.50	26	26	65000	65000	300	300
0026 - Charging - Stack 6 of 6								
	4.50	4.50	26	26	65000	65000	300	300
0027 - Malfunctions								
	4.36	4.50	113	113	8700	8700	166	166
0028 - Truck Loadout Station: Coke Handling								
	2.06		64		4680		118	

Attachment D

Middletown Coke Company, Redundancy Analysis

Middletown Coke Company, Monthly Bypass Venting Event Analysis: January 1, 2018 through June 30, 2018

Date/time of Bypass Venting event	Total Bypass Venting Hours	Bypass Venting Emissions (tons) SO2	PM	Lead	Cause for Bypass Venting event	Would event have been preventable if a Redundant HRSG system was installed? (explain)
1/9/18 @ 08:17 - 10:00.	0.60	0.08	0.00	0.00	Monthly stack lid testing: #1 HRSG: 08:17–08:20 (3 min); #2 HRSG: 08:40–09:02 (22 min); #3 HRSG: 09:07–09:08 & 09:45-09:47 (3 min); #4 HRSG: 09:23-09:25 & 09:53-09:55 (4 min); #5 HRSG: 09:29–09:31 & 09:58-10:00 (4 min), for a total of 36 min.	No - needed to open lids; short period of time per lid opening.
1/11/2018 @ 10:38 - 11:34; 14:46 - 15:32; 16:26 - 16:28	1.73	0.23	0.00	0.00	Replaced HRSG #5 stack lids. Coke Side Lid: 56 min.; Push Side Lid: 46 min. Lids Cycled: 2 min.; 1.73 hours total.	No - needed to open lids.
1/30/18 @ 16:53 - 17:12.	0.12	0.02	0.00	0.00	Monthly stack lid testing: #1 HRSG: 17:11 - 17:12; #2 HRSG: 17:07 - 17:08; #3 HRSG: 17:02 - 17:03; #4 HRSG: 16:58 - 17:00; #5 HRSG: 16:53 - 16:55; 7 minutes total (0.12 hrs).	No - needed to open lids; short period of time per lid opening.
2/2/18 @ 11:00 - 11:31.	0.52	0.07	0.00	0.00	Opened HRSG lid #2, push side, to adjust lid seating: 11:00 - 11:31; 31 minutes total (0.52 hrs).	No - needed to open lids.
2/13/18 @ 03:55 - 2/14/18 @ 21:15.	41.33	5.56	0.11	0.00	HRSG #4 tube leak.	Yes
2/27/18 @ 07:35 - 07:59.	0.10	0.01	0.00	0.00	Monthly stack lid testing: #1 HRSG: 07:58 - 07:59; #2 HRSG: 07:53 - 07:54; #3 HRSG: 07:49 - 07:50; #4 HRSG: 07:41 - 07:42; #5 HRSG: 07:35 - 07:37; 6 minutes total (0.10 hrs).	No - needed to open lids; short period of time per lid opening.
3/5/18 @ 17:17-17:28.	0.18	0.02	0.00	0.00	HRSG #5 Stack lid testing, 17:17-17:28; 11 min. total (0.18 hours).	No - needed to open lids; short period of time per lid opening.
3/16/18 @ 08:00 - 13:47.	3.18	0.43	0.01	0.00	Replaced HRSG #2 stack lids. Coke Side Lid: 08:00-09:57, 1.95 hours; Push Side Lid: 11:58-13:10, 1.20 hrs. Lids Cycled: 2 min., 13:45-13:47; for a total of 3.18 hours.	No - needed to open lids.
3/27/18 @ 10:51 - 11:45.	0.10	0.01	0.00	0.00	Monthly stack lid testing: HRSG 1: 11:44-11:45, 1 Min; HRSG 2: 11:34-11:35, 1 Min; HRSG 3: 11:20-11:21, 1 Min; HRSG 4: 11:06-11:07,1 Min; HRSG 5: 10:51-10:53, 2 Min, for a total of 6 minutes.	No - needed to open lids; short period of time per lid opening.
4/5/18 @ 08:33 - 11:05.	2.53	0.34	0.01	0.00	Maintenance: scoping #2 HRSG refractory repairs.	No - needed to open lids.
4/9/18 @ 06:00 - 4/15/18 @ 01:48.	139.80	18.80	0.36	0.01	HRSG #4 annual maintenance outage.	Yes
4/16/18 @ 06:00 - 4/22/18 @ 01:51.	139.85	18.81	0.36	0.01	HRSG #5 annual maintenance outage.	Yes
4/26/18 @ 01:31 - 02:15.	0.17	0.02	0.00	0.00	Monthly stack lid testing: #1 HRSG: 01:31 - 01:33; #2 HRSG: 01:45 - 01:47; #3 HRSG: 01:55 - 01:57; #4 HRSG: 02:05 - 02:07; #5 HRSG: 02:13 - 02:15, 10 minutes total, 0.17 hrs.	No - needed to open lids; short period of time per lid opening.
4/30/18 @ 0842 - 0943.	1.02	0.14	0.00	0.00	HRSG #2 lids were opened from 0842 - 0943 for lip repair.	No - needed to open lids.
5/3/18 @ 0811 - 1617.	40.50	5.45	0.10	0.00	Power outage due to goose contacting main transformer. All five vent stack lids open from 08:11 - 16:17; 8.1 hours each for a total venting of 40.50 hrs.	No - all five vent stacks opened.
5/20/18 @ 1017 - 5/26/18 @ 1437.	148.39	19.96	0.38	0.01	Tube Leak (HRSG #5)	Yes
5/27/18 @ 05:13 - 05:53.	0.10	0.01	0.00	0.00	Monthly stack lid testing: #1 HRSG: 05:52 - 05:53; #2 HRSG: 05:40 - 05:41; #3 HRSG: 05:29 - 05:31; #4 HRSG: 05:13 - 05:15; 6 minutes total, 0.1 hrs.	No - needed to open lids; short period of time per lid opening.
6/11/18 @ 21:15 - 6/17/18 @ 19:18.	142.05	19.11	0.37	0.01	Tube Leak (HRSG #3)	Yes
6/21/18 @ 14:46 - 15:28.	0.12	0.02	0.00	0.00	Monthly stack lid testing: #1 HRSG: 14:46 - 14:47; #2 HRSG: 14:57 - 14:59; #3 HRSG: 15:07 - 15:08; #4 HRSG: 15:18 - 15:20; #5 HRSG: 15:27 - 15:28, 7 minutes total, 0.12 hrs.	No - needed to open lids; short period of time per lid opening.

Venting Hours Summary:

Total Bypass Venting Hours during reporting period (First Half 2018):	**662.38**
Total Bypass Venting Hours Preventable by Redundant HRSG (First Half 2018):	**611.4**
12 Month Rolling Bypass Venting Hours Preventable by Redundant HRSG (Jul 2017 through Jun 2018):	**745.0**

Total Bypass Venting Emissions During Reporting Period (First Half 2018):

SO2 (tons):	**89.09**
PM (tons):	**1.71**
Lead (tons):	**0.03**

Attachment E

Haverhill Coke Company, HNCC No. 1 and HNCC No. 2 and Gateway Energy and Coke Company Bypass Vent Stack CEMs

CEMs Data and Excess Emissions Reports

GECC HRSG #5 Bypass Vent Stack CEMs Data

Reporting Period:1st Half 2018

Average SO_2 Wet PPM for 1st Half 2018:	429.19	(average of valid data)

Calculation of SO_2 Emission Factor for Semi-Annual Period:

Using same equation that is used to calculate SO_2 emissions from the main stack CEMs:

SO_2 (lbs/hour) = (1.66 x 10-7) X (Standard Cubic Feet per Hour) X Conc (ppm)

Flue Gas Flow Rate: 48,195 scfm, August 2013 GECC Flue Gas Flow Rate Study

SO_2 lbs/hr = 206.0 1st Half 2018 SO_2 Emission Factor for Bypass Venting

Date and Clock Hour	Hour	Minutes Online During 1-Hour Block	SO_2 Wet PPM (hourly average)	Reason For Venting
1/12/2018	13:00	20	425.2	Stack 5 PM
1/18/2018	10:00	26	406.4	Loss of Power
1/18/2018	11:00	60	506.4	Loss of Power
1/18/2018	12:00	60	438.7	Loss of Power
1/18/2018	13:00	39	413	Loss of Power
2/10/2018	14:00	5	117	Stack 5 PM
2/22/2018	0:00	59	324.7	Tube Leak
2/22/2018	1:00	60	336.7	Tube Leak
2/22/2018	2:00	60	323.3	Tube Leak
2/22/2018	3:00	60	512.9	Tube Leak
2/22/2018	4:00	60	420.8	Tube Leak
2/22/2018	5:00	60	310.6	Tube Leak
2/22/2018	6:00	60	263.3	Tube Leak
2/22/2018	7:00	60	264.6	Tube Leak
2/22/2018	8:00	60	369.6	Tube Leak
2/22/2018	9:00	60	406.8	Tube Leak
2/22/2018	10:00	60	572.6	Tube Leak
2/22/2018	11:00	60	452.9	Tube Leak
2/22/2018	12:00	60	448.5	Tube Leak
2/22/2018	13:00	60	427.2	Tube Leak
2/22/2018	14:00	60	416.7	Tube Leak
2/22/2018	15:00	60	431.7	Tube Leak
2/22/2018	16:00	60	444.9	Tube Leak
2/22/2018	17:00	60	428.3	Tube Leak
2/22/2018	18:00	60	419.5	Tube Leak
2/22/2018	19:00	60	397.5	Tube Leak
2/22/2018	20:00	60	380.1	Tube Leak
2/22/2018	21:00	60	371.1	Tube Leak
2/22/2018	22:00	60	351.7	Tube Leak
2/22/2018	23:00	60	340.6	Tube Leak
2/23/2018	0:00	60	402.5	Tube Leak
2/23/2018	1:00	57	356.2	Tube Leak
2/23/2018	2:00	10	227.2	Tube Leak
4/9/2018	10:00	1	25.7	Invalid - Partially Online
4/15/2018	20:00	56	350.7	Tube Leak
4/15/2018	21:00	60	432.2	Tube Leak
4/15/2018	22:00	60	550.1	Tube Leak
4/15/2018	23:00	60	487.1	Tube Leak
4/16/2018	0:00	60	363.7	Tube Leak
4/16/2018	1:00	60	344.8	Tube Leak

Date and Clock Hour	Hour	Minutes Online During 1-Hour Block	SO_2 Wet PPM (hourly average)	Reason For Venting
4/16/2018	2:00	60	340.8	Tube Leak
4/16/2018	3:00	60	344.7	Tube Leak
4/16/2018	4:00	60	426.1	Tube Leak
4/16/2018	5:00	60	546.8	Tube Leak
4/16/2018	6:00	60	477.4	Tube Leak
4/16/2018	7:00	60	436.4	Tube Leak
4/16/2018	8:00	60	453	Tube Leak
4/16/2018	9:00	60	452.6	Tube Leak
4/16/2018	10:00	60	441	Tube Leak
4/16/2018	11:00	60	426.8	Tube Leak
4/16/2018	12:00	60	420.1	Tube Leak
4/16/2018	13:00	60	412.7	Tube Leak
4/16/2018	14:00	60	399.8	Tube Leak
4/16/2018	15:00	60	397.9	Tube Leak
4/16/2018	16:00	60	391.4	Tube Leak
4/16/2018	17:00	60	375.5	Tube Leak
4/16/2018	18:00	60	367.1	Tube Leak
4/16/2018	19:00	60	372.7	Tube Leak
4/16/2018	20:00	60	365.4	Tube Leak
4/16/2018	21:00	60	478.5	Tube Leak
4/16/2018	22:00	60	514.1	Tube Leak
4/16/2018	23:00	60	451.3	Tube Leak
4/17/2018	0:00	60	412.2	Tube Leak
4/17/2018	1:00	60	394.6	Tube Leak
4/17/2018	2:00	60	384.2	Tube Leak
4/17/2018	3:00	60	699.5	Tube Leak
4/17/2018	4:00	60	791	Tube Leak
4/17/2018	5:00	60	552.5	Tube Leak
4/17/2018	6:00	60	494.2	Tube Leak
4/17/2018	7:00	60	466.8	Tube Leak
4/17/2018	8:00	60	464	Tube Leak
4/17/2018	9:00	60	448.7	Tube Leak
4/17/2018	10:00	60	443.4	Tube Leak
4/17/2018	11:00	60	430.8	Tube Leak
4/17/2018	12:00	60	421.6	Tube Leak
4/17/2018	13:00	60	400.7	Tube Leak
4/17/2018	14:00	60	394.3	Tube Leak
4/17/2018	15:00	60	375.2	Tube Leak
4/17/2018	16:00	60	362.1	Tube Leak
4/17/2018	17:00	60	328.8	Tube Leak
4/17/2018	18:00	60	311.1	Tube Leak
4/17/2018	19:00	60	337.5	Tube Leak
4/17/2018	20:00	50	336.1	Tube Leak
4/17/2018	22:00	4	561.2	Tube Leak
5/14/2018	21:00	23	448.7	Loss of Power
5/14/2018	22:00	27	588.3	Loss of Power
6/12/2018	14:00	7	254.9	Tube Leak
6/12/2018	15:00	60	484.2	Tube Leak
6/12/2018	16:00	60	421.7	Tube Leak
6/12/2018	17:00	60	397.7	Tube Leak
6/12/2018	18:00	60	376.9	Tube Leak
6/12/2018	19:00	60	363.6	Tube Leak
6/12/2018	20:00	60	358.6	Tube Leak
6/12/2018	21:00	60	329.9	Tube Leak
6/12/2018	22:00	60	310.5	Tube Leak
6/12/2018	23:00	60	311	Tube Leak
6/13/2018	0:00	60	434.2	Tube Leak
6/13/2018	1:00	60	349.6	Tube Leak
6/13/2018	2:00	60	338.8	Tube Leak
6/13/2018	3:00	60	391	Tube Leak

Date and Clock Hour	Hour	Minutes Online During 1-Hour Block	SO_2 Wet PPM (hourly average)	Reason For Venting
6/13/2018	4:00	60	296.2	Tube Leak
6/13/2018	5:00	60	337.7	Tube Leak
6/13/2018	6:00	60	749.1	Tube Leak
6/13/2018	7:00	60	487	Tube Leak
6/13/2018	8:00	60	528	Tube Leak
6/13/2018	9:00	60	499.8	Tube Leak
6/13/2018	10:00	60	466.4	Tube Leak
6/13/2018	11:00	60	446.6	Tube Leak
6/13/2018	12:00	60	440.4	Tube Leak
6/13/2018	13:00	60	428.8	Tube Leak
6/13/2018	14:00	60	438.8	Tube Leak
6/13/2018	15:00	60	447.4	Tube Leak
6/13/2018	16:00	60	423.8	Tube Leak
6/13/2018	17:00	60	405.8	Tube Leak
6/13/2018	18:00	60	394.7	Tube Leak
6/13/2018	19:00	60	377	Tube Leak
6/13/2018	20:00	60	360.7	Tube Leak
6/13/2018	21:00	60	349.7	Tube Leak
6/13/2018	22:00	60	505.7	Tube Leak
6/13/2018	23:00	60	552.2	Tube Leak
6/14/2018	0:00	60	481.2	Tube Leak
6/14/2018	1:00	60	462.5	Tube Leak
6/14/2018	2:00	60	434.3	Tube Leak
6/14/2018	3:00	60	407.2	Tube Leak
6/14/2018	4:00	60	394.2	Tube Leak
6/14/2018	5:00	60	375.9	Tube Leak
6/14/2018	6:00	60	936.3	Tube Leak
6/14/2018	7:00	60	685.5	Tube Leak
6/14/2018	8:00	60	575	Tube Leak
6/14/2018	9:00	60	525.8	Tube Leak
6/14/2018	10:00	60	492.3	Tube Leak
6/14/2018	11:00	60	469.4	Tube Leak
6/14/2018	12:00	60	451.7	Tube Leak
6/14/2018	13:00	60	444.9	Tube Leak
6/14/2018	14:00	60	444.9	Tube Leak
6/14/2018	15:00	60	433.1	Tube Leak
6/14/2018	16:00	60	422.6	Tube Leak
6/14/2018	17:00	60	404.9	Tube Leak
6/14/2018	18:00	60	381.6	Tube Leak
6/14/2018	19:00	60	369.5	Tube Leak
6/14/2018	20:00	60	367.7	Tube Leak
6/14/2018	21:00	60	362.5	Tube Leak
6/14/2018	22:00	60	596.7	Tube Leak
6/14/2018	23:00	60	511.6	Tube Leak
6/15/2018	0:00	60	490.5	Tube Leak
6/15/2018	1:00	60	458.7	Tube Leak
6/15/2018	2:00	60	444.4	Tube Leak
6/15/2018	3:00	60	432.2	Tube Leak
6/15/2018	4:00	60	564.9	Tube Leak
6/15/2018	5:00	60	568.6	Tube Leak
6/15/2018	6:00	60	545.6	Tube Leak
6/15/2018	7:00	60	512.8	Tube Leak
6/15/2018	8:00	60	439.7	Tube Leak
6/15/2018	9:00	60	431.9	Tube Leak
6/15/2018	10:00	60	423	Tube Leak
6/15/2018	11:00	60	452.4	Tube Leak
6/15/2018	12:00	60	446.2	Tube Leak
6/15/2018	13:00	60	448.7	Tube Leak
6/15/2018	14:00	60	435.2	Tube Leak
6/15/2018	15:00	60	399.2	Tube Leak

Date and Clock Hour	Hour	Minutes Online During 1-Hour Block	SO_2 Wet PPM (hourly average)	Reason For Venting
6/15/2018	16:00	60	387.3	Tube Leak
6/15/2018	17:00	60	365.5	Tube Leak
6/15/2018	18:00	60	357.5	Tube Leak
6/15/2018	19:00	60	356.3	Tube Leak
6/15/2018	20:00	60	359.3	Tube Leak
6/15/2018	21:00	60	340.1	Tube Leak
6/15/2018	22:00	60	487.7	Tube Leak
6/15/2018	23:00	60	358.3	Tube Leak
6/16/2018	0:00	4	394.3	Tube Leak
6/21/2018	22:00	8	765	Loss of Feedwater

EER and Performance Summary Report for ByPass Vent Stack #5 CEMS

GATEWAY ENERGY & COKE COMPANY, LLC

SO_2 EMISSION EXCEEDANCES SUMMARY REPORT

Reporting Period : January 2018 - June 2018

Facility ID: 119040ATN
Emission Unit: ByPass Vent Stack #5

SO_2 Emission Limits :

323 lb/hr on a 48-hr rolling average basis (when vent stack is open 48 or more hrs continuously)

Date of Commencement	Time of Commencement	Date of Completion	Time of Completion	Duration of Exceedance (days)	Pollutant	Magnitude (lb/hr)	Reason/s for the Excess Emissions	Corrective action/s taken, or measures taken to minimize emissions	Excess Emissions caused by Malfunction
There were no SO2 emission exceedances during the reporting period.									

NOTES:

EER and Performance Summary Report for ByPass Vent Stack #5 CEMS

GATEWAY ENERGY & COKE COMPANY, LLC

SO_2 CEMS INSTRUMENT DOWNTIME REPORT

Reporting Period : January 2018 - June 2018

Facility ID: 119040ATN
Emission Unit: ByPass Vent Stack #5

Date	Time of Commencement	Duration of Downtime (hours)	Parameter	Reasons for Downtime	Nature of system repairs and adjustments

NOTES:

1. Excludes minutes associated with daily calibration check; normally 14 minutes each day
2. Excludes minutes associated with probe blowback; up to 4 minutes each day

EER and Performance Summary Report for ByPass Vent Stack #5 CEMS

GATEWAY ENERGY & COKE COMPANY, LLC

SO_2 CEMS PERFORMANCE SUMMARY REPORT

Reporting Period : January 2018 - June 2018

Facility ID: 119040ATN
Emission Unit: ByPass Vent Stack #5

Performance Summary	SO2 lb/hr
1. Total clock time in reporting period =	4344
2. Duration (hrs) of bypass venting from Stack 5 =	160.6
3. CEMS downtime[1] (hrs) in reporting period due to: a. Monitor equipment malfunctions = b. Non-monitor equipment malfunctions = c. Quality assurance calibration = d. Other known causes = e. Unknown causes =	
4. Total CEMS downtime[1] (hrs)=	0.0
5. Percent Monitor Downtime[1] =	0.00%
6. Percent Monitor Online[1] =	100.00%

[1] CEMS downtime only reported during bypass stack #5 venting (i.e stack lid was open)

CEMS Downtime Notes:

1. Excludes minutes associated with daily calibration check; normally 14 minutes each day
2. Excludes minutes associated with probe blowback; up to 4 minutes each day

HNCC No. 1 HRSG #5 Bypass Vent Stack CEMs Data

Reporting Period: 1st Half 2018

Average SO_2 Wet PPM for 1st Half 2018:	307.25	(average of valid data)

Calculation of SO_2 Emission Factor for Semi-Annual Period:

Using same equation that is used to calculate SO_2 emissions from the main stack CEMs:

SO_2 (lbs/hour) = (1.66 x 10-7) X (Standard Cubic Feet per Hour) X Conc (ppm)

Flue Gas Flow Rate: 57,249 scfm, May 2016 HNCC No. 1 Flue Gas Flow Rate Study

SO_2 lbs/hr = 175.2 1st Half 2018 SO_2 Emission Factor for Bypass Venting

Date and Clock Hour	Minutes Online During 1-Hour Block	SO_2 Wet PPM (hourly average)	Reason For Venting
01/18/2018 07	28	58.3	CD Testing
01/22/2018 23	12	156.9	CD Testing
01/23/2018 00	2		Invalid - Maintenance/Calibration
03/04/2018 18	14	280.3	Scheduled FGD/HRSG Maintenance
03/04/2018 19	60	331.9	Scheduled FGD/HRSG Maintenance
03/04/2018 20	60	323.6	Scheduled FGD/HRSG Maintenance
03/04/2018 21	60	309.9	Scheduled FGD/HRSG Maintenance
03/04/2018 22	60	299.2	Scheduled FGD/HRSG Maintenance
03/04/2018 23	60	299.2	Scheduled FGD/HRSG Maintenance
03/05/2018 00	60	292.6	Scheduled FGD/HRSG Maintenance
03/05/2018 01	60	277.9	Scheduled FGD/HRSG Maintenance
03/05/2018 02	60	265.8	Scheduled FGD/HRSG Maintenance
03/05/2018 03	60	255.1	Scheduled FGD/HRSG Maintenance
03/05/2018 04	60	247.5	Scheduled FGD/HRSG Maintenance
03/05/2018 05	60	243.3	Scheduled FGD/HRSG Maintenance
03/05/2018 06	60	260.7	Scheduled FGD/HRSG Maintenance
03/05/2018 07	60	369.2	Scheduled FGD/HRSG Maintenance
03/05/2018 08	60	318.7	Scheduled FGD/HRSG Maintenance
03/05/2018 09	60	293.5	Scheduled FGD/HRSG Maintenance
03/05/2018 10	60	287.9	Scheduled FGD/HRSG Maintenance
03/05/2018 11	60	270.6	Scheduled FGD/HRSG Maintenance
03/05/2018 12	60	260.5	Scheduled FGD/HRSG Maintenance
03/05/2018 13	60	249.9	Scheduled FGD/HRSG Maintenance
03/05/2018 14	60	266.5	Scheduled FGD/HRSG Maintenance
03/05/2018 15	60	205.6	Scheduled FGD/HRSG Maintenance
03/05/2018 16	60	167.8	Scheduled FGD/HRSG Maintenance
03/05/2018 17	60	200.7	Scheduled FGD/HRSG Maintenance
03/05/2018 18	60	225.6	Scheduled FGD/HRSG Maintenance
03/05/2018 19	60	204.9	Scheduled FGD/HRSG Maintenance
03/05/2018 20	60	198.9	Scheduled FGD/HRSG Maintenance
03/05/2018 21	60	200.6	Scheduled FGD/HRSG Maintenance
03/05/2018 22	60	194.8	Scheduled FGD/HRSG Maintenance
03/05/2018 23	60	190.6	Scheduled FGD/HRSG Maintenance
03/06/2018 00	60	187.9	Scheduled FGD/HRSG Maintenance
03/06/2018 01	60	187.6	Scheduled FGD/HRSG Maintenance
03/06/2018 02	60	185.3	Scheduled FGD/HRSG Maintenance
03/06/2018 03	60	179.2	Scheduled FGD/HRSG Maintenance
03/06/2018 04	60	175.3	Scheduled FGD/HRSG Maintenance
03/06/2018 05	60	167.5	Scheduled FGD/HRSG Maintenance
03/06/2018 06	60	161.9	Scheduled FGD/HRSG Maintenance
03/06/2018 07	60	160.9	Scheduled FGD/HRSG Maintenance
03/06/2018 08	60		Invalid - Maintenance/Calibration
03/06/2018 09	60		Invalid - Maintenance/Calibration
03/06/2018 10	60		Invalid - Maintenance/Calibration
03/06/2018 11	60	196.9	Scheduled FGD/HRSG Maintenance
03/06/2018 12	60	200	Scheduled FGD/HRSG Maintenance
03/06/2018 13	60	314.8	Scheduled FGD/HRSG Maintenance

03/06/2018 14	60	465.8	Scheduled FGD/HRSG Maintenance
03/06/2018 15	60	464.3	Scheduled FGD/HRSG Maintenance
03/06/2018 16	60	416.2	Scheduled FGD/HRSG Maintenance
03/06/2018 17	60	395.3	Scheduled FGD/HRSG Maintenance
03/06/2018 18	60	378.9	Scheduled FGD/HRSG Maintenance
03/06/2018 19	60	345.8	Scheduled FGD/HRSG Maintenance
03/06/2018 20	60	362.3	Scheduled FGD/HRSG Maintenance
03/06/2018 21	60	324.2	Scheduled FGD/HRSG Maintenance
03/06/2018 22	60	322.5	Scheduled FGD/HRSG Maintenance
03/06/2018 23	60	290.6	Scheduled FGD/HRSG Maintenance
03/07/2018 00	60	303.6	Scheduled FGD/HRSG Maintenance
03/07/2018 01	60	283	Scheduled FGD/HRSG Maintenance
03/07/2018 02	60	291.3	Scheduled FGD/HRSG Maintenance
03/07/2018 03	60	277.4	Scheduled FGD/HRSG Maintenance
03/07/2018 04	60	256.6	Scheduled FGD/HRSG Maintenance
03/07/2018 05	60	265.9	Scheduled FGD/HRSG Maintenance
03/07/2018 06	60	323.1	Scheduled FGD/HRSG Maintenance
03/07/2018 07	60	416.7	Scheduled FGD/HRSG Maintenance
03/07/2018 08	60	351.5	Scheduled FGD/HRSG Maintenance
03/07/2018 09	60	343.3	Scheduled FGD/HRSG Maintenance
03/07/2018 10	60	330.4	Scheduled FGD/HRSG Maintenance
03/07/2018 11	60	367.4	Scheduled FGD/HRSG Maintenance
03/07/2018 12	60	218.2	Scheduled FGD/HRSG Maintenance
03/07/2018 13	60	215.8	Scheduled FGD/HRSG Maintenance
03/07/2018 14	60	268.3	Scheduled FGD/HRSG Maintenance
03/07/2018 15	60	277.7	Scheduled FGD/HRSG Maintenance
03/07/2018 16	60	227.8	Scheduled FGD/HRSG Maintenance
03/07/2018 17	60	225.8	Scheduled FGD/HRSG Maintenance
03/07/2018 18	60	252.9	Scheduled FGD/HRSG Maintenance
03/07/2018 19	60	334.2	Scheduled FGD/HRSG Maintenance
03/07/2018 20	60	282	Scheduled FGD/HRSG Maintenance
03/07/2018 21	60	346.2	Scheduled FGD/HRSG Maintenance
03/07/2018 22	60	408	Scheduled FGD/HRSG Maintenance
03/07/2018 23	60	378.9	Scheduled FGD/HRSG Maintenance
03/08/2018 00	60	373.2	Scheduled FGD/HRSG Maintenance
03/08/2018 01	60	363.8	Scheduled FGD/HRSG Maintenance
03/08/2018 02	60	390.9	Scheduled FGD/HRSG Maintenance
03/08/2018 03	60	432.5	Scheduled FGD/HRSG Maintenance
03/08/2018 04	60	393.6	Scheduled FGD/HRSG Maintenance
03/08/2018 05	60	395.4	Scheduled FGD/HRSG Maintenance
03/08/2018 06	60	379.1	Scheduled FGD/HRSG Maintenance
03/08/2018 07	60	363.1	Scheduled FGD/HRSG Maintenance
03/08/2018 08	60	245.7	Scheduled FGD/HRSG Maintenance
03/08/2018 09	60	189.4	Scheduled FGD/HRSG Maintenance
03/08/2018 10	60	180.9	Scheduled FGD/HRSG Maintenance
03/08/2018 11	60	174.1	Scheduled FGD/HRSG Maintenance
03/08/2018 12	60	244.3	Scheduled FGD/HRSG Maintenance
03/08/2018 13	60	226	Scheduled FGD/HRSG Maintenance
03/08/2018 14	60	176.3	Scheduled FGD/HRSG Maintenance
03/08/2018 15	60	199.4	Scheduled FGD/HRSG Maintenance
03/08/2018 16	60	172.6	Scheduled FGD/HRSG Maintenance
03/08/2018 17	60	170.6	Scheduled FGD/HRSG Maintenance
03/08/2018 18	60	204.2	Scheduled FGD/HRSG Maintenance
03/08/2018 19	60	392.9	Scheduled FGD/HRSG Maintenance
03/08/2018 20	60	383.5	Scheduled FGD/HRSG Maintenance
03/08/2018 21	60	307.7	Scheduled FGD/HRSG Maintenance
03/08/2018 22	60	260.9	Scheduled FGD/HRSG Maintenance
03/08/2018 23	60	212.5	Scheduled FGD/HRSG Maintenance
03/09/2018 00	60	225.8	Scheduled FGD/HRSG Maintenance
03/09/2018 01	60	326.9	Scheduled FGD/HRSG Maintenance
03/09/2018 02	60	311.2	Scheduled FGD/HRSG Maintenance
03/09/2018 03	60	217.6	Scheduled FGD/HRSG Maintenance
03/09/2018 04	60	280.5	Scheduled FGD/HRSG Maintenance
03/09/2018 05	60	265.1	Scheduled FGD/HRSG Maintenance
03/09/2018 06	60	252.5	Scheduled FGD/HRSG Maintenance
03/09/2018 07	60	242.3	Scheduled FGD/HRSG Maintenance
03/09/2018 08	60	255.8	Scheduled FGD/HRSG Maintenance
03/09/2018 09	60	365	Scheduled FGD/HRSG Maintenance
03/09/2018 10	60	318.5	Scheduled FGD/HRSG Maintenance
03/09/2018 11	60	289.2	Scheduled FGD/HRSG Maintenance

03/09/2018 12	60	288.7	Scheduled FGD/HRSG Maintenance
03/09/2018 13	60	275.2	Scheduled FGD/HRSG Maintenance
03/09/2018 14	60	267.5	Scheduled FGD/HRSG Maintenance
03/09/2018 15	60	296.2	Scheduled FGD/HRSG Maintenance
03/09/2018 16	60	302.5	Scheduled FGD/HRSG Maintenance
03/09/2018 17	60	298.2	Scheduled FGD/HRSG Maintenance
03/09/2018 18	60	291.3	Scheduled FGD/HRSG Maintenance
03/09/2018 19	60	350.8	Scheduled FGD/HRSG Maintenance
03/09/2018 20	60	317	Scheduled FGD/HRSG Maintenance
03/09/2018 21	60	339	Scheduled FGD/HRSG Maintenance
03/09/2018 22	60	343.1	Scheduled FGD/HRSG Maintenance
03/09/2018 23	60	320.5	Scheduled FGD/HRSG Maintenance
03/10/2018 00	60	326.5	Scheduled FGD/HRSG Maintenance
03/10/2018 01	60	313.4	Scheduled FGD/HRSG Maintenance
03/10/2018 02	60	307.6	Scheduled FGD/HRSG Maintenance
03/10/2018 03	60	304.2	Scheduled FGD/HRSG Maintenance
03/10/2018 04	60	299.1	Scheduled FGD/HRSG Maintenance
03/10/2018 05	60	291	Scheduled FGD/HRSG Maintenance
03/10/2018 06	60	279.5	Scheduled FGD/HRSG Maintenance
03/10/2018 07	60	268.4	Scheduled FGD/HRSG Maintenance
03/10/2018 08	60	260.8	Scheduled FGD/HRSG Maintenance
03/10/2018 09	60	264.7	Scheduled FGD/HRSG Maintenance
03/10/2018 10	60	373	Scheduled FGD/HRSG Maintenance
03/10/2018 11	60	348.3	Scheduled FGD/HRSG Maintenance
03/10/2018 12	60	339.3	Scheduled FGD/HRSG Maintenance
03/10/2018 13	60	383.9	Scheduled FGD/HRSG Maintenance
03/10/2018 14	60	439.1	Scheduled FGD/HRSG Maintenance
03/10/2018 15	60	408.4	Scheduled FGD/HRSG Maintenance
03/10/2018 16	60	439.6	Scheduled FGD/HRSG Maintenance
03/10/2018 17	60	421.4	Scheduled FGD/HRSG Maintenance
03/10/2018 18	60	409.3	Scheduled FGD/HRSG Maintenance
03/10/2018 19	60	396.6	Scheduled FGD/HRSG Maintenance
03/10/2018 20	60	395.4	Scheduled FGD/HRSG Maintenance
03/10/2018 21	60	382.1	Scheduled FGD/HRSG Maintenance
03/10/2018 22	60	382.8	Scheduled FGD/HRSG Maintenance
03/10/2018 23	60	371.4	Scheduled FGD/HRSG Maintenance
03/11/2018 00	60	358.5	Scheduled FGD/HRSG Maintenance
03/11/2018 01	60	349.1	Scheduled FGD/HRSG Maintenance
03/11/2018 02	60	337.3	Scheduled FGD/HRSG Maintenance
03/11/2018 03	60	325.3	Scheduled FGD/HRSG Maintenance
03/11/2018 04	60	312.3	Scheduled FGD/HRSG Maintenance
03/11/2018 05	60	346	Scheduled FGD/HRSG Maintenance
03/11/2018 06	60	460	Scheduled FGD/HRSG Maintenance
03/11/2018 07	60	387.9	Scheduled FGD/HRSG Maintenance
03/11/2018 08	60	386.9	Scheduled FGD/HRSG Maintenance
03/11/2018 09	60	365.6	Scheduled FGD/HRSG Maintenance
03/11/2018 10	60	367.4	Scheduled FGD/HRSG Maintenance
03/11/2018 11	60	357.1	Scheduled FGD/HRSG Maintenance
03/11/2018 12	60	475	Scheduled FGD/HRSG Maintenance
03/11/2018 13	60	478.9	Scheduled FGD/HRSG Maintenance
03/11/2018 14	60	456.1	Scheduled FGD/HRSG Maintenance
03/11/2018 15	60	551	Scheduled FGD/HRSG Maintenance
03/11/2018 16	60	529.5	Scheduled FGD/HRSG Maintenance
03/11/2018 17	60	493.9	Scheduled FGD/HRSG Maintenance
03/11/2018 18	60	471.6	Scheduled FGD/HRSG Maintenance
03/11/2018 19	60	445.4	Scheduled FGD/HRSG Maintenance
03/11/2018 20	60	429.1	Scheduled FGD/HRSG Maintenance
03/11/2018 21	60	414	Scheduled FGD/HRSG Maintenance
03/11/2018 22	60	397.3	Scheduled FGD/HRSG Maintenance
03/11/2018 23	60	385.5	Scheduled FGD/HRSG Maintenance
03/12/2018 00	60	376.6	Scheduled FGD/HRSG Maintenance
03/12/2018 01	60	359	Scheduled FGD/HRSG Maintenance
03/12/2018 02	60	336.8	Scheduled FGD/HRSG Maintenance
03/12/2018 03	60	328.6	Scheduled FGD/HRSG Maintenance
03/12/2018 04	60	310.6	Scheduled FGD/HRSG Maintenance
03/12/2018 05	60	349.3	Scheduled FGD/HRSG Maintenance
03/12/2018 06	60	430.9	Scheduled FGD/HRSG Maintenance
03/12/2018 07	60	389.8	Scheduled FGD/HRSG Maintenance
03/12/2018 08	60	374.9	Scheduled FGD/HRSG Maintenance
03/12/2018 09	60	365.1	Scheduled FGD/HRSG Maintenance

03/12/2018 10	60	356.1	Scheduled FGD/HRSG Maintenance
03/12/2018 11	60	456.1	Scheduled FGD/HRSG Maintenance
03/12/2018 12	60	494.2	Scheduled FGD/HRSG Maintenance
03/12/2018 13	60	444.6	Scheduled FGD/HRSG Maintenance
03/12/2018 14	60	448.7	Scheduled FGD/HRSG Maintenance
03/12/2018 15	60	413.3	Scheduled FGD/HRSG Maintenance
03/12/2018 16	60	409.5	Scheduled FGD/HRSG Maintenance
03/12/2018 17	60	408.2	Scheduled FGD/HRSG Maintenance
03/12/2018 18	60	389.1	Scheduled FGD/HRSG Maintenance
03/12/2018 19	60	359.8	Scheduled FGD/HRSG Maintenance
03/12/2018 20	60	343.7	Scheduled FGD/HRSG Maintenance
03/12/2018 21	60	316.6	Scheduled FGD/HRSG Maintenance
03/12/2018 22	60	309.4	Scheduled FGD/HRSG Maintenance
03/12/2018 23	60	302	Scheduled FGD/HRSG Maintenance
03/13/2018 00	60	272.7	Scheduled FGD/HRSG Maintenance
03/13/2018 01	60	278.3	Scheduled FGD/HRSG Maintenance
03/13/2018 02	60	294.5	Scheduled FGD/HRSG Maintenance
03/13/2018 03	60	410.6	Scheduled FGD/HRSG Maintenance
03/13/2018 04	60	319.1	Scheduled FGD/HRSG Maintenance
03/13/2018 05	60	353.9	Scheduled FGD/HRSG Maintenance
03/13/2018 06	60	332.9	Scheduled FGD/HRSG Maintenance
03/13/2018 07	60	316.9	Scheduled FGD/HRSG Maintenance
03/13/2018 08	60	325.9	Scheduled FGD/HRSG Maintenance
03/13/2018 09	60	515.7	Scheduled FGD/HRSG Maintenance
03/13/2018 10	60	441.9	Scheduled FGD/HRSG Maintenance
03/13/2018 11	60	474.5	Scheduled FGD/HRSG Maintenance
03/13/2018 12	60	473.2	Scheduled FGD/HRSG Maintenance
03/13/2018 13	60	455.6	Scheduled FGD/HRSG Maintenance
03/13/2018 14	60	445.4	Scheduled FGD/HRSG Maintenance
03/13/2018 15	60	430.3	Scheduled FGD/HRSG Maintenance
03/13/2018 16	60	396.8	Scheduled FGD/HRSG Maintenance
03/13/2018 17	60	403.3	Scheduled FGD/HRSG Maintenance
03/13/2018 18	60	423.7	Scheduled FGD/HRSG Maintenance
03/13/2018 19	60	405.4	Scheduled FGD/HRSG Maintenance
03/13/2018 20	60	380.7	Scheduled FGD/HRSG Maintenance
03/13/2018 21	60	372.4	Scheduled FGD/HRSG Maintenance
03/13/2018 22	60	372.9	Scheduled FGD/HRSG Maintenance
03/13/2018 23	60	337.2	Scheduled FGD/HRSG Maintenance
03/14/2018 00	60	341.7	Scheduled FGD/HRSG Maintenance
03/14/2018 01	60	314.6	Scheduled FGD/HRSG Maintenance
03/14/2018 02	60	298.4	Scheduled FGD/HRSG Maintenance
03/14/2018 03	60	310.5	Scheduled FGD/HRSG Maintenance
03/14/2018 04	60	406.6	Scheduled FGD/HRSG Maintenance
03/14/2018 05	60	406.9	Scheduled FGD/HRSG Maintenance
03/14/2018 06	60	362.9	Scheduled FGD/HRSG Maintenance
03/14/2018 07	60	350.1	Scheduled FGD/HRSG Maintenance
03/14/2018 08	60	435.2	Scheduled FGD/HRSG Maintenance
03/14/2018 09	60	464.9	Scheduled FGD/HRSG Maintenance
03/14/2018 10	60	419.5	Scheduled FGD/HRSG Maintenance
03/14/2018 11	60	397.2	Scheduled FGD/HRSG Maintenance
03/14/2018 12	60	396	Scheduled FGD/HRSG Maintenance
03/14/2018 13	60	417.2	Scheduled FGD/HRSG Maintenance
03/14/2018 14	60	396.9	Scheduled FGD/HRSG Maintenance
03/14/2018 15	60	393	Scheduled FGD/HRSG Maintenance
03/14/2018 16	60	380.4	Scheduled FGD/HRSG Maintenance
03/14/2018 17	60	367.5	Scheduled FGD/HRSG Maintenance
03/14/2018 18	60	349.4	Scheduled FGD/HRSG Maintenance
03/14/2018 19	60	328.1	Scheduled FGD/HRSG Maintenance
03/14/2018 20	60	314.1	Scheduled FGD/HRSG Maintenance
03/14/2018 21	60	311.1	Scheduled FGD/HRSG Maintenance
03/14/2018 22	60	298.8	Scheduled FGD/HRSG Maintenance
03/14/2018 23	60	292.4	Scheduled FGD/HRSG Maintenance
03/15/2018 00	60	274	Scheduled FGD/HRSG Maintenance
03/15/2018 01	60	254.7	Scheduled FGD/HRSG Maintenance
03/15/2018 02	60	240.4	Scheduled FGD/HRSG Maintenance
03/15/2018 03	60	237	Scheduled FGD/HRSG Maintenance
03/15/2018 04	60	305	Scheduled FGD/HRSG Maintenance
03/15/2018 05	60	383.5	Scheduled FGD/HRSG Maintenance
03/15/2018 06	60	337.2	Scheduled FGD/HRSG Maintenance
03/15/2018 07	60	307.7	Scheduled FGD/HRSG Maintenance

03/15/2018 08	60	304	Scheduled FGD/HRSG Maintenance
03/15/2018 09	60	460.6	Scheduled FGD/HRSG Maintenance
03/15/2018 10	60	473	Scheduled FGD/HRSG Maintenance
03/15/2018 11	60	457.8	Scheduled FGD/HRSG Maintenance
03/15/2018 12	60	435.6	Scheduled FGD/HRSG Maintenance
03/15/2018 13	60	418.9	Scheduled FGD/HRSG Maintenance
03/15/2018 14	60	401.6	Scheduled FGD/HRSG Maintenance
03/15/2018 15	60	391.2	Scheduled FGD/HRSG Maintenance
03/15/2018 16	60		Invalid - Loss of Power
03/15/2018 17	60	373.7	Scheduled FGD/HRSG Maintenance
03/15/2018 18	60	351.6	Scheduled FGD/HRSG Maintenance
03/15/2018 19	60	346.7	Scheduled FGD/HRSG Maintenance
03/15/2018 20	60		Invalid - Loss of Power
03/15/2018 21	60		Invalid - Loss of Power
03/15/2018 22	60	205.1	Scheduled FGD/HRSG Maintenance
03/15/2018 23	60	286.2	Scheduled FGD/HRSG Maintenance
03/16/2018 00	60	292.7	Scheduled FGD/HRSG Maintenance
03/16/2018 01	60	295.1	Scheduled FGD/HRSG Maintenance
03/16/2018 02	60	280.3	Scheduled FGD/HRSG Maintenance
03/16/2018 03	60	268.5	Scheduled FGD/HRSG Maintenance
03/16/2018 04	60	256.9	Scheduled FGD/HRSG Maintenance
03/16/2018 05	60	246.6	Scheduled FGD/HRSG Maintenance
03/16/2018 06	60	306.3	Scheduled FGD/HRSG Maintenance
03/16/2018 07	60	359.1	Scheduled FGD/HRSG Maintenance
03/16/2018 08	60	342.9	Scheduled FGD/HRSG Maintenance
03/16/2018 09	60	324.7	Scheduled FGD/HRSG Maintenance
03/16/2018 10	60	352.2	Scheduled FGD/HRSG Maintenance
03/16/2018 11	60	405.6	Scheduled FGD/HRSG Maintenance
03/16/2018 12	60	400.5	Scheduled FGD/HRSG Maintenance
03/16/2018 13	60	373.9	Scheduled FGD/HRSG Maintenance
03/16/2018 14	60	354.6	Scheduled FGD/HRSG Maintenance
03/16/2018 15	60	341.2	Scheduled FGD/HRSG Maintenance
03/16/2018 16	60	326.6	Scheduled FGD/HRSG Maintenance
03/16/2018 17	60	320.7	Scheduled FGD/HRSG Maintenance
03/16/2018 18	60	315.7	Scheduled FGD/HRSG Maintenance
03/16/2018 19	60	325.3	Scheduled FGD/HRSG Maintenance
03/16/2018 20	60	323.2	Scheduled FGD/HRSG Maintenance
03/16/2018 21	60	322.2	Scheduled FGD/HRSG Maintenance
03/16/2018 22	60	304.9	Scheduled FGD/HRSG Maintenance
03/16/2018 23	60	288	Scheduled FGD/HRSG Maintenance
03/17/2018 00	60	274.4	Scheduled FGD/HRSG Maintenance
03/17/2018 01	60	291	Scheduled FGD/HRSG Maintenance
03/17/2018 02	60	407.5	Scheduled FGD/HRSG Maintenance
03/17/2018 03	60	341.9	Scheduled FGD/HRSG Maintenance
03/17/2018 04	60	325.5	Scheduled FGD/HRSG Maintenance
03/17/2018 05	60	313.4	Scheduled FGD/HRSG Maintenance
03/17/2018 06	60	282.1	Scheduled FGD/HRSG Maintenance
03/17/2018 07	60	287.1	Scheduled FGD/HRSG Maintenance
03/17/2018 08	60	308.1	Scheduled FGD/HRSG Maintenance
03/17/2018 09	60	338.9	Scheduled FGD/HRSG Maintenance
03/17/2018 10	60	533.7	Scheduled FGD/HRSG Maintenance
03/17/2018 11	60	467.7	Scheduled FGD/HRSG Maintenance
03/17/2018 12	60	453.1	Scheduled FGD/HRSG Maintenance
03/17/2018 13	60	428.1	Scheduled FGD/HRSG Maintenance
03/17/2018 14	60	410.3	Scheduled FGD/HRSG Maintenance
03/17/2018 15	60	408.9	Scheduled FGD/HRSG Maintenance
03/17/2018 16	60	404	Scheduled FGD/HRSG Maintenance
03/17/2018 17	60	394.2	Scheduled FGD/HRSG Maintenance
03/17/2018 18	60	385.4	Scheduled FGD/HRSG Maintenance
03/17/2018 19	60	377.8	Scheduled FGD/HRSG Maintenance
03/17/2018 20	60	371.8	Scheduled FGD/HRSG Maintenance
03/17/2018 21	60	360.9	Scheduled FGD/HRSG Maintenance
03/17/2018 22	60	342.3	Scheduled FGD/HRSG Maintenance
03/17/2018 23	60	323.8	Scheduled FGD/HRSG Maintenance
03/18/2018 00	60	312.6	Scheduled FGD/HRSG Maintenance
03/18/2018 01	60	301.6	Scheduled FGD/HRSG Maintenance
03/18/2018 02	60	289.9	Scheduled FGD/HRSG Maintenance
03/18/2018 03	60	274.4	Scheduled FGD/HRSG Maintenance
03/18/2018 04	60	251	Scheduled FGD/HRSG Maintenance
03/18/2018 05	60	299	Scheduled FGD/HRSG Maintenance

03/18/2018 06	60	369.9	Scheduled FGD/HRSG Maintenance
03/18/2018 07	60	337.4	Scheduled FGD/HRSG Maintenance
03/18/2018 08	60	320.2	Scheduled FGD/HRSG Maintenance
03/18/2018 09	60	274	Scheduled FGD/HRSG Maintenance
03/18/2018 10	60	459.1	Scheduled FGD/HRSG Maintenance
03/18/2018 11	60	393.5	Scheduled FGD/HRSG Maintenance
03/18/2018 12	60	353.2	Scheduled FGD/HRSG Maintenance
03/18/2018 13	60	325.5	Scheduled FGD/HRSG Maintenance
03/18/2018 14	60	307.1	Scheduled FGD/HRSG Maintenance
03/18/2018 15	60	305.9	Scheduled FGD/HRSG Maintenance
03/18/2018 16	60	353.3	Scheduled FGD/HRSG Maintenance
03/18/2018 17	60	347.3	Scheduled FGD/HRSG Maintenance
03/18/2018 18	60	301.9	Scheduled FGD/HRSG Maintenance
03/18/2018 19	60	326.1	Scheduled FGD/HRSG Maintenance
03/18/2018 20	60	314.7	Scheduled FGD/HRSG Maintenance
03/18/2018 21	60	314.8	Scheduled FGD/HRSG Maintenance
03/18/2018 22	60	302.1	Scheduled FGD/HRSG Maintenance
03/18/2018 23	60	285.3	Scheduled FGD/HRSG Maintenance
03/19/2018 00	60	255.6	Scheduled FGD/HRSG Maintenance
03/19/2018 01	60	257.2	Scheduled FGD/HRSG Maintenance
03/19/2018 02	60	364.1	Scheduled FGD/HRSG Maintenance
03/19/2018 03	60	332.5	Scheduled FGD/HRSG Maintenance
03/19/2018 04	60	321.6	Scheduled FGD/HRSG Maintenance
03/19/2018 05	60	300.5	Scheduled FGD/HRSG Maintenance
03/19/2018 06	60	288.9	Scheduled FGD/HRSG Maintenance
03/19/2018 07	60	284.1	Scheduled FGD/HRSG Maintenance
03/19/2018 08	60	286.7	Scheduled FGD/HRSG Maintenance
03/19/2018 09	60	285.7	Scheduled FGD/HRSG Maintenance
03/19/2018 10	60	467.7	Scheduled FGD/HRSG Maintenance
03/19/2018 11	60	412.1	Scheduled FGD/HRSG Maintenance
03/19/2018 12	60	364.7	Scheduled FGD/HRSG Maintenance
03/19/2018 13	60	356.5	Scheduled FGD/HRSG Maintenance
03/19/2018 14	60	354.7	Scheduled FGD/HRSG Maintenance
03/19/2018 15	60	369.1	Scheduled FGD/HRSG Maintenance
03/19/2018 16	60	352.8	Scheduled FGD/HRSG Maintenance
03/19/2018 17	60	329	Scheduled FGD/HRSG Maintenance
03/19/2018 18	60	317.5	Scheduled FGD/HRSG Maintenance
03/19/2018 19	60	313.9	Scheduled FGD/HRSG Maintenance
03/19/2018 20	60	327.2	Scheduled FGD/HRSG Maintenance
03/19/2018 21	60	316.3	Scheduled FGD/HRSG Maintenance
03/19/2018 22	60	283.2	Scheduled FGD/HRSG Maintenance
03/19/2018 23	60	239.1	Scheduled FGD/HRSG Maintenance
03/20/2018 00	60	235	Scheduled FGD/HRSG Maintenance
03/20/2018 01	60	236.6	Scheduled FGD/HRSG Maintenance
03/20/2018 02	60	369.5	Scheduled FGD/HRSG Maintenance
03/20/2018 03	60	301	Scheduled FGD/HRSG Maintenance
03/20/2018 04	60	272.6	Scheduled FGD/HRSG Maintenance
03/20/2018 05	60	263.7	Scheduled FGD/HRSG Maintenance
03/20/2018 06	60	244.6	Scheduled FGD/HRSG Maintenance
03/20/2018 07	60	237.1	Scheduled FGD/HRSG Maintenance
03/20/2018 08	60	245.5	Scheduled FGD/HRSG Maintenance
03/20/2018 09	60	305.1	Scheduled FGD/HRSG Maintenance
03/20/2018 10	60	483.9	Scheduled FGD/HRSG Maintenance
03/20/2018 11	60	395.1	Scheduled FGD/HRSG Maintenance
03/20/2018 12	60	387.8	Scheduled FGD/HRSG Maintenance
03/20/2018 13	60	358.3	Scheduled FGD/HRSG Maintenance
03/20/2018 14	60	325.3	Scheduled FGD/HRSG Maintenance
03/20/2018 15	60	308.6	Scheduled FGD/HRSG Maintenance
03/20/2018 16	60	303.4	Scheduled FGD/HRSG Maintenance
03/20/2018 17	60	272.6	Scheduled FGD/HRSG Maintenance
03/20/2018 18	60	259.5	Scheduled FGD/HRSG Maintenance
03/20/2018 19	60	232.9	Scheduled FGD/HRSG Maintenance
03/20/2018 20	60	209	Scheduled FGD/HRSG Maintenance
03/20/2018 21	60	217.2	Scheduled FGD/HRSG Maintenance
03/20/2018 22	60	203	Scheduled FGD/HRSG Maintenance
03/20/2018 23	60	206.9	Scheduled FGD/HRSG Maintenance
03/21/2018 00	60	197	Scheduled FGD/HRSG Maintenance
03/21/2018 01	60	188	Scheduled FGD/HRSG Maintenance
03/21/2018 02	60	173.4	Scheduled FGD/HRSG Maintenance
03/21/2018 03	60	137.1	Scheduled FGD/HRSG Maintenance

03/21/2018 04	60	127.4	Scheduled FGD/HRSG Maintenance
03/21/2018 05	60	127.5	Scheduled FGD/HRSG Maintenance
03/21/2018 06	60	119	Scheduled FGD/HRSG Maintenance
03/21/2018 07	60	114.2	Scheduled FGD/HRSG Maintenance
03/21/2018 08	60	145.6	Scheduled FGD/HRSG Maintenance
03/21/2018 09	60	120.4	Scheduled FGD/HRSG Maintenance
03/21/2018 10	60	97	Scheduled FGD/HRSG Maintenance
03/21/2018 11	60	94	Scheduled FGD/HRSG Maintenance
03/21/2018 12	60	93.5	Scheduled FGD/HRSG Maintenance
03/21/2018 13	60	110.9	Scheduled FGD/HRSG Maintenance
03/21/2018 14	60	99	Scheduled FGD/HRSG Maintenance
03/21/2018 15	60	99.6	Scheduled FGD/HRSG Maintenance
03/21/2018 16	60		Invalid - Loss of Power
03/21/2018 17	60	122.5	Scheduled FGD/HRSG Maintenance
03/21/2018 18	60	106.5	Scheduled FGD/HRSG Maintenance
03/21/2018 19	60	103.7	Scheduled FGD/HRSG Maintenance
03/21/2018 20	60	138.7	Scheduled FGD/HRSG Maintenance
03/21/2018 21	60		Invalid - Loss of Power
03/21/2018 22	60		Invalid - Loss of Power
03/21/2018 23	60	133.6	Scheduled FGD/HRSG Maintenance
03/22/2018 00	60	123.9	Scheduled FGD/HRSG Maintenance
03/22/2018 01	60	172.8	Scheduled FGD/HRSG Maintenance
03/22/2018 02	60	180.6	Scheduled FGD/HRSG Maintenance
03/22/2018 03	60	141.1	Scheduled FGD/HRSG Maintenance
03/22/2018 04	60	140.2	Scheduled FGD/HRSG Maintenance
03/22/2018 05	60	141	Scheduled FGD/HRSG Maintenance
03/22/2018 06	60	143.2	Scheduled FGD/HRSG Maintenance
03/22/2018 07	60	137.9	Scheduled FGD/HRSG Maintenance
03/22/2018 08	60	199.4	Scheduled FGD/HRSG Maintenance
03/22/2018 09	60	265.5	Scheduled FGD/HRSG Maintenance
03/22/2018 10	60	235.8	Scheduled FGD/HRSG Maintenance
03/22/2018 11	60	235.3	Scheduled FGD/HRSG Maintenance
03/22/2018 12	60	339.7	Scheduled FGD/HRSG Maintenance
03/22/2018 13	60	293.2	Scheduled FGD/HRSG Maintenance
03/22/2018 14	60	281.2	Scheduled FGD/HRSG Maintenance
03/22/2018 15	60	301.2	Scheduled FGD/HRSG Maintenance
03/22/2018 16	60	307.4	Scheduled FGD/HRSG Maintenance
03/22/2018 17	60	297.5	Scheduled FGD/HRSG Maintenance
03/22/2018 18	60	286.2	Scheduled FGD/HRSG Maintenance
03/22/2018 19	60	260.2	Scheduled FGD/HRSG Maintenance
03/22/2018 20	60	278.3	Scheduled FGD/HRSG Maintenance
03/22/2018 21	60	289.3	Scheduled FGD/HRSG Maintenance
03/22/2018 22	60	287.8	Scheduled FGD/HRSG Maintenance
03/22/2018 23	60	302.2	Scheduled FGD/HRSG Maintenance
03/23/2018 00	60	307.3	Scheduled FGD/HRSG Maintenance
03/23/2018 01	60	307.1	Scheduled FGD/HRSG Maintenance
03/23/2018 02	60	302.5	Scheduled FGD/HRSG Maintenance
03/23/2018 03	60	297.5	Scheduled FGD/HRSG Maintenance
03/23/2018 04	60	273.2	Scheduled FGD/HRSG Maintenance
03/23/2018 05	60	265.4	Scheduled FGD/HRSG Maintenance
03/23/2018 06	60	253.7	Scheduled FGD/HRSG Maintenance
03/23/2018 07	60	245.8	Scheduled FGD/HRSG Maintenance
03/23/2018 08	60	226.6	Scheduled FGD/HRSG Maintenance
03/23/2018 09	60	223.4	Scheduled FGD/HRSG Maintenance
03/23/2018 10	60	207.9	Scheduled FGD/HRSG Maintenance
03/23/2018 11	60	192.2	Scheduled FGD/HRSG Maintenance
03/23/2018 12	60	193.1	Scheduled FGD/HRSG Maintenance
03/23/2018 13	60	182.7	Scheduled FGD/HRSG Maintenance
03/23/2018 14	60	159.8	Scheduled FGD/HRSG Maintenance
03/23/2018 15	60	196.3	Scheduled FGD/HRSG Maintenance
03/23/2018 16	60	243.8	Scheduled FGD/HRSG Maintenance
03/23/2018 17	60	210.1	Scheduled FGD/HRSG Maintenance
03/23/2018 18	60	184.8	Scheduled FGD/HRSG Maintenance
03/23/2018 19	60	172.2	Scheduled FGD/HRSG Maintenance
03/23/2018 20	60	206.9	Scheduled FGD/HRSG Maintenance
03/23/2018 21	60	287.4	Scheduled FGD/HRSG Maintenance
03/23/2018 22	60	270	Scheduled FGD/HRSG Maintenance
03/23/2018 23	60	231.6	Scheduled FGD/HRSG Maintenance
03/24/2018 00	60	218.2	Scheduled FGD/HRSG Maintenance
03/24/2018 01	60	210	Scheduled FGD/HRSG Maintenance

03/24/2018 02	60	335.8	Scheduled FGD/HRSG Maintenance
03/24/2018 03	60	359.9	Scheduled FGD/HRSG Maintenance
03/24/2018 04	60	316.3	Scheduled FGD/HRSG Maintenance
03/24/2018 05	60	297.8	Scheduled FGD/HRSG Maintenance
03/24/2018 06	60	282.7	Scheduled FGD/HRSG Maintenance
03/24/2018 07	60	268.9	Scheduled FGD/HRSG Maintenance
03/24/2018 08	60	281	Scheduled FGD/HRSG Maintenance
03/24/2018 09	60	329.5	Scheduled FGD/HRSG Maintenance
03/24/2018 10	60	299.6	Scheduled FGD/HRSG Maintenance
03/24/2018 11	60	408.9	Scheduled FGD/HRSG Maintenance
03/24/2018 12	60	421.5	Scheduled FGD/HRSG Maintenance
03/24/2018 13	60	392.4	Scheduled FGD/HRSG Maintenance
03/24/2018 14	60	364.3	Scheduled FGD/HRSG Maintenance
03/24/2018 15	60	354.4	Scheduled FGD/HRSG Maintenance
03/24/2018 16	60	342.9	Scheduled FGD/HRSG Maintenance
03/24/2018 17	60	379.1	Scheduled FGD/HRSG Maintenance
03/24/2018 18	60	369.3	Scheduled FGD/HRSG Maintenance
03/24/2018 19	60	334.9	Scheduled FGD/HRSG Maintenance
03/24/2018 20	60	325	Scheduled FGD/HRSG Maintenance
03/24/2018 21	60	321	Scheduled FGD/HRSG Maintenance
03/24/2018 22	60	319.8	Scheduled FGD/HRSG Maintenance
03/24/2018 23	60	310.1	Scheduled FGD/HRSG Maintenance
03/25/2018 00	60	307.2	Scheduled FGD/HRSG Maintenance
03/25/2018 01	60	304.8	Scheduled FGD/HRSG Maintenance
03/25/2018 02	60	298	Scheduled FGD/HRSG Maintenance
03/25/2018 03	60	357.2	Scheduled FGD/HRSG Maintenance
03/25/2018 04	60	324.6	Scheduled FGD/HRSG Maintenance
03/25/2018 05	60	298	Scheduled FGD/HRSG Maintenance
03/25/2018 06	60	281.9	Scheduled FGD/HRSG Maintenance
03/25/2018 07	60	271.8	Scheduled FGD/HRSG Maintenance
03/25/2018 08	60	274.9	Scheduled FGD/HRSG Maintenance
03/25/2018 09	60	264.5	Scheduled FGD/HRSG Maintenance
03/25/2018 10	60	282.3	Scheduled FGD/HRSG Maintenance
03/25/2018 11	60	306.8	Scheduled FGD/HRSG Maintenance
03/25/2018 12	60	313.4	Scheduled FGD/HRSG Maintenance
03/25/2018 13	60	283.7	Scheduled FGD/HRSG Maintenance
03/25/2018 14	60	274.6	Scheduled FGD/HRSG Maintenance
03/25/2018 15	60	274.3	Scheduled FGD/HRSG Maintenance
03/25/2018 16	60	253.3	Scheduled FGD/HRSG Maintenance
03/25/2018 17	60	235.7	Scheduled FGD/HRSG Maintenance
03/25/2018 18	60	219.7	Scheduled FGD/HRSG Maintenance
03/25/2018 19	60	221	Scheduled FGD/HRSG Maintenance
03/25/2018 20	60	405.8	Scheduled FGD/HRSG Maintenance
03/25/2018 21	60	329.4	Scheduled FGD/HRSG Maintenance
03/25/2018 22	60	278.4	Scheduled FGD/HRSG Maintenance
03/25/2018 23	60	251.8	Scheduled FGD/HRSG Maintenance
03/26/2018 00	60	234.4	Scheduled FGD/HRSG Maintenance
03/26/2018 01	60	243.6	Scheduled FGD/HRSG Maintenance
03/26/2018 02	60	500	Scheduled FGD/HRSG Maintenance
03/26/2018 03	60	429.1	Scheduled FGD/HRSG Maintenance
03/26/2018 04	60	377.3	Scheduled FGD/HRSG Maintenance
03/26/2018 05	60	336	Scheduled FGD/HRSG Maintenance
03/26/2018 06	60	314.2	Scheduled FGD/HRSG Maintenance
03/26/2018 07	60	298.6	Scheduled FGD/HRSG Maintenance
03/26/2018 08	60	292.8	Scheduled FGD/HRSG Maintenance
03/26/2018 09	60	259.3	Scheduled FGD/HRSG Maintenance
03/26/2018 10	60	241.1	Scheduled FGD/HRSG Maintenance
03/26/2018 11	60	233.7	Scheduled FGD/HRSG Maintenance
03/26/2018 12	60	354.1	Scheduled FGD/HRSG Maintenance
03/26/2018 13	60	349.8	Scheduled FGD/HRSG Maintenance
03/26/2018 14	60	355.1	Scheduled FGD/HRSG Maintenance
03/26/2018 15	60	337.9	Scheduled FGD/HRSG Maintenance
03/26/2018 16	60	360.2	Scheduled FGD/HRSG Maintenance
03/26/2018 17	60	343.1	Scheduled FGD/HRSG Maintenance
03/26/2018 18	60	327.3	Scheduled FGD/HRSG Maintenance
03/26/2018 19	60	300.4	Scheduled FGD/HRSG Maintenance
03/26/2018 20	60	276.5	Scheduled FGD/HRSG Maintenance
03/26/2018 21	60	268.3	Scheduled FGD/HRSG Maintenance
03/26/2018 22	60	256.5	Scheduled FGD/HRSG Maintenance
03/26/2018 23	60	242.9	Scheduled FGD/HRSG Maintenance

03/27/2018 00	60	234	Scheduled FGD/HRSG Maintenance
03/27/2018 01	60	232.5	Scheduled FGD/HRSG Maintenance
03/27/2018 02	60	315.9	Scheduled FGD/HRSG Maintenance
03/27/2018 03	60		Invalid - Loss of Power
03/27/2018 04	60	333.1	Scheduled FGD/HRSG Maintenance
03/27/2018 05	60	309.9	Scheduled FGD/HRSG Maintenance
03/27/2018 06	60	301.7	Scheduled FGD/HRSG Maintenance
03/27/2018 07	60	290.2	Scheduled FGD/HRSG Maintenance
03/27/2018 08	60	297.9	Scheduled FGD/HRSG Maintenance
03/27/2018 09	60	290.9	Scheduled FGD/HRSG Maintenance
03/27/2018 10	60	282.2	Scheduled FGD/HRSG Maintenance
03/27/2018 11	60	273.9	Scheduled FGD/HRSG Maintenance
03/27/2018 12	60	273.8	Scheduled FGD/HRSG Maintenance
03/27/2018 13	60	258.6	Scheduled FGD/HRSG Maintenance
03/27/2018 14	60	244.4	Scheduled FGD/HRSG Maintenance
03/27/2018 15	60	237	Scheduled FGD/HRSG Maintenance
03/27/2018 16	60	222	Scheduled FGD/HRSG Maintenance
03/27/2018 17	60	212.8	Scheduled FGD/HRSG Maintenance
03/27/2018 18	60	299.8	Scheduled FGD/HRSG Maintenance
03/27/2018 19	34	321.5	Scheduled FGD/HRSG Maintenance
04/23/2018 00	14	277	CD Testing
04/23/2018 01	19	348.9	CD Testing
04/26/2018 09	3	148.9	CD Testing
04/26/2018 10	14	224.7	CD Testing
04/30/2018 12	1		Invalid - Partially Online

HNCC No. 2 HRSG #6 Bypass Vent Stack CEMs Data

Reporting Period: 1st Half 2018

Average SO_2 Wet PPM for 1st Half 2018:	289.03	(average of valid data)

Calculation of SO_2 Emission Factor for Semi-Annual Period:

Using same equation that is used to calculate SO_2 emissions from the main stack CEMs:

SO_2 (lbs/hour) = (1.66 x 10-7) X (Standard Cubic Feet per Hour) X Conc (ppm)

Flue Gas Flow Rate: 57,249 scfm, May 2016 HNCC No. 1 Flue Gas Flow Rate Study

SO_2 lbs/hr = 164.8 1st Half 2018 SO_2 Emission Factor for Bypass Venting

Date and Clock Hour	Minutes Online During 1-Hour Block	SO_2 Wet PPM (hourly average)	Reason For Venting
01/29/2018 11	2		Invalid - Partially Online
03/27/2018 17	27	380.1	Loss of Plant Air
03/27/2018 18	5	421.9	Loss of Plant Air
03/28/2018 02	59	307.9	Penthouse Fire
03/28/2018 03	60	293.8	Penthouse Fire
03/28/2018 04	60	324	Penthouse Fire
03/28/2018 05	60	322	Penthouse Fire
03/28/2018 06	60	310.6	Penthouse Fire
03/28/2018 07	60	283.7	Penthouse Fire
03/28/2018 08	60	298.4	Penthouse Fire
03/28/2018 09	60	266.3	Penthouse Fire
03/28/2018 10	60	273.5	Penthouse Fire
03/28/2018 11	60	316.2	Penthouse Fire
03/28/2018 12	60	262.9	Penthouse Fire
03/28/2018 13	60	237.8	Penthouse Fire
03/28/2018 14	60	262.4	Penthouse Fire
03/28/2018 15	60	267.4	Penthouse Fire
03/28/2018 16	60	242.6	Penthouse Fire
03/28/2018 17	60	228.1	Penthouse Fire
03/28/2018 18	14	247.1	Penthouse Fire
05/24/2018 09	3	252.5	Deviation
06/03/2018 17	54	178.8	Scheduled FGD/HRSG Maintenance
06/03/2018 18	60	186.1	Scheduled FGD/HRSG Maintenance
06/03/2018 19	60	182.7	Scheduled FGD/HRSG Maintenance
06/03/2018 20	60	185.4	Scheduled FGD/HRSG Maintenance
06/03/2018 21	60	143.4	Scheduled FGD/HRSG Maintenance
06/03/2018 22	60	118.3	Scheduled FGD/HRSG Maintenance
06/03/2018 23	60	212.1	Scheduled FGD/HRSG Maintenance
06/04/2018 00	60	186.4	Scheduled FGD/HRSG Maintenance
06/04/2018 01	60	193.8	Scheduled FGD/HRSG Maintenance
06/04/2018 02	60	173.2	Scheduled FGD/HRSG Maintenance
06/04/2018 03	60	182.6	Scheduled FGD/HRSG Maintenance
06/04/2018 04	60	291.5	Scheduled FGD/HRSG Maintenance
06/04/2018 05	60	275.3	Scheduled FGD/HRSG Maintenance
06/04/2018 06	60	231.5	Scheduled FGD/HRSG Maintenance
06/04/2018 07	60	214	Scheduled FGD/HRSG Maintenance
06/04/2018 08	60	185.4	Scheduled FGD/HRSG Maintenance
06/04/2018 09	60	167.9	Scheduled FGD/HRSG Maintenance
06/04/2018 10	60	217.3	Scheduled FGD/HRSG Maintenance
06/04/2018 11	60	205.5	Scheduled FGD/HRSG Maintenance
06/04/2018 12	60	228.7	Scheduled FGD/HRSG Maintenance
06/04/2018 13	60	215	Scheduled FGD/HRSG Maintenance

06/04/2018 14	60	209.7	Scheduled FGD/HRSG Maintenance
06/04/2018 15	60	183.9	Scheduled FGD/HRSG Maintenance
06/04/2018 16	60	186.6	Scheduled FGD/HRSG Maintenance
06/04/2018 17	60	177.6	Scheduled FGD/HRSG Maintenance
06/04/2018 18	60	154.7	Scheduled FGD/HRSG Maintenance
06/04/2018 19	60	148.8	Scheduled FGD/HRSG Maintenance
06/04/2018 20	60	150.8	Scheduled FGD/HRSG Maintenance
06/04/2018 21	60	167.2	Scheduled FGD/HRSG Maintenance
06/04/2018 22	60	168.7	Scheduled FGD/HRSG Maintenance
06/04/2018 23	60	186.4	Scheduled FGD/HRSG Maintenance
06/05/2018 00	60	192	Scheduled FGD/HRSG Maintenance
06/05/2018 01	60	207.4	Scheduled FGD/HRSG Maintenance
06/05/2018 02	60	161	Scheduled FGD/HRSG Maintenance
06/05/2018 03	60	155.2	Scheduled FGD/HRSG Maintenance
06/05/2018 04	60	166.2	Scheduled FGD/HRSG Maintenance
06/05/2018 05	60	259.3	Scheduled FGD/HRSG Maintenance
06/05/2018 06	60	239.7	Scheduled FGD/HRSG Maintenance
06/05/2018 07	60	241.9	Scheduled FGD/HRSG Maintenance
06/05/2018 08	60	253.7	Scheduled FGD/HRSG Maintenance
06/05/2018 09	60	206.3	Scheduled FGD/HRSG Maintenance
06/05/2018 10	60	214.8	Scheduled FGD/HRSG Maintenance
06/05/2018 11	60	215.7	Scheduled FGD/HRSG Maintenance
06/05/2018 12	60	239.6	Scheduled FGD/HRSG Maintenance
06/05/2018 13	60	250.2	Scheduled FGD/HRSG Maintenance
06/05/2018 14	60	222.1	Scheduled FGD/HRSG Maintenance
06/05/2018 15	60	202.9	Scheduled FGD/HRSG Maintenance
06/05/2018 16	60	179.4	Scheduled FGD/HRSG Maintenance
06/05/2018 17	60	166.3	Scheduled FGD/HRSG Maintenance
06/05/2018 18	60	169.8	Scheduled FGD/HRSG Maintenance
06/05/2018 19	60	155.7	Scheduled FGD/HRSG Maintenance
06/05/2018 20	60	144.4	Scheduled FGD/HRSG Maintenance
06/05/2018 21	60	129.4	Scheduled FGD/HRSG Maintenance
06/05/2018 22	60	159.1	Scheduled FGD/HRSG Maintenance
06/05/2018 23	60	243.7	Scheduled FGD/HRSG Maintenance
06/06/2018 00	60	243.6	Scheduled FGD/HRSG Maintenance
06/06/2018 01	60	217.7	Scheduled FGD/HRSG Maintenance
06/06/2018 02	60	204.9	Scheduled FGD/HRSG Maintenance
06/06/2018 03	60	249.1	Scheduled FGD/HRSG Maintenance
06/06/2018 04	60	190	Scheduled FGD/HRSG Maintenance
06/06/2018 05	60	151.4	Scheduled FGD/HRSG Maintenance
06/06/2018 06	60	142.6	Scheduled FGD/HRSG Maintenance
06/06/2018 07	60	149.2	Scheduled FGD/HRSG Maintenance
06/06/2018 08	60	162.8	Scheduled FGD/HRSG Maintenance
06/06/2018 09	60	147.2	Scheduled FGD/HRSG Maintenance
06/06/2018 10	60	157.9	Scheduled FGD/HRSG Maintenance
06/06/2018 11	60	176.3	Scheduled FGD/HRSG Maintenance
06/06/2018 12	60	219.5	Scheduled FGD/HRSG Maintenance
06/06/2018 13	60	179.9	Scheduled FGD/HRSG Maintenance
06/06/2018 14	60	197.5	Scheduled FGD/HRSG Maintenance
06/06/2018 15	60	191.7	Scheduled FGD/HRSG Maintenance
06/06/2018 16	60	184.7	Scheduled FGD/HRSG Maintenance
06/06/2018 17	60	188	Scheduled FGD/HRSG Maintenance
06/06/2018 18	60	179.2	Scheduled FGD/HRSG Maintenance
06/06/2018 19	60	210.8	Scheduled FGD/HRSG Maintenance
06/06/2018 20	60	233.2	Scheduled FGD/HRSG Maintenance
06/06/2018 21	60	209.9	Scheduled FGD/HRSG Maintenance
06/06/2018 22	60	189.4	Scheduled FGD/HRSG Maintenance
06/06/2018 23	60	243.6	Scheduled FGD/HRSG Maintenance
06/07/2018 00	60	223.2	Scheduled FGD/HRSG Maintenance
06/07/2018 01	60	181.5	Scheduled FGD/HRSG Maintenance
06/07/2018 02	60	158.3	Scheduled FGD/HRSG Maintenance
06/07/2018 03	60	256.9	Scheduled FGD/HRSG Maintenance
06/07/2018 04	60	249.7	Scheduled FGD/HRSG Maintenance
06/07/2018 05	60	234.6	Scheduled FGD/HRSG Maintenance

06/07/2018 06	60	259.3	Scheduled FGD/HRSG Maintenance
06/07/2018 07	60	257	Scheduled FGD/HRSG Maintenance
06/07/2018 08	60	241.1	Scheduled FGD/HRSG Maintenance
06/07/2018 09	60	192.3	Scheduled FGD/HRSG Maintenance
06/07/2018 10	60	222.8	Scheduled FGD/HRSG Maintenance
06/07/2018 11	60	208.4	Scheduled FGD/HRSG Maintenance
06/07/2018 12	60	220.6	Scheduled FGD/HRSG Maintenance
06/07/2018 13	60	197	Scheduled FGD/HRSG Maintenance
06/07/2018 14	60	213.2	Scheduled FGD/HRSG Maintenance
06/07/2018 15	60	192.2	Scheduled FGD/HRSG Maintenance
06/07/2018 16	60	191	Scheduled FGD/HRSG Maintenance
06/07/2018 17	60	190	Scheduled FGD/HRSG Maintenance
06/07/2018 18	60	189.8	Scheduled FGD/HRSG Maintenance
06/07/2018 19	60	184.7	Scheduled FGD/HRSG Maintenance
06/07/2018 20	60	150.9	Scheduled FGD/HRSG Maintenance
06/07/2018 21	60	147.5	Scheduled FGD/HRSG Maintenance
06/07/2018 22	60	139.4	Scheduled FGD/HRSG Maintenance
06/07/2018 23	60	137.7	Scheduled FGD/HRSG Maintenance
06/08/2018 00	60	134.6	Scheduled FGD/HRSG Maintenance
06/08/2018 01	60	128.3	Scheduled FGD/HRSG Maintenance
06/08/2018 02	60	129.8	Scheduled FGD/HRSG Maintenance
06/08/2018 03	60	164.6	Scheduled FGD/HRSG Maintenance
06/08/2018 04	60	211.9	Scheduled FGD/HRSG Maintenance
06/08/2018 05	60	245.2	Scheduled FGD/HRSG Maintenance
06/08/2018 06	60	211.2	Scheduled FGD/HRSG Maintenance
06/08/2018 07	60	198.7	Scheduled FGD/HRSG Maintenance
06/08/2018 08	60	210.9	Scheduled FGD/HRSG Maintenance
06/08/2018 09	60	173.1	Scheduled FGD/HRSG Maintenance
06/08/2018 10	60	175	Scheduled FGD/HRSG Maintenance
06/08/2018 11	60	170.4	Scheduled FGD/HRSG Maintenance
06/08/2018 12	60	203.6	Scheduled FGD/HRSG Maintenance
06/08/2018 13	60	273.6	Scheduled FGD/HRSG Maintenance
06/08/2018 14	60	224.3	Scheduled FGD/HRSG Maintenance
06/08/2018 15	60	203.2	Scheduled FGD/HRSG Maintenance
06/08/2018 16	60	181.5	Scheduled FGD/HRSG Maintenance
06/08/2018 17	60	96.5	Scheduled FGD/HRSG Maintenance
06/08/2018 18	60	129.4	Scheduled FGD/HRSG Maintenance
06/08/2018 19	60	116.2	Scheduled FGD/HRSG Maintenance
06/08/2018 20	60	109.5	Scheduled FGD/HRSG Maintenance
06/08/2018 21	60	154.3	Scheduled FGD/HRSG Maintenance
06/08/2018 22	60	142.6	Scheduled FGD/HRSG Maintenance
06/08/2018 23	60	168.8	Scheduled FGD/HRSG Maintenance
06/09/2018 00	60	178.3	Scheduled FGD/HRSG Maintenance
06/09/2018 01	60	154.1	Scheduled FGD/HRSG Maintenance
06/09/2018 02	60	159.6	Scheduled FGD/HRSG Maintenance
06/09/2018 03	60	161.1	Scheduled FGD/HRSG Maintenance
06/09/2018 04	60	169.9	Scheduled FGD/HRSG Maintenance
06/09/2018 05	60	269.9	Scheduled FGD/HRSG Maintenance
06/09/2018 06	60	248.6	Scheduled FGD/HRSG Maintenance
06/09/2018 07	60	244	Scheduled FGD/HRSG Maintenance
06/09/2018 08	60	251.1	Scheduled FGD/HRSG Maintenance
06/09/2018 09	60	222	Scheduled FGD/HRSG Maintenance
06/09/2018 10	60	235.8	Scheduled FGD/HRSG Maintenance
06/09/2018 11	60	227.3	Scheduled FGD/HRSG Maintenance
06/09/2018 12	60	243.9	Scheduled FGD/HRSG Maintenance
06/09/2018 13	60	227.1	Scheduled FGD/HRSG Maintenance
06/09/2018 14	60	206	Scheduled FGD/HRSG Maintenance
06/09/2018 15	60	202.3	Scheduled FGD/HRSG Maintenance
06/09/2018 16	60	203.8	Scheduled FGD/HRSG Maintenance
06/09/2018 17	60	196	Scheduled FGD/HRSG Maintenance
06/09/2018 18	60	182.6	Scheduled FGD/HRSG Maintenance
06/09/2018 19	60	188	Scheduled FGD/HRSG Maintenance
06/09/2018 20	60	185.1	Scheduled FGD/HRSG Maintenance
06/09/2018 21	60	174.8	Scheduled FGD/HRSG Maintenance

06/09/2018 22	60	162.8	Scheduled FGD/HRSG Maintenance
06/09/2018 23	60	257.1	Scheduled FGD/HRSG Maintenance
06/10/2018 00	60	274.3	Scheduled FGD/HRSG Maintenance
06/10/2018 01	60	277.2	Scheduled FGD/HRSG Maintenance
06/10/2018 02	60	249.1	Scheduled FGD/HRSG Maintenance
06/10/2018 03	60	219.1	Scheduled FGD/HRSG Maintenance
06/10/2018 04	60	220.3	Scheduled FGD/HRSG Maintenance
06/10/2018 05	60	214.5	Scheduled FGD/HRSG Maintenance
06/10/2018 06	60	205.7	Scheduled FGD/HRSG Maintenance
06/10/2018 07	60	209.2	Scheduled FGD/HRSG Maintenance
06/10/2018 08	60	222.1	Scheduled FGD/HRSG Maintenance
06/10/2018 09	60	225.9	Scheduled FGD/HRSG Maintenance
06/10/2018 10	60	225.9	Scheduled FGD/HRSG Maintenance
06/10/2018 11	60	243.7	Scheduled FGD/HRSG Maintenance
06/10/2018 12	60	239.4	Scheduled FGD/HRSG Maintenance
06/10/2018 13	60	229.7	Scheduled FGD/HRSG Maintenance
06/10/2018 14	60	240	Scheduled FGD/HRSG Maintenance
06/10/2018 15	60	198.5	Scheduled FGD/HRSG Maintenance
06/10/2018 16	60	189.1	Scheduled FGD/HRSG Maintenance
06/10/2018 17	60	187.4	Scheduled FGD/HRSG Maintenance
06/10/2018 18	60	191.6	Scheduled FGD/HRSG Maintenance
06/10/2018 19	60	174.3	Scheduled FGD/HRSG Maintenance
06/10/2018 20	60	172.4	Scheduled FGD/HRSG Maintenance
06/10/2018 21	60	162	Scheduled FGD/HRSG Maintenance
06/10/2018 22	60	145.4	Scheduled FGD/HRSG Maintenance
06/10/2018 23	60	147.5	Scheduled FGD/HRSG Maintenance
06/11/2018 00	60	186.8	Scheduled FGD/HRSG Maintenance
06/11/2018 01	60	227	Scheduled FGD/HRSG Maintenance
06/11/2018 02	60	153	Scheduled FGD/HRSG Maintenance
06/11/2018 03	60	152.9	Scheduled FGD/HRSG Maintenance
06/11/2018 04	60	138.2	Scheduled FGD/HRSG Maintenance
06/11/2018 05	60	167.4	Scheduled FGD/HRSG Maintenance
06/11/2018 06	60	287	Scheduled FGD/HRSG Maintenance
06/11/2018 07	60	196.1	Scheduled FGD/HRSG Maintenance
06/11/2018 08	60	216.9	Scheduled FGD/HRSG Maintenance
06/11/2018 09	60	186.3	Scheduled FGD/HRSG Maintenance
06/11/2018 10	60	156.4	Scheduled FGD/HRSG Maintenance
06/11/2018 11	60	203.2	Scheduled FGD/HRSG Maintenance
06/11/2018 12	60	197.8	Scheduled FGD/HRSG Maintenance
06/11/2018 13	60	174	Scheduled FGD/HRSG Maintenance
06/11/2018 14	60	163.2	Scheduled FGD/HRSG Maintenance
06/11/2018 15	60	161.3	Scheduled FGD/HRSG Maintenance
06/11/2018 16	60	157.5	Scheduled FGD/HRSG Maintenance
06/11/2018 17	60		Invalid - Maintenance/Calibration
06/11/2018 18	60		Invalid - Maintenance/Calibration
06/11/2018 19	60	277	Scheduled FGD/HRSG Maintenance
06/11/2018 20	60	272.3	Scheduled FGD/HRSG Maintenance
06/11/2018 21	60	266.4	Scheduled FGD/HRSG Maintenance
06/11/2018 22	60	257.3	Scheduled FGD/HRSG Maintenance
06/11/2018 23	60	359.4	Scheduled FGD/HRSG Maintenance
06/12/2018 00	60	355.4	Scheduled FGD/HRSG Maintenance
06/12/2018 01	60	343.8	Scheduled FGD/HRSG Maintenance
06/12/2018 02	60	325.2	Scheduled FGD/HRSG Maintenance
06/12/2018 03	60	304.6	Scheduled FGD/HRSG Maintenance
06/12/2018 04	60	295.5	Scheduled FGD/HRSG Maintenance
06/12/2018 05	60	296.3	Scheduled FGD/HRSG Maintenance
06/12/2018 06	60	289.2	Scheduled FGD/HRSG Maintenance
06/12/2018 07	60	287.3	Scheduled FGD/HRSG Maintenance
06/12/2018 08	60	289.3	Scheduled FGD/HRSG Maintenance
06/12/2018 09	60	291.3	Scheduled FGD/HRSG Maintenance
06/12/2018 10	60	295.4	Scheduled FGD/HRSG Maintenance
06/12/2018 11	60	285.9	Scheduled FGD/HRSG Maintenance
06/12/2018 12	60	275.1	Scheduled FGD/HRSG Maintenance
06/12/2018 13	60	325.4	Scheduled FGD/HRSG Maintenance

06/12/2018 14	60	351.4	Scheduled FGD/HRSG Maintenance
06/12/2018 15	60	291.2	Scheduled FGD/HRSG Maintenance
06/12/2018 16	60	296	Scheduled FGD/HRSG Maintenance
06/12/2018 17	60	281.1	Scheduled FGD/HRSG Maintenance
06/12/2018 18	60	268.9	Scheduled FGD/HRSG Maintenance
06/12/2018 19	60	270.6	Scheduled FGD/HRSG Maintenance
06/12/2018 20	60	271.3	Scheduled FGD/HRSG Maintenance
06/12/2018 21	60	259.7	Scheduled FGD/HRSG Maintenance
06/12/2018 22	60	245	Scheduled FGD/HRSG Maintenance
06/12/2018 23	60	308.3	Scheduled FGD/HRSG Maintenance
06/13/2018 00	60	386.6	Scheduled FGD/HRSG Maintenance
06/13/2018 01	60	313.3	Scheduled FGD/HRSG Maintenance
06/13/2018 02	60	282.8	Scheduled FGD/HRSG Maintenance
06/13/2018 03	60	262.6	Scheduled FGD/HRSG Maintenance
06/13/2018 04	60	350.1	Scheduled FGD/HRSG Maintenance
06/13/2018 05	60	451.7	Scheduled FGD/HRSG Maintenance
06/13/2018 06	60	400.3	Scheduled FGD/HRSG Maintenance
06/13/2018 07	60	379.3	Scheduled FGD/HRSG Maintenance
06/13/2018 08	60	378.5	Scheduled FGD/HRSG Maintenance
06/13/2018 09	60	351.7	Scheduled FGD/HRSG Maintenance
06/13/2018 10	60	341.1	Scheduled FGD/HRSG Maintenance
06/13/2018 11	60	344.9	Scheduled FGD/HRSG Maintenance
06/13/2018 12	60	347.8	Scheduled FGD/HRSG Maintenance
06/13/2018 13	60		Invalid - Loss of Power
06/13/2018 14	60		Invalid - Loss of Power
06/13/2018 15	60		Invalid - Loss of Power
06/13/2018 16	60	313.3	Scheduled FGD/HRSG Maintenance
06/13/2018 17	60	311.8	Scheduled FGD/HRSG Maintenance
06/13/2018 18	60	295.3	Scheduled FGD/HRSG Maintenance
06/13/2018 19	60	289	Scheduled FGD/HRSG Maintenance
06/13/2018 20	60	280.4	Scheduled FGD/HRSG Maintenance
06/13/2018 21	60	277.4	Scheduled FGD/HRSG Maintenance
06/13/2018 22	60	264.4	Scheduled FGD/HRSG Maintenance
06/13/2018 23	60	314.5	Scheduled FGD/HRSG Maintenance
06/14/2018 00	60	411.5	Scheduled FGD/HRSG Maintenance
06/14/2018 01	60	385.9	Scheduled FGD/HRSG Maintenance
06/14/2018 02	60	369.5	Scheduled FGD/HRSG Maintenance
06/14/2018 03	60	377.4	Scheduled FGD/HRSG Maintenance
06/14/2018 04	60	361.2	Scheduled FGD/HRSG Maintenance
06/14/2018 05	60	353.7	Scheduled FGD/HRSG Maintenance
06/14/2018 06	60	316.3	Scheduled FGD/HRSG Maintenance
06/14/2018 07	60	316.5	Scheduled FGD/HRSG Maintenance
06/14/2018 08	60	299.9	Scheduled FGD/HRSG Maintenance
06/14/2018 09	60	280.1	Scheduled FGD/HRSG Maintenance
06/14/2018 10	60	282.2	Scheduled FGD/HRSG Maintenance
06/14/2018 11	60	268.2	Scheduled FGD/HRSG Maintenance
06/14/2018 12	60	270	Scheduled FGD/HRSG Maintenance
06/14/2018 13	60	332.5	Scheduled FGD/HRSG Maintenance
06/14/2018 14	60	286.7	Scheduled FGD/HRSG Maintenance
06/14/2018 15	60	311.7	Scheduled FGD/HRSG Maintenance
06/14/2018 16	60	296.9	Scheduled FGD/HRSG Maintenance
06/14/2018 17	60	279.2	Scheduled FGD/HRSG Maintenance
06/14/2018 18	60	266.7	Scheduled FGD/HRSG Maintenance
06/14/2018 19	60	252.1	Scheduled FGD/HRSG Maintenance
06/14/2018 20	60	256.9	Scheduled FGD/HRSG Maintenance
06/14/2018 21	60	251.4	Scheduled FGD/HRSG Maintenance
06/14/2018 22	60	255.9	Scheduled FGD/HRSG Maintenance
06/14/2018 23	60	357.9	Scheduled FGD/HRSG Maintenance
06/15/2018 00	60	330.9	Scheduled FGD/HRSG Maintenance
06/15/2018 01	60	263.8	Scheduled FGD/HRSG Maintenance
06/15/2018 02	60	267.6	Scheduled FGD/HRSG Maintenance
06/15/2018 03	60	255.8	Scheduled FGD/HRSG Maintenance
06/15/2018 04	60	242.3	Scheduled FGD/HRSG Maintenance
06/15/2018 05	60	242.4	Scheduled FGD/HRSG Maintenance

06/15/2018 06	60	261.3	Scheduled FGD/HRSG Maintenance
06/15/2018 07	60	349.6	Scheduled FGD/HRSG Maintenance
06/15/2018 08	60	411.8	Scheduled FGD/HRSG Maintenance
06/15/2018 09	60	362.8	Scheduled FGD/HRSG Maintenance
06/15/2018 10	60	354.8	Scheduled FGD/HRSG Maintenance
06/15/2018 11	60	346.9	Scheduled FGD/HRSG Maintenance
06/15/2018 12	60	343	Scheduled FGD/HRSG Maintenance
06/15/2018 13	60	340.9	Scheduled FGD/HRSG Maintenance
06/15/2018 14	60	335.5	Scheduled FGD/HRSG Maintenance
06/15/2018 15	60	327.6	Scheduled FGD/HRSG Maintenance
06/15/2018 16	60	319.8	Scheduled FGD/HRSG Maintenance
06/15/2018 17	60	311	Scheduled FGD/HRSG Maintenance
06/15/2018 18	60	303.2	Scheduled FGD/HRSG Maintenance
06/15/2018 19	60	303.4	Scheduled FGD/HRSG Maintenance
06/15/2018 20	60	300.9	Scheduled FGD/HRSG Maintenance
06/15/2018 21	60	290.3	Scheduled FGD/HRSG Maintenance
06/15/2018 22	60	277.6	Scheduled FGD/HRSG Maintenance
06/15/2018 23	60	337.9	Scheduled FGD/HRSG Maintenance
06/16/2018 00	60	368.8	Scheduled FGD/HRSG Maintenance
06/16/2018 01	60	343.4	Scheduled FGD/HRSG Maintenance
06/16/2018 02	60	336.5	Scheduled FGD/HRSG Maintenance
06/16/2018 03	60	321.2	Scheduled FGD/HRSG Maintenance
06/16/2018 04	60	303.8	Scheduled FGD/HRSG Maintenance
06/16/2018 05	60	302.8	Scheduled FGD/HRSG Maintenance
06/16/2018 06	60	301.7	Scheduled FGD/HRSG Maintenance
06/16/2018 07	60	322.8	Scheduled FGD/HRSG Maintenance
06/16/2018 08	60	312	Scheduled FGD/HRSG Maintenance
06/16/2018 09	60	378	Scheduled FGD/HRSG Maintenance
06/16/2018 10	60	351.9	Scheduled FGD/HRSG Maintenance
06/16/2018 11	60	330.4	Scheduled FGD/HRSG Maintenance
06/16/2018 12	60	366.5	Scheduled FGD/HRSG Maintenance
06/16/2018 13	60	329.5	Scheduled FGD/HRSG Maintenance
06/16/2018 14	60	316.6	Scheduled FGD/HRSG Maintenance
06/16/2018 15	60	353.5	Scheduled FGD/HRSG Maintenance
06/16/2018 16	60	357	Scheduled FGD/HRSG Maintenance
06/16/2018 17	60	382.1	Scheduled FGD/HRSG Maintenance
06/16/2018 18	60	371.8	Scheduled FGD/HRSG Maintenance
06/16/2018 19	60	352.3	Scheduled FGD/HRSG Maintenance
06/16/2018 20	60	345.7	Scheduled FGD/HRSG Maintenance
06/16/2018 21	60	337.2	Scheduled FGD/HRSG Maintenance
06/16/2018 22	60	321.7	Scheduled FGD/HRSG Maintenance
06/16/2018 23	60	425.8	Scheduled FGD/HRSG Maintenance
06/17/2018 00	60	332.9	Scheduled FGD/HRSG Maintenance
06/17/2018 01	60	300.3	Scheduled FGD/HRSG Maintenance
06/17/2018 02	60	302.6	Scheduled FGD/HRSG Maintenance
06/17/2018 03	60	288.6	Scheduled FGD/HRSG Maintenance
06/17/2018 04	60	302.2	Scheduled FGD/HRSG Maintenance
06/17/2018 05	60	289.3	Scheduled FGD/HRSG Maintenance
06/17/2018 06	60	317	Scheduled FGD/HRSG Maintenance
06/17/2018 07	60	287.4	Scheduled FGD/HRSG Maintenance
06/17/2018 08	60	275.9	Scheduled FGD/HRSG Maintenance
06/17/2018 09	60	259.6	Scheduled FGD/HRSG Maintenance
06/17/2018 10	60	256.5	Scheduled FGD/HRSG Maintenance
06/17/2018 11	60	251.6	Scheduled FGD/HRSG Maintenance
06/17/2018 12	60	245.2	Scheduled FGD/HRSG Maintenance
06/17/2018 13	60	242.1	Scheduled FGD/HRSG Maintenance
06/17/2018 14	60	232.6	Scheduled FGD/HRSG Maintenance
06/17/2018 15	60	244.1	Scheduled FGD/HRSG Maintenance
06/17/2018 16	60	419	Scheduled FGD/HRSG Maintenance
06/17/2018 17	60	387.1	Scheduled FGD/HRSG Maintenance
06/17/2018 18	60	365.3	Scheduled FGD/HRSG Maintenance
06/17/2018 19	60	328.5	Scheduled FGD/HRSG Maintenance
06/17/2018 20	60	291.5	Scheduled FGD/HRSG Maintenance
06/17/2018 21	60	295.9	Scheduled FGD/HRSG Maintenance

06/17/2018 22	60	289	Scheduled FGD/HRSG Maintenance
06/17/2018 23	60	387.4	Scheduled FGD/HRSG Maintenance
06/18/2018 00	60	354.5	Scheduled FGD/HRSG Maintenance
06/18/2018 01	60	370.3	Scheduled FGD/HRSG Maintenance
06/18/2018 02	60	344.2	Scheduled FGD/HRSG Maintenance
06/18/2018 03	60	371.5	Scheduled FGD/HRSG Maintenance
06/18/2018 04	60	353.6	Scheduled FGD/HRSG Maintenance
06/18/2018 05	60	366.3	Scheduled FGD/HRSG Maintenance
06/18/2018 06	60	374.9	Scheduled FGD/HRSG Maintenance
06/18/2018 07	60	365.2	Scheduled FGD/HRSG Maintenance
06/18/2018 08	60	472.3	Scheduled FGD/HRSG Maintenance
06/18/2018 09	60	483.1	Scheduled FGD/HRSG Maintenance
06/18/2018 10	60	430.9	Scheduled FGD/HRSG Maintenance
06/18/2018 11	60	420.5	Scheduled FGD/HRSG Maintenance
06/18/2018 12	60	400.8	Scheduled FGD/HRSG Maintenance
06/18/2018 13	60	404.4	Scheduled FGD/HRSG Maintenance
06/18/2018 14	60	418.7	Scheduled FGD/HRSG Maintenance
06/18/2018 15	60	399.4	Scheduled FGD/HRSG Maintenance
06/18/2018 16	60	394.4	Scheduled FGD/HRSG Maintenance
06/18/2018 17	60	381.4	Scheduled FGD/HRSG Maintenance
06/18/2018 18	60	351.5	Scheduled FGD/HRSG Maintenance
06/18/2018 19	60	343.5	Scheduled FGD/HRSG Maintenance
06/18/2018 20	60	339	Scheduled FGD/HRSG Maintenance
06/18/2018 21	60	343.8	Scheduled FGD/HRSG Maintenance
06/18/2018 22	60	336.3	Scheduled FGD/HRSG Maintenance
06/18/2018 23	60	444.3	Scheduled FGD/HRSG Maintenance
06/19/2018 00	60	412.3	Scheduled FGD/HRSG Maintenance
06/19/2018 01	60	408.9	Scheduled FGD/HRSG Maintenance
06/19/2018 02	60	412.1	Scheduled FGD/HRSG Maintenance
06/19/2018 03	60	393.1	Scheduled FGD/HRSG Maintenance
06/19/2018 04	60	371.6	Scheduled FGD/HRSG Maintenance
06/19/2018 05	60	357.7	Scheduled FGD/HRSG Maintenance
06/19/2018 06	60	385.4	Scheduled FGD/HRSG Maintenance
06/19/2018 07	60	375.4	Scheduled FGD/HRSG Maintenance
06/19/2018 08	60	352.2	Scheduled FGD/HRSG Maintenance
06/19/2018 09	60	324.3	Scheduled FGD/HRSG Maintenance
06/19/2018 10	60	312.8	Scheduled FGD/HRSG Maintenance
06/19/2018 11	60	300.5	Scheduled FGD/HRSG Maintenance
06/19/2018 12	60	296.3	Scheduled FGD/HRSG Maintenance
06/19/2018 13	60	291.9	Scheduled FGD/HRSG Maintenance
06/19/2018 14	60	403.2	Scheduled FGD/HRSG Maintenance
06/19/2018 15	60	439	Scheduled FGD/HRSG Maintenance
06/19/2018 16	60	366.2	Scheduled FGD/HRSG Maintenance
06/19/2018 17	60	362.8	Scheduled FGD/HRSG Maintenance
06/19/2018 18	60	365.4	Scheduled FGD/HRSG Maintenance
06/19/2018 19	60	346	Scheduled FGD/HRSG Maintenance
06/19/2018 20	60	332.7	Scheduled FGD/HRSG Maintenance
06/19/2018 21	60	347.7	Scheduled FGD/HRSG Maintenance
06/19/2018 22	60	330	Scheduled FGD/HRSG Maintenance
06/19/2018 23	60	396.9	Scheduled FGD/HRSG Maintenance
06/20/2018 00	60	364.3	Scheduled FGD/HRSG Maintenance
06/20/2018 01	60	364.9	Scheduled FGD/HRSG Maintenance
06/20/2018 02	60	343.8	Scheduled FGD/HRSG Maintenance
06/20/2018 03	60	335.6	Scheduled FGD/HRSG Maintenance
06/20/2018 04	60	380	Scheduled FGD/HRSG Maintenance
06/20/2018 05	60	419.1	Scheduled FGD/HRSG Maintenance
06/20/2018 06	60	420.5	Scheduled FGD/HRSG Maintenance
06/20/2018 07	60	393.4	Scheduled FGD/HRSG Maintenance
06/20/2018 08	60	387	Scheduled FGD/HRSG Maintenance
06/20/2018 09	60	362.5	Scheduled FGD/HRSG Maintenance
06/20/2018 10	60	346.8	Scheduled FGD/HRSG Maintenance
06/20/2018 11	60	336.1	Scheduled FGD/HRSG Maintenance
06/20/2018 12	60	326.2	Scheduled FGD/HRSG Maintenance
06/20/2018 13	60	343.2	Scheduled FGD/HRSG Maintenance

06/20/2018 14	60	345.9	Scheduled FGD/HRSG Maintenance
06/20/2018 15	60	333.8	Scheduled FGD/HRSG Maintenance
06/20/2018 16	60	335.2	Scheduled FGD/HRSG Maintenance
06/20/2018 17	60	316.2	Scheduled FGD/HRSG Maintenance
06/20/2018 18	60	313.1	Scheduled FGD/HRSG Maintenance
06/20/2018 19	60	302.9	Scheduled FGD/HRSG Maintenance
06/20/2018 20	60	296.1	Scheduled FGD/HRSG Maintenance
06/20/2018 21	60	288.5	Scheduled FGD/HRSG Maintenance
06/20/2018 22	60	283	Scheduled FGD/HRSG Maintenance
06/20/2018 23	60	350.8	Scheduled FGD/HRSG Maintenance
06/21/2018 00	60	375.6	Scheduled FGD/HRSG Maintenance
06/21/2018 01	60	368.9	Scheduled FGD/HRSG Maintenance
06/21/2018 02	60	394.6	Scheduled FGD/HRSG Maintenance
06/21/2018 03	60	379.8	Scheduled FGD/HRSG Maintenance
06/21/2018 04	60	359.4	Scheduled FGD/HRSG Maintenance
06/21/2018 05	60	355.6	Scheduled FGD/HRSG Maintenance
06/21/2018 06	60	340.7	Scheduled FGD/HRSG Maintenance
06/21/2018 07	60	331.8	Scheduled FGD/HRSG Maintenance
06/21/2018 08	60	328.8	Scheduled FGD/HRSG Maintenance
06/21/2018 09	60	268.6	Scheduled FGD/HRSG Maintenance
06/21/2018 10	60	251.2	Scheduled FGD/HRSG Maintenance
06/21/2018 11	60	246.4	Scheduled FGD/HRSG Maintenance
06/21/2018 12	60	352.7	Scheduled FGD/HRSG Maintenance
06/21/2018 13	60	317.8	Scheduled FGD/HRSG Maintenance
06/21/2018 14	60	303.9	Scheduled FGD/HRSG Maintenance
06/21/2018 15	60	313.1	Scheduled FGD/HRSG Maintenance
06/21/2018 16	60	299	Scheduled FGD/HRSG Maintenance
06/21/2018 17	60	292.7	Scheduled FGD/HRSG Maintenance
06/21/2018 18	60	281.8	Scheduled FGD/HRSG Maintenance
06/21/2018 19	60	270.9	Scheduled FGD/HRSG Maintenance
06/21/2018 20	60	257.6	Scheduled FGD/HRSG Maintenance
06/21/2018 21	60	247.2	Scheduled FGD/HRSG Maintenance
06/21/2018 22	60	236.4	Scheduled FGD/HRSG Maintenance
06/21/2018 23	60	302.8	Scheduled FGD/HRSG Maintenance
06/22/2018 00	60	337	Scheduled FGD/HRSG Maintenance
06/22/2018 01	60	339.6	Scheduled FGD/HRSG Maintenance
06/22/2018 02	60	332.6	Scheduled FGD/HRSG Maintenance
06/22/2018 03	60	382.1	Scheduled FGD/HRSG Maintenance
06/22/2018 04	60	371.1	Scheduled FGD/HRSG Maintenance
06/22/2018 05	60	344.6	Scheduled FGD/HRSG Maintenance
06/22/2018 06	60	355.9	Scheduled FGD/HRSG Maintenance
06/22/2018 07	60	363	Scheduled FGD/HRSG Maintenance
06/22/2018 08	60	336.8	Scheduled FGD/HRSG Maintenance
06/22/2018 09	60	319.3	Scheduled FGD/HRSG Maintenance
06/22/2018 10	60	329	Scheduled FGD/HRSG Maintenance
06/22/2018 11	60	338.5	Scheduled FGD/HRSG Maintenance
06/22/2018 12	60	338.5	Scheduled FGD/HRSG Maintenance
06/22/2018 13	60	332.9	Scheduled FGD/HRSG Maintenance
06/22/2018 14	60	329.1	Scheduled FGD/HRSG Maintenance
06/22/2018 15	60	320.5	Scheduled FGD/HRSG Maintenance
06/22/2018 16	60	318.6	Scheduled FGD/HRSG Maintenance
06/22/2018 17	60	285.3	Scheduled FGD/HRSG Maintenance
06/22/2018 18	60	313.2	Scheduled FGD/HRSG Maintenance
06/22/2018 19	60	313.1	Scheduled FGD/HRSG Maintenance
06/22/2018 20	60	300.1	Scheduled FGD/HRSG Maintenance
06/22/2018 21	60	254.4	Scheduled FGD/HRSG Maintenance
06/22/2018 22	60	246.7	Scheduled FGD/HRSG Maintenance
06/22/2018 23	60	346.8	Scheduled FGD/HRSG Maintenance
06/23/2018 00	60	318.4	Scheduled FGD/HRSG Maintenance
06/23/2018 01	60	332.5	Scheduled FGD/HRSG Maintenance
06/23/2018 02	60	318.9	Scheduled FGD/HRSG Maintenance
06/23/2018 03	60	319.7	Scheduled FGD/HRSG Maintenance
06/23/2018 04	60	294.5	Scheduled FGD/HRSG Maintenance
06/23/2018 05	60	281.9	Scheduled FGD/HRSG Maintenance

06/23/2018 06	60	273	Scheduled FGD/HRSG Maintenance
06/23/2018 07	60	311	Scheduled FGD/HRSG Maintenance
06/23/2018 08	60	296.2	Scheduled FGD/HRSG Maintenance
06/23/2018 09	60	280.7	Scheduled FGD/HRSG Maintenance
06/23/2018 10	60	446.4	Scheduled FGD/HRSG Maintenance
06/23/2018 11	60	442.3	Scheduled FGD/HRSG Maintenance
06/23/2018 12	60	399.3	Scheduled FGD/HRSG Maintenance
06/23/2018 13	60	380.1	Scheduled FGD/HRSG Maintenance
06/23/2018 14	60	387.4	Scheduled FGD/HRSG Maintenance
06/23/2018 15	60	389.2	Scheduled FGD/HRSG Maintenance
06/23/2018 16	60	336.7	Scheduled FGD/HRSG Maintenance
06/23/2018 17	60	323.6	Scheduled FGD/HRSG Maintenance
06/23/2018 18	60	304.8	Scheduled FGD/HRSG Maintenance
06/23/2018 19	60	300.2	Scheduled FGD/HRSG Maintenance
06/23/2018 20	60	294.4	Scheduled FGD/HRSG Maintenance
06/23/2018 21	60	293	Scheduled FGD/HRSG Maintenance
06/23/2018 22	60	281.5	Scheduled FGD/HRSG Maintenance
06/23/2018 23	60	407.1	Scheduled FGD/HRSG Maintenance
06/24/2018 00	60	374.7	Scheduled FGD/HRSG Maintenance
06/24/2018 01	60	406.1	Scheduled FGD/HRSG Maintenance
06/24/2018 02	60	364.2	Scheduled FGD/HRSG Maintenance
06/24/2018 03	60	451.3	Scheduled FGD/HRSG Maintenance
06/24/2018 04	60	387	Scheduled FGD/HRSG Maintenance
06/24/2018 05	60	393.6	Scheduled FGD/HRSG Maintenance
06/24/2018 06	60	374.2	Scheduled FGD/HRSG Maintenance
06/24/2018 07	60	380.9	Scheduled FGD/HRSG Maintenance
06/24/2018 08	60	399.9	Scheduled FGD/HRSG Maintenance
06/24/2018 09	60	367.6	Scheduled FGD/HRSG Maintenance
06/24/2018 10	60	353.4	Scheduled FGD/HRSG Maintenance
06/24/2018 11	60	358.5	Scheduled FGD/HRSG Maintenance
06/24/2018 12	60	355.1	Scheduled FGD/HRSG Maintenance
06/24/2018 13	60	359.8	Scheduled FGD/HRSG Maintenance
06/24/2018 14	60	379.8	Scheduled FGD/HRSG Maintenance
06/24/2018 15	60	370.5	Scheduled FGD/HRSG Maintenance
06/24/2018 16	60	360.5	Scheduled FGD/HRSG Maintenance
06/24/2018 17	60	351.6	Scheduled FGD/HRSG Maintenance
06/24/2018 18	60	349.2	Scheduled FGD/HRSG Maintenance
06/24/2018 19	60	289.6	Scheduled FGD/HRSG Maintenance
06/24/2018 20	60	283.8	Scheduled FGD/HRSG Maintenance
06/24/2018 21	60	277.9	Scheduled FGD/HRSG Maintenance
06/24/2018 22	60	271.1	Scheduled FGD/HRSG Maintenance
06/24/2018 23	60	382.4	Scheduled FGD/HRSG Maintenance
06/25/2018 00	60	339.9	Scheduled FGD/HRSG Maintenance
06/25/2018 01	60	312.7	Scheduled FGD/HRSG Maintenance
06/25/2018 02	60	306.8	Scheduled FGD/HRSG Maintenance
06/25/2018 03	60	288.2	Scheduled FGD/HRSG Maintenance
06/25/2018 04	60	283.9	Scheduled FGD/HRSG Maintenance
06/25/2018 05	60	271.7	Scheduled FGD/HRSG Maintenance
06/25/2018 06	60	264.5	Scheduled FGD/HRSG Maintenance
06/25/2018 07	60	292	Scheduled FGD/HRSG Maintenance
06/25/2018 08	60	400.7	Scheduled FGD/HRSG Maintenance
06/25/2018 09	60	363.5	Scheduled FGD/HRSG Maintenance
06/25/2018 10	60	353.2	Scheduled FGD/HRSG Maintenance
06/25/2018 11	60	338.6	Scheduled FGD/HRSG Maintenance
06/25/2018 12	60	327.2	Scheduled FGD/HRSG Maintenance
06/25/2018 13	60	305.8	Scheduled FGD/HRSG Maintenance
06/25/2018 14	60	303.4	Scheduled FGD/HRSG Maintenance
06/25/2018 15	60	291.7	Scheduled FGD/HRSG Maintenance
06/25/2018 16	60	287.5	Scheduled FGD/HRSG Maintenance
06/25/2018 17	60	291.1	Scheduled FGD/HRSG Maintenance
06/25/2018 18	60	281.1	Scheduled FGD/HRSG Maintenance
06/25/2018 19	60	276.9	Scheduled FGD/HRSG Maintenance
06/25/2018 20	60	266.6	Scheduled FGD/HRSG Maintenance
06/25/2018 21	60	258.3	Scheduled FGD/HRSG Maintenance

06/25/2018 22	60	242	Scheduled FGD/HRSG Maintenance
06/25/2018 23	60	298.4	Scheduled FGD/HRSG Maintenance
06/26/2018 00	60	336.8	Scheduled FGD/HRSG Maintenance
06/26/2018 01	60	283.4	Scheduled FGD/HRSG Maintenance
06/26/2018 02	60	343.5	Scheduled FGD/HRSG Maintenance
06/26/2018 03	60	320	Scheduled FGD/HRSG Maintenance
06/26/2018 04	60	359.4	Scheduled FGD/HRSG Maintenance
06/26/2018 05	60	454.7	Scheduled FGD/HRSG Maintenance
06/26/2018 06	60	416.2	Scheduled FGD/HRSG Maintenance
06/26/2018 07	60	386.4	Scheduled FGD/HRSG Maintenance
06/26/2018 08	60	364.4	Scheduled FGD/HRSG Maintenance
06/26/2018 09	60	374.8	Scheduled FGD/HRSG Maintenance
06/26/2018 10	60	332	Scheduled FGD/HRSG Maintenance
06/26/2018 11	60	354.7	Scheduled FGD/HRSG Maintenance
06/26/2018 12	60	326.3	Scheduled FGD/HRSG Maintenance
06/26/2018 13	60	345.6	Scheduled FGD/HRSG Maintenance
06/26/2018 14	60	301.2	Scheduled FGD/HRSG Maintenance
06/26/2018 15	60	306.7	Scheduled FGD/HRSG Maintenance
06/26/2018 16	60	304.3	Scheduled FGD/HRSG Maintenance
06/26/2018 17	60	296.7	Scheduled FGD/HRSG Maintenance
06/26/2018 18	60	284.2	Scheduled FGD/HRSG Maintenance
06/26/2018 19	60	278.7	Scheduled FGD/HRSG Maintenance
06/26/2018 20	60	268.1	Scheduled FGD/HRSG Maintenance
06/26/2018 21	60	263.3	Scheduled FGD/HRSG Maintenance
06/26/2018 22	60	252.4	Scheduled FGD/HRSG Maintenance
06/26/2018 23	60	335.9	Scheduled FGD/HRSG Maintenance
06/27/2018 00	60	310.5	Scheduled FGD/HRSG Maintenance
06/27/2018 01	60	277.3	Scheduled FGD/HRSG Maintenance
06/27/2018 02	60	259.6	Scheduled FGD/HRSG Maintenance
06/27/2018 03	60	319.3	Scheduled FGD/HRSG Maintenance
06/27/2018 04	60	318.7	Scheduled FGD/HRSG Maintenance
06/27/2018 05	60	467.6	Scheduled FGD/HRSG Maintenance
06/27/2018 06	60	435.9	Scheduled FGD/HRSG Maintenance
06/27/2018 07	60	404.5	Scheduled FGD/HRSG Maintenance
06/27/2018 08	60	375.9	Scheduled FGD/HRSG Maintenance
06/27/2018 09	60	380	Scheduled FGD/HRSG Maintenance
06/27/2018 10	60	369.4	Scheduled FGD/HRSG Maintenance
06/27/2018 11	60	395	Scheduled FGD/HRSG Maintenance
06/27/2018 12	60	384.8	Scheduled FGD/HRSG Maintenance
06/27/2018 13	60	344.2	Scheduled FGD/HRSG Maintenance
06/27/2018 14	60	342.8	Scheduled FGD/HRSG Maintenance
06/27/2018 15	60	318.6	Scheduled FGD/HRSG Maintenance
06/27/2018 16	60	298.6	Scheduled FGD/HRSG Maintenance
06/27/2018 17	60	285.8	Scheduled FGD/HRSG Maintenance
06/27/2018 18	60	274.4	Scheduled FGD/HRSG Maintenance
06/27/2018 19	60	274.9	Scheduled FGD/HRSG Maintenance
06/27/2018 20	60	306.8	Scheduled FGD/HRSG Maintenance
06/27/2018 21	60	296.1	Scheduled FGD/HRSG Maintenance
06/27/2018 22	60	284.8	Scheduled FGD/HRSG Maintenance
06/27/2018 23	60	318.4	Scheduled FGD/HRSG Maintenance
06/28/2018 00	60	330.6	Scheduled FGD/HRSG Maintenance
06/28/2018 01	60	334.8	Scheduled FGD/HRSG Maintenance
06/28/2018 02	60	340	Scheduled FGD/HRSG Maintenance
06/28/2018 03	60	347.8	Scheduled FGD/HRSG Maintenance
06/28/2018 04	60	486.2	Scheduled FGD/HRSG Maintenance
06/28/2018 05	60	435.2	Scheduled FGD/HRSG Maintenance
06/28/2018 06	60	435.5	Scheduled FGD/HRSG Maintenance
06/28/2018 07	60	414.8	Scheduled FGD/HRSG Maintenance
06/28/2018 08	60	418.8	Scheduled FGD/HRSG Maintenance
06/28/2018 09	60	408.1	Scheduled FGD/HRSG Maintenance
06/28/2018 10	60	395.4	Scheduled FGD/HRSG Maintenance
06/28/2018 11	60	394.6	Scheduled FGD/HRSG Maintenance
06/28/2018 12	60	373.1	Scheduled FGD/HRSG Maintenance
06/28/2018 13	60	328.5	Scheduled FGD/HRSG Maintenance

06/28/2018 14	60	321.1	Scheduled FGD/HRSG Maintenance
06/28/2018 15	60	312.3	Scheduled FGD/HRSG Maintenance
06/28/2018 16	60	311.2	Scheduled FGD/HRSG Maintenance
06/28/2018 17	60	331.8	Scheduled FGD/HRSG Maintenance
06/28/2018 18	60	286.6	Scheduled FGD/HRSG Maintenance
06/28/2018 19	60	268.9	Scheduled FGD/HRSG Maintenance
06/28/2018 20	60	266.4	Scheduled FGD/HRSG Maintenance
06/28/2018 21	60	265.6	Scheduled FGD/HRSG Maintenance
06/28/2018 22	60	252.8	Scheduled FGD/HRSG Maintenance
06/28/2018 23	60	334.1	Scheduled FGD/HRSG Maintenance
06/29/2018 00	60	332.3	Scheduled FGD/HRSG Maintenance
06/29/2018 01	60	309	Scheduled FGD/HRSG Maintenance
06/29/2018 02	60	279.6	Scheduled FGD/HRSG Maintenance
06/29/2018 03	60	267.1	Scheduled FGD/HRSG Maintenance
06/29/2018 04	60	262.6	Scheduled FGD/HRSG Maintenance
06/29/2018 05	60	411.8	Scheduled FGD/HRSG Maintenance
06/29/2018 06	60	356.7	Scheduled FGD/HRSG Maintenance
06/29/2018 07	60	349.1	Scheduled FGD/HRSG Maintenance
06/29/2018 08	60	348.2	Scheduled FGD/HRSG Maintenance
06/29/2018 09	60	350.5	Scheduled FGD/HRSG Maintenance
06/29/2018 10	60	335	Scheduled FGD/HRSG Maintenance
06/29/2018 11	60	314	Scheduled FGD/HRSG Maintenance
06/29/2018 12	60	312.4	Scheduled FGD/HRSG Maintenance
06/29/2018 13	60	314	Scheduled FGD/HRSG Maintenance
06/29/2018 14	60	311.1	Scheduled FGD/HRSG Maintenance
06/29/2018 15	60	308.6	Scheduled FGD/HRSG Maintenance
06/29/2018 16	60	309.3	Scheduled FGD/HRSG Maintenance
06/29/2018 17	60	292.5	Scheduled FGD/HRSG Maintenance
06/29/2018 18	60	280.9	Scheduled FGD/HRSG Maintenance
06/29/2018 19	60	243	Scheduled FGD/HRSG Maintenance
06/29/2018 20	60	267.7	Scheduled FGD/HRSG Maintenance
06/29/2018 21	60	257.9	Scheduled FGD/HRSG Maintenance
06/29/2018 22	60	248	Scheduled FGD/HRSG Maintenance
06/29/2018 23	60	327.5	Scheduled FGD/HRSG Maintenance
06/30/2018 00	60	318.9	Scheduled FGD/HRSG Maintenance
06/30/2018 01	60	294	Scheduled FGD/HRSG Maintenance
06/30/2018 02	60	282.1	Scheduled FGD/HRSG Maintenance
06/30/2018 03	60	411.7	Scheduled FGD/HRSG Maintenance
06/30/2018 04	60	436.8	Scheduled FGD/HRSG Maintenance
06/30/2018 05	60	362.7	Scheduled FGD/HRSG Maintenance
06/30/2018 06	60	346.5	Scheduled FGD/HRSG Maintenance
06/30/2018 07	60	351.8	Scheduled FGD/HRSG Maintenance
06/30/2018 08	60	347.8	Scheduled FGD/HRSG Maintenance
06/30/2018 09	60	309.7	Scheduled FGD/HRSG Maintenance
06/30/2018 10	60	309.5	Scheduled FGD/HRSG Maintenance
06/30/2018 11	60	303.6	Scheduled FGD/HRSG Maintenance
06/30/2018 12	60	296.8	Scheduled FGD/HRSG Maintenance
06/30/2018 13	60	299.9	Scheduled FGD/HRSG Maintenance
06/30/2018 14	60	294.3	Scheduled FGD/HRSG Maintenance
06/30/2018 15	60	288.5	Scheduled FGD/HRSG Maintenance
06/30/2018 16	60	278.6	Scheduled FGD/HRSG Maintenance
06/30/2018 17	60	271.3	Scheduled FGD/HRSG Maintenance
06/30/2018 18	60	271	Scheduled FGD/HRSG Maintenance
06/30/2018 19	60	265.2	Scheduled FGD/HRSG Maintenance
06/30/2018 20	60	260.8	Scheduled FGD/HRSG Maintenance
06/30/2018 21	60	251	Scheduled FGD/HRSG Maintenance
06/30/2018 22	60	239.4	Scheduled FGD/HRSG Maintenance
06/30/2018 23	60	315.3	Scheduled FGD/HRSG Maintenance

Semi-Annual Excess Emissions and Monitoring System Performance Report

for

Bypass Vent Stack CEMS on Stacks 5 and 6

1st Semi-Annual Period of 2018

Prepared for:
Haverhill Coke Company, LLC
Franklin Furnace, Ohio

Prepared by:
AECOM
Oak Ridge, Tennessee

July 2018

BYPASS VENT STACK 5
1st Quarter of 2018
EXCESS EMISSIONS AND MONITORING SYSTEM PERFORMANCE REPORT

EER and Performance Summary Report for Bypass Vent Stack 5 CEMS

EMISSION EXCEEDANCES SUMMARY REPORT
HAVERHILL COKE COMPANY, OH
Reporting Period: 1st Quarter of 2018

Facility ID: 0773000182
Emissions Unit ID: P901
Emissions Unit: Bypass Vent Stack 5

SO_2 Emission Limits :
420 lb/hr on a 3-hr block average basis
323 lb/hr on a 48-hr rolling average basis

Date/Time of Commencement	Date/Time of Completion	Duration of Exceedance (hours)	Pollutant	Magnitude (lb/hr)	Reason/s for the Excess Emissions	Corrective action/s taken, or measures taken to minimize emissions
No emission exceedances in this reporting period						

CEMS PERFORMANCE SUMMARY REPORT

HAVERHILL COKE COMPANY, OH

Reporting Period: 1st Quarter of 2018

Facility ID: 0773000182
Emissions Unit ID: P901
Emissions Unit: Bypass Vent Stack 5

Performance Summary	SO2 lb/hr
1. Total clock time in reporting period=	2,160 hr
2. Duration of bypass venting from Stack 5 =	554 hr
3. CEMS downtime[1] in reporting period due to:	
a. Monitor equipment malfunctions =	0 hr
b. Non-monitor equipment malfunctions =	0 hr
c. Quality assurance calibration =	7.4 hr
d. Other known causes =	8.5 hr
e. Unknown causes =	0 hr
4. Total CEMS downtime[1] =	15.9 hr
5. Percent Monitor Downtime[1] =	2.9%
6. Percent Monitor Online[1] =	97.1%
7. Percent Monitor Downtime[1] (excluding QA calibration) =	**1.5%**
8. Percent Monitor Online[1] (excluding QA calibration) =	**98.5%**

[1] CEMS downtime only reported during bypass stack 5 venting (i.e stack lid was open)

CEMS INSTRUMENT DOWNTIME REPORT

HAVERHILL COKE COMPANY, OH

Reporting Period: 1st Quarter of 2018

Facility ID: 0773000182
Emissions Unit ID: P901
Emissions Unit: Bypass Vent Stack 5

Date	Time of Commencement	Duration of Downtime (hours)	Parameter	Reasons for Downtime	Nature of system repairs and adjustments
Entire reporting period while bypass stack 5 lid was open		7.37	SO2 lb/hr	Quality assurance calibration	Calibration checks and probe blowbacks while the bypass stack 5 lid was open
03/06/18	7:58	2.85	SO2 lb/hr	Other known causes	Preventive maintenance on the CEMS prior to RATA testing
03/15/18	16:07	0.62	SO2 lb/hr	Other known causes	Power failure. No corrective actions necessary
03/15/18	20:24	2.18	SO2 lb/hr	Other known causes	Power failure. No corrective actions necessary
03/21/18	15:53	0.93	SO2 lb/hr	Other known causes	Power failure. No corrective actions necessary
03/21/18	21:26	0.95	SO2 lb/hr	Other known causes	Power failure. No corrective actions necessary
03/27/18	3:09	0.98	SO2 lb/hr	Other known causes	Power failure. No corrective actions necessary
Total		15.9			

BYPASS VENT STACK 5
2nd Quarter of 2018
EXCESS EMISSIONS AND MONITORING SYSTEM PERFORMANCE REPORT

EER and Performance Summary Report for Bypass Vent Stack 5 CEMS

EMISSION EXCEEDANCES SUMMARY REPORT

HAVERHILL COKE COMPANY, OH
Reporting Period: 2nd Quarter of 2018

Facility ID: 0773000182
Emissions Unit ID: P901
Emissions Unit: Bypass Vent Stack 5

SO_2 Emission Limits :
420 lb/hr on a 3-hr block average basis
323 lb/hr on a 48-hr rolling average basis

Date/Time of Commencement	Date/Time of Completion	Duration of Exceedance (hours)	Pollutant	Magnitude (lb/hr)	Reason/s for the Excess Emissions	Corrective action/s taken, or measures taken to minimize emissions
No emission exceedances in this reporting period						

CEMS PERFORMANCE SUMMARY REPORT

HAVERHILL COKE COMPANY, OH

Reporting Period: 2nd Quarter of 2018

Facility ID: 0773000182
Emissions Unit ID: P901
Emissions Unit: Bypass Vent Stack 5

Performance Summary	SO2 lb/hr
1. Total clock time in reporting period=	2,184 hr
2. Duration of bypass venting from Stack 5 =	0.85 hr
3. CEMS downtime[1] in reporting period due to:	
a. Monitor equipment malfunctions =	0 hr
b. Non-monitor equipment malfunctions =	0 hr
c. Quality assurance calibration =	0.4 hr
d. Other known causes =	0.0 hr
e. Unknown causes =	0 hr
4. Total CEMS downtime[1] =	0.4 hr
5. Percent Monitor Downtime[1] =	47.1%
6. Percent Monitor Online[1] =	52.9%
7. Percent Monitor Downtime[1] (excluding QA calibration) =	**0.0%**
8. Percent Monitor Online[1] (excluding QA calibration) =	**100.0%**

[1] CEMS downtime only reported during bypass stack 5 venting (i.e stack lid was open)

CEMS INSTRUMENT DOWNTIME REPORT

HAVERHILL COKE COMPANY, OH

Reporting Period: 2nd Quarter of 2018

Facility ID: 0773000182
Emissions Unit ID: P901
Emissions Unit: Bypass Vent Stack 5

Date	Time of Commencement	Duration of Downtime (hours)	Parameter	Reasons for Downtime	Nature of system repairs and adjustments
Entire reporting period while bypass stack 5 lid was open		0.40	SO2 lb/hr	Quality assurance calibration	Calibration checks and probe blowbacks while the bypass stack 5 lid was open
Total		0.4			

BYPASS VENT STACK 6
1st Quarter of 2018
EXCESS EMISSIONS AND MONITORING SYSTEM PERFORMANCE REPORT

EER and Performance Summary Report for Bypass Vent Stack 6 CEMS

EMISSION EXCEEDANCES SUMMARY REPORT
HAVERHILL COKE COMPANY, OH
Reporting Period: 1st Quarter of 2018

Facility ID: 0773000182
Emissions Unit ID: P902
Emissions Unit: Bypass Vent Stack 6

SO_2 Emission Limits :
420 lb/hr on a 3-hr block average basis
323 lb/hr on a 48-hr rolling average basis

Date/Time of Commencement	Date/Time of Completion	Duration of Exceedance (hours)	Pollutant	Magnitude (lb/hr)	Reason/s for the Excess Emissions	Corrective action/s taken, or measures taken to minimize emissions
No emission exceedances in this reporting period						

CEMS PERFORMANCE SUMMARY REPORT

HAVERHILL COKE COMPANY, OH

Reporting Period: 1st Quarter of 2018

Facility ID: 0773000182
Emissions Unit ID: P902
Emissions Unit: Bypass Vent Stack 6

Performance Summary	SO2 lb/hr
1. Total clock time in reporting period=	2,160 hr
2. Duration of bypass venting from Stack 6 =	16.78 hr
3. CEMS downtime[1] in reporting period due to:	
a. Monitor equipment malfunctions =	0 hr
b. Non-monitor equipment malfunctions =	0 hr
c. Quality assurance calibration =	0.5 hr
d. Other known causes =	0.03 hr
e. Unknown causes =	0 hr
4. Total CEMS downtime[1] =	0.53 hr
5. Percent Monitor Downtime[1] =	3.2%
6. Percent Monitor Online[1] =	96.8%
7. Percent Monitor Downtime[1] (excluding QA calibration) =	**0.2%**
8. Percent Monitor Online[1] (excluding QA calibration) =	**99.8%**

[1] CEMS downtime only reported during bypass Stack 6 venting (i.e stack lid was open)

CEMS INSTRUMENT DOWNTIME REPORT

HAVERHILL COKE COMPANY, OH

Reporting Period: 1st Quarter of 2018

Facility ID: 0773000182
Emissions Unit ID: P902
Emissions Unit: Bypass Vent Stack 6

Date	Time of Commencement	Duration of Downtime (hours)	Parameter	Reasons for Downtime	Nature of system repairs and adjustments
Entire reporting period while bypass Stack 6 lid was open		0.50	SO2 lb/hr	Quality assurance calibration	Calibration checks and probe blowbacks while the bypass Stack 6 lid was open
01/29/18	11:51	0.03	SO2 lb/hr	Other known causes	No full clock minutes of data available in this period
Total		0.5			

BYPASS VENT STACK 6
2nd Quarter of 2018
EXCESS EMISSIONS AND MONITORING SYSTEM PERFORMANCE REPORT

EER and Performance Summary Report for Bypass Vent Stack 6 CEMS

EMISSION EXCEEDANCES SUMMARY REPORT
HAVERHILL COKE COMPANY, OH
Reporting Period: 2nd Quarter of 2018

Facility ID: 0773000182
Emissions Unit ID: P902
Emissions Unit: Bypass Vent Stack 6

SO_2 Emission Limits :
420 lb/hr on a 3-hr block average basis
323 lb/hr on a 48-hr rolling average basis

Date/Time of Commencement	Date/Time of Completion	Duration of Exceedance (hours)	Pollutant	Magnitude (lb/hr)	Reason/s for the Excess Emissions	Corrective action/s taken, or measures taken to minimize emissions
No emission exceedances in this reporting period						

CEMS PERFORMANCE SUMMARY REPORT

HAVERHILL COKE COMPANY, OH

Reporting Period: 2nd Quarter of 2018

Facility ID: 0773000182
Emissions Unit ID: P902
Emissions Unit: Bypass Vent Stack 6

Performance Summary	SO2 lb/hr
1. Total clock time in reporting period=	2,184 hr
2. Duration of bypass venting from Stack 6 =	655 hr
3. CEMS downtime[1] in reporting period due to:	
a. Monitor equipment malfunctions =	0 hr
b. Non-monitor equipment malfunctions =	0 hr
c. Quality assurance calibration =	7.9 hr
d. Other known causes =	4.05 hr
e. Unknown causes =	0 hr
4. Total CEMS downtime[1] =	11.98 hr
5. Percent Monitor Downtime[1] =	1.8%
6. Percent Monitor Online[1] =	98.2%
7. Percent Monitor Downtime[1] (excluding QA calibration) =	**0.6%**
8. Percent Monitor Online[1] (excluding QA calibration) =	**99.4%**

[1] CEMS downtime only reported during bypass Stack 6 venting (i.e stack lid was open)

CEMS INSTRUMENT DOWNTIME REPORT

HAVERHILL COKE COMPANY, OH

Reporting Period: 2nd Quarter of 2018

Facility ID: 0773000182
Emissions Unit ID: P902
Emissions Unit: Bypass Vent Stack 6

Date	Time of Commencement	Duration of Downtime (hours)	Parameter	Reasons for Downtime	Nature of system repairs and adjustments
Entire reporting period while bypass Stack 6 lid was open		7.93	SO2 lb/hr	Quality assurance calibration	Calibration checks and probe blowbacks while the bypass Stack 6 lid was open
06/11/18	16:58	1.85	SO2 lb/hr	Other known causes	Preventive maintenance on CEMS prior to RATA
06/13/18	13:09	2.20	SO2 lb/hr	Other known causes	Power failure. No corrective actions necessary
Total		11.98			

QUARTERLY QA/QC ASSESSMENTS

NOTE:

No CGA for Stack 5 CEMS in the 1st quarter. A RATA was conducted instead. RATA Report has been submitted to the OEPA previously.

No CGA for Stack 6 CEMS in the 2nd quarter. A RATA was conducted instead. RATA Report has been submitted to the OEPA previously.

Cylinder Gas Audit

Plant: Haverhill North Coke Company

Report Period: 01/01/2018 00:00 Through 06/30/2018 23:59

Source: UNIT3
Parameter: SO2ADJ
Instrument Span: 1000.000

Test Date/Time: 06/13/18 14:27
Test Result: **Pass**
Aborted?: No

Time	CEMS Value	Audit Value	Difference	% of Audit Value
Low-Level				
06/13/18 14:00	245.300	249.400	-4.100	-1.6
06/13/18 14:11	247.700	249.400	-1.700	-0.7
06/13/18 14:22	248.100	249.400	-1.300	-0.5

CEMS Mean (Cm): 247.033
Audit Mean (Ca): 249.400
Accuracy (A) in %: -0.9
Mean Difference: -2.4
APS Indicator: 0

Cylinder #: CC51164
Cylinder Exp. Date: 06/09/2023

Time	CEMS Value	Audit Value	Difference	% of Audit Value
Mid-Level				
06/13/18 14:05	568.900	569.400	-0.500	-0.1
06/13/18 14:16	571.300	569.400	1.900	0.3
06/13/18 14:27	571.100	569.400	1.700	0.3

CEMS Mean (Cm): 570.433
Audit Mean (Ca): 569.400
Accuracy (A) in %: 0.2
Mean Difference: 1.0
APS Indicator: 0

Cylinder #: CC50199
Cylinder Exp. Date: 03/27/2023

Cylinder Gas Audit

Plant: Haverhill North Coke Company

Report Period: 01/01/2018 00:00 Through 06/30/2018 23:59

Source: UNIT4
Parameter: SO2ADJ
Instrument Span: 1000.000

Test Date/Time: 03/07/18 21:46
Test Result: **Pass**
Aborted?: No

Time	CEMS Value	Audit Value	Difference	% of Audit Value
Low-Level				
03/07/18 21:20	218.100	254.600	-36.500	-14.3
03/07/18 21:30	240.300	254.600	-14.300	-5.6
03/07/18 21:41	253.100	254.600	-1.500	-0.6

CEMS Mean (Cm): 237.167
Audit Mean (Ca): 254.600
Accuracy (A) in %: -6.8
Mean Difference: -17.4
APS Indicator: 0

Cylinder #: CC259124
Cylinder Exp. Date: 10/26/2020

Time	CEMS Value	Audit Value	Difference	% of Audit Value
Mid-Level				
03/07/18 21:24	499.600	553.800	-54.200	-9.8
03/07/18 21:35	530.400	553.800	-23.400	-4.2
03/07/18 21:46	542.300	553.800	-11.500	-2.1

CEMS Mean (Cm): 524.100
Audit Mean (Ca): 553.800
Accuracy (A) in %: -5.4
Mean Difference: -29.7
APS Indicator: 0

Cylinder #: SG9182072BAL
Cylinder Exp. Date: 06/08/2023