IN SITU HYDRAULIC CONDUCTIVITY TESTS FOR COMPACTED CLAY

by David E. Daniel[1], Member, ASCE

ABSTRACT

This paper summarizes the state of the art for in situ hydraulic conductivity testing of compacted clay soils. Nine methods of testing are reviewed: (1) the Boutwell permeameter; (2) constant-head borehole permeameters such as the Guelph permeameter; (3) porous probes, e.g., the BAT device; (4) open, single-ring infiltrometers; (5) open, double-ring infiltrometers; (6) closed, single-ring infiltrometers, (7) sealed, double-ring infiltrometers; (8) the air-entry permeameter; and (9) lysimeter pans. Installation procedures are given, equations for calculating hydraulic conductivity are presented, simplifying assumptions are listed, and case histories are reviewed.

Each type of permeameter has advantages. The Boutwell permeameter is especially convenient for measurement of the vertical and horizontal hydraulic conductivity. Borehole permeameters and porous probes provide data relatively quickly but permeate a relatively small volume of soil. Of the permeameters that can permeate large volumes of soil, the sealed double-ring infiltrometer and pan lysimeter are the most versatile.

INTRODUCTION

Laboratory tests have been used extensively to investigate the hydraulic conductivity of compacted clay (Lambe, 1954 and 1958; Mitchell, Hooper, and Campanella, 1965; Boynton and Daniel, 1985; and others). However, laboratory devices can only permeate relatively small specimens of soil; in situ tests offer the opportunity to test larger, more representative volumes of material and to include flow through secondary features, such as macropores, fissures, and slickensides, in a manner that often cannot be simulated properly in small, laboratory test specimens.

As shown in Fig. 1, in situ permeameters fall into four categories. Borehole and porous probe devices have been used extensively to permeate naturally-occurring, clayey soils. Infiltrometers and lysimeters have been routinely installed in relatively permeable, agricultural soils. However, in situ permeameters have only recently been used in compacted

[1] Assoc. Prof. of Civil Engrg., Univ. of Texas, Austin, TX 78712

clay soils, which are very difficult to test because of their low hydraulic conductivity, incomplete saturation with water, and capillary suctions that influence the test results.

This paper describes the state of the art for in situ hydraulic conductivity testing of compacted clay soils. Methods of testing are discussed, techniques for data reduction are presented, the relative advantages and disadvantages of the methods of testing are compared, and case histories that illustrate practical experience with each permeameter are summarized.

BOREHOLE TESTS

Boutwell Permeameter

Method. A two-stage, borehole hydraulic conductivity test was developed by Boutwell and is described by Soil Testing Engineers (1983) and Boutwell and Derick (1986). The concept is that by varying the geometry of the wetted zone, the relative effect of vertical and horizontal conductivities is varied in a calculable manner. The test is illustrated schematically in Fig. 2. The device is installed by drilling a hole, placing a casing in the hole, and sealing the annular space between the casing and borehole with grout. Falling-head tests are performed, and the hydraulic conductivity from Stage I (k_1) is computed from the appropriate Hvorslev (1949) equation as follows:

$$k_1 = \frac{\pi d^2}{11 D (t_2 - t_1)} \ln(H_1/H_2) \qquad (1)$$

The values of k_1 are plotted vs time. When steady conditions are reached (which typically takes from a few days to 2 weeks), Stage I of the test is complete.

Next, the hole is deepened by augering or by pushing a thin-walled sampling tube into the soil. Smeared soil is removed from the surface of the hole, e.g., with a wire brush. The permeameter is reassembled, and falling-head tests are again performed. The hydraulic conductivity from Stage II (k_2) is calculated from Hvorslev's (1949) equations as follows:

$K = \frac{r^2 \ln(L/R)}{2LT_0}$

$$k_2 = \frac{A}{B} \ln(H_1/H_2) \tag{2}$$

where

$$A = d^2 \{\ln [\frac{L}{D} + \sqrt{1 + (L/D)^2}]\} \tag{3}$$

$$B = 8 D \frac{L}{D} (t_2 - t_1) \{1 - 0.562 \exp[-1.57(L/d)]\} \tag{4}$$

Stage II continues until k_2 ceases to change significantly .

Next, one accounts for anisotropy by relating the ratio k_2/k_1 to the degree of anisotropy. This is done by selecting values of m, where m is defined as:

$$m = \sqrt{k_h/k_v} \tag{5}$$

(k_h and k_v are the hydraulic conductivities in the horizontal and vertical directions, respectively) and calculating the corresponding values of k_2/k_1 from the expression:

$$\frac{k_2}{k_1} = \frac{\ln [\frac{L}{D} + \sqrt{1 + (L/D)^2}]}{\ln [\frac{m L}{D} + \sqrt{1 + (m L/D)^2}]} \tag{6}$$

Values of k_2/k_1 are plotted versus m and L/D in Fig. 3. The value of m that corresponds to the actual value of k_2/k_1 is found from this graph. The hydraulic conductivities in the vertical and horizontal directions are computed as follows:

$$k_h = m k_1 \tag{7}$$

$$k_v = \frac{1}{m} k_1 \tag{8}$$

<u>Assumptions</u>. The critical assumptions are that the soil is homogeneous and uniformly soaked with water; soil is not smeared across the surface; the pore water pressure is zero at the base of the permeameter (Stage I) or the center of the uncased section (Stage II); boundaries are at infinity; effects of soil suction are negligible; steady conditions are reached in the two stages; the soil undergoes no volume change during a falling-head test; and Hvorslev's (1949) equations are correct. The failure of the method to account for soil suction can be an important limitation for relatively dry soils.

$$F_1 = \frac{4.117\,[R^2 - 1]}{\ln[R + \sqrt{R^2-1}] - \sqrt{1 - (1/R^2)}} \tag{10}$$

$$F_2 = \frac{4.280}{\ln[R + \sqrt{R^2-1}]} \tag{11}$$

$$A = \frac{1}{2}\,\alpha\, r \tag{12}$$

and α is a parameter (units of L^{-1}) called the "sorptive number" that is a measure of the capillary (suction) properties of the soil and has a typical value of 0.002 cm^{-1} (Philip, 1985, p. 1026) to 0.01 cm^{-1} (Elrick, 1988) for fine-grained soil.

2. The k calculated from Eq. 9 should be compared with the value of k computed from Stephens et al.'s (1987) regression analysis of numerical simulations:

$$k = \frac{q}{r\,H\,C_u} \tag{13}$$

where the dimensionless factor C_u is determined as follows from α_v (units of cm^{-1}) and H and r (units of meters):

$$\log_{10}(C_u) = [0.653 \log_{10}(R)] - [0.257 \log_{10}(\alpha_v)] - [0.633 \log_{10}(H)] + [0.021 \sqrt{R}] - [0.313/\sqrt{N}] + [1.456\, r] + 0.453 \tag{14}$$

and where N and α_v are parameters that have values of about 1.8 and 0.002 cm^{-1}, respectively, for fine-grained soils (Stephens et al., 1988, p. 62).

3. A third procedure for calculating k is given by Elrick, Reynolds, and Tan (1988):

$$k = \frac{C\,q}{2\pi H^2 + \pi r^2 C + 2\pi H/\alpha^*} \tag{15}$$

where C is determined from Fig. 6. For practical purposes, α^* (Eq. 15) is equal to α (Eq. 12), although Elrick (1988), who developed Eq. 15, suggests that α^* has a field value of approximately 0.01 cm^{-1} for compacted clay soils.

The borehole test may be continued for a second stage with a higher head in Stage 2, and the method of Reynolds and Elrick (1986, p. 91) used to determine k from the rates of flow (q_1 and q_2) needed to maintain water depths of H_1 and H_2 ($H_2 > H_1$) in Stages 1 and 2:

$$k = G_2 q_2 - G_1 q_1 \tag{16}$$

where:

$$G_2 = \frac{H_1 C_2}{\pi \left[2 H_1 H_2 (H_2 - H_1) + r^2 (H_1 C_2 - H_2 C_1)\right]} \tag{17}$$

$$G_1 = G_2 \frac{H_2 C_1}{H_1 C_2} \tag{18}$$

and C is determined from Fig. 6. However, it is difficult to obtain reliable values of q_2/q_1 in soils with low k because of soil heterogeneities; as the head in the borehole increases, the volume of wetted soil increases, and unless the soil is perfectly homogeneous, the overall k will change. Baumgartner et al. (1987) and Stephens et al. (1988) report calculating negative values of k with Eq. 16. Therefore, the one-stage methods described earlier are recommended instead of the two-stage approach.

Assumptions. The important assumptions are that the soil is homogeneous, isotropic, and uniformly soaked; boundaries are at infinity; soil is not smeared across the surface of the borehole; and the soil does not swell when wetted. The method of data interpretation is more rigorous than with the Boutwell method because soil suction is taken into account, but for highly anisotropic soils, the assumption that $k_h = k_v$ can be a source of error.

Field Data. Reynolds and Elrick (1985) measured hydraulic conductivity with the Guelph permeameter, which utilizes a Mariotte system, on a heterogeneous loam. The average k from 22 tests was 2.5×10^{-4} cm/s, which was within the range of 1.1×10^{-4} cm/s for k_h to 6.4×10^{-4} cm/s for k_v measured in the laboratory on core samples. Baumgartner, Elrick, and Bradshaw (1987) used the Guelph permeameter in a silty clay and obtained a mean k of 2×10^{-7} cm/s.

Stephens et al. (1988) measured k with borehole permeameters of various sizes. Data were also obtained using an air-entry permeameter (see later discussion) and laboratory permeameters. Results for one clay (Ql_2) tested were as follows:

Permeameter	Hydraulic Conductivity (cm/s)
Laboratory	0.1 to 0.5 x 10^{-7}
Air-Entry Permeameter	0.8 to 1 x 10^{-7}
5-cm-Diameter Borehole Permeameter	4 x 10^{-7}
19-cm-Diameter Borehole Permeameter	8 x 10^{-7}

(The values of k for borehole tests were calculated from Eq. 14). The k's from borehole tests were about 10 times larger than values from laboratory tests. Note that the borehole test is expected to produce higher k's than the air-entry permeameter if $k_h > k_v$ and that there may be many causes for differences between laboratory- and field-measured hydraulic conductivities.

Advantages and Disadvantages. Advantages and disadvantages of constant head borehole permeameters are given in Table 1. Consideration of the effects of soil suction and short testing times (a few hours to a few days) are important assets of this type of test. Permeation of a comparatively small volume of soil and difficulty in measuring $k < 10^{-7}$ cm/s are important limitations.

POROUS PROBES

Method. Porous probes are pushed or driven into the soil, and constant- or falling-head tests are performed. Hvorslev's (1949) equations, which apply to saturated, homogeneous, isotropic porous media, are usually used to compute k, although the equations presented earlier for borehole tests could be used. Olson and Daniel (1981) discuss porous probes for measuring

k in saturated clays. The usual configurations of the probe and equations recommended for calculation of k are given in Fig. 7.

Although porous probes have been used widely for measuring k of saturated clay, they have not often been applied to tests on unsaturated, compacted clay. However, one device, known as the BAT permeameter (Torstensson, 1984) has been used for compacted clay. With this device, a porous probe is pushed or driven into the soil beneath the bottom of a borehole, and then casing is brought to the surface. A chamber is lowered down the casing and brought into contact with the porous probe using a hypodermic needle and septum. The chamber contains both air and water. The air in the chamber is pressurized (or evacuated) to any desired pressure. As water flows out of (or into) the probe, the air pressure in the chamber changes. A pressure transducer monitors the pressure change. The quantity of flow and heads are computed from Boyle's Law and the measured change in the gas pressure in the chamber.

Assumptions. It is assumed that the soil is homogeneous, isotropic, uniformly soaked, and incompressible; boundaries are at infinity; soil is not smeared across the surface of the porous element; effects of soil suction are negligible (unless efforts are made to account for suction using methods described earlier for borehole permeameters); conditions are isothermal; there is no effect from dissolutioned gas in the pressure chamber; and Hvorslev's (1949) equations are correct.

Field Data. Chen and Yamamoto (1987) performed tests with the BAT and other permeameters on a highly plastic compacted clay. Average k's were as follows:

Testing Device	Hydraulic Conductivity (cm/s)
Laboratory Cell	$0.7 - 2 \times 10^{-8}$
Sealed Double-Ring Infiltrometer	20×10^{-8}
BAT Permeameter	$0.06 - 0.9 \times 10^{-8}$

(Notes: 1. The sealed double-ring infiltrometer (SDRI) is discussed later. 2. The k's from laboratory tests are for the lowest effective stress used. 3. For the SDRI test, the wetting-front pressure head was taken as zero. 4. The k's for the BAT probe are the values determined prior to ponding.) Results from the BAT permeameter compare well with laboratory k's. Petsonk (1988) reports that the device was used for more than 500 tests at a site in California.

Advantages and Disadvantages. Advantages and disadvantages of the BAT permeameter are listed in Table 1. Fast measurements of low k are the strong point of this device. Many tests can be performed with the BAT permeameter, e.g., for construction control. The small volume of soil tested, plus the danger that soil will be smeared across the porous element, are the main drawbacks. Although the equipment is relatively expensive, the cost per test may be low since many tests can be performed comparatively quickly.

INFILTROMETERS

Open, Single-Ring Infiltrometer

Method. The open, single-ring (Fig. 8) is the simplest infiltrometer. The ring is embedded in a trench that is sealed with a bentonitic grout. The ring is filled with water and monitored to determine the rate of infiltration (I):

$$I = \frac{Q}{A\ t} = \frac{q}{A} \tag{19}$$

where Q is quantity of flow, A is the area of the ring, t is the elapsed time, and q is the rate of flow. If evaporation can occur, a separate ring with an impermeable base is used to measure evaporative losses and to correct the infiltration rate. The quantity of flow is determined by measuring the change in water level in the ring with a hook gauge, scale mounted on the ring, Mariotte bottle (Olson and Daniel, 1981), or other suitable device. A Mariotte device is attractive because the rate of flow is measured while a constant water level is maintained. However, Stewart and Nolan (1987) report that Mariotte systems do not work well for low flow

rates. The author's experience is that Mariotte systems are unreliable for flow rates below about 100 mL/day.

Hydraulic conductivity is calculated from the following equation:

$$k = \frac{I}{i} = \frac{I}{[H + L_f + \psi_f] / L_f} \tag{20}$$

where i is the hydraulic gradient, H is the depth of ponded water, L_f is the depth of the wetting front, and ψ_f is the wetting-front suction head. For a sharp wetting front, the Green-Ampt (1911) model can be used to estimate the wetting-front suction head:

$$\psi_f = \int_0^{\psi_i} \frac{k}{k_{sat}} d\psi \tag{21}$$

where k and k_{sat} are the hydraulic conductivities at a particular suction and at saturation, respectively, and ψ_i is the initial suction. The relationship between k/k_{sat} and ψ can be measured or estimated, or (as is often done), ψ_f can be taken as zero, which leads to overestimation of k. The depth to the wetting front (L_f) is determined from probes in the ground, e.g., tensiometers, or by water content measurements at the end of the test.

If the wetting front does not penetrate below the embedded ring, the water percolates downward one dimensionally. However, once the wetting front passes below the ring, water spreads laterally. Day and Daniel (1985b) describe techniques by which one can account for lateral spreading when calculating k.

Assumptions. The key assumptions are that the soil is homogeneous and uniformly soaked behind a wetting front; the rate of infiltration is sufficiently large that it can be measured accurately; there is no leakage through the seal between the infiltrometer and soil; evaporative losses can be taken into account; either the wetting front does not pass below the bottom of the ring or lateral spreading below the ring is properly considered; the wetting-front suction head can be determined or taken as zero without introducing excessive error; any swelling of the soil

is complete by the time that the final k is determined; and the effect of boundary conditions beneath the ring are negligible.

Field Data. Daniel (1984) and Day and Daniel (1985a) describe several case histories in which open, single-ring infiltrometers were used to measure k in situ:

	Hydraulic Conductivity (cm/s)	
Site	Single-Ring Infiltrometer	"Actual" Field Value
Central Texas	4×10^{-5}	$2 - 5 \times 10^{-5}$
Northern Mexico	2×10^{-7}	1×10^{-6}
Austin, Texas (Clay 1)	2×10^{-5}	9×10^{-6}
Austin, Texas (Clay 2)	4×10^{-6}	4×10^{-6}

The "actual" field values represent field-measured values over much larger areas than the infiltrometers and are assumed to be close to the true average value of k. The comparisons are excellent, but all k's are > 1×10^{-7} cm/s.

Advantages and Disadvantages. The advantages and disadvantages of infiltrometers are listed in Table 1. The strengths of the open, single-ring infiltrometer are low cost and unlimited size; a drawback is the great difficulty in measuring k's less than 10^{-6} to 10^{-7} cm/s because of problems in measuring low flow rates and effects of evaporative losses.

Open, Double-Ring Infiltrometer

Method. Two rings or boxes are sealed in the compacted soil, filled with water, and covered to minimize evaporation. The water levels are usually kept constant using Mariotte systems (Olson and Daniel, 1981). The rate of infiltration from the inner ring is determined from Eq. 19, and k is calculated from Eq. 20 (often with the assumption that $\psi_f = 0$). The purpose of the outer ring is to limit lateral spreading of water originating from the inner ring.

Assumptions. It is assumed that the soil is homogeneous and uniformly wetted; the rate of infiltration is large enough to be measured accurately; evaporative losses are properly taken into account; seepage beneath the inner ring is one dimensional; the wetting front suction can be determined or taken as zero without introducing excessive error; any swelling of the soil is

Advantages and Disadvantages. This device can measure low infiltration rates, but temperature fluctuations and lateral spreading of water can lead to error.

Sealed, Double-Ring Infiltrometer

Method. Daniel and Trautwein (1986) and Trautwein Soil Testing Equipment Co. (1987) describe a sealed, double-ring infiltrometer (SDRI), which consists of a sealed inner ring (0.6 to 2 m wide) and an open outer ring (Fig. 9) that are embedded into trenches and sealed with a bentonitic grout. The rings are filled with water, and a small, flexible bag is attached to the inner ring. The entire SDRI is covered with a tarpaulin, and periodically the bag is removed, weighed, and (when necessary) refilled to determine the quantity of flow. The differential pressure between the inner and outer ring is always zero (unless there are temperature fluctuations) even when the water level in the outer ring fluctuates. Tensiometers are used to monitor the depth of the wetting front, and Eqs. 19 and 20 are used to compute I and k.

Assumptions. The important assumptions are that the soil is homogeneous and uniformly soaked behind a wetting front; the wetting-front suction head can be determined or taken as zero without introducing excessive error; temperature fluctuations in the inner ring are minimal; seepage beneath the inner ring is one dimensional; any swelling of the soil is either complete when the final k is determined or can somehow be taken into account; and the effects of boundaries beneath the rings are negligible.

Field Data. Daniel and Trautwein (1987) and Chen and Yamamoto (1987) found that SDRI-measured k's were about an order of magnitude higher than values measured in the laboratory. The differences may be the result of many effects, including differences of scale, degree of saturation, and others. Trautwein (1988) has unpublished data on more than a dozen case histories that show SDRI-measured k's to be 1 to 10 times laboratory-measured k's. Comparative data reported by Elsbury et al. (1988) showed excellent agreement between k's determined from an SDRI and a large lysimeter pan (see later discussion of lysimeters), which provided an accurate measure of in situ k.

Advantages and Disadvantages. The SDRI minimizes most of the problems that plague other types of infiltrometers and permeates a large volume of soil. The main disadvantage is that testing usually lasts several weeks or months for soils with $k < 1 \times 10^{-7}$ cm/s.

Air-Entry Permeameter

Method. The air-entry permeameter (AEP), developed by Bouwer (1966, 1978, 1986) and shown in Fig. 10, consists of a sealed ring (about 60 cm in diameter) embedded about 10 cm into the soil. In the first of two stages, the rate of infiltration (I) is determined from falling-head tests or, preferably, a constant-head test, e.g., with a Mariotte device. When the wetting front has penetrated to the base of the ring (which typically takes 5 to 30 minutes for agricultural soils, for which the test was originally developed, or as much as several weeks for compacted clay soil), Stage I is complete.

To initiate Stage II, a valve to the flow-measuring device is closed, which seals the AEP. A negative pressure, which is measured with a gauge, develops as the unsaturated soil tries to suck water out of the AEP. When the vacuum gauge yields its peak reading, the AEP is disassembled and the depth to the wetting front (L_f) is measured, usually by taking a relatively undisturbed sample of soil and measuring the variation of water content with depth.

The water-entry suction (p_w) and air-entry suction (p_a) are denoted in Fig. 11. According to Bouwer, the minimum water pressure during the second stage of testing occurs when the air-entry value of the wetted zone is reached. At that point, air will start moving upward through the wetted zone. The air-entry suction pressure at the edge of the wetting front (p_a) is defined as follows:

$$p_a = -u_w - [L_f + G]\ \gamma_w \tag{22}$$

where u_w is the minimum water pressure (a negative value) measured with a pressure gauge located a distance G above the ground surface and γ_w is the unit weight of water. Bouwer suggests, based on experience with various soils (but not compacted clay), that the water-entry suction pressure at the wetting front (p_w) is approximately one-half the air-entry suction pressure. The suction head at the wetting front (ψ_f) is assumed to be:

$$\psi f = -p_w / \gamma_w = -\frac{1}{2} p_a / \gamma_w = \frac{1}{2}\{\frac{u_w}{\gamma_w} + (L_f + G)\} \tag{23}$$

From Darcy's law, hydraulic conductivity is computed as follows:

$$k = q / (i\ A) = (q / A) / (h / L_f) = \frac{I\ L_f}{H + L_f + \psi_f} \tag{24}$$

where I is the rate of infiltration from the first stage of testing, L_f is the depth of wetting front determined after the test is complete, h is the head loss across the wetted zone, H is the pressure head at the ground surface inside the AEP during the first stage of testing , and ψ_f is the suction head at the base of the wetting front.

Assumptions. It is assumed that the soil is homogeneous and uniformly soaked behind a sharp wetting front; the gauge reading is directly related to the air entry value of a soaked zone of soil; the water-entry value is one-half the air-entry value computed from the gauge reading; and the soil does not swell when wetted.

Field Data. Knight and Haile (1984) used the AEP on an earthen liner and reported k's of 5×10^{-9} to 3×10^{-7} cm/s. Laboratory tests on "undisturbed" samples produced k's that averaged about one-half an order of magnitude less than k's from the AEP. There may have been many causes for differences between lab- and field-measured values, and, unfortunately, published data do not exist to demonstrate that the AEP-measured k's are the correct in situ k's.

Advantages and Disadvantages. The primary advantages of the AEP are short testing times and the ability to estimate the wetting-front suction head. The main disadvantages are that the wetting-front does not penetrate very deeply into the soil (hence, the volume of soil tested is relatively small) and several important assumptions must be made.

UNDERDRAINS

Method

A lysimeter pan (Fig. 1) is an underdrain placed beneath a clay liner. The pan can be constructed of any impervious material, but geomembranes are convenient. The pan is

backfilled with drainage material, soaked, and covered with a filter fabric; then the clay liner is built. Hydraulic conductivity is calculated from the measured rate of flow into the pan and Darcy's law.

A problem for soils with low k ($<10^{-8}$ cm/s) is that many weeks or months may pass before steady seepage develops from the underdrain. The tendency for flow to be other than one-dimensional may be minimized by making the width of the pan much larger than the thickness of the liner.

Assumptions

The important assumptions are that flow has reached steady state and that water flows one dimensionally into the pan. The interpretation of data from pan lysimeters is less ambiguous and subject to fewer assumptions than any other method of testing.

Field Data

Day and Daniel (1985a), Rogowski (1986), Lahti et al. (1987), and Elsbury et al. (1988) used pan lysimeters to measure hydraulic conductivities in the range of 10^{-8} to 10^{-4} cm/s on compacted clay liners. The k's determined by pan lysimeters were in excellent agreement with other field tests, or, in the case of Lahti et al. (1987), with laboratory tests.

Advantages and Disadvantages

Advantages and disadvantages of pan lysimeters are listed in Table 1. Pan lysimeters offer the opportunity to measure reliably in situ k for a very large volume of soil. However, lysimeters must be installed before the liner is built, and tests must last a long time for low k.

DISCUSSION

The best application of the various testing devices is summarized as follows:

- Boutwell Permeameter : This inexpensive permeameter can be used for performing many tests, e.g., to study the variability of hydraulic conductivity. This testing method enables one to determine k in both the vertical and horizontal directions.

- Constant Head Borehole Permeameter: This permeameter yields results quickly (hours to days), is inexpensive, and has a relatively sound theoretical base.

- Porous Probes: Fast measurement of low k is the strength of this device; the small volume of soil tested plus possible effects from smeared soil are important limitations.

- Open, Single-Ring Infiltrometer: The most advantageous use of this permeameter is for flooding a large area (>10 m^2) and measuring infiltration rates in the range of 10^{-6} to 10^{-4} cm/s. Smaller rates of infiltration are difficult to measure accurately with this device.

- Open, Double-Ring Infiltrometer: This is an excellent in situ test when an area <1 m^2 is to be tested and the infiltration rate is in the range of 10^{-6} to 10^{-4} cm/s.

- Sealed, Single-Ring Infiltrometer: This infiltrometer is well suited to testing thin clay liners over areas < 1 m^2 at infiltration rates $<10^{-6}$ cm/s.

- Sealed, Double-Ring Infiltrometer: This device is an excellent in situ permeameter for measuring low hydraulic conductivity ($<10^{-6}$ cm/s) on large volumes of soil. All other devices (except pan lysimeters) either permeate a much smaller volume of soil or cannot accurately measure low flow rates. The main drawback is testing times of weeks to months for $k < 10^{-7}$ cm/s.

- Air-Entry Permeameter: This device yields fast measurement of low k but only tests the upper few centimeters of soil and requires several unverified (for clay) assumptions.

- Pan Lysimeter: For clay liners in which adequate time is available to obtain readings with an underdrain, this is the best in situ permeameter; large areas can be tested, and practically no simplifying assumptions are needed to calculate k.

All of the permeameters described in this article soak the soil but do not ensure that all air is displaced from the soaked soil. Entrapment of some air bubbles during permeation is inevitable. Because unsaturated soils are less permeable than fully saturated soils (Mitchell et al., 1965; Olson and Daniel, 1981; and others), in situ tests can be criticized because they do not ensure complete saturation of the soil. Bouwer (1988) suggests that the value of k at complete saturation is 2 (sandy soils) to 4 (clayey soils) times larger than the value measured

from an infiltration test. However, the author's experience is that no fixed number, such as Bouwer recommends, for a particular soil type can be given. To determine k at full saturation, the author recommends: (1) in situ measurement of k with one of the methods described here; (2) measurement of the degree of saturation of the soil that is permeated in the field; (3) measurement of the relationship between k and degree of saturation in the laboratory (Daniel, 1983; and Daniel et al., 1984); and (4) extrapolation of the field-measured k to full saturation based on results of laboratory tests. Alternatively, for compacted soils with a degree of saturation greater than about 80 percent, the effect of partial saturation may be approximated as follows:

$$k_{sat} = k / S^{n} \tag{25}$$

where k_{sat} is the hydraulic conductivity at full saturation, k is the hydraulic conductivity measured on soil that has a degree of saturation S (expressed as a decimal rather than percentage), and n is a parameter approximately equal to 3 (Mitchell et al., 1965).

Another potentially important problem with in situ tests is that the overburden stress acting on the soil at the time of testing is negligible. Under "operating conditions" the soil may be compressed from overburden and have a lower k. To estimate k at different stress levels, the author recommends laboratory tests with consolidation-cell or flexible-wall permeameters (Daniel, Anderson, and Boynton, 1985).

SUMMARY AND CONCLUSIONS

Nine in situ methods of measuring the hydraulic conductivity of water-soaked, compacted clay soil have been described. All methods have been used with some degree of success. No one type of permeameter is a panacea -- each method of testing has useful application.

Most of the permeameters permeate a relatively small ($<< 1\ m^3$) volume of soil. In many cases, a primary motivation in performing in situ rather than laboratory tests is to permeate a large volume of soil. However, each of the "small" tests still has important capabilities that can be advantageous in certain situations. For example, the Boutwell permeameter measures k in

the vertical and horizontal directions, and the borehole, porous-probe, and air-entry permeameters yield results relatively quickly (in a few hours to a few days).

Of the permeameters that enable permeation of large volumes of soil, the sealed double-ring permeameter (SDRI) and pan lysimeter are the most versatile. The SDRI can permeate a large (> 1 m^3) volume of soil and measure accurately infiltration rates down to about 10^{-8} cm/s, but testing times are usually several weeks or more for $k < 10^{-7}$ cm/s. The pan lysimeter can cover very large areas (>10 m^2) and provide reliable data, but testing times are typically many weeks or months for soils with hydraulic conductivities $< 10^{-7}$ cm/s.

All in situ testing methods are affected by problems with incomplete saturation of the soil. Laboratory hydraulic conductivity tests or Eq. 25 can be used to evaluate the effect of entrapped gas. Laboratory tests should be used to determine the effect of overburden stress on k.

The state of the art for in situ hydraulic conductivity testing of compacted clay soils has improved incredibly over the past half decade. One now has a "toolbox" of testing methods as his disposal. Judicial selection of the proper method of testing and combination of field-test results with other data (such as from laboratory hydraulic conductivity tests) can provide a better indication of in situ k of compacted clays than was possible just a few years ago.

ACKNOWLEDGMENTS

The author expresses his appreciation to Gordon P. Boutwell, David E. Elrick, Herman Bouwer, Andrew M. Petsonk, Daniel B. Stephens, and Stephen J. Trautwein for their critical review an earlier version of this manuscript and for their comments, suggestions, and data.

REFERENCES

Baumgartner, N., Elrick, D.E., and K. L. Bradshaw (1987), "In-Situ Hydraulic Conductivity Measurements of Slowly Permeable Materials Using a Modified Guelph Permeameter and the Guelph Infiltrometer," Proceedings, First National Outdoor Action Conference on Aquifer Restoration, Ground Water Monitoring and Geophysical Methods, Las Vegas, pp. 469-483.

Boutwell, G. P., and R. K. Derick (1986), "Groundwater Protection for Sanitary Landfills in the Saturated Zone," Presented to Waste Tech '86, National Solid Waste Management Association, Chicago, Illinois.

Boutwell, G. P. (1988), Personal Communication.

Bouwer, H. (1966), "Rapid Field Measurement of Air Entry Value and Hydraulic Conductivity of Soil as Significant Parameters in Flow System Analysis," Water Resources Research, Vol. 2, pp. 729-732.

Bouwer, H. (1978), Groundwater Hydrology, McGraw-Hill, New York, 480 p.

Bouwer, H. (1986), "Intake Rate: Cylinder Infiltrometer," in Methods of Soil Analysis, Part 1, Physical and Mineralogical Methods, Agronomy Monograph No. 9, American Society of Agronomy, Madison, Wisconsin, pp. 825-844.

Bouwer, H. (1988), Personal Communication.

Boynton, S. S. and D. E. Daniel (1985), "Hydraulic Conductivity Tests on Compacted Clay," Journal of Geotechnical Engineering, Vol. 111, No. 4, pp. 465-478.

Chen, H. W., and L. O. Yamamoto (1987), "Permeability Tests for Hazardous Waste Management Unit Clay Liners," in Geotechnical and Geohydrological Aspects of Waste Management, D. J. A. van Zyl et al. (eds.), Lewis Publishing, Inc., Chelsea, Michigan, pp. 229-243.

Daniel, D. E. (1983), "Permeability Test for Unsaturated Soil," Geotechnical Testing Journal, Vol. 6, No. 2, pp. 81-86.

Daniel, D. E. (1984), "Predicting the Hydraulic Conductivity of Compacted Clay Liners," Journal of Geotechnical Engineering, Vol. 110, No. 2, pp. 285-300.

Daniel, D. E., Trautwein, S. J., Boynton, S. S., and D. E. Foreman (1984), "Permeability Testing with Flexible-Wall Permeameters," Geotechnical Testing Journal, Vol. 7, No. 3, pp. 113-122.

Daniel, D. E., Anderson, D. C., and S. S. Boynton (1985), "Fixed-Wall Vs. Flexible-Wall Permeameters," ASTM STP 874, pp. 276-288.

Daniel, D. E., and S. J. Trautwein (1986), "Field Permeability Test for Earthen Liners," Proceedings, In Situ '86, Blacksburg, Virginia, pp. 146-160.

Day, S. R., and D. E. Daniel (1985a), "Hydraulic Conductivity of Two Prototype Clay Liners," Journal of Geotechnical Engineering, Vol. 111, No. 8, pp. 957-970.

Day, S. R., and D. E. Daniel (1985b), "Field Permeability Test for Clay Liners," ASTM STP 874, pp. 276-288.

Elrick, D. E. (1988), Personal Communication.

Elrick, D. E., Reynolds, W. D., and K. A. Tan (1988), "A New Analysis for the Constant Head Well Permeameter," Proceedings, Validation of Flow and Transport Models for the Unsaturated Zone, Univ. of New Mexico, Las Cruses, New Mexico, (in press).

Elsbury, B. R., Sraders, G. A., Anderson, D. C., Rehage, J. A., Sai, J. O., and D. E. Daniel (1988), "Field and Laboratory Testing of a Compacted Soil Liner," U.S. EPA, Cincinnati, Ohio (in press).

Glover, R. E. (1953), "Flow for a Test Hole Located above Groundwater Level," in Theory and Problems of Water Percolation, by C. N. Zangar, U.S. Department of Interior, Bureau of Reclamation, Engineering Monograph No. 8, pp. 69-71.

Green, W. H., and G. A. Ampt (1911), "Studies on Soil Physics. Part I. - The Flow of Air and Water Through Soils," Journal of Agricultural Science, Vol. 4, pp. 1 - 24.

Hvorslev, M. J. (1949), "Time Lag in the Observation of Ground-Water Levels and Pressures," U.S. Army Engineers Waterways Experiment Station, Vicksburg, Mississippi.

Knight, R. B., and J. P. Haile (1984), "Construction of the Key Lake Tailings Facility," Proceedings, International Conference on Case Histories in Geotechnical Engineering, St. Louis, Missouri.

Lahti, L. R., King, K. S., Reades, D. W., and A. Bacopoulos (1987), "Quality Assurance Monitoring of a Large Clay Liner," Proceedings, Geotechnical Practice for Waste Disposal '87, ASCE, pp. 640-654.

Lambe, T. W. (1954), "The Permeability of Compacted Fine-Grained Soils," ASTM STP 163, pp. 56-67.

Lambe, T. W. (1958), "The Engineering Behavior of Compacted Clay," Journal of the Soil Mechanics and Foundations Division, ASCE, Vol. 84, No. SM2, pp. 1654-1 - 1654-34.

Mitchell, J. K., Hooper, D. R., and R. G. Campanella (1965), "Permeability of Compacted Clay," Journal of the Soil Mechanics and Foundations Division, ASCE, Vol. 91, No. SM4, pp. 41-65.

Olson, R. E., and D. E. Daniel (1981), "Measurement of the Hydraulic Conductivity of Fine-Grained Soils," ASTM STP 746, pp. 18 - 64.

Petsonk, Andrew M. (1988), Personal Communication.

Philip, J. R. (1985), "Approximate Analysis of the Borehole Permeameter in Unsaturated Soil," Water Resources Research, Vol. 21, No. 7, pp. 1025 - 1033.

Reynolds, W. D., and D. E. Elrick (1985), "In Situ Measurement of Field-Saturated Hydraulic Conductivity, Sorptivity, and the a-Parameter Using the Guelph Permeameter," Soil Science, Vol. 140, No. 4, pp. 292-302.

Reynolds, W. D., and D. E. Elrick (1986), "A Method for Simultaneous In Situ Measurement in the Vadose Zone of Field-Saturated Hydraulic Conductivity, Sorptivity and the Conductivity-Pressure Head Relationships," Ground Water Monitoring Review, Vol. 6, No. 1, pp. 84-95.

Reynolds, W. D., and D. E. Elrick (1987), "A Laboratory and Numerical Assessment of the Guelph Permeameter Method," Soil Science, Vol. 144, pp. 282-299.

Reynolds, W. D., Elrick, D. E., and G. C. Topp (1983), "A Reexamination of the Constant Head Well Permeameter for Measuring Saturated Hydraulic Conductivity above the Water Table," Soil Science, Vol. 136, No. 2, pp. 250-268.

Reynolds, W. D., Elrick, D. E., and B. E. Clothier (1985), "The Constant Head Well Permeameter: Effect of Unsaturated Flow," Soil Science, Vol. 139, No. 2, pp. 172-180.

Rogowski, A. S. (1986), "Hydraulic Conductivity of Compacted Clay Soils," Proceedings, Twelfth Annual Research Symposium on Land Disposal, Remedial Action, Incineration, and Treatment of Hazardous Waste, U.S. EPA, Cincinnati, Ohio, pp. 29-39.

Soilmoisture Equipment Corp. (1987), "Model 2800 Guelph Permeameter," Santa Barbara, California, 28 p.

Soil Testing Engineers, Inc. (1983), "STEI Two Stage Permeability Test," Baton Rouge, Louisiana.

Stephens, D. B., and S. P. Neuman (1982a), "Vadose Zone Permeability Tests: Summary," Journal of the Hydraulics Division, ASCE, Vol. 108, No. HY5, pp. 623-639.

Stephens, D. B., and S. P. Neuman (1982b), "Vadose Zone Permeability Tests: Steady State Results," Journal of the Hydraulics Division, ASCE, Vol. 108, No. HY5, pp. 640-659.

Stephens, D. B., and S. P. Neuman (1982c), "Vadose Zone Permeability Tests: Unsteady Flow," Journal of the Hydraulics Division, ASCE, Vol. 108, No. HY5, pp. 660-677.

Stephens, D. B., and S. P. Neuman (1982d), "Free Surface and Saturated-Unsaturated Analyses of Borehole Infiltration Tests above the Water Table," Adv. Water Resources, Vol. 5, June, pp. 111-116.

Stephens, D. B., Lambert, K., and D. Watson (1987), "Regression Models for Hydraulic Conductivity and Field Test of the Borehole Permeameter," Water Resources Research, Vol. 23, No. 12, pp. 2207-2214.

Stephens, D. B., Unruh, M., Havlena, J., Knowlton, R. G., Matteson, E., and W. Cox (1988), "Vadose Zone Characterization of Low-Permeability Sediments Using Field Permeameters," Ground Water Monitoring Review, Vol. 8, No. 2, pp. 59-66.

Stewart, J. P., and T. W. Nolan (1987), "Infiltration Testing for Hydraulic Conductivity of Soil Liners," Geotechnical Testing Journal, Vol. 10, No. 2, pp. 41-50.

Torstensson, B. A. (1984), "A New System for Ground Water Monitoring," Ground Water Monitoring Review," Vol. 4, No. 4, pp. 131-138.

Trautwein Soil Testing Equipment Co. (1987), "Installation and Operating Instructions for the Sealed Double-Ring Infiltrometer" Houston, Texas, 25 p.

Trautwein, S. J. (1988), Personal Communication.

Appendix - Notation

A	coefficient in Eq. 2 defined in Eq. 3, or coefficient in Eq. 9 defined in Eq. 12, or cross sectional area of infiltration
B	coefficient in Eq. 2 defined in Eq. 4
C	factor used in Eqs. 17 and 18 and determined from Fig. 6
C_u	factor used in Eq. 12 and defined in Eq. 14
d	diameter of standpipe in falling head test
D	diameter of casing in borehole test
F_1	factor used in Eq. 9 and defined in Eq. 10
F_2	factor used in Eq. 9 and defined in Eq. 11
H	hydraulic head
i	hydraulic gradient
I	rate of infiltration (quantity of infiltration per unit area per unit time)
k	hydraulic conductivity
k_1	hydraulic conductivity from first stage of a two-stage test
k_2	hydraulic conductivity from second stage of a two-stage test
k_h	hydraulic conductivity in horizontal direction
k_{sat}	hydraulic conductivity of fully saturated soil
k_v	hydraulic conductivity in vertical direction
G	height of gauge above ground surface
G_1	factor used in Eq. 16 and defined in Eq. 18
G_2	factor used in Eq. 16 and defined in Eq. 17
L	length of uncased section in Boutwell permeameter
L_f	depth of wetting front
m	permeability radio defined in Eq. 5
n	porosity (Fig. 11) or parameter equal to 3 (Eq. 25)
N	parameter used in Eq. 14 and equal to about 1.8

p_a	air-entry pressure
p_w	water entry pressure
q	rate of flow (volume of flow per unit time)
Q	quantity of flow
r	radius of borehole
R	factor equal to H/r (head in a borehole divided by radius of borehole)
S	degree of saturation (volume of water/volume of voids)
t	time
u_w	water pressure
z	depth
α	sorptive number used in Eq. 12
α^*	parameter used in Eq. 15
α_v	parameter used in Eq. 14
ψ_f	wetting-front suction head
ψ_i	initial soil suction
γ_w	unit weight of water

Borehole Test

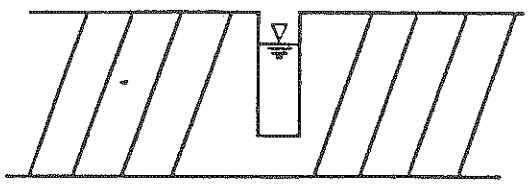

Porous Probe

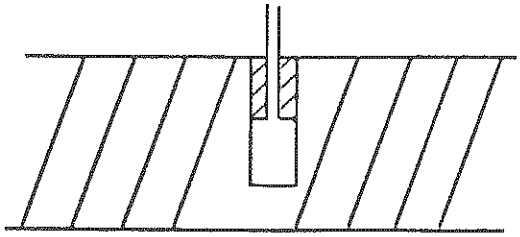

Infiltrometer

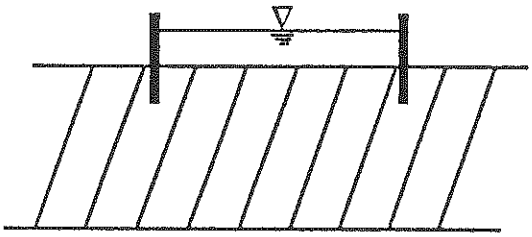

Underdrain

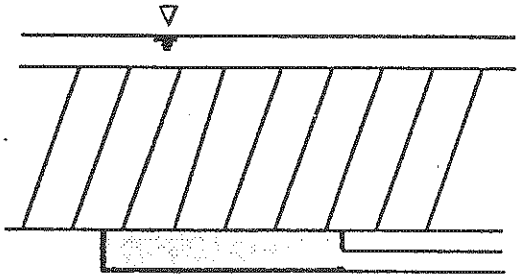

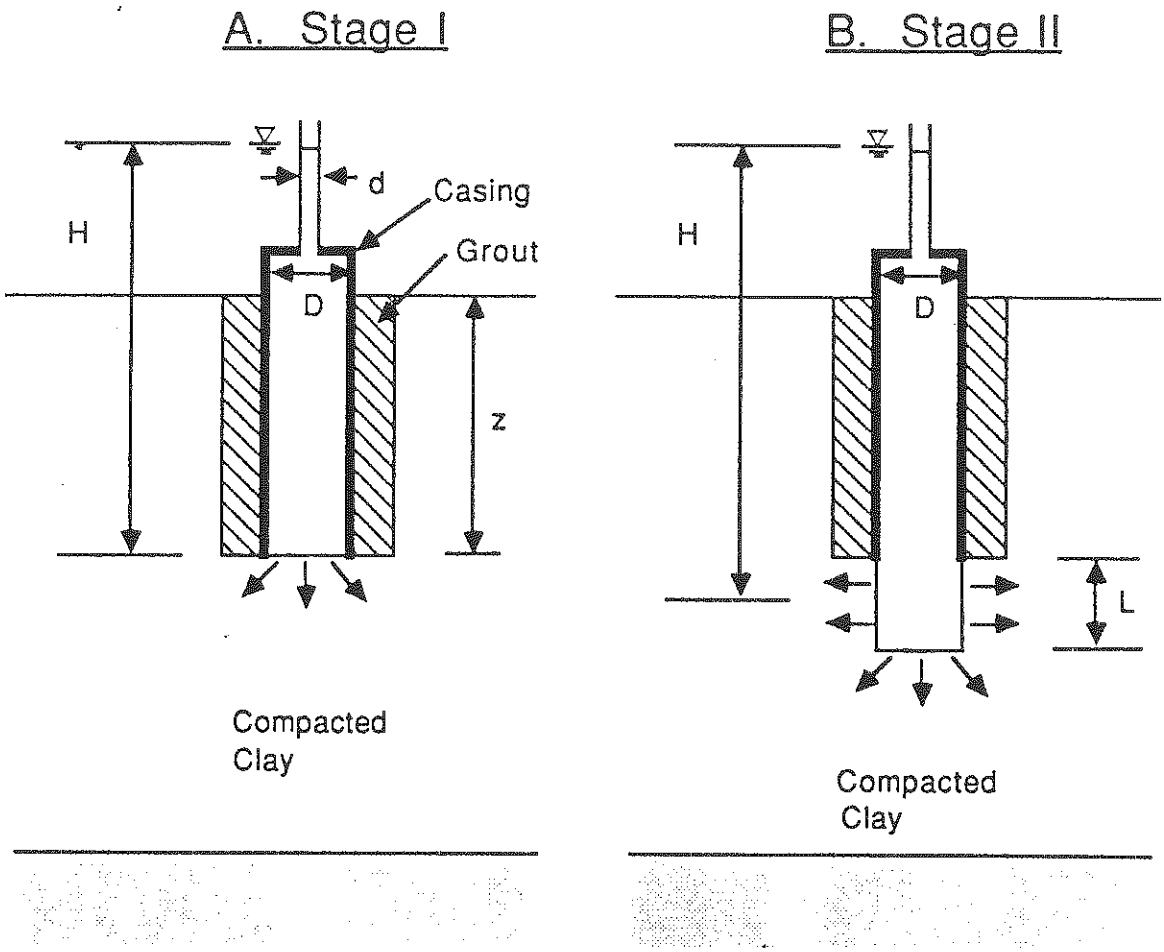
A. Stage I
B. Stage II
H
d
Casing
Grout
D
z
Compacted
Clay
H
D
L
Compacted
Clay

f 2

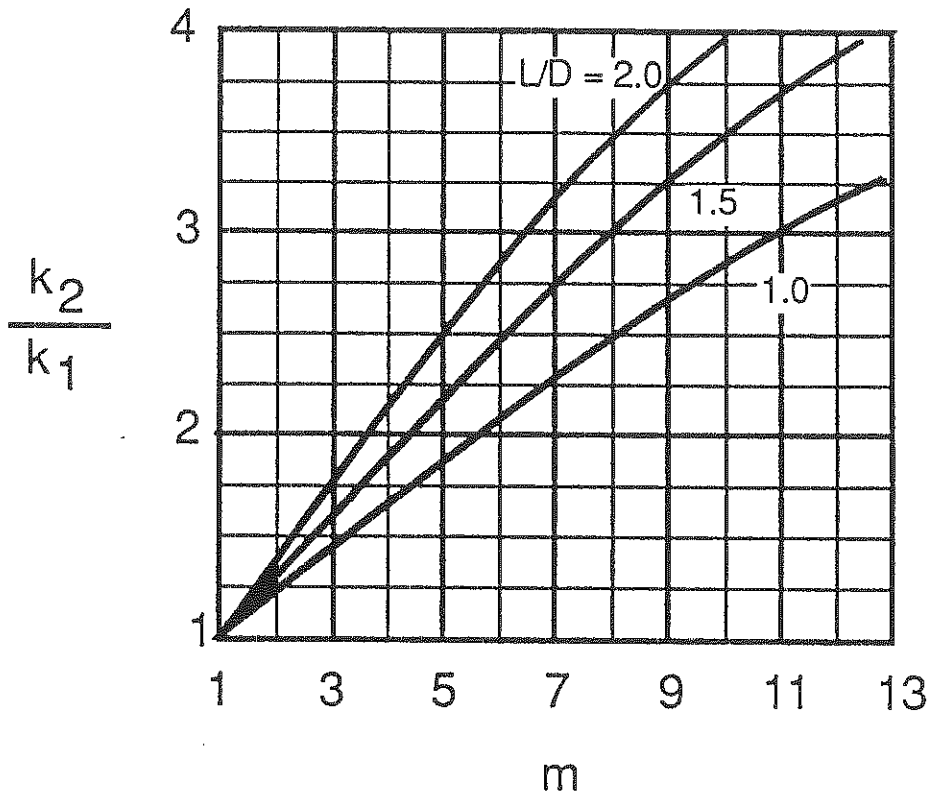
4
3
2
1
$\frac{k_2}{k_1}$
L/D = 2.0
1.5
1.0
1
3
5
7
9
11
13
m

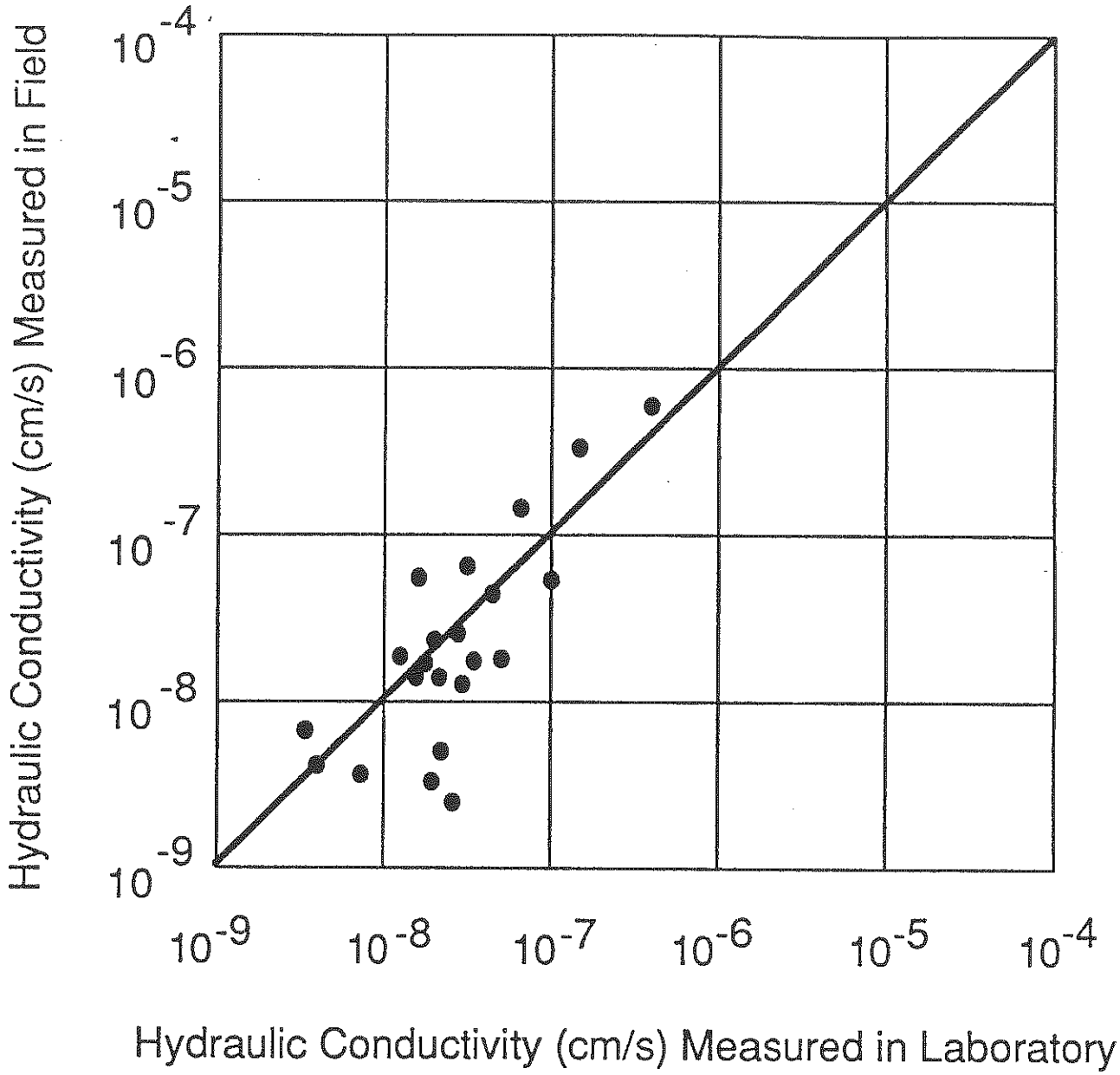
Hydraulic Conductivity (cm/s) Measured in Field
10^-4
10^-5
10^-6
10^-7
10^-8
10^-9
10^-9
10^-8
10^-7
10^-6
10^-5
10^-4
Hydraulic Conductivity (cm/s) Measured in Laboratory

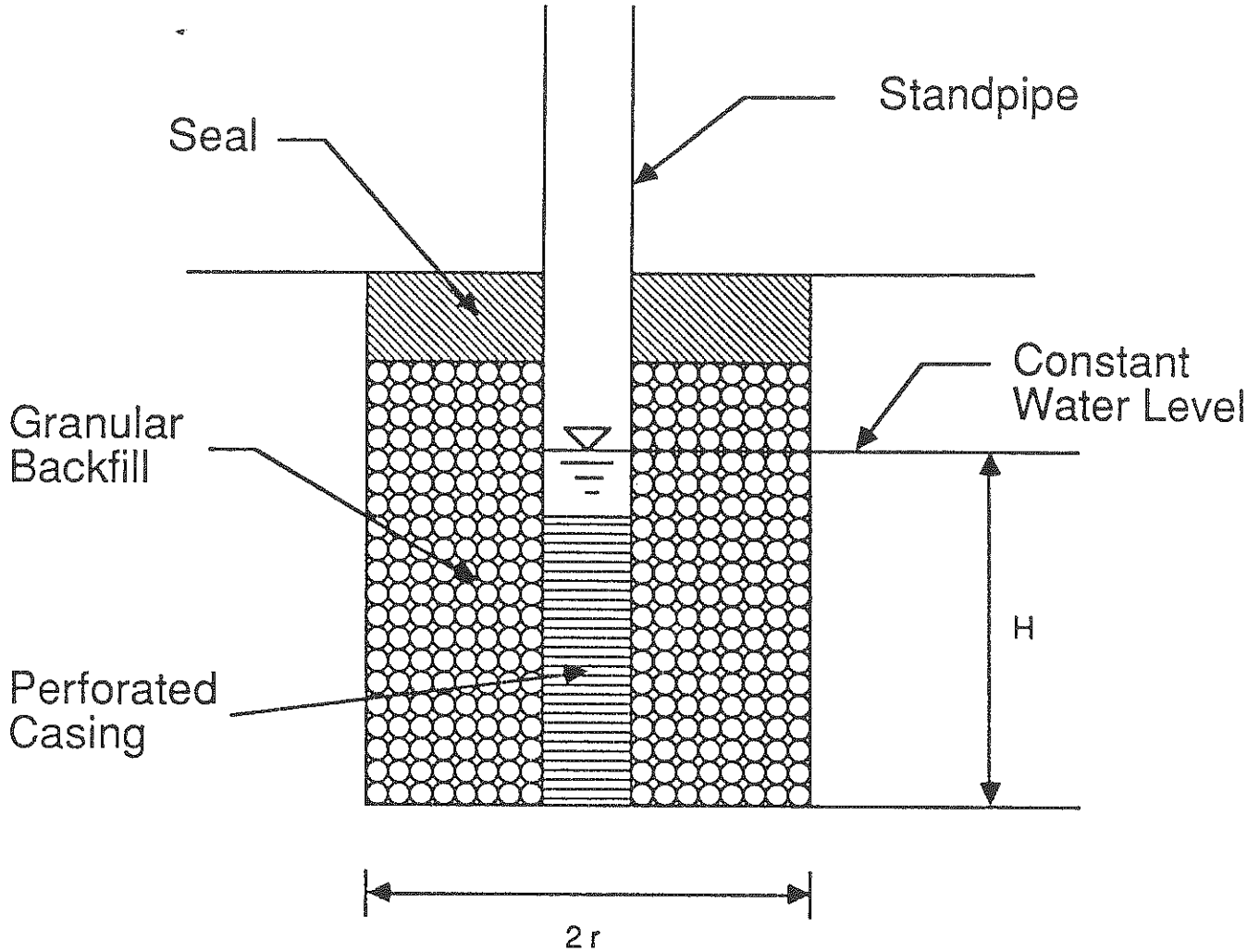
Standpipe
Seal
Constant
Water Level
Granular
Backfill
H
Perforated
Casing
2 r

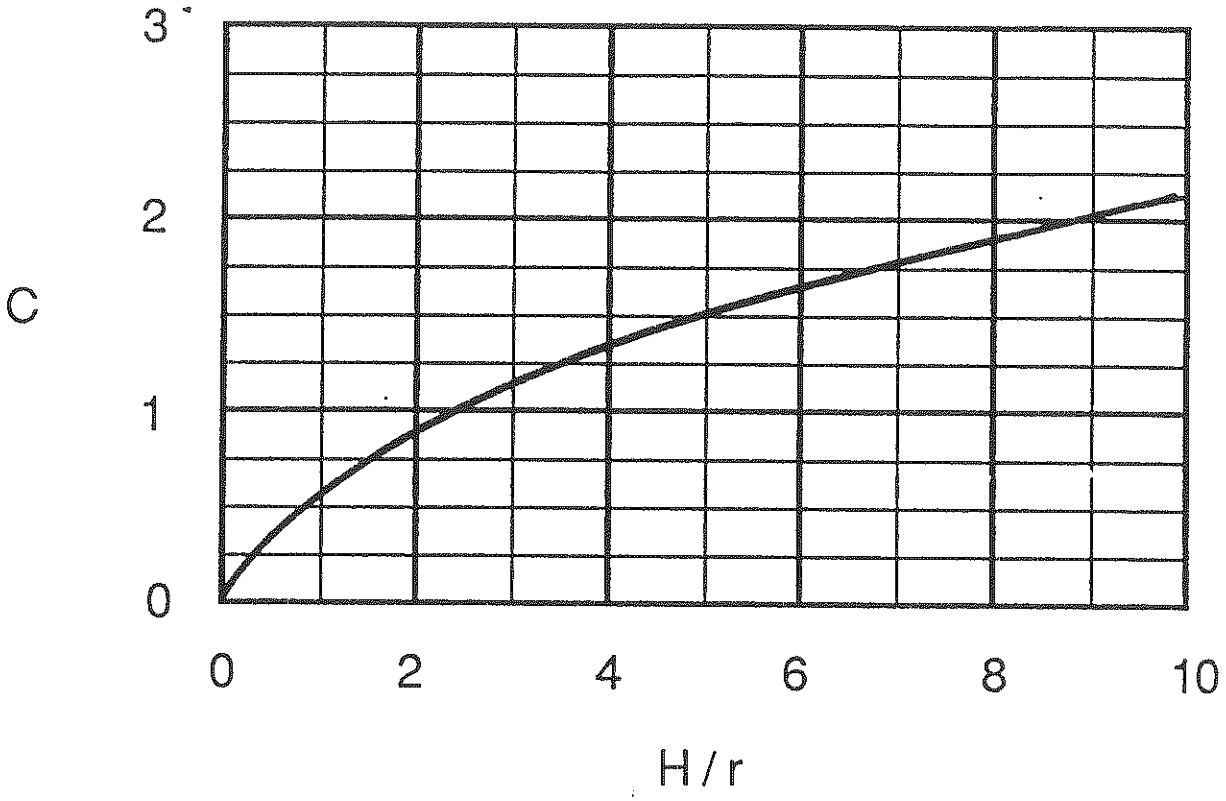
3
2
1
0
C
0
2
4
6
8
10
H / r

Case A
Probe with Permeable Base

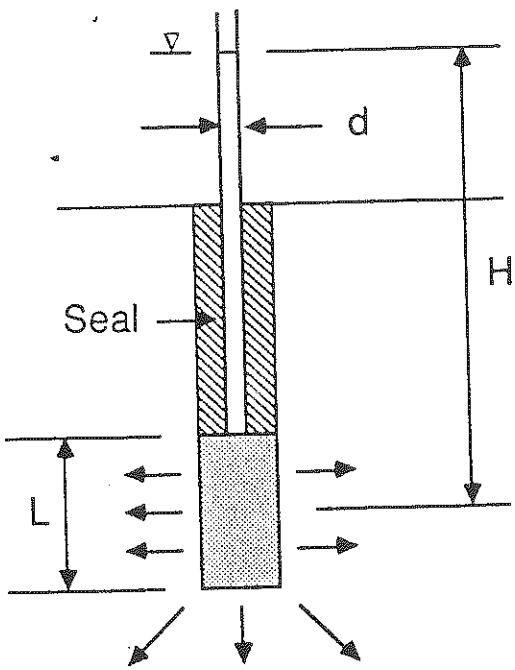

Case B
Probe with Impermeable Base

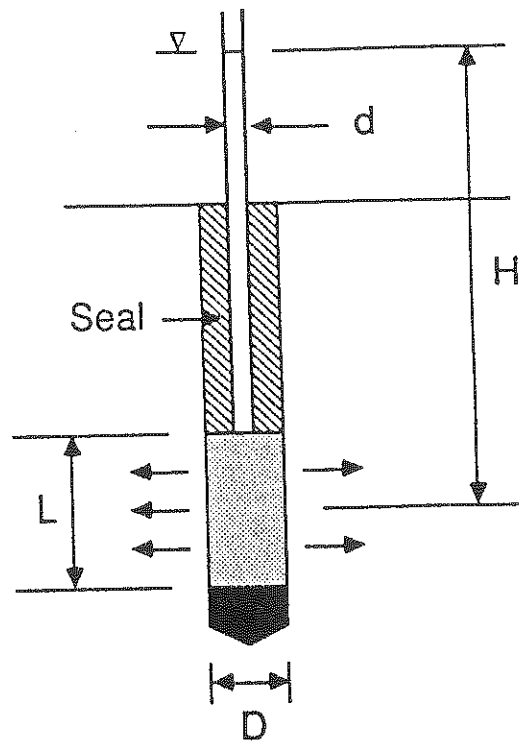

Constant Head: $$k = \frac{q}{FH}$$

Falling Head: $$k = \frac{\pi d^2/4}{F(t_2 - t_1)} \ln\left(\frac{H_1}{H_2}\right)$$

Case A: $$F = \frac{2\pi L}{\ln\left(\frac{L}{D} + \sqrt{1 + (L/D)^2}\right)}$$

Case B: $$F = \frac{2\pi L}{\ln\left(\frac{L}{D} + \sqrt{1 + (L/D)^2}\right)} - 2.8\,D$$

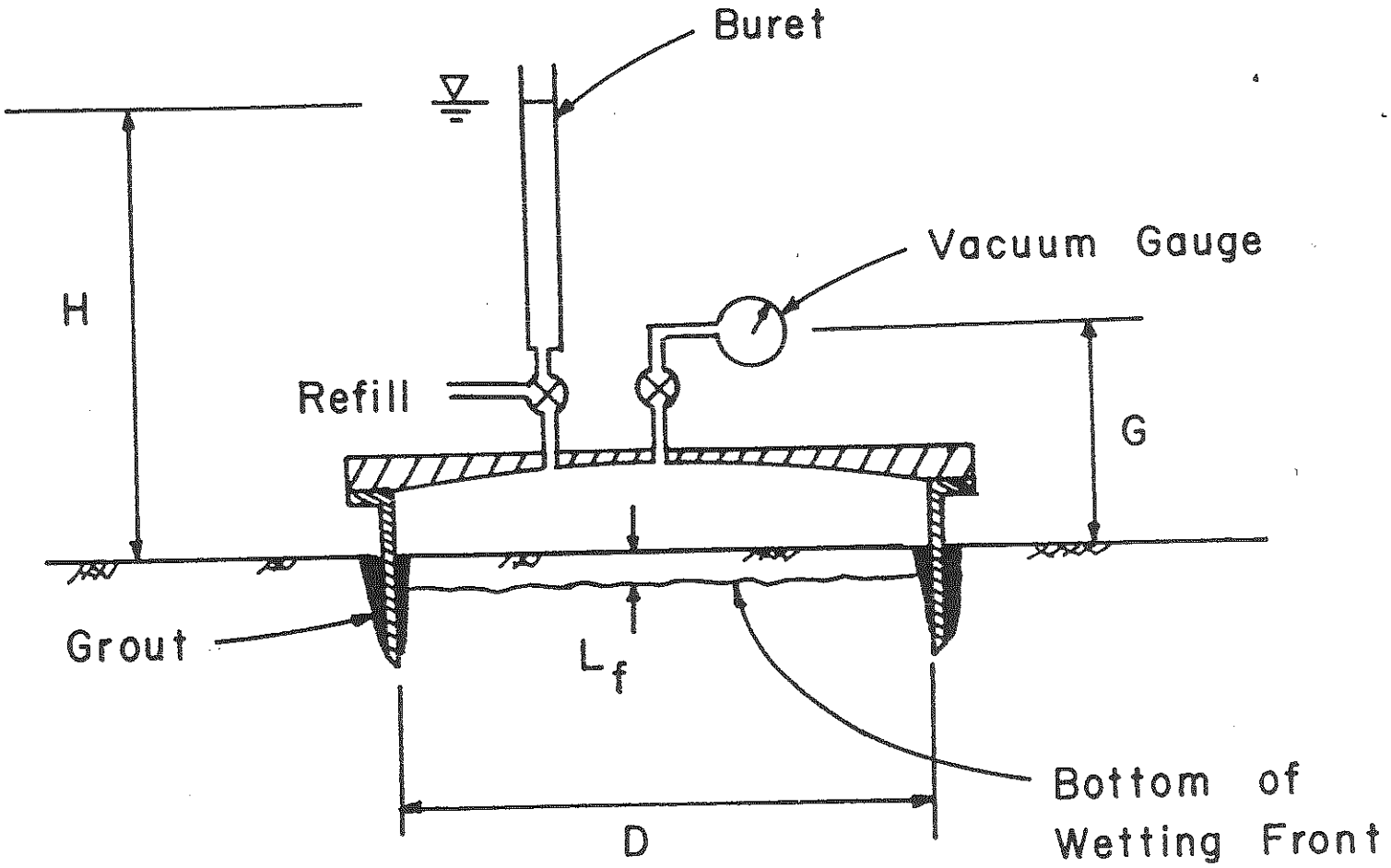
Buret
Vacuum Gauge
H
Refill
G
Grout
L_f
Bottom of
Wetting Front
D

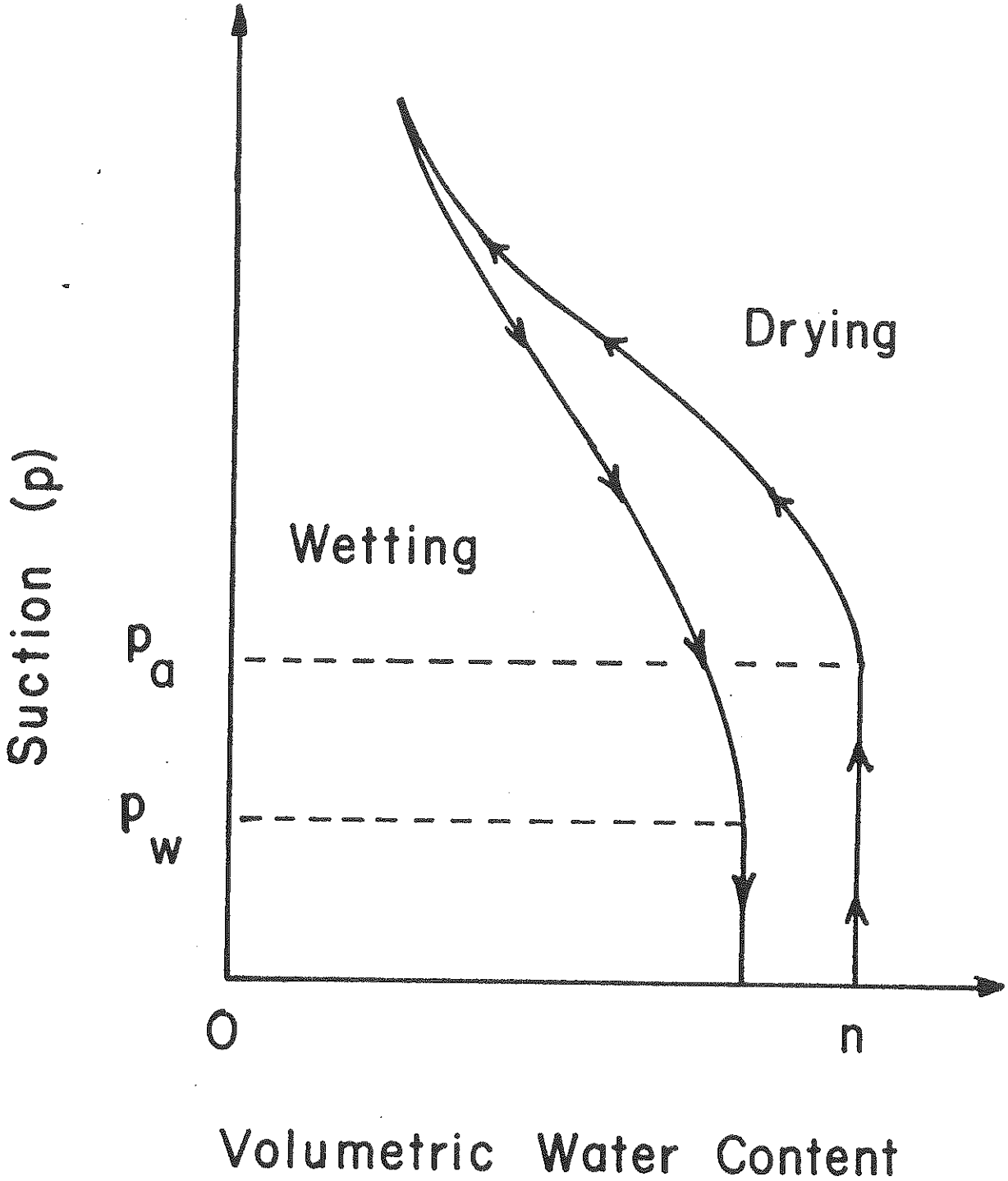
Drying
Wetting
Suction (p)
p_a
p_w
0
n
Volumetric Water Content

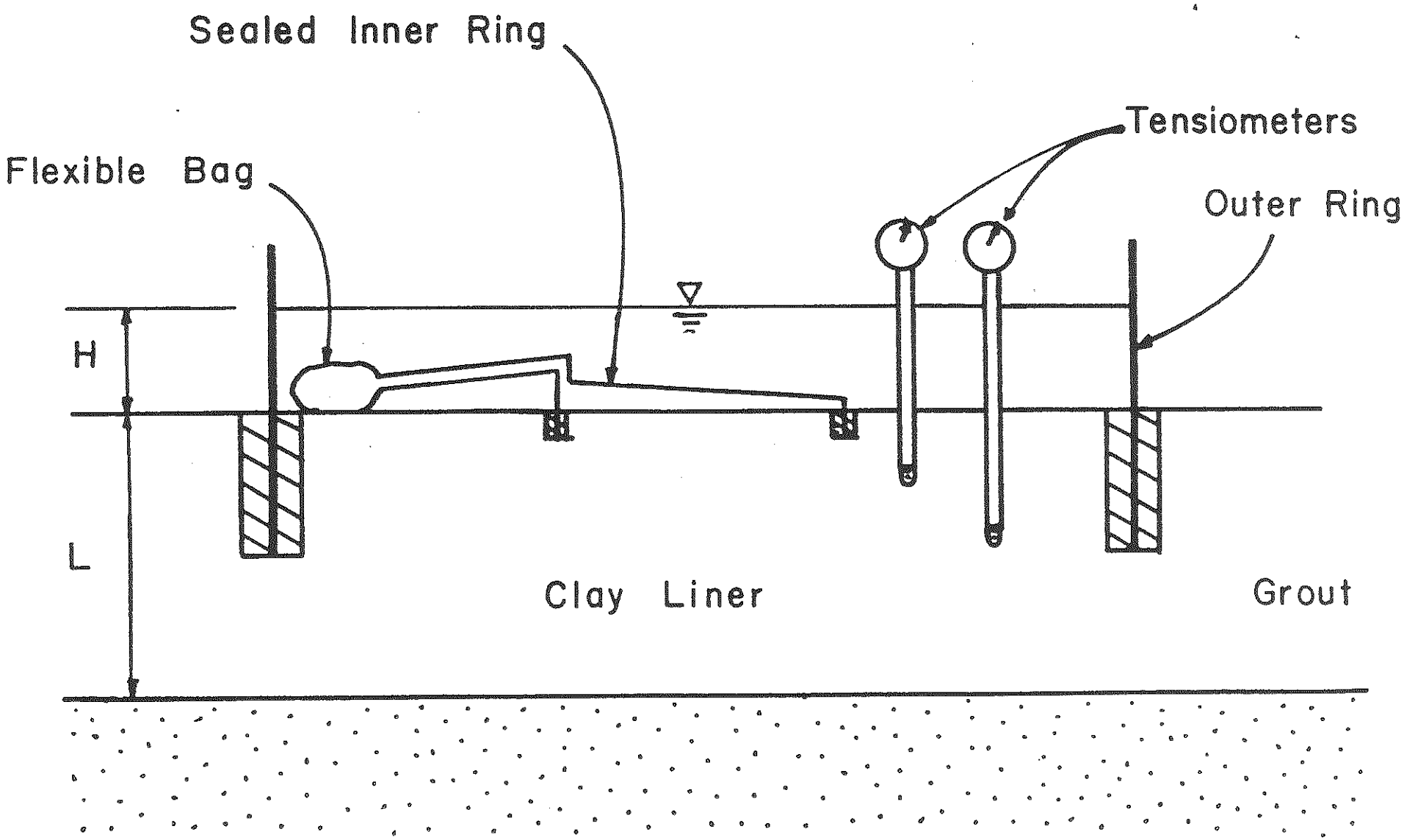
Sealed Inner Ring
Tensiometers
Flexible Bag
Outer Ring
H
L
Clay Liner
Grout

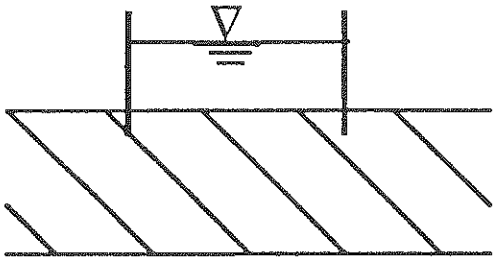

Open, Single Ring

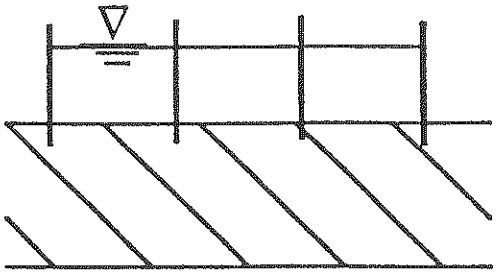

Open, Double Ring

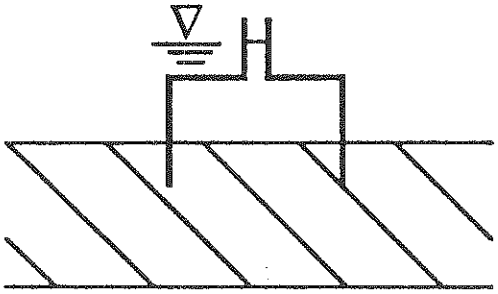

Sealed, Single Ring

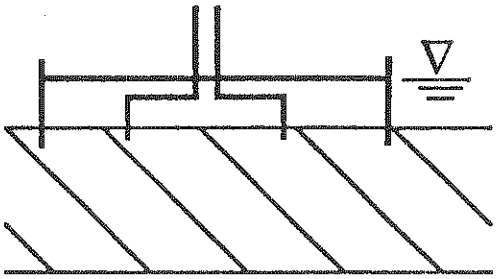

Sealed, Double Ring

Table 1. ADVANTAGES AND DISADVANTAGES OF METHODS OF TESTING

Type of Test	Device	Advantages	Disadvantages
Borehole	Boutwell Permeameter	1. Low equipment cost (< $1,000 per unit). 2. Easy to install. 3. Hydraulic conductivity is measured in vertical and horizontal direction. 4. Can measure low hydraulic conductivity (down to about 10^{-9} cm/s). 5. Can be used at great depths and on slopes.	1. Volume of soil tested is small. 2. Unsaturated nature of soil not properly taken into account. 3. Testing times are somewhat long (typically several days to several weeks for hydraulic conductivities < 10^{-7} cm/s)
	Constant Head Permeameter	1. Low equipment cost (< $1,000 per unit). 2. Easy to install. 3. Unsaturated nature of soil taken into account relatively rigorously. 4. Relatively short testing times (a few hours to several days). 5. The hydraulic conductivity that is measured is primarily the horizontal value (which is an advantage if this is the desired value). 6. Can be used at great depths.	1. Volume of soil tested is small. 2. The hydraulic conductivity that is measured is primarily the horizontal value (in some applications, the value in the vertical direction is desired). 3. The device is not well suited to measuring very low hydraulic conductivities (less than 10^{-7} cm/s).
Porous ~~Piezometer~~ Probe	BAT Permeameter	1. Easy to install. 2. Short testing times (usually a few minutes to a few hours). 3. Probe can also be used to measure pore water pressures. 4. Can measure low hydraulic conductivity (down to about 10^{-10} cm/s). 5. The hydraulic conductivity that is measured is primarily the horizontal value (which is an advantage if this is the desired value). 6. Can be used at large depths and on slopes.	1. High equipment cost (> $6,000). 2. Volume of soil tested is very small. 3. Soil smeared across probe during installation may lead to underestimation of hydraulic conductivity. 4. The hydraulic conductivity that is measured is primarily the horizontal value (in some applications the value in the vertical direction is desired). 5. The unsaturated nature of the soil is not properly taken into account.
Infiltrometer	Open, Single-Ring Infiltrometer	1. Low Cost (< $1,000) 2. Easy to Install	1. Low hydraulic conductivity (< 10^{-7} cm/s) is difficult to measure accurately.

(2)

Table 1. ADVANTAGES AND DISADVANTAGES OF METHODS OF TESTING (CONT.)

Type of Test	Device	Advantages	Disadvantages
		3. Very large infiltrometer can be used to test a large volume of soil. 4. Hydraulic conductivity in the vertical direction is determined.	2. Must eliminate, or make a corection for, evaporation. 3. May need to correct for lateral spreading of water beneath infiltrometer. 4. Testing times are relatively long (usually several weeks to several months for hydraulic conductivities < 10^{-7} cm/s 5. Must estimate wetting-front suction head. 6. Cannot be used on steep slopes unless a flat bench is cut.
	Open, Double-Ring Infiltrometer	1. Low equipment cost (< $1,000). 2. Hydraulic conductivity in the vertical direction is determined. 3. Minimal lateral spreading of water that infiltrates from inner ring.	1. Low hydraulic conductivity (10-7 cm/s) is difficult to measure accurately. 2. Must eliminate or make a correction for evaporation. 3. Testing times are somewhat long (usually several days to several months for hydraulic conductivities < 10^{-7} cm/s)
	Closed, Single-Ring Infiltrometer	1. Low equipment cost (< $1,000). 2. Hydraulic conductivity in the vertical direction is measured. 3. Can measure low hydraulic conductivity (down to 10^{-8} to 10^{-9} cm/s).	1. Volume of soil tested is somewhat small because diameter of ring is < 1 m. 2. Need to correct for lateral spreading of water if wetting front penetrates below the base of the ring. 3. Testing times are long (usually several weeks to several months). 4. Must estimate wetting-front suction head. 5. Very difficult to use on steeply sloping ground.

4. Must estimate wetting-front suction head

(3)

Table 1. ADVANTAGES AND DISADVANTAGES OF METHODS OF TESTING (CONT.)

Type of Test	Device	Advantages	Disadvantages
	Sealed, Double-Ring Infiltrometer	1. Moderate equipment cost (< $2,500). 2. Hydraulic conductivity in the vertical direction is determined 3. Can measure low hydraulic conductivity (down to about 10^{-8} cm/s). 4. Minimal lateral spreading of water that infiltrates from inner ring. 5. A relatively large volume of soil is permeated.	1. Testing times are relatively long (usually several weeks to several months). 2. Must estimate wetting front-suction head. 3. Cannot be used on slopes unless a flat bench is cut.
	Air-Entry Permeameter	1. Modest equipment cost (< $3,000). 2. Relatively short testing times (a few hours to a few days). 3. Hydraulic conductivity in the vertical direction is measured. 4. Can measure low hydraulic conductivity (down to 10^{-8} to 10^{-9} cm/s). 5. Wetting-front suction head is estimated in second stage of test.	1. A relatively small volume of soil is permeated because the wetting-front usually does not penetrate more than a few centimeters into compacted clay . 2. Cannot be used on slopes unless flat bench is cut. 3. Several important assumptions are required.
Underdrain	Lysimeter Pan	1. Low cost. 1. The hydrualic conductivity in the vertical direction is measured. 2. Large volumes of soil can be tested. 3. Few experimental ambiguities. 4. No disturbance of soil.	1. Must install underdrain before the liner is constructed. 2. Relatively long testing times (usually several weeks to several months)* for hydraulic conductivities less than 10^{-7} cm/s 3. Must collect and measure seepage from underdrain, which usually necessitates a sump and a pump. 4. ~~Very low hydraulic conductivity (< 10^{-8} cm/s) difficult to measure accurately.~~

TEST FILL CONSTRUCTION PROCEDURE

A series of test fills will be constructed at the Allen Park Clay Mine prior to the start of construction operations for Cell II. These test fills will consist of compacted clay pads constructed using the same type of construction equipment as will be used during construction of the cell. The purpose of the test fills is to verify that the specified design criteria, including permeability, shear strength, moisture content and soil density can be achieved consistently during the full-scale construction of the liner. This test fill construction procedure incorporates test pad dimensions, equipment types and number of passes, as well as testing methodologies and frequencies for the various design criteria.

BACKGROUND

It is our understanding that while test fills are not currently required for licensing of hazardous waste facilities under RCRA or Michigan P.A. 64, test fill requirements are incorporated into both the Federal and State operating permits.

In addition, the results of recent studies performed by several researchers have indicated that field measurements of hydraulic conductivity in compacted soil liners are frequently greater than would be predicted from laboratory permeability tests of the compacted clay. Therefore, field permeability tests taken in

conjunction with a test fill constructed using the same methodologies as planned to be utilized for construction of the full-scale facility allows the development of a correlation between actual hydraulic conductivity and construction methodologies. Test fills can also be used to establish relationships between field permeability and other soil index properties. It should be noted that a maximum hydraulic conductivity of 1×10^{-7} cm/sec is required for regulatory approval of a hazardous waste facility.

It should also be noted that the Technical Guidance Document for Construction Quality Assurance for Hazardous Waste Land Disposal Facilities prepared by the U.S. Hazardous Waste Engineering Research Laboratory in cooperation with The Office of Solid Waste and Emergency Response was used to develop this test fill construction procedure.

CONSTRUCTION PROCEDURE

Equipment and Test Pad Dimensions - For the Allen Park Clay Mine project, a series of three test fills shall be constructed. These fills shall be constructed by placing the soil planned to be used for the construction of the facility liner using a tractor-scraper, spreading each lift of soil, and then compacting each layer with a specific number of passes using a self-propelled sheepsfoot compactor. We further recommend that each test fill consist of four 12-inch thick loose lifts.

Based on information provided in the U.S. EPA Technical Guidance Document and information supplied by Ford personnel, the test pads shall have minimum plan dimensions of 50-feet by 75-feet. These dimensions represent a test pad width (50 feet) of approximately 4 times the width of a tractor-scraper (i.e. 12-feet) and a length (75-feet) approximately 3 times the length of a tractor-scraper (i.e. 15-feet) plus an additional 15-feet on either end of the test pad to allow room for turning.

Number of Passes - A different number of passes will be used to compact each test fill. A series of 2, 4, and 6 passes of the sheepsfoot compactor will be used to compact each lift of each of the three test fills. The sheepsfoot compactor shall be approximately 300 horsepower and shall have an operating weight of approximately 70,000 lbs. Each drum width shall be approximately 3 feet - 8 inches wide and shall contain a minimum of 65 sheepsfeet, arranged in 5 rows of 13 feet. Each sheepsfoot shall be a minimum of six inches long. Using this methodology, a relationship between hydraulic conductivity and the number of passes of the sheepsfoot compactor used to construct each test fill will be developed. Using this approach, the compactive effort provided by the tractor-scraper during placement and spreading of the material will be essentially constant.

Therefore, the hydraulic permeability of the test fill is considered to be a function of the number of passes of the sheepsfoot compactor.

Field Permeability Testing

The hydraulic conductivity of the test fill material shall be determined using a Boutwell permeameter according to the methodology presented by David E. Daniel in his paper entitled "In Situ Hydraulic Conductivity Tests", 1989. A resultant hydraulic conductivity greater than 1×10^{-7} cm/sec will be reported to the CQA Officer, and will be cause for construction of another test fill using different construction methodology.

Use of the Boutwell Permeameter is recommended for several reasons. The first reason is because the Boutwell method provides direct measurements of both the horizontal and vertical coefficients of permeability. Recent research into field permeability values for compacted clay indicates horizontal permeability is frequently higher than vertical permeability. Therefore, a test procedure that incorporates direct measurement of horizontal permeability is conservative.

Another advantage of the Boutwell method is its low equipment cost, ease of installation and relative speed. The Boutwell method only requires the installation of an approximately 3-foot length of casing into a borehole. The casing can be grouted into a hand-augered borehole, such that the time required to prepare a

test set-up is minimized. A Boutwell test typically requires a few days to a few weeks to complete. The method is also an accurate means of measuring low coefficients of permeability.

The Boutwell method is also considered to provide an element of flexibility to the test fill program. Due to the relative simplicity of the test method and the relatively short time intervals required for each test, this method provides a feasible approach to determining additional field permeability values if the proposed test fill program (i.e. three test fills) requires modification.

CONSTRUCTION WORK PLAN

I. Construction Methodology

1. Determine the moisture-density relationship of the borrow source clay prior to the start of test fill construction at a minimum frequency of one modified proctor test per borrow source. The modified proctor test shall be performed in accordance with the procedure outlined in ASTM D 1556.

2. Construct three test fills according to the following criteria:

a) Each test fill shall be a minimum of 50 ft. x 75 ft. in plan dimension.

b) Each test fill shall consist of a minimum of 4 12-inch thick loose lifts of soil.

c) Each lift of each test fill shall be constructed using the methodology planned for construction of the full-scale facility. This methodology shall consist of soil placement, spreading of each lift of soil, measurement of loose lift thickness followed by compaction of each lift of soil using a self-propelled sheepsfoot compactor. The compactor shall have approximately 300 horsepower and shall have an operating weight of approximately 70,000 lbs. Each drum width shall be approximately 3 feet - 8 inches wide and shall contain a minimum 65 sheepsfeet, arranged in configuration of 5 rows of 13 feet, each a minimum of 6-inches long.

3. Compact each lift within each individual test fill using a prescribed number of passes of the sheepsfoot compactor. The number of passes within each test fill shall be varied. One test fill shall be constructed with each lift compacted by 2 passes of the sheepsfoot compactor, one test fill shall be constructed with each lift compacted by 4 passes of the compactor, and one

test fill shall be constructed with each lift compacted by 6 passes of the compactor. The sheepsfoot compactor shall be operated at manufacturer's recommended speed during compaction operations for each of the test fills.

The test fills shall be constructed to a minimum of 90 percent maximum dry density and at -2 percent of optimum to +3 percent of the optimum moisture content, as determined by the modified proctor test for each test fill.

4. The field density and moisture content of the compacted clay shall be determined by the nuclear moisture/ density gauge method (ASTM D 2922 and D 3017) at a frequency of at least 3 tests per layer of clay placed.

5. Determine the hydraulic conductivity of each test fill using the Boutwell permeameter method. A minimum of three field permeability tests shall be performed for each test fill.

The Boutwell permeameter field permeability test shall be performed in two phases. The first phase will consist of grouting a 4-inch diameter casing into a 12-inch to 15-inch deep borehole followed by the performance of a constant head permeability test to

determine the vertical component of the hydraulic conductivity for the test fill. This phase I constant-head field permeability test shall be performed in accordance with the procedure outlined by Daniel, In Situ Hydraulic Conductivity Tests, 1989.

The second phase of the Boutwell permeameter field permeability test shall consist of extending the phase I borehole to a depth ranging from approximately 21 to 24 inches below the surface of the test fill. The borehole shall be extended by inserting a 3-inch diameter Shelby tube through the 4-inch diameter casing and pushing it into the underlying soil for a depth ranging from 6 to 9-inches. The Shelby tube shall then be removed from the borehole with the enclosed cylinder of soil.

A constant head permeability test shall then be performed in the extended borehole in accordance with the method outlined by Daniel, 1989 (In Situ Hydraulic Conductivity Tests), and the results evaluated with respect to the results of the Phase I test to determine a horizontal component of permeability.

6. The Shelby tube sample of soil removed from each field permeability test location shall be utilized to determine the laboratory coefficient of permeability. These samples will be tested for permeability according to the falling head method using one of the test

methods detailed in USEPA publication SW-925 (1984). In addition, the sample will be tested for Atterberg limits, particle size distribution, and shear strength. A resultant coefficient of permeability greater than 1 x 10^{-7} cm/sec will be immediately reported to the CQA Officer.

7. Shear strength will be determined at a minimum frequency of three tests per test fill. Shear strength will be determined by field vane shear methods or by laboratory strength tests performed on Shelby tube samples obtained in the field.

8. The test locations for hydraulic conductivity within each test fill shall be arranged in a triangular pattern, and the moisture and density tests for each lift of soil shall be performed at approximately the same location as the hydraulic conductivity testing so as to maximize the correlation between test results.

9. Using this approach, a minimum of nine sets of moisture, density test data and three sets of shear strength and permeability test data will be obtained for each test fill. Due to the inherent variability of soil compaction operations, the construction methodology used (i.e., the number of passes) shall be considered adequate for construction if the average of all of the field permeability values and all of the

field shear strength and moisture/density values meet the design requirements of the project Quality Assurance plan. That is, if the average field permeability value for a test fill is less than 1×10^{-7} cm/sec, and if all the field shear strength tests indicate values in excess of 2500 psf; and if all the moisture/density data meet the required specifications, the construction methodology shall be considered adequate.

II. Quality Assurance

1. Health and Safety Plans - For the construction of the test fills, as well as the construction of the hazardous waste cell, it is expected that worker exposure to chemical hazards will be limited. Therefore, during the performance of field activities, safety procedures will include the following: Each person will be required to wear a hard hat, steel-toed boots and safety glasses.

2. Equipment - The equipment planned for use during construction of the test fill will consist of the following types of equipment:

   Tractor - Scraper

   Bulldozer

   Sheepsfoot Compactor meeting equipment specifications included herein.

The sheepsfoot compactor used for the subsequent construction of the hazardous waste cell shall consist of the same type of equipment used to construct the test fill. This equipment shall be of a comparable age and quality, and be maintained in good repair.

3. Personnel - Qualified personnel will be used to monitor and evaluate the test fill construction program. A field engineer or geologist will monitor test fill construction operations and perform field testing and obtain soil samples. The results of the test fill field and laboratory testing program will be evaluated by a qualified engineer or geologist.

4. Quality Control Reports - Daily field reports will be prepared by the field engineer or geologist assigned to monitor construction of the test pads. These daily field reports will include, but will not be limited to, the following information:

- date, weather
- test pad dimensions
- lift thickness
- number of equipment passes
- type of equipment used
- equipment speed
- type of soil used

- location of moisture-density tests
- field permeability test data including location and borehole dimensions
- location and depth of undisturbed samples obtained for soil index testing

5. Photographic Record - Photographs of each lift of each test pad will also be obtained by the field geologist during construction of the test fill. These photographs will be compiled and labeled with pertinent data including date, weather and location into a permanent record.

David

MAY 0 8 1989

5H-12

CERTIFIED MAIL P 847 326 233
RETURN RECEIPT REQUESTED

Mr. Jerome S. Amber
Environmental and Safety Engineering Staff
Ford Motor Company
Suite 608
15201 Century Drive
Dearborn, Michigan 48120

Re: Ford Allen Park Clay Mine
Final Permit
MID 980 568 711

Dear Mr. Amber:

Enclosed is a copy of the final permit issued by the United States Environmental Protection Agency (U.S. EPA), which addresses the applicable provisions of the Hazardous and Solid Waste Amendments (HSWA) of 1984. The pre-HSWA permit is being concurrently issued by the Michigan Department of Natural Resources (MDNR). The effective date of the final permit is specified on the permit cover sheet.

The duration of the permit is five (5) years. However, the U.S. EPA may modify, revoke, reissue, or terminate this permit based on causes specified in 40 Code of Federal Regulations (CFR) Sections 270.41, 270.42, and 270.43.

You have the right to appeal any condition of the permit pursuant to 40 CFR Section 124.19. The failure of your company to meet any portion of the permit may result in civil and/or criminal penalties.

Sincerely,

Basil G. Constantelos, Director
Waste Management Division

Enclosures

#43

cc: Alan J. Howard, MDNR
Ken Burda, MDNR, w/enclosure
William Muno, HWEB
Leonardo Robinson, ORC

MAY 0 8 1989

5H-12

CERTIFIED MAIL P 847 326 233
RETURN RECEIPT REQUESTED

Mr. Jerome S. Amber
Environmental and Safety Engineering Staff
Ford Motor Company
Suite 608
15201 Century Drive
Dearborn, Michigan 48120

Re: Ford Allen Park Clay Mine
Final Permit
MID 980 568 711

Dear Mr. Amber:

Enclosed is a copy of the final permit issued by the United States Environmental Protection Agency (U.S. EPA), which addresses the applicable provisions of the Hazardous and Solid Waste Amendments (HSWA) of 1984. The pre-HSWA permit is being concurrently issued by the Michigan Department of Natural Resources (MDNR). The effective date of the final permit is specified on the permit cover sheet.

The duration of the permit is five (5) years. However, the U.S. EPA may modify, revoke, reissue, or terminate this permit based on causes specified in 40 Code of Federal Regulations (CFR) Sections 270.41, 270.42, and 270.43.

You have the right to appeal any condition of the permit pursuant to 40 CFR Section 124.19. The failure of your company to meet any portion of the permit may result in civil and/or criminal penalties.

Sincerely,

Basil G. Constantelos

Basil G. Constantelos, Director
Waste Management Division

Enclosures

cc: Alan J. Howard, MDNR
Ken Burda, MDNR, w/enclosure
William Muno, HWEB
Leonardo Robinson, ORC

YELLO

bcc: D. Petrovski, RPB
File

RCRA PERMITS	TYP.	AUTH.	IL. CHIEF	IN. CHIEF	MI. CHIEF	MN/WI CHIEF	OH. CHIEF	RPB CHIEF	O. R. A.D.D.	WMD DIR
INIT. DATE	9/26/88	9/27/88			9/27/88			9/27/88	9/26/88	9/27/88

EP 9-28-88

5HR-13 MI Section/D. Petrovski

UNITED STATES POSTAL SERVICE

OFFICIAL BUSINESS

MAY 2 1989

SENDER INSTRUCTIONS

Print your name, address, and ZIP Code in the space below.

- Complete items 1, 2, 3, and 4 on the reverse.
- Attach to front of article if space permits, otherwise affix to back of article.
- Endorse article "Return Receipt Requested" adjacent to number.

U.S.MAIL

PENALTY FOR PRIVATE USE, $300

RETURN TO

Print Sender's name, address, and ZIP Code in the space below.

UNITED STATES OF AMERICA
ENVIRONMENTAL PROTECTION AGENCY
REGION V HS
230 SOUTH DEARBORN STREET
CHICAGO, IL 60604

SENDER: Complete items 1 and 2 when additional services are desired, and complete items 3 and 4.

Put your address in the "RETURN TO" Space on the reverse side. Failure to do this will prevent this card from being returned to you. The return receipt fee will provide you the name of the person delivered to and the date of delivery. For additional fees the following services are available. Consult postmaster for fees and check box(es) for additional service(s) requested.

1. ☒ Show to whom delivered, date, and addressee's address. ↑*(Extra charge)*↑
2. ☐ Restricted Delivery ↑*(Extra charge)*↑

3. Article Addressed to:

Mr. Jerome S. Amber
Environmental and Safety
Engineering Staff
Ford Motor Company
Suite 608
15201 Century Drive
Dearborn, Michigan 48120

4. Article Number
P 847 326 238

Type of Service:
☐ Registered ☐ Insured
☒ Certified ☐ COD
☐ Express Mail

Always obtain signature of addressee or agent and DATE DELIVERED.

5. Signature — Addressee
X

6. Signature — Agent
X [signature]

7. Date of Delivery
5/11/89

8. Addressee's Address *(ONLY if requested and fee paid)*
15201 Century #608
48120

PS Form **3811**, Mar. 1987 ★ U.S.G.P.O. 1987-178-268 DOMESTIC RETURN RECEIPT

Ford Allen Park Clay Mine

MID 980568711

Section K Certification

Part B Certification 40 CFR 270.11

I certify under penalty of law that I have personally examined and am familiar with the information submitted in this document and all attachments and that, based on my inquiry of those individuals immediately responsible for obtaining the information, I believe that the information is true, accurate, and complete. I am aware that there are significant penalties for submitting false information, including the possibility of fine and imprisonment.

Paul T. Sullivan
President
Rouge Steel Company
(per delegation of authority letter attached)

Executive Vice President
Ford Diversified Products Operations

June 21, 1983

Paul T. Sullivan
President
Rouge Steel Company
3001 Miller Road
Dearborn, Michigan 48121

Pursuant to authority redelegated to me by the President of Ford Motor Company (the "Company"), I hereby delegate to Paul T. Sullivan authority to take such action as he may deem necessary or appropriate with respect to assets of the Company included as a part of the assets of the former Steel Division of the Company but not transferred to Rouge Steel Company, up to the levels of authority of a Divisional General Manager of the Company as described in the Capital Assets section of the Executive Authorities Manual issued from time to time by the Company.

This authority supercedes my April 18, 1983 redelegation to Mr. P. T. Brosnahan.

T. C. Page

cc: Sidney Kelly

Ford Motor Company

3001 Miller Road
Dearborn, Michigan 48121

Mr. Paul T. Sullivan,
General Manager
Steel Division

The undersigned hereby certifies to you that:

1. I am the person immediately responsible for obtaining the information contained in the document accompanying the certification and all of the attached documents.

2. I am familiar with the procedure used to obtain the information, and I personally supervised the persons who obtained the information. I believe the information is true, accurate and complete.

3. I am aware that there are significant penalties for submitting false information, including the possiblity of fine or imprisonment.

Signed: Douglas A. Painter

Douglas A. Painter,
Manager
Mining Department

CERTIFICATION OF CONFIDENTIAL BUSINESS INFORMATION

There is no part of this permit, administrative record, or permit application that is considered Confidential Business Information.

RCRA Permitting Branch

Signature

9-28-88

Date

RCRA Program Management Branch

Signature

9/28/88

Date

#39

CONVERSATION RECORD

TIME: 9:15 A.M.
DATE: 9-28-88

TYPE
☐ VISIT ☐ CONFERENCE ☒ TELEPHONE
☐ INCOMING
☐ OUTGOING

Location of Visit/Conference:

ROUTING	
NAME/SYMBOL	INT

NAME OF PERSON(S) CONTACTED OR IN CONTACT WITH YOU	ORGANIZATION (Office, dept., bureau, etc.)	TELEPHONE NO.
DAVID MILLER	FORD	(313) 322-0700

SUBJECT: The Ford Allen Park Permit, Administrative Record, Permit Application & RCRA Confidential Business Information

SUMMARY

- Asked Mr. Miller for verification regarding the absence of RCRA CBI in the Ford Allen Park File.

- Mr. Miller stated that there is not any CBI materials in the associated with the Allen Park File.

ACTION REQUIRED

NAME OF PERSON DOCUMENTING CONVERSATION	SIGNATURE	DATE
DAVE PETROWSKI	Dave Petrowski	9-28-88

ACTION TAKEN

SIGNATURE	TITLE	DATE

Attachment

Comments on Ford Allen Park Clay Mine Landfill
Draft Hazardous Waste Operating License
EPA ID No. MID 980 568 711

Part III A.1. The referenced engineering plans dated June 12, 1987 have been updated and replaced by drawings dated June 24, 1988 that should be incorporated into the operating license as Attachment 7.

Part III C. 1.a. The natural clay base meets Michigan Act 64 requirements as evidenced by the MDNR approval of the Groundwater Waiver Demonstration. Departmental concern over the integrity of the clay base with respect to the removal of water in Cell II is addressed in Part III C.1.b. Reference to Part III C.1.a. in the operating license should therefore be removed.

Part III C.5.a. The regulatory requirement for the maximum leachate head on the liner is twelve inches, not six inches. Please incorporate this correction.

Part III F.7. It is agreed that the facility must take all reasonable steps necessary to remove all waste from the cargo portion of any vehicle leaving the facility. The following revision (changes are in boldface type) is proposed to achieve this objective:

No waste shall remain in the cargo portion of any vehicle leaving the facility, **deminimis quantities excepted**. To assure compliance with this condition, the licensee shall inspect the cargo portion of all vehicles before they leave the facility and shall maintain a record of these inspections for a period of six months. If an inspection reveals waste remaining in the vehicle, the licensee shall take all **reasonable** steps necessary to assure that **the waste is removed from the vehicle**.

Part IV A.2. The proposed requirement to determine groundwater flow direction in the site artesian aquifer utilizing three static water elevations cannot be achieved, and should be deleted from the operating license. To provide a contour map from this data would not generate meaningful information inasmuch as the three data points reflect artesian conditions. Monitoring of the three static water elevations is adequate to affirm the artesian conditions as required in Part IV A.1.

Part IV B.2.b. Quarterly sampling results must be submitted within the time frame specified in Condition E.9.c., Part I of the Draft Operating License. Condition B.2.b., Part IV states an annual leachate summary report shall be submitted by March 1st of the following year. Because it is redundant to require submittal of these same analytical results a second time by each March 1st deadline, all that should be required each March 1st is a summary of the monthly leachate volumes pumped from each hazardous waste cell during the previous calendar year. The Waste Management Division of the MDNR should have the responsibility of attaching the annual leachate volume report to the quarterly leachate analytical reports already submitted by the licensee.

Part IV C.2.a. The last line of Condition C.1., Part IV of the Draft Operating License should be deleted and added as Condition C.2.c. of this part, such that condition C.1. stands alone as a requirement relating solely to Leak Detection liquid volume reporting.

Condition C.2.a. states that if "no liquid is present, background shall be established by the continuity correction method based on the detection limit of the compound" as detailed in Attachment 12, Part B. The t-Test with Continuity Correction has two significant shortcomings that make this statistical test inappropriate for application when background data is nonexistent (e.g., no liquid is collected before waste placement or insufficient data is collected to adequately establish background). First, the t-Test with Continuity Correction is inapt when there are only very few observations; it is critical to this method that sufficient background data be collected. Secondly, this test requires a calculation of the mean for both the background and foreground data. If no liquid is present to establish background water quality, the t-Test with Continuity Correction cannot be applied to foreground monitoring (i.e., following waste placement). To imply in Condition C.2.a. that the licensee is to "create" background data in the event none exists is inconsistent with a rational statistical approach to evaluating data. If the statistical method of identification cannot be applied to the conditions that exist or are likely to exist, then another more suitable method should be selected.

Because it may be difficult to collect any data let alone a sufficient pool of data to establish background prior to waste placement, it is appropriate to monitor for Table 2 parameters only by employing the Critical Value Method as presented in Exhibit I to this response. Table 2 parameters are organic compounds that are not expected to be found naturally occurring in virgin clay soils of a liner system. The assumption the licensee makes is that any waters collected in the Leak Detection System should be clean of Table 2 compounds during foreground monitoring and result in non-detectable levels. The Critical Value Method allows for evaluation of foreground data without prior knowledge to background information. The basis for selecting the Critical Value Method (a confidence level test) over the t-Test with Continuity Correction (a means comparision test inappropriately called a t-Test) is presented in Exhibit A to these comments.

Part IV C.2.b. Condition C.2.b. stipulates that each withdrawal of liquid from the system must be analyzed for those parameters listed in Tables 1, 2 and 6 of Attachment 11 to the Draft Operating License. Because Table 6 parameters are water quality indicators that can provide helpful information in the future, they should not be subjected to statistical evaluation as Table 2 parameters should be evaluated. Table 1 and 2 parameters are hazardous waste constituents typically found in the wastes identified for disposal at this facility. The monitoring and statistical evaluation of Table 2 parameters provide an environmental program capable of detecting a release of hazardous waste constituents from the primary liner of Cell II. Michigan Act 64 Rule 299.9611 requires the licensee to "develop an environmental monitoring program capable of detecting a release of hazardous waste or hazardous waste constituents from the facility." A leak in the

primary liner, detected in the leak detection system beneath the 150 cm clay liner, does not constitute a release of hazardous waste constituents from the facility per the definition of **Facility** in R299.9103. The development of a Leak Detection monitoring program is neither required nor capable of detecting such a release from this facility. The Leak Detection monitoring program is a viable plan for detecting a leak in the primary liner.

It should again be noted that there may not be any liquids that collect in the Leak Detection system prior to waste placement in Cell II. If such a scenario occurs, the licensee will be unable to implement the t-Test with Continuity Correction for foreground evaluation because background data will not exist. Because water from the moisture-conditioned clay may not be pressed out of the soil liner before waste placement (a very real likelihood), the most appropriate statistical test for evaluating significant increases to foreground data is the Critical Value Method. Evaluation of only Table 2 parameters by the Critical Value Method, is the most appropriate approach to determining whether liquids collected in the Leak Detection system are indeed the result of a leak in the primary liner. Table 1 parameters should be removed from the Leak Detection, Collection and Removal System Monitoring Program for the following reason:

1. Table 2 is a list of 16 Polynuclear Aromatic Hydrocarbons and 12 Phenolic compounds that are not expected to be naturally occurring in any virgin soils such as clay. Metals on the other hand, such as those listed in Table 1, may be naturally occurring in trace amounts since clays are minerals. Therefore, liquids compressed from the clay liner may emerge containing trace levels of soluble, suspended or miscible metals removed from the clay -- total metals in Table 1 require a digestion process. Without any background data relating metals concentrations in an uncontaminated Leak Detection liquid (i.e., before waste placement), it would be erroneous to assume that the detection of Table 1 metals in waters collected during foreground monitoring constitutes a leak to the system. Condition C.2.a., Part IV of the Draft Operating License infers that background data shall be "created" and be equal to one-half the detection limit for a given parameter in the event no liquid collects in the system prior to waste placement. The Surface Water monitoring program is the most comprehensive plan for collecting background data on Table 1 metals.

Condition C.2.b. reads that every withdrawal of liquid from the system must be analyzed for parameters listed in Tables 1, 2 and 6. Since Condition C.1. states that liquid withdrawal must be initiated monthly, sampling and analysis must be done whenever liquids are withdrawn -- a frequency much greater than required to protect human health and the environment. Surface water conditions are not monitored continuously nor is the artesian condition of the site. Condition C.2.b. should therefore be changed to read as follows:

"After waste has been placed in Cell II, the licensee shall sample and analyze quarterly for those parameters listed in Table 2 of

Attachment 11 and ...."

Part IV C.2.c. A Condition C.2.c. should be added, as discussed at the beginning of the Leak Detection comments section, to read as follows:

> "If there is insufficient liquid to obtain a sample, requirements under Condition C.2. of this part shall be waived."

Part IV C.3. Attachment 12, Parts A and B should be removed from the license as the statistical package identified in Condition C.3., Part IV and replaced with the statistical programs included as Exhibit A to these comments.

Part IV C.4. Refer to Exhibit B for alternative proposed language that would provide appropriate confirmation of a statistically significant increase in the analysed parameters, thus eliminating results attributed to laboratory or sampling error.

Part IV C.4.b. The requirement to monitor artesian wells is inconsistent with the groundwater waiver provision and should be removed from the operating license. Refer to Exhibit B.

Part IV C.5. Refer to Exhibit B for alternative proposed language that would trigger appropriate remedial action in the event an escape of pollutants is suspected from the Cell II liner system. Remedial action provisions relating to the leak detection system should pertain only to Cell II.

Part IV D.2. The frequency for sampling should be identified in Condition D.2. to read as follows:

> "The licensee shall sample quarterly and analyze...."

Part IV D.2.a. Condition D.2.a., Part IV of the Draft Operating License is technically incorrect because if "no liquid is present" a sample simply cannot be collected. True background monitoring is not possible for this program because foreground monitoring commences immediately with the first sampling of water of the <u>in situ</u> clays adjacent to Cell I. If this condition is suppose to be read like that in the Leak Detection program (i.e., where background data shall be "created" and equal to one-half the method detection limit of the Table 2 compound and evaluated by the t-Test with Continuity Correction), this method is inappropriate for the same reasons detailed in our comments with respect to the Leak Detection program. The t-Test with Continuity Correction cannot be applied unless background data exists; it is technically unsupportable to arbitrarily create data in the event such data does not exist. The t-Test with Continuity Correction is not an appropriate method to evaluating statistically significant increases of environmental data when there is no background data to which foreground information can be compared. The number of background observations, the mean of the background observations and the variance of the background observations all must be computed when calculating the t-statistic (see Attachment 12, Part B of the Draft Operating License). It is no more

appropriate to create foreground data than it is to create background data in attempting to make the formula work.

The Critical Value Method should be applied as the statistical method for Table 2 parameters in the Lysimeter Monitoring program. The Critical Value Method is capable of evaluating foreground data when no background data exists, based on the assumption that those compounds of interest are equal to some concentration below the method of detection. It is fair and accurate to assume that organics listed in Table 2 will not be present at levels requiring establishment of a background data set. An action level is calculated based on the precision of both the laboratory and the method at or slightly above the method detection limit. Precision for a method should be calculated once a year and can be accomplished in one day by running seven replicates of a blank sample spiked slightly above the detection limit. This approach to dealing with non-detects and with programs in which no background data exists is the most rational means of assessing environmental data of this type.

Part IV D.2.c. A Condition D.2.c. should be added to read as follows:

> "If there is insufficient liquid to obtain a sample, requirements under Condition D.2. of this part shall be waived."

Part IV D.3. Attachment 12, Parts A and B should be removed from the Draft Operating License as the statistical package identified in Condition D.3., Part IV and replaced with the statistical programs included as Exhibit A to these comments.

Part IV D.4. Refer to Exhibit B for proposed alternative language that would provide appropriate confirmation of a statistically significant increase in the analysed parameters, thus eliminating results attributed to laboratory error.

Part IV D.4. The requirement to monitor artesian wells is inconsistent with the groundwater waiver provision and should be removed from the Draft Operating License. Refer to Exhibit B.

Part IV D.5.a.and D.5.b. Refer to Exhibit B for proposed alternative language that would trigger appropriate remedial action in the event an escape of pollutants is suspected from Cell I.

Part IV E.2., E.2.a. and E.2.b. Condition E.2., Part IV of the Draft Operating License states that parameters listed in Table 3 shall be evaluated for statistically significant increases over background. Although background information relating to Table 3 parameters shall be established, it is not the intent to monitor for statistical increases of inorganic, nonhazardous constituents such as those of Table 3. Because Table 3 parameters are water quality indicators that can provide helpful information in the future, they should not be subjected to statistical evaluation as Table 1 and 2 parameters should be evaluated. Table 1 and 2 parameters are hazardous waste constituents typically found in the wastes identified for

disposal at this facility. Any reference to Table 3 parameters should be excluded from the language contained in Conditions E.2. and E.2.b., Part IV.

Cell II is scheduled to be constructed over a two year period. Background data shall be collected during this time as provided for in Condition E.1., Part IV. Since the facility is afforded the luxury of assimilating background data relating to surface water quality over an extended period of time, each parameter can be scrutinized for underlying statistical distributions (e.g., normally distributed or not), outlier values, seasonal cycles, long-term trends and serial correlation. In addition, analytical precision for the detection limits can be established and the data can be categorized according to the percent of non-detects found, as proposed in the statistical package included as Exhibit A to these comments. The flow-chart in Figure VIIa (page 531) of Exhibit A presents a powerful means of selecting the right statistical method for the data at hand. The chart is a powerful tool because it provides a means of evaluating each parameter individually rather than as a coordinated group behaving similarly to one another. For example, phenol is expected to be present and naturally occurring in trace amounts during certain times of the year because of the degradation of vegetable matter in the surface waters (e.g., lignin and tannin are plant constituents that are hydroxylated aromatic compounds). Neither naphthalene nor pyrene are expected to be detected in these same waters yet background data relating to these SCAN 7 parameters are likely to be censored differently than that of phenol which may require seasonal adjustments. The methods proposed in Exhibit A offer a means of isolating the peculiarities expected of individual parameters that are ignored by the methods included as Attachment 12 to the Draft Operating License.

The last sentence of Condition E.2. should be modified to read as follows:

> "A statistically significant increase, as specified in Attachment 12, shall be determined as follows:"

where Exhibit A of these comments replaces Attachment 12 of the Draft Operating License.

Condition E.2.a., Part IV should therefore read as follows:

> "If background data does not exist or if 100% of the background is below the detection limit, apply the Critical Value Method; if more than 50% yet less than 100% of the background data are above the detection limit, apply the Average Replicate t-Test; if less than 50% of the background data are above the detection limit, apply the Proportions Test."

Condition E.2.b. of this part should then be deleted.

Attachment 4 -- Contingency Plan: Page 285C of the Contingency Plan should be consistent with the requirements of Part IV C & D of the Draft Operating License. As referenced above, revision to the Contingency is requested per Exhibit C.

Attachment 5 -- Closure Plan: Portions of the Plan are outdated. An updated Plan is provided herewith, Exhibit D.

Prepared by:

Ford Motor Company
Stationary Source Environmental
Control Office
September 6, 1988

DAO/DSM

C. LEAK DETECTION, COLLECTION AND REMOVAL SYSTEM MONITORING

1. The licensee shall withdraw liquid which has collected in the leak detection, collection and removal system for Cell 2 and shall record the volume of liquid withdrawn at least monthly. If there is insufficient liquid to obtain a sample, this requirement shall be waived.

2. The licensee shall sample and analyze the leak detection, collection and removal system as follows:

   a. As Cell 2 is constructed, the licensee shall, at least monthly, if liquid is present, sample and analyze the leak detection, collection and removal system for all parameters listed in Tables 1, 2 and 6 of Attachment 11, prior to waste being placed in the cell to establish background concentrations of these parameters. If no liquid is present, background shall be established by the continuity correction method based on the detection limit of the compound for purposes of the statistical test outlined in condition C.3. of this part.

   b. After waste has been placed in a cell, the licensee shall sample and analyze each withdrawal from the system for those parameters listed in Tables 1, 2 and 6 of Attachment 11 and any additional volatile constituents found in the leachate of that cell in concentrations exceeding 0.5 ppm during two consecutive samplings conducted pursuant to condition B.2. of this part. The statistical procedure outlined in condition C.3. of this part shall be performed on all analytical results.

3. The licensee shall determine if statistically significant increases of each parameter analyzed have occurred above the background levels established pursuant to condition C.2. of this part. A statistically significant increase shall be determined using the interim statistical test specified in Attachment 12A, Part B. A final statistical program shall be developed in accordance with Condition I of this part.

4. If a statistically significant increase is confirmed by a resampling of the leak detection system, the licensee shall do all of the following:

   a. Notify the Director immediately by calling the Chief of the Waste Management Division, the Waste Management Division District Supervisor, or Department of Natural Resources 24 hour emergency response telephone at 1-800-292-4780, and by providing followup notification to the Chief of the Waste Management Division in writing within seven days.

Changed to include a resampling to verify confirmation of a statistically significant increase, per IDI Draft License

Condition "b" was deleted because of issuance of the groundwater waiver

b. Begin immediate action to implement the current contingency plan.

re-lettered (see previous comment)

c. Within 30 days, determine the cause of contamination and whether failure has occurred in the liner system.

d. Provide the Chief of the Waste Management Division or his designee, with weekly telephone updates and written reports every two weeks regarding the progress to date in determining the cause of contamination, and the results of all samples from environmental monitoring conducted by the licensee.

5. If the determinations made under condition C.4.c. of this part indicate an escape of pollutants from Cell II, the licensee shall do either of the following:

Condition C.5 is executed only if an escape of pollutants from the liner system is confirmed (i.e., Condition C.4.c.)

The leak detection system pertains only to Cell II (i.e., active cell) and not to Cell I (i.e., inactive cell)

a. Begin immediate action to repair failures in the liner system or otherwise correct the problem and demonstrate to the Chief of the Waste Management Division within 72 hours that the action being taken will correct the escape of pollutants. The licensee shall complete the repair on a schedule approved by the Chief of the Waste Management Division, and shall obtain the certification of a registered professional engineer that, to the best of his or her knowledge or opinion, the failure has been corrected. If the Chief of the Waste Management Division determines that the failure cannot be corrected on a schedule which insures the protection of human health and the environment, the licensee shall comply with condition C.5.b. of this part.

b. Cease placing waste into all cells continuously connected to any cell indicating failure and take action to prevent the migration of hazardous waste and hazardous waste constituents from Cell II on a schedule approved by the Chief of the Waste Management Division.

Only Cell II need be referenced

D. LYSIMETER MONITORING FOR LEAK DETECTION

1. The licensee shall submit a program for installation of a minimum of two leak detection lysimeters around Cell I within 30 days of issuance of this license.

Roman numeral "I"

2. The licensee shall sample and analyze the leak detection lysimeters for all parameters listed in Table 2 of Attachment 11 as follows:

a. If no liquid is present, background shall be assumed to be one half the method detection limit of the compound for purposes of the statistical test outlined in condition D.3. of this part.

b. The licensee shall sample and analyze each withdrawal from each lysimeter for those parameters listed in Table 2 of Attachment 11 and any additional volatile constituents found in the leachate of that cell in concentrations exceeding 0.5 ppm during two consecutive samplings conducted pursuant to condition B.2. of this part.

3. The licensee shall determine if statistically significant increases of each parameter and analyzed have occurred above the background levels established pursuant to condition C.2. of this part. A statistically significant increase shall be determined using the interim statistical test specified in Attachment 12A, Part B. A final statistical program shall be developed in accordance with Condition I of this part.

4. If a statistically significant increase is confirmed by a resampling of the lysimeter system, the licensee shall do all of the following:

The same language applies to the lysimeter system as that of the leak detection system

a. Notify the Director immediately by calling the Chief of the Waste Management Division, the Waste Management Division District Supervisor, or Department of Natural Resources 24 hour emergency response telephone at 1-800-292-4780, and by providing followup notification to the Chief of the Waste Management Division in writing within seven days.

Conditions were re-lettered because the groundwater sampling does not apply

b. Begin immediate action to implement the current contingency play.

c. Within 30 days, determine the cause of contamination and whether failure has occurred in the liner system.

d. Provide the Chief of the Waste Management Division or his designee, with weekly telephone updates and written reports every two weeks regarding the progress to date in determining the cause of contamination, and the results of all samples from environmental monitoring conducted by the licensee.

5. If the determinations made under condition D.4.c. of this part indicate an escape of pollutants from Cell I, the licensee shall do either of the following:

See comment for Condition C.5 as it applies to the lysimeter system

The lysimeter system is specific to Cell I only

a. Begin immediate action to repair failures in the liner system or otherwise correct the problem and demonstrate to the Chief of the Waste Management Division within 72 hours that the action being taken will correct the escape of pollutants. The licensee shall complete the repair on a schedule approved by the Chief of the Waste Management Division, and shall obtain the certification of a registered professional engineer that, to the best of his

or her knowledge or opinion, the failure has been corrected. If the Chief of the Waste Management Division determines that the failure cannot be corrected on a schedule which insures the protection of human health and the environment, the licensee shall comply with condition D.5.b. of this part.

b. Take action to prevent the migration of hazardous waste and hazardous waste constituents from Cell I on a schedule approved by the Chief of the Waste Management Division.

only Cell I need be referenced

E. SURFACE WATER MONITORING

1. The licensee shall conduct a surface water monitoring program of surface water drainage from the site by collecting samples once each quarter after a twenty-four hour, 0.5 inch or greater rainfall, from those locations shown on Figure 1-A of Attachment 13. The licensee shall analyze each sample for those constituents listed in Tables 1, 2 and 3 of Attachment 13, using the procedures specified in Attachment 13, and Appendix 1 of Attachment 10. The licensee shall record the quantity of rainfall during each storm event during which sampling occurs.

2. The licensee shall determine if statistically significant increases of parameters listed in Tables 1, 2 and 3 of Attachment 13 have occurred over background levels for surface water in the drains. A statistically significant increase shall be determined as follows:

   a. For organic parameters listed in Table 2, the student's t-test with continuity correction as specified in Attachment 12A, Part B as the interim statistical procedure.

   b. For parameters listed in Tables 1 and 3 with n values of 4 or more, using the sign test procedures in Attachment 11A, Part A as the interim statistical procedure.

3. In the event that the sampling and analysis of surface waters shows a statistically significant increase over background, the licensee shall do the following:

   a. Notify the Director immediately by calling the Chief of the Waste Management Division, the Waste Management Division District Supervisor, or Department of Natural Resources 24-hour emergency response telephone at 1-800-292-4780.

   b. Provide follow up notification to the Chief of the Waste Management Division in writing within seven days.

   c. Within 30 days of sampling, determine whether a discharge to surface waters is occurring, or will occur during subsequent storm events, determine the source of the

EXHIBIT C

Environmental and Safety Engineering Staff
Ford Motor Company

Suite 608
16201 Century Drive
Dearborn, Michigan 48120

August 17, 1988

Mr. Peter Quackenbush
Waste Management Division
Michigan Department of Natural Resources
P.O. Box 30028
Lansing, Michigan 48909

Re: Revised Contingency Plan
Ford Allen Park Clay Mine Landfill
MID # 980 568 711

Dear Mr. Quackenbush:

Enclosed please find revisions to the Contingency Plan referenced above, which should be incorporated into the final operating permit for the hazardous waste disposal facility. Directions for the revision are as follows:

Replace page 278C of the application with page 278D.

Replace page 279D of the application with 279D.

Replace page 285C with page 285D.

Insert page 293.1 into the application.

Should you have any questions regarding this matter, please contact David Miller at (313) 322-0700.

Yours truly,

Jerome S. Amber

Jerome S. Amber
Principal Staff Engineer

cc: Ardys Bennett - Allen Park
Richard Traub - U.S. EPA

bcc: G.A. Anderson
G. Kircos
S.H. Vaughn

August 16, 1988

Section G CONTINGENCY PLAN 40 CFR 270.14(b)(7)

G-1 General Information

The hazardous waste disposal facility consists of 16.5 acres in the northeast corner of the site as shown on the site plan. The site address is 17005 Oakwood Boulevard, Allen Park, Michigan 48101, and the site mailing address is Ford Motor Company, and 15201 Century Drive, Suite 608, Dearborn, Michigan 48120.

Waste types to be disposed of at the facility are:

- (K061) Electric Furnace Emission Control Dust
- (K087) Decanter Tank Tar Sludge from Coking Operations
- (F006) Wastewater Treatment Sludge from Electroplating Operations
- (D004) EP Toxic - Arsenic
- (D005) EP Toxic - Barium
- (D006) EP Toxic - Cadmium
- (D007) EP Toxic - Chromium
- (D008) EP Toxic - Lead
- (D009) EP Toxic - Mercury
- (D010) EP Toxic - Selenium
- (D011) EP Toxic - Silver
- (001D) EP Toxic - Copper
- (003D) EP Toxic - Zinc

G-2 Emergency Coordinators (In Priority Order) 40 CFR 264.52 (d)

1. Jerome S. Amber, Primary Emergency Coordinator

Office:	Home:
(313) 322-4646	(313) 258-6714
Suite 608 CPN	1610 Hanley Court
15201 Century Drive	Birmingham, MI 48009
Dearborn, MI 48120	

2. David S. Miller
Office: (313) 322-0700
Suit 608 CPN
15201 Century Drive
Dearborn, MI 48120

Home: (313) 662-4435
3601 Elizabeth
Ann Arbor, MI 48104

3. David A. O'Connor
Office: (313) 322-0701
Suite 608 CPN
15201 Century Drive
Dearborn, MI 48120

Home: (313) 569-7742
18680 Bungalow
Lathrop Village, MI
48076

4. William Dotterrer
Office: (313) 594-1014
Room 108
Construction Services Bldg.
3001 Miller Road
Dearborn, MI 48121

Home: (313) 360-0819
7441 Honeysuckle
West Bloomfield, MI
48033

G-3 Implementation 40 CFR 264.52(d)
40 CFR 264.55

The contingency plan will be implemented by the emergency coordinator when an imminent or actual hazard incident could threaten human health and/or the environment. Example of such hazards could be fire, fumes, dike failure, or storm overflow.

G-4a Emergency Contacts and Notification Procedures 40 CFR 264.56(a)

Any unplanned release of hazardous waste to the soil, air or surface water at the facility which could threaten human health or the environment would warrant implementation of this plan, as well as any condition which if not corrected might cause such a release. The above

G-4n Landfill Leakage 40 CFR 264.52

If liquid is detected in the leak detection system or lysimeter monitoring system, the liquid will be analysed for contamination according to each respective environmental monitoring program. If a statistically significant increase in the concentration of analysed parameters is detected, in accordance with the provisions of the monitoring programs, the following procedure shall be implemented whenever an immediate resampling confirms the statistically significant increase:

a. Notify the Director immediately by calling the Chief of the Waste Management Division, the Waste Management Division District Supervisor, or Department of Natural Resources 24 hour emergency response telephone at 1-800-292-4780, and by providing followup notification to the Chief of Waste Management Division in writing within seven days.

b. Begin immediate action to implement the current contingency plan.

c. Within 30 days, determine the cause of contamination and whether failure has occurred in the liner system.

d. Provide the Chief of the Waste Management Division or his designee, with weekly telephone updates and written reports every two weeks regarding the progress to date in determining the cause of contamination, and the results of all samples from environmental monitoring conducted by the licensee.

G-5 Emergency Equipment and Power Sources 40 CFR 264.52 (e)

Fire Extinguishers	- 8 located throughout the wheel wash building
Telephone	- located at the wheel wash building
Fire Hydrant	- located north of entrance gate
Electrical Power	- outlets located in wheel wash building and air monitoring stations
Misc. Mobil Equipment	- available at the Ford Rouge Plant upon request (front endloaders, vacuum truck, etc.)
Shower	- located in wheel wash building

RICHARD A. HUEBLER
CITY ADMINISTRATOR

City of Allen Park

OFFICE OF ADMINISTRATOR
16850 SOUTHFIELD ROAD
ALLEN PARK, MICHIGAN 48101
PHONE: 928-1400

June 17, 1987

Mr. Douglas A. Painter, Manager
Ford Motor Company Mining Department
3001 Miller Road
Dearborn, Michigan 48121

Re: "Contingency (Emergency) Plan"
Ford Motor Mine

Dear Mr. Painter:

I wish to thank you for your plan. It will become part of the City Plan for Emergency Management.

For your information:

Emergency Management Coordinator is
Richard A. Huebler (City Administrator)
16850 Southfield Road, Allen Park, MI 48101
Phone: 928-1400

Deputy Emergency Management Coordinator is
Carson C. Smith (Administrative Assistant)
Address and phone number above

Environmental Inspector
Ardys Bennett (Building Inspector)
Address and phone number above

Hazardous Material Response
Raymond Bertoncelli (Fire Chief)
6730 Roosevelt, Allen Park, MI 48101
Phone: 928-0024

Copies of your plan have been issued to the concerned parties.

Respectfully,

Richard A. Huebler

Richard A. Huebler
City Administrator

RAH:vag