A Phase I Reports

FINAL REPORT
GEOPHYSICAL INVESTIGATION
SYLVANIA CORNING FUSRAP SITE
HICKSVILLE, NEW YORK

Prepared for Ecology and Environment, Inc.
Lancaster, New York

Prepared by GeoView, Inc.
St. Petersburg, Florida

November 15, 2006

Mr. Gene Florentino
Ecology and Environment, Inc.
368 Pleasantview Drive
Lancaster, New York 14086

Subject: Transmittal of Final Report for Geophysical Investigation Sylvania Corning FUSRAP Site – Hicksville, New York GeoView Project Number 3376

Dear Mr. Florentino,

GeoView, Inc. (GeoView) is pleased to submit the final report that summarizes and presents the results of the geophysical investigation performed at the above referenced site. Time domain electromagnetics and ground penetrating radar were used to help determine the presence of buried drums or underground storage tanks and to identify the location of historical leach pools, drains and drywells within the accessible areas of the project site. GeoView appreciates the opportunity to have assisted you on this project. If you have any questions or comments about the report, please contact us.

Sincerely,
GEOVIEW, INC.

Christopher Taylor, P.G.
Vice President

Michael J. Wightman, P.G.
President
Florida Professional Geologist Number 1423

1.0 Introduction

A geophysical investigation was conducted at the Sylvania Corning FUSRAP Site located in Hicksville, New York. The project site consisted of a 10.5-acre area partially abandoned industrial facility divided into three separate but contiguous properties located at 70, 100, and 140 Cantiague Rock Road. (Figures 1 and 3). Of concern was the presence or absence of any remaining buried drums or underground storage tanks beneath the site and to identify the location of several of the historical leach pools, drains and drywells.

The geophysical investigation was conducted using time domain electromagnetics (TDEM) and ground penetrating radar (GPR). Mr. Chris Taylor, P.G. and Mr. Chris Kibler performed the investigation over a 5-day period on September 11th-15th, 2006.

2.0 Site Description

The site was approximately 10.5 acres in size. A chain link fence bordered the site. Three main buildings, Building 70, Building 100, and Building 140, were located within the survey area. Ground cover across the majority of the site was asphalt. Reinforced concrete was present within the floors of the three buildings. At the time of the geophysical investigation, the majority of the site was clear and accessible to the investigation.

During previous site activities and investigations, 57 buried drums were encountered and removed during the 1986 expansion of Building 70; one underground storage tank was encountered and abandoned in-place during the soil boring activities in Building 100; and several underground storage tanks were encountered and removed during remedial excavation activities to the east of Buildings 140 and 100, and south of Building 100. In addition, one underground storage tank was removed to the west of Buildings 140 and 100.

3.0 Description of Geophysical Investigation

The TDEM survey was conducted with a Geonics, Ltd. Model EM-61 Buried Metal Detector (EM-61). A discussion of the limitations of the survey grid is provided in Appendix A1.1. The survey was conducted along parallel lines spaced 5 ft apart. The TDEM readings were collected every 0.62 ft along the transect lines. The locations of the TDEM survey are shown in Figures 1 and 3. A total of 47,708 data readings were collected. The TDEM data was then contoured using Surfer^{tm}, a computer-contouring program. A discussion of the TDEM method is provided in Appendix A1.2.

The lateral sensitivity of the TDEM equipment to surficial metallic debris is usually 3 ft or less. In such areas, it is not possible to discriminate which portion of

the instrument response is being caused by the surficial debris and which portion (if any) is being cause by buried metallic debris. Accordingly, it is usually not possible to determine if buried metallic debris is present within 3 ft of areas where surficial metallic debris is present. It is also not possible to determine the depth of debris burial in areas where the TDEM response is affected by the presence of surficial metallic debris.

The GPR survey was conducted along a series of perpendicular or parallel transects spaced 10 ft apart. The results of this survey are presented in Figures 2 and 4. Additional GPR transects were performed using a smaller GPR grid over the suspected locations of the eight historical leach pools, drains, and drywells and over the majority of the EM-61 anomalies.

On the exterior of the buildings, the GPR data was collected using a Mala radar system with a 500-megahertz antenna. A time range setting of 60 to 90 nano-seconds was used. This time range setting provided information to an estimated depth of 5 to 11 ft below land surface (bls). On the interior of the buildings, the GPR data was collected using a Mala radar system with 500-megahertz and 800-megahertz antennas. A time range setting of 15 to 70 nano-seconds was used. This time range setting provided information to an estimated depth of 3 to 4 ft below land surface (bls). The reinforced concrete slab limited the penetration of the GPR signal. A detailed description of the GPR technique and the methods employed for debris studies is provided in Appendix A1.3.

4.0 Survey Results

4.1 Exterior Areas

The results of the geophysical investigation are presented in Figures 1-4. A summary of the results is provided in Table 1. The EM-61 data indicates multiple areas of elevated responses throughout the survey area. The majority of these areas of elevated response are due to reinforced concrete pads (visible at ground surface), fencing, possible underground utilities, manholes/drains, or other known metallic structures. However, several of the areas of elevated response may be due to areas of buried debris or other structures. These areas are indicated on Figures 1 and 3 as EM-61 Anomalies 1-35. GPR data collected within several of the EM-61 anomalies indicated areas of small shallow debris and did not indicate the existence of underground storage tanks or buried drums within the EM-61 anomalies. However, in some areas, the depth of penetration of the GPR signal was limited and the EM-61 may be responding to features that are buried beyond the depth of penetration of the GPR signal. Multiple circular anomalies were identified between buildings 100 and 140. These circular anomalies are the locations of drainage

structures installed during previous site activities. The locations of these structures are shown on Figures 1 and 2.

The GPR data identified seven additional anomalies. These anomalies are shown as GPR Anomalies A-G on Figures 2 and 4. GPR anomalies A and E are characterized by downwarping of the GPR reflectors and an increase of penetration of the GPR signal. These two anomalies may be areas of previous excavation activity. GPR Anomalies B, C, and F are characterized by parabolic reflections at depths ranging from 3 to 4 ft bls. These anomalies my indicate areas of possible buried debris. GPR anomalies D and G correspond to the possible locations of former drain DRYH-C and the drain within Building 140, respectively.

Additional geophysical testing was performed with an 800 MHz antenna and a Subsite Utility Locator at each of the proposed locations of the sub-slab sampling locations to identify possible utilities or other obstructions. If a utility was identified proximate to a proposed sampling location, the location of the suspected utility was marked with lumber crayon and the sampling location was moved to a more suitable location.

A known underground storage tank was located north of the northwest corner of Building 70. The existence of the underground storage tank was confirmed by the geophysical survey and the location of this underground storage tank is shown on Figures 3 and 4. Examples of the GPR data showing GPR Anomalies A and F are provided in Appendix 1.

4.2 Interior Areas

Initial GPR tests were performed across the location of a known underground storage tank located within the southeast corner of the interior of Building 100. The testing was performed to determine whether significant GPR signal penetration could be achieved to meet the project objectives of identifying underground storage tanks inside of the buildings. The underground storage tank was at a depth of 6 to 6.5 ft bls. The GPR signal did not have sufficient depth of penetration and was therefore not able to resolve the underground storage tank. Additional testing was performed within of western portion of Building 70, the eastern portion of Building 100 and the central portion of Building 140. Several utilities were identified at a maximum depth of 3 to 3.5 ft bls. Based on these results, it was determined that the signal penetration depth of the GPR was insufficient to identify unknown underground storage tanks or buried drums inside of the buildings. Accordingly, the GPR survey was not conducted throughout the remainder of the interior of the buildings. A discussion of the limitations of the GPR technique in underground storage tank/buried debris studies is provided in Appendix 2.3.

Table 1 – Summary of Geophysical Survey Results

Anomaly ID	Figure Number	GPR Response	EM-61 Response	Estimated Depth (feet)	Estimated Size of Anomaly Area (feet)	Comments
A	1,2	High	High	6-7	20x20	Downwarping of GPR reflector and associated increase in penetration of GPR signal. Possible area of previous excavation. Coincides with Anomaly 3.
B	1,2	Medium	Low	1-3	3x3	Single parabolic reflection only evident on one GPR transect. It is suspected that Anomaly B is small amounts of minor near surface debris.
C	1,2	Medium	Low	2-3	3x3	Anomaly comprised of multiple reflections, indicating multiple, smaller objects
D	3,4	High	Interference from metal fence	2-4	2x2	Single parabolic reflection. Anomaly D was located 5 ft to the northeast of the reported location of former drywell DRYH-C.
E	3,4	High	None	2-4	2x2	Apparent increase in depth of the GPR reflector and an increase in penetration of the GPR signal. May indicate an area of former excavation activity or a former pit.
F	3,4	High	High	2-4	8x20	GPR Anomaly is comprised of a single, strong parabolic reflection at a depth of 2-4 feet bls and several smaller, shallower parabolic reflections. Anomaly is located at the suspected termination of a utility identified by the EM-61 data.
G	1,2	Medium	Not Surveyed	2-4	3x3	Single parabolic reflection. Near reported location of DRH-A.

Table 1 – Summary of Geophysical Survey Results

Anomaly ID	Figure Number	GPR Response	EM-61 Response	Estimated Depth (feet)	Estimated Size of Anomaly Area (feet)	Comments
1	1	Low	Medium	1-3	5x5	Small EM-61 anomaly with rapid increase and decrease of the EM response. Only evident on one EM transect line. Suspected to be an area of minor, near surface metallic debris.
2	1	None	Medium	Unknown	7x10	Relatively large anomaly. Evident on 3 EM transects. May represent Former Leach Pool LPH-B.
3	1	High	High	6-7	5x10	Coincides with Anomaly A
4	1	Low	Medium	1-3	5x5	Possible area of buried debris. Evident of 4 parallel EM transect lines. Reinforced concrete barrier is located immediately north of Anomaly 4
5	1	None	High	Unknown	8x8	Larger EM-61 anomaly. No associated GPR anomaly. May be area of small, scattered near surface debris.
6	1	None	Low	Unknown	3x3	Small EM-61 anomaly with rapid increase and decrease of the EM response. Only evident on one EM transect line. Suspected to be an area of minor, near surface metallic debris.
7	1	None	Medium	Unknown	4x6	Small EM-61 anomaly with rapid increase and decrease of the EM response. Only evident on one EM transect line. Suspected to be an area of minor, near surface metallic debris.
8	1	None	Medium	Unknown	5x5	Small EM-61 anomaly with rapid increase and decrease of the EM response. Only evident on one EM transect line. Suspected to be an area of minor, near surface metallic debris.

Table 1 – Summary of Geophysical Survey Results

Anomaly ID	Figure Number	GPR Response	EM-61 Response	Estimated Depth (feet)	Estimated Size of Anomaly Area (feet)	Comments
9	1	None	Medium	Unknown	5x5	Small EM-61 anomaly with rapid increase and decrease of the EM response. Only evident on one EM transect line. Suspected to be an area of minor, near surface metallic debris.
10	1	None	Low	Unknown	3x3	Small EM-61 anomaly with rapid increase and decrease of the EM response. Only evident on one EM transect line. Suspected to be an area of minor, near surface metallic debris.
11	1	None	Medium	Unknown	3x3	Adjacent to fence. Only evident on one EM transect line. Suspected to be an area of minor, near surface metallic debris.
12	1	None	Low	Unknown	3x3	Small EM-61 anomaly with rapid increase and decrease of the EM response. Only evident on one EM transect line. Suspected to be an area of minor, near surface metallic debris.
13	1	Low	Medium	2-4	5x10	Anomaly comprised of multiple small GPR reflections and EM anomalies indicating possible area of scattered debris.
14	1	None	Low	Unknown	5x30	Possible Utility
15	1	Low	Medium	1-4	7x30	Anomaly comprised of multiple small GPR reflections and EM anomalies indicating possible area of scattered debris.

Table 1 – Summary of Geophysical Survey Results

Anomaly ID	Figure Number	GPR Response	EM-61 Response	Estimated Depth (feet)	Estimated Size of Anomaly Area (feet)	Comments
16	1	None	Medium	Unknown	5x3	Sharp increase and decrease in EM response, indicating small, near surface targets. Based on low to medium levels of response, is expected that this is an area of minor, near surface metallic debris.
17	1	None	Low	Unknown	3x3	Small EM-61 anomaly with rapid increase and decrease of the EM response. Only evident on one EM transect line. Suspected to be an area of minor, near surface metallic debris.
18	1	None	Low	Unknown	5x5	Based on low to medium levels of response, it is expected that this is an area of minor, near surface metallic debris.
19	1	None	Medium	Unknown	5x5	Based on low to medium levels of response, it is expected that this is an area of minor, near surface metallic debris.
20	1	None	Low	Unknown	3x3	Small EM-61 anomaly with rapid increase and decrease of the EM response. Only evident on one EM transect line. Suspected to be an area of minor, near surface metallic debris.
21	1	None	Medium	Unknown	7x10	Larger EM anomaly seen on two parallel transect lines. May be comprised of 2 individual anomalies.

Table 1 – Summary of Geophysical Survey Results

Anomaly ID	Figure Number	GPR Response	EM-61 Response	Estimated Depth (feet)	Estimated Size of Anomaly Area (feet)	Comments
22	1	None	Low	Unknown	3x3	Small EM-61 anomaly evident on two EM transect lines. Anomaly may be associated with leach pool LPH-C. May be an area of minor, near surface metallic debris or associated with former LPH-C.
23	1	None	Medium	Unknown	3x3	Small EM-61 anomaly with rapid increase and decrease of the EM response. Only evident on one EM transect line. Suspected to be an area of minor, near surface metallic debris.
24	1	Low	Medium	1-2	20x40	Anomaly comprised of multiple small GPR reflections and EM anomalies indicating possible area of scattered debris.
25	1	Low	Medium	1-3	7x10	Anomaly comprised of multiple small GPR reflections and EM anomalies indicating possible area of scattered debris.
26	3	None	Medium	Unknown	10x10	Larger EM anomaly seen on three parallel transect lines.
27	3	None	Low	Unknown	5x7	Minor area of debris
28	3	None	Medium	Unknown	7x7	Corresponds to former drywell DRY-E. Evident on 3 EM transect lines.
29	3	None	Medium	Unknown	40x40	Large EM anomaly comprised of multiple smaller EM anomalies. May be an area of scattered metallic debris or former foundation.

Table 1 – Summary of Geophysical Survey Results

Anomaly ID	Figure Number	GPR Response	EM-61 Response	Estimated Depth (feet)	Estimated Size of Anomaly Area (feet)	Comments
30	3	None	Medium	Unknown	5x5	Small EM-61 anomaly with rapid increase and decrease of the EM response. Only evident on one EM transect line. Suspected to be an area of minor, near surface metallic debris.
31	3	None	Low	Unknown	5X5	Probably associate with nearby reinforced concrete pad.
32	3	None	Low	Unknown	3x5	Small EM-61 anomaly with rapid increase and decrease of the EM response. Only evident on one EM transect line. Suspected to be an area of minor, near surface metallic debris.
33	3	None	Medium	Unknown	5x8	Probably associate with nearby reinforced concrete curb.
34	3	None	Low	Unknown	3x3	Small EM-61 anomaly with rapid increase and decrease of the EM response. Only evident on one EM transect line. Suspected to be an area of minor, near surface metallic debris.
35	3	Minor	Medium	1-3	3x3	Anomaly is located within a larger, rectangular EM-61 anomaly, which may be associated with a former building foundation.
36	3	None	Medium	Unknown	5x20	Along Cantiague Rock Road. Anomaly may be associated with Utility.

Table 1 – Summary of Geophysical Survey Results

Target ID	Figure Number	GPR Response	EM-61 Response	Estimated Depth (feet)	Estimated Size of Anomaly Area (feet)	Comments
DRYH-A	1, 2	Did Not Survey	Could not survey due to reinforced concrete	Unknown		The reported location of former drain DRYH-A was within the northeast portion of Building 140. Was not surveyed because of limited depth of penetration of GPR signal on the interior of the buildings.
DRY-B	1, 2	None	High	Unknown		EM-61 Anomaly is associated with existing catch basin. It is possible that DRY-B is the existing catch basin.
DRYH-C	3, 4	High	Interference from metal fence	2-4	2x2	A GPR was identified 5 ft to the northeast of the reported location of former drywell DRYH-C. The location of this anomaly is shown as GPR Anomaly D on Figure 4.
DRY-D	3, 4	None	High	Unknown		EM-61 Anomaly is associated with existing catch basin. It is possible that DRY-D is the existing catch basin.
DRY-E	3, 4	None	Medium	Unknown	7x7	A circular EM-61 anomaly was identified at the reported location of former drywell DRY-E. The location of this anomaly is shown on Figure 3 as EM-61 Anomalies 28.
LPH-A	1, 2	None	Interference from existing reinforced concrete pad	Unknown		Limited depth of penetration of GPR signal due to existing reinforced concrete pad.

Table 1 – Summary of Geophysical Survey Results

Target ID	Figure Number	GPR Response	EM-61 Response	Estimated Depth (feet)	Estimated Size of Anomaly Area (feet)	Comments
LPH-B	1, 2	Low	Medium	Unknown		Two geophysical anomalies were identified near the reported location of former leach pool LPH-B. The locations of these two anomalies correspond to Anomalies 1 and 2.
LPH-C	1, 2	Medium	None	Unknown		Reported location corresponds to Anomaly 22. Evident on 2 EM-61 transect lines.
DRH-A	1, 2	High	Not Surveyed	2-4	3x3	The reported location of former drain DRH-A was within the central portion of Building 140. One GPR anomaly was located in the vicinity of the reported drain. The GPR data was of poor quality due to the reinforced concrete floor. The location of the GPR anomaly is shown on Figure 2 as GPR Anomaly G.
DRH-B	1, 2	None	Could not survey due to reinforced concrete	Unknown		Reported to be located on interior of Building 100. Limited depth of penetration of GPR signal due to reinforced concrete.

APPENDIX 1
FIGURES AND EXAMPLE OF THE GPR DATA ACROSS GPR ANOMALIES A AND F

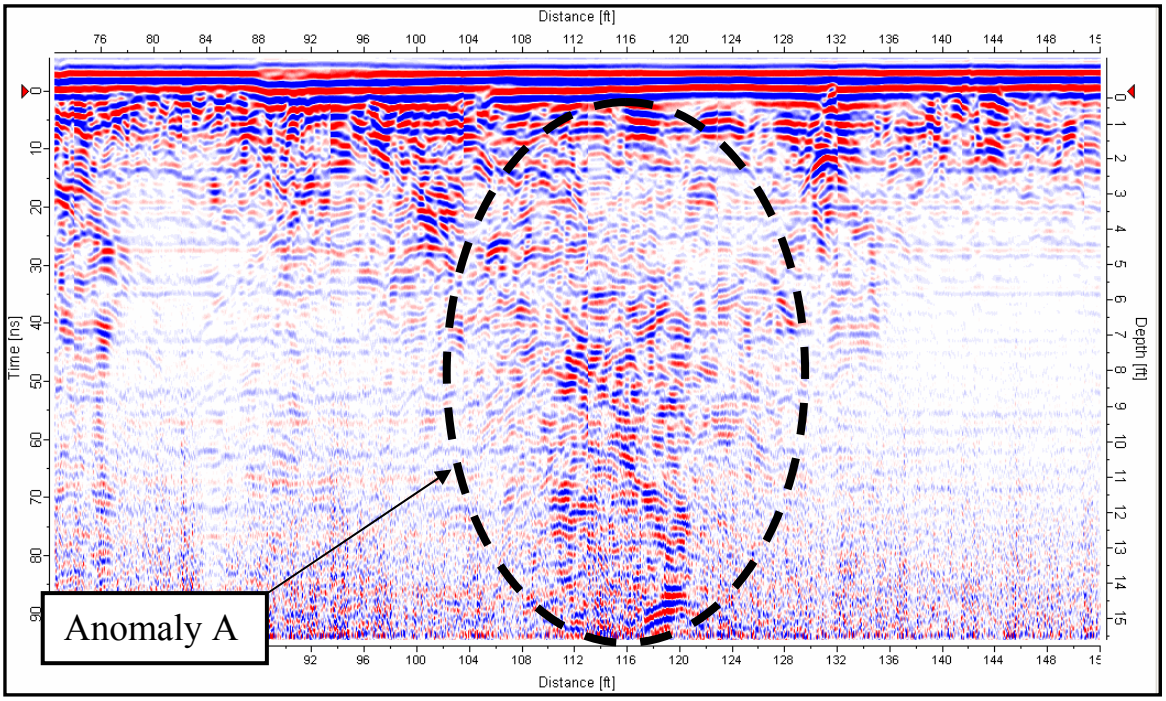

GPR Data Transect 10 across GPR Anomaly A

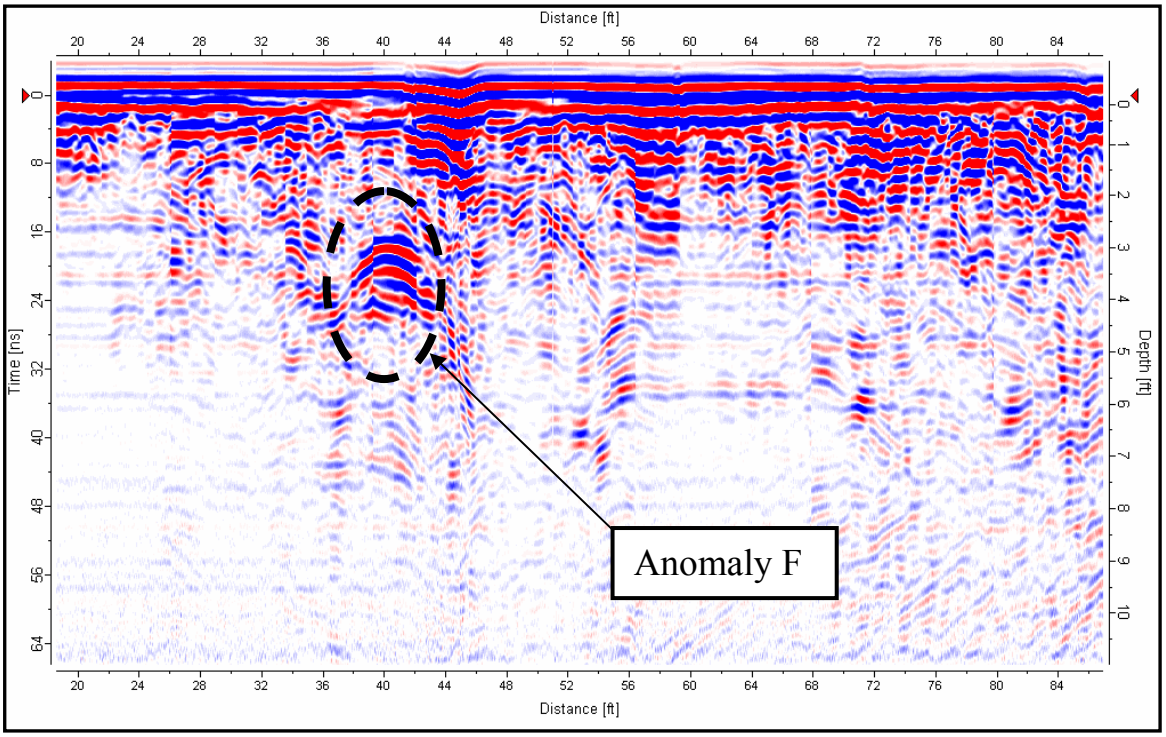

GPR Data Transect 103 across GPR Anomaly F

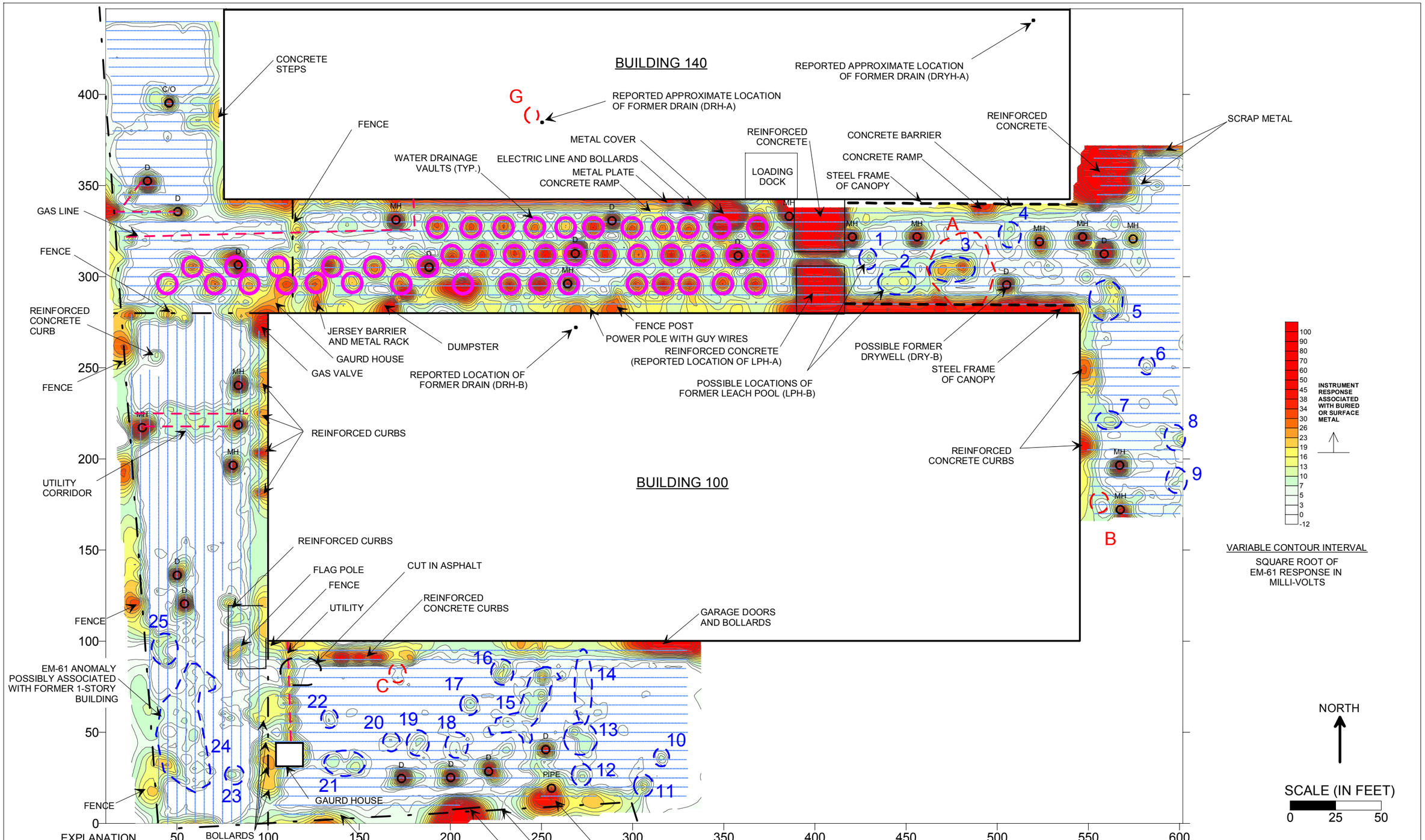

GeoView A geophysical services company	**FIGURE 1** **CONTOUR MAP OF EM-61 RESPONSE BUILDINGS 100 AND 140**	**SYLVANIA CORNING FUSRAP SITE CANTIAGUE ROCK ROAD HICKSVILLE, NEW YORK** **ECOLOGY AND ENVIRONMENT, INC. LANCASTER, NEW YORK** **PROJECT: 3376** **DATE: 11/15/06**

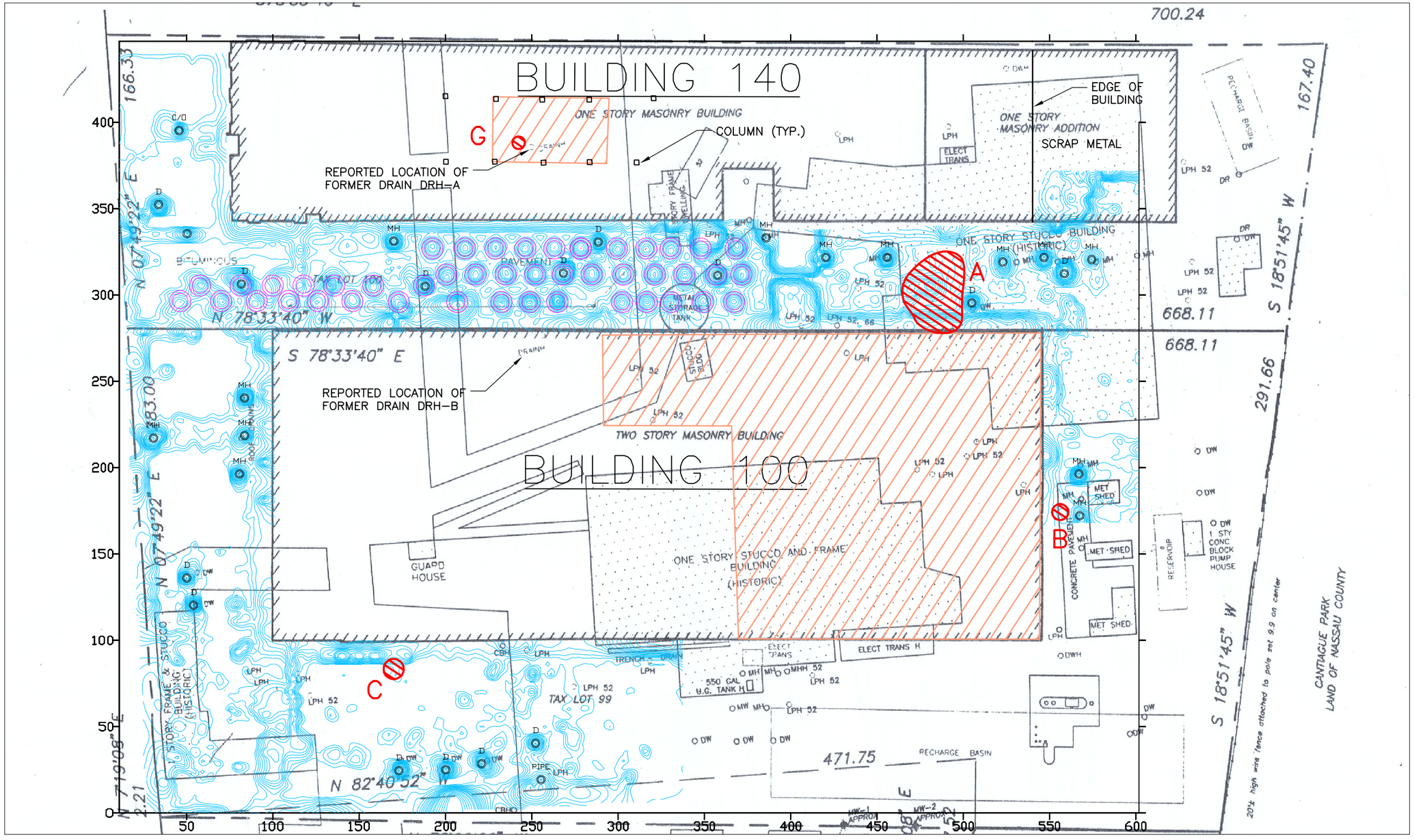

0 60'

SCALE: 1"=60' APPROX.

LEGEND

- CONTOUR OF EM-61 RESPONSE
- MH/D — LOCATION OF MANHOLE OR DRAIN
- APPROXIMATE LOCATION OF INTERIOR GPR SURVEY
- LOCATION OF SUSPECTED DRAINAGE STRUCTURE INSTALLED DURING PREVIOUS EXCAVATION ACTIVITIES
- A — APPROXIMATE LOCATION OF GPR ANOMALY WITH DESIGNATION

Geo View

FIGURE 2
SITE MAP SHOWING RESULTS OF EM-61 AND GPR SURVEY BUILDINGS 100 AND 140

SYLVANIA CORNING FUSRAP SITE
CANTIAGUE ROCK ROAD
HICKSVILLE, NEW YORK

PROJECT: 3376

ECOLOGY AND ENVIRONMENT, INC.
LANCASTER, NEW YORK

DATE: 11/15/06

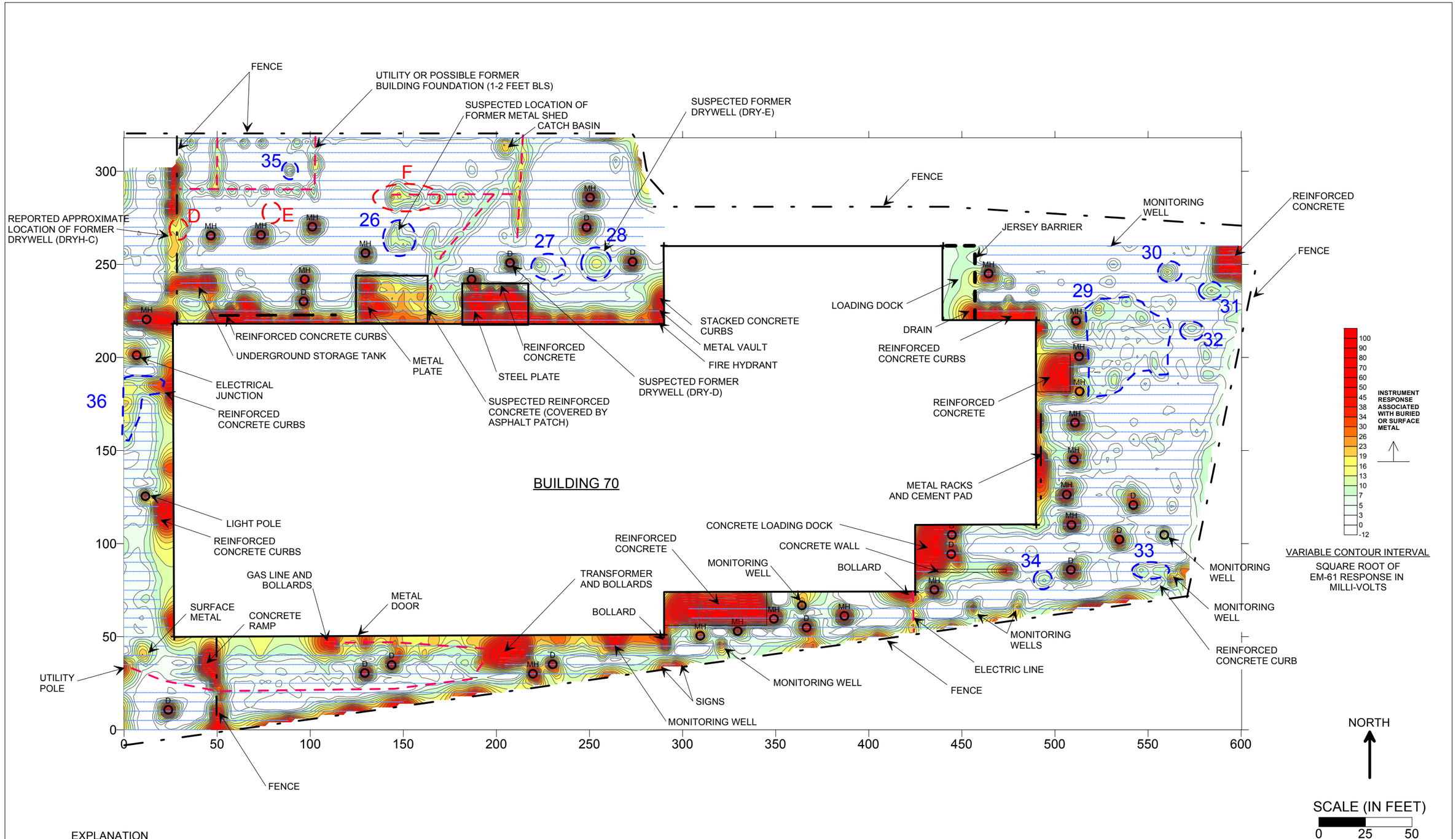

EXPLANATION

- 20 — CONTOUR OF EM RESPONSE (IN MILLI-VOLTS)
- EM DATA STATION
- 1 — EM-61 ANOMALY INDICATING AN AREA OF POSSIBLE BURIED METALLIC DEBRIS (WITH DESIGNATION)
- A — GPR ANOMALY INDICATING AN AREA OF POSSIBLE BURIED DEBRIS (WITH DESIGNATION)
- MH/D — MANHOLE/DRAIN
- EM-61 ANOMALY INDICATING A POSSIBLE BURIED METALLIC UTILITY

GeoView — A geophysical services company	**FIGURE 3**	**SYLVANIA CORNING FUSRAP SITE CANTIAGUE ROCK ROAD HICKSVILLE, NEW YORK**
	CONTOUR MAP OF EM-61 RESPONSE BUILDING 70	**ECOLOGY AND ENVIRONMENT, INC. LANCASTER, NEW YORK** — **PROJECT: 3376 DATE: 11/15/06**

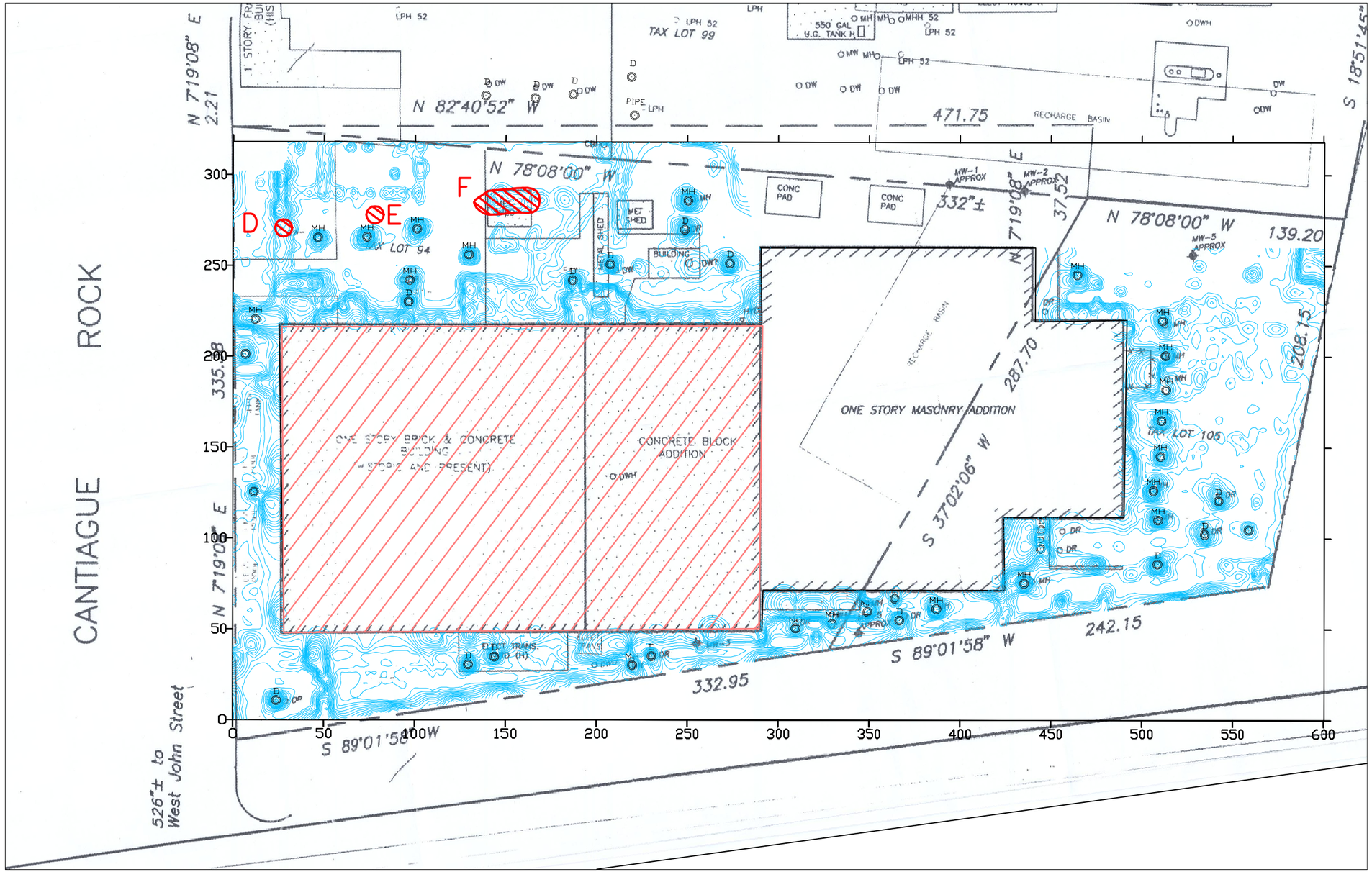

LEGEND

- CONTOUR OF EM-61 RESPONSE
- MH — LOCATION OF MANHOLE
- D — LOCATION OF DRAIN
- LOCATION OF INTERIOR GPR SURVEY
- A — APPROXIMATE LOCATION OF GPR ANOMALY

0 60'

SCALE: 1"=60' APPROX.

Geo View

FIGURE 4
SITE MAP SHOWING
EM-61 AND GPR RESULTS
OF GEOPHYSICAL SURVEY
BUILDING 70

SYLVANIA CORNING FUSRAP SITE
CANTIAGUE ROCK ROAD
HICKSVILLE, NEW YORK

PROJECT: 3376

ECOLOGY AND ENVIRONMENT, INC.
LANCASTER, NEW YORK

DATE: 11/15/06

APPENDIX 2
DESCRIPTION OF GEOPHYSICAL METHODS, SURVEY METHODOLOGIES AND LIMITATIONS

A2.1 On Site Measurements

The measurements that were collected and used to create the site map were made using a fiberglass measuring tape. The degree of accuracy of such an approach is typically +/-5% for lengths and +/-2.5 degrees for angles.

A2.2 Time Domain Electromagnetics

The TDEM (EM-61) method evaluates the magnitude of an induced (secondary) electromagnetic (EM) field caused by a primary EM field after that primary field is suddenly shut off.

During a TDEM (EM-61) sounding, an electrical current is caused to flow in a horizontal transmitter coil located near the ground. The current is maintained until a static magnetic field is established. The current in that coil is then rapidly terminated. This produces a strong electromotive force that induces eddy (secondary) currents in the ground. The eddy currents are caused by the presence of subsurface conductors. With increasing time, the strength of the eddy currents diminishes. The eddy currents, when they are still present induce a voltage in the receiver coil that is proportional to eddy current strength. The eddy current strength also depends on the amount of metal in the subsurface. The more metal present, the longer the eddy currents persist. Field measurement consists of reading the output voltage from the receiver coil registered at a particular time after field shut-off. If no metal is present near the coil, then there are no eddy currents at a late time and the reading is near zero. If metal is present near the coil, then the eddy currents persist for a longer time, and the reading is some positive number. By sensing only the response from the buried metal, the method is capable of detecting targets in highly conductive environments. For TDEM surveys the Geonics Ltd. Model EM-61 metal detection (EM-61) system is used. The EM-61 instrument response is recorded on field-portable computerized data logger (Polycorder Digital Data Recorder) for subsequent data processing and contouring.

The EM-61 survey is performed along predetermined transect lines. The transect lines are typically uni-directional and oriented parallel to the long axis of the site. The spacing between transects ranges from 2 to 5 ft, depending upon the desired size of the target to be identified. Approach is typically +/-5% for both lengths and angles in degrees.

A2.3 Ground Penetrating Radar

Ground Penetrating Radar (GPR) consists of a set of integrated electronic components that transmits high frequency (200 to 1500 megahertz [MHz]) electromagnetic waves into the ground and records the energy reflected back to the ground surface. The GPR system consists of an antenna, which serves as both a transmitter and receiver, and a profiling recorder that both processes the incoming signal and provides a graphic display of the data. The GPR data can be reviewed as both printed hard copy output or recorded on the profiling recorder's hard drive for later review. GeoView uses a Mala GPR system.

A GPR survey provides a graphic cross-sectional view of subsurface conditions. This cross-sectional view is created from the reflections of repetitive short-duration electromagnetic (EM) waves that are generated as the antenna is pulled across the ground surface. The reflections occur at the subsurface contacts between materials with differing electrical properties. The electrical property contrast that causes the reflections is the dielectric permittivity that is directly related to conductivity of a material. The GPR method is commonly used to identify such targets as underground utilities, underground storage tanks or drums, buried debris, voids, rebar or geological features.

The greater the electrical contrast between the surrounding materials (earth or concrete) and target of interest, the greater the amplitude of the reflected return signal. Unless the buried object is metal, only part of the signal energy will be reflected back to the antenna with the remaining portion of the signal continuing to propagate downward to be reflected by deeper features. If there is little or no electrical contrast between the target interest and surrounding earth materials it will be very difficult if not impossible to identify the object using GPR.

A GPR survey is conducted along survey lines (transects) which are measured paths along which the GPR antenna is moved. Electronic marks are placed in the data by the operator at designated points along the GPR transects. These marks allow for a correlation between the GPR data and the position of the GPR antenna on the ground.

For buried debris surveys, the GPR survey is conducted along a set of perpendicularly orientated transects. The survey is conducted in two directions. This is because the most definitive GPR signal response indicating the presence of a buried object is obtained when the GPR antenna is passed perpendicular to the long axis of the buried object.

Depth estimates to the top of the debris is determined by dividing the time of travel of the GPR signal from the land surface to the top of the GPR signal

reflection associated with the debris by the velocity of the GPR signal. The velocity of the GPR signal is usually obtained from published tables of the GPR signal traveling through unsaturated soils (4 to 6 nano-seconds per foot two-way travel time). The accuracy of GPR-derived depths typically ranges from 20 to 40 percent of the total depth.

The analysis and collection of GPR data is both a technical and interpretative skill. The technical aspects of the work are learned from both training and experience. Interpretative skills for debris studies are developed by having the opportunity to compare GPR data collected in numerous settings to the results from confirmatory studies performed at the same locations.

The ability of GPR to collect interpretable information at a project site is limited by the attenuation (absorption) of the GPR signal within subsurface soil materials. Once the GPR signal has been attenuated at a particular depth, information regarding deeper features will not be obtained. GeoView can make no warranties or representations of geological conditions that may be present beyond the depth of investigation or resolving capability of the GPR equipment or in areas that were not accessible to the geophysical investigation.

GeoView can make no warranties or representations of the conditions that may be present beyond the depth of investigation or resolving capability of the TDEM or GPR equipment or in areas that were not accessible to the geophysical investigation.

Radiation Surveys Inside Building 70

Sylvania Corning FUSRAP Site – Phase I RI

Radiation Surveys Inside Building 70

This technical memorandum addresses the results of the radiation surveys performed inside Building 70.

1.0 SURVEY METHODOLOGY

1.1 Overview

Radiation surveys inside Building 70 were performed September 11 through 15, 2006. Surveys included verification measurements at locations with elevated radiation levels identified during a radiological characterization survey performed in 2003 and as new surveys in the rear warehouse (not previously surveyed) and within building drains and other floor penetrations in Building 70.

All surveys were performed in accordance with safety procedures as outlined in the September 2006 *Site Safety and Health Plan – Remedial Investigation Phase I for the Sylvania Corning FUSRAP Site*. Surveys included surface scans and static measurements for alpha, beta, and gamma radiation at specific locations and direct gamma measurements within accessible drains. Radiation dose rates were also measured throughout the building.

1.2 Equipment

Equipment used to perform radiological surveys included the following:

- Ludlum Model- 2360 portable ratemeter/scaler with Ludlum Model 43-93 alpha/beta scintillation detector
- Ludlum Model 14C portable ratemeter with Ludlum Model 44-9 geiger-mueller (GM) detector.
- Bicron MicroRem dose ratemeter.
- Ludlum Model 2221 ratemeter/scaler with a Model 44-10-5, 2-inch by 2-inch sodium iodide (NaI) scintillation detector.

1.3 Quality Control Measures

Quality control (QC) measurements for field instrumentation included initial response to a radioactive source and daily operability checks. All instruments were calibrated within the last twelve months by the instrument vendor, a certified calibration laboratory, using sources traceable to the National Institute of Standards and Technology (NIST). Calibration certificates for each instrument are provided in Attachment 1. Prior to commencing any surveys, ten initial readings were collected on each detector using technicium-99 (^{99}Tc), thorium-230 (^{230}Th), and cesium-137 (^{137}Cs) sources to establish control charts for each unit to determine daily

operability. The bases for the daily operability of these instruments are ± 20% of the average for the initial ten measurements for the 44-9 and 44-10-5 probes and ±3-sigma of the average for the initial ten measurements for the 43-93. These data are included in Attachment 1.

All field instruments satisfactorily passed the daily QC checks, with one exception. During post-job review of the instrument QC data, it was observed that the Ludlum 2360/43-93 combination was found to be outside of ±3-sigma on 9/14/06. The field technician inadvertently applied a 'qualitative' ±20% criterion to the daily QC data for this instrument, which showed a passing result. However, when applying the more stringent ±2 and ±3 sigma criteria used for quantitative field instruments, the daily alpha source check failed. If the technician had known that the count failed, the count would have been repeated in accordance with CABRERA procedures. Further inspection of the data by the CABRERA project Health Physicist shows that this particular count was 13 counts per minute (cpm) above the +3-sigma control line, corresponding to a 3.2 sigma result. Since this value does not appear to represent a severe instrument deficiency or malfunction, it was determined that the survey data performed on 9/14/06 does not need to be disqualified.

1.4 Acceptable Levels of Surface Contamination

Table 1 provides acceptable surface contamination limits for various radionuclides as applied to surface contamination measurements. The most conservative values (transuranics) were used because the predominant radiological contaminants of potential concern are thorium and uranium. The alpha removable contamination limit is 20 disintegrations per minute per 100 square centimeters (dpm/100cm^2), while the maximum and average contamination limit is 300 and 100 dpm/100cm^2, respectively. The beta-gamma removable contamination limit is 1,000 dpm/100cm^2.

It should be noted that surveys of the drains within Building 70 were not compared with the surface contamination levels in Table 1. Since the drain surveys were performed for gamma radiation, technicians were advised to be cognizant of readings that exceeded twice the observed background levels in unaffected areas within Building 70.

Table 1: Acceptable Levels of Surface Contamination

Radionuclide[a]	Acceptable Surface Contamination Levels (DPM/100 cm^2)		
	Removable[b, e]	Average[b, c]	Maximum[b, d]
Transuranics, ^{226}Ra, ^{227}Ra, ^{230}Th, ^{228}Th, ^{231}Pa, ^{221}Ac, ^{125}I, ^{129}I	20	100	300
Th-Natural, ^{232}Th, ^{90}Sr, ^{223}Ra, ^{224}Ra, ^{232}U, ^{126}I, ^{131}I, ^{133}I	200	1,000	3,000
U-Natural, ^{235}U, ^{238}U, and associated decay products	1,000 α	5,000 α	15,000 α
Beta-Gamma emitters (radionuclides with decay modes other than alpha emission or spontaneous fission) except ^{90}Sr and others noted above.	1,000 β γ	5,000 β γ	15,000 β γ

Taken from Table 6-4 of USACE Radiation Protection Manual EM-385-1-80.

a Where surface contamination by both alpha- and beta-gamma emitting nuclides exists, the limits established for alpha- and beta-gamma emitting nuclides should apply independently.
b As used in this table, dpm (disintegrations per minute) means the rate of emission by radioactive material as determined by correcting the counts per minute observed by an appropriate detector for background, efficiency, and geometric factors associated with the instrumentation.
c Measurements of average contaminant should not be averaged over more than 1 square meter. For objects of less surface area, the average should be derived for each object.
d The maximum contamination level applies to an area not more than 100 cm^2.
e The amount of removable radioactive material per 100 cm^2 of surface area should be determined by wiping that area with dry filter or soft absorbent paper, applying moderate pressure, and assessing the amount of radioactive material on the wipe with an appropriate instrument of known efficiency. When removable contamination on objects of less surface area is determined, the pertinent levels should be reduced proportionately and the entire surface should be wiped.

2.0 RESULTS

The results of all contamination surveys are provided in Attachment 2. All surveys were labeled using the same grid system for Building 70 developed and used during the previous scoping efforts in 2003. For reference, a map of the scoping survey results performed in 2003 is provided as Figure 1. The grids are referenced by the building support beams located throughout all of the survey areas, e.g., F6, E9, etc. Multiple points within a given grid node are sequentially numbered.

Results of the verification measurements are summarized on Figure 2. The locations of all of the previously identified surface contamination areas were reconfirmed with either the alpha/beta scintillation detector or the gamma scintillation detector. Only beta and gamma radiation were measured, which confirmed the original survey findings that the contamination is contained underneath surface coatings or within the expansion joints of the concrete floors. At the F3

location, although readings were elevated, the spot identified originally is believed to be underneath a new divider wall installed since the original survey.

The results of the drain and penetration gamma surveys are illustrated in Attachment 2, Figure 3. All measurements were consistent with ambient background levels. The walkover gamma radiation survey around the perimeter of the eastern warehouse and over the footprint of the former recharge basin yielded background radiation levels. All radiation dose rates, measured at a height of approximately 1 meter above the ground, were at background levels.

Attachment 1

INSTRUMENT QC INFORMATION AND CALIBRATION CERTIFICATES

CABRERA ALPHA-BETA COUNTING INSTRUMENT (Rev 5)

Counting Instrument:			L 2360		Detector:	43-93		Calibration Date:		6/25/2006								
Serial #:			202398		Serial #:	PR211706		12 month calibration:		OK								
Detector Active Area or Area Covered by Smear (cm^2):						100		NRC 6 Mo Cal. Due Date?		OK								
	Efficiency (fraction)	Source Nuclide	Source Number	Original Source Activity (DPM)	Source Creation Date	$T_{1/2}$ (yr)	Source Decayed Activity	Required MDA ($DPM/100cm^2$)	Control Chart & Daily Bkg Count Time	Control Chart & Daily Source-Sample Count Time	Control Chart bkg Average α/β cpm	Control Chart bkg 1 sigma, cpm	Control Chart Source-bkg Average α/β cpm	Control Chart source 1 sigma, cpm				
Alpha	0.1079	Th-230	1905-04	41,200	3/30/2004	7.54E+04	41,199	100	1	1	1.60	1.71	5438.2	62.38				
Beta	0.1203	Tc-99	1904-04	45,200	3/30/2004	2.13E+05	45,200	1000	1	1	93.10	9.02	4444.0	114.18				

Date	Daily Bkg Counts		Daily Check Source Counts		Daily Bkg Rate (cpm)		Net Daily Source Rate (cpm)		Bkg QC Pass/Fail		Source QC Pass/Fail				α MDA OK?	β MDA OK?	H.P. Technician	Technician Initials
	Alpha	Beta	Alpha	Beta	Alpha	Beta	Alpha	Beta	Alpha	Beta	Alpha	Beta	MDA α (dpm)	MDA β (dpm)				
9/11/2006	1	87	5495	4493	1.0	87.0	5494.0	4406.0	PASS	PASS	PASS	PASS	70.95	386	Yes	Yes	JJW	JJW
9/12/2006	0	90	5341	4576	0.0	90.0	5341.0	4486.0	PASS	PASS	PASS	PASS	27.81	392	Yes	Yes	JJW	JJW
9/13/2006	3	87	5559	4871	3.0	87.0	5556.0	4784.0	PASS	PASS	PASS	*QUESTION*	102.52	386	No	Yes	JJW	JJW
9/14/2006	0	87	5640	4749	0.0	87.0	5640.0	4662.0	PASS	PASS	**FAIL**	PASS	27.81	386	Yes	Yes	DEA	DEA
9/15/2006	0	96	5358	4748	0.0	96.0	5358.0	4652.0	PASS	PASS	PASS	PASS	27.81	404	Yes	Yes	DEA	DEA

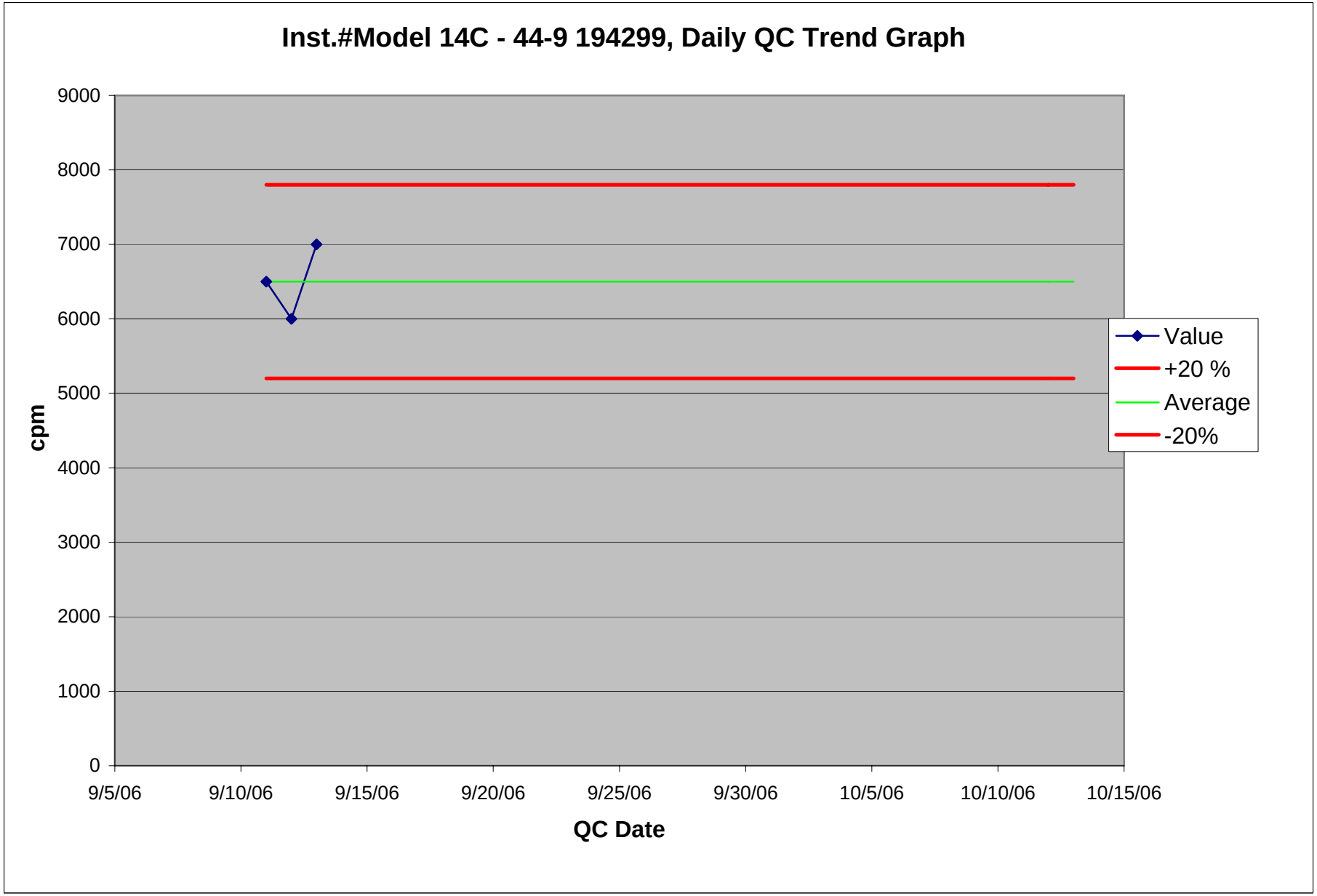
Inst.#Model 14C - 44-9 194299, Daily QC Trend Graph
9000
8000
7000
6000
5000
4000
3000
2000
1000
0
cpm
9/5/06
9/10/06
9/15/06
9/20/06
9/25/06
9/30/06
10/5/06
10/10/06
10/15/06
QC Date
Value
+20 %
Average
-20%

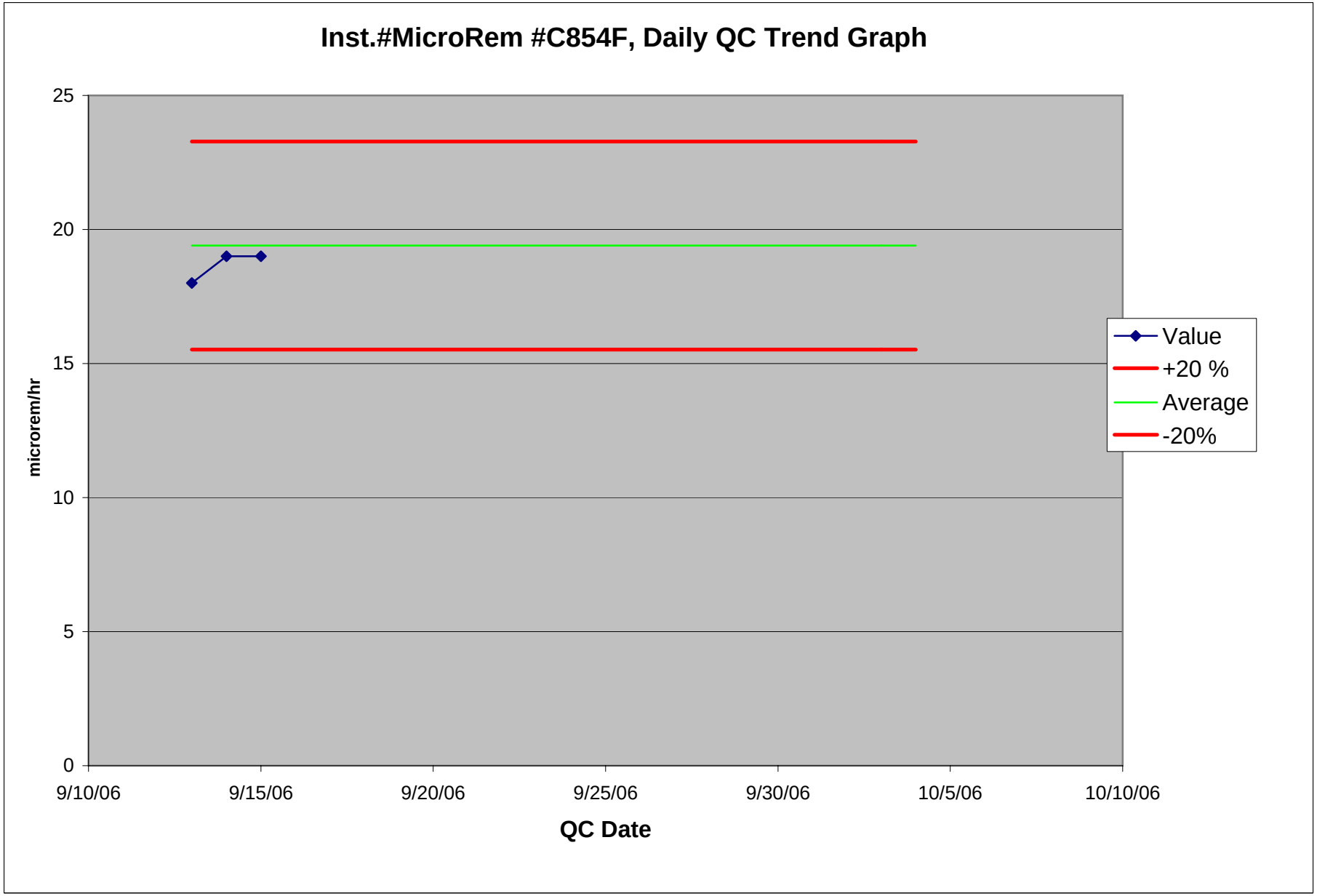
Inst.#MicroRem #C854F, Daily QC Trend Graph
25
20
15
10
5
0
microrem/hr
9/10/06
9/15/06
9/20/06
9/25/06
9/30/06
10/5/06
10/10/06
QC Date
Value
+20 %
Average
-20%

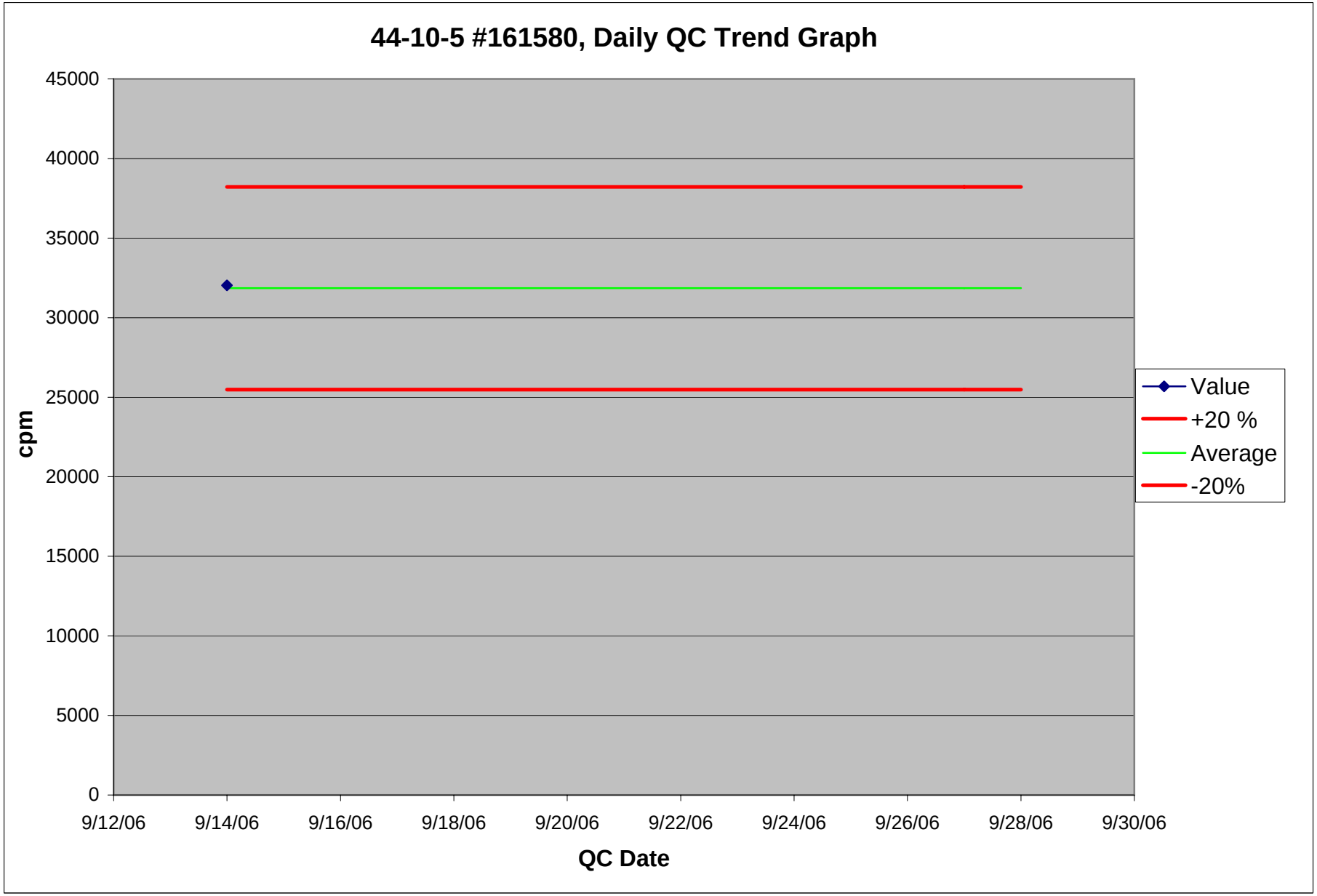
44-10-5 #161580, Daily QC Trend Graph
45000
40000
35000
30000
25000
20000
15000
10000
5000
0
cpm
9/12/06
9/14/06
9/16/06
9/18/06
9/20/06
9/22/06
9/24/06
9/26/06
9/28/06
9/30/06
QC Date
Value
+20 %
Average
-20%

Calibration Technology

A Division of RSCS, Inc.

Calibration Certificate
ID Number: C854F5134-0

Customer: Hank Siegrist
Cabrera Services, Inc.
473 Silver Lane
East Hartford, CT 06118-

Instrument
Bicron Model MicroRem

Serial Number
C854F

Precision Check				
Test 1	Test 2	Test 3	Mean	Results
4.00 mrem/hr	**4.00 mrem/hr**	**4.00 mrem/hr**	**4.00 mrem/hr**	**Satisfactory**

Accuracy Check			
Range	Target Value	As Found	As Left
X1000	160 mrem/hr	160 mrem/hr	160 mrem/hr
X1000	40 mrem/hr	40 mrem/hr	40 mrem/hr
X100	16 mrem/hr	13.5 mrem/hr	16 mrem/hr
X100	4 mrem/hr	3.5 mrem/hr	4 mrem/hr
X10	1.6 mrem/hr	1.6 mrem/hr	1.6 mrem/hr
X10	0.4 mrem/hr	0.4 mrem/hr	0.4 mrem/hr
X1	160 µrem/hr	160 µrem/hr	160 µrem/hr
X1	40 µrem/hr	40 µrem/hr #	40 µrem/hr #
X0.1	16 µrem/hr	17.5 µrem/hr #	16 µrem/hr #
X0.1	4 µrem/hr	5 µrem/hr # *	4 µrem/hr #

Readings with * indicate ranges where As-Found readings are >20% of Target value. Readings with ** indicate As-left readings are >10% of Target value
Readings with # indicate ranges where pulser was used.

MTE Instrument Type	Model	CalDueDate
Pulser	Ludlum 500 SN: 134720	08/16/2006

Outer Physical Check: *Pass*
Internal Check: *Pass*
Geotropism Check: *Pass*
Mechanical Zero: *Pass*
Tap Test: *Pass*

Calibrated by: QA Review:

Calibration Date: 05/25/2006
Expires: 05/25/2007

Atmospheric Conditions - Temperature: 72°F Humidity: 42% Barometric Pressure: 29.63"hg
This calibration was performed by RSCS Inc. using a NIST Traceable radiation source, in conformance to the following standards: ANSI N323A (1997). RSCS New Hampshire Radioactive Material License Number: 381R. RSCS calibration services are performed in accordance with the RSCS Radiation Protection Program Manual and Standard Operating Procedure 2.4. This calibration certificate shall not be reproduced except in full without the express written consent of RSCS, Inc

Radiation Safety and Control Services, Inc.
91 Portsmouth Ave. Stratham, NH 03885
1-800-525-8339 (603) 778-2871 Fax (603) 778-6879 www.radsafety.com

Designer and Manufacturer of Scientific and Industrial Instruments

CERTIFICATE OF CALIBRATION

LUDLUM MEASUREMENTS, INC.
POST OFFICE BOX 810 PH. 325-235-5494
501 OAK STREET FAX NO. 325-235-4672
SWEETWATER, TEXAS 79556, U.S.A.

CUSTOMER CABRERA SERVICES ORDER NO. 246337/297322

M/... Ludlum Measurements, Inc. Model 14C Serial No. 194299

M/... Ludlum Measurements, Inc. Model 44-38 Serial No. PR 198885

Cal. Date 23-Nov-05 Cal Due Date 23-Nov-06 Cal. Interval 1 Year Meterface 202-241

Check mark ☑ applies to applicable instr. and/or detector IAW mfg. spec. T. 77 °F RH 20 % Alt 697.8 mm Hg

☐ New Instrument Instrument Received ☑ Within Toler. +-10% ☐ 10-20% ☐ Out of Tol. ☐ Requiring Repair ☐ Other-See comments

☑ Mechanical ck. ☑ Meter Zeroed ☐ Background Subtract ☐ Input Sens. Linearity
☑ F/S Resp. ck ☑ Reset ck. ☐ Window Operation ☑ Geotropism
☑ Audio ck. ☐ Alarm Setting ck. ☑ Batt. ck. (Min. Volt) 2.2 VDC
☐ Calibrated in accordance with LMI SOP 14.8 rev 12/05/89. ☑ Calibrated in accordance with LMI SOP 14.9 rev 02/07/97.

Instrument Volt Set 900 V Input Sens. 34 mV Det. Oper. 900 V at 34 mV Threshold Dial Ratio = mV

☑ HV Readout (2 points) Ref./Inst. / V Ref./Inst. / V

COMMENTS:
Instrument calibrated with 6' "c" cable.

Gamma Calibration: GM detectors positioned perpendicular to source except for M 44-9 in which the front of probe faces source.

RANGE/MULTIPLIER	REFERENCE CAL. POINT	INSTRUMENT REC'D "AS FOUND READING"	INSTRUMENT METER READING*
X 1000	1500 mR/hr	1.49	1.5
X 1000	500 mR/hr	0.5	0.55
X 100	150 mR/hr	1.5	1.5
X 100	50 mR/hr	0.5	0.5
X 10	15 mR/hr	1.5	1.5
X 10	5 mR/hr	0.5	0.5
X 1	1.5 mR/hr = 1740 cpm	1.5	1.5
X 1	1.0mR/hr	1.0	1.0
X 0.1	174 cpm	1.5	1.5
X 0.1	58 cpm	0.5	0.5

*Uncertainty within ± 10% C.F. within ± 20% X 0.1 **Range(s) Calibrated Electronically**

	REFERENCE CAL. POINT	INSTRUMENT RECEIVED	INSTRUMENT METER READING*		REFERENCE CAL. POINT	INSTRUMENT RECEIVED	INSTRUMENT METER READING*
Digital Readout				Log Scale			

Ludlum Measurements, Inc. certifies that the above instrument has been calibrated by standards traceable to the National Institute of Standards and Technology, or to the calibration facilities of other International Standards Organization members, or have been derived from accepted values of natural physical constants or have been derived by the ratio type of calibration techniques. The calibration system conforms to the requirements of ANSI/NCSL Z540-1-1994 and ANSI N323-1978 State of Texas Calibration License No. LO-1963

Reference Instruments and/or Sources:
Cs-137 Gamma S/N ☐ 1162 ☑ G112 ☐ M565 ☐ 5105 ☐ T1008 ☐ T879 ☐ E552 ☑ E551 ☐ 720 ☐ 734 ☐ 1616 ☐ Neutron Am-241 Be S/N T-304

☐ Alpha S/N ☐ Beta S/N ☐ Other

m 500 S/N 94940 ☐ Oscilloscope S/N ☑ Multimeter S/N 78401031

Calibrated By: Date 23-NOV-05

Reviewed By: Date 28 NOV 05

This certificate shall not be reproduced except in full, without the written approval of Ludlum Measurements, Inc.
FORM C22A 11/26/2003

AC Inst. Only ☐ Passed Dielectric (Hi-Pot) and Continuity Test ☐ Failed:

Designer and Manufacturer
of
Scientific and Industrial
Instruments

LUDLUM MEASUREMENTS, INC.
POST OFFICE BOX 810 PH. 325-235-5494
501 OAK STREET FAX NO. 325-235-4672
SWEETWATER, TEXAS 79556, U.S.A.

CONVERSION CHART

Customer CABRERA SERVICES Date 23-Nov-05 Order #. 246337/297322

Model 14C Serial No. 194299 Detector Model 44-9 Serial No. PR 201558

Source Cs-137 194.6 mCi Cs-137 20 mCi High Voltage 900 V

Input Sensitivity 34 mV

Reference Point	"As Found" Readings (CPM): Meter Reading	Range/Scale	After Adjustment Readings (CPM): Meter Reading	Range/Scale
150 mR/hr	NA	NA	NA	NA
50 mR/hr	1.55 K	X100	1.55 K	X100
15 mR/hr	0.55 K	X100	0.55 K	X100
5 mR/hr	1.65 K	X10	1.65 K	X10
1.5 mR/hr	0.5 K	X10	0.5 K	X10
1.0 mR/hr	0.35 K	X10	0.35 K	X10

Signature: Scott Strong Date 23-NOV-05

FORM C17-1A 04/09/2003

Designer and Manufacturer of Scientific and Industrial Instruments

CERTIFICATE OF CALIBRATION

LUDLUM MEASUREMENTS, INC.
POST OFFICE BOX 810 PH. 325-235-5494
501 OAK STREET FAX NO. 325-235-4672
SWEETWATER, TEXAS 79556, U.S.A.

CUSTOMER CABRERA SERVICES ORDER NO. 257191/303228

Mfr Ludlum Measurements, Inc. Model 2360 Serial No. 202398

Mfg. Ludlum Measurements, Inc. Model 43-93 Serial No. PR 211706

Cal. Date 25-Jun-06 Cal Due Date 25-Jun-07 Cal. Interval 1 Year Meterface 202-855

Check mark ☑ applies to applicable instr. and/or detector IAW mfg. spec. T. 76 °F RH 42 % Alt 700.8 mm Hg

☐ New Instrument Instrument Received ☑ Within Toler. +-10% ☐ 10-20% ☐ Out of Tol. ☐ Requiring Repair ☐ Other-See comments

☑ Mechanical ck. ☑ Meter Zeroed ☐ Background Subtract ☐ Input Sens. Linearity
☐ F/S Resp. ck ☑ Reset ck. ☑ Window Operation ☑ Geotropism
☑ Audio ck. ☐ Alarm Setting ck. ☑ Batt. ck. (Min. Volt) 2.2 VDC
☑ Calibrated in accordance with LMI SOP 14.8 rev 12/05/89. ☐ Calibrated in accordance with LMI SOP 14.9 rev 02/07/97.

Instrument Volt Set 725 V

☑ HV Readout (2 points) Ref./Inst. 500 / 503 V Ref./Inst. 1500 / 1510 V

Firmware Version: 39010n25
Alpha Threshold: 120 mV
Beta Threshold: 3.5 mV
Beta Window: 30 mV
Overload SET TO SIMULATE LIGHT LEAK
Instrument calibrated with a 5' cable.
High voltage set with detector CONNECTED

(EEPROM Settings)
User Time: 1.0
Alpha Alarm: 50000
Beta Alarm: 50000
A/B Alarm: 50000
Model 2360 Date: 6/25/~~07~~ 06
Calibration Date Due: 6/25/07

COMMENTS:

Efficiency Formula:
Source Count - Bkgrd=? /source size (dpm)=? x100 = %
4 pi efficiencies for Th230, Tc99, Sr90Y90, and Ni63 are as follows:
Th230≈20%,Tc99≈16%,Sr90Y90≈25%,Ni63≈0.06%

* SEE PLATEAU SHEETS FOR ALL *

Gam alibration: GM detectors positioned perpendicular to source except for M 44-9 in which the front of probe faces source.

RANGE/MULTIPLIER	REFERENCE CAL. POINT	INSTRUMENT REC'D "AS FOUND READING"	INSTRUMENT METER READING*
x1000	400kcpm	400	400
x1000	100kcpm	100	100
x100	40kcpm	400	400
x100	10kcpm	100	100
x10	4kcpm	400	400
x10	1kcpm	100	100
x1	400kcpm	400	400
x1	100kcpm	100	100

*Uncertainty within ± 10% C.F. within ± 20% ALL Range(s) Calibrated Electronically

	REFERENCE CAL. POINT	INSTRUMENT RECEIVED	INSTRUMENT METER READING*		REFERENCE CAL. POINT	INSTRUMENT RECEIVED	INSTRUMENT METER READING*
Digital Readout	400kcpm	39993 (0)	39993 (0)	Log Scale			
	40kcpm	3995	3995				
	4kcpm	400	400				
	400cpm	40	40				
	40cpm	4	4				

Ludlum Measurements, Inc. certifies that the above instrument has been calibrated by standards traceable to the National Institute of Standards and Technology, or to the calibration facilities of other International Standards Organization members, or have been derived from accepted values of natural physical constants or have been derived by the ratio type of calibration techniques. The calibration system conforms to the requirements of ANSI/NCSL Z540-1-1994 and ANSI N323-1978 State of Texas Calibration License No. LO-1963

Reference Instruments and/or Sources: ☐ S-394 ☐ 1122 ☐ 781

Cs-137 Gamma S/N ☐ 1162 ☐ G112 ☐ M565 ☐ 5105 ☐ T1008 ☐ T879 ☐ E552 ☐ E551 ☐ 720 ☐ 734 ☐ 1616 ☐ Neutron Am-241 Be S/N T-304

☑ Alpha S/N Th230/E121495 ☑ Beta S/N Tc99/NI-EV,Sr90Y90/4016,Ni63/4017 ☐ Other

☐ 500 S/N 189496 ☐ Oscilloscope S/N ☑ Multimeter S/N 83750186

Calibrated By: Michael Jones Date 25 June 06

Reviewed By: W Robis Date 26 June 06

This certificate shall not be reproduced except in full, without the written approval of Ludlum Measurements, Inc.
FORM C22S 06/02/2006

AC Inst. Only ☐ Passed Dielectric (Hi-Pot) and Continuity Test ☐ Failed:

Designer and Manufacturer
of
Scientific and Industrial
Instruments

LUDLUM MEASUREMENTS, INC.
POST OFFICE BOX 810 PH. 325-235-5494
501 OAK STREET FAX NO. 325-235-4672
SWEETWATER, TEXAS 79556, U.S.A.

Bench Test Data For Detector

Detector 43-93 Serial No. PR 211706 Order #. 257191/303228

Customer CABRERA SERVICES Alpha Input Sensitivity 120 mV

Counter 2360 Serial No. 202398 Beta Input Sensitivity 3.5 mV

Count Time 1Minute Beta Window 30 mV

Other Distance Source to Detector Surface

High Voltage	Background		Isotope Th230 Size ≈19800 dpm		Isotope Size		Isotope Size	
	Alpha	Beta	Alpha	Beta	Alpha	Beta	Alpha	Beta
700	1	124	3918	505				
725	1	213	4047	568				
750	0	554	4132	1153				

☐ Gas Proportional detector count rate decreased ≤ 10% after 15 hour static test using 39" cable.

☐ Gas proportional detector count rate decreased ≤ 10% after 5 hour static test using 39" cable and alpha/beta counter.

Signature Michael Torres Date 25 June 06

FORM C4B 04/09/2003

Calibration Certificate
ID Number: 1615806817-0

Calibration Technology

A Division of RSCS, Inc.

Customer: Hank Siegrist
Cabrera Services, Inc.
473 Silver Lane
East Hartford, CT 06118-

Instrument	Serial Number
Ludlum Model 2221	161580

Probe Model	Serial Number
Ludlum 44-10-5	182508

Precision Check

Test 1	Test 2	Test 3	Mean	Results
399.00 cpm	**400.00 cpm**	**399.00 cpm**	**399.33 cpm**	**Satisfactory**

Accuracy Check

Range	Target Value	As Found	As Left
X1000	400 Kcpm	400 Kcpm #	400 Kcpm #
X1000	100 Kcpm	100 Kcpm #	100 Kcpm #
X100	40 Kcpm	40 Kcpm #	40 Kcpm #
X100	10 Kcpm	10 Kcpm #	10 Kcpm #
X10	4 Kcpm	3.997 Kcpm #	3.997 Kcpm #
X10	1 Kcpm	0.998 Kcpm #	0.998 Kcpm #
X1	400 cpm	399 cpm #	399 cpm #
X1	100 cpm	100 cpm #	100 cpm #

Readings with * indicate ranges where As-Found readings are >20% of Target value. Readings with ** indicate As-left readings are >10% of Target value
Readings with # indicate ranges were calibrated using a pulser

Probe Model & SN	Isotope	Efficiency	NIST Source ID	Geometry
44-10-5 182508	Cs-137	0.1040 C/D	Cs-137 (SN: 14290)	On Contact

MTE Instrument Type	Model	CalDueDate
Pulser	Ludlum 500-4SN: 66151	01/03/2007

Outer Physical Check: *Pass*
Internal Check: *Pass*
Geotropism Check: *Pass*
Mechanical Zero: *Pass*
Tap Test: *Pass*

Electronics Checks	As Found	As Left
High Voltage	**905 Volts**	**995 Volts**
Low Level Discriminator #1	**10.1 mV**	**2.5 mV**
Window	**Out**	**Out**

Calibrated by: QA Review:

Date: 08/15/2006
Expires: 08/15/2007

Atmospheric Conditions - Temperature: 78° F Humidity: 40 % Barometric Pressure: 29.54 in/hg
This calibration was performed by RSCS using a NIST Traceable radiation source, in conformance to the following standards: ANSI N323A (1997). RSCS New Hampshire Radioactive Material License Number: 381R. RSCS calibration services are performed in accordance with the RSCS Radiation Protection Program Manual and Standard Operating Procedure 2.4.
This calibration certificate shall not be reproduced except in full without the express written consent of RSCS, Inc

Radiation Safety and Control Services, Inc.
91 Portsmouth Ave. Stratham, NH 03885
1-800-525-8339 (603) 778-2871 Fax (603) 778-6879 www.radsafety.com

Attachment 2

FIGURES (SURVEY RESULTS)

Areas with Elevated Measurements

Figure 3 - Locations of Elevated Readings Found During 2004 Scoping Surveys within Building 70

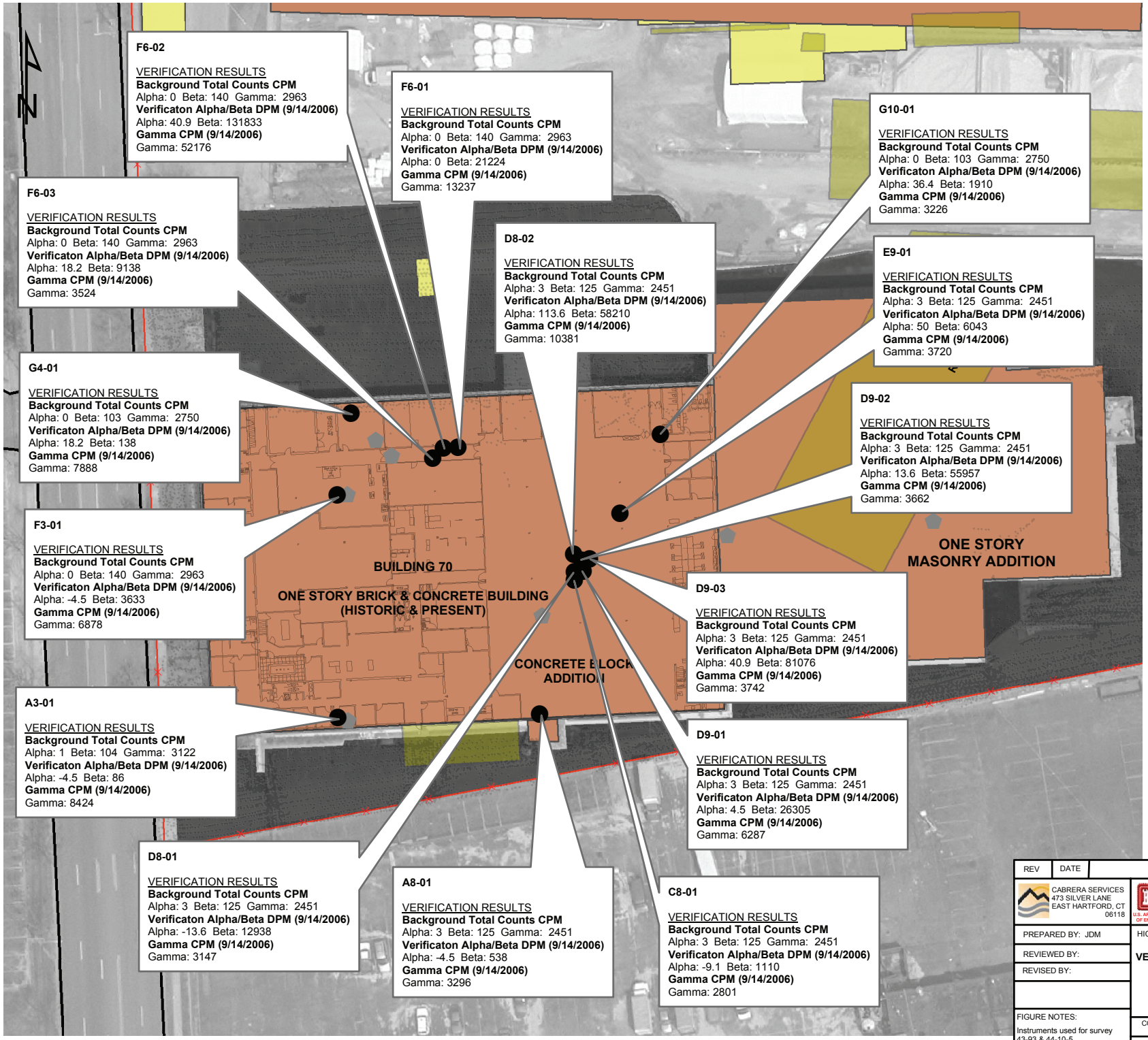

LEGEND

- Verificatoin Measurement Point
- Background Measurement Point
- Existing Buildings
- Historic Buildings
- Historic Features

REV	DATE	DESCRIPTION	BY

CABRERA SERVICES
473 SILVER LANE
EAST HARTFORD, CT
06118

U.S. ARMY ENGINEER DISTRICT, BALTIMORE
CORPS OF ENGINEERS
KANSAS CITY, KANSAS

PREPARED BY: JDM
REVIEWED BY:
REVISED BY:

HICKSVILLE NEW YORK

VERIFICATION SURVEY OF BUILDING 70 INTERIOR

SYLVANIA - CORNING FUSRAP SITE

FIGURE NOTES:
Instruments used for survey 43-93 & 44-10-5

CONTRACT #
DRAWING # 07-1005.00-11
2
SCALE: 0 20 40 Feet
DATE: 10/03/2006

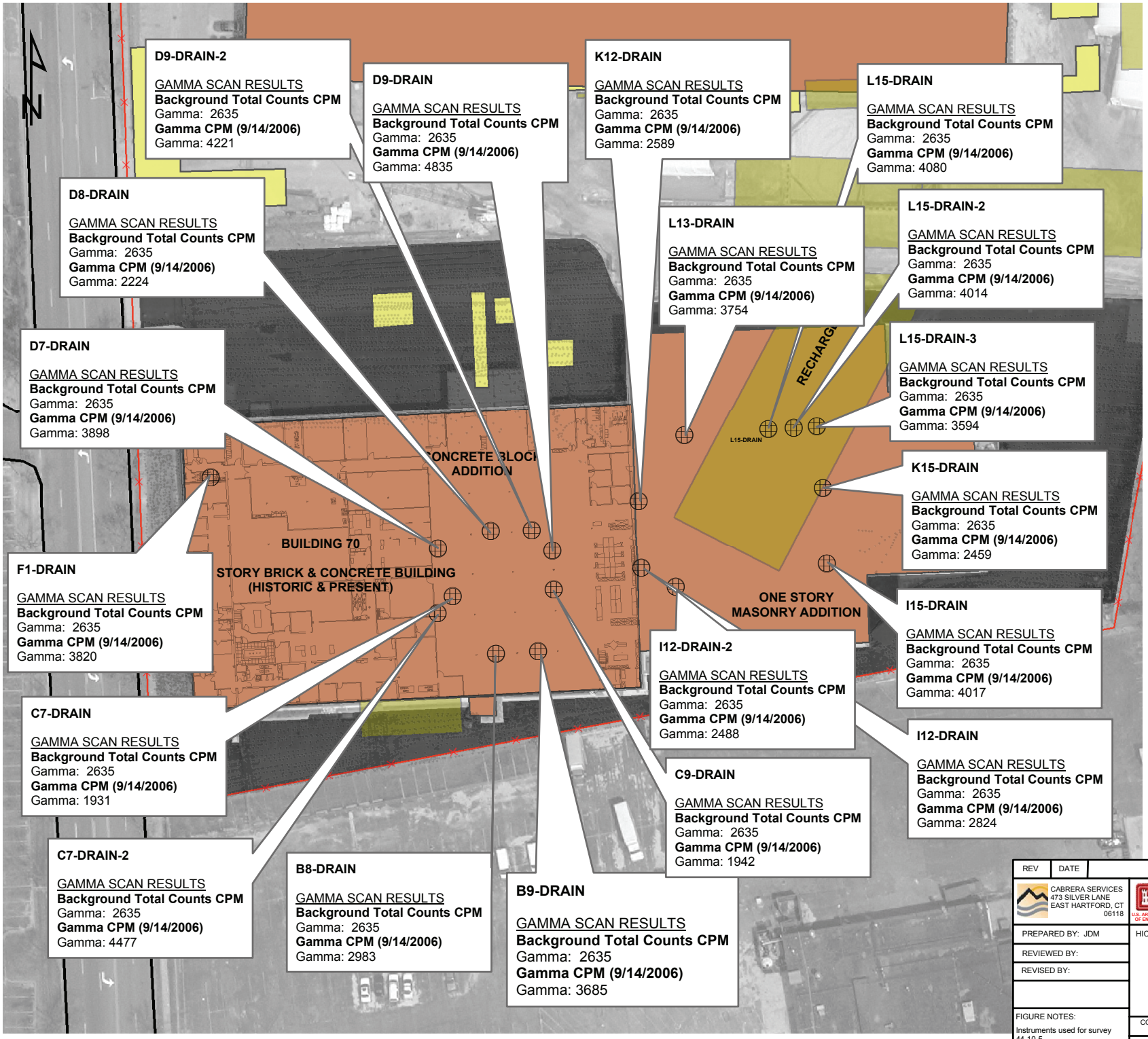

LEGEND

- Drain Measurement Point
- Existing Buildings
- Historic Buildings
- Historic Features

REV	DATE	DESCRIPTION	BY

CABRERA SERVICES
473 SILVER LANE
EAST HARTFORD, CT
06118

U.S. ARMY ENGINEER DISTRICT, BALTIMORE
CORPS OF ENGINEERS
KANSAS CITY, KANSAS

PREPARED BY: JDM
REVIEWED BY:
REVISED BY:

HICKSVILLE NEW YORK

DRAIN SURVEY OF BUILDING 70 INTERIOR

SYLVANIA - CORNING FUSRAP SITE

FIGURE NOTES:
Instruments used for survey
44-10-5

CONTRACT #
DRAWING # 07-1005.00-12
3
SCALE: 0 20 40 Feet
DATE: 10/03/2006

Walkover Gamma Radiation Survey for Exterior Areas of Building 70

Sylvania Corning FUSRAP Site – Phase I RI

Walkover Gamma Radiation Survey

Building 70 Exterior Areas

This technical memorandum addresses the results of the Building 70 exterior walkover gamma radiation survey.

1.0 WALKOVER GAMMA RADIATION SURVEY

The Building 70 walkover gamma radiation survey (walkover survey) was performed to assess the potential for elevated radiological contaminants of potential concern for the Sylvania Corning FUSRAP Site, specifically isotopes of thorium and uranium. The survey was performed over 100% of reasonably accessible areas surrounding Building 70. A total of 6771 square meters (or 1.67 acres) were surveyed. Approximately 70% of the total area had an asphalt surface, while the remainder was grass. Several small concrete areas were also surveyed, but the overall area was very small.

1.1 Equipment

The walkover survey was performed using a Ludlum Model 2221 ratemeter connected to a 3-inch by 3-inch sodium iodide (NaI) gamma scintillation detector. NaI detectors are well suited for exterior surveys of uranium and thorium isotopes.

The ratemeter/detector combination was connected to a Trimble Pro XRS global positioning system (GPS) receiver and configured such that correlated gamma count rate and geospatial location were recorded once every second during the survey. The GPS was operated such that positional accuracy to 1 meter was maintained throughout the survey. The minimum detectable concentration (MDC) capabilities of the system are outlined in Attachment 1.

1.2 Quality Control Measures

Quality control (QC) measurements for field instrumentation included initial response to a radioactive source and daily operability checks. All instruments were calibrated within the last twelve months by the instrument vendor, a certified calibration laboratory, using sources traceable to the National Institute of Standards and Technology (NIST). Calibration certificates for each instrument are provided in Attachment 2. Prior to commencing the walkover survey, ten initial readings were collected on each detector using a cesium-137 (^{137}Cs) source to establish a control chart for each unit to determine daily operability. The basis for daily operability for instruments of this type is ± 20% of the average for the initial ten measurements. These data are included in Attachment 2.

The GPS system was configured using the North American Datum 1983 (NAD83), State Plane coordinate system for New York Long Island (3104) in units of meters. Operability of the GPS was determined by the available satellite coverage and associated position dilution of precision (PDOP) reported by the GPS handset. If the PDOP was observed to rise above 6, the surveyor immediately paused and waited for the PDOP to improve. PDOP increases are a direct result of line-of-sight interference between the GPS satellites and the receiver.

1.3 Survey Methodology

The walkover survey was performed in accordance with the CABRERA project procedure provided in Attachment 1. The ratemeter, detector, and GPS were all mounted on a converted walk behind a 'baby-jogger' platform. The GPS receiver was placed inside the seat of the baby jogger with the antenna protruding vertically directly over the detector. This method served to improve the quality of the walkover survey data by eliminating variations in detector height and position and reducing operator errors due to fatigue. The walkover survey was performed by walking straight parallel paths over the designated areas. Survey passes were approximately 1 meter apart (the distance between the rear wheels). The operator used orange traffic cones or other markers to help maintain consistent path spacing between passes. While walking the survey paths, the surveyors visually observed the GPS signal reception status. In the event of GPS signal loss, the surveyors paused until signal was regained.

Data from the ratemeter/scaler was automatically logged into the GPS until the desired survey area was completed.

1.4 Data Processing

All field GWS data was forward to the CABRERA project Health Physicist for review and evaluation. The data compiled during the Building 70 GWS was verified to be complete and usable without qualification. The reviewed survey data was then imported into a geographic information system (GIS) software program for post-processing and imaging. Post-processing of the data included calculation of descriptive statistics including mean, standard deviation, and z-scores. A z-score is the difference of the count rate in counts per minute (cpm) from each acquisition and the mean of the count population divided by the standard deviation of the population, as shown in Equation 1 below.

$$Z = \frac{(L_{cr}) - (M_{ds})}{(STDEV)} \qquad \text{(Eq 1)}$$

where: Z = Z-score

L_{cr} = Count rate, in gross cpm, of local acquisition

M_{ds} = Mean of the data set, in gross cpm

STDEV= Standard deviation of the dataset

Imaging of the prepared data displayed spatial coordinates (plotted on the X and Y axes) and Z-scores of the gamma readings (plotted on the Z axis). The software generated a spatially

interpolated contour map depicting calculated Z-scores of the composite dataset. Locations with Z-scores greater than 3 were investigated as candidates for additional sampling and characterization activities.

2.0 RESULTS

During the course of the walkover survey, a total of 28,003 data points were collected from three ratemeter detector combinations. Meter SN 176952 collected 15,317 data points, having an average of 14,753 cpm, a standard deviation of 2,598 cpm, and a maximum of 35,196 cpm. Meter SN 1183465 collected 3,860 data points, having an average of 16,040 cpm, a standard deviation of 1,561 cpm, and a maximum of 21,351 cpm. Detector SN 132861 collected 8,825 data points, having an average of 16,483 cpm, a standard deviation of 2,341 cpm, and a maximum of 29,259 cpm. The overall average was found to be 15,346 cpm with a standard deviation of 2,531 cpm. Z-scores of the complete dataset ranged from -2.46 to 6.39.

The graphical representation of the dataset is shown on the Z-score contour plot in Attachment 3. A majority of the area surrounding Building 70 was found to be below one z-score, suggesting that there is little variability in the radiological constituents over the survey area.

Four general areas were found to have Z-scores greater than 3, shown as orange on the contour plot. These areas are summarized in Table 1.

Table 1. Summary of Walkover Survey Area with Z-Score > 3

Location	Description
1	Grass area to the northwest of Building 70 near gate to Cantiague Rock Road
2	Northwest corner of parking lot near north entrance door
3	Grass area between west boundary of Building 70 and Cantiague Rock Road
4	Small grass area at the southwestern property boundary

None of the above areas are believed to be real sources of residual contamination from former Sylvania operations. The following points support this conclusion:

- The elevated Z-scores shown for Areas 2 and 3 are most likely being biased by contributions from the brick facing used on the outside of Building 70 and, possibly, the concrete walkway. The NaI detectors used to perform the walkover survey were not shielded or collimated to eliminate contributions from sources beyond what is found directly below the detector face. Biases of this type are relatively easy to characterize and eliminate once they are understood and accounted for. Follow-up surveys in Areas 2 and 3 with shielded NaI detectors could be performed during Phase II of the RI, with

results compared with the unshielded detector. Several soil samples are already planned for these areas as part of the Building 70 characterization.

- The Z-score plot shows gross gamma count rates for multiple surfaces (asphalt, concrete, and grass). Each of these surfaces has a representative natural background range associated with it. Combining multiple areas into a single dataset can sometimes draw attention to one of these areas as a potential residual contamination area. Areas 1 and 4 are both grassy areas within a larger asphalt data set having lower average count rates. The grassy areas had count rates only 5,000 cpm above the larger data set. If the walkover survey is performed in the future, reference area surveys will be performed on similar surfaces to obtain gamma signatures for each type of surface.

Attachment 1

GWS PROCEDURE AND SCAN MINIMUM DETECTABLE CONCENTRATION CALCULATIONS

CABRERA SERVICES

RADIOLOGICAL · ENVIRONMENTAL · REMEDIATION

Cabrera Services, Inc.

Gamma Walkover Survey
General Procedure

Sylvania-Corning FUSRAP Site
Proj.#: 07-1005.00

Gamma Walkover Surveys

Purpose

The purpose of the GWS is to identify areas of elevated radioactivity. Surficial scans, where possible, are particularly effective at identifying spatial trends in surficial contamination and potential $DCGL_{emc}$ concerns. These types of surveys have been used with considerable success at other USACE FUSRAP sites with similar radiological contaminants of concern.

Equipment

Equipment required for performing the GWS survey includes the following:

- Trimble Pathfinder Pro - XRS (or equivalent)
- 2x2 or 3x3 NaI detector and associated rate-meter/scaler, equipped with RS-232 or USB download port;
- Hardware: IBM-compatible Pentium (minimum) personal computer, color printer, large capacity data storage device (e.g., CD-ROM), large format plotter, (note that some hardware may not be site-based).
- Software: Trimble Pathfinder Office, GIS software (ArcGIS or equivalent) with coordinate geometry capability.

Methods

The survey will be performed following MARSSIM protocol by walking straight parallel lines over an area while moving the detector in a serpentine motion, 0.05 to 0.10 m (2 to 4 in) above the ground surface. Survey passes will be approximately one meter apart. Data from the ratemeter/scaler will be automatically logged into the GPS unit once per second. After completion of the survey, the raw data will be downloaded from the GPS and sent to a data processing specialist for export into a geospatial software program. After completion of data processing, an electronic file with the contoured results of the survey will be returned to the FSM for evaluation.

The GWS data will then be forwarded to the CABRERA Technical Lead for evaluation after field data processing. Gamma walkover survey data will be delivered to E&E and USACE in graphical format (maps of count rate contours by easting and northing in US State Plane feet, New York Long Island, NAD83). This evaluation will determine if any GWS anomalies exist that warrant further investigation by collecting biased surface soil samples for laboratory radioanalysis. Anomalies identified will be reported to the CABRERA PM, or designee, for evaluation and concurrence. Anomaly locations will be forwarded to the field team, and will be physically marked for follow-up.

Before a detection system is utilized for surveys, it is necessary to perform an *a priori* calculation of the Scan Minimum Detectable Concentration (Scan MDC) for the system. The nominal Scan MDC for a Ludlum Model 44-20 3x3 NaI detector for U-238 has been calculated to be approximately 4 pCi/g.

Estimation of Scan Minimum Detectable Concentrations (MDCs) for Gamma Walkover Surveys at the Sylvania-Corning FUSRAP Site

1. Introduction

A MARSSIM based scoping survey plan was implemented by Cabrera Services, Inc. (CABRERA), under contract to Ecology & Environment (E&E) for properties in Hicksville, NY to determine whether they have been affected by the former operations conducted by Sylvania-Corning. The purpose of this document is to estimate gamma walkover scan sensitivities for the Radionuclides of Concern (ROCs), particularly Natural Uranium with Short-Lived Progeny and Uranium-235 (U-235). The specific objective is to estimate the scan sensitivity of a gamma walkover survey performed using a 3-in by 3-in sodium iodide (NaI) scintillation detector to measure ROCs at the Site. The method is first demonstrates for Cesium-137 (Cs-137), as this is the nuclide to which the NaI detectors are calibrated.

2. Estimation of Minimum Detectable Concentrations (MDC)

This document utilizes the methodology and approach documented in MARSSIM (Section 6.7.2.2, Table 6.7) for a 2-in x 2-in NaI scintillation detector. MARSSIM calculations for the 2-in x 2-in detectors are based on NRC NUREG-1507, *Minimum Detectable Concentrations with Typical Radiation Survey Instruments for Various Contaminants and Field Conditions* (NRC 1997). MARSSIM Table 6.7 does not provide scan MDCs for 3-in x 3-in NaI detectors; thus scan MDCs are derived using MARSSIM/NUREG-1507 methods. Factors included in this analysis are the surveyor scan efficiency, index of sensitivity, the natural background of the surveyed area, scan rate, detector to source geometry, areal extent of the potential hot spot(s), and energy and yield of gamma emissions.

The computer code Microshield was used to model the presence of a normalized 1 pCi/g of Cs-137, total uranium and short-lived progeny, and U-235 in soil with the assumption that the activity was uniformly distributed to a depth of 15 cm and spread over a disk shaped area with a diameter of 56 cm. This is consistent with the NUREG-1507 methodology and provides for a count rate to exposure ration (CPM/μR/hr) to be calculated. As the Site consists of paved areas, the model includes attenuation and energy loss through asphalt. Activity concentrations must be entered into Microshield in units of $\mu Ci/cm^3$ with consideration to the density of soil at 1.6 g/cm^3. Therefore, activity concentrations for Cs-137, total uranium with short-lived progeny, and U-235 were entered into Microshield as 1.6E-6 $\mu Ci/cm^3$ with decay times sufficient to allow in-growth of progeny activities.

$$1\ pCi/g \times 1E\text{-}6\ \mu Ci/pCi \times 1.6\ g/cm^3 = 1.6E\text{-}6\ \mu Ci/cm^3$$

The Microshield exposure rate output is included as an attachment to this Appendix.

Two scenarios were considered for estimating the uranium scan MDC. Fully enriched uranium metal (i.e. 100% U-235) and natural uranium ore with short-lived progeny. When uranium is extracted from ore, it disrupts the equilibrium between the parent and

daughter nuclides. Because some of the daughter radionuclides in both the U-235 and U-238 decay chains have large half-lives (~10^4 yr), it takes several years for the equilibrium to be reestablished. For the case where equilibrium with short lived progeny, U-235 was assumed to be in equilibrium with only Th-231, and U-238 was assumed to be in equilibrium with Th-234, and Pa-234/234m. U-234, U-235, and U-238 are assumed to exist at natural activity fractions (i.e. 0.489, 0.022, and 0.489, respectively). Therefore, isotopic uranium activity concentrations of 7.83E-7 μCi/cm^3, 3.47E-8 μCi/cm^3, and 7.83E-7 μCi/cm^3, respectively, to represent 1 pCi/g of total uranium.

For the fully enriched case, U-235 was used at a concentration of 1.6E-6 μCi/cm^3 to represent a total activity of 1 pCi/g.

A set of tables are attached, based upon the NUREG-1507 methodology as applied toward a 3-in x 3-in NaI scintillation detector. Additional details and discussion describing the NUREG analysis methodology are described in that publication.

2.1. Fluence Rate to Exposure Rate (FRER)

The fluence rate to exposure rate (FRER) may be approximated by:

$$FRER \approx \frac{1\mu R/hr}{(E_\gamma)(\mu_{en}/\rho)_{air}}$$

Where:

E_γ	=	energy of the gamma photon of concern, keV
(μ_{en}/ρ)	=	the mass energy absorption coefficient for air, cm^2/g

This can be represented in tabular form, as in Table 1.

2.2. Probability of Interaction (P) Through Detector End for a Given Energy

The probability, P, of a gamma ray interaction in the NaI scintillation crystal entering through the end of the crystal is given by:

$$\Pr obability(P) = 1 - e^{-(\mu/\rho)_{NaI}(X)(\rho_{NaI})}$$

Where:

$(\mu/\rho)_{NaI}$	=	the mass attenuation coefficient for NaI
X	=	the thickness through the end of the 3-in x 3-in NaI crystal, 7.62 cm
(ρ_{NaI})	=	the density of the NaI crystal, 3.67 g/cm^3

This can be represented in tabular form, as in Table 2.

2.3. Relative Detector Response (RDR)

The Relative Detector Response (RDR) as a function of energy is determined by multiplying the relative fluence rate to exposure rate (FRER) by the probability (P) of an interaction and is given by:

$$RDR = (FRER)(P)$$

This can be represented in tabular form, as in Table 3.

2.4. Determination of CPM per μR/hr as a Function of Energy

The equivalent FRER, P, and finally RDR may be calculated for the NaI scintillation detector at the Cesium-137 (Cs-137) energy of 662 keV. Manufacturers of this equipment typically provide an instrument response in terms of CPM and μR/hr at the Cs-137 energy. This point allows one to determine the CPM per μR/hr and ultimately activity concentration and minimum detection sensitivity level in terms of pCi/g for a specific instrument.

Based on a manufacturer's 3-in x 3-in NaI response specification (Ludlum 44-20) of 2,700 CPM/μR/hr, and using the same methodology as shown in the tables above, the FRER, P, and RDR are calculated. The mass energy absorption coefficient for air and the mass attenuation coefficient for NaI are interpolated from tables in the Radiological Health Handbook, Revised Edition January 1970, pages 139, and 140.

FRER	$Energy_{\gamma}$, keV	$(\mu_{en}/\rho)_{air}$, cm^2/g
0.0514	662	0.0294
		$(\mu_{en}/\rho)_{NaI}$, cm^2/g
		0.0780
P		
0.89		

And Cs-137 RDR (662 keV) = 0.0456

The detector response (CPM) to another energy is based upon the ratio of the RDR at a specific energy to the known CS-137 energy RDR:

$$CPM / \mu R / hr, E_i = \frac{(CPM / \mu R / hr_{Cs-137})(RDR_{E_i})}{(RDR_{Cs-137})}$$

This can be represented in tabular form, as in Table 4.

2.5. Minimum Detectable Count Rate

The minimum detectable count rate (MDCR) is calculated using the NUREG-1507 methodology where:

The average number of background counts in a one second interval, b_i = CPM/60

And for the Ludlum generic count rate to exposure rate ratio value of 2,700 CPMμR/hr and 10μR/hr measured background gives:

$$B_i = (10\mu R/hr)(2{,}700\ CPM/\mu R/hr)/(60) = 450 \text{ counts}$$

The background exposure rate of 10 μR/hr is used as a conservative estimate for the property. Background exposure rates vary but are typically less than 10 μR/hr.

The MDCR is therefore calculated as:

$$MDCR = (d')(b_i)^{0.5}(60sec/1min)$$

Where d' is from Table 6.1 of NUREG-1507 and represents the rate of detections at 95% and a false positive rate of 60%, and b_i is the background counts, giving:

$$MDCR = (1.38)(450)^{0.5}(60) = 1{,}756 \text{ CPM}$$

The MDCR for the surveyor is given as:

$$MDCR_{surveyor} = MDCR / (P)^{0.5}$$

Where P is the surveyor efficiency equal to 0.5 to 0.75 as given by NUREG-1507. 0.5 was chosen as a conservative estimate and

$$MDCR_{surveyor} = 1{,}756 / (0.5)^{0.5} = 2{,}483 \text{ CPM}$$

The count rate to exposure ratio for each of the Uranium with short-lived progeny and the U-235 gamma emissions and their contributions to the total exposure rate may be computed using the output of the Microshield runs and the count rate to exposure rate ratios from Table 4.

2.6. Estimate of Cs-137 Scan MDC

The Microshield runs are summarized in Table 5 for Cs-137. The minimum detectable exposure rate from Cs-137 is obtained from the $MDCR_{surveyor}$ divided by the Table 5 weighted count rate to exposure rate value of 3,003 CPM/μR/hr for a 1 pCi/g normalized concentration.

2,483 CPM / 3,003 CPM /μR/hr = 0.83 μR/hr

The scan MDC is then equal to the ratio of the Minimum Detectable Exposure Rate in the field to the exposure rate determined for the normalized 1 pCi/g concentration of Cs-137.

$$ScanMDC = \frac{(Normalized\_Cs_{conc})(ExposureRate_{surveyor})}{(ExposureRate_{normalized\_Cs\_conc})}$$

Scan MDC = (1 pCi/g)(0.83 μR/hr)/(0.131 μR/hr) = **6.34 pCi/g**

2.7. Estimate of Uranium with Short-lived Progeny Scan MDC

The Microshield runs are summarized in Table 6 for uranium with short-lived progeny. The minimum detectable exposure rate from uranium with short-lived progeny is obtained from the $MDCR_{surveyor}$ divided by the Table 6 weighted count rate to exposure rate value of 2,533 CPM/μR/hr for a 1 pCi/g normalized concentration.

2,483 CPM / 2,533 CPM /μR/hr = 0.98 μR/hr

The scan MDC is then equal to the ratio of the Minimum Detectable Exposure Rate in the field to the exposure rate determined for the normalized 1 pCi/g concentration for uranium and short-lived progeny.

$$ScanMDC = \frac{(Normalized\_U_{conc})(ExposureRate_{surveyor})}{(ExposureRate_{normalized\_U\_conc})}$$

Scan MDC = (1 pCi/g)(0.98 μR/hr)/(0.238 μR/hr) = **4.12 pCi/g**

2.8. Estimate of U-235 Scan MDC

The Microshield runs are summarized in Table 7 for uranium with short-lived progeny. The minimum detectable exposure rate from U-235 is obtained from the $MDCR_{surveyor}$ divided by the Table 7 weighted count rate to exposure rate value of 11,950 CPM/μR/hr for a 1 pCi/g normalized concentration.

2,483 CPM / 11,950 CPM /μR/hr = 0.208 μR/hr

The scan MDC is then equal to the ratio of the Minimum Detectable Exposure Rate in the field to the exposure rate determined for the normalized 1 pCi/g concentration for U-235.

$$ScanMDC = \frac{(Normalized\_U_{conc})(ExposureRate_{surveyor})}{(ExposureRate_{normalized\_U\_conc})}$$

Scan MDC = (1 pCi/g)(0.208 μR/hr)/(0.0224 μR/hr) = **9.28 pCi/g**

3. Summary

Using the NUREG-1507 methodology, the calculated scan MDCs for the 3-in x 3-in NaI scintillation detector employed for this radiological survey are as follows:

Radionuclide	Scan MDC (pCi/g)
Cs-137	6.34
Uranium with Short-lived Progeny	4.12
U-235	9.28

Table 1

Fluence Rate to Exposure Rate

Gamma Energy (keV)	Mass Attenuation Coefficient - Air (cm^2/g)	FRER
40	0.0640	0.3906
50	0.0384	0.5208
60	0.0292	0.5708
80	0.0236	0.5297
100	0.0231	0.4329
150	0.0251	0.2656
200	0.0268	0.1866
300	0.0288	0.1157
400	0.0296	0.0845
500	0.0297	0.0673
600	0.0296	0.0563
800	0.0289	0.0433
1000	0.0280	0.0357
1500	0.0255	0.0261
2000	0.0234	0.0214
3000	0.0205	0.0163

Table 2

Probability (P) of Interaction Through Detector End

Gamma Energy (keV)	Mass Attenuation Coefficient - NaI (cm^2/g)	P
40	19.3000	1.00
50	10.7000	1.00
60	6.6200	1.00
80	3.1200	1.00
100	1.7200	1.00
150	0.6250	1.00
200	0.3340	1.00
300	0.1670	0.99
400	0.1170	0.96
500	0.0955	0.93
600	0.0826	0.90
800	0.0676	0.85
1000	0.0586	0.81
1500	0.0469	0.73
2000	0.0413	0.68
3000	0.0366	0.64

Table 3

Relative Detector Response (RDR)

Gamma Energy (keV)	FRER	P	RDR
40	0.3906	1.00	0.3906
50	0.5208	1.00	0.5208
60	0.5708	1.00	0.5708
80	0.5297	1.00	0.5297
100	0.4329	1.00	0.4329
150	0.2656	1.00	0.2656
200	0.1866	1.00	0.1866
300	0.1157	0.99	0.1147
400	0.0845	0.96	0.0813
500	0.0673	0.93	0.0627
600	0.0563	0.90	0.0507
800	0.0433	0.85	0.0367
1000	0.0357	0.81	0.0288
1500	0.0261	0.73	0.0191
2000	0.0214	0.68	0.0146
3000	0.0163	0.64	0.0104

Table 4

3-in x 3-in NaI Detector Response vs. Energy

Gamma Energy (keV)	RDR	CPM per microR/hr
40	0.3906	23129
50	0.5208	30839
60	0.5708	33796
80	0.5297	31362
100	0.4329	25632
150	0.2656	15727
200	0.1866	11046
300	0.1147	6789
400	0.0813	4811
500	0.0627	3711
600	0.0507	3003
800	0.0367	2174
1000	0.0288	1704
1500	0.0191	1131
2000	0.0146	867
3000	0.0104	617

Table 5

Weighted CPM per microR/hr vs. Energy for Cs-137

15 cm x 56 cm cylinder under asphalt

Gamma Energy (keV)	Microshield Exposure Rate for 1pCi/g (microR/hr w/buildup)	CPM per microR/hr Table C-4	CPM per microR/hr (weighted)
40	3.17E-08	23129	5.601E-03
50	0.00E+00	30839	0.000E+00
60	0.00E+00	33796	0.000E+00
80	0.00E+00	31362	0.000E+00
100	0.00E+00	25632	0.000E+00
150	0.00E+00	15727	0.000E+00
200	0.00E+00	11046	0.000E+00
300	0.00E+00	6789	0.000E+00
400	0.00E+00	4811	0.000E+00
500	0.00E+00	3711	0.000E+00
600	1.31E-01	3003	3.003E+03
800	0.00E+00	2174	0.000E+00
1000	0.00E+00	1704	0.000E+00
1500	0.00E+00	1131	0.000E+00
2000	0.00E+00	867	0.000E+00
3000	0.00E+00	617	0.000E+00
TOTAL	**1.31E-01**		**3.003E+03**

Table 6

Weighted CPM per microR/hr vs. Energy for Uranium + Short-Lived Progeny

15 cm x 56 cm cylinder under asphalt

Gamma Energy (keV)	Microshield Exposure Rate for 1pCi/g (microR/hr w/buildup)	CPM per microR/hr Table C-4	CPM per microR/hr (weighted)
40	2.06E-09	23129	1.998E-04
50	5.92E-08	30839	7.662E-03
60	1.27E-05	33796	1.797E+00
80	8.99E-05	31362	1.184E+01
100	1.69E-03	25632	1.816E+02
150	2.60E-03	15727	1.720E+02
200	3.63E-03	11046	1.682E+02
300	2.21E-03	6789	6.295E+01
400	2.72E-03	4811	5.502E+01
500	5.22E-03	3711	8.139E+01
600	2.75E-02	3003	3.468E+02
800	8.09E-02	2174	7.383E+02
1000	7.86E-02	1704	5.626E+02
1500	2.73E-02	1131	1.295E+02
2000	5.71E-03	867	2.079E+01
3000	0.00E+00	617	0.000E+00
TOTAL	**2.38E-01**		**2.533E+03**

Table 7

Weighted CPM per microR/hr vs. Energy for U-235

15 cm x 56 cm cylinder under asphalt

Gamma Energy (keV)	Microshield Exposure Rate for 1pCi/g (microR/hr w/buildup)	CPM per microR/hr Table C-4	CPM per microR/hr (weighted)
40	1.63E-09	23129	1.682E-03
50	7.29E-08	30839	1.004E-01
60	1.38E-07	33796	2.077E-01
80	6.97E-05	31362	9.766E+01
100	5.09E-04	25632	5.831E+02
150	2.62E-03	15727	1.840E+03
200	1.90E-02	11046	9.383E+03
300	7.83E-05	6789	2.374E+01
400	8.08E-05	4811	1.737E+01
500	1.04E-05	3711	1.728E+00
600	0.00E+00	3003	0.000E+00
800	2.14E-06	2174	2.075E-01
1000	0.00E+00	1704	0.000E+00
1500	0.00E+00	1131	0.000E+00
2000	0.00E+00	867	0.000E+00
3000	0.00E+00	617	0.000E+00
TOTAL	**2.24E-02**		**1.195E+04**

Attachment 2

INSTRUMENT QC INFORMATION AND CALIBRATION CERTIFICATES

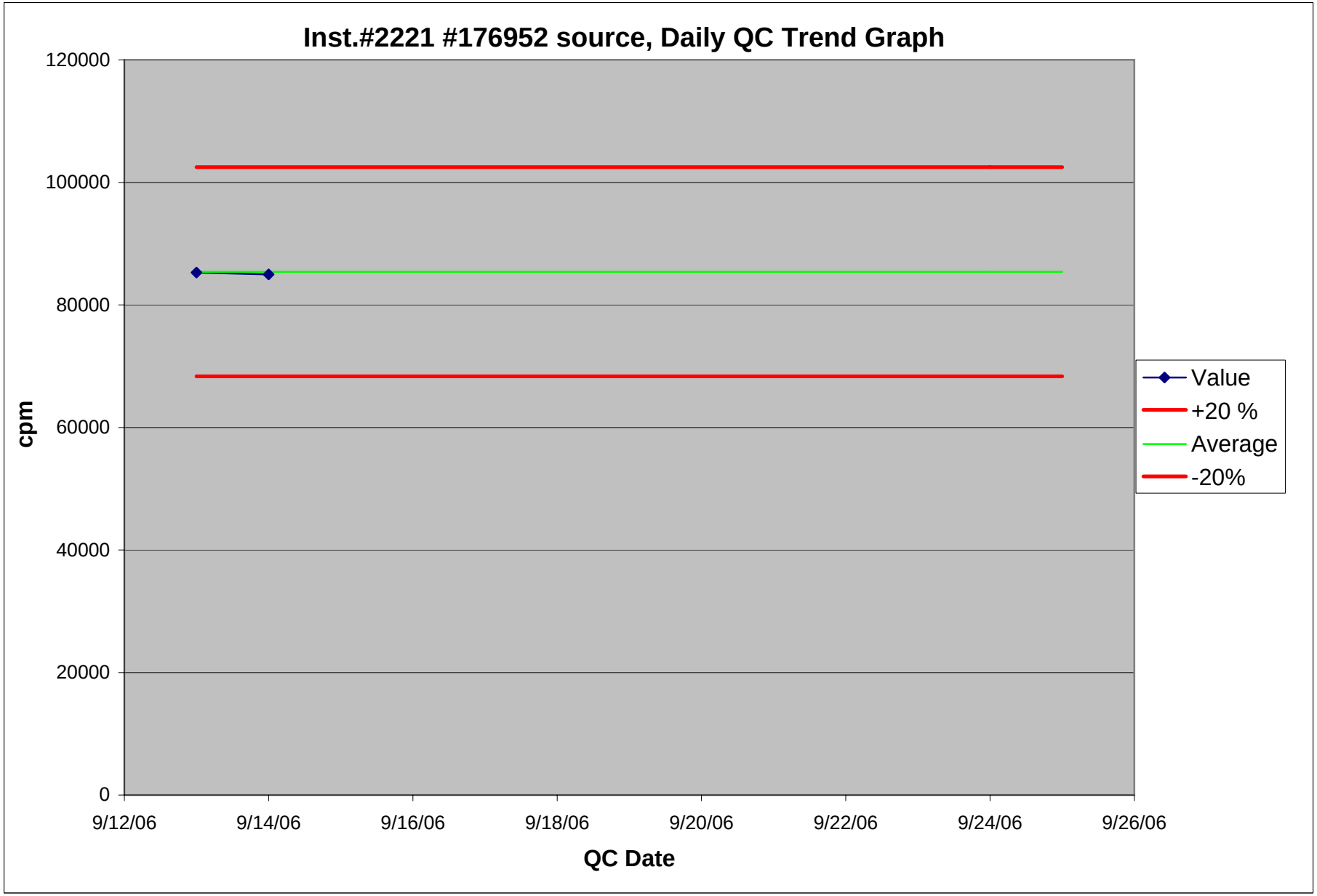
Inst.#2221 #176952 source, Daily QC Trend Graph
120000
100000
80000
60000
40000
20000
0
cpm
9/12/06
9/14/06
9/16/06
9/18/06
9/20/06
9/22/06
9/24/06
9/26/06
QC Date
Value
+20 %
Average
-20%

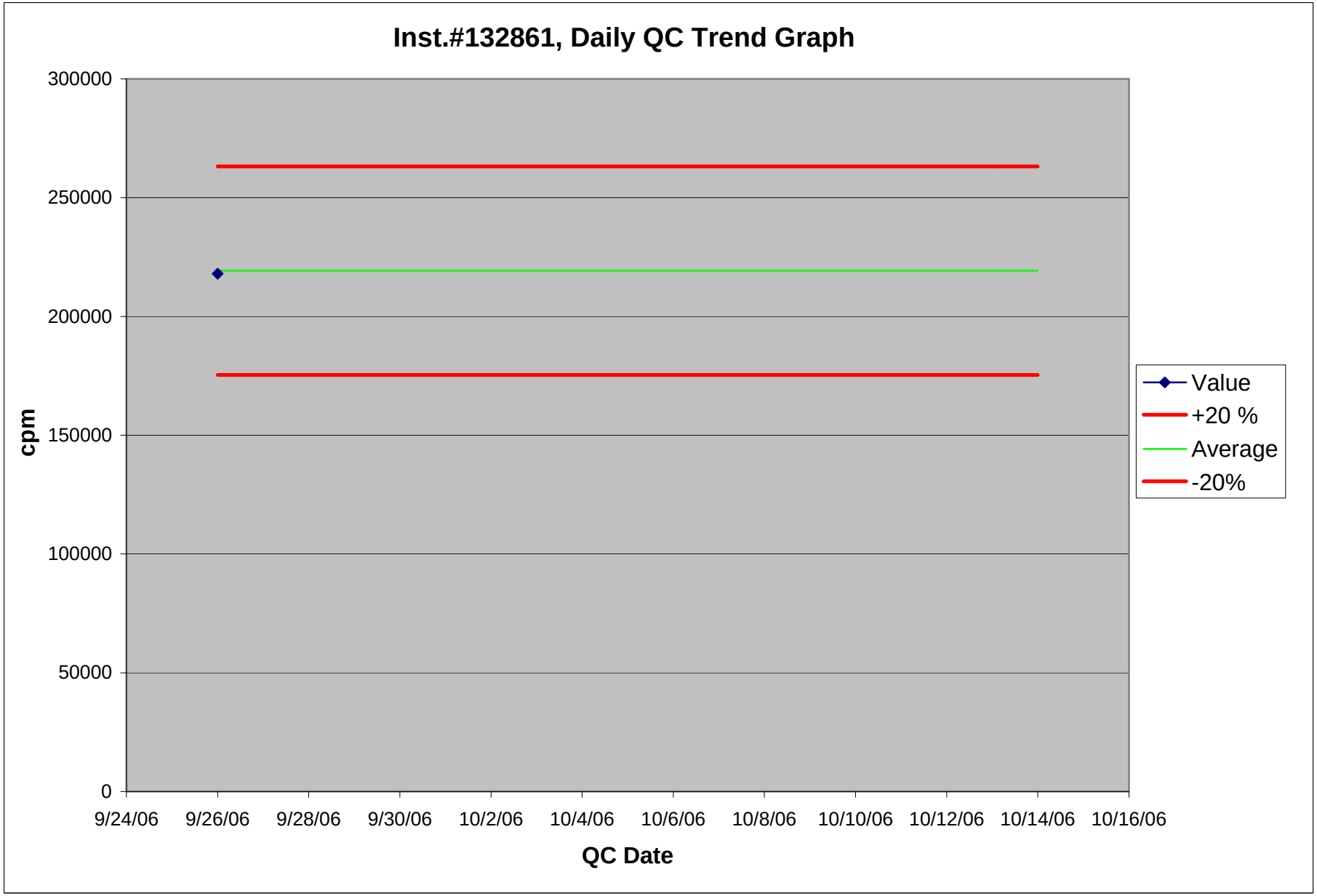
Inst.#132861, Daily QC Trend Graph
300000
250000
200000
150000
100000
50000
0
cpm
9/24/06
9/26/06
9/28/06
9/30/06
10/2/06
10/4/06
10/6/06
10/8/06
10/10/06
10/12/06
10/14/06
10/16/06
QC Date
Value
+20 %
Average
-20%

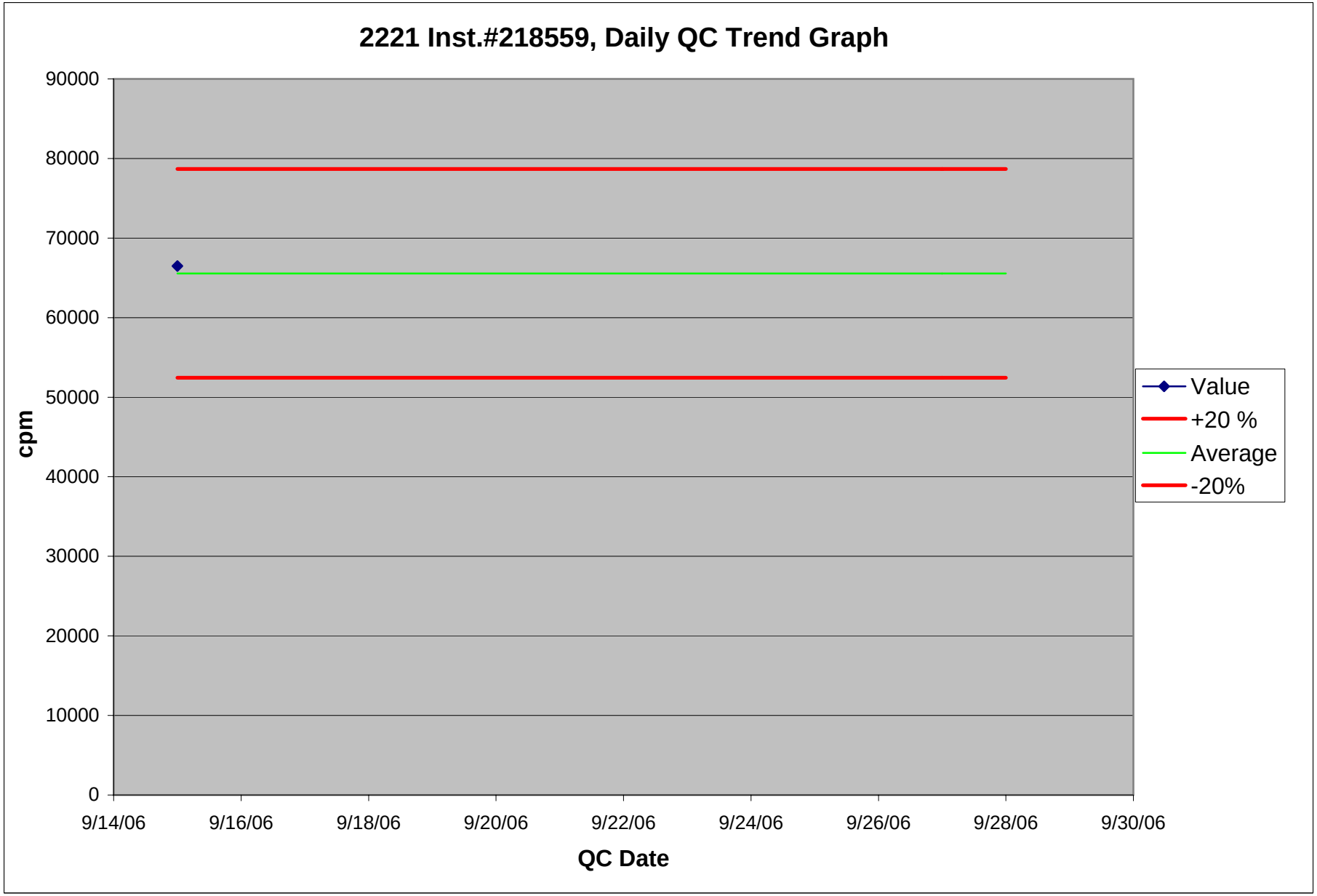
2221 Inst.#218559, Daily QC Trend Graph
90000
80000
70000
60000
50000
40000
30000
20000
10000
0
cpm
9/14/06
9/16/06
9/18/06
9/20/06
9/22/06
9/24/06
9/26/06
9/28/06
9/30/06
QC Date
Value
+20 %
Average
-20%

Designer and Manufacturer of Scientific and Industrial Instruments

CERTIFICATE OF CALIBRATION

LUDLUM MEASUREMENTS, INC.
POST OFFICE BOX 810 PH. 325-235-5494
501 OAK STREET FAX NO. 325-235-46
SWEETWATER, TEXAS 79556, U.S.A.

CUSTOMER CABRERA SERVICES ORDER NO. 253450 / 301183

Mfg. Ludlum Measurements, Inc. Model 2221 Serial No. 176952

Mfg. Ludlum Measurements, Inc. Model 44-20 Serial No. PR-183465

Cal. Date 10-Apr-06 Cal Due Date 10-Apr-07 Cal. Interval 1 Year Meterface 202-159

Check mark ☑ applies to applicable instr. and/or detector IAW mfg. spec. T. 74 °F RH 23 % Alt 701.8 mm H

☐ New Instrument Instrument Received ☑ Within Toler. +-10% ☐ 10-20% ☐ Out of Tol. ☐ Requiring Repair ☐ Other-See comments

☑ Mechanical ck. ☑ Meter Zeroed ☐ Background Subtract ☑ Input Sens. Linearity
☑ F/S Resp. ck ☑ Reset ck. ☑ Window Operation ☑ Geotropism
☑ Audio ck. ☐ Alarm Setting ck. ☑ Batt. ck. (Min. Volt) 4.4 VDC
☑ Calibrated in accordance with LMI SOP 14.8 rev 12/05/89. ☐ Calibrated in accordance with LMI SOP 14.9 rev 02/07/97.

Instrument Volt Set Comments V Input Sens. Comment mV Det. Oper. Comments V at Comment mV Threshold Dial Ratio 100 = 10 mV

☑ HV Readout (2 points) Ref./Inst. 500 / 499 V Ref./Inst. 2000 / 2002 V

COMMENTS:

	Peak Settings	Gross Counts	Firmware: 26 10 27
High Voltage:	840V	1150V	
Threshold Setting:	642	100(10mV)	Overload checked but not set.
Window Setting:	40	N/A	HV set w/detector connected.
Window Position:	"IN"	"OUT"	Calibrated using 6' C-cable.

Resolution for Cs137 ≈ 9.21%

Gamma Calibration: GM detectors positioned perpendicular to source except for M 44-9 in which the front of probe faces source.

RANGE/MULTIPLIER	REFERENCE CAL. POINT	INSTRUMENT REC'D "AS FOUND READING"	INSTRUMENT METER READING*
x1K	400kcpm	400	400
x1K	100kcpm	100	100
x100	40kcpm	400	400
x100	10kcpm	100	100
x10	4kcpm	400	400
x10	1kcpm	100	100
x1	400cpm	400	400
x1	100cpm	100	100

*Uncertainty within ± 10% C.F. within ± 20% ALL **Range(s) Calibrated Electronically**

	REFERENCE CAL. POINT	INSTRUMENT RECEIVED	INSTRUMENT METER READING*		REFERENCE CAL. POINT	INSTRUMENT RECEIVED	INSTRUMENT METER READING
Digital Readout	400kcpm	39981(0)	39981(0)	Log Scale	500kcpm	450K	450K
	40kcpm	3998	3998		50kcpm	50K	50K
	4kcpm	400	400		5kcpm	5K	5K
	400cpm	40	40		500cpm	500	500
	40cpm	4	4		50cpm	55	55

Ludlum Measurements, Inc. certifies that the above instrument has been calibrated by standards traceable to the National Institute of Standards and Technology, or to the calibration facilities o other International Standards Organization members, or have been derived from accepted values of natural physical constants or have been derived by the ratio type of calibration technique
The calibration system conforms to the requirements of ANSI/NCSL Z540-1-1994 and ANSI N323-1978 State of Texas Calibration License No. LO-19

Reference Instruments and/or Sources:

Cs-137 Gamma S/N ☐ 1162 ☐ G112 ☐ M565 ☐ 5105 ☐ T1008 ☐ T879 ☐ E552 ☐ E551 ☐ 720 ☐ 734 ☐ 1616 ☐ Neutron Am-241 Be S/N T-3

☐ Alpha S/N ☐ Beta S/N ☑ Other Am241≈0.83 µCi

☑ m 500 S/N 81084 ☐ Oscilloscope S/N ☑ Multimeter S/N 78401030

Calibrated By: Sebast Ceballos Date 10-Apr-06

Reviewed By: Michael T Thomas Date 11-Apr-06

This certificate shall not be reproduced except in full, without the written approval of Ludlum Measurements, Inc.

AC Inst. ☐ Passed Dielectric (Hi-Pot) and Continuity Test ☐

Designer and Manufacturer
of
Scientific and Industrial
Instruments

LUDLUM MEASUREMENTS, INC.
POST OFFICE BOX 810 PH. 325-235-5494
501 OAK STREET FAX NO. 325-235-46
SWEETWATER, TEXAS 79556, U.S.A.

Bench Test Data For Detector

Detector 44-20 Serial No. PR-183465

Customer CABRERA SERVICES Order #. 253450 / 301183

Counter 2221 Serial No. 176952 Counter Input Sensitivity 10 mV

Count Time 6 sec. Distance Source to Detector Surface

Other

High Voltage	Background	Isotope Am241 Size ≈0.83 μCi	Isotope Size	Isotope Size	Isotope Size
900V	1,237	16,074			
950	1,285	16,977			
1000	1,296	20,184			
1050	1,365	20,652			
1100	1,300	21,086			
* 1150	1,355	21,059			
1200	1,383	21,015			
1250	1,441	21,049			
1300	1,491	21,406			
1350	1,477	21,203			
1400	1,814	21,759			

Signature Sebastián Ceballos Date 10-Apr-06

FORM C4A 04/09/2003

Designer and Manufacturer of Scientific and Industrial Instruments

CERTIFICATE OF CALIBRATION

LUDLUM MEASUREMENTS, INC.
POST OFFICE BOX 810 PH. 325-235-5494
501 OAK STREET FAX NO. 325-235-46
SWEETWATER, TEXAS 79556, U.S.A.

CUSTOMER CABRERA SERVICES ORDER NO. 254454 / 301728

Mfg. Ludlum Measurements, Inc. Model 2221 Serial No. 132861

Mfg. Ludlum Measurements, Inc. Model 44-20 Serial No. PR-183405

Cal. Date 28-Apr-06 Cal Due Date 28-Apr-07 Cal. Interval 1 Year Meterface 202-159

Check mark ☑ applies to applicable instr. and/or detector IAW mfg. spec. T. 75 °F RH 37 % Alt 698.8 mm H

☐ New Instrument Instrument Received ☑ Within Toler. +-10% ☐ 10-20% ☐ Out of Tol. ☐ Requiring Repair ☐ Other-See comments

☑ Mechanical ck. ☑ Meter Zeroed ☐ Background Subtract ☑ Input Sens. Linearity
☑ F/S Resp. ck ☑ Reset ck. ☑ Window Operation ☑ Geotropism
☑ Audio ck. ☐ Alarm Setting ck. ☑ Batt. ck. (Min. Volt) 4.4 VDC
☑ Calibrated in accordance with LMI SOP 14.8 rev 12/05/89. ☐ Calibrated in accordance with LMI SOP 14.9 rev 02/07/97.

Instrument Volt Set Comments V Input Sens. Comment mV Det. Oper. Comments V at Comment mV Threshold Dial Ratio 100 = 10mV

☑ HV Readout (2 points) Ref./Inst. 500 / 499 V Ref./Inst. 2000 / 2004 V

COMMENTS:

	Peak Settings	Gross Counts	Firmware: 26 10 27
High Voltage:	674V	1000V	
Threshold:	642	100(10mV)	Overload checked but not set.
Window:	40	N/A	HV set w/detector connected.
WIN Position:	"IN"	"OUT"	Instrument currently set for Gross Counts.

Resolution for Cs137 ≈ 9.52%

Calibrated using 6' C-cable.

Gamma Calibration: GM detectors positioned perpendicular to source except for M 44-9 in which the front of probe faces source.

RANGE/MULTIPLIER	REFERENCE CAL. POINT	INSTRUMENT REC'D "AS FOUND READING"	INSTRUMENT METER READING*
x1K	400kcpm	400	400
x1K	100kcpm	100	100
x100	40kcpm	400	400
x100	10kcpm	100	100
x10	4kcpm	400	400
x10	1kcpm	100	100
x1	400cpm	400	400
x1	100cpm	100	100

*Uncertainty within ± 10% C.F. within ± 20% ALL **Range(s) Calibrated Electronically**

	REFERENCE CAL. POINT	INSTRUMENT RECEIVED	INSTRUMENT METER READING*		REFERENCE CAL. POINT	INSTRUMENT RECEIVED	INSTRUMENT METER READING
Digital Readout	400kcpm	39953(0)	39953(0)	Log Scale	500kcpm	475K	475K
	40kcpm	3997	3997		50kcpm	50K	50K
	4kcpm	400	400		5kcpm	5K	5K
	400cpm	40	40		500cpm	500	500
	40cpm	4	4		50cpm	50	50

Ludlum Measurements, Inc. certifies that the above instrument has been calibrated by standards traceable to the National Institute of Standards and Technology, or to the calibration facilities o other International Standards Organization members, or have been derived from accepted values of natural physical constants or have been derived by the ratio type of calibration technique
The calibration system conforms to the requirements of ANSI/NCSL Z540-1-1994 and ANSI N323-1978 State of Texas Calibration License No. LO-19

Reference Instruments and/or Sources:

Cs-137 Gamma S/N ☐ 1162 ☐ G112 ☐ M565 ☐ 5105 ☐ T1008 ☐ T879 ☐ E552 ☐ E551 ☐ 720 ☐ 734 ☐ 1616 ☐ Neutron Am-241 Be S/N T-3

☐ Alpha S/N ☐ Beta S/N ☑ Other Am241≈0.83 µCi

☑ m 500 S/N 81084 ☐ Oscilloscope S/N ☑ Multimeter S/N 78401030

Calibrated By: Sebast Cabrera Date 28-Apr-06

Reviewed By: Michael J Shu Date 28-Apr-06

This certificate shall not be reproduced except in full, without the written approval of Ludlum Measurements, Inc.

AC Inst. ☐ Passed Dielectric (Hi-Pot) and Continuity Test

Designer and Manufacturer
of
Scientific and Industrial
Instruments

LUDLUM MEASUREMENTS, INC.
POST OFFICE BOX 810 PH. 325-235-5494
501 OAK STREET FAX NO. 325-235-46
SWEETWATER, TEXAS 79556, U.S.A.

Bench Test Data For Detector

Detector 44-20 Serial No. PR-183405

Customer CABRERA SERVICES Order #. 254454 / 301728

Counter 2221 Serial No. 132861 Counter Input Sensitivity 10 mV

Count Time 6 sec. Distance Source to Detector Surface

Other

High Voltage	Background	Isotope Am241 Size ≈0.83μCi	Isotope Size	Isotope Size	Isotope Size
750V	1,455	16,061			
800	1,458	17,902			
850	1,556	20,875			
900	1,555	22,599			
950	1,611	23,152			
* 1000	1,547	23,535			
1050	1,542	23,636			
1100	1,572	23,427			
1150	1,649	24,166			
1200	1,652	24,762			
1250	1,823	24,170			

Signature Sebastián Caballos Date 28-Apr-06

Designer and Manufacturer of Scientific and Industrial Instruments

CERTIFICATE OF CALIBRATION

LUDLUM MEASUREMENTS, INC.
POST OFFICE BOX 810 PH. 325-235-5494
501 OAK STREET FAX NO. 325-235-4672
SWEETWATER, TEXAS 79556, U.S.A.

CUSTOMER CABRERA SERVICES ORDER NO. 257115/303187

Mfg. Ludlum Measurements, Inc. Model 2221 Serial No. 218559

Mfg. Ludlum Measurements, Inc. Model 44-20 Serial No. PR215468

Cal. Date 19-Aug-06 Cal Due Date 19-Aug-07 Cal. Interval 1 Year Meterface 202-159

Check mark ☑ applies to applicable instr. and/or detector IAW mfg. spec. T. 73 °F RH 43 % Alt 700.8 mm Hg

☐ New Instrument Instrument Received ☑ Within Toler. +-10% ☐ 10-20% ☐ Out of Tol. ☐ Requiring Repair ☐ Other-See comments

☑ Mechanical ck. ☑ Meter Zeroed ☐ Background Subtract ☑ Input Sens. Linearity
☑ F/S Resp. ck ☑ Reset ck. ☑ Window Operation ☑ Geotropism
☑ Audio ck. ☐ Alarm Setting ck. ☑ Batt. ck. (Min. Volt) 4.4 VDC

☑ Calibrated in accordance with LMI SOP 14.8 rev 12/05/89. ☐ Calibrated in accordance with LMI SOP 14.9 rev 02/07/97.

Instrument Volt Set Comments V Input Sens Comments mV Det. Oper Comments V at Comments mV Threshold Dial Ratio 100 = 10 mV

☑ HV Readout (2 points) Ref./Inst. 500 / 500 V Ref./Inst. 2000 / 2008 V

COMMENTS:

	Peak settings	Gross Counts
High Voltage:	687V	1050V
Threshold dial:	642	100(10mv)
Window dial:	40	n/a
Window Position:	"IN"	"OUT"
Resolution for Cs137:	≈8.7%	n/a

Model 2221 currently set for Gross Counts
High voltage set with detector connected.

Firmware: 261028 MTT

Calibrated with 5foot cable.

Gamma Calibration: GM detectors positioned perpendicular to source except for M 44-9 in which the front of probe faces source.

RANGE/MULTIPLIER	REFERENCE CAL. POINT	INSTRUMENT REC'D "AS FOUND READING"	INSTRUMENT METER READING*
X 1K	400kcpm	400	400
X 1K	100kcpm	100	100
X 100	40kcpm	400	400
X 100	10kcpm	100	100
X 10	4kcpm	400	400
X 10	1kcpm	100	100
X 1	400cpm	400	400
X 1	100cpm	100	100

*Uncertainty within ± 10% C.F. within ± 20% ALL **Range(s) Calibrated Electronically**

	REFERENCE CAL. POINT	INSTRUMENT RECEIVED	INSTRUMENT METER READING*		REFERENCE CAL. POINT	INSTRUMENT RECEIVED	INSTRUMENT METER READING*
Digital Readout	400kcpm	40215(0)	40215(0)	Log Scale	500kcpm	450 K	450K
	40kcpm	4013(0)	4013(0)		50kcpm	50 K	50K
	4kcpm	402(0)	402(0)		5kcpm	5 K	5K
	400cpm	40(0)	40(0)		500cpm	500	500
	40cpm	4(0)	4(0)		50cpm	55	55

Ludlum Measurements, Inc. certifies that the above instrument has been calibrated by standards traceable to the National Institute of Standards and Technology, or to the calibration facilities of other International Standards Organization members, or have been derived from accepted values of natural physical constants or have been derived by the ratio type of calibration techniques.
The calibration system conforms to the requirements of ANSI/NCSL Z540-1-1994 and ANSI N323-1978 State of Texas Calibration License No. LO-1963

Reference Instruments and/or Sources:

Cs-137 Gamma S/N ☐ 1162 ☐ G112 ☐ M565 ☐ 5105 ☐ T1008 ☐ T879 ☐ E552 ☐ E551 ☐ 720 ☐ 734 ☐ 1616 ☐ Neutron Am-241 Be S/N T-304

☐ Alpha S/N ☐ Beta S/N ☐ Other

☑ m 500 S/N 57881 ☐ Oscilloscope S/N ☑ Multimeter S/N 56110559R

Calibrated By: Michael J Thomas Date 19-Aug-06

Reviewed By: [illegible] Date 21 Aug 06

This certificate shall not be reproduced except in full, without the written approval of Ludlum Measurements, Inc.
FORM C22A 11/26/2003

AC Inst. Only ☐ Passed Dielectric (Hi-Pot) and Continuity Test ☐ Failed:

Designer and Manufacturer
of
Scientific and Industrial
Instruments

LUDLUM MEASUREMENTS, INC.
POST OFFICE BOX 810 PH. 325-235-5494
501 OAK STREET FAX NO. 325-235-4672
SWEETWATER, TEXAS 79556, U.S.A.

Bench Test Data For Detector

Detector 44-20 Serial No. PR 215468

Customer CABRERA SERVICES Order #. 257115/303187

Counter 2221 Serial No. 218559 Counter Input Sensitivity 10 mV

Count Time 6 sec Distance Source to Detector Surface

Other

High Voltage	Background	Isotope Am-241 Size ≈0.79uCi	Isotope Size	Isotope Size	Isotope Size
700	1704	1745			
750	1823	14477			
800	2019	16053			
850	2008	18828			
900	2046	19983			
950	2024	21056			
1000	2020	20841			
→ 1050	2137	20868			
1100	2043	20941			
1150	2160	20636			
1200	2249	20971			
1250	2651	21456			

Signature Michael J Thomas Date 19-Aug-06

FORM C4A 04/09/2003

Attachment 3

GAMMA Z-SCORE CONTOUR PLOT
SITE MAP

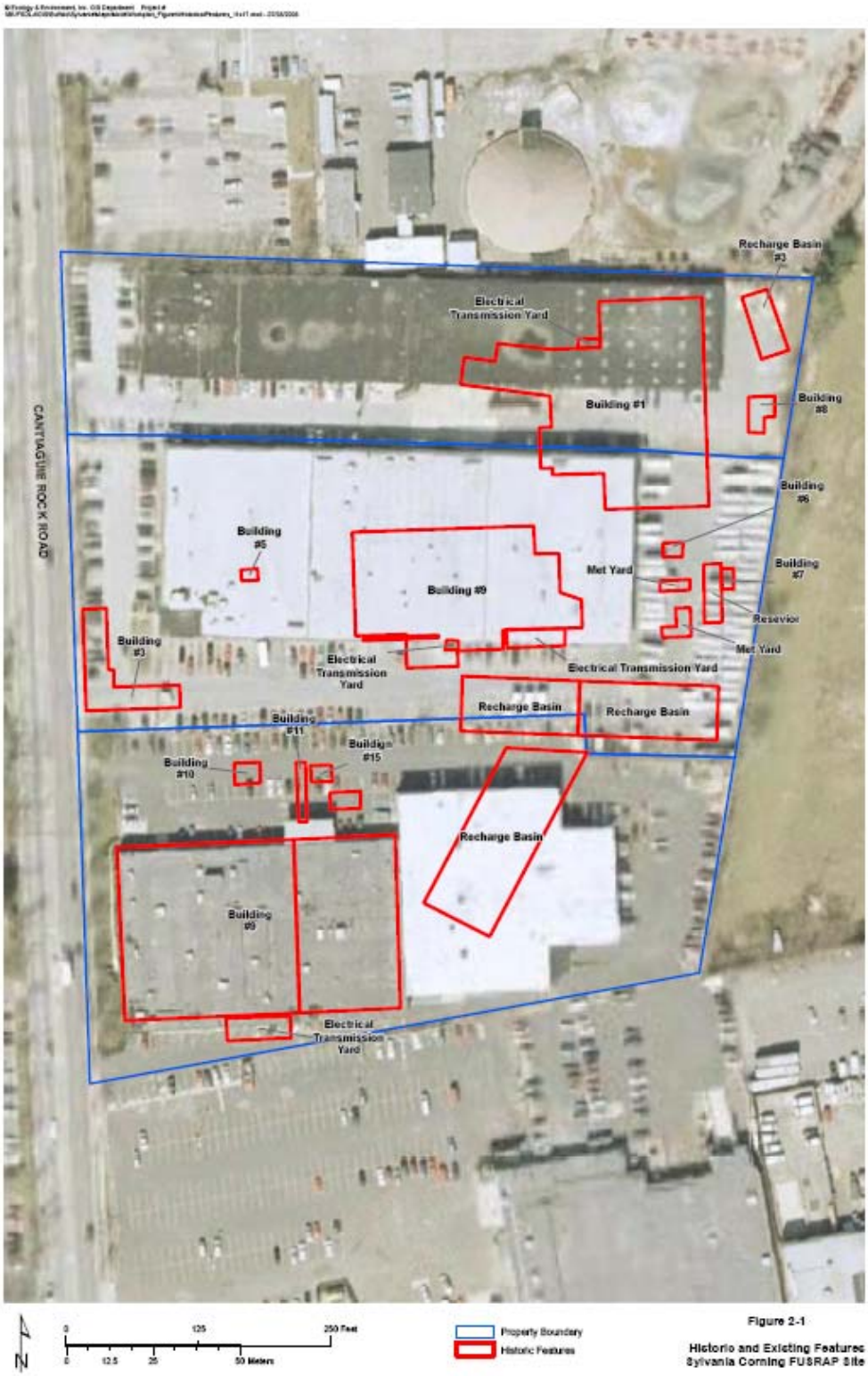

Figure 2-1

Historic and Existing Features
Sylvania Corning FUSRAP Site

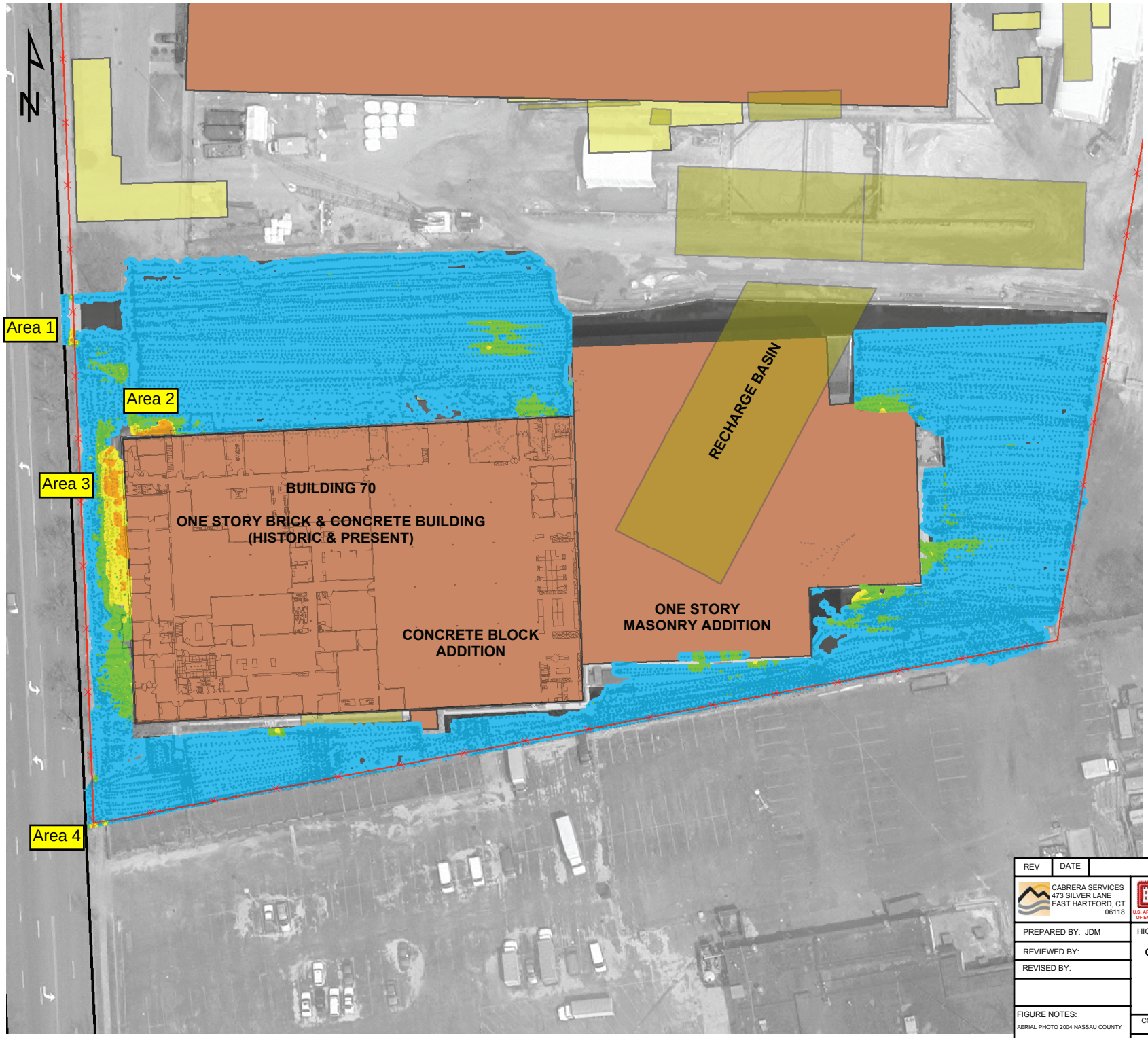

LEGEND

- Existing Buildings
- Historic Buildings
- Historic Features

Z Score 1m Radius Interpolation

- < 1
- 1 - 1.999
- 2 - 2.999
- > 3

REV	DATE	DESCRIPTION	BY

CABRERA SERVICES
473 SILVER LANE
EAST HARTFORD, CT
06118

U.S. ARMY ENGINEER DISTRICT, BALTIMORE
CORPS OF ENGINEERS
KANSAS CITY, KANSAS

PREPARED BY: JDM

REVIEWED BY:

REVISED BY:

HICKSVILLE NEW YORK

GAMMA WALK OVER SURVEY OF BUILDING 70
1m RADIUS Z SCORE INTERPOLATION

SYLVANIA - CORNING FUSRAP SITE

FIGURE NOTES:
AERIAL PHOTO 2004 NASSAU COUNTY

CONTRACT #

DRAWING # 07-1005.00-XX

1

SCALE: 0 30 60 Feet

DATE: 10/03/2006

Radiation Contamination Surveys

Sylvania Corning FUSRAP Site – Phase I RI

Radiation Contamination Surveys

All Site Areas

This technical memorandum addresses the results of the radiation-contamination surveys performed during installation and retrieval of passive soil gas probes around the exterior of Buildings 70, 100, and 140, and active soil gas probes inside Building 70 at the Sylvania Corning FUSRAP site.

1.0 SURVEY METHODOLOGY

1.1 Overview

Radiation contamination surveys were performed September 11 through 15, 2006 and on September 25 and 26, 2006. Contamination surveys were performed on equipment and personnel to assess the potential for elevated radiological contaminants of potential concern, specifically, isotopes of thorium and uranium, during intrusive sampling activities. Surveys for fixed and removable contamination were performed during installation and retrieval of active and passive soil gas probes and during collection of samples at the Building 70 transformer area.

All surveys were performed in accordance with safety procedures as outlined in the September 2006 *Site Safety and Health Plan – Remedial Investigation Phase I for the Sylvania Corning FUSRAP Site*. Surveys included surface scans and static measurements for alpha and beta radiation, wipes for removable alpha and beta contamination, and collection of representative background measurements for all surveyed surfaces.

1.2 Equipment

Equipment used to perform contamination surveys included the following:

- Ludlum Model- 2360 and 2224-1 portable ratemeter/scaler with Ludlum Model 43-93 alpha/beta scintillation detectors.
- Ludlum Model 14C portable ratemeter with Ludlum Model 44-9 geiger-mueller (GM) detector.

\

1.3 Quality Control Measures

Quality control (QC) measurements for field instrumentation included initial response to a radioactive source and daily operability checks. All instruments were calibrated within the last twelve months by the instrument vendor, a certified calibration laboratory, using sources traceable to the National Institute of Standards and Technology (NIST). Calibration certificates for each instrument are provided in Attachment 1. Prior to commencing any surveys, ten initial readings were collected on each detector using technicium-99 (^{99}Tc) and thorium-230 (^{230}Th) sources to establish a control chart for each unit to determine daily operability. The bases for the daily operability of these instruments are ± 20% of the average for the initial ten measurements for the 44-9 probe and ±3-sigma of the average for the initial ten measurements for the 43-93. These data are included in Attachment 1.

All field instruments satisfactorily passed the daily QC checks, with one exception. During post-job review of the instrument QC data, it was observed that the Ludlum 2360/43-93 combination was found to be outside of ±3-sigma on 9/14/06. The field technician inadvertently applied a 'qualitative' ±20% criterion to the daily QC data for this instrument, which showed a passing result. However, when applying the more stringent ±2 and ±3 sigma criteria used for quantitative field instruments, the daily alpha source check failed. If the technician had known that the count failed, the count would have been repeated in accordance with CABRERA procedures. Further inspection of the data by the CABRERA project Health Physicist shows that this particular count was 13 counts per minute (cpm) above the +3-sigma control line, corresponding to a 3.2 sigma result. Since this value does not appear to represent a severe instrument deficiency or malfunction, it was determined that the survey data performed on 9/14/06 does not need to be disqualified.

1.4 Acceptable Levels of Surface Contamination

Table 1 provides acceptable surface contamination limits for various radionuclides as applied to surface contamination measurements. The most conservative values (transuranics) were used because the predominant radiological contaminants of potential concern are thorium and uranium. The alpha removable contamination limit is 20 disintegrations per minute per 100 square centimeters (dpm/100cm^2), while the maximum and average contamination limit is 300 and 100 dpm/100cm^2, respectively. The beta-gamma removable contamination limit is 1,000 dpm/100cm^2.

.

\

Table 1: Acceptable Levels of Surface Contamination

Radionuclide[a]	Acceptable Surface Contamination Levels (DPM/100 cm^2)		
	Removable[b, e]	Average[b, c]	Maximum[b, d]
Transuranics, ^{226}Ra, ^{227}Ra, ^{230}Th, ^{228}Th, ^{231}Pa, ^{221}Ac, ^{125}I, ^{129}I	20	100	300
Th-Natural, ^{232}Th, ^{90}Sr, ^{223}Ra, ^{224}Ra, ^{232}U, ^{126}I, ^{131}I, ^{133}I	200	1,000	3,000
U-Natural, ^{235}U, ^{238}U, and associated decay products	1,000 α	5,000 α	15,000 α
Beta-Gamma emitters (radionuclides with decay modes other than alpha emission or spontaneous fission) except ^{90}Sr and others noted above.	1,000 β γ	5,000 β γ	15,000 β γ

[a] Where surface contamination by both alpha- and beta-gamma emitting nuclides exists, the limits established for alpha- and beta-gamma emitting nuclides should apply independently.
[b] As used in this table, dpm (disintegrations per minute) means the rate of emission by radioactive material as determined by correcting the counts per minute observed by an appropriate detector for background, efficiency, and geometric factors associated with the instrumentation.
[c] Measurements of average contaminant should not be averaged over more than 1 square meter. For objects of less surface area, the average should be derived for each object.
[d] The maximum contamination level applies to an area not more than 100 cm^2.
[e] The amount of removable radioactive material per 100 cm^2 of surface area should be determined by wiping that area with dry filter or soft absorbent paper, applying moderate pressure, and assessing the amount of radioactive material on the wipe with an appropriate instrument of known efficiency. When removable contamination on objects of less surface area is determined, the pertinent levels should be reduced proportionately and the entire surface should be wiped.

2.0 RESULTS

The results of all contamination surveys are provided in Attachment 2. Individual data worksheets are provided for background measurements collected at the site, Building 70 soil gas support surveys, and exterior soil gas support surveys. A summary map of the Building 70 interior surveys is also provided.

Calculation of disintegrations per minute per 100 square centimeters (dpm/100cm^2) integrated a 300-cm survey area because all removable contamination surveys utilized large area, i.e., masselin, wipes instead of smaller, folder-type smears. Masselin surveys are advantageous for surveys of this kind because much larger areas can be surveyed for removable contamination, which increases the probability of detection.

The only data flags that occurred during the surveys were results of the alpha scans on wipes of the boring equipment at exterior soil gas locations 45 (84.1 dpm/100cm^2) and 81 (56

\

dpm/100cm^2). However, it is unlikely that these events are true positives for removable alpha contamination, based on the supporting evidence. First, the flagged values are near or below the calculated alpha minimum detectable concentrations (MDC) for the model 43-93 detector. The lowest MDC achievable for the 43-93 is 27 dpm/100cm^2, given zero counts per minute background (see Attachment 1). MDC levels between 27 and 102 dpm/100cm^2 were calculated for the range of alpha background levels measured during the morning QC activities. Furthermore, both of these locations were shallow soil borings (6 inches) west and south of Building 70 and the beta results at these locations were both at background. It is more likely that the elevated alpha counts at these locations were due to natural background fluctuations.

\

Attachment 1

INSTRUMENT QC INFORMATION AND CALIBRATION CERTIFICATES

CABRERA ALPHA-BETA COUNTING INSTRUMENT (Rev 5)

Counting Instrument:			L 2360		Detector:	43-93		Calibration Date:		6/25/2006								
Serial #:			202398		Serial #:	PR211706		12 month calibration:		OK								
Detector Active Area or Area Covered by Smear (cm^2):						100		NRC 6 Mo Cal. Due Date?		OK								
	Efficiency (fraction)	Source Nuclide	Source Number	Original Source Activity (DPM)	Source Creation Date	$T_{1/2}$ (yr)	Source Decayed Activity	Required MDA ($DPM/100cm^2$)	Control Chart & Daily Bkg Count Time	Control Chart & Daily Source-Sample Count Time	Control Chart bkg Average α/β cpm	Control Chart bkg 1 sigma, cpm	Control Chart Source-bkg Average α/β cpm	Control Chart source 1 sigma, cpm				
Alpha	0.1079	Th-230	1905-04	41,200	3/30/2004	7.54E+04	41,199	100	1	1	1.60	1.71	5438.2	62.38				
Beta	0.1203	Tc-99	1904-04	45,200	3/30/2004	2.13E+05	45,200	1000	1	1	93.10	9.02	4444.0	114.18				

Date	Daily Bkg Counts		Daily Check Source Counts		Daily Bkg Rate (cpm)		Net Daily Source Rate (cpm)		Bkg QC Pass/Fail		Source QC Pass/Fail				α MDA OK?	β MDA OK?	H.P. Technician	Technician Initials
	Alpha	Beta	Alpha	Beta	Alpha	Beta	Alpha	Beta	Alpha	Beta	Alpha	Beta	MDA α (dpm)	MDA β (dpm)				
9/11/2006	1	87	5495	4493	1.0	87.0	5494.0	4406.0	PASS	PASS	PASS	PASS	70.95	386	Yes	Yes	JJW	JJW
9/12/2006	0	90	5341	4576	0.0	90.0	5341.0	4486.0	PASS	PASS	PASS	PASS	27.81	392	Yes	Yes	JJW	JJW
9/13/2006	3	87	5559	4871	3.0	87.0	5556.0	4784.0	PASS	PASS	PASS	*QUESTION*	102.52	386	No	Yes	JJW	JJW
9/14/2006	0	87	5640	4749	0.0	87.0	5640.0	4662.0	PASS	PASS	**FAIL**	PASS	27.81	386	Yes	Yes	DEA	DEA
9/15/2006	0	96	5358	4748	0.0	96.0	5358.0	4652.0	PASS	PASS	PASS	PASS	27.81	404	Yes	Yes	DEA	DEA

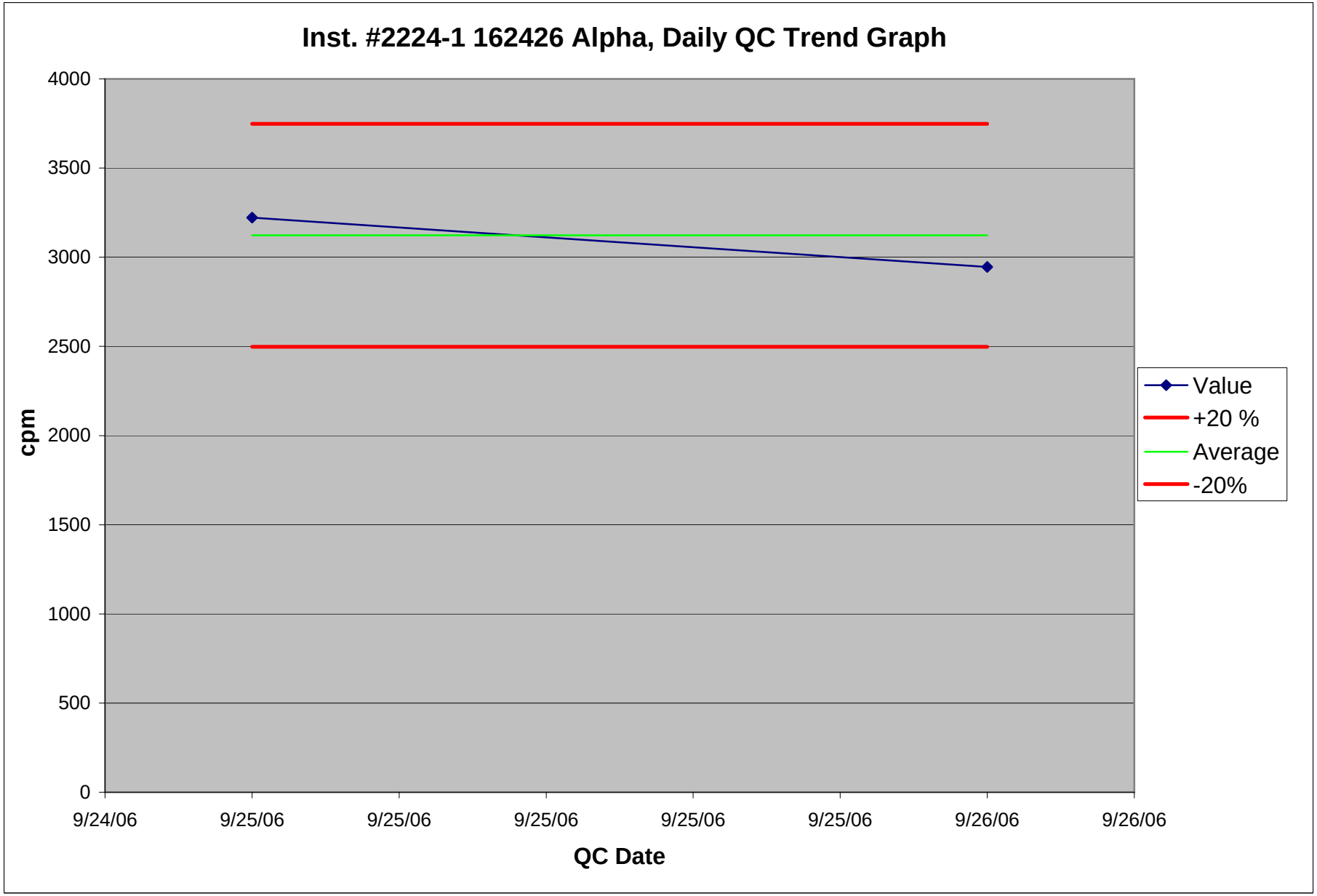
Inst. #2224-1 162426 Alpha, Daily QC Trend Graph
4000
3500
3000
2500
2000
1500
1000
500
0
cpm
9/24/06
9/25/06
9/25/06
9/25/06
9/25/06
9/25/06
9/26/06
9/26/06
QC Date
Value
+20 %
Average
-20%

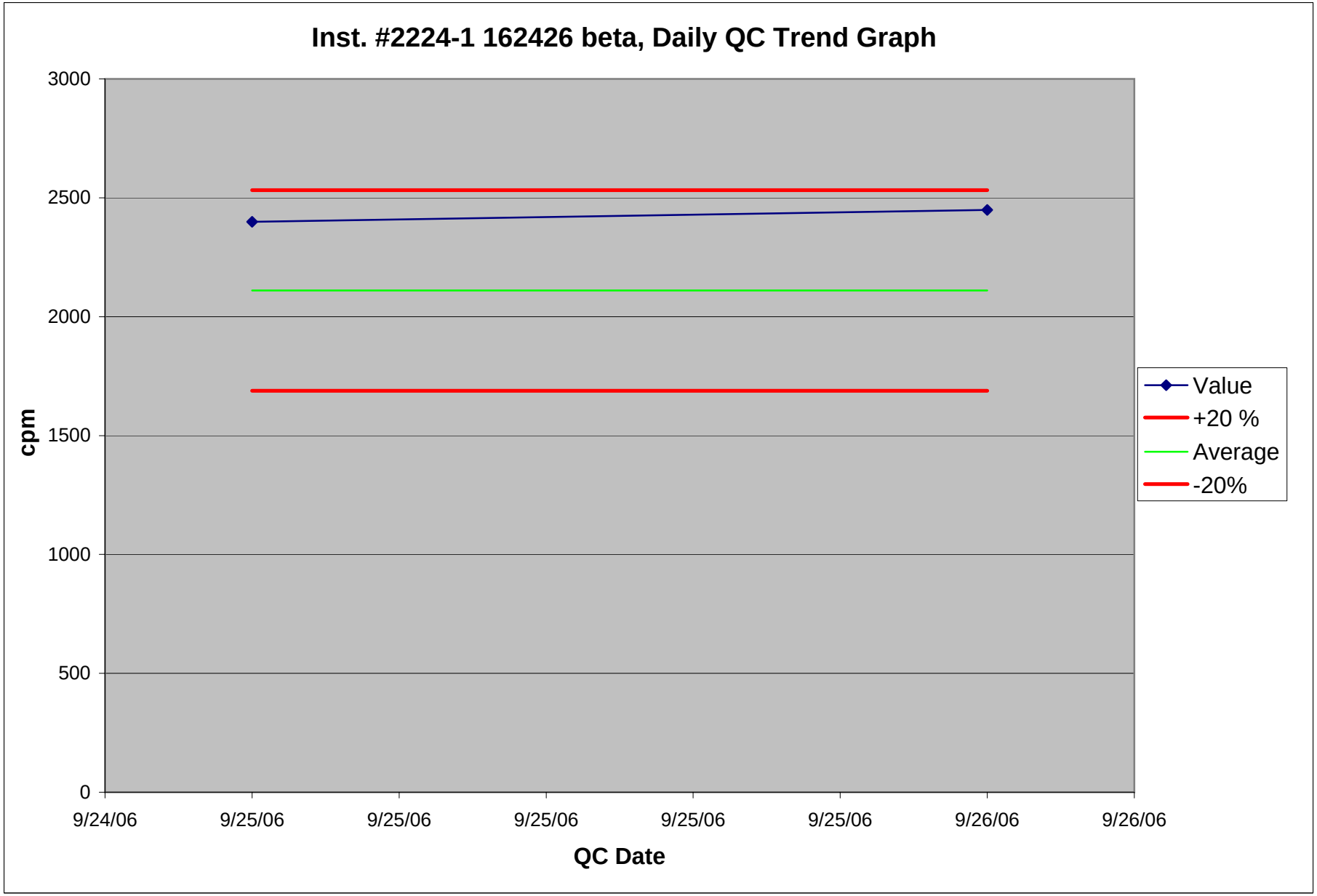
Inst. #2224-1 162426 beta, Daily QC Trend Graph
3000
2500
2000
1500
1000
500
0
cpm
9/24/06
9/25/06
9/25/06
9/25/06
9/25/06
9/25/06
9/26/06
9/26/06
QC Date
Value
+20 %
Average
-20%

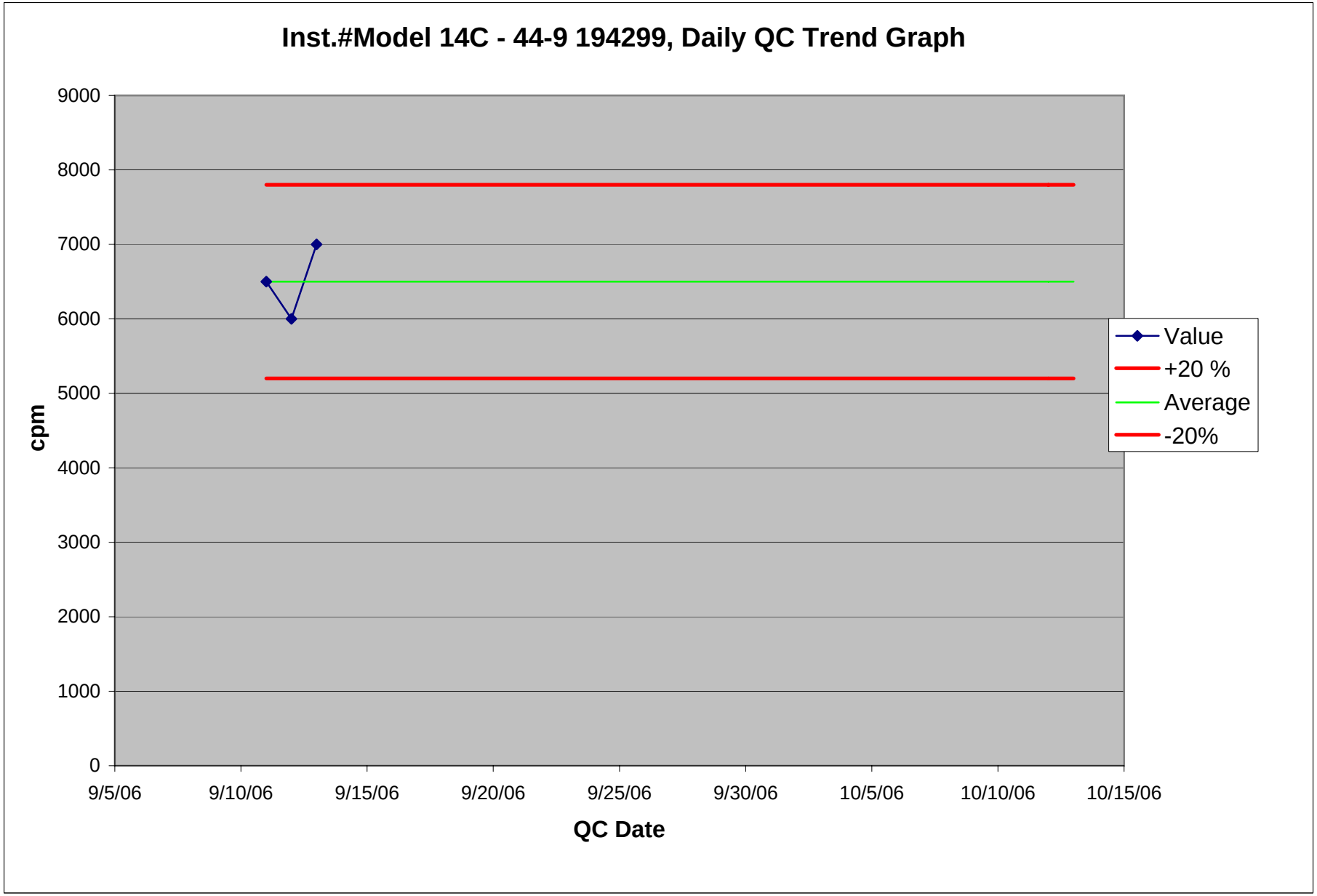
Inst.#Model 14C - 44-9 194299, Daily QC Trend Graph
9000
8000
7000
6000
5000
4000
3000
2000
1000
0
cpm
9/5/06
9/10/06
9/15/06
9/20/06
9/25/06
9/30/06
10/5/06
10/10/06
10/15/06
QC Date
Value
+20 %
Average
-20%

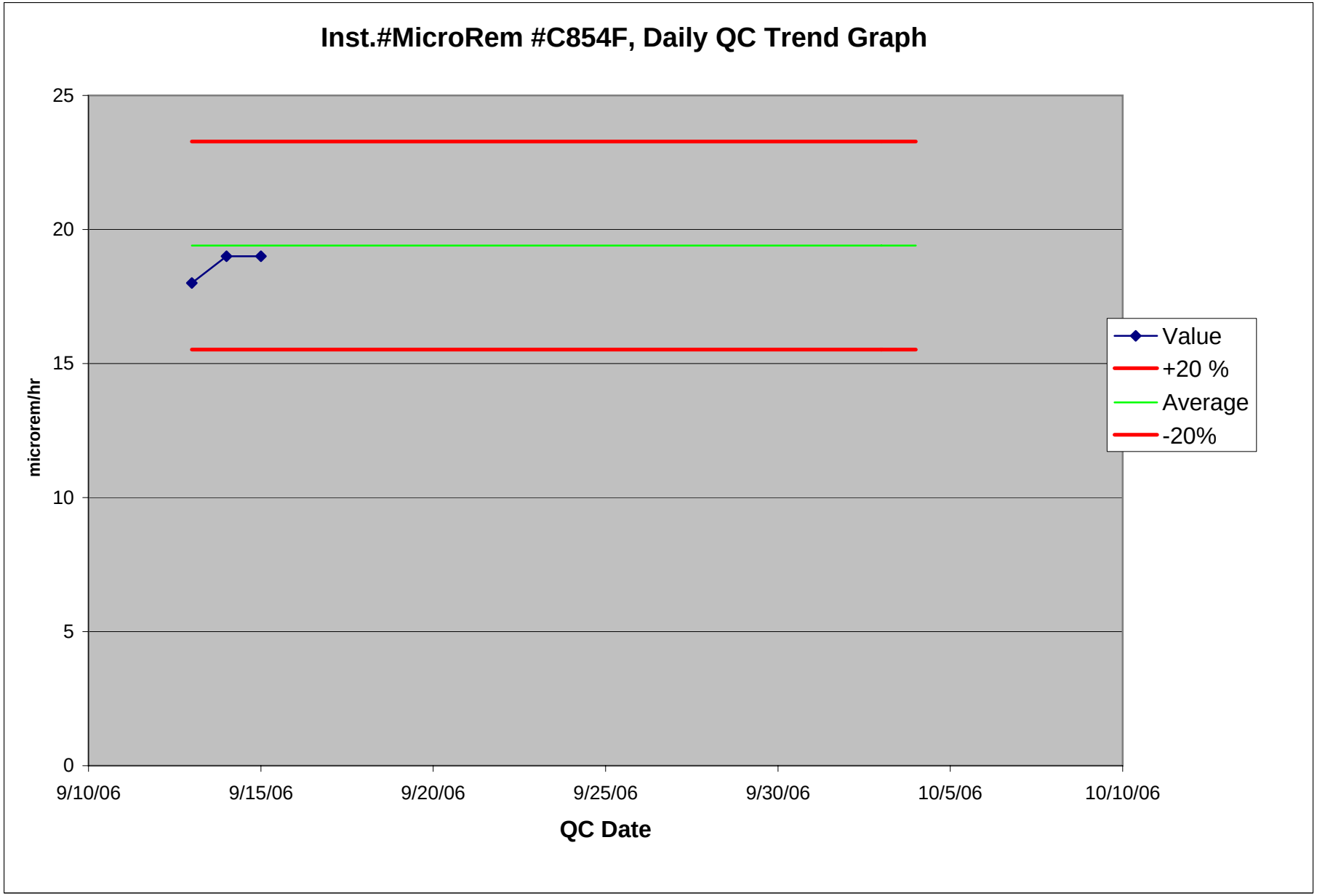
Inst.#MicroRem #C854F, Daily QC Trend Graph
25
20
15
10
5
0
microrem/hr
9/10/06
9/15/06
9/20/06
9/25/06
9/30/06
10/5/06
10/10/06
QC Date
Value
+20 %
Average
-20%

Calibration Technology

A Division of RSCS, Inc.

Calibration Certificate
ID Number: C854F5134-0

Customer: Hank Siegrist
Cabrera Services, Inc.
473 Silver Lane
East Hartford, CT 06118-

Instrument
Bicron Model MicroRem

Serial Number
C854F

Precision Check				
Test 1	Test 2	Test 3	Mean	Results
4.00 mrem/hr	**4.00 mrem/hr**	**4.00 mrem/hr**	**4.00 mrem/hr**	**Satisfactory**

Accuracy Check			
Range	Target Value	As Found	As Left
X1000	160 mrem/hr	160 mrem/hr	160 mrem/hr
X1000	40 mrem/hr	40 mrem/hr	40 mrem/hr
X100	16 mrem/hr	13.5 mrem/hr	16 mrem/hr
X100	4 mrem/hr	3.5 mrem/hr	4 mrem/hr
X10	1.6 mrem/hr	1.6 mrem/hr	1.6 mrem/hr
X10	0.4 mrem/hr	0.4 mrem/hr	0.4 mrem/hr
X1	160 µrem/hr	160 µrem/hr	160 µrem/hr
X1	40 µrem/hr	40 µrem/hr #	40 µrem/hr #
X0.1	16 µrem/hr	17.5 µrem/hr #	16 µrem/hr #
X0.1	4 µrem/hr	5 µrem/hr # *	4 µrem/hr #

Readings with * indicate ranges where As-Found readings are >20% of Target value. Readings with ** indicate As-left readings are >10% of Target value
Readings with # indicate ranges where pulser was used.

MTE Instrument Type	Model	CalDueDate
Pulser	Ludlum 500 SN: 134720	08/16/2006

Outer Physical Check: *Pass*
Internal Check: *Pass*
Geotropism Check: *Pass*
Mechanical Zero: *Pass*
Tap Test: *Pass*

Calibrated by: QA Review:

Calibration Date: 05/25/2006
Expires: 05/25/2007

Atmospheric Conditions - Temperature: 72°F Humidity: 42% Barometric Pressure: 29.63"hg
This calibration was performed by RSCS Inc. using a NIST Traceable radiation source, in conformance to the following standards: ANSI N323A (1997). RSCS New Hampshire Radioactive Material License Number: 381R. RSCS calibration services are performed in accordance with the RSCS Radiation Protection Program Manual and Standard Operating Procedure 2.4. This calibration certificate shall not be reproduced except in full without the express written consent of RSCS, Inc

Radiation Safety and Control Services, Inc.
91 Portsmouth Ave. Stratham, NH 03885
1-800-525-8339 (603) 778-2871 Fax (603) 778-6879 www.radsafety.com

Designer and Manufacturer
of
Scientific and Industrial
Instruments

LUDLUM MEASUREMENTS, INC.
POST OFFICE BOX 810 PH. 325-235-5494
501 OAK STREET FAX NO. 325-235-4672
SWEETWATER, TEXAS 79556, U.S.A.

CONVERSION CHART

Customer CABRERA SERVICES Date 23-Nov-05 Order #. 246337/297322

Model 14C Serial No. 194299 Detector Model 44-9 Serial No. PR 201558

Source Cs-137 194.6 mCi Cs-137 20 mCi High Voltage 900 V

Input Sensitivity 34 mV

Reference Point	"As Found" Readings (CPM): Meter Reading	Range/Scale	After Adjustment Readings (CPM): Meter Reading	Range/Scale
150 mR/hr	NA	NA	NA	NA
50 mR/hr	1.55 K	X100	1.55 K	X100
15 mR/hr	0.55 K	X100	0.55 K	X100
5 mR/hr	1.65 K	X10	1.65 K	X10
1.5 mR/hr	0.5 K	X10	0.5 K	X10
1.0 mR/hr	0.35 K	X10	0.35 K	X10

Signature: Scott Strong Date 23-NOV-05

FORM C17-1A 04/09/2003

Designer and Manufacturer of Scientific and Industrial Instruments

CERTIFICATE OF CALIBRATION

LUDLUM MEASUREMENTS, INC.
POST OFFICE BOX 810 PH. 325-235-5494
501 OAK STREET FAX NO. 325-235-4672
SWEETWATER, TEXAS 79556, U.S.A.

CUSTOMER CABRERA SERVICES ORDER NO. 257191/303228

Mfr Ludlum Measurements, Inc. Model 2360 Serial No. 202398

Mfg. Ludlum Measurements, Inc. Model 43-93 Serial No. PR 211706

Cal. Date 25-Jun-06 Cal Due Date 25-Jun-07 Cal. Interval 1 Year Meterface 202-855

Check mark ☑ applies to applicable instr. and/or detector IAW mfg. spec. T. 76 °F RH 42 % Alt 700.8 mm Hg

☐ New Instrument Instrument Received ☑ Within Toler. +-10% ☐ 10-20% ☐ Out of Tol. ☐ Requiring Repair ☐ Other-See comments

☑ Mechanical ck. ☑ Meter Zeroed ☐ Background Subtract ☐ Input Sens. Linearity
☐ F/S Resp. ck ☑ Reset ck. ☑ Window Operation ☑ Geotropism
☑ Audio ck. ☐ Alarm Setting ck. ☑ Batt. ck. (Min. Volt) 2.2 VDC
☑ Calibrated in accordance with LMI SOP 14.8 rev 12/05/89. ☐ Calibrated in accordance with LMI SOP 14.9 rev 02/07/97.

Instrument Volt Set 725 V

☑ HV Readout (2 points) Ref./Inst. 500 / 503 V Ref./Inst. 1500 / 1510 V

Firmware Version: 39010n25
Alpha Threshold: 120 mV
Beta Threshold: 3.5 mV
Beta Window: 30 mV
Overload SET TO SIMULATE LIGHT LEAK
Instrument calibrated with a 5' cable.
High voltage set with detector CONNECTED

(EEPROM Settings)
User Time: 1.0
Alpha Alarm: 50000
Beta Alarm: 50000
A/B Alarm: 50000
Model 2360 Date: 6/25/~~07~~ 06
Calibration Date Due: 6/25/07

COMMENTS:

Efficiency Formula:
Source Count - Bkgrd=? /source size (dpm)=? x100 = %
4 pi efficiencies for Th230, Tc99, Sr90Y90, and Ni63 are as follows:
Th230≈20%,Tc99≈16%,Sr90Y90≈25%,Ni63≈0.06%

* SEE PLATEAU SHEETS FOR ALL *

Gam alibration: GM detectors positioned perpendicular to source except for M 44-9 in which the front of probe faces source.

RANGE/MULTIPLIER	REFERENCE CAL. POINT	INSTRUMENT REC'D "AS FOUND READING"	INSTRUMENT METER READING*
x1000	400kcpm	400	400
x1000	100kcpm	100	100
x100	40kcpm	400	400
x100	10kcpm	100	100
x10	4kcpm	400	400
x10	1kcpm	100	100
x1	400kcpm	400	400
x1	100kcpm	100	100

*Uncertainty within ± 10% C.F. within ± 20% ALL Range(s) Calibrated Electronically

	REFERENCE CAL. POINT	INSTRUMENT RECEIVED	INSTRUMENT METER READING*		REFERENCE CAL. POINT	INSTRUMENT RECEIVED	INSTRUMENT METER READING*
Digital Readout	400kcpm	39993 (0)	39993 (0)	Log Scale			
	40kcpm	3995	3995				
	4kcpm	400	400				
	400cpm	40	40				
	40cpm	4	4				

Ludlum Measurements, Inc. certifies that the above instrument has been calibrated by standards traceable to the National Institute of Standards and Technology, or to the calibration facilities of other International Standards Organization members, or have been derived from accepted values of natural physical constants or have been derived by the ratio type of calibration techniques. The calibration system conforms to the requirements of ANSI/NCSL Z540-1-1994 and ANSI N323-1978 State of Texas Calibration License No. LO-1963

Reference Instruments and/or Sources: ☐ S-394 ☐ 1122 ☐ 781

Cs-137 Gamma S/N ☐ 1162 ☐ G112 ☐ M565 ☐ 5105 ☐ T1008 ☐ T879 ☐ E552 ☐ E551 ☐ 720 ☐ 734 ☐ 1616 ☐ Neutron Am-241 Be S/N T-304

☑ Alpha S/N Th230/E121495 ☑ Beta S/N Tc99/NI-EV,Sr90Y90/4016,Ni63/4017 ☐ Other

☐ 500 S/N 189496 ☐ Oscilloscope S/N ☑ Multimeter S/N 83750186

Calibrated By: Michael Jones Date 25 June 06

Reviewed By: W Robis Date 26 June 06

This certificate shall not be reproduced except in full, without the written approval of Ludlum Measurements, Inc.
FORM C22S 06/02/2006

AC Inst. Only ☐ Passed Dielectric (Hi-Pot) and Continuity Test ☐ Failed:

Designer and Manufacturer
of
Scientific and Industrial
Instruments

LUDLUM MEASUREMENTS, INC.
POST OFFICE BOX 810 PH. 325-235-5494
501 OAK STREET FAX NO. 325-235-4672
SWEETWATER, TEXAS 79556, U.S.A.

Bench Test Data For Detector

Detector 43-93 Serial No. PR 211706 Order #. 257191/303228

Customer CABRERA SERVICES Alpha Input Sensitivity 120 mV

Counter 2360 Serial No. 202398 Beta Input Sensitivity 3.5 mV

Count Time 1Minute Beta Window 30 mV

Other Distance Source to Detector Surface

High Voltage	Background		Isotope Th230 Size ≈19800 dpm		Isotope Size		Isotope Size	
	Alpha	Beta	Alpha	Beta	Alpha	Beta	Alpha	Beta
700	1	124	3918	505				
725	1	213	4047	568				
750	0	554	4132	1153				

☐ Gas Proportional detector count rate decreased ≤ 10% after 15 hour static test using 39" cable.

☐ Gas proportional detector count rate decreased ≤ 10% after 5 hour static test using 39" cable and alpha/beta counter.

Signature Michael Torres Date 25 June 06

FORM C4B 04/09/2003

Designer and Manufacturer of Scientific and Industrial Instruments

CERTIFICATE OF CALIBRATION

LUDLUM MEASUREMENTS, INC.
POST OFFICE BOX 810 PH. 325-235-5494
501 OAK STREET FAX NO. 325-235-4672
SWEETWATER, TEXAS 79556, U.S.A.

CUSTOMER CABRERA SERVICES ORDER NO. 261531/305134

Mfg. Ludlum Measurements, Inc. Model 2224-1 Serial No. 162426

Mfg. Ludlum Measurements, Inc. Model 43-93 Serial No. PR 193921

Cal. Date 23-Aug-06 Cal Due Date 23-Aug-07 Cal. Interval 1 Year Meterface 202-848

Check mark ☑ applies to applicable instr. and/or detector IAW mfg. spec. T. 73 °F RH 46 % Alt 701.8 mm Hg

☐ New Instrument Instrument Received ☐ Within Toler. +-10% ☐ 10-20% ☐ Out of Tol. ☑ Requiring Repair ☐ Other-See comments

☑ Mechanical ck. ☑ Meter Zeroed ☐ Background Subtract ☐ Input Sens. Linearity
☐ F/S Resp. ck ☑ Reset ck. ☑ Window Operation ☑ Geotropism
☑ Audio ck. ☐ Alarm Setting ck. ☑ Batt. ck. (Min. Volt) 2.2 VDC
☑ Calibrated in accordance with LMI SOP 14.8 rev 12/05/89. ☐ Calibrated in accordance with LMI SOP 14.9 rev 02/07/97.

Instrument Volt Set 825 V Input Sens. comments mV Det. Oper. 825 V at comments mV Threshold Dial Ratio = mV

☑ HV Readout (2 points) Ref./Inst. 500 / 501 V Ref./Inst. 1000 / 999 V

COMMENTS:

Alpha Sens.:120mv
Beta Sens.:3.5mv
Beta Window:30mv
H.V. set with detector disconnected.
Firmware;390096
instrument calibrated with 5' cable.
EFF. for: Th230=22%, Tc99=21%, Ni63=0.13%, Sr90Y90=36%
4 pi efficiencies (refer to plateau sheet for details).
Overload set to simulate light leak.

Gamma Calibration: GM detectors positioned perpendicular to source except for M 44-9 in which the front of probe faces source.

RANGE/MULTIPLIER	REFERENCE CAL. POINT	INSTRUMENT REC'D "AS FOUND READING"	INSTRUMENT METER READING*
x1000	800k cpm	n/a	800
x1000	200k cpm		200
x100	80k cpm		800
x100	20k cpm		200
x10	8k cpm		800
x10	2k cpm		200
x1	800 cpm		800
x1	200 cpm		200

*Uncertainty within ± 10% C.F. within ± 20% ALL **Range(s) Calibrated Electronically**

	REFERENCE CAL. POINT	INSTRUMENT RECEIVED	INSTRUMENT METER READING*		REFERENCE CAL. POINT	INSTRUMENT RECEIVED	INSTRUMENT METER READING*
Digital Readout	800kcpm	n/a	798123	Log Scale			
	80kcpm		79800				
	8kcpm		7980				
	800cpm		798				
	80cpm		80				

Ludlum Measurements, Inc. certifies that the above instrument has been calibrated by standards traceable to the National Institute of Standards and Technology, or to the calibration facilities of other International Standards Organization members, or have been derived from accepted values of natural physical constants or have been derived by the ratio type of calibration techniques.
The calibration system conforms to the requirements of ANSI/NCSL Z540-1-1994 and ANSI N323-1978 State of Texas Calibration License No. LO-1963

Reference Instruments and/or Sources: ☐ S-394 ☐ 1122 ☐ 781
Cs-137 Gamma S/N ☐ 1162 ☐ G112 ☐ M565 ☐ 5105 ☐ T1008 ☐ T879 ☐ E552 ☐ E551 ☐ 720 ☐ 734 ☐ 1616 ☐ Neutron Am-241 Be S/N T-304

☑ Alpha S/N Th230:5020-04 ☑ Beta S/N Tc99:5279-04/Sr90Y90:5281- Ni63: 99NI220 ☐ Other

☑ m 500 S/N 949940 ☐ Oscilloscope S/N ☑ Multimeter S/N 78401031

Calibrated By: [signature] Date 23-Aug-06

Reviewed By: [signature] Date 23 Aug 06

This certificate shall not be reproduced except in full, without the written approval of Ludlum Measurements, Inc.
FORM C22A 06/02/2006

AC Inst. Only ☐ Passed Dielectric (Hi-Pot) and Continuity Test ☐ Failed:

Designer and Manufacturer
of
Scientific and Industrial
Instruments

LUDLUM MEASUREMENTS, INC.
POST OFFICE BOX 810 PH. 325-235-5494
501 OAK STREET FAX NO. 325-235-4672
SWEETWATER, TEXAS 79556, U.S.A.

Bench Test Data For Detector

Detector 43-93 Serial No. PR 193921 Order #. 261531/305134

Customer CABRERA SERVICES Alpha Input Sensitivity 120 mV

Counter 2224-1 Serial No. 162426 Beta Input Sensitivity 3.5 mV

Count Time 1Minute Beta Window 30 mV

Other Distance Source to Detector Surface

High Voltage	Background		Isotope Tc99 Size 28,800 dpm		Isotope Sr90Y90 Size 113,696 dpm		Isotope Ni63 Size 290,376 dpm	
	Alpha	Beta	Alpha	Beta	Alpha	Beta	Alpha	Beta
750	1	90	5	2665	8	21997	1	70
775	2	114	8	3811	4	29885	5	114
800	2	152	13	5022	1	36220	4	218
825	1	199	8	6109	1	41313	2	584
850	2	267	9	7169	2	44628	2	1309
875	1	326	5	8098	9	45677	1	2638

☐ Gas Proportional detector count rate decreased ≤ 10% after 15 hour static test using 39" cable.

☐ Gas proportional detector count rate decreased ≤ 10% after 5 hour static test using 39" cable and alpha/beta counter.

Signature [signature] Date 23-Aug.06

FORM C4B 04/09/2003

• *Serving The Nuclear Industry Since 1962* •

Designer and Manufacturer
of
Scientific and Industrial
Instruments

LUDLUM MEASUREMENTS, INC.
POST OFFICE BOX 810 PH. 325-235-5494
501 OAK STREET FAX NO. 325-235-4672
SWEETWATER, TEXAS 79556, U.S.A.

Bench Test Data For Detector

Detector 43-93 Serial No. PR 193921 Order #. 261531/305134

Customer CABRERA SERVICES Alpha Input Sensitivity 120 mV

Counter 2224-1 Serial No. 162426 Beta Input Sensitivity 3.5 mV

Count Time 1Minute Beta Window 30 mV

Other Distance Source to Detector Surface

High Voltage	Background Alpha	Background Beta	Isotope Th230 Size 4395 dpm Alpha	Beta	Isotope Size Alpha	Beta	Isotope Size Alpha	Beta
750	1	90	782	165				
775	2	114	843	206				
800	2	152	865	234				
825	1	199	944	328				
850	2	267	955	473				
875	1	326	947	501				

☐ Gas Proportional detector count rate decreased ≤ 10% after 15 hour static test using 39" cable.

☐ Gas proportional detector count rate decreased ≤ 10% after 5 hour static test using 39" cable and alpha/beta counter.

Signature [illegible] Date 23-Aug.06

FORM C4B 04/09/2003

• *Serving The Nuclear Industry Since 1962* •

Attachment 2

SURVEY DATA WORKSHEETS
SURVEY DATA MAPS

Instrument: Ludlum Model 2360
Probe: Ludlum Model 43-93
Probe Active Area: 100 cm2
Units: cpm

seq. #	Sample ID# and Description	Date	Background Total Counts* α	β
Building 70 Surface Backgrounds				
1	Concrete - Old Warehouse	9/11/2006	1	11
2		9/11/2006	6	124
3		9/11/2006	0	125
1	Concrete - New Warehouse	9/11/2006	0	90
2		9/11/2006	0	81
3		9/11/2006	0	96
1	Bldg 12 x 12 Floor Tiles	9/11/2006	3	155
2		9/11/2006	3	163
3		9/11/2006	2	133
1	Glazed Gray Tile - Lobby	9/11/2006	20	294
2		9/11/2006	10	265
3		9/11/2006	20	286
4		9/11/2006	15	334
5		9/11/2006	15	291
1	Brown Asbestos tile(12x12)	9/11/2006	2	116
2		9/11/2006	1	101
3		9/11/2006	2	110
4		9/11/2006	1	114
5		9/11/2006	2	119
Cantiague Park Soil Backgrounds				
1	Soil Cantiague Park set# 1	9/11/2006	1	175
2		9/11/2006	1	173
3		9/11/2006	2	178
4		9/11/2006	1	181
5		9/11/2006	5	187
1	Soil Cantiague Park set# 2	9/11/2006	3	158
2		9/11/2006	8	225
3		9/11/2006	3	190
4		9/11/2006	3	187
5		9/11/2006	2	170

Instrument:	Ludlum Model 2360
Probe:	Ludlum Model 43-93

Survey Area (cm^2)	α eff	β eff	Static Count Time (min)	Daily Background Count Time (min)	dpm/100 cm^2 α Flag	dpm/100 cm^2 β Flag
300	0.2200	0.2100	1.0	1.0	20	1000

* Morning Daily Count

seq. #	Sample ID# and Description	Date	Background Total Counts* α	Background Total Counts* β	Sample Total Counts α	Sample Total Counts β	Background (cpm) α	Background (cpm) β	Sample Counts (cpm) α	Sample Counts (cpm) β	Sample (dpm/100 cm^2) α	Sample (dpm/100 cm^2) β	> α flag	> β flag	Tech. Initial
Active Soil Gas Probe Install Surveys															
1	B70SSA-01	9/12/2006	3	150	0	NR	2.7	150.3	0.00	N/A	-4.0	N/A			DA
2	B70SSA-02	9/12/2006	3	150	3	NR	2.7	150.3	3.00	N/A	0.5	N/A			DA
3	B70SSA-03	9/12/2006	3	150	0	NR	2.7	150.3	0.00	N/A	-4.0	N/A			DA
4	B70SSA-04	9/12/2006	0	89	0	NR	0.0	89.0	0.00	N/A	0.0	N/A			DA
5	B70SSA-05	9/12/2006	2	140	6	154	2.0	140.0	6.00	154	6.1	22			DA
6	B70SSA-06	9/12/2006	2	140	2	172	2.0	140.0	2.00	172	0.0	51			DA
7	B70SSA-07	9/12/2006	2	110	0	121	2.0	110.0	0.00	121	-3.0	17			DA
8	B70SSA-08	9/12/2006	2	136	3	155	2.0	136.0	3.00	155	1.5	30			DA
9	B70SSA-09	9/12/2006	2	139	1	146	2.0	139.0	1.00	146	-1.5	11			DA
10	B70SSA-10	9/12/2006	1	124	5	155	1.0	124.0	5.00	155	6.1	49			DA
11	B70SSA-11	9/12/2006	4	139	0	140	4.0	139.0	0.00	140	-6.1	2			DA
12	B70SSA-12	9/12/2006	1	114	2	120	1.0	114.0	2.00	120	1.5	10			DA

Instrument:	Ludlum Model 3
Probe:	Ludlum Model 44-9

Detector Active Area (cm^2)	α eff	β eff
15	N/A	0.1000

Count Time (min)	
	Rate

Daily Background Count Time (min)	
	Rate

dpm/100 cm^2	
α Flag	β Flag
N/A	1000

seq. #	Sample ID# and Description	Date	Background Total Counts*		Sample Total Counts		Background (cpm)		Sample Counts (cpm)		Sample (dpm/100 cm^2)		> α flag	> β flag	Tech. Initial
			α	β	α	β	α	β	α	β	α	β			
Active Soil Gas Probe Removal Surveys															
1	B70SSA-01	9/13/2006	NR	40	NR	40	N/A	40.0	N/A	40	N/A	0.0			JC
2	B70SSA-02	9/13/2006	NR	40	NR	40	N/A	40.0	N/A	40	N/A	0.0			JC
3	B70SSA-03	9/13/2006	NR	40	NR	40	N/A	40.0	N/A	40	N/A	0.0			JC
4	B70SSA-04	9/13/2006	NR	40	NR	40	N/A	40.0	N/A	40	N/A	0.0			JC
5	B70SSA-05	9/13/2006	NR	40	NR	40	N/A	40.0	N/A	40	N/A	0.0			JC
6	B70SSA-06	9/13/2006	NR	40	NR	40	N/A	40.0	N/A	40	N/A	0.0			JC
7	B70SSA-07	9/13/2006	NR	40	NR	40	N/A	40.0	N/A	40	N/A	0.0			JC
8	B70SSA-08	9/13/2006	NR	40	NR	40	N/A	40.0	N/A	40	N/A	0.0			JC
9	B70SSA-09	9/13/2006	NR	40	NR	40	N/A	40.0	N/A	40	N/A	0.0			JC
10	B70SSA-10	9/13/2006	NR	40	NR	40	N/A	40.0	N/A	40	N/A	0.0			JC
11	B70SSA-11	9/13/2006	NR	40	NR	40	N/A	40.0	N/A	40	N/A	0.0			JC
12	B70SSA-12	9/14/2006	NR	40	NR	40	N/A	40.0	N/A	40	N/A	0.0			JC

Exterior Passive Soil Gas Probe Installation Surveys

Detector No.	Probe	Survey Active Area (cm^2)	Alpha Efficiency	Beta Efficiency	Survey Type	Static Count Time (min)	Daily Background Count Time (min)	dpm/100 cm^2 Alpha Flag	dpm/100 cm^2 Beta Flag
1	44-9	300	n/a	10%	Count Rate	N/A	N/A	N/A	1000
2	43-93	300	10.7%	12.0%	Static Count	1.0	1.0	20	1000

Survey Location	Detector Number	Date	Background Count *(local at SG location or in general area)*		Sample Count		Background (cpm)		Sample Counts (cpm)		Sample Count (dpm/100 cm2)		> a flag	> b flag	Notes	Tech. Initial
			α	β	α	β	α	β	α	β	α	β				
SSG-001	2	9/13/2006	2	140	1	138	2	140	1	138	-3.1	-6				DA
SSG-002	2	9/13/2006	2	134	0	141	2	134	0	141	-6.2	19				DA
SSG-003	2	9/13/2006	2	140	0	158	2	140	0	158	-6.2	50				DA
SSG-004	2	9/13/2006	2	140	1	148	2	140	1	148	-3.1	22				DA
SSG-005	2	9/12/2006	2	140	6	154	2	140	6	154	12.5	39				JW
SSG-006	2	9/12/2006	2	140	2	171	2	140	2	171	0.0	86				JW
SSG-007	2	9/12/2006	2	110	0	121	2	110	0	121	-6.2	31				JW
SSG-008	2	9/13/2006	2	136	3	155	2	136	3	155	3.1	53				DA
SSG-009	2	9/13/2006	2	107	1	130	2	107	1	130	-3.1	64				DA
SSG-010	2	9/12/2006	1	124	5	155	1	124	5	155	12.5	86				JW
SSG-011	2	9/12/2006	4	139	0	140	4	139	0	140	-12.5	3				JW
SSG-012	2	9/12/2006	1	114	2	120	1	114	2	120	3.1	17				JW
SSG-013	2	9/13/2006	0	122	3	154	0	122	3	154	9.3	89				DA
SSG-014	2	9/13/2006	0	98	2	148	0	98	2	148	6.2	139				DA
SSG-015	2	9/13/2006	0	132	1	100	0	132	1	100	3.1	-89				DA
SSG-016	2	9/13/2006	2	136	0	135	2	136	0	135	-6.2	-3				DA
SSG-017	2	9/13/2006	2	136	1	149	2	136	1	149	-3.1	36				DA
SSG-018	2	9/13/2006	4	162	2	132	4	162	2	132	-6.2	-83				DA
SSG-019	2	9/13/2006	3	121	1	131	3	121	1	131	-6.2	28				DA
SSG-020	2	9/13/2006	1	134	0	113	1	134	0	113	-3.1	-58				DA
SSG-021	2	9/13/2006	1	90	0	120	1	90	0	120	-3.1	83				DA
SSG-022	2	9/13/2006	2	226	0	126	2	226	0	126	-6.2	-278				DA
SSG-023	2	9/13/2006	0	86	2	154	0	86	2	154	6.2	189				DA
SSG-024	2	9/13/2006	1	103	1	112	1	103	1	112	0.0	25				DA
SSG-025	2	9/13/2006	0	115	1	116	0	115	1	116	3.1	3				DA
SSG-026	2	9/13/2006	0	103	1	113	0	103	1	113	3.1	28				DA
SSG-027	2	9/13/2006	0	119	6	100	0	119	6	100	18.7	-53				DA
SSG-028	2	9/13/2006	1	98	2	118	1	98	2	118	3.1	56				DA
SSG-029	2	9/13/2006	1	100	3	110	1	100	3	110	6.2	28				DA
SSG-030	2	9/13/2006	0	109	2	100	0	109	2	100	6.2	-25				DA
SSG-031	2	9/13/2006	0	90	1	86	0	90	1	86	3.1	-11				DA
SSG-032	2	9/13/2006	1	96	3	113	1	96	3	113	6.2	47				DA
SSG-033	2	9/13/2006	1	111	0	106	1	111	0	106	-3.1	-14				DA
SSG-034	2	9/13/2006	0	134	0	120	0	134	0	120	0.0	-39				DA
SSG-035	2	9/14/2006	1	160	1	120	1	160	1	120	0.0	-111				DA
SSG-036	1	9/14/2006	N/A	50	N/A	60	N/A	50	N/A	60	N/A	34	N/A		Beta-only survey using GM tube	DA
SSG-037	1	9/14/2006	N/A	50	N/A	50	N/A	50	N/A	50	N/A	0	N/A		Beta-only survey using GM tube	DA
SSG-038	1	9/14/2006	N/A	50	N/A	50	N/A	50	N/A	50	N/A	0	N/A		Beta-only survey using GM tube	DA
SSG-039	2	9/14/2006	1	120	0	139	1	120	0	139	-9.3	158				DA
SSG-040	2	9/14/2006	0	139	0	122	0	139	0	122	0.0	-142				DA
SSG-041	2	9/14/2006	1	153	1	160	1	153	1	160	0.0	58				DA
SSG-042	1	9/14/2006	N/A	60	N/A	70	N/A	60	N/A	70	N/A	34	N/A		Beta-only survey using GM tube	DA
SSG-043	1	9/14/2006	N/A	50	N/A	50	N/A	50	N/A	50	N/A	0	N/A		Beta-only survey using GM tube	DA
SSG-044	1	9/14/2006	N/A	50	N/A	70	N/A	50	N/A	70	N/A	68	N/A		Beta-only survey using GM tube	DA

Exterior Passive Soil Gas Probe Installation Surveys

Detector No.	Probe	Survey Active Area (cm^2)	Alpha Efficiency	Beta Efficiency	Survey Type	Static Count Time (min)	Daily Background Count Time (min)	dpm/100 cm^2 Alpha Flag	dpm/100 cm^2 Beta Flag
1	44-9	300	n/a	10%	Count Rate	N/A	N/A	N/A	1000
2	43-93	300	10.7%	12.0%	Static Count	1.0	1.0	20	1000

Survey Location	Detector Number	Date	Background Count *(local at SG location or in general area)*		Sample Count		Background (cpm)		Sample Counts (cpm)		Sample Count (dpm/100 cm2)		> a flag	> b flag	Notes	Tech. Initial
			α	β	α	β	α	β	α	β	α	β				
SSG-045	2	9/14/2006	0	139	9	162	0	139	9	162	84.1	192	FLAG			DA
SSG-046	2	9/14/2006	1	120	1	165	1	120	1	165	0.0	375				DA
SSG-047	1	9/14/2006	N/A	50	N/A	50	N/A	50	N/A	50	N/A	0	N/A		Beta-only survey using GM tube	DA
SSG-048	1	9/14/2006	N/A	50	N/A	50	N/A	50	N/A	50	N/A	0	N/A		Beta-only survey using GM tube	DA
SSG-049	1	9/14/2006	N/A	50	N/A	50	N/A	50	N/A	50	N/A	0	N/A		Beta-only survey using GM tube	DA
SSG-050	1	9/14/2006	N/A	50	N/A	50	N/A	50	N/A	50	N/A	0	N/A		Beta-only survey using GM tube	DA
SSG-051	1	9/14/2006	N/A	50	N/A	50	N/A	50	N/A	50	N/A	0	N/A		Beta-only survey using GM tube	DA
SSG-052	2	9/14/2006	1	153	1	156	1	153	1	156	0.0	25				DA
SSG-053	2	9/14/2006	1	160	1	120	1	160	1	120		-408			Beta-only survey using GM tube	DA
SSG-054	1	9/14/2006	N/A	45	N/A	45	N/A	45	N/A	45	N/A	0	N/A		Beta-only survey using GM tube	DA
SSG-055	1	9/14/2006	N/A	50	N/A	50	N/A	50	N/A	50	N/A	0	N/A		Beta-only survey using GM tube	DA
SSG-056	1	9/14/2006	N/A	50	N/A	50	N/A	50	N/A	50	N/A	0	N/A		Beta-only survey using GM tube	DA
SSG-057	1	9/14/2006	N/A	50	N/A	50	N/A	50	N/A	50	N/A	0	N/A		Beta-only survey using GM tube	DA
SSG-058	1	9/14/2006	N/A	50	N/A	50	N/A	50	N/A	50	N/A	0	N/A		Beta-only survey using GM tube	DA
SSG-059	1	9/14/2006	N/A	50	N/A	50	N/A	50	N/A	50	N/A	0	N/A		Beta-only survey using GM tube	DA
SSG-060	1	9/14/2006	N/A	50	N/A	50	N/A	50	N/A	50	N/A	0	N/A		Beta-only survey using GM tube	DA
SSG-061	1	9/14/2006	N/A	50	N/A	50	N/A	50	N/A	50	N/A	0	N/A		Beta-only survey using GM tube	DA
SSG-062	1	9/14/2006	N/A	60	N/A	70	N/A	60	N/A	70	N/A	34	N/A		Beta-only survey using GM tube	DA
SSG-063	1	9/14/2006	N/A	60	N/A	50	N/A	60	N/A	50	N/A	-34	N/A		Beta-only survey using GM tube	DA
SSG-064	1	9/14/2006	N/A	50	N/A	50	N/A	50	N/A	50	N/A	0	N/A		Beta-only survey using GM tube	DA
SSG-065	1	9/14/2006	N/A	60	N/A	70	N/A	60	N/A	70	N/A	34	N/A		Beta-only survey using GM tube	DA
SSG-066	1	9/14/2006	N/A	60	N/A	70	N/A	60	N/A	70	N/A	34	N/A		Beta-only survey using GM tube	DA
SSG-067	1	9/14/2006	N/A	50	N/A	75	N/A	50	N/A	75	N/A	85	N/A		Beta-only survey using GM tube	DA
SSG-068	1	9/14/2006	N/A	50	N/A	50	N/A	50	N/A	50	N/A	0	N/A		Beta-only survey using GM tube	DA
SSG-069	1	9/14/2006	N/A	50	N/A	50	N/A	50	N/A	50	N/A	0	N/A		Beta-only survey using GM tube	DA
SSG-070	1	9/14/2006	N/A	50	N/A	50	N/A	50	N/A	50	N/A	0	N/A		Beta-only survey using GM tube	DA
SSG-071	1	9/14/2006	N/A	50	N/A	50	N/A	50	N/A	50	N/A	0	N/A		Beta-only survey using GM tube	DA
SSG-072	2	9/15/2006	0	107	1	109	0	107	1	109	9.3	17				DA
SSG-073	2	9/15/2006	0	160	2	180	0	160	2	180	18.7	167				DA
SSG-074	2	9/15/2006	0	116	0	127	0	116	0	127	0.0	92				DA
SSG-075	1	9/14/2006	N/A	50	N/A	50	N/A	50	N/A	50	N/A	0	N/A		Beta-only survey using GM tube	DA
SSG-076	1	9/14/2006	N/A	50	N/A	50	N/A	50	N/A	50	N/A	0	N/A		Beta-only survey using GM tube	DA
SSG-077	1	9/14/2006	N/A	50	N/A	50	N/A	50	N/A	50	N/A	0	N/A		Beta-only survey using GM tube	DA
SSG-078	2	9/15/2006	1	107	1	94	1	107	1	94	0.0	-108				DA
SSG-079	2	9/15/2006	0	124	0	106	0	124	0	106	0.0	-150				DA
SSG-080	2	9/15/2006	4	125	2	121	4	125	2	121	-18.7	-33				DA
SSG-081	2	9/15/2006	4	125	10	118	4	125	10	118	56.1	-58	FLAG			DA
SSG-082	2	9/15/2006	0	131	0	96	0	131	0	96	0.0	-292				DA
SSG-083	2	9/15/2006	5	128	0	111	5	128	0	111	-46.7	-142				DA
SSG-084	2	9/15/2006	1	117	1	122	1	117	1	122	0.0	42				DA
SSG-085	2	9/15/2006	0	110	1	111	0	110	1	111	9.3	8				DA
SSG-086	2	9/15/2006	1	121	3	117	1	121	3	117	18.7	-33				DA
SSG-087	2	9/15/2006	1	101	1	116	1	101	1	116	0.0	125				DA
SSG-088	2	9/15/2006	1	101	2	108	1	101	2	108	9.3	58				DA
SSG-089	2	9/15/2006	1	101	2	98	1	101	2	98	9.3	-25				DA

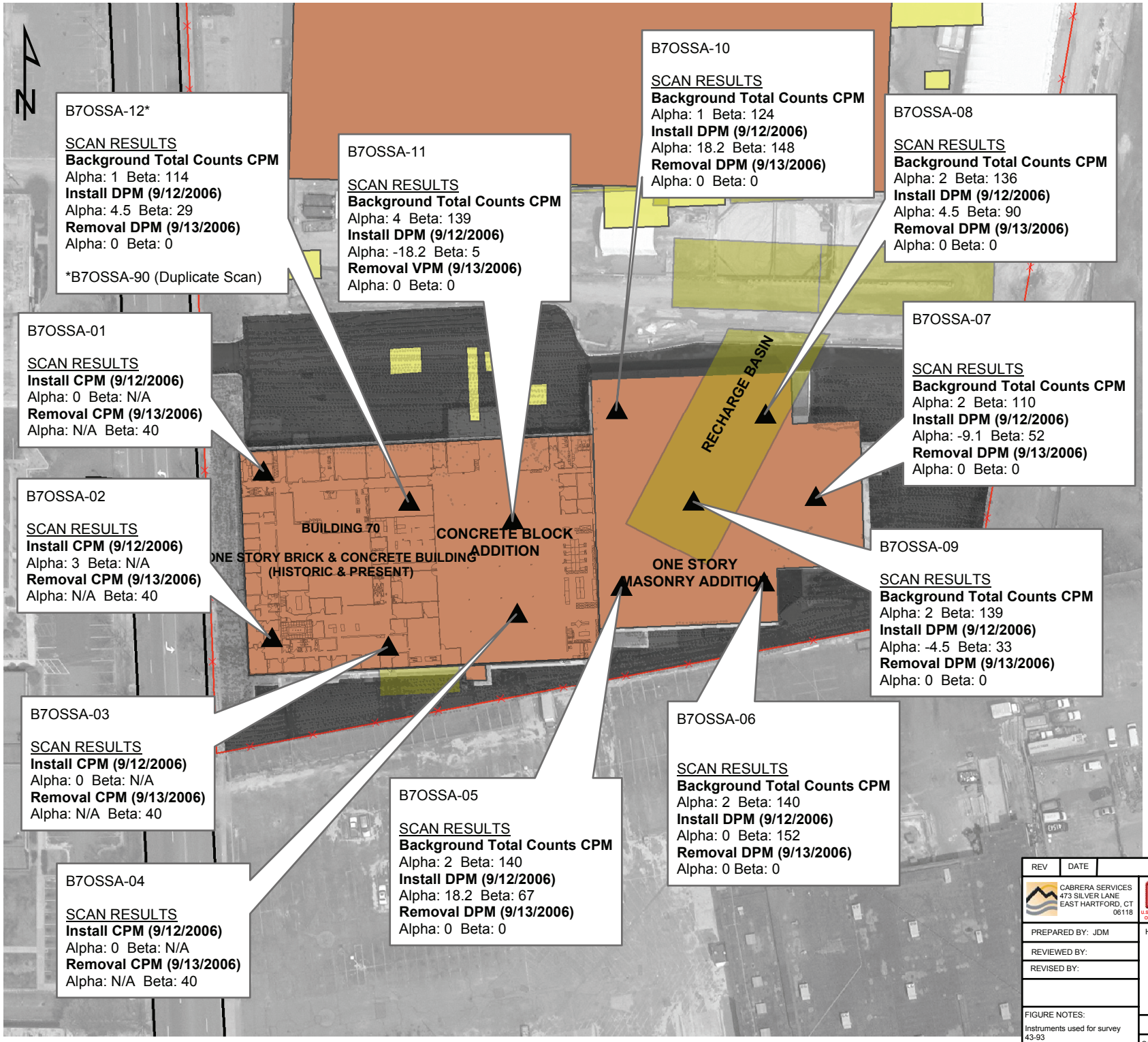

REV	DATE	DESCRIPTION	BY

CABRERA SERVICES
473 SILVER LANE
EAST HARTFORD, CT
06118

U.S. ARMY ENGINEER DISTRICT, BALTIMORE
CORPS OF ENGINEERS
KANSAS CITY, KANSAS

PREPARED BY: JDM
REVIEWED BY:
REVISED BY:

HICKSVILLE NEW YORK

SOIL VAPOR GAS SURVEY OF BUILDING 70 INTERIOR

SYLVANIA - CORNING FUSRAP SITE

FIGURE NOTES:
Instruments used for survey 43-93

CONTRACT #
DRAWING # 07-1005.00-11
1
SCALE: 0 30 60 Feet
DATE: 10/03/2006

B Phase II Reports

TECHNICAL MEMORANDUM

Results of Downhole Gamma Logging, Soil Core Scanning, and Radiological Support Surveys

Sylvania Corning FUSRAP Site
Hicksville, New York

Prepared for:
Ecology and Environment, Inc.
368 Pleasant View Drive
Lancaster, NY 14086

Prepared by:

CABRERA SERVICES
RADIOLOGICAL · ENVIRONMENTAL · REMEDIATION
103 East Mount Royal Ave, Suite 2B
Baltimore, MD 21202

February 2008

1.0 INTRODUCTION

The Sylvania Corning site (hereafter referred to as the 'Site') occupies 10.5 acres divided into three contiguous properties located at 70, 100, and 140 Cantiague Rock Road, in the westernmost portion of Hicksville, Long Island, approximately 30 miles east of lower Manhattan. Industrial and commercial properties adjoin the Site to the north (the Nassau County Department of Public Works), to the south (General Instruments' inactive waste disposal site, currently unoccupied), to the west by Cantiague Rock Road, and to the east by the golf driving range of Cantiague Park.

The Site was added to the Formerly Used Sites Remedial Action Program (FUSRAP) in 2006 to evaluate radioactive contamination resulting from former operations conducted under contract to the federal government. The US Army Corps of Engineers (USACE), Kansas City District has responsibility for the FUSRAP investigation of the Site. Ecology and Environment, Inc. (E & E) has been contracted by USACE to conduct a remedial investigation of uranium and thorium contamination at the Site.

2.0 SCOPE OF WORK

Cabrera Services, Inc. (CABRERA) has been contracted by E & E to perform Health Physics (HP) support services for the second phase of the FUSRAP remedial investigation at the Site. These services included the performance of soil core scanning surveys, Downhole Gamma Logging (DGL) surveys, and providing radiological support for the following activities:

- Leach pool/drain/drywell investigations;
- Collection of confirmatory borings in remediation cells;
- Collection of borings in data gap areas of the Building 70 property;
- Collection of borings in the area between Building 100 and Building 140;
- Concrete coring investigations in Building 70;
- Test pit excavations to investigate geophysical anomalies at the Site.

The results of these activities were used to assist sample location efforts in the field, ensure worker health and safety, and to provide radiological data for the draft RI report.

3.0 SURVEY METHODOLOGY

To accomplish the scope of work, CABRERA provided two teams of two personnel each. The first team consisted of Albert Craig and Kevin Andrews (Site Safety & Health Officer). The second team was comprised of Derrick Albert and Gordon Tannahill (Field Site Manager and Site Radiation Safety Officer). All work was performed in accordance with *Final Remedial Investigation Work Plan (Phase I & Phase II) for the Sylvania Corning FUSRAP Site, 2007* (WP) and CABRERA procedures.

3.1 Soil Core Scanning Surveys

Soil sample cores were scanned for ambient gross gamma radiation using a lead shielded Ludlum Model 44-10 sodium-iodide (NaI) probe connected to a Ludlum Model 2221 ratemeter/scaler. Soil cores were placed in a counting jig and scanned at a rate of one to two inches per second. Scanning results were recorded on data sheets in increments of one foot at the location of highest activity in that increment. Local background measurements were collected for the 44-10 detector within the jig at each borehole.

3.2 Downhole Gamma Logging

Sample boreholes were surveyed for gross gamma radiation using a Bicron Model G1 1x1 NaI probe connected to a Ludlum Model 2221 ratemeter/scaler. Once the target depth was reached by the drilling contractor, each sample borehole was sleeved with 1.5-in outside diameter (OD) poly-vinyl chloride (PVC) pipe. The pipe was used to maintain the integrity (i.e., prevent collapse) of the borehole once the sample barrel and drilling rods were removed from the hole. One-minute integrated measurements were collected in one foot increments within the borehole, relative to the bottom, and recorded on a data sheet. An integrated one minute reference measurement was performed at the surface of each borehole. All gamma logging surveys were performed in accordance with CABRERA procedures.

3.3 Radiological Support

3.3.1 Routine Radiological Monitoring

Radiological controls were maintained and contamination monitoring was performed by team members during all sampling and subsurface activities. Radiological controls included posting and implementation of exclusion zones (EZ) surrounding work areas, treating all equipment in work areas as if contaminated, and performing release surveys on all equipment and personnel exiting from an EZ. Contamination monitoring was performed throughout work activities to identify potential contamination as soon as possible. Routine contamination monitoring results were compared to the acceptable levels of surface contamination (See Section 3.4). All contamination monitoring was performed in accordance with CABRERA procedures and the approved WP (E & E, 2007).

Routine monitoring included the following:

- Ambient Gamma Monitoring (Ludlum Model 19 exposure rate meter)
- Masselin Cloth (Ludlum Model 2221 ratemeter/scaler with 43-93 α/β probe)

- Surface scans (Ludlum Model 12C with 44-9 β/γ probe and Ludlum Model 2221 with 43-93 probe)
- Frisking of Personnel and Equipment (Ludlum Model 12C with 44-9 β/γ probe and Ludlum Model 2221 with 43-93 α/β probe)
- Swipe Samples (Ludlum Model 2929)

In addition to routine contamination monitoring, surveys for free release of materials and equipment were performed for equipment leaving the site. Free release survey results were compared to the acceptable levels of surface contamination (See Section 3.4). All free release surveys were performed in accordance with CABRERA procedures and the WP (E & E, 2007).

3.3.2 Monitoring During Test Pitting

Exclusion zones were set up around the test pit work areas and pre-excavation surveys were performed with Ludlum Model 2221 ratemeter/scalers with 44-10 NaI probes and Ludlum Model 19 detectors. Plastic sheeting was laid over the asphalt so that the spoils could be surveyed. Soil was scanned using a Ludlum Model 44-10 probe and Ludlum Model 19 in the bucket before being placed on the spoils pile. Once a uniform depth of soil had been removed from the test pit, the spoils from that depth were spread out on the plastic, visually examined, and scanned again using a 44-10 probe and Model 19. Routine contamination monitoring was performed throughout the excavation process.

3.3.3 Building 70 Concrete Core Removal

The Phase I investigation identified seven floor locations in Building 70 with elevated surface activity. Cores from these seven locations were collected as part of the Phase II investigation. Cores were bored through the concrete to the soil below the slab. If an expansion joint was present at the location, the core was drilled such that the expansion joint ran the diameter of the bit.

Prior to drilling, sample locations were posted as EZ and sectioned off with yellow and magenta rope. Personnel inside the restricted area donned tyvek suits, rubber booties, and gloves for contamination control purposes. Four inch diameter concrete cores were drilled and removed under continuous HP coverage. Water use during boring operations was required for cooling and dust suppression, but was kept to a minimum. All water used during coring activities was collected via absorbent pads. Absorber pads, PPE, and materials used in restricted areas were collected and packaged as rad waste. Cores were placed in plastic bags during storage.

3.4 Acceptable Levels of Surface Contamination

Table 1 provides acceptable surface contamination limits for various radionuclides as applied to surface contamination measurements. The most conservative values (transuranics) were used since the predominant radionuclides of potential concern are thorium and uranium. The alpha removable contamination limit is 20 disintegrations per minute per 100 square centimeters (dpm/100cm^2), while the maximum and average contamination limit is 300 and 100 dpm/100cm^2, respectively. The beta-gamma removable contamination limit is 1000 dpm/100cm^2.

TABLE 1: ACCEPTABLE LEVELS OF SURFACE CONTAMINATION

Radionuclide[a]	Acceptable Surface Contamination Levels (DPM/100 cm^2)		
	Removable[b, e]	Average[b, c]	Maximum[b, d]
Transuranics, ^{226}Ra, ^{227}Ra, ^{230}Th, ^{228}Th, ^{231}Pa, ^{221}Ac, ^{125}I, ^{129}I,	20	100	300
Th-Natural, ^{232}Th, ^{90}Sr, ^{223}Ra, ^{224}Ra, ^{232}U, ^{126}I, ^{131}I, ^{133}I	200	1,000	3,000
U-Natural, ^{235}U, ^{238}U, and associated decay products	1,000 α	5,000 α	15,000 α
Beta-Gamma emitters (radionuclides with decay modes other than alpha emission or spontaneous fission) except ^{90}Sr and others noted above.	1,000 β γ	5,000 β γ	15,000 β γ

Taken from Table 6-4 of USACE Radiation Protection Manual EM-385-1-80.

a Where surface contamination by both alpha- and beta-gamma emitting nuclides exists, the limits established for alpha- and beta-gamma emitting nuclides should apply independently.

b As used in this table, dpm (disintegrations per minute) means the rate of emission by radioactive material as determined by correcting the counts per minute observed by an appropriate detector for background, efficiency, and geometric factors associated with the instrumentation.

c Measurements of average contaminant should not be averaged over more than 1 square meter. For objects of less surface area, the average should be derived for each object.

d The maximum contamination level applies to an area not more than 100 cm^2.

e The amount of removable radioactive material per 100 cm^2 of surface area should be determined by wiping that area with dry filter or soft absorbent paper, applying moderate pressure, and assessing the amount of radioactive material on the wipe with an appropriate instrument of known efficiency. When removable contamination on objects of less surface area is determined, the pertinent levels should be reduced proportionately and the entire surface should be wiped.

4.0 RESULTS

4.1 Soil Core Scanning Surveys

Sample core scan results were used to aid in the selection of biased samples. Each sample core was scanned and the area of highest activity was marked on the core and recorded on the data sheet. A total of 180 core scan surveys were performed at the Site. Core scan results ranged from a minimum of 1,100 cpm to a maximum of 9,000 cpm on the shielded 44-10 NaI detector. The median range for individual boreholes was 300 cpm. Four boreholes (i.e., F6-01, 100-11, 140-06, and SU-08-06) had core scan results with a range of 1,000 cpm or greater.

A summary of soil core scan results by borehole is presented in Attachment 1. Electronic copies of all Soil Core Scanning Survey data sheets are located on the attached Data compact disk (CD).

4.2 Downhole Gamma Logging Surveys

A total of 163 DGL surveys were performed at the Site. DGL results ranged from a minimum of 623 cpm to a maximum of 29,106 cpm. The median range of the DGL results within the boreholes was 1,895 cpm. A summary of DGL results by borehole is presented in Attachment 1. Electronic copies of all DGL data sheets are located in Attachment 2 on the attached Data CD.

4.3 Radiological Support

4.3.1 Contamination Monitoring

All sampling and subsurface activities were monitored for the presence of elevated radiological activity. Results of routine contamination monitoring were recorded in site log books. All of the routine removable contamination monitoring results were below the applicable limits in Table 1. Electronic copies of the site logbooks with routine contamination monitoring results are located in Attachment 2 on the attached Data CD. All routine contamination monitoring was performed in accordance with CABRERA procedures and the WP (E & E, 2007).

In addition to the sampling support activities, all equipment leaving the site was surveyed for free release. Equipment that was surveyed for free release included drilling rigs, backhoes, and all associated support equipment. Survey results for all release surveys were below the applicable removable release criteria in Table 1. Electronic copies of all radiological release surveys are located in Attachment 2 on the attached Data CD.

4.3.2 Test Pits

A total of ten test pits were excavated at the site. Soil scanning results ranged from 1,300 cpm to 6,500 cpm with a shielded Ludlum 44-10 NaI probe. Table 2 summarizes the survey results for each test pit. Five of the test pits (EM-3, EM-5, EM-15-1B, EM-29A, and GPR-F) identified elevated levels of radioactivity. Descriptions of the findings within each of these pits are provided in the following paragraphs. An electronic copy of the radiological survey forms of the test pits is located in Attachment 2 on the attached Data CD.

In Test Pit EM-3, approximately 20 linear feet of 3-in diameter pipe with internal contamination was identified at a depth of approximately 3’ 3-ft below ground surface (bgs). Exposure rate

measurements of the pipe were up to 20 μR/hr on contact and 5 μR/hr at one meter from the pipe with an ambient background of 5 μR/hr. The highest scan result from the end of a section of pipe was 3,000 β/γ cpm with a Ludlum Model 44-9 with an instrument background of 40 β/γ cpm. The exposure rate on a soil sampled pulled from the interior of the pipe was 35 μR/hr on contact. The lengths of pipe were bagged on both ends and placed inside a double bagged drum. The exposure rate on the drum was 10 μR/hr on contact and 5 μR/hr at one meter. Swipe measurements collected from the interior of the pipes and the work area were below the applicable limits in Table 1, indicating that the contamination is fixed.

In Test Pit EM-5, a four foot section of 3-in diameter pipe with internal contamination was identified at a depth of approximately 2 ft bgs. Exposure rate measurements of the pipe were background on contact. The highest scan result from the end of the pipe was 4,000 β/γ cpm with a Ludlum Model 44-9, relative to a local background count rate of 40 β/γ cpm. The exposure rate on a soil sampled pulled from the interior of the pipe was 35 μR/hr on contact. The pipe was double bagged and fitted into a drum to be disposed of as radioactive waste. Masselin results collected from the interior of the pipes and the work area were below the applicable limits in Table 1.

Test Pit EM-15-1B had elevated soil at a depth of 1-ft to 3-ft bgs. The elevated material was found to present in between two asphalt layers. Mixed in the soil was greenish salt like material that appeared to be the source of the elevated readings. Small amount (i.e., 0.5 grams) of the salt was collected and had a direct beta/gamma reading of 800 β/γ cpm with a Ludlum 44-9. On the face of the trench wall, the exposure rate was up to 70 μR/hr on contact and 5 μR/hr at one meter from the face of the trench. The elevated soil that was excavated from between the asphalt layers was loaded into three drums and labeled as radioactive waste. Each drum had an exposure rate of 10 μR/hr on contact and 5 μR/hr at one meter. Masselin results collected from the work area were all below the applicable limits in Table 1.

In Test Pit EM-29A, a small (e.g., 5-30 gallon) drum carcass or container was found at a depth of approximately 3-ft bgs. The remains of the crushed and rusted container was in two pieces with one piece measuring approximately 2-ft by 2-ft and the other piece being 1.5-ft by 1-ft. A survey of the drum identified elevated alpha and beta/gamma activity in the seams and folds of the carcass. The drum read 15 μR/hr on contact and 5 μR/hr at one meter. A static count of the drum bung with a Ludlum 43-93 was approximately 60 α dpm/100cm^2 and 17,450 β/γ dpm/100cm^2. Masselin results of the drum and general area were below the applicable limits in Table 1. The drum carcass appeared to have lead shielding associated with it. The carcass and surrounding soil were double bagged and placed in a separate drum for storage as suspect radioactive waste.

In Test Pit GPR-F, soil scanning identified a hardened "nugget" with elevated activity at a depth of approximately 3-ft bgs. The shielded Ludlum 44-10 reading on contact with the nugget was 60,000 γ cpm. The nugget was 70 μR/hr on contact and 5 μR/hr at one meter. The nugget had static alpha/beta count rates of 42 dpm/100cm^2 and 350 dpm/100cm^2 with the Ludlum 43-93, respectively and 80,000 β/γ dpm/100cm^2 with the Ludlum 44-9. The nugget and immediate soil were double bagged and placed in a drum as radioactive waste along with the with the drum carcass from EM-29A.

TABLE 2: TEST PIT SURVEY RESULTS

Date	Location ID	Total Depth (ft)	Minimum 44-10 Result (cpm)	Maximum 44-10 Result (cpm)	Maximum Exposure Rate (µR/hr)
6/14/07	EM-2	4	1,600	3,000	6
6/14/07	EM-3	7	1,900	3,000	6
6/14/07	EM-5	4	1,800	2,400	6
6/13/07	EM-15-1A	3	1,600	3,000	10
6/13/07	EM-15-1B	7	1,000	6,500	70
6/12/07	EM-21	7	1,200	1,800	5
6/11/07	EM-26	4	1,800	2,600	6
6/11/07	EM-29A	7	2,100	6,500	15
6/11/07	EM-29B	4	2,000	2,400	5
6/12/07	GPR-F	4	1,800	2,500	70

4.3.3 Building 70 Concrete Core Removal

Initial surveys were performed at locations G4-01, F3-01, F6-01, F6-02, D9-01, A3-01 and D8-02. Elevated activity was confirmed on surface areas and in the expansion joints of the concrete slabs. Ambient exposure rates at sample locations ranged from 5 to 50 µR/hr on contact. Static measurements of surface activity ranged up to 127 α dpm/100cm^2 and 235,860 β/γ dpm/100cm^2 with the Ludlum Model 43-93. No removable activity above the applicable limits in Table 1 was identified at these sample locations.

At location D9-01, elevated activity was identified in the top 3-in of the expansion joint. The highest reading on the core was 1,500 cpm β/γ with the Ludlum Model 44-9 and a surface exposure rate of 5 µR/hr. Elevated activity was present in the expansion joint on both sides of the hole after the core was removed. At the bottom of the hole, a 1-min integrated result with the shielded Ludlum 44-10 was 14,000 cpm. No removable activity above the applicable limits in Table 1 was found after sampling was completed.

At boring location A6-01, elevated activity was identified the throughout the expansion joint (i.e., 4-in). Elevated activity was also identified on the soil below the slab. The core sample had a surface count rate of 35,000 β/γ cpm with the Ludlum Model 44-9 and an exposure rate of 20 µR/hr on contact. Soil at the bottom of the hole appeared elevated with a shielded Ludlum 44-10 result of 20,000 γ cpm in contact with the soil. Given these levels, the Geoprobe unit was brought in to collect subsurface soil samples at this location. Soil core screening identified elevated activity in the first 2 to 3 ft of soil with results of up to 9,000 cpm on the shielded 44-10. The Geoprobe hit refusal at approximately 7-ft bgs. Soil core screening results returned to background levels (~2,100 cpm) between 4-ft and 7-ft bgs.

For boreholes A3-01, D8-02, F6-02, A3-01, and G4-01, core readings ranged from 100 to 35,000 cpm β/γ with a Ludlum Model 44-9. Instrument readings at the bottom of the boreholes ranged from 2,730 cpm to 4,746 γ cpm with the shielded Ludlum 44-10.

5.0 QUALITY CONTROL

5.1 Quality Control Measures

Quality control (QC) measurements for field instrumentation included initial response to a radioactive source and daily operability checks. All instruments were calibrated within the last twelve months by the instrument vendor, a certified calibration laboratory, sources traceable to the National Institute of Standards and Technology (NIST). Calibration certificates for each instrument are provided on the attached Data CD.

Prior to commencing any surveys, ten (10) initial readings were collected on each detector using Technicium-99 (^{99}Tc) and Thorium-230 (^{230}Th) sources to establish a control chart for each unit to determine daily operability. The bases for the daily operability of these instruments are ± 20% of the average for the initial ten measurements for the Ludlum Model 44-9 probe, Ludlum Model 44-10 probe, Bicron G1 probe, and Ludlum Model 19 detector and ±3-sigma of the average for the initial ten measurements for the Ludlum Model 43-93 probe and Ludlum 2929 detector. These data are included in Attachment 2. All field instruments satisfactorily passed the daily QC checks.

6.0 REFERENCE

(E & E, 2007) *Final Remedial Investigation Work Plan (Phase I & Phase II) for the Sylvania Corning FUSRAP Site, Environment and Ecology, Inc. March 2007*

ATTACHMENT 1

SUMMARY OF SOIL CORE SCANNING SURVEY AND DOWNHOLE GAMMA LOGGING SURVEY RESULTS

Date	Location ID	Soil Core Scanning Survey Results (Shielded 44-10 NaI)			DGL Survey Results (1x1 NaI)			Ambient Exposure Rate Result (µR/hr)
		Total Depth (ft)	Minimum Result (cpm)	Maximum Result (cpm)	Total Depth (ft)	Minimum Result (cpm)	Maximum Result (cpm)	
6/13/07	100-01	11’	1,200	1,500	9’	1,971	2,765	5
6/18/07	100-02	12’	1,400	1,700	11’	1,228	3,151	6
6/18/07	100-03	10’	1,350	1,550	10’	1,475	3,237	5
6/13/07	100-04	8’	1,200	1,400	8’	1,404	2,912	5
6/13/07	100-05	12’	1,300	1,600	12’	1,434	4,377	5
6/7/07	100-07	16’	1,850	2,000	17’	788	3,395	5
6/7/07	100-08	16’	1,775	2,050	17’	985	3,542	5
6/7/07	100-09	16’	1,725	2,025	17’	816	2,492	5
6/8/07	100-10	16’	1,850	2,250	15’	1,022	2,977	5
6/15/07	100-10	15’	1,150	1,275	N/A	N/A	N/A	N/A
6/7/07	100-11	16’	2,000	3,700	13’	1,232	7,833	7
6/18/07	140-01	9’	1,750	2,100	5’	1,601	2,759	5
6/14/07	140-02	11’	1,125	1,450	6’	1,485	2,892	4
6/13/07	140-03	9’	1,200	1,550	5’	1,499	2,638	4
6/14/07	140-04	11’	1,100	1,300	10’	1,659	2,887	4
6/13/07	140-05	11’	1,225	1,450	11’	2,285	4,557	4
6/12/07	140-06	16’	1,450	2,550	16’	1,176	3,564	6
6/12/07	140-08	16’	1,450	1,800	16’	1,141	8,464	5
6/18/07	140-09	11’	1,550	2,000	11’	1,262	3,110	6
6/7/07	140-10	16’	1,725	2,000	17’	966	3,604	4
6/7/07	140-11	16’	1,750	2,300	17’	960	3,357	5
5/18/07	A3-01	8’	1,800	2,000	8’	1,490	2,380	5
6/5/07	DRA-2	16’	1,500	1,950	10’	1,529	5,757	6
6/1/07	DR-C	20’	1,200	1,500	18’	1,015	2,540	5
6/1/07	DR-D	8’	1,250	1,375	N/A	N/A	N/A	5
6/1/07	DR-E	16’	1,250	1,900	11’	1,121	2,675	4
6/6/07	DR-F	20’	1,200	1,450	20’	751	2,986	4
6/5/07	DR-G	20’	1,200	1,500	20’	831	3,108	4
6/1/07	DR-H	16’	1,400	1,650	14’	1,099	2,788	5
6/6/07	DRH-A1	15’	1,475	2,000	12	1,124	5,236	5
6/6/07	DRH-B	20’	1,650	2,000	15	1,097	2,877	5
6/1/07	DR-I	20’	1,375	1,750	16’	919	2,838	5
5/31/07	DR-J	16’	2,050	2,300	15’	1,328	4,046	5
5/31/07	DR-K	20’	2,150	2,800	17’	900	3,461	5
5/31/07	DR-L	16’	2,000	2,300	15’	1,038	2,867	6
6/1/07	DR-M	12’	1,600	1,800	N/A	N/A	N/A	5
6/4/07	DR-N	15’	1,250	2,075	11’	1,372	2,534	4
6/4/07	DR-O	20’	1,300	1,780	20’	939	2,368	4
6/6/07	DR-P	20’	1,250	1,600	18’	872	2,623	4
6/7/07	DR-R1/R2	8’	1,450	1,550	7’	1,386	2,785	4
6/1/07	DR-U	16’	1,450	1,790	14’	1,124	3,757	5
6/5/07	DR-V	16’	1,550	1,800	14’	1,202	3,315	6

Date	Location ID	Soil Core Scanning Survey Results (Shielded 44-10 NaI)			DGL Survey Results (1x1 NaI)			Ambient Exposure Rate Result (µR/hr)
		Total Depth (ft)	Minimum Result (cpm)	Maximum Result (cpm)	Total Depth (ft)	Minimum Result (cpm)	Maximum Result (cpm)	
6/5/07	DRY-B	16’	1,925	2,050	16’	1,082	1,862	7
6/5/07	DRY-D	32’	1,900	2,450	32’	750	2,645	5
6/4/07	DRY-E	16’	1,450	1,650	15’	907	1,978	5
6/5/07	DRYH-A	16’	2,000	2,450	15’	1,171	3,501	7
5/23/07	DRY-HC	16’	1,700	1,900	16’	1,154	2,318	7
6/6/07	DRYH-F	20’	1,250	1,600	20’	879	3,207	4
5/17/07	F6-01	7’	1,900	9,000	6’	1,560	2,910	5
6/5/07	LPH-B	16’	2,000	2,150	16’	921	2,548	6
6/12/07	SBRI-SU08-01	16’	1,350	1,700	16’	1,183	2,148	5
6/11/07	SBRI-SU08-03	16’	1,250	1,500	16’	979	3,683	5
6/11/07	SBRI-SU08-04	12’	1,250	1,450	12’	1,306	2,198	5
6/11/07	SBRI-SU08-05	16’	1,350	1,400	16’	1,009	2,503	5
6/11/07	SBRI-SU08-06	16’	1,400	2,450	16’	846	2,075	8
6/8/07	SBRI-SU08-07	16’	2,350	2,850	16’	719	2,383	5
6/14/07	SBRI-SU08-07	16'	1,150	1,325	N/A	N/A	N/A	7
6/8/07	SBRI-SU08-08	16’	2,150	2,625	16’	869	2,382	5
6/15/07	SBRI-SU08-08	15’	1,200	1,350	N/A	N/A	N/A	N/A
6/6/07	SBRI-SU08-09	20’	2,050	2,500	20	758	2,559	5
6/6/07	SBRI-SU08-10	20’	2,050	2,425	19	785	2,795	5
6/15/07	SBRI-SU08-10	4’	1,275	1,400	N/A	N/A	N/A	N/A
6/8/07	SBRI-SU08-12	16’	2,250	2,750	16’	722	3,679	6
6/15/07	SBRI-SU08-12	15’	1,125	1,600	N/A	N/A	N/A	N/A
6/6/07	SBRI-SU08-13	20’	2,025	2,450	20	892	3,102	5
6/7/07	SBRI-SU08-15	16’	1,700	2,000	17’	967	3,468	6
5/23/07	SBRI-SU09-01	24’	1,655	2,000	23’	927	3,135	7
5/16/07	SBRI-SU09-02	16'	1,200	1,400	15'	1,055	3,275	5
6/12/07	SBRI-SU09-02	0’ - 5’	1,450	1,700	N/A	N/A	N/A	5
5/16/07	SBRI-SU09-03	16'	1,225	1,350	16'	764	3,697	6
6/12/07	SBRI-SU09-03	10' - 13'	1,400	1,500	N/A	N/A	N/A	5
5/15/07	SBRI-SU09-04	15'	1,500	1,850	7'	1,538	2,908	5
5/15/07	SBRI-SU09-05	17'	1,500	1,700	17'	662	3,883	5
5/21/07	SBRI-SU09-06	20’	1,300	1,550	20’	728	4,257	5
5/15/07	SBRI-SU09-07	15'	1,300	1,800	8'	1,583	2,980	7
5/15/07	SBRI-SU09-08D	50'	1,350	2,175	35'	759	4,203	6
5/16/07	SBRI-SU09-09	14'	1,450	1,650	7'	1,766	2,970	5
6/14/07	SBRI-SU09-09	14'	1,350	1,525	N/A	N/A	N/A	5
5/17/07	SBRI-SU09-10	55’	1,450	1,750	27’	747	3,120	5
5/17/07	SBRI-SU09-11	16’	1,400	1,750	10’	1,140	2,180	5
5/21/07	SBRI-SU09-12	16’	1,850	2,000	16’	789	2,567	7
5/16/07	SBRI-SU09-13	16'	1,200	1,450	10'	1,210	3,077	5
6/12/07	SBRI-SU09-13	10' - 15'	1,400	1,500	N/A	N/A	N/A	5
5/15/07	SBRI-SU09-14	15'	1,500	1,950	10'	1,651	3,044	5
5/29/07	SBRI-SU10-01	9’	1,400	1,550	6’	1,317	2,069	5
6/7/07	SBRI-SU10-02	11’	1,300	1,500	9’	1,705	2,513	4

Date	Location ID	Soil Core Scanning Survey Results (Shielded 44-10 NaI)			DGL Survey Results (1x1 NaI)			Ambient Exposure Rate Result (µR/hr)
		Total Depth (ft)	Minimum Result (cpm)	Maximum Result (cpm)	Total Depth (ft)	Minimum Result (cpm)	Maximum Result (cpm)	
6/8/07	SBRI-SU10-03	8’	1,825	2,000	6’	1,576	2,514	6
6/18/07	SBRI-SU10-03	8’	1,425	1,550	7’	1,519	2,484	5
5/25/07	SBRI-SU10-04	11.5’	1,400	1,650	16’	1,238	4,046	6
5/25/07	SBRI-SU10-05	11’	1,400	1,700	24’	1,818	3,652	6
5/29/07	SBRI-SU10-06	16’	1,300	1,800	13’	1,384	2,854	6
5/29/07	SBRI-SU10-07	12’	1,450	1,600	12’	1,887	4,182	6
5/29/07	SBRI-SU10-08	9’	1,400	1,700	7’	1,524	4,056	6
5/30/07	SBRI-SU10-09	6’	1,350	1,500	4’	1,993	2,478	6
5/30/07	SBRI-SU10-09	15’	1,350	1,525	N/A	N/A	N/A	5
5/31/07	SBRI-SU10-10	20’	1,150	1,500	16’	1,115	3,438	4
6/8/07	SBRI-SU10-11	11’	1,825	2,150	9’	1,868	3,809	6
6/14/07	SBRI-SU10-11	11’	1,450	1,675	N/A	N/A	N/A	4
5/30/07	SBRI-SU10-12	12’	1,375	1,650	12’	2,110	4,287	6
5/30/07	SBRI-SU10-13	9’	1,300	1,800	9’	1,918	4,064	6
6/4/07	SBRI-SU10-14	14’	1,675	2,075	13’	1,220	2,136	5
6/8/07	SBRI-SU10-15	10’	1,450	1,600	5’	2,027	2,489	5
6/14/07	SBRI-SU10-15	10’	1,800	2,150	N/A	N/A	N/A	4
6/4/07	SBRI-SU10-16	12’	1,750	1,900	10’	1,633	3,565	5
6/4/07	SBRI-SU10-17	9’	1,700	1,850	2’	1,608	1,680	5
5/31/07	SBRI-SU10-18	16’	1,350	1,500	14’	1,261	2,501	4
6/8/07	SBRI-SU10-19	11’	1,850	2,200	9’	1,280	3,392	6
6/14/07	SBRI-SU10-19	11’	1,375	1,550	N/A	N/A	N/A	5
6/4/07	SBRI-SU11-01	16’	1,450	1,875	15’	1,019	3,534	5
6/4/07	SBRI-SU11-02	12’	1,550	1,780	10’	1,430	3,251	4
6/7/07	SBRI-SU11-03	8’	1,300	1,625	8’	1,424	3,804	5
6/6/07	SBRI-SU11-04	20’	1,300	1,575	20’	872	2,734	5
6/6/07	SBRI-SU11-05	12’	1,350	1,550	12’	1,118	3,308	4
6/4/07	SBRI-SU11-06	9’	1,550	1,800	7’	1,421	3,829	5
5/30/07	SBRI-SU11-07	16’	1,300	1,600	12’	1,940	2,948	5
5/30/07	SBRI-SU11-08	16’	1,325	1,650	6’	1,483	3,103	5
6/6/07	SBRI-SU11-09	20’	1,250	1,500	20’	862	3,142	5
6/5/07	SBRI-SU11-10	14’	1,200	1,500	14’	972	3,001	4
6/6/07	SBRI-SU11-11	20’	1,200	1,600	20’	835	3,338	4
6/5/07	SBRI-SU11-12	20’	1,200	1,800	20’	878	3,141	4
6/4/07	SBRI-SU11-13	50'	1,300	1,500	50’	623	2,357	4
6/1/07	SBRI-SU11-14	10’	1,200	1,450	N/A	N/A	N/A	5
6/4/07	SBRI-SU11-14	32’	1,275	1,875	16’	1,085	3,299	4
6/1/07	SBRI-SU11-15	16’	1,250	1,475	13’	1,102	3,301	4
5/31/07	SBRI-SU11-16	20’	1,250	1,350	19’	969	3,526	4
6/5/07	SBRI-SU11-17	20’	1,300	1,600	20’	847	3,485	5
6/5/07	SBRI-SU11-18	18’	1,250	1,450	18’	837	3,472	4
5/31/07	SBRI-SU11-19	16’	1,250	1,600	15’	1,186	4,475	4
5/31/07	SBRI-SU11-20	16’	1,100	1,475	15’	992	3,223	4
6/5/07	SBRI-SU11-21	11’	1,250	1,600	11’	1,100	3,743	4

Date	Location ID	Soil Core Scanning Survey Results (Shielded 44-10 NaI)			DGL Survey Results (1x1 NaI)			Ambient Exposure Rate Result (µR/hr)
		Total Depth (ft)	Minimum Result (cpm)	Maximum Result (cpm)	Total Depth (ft)	Minimum Result (cpm)	Maximum Result (cpm)	
6/7/07	SBRI-SU11-22	8’	1,260	1,500	7’	1,005	3,419	4
5/31/07	SBRI-SU12-02	20’	1,900	2,300	11'	1,359	3,528	5
5/31/07	SBRI-SU12-03	35’	2,000	2,350	28'	1,009	9,607	5
5/30/07	SBRI-SU12-05	16’	1,400	1,700	11’	1,267	3,555	4
5/30/07	SBRI-SU12-06	20’	1,350	1,650	13’	1,315	2,689	4
5/18/07	SBRI-SU12-09	12’	1,500	1,700	12'	1,260	2,670	5
5/24/07	SBRI-SU12-09	8' - 16'	1,600	1,750	12’	897	2,644	5
5/30/07	SBRI-SU12-10	16’	1,350	1,675	10’	1,162	3,053	4
5/24/07	SBRI-SU12-12	9’	1,500	1,700	N/A	N/A	N/A	5
5/24/07	SBRI-SU12-13	12’	1,625	1,750	12’	1,038	3,222	5
5/18/07	SBRI-SU12-14	12'	1,250	1,550	5'	1,494	3,214	6
5/29/07	SBRI-SU12-15	16’	1,450	1,700	12’	1,128	2,630	4
5/29/07	SBRI-SU12-16	13’	1,500	1,650	13’	1,455	3,087	4
5/29/07	SBRI-SU12-18	12’	1,550	1,750	8’	1,311	3,028	4
5/18/07	SBRI-SU12-19	10’	1,250	1,500	11’	1,460	3,160	6
5/18/07	SBRI-SU12-20	16’	1,700	1,900	13’	1,080	2,680	5
5/18/07	SBRI-SU12-21	12’	1,900	2,200	9’	1,480	3,870	5
5/21/07	SBRI-SU13-01	16’	1,450	1,950	11’	1,092	6,606	7
5/21/07	SBRI-SU13-02	16’	1,550	1,950	16’	911	2,186	7
5/21/07	SBRI-SU13-03	16’	1,550	1,700	16’	1,077	2,784	7
5/22/07	SBRI-SU13-04	16’	1,600	1,750	16’	909	3,750	7
5/22/07	SBRI-SU13-05	16’	1,600	1,750	16’	1,419	2,351	7
5/22/07	SBRI-SU13-06	16’	1,600	1,700	14’	1,088	3,508	6
5/22/07	SBRI-SU13-08	16’	1,600	1,800	16’	956	2,593	7
5/22/07	SBRI-SU13-09	16’	1,550	1,800	16’	835	2,662	7
5/22/07	SBRI-SU13-10	16’	1,550	1,800	15’	902	2,540	7
5/21/07	SBRI-SU13-11	16’	2,150	2,400	7’	1,481	2,469	7
5/21/07	SBRI-SU13-12	16’	2,400	2,650	15’	1,004	2,611	7
5/21/07	SBRI-SU13-13	16’	2,000	2,600	16’	911	2,125	7
5/21/07	SBRI-SU13-14	16’	1,900	2,300	7’	1,807	2,997	6
5/21/07	SBRI-SU13-15	16’	2,100	2,450	16’	867	3,397	5
5/23/07	SBRI-SU14-01	16’	2,200	2,500	12’	889	3,329	9
5/23/07	SBRI-SU14-02	16’	2,200	2,550	15’	995	2,571	9
5/24/07	SBRI-SU14-04	16’	2,200	2,350	16’	1,111	2,305	9
5/24/07	SBRI-SU14-05	24’	1,950	2,250	24’	915	2,823	8
5/24/07	SBRI-SU14-06	16’	1,900	2,200	16’	1,046	2,688	8
5/23/07	SBRI-SU14-07	16’	2,000	2,250	16’	920	3,313	6
5/24/07	SBRI-SU14-08	16’	1,550	1,900	14’	1,229	3,366	8
5/23/07	SBRI-SU14-09	16’	2,100	2,350	16’	965	3,313	5
5/23/07	SBRI-SU14-11	16’	1,950	2,200	15’	987	3,042	5
5/23/07	SBRI-SU14-12	16’	2,000	2,300	16’	937	2,822	5
5/22/07	SBRI-SU14-13	16’	1,700	1,950	16	1,106	2,429	4
5/22/07	SBRI-SU14-14	16’	1,950	2,100	16	986	2,525	7
5/22/07	SBRI-SU14-15	16’	2,000	2,150	16	776	2,854	5

Date	Location ID	Soil Core Scanning Survey Results (Shielded 44-10 NaI)			DGL Survey Results (1x1 NaI)			Ambient Exposure Rate Result (µR/hr)
		Total Depth (ft)	Minimum Result (cpm)	Maximum Result (cpm)	Total Depth (ft)	Minimum Result (cpm)	Maximum Result (cpm)	
5/22/07	SBRI-SU14-16	16’	1,800	2,200	16	862	3,211	4
5/22/07	SBRI-SU14-17	16’	2,200	2,500	11	1,241	2,267	6
5/22/07	SBRI-SU14-18	16’	2,250	2,600	16	972	3,333	6
5/23/07	SBRI-SU14-19	16’	2,000	2,300	16’	869	3,428	5
5/23/07	SBRI-SU14-20	15’	1,850	2,200	15’	1,051	3,042	5
6/7/07	SMP-1	20’	1,300	1,475	20’	873	3,058	5

N/A- No DGL survey performed due to collapse of the borehole, archive sample collected, or recollection of sample.

ATTACHMENT 2

INSTRUMENT QC CHECKS AND SWIPE RESULTS

(Included on compact disc)

Calibration Technology

A Division of RSCS, Inc.

Calibration Certificate
ID Number: 1636858364-0

Customer: Chuck Mikaitis
Cabrera Services, Inc.
473 Silver Lane
East Hartford, CT 06118-

Instrument	Serial Number
Ludlum Model 2221	163685

Probe Model	Serial Number
Ludlum 44-10	166295

Precision Check

Test 1	Test 2	Test 3	Mean	Results
4.06 Kcpm	**4.07 Kcpm**	**4.06 Kcpm**	**4.06 Kcpm**	**Satisfactory**

Accuracy Check

Range	Target Value	As Found	As Left
X1000	400 Kcpm	406.999 Kcpm #	406.999 Kcpm #
X1000	100 Kcpm	101.555 Kcpm #	101.555 Kcpm #
X100	40 Kcpm	40.666 Kcpm #	40.666 Kcpm #
X100	10 Kcpm	10.101 Kcpm #	10.101 Kcpm #
X10	4 Kcpm	4.061 Kcpm #	4.061 Kcpm #
X10	1 Kcpm	1.010 Kcpm #	1.010 Kcpm #
X1	400 cpm	401 cpm #	401 cpm #
X1	100 cpm	101 cpm #	101 cpm #

Readings with * indicate ranges where As-Found readings are >20% of Target value. Readings with ** indicate As-left readings are >10% of Target value
Readings with # indicate ranges were calibrated using a pulser

Probe Model & SN	Isotope	Efficiency	NIST Source ID	Geometry
44-10 166295	Cs-137	0.1254 C/D	Cs-137 (SN: 14290)	On Contact

MTE Instrument Type	Model	CalDueDate
Pulser	Ludlum 500-4SN: 66151	01/03/2007

Outer Physical Check: *Pass*
Tap Test: *Pass*

Electronics Checks	As Found	As Left
High Voltage	**1119 Volts**	**550 Volts**
Low Level Discriminator #1	**44.9**	**2.5**
Window	**Out**	**Out**

Comments: All analog scales verified to read accurately when compared to digital ratemeter and scaler modes

Calibrated by: QA Review:

Date: 10/27/2006
Expires: 10/27/2007

Atmospheric Conditions - Temperature: 74° F Humidity: 30 % Barometric Pressure: 29.97 in/hg
This calibration was performed by RSCS using a NIST Traceable radiation source, in conformance to the following standards: ANSI N323A (1997). RSCS New Hampshire Radioactive Material License Number: 381R. RSCS calibration services are performed in accordance with the RSCS Radiation Protection Program Manual and Standard Operating Procedure 2.4.
This calibration certificate shall not be reproduced except in full without the express written consent of RSCS, Inc

Radiation Safety and Control Services, Inc.
91 Portsmouth Ave. Stratham, NH 03885
1-800-525-8339 (603) 778-2871 Fax (603) 778-6879 www.radsafety.com

Calibration Technology

A Division of RSCS, Inc.

Calibration Certificate
ID Number: 1769418365-0

Customer: Chuck Mikaitis
Cabrera Services, Inc.
473 Silver Lane
East Hartford, CT 06118-

Instrument	Serial Number
Ludlum Model 2221	176941

Probe Model	Serial Number
Ludlum 44-10	174359

Precision Check

Test 1	Test 2	Test 3	Mean	Results
4.00 Kcpm	**4.00 Kcpm**	**4.00 Kcpm**	**4.00 Kcpm**	**Satisfactory**

Accuracy Check

Range	Target Value	As Found	As Left
X1000	400 Kcpm	399.987 Kcpm #	399.987 Kcpm #
X1000	100 Kcpm	99.995 Kcpm #	99.995 Kcpm #
X100	40 Kcpm	39.97 Kcpm #	39.97 Kcpm #
X100	10 Kcpm	9.998 Kcpm #	9.998 Kcpm #
X10	4 Kcpm	3.998 Kcpm #	3.998 Kcpm #
X10	1 Kcpm	0.999 Kcpm #	0.999 Kcpm #
X1	400 cpm	399 cpm #	399 cpm #
X1	100 cpm	100 cpm #	100 cpm #

Readings with * indicate ranges where As-Found readings are >20% of Target value. Readings with ** indicate As-left readings are >10% of Target value
Readings with # indicate ranges were calibrated using a pulser

Probe Model & SN	Isotope	Efficiency	NIST Source ID	Geometry
44-10 174359	Cs-137	0.1120 C/D	Cs-137 (SN: 14290)	On Contact

MTE Instrument Type	Model	CalDueDate
Pulser	Ludlum 500-4SN: 66151	01/03/2007

Outer Physical Check: *Pass*
Mechanical Zero: *Pass*
Tap Test: *Pass*

Electronics Checks	As Found	As Left
High Voltage	**896 Volts**	**600 Volts**
Low Level Discriminator #1	**10.0 mV**	**2.5 mV**
Window	**Out**	**Out**

Comments: All analog scales verified to read accurately when compared to digital ratemeter and scaler modes
Adjusted mechanical zero.

Calibrated by: QA Review:

Date: 10/27/2006
Expires: 10/27/2007

Atmospheric Conditions - Temperature: 74° F Humidity: 30 % Barometric Pressure: 29.97 in/hg
This calibration was performed by RSCS using a NIST Traceable radiation source, in conformance to the following standards: ANSI N323A (1997). RSCS New Hampshire Radioactive Material License Number: 381R. RSCS calibration services are performed in accordance with the RSCS Radiation Protection Program Manual and Standard Operating Procedure 2.4.
This calibration certificate shall not be reproduced except in full without the express written consent of RSCS, Inc

Radiation Safety and Control Services, Inc.
91 Portsmouth Ave. Stratham, NH 03885
1-800-525-8339 (603) 778-2871 Fax (603) 778-6879 www.radsafety.com

Calibration Certificate
ID Number: 19606211654-0

Calibration Technology
A Division of RSCS, Inc.

Customer: Chuck Mikaitis
Cabrera Services, Inc.
473 Silver Lane
East Hartford, CT 06118-

Instrument
Ludlum Model 2221

Serial Number
196062

Probe Model
Bicron G-1

Serial Number
C443E

Precision Check				
Test 1	Test 2	Test 3	Mean	Results
9.99 Kcpm	**9.99 Kcpm**	**9.99 Kcpm**	**9.99 Kcpm**	**Satisfactory**

Accuracy Check			
Range	Target Value	As Found	As Left
X1000	400 Kcpm	399.622 Kcpm #	399.622 Kcpm #
X1000	100 Kcpm	100.139 Kcpm #	100.139 Kcpm #
X100	40 Kcpm	39.987 Kcpm #	39.987 Kcpm #
X100	10 Kcpm	9.993 Kcpm #	9.993 Kcpm #
X10	4 Kcpm	4.007 Kcpm #	4.007 Kcpm #
X10	1 Kcpm	0.999 Kcpm #	0.999 Kcpm #
X1	400 cpm	401 cpm #	401 cpm #
X1	100 cpm	100 cpm #	100 cpm #

Readings with * indicate ranges where As-Found readings are >20% of Target value. Readings with ** indicate As-left readings are >10% of Target value
Readings with # indicate ranges were calibrated using a pulser

Probe Model & SN	Isotope	Efficiency	NIST Source ID	Geometry
G-1 C443E	Ba-133	0.1736 C/D	Ba-133 (SN: 380-39-1)	@1cm
G-1 C443E	Co-57	0.1515 C/D	Co-57 (SN: 14288)	@1cm
G-1 C443E	Cs-137	0.0450 C/D	Cs-137 (SN: 14290)	@1cm
G-1 C443E	I-129	0.0684 C/D	I-129 (SN: NES-186S)	@1cm

MTE Instrument Type	Model	CalDueDate
Pulser	Ludlum 500-4SN: 66151	01/15/2008

Outer Physical Check: *Pass*
Internal Check: *Pass*
Geotropism Check: *Pass*
Mechanical Zero: *Pass*
Tap Test: *Pass*

Electronics Checks	As Found	As Left
High Voltage	**880 Volts**	**880 Volts**
Low Level Discriminator #1	**3.4 mV**	**10 mV**
Window	**In**	**Out**

Comments: Analog and digital displays reflect appropriate congruence.

Calibrated by: QA Review:

Date: 05/04/2007
Expires: 05/04/2008

Atmospheric Conditions - Temperature: 74° F Humidity: 21 % Barometric Pressure: 29.99 in/hg
This calibration was performed by RSCS using a NIST Traceable radiation source, in conformance to the following standards: ANSI N323A (1997). RSCS New Hampshire Radioactive Material License Number: 381R. RSCS calibration services are performed in accordance with the RSCS Radiation Protection Program Manual and Standard Operating Procedure 2.4.
This calibration certificate shall not be reproduced except in full without the express written consent of RSCS, Inc

Radiation Safety and Control Services, Inc.
91 Portsmouth Ave. Stratham, NH 03885
1-800-525-8339 (603) 778-2871 Fax (603) 778-6879 www.radsafety.com

Calibration Technology

A Division of RSCS, Inc.

Calibration Certificate
ID Number: 21651211656-0

Customer: Chuck Mikaitis
Cabrera Services, Inc.
473 Silver Lane
East Hartford, CT 06118-

Instrument
Ludlum Model 2221

Serial Number
216512

Probe Model
Bicron G-1

Serial Number
C442E

Precision Check				
Test 1	Test 2	Test 3	Mean	Results
4.00 Kcpm	**4.00 Kcpm**	**4.00 Kcpm**	**4.00 Kcpm**	**Satisfactory**

Accuracy Check			
Range	Target Value	As Found	As Left
X1000	400 Kcpm	399.781 Kcpm #	399.781 Kcpm #
X1000	100 Kcpm	99.797 Kcpm #	99.797 Kcpm #
X100	40 Kcpm	39.978 Kcpm #	39.978 Kcpm #
X100	10 Kcpm	9.997 Kcpm #	9.997 Kcpm #
X10	4 Kcpm	3.998 Kcpm #	3.998 Kcpm #
X10	1 Kcpm	0.999 Kcpm #	0.999 Kcpm #
X1	400 cpm	400 cpm #	400 cpm #
X1	100 cpm	100 cpm #	100 cpm #

Readings with * indicate ranges where As-Found readings are >20% of Target value. Readings with ** indicate As-left readings are >10% of Target value
Readings with # indicate ranges were calibrated using a pulser

Probe Model & SN	Isotope	Efficiency	NIST Source ID	Geometry
G-1 C442E	Ba-133	0.1694 C/D	Ba-133 (SN: 380-39-1)	@1cm
G-1 C442E	Co-57	0.1493 C/D	Co-57 (SN: 14288)	@1cm
G-1 C442E	Cs-137	0.0435 C/D	Cs-137 (SN: 14290)	@1cm
G-1 C442E	I-129	0.0632 C/D	I-129 (SN: NES-186S)	@1cm

MTE Instrument Type	Model	CalDueDate
Pulser	Ludium 500-4SN: 66151	01/15/2008

Outer Physical Check: *Pass*
Internal Check: *Pass*
Geotropism Check: *Pass*
Mechanical Zero: *Pass*
Tap Test: *Pass*

Electronics Checks	As Found	As Left
High Voltage	**895 Volts**	**895 Volts**
Low Level Discriminator #1	**10 mV**	**10 mV**
Window	**Out**	**Out**

Comments: Analog and digital displays reflect appropriate congruence.

Calibrated by: QA Review:

Date: 05/04/2007
Expires: 05/04/2008

Atmospheric Conditions - Temperature: 74° F Humidity: 21 % Barometric Pressure: 29.99 in/hg
This calibration was performed by RSCS using a NIST Traceable radiation source, in conformance to the following standards: ANSI N323A (1997). RSCS New Hampshire Radioactive Material License Number: 381R. RSCS calibration services are performed in accordance with the RSCS Radiation Protection Program Manual and Standard Operating Procedure 2.4.
This calibration certificate shall not be reproduced except in full without the express written consent of RSCS, Inc

Radiation Safety and Control Services, Inc.
91 Portsmouth Ave. Stratham, NH 03885
1-800-525-8339 (603) 778-2871 Fax (603) 778-6879 www.radsafety.com

Calibration Technology

A Division of RSCS, Inc.

Calibration Certificate
ID Number: 21648211655-0

Customer: Chuck Mikaitis
Cabrera Services, Inc.
473 Silver Lane
East Hartford, CT 06118-

Instrument
Ludlum Model 2221

Serial Number
216482

Probe Model
Bicron G-1

Serial Number
C358C

Precision Check

Test 1	Test 2	Test 3	Mean	Results
9.95 Kcpm	**9.96 Kcpm**	**9.96 Kcpm**	**9.95 Kcpm**	**Satisfactory**

Accuracy Check

Range	Target Value	As Found	As Left
X1000	400 Kcpm	400.549 Kcpm #	400.549 Kcpm #
X1000	100 Kcpm	99.530 Kcpm #	99.530 Kcpm #
X100	40 Kcpm	40.016 Kcpm #	40.016 Kcpm #
X100	10 Kcpm	9.953 Kcpm #	9.953 Kcpm #
X10	4 Kcpm	4.010 Kcpm #	4.010 Kcpm #
X10	1 Kcpm	0.995 Kcpm #	0.995 Kcpm #
X1	400 cpm	400 cpm #	400 cpm #
X1	100 cpm	99 cpm #	99 cpm #

Readings with * indicate ranges where As-Found readings are >20% of Target value. Readings with ** indicate As-left readings are >10% of Target value
Readings with # indicate ranges were calibrated using a pulser

Probe Model & SN	Isotope	Efficiency	NIST Source ID	Geometry
G-1 C358C	Ba-133	0.1638 C/D	Ba-133 (SN: 380-39-1)	@1cm
G-1 C358C	Co-57	0.1404 C/D	Co-57 (SN: 14288)	@1cm
G-1 C358C	Cs-137	0.0427 C/D	Cs-137 (SN: 14290)	@1cm
G-1 C358C	I-129	0.0598 C/D	I-129 (SN: NES-186S)	@1cm

MTE Instrument Type	Model	CalDueDate
Pulser	Ludlum 500-4SN: 66151	01/15/2008

Outer Physical Check: *Pass*
Internal Check: *Pass*
Geotropism Check: *Pass*
Mechanical Zero: *Pass*
Tap Test: *Pass*

Electronics Checks	As Found	As Left
High Voltage	**945 Volts**	**945 Volts**
Low Level Discriminator #1	**10 mV**	**10 mV**
Window	**Out**	**Out**

Comments: Analog and digital displays reflect appropriate congruence.

Calibrated by: QA Review:

Date: 05/04/2007
Expires: 05/04/2008

Atmospheric Conditions - Temperature: 74° F Humidity: 21 % Barometric Pressure: 29.99 in/hg
This calibration was performed by RSCS using a NIST Traceable radiation source, in conformance to the following standards: ANSI N323A (1997). RSCS New Hampshire Radioactive Material License Number: 381R. RSCS calibration services are performed in accordance with the RSCS Radiation Protection Program Manual and Standard Operating Procedure 2.4.
This calibration certificate shall not be reproduced except in full without the express written consent of RSCS, Inc

Radiation Safety and Control Services, Inc.
91 Portsmouth Ave. Stratham, NH 03885
1-800-525-8339 (603) 778-2871 Fax (603) 778-6879 www.radsafety.com

Calibration Technology

A Division of RSCS, Inc.

Calibration Certificate
ID Number: 19020511653-0

Customer: Chuck Mikaitis
Cabrera Services, Inc.
473 Silver Lane
East Hartford, CT 06118-

Instrument	Serial Number
Ludlum Model 2221	190205

Probe Model	Serial Number
Bicron G-1	C436E

Precision Check

Test 1	Test 2	Test 3	Mean	Results
4.00 Kcpm	**4.00 Kcpm**	**4.00 Kcpm**	**4.00 Kcpm**	**Satisfactory**

Accuracy Check

Range	Target Value	As Found	As Left
X1000	400 Kcpm	399.133 Kcpm #	399.133 Kcpm #
X1000	100 Kcpm	98.969 Kcpm #	98.969 Kcpm #
X100	40 Kcpm	39.932 Kcpm #	39.932 Kcpm #
X100	10 Kcpm	9.912 Kcpm #	9.912 Kcpm #
X10	4 Kcpm	3.997 Kcpm #	3.997 Kcpm #
X10	1 Kcpm	0.992 Kcpm #	0.992 Kcpm #
X1	400 cpm	399 cpm #	399 cpm #
X1	100 cpm	100 cpm #	100 cpm #

Readings with * indicate ranges where As-Found readings are >20% of Target value. Readings with ** indicate As-left readings are >10% of Target value
Readings with # indicate ranges were calibrated using a pulser

Probe Model & SN	Isotope	Efficiency	NIST Source ID	Geometry
G-1 C436E	Ba-133	0.1685 C/D	Ba-133 (SN: 380-39-1)	@1cm
G-1 C436E	Co-57	0.1439 C/D	Co-57 (SN: 14288)	@1cm
G-1 C436E	Cs-137	0.0425 C/D	Cs-137 (SN: 14290)	@1cm
G-1 C436E	I-129	0.0616 C/D	I-129 (SN: NES-186S)	@1cm

MTE Instrument Type	Model	CalDueDate
Pulser	Ludlum 500-4SN: 66151	01/15/2008

Outer Physical Check: *Pass*
Internal Check: *Pass*
Geotropism Check: *Pass*
Mechanical Zero: *Pass*
Tap Test: *Pass*

Electronics Checks	As Found	As Left
High Voltage	**850 Volts**	**850 Volts**
Low Level Discriminator #1	**10 mV**	**10 mV**
Window	**Out**	**Out**

Comments: Analog and digital displays reflect appropriate congruence.

Calibrated by: QA Review:

Date: 05/04/2007
Expires: 05/04/2008

Atmospheric Conditions - Temperature: 74° F Humidity: 21 % Barometric Pressure: 29.99 in/hg
This calibration was performed by RSCS using a NIST Traceable radiation source, in conformance to the following standards: ANSI N323A (1997). RSCS New Hampshire Radioactive Material License Number: 381R. RSCS calibration services are performed in accordance with the RSCS Radiation Protection Program Manual and Standard Operating Procedure 2.4.
This calibration certificate shall not be reproduced except in full without the express written consent of RSCS, Inc

Radiation Safety and Control Services, Inc.
91 Portsmouth Ave. Stratham, NH 03885
1-800-525-8339 (603) 778-2871 Fax (603) 778-6879 www.radsafety.com

Certificate of Calibration

2 Channel Scaler Certificate of Calibration

ERG
Environmental Restoration Group, Inc.
8809 Washington St. NE, Suite 150
Albuquerque, NM 87113
(505) 298-4224

Manufacturer: Ludlum Model: 2929 Serial No.: 137620

All Ranges Calibrated Electronically; Ludlum Pulser Generator Serial No.: 97743 ☐ 201932 ☑

This calibration conforms to the requirements and acceptable calibration conditions of ANSI N323A - 1997.
NMRCB Registration No. 481-3 • Calibration of Radiation Detection Instruments & Devices

☑ Mechanical ck. ☐ ~~Meter Zeroed~~ ☐ ~~Geotropism ck.~~ ☐ ~~F/S Response ck.~~ ☑ Audio ck.

☐ ~~THR/WIN ck.~~ High Voltage ck. ☑ 500v ☑ 1000v ☑ 1500v ☑ Battery ck. (min 4.4 vdc)

Alpha Threshold.: 170 mV Beta Threshold.: 4 mV Beta Window.: 50 mV

Voltage setting: 700 volts = 2.94 on HV Dial (Pot.)

Instrument found within tolerance (+/- 10%) ☐ Yes ☐ No

Reference Setting	Alpha Channel Digital Readout		Beta Channel Digital Readout	
	Instrument "As Found Reading"	Integrated Counts (1-minute count)	Instrument "As Found Reading"	Integrated Counts (1-minute count)
400 Kcpm	+/-10%	399556	+/-10%	399481
40 Kcpm		39956		39959
4 Kcpm		3995		3996
400 cpm		399		399

Calibrated By: [signature] Calibration Date: 4-30-07

Calibration Due: 4-30-08

Reviewed By: [signature] Date: 5/1/07

Certificate of Calibration

Voltage Plateau Form

ERG
Environmental Restoration Group, Inc.
8809 Washington St. NE, Suite 150
Albuquerque, NM 87113
(505) 298-4224

Detector Mfg.: Ludlum Model: 43-10-1 Serial No.: PR203054

Counter Mfg.: Ludlum Model: 2929 Serial No.: 137620

This calibration conforms to the requirements and acceptable calibration conditions of ANSI N323A - 1997.
NMRCB Registration No. 481-3 • Calibration of Radiation Detection Instruments & Devices

Alpha Threshold: 170 mV Beta Threshold: 4 mV Beta Window: 50 mV

Geometry / Distance to source: In planchett Cable Length: ☑ 39 inch ☐ Other:

Alpha Source : ☑ Th230 @ 13,300 dpm (1/19/07) sn: 4098-03 ☐ Other:

Beta Source: ☑ Tc99 @ 17,800 dpm (1/15/07) sn: 4099-03 ☐ Other:

Count Time: 1 minute(s)

High Voltage	Alpha Source Counts		Beta Source Counts		Background Counts		Pot. Setting
	Alpha	Beta	Alpha	Beta	Alpha	Beta	
600	3413	312	4	955	0	16	2.52
650	4246	289	8	2251	1	46	2.74
700	4624	352	5	3296	1	56	2.94
750	4724	628	9	4423	0	67	3.20
800	4822	1145	5	5181	3	104	3.38

Comments: Recommended Operating High Voltage: 700 volts

Calibrated By: [signature] Calibration Date: 43007

Calibration Due: 430-08

Reviewed By: [signature] Date: 5/1/07

ERG Form 1.03C

Certificate of Calibration

2 Channel Scaler Certificate of Calibration

ERG
Environmental Restoration Group, Inc.
8809 Washington St. NE, Suite 150
Albuquerque, NM 87113
(505) 298-4224

Manufacturer: Ludlum Model: 2929 Serial No.: 147736

All Ranges Calibrated Electronically; Ludlum Pulser Generator Serial No.: 97743 ☐ 201932 ☑

This calibration conforms to the requirements and acceptable calibration conditions of ANSI N323A - 1997.
NMRCB Registration No. 481-3 • Calibration of Radiation Detection Instruments & Devices

☑ Mechanical ck. ~~☐ Meter Zeroed.~~ ~~☐ Geotropism ck.~~ ~~☐ F/S Response ck.~~ ☑ Audio ck.

~~☐ THR/WIN ck.~~ High Voltage ck. ☑ 500v ☑ 1000v ☑ 1500v ☑ Battery ck. (min 4.4 vdc)

Alpha Threshold.: 175 mV Beta Threshold.: 4 mV Beta Window.: 50 mV

Voltage setting: 700 volts = 3.80 on HV Dial (Pot.)

Instrument found within tolerance (+/- 10%) ☑ Yes ☐ No

Reference Setting	Alpha Channel Digital Readout		Beta Channel Digital Readout	
	Instrument "As Found Reading"	Integrated Counts (1-minute count)	Instrument "As Found Reading"	Integrated Counts (1-minute count)
400 Kcpm	+/-10%	399587	+/-10%	399594
40 Kcpm		39961		39961
4 Kcpm		3997		3997
400 cpm		400		400

Calibrated By: [signature] Calibration Date: 4-30-07

Calibration Due: 4-30-08

Reviewed By: [signature] Date: 5/1/07

Certificate of Calibration

Voltage Plateau Form

ERG
Environmental Restoration Group, Inc.
8809 Washington St. NE, Suite 150
Albuquerque, NM 87113
(505) 298-4224

Detector Mfg.: Ludlum Model: 43-10-1 Serial No.: PR150788

Counter Mfg.: Ludlum Model: 2929 Serial No.: 147736

This calibration conforms to the requirements and acceptable calibration conditions of ANSI N323A - 1997.
NMRCB Registration No. 481-3 • Calibration of Radiation Detection Instruments & Devices

Alpha Threshold: 175 mV Beta Threshold: 4 mV Beta Window: 50 mV

Geometry / Distance to source: In planchett Cable Length: ☑ 39 inch ☐ Other:

Alpha Source : ☑ Th230 @ 13,300 dpm (1/19/07) sn: 4098-03 ☐ Other:

Beta Source: ☑ Tc99 @ 17,800 dpm (1/15/07) sn: 4099-03 ☐ Other:

Count Time: 1 minute(s)

High Voltage	Alpha Source Counts		Beta Source Counts		Background Counts		Pot. Setting
	Alpha	Beta	Alpha	Beta	Alpha	Beta	
600	2639	464	1	658	2	12	3.40
650	3974	347	7	2027	1	50	3.60
700	4589	336	6	2898	0	72	3.80
750	4793	550	6	4187	0	89	4.04

Comments: Recommended Operating High Voltage: 700 volts

Calibrated By: [signature] Calibration Date: 4-30-07

Calibration Due: 4-30-08

Reviewed By: [signature] Date: 5/1/07

Certificate of Calibration

Ratemeter Certificate of Calibration

ERG
Environmental Restoration Group, Inc.
8809 Washington St. NE, Suite 150
Albuquerque, NM 87113
(505) 298-4224

Manufacturer: Ludlum Model: 2360 Serial No.: 184908

All Ranges Calibrated Electronically; Ludlum Pulser Generator Serial No.: ☐ 97743 ☑ 201932

This calibration conforms to the requirements and acceptable calibration conditions of ANSI N323A - 1997.
NMRCB Registration No. 481-3 • Calibration of Radiation Detection Instruments & Devices

☑ Mechanical ck. ☑ Meter Zeroed ☑ Geotropism ck. ☐ ~~F/S Response~~ ck. ☑ Audio ck.

☐ ~~THR/WIN~~ ck. High Voltage ck. ☑ 500v ☑ 1000v ☑ 1500v ☑ Battery ck. (min 4.4 vdc)

Alpha Threshold.: 120 mV Beta Threshold.: 4 mV Beta Window.: 30 mV

Internal Calibration Date Reset ☑ Instrument found within tolerance (+/- 10%) Yes ☑ No ☐

Reference Setting	Instrument "As Found Reading"	Instrument Meter Reading
400 Kcpm	+/-10%	400 Kcpm
100 Kcpm		100 Kcpm
40 Kcpm		40 Kcpm
10 Kcpm		10 Kcpm
4 Kcpm		4 Kcpm
1 Kcpm		1 Kcpm
400 cpm		400 cpm
100 cpm		100 cpm

Reference Setting	Instrument "As Found Reading"	Integrated Counts (1-minute count)
400 Kcpm	+/-10%	398669
40 Kcpm		39869
4 Kcpm		3987
400 cpm		398

Calibrated By: [signature] Calibration Date: 5-7-07

Calibration Due: 5-7-08

Reviewed By: [signature] Date: 5-7-07

ERG Form 1.02C

Certificate of Calibration

Ratemeter Certificate of Calibration

ERG
Environmental Restoration Group, Inc.
8809 Washington St. NE, Suite 150
Albuquerque, NM 87113
(505) 298-4224

Manufacturer: Ludlum Model: 2360 Serial No.: 184920

All Ranges Calibrated Electronically; Ludlum Pulser Generator Serial No.: ☐ 97743 ☑ 201932

This calibration conforms to the requirements and acceptable calibration conditions of ANSI N323A - 1997.
NMRCB Registration No. 481-3 • Calibration of Radiation Detection Instruments & Devices

☑ Mechanical ck. ☑ Meter Zeroed ☑ Geotropism ck. ☐ ~~F/S Response~~ ck. ☑ Audio ck.

☐ ~~THR/WIN ck.~~ High Voltage ck. ☑ 500v ☑ 1000v ☑ 1500v ☑ Battery ck. (min 4.4 vdc)

Alpha Threshold.: 120 mV Beta Threshold.: 3.5 mV Beta Window.: 30 mV

Internal Calibration Date Reset ☑ Instrument found within tolerance (+/- 10%) Yes ☑ No ☐

Reference Setting	Instrument "As Found Reading"	Instrument Meter Reading
400 Kcpm	+/- 10%	400 Kcpm
100 Kcpm		100 Kcpm
40 Kcpm		40 Kcpm
10 Kcpm		10 Kcpm
4 Kcpm		4 Kcpm
1 Kcpm		1 Kcpm
400 cpm		400 cpm
100 cpm		100 cpm

Reference Setting	Instrument "As Found Reading"	Integrated Counts (1-minute count)
400 Kcpm	+/- 10%	400199
40 Kcpm		40020
4 Kcpm		4002
400 cpm		400

Calibrated By: [signature] Calibration Date: 5-1-07

Calibration Due: 5-1-08

Reviewed By: [signature] Date: 5-7-07

ERG Form 1.02C

Certificate of Calibration

Voltage Plateau Form

ERG
Environmental Restoration Group, Inc.
8809 Washington St. NE, Suite 150
Albuquerque, NM 87113
(505) 298-4224

Detector Mfg.: Ludlum Model: 43-93 Serial No.: PR 199826

Counter Mfg.: Ludlum Model: 2360 Serial No.: 184908

This calibration conforms to the requirements and acceptable calibration conditions of ANSI N323A - 1997.
NMRCB Registration No. 481-3 • Calibration of Radiation Detection Instruments & Devices

Alpha Threshold: 120 mV Beta Threshold: 4 mV Beta Window: 38 mV

Detector geometry to source: ☑ Face, ☐ Side, ☐ Below, ☐ Other:

Distance to source: ☑ Contact, ☐ 6 Inches, ☐ Other:

Alpha Source : ☑ Th230 @ 13,300 dpm (1/19/07) sn: 4098-03 ☐ Other:

Beta Source: ☑ Tc99 @ 17,800 dpm (1/15/07) sn: 4099-03 ☐ Other:

Count Time: 1 minute(s)

High Voltage	Alpha Source Counts		Beta Source Counts		Background Counts	
	Alpha	Beta	Alpha	Beta	Alpha	Beta
650	2304	288	4	979	4	69
700	2547	414	9	2026	0	173
725	2685	553	3	2865	1	245
750	2706	730	5	3270	3	315

Comments: Recommended Operating High Voltage: 725 volts

Calibrated By: [signature] Calibration Date: 5-7-07

Calibration Due: 5-7-08

Reviewed By: [signature] Date: 5-7-07

ERG Form 1.03B

Certificate of Calibration

Ratemeter Certificate of Calibration

ERG
Environmental Restoration Group, Inc.
8809 Washingtion St. NE, Suite 150
Albuquerque, NM 87113
(505) 298-4224

Manufacturer: Ludlum Model: 2360 Serial No.: 184903

All Ranges Calibrated Electronically; Ludlum Pulser Generator Serial No.: ☐ 97743 ☑ 201932

This calibration conforms to the requirements and acceptable calibration conditions of ANSI N323A - 1997.
NMRCB Registration No. 481-3 • Calibration of Radiation Detection Instruments & Devices

☑ Mechanical ck. ☑ Meter Zeroed ☑ Geotropism ck. ☐ ~~F/S Response~~ ck. ☑ Audio ck.

☐ ~~THR/WIN ck.~~ High Voltage ck. ☑ 500v ☑ 1000v ☑ 1500v ☑ Battery ck. (min 4.4 vdc)

Alpha Threshold.: 120 mV Beta Threshold.: 3.5 mV Beta Window.: 80 mV

Internal Calibration Date Reset ☑ Instrument found within tolerance (+/- 10%) Yes ☑ No ☐

Reference Setting	Instrument "As Found Reading"	Instrument Meter Reading
400 Kcpm	+/- 10%	400 Kcpm
100 Kcpm		100 Kcpm
40 Kcpm		40 Kcpm
10 Kcpm		10 Kcpm
4 Kcpm		4 Kcpm
1 Kcpm		1 Kcpm
400 cpm		400 cpm
100 cpm		100 cpm

Reference Setting	Instrument "As Found Reading"	Integrated Counts (1-minute count)
400 Kcpm	+/-10%	399873
40 Kcpm		39989
4 Kcpm		3999
400 cpm		400

Calibrated By: [signature] Calibration Date: 5-7-07

Calibration Due: 5-7-08

Reviewed By: [signature] Date: 5-7-08 TM

ERG Form 1.02C

Certificate of Calibration

Voltage Plateau Form

ERG
Environmental Restoration Group, Inc.
8809 Washington St. NE, Suite 150
Albuquerque, NM 87113
(505) 298-4224

Detector Mfg.: Ludlum Model: 43-93 Serial No.: PR 179868

Counter Mfg.: Ludlum Model: 2360 Serial No.: 184903

This calibration conforms to the requirements and acceptable calibration conditions of ANSI N323A - 1997.
NMRCB Registration No. 481-3 • Calibration of Radiation Detection Instruments & Devices

Alpha Threshold: 120 mV Beta Threshold: 3.5 mV Beta Window: 30 mV

Detector geometry to source: ☑ Face, ☐ Side, ☐ Below, ☐ Other:

Distance to source: ☑ Contact, ☐ 6 Inches, ☐ Other:

Alpha Source : ☑ Th230 @ 13,300 dpm (1/19/07) sn: 4098-03 ☐ Other:

Beta Source: ☑ Tc99 @ 17,800 dpm (1/15/07) sn: 4099-03 ☐ Other:

Count Time: 1 minute(s)

High Voltage	Alpha Source Counts		Beta Source Counts		Background Counts	
	Alpha	Beta	Alpha	Beta	Alpha	Beta
700	1822	279	4	768	0	79
750	2699	458	4	2125	1	180
→ 775	2739	548	7	2513	0	233
800	2873	703	7	3170	3	290
850	2998	1617	7	3966	0	375

Comments: Recommended Operating High Voltage: >775 volts

Calibrated By: [signature] Calibration Date: 5-7-07

Calibration Due: 5-7-08

Reviewed By: [signature] Date: 5-7-07

ERG Form 1.03B

Certificate of Calibration

Ratemeter Certificate of Calibration

ERG
Environmental Restoration Group, Inc.
8809 Washington St. NE, Suite 150
Albuquerque, NM 87113
(505) 298-4224

Manufacturer: Ludlum Model: 2360 Serial No.: 168040

All Ranges Calibrated Electronically; Ludlum Pulser Generator Serial No.: ☐ 97743 ☑ 201932

This calibration conforms to the requirements and acceptable calibration conditions of ANSI N323A - 1997.
NMRCB Registration No. 481-3 • Calibration of Radiation Detection Instruments & Devices

☑ Mechanical ck. ☑ Meter Zeroed ☑ Geotropism ck. ~~☐ F/S Response ck.~~ ☑ Audio ck.

~~☐ THR/WIN ck.~~ High Voltage ck. ☑ 500v ☑ 1000v ☑ 1500v ☑ Battery ck. (min 4.4 vdc)

Alpha Threshold.: 120 mV Beta Threshold.: 3.5 mV Beta Window.: 30 mV

Internal Calibration Date Reset ☑ Instrument found within tolerance (+/- 10%) Yes ☑ No ☐

Reference Setting	Instrument "As Found Reading"	Instrument Meter Reading
400 Kcpm	+/- 10%	400 Kcpm
100 Kcpm		100 Kcpm
40 Kcpm		40 Kcpm
10 Kcpm		10 Kcpm
4 Kcpm		4 Kcpm
1 Kcpm		1 Kcpm
400 cpm		400 cpm
100 cpm		100 cpm

Reference Setting	Instrument "As Found Reading"	Integrated Counts (1-minute count)
400 Kcpm	+/- 10%	398915
40 Kcpm		39894
4 Kcpm		3989
400 cpm		399

Calibrated By: [signature] Calibration Date: 5-1-07

Calibration Due: 5-1-08

Reviewed By: [signature] Date: 5-7-07

ERG Form 1.02C

Certificate of Calibration

Voltage Plateau Form

ERG
Environmental Restoration Group, Inc.
8809 Washington St. NE, Suite 150
Albuquerque, NM 87113
(505) 298-4224

Detector Mfg.: Ludlum Model: 43-93 Serial No.: PR179859

Counter Mfg.: Ludlum Model: 2360 Serial No.: ~~184926~~ BSH 184920

This calibration conforms to the requirements and acceptable calibration conditions of ANSI N323A - 1997.
NMRCB Registration No. 481-3 • Calibration of Radiation Detection Instruments & Devices

Alpha Threshold: 120 mV Beta Threshold: 3.5 mV Beta Window: 30 mV

Detector geometry to source: ☑ Face, ☐ Side, ☐ Below, ☐ Other:

Distance to source: ☑ Contact, ☐ 6 Inches, ☐ Other:

Alpha Source : ☑ Th230 @ 13,300 dpm (1/19/07) sn: 4098-03 ☐ Other:

Beta Source: ☑ Tc99 @ 17,800 dpm (1/15/07) sn: 4099-03 ☐ Other:

Count Time: 1 minute(s)

High Voltage	Alpha Source Counts		Beta Source Counts		Background Counts	
	Alpha	Beta	Alpha	Beta	Alpha	Beta
700	1422	299	3	421	3	64
750	2547	361	4	1743	1	156
→ 800	2825	535	3	2685	2	244
850	2906	1022	11	3707	4	348

Comments: Recommended Operating High Voltage: 800 volts

Calibrated By: [signature] Calibration Date: 5-7-07

Calibration Due: 5-7-08

Reviewed By: [signature] Date: 5-7-07

ERG Form 1.03B

Certificate of Calibration

Voltage Plateau Form

ERG
Environmental Restoration Group, Inc.
8809 Washington St. NE, Suite 150
Albuquerque, NM 87113
(505) 298-4224

Detector Mfg.: Ludlum Model: 43-93 Serial No.: PR 197432

Counter Mfg.: Ludlum Model: 2360 Serial No.: 168040

This calibration conforms to the requirements and acceptable calibration conditions of ANSI N323A - 1997.
NMRCB Registration No. 481-3 • Calibration of Radiation Detection Instruments & Devices

Alpha Threshold: 120 mV Beta Threshold: 3.5 mV Beta Window: 30 mV

Detector geometry to source: ☑ Face, ☐ Side, ☐ Below, ☐ Other:

Distance to source: ☑ Contact, ☐ 6 Inches, ☐ Other:

Alpha Source : ☑ Th230 @ 13,300 dpm (1/19/07) sn: 4098-03 ☐ Other:

Beta Source: ☑ Tc99 @ 17,800 dpm (1/15/07) sn: 4099-03 ☐ Other:

Count Time: 1 minute(s)

High Voltage	Alpha Source Counts		Beta Source Counts		Background Counts	
	Alpha	Beta	Alpha	Beta	Alpha	Beta
700	1971	304	1	523	0	74
750	2534	395	8	1549	1	181
→ 775	2623	469	1	2042	2	245
800	2706	583	4	2720	1	295

Comments: Recommended Operating High Voltage: 775 volts

Calibrated By: Calibration Date: 5-7-07

Calibration Due: 5-7-08

Reviewed By: Date: 5-7-07

ERG Form 1.03B

Certificate of Calibration

Ratemeter / Scaler Certificate of Calibration

ERG
Environmental Restoration Group, Inc.
8809 Washington St. NE, Suite 150
Albuquerque, NM 87113
(505) 298-4224

Manufacturer: Ludlum Model: 2221 Serial No.: 149942

All Ranges Calibrated Electronically; Ludlum Pulser Generator Serial No.: ☐ 97743 ☑ 201932

This calibration conforms to the requirements and acceptable calibration conditions of ANSI N323A - 1997.
NMRCB Registration No. 481-3 • Calibration of Radiation Detection Instruments & Devices

☑ Mechanical ck. ☑ Meter Zeroed ☑ Geotropism ck. ☑ F/S Response ck. ☑ Audio ck.

☐ THR/WIN ck. High Voltage ck.: ☑ 500v ☑ 1000v ☑ 1500v ☑ Battery ck. (min 4.4 vdc)

Threshold Setting: 10 mV

Instrument found within tolerance (+/- 10%) ☑ Yes ☐ No

Reference Calibration Point	Instrument "As Found Reading"	Instrument Meter Reading
400 Kcpm	+/- 10%	400 Kcpm
100 Kcpm		100 Kcpm
40 Kcpm		40 Kcpm
10 Kcpm		10 Kcpm
4 Kcpm		4 Kcpm
1 Kcpm		1 Kcpm
400 cpm		400 cpm
100 cpm		100 cpm

Reference Calibration Point	Integrated Counts (1-minute count)	Log Scale Count Rate	Instrument "As Found Reading"
400 Kcpm	+/- 10%	400 Kcpm	399543
40 Kcpm		40 Kcpm	39959
4 Kcpm		4 Kcpm	3996
400 cpm		400 cpm	400

Calibrated By: [signature] Calibration Date: 4/30/07

Calibration Due: 4/30/08

Reviewed By: [signature] Date: 5/1/07

ERG Form 1.02B

Certificate of Calibration

Ratemeter / Scaler Certificate of Calibration

ERG
Environmental Restoration Group, Inc.
8809 Washington St. NE, Suite 150
Albuquerque, NM 87113
(505) 298-4224

Manufacturer: Ludlum Model: 2221 Serial No.: 108862

All Ranges Calibrated Electronically; Ludlum Pulser Generator Serial No.: ☐ 97743 ☑ 201932

This calibration conforms to the requirements and acceptable calibration conditions of ANSI N323A - 1997.
NMRCB Registration No. 481-3 • Calibration of Radiation Detection Instruments & Devices

☑ Mechanical ck. ☑ Meter Zeroed ☑ Geotropism ck. ☑ F/S Response ck. ☑ Audio ck.

☑ THR/WIN ck. High Voltage ck.: ☑ 500v ☑ 1000v ☑ 1500v ☑ Battery ck. (min 4.4 vdc)

Threshold Setting: 10 mV

Instrument found within tolerance (+/- 10%) ☑ Yes ☐ No

Reference Calibration Point	Instrument "As Found Reading"	Instrument Meter Reading
400 Kcpm	+/-10%	400 Kcpm
100 Kcpm		100 Kcpm
40 Kcpm		40 Kcpm
10 Kcpm		10 Kcpm
4 Kcpm		4 Kcpm
1 Kcpm		1 Kcpm
400 cpm		400 cpm
100 cpm		100 cpm

Reference Calibration Point	Integrated Counts (1-minute count)	Log Scale Count Rate	Instrument "As Found Reading"
400 Kcpm	399499	400 Kcpm	+/-10%
40 Kcpm	39951	40 Kcpm	
4 Kcpm	3995	4 Kcpm	
400 cpm	399	400 cpm	

Calibrated By: [signature]

Calibration Date: 4-30-07

Calibration Due: 4-30-08

Reviewed By: [signature]

Date: 5/1/07

ERG Form 1.02B

Certificate of Calibration

Voltage Plateau Form

ERG
Environmental Restoration Group, Inc.
8809 Washington St. NE, Suite 150
Albuquerque, NM 87113
(505) 298-4224

Detector Mfg.: Ludlum Model: 44-10 Serial No.: PR 154615

Counter Mfg.: Ludlum Model: 2221 Serial No.: 108862

This calibration conforms to the requirements and acceptable calibration conditions of ANSI N323A - 1997.
NMRCB Registration No. 481-3 • Calibration of Radiation Detection Instruments & Devices

Counter Threshold Setting: 10 mV Cable Length: ☐ 39 inch, ☐ 5 foot, ☑ Other: Curly

Detector geometry to source: ☐ Face, ☑ Side, ☐ Below, ☐ Other:

Distance to source: ☐ Contact, ☑ 6 Inches, ☐ Other:

Source : ☐ Th230 @ 13,300 dpm (1/19/07) sn: 4098-03 ☐ Tc99 @ 17,800 dpm (1/15/07) sn: 4099-03

☑ Cs137 @ 5.84 µCi (3/07/07) sn: 4097-03 ☐ Other:

Count Time: 1 minute(s)

High Voltage	Gross Source Counts	Background Counts
700	12432	
800	41180	
900	65573	
1000	76520	
1100	81396	10098
1200	83866	

Comments: Recommended Operating High Voltage: 1100 volts

Calibrated By: [signature] Calibration Date: 4-30-07

Calibration Due: 4-30-08

Reviewed By: [signature] Date: 5/1/07

ERG Form 1.03A1

Certificate of Calibration

Voltage Plateau Form

ERG
Environmental Restoration Group, Inc.
8809 Washington St. NE, Suite 150
Albuquerque, NM 87113
(505) 298-4224

Detector Mfg.: Ludlum Model: 44-10 Serial No.: PR 150783

Counter Mfg.: Ludlum Model: 2221 Serial No.: 149942

This calibration conforms to the requirements and acceptable calibration conditions of ANSI N323A - 1997.
NMRCB Registration No. 481-3 • Calibration of Radiation Detection Instruments & Devices

Counter Threshold Setting: 10 mV Cable Length: ☐ 39 inch, ☐ 5 foot, ☑ Other: Cuely

Detector geometry to source: ☐ Face, ☑ Side, ☐ Below, ☐ Other:

Distance to source: ☐ Contact, ☑ 6 Inches, ☐ Other:

Source : ☐ Th230 @ 13,300 dpm (1/19/07) sn: 4098-03 ☐ Tc99 @ 17,800 dpm (1/15/07) sn: 4099-03

☑ Cs137 @ 5.84 µCi (3/07/07) sn: 4097-03 ☐ Other:

Count Time: 1 minute(s)

High Voltage	Gross Source Counts	Background Counts
700	1022	
800	38581	
900	64904	
1000	77389	
1100	81318	10286
1200	86225	

Comments: Recommended Operating High Voltage: 1100 volts

Calibrated By: [signature] Calibration Date: 4-30-07

Calibration Due: 4-30-08

Reviewed By: [signature] Date: 5/1/07

ERG Form 1.03A1

Designer and Manufacturer of Scientific and Industrial Instruments

CERTIFICATE OF CALIBRATION

LUDLUM MEASUREMENTS, INC.
POST OFFICE BOX 810 PH. 325-235-5494
501 OAK STREET FAX NO. 325-235-4672
SWEETWATER, TEXAS 79556, U.S.A.

CUSTOMER ENVIRONMENTAL RESTORATION GRP ORDER NO. 264544/306669

Mfg. Ludlum Measurements, Inc. Model 19 Serial No. 221521

Mfg. Model Serial No.

Cal. Date 15-Oct-06 Cal Due Date 15-Oct-07 Cal. Interval 1 Year Meterface 202-1070

Check mark ☑ applies to applicable instr. and/or detector IAW mfg. spec. T. 74 °F RH 57 % Alt 693.8 mm Hg

☐ New Instrument Instrument Received ☐ Within Toler. +-10% ☑ 10-20% ☐ Out of Tol. ☐ Requiring Repair ☐ Other-See comments

☑ Mechanical ck. ☑ Meter Zeroed ☐ Background Subtract ☐ Input Sens. Linearity
☑ F/S Resp. ck ☑ Reset ck. ☐ Window Operation ☐ Geotropism
☑ Audio ck. ☐ Alarm Setting ck. ☑ Batt. ck. (Min. Volt) 2.2 VDC

☐ Calibrated in accordance with LMI SOP 14.8 rev 12/05/89. ☑ Calibrated in accordance with LMI SOP 14.9 rev 02/07/97.

Instrument Volt Set 800 V Input Sens. 29 mV Det. Oper. V at mV Threshold Dial Ratio = mV

☑ HV Readout (2 points) Ref./Inst. 500 / 513 V Ref./Inst. 1000 / 997 V

COMMENTS:

Gamma Calibration: GM detectors positioned perpendicular to source except for M 44-9 in which the front of probe faces source.

RANGE/MULTIPLIER	REFERENCE CAL. POINT	INSTRUMENT REC'D "AS FOUND READING"	INSTRUMENT METER READING*
5000	4000μR/hr	3800	4000
5000	1000μR/hr	850	1000
500	400μR/hr = 72200 cpm	390	400
500	100μR/hr	90	100
250	200μR/hr = 35800 cpm	200	200
250	100μR/hr	100	100
50	7220 cpm	39.5	40
50	1805 cpm	9.5	10
25	3580 cpm	20	20
25	895 cpm	10	10

*Uncertainty within ± 10% C.F. within ± 20%

Range(s) Calibrated Electronically

	REFERENCE CAL. POINT	INSTRUMENT RECEIVED	INSTRUMENT METER READING*		REFERENCE CAL. POINT	INSTRUMENT RECEIVED	INSTRUMENT METER READING*
Digital Readout				Log Scale			

Ludlum Measurements, Inc. certifies that the above instrument has been calibrated by standards traceable to the National Institute of Standards and Technology, or to the calibration facilities of other International Standards Organization members, or have been derived from accepted values of natural physical constants or have been derived by the ratio type of calibration techniques. The calibration system conforms to the requirements of ANSI/NCSL Z540-1-1994 and ANSI N323-1978

State of Texas Calibration License No. LO-1963

Reference Instruments and/or Sources: ☐ S-394 ☐ 1122 ☐ 781

Cs-137 Gamma S/N ☐ 1162 ☐ G112 ☑ M565 ☐ 5105 ☐ T1008 ☐ T879 ☐ E552 ☐ E551 ☐ 720 ☐ 734 ☐ 1616 ☐ Neutron Am-241 Be S/N T-304

☐ Alpha S/N ☐ Beta S/N ☐ Other

☑ m 500 S/N 141240 ☐ Oscilloscope S/N ☑ Multimeter S/N 71300492

Calibrated By: Veronica Quelas Date 15 Oct 06

Reviewed By: Rhonda Harris Date 15 Oct 06

This certificate shall not be reproduced except in full, without the written approval of Ludlum Measurements, Inc.
FORM C22A 06/02/2006

AC Inst. Only ☐ Passed Dielectric (Hi-Pot) and Continuity Test ☐ Failed:

Designer and Manufacturer of Scientific and Industrial Instruments

CERTIFICATE OF CALIBRATION

LUDLUM MEASUREMENTS, INC.
POST OFFICE BOX 810 PH. 325-235-5494
501 OAK STREET FAX NO. 325-235-4672
SWEETWATER, TEXAS 79556, U.S.A.

CUSTOMER ENVIRONMENTAL RESTORATION GROUP ORDER NO. 263667/306211

Mfg. Ludlum Measurements, Inc. Model 19 Serial No. 111333

Mfg. Model Serial No.

Cal. Date 28-Sep-06 Cal Due Date 28-Sep-07 Cal. Interval 1 Year Meterface 202-016

Check mark ☑ applies to applicable instr. and/or detector IAW mfg. spec. T. 73 °F RH 38 % Alt 702.8 mm Hg

☐ New Instrument Instrument Received ☑ Within Toler. +-10% ☐ 10-20% ☐ Out of Tol. ☐ Requiring Repair ☐ Other-See comments

☑ Mechanical ck. ☑ Meter Zeroed ☐ Background Subtract ☐ Input Sens. Linearity
☑ F/S Resp. ck ☑ Reset ck. ☐ Window Operation ☑ Geotropism
☑ Audio ck. ☐ Alarm Setting ck. ☑ Batt. ck. (Min. Volt) 2.2 VDC

☐ Calibrated in accordance with LMI SOP 14.8 rev 12/05/89. ☑ Calibrated in accordance with LMI SOP 14.9 rev 02/07/97.

Instrument Volt Set 900 V Input Sens. 34 mV Det. Oper. V at mV Threshold Dial Ratio = mV

☐ HV Readout (2 points) Ref./Inst. / V Ref./Inst. / V

COMMENTS:

Gamma Calibration: GM detectors positioned perpendicular to source except for M 44-9 in which the front of probe faces source.

RANGE/MULTIPLIER	REFERENCE CAL. POINT	INSTRUMENT REC'D "AS FOUND READING"	INSTRUMENT METER READING*
5000	4000 uR/hr	4300	4000
5000	1000 uR/hr	1100	1000
500	400 uR/hr = 65300 gm	420	400
500	100 uR/hr	105	100
250	200 uR/hr = 33000 gm	210	200
250	100 uR/hr	105	100
50	6530 cpm	42	40
50	1630 cpm	10.2	10
25	3300 cpm	22	20
25	820 cpm	~~5.2~~ 5.4	5

*Uncertainty within ± 10% C.F. within ± 20%

50, 25 **Range(s) Calibrated Electronically**

	REFERENCE CAL. POINT	INSTRUMENT RECEIVED	INSTRUMENT METER READING*
Digital Readout			

	REFERENCE CAL. POINT	INSTRUMENT RECEIVED	INSTRUMENT METER READING*
Log Scale			

Ludlum Measurements, Inc. certifies that the above instrument has been calibrated by standards traceable to the National Institute of Standards and Technology, or to the calibration facilities of other International Standards Organization members, or have been derived from accepted values of natural physical constants or have been derived by the ratio type of calibration techniques. The calibration system conforms to the requirements of ANSI/NCSL Z540-1-1994 and ANSI N323-1978

State of Texas Calibration License No. LO-1963

Reference Instruments and/or Sources: ☐ S-394 ☐ 1122 ☐ 781

Cs-137 Gamma S/N ☐ 1162 ☐ G112 ☑ M565 ☐ 5105 ☐ T1008 ☐ T879 ☐ E552 ☐ E551 ☐ 720 ☐ 734 ☐ 1616 ☐ Neutron Am-241 Be S/N T-304

☐ Alpha S/N ☐ Beta S/N ☐ Other

☑ m 500 S/N 54683 ☐ Oscilloscope S/N ☑ Multimeter S/N 70602489

Calibrated By: Duane Jackson Date 28 Sep 06

Reviewed By: [illegible] Date 28 Sep 06

This certificate shall not be reproduced except in full, without the written approval of Ludlum Measurements, Inc.
FORM C22A 06/02/2006

AC Inst. Only ☐ Passed Dielectric (Hi-Pot) and Continuity Test ☐ Failed:

Designer and Manufacturer of Scientific and Industrial Instruments

CERTIFICATE OF CALIBRATION

LUDLUM MEASUREMENTS, INC.
POST OFFICE BOX 810 PH. 325-235-5494
501 OAK STREET FAX NO. 325-235-4672
SWEETWATER, TEXAS 79556, U.S.A.

CUSTOMER ENVIRONMENTAL RESTORATION GRP ORDER NO. 264543 / 306667

Mfg. Ludlum Measurements, Inc. Model 19 Serial No. 193604

Mfg. Model Serial No.

Cal. Date 10-Oct-06 Cal Due Date 10-Oct-07 Cal. Interval 1 Year Meterface 202-016

Check mark ☑ applies to applicable instr. and/or detector IAW mfg. spec. T. 73 °F RH 49 % Alt 700.8 mm Hg

☐ New Instrument Instrument Received ☑ Within Toler. +-10% ☐ 10-20% ☐ Out of Tol. ☐ Requiring Repair ☐ Other-See comments

☑ Mechanical ck. ☑ Meter Zeroed ☐ Background Subtract ☐ Input Sens. Linearity
☑ F/S Resp. ck ☑ Reset ck. ☐ Window Operation ☐ Geotropism
☑ Audio ck. ☐ Alarm Setting ck. ☑ Batt. ck. (Min. Volt) 2.2 VDC

☐ Calibrated in accordance with LMI SOP 14.8 rev 12/05/89. ☑ Calibrated in accordance with LMI SOP 14.9 rev 02/07/97.

Instrument Volt Set 575 V Input Sens. 35 mV Det. Oper. V at mV Threshold Dial Ratio = mV

☑ HV Readout (2 points) Ref./Inst. / V Ref./Inst. / V

COMMENTS:

Gamma Calibration: GM detectors positioned perpendicular to source except for M 44-9 in which the front of probe faces source.

RANGE/MULTIPLIER	REFERENCE CAL. POINT	INSTRUMENT REC'D "AS FOUND READING"	INSTRUMENT METER READING*
5000	4000 uR/hr	3900	4000
5000	1000 uR/hr	1000	1000
500	400 uR/hr = 70200 cpm	400	400
500	100 uR/hr	100	100
250	200 uR/hr = 38900 cpm	190	200
250	100 uR/hr	100	100
50	7020 cpm	40	40
50	1755 cpm	10	10
25	3890 cpm	22	20
25	972 cpm	5.5	5

*Uncertainty within ± 10% C.F. within ± 20% 50, 25 **Range(s) Calibrated Electronically**

Digital Readout	REFERENCE CAL. POINT	INSTRUMENT RECEIVED	INSTRUMENT METER READING*	Log Scale	REFERENCE CAL. POINT	INSTRUMENT RECEIVED	INSTRUMENT METER READING*

For International Standards Organization members, or have been derived from accepted values of natural physical constants or have been derived by the ratio type of calibration techniques. calibration system conforms to the requirements of ANSI/NCSL Z540-1-1994 and ANSI N323-1978 State of Texas Calibration License No. LO-1963

Reference Instruments and/or Sources: ☐ S-394 ☐ 1122 ☑ 781

Cs-137 Gamma S/N ☐ 1162 ☐ G112 ☐ M565 ☐ 5105 ☐ T1008 ☐ T879 ☐ E552 ☐ E551 ☐ 720 ☐ 734 ☐ 1616 ☐ Neutron Am-241 Be S/N T-304

☐ Alpha S/N ☐ Beta S/N ☐ Other

☑ m 500 S/N 189509 ☐ Oscilloscope S/N ☑ Multimeter S/N 71300492

Calibrated By: Wendell Williams Date 10-OCT-06

Reviewed By: Rhonda Harris Date 10 Oct 06

This certificate shall not be reproduced except in full, without the written approval of Ludlum Measurements, Inc.
FORM C22A 06/02/2006

AC Inst. Only ☐ Passed Dielectric (Hi-Pot) and Continuity Test ☐ Failed:

Designer and Manufacturer of Scientific and Industrial Instruments

CERTIFICATE OF CALIBRATION

LUDLUM MEASUREMENTS, INC.
POST OFFICE BOX 810 PH. 325-235-5494
501 OAK STREET FAX NO. 325-235-4672
SWEETWATER, TEXAS 79556, U.S.A.

CUSTOMER ENVIRONMENTAL RESTORATION GRP ORDER NO. / 264543 / 306667

Mfg. Ludlum Measurements, Inc. Model 19 Serial No. 101662

Mfg. Model Serial No.

Cal. Date 10-Oct-06 Cal Due Date 10-Oct-07 Cal. Interval 1 Year Meterface 202-016

heck mark ☑ applies to applicable instr. and/or detector IAW mfg. spec. T. 73 °F RH 49 % Alt 700.8 mm Hg

☐ New Instrument Instrument Received ☑ Within Toler. +-10% ☐ 10-20% ☐ Out of Tol. ☐ Requiring Repair ☐ Other-See comments

☑ Mechanical ck. ☑ Meter Zeroed ☐ Background Subtract ☐ Input Sens. Linearity
☑ F/S Resp. ck ☑ Reset ck. ☐ Window Operation ☐ Geotropism
☑ Audio ck. ☐ Alarm Setting ck. ☑ Batt. ck. (Min. Volt) 2.2 VDC

☐ Calibrated in accordance with LMI SOP 14.8 rev 12/05/89. ☑ Calibrated in accordance with LMI SOP 14.9 rev 02/07/97.

strument Volt Set 650 V Input Sens. 33 mV Det. Oper. V at mV Threshold Dial Ratio = mV

☑ HV Readout (2 points) Ref./Inst. / V Ref./Inst. / V

:OMMENTS:

nma Calibration: GM detectors positioned perpendicular to source except for M 44-9 in which the front of probe faces source.

RANGE/MULTIPLIER	REFERENCE CAL. POINT	INSTRUMENT REC'D "AS FOUND READING"	INSTRUMENT METER READING*
5000	4000 uR/hr	4000	4000
5000	1000 uR/hr	1000	1000
500	400 uR/hr = 72200 cpm	380	400
500	100 uR/hr	100	100
250	200 uR/hr = 3440 cpm	190	200
250	100 uR/hr	100	100
50	7220 cpm	39	40
50	1805 cpm	10	10
25	3440 cpm	18	20
25	860 cpm	5	5

*Uncertainty within ± 10% C.F. within ± 20%

50, 25 **Range(s) Calibrated Electronically**

	REFERENCE CAL. POINT	INSTRUMENT RECEIVED	INSTRUMENT METER READING*		REFERENCE CAL. POINT	INSTRUMENT RECEIVED	INSTRUMENT METER READING*
;ital adout				Log Scale			

r International Standards Organization members, or have been derived from accepted values of natural physical constants or have been derived by the ratio type of calibration techniques.
calibration system conforms to the requirements of ANSI/NCSL Z540-1-1994 and ANSI N323-1978
State of Texas Calibration License No. LO-1963

eference Instruments and/or Sources: ☐ S-394 ☐ 1122 ☐ 781

-137 Gamma S/N ☐ 1162 ☐ G112 ☑ M565 ☐ 5105 ☐ T1008 ☐ T879 ☐ E552 ☐ E551 ☐ 720 ☐ 734 ☐ 1616 ☐ Neutron Am-241 Be S/N T-304

☐ Alpha S/N ☐ Beta S/N ☐ Other

☑ m 500 S/N 189509 ☐ Oscilloscope S/N ☑ Multimeter S/N 71300492

alibrated By: Wendell Williams Date 10-OCT-06

eviewed By: Rhonda Hamm Date 10 Oct 06

is certificate shall not be reproduced except in full, without the written approval of Ludlum Measurements, Inc.
)RM C22A 06/02/2006

AC Inst. Only ☐ Passed Dielectric (Hi-Pot) and Continuity Test ☐ Failed:

Certificate of Calibration

Ratemeter Certificate of Calibration

ERG
Environmental Restoration Group, Inc.
8809 Washington St. NE, Suite 150
Albuquerque, NM 87113
(505) 298-4224

Manufacturer: Ludlum Model: 12 Serial No.: 223414

All Ranges Calibrated Electronically; Ludlum Pulser Generator Serial No.: ☐ 97743 ☑ 201932

This calibration conforms to the requirements and acceptable calibration conditions of ANSI N323A - 1997.
NMRCB Registration No. 481-3 • Calibration of Radiation Detection Instruments & Devices

☑ Mechanical ck. ☑ Meter Zeroed ☑ Geotropism ck. ☑ F/S Response ck. ☑ Audio ck.

~~☐ THR/WIN ck.~~ High Voltage ck.: ☑ 500v ☑ 1000v ☑ 1500v ☑ Battery ck. (min 4.4 vdc)

Threshold Setting: 40 mV

Instrument found within tolerance (+/- 10%) ☑ Yes ☐ No

Reference Calibration Point	Instrument "As Found Reading"	Instrument Meter Reading
400 Kcpm	+/-10%	400Kcpm
100 Kcpm		100Kcpm
40 Kcpm		40Kcpm
10 Kcpm		10Kcpm
4 Kcpm		4Kcpm
1 Kcpm		1Kcpm
400 cpm		400cpm
100 cpm		100cpm

Comments:

Calibrated By: [signature] Calibration Date: 4-30-07

Calibration Due: 4-30-08

Reviewed By: [signature] Date: 5/1/07

ERG Form 1.02A

Certificate of Calibration

Ratemeter Certificate of Calibration

ERG
Environmental Restoration Group, Inc.
8809 Washington St. NE, Suite 150
Albuquerque, NM 87113
(505) 298-4224

Manufacturer: Ludlum Model: 12 Serial No.: 149332

All Ranges Calibrated Electronically; Ludlum Pulser Generator Serial No.: ☐ 97743 ☑ 201932

This calibration conforms to the requirements and acceptable calibration conditions of ANSI N323A - 1997.
NMRCB Registration No. 481-3 • Calibration of Radiation Detection Instruments & Devices

☑ Mechanical ck. ☑ Meter Zeroed ☑ Geotropism ck. ☑ F/S Response ck. ☑ Audio ck.

☐ ~~THR/WIN ck.~~ High Voltage ck.: ☑ 500v ☑ 1000v ☑ 1500v ☑ Battery ck. (min 4.4 vdc)

Threshold Setting: 40 mV

Instrument found within tolerance (+/- 10%) ☑ Yes ☐ No

Reference Calibration Point	Instrument "As Found Reading"	Instrument Meter Reading
400 Kcpm	+/- 10%	400 Kcpm
100 Kcpm		100 Kcpm
40 Kcpm		40 Kcpm
10 Kcpm		10 Kcpm
4 Kcpm		4 Kcpm
1 Kcpm		1 Kcpm
400 cpm		400 cpm
100 cpm		100 cpm

Comments:

Calibrated By: [signature] Calibration Date: 4-30-07

Calibration Due: 4-30-08

Reviewed By: [signature] Date: 5/1/07

ERG Form 1.02A

Certificate of Calibration

Ratemeter Certificate of Calibration

ERG
Environmental Restoration Group, Inc.
8809 Washington St. NE, Suite 150
Albuquerque, NM 87113
(505) 298-4224

Manufacturer: Ludlum Model: 12 Serial No.: 229304

All Ranges Calibrated Electronically; Ludlum Pulser Generator Serial No.: ☐ 97743 ☑ 201932

This calibration conforms to the requirements and acceptable calibration conditions of ANSI N323A - 1997.
NMRCB Registration No. 481-3 • Calibration of Radiation Detection Instruments & Devices

☑ Mechanical ck. ☑ Meter Zeroed ☑ Geotropism ck. ☑ F/S Response ck. ☑ Audio ck.

~~☐ THR/WIN ck.~~ High Voltage ck.: ☑ 500v ☐ 1000v ☐ 1500v ☑ Battery ck. (min 4.4 vdc)

Threshold Setting: 40 mV

Instrument found within tolerance (+/- 10%) ☑ Yes ☐ No

Reference Calibration Point	Instrument "As Found Reading"	Instrument Meter Reading
400 Kcpm	+/-10%	400 Kcpm
100 Kcpm		100 Kcpm
40 Kcpm		40 Kcpm
10 Kcpm		10 Kcpm
4 Kcpm		4 Kcpm
1 Kcpm		1 Kcpm
400 cpm		400 cpm
100 cpm		100 cpm

Comments:

Calibrated By: [signature] Calibration Date: 4-30-07

Calibration Due: 4-30-08

Reviewed By: [signature] Date: 5/1/07

ERG Form 1.02A

Certificate of Calibration

Ratemeter Certificate of Calibration

ERG
Environmental Restoration Group, Inc.
8809 Washington St. NE, Suite 150
Albuquerque, NM 87113
(505) 298-4224

Manufacturer: Ludlum Model: 12 Serial No.: 229277

All Ranges Calibrated Electronically; Ludlum Pulser Generator Serial No.: ☐ 97743 ☑ 201932

This calibration conforms to the requirements and acceptable calibration conditions of ANSI N323A - 1997.
NMRCB Registration No. 481-3 • Calibration of Radiation Detection Instruments & Devices

☑ Mechanical ck. ☑ Meter Zeroed ☑ Geotropism ck. ☑ F/S Response ck. ☑ Audio ck.

☐ ~~THR/WIN ck.~~ High Voltage ck.: ☑ 500v ☐ 1000v ☑ 1500v ☑ Battery ck. (min 4.4 vdc)

Threshold Setting: 40 mV

Instrument found within tolerance (+/- 10%) ☑ Yes ☐ No

Reference Calibration Point	Instrument "As Found Reading"	Instrument Meter Reading
400 Kcpm	+/-10%	400 Kcpm
100 Kcpm		100 Kcpm
40 Kcpm		40 Kcpm
10 Kcpm		10 Kcpm
4 Kcpm		4 Kcpm
1 Kcpm		1 Kcpm
400 cpm		400 cpm
100 cpm		100 cpm

Comments:

Calibrated By: [signature] Calibration Date: 4-30-07

Calibration Due: 4-30-08

Reviewed By: [signature] Date: 5/1/07

ERG Form 1.02A

Efficiency Calibration

ERG
Environmental Restoration Group, Inc.
8809 Washington St. NE, Suite 150
Albuquerque, NM 87113
(505) 298-4224

Detector Mfg.: Ludlum Model: 44-9 Serial No: PR251740

Counter Mfg.: Ludlum Model: 12 Serial No: 223414

This calibration conforms to the requirements and acceptable calibration conditions of ANSI N323A - 1997.
NMRCB Registration No. 481-3 • Calibration of Radiation Detection Instruments & Devices

GM tube voltage: 900 volts Counter Threshold Setting: 40 mV

Cable Length: ☑ 39 inch, ☐ 5 foot, ☐ Other:

Detector geometry to source: ☑ Face, ☐ Planchett/In tray, ☐ Side, ☐ Other:

Distance to source: ☑ Contact, ☐ Planchett/In tray, ☐ 6 Inches, ☐ Other:

Source: ☑ Tc99 @ 17,800 dpm (1/15/07) sn: 4099-03 ☐ Other:

Gross source counts: 2400 cpm

Background counts: 60 cpm

Net source counts: 2340 cpm

Comments:

4π Efficiency for Cal Source: 13 %

Efficiency = Net source counts (cpm) / Source activity (cpm,dpm)

Calibrated By: Calibration Date: 4-30-07

Calibration Due: 4-30-08

Reviewed By: Date: 5/1/07

Efficiency Calibration

ERG
Environmental Restoration Group, Inc.
8809 Washington St. NE, Suite 150
Albuquerque, NM 87113
(505) 298-4224

Detector Mfg.: Ludlum Model: 44-9 Serial No: PR093409

Counter Mfg.: Ludlum Model: 12 Serial No: 229304

This calibration conforms to the requirements and acceptable calibration conditions of ANSI N323A - 1997.
NMRCB Registration No. 481-3 • Calibration of Radiation Detection Instruments & Devices

GM tube voltage: 900 volts Counter Threshold Setting: 40 mV

Cable Length: ☑ 39 inch, ☐ 5 foot, ☐ Other:

Detector geometry to source: ☑ Face, ☐ Planchett/In tray, ☐ Side, ☐ Other:

Distance to source: ☑ Contact, ☐ Planchett/In tray, ☐ 6 Inches, ☐ Other:

Source: ☑ Tc99 @ 17,800 dpm (1/15/07) sn: 4099-03 ☐ Other:

Gross source counts: 2400 cpm

Background counts: 80 cpm

Net source counts: 2320 cpm

Comments:

4π Efficiency for Cal Source: 13 %

Efficiency = Net source counts (cpm) / Source activity (cpm,dpm)

Calibrated By: Calibration Date: 4-30-07

Calibration Due: 4-30-08

Reviewed By: Date: 5/1/07

Efficiency Calibration

ERG
Environmental Restoration Group, Inc.
8809 Washington St. NE, Suite 150
Albuquerque, NM 87113
(505) 298-4224

Detector Mfg.: Ludlum Model: 44-9 Serial No: PR248554

Counter Mfg.: Ludlum Model: 12 Serial No: 229277

This calibration conforms to the requirements and acceptable calibration conditions of ANSI N323A - 1997
NMRCB Registration No. 481-3 • Calibration of Radiation Detection Instruments & Devices

GM tube voltage: 900 volts Counter Threshold Setting: 40 mV

Cable Length: ☑ 39 inch, ☐ 5 foot, ☐ Other:

Detector geometry to source: ☑ Face, ☐ Planchett/In tray, ☐ Side, ☐ Other:

Distance to source: ☑ Contact, ☐ Planchett/In tray, ☐ 6 Inches, ☐ Other:

Source: ☑ Tc99 @ 17,800 dpm (1/15/07) sn: 4099-03 ☐ Other:

Gross source counts: 2400 cpm

Background counts: 70 cpm

Net source counts: 2330 cpm

Comments:

4π Efficiency for Cal Source: 13 %

Efficiency = Net source counts (cpm) / Source activity (cpm,dpm)

Calibrated By: Calibration Date: 4-30-07

Calibration Due: 4-30-08

Reviewed By: Date: 5/1/07

Efficiency Calibration

ERG
Environmental Restoration Group, Inc.
8809 Washington St. NE, Suite 150
Albuquerque, NM 87113
(505) 298-4224

Detector Mfg.: Ludlum Model: 44-9 Serial No: PR 251713

Counter Mfg.: Ludlum Model: 12 Serial No: 149332

This calibration conforms to the requirements and acceptable calibration conditions of ANSI N323A - 1997.
NMRCB Registration No. 481-3 • Calibration of Radiation Detection Instruments & Devices

GM tube voltage: 900 volts Counter Threshold Setting: 40 mV

Cable Length: ☑ 39 inch, ☐ 5 foot, ☐ Other:

Detector geometry to source: ☑ Face, ☐ Planchett/In tray, ☐ Side, ☐ Other:

Distance to source: ☑ Contact, ☐ Planchett/In tray, ☐ 6 Inches, ☐ Other:

Source: ☑ Tc99 @ 17,800 dpm (1/15/07) sn: 4099-03 ☐ Other:

Gross source counts: 2400 cpm

Background counts: 50 cpm

Net source counts: 2350 cpm

Comments:

4π Efficiency for Cal Source: 13 %

Efficiency = Net source counts (cpm) / Source activity (cpm,dpm)

Calibrated By: Calibration Date: 4-30-07

Calibration Due: 4-30-08

Reviewed By: Date: 5/1/07

Certificate of Calibration

Voltage Plateau Form

ERG
Environmental Restoration Group, Inc.
8809 Washington St. NE, Suite 150
Albuquerque, NM 87113
(505) 298-4224

Detector Mfg.: Ludlum Model: 43-10-1 Serial No.: PR 138385

Counter Mfg.: Ludlum Model: 2929 Serial No.: 132806

This calibration conforms to the requirements and acceptable calibration conditions of ANSI N323A - 1997.
NMRCB Registration No. 481-3 • Calibration of Radiation Detection Instruments & Devices

Alpha Threshold: 170 mV Beta Threshold: 4 mV Beta Window: 50 mV

Geometry / Distance to source: In planchett Cable Length: ☑ 39 inch ☐ Other:

Alpha Source : ☑ Th230 @ 13,300 dpm (1/19/07) sn: 4098-03 ☐ Other:

Beta Source: ☑ Tc99 @ 17,800 dpm (1/15/07) sn: 4099-03 ☐ Other:

Count Time: 1 minute(s)

High Voltage	Alpha Source Counts		Beta Source Counts		Background Counts		Pot. Setting
	Alpha	Beta	Alpha	Beta	Alpha	Beta	
600	2424	551	1	200	0	8	2.50
650	3754	343	0	1162	0	19	2.70
700	4331	293	1	2154	0	31	2.90
750	4452	332	1	2926	0	52	3.10
800	4619	433	8	3683	1	63	3.30
850	4841	747	6	4337	2	113	3.50

Comments: Recommended Operating High Voltage: 800 volts

Calibrated By: Calibration Date: 7-6-07

Calibration Due: 7-6-08

Reviewed By: Date: 7-6-07

Certificate of Calibration

2 Channel Scaler Certificate of Calibration

ERG
Environmental Restoration Group, Inc.
8809 Washington St. NE, Suite 150
Albuquerque, NM 87113
(505) 298-4224

Manufacturer: Ludlum Model: 2929 Serial No.: 132806

All Ranges Calibrated Electronically; Ludlum Pulser Generator Serial No.: 97743 ☐ 201932 ☑

This calibration conforms to the requirements and acceptable calibration conditions of ANSI N323A - 1997.
NMRCB Registration No. 481-3 • Calibration of Radiation Detection Instruments & Devices

☑ Mechanical ck. ~~☐ Meter Zeroed~~ ~~☐ Geotropism ck.~~ ~~☐ F/S Response~~ ck. ☑ Audio ck.

☐ THR/WIN ck. High Voltage ck. ☑ 500v ☑ 1000v ☑ 1500v ☐ Battery ck. (min 4.4 vdc)

Alpha Threshold.: 170 mV Beta Threshold.: 4.0 mV Beta Window.: 50 mV

Voltage setting: 800 volts = 3.30 on HV Dial (Pot.)

Instrument found within tolerance (+/- 10%) ☑ Yes ☐ No

Reference Setting	Alpha Channel Digital Readout		Beta Channel Digital Readout	
	Instrument "As Found Reading"	Integrated Counts (1-minute count)	Instrument "As Found Reading"	Integrated Counts (1-minute count)
400 Kcpm	+/- 10%	399446	+/- 10%	399440
40 Kcpm	+/- 10%	39956	+/- 10%	39946
4 Kcpm	+/- 10%	3995	+/- 10%	3996
400 cpm	+/- 10%	399	+/- 10%	400

Calibrated By: Calibration Date: 7-6-07

Calibration Due: 7-6-08

Reviewed By: Date: 7-6-07

Environmental Restoration Group, Inc.
8809 Washington NE, Ste. 150
Albuquerque, NM 87113

ph: 505.298.4224
fax: 505.797-1404
web: www.ERGOffice.com

EQUIPMENT PACKING SLIP

Company Name: Cabrera Services, Inc.
Contact Name: Gordon Tannahill
Contact Telephone: 702-839-1731

Order Number: 1044
P.O. or Reference Number: 07-1022.00 Task 2

Date Ordered: 7/6/2007
Date Shipped: 7/6/2007
Date of Delivery: 7/9/2007

Shipping Method: FedEx Priority Overnight
Shipping Number: 2246-1732-1

Ship To Information:
Gordon Tannahill c/o Extended Stay
Cabrera Services, Inc.
905 South Oyster Bay Rd
Bethpage, NY 11714
516-349-8759

Billing Address:
Cabrera Services - Maryland
Accounts Payable
103 East Mount Royal Ave
Baltimore, MD 21202

Equipment Enclosed:

Instrument	***Serial Number***
Ludlum 12	232131
Ludlum 19	144790
Ludlum 2929 & 43-10-1	132806 & PR138385
Ludlum 44-9	PR248560

Special Instructions:

None

Scientific and Industrial Instruments

CERTIFICATE OF CALIBRATION

POST OFFICE BOX 810 PH. 325-235-5494
501 OAK STREET FAX NO. 325-235-4672
SWEETWATER, TEXAS 79556, U.S.A.

CUSTOMER ERG (ENVIRO RES GRP) ORDER NO. 277826 / 314012

Mfg. Ludlum Measurements, Inc. Model 19 Serial No. 144790

Mfg. Model Serial No.

Cal. Date 31-May-07 Cal Due Date 31-May-08 Cal. Interval 1 Year Meterface 202-016

Check mark ☑ applies to applicable instr. and/or detector IAW mfg. spec. T. 71 °F RH 45 % Alt 698.8 mm Hg

☐ New Instrument Instrument Received ☐ Within Toler. +-10% ☐ 10-20% ☑ Out of Tol. ☐ Requiring Repair ☐ Other-See comments

☑ Mechanical ck. ☑ Meter Zeroed ☐ Background Subtract ☐ Input Sens. Linearity
☑ F/S Resp. ck ☑ Reset ck. ☐ Window Operation ☐ Geotropism
☑ Audio ck. ☐ Alarm Setting ck. ☑ Batt. ck. (Min. Volt) 2.2 VDC

☐ Calibrated in accordance with LMI SOP 14.8 rev 12/05/89. ☑ Calibrated in accordance with LMI SOP 14.9 rev 02/07/97.

Instrument Volt Set 1000 V Input Sens. 33 mV Det. Oper. V at mV Threshold Dial Ratio = mV

☑ HV Readout (2 points) Ref./Inst. / V Ref./Inst. / V

COMMENTS:

Gamma Calibration: GM detectors positioned perpendicular to source except for M 44-9 in which the front of probe faces source.

RANGE/MULTIPLIER	REFERENCE CAL. POINT	INSTRUMENT REC'D "AS FOUND READING"	INSTRUMENT METER READING*
5000	4000 uR/hr	1800	4000
5000	1000 uR/hr	400	1000
500	400 uR/hr = 73000 cpm	180	400
500	100 uR/hr	40	100
250	200 uR/hr = 36000 cpm	75	200
250	100 uR/hr	35	100
50	7300 cpm	44	40
50	1825 cpm	11	10
25	3600 cpm	265	20
25	900 cpm	5.1	5

*Uncertainty within ± 10% C.F. within ± 20%

50, 25 **Range(s) Calibrated Electronically**

	REFERENCE CAL. POINT	INSTRUMENT RECEIVED	INSTRUMENT METER READING*
Digital Readout			

	REFERENCE CAL. POINT	INSTRUMENT RECEIVED	INSTRUMENT METER READING*
Log Scale			

Ludlum Measurements, Inc. certifies that the above instrument has been calibrated by standards traceable to the National Institute of Standards and Technology, or to the calibration facilities of other International Standards Organization members, or have been derived from accepted values of natural physical constants or have been derived by the ratio type of calibration techniques. The calibration system conforms to the requirements of ANSI/NCSL Z540-1-1994 and ANSI N323-1978

State of Texas Calibration License No. LO-1963

Reference Instruments and/or Sources: ☐ S-394/1122 ☐ 1131 ☐ 781

Cs-137 Gamma S/N ☐ 1162 ☐ G112 ☑ M565 ☐ 5105 ☐ T1008 ☐ T879 ☐ E552 ☐ E551 ☐ 720 ☐ 734 ☐ 1616 ☐ Neutron Am-241 Be S/N T-304

☐ Alpha S/N ☐ Beta S/N ☐ Other

☑ m 500 S/N 189509 ☐ Oscilloscope S/N ☑ Multimeter S/N 71300492

Calibrated By: Wendell Williams Date 31-MAY-07

Reviewed By: Rhonda Harris Date 5 Jun 07

This certificate shall not be reproduced except in full, without the written approval of Ludlum Measurements, Inc.

FORM C22A 01/24/2007

AC Inst. Only ☐ Passed Dielectric (Hi-Pot) and Continuity Test ☐ Failed:

Efficiency Calibration

ERG
Environmental Restoration Group, Inc.
8809 Washington St. NE, Suite 150
Albuquerque, NM 87113
(505) 298-4224

Detector Mfg.: Ludlum Model: 44-9 Serial No: PR 248560

Counter Mfg.: Ludlum Model: 12 Serial No: 232131

This calibration conforms to the requirements and acceptable calibration conditions of ANSI N323A - 1997.
NMRCB Registration No. 481-3 • Calibration of Radiation Detection Instruments & Devices

GM tube voltage: 900 volts Counter Threshold Setting: 40 mV

Cable Length: ☑ 39 inch, ☐ 5 foot, ☐ Other:

Detector geometry to source: ☑ Face, ☐ Planchett/In tray, ☐ Side, ☐ Other:

Distance to source: ☑ Contact, ☐ Planchett/In tray, ☐ 6 Inches, ☐ Other:

Source: ☑ Tc99 @ 17,800 dpm (1/15/07) sn: 4099-03 ☐ Other:

Gross source counts: 2300 cpm

Background counts: 80 cpm

Net source counts: 2220 cpm

Comments:

4π Efficiency for Cal Source: 12 %

Efficiency = Net source counts (cpm) / Source activity (cpm,dpm)

Calibrated By: Calibration Date: 7-6-07

Calibration Due: 7-6-08

Reviewed By: Date: 7-6-07

Certificate of Calibration

2 Channel Scaler Certificate of Calibration

ERG
Environmental Restoration Group, Inc.
8809 Washington St. NE, Suite 150
Albuquerque, NM 87113
(505) 298-4224

Manufacturer: Ludlum Model: 2929 Serial No.: 132806

All Ranges Calibrated Electronically; Ludlum Pulser Generator Serial No.: 97743 ☐ 201932 ☑

This calibration conforms to the requirements and acceptable calibration conditions of ANSI N323A - 1997.
NMRCB Registration No. 481-3 • Calibration of Radiation Detection Instruments & Devices

☑ Mechanical ck. ☐ Meter Zeroed ☐ Geotropism ck. ☐ F/S Response ck. ☑ Audio ck.

☐ THR/WIN ck. High Voltage ck. ☑ 500v ☑ 1000v ☑ 1500v ☐ Battery ck. (min 4.4 vdc)

Alpha Threshold.: 170 mV Beta Threshold.: 4.0 mV Beta Window.: 50 mV

Voltage setting: _____ volts = _____ on HV Dial (Pot.)

Instrument found within tolerance (+/- 10%) ☑ Yes ☐ No

Reference Setting	Alpha Channel Digital Readout		Beta Channel Digital Readout	
	Instrument "As Found Reading"	Integrated Counts (1-minute count)	Instrument "As Found Reading"	Integrated Counts (1-minute count)
400 Kcpm	+/- 10%	399446	+/- 10%	399440
40 Kcpm	+/- 10%	39956	+/- 10%	39946
4 Kcpm	+/- 10%	3995	+/- 10%	3996
400 cpm	+/- 10%	399	+/- 10%	400

Calibrated By: _____ Calibration Date: _____

Calibration Due: _____

Reviewed By: _____ Date: 7-16-07

ERG Form 1.02D

Inst.#229277(1)		
QC Daily Source		
Date	Result (cpm)	P/F
5/14/2007	4950	Pass
5/15/2007	4900	Pass
5/16/2007	4950	Pass
5/17/2007	4500	Pass
5/18/2007	4600	Pass
5/21/2007	4650	Pass
5/22/2007	4800	Pass
5/23/2007	4550	Pass
5/24/2007	4800	Pass
5/25/2007	4700	Pass
5/29/2007	4650	Pass
5/30/2007	4750	Pass
5/31/2007	4600	Pass
6/1/2007	4500	Pass
6/4/2007	4400	Pass
6/5/2007	4500	Pass
6/6/2007	4600	Pass
6/7/2007	4400	Pass
6/8/2007	4600	Pass
6/11/2007	4550	Pass
6/12/2007	4500	Pass
6/13/2007	4700	Pass
6/14/2007	4600	Pass
6/15/2007	4500	Pass
6/18/2007	4600	Pass
6/19/2007	4650	Pass

Inst.#229277(1)		Source Ser. #	1903-04
Initial Source Readings		Nuclide	Tc-99
Date	Result (cpm)		
5/14/2007	5000		
5/14/2007	4850		
5/14/2007	4900		
5/14/2007	4950		
5/14/2007	4900		
5/14/2007	5000		
5/14/2007	4850		
5/14/2007	4800		
5/14/2007	4900		
5/14/2007	4950		
	Average		
	4910		

Inst.#229304(2)		
QC Daily Source		
Date	Result (cpm)	P/F
5/14/2007	4100	Pass
5/15/2007	4000	Pass
5/16/2007	4150	Pass
5/17/2007	4500	Pass
5/18/2007	4600	Pass
5/21/2007	4500	Pass
5/22/2007	4560	Pass
5/23/2007	4550	Pass
5/24/2007	4600	Pass
5/25/2007	4500	Pass
5/29/2007	4750	Pass
5/30/2007	4300	Pass
5/31/2007	4700	Pass
6/1/2007	4500	Pass
6/4/2007	4600	Pass
6/5/2007	4400	Pass
6/6/2007	4600	Pass
6/7/2007	4500	Pass
6/8/2007	4600	Pass
6/11/2007	4500	Pass
6/12/2007	4800	Pass
6/13/2007	4600	Pass
6/14/2007	4600	Pass
6/15/2007	4700	Pass
6/18/2007	4600	Pass
6/19/2007	4600	Pass

Inst.#229304(2)		Source Ser. #	1903-04
Initial Source Readings		Nuclide	Tc-99
Date	Result (cpm)		
5/14/2007	4100		
5/14/2007	4000		
5/14/2007	3900		
5/14/2007	4200		
5/14/2007	4200		
5/14/2007	4100		
5/14/2007	4200		
5/14/2007	4200		
5/14/2007	4000		
5/14/2007	4100		
	Average		
	4100		

Inst.#232131(25)		
QC Daily Source		
Date	Result (cpm)	P/F
7/11/2007	6000	Pass
7/12/2007	6000	Pass

Inst.#232131(25)		Source Ser. #	1904-04
Initial Source Readings		Nuclide	Tc-99
Date	Result (cpm)		
7/11/2007	6000		
7/11/2007	6000		
7/11/2007	8000		
7/11/2007	6000		
7/11/2007	7000		
7/11/2007	7000		
7/11/2007	6000		
7/11/2007	6000		
7/11/2007	8000		
7/11/2007	7000		
	Average		
	6700		

Inst.#108862(17)		
QC Daily Source		
Date	Result (cpm)	P/F
5/14/2007	11499	Pass
5/15/2007	11823	Pass
5/16/2007	11779	Pass
5/17/2007	11784	Pass
5/18/2007	11835	Pass
5/21/2007	11546	Pass
5/22/2007	11320	Pass
5/23/2007	11788	Pass
5/24/2007	12040	Pass
5/25/2007	10888	Pass
5/29/2007	11936	Pass
5/30/2007	12444	Pass
5/31/2007	11872	Pass
6/1/2007	11860	Pass
6/4/2007	11567	Pass
6/5/2007	11639	Pass
6/6/2007	12086	Pass
6/7/2007	12372	Pass
6/8/2007	12181	Pass
6/11/2007	12677	Pass
6/12/2007	12459	Pass
6/13/2007	11769	Pass
6/14/2007	12567	Pass
6/15/2007	11230	Pass

Inst.#108862(17)		Source Ser. #	3532
Initial Source Readings		Nuclide	Cs137
Date	Result (cpm)		
5/14/2007	11400		
5/14/2007	11142		
5/14/2007	11533		
5/14/2007	11385		
5/14/2007	11220		
5/14/2007	11300		
5/14/2007	11404		
5/14/2007	11314		
5/14/2007	11403		
5/14/2007	11298		
	Average		
	11340		

Inst.#163685(19)		
QC Daily Source		
Date	Result (cpm)	P/F
5/14/2007	11701	Pass
5/15/2007	11803	Pass
5/16/2007	11790	Pass
5/17/2007	11917	Pass
5/18/2007	11785	Pass
5/21/2007	11757	Pass
5/22/2007	11935	Pass
5/23/2007	11897	Pass
5/24/2007	12093	Pass
5/25/2007	11889	Pass
5/29/2007	12097	Pass
5/30/2007	11578	Pass
5/31/2007	11684	Pass
6/1/2007	11655	Pass
6/4/2007	11605	Pass
6/5/2007	11670	Pass
6/6/2007	11958	Pass
6/7/2007	11218	Pass
6/8/2007	11746	Pass
6/11/2007	11025	Pass
6/12/2007	12159	Pass
6/13/2007	11681	Pass
6/14/2007	11606	Pass
6/15/2007	11832	Pass
6/18/2007	12595	Pass
6/19/2007	12043	Pass

Inst.#163685(19)		Source Ser. #	3532
Initial Source Readings		Nuclide	CS-137
Date	Result (cpm)		
5/14/2007	11476		
5/14/2007	11732		
5/14/2007	11935		
5/14/2007	11727		
5/14/2007	11726		
5/14/2007	11964		
5/14/2007	11697		
5/14/2007	11769		
5/14/2007	11730		
5/14/2007	12320		
	Average		
	11808		

Inst.#190205(13)		
QC Daily Source		
Date	Result (cpm)	P/F
5/14/2007	5909	Pass
5/15/2007	5466	Pass
5/16/2007	5314	Pass
5/17/2007	5513	Pass
5/18/2007	4860	Pass
5/21/2007	5086	Pass
5/22/2007	5492	Pass
5/23/2007	5319	Pass
5/24/2007	5244	Pass
5/25/2007	5099	Pass
5/29/2007	5131	Pass
5/30/2007	5079	Pass
5/31/2007	5195	Pass
6/1/2007	4860	Pass
6/4/2007	4724	Pass
6/5/2007	4878	Pass
6/6/2007	5094	Pass
6/7/2007	5128	Pass
6/8/2007	5383	Pass
6/11/2007	5619	Pass
6/12/2007	5464	Pass
6/13/2007	5369	Pass
6/14/2007	5389	Pass
6/15/2007	5004	Pass
6/18/2007	5300	Pass
6/19/2007	5162	Pass

Inst.#190205(13)		Source Ser. #	3532
Initial Source Readings		Nuclide	Cs137
Date	Result (cpm)		
5/14/2007	5175		
5/14/2007	5270		
5/14/2007	4381		
5/14/2007	5121		
5/14/2007	5315		
5/14/2007	5270		
5/14/2007	5373		
5/14/2007	5439		
5/14/2007	5322		
5/14/2007	5351		
	Average		
	5202		

Inst.#216482(14)		
QC Daily Source		
Date	Result (cpm)	P/F
5/14/2007	5330	Pass
5/15/2007	5790	Pass
5/16/2007	5625	Pass
5/17/2007	5436	Pass
5/18/2007	4688	Pass
5/21/2007	5019	Pass
5/22/2007	5354	Pass
5/23/2007	5270	Pass
5/24/2007	5206	Pass
5/25/2007	5393	Pass
5/29/2007	5351	Pass
5/30/2007	5123	Pass
5/31/2007	5290	Pass
6/1/2007	5272	Pass
6/4/2007	5520	Pass
6/5/2007	4805	Pass
6/6/2007	5752	Pass
6/7/2007	5469	Pass
6/8/2007	4716	Pass
6/19/2007	4924	Pass

Inst.#216482(14)		Source Ser. #	3532
Initial Source Readings		Nuclide	Cs137
Date	Result (cpm)		
5/14/2007	5199		
5/14/2007	5211		
5/14/2007	5043		
5/14/2007	4966		
5/14/2007	5355		
5/14/2007	5105		
5/14/2007	4979		
5/14/2007	5347		
5/14/2007	5421		
5/14/2007	5268		
	Average		
	5189		

Inst.#101662(5)		
QC Daily Source		
Date	Result (µrem/hr)	P/F
5/14/2007	90	Pass
5/15/2007	80	Pass
5/16/2007	85	Pass
5/17/2007	90	Pass
5/18/2007	85	Pass
5/21/2007	85	Pass
5/22/2007	90	Pass
5/23/2007	85	Pass
5/24/2007	80	Pass
5/25/2007	90	Pass
5/29/2007	90	Pass
5/30/2007	85	Pass
5/31/2007	90	Pass
6/1/2007	90	Pass
6/4/2007	85	Pass
6/5/2007	90	Pass
6/6/2007	90	Pass
6/7/2007	90	Pass
6/8/2007	90	Pass
6/11/2007	85	Pass
6/12/2007	90	Pass
6/13/2007	85	Pass
6/14/2007	90	Pass
6/15/2007	85	Pass
6/18/2007	90	Pass
6/19/2007	80	Pass

Inst.#101662(5)		Source Ser. #	3532
Initial Source Readings		Nuclide	Cs-137
Date	Result (µrem/hr)		
5/14/2007	85		
5/14/2007	90		
5/14/2007	85		
5/14/2007	90		
5/14/2007	95		
5/14/2007	85		
5/14/2007	80		
5/14/2007	90		
5/14/2007	95		
5/14/2007	85		
	Average		
	88		

Inst.#221521(6)		
QC Daily Source		
Date	Result (µrem/hr)	P/F
5/14/2007	120	Pass
5/15/2007	110	Pass
5/16/2007	100	Pass
5/17/2007	100	Pass
5/18/2007	100	Pass
5/21/2007	95	Pass
5/22/2007	95	Pass
5/23/2007	95	Pass
5/24/2007	90	Pass
5/25/2007	100	Pass
5/29/2007	90	Pass
5/30/2007	95	Pass
5/31/2007	100	Pass
6/1/2007	95	Pass
6/4/2007	90	Pass
6/5/2007	95	Pass
6/6/2007	100	Pass
6/7/2007	90	Pass
6/8/2007	100	Pass
6/11/2007	100	Pass
6/12/2007	95	Pass
6/13/2007	90	Pass
6/14/2007	100	Pass
6/15/2007	90	Pass
6/18/2007	95	Pass
6/19/2007	100	Pass

Inst.#221521(6)		Source Ser. #	3532
Initial Source Readings		Nuclide	Cs-137
Date	Result (µrem/hr)		
5/14/2007	100		
5/14/2007	120		
5/14/2007	110		
5/14/2007	120		
5/14/2007	100		
5/14/2007	120		
5/14/2007	110		
5/14/2007	100		
5/14/2007	120		
5/14/2007	110		
	Average		
	111		

Inst.#144790(24)		
QC Daily Source		
Date	Result (µrem/hr)	P/F
7/11/2007	23	Pass
7/12/2007	22	Pass

Inst.#144790(24)		Source Ser. #	1142
Initial Source Readings		Nuclide	Cs-137
Date	Result (µrem/hr)		
7/11/2007	22		
7/11/2007	21		
7/11/2007	22		
7/11/2007	22		
7/11/2007	23		
7/11/2007	20		
7/11/2007	24		
7/11/2007	22		
7/11/2007	23		
7/11/2007	21		
	Average		
	22		

Inst.#101662(5)		
QC Daily Source		
Date	Result (µrem/hr)	P/F
5/14/2007	90	Pass
5/15/2007	80	Pass
5/16/2007	85	Pass
5/17/2007	90	Pass
5/18/2007	85	Pass
5/21/2007	85	Pass
5/22/2007	90	Pass
5/23/2007	85	Pass
5/24/2007	80	Pass
5/25/2007	90	Pass
5/29/2007	90	Pass
5/30/2007	85	Pass
5/31/2007	90	Pass
6/1/2007	90	Pass
6/4/2007	85	Pass
6/5/2007	90	Pass
6/6/2007	90	Pass
6/7/2007	90	Pass
6/8/2007	90	Pass
6/11/2007	85	Pass
6/12/2007	90	Pass
6/13/2007	85	Pass
6/14/2007	90	Pass
6/15/2007	85	Pass
6/18/2007	90	Pass
6/19/2007	80	Pass

Inst.#101662(5)		Source Ser. #	3532
Initial Source Readings		Nuclide	Cs-137
Date	Result (µrem/hr)		
5/14/2007	85		
5/14/2007	90		
5/14/2007	85		
5/14/2007	90		
5/14/2007	95		
5/14/2007	85		
5/14/2007	80		
5/14/2007	90		
5/14/2007	95		
5/14/2007	85		
	Average		
	88		

Inst.#221521(6)		
QC Daily Source		
Date	Result (µrem/hr)	P/F
5/14/2007	120	Pass
5/15/2007	110	Pass
5/16/2007	100	Pass
5/17/2007	100	Pass
5/18/2007	100	Pass
5/21/2007	95	Pass
5/22/2007	95	Pass
5/23/2007	95	Pass
5/24/2007	90	Pass
5/25/2007	100	Pass
5/29/2007	90	Pass
5/30/2007	95	Pass
5/31/2007	100	Pass
6/1/2007	95	Pass
6/4/2007	90	Pass
6/5/2007	95	Pass
6/6/2007	100	Pass
6/7/2007	90	Pass
6/8/2007	100	Pass
6/11/2007	100	Pass
6/12/2007	95	Pass
6/13/2007	90	Pass
6/14/2007	100	Pass
6/15/2007	90	Pass
6/18/2007	95	Pass
6/19/2007	100	Pass

Inst.#221521(6)		Source Ser. #	3532
Initial Source Readings		Nuclide	Cs-137
Date	Result (µrem/hr)		
5/14/2007	100		
5/14/2007	120		
5/14/2007	110		
5/14/2007	120		
5/14/2007	100		
5/14/2007	120		
5/14/2007	110		
5/14/2007	100		
5/14/2007	120		
5/14/2007	110		
	Average		
	111		

Inst.#144790(24)		
QC Daily Source		
Date	Result (µrem/hr)	P/F
7/11/2007	23	Pass
7/12/2007	22	Pass

Inst.#144790(24)		Source Ser. #	1142
Initial Source Readings		Nuclide	Cs-137
Date	Result (µrem/hr)		
7/11/2007	22		
7/11/2007	21		
7/11/2007	22		
7/11/2007	22		
7/11/2007	23		
7/11/2007	20		
7/11/2007	24		
7/11/2007	22		
7/11/2007	23		
7/11/2007	21		
	Average		
	22		

CABRERA ALPHA-BETA COUNTING INSTRUMENT (Rev 5)

Counting Instrument:			2360		Detector:	43/93		Calibration Date:		5/7/2007								
Serial #:			184903		Serial #:	179868		12 month calibration:		OK								
Detector Active Area or Area Covered by Smear (cm^2):						100		NRC 6 Mo Cal. Due Date?		OK								
	Efficiency (fraction)	Source Nuclide	Source Number	Original Source Activity (DPM)	Source Creation Date	$T_{1/2}$ (yr)	Source Decayed Activity	Required MDA ($DPM/100cm^2$)	Control Chart & Daily Bkg Count Time	Control Chart & Daily Source-Sample Count Time	Control Chart bkg Average α/β cpm	Control Chart bkg 1 sigma, cpm	Control Chart Source-bkg Average α/β cpm	Control Chart source 1 sigma, cpm				
Alpha	0.2130	Th230	1247	41,200	3/30/2004	7.54E+04	41,199	100	1	1	0.90	1.29	6836.8	268.57				
Beta	0.1750	Tc99	1246	27,800	3/30/2004	2.11E+02	27,514	1000	1	1	76.90	10.47	4614.6	327.53				

Date	Daily Bkg Counts		Daily Check Source Counts		Daily Bkg Rate (cpm)		Net Daily Source Rate (cpm)		Bkg QC Pass/Fail		Source QC Pass/Fail				α MDA OK?	β MDA OK?	H.P. Technician	Technician Initials
	Alpha	Beta	Alpha	Beta	Alpha	Beta	Alpha	Beta	Alpha	Beta	Alpha	Beta	MDA α (dpm)	MDA β (dpm)				
5/21/2007	3	72	6459	4693	3.0	72.0	6456.0	4621.0	PASS	PASS	PASS	PASS	51.92	243	Yes	Yes	GT	DA
5/22/2007	1	63	7077	4269	1.0	63.0	7076.0	4206.0	PASS	PASS	PASS	PASS	35.93	228	Yes	Yes	GT	DA
5/23/2007	0	74	6494	4068	0.0	74.0	6494.0	3994.0	PASS	PASS	PASS	PASS	14.08	246	Yes	Yes	GT	DA
5/24/2007	0	96	6700	4675	0.0	96.0	6700.0	4579.0	PASS	PASS	PASS	PASS	14.08	278	Yes	Yes	GT	DA
5/25/2007	0	82	6478	4224	0.0	82.0	6478.0	4142.0	PASS	PASS	PASS	PASS	14.08	258	Yes	Yes	GT	DA
5/29/2007	0	81	6925	4151	0.0	81.0	6925.0	4070.0	PASS	PASS	PASS	PASS	14.08	256	Yes	Yes	GT	DA
5/30/2007	0	88	6679	4282	0.0	88.0	6679.0	4194.0	PASS	PASS	PASS	PASS	14.08	267	Yes	Yes	GT	DA
5/31/2007	0	92	6668	4166	0.0	92.0	6668.0	4074.0	PASS	PASS	PASS	PASS	14.08	272	Yes	Yes	GT	DA
6/1/2007	1	89	7071	4263	1.0	89.0	7070.0	4174.0	PASS	PASS	PASS	PASS	35.93	268	Yes	Yes	GT	DA
6/4/2007	0	85	6417	4109	0.0	85.0	6417.0	4024.0	PASS	PASS	PASS	PASS	14.08	262	Yes	Yes	GT	DA
6/5/2007	0	91	6274	4047	0.0	91.0	6274.0	3956.0	PASS	PASS	*QUESTION*	*QUESTION*	14.08	271	Yes	Yes	GT	DA
6/6/2007	1	99	6846	4164	1.0	99.0	6845.0	4065.0	PASS	*QUESTION*	PASS	PASS	35.93	282	Yes	Yes	GT	DA
6/7/2007	0	96	6794	4112	0.0	96.0	6794.0	4016.0	PASS	PASS	PASS	PASS	14.08	278	Yes	Yes	GT	DA
6/8/2007	0	97	6786	4154	0.0	97.0	6786.0	4057.0	PASS	PASS	PASS	PASS	14.08	279	Yes	Yes	GT	DA
6/11/2007	0	90	7169	4221	0.0	90.0	7169.0	4131.0	PASS	PASS	PASS	PASS	14.08	269	Yes	Yes	GT	DA
6/12/2007	0	96	6487	4102	0.0	96.0	6487.0	4006.0	PASS	PASS	PASS	PASS	14.08	278	Yes	Yes	GT	DA
6/13/2007	0	105	6768	4162	0.0	105.0	6768.0	4057.0	PASS	*QUESTION*	PASS	PASS	14.08	290	Yes	Yes	GT	DA
6/14/2007	0	86	6927	4275	0.0	86.0	6927.0	4189.0	PASS	PASS	PASS	PASS	14.08	264	Yes	Yes	GT	DA
6/15/2007	1	81	6308	4295	1.0	81.0	6307.0	4214.0	PASS	PASS	PASS	PASS	35.93	256	Yes	Yes	GT	DA
6/18/2007	0	89	6681	4067	0.0	89.0	6681.0	3978.0	PASS	PASS	PASS	PASS	14.08	268	Yes	Yes	GT	KA
6/19/2007	1	92	6431	4297	1.0	92.0	6430.0	4205.0	PASS	PASS	PASS	PASS	35.93	272	Yes	Yes	GT	KA

CABRERA ALPHA-BETA COUNTING INSTRUMENT (Rev 5)

Counting Instrument:	2360	Detector:	43/93
Serial #:	168040	Serial #:	197432
Detector Active Area or Area Covered by Smear (cm^2):	100		

Calibration Date:	5/7/2007
12 month calibration:	OK
NRC 6 Mo Cal. Due Date?	OK

	Efficiency (fraction)	Source Nuclide	Source Number	Original Source Activity (DPM)	Source Creation Date	$T_{1/2}$ (yr)	Source Decayed Activity	Required MDA ($DPM/100cm^2$)	Control Chart & Daily Bkg Count Time	Control Chart & Daily Source-Sample Count Time	Control Chart bkg Average α/β cpm	Control Chart bkg 1 sigma, cpm	Control Chart Source-bkg Average α/β cpm	Control Chart source 1 sigma, cpm
Alpha	0.2130	Th230	1247	41,200	3/30/2004	7.54E+04	41,199	100	1	1	0.50	0.53	7392.2	402.20
Beta	0.1750	Tc99	1246	27,800	3/30/2004	2.11E+02	27,514	1000	1	1	89.90	7.42	2614.7	233.41

Date	Daily Bkg Counts		Daily Check Source Counts		Daily Bkg Rate (cpm)		Net Daily Source Rate (cpm)		Bkg QC Pass/Fail		Source QC Pass/Fail		MDA α (dpm)	MDA β (dpm)	α MDA OK?	β MDA OK?	H.P. Technician	Technician Initials
	Alpha	Beta	Alpha	Beta	Alpha	Beta	Alpha	Beta	Alpha	Beta	Alpha	Beta						
5/22/2007	0	88	7365	2757	0.0	88.0	7365.0	2669.0	PASS	PASS	PASS	PASS	14.08	267	Yes	Yes	GT	DA
5/23/2007	0	85	7356	2715	0.0	85.0	7356.0	2630.0	PASS	PASS	PASS	PASS	14.08	262	Yes	Yes	GT	DA
5/24/2007	0	88	6645	2641	0.0	88.0	6645.0	2553.0	PASS	PASS	PASS	PASS	14.08	267	Yes	Yes	GT	DA
5/25/2007	1	83	7237	2752	1.0	83.0	7236.0	2669.0	PASS	PASS	PASS	PASS	35.93	259	Yes	Yes	GT	DA
5/29/2007	0	82	7376	2755	0.0	82.0	7376.0	2673.0	PASS	PASS	PASS	PASS	14.08	258	Yes	Yes	GT	DA
5/30/2007	0	82	7368	2670	0.0	82.0	7368.0	2588.0	PASS	PASS	PASS	PASS	14.08	258	Yes	Yes	GT	DA
5/31/2007	0	70	7345	2642	0.0	70.0	7345.0	2572.0	PASS	*QUESTION*	PASS	PASS	14.08	240	Yes	Yes	GT	DA
6/1/2007	0	90	7293	2645	0.0	90.0	7293.0	2555.0	PASS	PASS	PASS	PASS	14.08	269	Yes	Yes	GT	DA
6/4/2007	0	95	7354	2735	0.0	95.0	7354.0	2640.0	PASS	PASS	PASS	PASS	14.08	276	Yes	Yes	GT	DA
6/5/2007	0	98	7054	2711	0.0	98.0	7054.0	2613.0	PASS	PASS	PASS	PASS	14.08	280	Yes	Yes	GT	DA
6/6/2007	0	86	7178	2701	0.0	86.0	7178.0	2615.0	PASS	PASS	PASS	PASS	14.08	264	Yes	Yes	GT	DA
6/7/2007	1	83	6961	2692	1.0	83.0	6960.0	2609.0	PASS	PASS	PASS	PASS	35.93	259	Yes	Yes	GT	DA
6/8/2007	0	79	6987	2672	0.0	79.0	6987.0	2593.0	PASS	PASS	PASS	PASS	14.08	253	Yes	Yes	GT	DA
6/11/2007	1	86	7027	2568	1.0	86.0	7026.0	2482.0	PASS	PASS	PASS	PASS	35.93	264	Yes	Yes	GT	DA
6/12/2007	1	91	7027	2747	1.0	91.0	7026.0	2656.0	PASS	PASS	PASS	PASS	35.93	271	Yes	Yes	GT	DA
6/13/2007	0	81	6842	2674	0.0	81.0	6842.0	2593.0	PASS	PASS	PASS	PASS	14.08	256	Yes	Yes	GT	DA
6/14/2007	2	79	7031	2652	2.0	79.0	7029.0	2573.0	*QUESTION*	PASS	PASS	PASS	44.98	253	Yes	Yes	GT	DA
6/15/2007	0	82	6648	2761	0.0	82.0	6648.0	2679.0	PASS	PASS	PASS	PASS	14.08	258	Yes	Yes	GT	DA
6/18/2007	1	90	6823	2636	1.0	90.0	6822.0	2546.0	PASS	PASS	PASS	PASS	35.93	269	Yes	Yes	GT	KA
6/19/2007	1	77	6798	2715	1.0	77.0	6797.0	2638.0	PASS	PASS	PASS	PASS	35.93	250	Yes	Yes	GT	KA

CABRERA ALPHA-BETA COUNTING INSTRUMENT (Rev 6)

Counting Instrument:			2929		Detector:	43-10-1		Calibration Date:		5/7/2007								
Serial #:			137620		Serial #:	203054		12 month calibration:		OK								
Detector Active Area or Area Covered by Smear (cm^2):						100												
	Efficiency (fraction)	Source Nuclide	Source Number	Original Source Activity (DPM)	Source Creation Date	$T_{1/2}$ (yr)	Source Decayed Activity	Required MDA ($DPM/100cm^2$)	Control Chart & Daily Bkg Count Time	Control Chart & Daily Source-Sample Count Time	Control Chart bkg Average α/β cpm	Control Chart bkg 1 sigma, cpm	Control Chart Source-bkg Average α/β cpm	Control Chart source 1 sigma, cpm				
Alpha	0.3480	Th230	1247	41,200	3/30/2004	7.54E+04	41,199	100	20	2	0.18	0.10	14054.3	62.88				
Beta	0.1820	Tc99	1246	27,800	3/30/2004	2.11E+02	27,516	1000	20	2	33.78	1.57	6285.8	52.86				

Date	Daily Bkg Counts		Daily Check Source Counts		Daily Bkg Rate (cpm)		Net Daily Source Rate (cpm)		Bkg QC Pass/Fail		Source QC Pass/Fail				α MDA OK?	β MDA OK?	H.P. Technician	Technician Initials
	Alpha	Beta	Alpha	Beta	Alpha	Beta	Alpha	Beta	Alpha	Beta	Alpha	Beta	MDA α (dpm)	MDA β (dpm)				
5/14/2007	4	693	28105	12669	0.2	34.7	14052.3	6299.9	PASS	PASS	PASS	PASS	7.45	87	Yes	Yes	GT	DA
5/15/2007	4	729	28176	12526	0.2	36.5	14087.8	6226.6	PASS	PASS	PASS	PASS	7.45	89	Yes	Yes	GT	DA
5/16/2007	2	681	28104	12797	0.1	34.1	14051.9	6364.5	PASS	PASS	PASS	PASS	6.53	86	Yes	Yes	GT	DA
5/17/2007	5	679	28083	12464	0.3	34.0	14041.3	6198.1	PASS	PASS	PASS	PASS	7.82	86	Yes	Yes	GT	DA
5/18/2007	3	669	28166	12800	0.2	33.5	14082.9	6366.6	PASS	PASS	PASS	PASS	7.03	86	Yes	Yes	GT	DA
5/21/2007	4	685	28347	12673	0.2	34.3	14173.3	6302.3	PASS	PASS	PASS	PASS	7.45	87	Yes	Yes	GT	DA
5/22/2007	5	687	28215	12734	0.3	34.4	14107.3	6332.7	PASS	PASS	PASS	PASS	7.82	87	Yes	Yes	GT	DA
5/23/2007	7	681	28120	12748	0.4	34.1	14059.7	6340.0	PASS	PASS	PASS	PASS	8.46	86	Yes	Yes	GT	DA
5/24/2007	4	680	28171	12634	0.2	34.0	14085.3	6283.0	PASS	PASS	PASS	PASS	7.45	86	Yes	Yes	GT	DA
5/25/2007	4	663	28136	12627	0.2	33.2	14067.8	6280.4	PASS	PASS	PASS	PASS	7.45	85	Yes	Yes	GT	DA
5/29/2007	5	657	28262	12837	0.3	32.9	14130.8	6385.7	PASS	PASS	PASS	PASS	7.82	85	Yes	Yes	GT	DA
5/30/2007	1	643	28113	12446	0.1	32.2	14056.5	6190.9	PASS	PASS	PASS	PASS	5.88	84	Yes	Yes	GT	DA
5/31/2007	0	722	28305	12658	0.0	36.1	14152.5	6292.9	PASS	PASS	PASS	PASS	4.31	89	Yes	Yes	GT	DA
6/1/2007	2	718	28268	12536	0.1	35.9	14133.9	6232.1	PASS	PASS	PASS	PASS	6.53	89	Yes	Yes	GT	DA
6/4/2007	1	695	27958	12453	0.1	34.8	13979.0	6191.8	PASS	PASS	PASS	PASS	5.88	87	Yes	Yes	GT	DA
6/5/2007	2	704	28269	12517	0.1	35.2	14134.4	6223.3	PASS	PASS	PASS	PASS	6.53	88	Yes	Yes	GT	DA
6/6/2007	4	723	28265	12701	0.2	36.2	14132.3	6314.4	PASS	PASS	PASS	PASS	7.45	89	Yes	Yes	GT	DA
6/7/2007	3	702	27999	12797	0.2	35.1	13999.4	6363.4	PASS	PASS	PASS	PASS	7.03	88	Yes	Yes	GT	DA
6/8/2007	3	708	28439	12585	0.2	35.4	14219.4	6257.1	PASS	PASS	*QUESTION*	PASS	7.03	88	Yes	Yes	GT	DA
6/8/2007	4	729	27950	12392	0.2	36.5	13974.8	6159.6	PASS	PASS	PASS	*QUESTION*	7.45	89	Yes	Yes	GT	DA
6/11/2007	4	691	28044	12492	0.2	34.6	14021.8	6211.5	PASS	PASS	PASS	PASS	7.45	87	Yes	Yes	GT	DA
6/12/2007	2	684	28071	12568	0.1	34.2	14035.4	6249.8	PASS	PASS	PASS	PASS	6.53	87	Yes	Yes	GT	DA
6/13/2007	4	719	27913	12524	0.2	36.0	13956.3	6226.1	PASS	PASS	PASS	PASS	7.45	89	Yes	Yes	GT	DA
6/14/2007	2	732	27884	12586	0.1	36.6	13941.9	6256.4	PASS	PASS	PASS	PASS	6.53	89	Yes	Yes	GT	KA
6/15/2007	3	697	28212	12659	0.2	34.9	14105.9	6294.7	PASS	PASS	PASS	PASS	7.03	87	Yes	Yes	GT	KA
6/18/2007	4	667	28298	12494	0.2	33.4	14148.8	6213.7	PASS	PASS	PASS	PASS	7.45	86	Yes	Yes	GT	KA
6/19/2007	5	702	28144	12556	0.3	35.1	14071.8	6242.9	PASS	PASS	PASS	PASS	7.82	88	Yes	Yes	GT	KA

CABRERA ALPHA-BETA COUNTING INSTRUMENT (Rev 6)

Counting Instrument:			2929		Detector:	43-10-1		Calibration Date:		5/7/2007								
Serial #:			147736		Serial #:	150788		12 month calibration:		OK								
Detector Active Area or Area Covered by Smear (cm^2):						100												
	Efficiency (fraction)	Source Nuclide	Source Number	Original Source Activity (DPM)	Source Creation Date	$T_{1/2}$ (yr)	Source Decayed Activity	Required MDA ($DPM/100cm^2$)	Control Chart & Daily Bkg Count Time	Control Chart & Daily Source-Sample Count Time	Control Chart bkg Average α/β cpm	Control Chart bkg 1 sigma, cpm	Control Chart Source-bkg Average α/β cpm	Control Chart source 1 sigma, cpm				
Alpha	0.3450	Th230	1247	41,200	3/30/2004	7.54E+04	41,199	100	20	2	0.12	0.11	14490.0	97.33				
Beta	0.1590	Tc99	1246	27,800	3/30/2004	2.11E+02	27,516	1000	20	2	40.56	4.22	5969.1	57.21				

Date	Daily Bkg Counts		Daily Check Source Counts		Daily Bkg Rate (cpm)		Net Daily Source Rate (cpm)		Bkg QC Pass/Fail		Source QC Pass/Fail				α MDA OK?	β MDA OK?	H.P. Technician	Technician Initials
	Alpha	Beta	Alpha	Beta	Alpha	Beta	Alpha	Beta	Alpha	Beta	Alpha	Beta	MDA α (dpm)	MDA β (dpm)				
5/14/2007	2	863	29106	12059	0.1	43.2	14552.9	5986.4	PASS	PASS	PASS	PASS	6.58	110	Yes	Yes	GT	DA
5/15/2007	3	859	29025	12114	0.2	43.0	14512.4	6014.1	PASS	PASS	PASS	PASS	7.09	110	Yes	Yes	GT	DA
5/16/2007	4	781	28923	12027	0.2	39.1	14461.3	5974.5	PASS	PASS	PASS	PASS	7.51	105	Yes	Yes	GT	DA
5/17/2007	1	826	29191	12170	0.1	41.3	14595.5	6043.7	PASS	PASS	PASS	PASS	5.93	108	Yes	Yes	GT	DA
5/18/2007	3	669	29158	12186	0.2	33.5	14578.9	6059.6	PASS	PASS	PASS	PASS	7.09	98	Yes	Yes	GT	DA
5/21/2007	4	722	29293	12169	0.2	36.1	14646.3	6048.4	PASS	PASS	PASS	PASS	7.51	102	Yes	Yes	GT	DA
5/22/2007	4	722	29293	12169	0.2	36.1	14646.3	6048.4	PASS	PASS	PASS	PASS	7.51	102	Yes	Yes	GT	DA
5/23/2007	0	646	29155	12017	0.0	32.3	14577.5	5976.2	PASS	PASS	PASS	PASS	4.35	97	Yes	Yes	GT	DA
5/24/2007	4	693	28698	11833	0.2	34.7	14348.8	5881.9	PASS	PASS	PASS	PASS	7.51	100	Yes	Yes	GT	DA
5/25/2007	3	702	28872	12146	0.2	35.1	14435.9	6037.9	PASS	PASS	PASS	PASS	7.09	100	Yes	Yes	GT	DA
5/29/2007	4	746	28937	12067	0.2	37.3	14468.3	5996.2	PASS	PASS	PASS	PASS	7.51	103	Yes	Yes	GT	DA
5/30/2007	1	787	28786	11911	0.1	39.4	14393.0	5916.2	PASS	PASS	PASS	PASS	5.93	106	Yes	Yes	GT	DA
5/31/2007	3	692	28958	11784	0.2	34.6	14478.9	5857.4	PASS	PASS	PASS	PASS	7.09	100	Yes	Yes	GT	DA
6/1/2007	4	830	29052	12085	0.2	41.5	14525.8	6001.0	PASS	PASS	PASS	PASS	7.51	108	Yes	Yes	GT	DA
6/4/2007	4	847	28762	11994	0.2	42.4	14380.8	5954.7	PASS	PASS	PASS	PASS	7.51	109	Yes	Yes	GT	DA
6/5/2007	3	791	28692	11761	0.2	39.6	14345.9	5841.0	PASS	PASS	PASS	*QUESTION*	7.09	106	Yes	Yes	GT	DA
6/6/2007	2	696	28997	12150	0.1	34.8	14498.4	6040.2	PASS	PASS	PASS	PASS	6.58	100	Yes	Yes	GT	DA
6/7/2007	1	942	28741	11754	0.1	47.1	14370.5	5829.9	PASS	PASS	PASS	*QUESTION*	5.93	115	Yes	Yes	GT	DA
6/8/2007	2	704	29036	11894	0.1	35.2	14517.9	5911.8	PASS	PASS	PASS	PASS	6.58	100	Yes	Yes	GT	DA
6/11/2007	3	817	28651	11826	0.2	40.9	14325.4	5872.2	PASS	PASS	PASS	PASS	7.09	108	Yes	Yes	GT	DA
6/12/2007	2	826	28913	11737	0.1	41.3	14456.4	5827.2	PASS	PASS	PASS	*QUESTION*	6.58	108	Yes	Yes	GT	DA
6/12/2007	1	787	28811	12235	0.1	39.4	14405.5	6078.2	PASS	PASS	PASS	PASS	5.93	106	Yes	Yes	GT	DA
6/13/2007	2	826	29157	11919	0.1	41.3	14578.4	5918.2	PASS	PASS	PASS	PASS	6.58	108	Yes	Yes	GT	DA

CABRERA ALPHA-BETA COUNTING INSTRUMENT (Rev 6)

Counting Instrument:			2929		Detector:	43-10-1		Calibration Date:		7/6/2007								
Serial #:			132806		Serial #:	PR138385		12 month calibration:		OK								
Detector Active Area or Area Covered by Smear (cm^2):						100												
	Efficiency (fraction)	Source Nuclide	Source Number	Original Source Activity (DPM)	Source Creation Date	$T_{1/2}$ (yr)	Source Decayed Activity	Required MDA ($DPM/100cm^2$)	Control Chart & Daily Bkg Count Time	Control Chart & Daily Source-Sample Count Time	Control Chart bkg Average α/β cpm	Control Chart bkg 1 sigma, cpm	Control Chart Source-bkg Average α/β cpm	Control Chart source 1 sigma, cpm				
Alpha	0.3410	Th230	1906-04	31,500	3/29/2004	7.54E+04	31,499	100	10	2	0.18	0.13	10735.5	103.20				
Beta	0.2010	Tc99	1904-04	45,200	3/30/2004	2.11E+02	44,715	1000	10	2	45.28	4.18	9095.8	68.92				

Date	Daily Bkg Counts		Daily Check Source Counts		Daily Bkg Rate (cpm)		Net Daily Source Rate (cpm)		Bkg QC Pass/Fail		Source QC Pass/Fail				α MDA OK?	β MDA OK?	H.P. Technician	Technician Initials
	Alpha	Beta	Alpha	Beta	Alpha	Beta	Alpha	Beta	Alpha	Beta	Alpha	Beta	MDA α (dpm)	MDA β (dpm)				
7/11/2007	2	416	21277	18118	0.2	41.6	10638.3	9017.4	PASS	PASS	PASS	PASS	7.74	89	Yes	Yes	gmt	gmt
7/12/2007	3	508	21511	18347	0.3	50.8	10755.2	9122.7	PASS	PASS	PASS	PASS	8.49	98	Yes	Yes	gmt	gmt

Location: Site: SYLVANIA CORNING, BLG 70	RWP# 07-1022.00-001	Survey # 001	Survey Type: Contamination	pg. 1 of 1

Smear (CPM/100 cm²) / Direct Count (CPM/Direct Frisk) — circle one

No.	α	β	No.	α	β
1	0	9447	26		
2	0	9045	27		
3			28		
4			29		
5			30		
6			31		
7			32		
8			33		
9			34		
10			35		N
11			36		
12		N	37		
13			38	A	
14			39		
15	A		40		
16			41		
17			42		
18			43		
19			44		
20			45		
21			46		
22			47		
23			48		
24			49		
25			50		

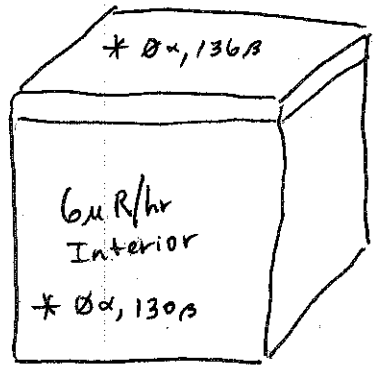

6μR/hr exterior

FREEZER IN BLDG

Comments	Surveyed By:	Date:	Instrument	Serial #	α Eff.	β Eff.	α Bkg.	β Bkg	γ Bkg	Cal. Due
PERFORMED Contamination survey of freezer in building 70. Performed 100% scan of accessible surfaces in interior & exterior	GORDON TANNAHILL	5/14/07	2360/43-93	168040			0	112	NA	5/7/08
			Mod 19	101662	NA	NA	NA	NA	6	10/7/07
	N		Mod 2929	147736			0.1	43	NA	4/30/08
	A									
						N				
	Reviewed By:	Date:								
	GMT	5/15/07					A			

Key: A/S Location; Boundary; Smear; Dose Rate μR /hr; Direct Reading CPM/direct frisk; Grab Sample

Location: SU9-04, 05, 14 Site: SYLVANIA - CORNING FUSRAP SITE	RWP# 07-1022.00-001	Survey # 002	Survey Type: FREE RELEASE	pg. 1 of 1

Smear (~~CPM/100 cm²~~) circle one

Direct Count (CPM/Direct Frisk)

No.	α	β	No.	α	β
1	0	98	26		
2	0	79	27		
3	0	60	28		
4			29		
5			30		
6			31		
7			32		
8			33		
9			34		
10			35		N
11			36		
12			37		
13		N	38	A	
14			39		
15			40		
16			41		
17	A		42		
18			43		
19			44		
20			45		
21			46		
22			47		
23			48		
24			49		
25			50		

1. SU9-04, END OF BORING
2. SU9-05, " "
3. SU9-14, " "

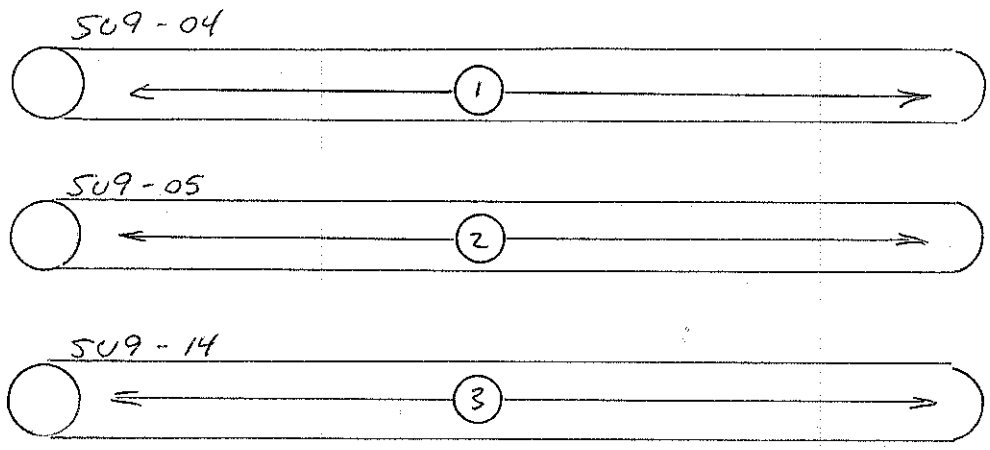

Comments	Surveyed By:	Date:	Instrument	Serial #	α Eff.	β Eff.	α Bkg.	β Bkg	γ Bkg	Cal. Due
SMEARS ARE FROM	K. ANDREWS	5/16/07	2929/ 43-10-1	147736 PR. 150788	0.345	0.159	~~4~~	~~781~~	NA	04/30/08
GROSS AREAS OF TUBES							0.2	36.5		
@ EACH BORING LOCATION,	N									
ALL GROSS MASSALINN WERE							N			
DID NOT EXCEED BKG. OF	A									
0α, 131 BX w/2360, 43-93	Reviewed By:	Date:					A			
swipe results are counts/2min	[signature]	5/16/07								

Key

■	A/S Location
-	Boundary
○	Smear
□	Dose Rate ____/hr
*	Direct Reading CPM/direct frisk
△	Grab Sample

Location: ZEBRA TRUCK / DRILL RIG Site: SYLVANIA - CORNING FUSRAP SITE	RWP# 07-1022.00-001	Survey # 003	Survey Type: INCOMING	pg. 1 of 1

Smear (CPM/100 cm²) circle one

Direct Count (CPM/Direct Frisk)

No.	α	β	No.	α	β
1	0	83	26		
2	1	70	27		
3	0	81	28		
4	0	68	29		
5	0	76	30		
6	1	72	31		
7			32		
8			33		
9			34		
10			35		
11			36		
12			37		
13			38		
14			39		
15			40		
16			41		
17			42		
18			43		
19			44		
20			45		
21			46		
22			47		
23			48		
24			49		
25			50		

LOCATION / DIRECTS

1. CAB / * 0, 116
2. SHOE / * 0, 127
3. CONTROL PANEL / * 4, 87
4. TIRE / * 0, 108
5. TOOL BOX LEFT, RIGHT / * 0, 151
6. BED / * 4, 99; 0, 99

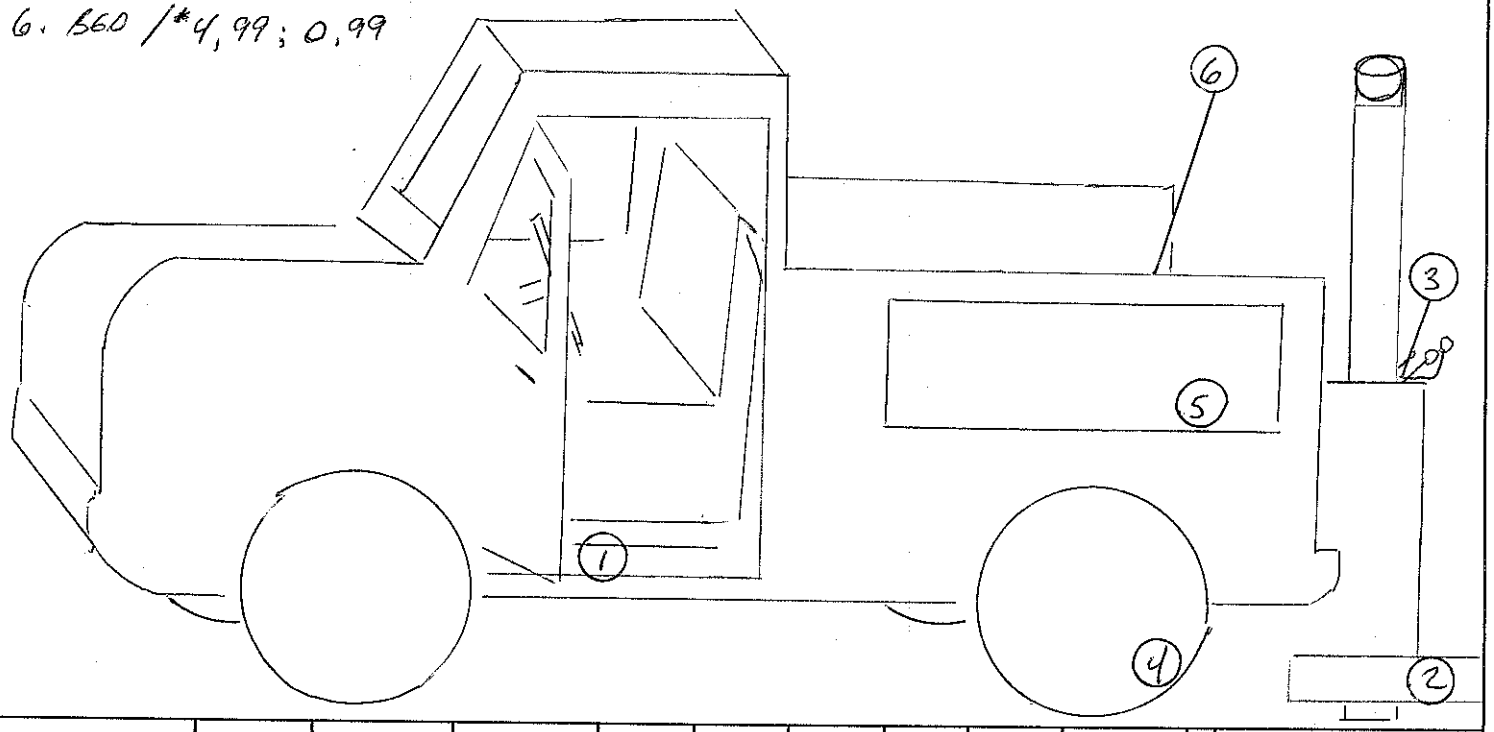

Comments	Surveyed By:	Date:	Instrument	Serial #	α Eff.	β Eff.	α Bkg.	β Bkg	γ Bkg	Cal. Due
swipe results in counts / 2 min.	A. CRAIG - K. ANDREWS	05/15/07	2360/ 43-93	168040	0.15	0.10	0	131	NA	5/7/08
	K. ANDREWS	05/16/07	2929/ 43-10-1	147736/ PR. 150788	0.345	0.159 KMA	~~4~~ 0.2	~~781~~ 36.5	NA	04/30/08
	Reviewed By: [signature]	Date: 5/16/07								

Key

■	A/S Location
-	Boundary
○	Smear
□	Dose Rate ____ /hr
*	Direct Reading CPM/direct frisk
△	Grab Sample

Location: ZEBRA TRUCK / DRILL RIG Site: SYRACUSE - CONNING FUSRAP SITE	RWP# 07 - 1022.00 - 001	Survey # 004	Survey Type: FREE RELEASE	pg. 1 of 1

circle one: Smear (CPM/100 cm²) / Direct Count (CPM/Direct Frisk)

No.	α	β	No.	α	β
1	0	69	26		
2	1	83	27		
3	1	71	28		
4	0	72	29		
5	2	67	30		
6	0	69	31		
7			32		
8			33		
9			34		
10			35		
11			36		
12			37		
13			38		
14			39		
15			40		
16			41		
17			42		
18			43		
19			44		
20			45		
21			46		
22			47		
23			48		
24			49		
25			50		

1. CAB, INTERIOR / * 1, 64
2. TABLE ON TRUCK / * 0, 57
3. TAILGATE / * 1, 66
4. PROBE ON RIG / * 0, 64
5. BED OF TRUCK / * 0, 59
6. TIRES / * 1, 68

Comments	Surveyed By:	Date:	Instrument	Serial #	α Eff.	β Eff.	α Bkg.	β Bkg	γ Bkg	Cal. Due
GROSS MASSELANN FROM	A. CRAIG	05/16/07	2360/ 43-93	148040	0.15	0.10	0	66	NA	5/7/08
TRUCK 2 CPM α, 71 CPM β	K. ANDERSON	05/16/07	2929/ 43-10-1	147736/ PR. 150788	0.345	0.59 KMA	~~4~~	~~78~~	NA	04/30/08
AVG. SCAN OF ALL							0.2	36.5		
ACCESSABLE AREAS OF	N									
TRUCK RIG WERE	A					N				
0 CPM α	Reviewed By:	Date:				A				
65 CPM βγ	[illegible]	5/16/07								

Key

■	A/S Location
-	Boundary
○	Smear
□	Dose Rate _____/hr
*	Direct Reading CPM/direct frisk
△	Grab Sample

Location: Site: SYLVANIA CORNING	RWP# 07 - 1022.00-01	Survey # 005	Survey Type: SHIPPING	pg. 1 of 1

circle one

Smear (CPM/100 cm²)					
Direct Count (CPM/Direct Frisk)					
No.	α	β	No.	α	β
1	3.5	39.5	26		
2	Ø	35.5	27		
3			28		
4			29		
5			30		
6			31		
7			32		
8			33		
9			34		
10			35		
11			36		
12			37		
13			38		
14			39		
15			40		
16			41		
17			42		
18			43		
19			44		
20			45		
21			46		
22			47		
23			48		
24			49		
25			50		

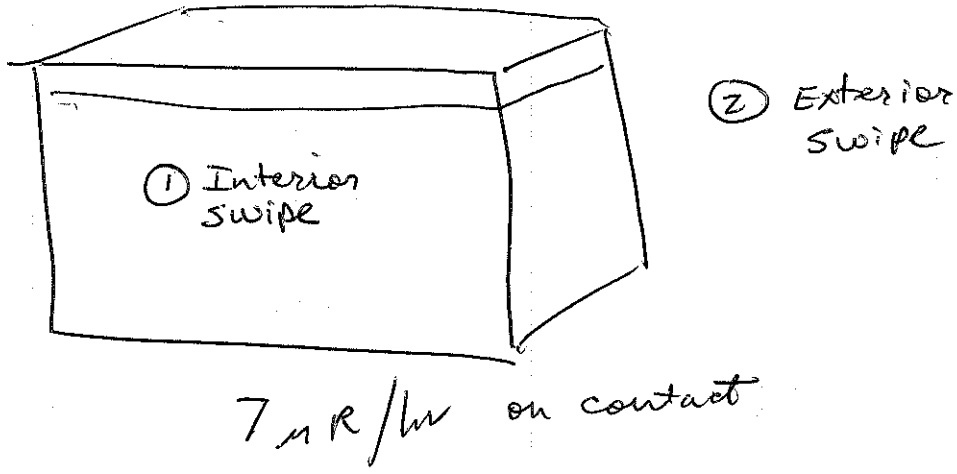

Comments	Surveyed By:	Date:	Instrument	Serial #	α Eff.	β Eff.	α Bkg.	β Bkg	γ Bkg	Cal. Due
E&E sample codes	Al Craig	5/16/07	2929	137620	34.8%	18.2%	0.2	36.5	NA	4/30/08
			Mod 19	221521	NA	NA	NA	NA	5μR/hr	10/15/07
	N									
	A					N				
	Reviewed By:	Date:					A			
	DM Reed	5/16/07								

Key	
■	A/S Location
-	Boundary
○	Smear
□	Dose Rate ____/hr
*	Direct Reading CPM/direct frisk
△	Grab Sample

Location: Site: Sylvania Corning | RWP# 07-1022.00-001 | Survey # 006 | Survey Type: Doserate/Smear | pg. 1 of 1

Smear (CPM/100 cm²) 2 min — circle one
Direct Count (CPM/Direct Frisk)

No.	α	β	No.	α	β
1	0	38	26		
2	1	34	27		
3			28		
4			29		
5			30		
6			31		
7			32		
8			33		
9			34		
10			35		
11			36		
12		N	37		N
13			38		
14			39		
15	A		40	A	
16			41		
17			42		
18			43		
19			44		
20			45		
21			46		
22			47		
23			48		
24			49		
25			50		

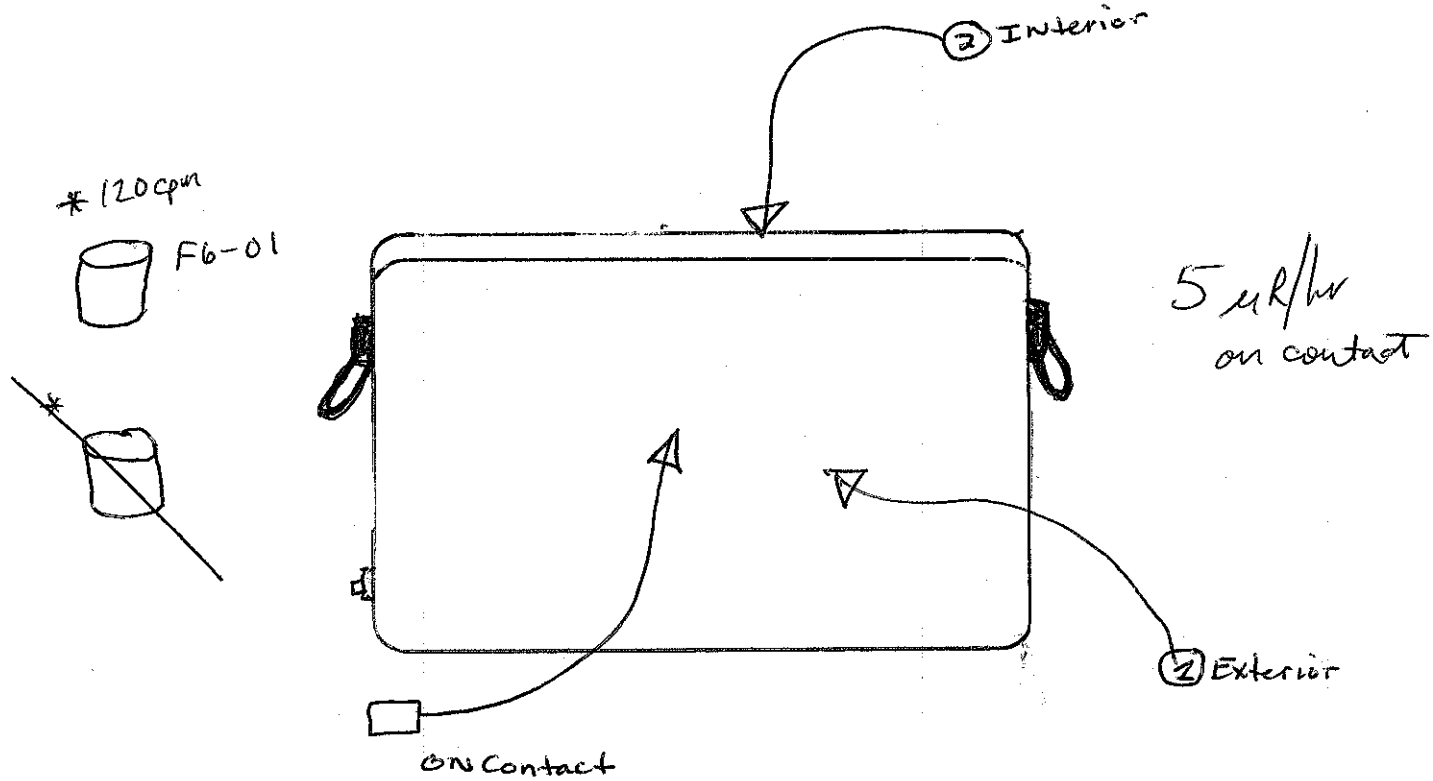

Comments	Surveyed By:	Date:	Instrument	Serial #	α Eff.	β Eff.	α Bkg.	β Bkg	γ Bkg	Cal. Due
E & E Sample Cooler	M Craig	5/17/07	2929	137620	34.8	18.2	0.1	41.3	N/A	4/30/08
	K. Anderson	5/17/07	mod 19	221521	N/A	N/A	N/A	N/A	5 mr/h	10/18/07
			449	229304	NA	13%	NA	50	NA	4/30/08
	N						N			
	A									
	Reviewed By:	Date:								
	SWK	5/17/07					A			

Key
- ■ A/S Location
- *..* Boundary
- ○ Smear
- □ Dose Rate _____ /hr
- * Direct Reading CPM/direct frisk
- △ Grab Sample

Location: Site: Sylvania Corning	RWP# 07-1022.00-07	Survey # 07	Survey Type: Smear/Static	pg. 1 of [

Smear (CPM/100 cm²) / Direct Count (CPM/Direct Frisk) — circle one

No.	α	β	No.	α	β
1	0	35	26		
2	0	31	27		
3	0	38	28		
4	2.5	43	29		
5	1	45	30		
6	0	40	31		
7	2.5	42.5	32		
8	0	34.5	33		
9			34		
10			35		
11			36		
12			37		
13			38		
14			39		
15			40		
16			41		
17			42		
18			43		
19			44		
20			45		
21			46		
22			47		
23			48		
24			49		
25			50		

Statics

1	0/133
2	3/133
3	3/130
4	0/235
5	2/271
6	1/292
7	2/206
8	1/153

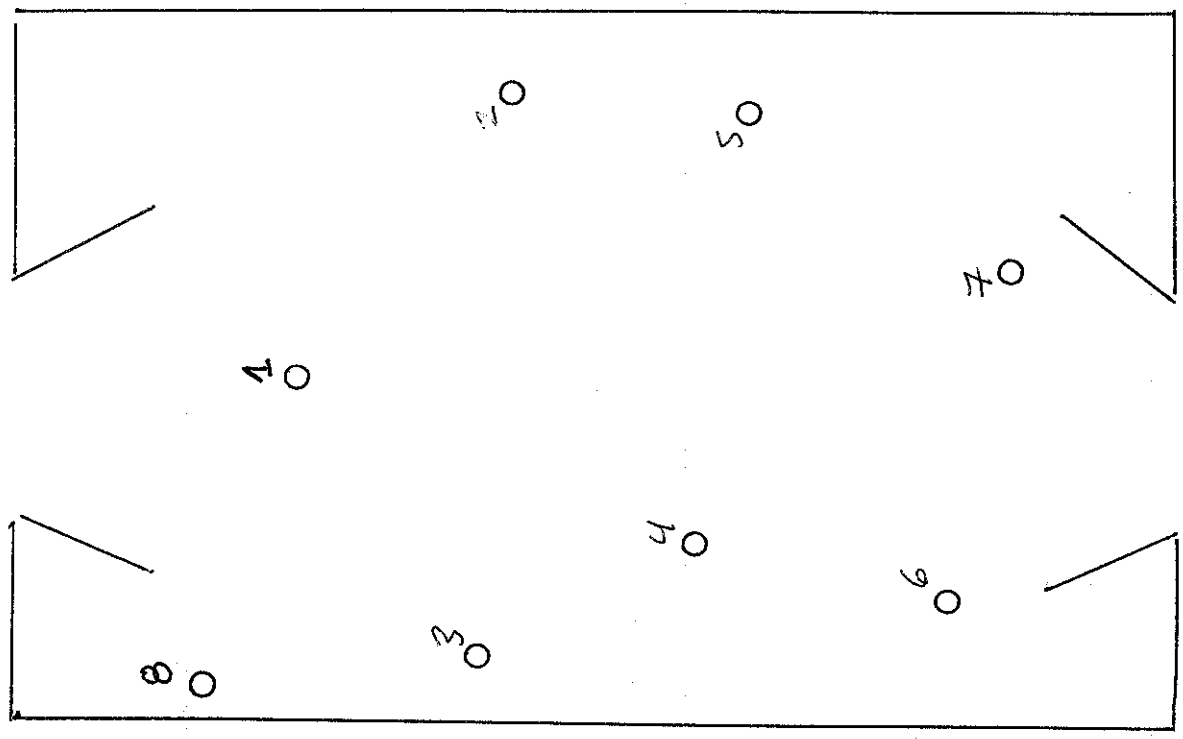

HALLWAY BORINGS & Core locations

Comments	Surveyed By:	Date:	Instrument	Serial #	α Eff.	β Eff.	α Bkg.	β Bkg	γ Bkg	Cal. Due
	Al Craig	5/18/07	2929	147736	34.52	15.9	0.2	33.5	NA	4/30/08
	Kevin Andrews	5/18/07	2360	168040	15.0	10.0	Ø	97	NA	5/8/07
	Reviewed By:	Date:								
		5/18/07								

Key
- ■ A/S Location
- *-* Boundary
- ○ Smear
- □ Dose Rate _____/hr
- * Direct Reading CPM/direct frisk
- △ Grab Sample

Location: GEOPROBE / CORE LOCATIONS Site: SYLVANIA - CORNING FUSRAP SITE	RWP# 07-1022.00-01	Survey # 008	Survey Type: FREE RELEASE	pg. 1 of 1

Smear (CPM/100 cm²)
Direct Count (CPM/Direct Frisk)

circle one

No.	α	β	No.	α	β
1	0	81	26		
2	0	59	27		
3	1	78	28		
4	1	76	29		
5	0	65	30		
6			31		
7			32		
8			33		
9			34		
10			35		
11			36		
12			37		
13			38		
14			39		
15			40		
16			41		
17			42		
18			43		
19			44		
20			45		
21			46		
22			47		
23			48		
24			49		
25			50		

1. SU13-14
2. SU13-13
3. SU13-12
4. SU13-11
5. SU13-15

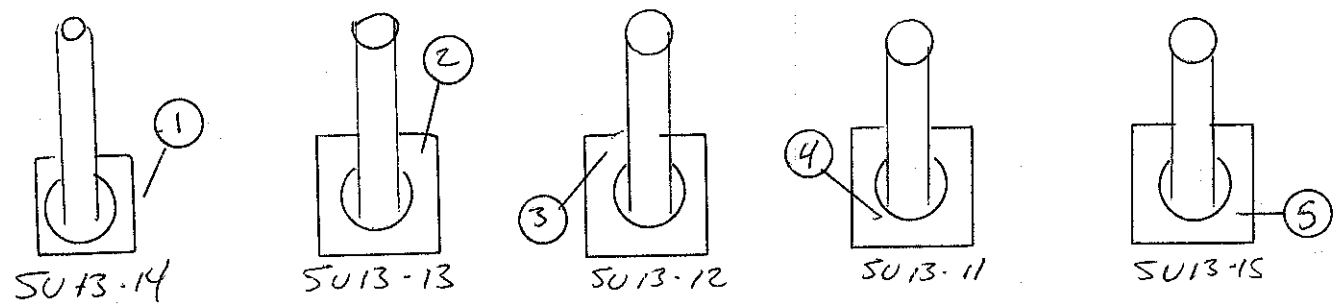

Comments	Surveyed By:	Date:	Instrument	Serial #	α Eff.	β Eff.	α Bkg.	β Bkg	γ Bkg	Cal. Due
End of Boring Smears	K. ANDREWS	5/21/07	2929-43-10-1	147736-PR. 150788	.213	.175	0.2	34.3	~~34.3~~	KNA 4-30-08
	Reviewed By:	Date:								
	SWT	5/21/07								

Key

■	A/S Location
-	Boundary
○	Smear
□	Dose Rate _____/hr
*	Direct Reading CPM/direct frisk
△	Grab Sample

Location: SU 14-18	RWP# 07-1022.00-001	Survey # 009	Survey Type: FREE RELEASE	pg. 1 of 1
Site: SYLVANIA-CORNING FUSRAP SITE				

Smear (CPM/100 cm²) / Direct Count (CPM/Direct Frisk) — circle one

No.	α	β	No.	α	β
1	0	29	26		
2	0	25	27		
3	0	32.5	28		
4	1	31.5	29		
5	1	23.5	30		
6	0	34	31		
7			32		
8			33		
9			34		
10			35		
11			36		
12			37		
13			38		
14			39		
15			40		
16			41		
17			42		
18			43		
19			44		
20			45		
21			46		
22			47		
23			48		
24			49		
25			50		

1. SU14-18
2. SU14-17
3. SU14-16
4. SU14-15
5. SU14-14
6. SU14-13

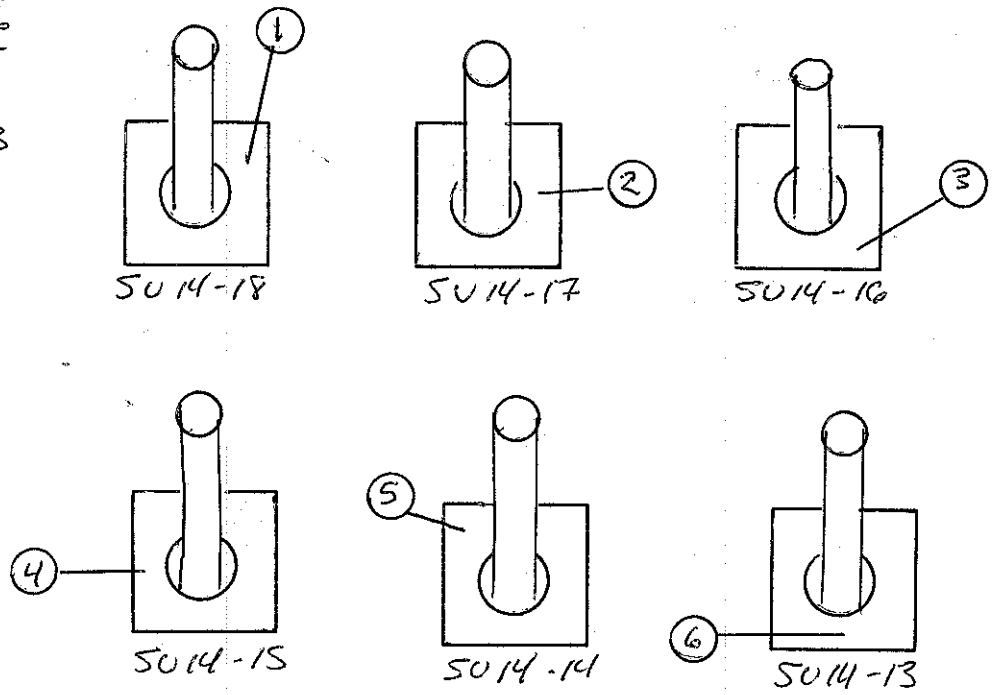

Comments	Surveyed By:	Date:	Instrument	Serial #	α Eff.	β Eff.	α Bkg.	β Bkg	γ Bkg	Cal. Due
	R. ANDREWS	05/22/07	2929-43-10-1	147736-PL-150788	0.2130	0.1250	0.2	36.1	N A	4-30-08
	Reviewed By:	Date:								
	[illegible]	5/22/07								

Key:
- ■ A/S Location
- *-* Boundary
- ○ Smear
- □ Dose Rate _____/hr
- * Direct Reading CPM/direct frisk
- △ Grab Sample

Location: ZEBRA TRAC GEOPROBE RIG Site: SYLVANIA - CORNING FUSRAP SITE	RWP# 07-1022-00-001	Survey # 010	Survey Type: FREE RELEASE	pg. 1 of 1

~~Smear (CPM/100 cm²)~~ circle one

Direct Count (CPM/Direct Frisk)

No.	α	β	No.	α	β
1	0	38	26		
2	0	35	27		
3	.5	25	28		
4	0	45	29		
5	0	40	30		
6	0	38	31		
7	.5	30	32		
8	0	34	33		
9	0	32	34		
10	0	37	35		
11			36		
12			37		
13			38		
14			39		
15			40		
16			41		
17			42		
18			43		
19			44		
20			45		
21			46		
22			47		
23			48		
24			49		
25			50		

DIRECT COUNTS W/ 2360

1. LEFT TRAC HOUSING * 1α, 62 BD
2. LEFT TRAC, * 0α, 75 BD
3. RIGHT TRAC HOUSING, * 0α, 67 BD
4. RIGHT TRAC, * 2α, 84 BD
5. SHOE, * 1α, 94 BD
6. CONTROLS * 1α, 68 BD
7. BASE OF TRAC RIG, * 1α, 77 BD
8. TOP OF SHOE, * 0α, 83 BD
9. OUTRIGGER, LEFT, * 1α, 95 BD
10. " ", RIGHT, * 0α, 87 BD

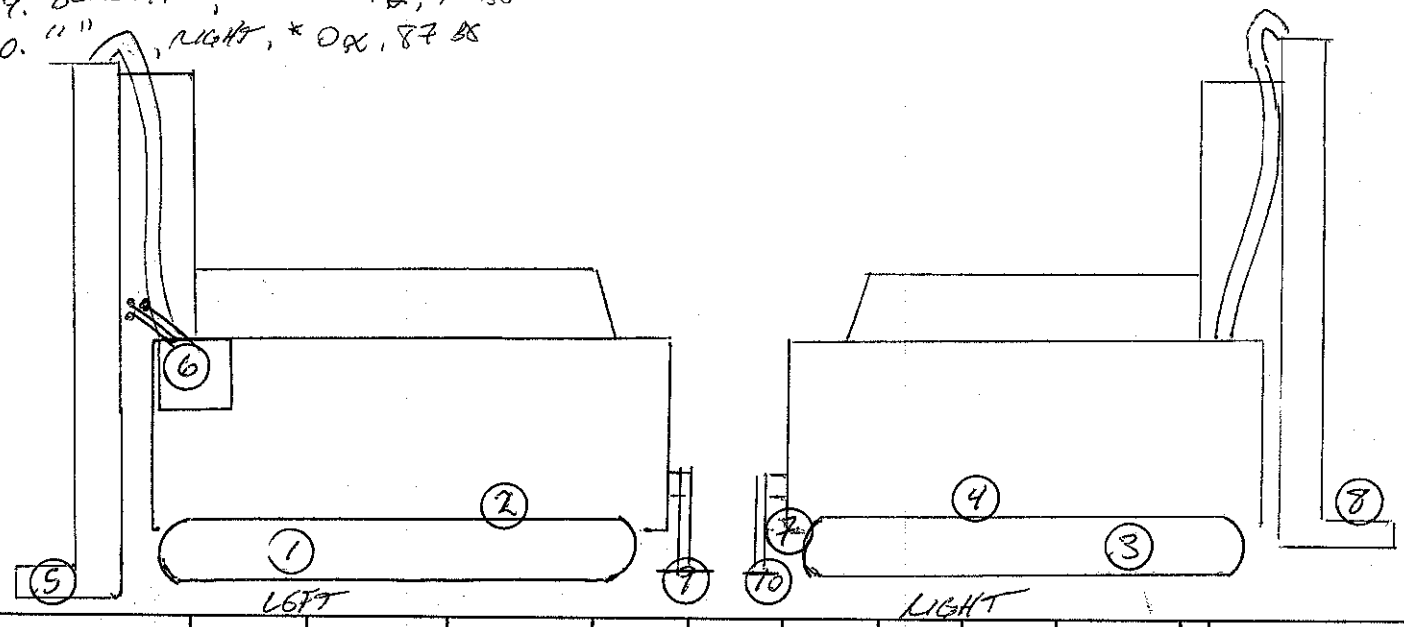

Comments	Surveyed By:	Date:	Instrument	Serial #	α Eff.	β Eff.	α Bkg.	β Bkg	γ Bkg	Cal. Due
	K. ANDREWS	5/25/07	2360/43-93	184903 PR. 179868	0.15	0.10	0	82	~~82~~	05/07/08
	A. CRAIG	5/25/07	2929/43-10-1	137620 PR. 203054	.348 ~~.213~~	.175	0.182 ~~0.3~~	33.2	N/A	05/07/08
	Reviewed By:	Date:								
	[signature]	5/25/07								

Key

■	A/S Location
-	Boundary
○	Smear
□	Dose Rate _____/hr
*	Direct Reading CPM/direct frisk
△	Grab Sample

Location: Site: HICKSVILLE, L.I. FUSRAP	RWP# 07-1022.00-002	Survey # 011	Survey Type: Release Survey	pg. 1 of 1

Smear (CPM/100 cm²) ~~Direct Count (CPM/direct Frisk)~~ circle one

No.	α	β	No.	α	β
1	0.5	40	26		
2	Ø	35.5	27		
3	Ø	39.5	28		
4	Ø	38	29		
5	0.5	41.5	30		
6			31		
7			32		
8			33		
9			34		
10			35		N
11			36		
12			37	A	
13			38		
14		N	39		
15			40		
16			41		
17	A		42		
18			43		
19			44		
20			45		
21			46		
22			47		
23			48		
24			49		
25			50		

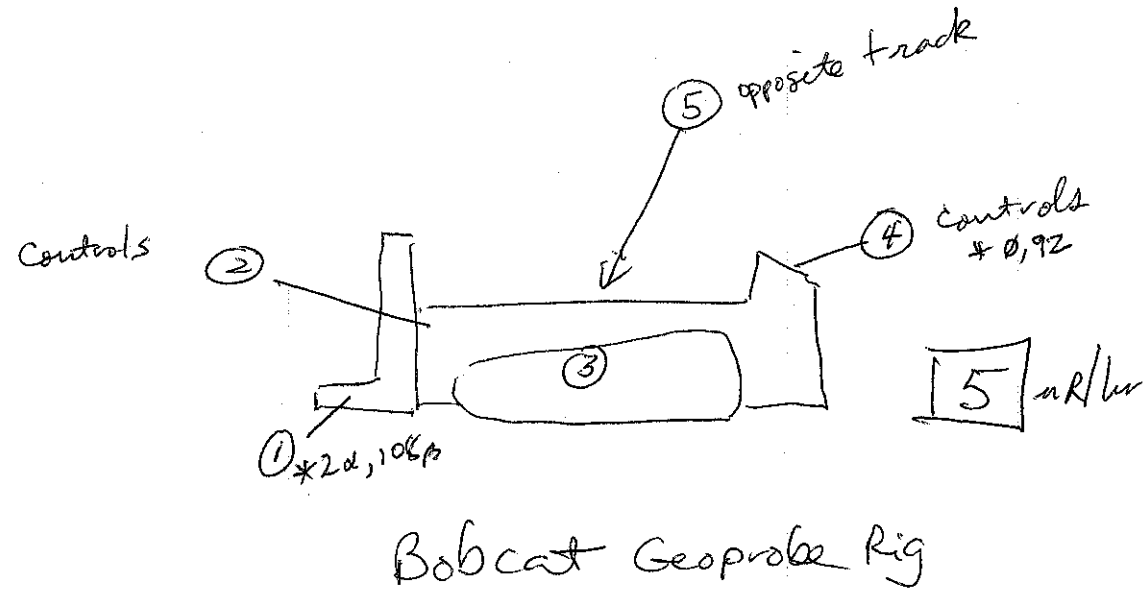

Bobcat Geoprobe Rig

Comments	Surveyed By:	Date:	Instrument	Serial #	α Eff.	β Eff.	α Bkg.	β Bkg	γ Bkg	Cal. Due
Swipe results in CPM	SMT	6/7/07	147736	2929	34.5	15.9	0.1	47.1	NA	4/30/08
	~~SMT~~		~~449~~							
			184903	43-93	15.Ø	10.Ø	1	84	NA	5/07/08
			101662	Mod 19	NA	NA	NA	NA	5nR/hr	10/01/07
							N			
	Reviewed By:	Date:								
	[signature]	6/7/07					A			

Key
- A/S Location
- Boundary
- Smear
- Dose Rate μR /hr
- Direct Reading CPM/direct frisk
- Grab Sample

Location: Site: EM 29	RWP# 07-1022.00-001	Survey # Ø12	Survey Type: Contamination	pg. 1 of 1

Smear (CPM/100 cm²) circle one

Direct Count (CPM/Direct Frisk)

No.	α	β	No.	α	β
1	4	87	26		
2	6	84	27		
3	1	70	28		
4	2	67	29		
5	3	73	30		
6	3	90	31		
7	1	82	32		
8	Ø	78	33		
9	Ø	66	34		
10			35		
11			36		
12			37		
13			38		
14			39		
15			40		
16			41		
17			42		
18			43		
19			44		
20			45		
21			46		
22			47		
23			48		
24			49		
25			50		

Approximately 2'x2'

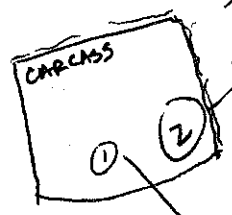

* 6,500 cpm w/ shielded 44-10

* 800 cpm (44-9)
~~10~~ μR/hr
15 μR/hr

* ~~[illegible]~~ 11α, 1833 β (43-93)

* 500 cpm β/γ
10 μR/hr

3 * 300 cpm (44-9)

4 general area

5 ~~Bucket~~ Bung of drum

Drum carcass found @ 3' bgs @ Em-29. Drum had elevated activity in seams & folds (bung). Drum appears to have lead.

6 Bucket of Backhoe

7 general area

8 "

9 "

Comments	Surveyed By:	Date:	Instrument	Serial #	α Eff.	β Eff.	α Bkg.	β Bkg	γ Bkg	Cal. Due
	Al Craig	6/11/07	44-9	~~229804~~ 229304	NA	10%	NA	40	NA	5/08
			Mod 19	221521	NA	NA	NA	NA	S	5/08
			44-10 shield	108862	NA	NA	NA	NA	~~[illegible]~~ 1880	5/08
			43-93	168040	15%	10%	2	86	NA	5/08
			2929	147736	34.5	15.9	0.2	40.9	NA	4/08
	Reviewed By:	Date:								
	Smit	6/11/07								

Key

■	A/S Location
-	Boundary
○	Smear
□	Dose Rate ____/hr
*	Direct Reading CPM/direct frisk
△	Grab Sample

Location: Site: BobCat Rig	RWP# 07-1022.00-001	Survey # 013	Survey Type: RELEASE	pg. 1 of 1

Smear (CPM/100 cm²) / Direct Count (CPM/Direct Frisk) — circle one

No.	α	β	No.	α	β
1	.5	39	26		
2	0	32	27		
3	0	34	28		
4	0	40	29		
5	.5	32	30		
6	0	33	31		
7	0	35	32		
8			33		
9			34		
10			35		
11			36		
12			37		
13			38		
14			39		
15			40		
16			41		
17			42		
18			43		
19			44		
20			45		
21			46		
22			47		
23			48		
24			49		
25			50		

Statics
1 1/52
2 1/61
3 0/54
4 1/63

Smears
1 – 7

Probe Tracks Body

Scan Result
At BKG or Below Ambient BKG

Comments	Surveyed By:	Date:	Instrument	Serial #	α Eff.	β Eff.	α Bkg.	β Bkg	γ Bkg	Cal. Due
	AC	6/15/07	2929	137620	34.8	18.2	2	689	N/A	4/26/08
			2360	168090	21.3	17.5	1	52	N/A	5/1/08
	Reviewed By:	Date:								
	Gwt	6/15/07								

Key
- A/S Location
- Boundary
- Smear
- Dose Rate _____/hr
- Direct Reading CPM/direct frisk
- Grab Sample

Location: Site: Back Hoe	RWP# 07-1022.00-001	Survey # 014	Survey Type: RELEASE	pg. 1 of 1

Smear (CPM/100 cm²) / Direct Count (CPM/Direct Frisk)					
No.	α	β	No.	α	β
1	0	37	26		
2	1	36	27		
3	0	31	28		
4	1	34	29		
5	0	40	30		
6	0	28	31		
7	0	34	32		
8	0.5	42	33		
9	0	38	34		
10	0.5	32	35		
11	0	35	36		
12			37		
13			38		
14			39		
15			40		
16			41		
17			42		
18			43		
19			44		
20			45		
21			46		
22			47		
23			48		
24			49		
25			50		

circle one

Statics

		Swipes
Bucket	* 2/86	1, 2
Hoe	* 1/73	3, 4
RT	* 2/89	5
LT	* 1/90	6
RRT	* 2/76	7
LRT	* 3/71	8
Cab	* 2/82	9
Out rigger (L, R)		10, 11

SCAN 4393/2360

< Than 100 cpm Beta/gamma

< Than 5 Alpha cpm

Comments	Surveyed By:	Date:	Instrument	Serial #	α Eff.	β Eff.	α Bkg.	β Bkg	γ Bkg	Cal. Due
	Al Kia	6/15/07	2929	137620	34.8	18.2	2	689	N/A	4/30/08
			2360	168040	2130	17.5	1	52	N/A	5/1/08
	Reviewed By:	Date:								
	gmt	6/15/07								

Key

■	A/S Location
-	Boundary
○	Smear
□	Dose Rate _____/hr
*	Direct Reading CPM/direct frisk
△	Grab Sample

Location: Site: RAD Drum Area	RWP# 07-1022.00-001	Survey # 015	Survey Type: Contamination	pg. 1 of 1

Smear (CPM/100 cm²) / Direct Count (CPM/Direct Frisk)						circle one
No.	α	β	No.	α	β	
1	0.5	34	26			
2	0.5	34	27			
3	0.5	35	28			
4	0.5	32	29			
5	0.5	40	30			
6	0.5	36	31			
7	0.5	38	32			
8	0.5	32	33			
9	0.5	35	34			
10			35			
11			36			
12			37		N	
13			38			
14			39	N		
15			40			
16		N	41			
17			42			
18			43			
19	N		44			
20			45			
21			46			
22			47			
23			48			
24			49			
25			50			

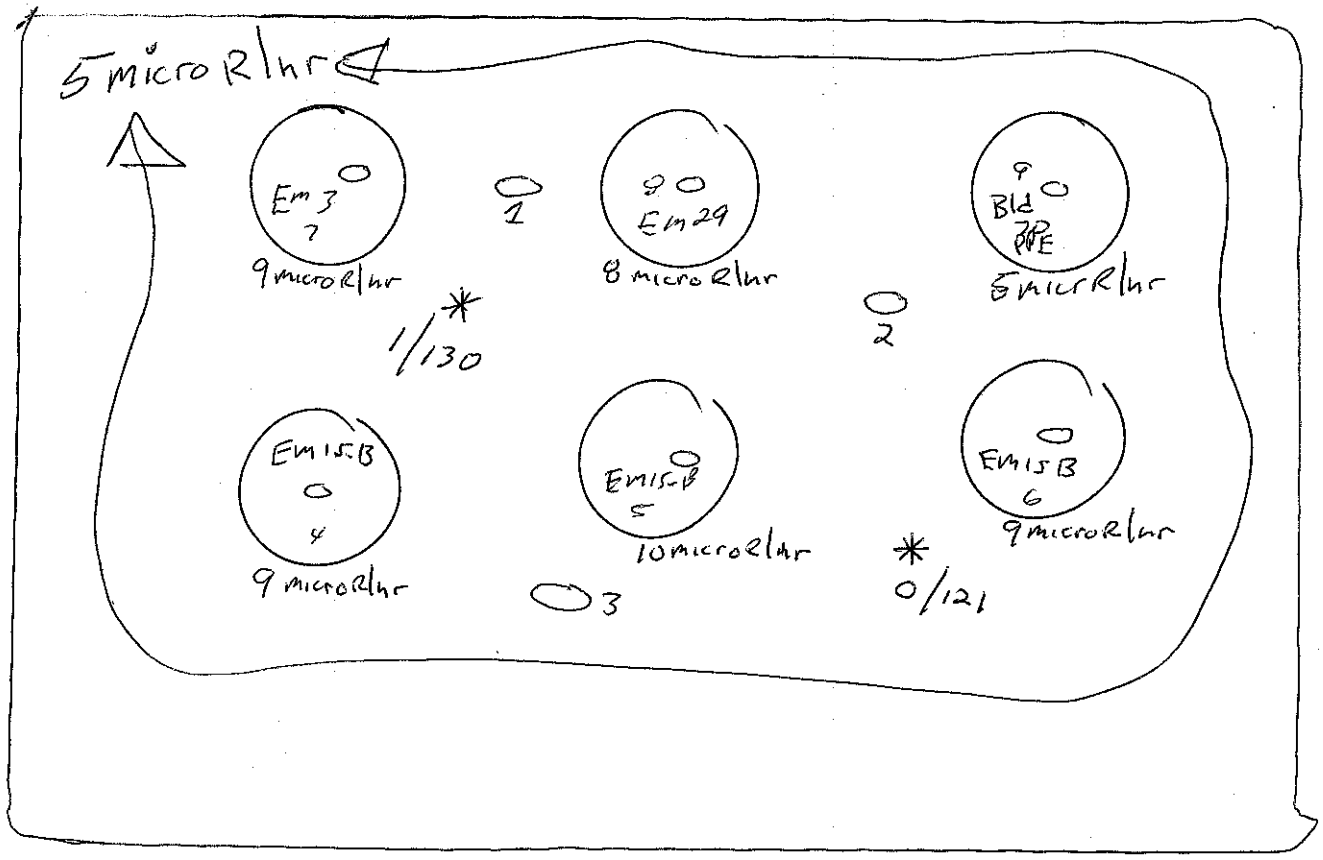

Comments	Surveyed By:	Date:	Instrument	Serial #	α Eff.	β Eff.	α Bkg.	β Bkg	γ Bkg	Cal. Due
	AL KA	6/15/07	2929	137620	34.6	18.2	2	689	N/A	4/30/08
			2360	168040	~~21.50~~	17.5	1	~~52~~	~~N/A~~	5/1/08
	N		MOD19	221521					5	10/15/07
	A					N				
	Reviewed By:	Date:				A				
	SMT	6/15/07								

Key	
■	A/S Location
-	Boundary
○	Smear
□	Dose Rate _____/hr
*	Direct Reading CPM/direct frisk
△	Grab Sample

Location: ACHING SAMPLE PT.	RWP#	Survey #	Survey Type:	
Site: SYLVANIA - CORNING FUSRAP SITE	07 - 1022 . 00 - 001	016	FREE RELEASE	pg. 1 of 1

Smear (CPM/100 cm²) / Direct Count (CPM/Direct Frisk) — circle one

No.	α	β	No.	α	β
1	0	52	26		
2	1	50	27		
3	0	65	28		
4	0	78	29		
5			30		
6			31		
7			32		
8			33		
9			34		
10			35		
11			36		
12			37		
13	N		38	N	
14		A	39		A
15			40		
16			41		
17			42		
18			43		
19			44		
20			45		
21			46		
22			47		
23			48		
24			49		
25			50		

1. SU 10-09
2. SU 10-02
3. DR R1/R2
4. SU 11-22

Comments	Surveyed By:	Date:	Instrument	Serial #	α Eff.	β Eff.	α Bkg.	β Bkg	γ Bkg	Cal. Due
2 MIN CT. ON	K. ANDREWS	6/19/07 ~~04/30/08~~	2929 / 43-10-1	137620 / 203054	.318	.182			N/A	04/30/08
SMEARS.										
					N					
					A					
	Reviewed By:	Date:								
	SMT	6/19/07								

Key
- ■ A/S Location
- *_* Boundary
- ○ Smear
- □ Dose Rate _____/hr
- * Direct Reading CPM/direct frisk
- △ Grab Sample

Location: HICKSVILLE	RWP# 07-1022.00-001	Survey # Release/Swipe	Survey Type:	pg. 1 of 1
Site:				

Smear (CPM/100 cm²) Direct Count (CPM/Direct Frisk)					
No.	α	β	No.	α	β
1	1	40	26		
2	1	34	27		
3	0	37	28		
4	0	40	29		
5	0	32	30		
6	1	31	31		
7			32		
8			33		
9			34		
10			35		
11			36		
12			37		
13			38		
14			39		
15			40		
16			41		
17			42		
18			43		
19			44		
20			45		
21			46		
22			47		
23			48		
24			49		
25			50		

circle one

ARCHIVE COOLERS #'s. 1,2,3

1. COOLER 2 INSIDE
2. " " OUTSIDE
3. COOLER 1 INSIDE
4. COOLER 1 OUTSIDE
5. COOLER 3 INSIDE
6. COOLER 3 OUTSIDE

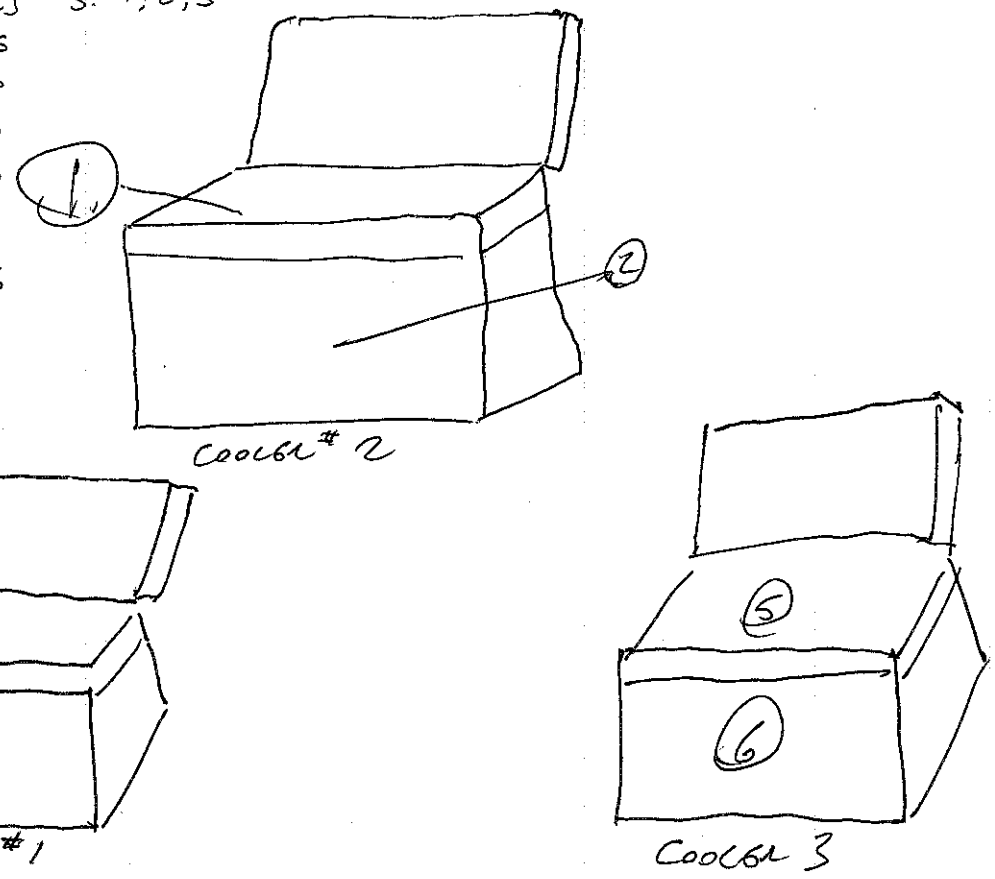

Comments	Surveyed By:	Date:	Instrument	Serial #	α Eff.	β Eff.	α Bkg.	β Bkg	γ Bkg	Cal. Due
	K Andrews	6/18/07	~~#4~~ 9							
			2929	137620	0.348	0.182	0.2	33.4	NA	4/30/08
	Reviewed By:	Date:								
		6/18/07								

Key
- A/S Location
- Boundary
- Smear
- Dose Rate _____/hr
- Direct Reading CPM/direct frisk
- Grab Sample

Location: HICKSVILLE Site: BLG 70 G4-01	RWP# 07-1022.00-001	Survey # ~~Contamination~~ gmt SURVEY-018	Survey Type: CORE BORING	pg. 1 of 1

circle one

Smear (CPM/100 cm²) Direct Count (~~CPM~~/Direct Frisk)					
No.	α	β	No.	α	β
1	10	80	26		
2	Ø	55	27		
3			28		
4			29		
5			30		
6			31		
7			32		
8			33		
9			34		
10			35		
11			36		
12			37		
13			38		
14			39		
15			40		
16			41		
17			42		
18			43		
19			44		
20			45		
21			46		
22			47		
23			48		
24			49		
25			50		

Smear results in counts per 2 minutes.

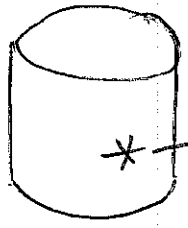

100-110 cpm w/ 44-9 (β/γ)

~~20 kcpm (γ) w/44-10~~ gmt

① Pre coring

② post coring.

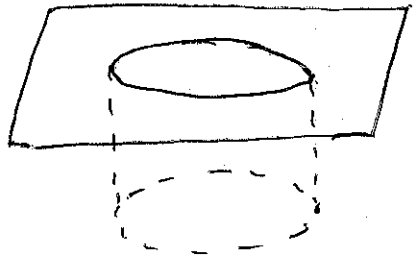

Comments	Surveyed By:	Date:	Instrument	Serial #	α Eff.	β Eff.	α Bkg.	β Bkg	γ Bkg	Cal. Due
SCANNED 100% of core	K. ANDREWS	5/16/07	12C/44-9	229304	NA	0.10	NA	30	NA	5/08
SAMPLE & BOREHOLE. ~~Static~~	A. Craig	5/16/07	19	4221521	NA	NA	NA	NA	5	10/07
Measurements performed			2221/44-10	108862	NA	NA	NA	NA	2,873	5/08
at locations w/ highest activity.			2360/43-93	168040	0.15	0.10	Ø	98	NA	5/08
			2929	147736	0.345	0.159	0.2	39.1	NA	5/08
TRANSCRIBED Results from	Reviewed By:	Date:								
log to survey form.	[illegible]	6/19/07								

Key	
■	A/S Location
-	Boundary
○	Smear
□	Dose Rate μR /hr
*	Direct Reading CPM/direct frisk
△	Grab Sample

Location: HICKSVILLE Site: D8-02	RWP# 07-1022.00-001	Survey # SURVEY 019	Survey Type: CORE BORING	pg. 1 of 1

circle one

Smear (CPM/100 cm²) / Direct Count (CPM/Direct Frisk)					
No.	α	β	No.	α	β
1	0.5	37.5	26		
2	Ø	37	27		
3			28		
4			29		
5			30		
6			31		
7			32		
8			33		
9			34		
10			35		
11			36		
12			37		
13			38		
14			39		
15			40		
16			41		
17			42		
18			43		
19			44		
20			45		
21			46		
22			47		
23			48		
24			49		
25			50		

① pre coring
② post coring

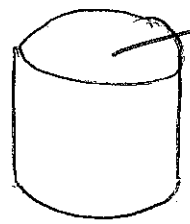

* 35 K cpm w/ 44-9

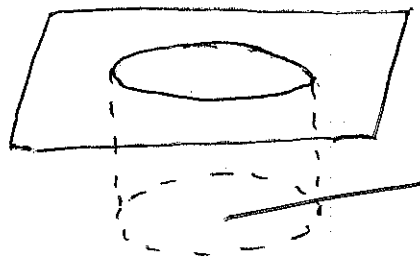

* 3,300 cpm w/ 44-10

Comments	Surveyed By:	Date:	Instrument	Serial #	α Eff.	β Eff.	α Bkg.	β Bkg	γ Bkg	Cal. Due
SCANNED 100% of core	K. Andrews	5/16/07	12C/44-9	229304	NA	0.10	NA	45	NA	5/08
SAMPLE & BOREHOLE. Static	A. Craig	5/16/07	19	12221521	NA	NA	NA	NA	5	10/07
Measurements performed			2221/44-10	108862	NA	NA	NA	NA	1,448	5/08
at locations w/ highest activity.			2360/43-93	168040	0.15	0.10	2	96	NA	5/08
TRANSCRIBED SURVEY from	A		2929	147736	0.345	0.159	0.2	39.1	NA	5/08
field log.	Reviewed By:	Date:								
	[illegible]	6/19/07								

Key

■	A/S Location
-	Boundary
○	Smear
□	Dose Rate μR /hr
*	Direct Reading CPM/direct frisk
△	Grab Sample

Location: HICKSVILLE Site: BLG 70 F6-Ø2	RWP# 07-1022.00-001	Survey # SURVEY-020	Survey Type: CORE BORING	pg. 1 of 1

Smear (CPM/100 cm²) / Direct Count (CPM/Direct Frisk)						circle one
No.	α	β	No.	α	β	
1	0.5	36.5	26			
2	Ø	34.5	27			
3			28			
4			29			
5			30			
6			31			
7			32			
8			33			
9			34			
10			35			
11			36			
12			37			
13			38			
14			39			
15			40			
16			41			
17			42			
18			43			
19			44			
20			45			
21			46			
22			47			
23			48			
24			49			
25			50			

① pre survey
② post survey

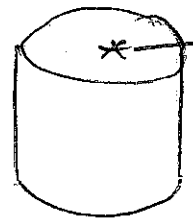

* 33 Kcpm β/γ w/ 44-9

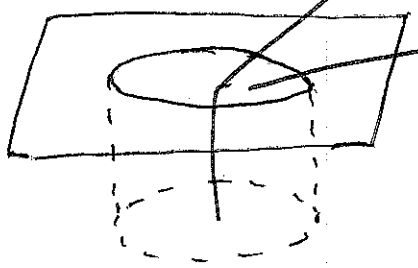

* 4,746 cpm γ w/ 44-10

20 μR/hr in hole

LAS of core & hole + equipment is Ø α, 118 β w/ ~~2360~~ 43-93.

Comments	Surveyed By:	Date:	Instrument	Serial #	α Eff.	β Eff.	α Bkg.	β Bkg	γ Bkg	Cal. Due
SCANNED 100% of core	K. Andrews	5/16/07	12C/44-9	229304	NA	0.10	NA	35	NA	5/08
SAMPLE & BOREHOLE. ~~Static~~	K. Craig	5/16/07	19	10221521	NA	NA	NA	NA	5	10/07
Measurements performed			2221/44-10	108862	NA	NA	NA	NA	1,856	5/08
at location w/ highest activity.			2360/43-93	168040	0.15	0.10	1	99	NA	5/08
Transcribed survey from			2929	147736	0.345	0.159	0.2	39.1	NA	5/08
field log.	Reviewed By:	Date:								
	[illegible]	6/19/07								

Key	
▩	A/S Location
-	Boundary
○	Smear
□	Dose Rate μR /hr
*	Direct Reading CPM/direct frisk
△	Grab Sample

Location: HICKSVILLE Site: D9-Ø1	RWP# 07-1022.00-001	Survey # SURVEY-021	Survey Type: CORE BORING	pg. 1 of 1

Smear (CPM/100 cm²) / Direct Count (CPM/Direct Frisk) — circle one

No.	α	β	No.	α	β
1	Ø	36	26		
2	1.5	47	27		
3			28		
4			29		
5			30		
6			31		
7			32		
8			33		
9			34		
10			35		
11			36		
12			37		
13			38		
14			39		
15			40		
16			41		
17			42		
18			43		
19			44		
20			45		
21			46		
22			47		
23			48		
24			49		
25			50		

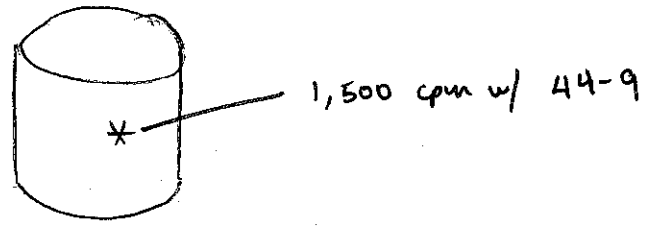

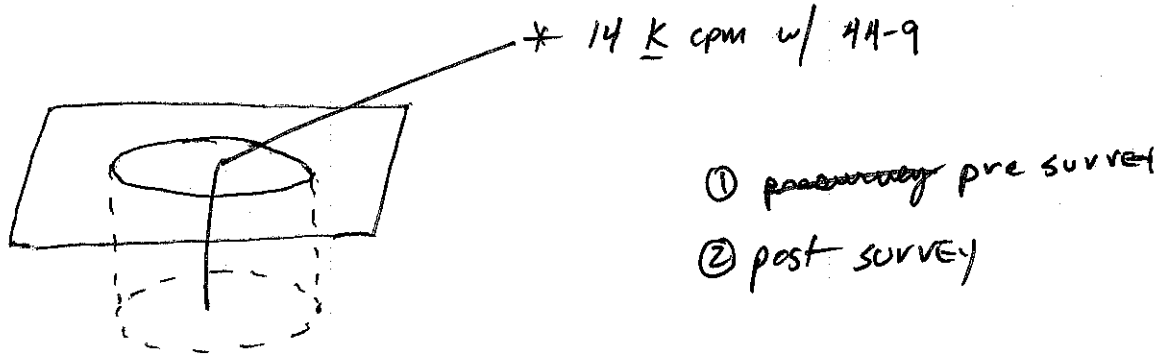

Comments	Surveyed By:	Date:	Instrument	Serial #	α Eff.	β Eff.	α Bkg.	β Bkg	γ Bkg	Cal. Due
SCANNED 100% of core	K. ANDREWS	5/17/07	12C/44-9	229304	NA	0.10	NA	45	NA	5/08
SAMPLE & BOREHOLE. ~~Static~~	A. CRAIG	5/17/07	19	10221521	NA	NA	NA	NA	5	10/07
Measurements performed			2221/44-10	108862	NA	NA	NA	NA	1,407	5/08
at locations w/ highest activity.			2360/43-93	168040	0.15	0.10	1	83	NA	5/08
			2929	147736	0.345	0.159	0.1	41.3	NA	5/08
	Reviewed By:	Date:								
	[signature]	6/19/07								

Key

■	A/S Location
-	Boundary
○	Smear
□	Dose Rate μR /hr
*	Direct Reading CPM/direct frisk
△	Grab Sample

Location: HICKSVILLE Site: F6-01	RWP# 07-1022.00-001	Survey # SURVEY-022	Survey Type: CORE BORING	pg. 1 of 1

Smear (CPM/100 cm²) / Direct Count (CPM/Direct Frisk) — circle one

No.	α	β	No.	α	β
1	1	38	26		
2	0	33	27		
3			28		
4			29		
5			30		
6			31		
7			32		
8			33		
9			34		
10			35		
11			36		
12			37		
13			38		
14			39		
15			40		
16			41		
17			42		
18			43		
19			44		
20			45		
21			46		
22			47		
23			48		
24			49		
25			50		

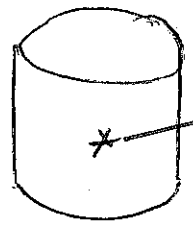

20 uR/hr @ contact.

35 k cpm w/ 44-9. (β/γ)

① pre survey

② post survey

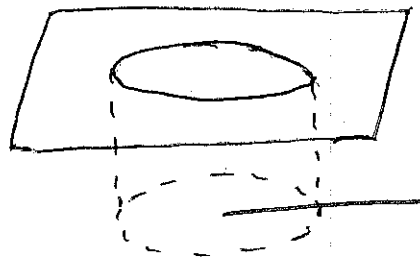

20 k cpm w 44-10 (γ)

Comments	Surveyed By:	Date:	Instrument	Serial #	α Eff.	β Eff.	α Bkg.	β Bkg	γ Bkg	Cal. Due
SCANNED 100% of core	K. Andrews	5/17/07	12C/44-9	229304	NA	0.10	NA	50	NA	5/08
SAMPLE & BOREHOLE. ~~Static~~	A. Craig	5/17/07	19	70221521	NA	NA	NA	NA	5	10/07
Measurements performed			2221/44-10	108862	NA	NA	NA	NA	1,586	5/08
at locations w/ highest activity.			2360/43-93	168040	0.15	0.10	1	80	NA	5/08
			2929	147736	0.345	0.159	0.1	41.3	NA	5/08
	Reviewed By:	Date:								
	[signature]	6/19/07								

Key: ■ A/S Location; Boundary; ○ Smear; □ Dose Rate μR /hr; * Direct Reading CPM/direct frisk; △ Grab Sample

Location: HICKSVILLE Site: F3-01	RWP# 07-1022.00-001	Survey # SURVEY-023	Survey Type: CORE BORING	pg. 1 of 1

Smear (CPM/100 cm²) / Direct Count (CPM/Direct Frisk)						circle one
No.	α	β	No.	α	β	
1	1	445	26			
2	0.5	38.5	27			
3			28			
4			29			
5			30			
6			31			
7			32			
8			33			
9			34			
10			35			
11			36			
12			37			
13			38			
14			39			
15			40			
16			41			
17			42			
18			43			
19			44			
20			45			
21			46			
22			47			
23			48			
24			49			
25			50			

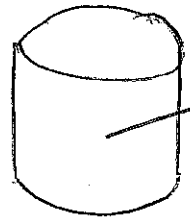

→ 600 cpm w/ 44-9 (β/γ), 3 K cpm w/ 44-10 (γ)

7 μR/hr at contact

① pre SURVEY

② post SURVEY

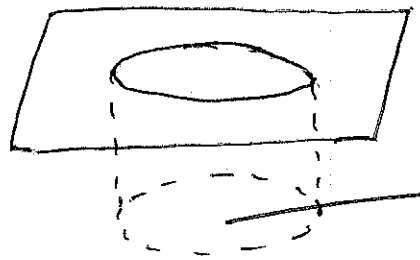

→ 3 K cpm w/ 44-10 (γ)

Comments	Surveyed By:	Date:	Instrument	Serial #	α Eff.	β Eff.	α Bkg.	β Bkg	γ Bkg	Cal. Due
SCANNED 100% of core	K. Andrews	5/17/07	12C/44-9	229304	NA	0.10	NA	50	NA	5/08
SAMPLE & BOREHOLE. ~~Static~~	A. Craig	5/19/07	19	10221521	NA	NA	NA	NA	75	~~6/08~~ 10/07
Measurements performed			2221/44-10	108862	NA	NA	NA	NA	~~1,500~~ 1867	5/08
at locations w/ highest activity.			2360/43-93	168040	0.15	0.10	1	83	NA	5/08
			2929	147736	0.345	0.159	0.1	41.3	NA	5/08
	Reviewed By:	Date:								
	DMD	6/19/07								

Key	
■	A/S Location
"-"	Boundary
○	Smear
□	Dose Rate μR /hr
*	Direct Reading CPM/direct frisk
△	Grab Sample

Location: HICKSVILLE Site: A3-01	RWP# 07-1022.00-001	Survey # SURVEY-024	Survey Type: CORE BORING	pg. 1 of 1

Smear (CPM/100 cm²) / Direct Count (CPM/Direct Frisk) — circle one

No.	α	β	No.	α	β
1	Ø	~~40.7~~ 40.5	26	40.5	Smt
2	1.5	47.5	27		
3			28		
4			29		
5			30		
6			31		
7			32		
8			33		
9			34		
10			35		
11			36		
12			37		
13			38		
14			39		
15			40		
16			41		
17			42		
18			43		
19			44		
20			45		
21			46		
22			47		
23			48		
24			49		
25			50		

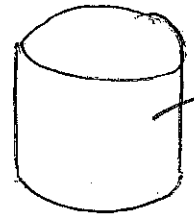

[12] μR/hr @ contact

* 100 cpm w/ 44-9 (β/γ); 7,823 cpm w/ 44-10 (γ)

① pre survey

② post survey.

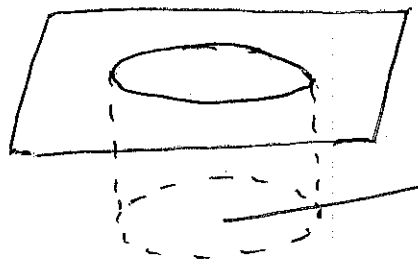

* 2,730 cpm w/ 44-10 (γ)

Comments	Surveyed By:	Date:	Instrument	Serial #	α Eff.	β Eff.	α Bkg.	β Bkg	γ Bkg	Cal. Due
SCANNED 100% of core	K. Andrews	5/17/07	12C/44-9	229304	NA	0.10	NA	50	NA	5/08
SAMPLE & BOREHOLE. ~~Static~~	A. Craig	5/17/07	19	47221521	NA	NA	NA	NA	5	10/07
Measurements performed			2221/44-10	108862	NA	NA	NA	NA	1,849	5/08
at locations w/ highest activity.			2360/43-93	168040	0.15	0.10	1	83	NA	5/08
			~~2929~~	~~0.345~~	~~0.159~~	~~0.1~~	~~41.3~~	~~A~~		~~Smt~~
	Reviewed By:	Date:	2929	147736	0.345	0.159	0.1	41.3	NA	5/08
	JMD	6/19/07								

Key	
■	A/S Location
-	Boundary
○	Smear
□	Dose Rate μR /hr
*	Direct Reading CPM/direct frisk
△	Grab Sample

Location: REMOTE GEOPROBE UNIT / CORE DRILL	RWP# 07-1022.00-001	Survey # SURVEY #025	Survey Type: FREE RELEASE	pg. 1 of 1
Site: SYLVANIA - CORNING FUSRAP SITE				

Smear (CPM/100 cm²)						circle one
Direct Count (CPM/Direct Frisk)						
No.	α	β	No.	α	β	
1	0	76	26			
2	0	61	27			
3	1	59	28			
4	0	66	29			
5	0	64	30			
6	0	74	31			
7	0	60	32			
8	1	82	33			
9			34			
10			35			
11			36			
12			37	N		
13			38		A	
14			39			
15			40			
16	N		41			
17		A	42			
18			43			
19			44			
20			45			
21			46			
22			47			
23			48			
24			49			
25			50			

GEOPROBE RMA
1. SHOE, ~~0 BC~~ 0α / 86 βγ
2. CONTROLS, 0α / 71 βγ
3. WHEELS, 1α / 83 βγ
4. BASE, 0α / 79 βγ

CORE DRILL
5. DRILL BLADE, 1α / 85 βγ
6. BASE / PLATE, 0α / 72 βγ
7. CONTROLS, 1α / 64 βγ
8. WHEELS, 2α / 70 βγ

Comments	Surveyed By:	Date:	Instrument	Serial #	α Eff.	β Eff.	α Bkg.	β Bkg	γ Bkg	Cal. Due
1 MIN CT FOR STATIC	K. ANDREWS	06/19/07	2360/43-93	189905/179868	15.0	10.0	0	72	N/A	05/07/08
READING, 2 MIN CT.	K. ANDREWS	06/19/07	2929/43-10-1	137620/203054	.348	.182	0.3	35.1		04/30/08
FOR SMEARS.										
					N					
Swipe counts over										
2 minutes.	Reviewed By:	Date:				A				
	D. M. [illegible]	6/19/07								

Key
- ■ A/S Location
- *-* Boundary
- ○ Smear
- □ Dose Rate ____ /hr
- * Direct Reading CPM/direct frisk
- △ Grab Sample

Location: ZEBRA GEOPROBE TRAC RIG	RWP#	Survey #	Survey Type:	
Site: SYLVANIA - CORNING FUSRAP SITE	07-1022.00-001	Ø26	FREE RELEASE	pg. 1 of 1

Smear (CPM/100 cm²) circle one

Direct Count (CPM/Direct Frisk)

No.	α	β	No.	α	β
1	1	65	26		
2	1	68	27		
3	1	64	28		
4	1	61	29		
5	0	78	30		
6	0	80	31		
7	0	70	32		
8	1	72	33		
9	0	74	34		
10	1	55	35		
11	0	59	36		
12	0	69	37		
13	2	74	38	N	
14			39		A
15			40		
16			41		
17			42		
18			43		
19	N		44		
20		A	45		
21			46		
22			47		
23			48		
24			49		
25			50		

1. SHOE, 1α / 81 BG
2. LEFT SIDE OUTRIGGER, 0α / 70 BG
3. RIGHT SIDE OUTRIGGER, 0α / 63 BG
4. RIGHT TRAC HOUSING, 2α / 77 BG
5. RIGHT SIDE TRAC, 0α / 83 BG
6. BARREL, 1α / 70 BG
7. RODS, 0α / 64 BG
8. LEFT TRAC HOUSING, 2α / 69 BG
9. LEFT TRAC, 1α / 78 BG
10. BASE OF SHOE, 0α / 72 BG
11. BARREL SHELF, 1α / 68 BG
12. UNDERCARRAGE, 0α / 81 BG
13. CONTROL PANEL, 0α / 56 BG

Comments	Surveyed By:	Date:	Instrument	Serial #	α Eff.	β Eff.	α Bkg.	β Bkg	γ Bkg	Cal. Due
SWIPE RESULTS	K. ANDREWS	6/19/07	2360/ 43-93	184903/ 179868	15.0	10.0	0	72	N	05/07/08
are listed over a	K. ANDREWS	6/19/07	2929/ 43-10-1	137620/ 203054	.348	.182	0.3	35.1	A	04/30/08
2 minute count		N								
time, NOT CPM.		A					N			
1 MIN CT FOR STATIC READ.							A			
	Reviewed By:	Date:								
	[signature]	6/19/07								

Key

■	A/S Location
-	Boundary
○	Smear
□	Dose Rate ____/hr
*	Direct Reading CPM/direct frisk
△	Grab Sample

Location: ARCHIVE SAMPLE LOCATIONS	RWP#	Survey #	Survey Type:	
Site: SYLVANIA - CORNING FUSRAP SITE	07-1022.00-001	027	Free Release	pg. 1 of 1

circle one

ARCHIVE SAMPLE PT. I.D. #'S

1. SU 11-08,
2. DR-E,
3. SU 11-13,
4. SU 11-21,
5. SU 12-06,
6. DR-J,
7. DR-U,
8. SU 9-01,

Smear (CPM/100 cm²) / Direct Count (CPM/Direct Frisk)					
No.	α	β	No.	α	β
1	1	66	26		
2	0	63	27		
3	1	67	28		
4	0	69	29		
5	0	73	30		
6	1	62	31		
7	1	75	32		
8	0	59	33		
9			34		
10			35		
11			36		
12			37		
13			38		
14			39	N	
15			40		A
16	N		41		
17		A	42		
18			43		
19			44		
20			45		
21			46		
22			47		
23			48		
24			49		
25			50		

Comments	Surveyed By:	Date:	Instrument	Serial #	α Eff.	β Eff.	α Bkg.	β Bkg	γ Bkg	Cal. Due
KMA ~~1 MW GT. FOR STATIC~~	K. ANDREWS	06/19/07	2360/43-93	184903/179868	15.0	10.0	0	72	N	05/07/08
~~READINGS~~, 2 MW GT.	K. ANDREWS	06/19/07	2929/43-10.1	137620/203054	.348	.182	0.3	35.1	A	01/30/08
FOR SMEARS.					N					
N				A						
A	Reviewed By:	Date:								
	[signature]	6/19/07								

Key

■	A/S Location
-	Boundary
○	Smear
□	Dose Rate _____/hr
*	Direct Reading CPM/direct frisk
△	Grab Sample

Location: HICKSVILLE Site: BLDG 70	RWP# 07-1022.00-001	Survey # ~~018~~ 028 (gmt)	Survey Type: Contamination	pg. 1 of 1

→ Smear (CPM/100 cm²) circle one

Direct Count (CPM/Direct Frisk)

No.	α	β	No.	α	β
1	Ø	38	26		
2	1	47	27		
3	Ø	41	28		
4	0.5	47	29		
5	Ø	51	30		
6	Ø.5	53	31		
7	1	51	32		
8	Ø	55	33		
9	Ø	52	34		
10	0.5	47	35		
11	0.5	50	36		
12	Ø	53	37		N
13	Ø	44	38		
14	1	56	39	A	
15	Ø	52	40		
16	0.5	49	41		
17	Ø	42	42		
18	0.5	50	43		
19	0.5	55	44		
20	1.0	5Ø	45		
21			46		
22		N	47		
23			48		
24		A	49		
25			50		

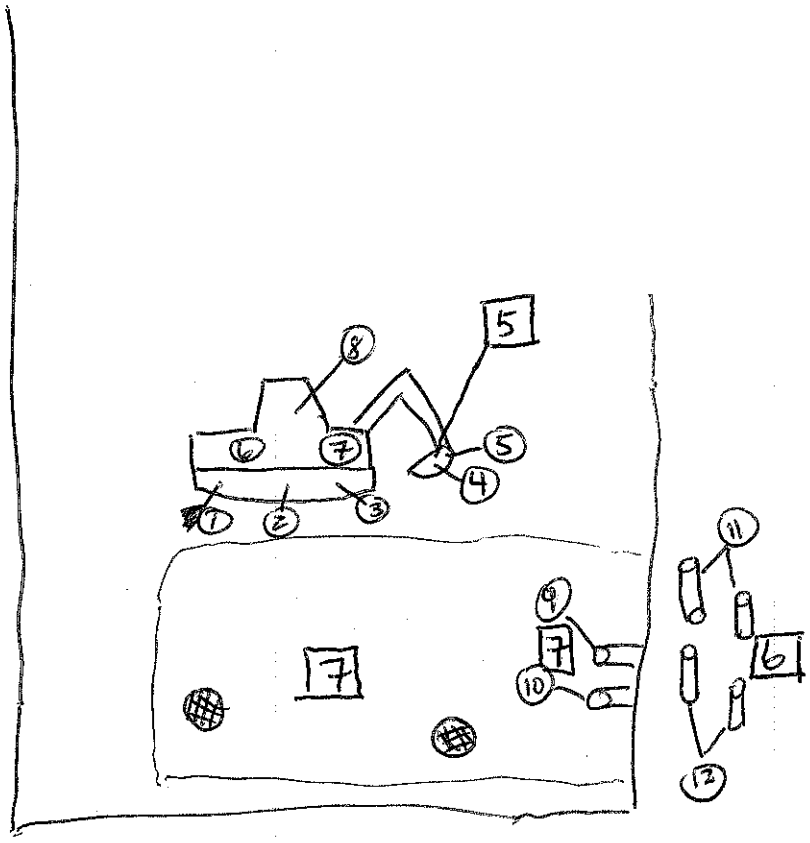

1. BACKHOE TRACK
2. " "
3. " "
4. BACKHOE BUCKET
5. "
6. BACKHOE EXTERIER
7. " "
8. CAB + Controls
9. PVC PIPE in situ
10. " "
11, 12. > PIPE REMOVED
13-20. Tools, Equipment, PERSONNEL, MISC.

Comments	Surveyed By:	Date:	Instrument	Serial #	α Eff.	β Eff.	α Bkg.	β Bkg	γ Bkg	Cal. Due
PERFORMED 100% SCAN of	G.M. TANNAHILL	7/12/07	2929	132806	0.34	Ø.2Ø	0.3	50.8	NA	7/Ø8
BACKHOE, Equipment, pipe &			12/44-9	232131	NA	0.1Ø	NA	60	NA	7/Ø8
personnel. Performed 50%			Mod 19	144790	NA	NA	NA	NA	7	5/Ø8
scan of asphalt &										
materials.										
	Reviewed By:	Date:								
	[signature]	7/12/07								

N

A

Key

■	A/S Location
-·-	Boundary
○	Smear
□	Dose Rate MR /hr
*	Direct Reading CPM/direct frisk
△	Grab Sample

029

Location: HICKSVILLE Site: BLDG 70	RWP# 07-1022.00-001	Survey # ~~019~~ 8mt	Survey Type: CONTAMINATION	pg. 1 of 1

→ Smear (CPM/100 cm²) / Direct Count (CPM/Direct Frisk)						circle one
No.	α	β	No.	α	β	
1	0	40	26			
2	0	44	27			
3	1	45	28			
4	0.5	42	29			
5	0	53	30			
6	0.5	42	31			
7	0	42	32			
8	0.5	46	33			
9	0.5	44	34			
10	0.5	42	35			
11			36			
12			37			
13			38			
14			39			
15			40			
16			41			
17			42			
18			43			
19			44			
20			45			
21			46			
22			47			
23			48			
24			49			
25			50			

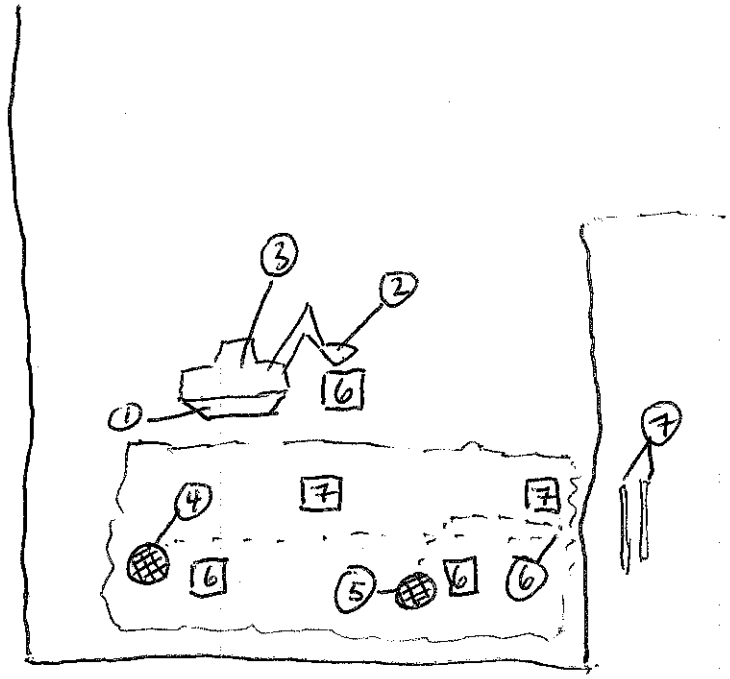

1. BACKHOE TRACK & Exterior
2. " Bucket
3. " Interior
4. DRAIN
5. DRAIN
6. PVC PIPE (INSITU)
7. PVC PIPE Removed sections
8. TOOLS & Equipment
9. " "
10. " "

MANHOLE COVER

Comments	Surveyed By:	Date:	Instrument	Serial #	α Eff.	β Eff.	α Bkg.	β Bkg	γ Bkg	Cal. Due
PERFORMED 100% SCAN	D.M.	7/11/07	2929	132806	0.340	0.201	0.2	41.6	NA	7/08
of ACCESSIBLE SURFACES of			12/44-9	232131	NA	0.10	NA	40	NA	7/08
~~BACKE~~ BACKHOE, PIPE, tools			Mod. 19	1447790	NA	NA	NA	NA	8 μR/hr	5/08
etc. PERFORMED 50% scan										
of asphalt and DIRT. NO						N				
elevated activity ~~from~~	Reviewed By:	Date:				A				
Identified.	D.M.	7/11/07								

Key	
■	A/S Location
·-·	Boundary
○	Smear
□	Dose Rate μR /hr
*	Direct Reading CPM/direct frisk
△	Grab Sample

CABRERA SERVICES

RADIOLOGICAL · ENVIRONMENTAL · REMEDIATION

SOIL CORE SCAN LOG

Project: Sylvania-Corning FUSRAP Site
Project #: 07-1005.00
Location ID: SU9 - 04
Total Depth: 15'
Page: 1 of 1

Date/Time: 05/15/07 1030 - 1120
Instr. Model / SN: 2221 w/ 44-10 108862 w/ PR. 154615
Cal Due: 04/30/08
Ambient Bkg: 1,811 cpm
Technician Init: KMA

Sleeve #	Depth Range	Core & Scan Info (Top → Bottom)			
1	0' - 4'	1,700	1,600	1,600	1,500
2	4' - 8'	1,500	1,600	1,500	1,600
3	8 - 12'	1,700	1,800	1,800	1,850
4	12' - 16'	1,600	1,600	1,700	
5	~~16' - 20'~~				

Core Scan Results (cpm):

Comments: *(record any drilling or sampling issues, e.g., refusal, groundwater, poor recovery, etc. here)*

500 ML - 44-9 - 85 cpm

CABRERA SERVICES, INC.

PROJECT NAME: Sylvania-Corning FUSRAP
LOCATION: Hicksville, NY
CLIENT: E & E

BORING LOG

Location ID: SU9-04
Page No.: 1 of 1

Contractor: E & A	Driller: ZEBRA ENVIR.	Date Started: 05/15/07	Rock Refusal Depth:
Method: Geoprobe	Water Elevation: NA	Date Finished: 05/15/07	Rock Cored (FT):
Elevation: NA	Soil Drilled:	Total Depth: 7'	Casing Size: 4" Acetate
			Core Size: 1.5" ~~#~~ gmt
Logged By: KMA	Checked By: gmt		
Date/Time: 05/15/07 1125			

Elevation	Depth (feet)	Casing Blows/Foot	DHG cpm	Sample No. & Penetration/Recovery (feet)	Sample Type	Sample Description and Classification	Group Designation	Remarks	Equipment Installed	Lab Tests Performed
	1'		2,145	FULL	SOIL	5 μR/hr @ Borehole surface				
	2'		1,640	↓	↓					
	3'		1,567							
	4'		1,538							
	5'		1,935							
	6'		2,908							
	7		1,672	↓	↓					

Notes
2221/G1 # 216482
BKG 1,104 CPM
MODEL 19 / 221151 BKG 5 MICRO R
HOLE CAVED IN AFTER 7'

CABRERA SERVICES

RADIOLOGICAL · ENVIRONMENTAL · REMEDIATION

SOIL CORE SCAN LOG

Project: Sylvania-Corning FUSRAP Site
Date/Time: 05/15/07 1450
Project #: 07-1005.00
Instr. Model / SN: 2221 w/ 44/10, 108862
Location ID: SU9-05
Cal Due: 04/30/08
Total Depth: 17'
Ambient Bkg: 1734 cpm
Page: 1 of 1
Technician Init: KMA

Sleeve #	Depth Range	Core & Scan Info (Top → Bottom)			
1	0' - 4'	1550	1650	1600	1600
Core Scan Results (cpm):					
2	4' - 8'	1500	1500	1600	1600
Core Scan Results (cpm):					
3	8 - 12'	1700	1650	1700	1550
Core Scan Results (cpm):					
4	12' - 16'	1650	1600	1600	1500
Core Scan Results (cpm):					
5	16' - 20'	1500			
Core Scan Results (cpm):					

Comments: *(record any drilling or sampling issues, e.g., refusal, groundwater, poor recovery, etc. here)*

CABRERA SERVICES, INC.

PROJECT NAME: Sylvania-Corning FUSRAP
LOCATION: Hicksville, NY
CLIENT: E & E

BORING LOG
Location ID: SU9-05
Page No.: ___ of ___

Contractor: ZEBRA	Driller: Zebra	Date Started: 05/15/07	Rock Refusal Depth: NA
Method: Geoprobe	Water Elevation: N/A	Date Finished: 05/15/07	Rock Cored (FT): NA
Elevation: NA	Soil Drilled:	Total Depth: 17'	Casing Size: 4'
			Core Size: 1.5"
Logged By: R. ANDREWS	Checked By: [illegible]		
Date/Time: 05/15/07 1610			

Elevation	Sample Information: Depth (feet)	Casing Blows/Foot	DHG cpm	Sample No. & Penetration/Recovery (feet)	Sample Type	Sample Description and Classification	Group Designation	Remarks	Equipment Installed	Lab Tests Performed
	1		3004		Soil	5 uR/hr @ Borehole surface				
	2		3014							
	3		2334							
	4		1496							
	5		1549							
	6		1656							
	7		1680							
	8		2730							
	9		3330							
	10		3883							
	11		3115							
	12		1836							
	13		1307							
	14		1320							
	15		1037							
	16		1036							
	17		0662							

Notes
2221 / G1 # 216482
BKG - 1028 CPM
MODEL 19 / 221151
Bkg 5 uR/hr

CABRERA SERVICES

RADIOLOGICAL · ENVIRONMENTAL · REMEDIATION

(1)

SOIL CORE SCAN LOG

Project: Sylvania-Corning FUSRAP Site
Date/Time: 5/15/07
Project #: 07-1005.00
Instr. Model / SN: 44/10 - 163685
Location ID: SBR1-SW09-07-E1
Cal Due: 10/27/07
Total Depth: 15'
Ambient Bkg: 1537 cpm
Page: 1 of 1
Technician Init: DA

Sleeve #	Depth Range	Core & Scan Info (Top → Bottom)
1	~~0'-4'~~ DA 0'-5'	Core Scan Results (cpm): 1310, 1737, 1617
2	~~4'-8'~~ DA 5'-10'	Core Scan Results (cpm): 1703, 1656, 1659, 1410, 1507
3	~~8-12'~~ DA 10'-15'	Core Scan Results (cpm): 1614, 1784, 1396, 1388, 1617
4	12' - 16'	Core Scan Results (cpm):
5	16' - 20'	Core Scan Results (cpm):

Comments: *(record any drilling or sampling issues, e.g., refusal, groundwater, poor recovery, etc. here)*

CABRERA SERVICES

RADIOLOGICAL · ENVIRONMENTAL · REMEDIATION

SOIL CORE SCAN LOG

Project: Sylvania-Corning FUSRAP Site
Date/Time: 5/16/07 0905
Project #: ~~07-1005.00~~ 07-1022.00 II
Instr. Model / SN: 2221 w/ 44-10 ; SN# 163685
Location ID: SBR1-SU09-07 (Archive)
Cal Due: 10/27/08
Total Depth: 4'
Ambient Bkg: 1593 cpm
Page: 1 of 1
Technician Init: DA

Sleeve #	Depth Range	Core & Scan Info (Top – Bottom)			
1	0' - 4'				
Core Scan Results (cpm):		1450	1450	1500	
2	4' - 8'				
Core Scan Results (cpm):					
3	8 - 12'				
Core Scan Results (cpm):					
4	12' - 16'				
Core Scan Results (cpm):					
5	16' - 20'				
Core Scan Results (cpm):					

Comments: (record any drilling or sampling issues, e.g., refusal, groundwater, poor recovery, etc. here)

CABRERA SERVICES, INC.

PROJECT NAME: Sylvania-Corning FUSRAP
LOCATION: Hicksville, NY
CLIENT: E & E

BORING LOG

Location ID: SBRI-SU09-07
Page No.: 1 of 1

Contractor: E & E	Driller: ZEBRA	Date Started: 5/15/07	Rock Refusal Depth: NA
Method: GEOPROBE, 4' MACRO CORE	Water Elevation: NA	Date Finished: 5/15/07	Rock Cored (FT):
Elevation: NA	Soil Drilled: 15'	Total Depth: 8'	Casing Size:
			Core Size: 1.5" x 4'
Logged By: DA	Checked By: GMK		
Date/Time: 5/15/07		2221 SN# 190205	AKE 2221 -
		Mod 19 SN# 101662	Mod 19 - 7 μR/hr

Elevation	Depth (feet)	Casing Blows/Foot	DHG cpm	Sample No. & Penetration/Recovery (feet)	Sample Type	Sample Description and Classification	Group Designation	Remarks	Equipment Installed	Lab Tests Performed
	1	NA	1850	NA	Soil	6 μR/hr @ Borehole surface				
	2		1798							
	3		2129							
	4		2980							
	5		2746							
	6		1641							
	7		1712							
	8		1583							
								NA	NA	NA

Notes

CABRERA SERVICES

RADIOLOGICAL · ENVIRONMENTAL · REMEDIATION

SOIL CORE SCAN LOG

Project: Sylvania-Corning FUSRAP Site
Project #: ~~07-1005.00~~ 07-1022.06 II
Location ID: SB21-SU09-08/D
Total Depth: 50
Page: 1 of 2

Date/Time: 5/15/07
Instr. Model / SN: 44-10 / 163685
Cal Due: 10/27/07
Ambient Bkg: 1839 cpm
Technician Init: DA

Sleeve #	Depth Range	Core & Scan Info (Top → Bottom)			
1	~~0'-4'~~ DA 0'-5'				
Core Scan Results (cpm):		1737	1760	1830	1526
2	~~4'-8'~~ DA 5'-10'				
Core Scan Results (cpm):		1742	2166	1812	1622	2144
3	~~8'-12'~~ DA 10'-15'				
Core Scan Results (cpm):		1557	1494	1603	1428
4	~~12'-16'~~ DA 15'-20'				
Core Scan Results (cpm):		1522	1487	1425	1507
5	~~16'-20'~~ DA 20'-25'				
Core Scan Results (cpm):		1450	1450	1400	

Comments: *(record any drilling or sampling issues, e.g., refusal, groundwater, poor recovery, etc. here)*

CABRERA SERVICES

RADIOLOGICAL · ENVIRONMENTAL · REMEDIATION

SOIL CORE SCAN LOG

Project: Sylvania-Corning FUSRAP Site
Project #: 07-1005.00
Location ID: SBR1-SU09-08/D
Total Depth: 50
Page: 2 of 2

Date/Time: 5/15/07
Instr. Model / SN: 44/10 - 163685
Cal Due: 10/27/07
Ambient Bkg: 1839 cpm
Technician Init: DA

Sleeve #	Depth Range	Core & Scan Info (Top / Bottom)			
1	~~0'-4'~~ DA 25'-30'				
Core Scan Results (cpm):		1480	1350	1500	
2	~~4'-8'~~ 30'-35'				
Core Scan Results (cpm):		1378	1357	1485	
3	~~8-12'~~ 35'-40'				
Core Scan Results (cpm):		1461	1360	1428	
4	~~12'-16'~~ 40'-45'				
Core Scan Results (cpm):		1375	1430		
5	~~16'-20'~~ 45'-50'				
Core Scan Results (cpm):		1602	1480	1467	

Comments: *(record any drilling or sampling issues, e.g., refusal, groundwater, poor recovery, etc. here)*

CABRERA SERVICES, INC.

PROJECT NAME: Sylvania-Corning FUSRAP
LOCATION: Hicksville, NY
CLIENT: E & E

BORING LOG
Location ID: SBR1-SUB9-08/D
Page No.: 1 of 2

Contractor: E&E	Driller: ZEBRA	Date Started: 5/15/07	Rock Refusal Depth: N/A
Method: GEO PROBE	Water Elevation: N/A	Date Finished: 5/15/07	Rock Cored (FT):
Elevation: N/A	Soil Drilled: ~~50'~~ gmt	Total Depth: 35'	Casing Size:
			Core Size: 1.5" x 4'
Logged By: DA	Checked By: gmt		
Date/Time: 5/15/07		2221 SN# 190205	BKG 2221-998 cpm
		Mod. 19 SN# 101662	Mod. 19 - 6 μR/hr

Elevation	Depth (feet)	Casing Blows/Foot	DHG cpm	Sample No. & Penetration/Recovery (feet)	Sample Type	Sample Description and Classification	Group Designation	Remarks	Equipment Installed	Lab Tests Performed
	1	N/A	934	N/A	Soil	6 μR/hr @ Borehole surface				
	2		1624							
	3		1752							
	4		1808							
	5		1979							
	6		2443							
	7		3030							
	8		3468							
	9		2744							
	10		3734							
	11		4203							
	12		3525							
	13		1494							
	14		1307							
	15		1483							
	16		1230							
	17		1128							
	18		1123							
	19		1053							
	20		1377							
	21		1151							
	22		1033							
	23		1082							
	24		965							
	25		938							
	26		978							
	27		833							
	28		883							
	29		782							
	30		759							

N A

Notes

CABRERA SERVICES, INC.

PROJECT NAME: Sylvania-Corning FUSRAP
LOCATION: Hicksville, NY
CLIENT: E & E

BORING LOG
Location ID: SBR-SU09-08/D
Page No.: 2 of 2

Contractor: E&E	Driller: ZEBUA	Date Started: 5/15/07	Rock Refusal Depth: N/A
Method: GEO PROBE	Water Elevation: N/A	Date Finished: 5/15/07	Rock Cored (FT):
Elevation: N/A	Soil Drilled: ~~50'~~	Total Depth: 35'	Casing Size:
			Core Size: 1.5" x 4'
Logged By: DA	Checked By: JWK		
Date/Time: 5/15/07		2221 S/N# 190205	BKG-2221 - 998
		Mod. 19 S/N# 101662	MOD. 19 - 6 μR/hr

Elevation	Depth (feet)	Casing Blows/Foot	DHG cpm	Sample No. & Penetration/ Recovery (feet)	Sample Type	Sample Description and Classification	Group Designation	Remarks	Equipment Installed	Lab Tests Performed
	31	N/A	802	N/A	Soil	μR/hr @ borehole surface				
	32		787							
	33		796							
	34		776							
	35		884							
		N		A			N		A	NA

Notes

CABRERA SERVICES

RADIOLOGICAL · ENVIRONMENTAL · REMEDIATION

SOIL CORE SCAN LOG

Project: Sylvania-Corning FUSRAP Site
Date/Time: 05/15/07 1325
Project #: 07-1005.00
Instr. Model / SN: 2221 w/44-10 108862
Location ID: SU9-14
Cal Due: 04/30/08
Total Depth: 15'
Ambient Bkg: 1699 cpm
Page: 1 of 1
Technician Init: KMA

Sleeve #	Depth Range	Core & Scan Info (Top → Bottom)			
1	0' - 4'	1700	1850	1700	1700
Core Scan Results (cpm):					
2	4' - 8'	1600	1950	1800	1600
Core Scan Results (cpm):					
3	8 - 12'	1605	1600	1650	1900
Core Scan Results (cpm):					
4	12' - 16'	1700	1600	1500	
Core Scan Results (cpm):					
5	16' - 20'				
Core Scan Results (cpm):					

Comments: *(record any drilling or sampling issues, e.g., refusal, groundwater, poor recovery, etc. here)*

CABRERA SERVICES, INC.

PROJECT NAME: Sylvania-Corning FUSRAP
LOCATION: Hicksville, NY
CLIENT: E & E

BORING LOG

Location ID: 509-14
Page No.: 1 of 1

Contractor: E&E	Driller: ZEBRA ENV.	Date Started: 05/15/07	Rock Refusal Depth: NA
Method: geoprobe	Water Elevation: NA	Date Finished: 05/15/07	Rock Cored (FT): NA
Elevation: NA	Soil Drilled:	Total Depth: 10'	Casing Size: 4'
			Core Size: 1.5"
Logged By: KMA	Checked By: [illegible]		
Date/Time: 05/15/07 1350			

Elevation	Sample Information: Depth (feet)	Casing Blows/Foot	DHG cpm	Sample No. & Penetration/Recovery (feet)	Sample Type	Sample Description and Classification	Group Designation	Remarks	Equipment Installed	Lab Tests Performed
	1		2222			5 μR/hr @ ~~to~~ borehole surface				
	2		2195							
	3		1976							
	4		1776							
	5		1913							
	6		1898							
	7		1886							
	8		2385							
	9		3044							
	10		1651							

Notes

2221/G1 # 216482

BKG 903 cpm

MODEL 19 / 221151 BKG 5 MicroR

HOLE CAVED-IN AFTER 10'

CABRERA SERVICES

RADIOLOGICAL · ENVIRONMENTAL · REMEDIATION

SOIL CORE SCAN LOG

(3)

Project: Sylvania-Corning FUSRAP Site
Date/Time: 5/16/07
Project #: ~~07-1005.00~~ 07-1022.00 II
Instr. Model / SN: 2221 w/ 44-10 ; SN# 163685
Location ID: SBR1-SU09-02(21)
Cal Due: 10/27/07
Total Depth: 16'
Ambient Bkg: 1269 cpm
Page: 1 of 1
Technician Init: DA

Sleeve #	Depth Range	Core & Scan Info (Top → Bottom)			
1	0' - 4'				
Core Scan Results (cpm):		1250	1350	1300	
2	4' - 8'				
Core Scan Results (cpm):		1325	1200	1200	
3	8 - 12'				
Core Scan Results (cpm):		ZERO RECOVERY			
4	12' - 16'				
Core Scan Results (cpm):		1400	1250	1300	
5	16' - 20'				
Core Scan Results (cpm):					

Comments: (record any drilling or sampling issues, e.g., refusal, groundwater, poor recovery, etc. here)

5 mR/hr

CABRERA SERVICES, INC.

PROJECT NAME: Sylvania-Corning FUSRAP
LOCATION: Hicksville, NY
CLIENT: E & E

BORING LOG
Location ID: SB21-SUB9-02
Page No.: 1 of 1

Contractor: E & E	Driller: ZEBRA	Date Started: 5/16/07	Rock Refusal Depth: N/A
Method: GEO PROBE	Water Elevation: N/A	Date Finished: 5/16/07	Rock Cored (FT):
Elevation: N/A	Soil Drilled: 16'	Total Depth: 15'	Casing Size:
			Core Size: 1.5" x 4'
Logged By: DA	Checked By: [illegible]		
Date/Time: 5/16/07		S/N # 190205 (2221)	BKG (2221) - 947 cpm
		Mod 19 - S/N # 101662	mod-19 - 5 μR/hr

Elevation	Depth (feet)	Casing Blows/Foot	DHG cpm	Sample No. & Penetration/ Recovery (feet)	Sample Type	Sample Description and Classification	Group Designation	Remarks	Equipment Installed	Lab Tests Performed
	1	N/A	1566	N/A	Soil	5 μR/hr @ Borehole surface				
	2		2393							
	3		2707							
	4		3235							
	5		2373							
	6		1567							
	7		1497							
	8		1548							
	9		1324							
	10		1312							
	11		1261							
	12		1209							
	13		1266							
	14		1189							
	15		1055							
			N				N		A	
				A						

Notes

CABRERA SERVICES

RADIOLOGICAL · ENVIRONMENTAL · REMEDIATION

(4)

SOIL CORE SCAN LOG

Project: Sylvania-Corning FUSRAP Site
Date/Time: 5/16/07
Project #: ~~07-1005.00~~ 07-1022.00 II
Instr. Model / SN: 2221 w/ 44-10 ; SN# 163685
Location ID: SBR-SU09-03
Cal Due: 10/27/07
Total Depth: 16'
Ambient Bkg: 1401 cpm
Page: 1 of 1
Technician Init: DA

Sleeve #	Depth Range	Core & Scan Info (Top → Bottom)			
1	0' - 4'				
Core Scan Results (cpm):		1350	1350	1275	
2	4' - 8'				
Core Scan Results (cpm):		1500	1325	1350	
3	8 - 12'				
Core Scan Results (cpm):		1300	1255	1250	1300
4	12' - 16'				
Core Scan Results (cpm):		1250	1225	1225	
5	16' - 20'				
Core Scan Results (cpm):					

Comments: *(record any drilling or sampling issues, e.g., refusal, groundwater, poor recovery, etc. here)*

CABRERA SERVICES, INC.

PROJECT NAME: Sylvania-Corning FUSRAP
LOCATION: Hicksville, NY
CLIENT: E & E

BORING LOG

Location ID: SBR1-5449-03
Page No.: 1 of 1

Contractor: E & E	Driller: ZEBRA	Date Started: 5/16/07	Rock Refusal Depth: N/A
Method: GEO PROBE	Water Elevation: N/A	Date Finished: 5/16/07	Rock Cored (FT):
Elevation: N/A	Soil Drilled: 16'	Total Depth: 16'	Casing Size:
			Core Size: 1.5" X 4'
Logged By: DA	Checked By: [illegible]		
Date/Time: 5/16/07		2221-S/N# 190205	BKG-2221-877
		Mod 19 S/N # 101662	Mod. 19 - 6 uR/hr

Elevation	Depth (feet)	Casing Blows/Foot	DHG cpm	Sample No. & Penetration/Recovery (feet)	Sample Type	Sample Description and Classification	Group Designation	Remarks	Equipment Installed	Lab Tests Performed
	1	N/A	2069	N/A	Soil	5 uR/hr @ Borehole surface				
	2		2202							
	3		2176							
	4		2164							
	5		2558							
	6		3257							
	7		3697							
	8		2300							
	9		3045							
	10		3021							
	11		3583							
	12		1482							
	13		1296							
	14		1147							
	15		1076							
	16		764							
			N	A						

Notes

CABRERA SERVICES

RADIOLOGICAL · ENVIRONMENTAL · REMEDIATION

SOIL CORE SCAN LOG

Project: Sylvania-Corning FUSRAP Site
Date/Time: 5/16/07
Project #: ~~07-1005.00~~ 07-1022.00 II
Instr. Model / SN: 2221 w/ 44-10 ; SN# 163685
Location ID: SB21-SU09-05D (Archive)
Cal Due: 10/27/07
Total Depth: 10'
Ambient Bkg: 1593 cpm
Page: 1 of 1
Technician Init: DA

Sleeve #	Depth Range	Core & Scan Info (Top → Bottom)			
1	~~0'-4'~~ DA 0'-5'				
Core Scan Results (cpm):		1650	1575	1550	
2	~~4'-8'~~ DA 5'-10'				
Core Scan Results (cpm):		1500	1575	1450	1600
3	8 - 12'				
Core Scan Results (cpm):					
4	12' - 16'				
Core Scan Results (cpm):					
5	16' - 20'				
Core Scan Results (cpm):					

Comments: (record any drilling or sampling issues, e.g., refusal, groundwater, poor recovery, etc. here)

5' acetate sleeves.

CABRERA SERVICES

RADIOLOGICAL • ENVIRONMENTAL • REMEDIATION

SOIL CORE SCAN LOG

Project: Sylvania-Corning FUSRAP Site
Date/Time: 5/16/07
Project #: ~~07-1005.00~~ 07-1022.00 II
Instr. Model / SN: 2221 w/ 44-10 ; SN# 163685
Location ID: SBRE SU09-09
Cal Due: 10/27/07
Total Depth: ~ 14'
Ambient Bkg: 1496 cpm
Page: 1 of 1
Technician Init: DA

Sleeve #	Depth Range	Core & Scan Info (Top → Bottom)
1	0' - 4'	Core Scan Results (cpm): 1600 1500 1650
2	4' - 8'	Core Scan Results (cpm): 1650 1500 1550
3	8 - 12'	Core Scan Results (cpm): 1650 1600 1450
4	12' - 16'	Core Scan Results (cpm): 1550 1550
5	16' - 20'	Core Scan Results (cpm):

Comments: *(record any drilling or sampling issues, e.g., refusal, groundwater, poor recovery, etc. here)*

Rain ~~[illegible]~~.

CABRERA SERVICES, INC.

PROJECT NAME: Sylvania-Corning FUSRAP
LOCATION: Hicksville, NY
CLIENT: E & E

BORING LOG

Location ID: SBR1-SW09-09
Page No.: 1 of 1

Contractor: E&E	Driller: ZEBRA	Date Started: 5/16/07	Rock Refusal Depth: N/A
Method: geoprobe	Water Elevation: N/A	Date Finished: 5/16/07	Rock Cored (FT): N/A
Elevation: N/A	Soil Drilled:	Total Depth: 7'	Casing Size: N/A
			Core Size: 1.5" X 4'
Logged By: DA	Checked By: [illegible]		
Date/Time: 5/16/07		2221 S/N# 190205	BKG-2221- 1182 cpm
		Mod. 19 S/N# 101662	Mod. 19- 5 uR/hr

Elevation	Depth (feet)	Casing Blows/Foot	DHG cpm	Sample No. & Penetration/ Recovery (feet)	Sample Type	Sample Description and Classification	Group Designation	Remarks	Equipment Installed	Lab Tests Performed
	1	N/A	1921	N/A	Soil	5uR/hr @ borehole surface				
	2		1971							
	3		2970							
	4		2147							
	5		1807							
	6		1889							
	7		1766							
			N/A							

Notes

CABRERA SERVICES

RADIOLOGICAL • ENVIRONMENTAL • REMEDIATION

SOIL CORE SCAN LOG

Project: Sylvania-Corning FUSRAP Site
Date/Time: 5/16/07
Project #: ~~07-1005.00~~ 07-1022.00 II
Instr. Model / SN: 2221 w/ 44-10 ; SN# 163685
Location ID: SBR1-SU09-13
Cal Due: 10/27/07
Total Depth: 16'
Ambient Bkg: 1394 cpm
Page: 1 of 1
Technician Init: DA

Sleeve #	Depth Range	Core & Scan Info (Top → Bottom)			
1	0' - 4'				
Core Scan Results (cpm):		1450	1300		
2	4' - 8'				
Core Scan Results (cpm):		1400	1300	1250	
3	8 - 12'				
Core Scan Results (cpm):		1200	1200	1250	
4	12' - 16'				
Core Scan Results (cpm):		1300	1450	1300	
5	~~16' - 20'~~				
Core Scan Results (cpm):					

Comments: (record any drilling or sampling issues, e.g., refusal, groundwater, poor recovery, etc. here)

CABRERA SERVICES, INC.

PROJECT NAME: Sylvania-Corning FUSRAP
LOCATION: Hicksville, NY
CLIENT: E & E

BORING LOG
Location ID: SSRI-SU09-13
Page No.: 1 of 1

Contractor: E&E	Driller: ZEBRA	Date Started: 5/16/07	Rock Refusal Depth: N/A
Method: GEO PROBE	Water Elevation: N/A	Date Finished: 5/16/07	Rock Cored (FT): NA
Elevation: N/A	Soil Drilled: 16'	Total Depth: 10'	Casing Size: 4'
			Core Size: 1.5"
Logged By: DA	Checked By: SWT		
Date/Time: 5/16/07		2221 S/N# 190205	BKG-2221-926
		Mod. 19 S/N# 101662	Mod. 19- 5μR/hr

Elevation	Depth (feet)	Casing Blows/Foot	DHG cpm	Sample No. & Penetration/Recovery (feet)	Sample Type	Sample Description and Classification	Group Designation	Remarks	Equipment Installed	Lab Tests Performed
	1	N/A	2113	N/A	Soil	5μR/hr @ Borehole surface				
	2		2231							
	3		2423							
	4		2407							
	5		3077							
	6		1742							
	7		1472							
	8		1357							
	9		1479							
	10		1210							
			N	A						

Notes

CABRERA SERVICES

RADIOLOGICAL • ENVIRONMENTAL • REMEDIATION

SOIL CORE SCAN LOG

Project: Sylvania-Corning FUSRAP Site
Date/Time: 5/17/07 0840
Project #: ~~07-1005.00~~ 07-1022.00 II
Instr. Model / SN: 44-10 / 163685
Location ID: SBRCA-SU09-10
Cal Due: 10/27/07
Total Depth: 55'
Ambient Bkg: 1333 cpm
Page: 1 of 3
Technician Init: DA

Sleeve #	Depth Range	Core & Scan Info (Top → Bottom)			
1	0' - 4'				
Core Scan Results (cpm):		1525	1600	1500	
2	4' - 8'				
Core Scan Results (cpm):		1550	1550	1500	1500
3	8 - 12'				
Core Scan Results (cpm):		1500	1500	1525	
4	12' - 16'				
Core Scan Results (cpm):		1450	1500	1500	
5	16' - 20'				
Core Scan Results (cpm):		1600	1500		

Comments: *(record any drilling or sampling issues, e.g., refusal, groundwater, poor recovery, etc. here)*

CABRERA SERVICES

RADIOLOGICAL · ENVIRONMENTAL · REMEDIATION

SOIL CORE SCAN LOG

Project: Sylvania-Corning FUSRAP Site
Date/Time: 5/17/07
Project #: ~~07-1005.00~~ 07-1022.00 II
Instr. Model / SN: 44-107 / 163685
Location ID: SB21-SW09-10
Cal Due: 10/27/07
Total Depth: 55'
Ambient Bkg: 1733 cpm
Page: 2 of 3
Technician Init: DA

Sleeve #	Depth Range	Core & Scan Info (Top → Bottom)			
1	~~0'-4'~~ 20'-24'				
	Core Scan Results (cpm):	1550	1550	1650	
2	24'-28'				
	Core Scan Results (cpm):	1600	1750		
3	28-32'				
	Core Scan Results (cpm):	1600	1650		
4	32'-36'				
	Core Scan Results (cpm):	1500	1500		
5	36'-40'				
	Core Scan Results (cpm):	1550	1500		

Comments: *(record any drilling or sampling issues, e.g., refusal, groundwater, poor recovery, etc. here)*

Elevated pid (314 ppm), continue digging.

CABRERA SERVICES

RADIOLOGICAL • ENVIRONMENTAL • REMEDIATION

SOIL CORE SCAN LOG

Project: Sylvania-Corning FUSRAP Site
Date/Time: 5/17/07
Project #: ~~07-1005.00~~ 07-1022.00 II
Instr. Model / SN: 2221 w/ 44-10 ; SN# 163685
Location ID: SBK4-SW89-10
Cal Due: 10/27/07
Total Depth: 55'
Ambient Bkg: 1333 cpm
Page: 3 of 3
Technician Init: DA

Sleeve #	Depth Range	Core & Scan Info (Top – Bottom)			
1	40' - 44'				
Core Scan Results (cpm):		1575	1575		
2	44' - 48'				
Core Scan Results (cpm):		1600	1450		
3	48' - 52'				
Core Scan Results (cpm):		1650	1675	1500	
4	52' - 56'				
Core Scan Results (cpm):		1750	1600		
5	~~56' - 60'~~				
Core Scan Results (cpm):					

Comments: *(record any drilling or sampling issues, e.g., refusal, groundwater, poor recovery, etc. here)*

CABRERA SERVICES, INC.

PROJECT NAME: Sylvania-Corning FUSRAP
LOCATION: Hicksville, NY
CLIENT: E & E

BORING LOG

Location ID: SBRA-SU#9-10
Page No.: 1 of 1

Contractor: E&E	Driller: ZEBRA	Date Started: 5/17/07	Rock Refusal Depth:
Method: 4' MACRO CORE GEOPROBE	Water Elevation: NA	Date Finished: 5/17/07	Rock Cored (FT):
Elevation: NA	Soil Drilled:	Total Depth: 27'	Casing Size:
			Core Size: 1.5" x 4'
Logged By: DA	Checked By:		
Date/Time: 5/17/07		S/N NaI- 190205	BKG NaI (cpm) 457 cpm
		S/N Mod19- 101662	BKG Mod19 (uR/hr) 6 uR/hr

Elevation	Depth (feet)	Casing Blows/Foot	DHG cpm	Sample No. & Penetration/Recovery (feet)	Sample Type	Sample Description and Classification	Group Designation	Remarks	Equipment Installed	Lab Tests Performed
	1		2108	N/A	SOIL					
	2		2085							
	3		2213							
	4		1709							
	5		1998							
	6		2207							
	7		3118							
	8		2379							
	9		1943							
Z	10		1175							
	11	Z	1251							
A	12		1270							
	13	A	1221						Z	
	14		1048							
	15		990					A		
	16		1007							
	17		903							
	18		851							
	19		848							
	20		845							
	21		774							
	22		998							
	23		1188							
	24		747							
	25		839							
	26		811							
	27		817							
	~~28~~ DA		~A							
	N/A		N		A					

Notes

CABRERA SERVICES

RADIOLOGICAL • ENVIRONMENTAL • REMEDIATION

SOIL CORE SCAN LOG

Project: Sylvania-Corning FUSRAP Site
Date/Time: 5/17/07
Project #: ~~07-1005.00~~ 07-1022.00 II
Instr. Model / SN: 2221 w/ 44-10; SN# 163685
Location ID: SU09-11
Cal Due: 10/27/07
Total Depth: 10'
Ambient Bkg: 1613 cpm
Page: 1 of 1
Technician Init: SMT

Sleeve #	Depth Range	Core & Scan Info (Top → Bottom)			
1	0' - 4'			~~14~~	
	Core Scan Results (cpm):	1750	1600	1440	
2	4' - 8'	1550	1600	1450	
	Core Scan Results (cpm):				
3	8 - 12'				
	Core Scan Results (cpm):	1500	1500	1450	
4	12' - 16'				
	Core Scan Results (cpm):	1600	1500	1400	
5	16' - 20'				
	Core Scan Results (cpm):		A		

Comments: *(record any drilling or sampling issues, e.g., refusal, groundwater, poor recovery, etc. here)*

CABRERA SERVICES, INC.

PROJECT NAME: Sylvania-Corning FUSRAP
LOCATION: Hicksville, NY
CLIENT: E & E

BORING LOG

Location ID: S509-11
Page No.: 1 of 1

Contractor: E&E	Driller: ZEBRA	Date Started: 5/17/07	Rock Refusal Depth: NA
Method: 4' MACRO CORE GEOPROBE	Water Elevation: NA	Date Finished: 5/17/07	Rock Cored (FT): NA
Elevation: NA	Soil Drilled:	Total Depth: 10'	Casing Size:
			Core Size: 1.5" x 4'
Logged By: gmt	Checked By: gmt		
Date/Time: 5/17/07		S/N NaI- 190205	BKG NaI (cpm) 1,141
		S/N Mod19- 101662	BKG Mod19 (uR/hr) 6uR/hr

Elevation	Depth (feet)	Casing Blows/Foot	DHG cpm	Sample No. & Penetration/Recovery (feet)	Sample Type	Sample Description and Classification	Group Designation	Remarks	Equipment Installed	Lab Tests Performed
	1		2177	N/A	SOIL	6uR/hr @ Borehole surface				
	2		1747							
	3		1846							
	4		1605							
	5		1748							
	6		2102							
	7		1860							
	8		1880							
	9		1686							
	10		1141							
			N/A		N/A					

Notes

CABRERA SERVICES

RADIOLOGICAL · ENVIRONMENTAL · REMEDIATION

SOIL CORE SCAN LOG

Project: Sylvania-Corning FUSRAP Site
Date/Time: 05/16/07
Project #: 07-1005.00
Instr. Model / SN: 2221 w/44-10 #108862 w/PR. 154615
Location ID: F6-01
Cal Due: 04/30/08
Total Depth: ~~8~~ KMA 7.5'
Ambient Bkg: 1586 cpm
Page: 1 of 1
Technician Init: KMA

Sleeve #	Depth Range	Core & Scan Info (Top → Bottom)			
1	0' - 4'	7,000	9,000	2,000	2,200
Core Scan Results (cpm):	1ST 7" WERE COLD BOLING / SOIL HAND AUGER SEE LOGBOOK FOR RESULTS				
2	4' - 8'	2,000	1,900	2,600	2,100
Core Scan Results (cpm):	GEOPROBE HIT REFUSAL @ 7.5' DEPTH				
3	8 - 12'				
Core Scan Results (cpm):					
4	12' - 16'				
Core Scan Results (cpm):					
5	16' - 20'				
Core Scan Results (cpm):					

Comments: *(record any drilling or sampling issues, e.g., refusal, groundwater, poor recovery, etc. here)*

GEOPROBE HIT REFUSAL @ 7.5'

CABRERA SERVICES, INC.

PROJECT NAME: Sylvania-Corning FUSRAP
LOCATION: Hicksville, NY
CLIENT: E & E

BORING LOG
Location ID: F6 01
Page No.: 1 of 1

Contractor: ZEBRA ENV.	Driller: L. LEGG	Date Started: 05/16/07	Rock Refusal Depth: 7.5'
Method: DIRECT PUSH	Water Elevation: N/A	Date Finished: 05/17/07	Rock Cored (FT): 7" CONCRETE
Elevation: N/A	Soil Drilled: SANDY - SILTY	Total Depth:	Casing Size: STONE/SOIL
		MASTER INFO	Core Size:
Logged By: KMA	Checked By:	2221 w/ G1	MODEL 19 221521
Date/Time: 05/16/07		#216482 w/ C358C	CAL DUE DATE 10/15/07
		CAL. DUE DATE 05/04/08	

Elevation	Depth (feet)	Casing Blows/Foot	DHG cpm	Sample No. & Penetration/Recovery (feet)	Sample Type	Sample Description and Classification	Group Designation	Remarks	Equipment Installed	Lab Tests Performed
	1	N/A	29,106		SOIL	TOP 4" CONCRETE / 8" STONE & SOIL				
	2		3,204			LIMIT OF CONTAMINATION. (SUSPECT)				
	3		2,596							
	4		1,769							
	5		1,575							
	6		2,143		SOIL					
	7		N/A			HOLE CAVED-IN BEFORE COUNTS WERE TAKEN, KMA				
	7.5									

Notes
2221 w/G1 BKG 916 1MIN (ct.)

CABRERA SERVICES, INC.

PROJECT NAME: Sylvania-Corning FUSRAP
LOCATION: Hicksville, NY
CLIENT: E & E

BORING LOG

Location ID: SU12-20
Page No.: 1 of 1

Contractor: ZEBRA ENV.	Driller: L. RGGSG	Date Started: 05/18/07	Rock Refusal Depth:
Method: DIRECT PUSH	Water Elevation: N/A	Date Finished: 05/18/07	Rock Cored (FT):
Elevation: N/A	Soil Drilled:	Total Depth: 13'	Casing Size:
		METER INFO	Core Size:
Logged By: RMA	Checked By: gwk	2221 w/ GZ	MODEL 19 221521
Date/Time: 05/18/07		# 216482 w/ C358C	CAL DUE DATE 10/15/07
		CAL DUE. 05/04/08	

Elevation	Depth (feet)	Casing Blows/Foot	DHG cpm	Sample No. & Penetration/Recovery (feet)	Sample Type	Sample Description and Classification	Group Designation	Remarks	Equipment Installed	Lab Tests Performed
	1		1124							
	2		1516							
	3		2410							
	4		2441							
	5		2467							
	6		2440							
	7		2482							
	8		2441							
	9		2677							
	10		1528							
	11		1300							
	12		1082							
	13		1148							

Notes

CABRERA SERVICES

RADIOLOGICAL • ENVIRONMENTAL • REMEDIATION

SOIL CORE SCAN LOG

Project: Sylvania-Corning FUSRAP Site
Project #: 07-1005.00
Location ID: SU 12-20
Total Depth: 16'
Page: 1 of 1

Date/Time: 05/18/07
Instr. Model / SN: 2221 w/ 44-10 #108862 w/ PR 154615
Cal Due: 04/30/08
Ambient Bkg: 1,889 cpm
Technician Init: KMA, AC

Sleeve #	Depth Range	Core & Scan Info (Top → Bottom)			
1	0' - 4'		1,800	1,900	1,900
Core Scan Results (cpm):		1ST 1' OF TUBE VOID SOIL/MATERIAL			
2	4' - 8'			1,800	1,850
Core Scan Results (cpm):		4'-6' OF TUBE VOID SOIL/MATERIAL			
3	8 - 12'		1,900	1,700	1,800
Core Scan Results (cpm):		8'-9' OF TUBE VOID OF SOIL/MATERIAL			
4	12' - 16'		1,800	1,700	1,700
Core Scan Results (cpm):		9" VOID OF TOP OF TUBE			
5	16' - 20'				
Core Scan Results (cpm):					

Comments: *(record any drilling or sampling issues, e.g., refusal, groundwater, poor recovery, etc. here)*

CABRERA SERVICES

RADIOLOGICAL · ENVIRONMENTAL · REMEDIATION

SOIL CORE SCAN LOG

Project: Sylvania-Corning FUSRAP Site
Project #: 07-1005.00
Location ID: SU12-21
Total Depth: 12
Page: 1 of 1

Date/Time: 05/18/07
Instr. Model / SN: 2221 w/44-10 #108862 w/PL. 154615
Cal Due: 04/30/08
Ambient Bkg: 2075 cpm
Technician Init: AC, KMA

Sleeve #	Depth Range	Core & Scan Info (Top → Bottom)			
1	0' - 4'	VOID	2,000	2,100	2000
Core Scan Results (cpm):		0-1' OF TUBE. VOID OF SOIL/MAGNIAC			
2	4' - 8'	2,000	2000	1900	2000
Core Scan Results (cpm):					
3	8 - 12'	1,900	2,200	2,000	2,100
Core Scan Results (cpm):					
4	12' - 16'				
Core Scan Results (cpm):					
5	16' - 20'				
Core Scan Results (cpm):					

Comments: *(record any drilling or sampling issues, e.g., refusal, groundwater, poor recovery, etc. here)*

CABRERA SERVICES, INC.

PROJECT NAME: Sylvania-Corning FUSRAP
LOCATION: Hicksville, NY
CLIENT: E & E

BORING LOG
Location ID: SUN-21
Page No.: of

Contractor: ZEBRA	Driller: L. REESE	Date Started: 5/18/07	Rock Refusal Depth: 9'
Method: DIRECT PUSH	Water Elevation: N/A	Date Finished: 5/18/07	Rock Cored (FT): 12'
Elevation: N/A	Soil Drilled: SANDY-SILTY	Total Depth: 9'	Casing Size:
		CORED TO 12' AND	Core Size: 1.5"x4'
Logged By: KMA	Checked By: [signature]	HIT REFUSAL, BUT HOLE	
Date/Time: 5/18/07 1330		CAVED IN @ 9'	

Elevation	Sample Information: Depth (feet)	Casing Blows/Foot	DHG cpm	Sample No. & Penetration/Recovery (feet)	Sample Type	Sample Description and Classification	Group Designation	Remarks	Equipment Installed	Lab Tests Performed
	1		2086							
	2		3869							
	3		5316							
	4		2793							
	5		1710							
	6		1480							
	7		1525							
	8		1885							
	9		2660							

Notes
BKG FOR 2221 W/G1
#168040 - 1035

CABRERA SERVICES

RADIOLOGICAL · ENVIRONMENTAL · REMEDIATION

SOIL CORE SCAN LOG

Project: Sylvania-Corning FUSRAP Site
Date/Time: 5/18/07
Project #: ~~07-1005.00~~ 07-1022.00 II
Instr. Model / SN: 2221 w/ 44-10 ; SN# 163685
Location ID: SBRP-SU12 - 14
Cal Due: 10/27/07
Total Depth: 12'
Ambient Bkg: 1495 cpm
Page: 1 of 1
Technician Init: JA

Sleeve #	Depth Range	Core & Scan Info (Top → Bottom)			
1	0' - 4'				
Core Scan Results (cpm):		1450	1500	1550	
2	4' - 8'				
Core Scan Results (cpm):		1250	1400	1550	1550
3	8 - 12'				
Core Scan Results (cpm):		1550			
4	12' - 16'				
Core Scan Results (cpm):					
5	16' - 20'				
Core Scan Results (cpm):					

Comments: (record any drilling or sampling issues, e.g., refusal, groundwater, poor recovery, etc. here)

6μR/hr Bkg. on Mod. 19

CABRERA SERVICES, INC.

PROJECT NAME: Sylvania-Corning FUSRAP
LOCATION: Hicksville, NY
CLIENT: E & E

BORING LOG

Location ID: SBU-SU12-14
Page No.: 1 of 1

Contractor: E&E	Driller: ZEBRA	Date Started: 5/18/07	Rock Refusal Depth: NA
Method: 4' MACRO CORE GEOPROBE	Water Elevation: NA	Date Finished: 5/18/07	Rock Cored (FT):
Elevation: NA	Soil Drilled:	Total Depth: 5'	Casing Size:
			Core Size: 1.5" x 4'
Logged By: DA	Checked By:		
Date/Time: 5/18/07		S/N NaI- 190205	BKG NaI (cpm) - 1082
		S/N Mod 19- 101662	BKG Mod19 (uR/hr) 6uR/hr

Elevation	Sample Information: Depth (feet)	Casing Blows/Foot	DHG cpm	Sample No. & Penetration/Recovery (feet)	Sample Type	Sample Description and Classification	Group Designation	Remarks	Equipment Installed	Lab Tests Performed
	1		1975		SOIL	Borehole 6uR/hr @ Borehole (1m)				
	2		2256							
	3		3214							
	4		2832							
	5		1494							

Notes

uR/hr

CABRERA SERVICES

RADIOLOGICAL · ENVIRONMENTAL · REMEDIATION

SOIL CORE SCAN LOG

Project: Sylvania-Corning FUSRAP Site
Project #: 07-1005.00
Location ID: A3-01
Total Depth: 8'
Page: 1 of 1

Date/Time: 05/18/07
Instr. Model / SN: 2221 w/44.10 #108862 w/PR. 154615
Cal Due: 04/30/08
Ambient Bkg: 1997 cpm
Technician Init: KA

Sleeve #	Depth Range	Core & Scan Info			
1	0' - 4'	Top	End first Tube →		Bottom
		2000	1,800	1,950	
	Core Scan Results (cpm):	1'-3' Compacted into 2 Ft Section of Tube			
2	4' - 8'		End Second Tube →		
		2000	1,900	2000	1,950
	Core Scan Results (cpm):	Second Tube Full Recovery 3'-6'			
3	8 - 12'				
	Core Scan Results (cpm):				
4	12' - 16'				
	Core Scan Results (cpm):				
5	16' - 20'				
	Core Scan Results (cpm):				

Comments: *(record any drilling or sampling issues, e.g., refusal, groundwater, poor recovery, etc. here)*

3 Ft macros on mobile indoor Rig

CABRERA SERVICES, INC.

PROJECT NAME: Sylvania-Corning FUSRAP
LOCATION: Hicksville, NY
CLIENT: E & E

BORING LOG
Location ID: A3-01
Page No.: 1 of 1

Contractor: ZEBRA ENV.	Driller: Zebra	Date Started: 05/18/07	Rock Refusal Depth:
Method: DIRECT PUSH	Water Elevation: NA	Date Finished: 5/18/07	Rock Cored (FT):
Elevation: N/A	Soil Drilled:	Total Depth: 8	Casing Size: 3'
		METER INFO	Core Size: 1.5
Logged By: KA	Checked By: gwt	EC21 w/ G1	MODEL 19 22152
Date/Time: 05/16/07		#216482 w/ C358C	CAL DUE DATE 10/15/07
		CAL DUE DATE 05/09/08	

Elevation	Depth (feet)	Casing Blows/Foot	DHG cpm	Sample No. & Penetration/ Recovery (feet)	Sample Type	Sample Description and Classification	Group Designation	Remarks	Equipment Installed	Lab Tests Performed
	1		2364			5 uR/hr @ Borehole surface				
	2		2169							
	3		2379							
	4		2179							
	5		1514							
	6		1493							
	7		1928							
	8		2748							

Notes BKG 1,046
9:55 AM

CABRERA SERVICES

RADIOLOGICAL • ENVIRONMENTAL • REMEDIATION

SOIL CORE SCAN LOG

Project: Sylvania-Corning FUSRAP Site
Date/Time: 5/18/07
Project #: ~~07-1005.00~~ 07-1022.00 II
Instr. Model / SN: 2221 w/ 44-10 ; SN# 163685
Location ID: SBR1-SU~~12~~ 12/-09
Cal Due: 10/27/07
Total Depth: ~~12'~~ 12'
Ambient Bkg: 1517 cpm
Page: 1 of 1
Technician Init: DA

Sleeve #	Depth Range	Core & Scan Info (Top / Bottom)
1	0' - 4'	Core Scan Results (cpm): 1700 1500 1600 1500 1550
2	~~4' - 8'~~ DA 6'-11'	Core Scan Results (cpm): 1600 1550 1500
3	~~8 - 12'~~ DA 11'-16'	Core Scan Results (cpm):
4	12' - 16'	Core Scan Results (cpm):
5	16' - 20'	Core Scan Results (cpm):

Comments: (record any drilling or sampling issues, e.g. refusal, groundwater, poor recovery, etc. here)

5' sleeves (2" diameter)

CABRERA SERVICES, INC.

PROJECT NAME: Sylvania-Corning FUSRAP
LOCATION: Hicksville, NY
CLIENT: E & E

BORING LOG
Location ID: SB4-SU02-09
Page No.: 1 of 1

Contractor: E&E	Driller: ZEBRA	Date Started: 5/18/07	Rock Refusal Depth:
Method: 4' MACRO CORE GEOPROBE	Water Elevation: NA	Date Finished: 5/18/07	Rock Cored (FT):
Elevation: NA	Soil Drilled:	Total Depth: 12'	Casing Size:
			Core Size: ~~7.5 DA~~ 4' 2" x 5'
Logged By: DA	Checked By: gmt		
Date/Time: 5/18/07		S/N NaI- 190205	BKG NaI (cpm) 1060
		S/N Mod19- 101662	BKG Mod19 (uR/hr) 5

Elevation	Depth (feet)	Casing Blows/Foot	DHG cpm	Sample No. & Penetration/ Recovery (feet)	Sample Type	Sample Description and Classification	Group Designation	Remarks	Equipment Installed	Lab Tests Performed
	1		1637		SOIL					
	2		2665							
	3		2199							
	4		2660							
	5		2635							
	6		2257							
	7		1652							
	8		1720							
	9		1472							
	10		1782							
	11		2261							
	12		1395							

Notes

CABRERA SERVICES

RADIOLOGICAL · ENVIRONMENTAL · REMEDIATION

SOIL CORE SCAN LOG

Project: Sylvania-Corning-FUSRAP Site
Project #: ~~07-1005.00~~ DA 07-1022.00 #
Location ID: SBR1-SU12-19
Total Depth: 10
Page: 1 of 1

Date/Time: 5/18/07
Instr. Model / SN: 2221 w/ 44-10, SN# 163685
Cal Due: 10/27/07
Ambient Bkg: 1478 cpm
Technician Init: DA

Sleeve #	Depth Range	Core & Scan Info (Top → Bottom)			
1	~~0'-4'~~ DA 0'-6'				
Core Scan Results (cpm):		1275	1450	1350	1350
2	~~4'-8'~~ DA 6'-11'				
Core Scan Results (cpm):		1450	1500	1300	
3	~~8-12'~~ DA 11'-15'				
Core Scan Results (cpm):		1250	1300	1350	
4	12' - 16'				
Core Scan Results (cpm):					
5	16' - 20'				
Core Scan Results (cpm):					

A N

Comments: (record any drilling or sampling issues, e.g., refusal, groundwater, poor recovery, etc. here)

5' tube + 1' extender on core sampler barrel (1'-6')
5' tube 6-11'
4' tube 11'-15'

CABRERA SERVICES, INC.

PROJECT NAME: Sylvania-Corning FUSRAP
LOCATION: Hicksville, NY
CLIENT: E & E

BORING LOG

Location ID: SB01-SU12-19
Page No.: 1 of

Contractor: E&E	Driller: ZEBRA	Date Started: 5/18/07	Rock Refusal Depth:
Method: 4' MACRO CORE GEOPROBE	Water Elevation: NA	Date Finished: 5/18/07	Rock Cored (FT):
Elevation: NA	Soil Drilled:	Total Depth: 11'	Casing Size:
			Core Size: ~~1.5" OD x 4'~~ 8" x 5'
Logged By: DA	Checked By: GMT		
Date/Time: 5/18/07		S/N NaI- 190205	BKG NaI (cpm) 1010 cpm
		S/N Mod19- 101662	BKG Mod19 (uR/hr) 6uR/hr

Elevation	Depth (feet)	Casing Blows/Foot	DHG cpm	Sample No. & Penetration/ Recovery (feet)	Sample Type	Sample Description and Classification	Group Designation	Remarks	Equipment Installed	Lab Tests Performed
	1		1388		SOIL					
	2		1753							
	3		3162							
	4		2611							
	5		1530							
	6		1458							
	7		1452							
	8		1774							
	9		2288							
Z	10		2495							
	11	Z	1728							
A										
		A								
								Z		
								A		

Notes

CABRERA SERVICES

RADIOLOGICAL · ENVIRONMENTAL · REMEDIATION

SOIL CORE SCAN LOG

Project: Sylvania-Corning FUSRAP Site
Project #: 07-1005.00
Location ID: SU13-13
Total Depth: 16'
Page: 1 of 1

Date/Time: 5/21/07 10:20
Instr. Model / SN: 2221 w/44-10 108862
Cal Due: 04-30-08
Ambient Bkg: 2030 cpm
Technician Init: KMA, AC

Sleeve #	Depth Range	Core & Scan Info (Top → Bottom)			
1	0' - 4'	2,500	2,400	2,000	2,000
Core Scan Results (cpm):		TOP 4" VOIDS			
2	4' - 8'	2,600	2,600	2,600	2,000
Core Scan Results (cpm):		10" VOIDS @ 4'-4' 10"			
3	8 - 12'	2,400	2,100	2,400	2,400
Core Scan Results (cpm):		7" VOIDS @ 8'-8' 7"			
4	12' - 16'		2,200	2,300	2,300
Core Scan Results (cpm):		12'-13' SECTION OF TUBE VOID			
5	16' - 20'				
Core Scan Results (cpm):					

Comments: (record any drilling or sampling issues, e.g., refusal, groundwater, poor recovery, etc. here)

CABRERA SERVICES, INC.

PROJECT NAME: Sylvania-Corning FUSRAP
LOCATION: Hicksville, NY
CLIENT: E & E

BORING LOG
Location ID: SU 12-13
Page No.: 1 of 1

Contractor: ZEBRA	Driller: L. MEESE	Date Started: 5/21/07	Rock Refusal Depth:
Method: DIRECT PUSH	Water Elevation: N/A	Date Finished: 5/21/07	Rock Cored (FT):
Elevation:	Soil Drilled: SANDY, SILTY	Total Depth: 16'	Casing Size:
		MODEL INFO	Core Size: 1.5" x 4'
Logged By: KMA, AC	Checked By:	2221 W/GI 216482	MODEL INFO
Date/Time: 5/21/07		CAL DUE 05-01-08	MODEL # 221521
			BKG 7, CONTACT 7 MR/HR

Elevation	Depth (feet)	Casing Blows/Foot	DHG cpm	Sample No. & Penetration/Recovery (feet)	Sample Type	Sample Description and Classification	Group Designation	Remarks	Equipment Installed	Lab Tests Performed
	1		1760		SOIL					
	2		1859							
	3		1856							
	4		1787							
	5		1926							
	6		2070							
	7		2125							
	8		1771							
	9		1318							
	10		1299							
	11		1362							
	12		1481							
	13		1006							
	14		1013							
	15		1013							
	16		911							
			N	A						

Notes
BKG 1225

CABRERA SERVICES

RADIOLOGICAL • ENVIRONMENTAL • REMEDIATION

SOIL CORE SCAN LOG

Project: Sylvania-Corning FUSRAP Site
Date/Time: 5/21/07 - 8:45
Project #: 07-1005.00
Instr. Model / SN: 2221 w/44-10 108862
Location ID: SU13-14
Cal Due: 04-30-08
Total Depth: 16"
Ambient Bkg: 2018 cpm
Page: 1 of 1
Technician Init: KMA, AC

Sleeve #	Depth Range	Core & Scan Info (Top → Bottom)			
1	0' - 4'		2,000	2,000	2,300
Core Scan Results (cpm):		1ST 1' WAS VOID OF SOIL/MATERIAL			
2	4' - 8'	2000	2,250	2,100	2,150
Core Scan Results (cpm):		9" Void			
3	8 - 12'	2,000	2,000	2,000	1,900
Core Scan Results (cpm):					
4	12' - 16'	1950	2,200	2,100	2,300
Core Scan Results (cpm):					
5	16' - 20'				
Core Scan Results (cpm):					

Comments: *(record any drilling or sampling issues, e.g., refusal, groundwater, poor recovery, etc. here)*

CABRERA SERVICES, INC.	PROJECT NAME: Sylvania-Corning FUSRAP LOCATION: Hicksville, NY CLIENT: E & E	BORING LOG Location ID: SU13-14 Page No.: 1 of 1

Contractor: ZEBRA	Driller: L. REESE	Date Started: 5/21/07	Rock Refusal Depth:
Method: DIRECT PUSH	Water Elevation:	Date Finished: 5/21/07	Rock Cored (FT):
Elevation: N/A	Soil Drilled: SILTY, SANDY	Total Depth: 7'	Casing Size:
		METER INFO	Core Size: 1.5" x 4'
Logged By: KMA, AC	Checked By: [illegible]	2221 W/GI 216482	METER INFO
Date/Time: 5/21/07 0935		CAL DUE 05-04-08	MODEL 19 221521
		BKG: 1,077 CPM (1 MIN)	BKG 5, C.6 ur/hr

Elevation	Sample Information: Depth (feet)	Casing Blows/Foot	DHG cpm	Sample No. & Penetration/Recovery (feet)	Sample Type	Sample Description and Classification	Group Designation	Remarks	Equipment Installed	Lab Tests Performed
	1		1924		SOIL				P.U.C.	
	2		2478							
	3		2467							
	4		2997							
	5		2216							
	6		2174							
	7		1804							
								GEOPROBE W/ P.U.C. FOR D.H.G. REFUSED @ 7' DEPTH.		
			N	A						

Notes

wall collapse

CABRERA SERVICES

RADIOLOGICAL • ENVIRONMENTAL • REMEDIATION

SOIL CORE SCAN LOG

Project: Sylvania-Corning FUSRAP Site
Date/Time: 5/21/07
Project #: ~~07-1005.00~~ 07-1022.00 II
Instr. Model / SN: 2221 w/ 44-10 ; SN# 163685
Location ID: SB21-SU13-03
Cal Due: 10/27/07
Total Depth: 16'
Ambient Bkg: 1819 cpm
Page: 1 of 1
Technician Init: DA

Sleeve #	Depth Range	Core & Scan Info (Top → Bottom)				
1	0' - 4'		1600	1650	1700	1650
		Core Scan Results (cpm): VOID				
2	4' - 8'		1600	1600	1625	1650
		Core Scan Results (cpm): VOID				
3	8 - 12'			1550	1650	1600
		Core Scan Results (cpm): VOID				
4	12' - 16'			1600	1500	1500
		Core Scan Results (cpm): VOID				
5	16' - 20'					
		Core Scan Results (cpm):				

Comments: (record any drilling or sampling issues, e.g. refusal, groundwater, poor recovery, etc. here)

7mR/hr

CABRERA SERVICES, INC.

PROJECT NAME: Sylvania-Corning FUSRAP
LOCATION: Hicksville, NY
CLIENT: E & E

BORING LOG
Location ID: SBU-SU63-03
Page No.: 1 of 1

Contractor: E&E	Driller: ZEBRA	Date Started: 5/21/07	Rock Refusal Depth:
Method: 4' MACRO CORE GEOPROBE	Water Elevation: NA	Date Finished: 5/21/07	Rock Cored (FT):
Elevation: NA	Soil Drilled:	Total Depth: 15'	Casing Size:
			Core Size: 1.5" x 4'
Logged By: DA	Checked By: [signature]		
Date/Time: 5/28/07		S/N NaI- 190205	BKG NaI (cpm)- 1230
		S/N Mod19- 101662	BKG Mod19 (uR/hr) -7 uR/hr

Elevation	Depth (feet)	Casing Blows/Foot	DHG cpm	Sample No. & Penetration/ Recovery (feet)	Sample Type	Sample Description and Classification	Group Designation	Remarks	Equipment Installed	Lab Tests Performed
	1		1703		SOIL					
	2		2436							
	3		2784							
	4		2304							
	5		2500							
	6		2192							
	7		2016							
	8		2114							
	9		2153							
	10		2147							
	11		2301							
	12		1763							
	13		1632							
	14		1085							
	15		1077							
	16		1130							

ZA

Notes

Acetate sleeve for liner (casing)

CABRERA SERVICES

RADIOLOGICAL · ENVIRONMENTAL · REMEDIATION

SOIL CORE SCAN LOG

Project: Sylvania-Corning FUSRAP Site
Date/Time: 5/21/07
Project #: ~~07-1005.00~~ 07-1022.00 II
Instr. Model / SN: 2221 w/ 44-10 ; SN# 163685
Location ID: SBRI-SV13-02
Cal Due: 10/27/07
Total Depth: 16'
Ambient Bkg: 2027 cpm
Page: 1 of 1
Technician Init: DA

Sleeve #	Depth Range	Core & Scan Info (Top 1 / 2 / 3 / 4 Bottom)
1	0' - 4'	Void / 1950 / 1800 / 1875 / 1900
		Core Scan Results (cpm):
2	4' - 8'	Void / 1900 / 1850 / 1850 / 1900
		Core Scan Results (cpm):
3	8 - 12'	1 / 1775 / 1550 / 1775
		Core Scan Results (cpm): VOID
4	12' - 16'	1 / 1900 / 1700 / 1700
		Core Scan Results (cpm): VOID
~~5~~	~~16' - 20'~~	1 / 2 / 3 / 4
		Core Scan Results (cpm): N A

Comments (record any drilling or sampling issues, e.g. refusal, groundwater, poor recovery, etc. here):

CABRERA SERVICES, INC.

PROJECT NAME: Sylvania-Corning FUSRAP
LOCATION: Hicksville, NY
CLIENT: E & E

BORING LOG
Location ID: SBR1-SB03-02
Page No.: 1 of

Contractor: E&E	Driller: ZEBRA	Date Started: 5/21/07	Rock Refusal Depth:
Method: 4' MACRO CORE GEOPROBE	Water Elevation: NA	Date Finished: 5/21/07	Rock Cored (FT):
Elevation: NA	Soil Drilled:	Total Depth: 16'	Casing Size:
			Core Size: 1.5" x 4'
Logged By: DA	Checked By: gmT		
Date/Time: 5/21/07		S/N NaI- 190205	BKG NaI (cpm) 1476
		S/N Mod 19- 101662	BKG Mod19 (uR/hr) 7uR/hr

Elevation	Depth (feet)	Casing Blows/Foot	DHG cpm	Sample No. & Penetration/ Recovery (feet)	Sample Type	Sample Description and Classification	Group Designation	Remarks	Equipment Installed	Lab Tests Performed
	1		2052		SOIL	7 µR/hr @ bore hole				
	2		2432							
	3		2215							
	4		2611							
	5		3186							
	6		2222							
	7		1564							
	8		1683							
	9		1850							
Z	10		1765							
	11	Z	1263							
A	12		1328	N	A					
	13	A	1117						Z	
	14		1193							
	15		1031					A		
	16		911							
	NA		NA		NA					

Notes

CABRERA SERVICES, INC.

PROJECT NAME: Sylvania-Corning FUSRAP
LOCATION: Hicksville, NY
CLIENT: E & E

BORING LOG
Location ID: SBRI-SU03-01
Page No.: 1 of 1

Contractor: E&E	Driller: ZEBRA	Date Started: 5/21/07	Rock Refusal Depth:
Method: 4' MACRO CORE GEOPROBE	Water Elevation: NA	Date Finished: 5/21/07	Rock Cored (FT):
Elevation: NA	Soil Drilled:	Total Depth: 11'	Casing Size:
			Core Size: 1.5" x 4'
Logged By: DA	Checked By: [illegible]		
Date/Time: 5/21/07		S/N NaI - 190205	BKG NaI (cpm) 1470
		S/N Mod19 - 101662	BKG Mod19 (uR/hr) 7 uR/hr

Elevation	Depth (feet)	Casing Blows/Foot	DHG cpm	Sample No. & Penetration/ Recovery (feet)	Sample Type	Sample Description and Classification	Group Designation	Remarks	Equipment Installed	Lab Tests Performed
	1		2101		SOIL	7μR/hr @ bore hole				
	2		2973							
	3		6606							
	4		2800							
	5		2548	N.A.						
	6		2463							
	7		3097							
	8		1978							
	9		2018							
	10		1580							
	11		1092							
		N/A		N/A				N/A	N/A	

Notes

CABRERA SERVICES

RADIOLOGICAL · ENVIRONMENTAL · REMEDIATION

SOIL CORE SCAN LOG

Project: Sylvania-Corning FUSRAP Site
Project #: ~~07-1005.00~~ 07-1022.00 II
Location ID: SBR1-SU13-01
Total Depth: 16'
Page: 1 of 1

Date/Time: 5/21/07
Instr. Model / SN: 2221 w/ 44-10 ; SN# 163685
Cal Due: 10/27/07
Ambient Bkg: 1887 cpm
Technician Init: DA/GMT

Sleeve #	Depth Range	Core & Scan Info			
1	0' - 4'	Top 1	2	3	4 Bottom
			1900	1850	1750
Core Scan Results (cpm):		VOID			
2	4' - 8'	1	2	3	4
		1750	1800	1850	1850
Core Scan Results (cpm):		VOID			
3	8 - 12'	1	2	3	4
		1450	1750	1950	1900
Core Scan Results (cpm):		VOID			
4	12' - 16'	1	2	3	4
			1900	1700	1800
Core Scan Results (cpm):		VOID			
5	16' - 20'	1	2	3	4
				A	
Core Scan Results (cpm):			N		

Comments (Record any drilling or sampling issues, e.g. refusal, groundwater, poor recovery, etc. here)

CABRERA SERVICES

RADIOLOGICAL · ENVIRONMENTAL · REMEDIATION

SOIL CORE SCAN LOG

Project: Sylvania-Corning FUSRAP Site
Date/Time: 5/21/07
Project #: ~~07-1005.00~~ 07-1022.00 II
Instr. Model / SN: 2221 w/ 44-10 ; SN# 163685
Location ID: SBRI-SU09-12
Cal Due: 10/27/07
Total Depth: 16'
Ambient Bkg: 1945 cpm
Page: 1 of 1
Technician Init: DA

Sleeve #	Depth Range	Core & Scan Info (Top → Bottom)					
1	0' - ~~4~~ 6'		VOID	VOID	1900	1900	
Core Scan Results (cpm):							
2	~~4' - 8'~~ 6' - 11'						
Core Scan Results (cpm):		No Recovery					
3	~~8 - 12'~~ 11 - 16'		VOID		1850	1900	20,200
Core Scan Results (cpm):							
4	12' - 16'						
Core Scan Results (cpm):							
5	16' - 20'						
Core Scan Results (cpm):							

N/A

Comments: (record any drilling or sampling issues, e.g., refusal, groundwater, poor recovery, etc. here.)

~~1~~ first push w/ 5' core + 1' extention (0-6')

CABRERA SERVICES, INC.

PROJECT NAME: Sylvania-Corning FUSRAP
LOCATION: Hicksville, NY
CLIENT: E & E

BORING LOG
Location ID: SB21-SU09-12
Page No.: 1 of 1

Contractor: E&E	Driller: ZEBRA	Date Started: 5/21/09	Rock Refusal Depth:
Method: 4' MACRO CORE GEOPROBE	Water Elevation: NA	Date Finished: 5/21/09	Rock Cored (FT):
Elevation: NA	Soil Drilled:	Total Depth: 16'	Casing Size:
			Core Size: 1.5" x 4'
Logged By: DA	Checked By: gmt		
Date/Time: 5/21/09		S/N NaI - 190205	BKG NaI (cpm) 1598
		S/N Mod19 - 101662	BKG Mod19 (uR/hr) 7μR/hr

Elevation	Depth (feet)	Casing Blows/Foot	DHG cpm	Sample No. & Penetration/ Recovery (feet)	Sample Type	Sample Description and Classification	Group Designation	Remarks	Equipment Installed	Lab Tests Performed
	1		2529		SOIL	7μR/hr @ bore hole				
	2		2226							
	3		2299							
	4		2567							
	5		2212							
	6		2176							
	7		1984							
	8		1851							
	9		1801							
	10		1905							
	11		1304							
	12		1230							
	13		969							
	14		968							
	15		928							
	16		789							

Notes

CABRERA SERVICES

RADIOLOGICAL · ENVIRONMENTAL · REMEDIATION

SOIL CORE SCAN LOG

Project: Sylvania-Corning FUSRAP Site
Project #: ~~07-1005.00~~ 07-1022.00 II
Location ID: SBR1-SU09-06
Total Depth: 20'
Page: 1 of 1

Date/Time: 5/21/07
Instr. Model / SN: 2221 w/ 44-10 ; SN# 163685
Cal Due: 10/27/07
Ambient Bkg: 1589 cpm
Technician Init: DA / GMT

Sleeve #	Depth Range	Core & Scan Info (Top 1 / 2 / 3 / 4 / Bottom 5)
1	0' - 6'	1400 / 1450 / 1400 / 1400
	Core Scan Results (cpm):	Void
2	6' - ~~8'~~ DA 11'	
	Core Scan Results (cpm):	No SAMPLE
3	~~8 - 12'~~ DA 11' - 16'	1350 / 1350 / 1450 / 1550 / 1400
	Core Scan Results (cpm):	Void
4	~~12' - 16'~~ DA 16' - 21'	1300 / 1400 / 1300
	Core Scan Results (cpm):	VOID / VOID / VOID
5	~~16' - 20'~~	A
	Core Scan Results (cpm):	N

Comments: (record any drilling or sampling issues, e.g., refusal, groundwater, poor recovery, etc. here)

5' Acetate & 1' extension First run

CABRERA SERVICES, INC.

PROJECT NAME: Sylvania-Corning FUSRAP
LOCATION: Hicksville, NY
CLIENT: E & E

BORING LOG

Location ID: SBRI-SU09-06
Page No.: 1 of 1

Contractor: E&E	Driller: ZEBRA	Date Started: 5/21/07	Rock Refusal Depth:
Method: 4' MACRO CORE GEOPROBE	Water Elevation: NA	Date Finished: 5/21/07	Rock Cored (FT):
Elevation: NA	Soil Drilled:	Total Depth: 20'	Casing Size:
			Core Size: 1.5" x 4'
Logged By: DA	Checked By: gmt		
Date/Time: 5/21/07		S/N NaI- 190205	BKG NaI (cpm) 110
		S/N Mod19- 101662	BKG Mod19 (uR/hr) 5

Elevation	Depth (feet)	Casing Blows/Foot	DHG cpm	Sample No. & Penetration/ Recovery (feet)	Sample Type	Sample Description and Classification	Group Designation	Remarks	Equipment Installed	Lab Tests Performed
	1		4257		SOIL	5uR/hr @ Borehole Surface				
	2		2392							
	3		1499							
	4		1512							
	5		1517							
	6		1712							
	7		2867							
	8		2519							
	9		1350							
	10		1096							
	11		1113							
	12		1099							
	13		964							
	14		967							
	15		894							
	16		816							
	17		1245							
	18		1020							
	19		925							
	20		728							

Notes

CABRERA SERVICES

RADIOLOGICAL · ENVIRONMENTAL · REMEDIATION

SOIL CORE SCAN LOG

Project: Sylvania-Corning FUSRAP Site
Project #: 07-1005.00
Location ID: SU 13-15
Total Depth: 16'
Page: 1 of 1

Date/Time: 5/21/07 1600
Instr. Model / SN: 2221 w/44-10 108862
Cal Due: 04-30-08
Ambient Bkg: 2270 cpm
Technician Init: KMA, AC

Sleeve #	Depth Range	Core & Scan Info (Top → Bottom)			
1	0' - 4'	2,200	2,150	2300	2,300
Core Scan Results (cpm):					
2	4' - 8'	2,200	2,200	2,100	2,300
Core Scan Results (cpm):					
3	8 - 12'	2,450	2,200	2,200	2,100
Core Scan Results (cpm):					
4	12' - 16'	2,200	2,200	2,150	2,200
Core Scan Results (cpm):		8" VOID FROM 12' TO 12'8"			
5	16' - 20'				
Core Scan Results (cpm):					

Comments: (record any drilling or sampling issues, e.g., refusal, groundwater, poor recovery, etc. here)

CABRERA SERVICES, INC.

PROJECT NAME: Sylvania-Corning FUSRAP
LOCATION: Hicksville, NY
CLIENT: E & E

BORING LOG
Location ID: SU13-15
Page No.: 1 of 1

Contractor: ZEBRA	Driller:	Date Started: 5/21/07	Rock Refusal Depth:
Method: DIRECT PUSH	Water Elevation:	Date Finished: 5/21/07	Rock Cored (FT):
Elevation: NA	Soil Drilled:	Total Depth: 16	Casing Size:
		METER INFO	Core Size:
Logged By: KA	Checked By: [illegible]	2221 w/GI 216482	MODEL 19 # 221521
Date/Time: 5/21/07		CAL DUE 05-04-08	BKG 5 uR/hr
			CORE AREA 5 uR/hr

Elevation	Sample Information: Depth (feet)	Casing Blows/Foot	DHG cpm	Sample No. & Penetration/ Recovery (feet)	Sample Type	Sample Description and Classification	Group Designation	Remarks	Equipment Installed	Lab Tests Performed
	1		2366							
	2		3397							
	3		2976							
	4		2545							
	5		1513							
	6		1494							
	7		2671							
	8		2695							
	9		1593							
	10		1290							
	11		1276							
	12		1327							
	13		1133							
	14		992							
	15		964							
	16		867							

Notes BKG 1153

CABRERA SERVICES

RADIOLOGICAL · ENVIRONMENTAL · REMEDIATION

SOIL CORE SCAN LOG

Project: Sylvania-Corning FUSRAP Site
Project #: 07-1005.00
Location ID: S013-11
Total Depth: 16'
Page: 1 of 1

Date/Time: 5/21/07
Instr. Model / SN: 2221 w/44-10 108862
Cal Due: 04-30-08
Ambient Bkg: 2590 cpm
Technician Init: RMA/AC

Sleeve #	Depth Range	Core & Scan Info (Top → Bottom)			
1	0' - 4'		2400	2200	2150
Core Scan Results (cpm):		14" void			
2	4' - 8'	2,400	2,400	2,200	2,200
Core Scan Results (cpm):					
3	8 - 12'		← 2,200 →	2,200	2,100
Core Scan Results (cpm):		10" VOID FROM 8' TO 8'10"			
4	12' - 16'		2,400	2,200	2,200
Core Scan Results (cpm):		VOID FROM 12' TO 13'			
5	16' - 20'				
Core Scan Results (cpm):					

Comments: (record any drilling or sampling issues, e.g., refusal, groundwater, poor recovery, etc. here)

CABRERA SERVICES, INC.	PROJECT NAME: Sylvania-Corning FUSRAP LOCATION: Hicksville, NY CLIENT: E & E	BORING LOG Location ID: SU13-11 Page No.: 1 of 1

Contractor: TEGRA	Driller: C. REESE	Date Started: 05/21/07	Rock Refusal Depth: 7'
Method: DIRECT PUSH	Water Elevation: N/A	Date Finished: 05/21/07	Rock Cored (FT):
Elevation: N/A	Soil Drilled: SILTY, SANDY	Total Depth: 7'	Casing Size:
		METER INFO	Core Size:
Logged By: KMA, AC	Checked By: [illegible]	2221 w/ GI 216482	MODEL 19 #221521
Date/Time: 5/21/07 1525		CAL DUE 05-04-08	LIKE 6 uR/hr
			CORE COC. 7 uR/hr.

Elevation	Depth (feet)	Casing Blows/Foot	DHG cpm	Sample No. & Penetration/ Recovery (feet)	Sample Type	Sample Description and Classification	Group Designation	Remarks	Equipment Installed	Lab Tests Performed
	1		1903		SOIL					
	2		2155							
	3		2167							
	4		2219							
	5		2469							
	6		1844							
	7		1481			HIT REFUSAL @ 7' DEPTH				

N/A

Notes BKG 1297

CABRERA SERVICES

RADIOLOGICAL · ENVIRONMENTAL · REMEDIATION

SOIL CORE SCAN LOG

Project: Sylvania-Corning FUSRAP Site
Project #: 07-1005.00
Location ID: SU 13-12
Total Depth: 16'
Page: 1 of 1

Date/Time: 5/21/07 1:20
Instr. Model / SN: 2221 w/44-10 108962
Cal Due: 04-30-08
Ambient Bkg: 2282 cpm
Technician Init: KMA, AC

Sleeve #	Depth Range	Core & Scan Info (Top → Bottom)			
1	0' - 4'	2,500	2,500	2,500	2,500
Core Scan Results (cpm):	1ST 4" VOID OF SOIL/MATERIAL				
2	4' - 8'	2,600	2,650	2,600	2,600
Core Scan Results (cpm):					
3	8 - 12'	2,400	2,400	2,500	2,400
Core Scan Results (cpm):					
4	12' - 16'	2,650	2,600	2,500	2,550
Core Scan Results (cpm):	6" VOID FROM 12' - 12'6"				
5	16' - 20'				
Core Scan Results (cpm):					

Comments: (record any drilling or sampling issues, e.g. refusal, groundwater, poor recovery, etc. here)

CABRERA SERVICES, INC.

PROJECT NAME: Sylvania-Corning FUSRAP
LOCATION: Hicksville, NY
CLIENT: E & E

BORING LOG
Location ID: SU13-12
Page No.: 1 of 1

Contractor: ZEBRA	Driller: L. REESE	Date Started: 05/21/07	Rock Refusal Depth:
Method: DIRECT PUSH	Water Elevation: N/A	Date Finished: 05/21/07	Rock Cored (FT):
Elevation: NA	Soil Drilled: SANDY, SILTY	Total Depth: 15'	Casing Size:
		METER INFO	Core Size: 1.5" x 4'
Logged By: KMA/AC	Checked By: [illegible]	2221 W/GI 216482	MODEL 19 #221521
Date/Time: 5/21/07		CAL DUE 05-04-08	BKG 6 NR/HR.
			ON CORE AREA 7 NR/HR.

Elevation	Depth (feet)	Casing Blows/Foot	DHG cpm	Sample No. & Penetration/ Recovery (feet)	Sample Type	Sample Description and Classification	Group Designation	Remarks	Equipment Installed	Lab Tests Performed
	1		2438		SOIL					
	2		2611							
	3		2607							
	4		2441							
	5		2050							
	6		1934							
	7		2444							
	8		2334							
	9		1487							
	10		1128							
	11		1249							
	12		1529							
	13		1040							
	14		1042							
	15		1004							
	~~16~~		~~1042~~	KMA		N/A, LAST FOOT COLLAPSED BEFORE PVC WAS INSTALLED. KMA				

N/A

Notes BKG 1282

CABRERA SERVICES

RADIOLOGICAL · ENVIRONMENTAL · REMEDIATION

SOIL CORE SCAN LOG

Project: Sylvania-Corning FUSRAP Site
Date/Time: 5/22/07
Project #: ~~07-1005.00~~ 07-1022.00 II
Instr. Model / SN: 2221w/44-10; SN# 163685
Location ID: SBR1-S1113-04
Cal Due: 10/27/07
Total Depth: 16'
Ambient Bkg: 1919 cpm
Page: 1 of 1
Technician Init: DA / GMT

Sleeve #	Depth Range	Core & Scan Info (Top → Bottom)			
1	0' - 4'	1	2	3	4
		1700	1650	1750	1600
Core Scan Results (cpm):		VOID			
2	4' - 8'	1700	1700	1750	1675
Core Scan Results (cpm):					
3	8 - 12'	1	2	3	4
		1625	1750	1600	1600
Core Scan Results (cpm):		VOID			
4	12' - 16'	1	2	3	4
		~~1650~~	1700	1600	1700
Core Scan Results (cpm):		VOID 1 ft.			
5	~~16' - 20'~~				
Core Scan Results (cpm):					

Comments: (Record any drilling or sampling issues, e.g. refusal, groundwater, poor recovery, etc. here)

7 μR/hr Bkgd.

N A

CABRERA SERVICES, INC.

PROJECT NAME: Sylvania-Corning FUSRAP
LOCATION: Hicksville, NY
CLIENT: E & E

BORING LOG
Location ID: SBU-SU13-04
Page No.: 1 of 1

Contractor: E&E	Driller: ZEBRA	Date Started: 5/22/07	Rock Refusal Depth:
Method: 4' MACRO CORE GEOPROBE	Water Elevation: NA	Date Finished: 5/22/07	Rock Cored (FT):
Elevation: NA	Soil Drilled:	Total Depth: 16'	Casing Size:
			Core Size: 1.5" x 4'
Logged By: DA	Checked By: [illegible]		
Date/Time: 5/22/07		S/N NaI- 190205	BKG NaI (cpm) 1508
		S/N Mod 19- 101662	BKG Mod19 (uR/hr) 7uR/hr

Elevation	Depth (feet)	Casing Blows/Foot	DHG cpm	Sample No. & Penetration/ Recovery (feet)	Sample Type	Sample Description and Classification	Group Designation	Remarks	Equipment Installed	Lab Tests Performed
	1		1589		SOIL	7uR/hr @ bore hole				
	2		2068							
	3		3586							
	4		3750							
	5		1923							
	6		2143							
	7		2673							
	8		1867							
	9		2067							
	10		1546							
	11		1259							
	12		1477							
	13		1097							
	14		909							
	15		940							
	16		981							
	NA		NA							

Notes

CABRERA SERVICES

RADIOLOGICAL · ENVIRONMENTAL · REMEDIATION

SOIL CORE SCAN LOG

Project: Sylvania-Corning FUSRAP Site
Date/Time: 5/22/07
Project #: ~~07-1005.00~~ 07-1022.00 II
Instr. Model / SN: 2221 w/ 44-10 ; SN# 163685
Location ID: SBR1-SU13-05
Cal Due: 10/27/07
Total Depth: 16'
Ambient Bkg: 1896 cpm
Page: 1 of 1
Technician Init: DA/GMT

Sleeve #	Depth Range	Core & Scan Info (Top → Bottom)			
1	0' - 4'		1750	1625	1700
Core Scan Results (cpm):		VOID			
2	4' - 8'		1650	1675	1600
Core Scan Results (cpm):		VOID			
3	8 - 12'				1600
Core Scan Results (cpm):					
4	12' - 16'			1650	1700
Core Scan Results (cpm):					
5	16' - 20'		A		
Core Scan Results (cpm):		N			

Comments (record any drilling or sampling issues, e.g. refusal, groundwater, poor recovery, etc.(where))

CABRERA SERVICES, INC.

PROJECT NAME: Sylvania-Corning FUSRAP
LOCATION: Hicksville, NY
CLIENT: E & E

BORING LOG

Location ID: SBRI-SU13-05
Page No.: 1 of 1

Contractor: E&E	Driller: ZEBRA	Date Started: 5/22/07	Rock Refusal Depth:
Method: 4' MACRO CORE GEOPROBE	Water Elevation: NA	Date Finished: 5/22/07	Rock Cored (FT):
Elevation: NA	Soil Drilled:	Total Depth: 16	Casing Size:
			Core Size: 1.5" x 4'
Logged By: DA	Checked By: gmt		
Date/Time: 5/22/07		S/N NaI- 190205	BKG NaI (cpm) 1322
		S/N Mod 19- 101662	BKG Mod19 (uR/hr) 7

Elevation	Depth (feet)	Casing Blows/Foot	DHG cpm	Sample No. & Penetration/Recovery (feet)	Sample Type	Sample Description and Classification	Group Designation	Remarks	Equipment Installed	Lab Tests Performed
	1		1787		SOIL	7μR/hr @ bore hole				
	2		2196							
	3		2251							
	4		2004							
	5		1905							
	6		2004							
	7		2037							
	8		1827							
	9		1729							
	10		1779							
	11		1966							
	12		1497							
	13		1419							
	14		1616							
	15		1610							
	16		2209							
	NA		NA		NA					

Notes

CABRERA SERVICES

RADIOLOGICAL · ENVIRONMENTAL · REMEDIATION

SOIL CORE SCAN LOG

Project: Sylvania-Corning FUSRAP Site
Date/Time: 5/22/07
Project #: ~~07-1005.00~~ 07-1022.00 II
Instr. Model / SN: 2221 w/ 44-10; SN# 163685
Location ID: SBR1-SW13-06
Cal Due: 10/27/07
Total Depth: 16'
Ambient Bkg: 1855 cpm
Page: 1 of 1
Technician Init: DA / GMT

Sleeve #	Depth Range	Core & Scan Info (Top 1 / 2 / 3 / 4 Bottom)	Core Scan Results (cpm)
1	0' - 4'	VOID / 1600 / 1600 / 1650 / 1600	VOID
2	4' - 8'	1700 / 1650 / 1650 / 1650	
3	8 - 12'	VOID / 1650 / 1700	
4	12' - 16'	VOID / 1650 / 1600	VOID
5	16' - 20'	N / A	

Comments: (record any drilling or sampling issues, e.g. refusal, groundwater, poor recovery, etc. here)

6 μR/hr - BKGD.

CABRERA SERVICES, INC.

PROJECT NAME: Sylvania-Corning FUSRAP	BORING LOG
LOCATION: Hicksville, NY	Location ID: SBRI-SU13-06
CLIENT: E & E	Page No.: 1 of 1

Contractor: E&E	Driller: ZEBRA	Date Started: 5/22/07	Rock Refusal Depth:
Method: 4' MACRO CORE GEOPROBE	Water Elevation: NA	Date Finished: 5/22/07	Rock Cored (FT):
Elevation: NA	Soil Drilled:	Total Depth: 14'	Casing Size:
			Core Size: 1.5" x 4'
Logged By: DA	Checked By: [signature]		
Date/Time: 5/22/07		S/N NaI- 190205	BKG NaI (cpm) 1272
		S/N Mod19- 101662	BKG Mod19 (uR/hr) 6uR/hr

Elevation	Depth (feet)	Casing Blows/Root	DHG cpm	Sample No. & Penetration/ Recovery (feet)	Sample Type	Sample Description and Classification	Group Designation	Remarks	Equipment Installed	Lab Tests Performed
	1		1635		SOIL	6uR/hr @ bore hole				
	2		2240							
	3		2704							
	4		2512							
	5		1854							
	6		2978							
	7		3508							
	8		2323							
	9		2047							
	10		1972							
	11		1367							
	12		1270							
	13		1101							
	14		1088							
NA			NA	NA	NA			ZA		

Notes

CABRERA SERVICES

RADIOLOGICAL · ENVIRONMENTAL · REMEDIATION

SOIL CORE SCAN LOG

Project: Sylvania-Corning FUSRAP Site
Date/Time: 5/22/07
Project #: ~~07-1005.00~~ 07-1022.00 II
Instr. Model / SN: 2221w/44-10; SN# 163685
Location ID: SBR1-SW13-18
Cal Due: 10/27/07
Total Depth: 16'
Ambient Bkg: 1896 cpm
Page: 1 of 1
Technician Init: JA/GMT

Sleeve #	Depth Range	Core & Scan Info (Top → Bottom)			
1	0' - 4'	VOID / 1700	1400	1750	1650
Core Scan Results (cpm):					
2	4' - 8'	VOID / 1700	1750	1600	1700
Core Scan Results (cpm):					
3	8 - 12'	1630	1600	1800	1700
Core Scan Results (cpm):		VOID			
4	12' - 16'	VOID / 1650	1600	1650	1600
Core Scan Results (cpm):					
5	16' - 20'				
Core Scan Results (cpm):		N	A		

Comments: (record any drilling or sampling issues, e.g. refusal, groundwater, poor recovery, etc. here)

7μR/hr = Bkgd

CABRERA SERVICES, INC.

PROJECT NAME: Sylvania-Corning FUSRAP
LOCATION: Hicksville, NY
CLIENT: E & E

BORING LOG
Location ID: SBRI-SU13-08
Page No.: 1 of 1

Contractor: E&E	Driller: ZEBRA	Date Started: 5/22/07	Rock Refusal Depth:
Method: 4' MACRO CORE GEOPROBE	Water Elevation: NA	Date Finished: 5/22/07	Rock Cored (FT):
Elevation: NA	Soil Drilled:	Total Depth: 16'	Casing Size:
			Core Size: 1.5" x 4'
Logged By: DA	Checked By: [illegible]		
Date/Time: 5/22/07		S/N NaI- 190205	BKG NaI (cpm) 1316
		S/N Mod 19- 101662	BKG Mod19 (uR/hr) 7uR/hr

Elevation	Depth (feet)	Casing Blows/Foot	DHG cpm	Sample No. & Penetration/ Recovery (feet)	Sample Type	Sample Description and Classification	Group Designation	Remarks	Equipment Installed	Lab Tests Performed
	1		1522		SOIL	7μR/hr @ bore hole				
	2		1658							
	3		2424							
	4		2593							
	5		2339							
	6		1529							
	7		1897							
	8		1372							
	9		1804							
	10		1926							
	11		2436							
	12		1501							
	13		1200							
	14		1050							
	15		971							
	16		956							
	NA		NA	NA	NA					

Notes

CABRERA SERVICES

RADIOLOGICAL · ENVIRONMENTAL · REMEDIATION

SOIL CORE SCAN LOG

Project: Sylvania-Corning FUSRAP Site
Date/Time: 5/22/07
Project #: ~~07-1005.00~~ 07-1022.00 II
Instr. Model / SN: 2221 w/ 44-10 ; SN# 163685
Location ID: SBRI-SU13-10
Cal Due: 10/27/07
Total Depth: 16'
Ambient Bkg: 1746 cpm
Page: 1 of 1
Technician Init: DA / GMT

Sleeve #	Depth Range	Core & Scan Info (Top → Bottom)
1	0' - 4'	VOID | 1600 | 1750 | 1800 | 1700
2	4' - 8'	VOID | 1600 | 1750 | 1650
3	8 - 12'	VOID | 1550 | 1600
4	12' - 16'	VOID | 1600 | 1750 | 1650 | 1650
5	16' - 20'	N | A

Core Scan Results (cpm):

Comments (recordable drilling or sampling issues, e.g. refusal, groundwater, poor recovery, etc. here)

7 μR/hr = Bkgd

CABRERA SERVICES, INC.

PROJECT NAME: Sylvania-Corning FUSRAP
LOCATION: Hicksville, NY
CLIENT: E & E

BORING LOG
Location ID: SBR1-SU13-10
Page No.: 1 of 1

Contractor: E&E	Driller: ZEBRA	Date Started: 5/22/07	Rock Refusal Depth:
Method: 4" MACRO CORE GEOPROBE	Water Elevation: NA	Date Finished: 5/22/07	Rock Cored (FT):
Elevation: NA	Soil Drilled:	Total Depth: 15'	Casing Size:
			Core Size: 1.5" x 4'
Logged By: JA	Checked By: GW		
Date/Time: 5/22/07		S/N NaI- 190205	BKG NaI (cpm) 1326
		S/N Mod19- 101662	BKG Mod19 (uR/hr) 7

Elevation	Depth (feet)	Casing Blows/Foot	DHG cpm	Sample No. & Penetration/ Recovery (feet)	Sample Type	Sample Description and Classification	Group Designation	Remarks	Equipment Installed	Lab Tests Performed
	1		1810		SOIL	7 µR/hr @ bore hole				
	2		2590							
	3		2213							
	4		2260							
	5		2119							
	6		2185							
	7		1774							
	8		2145							
	9		1819							
	10		1126							
	11		1559							
	12		1467							
	13		1036							
	14		998							
	15		902							

Notes

CABRERA SERVICES

RADIOLOGICAL · ENVIRONMENTAL · REMEDIATION

SOIL CORE SCAN LOG

Project: Sylvania-Corning FUSRAP Site
Date/Time: 5/22/07
Project #: ~~07-1005.00~~ 07-1022.00 II
Instr. Model / SN: 2221 w/ 44-10 ; SN# 163685
Location ID: SBR1-SU13-09
Cal Due: 10/27/05
Total Depth: 16'
Ambient Bkg: 1742 cpm
Page: 1 of 1
Technician Init: DA/GMT.

Sleeve #	Depth Range	Core & Scan Info				
1	0' - 4'	Top VOID	1700	1750	1550	1600 Bottom
	Core Scan Results (cpm):					
2	4' - 8'		1750	1700	1800	1650
	Core Scan Results (cpm):	VOID				
3	8 - 12'			1750	1650	1700
	Core Scan Results (cpm):	VOID				
4	12' - 16'			1600	1625	1600
	Core Scan Results (cpm):					
5	16' - 20'		N		A	
	Core Scan Results (cpm):					

Comments: (record any drilling or sampling issues, e.g., refusal, groundwater, poor recovery, etc. here)

BKGD- 7μR/hr

CABRERA SERVICES, INC.

PROJECT NAME: Sylvania-Corning FUSRAP
LOCATION: Hicksville, NY
CLIENT: E & E

BORING LOG
Location ID: SBC-5413-BG
Page No.: 1 of 1

Contractor: E&E	Driller: ZEBRA	Date Started: 5/22/07	Rock Refusal Depth:
Method: 4' MACRO CORE GEOPROBE	Water Elevation: NA	Date Finished: 5/22/07	Rock Cored (FT):
Elevation: NA	Soil Drilled:	Total Depth: 16'	Casing Size:
			Core Size: 1.5" x 4'
Logged By: DA	Checked By: GMT		
Date/Time: 5/22/07		S/N NaI- 190205	BKG NaI (cpm) 1338
		S/N Mod19- 101662	BKG Mod19 (uR/hr) 7 µR/hr

Elevation	Depth (feet)	Casing Blows/Foot	DHG cpm	Sample No. & Penetration/ Recovery (feet)	Sample Type	Sample Description and Classification	Group Designation	Remarks	Equipment Installed	Lab Tests Performed
	1		1513		SOIL	7µR/hr @ bore hole				
	2		1758							
	3		2145							
	4		2167							
	5		2662							
	6		2626							
	7		1907							
	8		2336							
	9		2614							
	10		1709							
	11		1520							
	12		1270							
	13		1256							
	14		905							
	15		895							
	16		835							
	NA		NA		NA					

Notes

CABRERA SERVICES

RADIOLOGICAL • ENVIRONMENTAL • REMEDIATION

SOIL CORE SCAN LOG

Project: Sylvania-Corning FUSRAP Site
Date/Time: 5/22/07
Project #: 07-1005.00
Instr. Model / SN: 2221 w/44-10 108862
Location ID: SU 14-18
Cal Due: 04-30-08
Total Depth: 16
Ambient Bkg: 2230 cpm
Page: 1 of 1
Technician Init: KMA, AC

Sleeve #	Depth Range	Core & Scan Info (Top → Bottom)			
1	0' - 4'	2,400	2,450	2,450	2,450
Core Scan Results (cpm):					
2	4' - 8'	2,300	2,350	2,400	2,400
Core Scan Results (cpm):					
3	8 - 12'		2,500	2,400	2,350
Core Scan Results (cpm):		void 12"			
4	12' - 16'		2,600	2,450	2,250
Core Scan Results (cpm):					
5	16' - 20'				
Core Scan Results (cpm):					

Comments (record any drilling or sampling issues, e.g., refusal, groundwater, poor recovery, etc. here)

CABRERA SERVICES, INC.

PROJECT NAME: Sylvania-Corning FUSRAP
LOCATION: Hicksville, NY
CLIENT: E & E

BORING LOG

Location ID: SO14-18
Page No.: of

Contractor: ZEBRA	Driller: L. CABRERA	Date Started: 5/22/07	Rock Refusal Depth: N/A
Method: DIRECT PUSH	Water Elevation: N/A	Date Finished: 5/22/07	Rock Cored (FT):
Elevation: N/A	Soil Drilled: SANDY, SILTY	Total Depth: 16	Casing Size:
		METER INFO	Core Size: 1' x 1.5"
Logged By: RMR, AC	Checked By:	2221 w/gl 216482	MED619 # 221521
Date/Time: 5/22/07		CAL DUE 05-04-08	GFG 5 UR/HR CONTACT 6DR/HR
			CAL DUE 10/15/07

Elevation	Depth (feet)	Casing Blows/Foot	DHG cpm	Sample No. & Penetration/ Recovery (feet)	Sample Type	Sample Description and Classification	Group Designation	Remarks	Equipment Installed	Lab Tests Performed
	1		1707							
	2		2428							
	3		3333							
	4		3103							
	5		2858							
	6		1773							
	7		1515							
	8		2495							
	9		2350			VOID IN TURG @ 8'-9'				
	10		1572							
	11		1270							
	12		1101							
	13		1350			VOID IN TURG @ 12'-13'				
	14		972							
	15		1075							
	16		1105							

Notes BKG 1199

CABRERA SERVICES

RADIOLOGICAL · ENVIRONMENTAL · REMEDIATION

SOIL CORE SCAN LOG

Project: Sylvania-Corning FUSRAP Site
Date/Time: 5/22/07
Project #: 07-1005.00
Instr. Model / SN: 2221 w/44-10 108762
Location ID: SU14-17
Cal Due: 04-30-08
Total Depth: 16'
Ambient Bkg: 2440 cpm
Page: 1 of 1
Technician Init: RMA/AC

Sleeve #	Depth Range	Core & Scan Info (Top → Bottom)			
1	0' - 4'		2,250	2,250	2,300
Core Scan Results (cpm):	0'-1' OF CORE VOID OF SOIL/MATERIAL				
2	4' - 8'		2,300	2,250	2,300
Core Scan Results (cpm):	4'-5' OF CORE VOID OF SOIL/MATERIAL				
3	8 - 12'		2,500	2,400	2,450
Core Scan Results (cpm):	8'-9' OF CORE VOID OF SOIL/MATERIAL				
4	12' - 16'		2,200	2,200	2,200
Core Scan Results (cpm):					
5	16' - 20'				
Core Scan Results (cpm):					

Comments: (record any drilling or sampling issues, e.g. refusal, groundwater, poor recovery, etc. here)

CABRERA SERVICES, INC.

PROJECT NAME: Sylvania-Corning FUSRAP
LOCATION: Hicksville, NY
CLIENT: E & E

BORING LOG

Location ID: SU 14-17
Page No.: 1 of 1

Contractor: ZEBRA	Driller: L. CABELLARO	Date Started: 05/22/07	Rock Refusal Depth:
Method: DIRECT PUSH	Water Elevation: N/A	Date Finished:	Rock Cored (FT):
Elevation: O.G.	Soil Drilled: SANDY, SILTY	Total Depth:	Casing Size:
		METER INFO	Core Size:
Logged By: KMA, AC	Checked By: [signature]	2221 w/GI 216482	MODEL 19 #221521
Date/Time: 5/22/07		CAL DUE 05-04-08	BKG 6 mr/hr, CON. 6 mr/hr
			CAL DUE 10/15/07

Elevation	Depth (feet)	Casing Blows/Foot	DHG cpm	Sample No. & Penetration/ Recovery (feet)	Sample Type	Sample Description and Classification	Group Designation	Remarks	Equipment Installed	Lab Tests Performed
	1		2148			1ST 1' OF CORE DRILLED WAS VOID OF MATERIAL				
	2		2107							
	3		1757							
	4		2033							
	5		1938			4'-5' OF CORE DRILLED WAS VOID OF MATERIAL				
	6		2069							
	7		2267							
	8		1602							
	9		1502			8'-9' OF CORE DRILLED WAS VOID OF MATERIAL				
	10		1241							
	11		1310							
						12'-13' OF CORE DRILLED WAS VOID OF MAT/SOIL WERE NOT ABLE TO D.H.G. TO MAX CORE DEPTH OF 16' DUE TO COLLAPSE IN HOLE. KMA				

N/A

Notes BKG 13 93

CABRERA SERVICES

RADIOLOGICAL · ENVIRONMENTAL · REMEDIATION

SOIL CORE SCAN LOG

Project: Sylvania-Corning FUSRAP Site
Date/Time: 5/22/07, 1245
Project #: 07-1005.00
Instr. Model / SN: 2221 w/44-10 108862
Location ID: SV14-16
Cal Due: 04-30-08
Total Depth: 16'
Ambient Bkg: 2346 cpm
Page: 1 of 1
Technician Init: KHA, AC

Sleeve #	Depth Range	Core & Scan Info (Top → Bottom)			
1	0' - 4'	2,150	2,000	2,150	2,150
Core Scan Results (cpm):	0'-6" VOID OF SOIL/MATERIAL				
2	4' - 8'	2,100	2,100	2,000	2,200
Core Scan Results (cpm):					
3	8 - 12'	2,100	2,100	1,850	2,150
Core Scan Results (cpm):					
4	12' - 16'	1,800	1,850	2,000	2,100
Core Scan Results (cpm):					
~~5~~	~~16' - 20'~~				
Core Scan Results (cpm):					

Comments: *(record any drilling or sampling issues, e.g., refusal, groundwater, poor recovery, etc. here)*

CABRERA SERVICES, INC.

PROJECT NAME: Sylvania-Corning FUSRAP
LOCATION: Hicksville, NY
CLIENT: E & E

BORING LOG

Location ID: SU19-16
Page No.: 1 of 1

Contractor: ZEBRA	Driller: L. CABRERA	Date Started: 5/22/07	Rock Refusal Depth:
Method: DIRECT PUSH	Water Elevation: N/A	Date Finished: 5/22/07	Rock Cored (FT):
Elevation: O.G.	Soil Drilled: SANDY, SILTY	Total Depth: 16'	Casing Size:
		METER INFO	Core Size:
Logged By: KMA, AC	Checked By:	221 W/GI 216482	METER INFO
Date/Time: 5/22/07		CAL DUE 05-04-08	MODEL A #221521 BKG 6 uR/hr
			CAL DUE 10-15-07 CON 4 uR/hr

Elevation	Depth (feet)	Casing Blows/Foot	DHG cpm	Sample No. & Penetration/Recovery (feet)	Sample Type	Sample Description and Classification	Group Designation	Remarks	Equipment Installed	Lab Tests Performed
	1		3188		SOIL	1ST 0-6" VOID				
	2		3212							
	3		2924							
	4		1777							
	5		1877							
	6		2165							
	7		2940							
	8		2132							
	9		1765							
	10		1125							
	11		1152							
	12		1392							
	13		1157			1ST 0-6" VOID				
	14		1011							
	15		969							
	16		862							
			N	A						

Notes BKG 1212

CABRERA SERVICES

RADIOLOGICAL · ENVIRONMENTAL · REMEDIATION

SOIL CORE SCAN LOG

Project: Sylvania-Corning FUSRAP Site
Project #: 07-1005.00
Location ID: SU 14-15
Total Depth: 16'
Page: 1 of 1

Date/Time: 5/22/07
Instr. Model / SN: 2221 w/44-10 108862
Cal Due: 04-30-08
Ambient Bkg: 2303 cpm
Technician Init: KMA, AC

Sleeve #	Depth Range	Core & Scan Info (Top → Bottom)			
1	0' - 4'		2000	2100	2000
Core Scan Results (cpm):		12" Void			
2	4' - 8'	2000	2100	2000	2050
Core Scan Results (cpm):					
3	8 - 12'	2,100	2,000	2,000	2,100
Core Scan Results (cpm):					
4	12' - 16'		2150	2000	2000
Core Scan Results (cpm):		12" void			
5	16' - 20'				
Core Scan Results (cpm):					

Comments: (record any drilling or sampling issues, e.g. refusal, groundwater, poor recovery, etc. here)

CABRERA SERVICES, INC.

PROJECT NAME: Sylvania-Corning FUSRAP
LOCATION: Hicksville, NY
CLIENT: E & E

BORING LOG
Location ID: SU14-15
Page No.: 1 of 1

Contractor: ZEBRA	Driller: L. CABELLARO	Date Started: 5/22/07	Rock Refusal Depth:
Method: DIRECT PUSH	Water Elevation: N/A	Date Finished: 5/22/07	Rock Cored (FT):
Elevation:	Soil Drilled: SAND, SILT	Total Depth: 16'	Casing Size:
		METER INFO	Core Size:
Logged By: KMA, AC	Checked By: [signature]	2221 W/GI 216482	MODEL 19 #221521
Date/Time: 5/22/07		CAL DUE 05-04-08	CAL DUE 10-15-07
			BKG. 6 UR/HR, COV. 5 UR/HR

Elevation	Sample Information: Depth (feet)	Casing Blows/Foot	DHG cpm	Sample No. & Penetration/ Recovery (feet)	Sample Type	Sample Description and Classification	Group Designation	Remarks	Equipment Installed	Lab Tests Performed
	1		2854							
	2		2523							
	3		1398							
	4		1506							
	5		1720							
	6		2396							
	7		2465							
	8		2269							
	9		1809							
	10		1395							
	11		1137							
	12		1038							
	13		974							
	14		899							
	15		820							
	16		776							

N

A

Notes BKG 1407

CABRERA SERVICES

RADIOLOGICAL • ENVIRONMENTAL • REMEDIATION

SOIL CORE SCAN LOG

Project: Sylvania-Corning FUSRAP Site
Project #: 07-1005.00
Location ID: SU 14-14
Total Depth: 16'
Page: 1 of 1

Date/Time: 05/22/07 1500
Instr. Model / SN: 2221 w/44-10 108862
Cal Due: 04-30-08
Ambient Bkg: 2499 cpm
Technician Init: KMA, AC

Sleeve #	Depth Range	Core & Scan Info (Top → Bottom)			
1	0' - 4'	2000	2000	2000	2000
Core Scan Results (cpm):		6" void			
2	4' - 8'	2,100	2,000	1,950	2,100
Core Scan Results (cpm):					
3	8 - 12'	2,100	2,200	2,000	2,000
Core Scan Results (cpm):		6" void			
4	12' - 16'	2,100	2000	2050	2000
Core Scan Results (cpm):		6" void			
5	16' - 20'				
Core Scan Results (cpm):					

Comments: (record any drilling or sampling issues, e.g. refusal, groundwater, poor recovery, etc. here)

CABRERA SERVICES, INC.

PROJECT NAME: Sylvania-Corning FUSRAP
LOCATION: Hicksville, NY
CLIENT: E & E

BORING LOG
Location ID: SU 19-19
Page No.: 1 of 1

Contractor: ZEBRA	Driller: L. CABRERA	Date Started: 5/22/07	Rock Refusal Depth:
Method: DIRECT PUSH	Water Elevation: N/A	Date Finished: 5/22/07	Rock Cored (FT):
Elevation: P.G.	Soil Drilled: SAND, SILT	Total Depth: 16'	Casing Size:
		METER INFO	Core Size:
Logged By: RMA, AC	Checked By: [illegible]	2221 w/GI 216482	MODEL 19 #221527
Date/Time: 5/22/07, 1530		CAL DUE 05-04-08	CAL. DUE. 05-04-08
			BKG 7 uR/hr COW 7 uR/hr.

Elevation	Depth (feet)	Casing Blows/Foot	DHG cpm	Sample No. & Penetration/Recovery (feet)	Sample Type	Sample Description and Classification	Group Designation	Remarks	Equipment Installed	Lab Tests Performed
	1		1291		SOIL					
	2		2015							
	3		1892							
	4		2103							
	5		2525							
	6		2408							
	7		2185							
	8		2487							
	9		2131							
	10		1599							
	11		1118							
	12		1212							
	13		1655							
	14		1059							
	15		1253							
	16		986							

Notes BKG 1289

CABRERA SERVICES

RADIOLOGICAL · ENVIRONMENTAL · REMEDIATION

SOIL CORE SCAN LOG

Project: Sylvania-Corning FUSRAP Site
Date/Time: 5/02/07
Project #: 07-1005.00
Instr. Model / SN: 2221 w/44-10 108862
Location ID: SU14-13
Cal Due: 04-30-08
Total Depth: 16'
Ambient Bkg: 2320 cpm
Page: 1 of 1
Technician Init: KMA, AC

Sleeve #	Depth Range	Core & Scan Info (Top → Bottom)			
1	0' - 4'			1800	1900
Core Scan Results (cpm):		void 2FT			
2	4' - 8'	1700	1900	1800	1900
Core Scan Results (cpm):					
3	8 - 12'		1800	1700	1700	1900
Core Scan Results (cpm):		6" void			
4	12' - 16'		1,850	1,950	1,900	1,850
Core Scan Results (cpm):		6" void			
5	16' - 20'				
Core Scan Results (cpm):					

Comments: (record any drilling or sampling issues: e.g. refusal, groundwater, poor recovery, etc. here)

CABRERA SERVICES, INC.

PROJECT NAME: Sylvania-Corning FUSRAP
LOCATION: Hicksville, NY
CLIENT: E & E

BORING LOG
Location ID: SU-~~14~~ 13
Page No.: 1 of 1

Contractor: ZEBRA	Driller: NA	Date Started: 5/22/07	Rock Refusal Depth:
Method: DIRECT PUSH	Water Elevation: NA	Date Finished: 5/22/07	Rock Cored (FT):
Elevation:	Soil Drilled: 16'	Total Depth: 16'	Casing Size:
		METER INFO	Core Size:
Logged By: KA, AC	Checked By: [signature]	2221 w/GI 216482	MODEL 19 221521
Date/Time: 5/22/07		CAL DUE 05-04-08	CAL DUE 10-15-07
			BKG 5 CON 4 ave/hr

Elevation	Depth (feet)	Casing Blows/Foot	DHG cpm	Sample No. & Penetration/ Recovery (feet)	Sample Type	Sample Description and Classification	Group Designation	Remarks	Equipment Installed	Lab Tests Performed
	1		2326							
	2		2429							
	3		2096							
	4		1513							
	5		1619							
	6		1679							
	7		2169							
	8		1939							
	9		1366							
	10		1127							
	11		1142							
	12		1225	[signature]						
	13		~~[illegible]~~	1130						
	14		1185							
	15		1132							
	16		1106							

Notes BKG 1216

CABRERA SERVICES

RADIOLOGICAL · ENVIRONMENTAL · REMEDIATION

SOIL CORE SCAN LOG

Project: Sylvania-Corning FUSRAP Site
Project #: ~~07-1005.00~~ 07-1022.00 II
Location ID: SBR1-SU09-01
Total Depth: 24
Page: 1 of 2

Date/Time: 5/23/07
Instr. Model / SN: 2221 w/ 44-10; SN# 163685
Cal Due: 10/27/07
Ambient Bkg: 1945 cpm
Technician Init: DA/GMT

Sleeve #	Depth Range	Core & Scan Info (Top → Bottom)			
1	0' - 4'	VOID / 1900	1750	1950	1700
2	4' - 8'	1775	1750	1775	1750
3	8 - 12'	VOID / 1800	1655	1600	
4	12' - 16'	VOID / 2000	1700	1675	1750
5	16' - 20'	VOID / 1700			

Core Scan Results (cpm):

Comments: (record any drilling or sampling issues, e.g., refusal, groundwater, poor recovery, etc. here)

SEE NEXT PG. - CONTINUE PG. (CORE)

CABRERA SERVICES

RADIOLOGICAL · ENVIRONMENTAL · REMEDIATION

SOIL CORE SCAN LOG

Project: Sylvania-Corning FUSRAP Site
Project #: ~~07-1005.00~~ 07-1022.00 II
Location ID: SBR1-SU09-01
Total Depth: 24'
Page: 2 of 2

Date/Time: 5/23/07
Instr. Model / SN: 2221 w/ 44-10 ; SN# 163685
Cal Due: 10/27/09
Ambient Bkg: 1945 cpm
Technician Init: DA / GMT

Sleeve #	Depth Range	Core & Scan Info (Top / Bottom)
1	20' 24'	VOID; 1800; 1700
	Core Scan Results (cpm):	
2	24'-28'	
	Core Scan Results (cpm):	
3	28 - 32'	
	Core Scan Results (cpm):	
4	32' - 36'	
	Core Scan Results (cpm):	
5	36' - 40'	
	Core Scan Results (cpm):	

Comments: (record any drilling or sampling issues, e.g., refusal, groundwater, poor recovery, etc. here)

CABRERA SERVICES, INC.

PROJECT NAME: Sylvania-Corning FUSRAP
LOCATION: Hicksville, NY
CLIENT: E & E

BORING LOG
Location ID: SBR1-SUR9-01
Page No.: 1 of 1

Contractor: E&E	Driller: ZEBRA	Date Started: 5/23/07	Rock Refusal Depth:
Method: 4' MACRO CORE GEOPROBE	Water Elevation: NA	Date Finished: 5/23/07	Rock Cored (FT):
Elevation: NA	Soil Drilled:	Total Depth: 23'	Casing Size:
Logged By: DA	Checked By: GMT		Core Size: 1.5" x 4'
Date/Time: 5/23/07		S/N NaI- 190205	BKG NaI (cpm) 1331
		S/N Mod19- 101662	BKG Mod19 (uR/hr) 7

Elevation	Depth (feet)	Casing Blows/Foot	DHG cpm	Sample No. & Penetration/ Recovery (feet)	Sample Type	Sample Description and Classification	Group Designation	Remarks	Equipment Installed	Lab Tests Performed
	1		2277		SOIL	7μR/hr @ BORE HOLE				
	2		3135							
	3		2726							
	4		1985							
	5		1679							
	6		1801							
	7		1405							
	8		1396							
	9		1484							
	10		1403							
	11	Z	1405							
	12		1259							
	13	A	1317							
	14		1259							
	15		1082							
	16		1176							
	17		1154							
	18		997							
	19		927							
	20		1119							
	21		1145							
	22		1128							
	23		1081							

Notes

CABRERA SERVICES

RADIOLOGICAL · ENVIRONMENTAL · REMEDIATION

SOIL CORE SCAN LOG

Project: Sylvania-Corning FUSRAP Site
Project #: 07-1005.00
Location ID: DRY 4-C 2:1
Total Depth: 16'
Page: 1 of 1

Date/Time: 5/23/07
Instr. Model / SN: 2221 / 44-40 ; 163685
Cal Due: 10/27/07
Ambient Bkg: 1889 cpm
Technician Init: Gust

Sleeve #	Depth Range	Core & Scan Info (Top → Bottom)			
1	0' - 4'		1900	1800	1900
2	4' - 8'		1750	1800	1750
3	8 - 12'		1900	1800	1700
4	12' - 16'		1800	1800	1700
5	16' - 20'	N		A	

Core Scan Results (cpm):

Comments: *(record any drilling or sampling issues, e.g., refusal, groundwater, poor recovery, etc. here)*

CABRERA SERVICES, INC.

PROJECT NAME: Sylvania-Corning FUSRAP
LOCATION: Hicksville, NY
CLIENT: E & E

BORING LOG
Location ID: ~~SSR~~ DRY -HC-21
Page No.: 1 of 1

Contractor: E&E	Driller: ZEBRA	Date Started: 5/23/07	Rock Refusal Depth:
Method: 4' MACRO CORE GEOPROBE	Water Elevation: NA	Date Finished: 5/23/07	Rock Cored (FT):
Elevation: NA	Soil Drilled:	Total Depth: 12'	Casing Size:
Logged By: DA	Checked By: [signature]		Core Size: 1.5" x 4'
Date/Time: 5/23/07		S/N NaI- 190205	BKG NaI (cpm) 1172
		S/N Mod19- 101662	BKG Mod19 (uR/hr) 7

Elevation	Depth (feet)	Casing Blows/Foot	DHG cpm	Sample No. & Penetration/ Recovery (feet)	Sample Type	Sample Description and Classification	Group Designation	Remarks	Equipment Installed	Lab Tests Performed
	1		1947		SOIL	7 μR/hr @ borehole				
	2		2318		↓					
	3		1863							
	4		1947							
	5		1926							
	6		1669							
	7		1783							
	8		1809							
	9		1457							
	10		1154							
	11		1209							
	12		1297							
NA	NA	NA	NA	NA			ZA			

Notes

CABRERA SERVICES

RADIOLOGICAL · ENVIRONMENTAL · REMEDIATION

SOIL CORE SCAN LOG

Project: Sylvania-Corning FUSRAP Site
Date/Time: 5/23/07
Project #: ~~07-1005.00~~ 07-1022.00 II
Instr. Model / SN: 2221 w/ 44-10 ; SN# 163685
Location ID: SB21-5414-01
Cal Due: 10/27/07
Total Depth: 16
Ambient Bkg: 2489 cpm
Page: 1 of 1
Technician Init: DA / GMT

Sleeve #	Depth Range	Core & Scan Info (Top → Bottom)			
1	0' - 3'	2400	2250	2500	
HAND AUGER					
Core Scan Results (cpm):					
2	3' - 8'	2500	2450	2300	2400
Core Scan Results (cpm):					
3	8 - 12'	VOID	2350	2200	2200
Core Scan Results (cpm):					
4	12' - 16'		2300	2350	2400
Core Scan Results (cpm):					
5	~~16' - 20'~~				
Core Scan Results (cpm):		N	A		

Comments: (Record any drilling or sampling issues, e.g., refusal, groundwater, poor recovery, etc. here)

HAND Auger (0-3) ft., soil loose on plastic (different geometry

CABRERA SERVICES, INC.

PROJECT NAME: Sylvania-Corning FUSRAP
LOCATION: Hicksville, NY
CLIENT: E & E

BORING LOG
Location ID: SBR1-SU14-01
Page No.: 1 of 1

Contractor: E&E	Driller: ZEBRA	Date Started: 5/23/07	Rock Refusal Depth:
Method: 4' MACRO CORE GEOPROBE	Water Elevation: NA	Date Finished: 5/23/07	Rock Cored (FT):
Elevation: NA	Soil Drilled: N/A	Total Depth: 15'	Casing Size:
			Core Size: 1.5" x 4'
Logged By: ~~5/23/07~~ DA	Checked By: gwt		
Date/Time: 5/23/07		S/N NaI- 190205	BKG NaI (cpm) 747
		S/N Mod19- 101662	BKG Mod19 (uR/hr) 9

Elevation	Depth (feet)	Casing Blows/Foot	DHG cpm	Sample No. & Penetration/ Recovery (feet)	Sample Type	Sample Description and Classification	Group Designation	Remarks	Equipment Installed	Lab Tests Performed
	1		2384		SOIL					
	2		2740							
	3		3270							
	4		3329							
	5		1712							
	6		1979							
	7		1982							
	8		1794							
	9		1327							
	10		1423							
	11		1228							
	12		1197							
	13		1236							
	14		1101							
	15		889							

Sample Information

Notes

CABRERA SERVICES

RADIOLOGICAL · ENVIRONMENTAL · REMEDIATION

SOIL CORE SCAN LOG

Project: Sylvania-Corning FUSRAP Site
Date/Time: 5/23/07
Project #: ~~07-1005.00~~ 07-1022.00 II
Instr. Model / SN: 2221 w/ 44-10 ; SN# 163685
Location ID: SBR-SU14-02
Cal Due: 10/27/07
Total Depth: 16
Ambient Bkg: 2411 cpm
Page: 1 of 1
Technician Init: DA / GMT

Sleeve #	Depth Range	Core & Scan Info (Top → Bottom)			
1 HAND AUGER	0' - 4'	VOID	2400	2300	2300
Core Scan Results (cpm):					
2	4' - 8'	VOID	2350	2300	2350
Core Scan Results (cpm):					
3	8 - 12'		2300	2250	2200
Core Scan Results (cpm):					
4	12' - 16'		2550	2300	2350
Core Scan Results (cpm):					
5	16' - 20'				
Core Scan Results (cpm):					

Comments: (record any drilling or sampling issues, e.g. refusal, groundwater, poor recovery, etc. here)

9μR/hr ~~BKGD~~ DA BKGD

CABRERA SERVICES, INC.

PROJECT NAME: Sylvania-Corning FUSRAP
LOCATION: Hicksville, NY
CLIENT: E & E

BORING LOG
Location ID: SBR1-SU14-02
Page No.: 1 of 1

Contractor: E&E	Driller: ZEBRA	Date Started: 5/23/07	Rock Refusal Depth:
Method: 4' MACROCORE GEOPROBE	Water Elevation: N/A	Date Finished: 5/23/07	Rock Cored (FT):
Elevation: N/A	Soil Drilled:	Total Depth: 16'	Casing Size:
Logged By: ~~SBR1-St~~ DA	Checked By: [illegible]		Core Size: 1.5" x 4' ~~#~~ DA
Date/Time: 5/23/07		S/N NaI-190205	BKG NaI (cpm) 1857
		S/N Mod19-101662	BKG Mod19 (uR/hr) 9

Elevation	Depth (feet)	Casing Blows/Foot	DHG cpm	Sample No. & Penetration/ Recovery (feet)	Sample Type	Sample Description and Classification	Group Designation	Remarks	Equipment Installed	Lab Tests Performed
NA	1		2571	NA	Soil	9μR/hr @ bore hole	NA			
	2		2106							
	3		2552							
	4		2183							
	5		2020							
	6		1932							
	7		1867							
	8		1781							
	9		1416							
	10		1323							
	11		1248							
	12		1138							
	13		1249							
	14		1230							
	15		995							
	16	~~1009~~ DA	1009							
NA										

Notes

CABRERA SERVICES

RADIOLOGICAL · ENVIRONMENTAL · REMEDIATION

SOIL CORE SCAN LOG

Project: Sylvania-Corning FUSRAP Site
Project #: 07-1005.00
Location ID: SU14-07
Total Depth: ~~SU14-07~~ 16'
Page: 1 of 1

Date/Time: 5/23/07
Instr. Model / SN: 2221 w/44-10 108862
Cal Due: 04-30-08
Ambient Bkg: 2147 cpm
Technician Init: KMA, AC

Sleeve #	Depth Range	Core & Scan Info (Top → Bottom)			
1	0' - 4'	2100	2150	2050	2100
	Core Scan Results (cpm):				
2	4' - 8'	2250	2150	2000	2000
	Core Scan Results (cpm):				
3	8 - 12'	~~[illegible]~~	2000	2000	2200
	Core Scan Results (cpm): 12" void				
4	12' - 16'	//VOID//	2,250	2,200	2290
	Core Scan Results (cpm): VOID FROM 12' TO 12'				
5	16' - 20'				
	Core Scan Results (cpm):				

Comments: (record any drilling or sampling issues, e.g., refusal, groundwater, poor recovery, etc. here)

CABRERA SERVICES, INC.

PROJECT NAME: Sylvania-Corning FUSRAP
LOCATION: Hicksville, NY
CLIENT: E & E

BORING LOG

Location ID: SU 19-07
Page No.: 1 of 1

Contractor: ZEBRA	Driller: NA	Date Started: 5/23/07	Rock Refusal Depth:
Method: DIRECT PUSH	Water Elevation: NA	Date Finished: 5/23/07	Rock Cored (FT):
Elevation: NA	Soil Drilled: NA	Total Depth: 16	Casing Size:
Logged By: A. Craig	Checked By: SWT	METER INFO	Core Size: 1.5x4
Date/Time: 5/23/07		2221 w/GI 216482	6
		CAL DUE 05-04-08	6
		1022 cpm	

Elevation	Depth (feet)	Casing Blows/Foot	DHG cpm	Sample No. & Penetration/ Recovery (feet)	Sample Type	Sample Description and Classification	Group Designation	Remarks	Equipment Installed	Lab Tests Performed
	1		2147							
	2		3313							
	3		1983							
	4		1502							
	5		1361							
	6		2299							
	7		2371							
	8		1989							
	9		1202							
	10		1579							
	11		1543							
	12		1202							
	13		1110							
	14		1152							
	15		970							
	16		965							

N

A

Notes BKG 1115

CABRERA SERVICES, INC.

PROJECT NAME: Sylvania-Corning FUSRAP
LOCATION: Hicksville, NY
CLIENT: E & E

BORING LOG

Location ID: SO19-09
Page No.: 1 of 1

Contractor: ZEBRA	Driller: L. CABRERA	Date Started: 5/23/07	Rock Refusal Depth:
Method: DIRECT PUSH	Water Elevation: N/A	Date Finished: 5/23/07	Rock Cored (FT):
Elevation: O.G.	Soil Drilled: SAND, SILT	Total Depth: 16'	Casing Size:
		METER INFO	Core Size:
Logged By: KMR, AC	Checked By: [illegible]	2221 w/GI 216482	MODEL 19 221521 BKG 5 UR/HR
Date/Time: 5/23/07 1010		CAL DUE 05-04-08	CAL DUE 10/15/07 CON 5 UR/HR

Elevation	Depth (feet)	Casing Blows/Foot	DHG cpm	Sample No. & Penetration/ Recovery (feet)	Sample Type	Sample Description and Classification	Group Designation	Remarks	Equipment Installed	Lab Tests Performed
	1		1962		SOIL					
	2		2054							
	3		2811							
	4		2670							
	5		3313							
	6		1851							
	7		1798							
	8		2250							
	9		1281							
	10		1685							
	11		1286							
	12		1143							
	13		1173							
	14		1223							
	15		1072							
	16		965							

Notes BKG 1132

CABRERA SERVICES

RADIOLOGICAL · ENVIRONMENTAL · REMEDIATION

SOIL CORE SCAN LOG

Project: Sylvania-Corning FUSRAP Site
Project #: 07-1005.00
Location ID: SU 19-09
Total Depth: 16'
Page: 1 of 1

Date/Time: 5/23/07
Instr. Model / SN: 2221 w/44-10 108962
Cal Due: 04-30-08
Ambient Bkg: 2197 cpm
Technician Init: KMA/AC

Sleeve #	Depth Range	Core & Scan Info (Top → Bottom)			
1	0' - 4'	XXXXX	2250	2300	2200
Core Scan Results (cpm):		void 12"			
2	4' - 8'	2,200	2300	2150	2150
Core Scan Results (cpm):					
3	8 - 12'	2,250	2,200	2,250	2,100
Core Scan Results (cpm):		5" VOID			
4	12' - 16'	2,350	2,150	2,050	2,200
Core Scan Results (cpm):		6" VOID			
5	16' - 20'				
Core Scan Results (cpm):					

Comments: (recording drilling or sampling issues, e.g. refusal, groundwater, poor recovery, etc. here)

CABRERA SERVICES, INC.

PROJECT NAME: Sylvania-Corning FUSRAP
LOCATION: Hicksville, NY
CLIENT: E & E

BORING LOG

Location ID: SU19-20
Page No.: 1 of 1

Contractor: ZEBRA	Driller: L. CABALLACO	Date Started: 5/23/07	Rock Refusal Depth:
Method: DIRECT PUSH	Water Elevation: N/A	Date Finished: 5/23/07	Rock Cored (FT):
Elevation: O.G.	Soil Drilled: SAND/SILT	Total Depth: 15'	Casing Size:
Logged By: KMA/AC	Checked By:	METER INFO	Core Size:
Date/Time: 5/23/07		2221 W/GL 216482	MODEL 19 221521
		CAL DUE 05-01-08	CAL DUE 10-15-07
		1122 cpm	BKG 5 ur/hr Con 5 ur/hr

Elevation	Depth (feet)	Casing Blows/Foot	DHG cpm	Sample No. & Penetration/Recovery (feet)	Sample Type	Sample Description and Classification	Group Designation	Remarks	Equipment Installed	Lab Tests Performed
	1		2631							
	2		3042							
	3		2571							
	4		1685							
	5		1923							
	6		1733							
	7		2676							
	8		1864							
	9		1577							
	10		1366							
	11		1209							
	12		1131							
	13		1136							
	14		1059							
	15		1051							

Notes BKG 1122

CABRERA SERVICES

RADIOLOGICAL · ENVIRONMENTAL · REMEDIATION

SOIL CORE SCAN LOG

Project: Sylvania-Corning FUSRAP Site
Project #: 07-1005.00
Location ID: SU 14-20
Total Depth: 15'
Page: 1 of 1

Date/Time: 5/23/07
Instr. Model / SN: 2221 w/44-10 108762
Cal Due: 04-30-08
Ambient Bkg: 2141 cpm
Technician Init: KMA, AC

Sleeve #	Depth Range	Core & Scan Info (Top → Bottom)			
1	0' - 4'		2200	2150	2000
Core Scan Results (cpm):		12" void			
2	4' - 8'	2050	2100	2000	2000
Core Scan Results (cpm):					
3	8 - 12'	2000	2150	2000	1900
Core Scan Results (cpm):					
4	12' - 16'	1850	2000	2000	
Core Scan Results (cpm):		REFUSAL @ 15'			
5	16' - 20'				
Core Scan Results (cpm):			N/A		

Comments: (record any drilling or sampling issues, e.g., refusal, groundwater, poor recovery, etc. here)

CABRERA SERVICES, INC.

PROJECT NAME: Sylvania-Corning FUSRAP
LOCATION: Hicksville, NY
CLIENT: E & E

BORING LOG

Location ID: SU 14-11
Page No.: 1 of 1

Contractor: ZEBRA	Driller: L. CABELLERO	Date Started: 5/23/07	Rock Refusal Depth:
Method: DIRECT PUSH	Water Elevation: N/A	Date Finished: 5/23/07	Rock Cored (FT):
Elevation: O.G.	Soil Drilled: SAND, SILT	Total Depth: 15'	Casing Size:
Logged By: KMA, AC	Checked By: [signature]	METER INFO	Core Size:
Date/Time: 5/23/07		2221 w/GI 216482	Model P 221521
		CAL DUE 05-04-08	CAL DUE 10-15-07
		1145 cpm	BKG CPM 5 uc/pc CON 5 uc/kc

Elevation	Depth (feet)	Casing Blows/Foot	DHG cpm	Sample No. & Penetration/ Recovery (feet)	Sample Type	Sample Description and Classification	Group Designation	Remarks	Equipment Installed	Lab Tests Performed
	1		2338		SOIL					
	2		2058							
	3		2292							
	4		2830							
	5		2686							
	6		3042							
	7		2616							
	8		1504							
	9		1677							
	10		1180							
	11		1120							
	12		1251							
	13		987							
	14		1003							
	15		1181							

N/A

Notes

BKG 1145 cpm

CABRERA SERVICES

RADIOLOGICAL · ENVIRONMENTAL · REMEDIATION

SOIL CORE SCAN LOG

Project: Sylvania-Corning FUSRAP Site
Project #: 07-1005.00
Location ID: SU 14-11
Total Depth: 16'
Page: 1 of 1

Date/Time: 05/23/07 1100
Instr. Model / SN: 2221 w/44-10 108862
Cal Due: 04-30-08
Ambient Bkg: 2153 cpm
Technician Init: KMA, AC

Sleeve #	Depth Range	Core & Scan Info (Top → Bottom)			
1	0' - 4'	1,950	2,000	2,050	2,100
Core Scan Results (cpm):					
2	4' - 8'	2200	2,150	2,200	2,150
Core Scan Results (cpm):		6" void			
3	8 - 12'	2200	2050	2100	2000
Core Scan Results (cpm):					
4	12' - 16'	2,150	2,200	2,000	2100
Core Scan Results (cpm):					
5	16' - 20'				
Core Scan Results (cpm):					

Comments: (record any drilling or sampling issues, e.g. refusal, groundwater, poor recovery, etc. here)

CABRERA SERVICES

RADIOLOGICAL · ENVIRONMENTAL · REMEDIATION

SOIL CORE SCAN LOG

Project: Sylvania-Corning FUSRAP Site
Project #: 07-1005.00
Location ID: 14 - 12
Total Depth: 16'
Page: 1 of 1

Date/Time: 5/23/07
Instr. Model / SN: 2221 w/44-10 108862
Cal Due: 04-30-08
Ambient Bkg: 2138 cpm
Technician Init: KMA, AC

Sleeve #	Depth Range	Core & Scan Info (Top → Bottom)			
1	0' - 4'		2,250	2,100	2,100
	Core Scan Results (cpm):	12" void			
2	4' - 8'	2100	2150	2250	2300
	Core Scan Results (cpm):				
3	8 - 12'	2100	2200	2000	2050
	Core Scan Results (cpm):	10" void			
4	12' - 16'	2100	2200	2150	2100
	Core Scan Results (cpm):	5" void			
5	16' - 20'				
	Core Scan Results (cpm):				

Comments: (record any drilling or sampling issues, e.g., refusal, groundwater, poor recovery, etc. here)

CABRERA SERVICES, INC.

PROJECT NAME: Sylvania-Corning FUSRAP
LOCATION: Hicksville, NY
CLIENT: E & E

BORING LOG

Location ID: SU 14-12
Page No.: 1 of 1

Contractor: ZEBRA	Driller:	Date Started: 5/23/07	Rock Refusal Depth:
Method: DIRECT PUSH	Water Elevation:	Date Finished: 5/23/07	Rock Cored (FT):
Elevation:	Soil Drilled:	Total Depth: 16	Casing Size:
Logged By: AL CRAIG	Checked By: [illegible]	METER INFO 2221 W/GI 216482	Core Size:
Date/Time: 5/23/07		CAL DUE 05-04-08	Mod 19 221521 BKG 5 Cal Due 10/5/07

Elevation	Depth (feet)	Casing Blows/Foot	DHG cpm	Sample No. & Penetration/ Recovery (feet)	Sample Type	Sample Description and Classification	Group Designation	Remarks	Equipment Installed	Lab Tests Performed
	1		2071							
	2		2299							
	3		2822							
	4		1509							
	5		1454							
	6		1739							
	7		2202							
	8		2127							
	9		1603							
	10		1369							
	11		1794							
	12		1239							
	13		1079							
	14		1114							
	15		950							
	16		937							

Notes BKG 1069

CABRERA SERVICES

RADIOLOGICAL · ENVIRONMENTAL · REMEDIATION

SOIL CORE SCAN LOG

Project: Sylvania-Corning FUSRAP Site
Project #: 07-1005.00
Location ID: SU14 - 19
Total Depth: 16'
Page: 1 of 1

Date/Time: 5/23/07
Instr. Model / SN: 2221 w/44-10 108962
Cal Due: 04-30-08
Ambient Bkg: 2138 cpm
Technician Init: KMA, AC

Sleeve #	Depth Range	Core & Scan Info (Top → Bottom)			
1	0' - 4'	2,150	2,200	2,050	2,000
Core Scan Results (cpm):					
2	4' - 8'	2250	2150	2000	2200
Core Scan Results (cpm):					
3	8 - 12'	2300	2100	2100	2150
Core Scan Results (cpm):					
4	12' - 16'	2,100	2,150	2,000	2,150
Core Scan Results (cpm):		9" VOID FROM 12' - 12'9"			
5	16' - 20'				
Core Scan Results (cpm):					

Comments: (record any drilling or sampling issues, e.g., refusal, groundwater, poor recovery, etc. here)

CABRERA SERVICES, INC.

PROJECT NAME: Sylvania-Corning FUSRAP
LOCATION: Hicksville, NY
CLIENT: E & E

BORING LOG

Location ID: SU14-19
Page No.: 1 of 1

Contractor: ZEBRA	Driller: L. CALELLANO	Date Started: 5/23/07	Rock Refusal Depth:
Method: DIRECT PUSH	Water Elevation: N/A	Date Finished: 5/23/07	Rock Cored (FT):
Elevation: D.G.	Soil Drilled: SAND, SILT	Total Depth: 16'	Casing Size:
Logged By: KMA, AC	Checked By: [illegible]	METER INFO	Core Size:
Date/Time: 05/23/07 1020		2221 w/GI 216482	MODEL 19 221521
		CAL DUE 05-04-08	CAL DUE 10/15/07
			BKG 5 [illegible] CON 5 [illegible]

Elevation	Depth (feet)	Casing Blows/Foot	DHG cpm	Sample No. & Penetration/ Recovery (feet)	Sample Type	Sample Description and Classification	Group Designation	Remarks	Equipment Installed	Lab Tests Performed
	1		2399		SOIL					
	2		3428							
	3		1850							
	4		1567							
	5		1807							
	6		2375							
	7		2877							
	8		2012							
	9		1473							
	10		1240							
	11		1056							
	12		1043							
	13		1345							
	14		973							
	15		869							
	16		1009							

Notes BKG 1069

CABRERA SERVICES

RADIOLOGICAL • ENVIRONMENTAL • REMEDIATION

SOIL CORE SCAN LOG

Project: Sylvania-Corning FUSRAP Site
Project #: ~~07-1005.00~~ 07-1022.00 II
Location ID: SBR1-SW14-~~05~~ DA-04
Total Depth: 16
Page: 1 of 1

Date/Time: ~~5/23/07~~ 5/24/07 DA
Instr. Model / SN: 2221 w/ 44-10; SN# 163685
Cal Due: 10/27/07
Ambient Bkg: 2471 cpm
Technician Init: DA/GMT

Sleeve #	Depth Range	Core & Scan Info (Top → Bottom)			
1	0' - 4'	HAND AUGER 2200	2300	VOID	2200
Core Scan Results (cpm):					
2	4' - 8'	VOID 2300	2300	2350	2350
Core Scan Results (cpm):					
3	8 - 12'	VOID	2350	2200	2200
Core Scan Results (cpm):					
4	12' - 16'	VOID	2300	2300	2200
Core Scan Results (cpm):					
5	16' - 20'				
Core Scan Results (cpm):		N	A		

Comments: (record any drilling or sampling issues e.g. refusal, groundwater, poor recovery, etc. here)

Used hand auger for (0-1.5) ft.
9μR/hr - Bkgd

CABRERA SERVICES, INC.

PROJECT NAME: Sylvania-Corning FUSRAP
LOCATION: Hicksville, NY
CLIENT: E & E

BORING LOG

Location ID: SBR-SW4-04
Page No.: 1 of 1

Contractor: E&E	Driller: ZEBRA	Date Started: 5/24/07	Rock Refusal Depth:
Method: 4' MACROCORE GEOPROBE	Water Elevation: N/A	Date Finished: 5/24/07	Rock Cored (FT):
Elevation: N/A	Soil Drilled:	Total Depth: 16	Casing Size:
Logged By: DA	Checked By: [illegible]		Core Size: 1.5" X 4'
Date/Time: 5/24/07		S/N NaI- 190205	BKG NaI (cpm) 1858
		S/N Mod19- 101662	BKG Mod19 (uR/hr) 9uR/hr

Elevation	Depth (feet)	Casing Blows/Foot	DHG cpm	Sample No. & Penetration/ Recovery (feet)	Sample Type	Sample Description and Classification	Group Designation	Remarks	Equipment Installed	Lab Tests Performed
	1		2115		Soil	9uR/hr @ bore hole				
	2		2164							
	3		2305							
	4		2166							
	5		1762							
	6		1753							
	7		1654							
	8		2146							
	9		1683							
	10		1674							
	11		1878							
	12		1387							
	13		1448							
	14		1175							
	15		1111							
	16		1176							

Notes

CABRERA SERVICES

RADIOLOGICAL · ENVIRONMENTAL · REMEDIATION

SOIL CORE SCAN LOG

Project: Sylvania-Corning-FUSRAP Site
Project #: ~~07-1005.00~~ 07-1022.00 II
Location ID: SBR1-SW14-05
Total Depth: 24'
Page: 1 of 2

Date/Time: 5/24/07
Instr. Model / SN: 2221 W/44-10, SN# 163685
Cal Due: 10/27/07
Ambient Bkg: 2065 cpm
Technician Init: DA/GMT

Sleeve #	Depth Range	Core & Scan Info (Top → Bottom)				
1	0' - 4'	VOID	2250	2050	1950	2000
	Core Scan Results (cpm):					
2	4' - 8'	VOID	2100	2100	1950	1950
	Core Scan Results (cpm):					
3	8 - 12'	VOID	2100	2050	1950	
	Core Scan Results (cpm):					
4	12' - 16'	VOID	2100	2250	2100	
	Core Scan Results (cpm):					
5	16' - 20'	VOID	2050	2000	2100	
	Core Scan Results (cpm):					

Comments: (record any drilling or sampling issues, e.g. refusal, groundwater, poor recovery, etc. here)

CABRERA SERVICES

RADIOLOGICAL · ENVIRONMENTAL · REMEDIATION

SOIL CORE SCAN LOG

Project: Sylvania-Corning FUSRAP Site
Project #: ~~07-1005.00~~ 07-102200
Location ID: SBR1-SW14-05
Total Depth: 24'
Page: 2 of 2

Date/Time: 5/29/07
Instr. Model / SN: 2221 w/44-10, SN# 163685
Cal Due: 10/27/07
Ambient Bkg: 2065 cpm
Technician Init: DA/GMT

Sleeve #	Depth Range	Core & Scan Info (Top → Bottom)			
1	20' 24'	VOID	2050	1950	1950
	Core Scan Results (cpm):				
2	4' - 8'				
	Core Scan Results (cpm):				
3	8 - 12'				
	Core Scan Results (cpm):				
4	12' - 16'				
	Core Scan Results (cpm):				
5	16' - 20'				
	Core Scan Results (cpm):				

Comments: (record any drilling or sampling issues, e.g. refusal, groundwater, poor recovery, etc. here)

CABRERA SERVICES, INC.

PROJECT NAME: Sylvania-Corning FUSRAP
LOCATION: Hicksville, NY
CLIENT: E & E

BORING LOG
Location ID: 5321-SU14-05
Page No.: 1 of 1

Contractor: E&E	Driller: ZEBRA	Date Started: 5/24/07	Rock Refusal Depth:
Method: 4' MACRO CORE GEOPROBE	Water Elevation: N/A	Date Finished: 5/24/07	Rock Cored (FT):
Elevation: N/A	Soil Drilled:	Total Depth: 24'	Casing Size:
			Core Size:
Logged By: DA	Checked By: [illegible]		
Date/Time: 5/24/07		S/N NaI- 190205	BKG NaI (cpm) 1685
		S/N Mod19- 1018662	BKG Mod19 (uR/hr) 8

Elevation	Depth (feet)	Casing Blows/Foot	DHG cpm	Sample No. & Penetration/Recovery (feet)	Sample Type	Sample Description and Classification	Group Designation	Remarks	Equipment Installed	Lab Tests Performed
N	1	N	2400	N	Soil	8 μR/hr @ bore hole	N	N	A	
	2		2823							
	3		2444							
	4		1939							
	5		1457							
A	6	A	2065	A						
	7		1578							
	8		2092							
	9		3211							
	10		2540							
N	11	N	1581	N						
	12		1235							
	13		1488							
	14		1269							
	15		1009							
A	16	A	1049	A						
	17		1032							
	18		1002							
	19		1030							
	20		946							
	21		915							
	22		973							
	23		907							
	24		1041							
	N/A	N/A	N/A	N/A						

Notes

CABRERA SERVICES

RADIOLOGICAL · ENVIRONMENTAL · REMEDIATION

SOIL CORE SCAN LOG

Project: Sylvania-Corning FUSRAP Site
Project #: 07-1005.00
Location ID: SJ12-13
Total Depth: 12'
Page: 1 of 1

Date/Time: 5/24/07
Instr. Model / SN: 2221 w/44-10 108762
Cal Due: 04-30-08
Ambient Bkg: 1672 cpm
Technician Init: KMA, AC

Sleeve #	Depth Range	Core & Scan Info (Top)			(Bottom)
1	0' - 4'	void	1700	1650	1700
2	4' - 8'	1725	1675	1750	1700
3	8 - 12'	6" void	1600	1675	1625	1700
4	12' - 16'				
5	16' - 20'				

Core Scan Results (cpm):

Comments: (record any drilling or sampling issues, e.g., refusal, groundwater, poor recovery, etc. here)

CABRERA SERVICES, INC.

PROJECT NAME: Sylvania-Corning FUSRAP
LOCATION: Hicksville, NY
CLIENT: E & E

BORING LOG

Location ID: SU12-13
Page No.: 1 of 1

Contractor: ZEBRA	Driller: C. CABELLARO	Date Started: 5/24/07	Rock Refusal Depth:
Method: DIRECT PUSH	Water Elevation: N/A	Date Finished: 5/24/07	Rock Cored (FT):
Elevation: O.G.	Soil Drilled: SAND, SILT	Total Depth: 12'	Casing Size:
Logged By: RMA, AC	Checked By: GMA	METER INFO	Core Size:
Date/Time: 05/24/07		2221 w/GI 216482	MODEL 19 221521
		CAL DUE 05-04-08	CAL DUE 10/15/07
			BKG 5 wk/hr CON. 5 wk/hr

Elevation	Depth (feet)	Casing Blows/Foot	DHG cpm	Sample No. & Penetration/ Recovery (feet)	Sample Type	Sample Description and Classification	Group Designation	Remarks	Equipment Installed	Lab Tests Performed
	1		1038		SOIL					
	2		1796							
	3		3092							
	4		3222							
	5		3092							
	6		3060							
	7		3204							
	8		1634							
	9		2220							
	10		2021							
	11		1570							
	12		1161							

Notes BKG 830

CABRERA SERVICES

RADIOLOGICAL · ENVIRONMENTAL · REMEDIATION

SOIL CORE SCAN LOG

Project: Sylvania-Corning FUSRAP Site
Project #: 07-1005.00
Location ID: SU12-12
Total Depth: 91
Page: 1 of 1

Date/Time: 5/29/07
Instr. Model / SN: 2221 w/44-10 108862
Cal Due: 04-30-08
Ambient Bkg: 1614 cpm
Technician Init: KMA, AC

Sleeve #	Depth Range	Core & Scan Info (Top → Bottom)			
1	0' - 4'		1700	1600	1650
Core Scan Results (cpm):		12" void			
2	4' - 8'	1700	1650	1500	1500
Core Scan Results (cpm):					
3	8 - 12'	1550			
Core Scan Results (cpm):		IN Bucket Crushed liner			
4	12' - 16'				
Core Scan Results (cpm):					
5	16' - 20'				
Core Scan Results (cpm):					

Comments: (record any drilling or sampling issues, e.g., refusal, groundwater, poor recovery, etc. here)

geo probe in operable w/ barrel & rods in hole.
will attempt to ~~to~~ DHG log when fixed.

CABRERA SERVICES

RADIOLOGICAL · ENVIRONMENTAL · REMEDIATION

SOIL CORE SCAN LOG

Project: Sylvania-Corning FUSRAP Site
Project #: ~~07-1005.00~~ 07-1022.00
Location ID: SBR1-SU19-06
Total Depth: 16
Page: ~~16~~ DA 1 of 1

Date/Time: 5/29/07
Instr. Model / SN: 2221 w/44-10; SN# 163685
Cal Due: 10/27/07
Ambient Bkg: 2060 cpm
Technician Init: DA/GMT

Sleeve #	Depth Range	Core & Scan Info (Top → Bottom)			
1	0' - 4'	VOID / 2200	2050	2100	1950
Core Scan Results (cpm):					
2	4' - 8'		2100	2000	2000
Core Scan Results (cpm):					
3	8 - 12'		2150	2000	1950
Core Scan Results (cpm):					
4	12' - 16'	VOID	2200	2000	1900
Core Scan Results (cpm):					
5	16' - 20'		A		
Core Scan Results (cpm):		N			

Comments: *(record any drilling or sampling issues, e.g., refusal, groundwater, poor recovery, etc. here)*

8 μR/hr BKGD

CABRERA SERVICES, INC.

PROJECT NAME: Sylvania-Corning FUSRAP
LOCATION: Hicksville, NY
CLIENT: E & E

BORING LOG
Location ID: SB21-SU14-06
Page No.: 1 of 1

Contractor: F&E	Driller: ZEBRA	Date Started: 5/24/07	Rock Refusal Depth:
Method: 4' MACRO CORE GEOPROBE	Water Elevation: N/A	Date Finished: 5/24/07	Rock Cored (FT):
Elevation: N/A	Soil Drilled:	Total Depth: 16'	Casing Size:
			Core Size: 1.5" x 4'
Logged By: DA	Checked By: [illegible]		
Date/Time: 5/24/07		S/N NaI- 190205	BKG NaI (cpm) 1666
		S/N Mod19- 101662	BKG Mod19 (uR/hr) 8

Elevation	Depth (feet)	Casing Blows/Foot	DHG cpm	Sample No. & Penetration/ Recovery (feet)	Sample Type	Sample Description and Classification	Group Designation	Remarks	Equipment Installed	Lab Tests Performed
	1		2250		Soil	8 µR/hr @ bore hole				
	2		2688							
N	3	N	2312	N						N
	4		2137							
	5		1368							
	6		1338							
	7		1671							
	8		1947							
	9		2642							
	10		1981							
	11	A	1891	A			N	N	A	
	12		1327							
	13		1476							A
	14		1393							
	15		1085							
	16		1046							
A	N	N	N	N	N					N
N										
A	A	A	A	A	A					A

Notes

CABRERA SERVICES

RADIOLOGICAL • ENVIRONMENTAL • REMEDIATION

SOIL CORE SCAN LOG

Project: Sylvania-Corning FUSRAP Site
Project #: ~~07-1005.00~~ 07-1022.00 II
Location ID: SBR1-SU14-Ø8
Total Depth: 16'
Page: 1 of 1

Date/Time: 5/24/07
Instr. Model / SN: 2221 W/44-10; SN# 163685
Cal Due: 10/27/07
Ambient Bkg: 1826 cpm
Technician Init: DA/GMT

Sleeve #	Depth Range	Core & Scan Info (Top / Bottom)			
1	0' - 4'	1900	1850	1800	1750
	Core Scan Results (cpm):	USED HAND AUGER (0-4)ft			
2	4' - 8'	1750	1600	1700	1650
	Core Scan Results (cpm):				
3	8 - 12'	VOID	1800	1800	1650
	Core Scan Results (cpm):				
4	12' - 16'	VOID	1650	1850	1550
	Core Scan Results (cpm):				
5	16' - 20'	N		A	
	Core Scan Results (cpm):				

Comments: (record any drilling or sampling issues, e.g., refusal, groundwater, poor recovery, etc. here)

(0-4)ft Hand Auger

CABRERA SERVICES, INC.

PROJECT NAME: Sylvania-Corning FUSRAP
LOCATION: Hicksville, NY
CLIENT: E & E

BORING LOG
Location ID: SB21-SU14-08
Page No.: 1 of 1

Contractor: E&E	Driller: ZEBRA	Date Started: 5/24/07	Rock Refusal Depth:
Method: 4' MACRO CORE GEOPROBE	Water Elevation: N/A	Date Finished: 5/24/07	Rock Cored (FT):
Elevation: N/A	Soil Drilled:	Total Depth: ~~16~~ 14	Casing Size:
			Core Size: 1.5" x 4'
Logged By: DA	Checked By: [illegible]		
Date/Time: 5/24/07		S/N NaI- 190205	BKG NaI (cpm) 1555
		S/N Mod19- 101662	BKG Mod19 (uR/hr) 7

Elevation	Depth (feet)	Casing Blows/Foot	DHG cpm	Sample No. & Penetration/ Recovery (feet)	Sample Type	Sample Description and Classification	Group Designation	Remarks	Equipment Installed	Lab Tests Performed
N/A	1	N/A	2428	N/A	Soil	7 μR/hr @ bore hole	N/A	N/A	N/A	N/A
	2		3366							
	3		1900							
	4		1388							
	5		1470							
	6		1744							
	7		1414							
	8		2231							
	9		1630							
	10		1916							
	11		1507							
	12		1229							
	13		1411							
	14		1461							
N/A	N/A	N/A	N/A	N/A	N/A					N/A

Notes

CABRERA SERVICES

RADIOLOGICAL · ENVIRONMENTAL · REMEDIATION

SOIL CORE SCAN LOG

Project: Sylvania-Corning FUSRAP Site
Project #: 07-1005.00
Location ID: SU 12-09
Total Depth: 8'-16'
Page: 1 of 1

Date/Time: 05/24/07
Instr. Model / SN: 2221 w/44-10 108862
Cal Due: 04-30-08
Ambient Bkg: 1,777 cpm
Technician Init: KMA, AC

Sleeve #	Depth Range	Core & Scan Info
1	0' - 4'	Top / Bottom
		Core Scan Results (cpm): 1ST 8' ALREADY SULUGGED & LOGGED BY
2	4' - 8'	
		Core Scan Results (cpm): GMT & DA (SEE LOG FOR TIME & DATE / DETAILS) KMA
3	8 - 12'	1650 | 1700 | XXX | XXX | 1675 | 1750
		Core Scan Results (cpm): void void 9"
4	12' - 16'	1600 | 1600 | 1600 | 1600
		Core Scan Results (cpm):
5	16' - 20'	
		Core Scan Results (cpm):

Comments: (record any drilling or sampling issues, e.g. refusal, groundwater, poor recovery, etc. here)

CABRERA SERVICES, INC.

PROJECT NAME: Sylvania-Corning FUSRAP
LOCATION: Hicksville, NY
CLIENT: E & E

BORING LOG

Location ID: SU 12-09
Page No.: 1 of 1

Contractor: ZEBRA	Driller: L. CABELLARO	Date Started: 5/24/07	Rock Refusal Depth:
Method: DIRECT PUSH	Water Elevation: N/A	Date Finished:	Rock Cored (FT):
Elevation: O.G.	Soil Drilled: SAND, SILT	Total Depth: 12'	Casing Size:
		METER INFO	Core Size:
Logged By: KMA AC	Checked By: [signature]	2221 w/GI 216482	MODEL 19 # 221521
Date/Time: 05/24/07		CAL DUE 05-04-08	CAL DUE 10-15-07
			BKG 4 uc/hr, CON. 5 uc/hr

Elevation	Depth (feet)	Casing Blows/Foot	DHG cpm	Sample No. & Penetration/ Recovery (feet)	Sample Type	Sample Description and Classification	Group Designation	Remarks	Equipment Installed	Lab Tests Performed
	1		897		SOIL					
	2		1028							
	3		1332							
	4	N/A	2653							
	5		2170							
	6	~~2403~~	2403							
	7	~~2644~~	2644							
	8	~~1457~~	1457							
	9	~~1731~~	1731							
	10	~~1462~~	1462							
	11	~~2654~~	2654							
	12	~~1455~~	11455							
		KMA								

[signature] Data in wrong column 5/24/07

Notes

CABRERA SERVICES

RADIOLOGICAL · ENVIRONMENTAL · REMEDIATION

SOIL CORE SCAN LOG

Project: Sylvania-Corning-FUSRAP Site
Date/Time: 5/25/07
Project #: ~~07-1005.00~~ 07-102.00 II
Instr. Model / SN: 2221/W/44-10 SN # 163685
Location ID: SB21-5410-04
Cal Due: 10/27/07
Total Depth: 12
Ambient Bkg: 1578 cpm
Page: 1 of 1
Technician Init: DA/GMT

Sleeve #	Depth Range	Core & Scan Info (Top → Bottom)			
1	0' - 4'	1550	1600	1450	1400
Core Scan Results (cpm):					
2	4' - 8'	1450	1550	1550	1650
Core Scan Results (cpm):					
3	8 - 12'	1650	1450	1400	1500
Core Scan Results (cpm):					
4	12' - 16'				
Core Scan Results (cpm):					
5	16' - 20'				
Core Scan Results (cpm):					

Comments: (record any drilling or sampling issues, e.g., refusal, groundwater, poor recovery, etc. here)

6 μR/hr @ Bkgd

CABRERA SERVICES, INC.	PROJECT NAME: Sylvania-Corning FUSRAP LOCATION: Hicksville, NY CLIENT: E & E	BORING LOG Location ID: S321-SU10-04 Page No.: 1 of 1

Contractor: E&E	Driller: ZEBRA	Date Started: 5/25/07	Rock Refusal Depth:
Method: 4' MACRO CORE GEOPROBE	Water Elevation: N/A	Date Finished: 5/25/07	Rock Cored (FT):
Elevation: N/A	Soil Drilled:	Total Depth: 11.5	Casing Size:
			Core Size: 1.5" x 4'
Logged By: DA	Checked By: [signature]		
Date/Time: 5/25/07		S/N NaI- 190205	BKG NaI (cpm) 878 cpm
		S/N Mod19- 101662	BKG Mod19 (uR/hr) 6 µR/hr

Elevation	Depth (feet)	Casing Blows/Foot	DHG cpm	Sample No. & Penetration/ Recovery (feet)	Sample Type	Sample Description and Classification	Group Designation	Remarks	Equipment Installed	Lab Tests Performed
N/A	1		2235		Soil	6µR/hr @ bore hole				
	2		2257							
	3		2158							
	4		2351							
	5		2501							
N	6		3119							
	7		4046							
	8		2201							
	9		1490							
	10		1400							
	11		1238							
	~~[illegible]~~									
	N		N		N					
A	A	A	A	A	A					
N/A										

Notes

CABRERA SERVICES

RADIOLOGICAL · ENVIRONMENTAL · REMEDIATION

SOIL CORE SCAN LOG

Project: Sylvania-Corning FUSRAP Site
Date/Time: 5/25/07
Project #: ~~07-1005.00~~ 07-1022.00 II
Instr. Model / SN: 2221 w/ 44-10 SN# 163685
Location ID: SBR1-SU10-05
Cal Due: 10/29/07
Total Depth: 11'
Ambient Bkg: 1446 cpm
Page: 1 of 1
Technician Init: DA / GMT

Sleeve #	Depth Range	Core & Scan Info (Top → Bottom)				
1	0' - 4'	VOID	1600	1500	1500	1500
Core Scan Results (cpm):						
2	4' - 8'	VOID	1400	1550	1500	1450
Core Scan Results (cpm):						
3	8 - 12'	1400	1550	1600	1700	
Core Scan Results (cpm):						
4	12' - 16'					
Core Scan Results (cpm):						
5	16' - 20'					
Core Scan Results (cpm):						

N/A

Comments: (record any drilling or sampling issues, e.g. refusal, groundwater, poor recovery, etc. here)

6 μR/hr @ Bkgd

CABRERA SERVICES, INC.

PROJECT NAME: Sylvania-Corning FUSRAP
LOCATION: Hicksville, NY
CLIENT: E & E

BORING LOG
Location ID: SBR1-SB10-B5
Page No.: 1 of 1

Contractor: E&E	Driller: ZEBRA	Date Started:	Rock Refusal Depth:
Method: 4' MACRO CORE GEOPROBE	Water Elevation: NA	Date Finished:	Rock Cored (FT):
Elevation: NA	Soil Drilled:	Total Depth: 11'	Casing Size:
			Core Size: 1.5" x 4'
Logged By: DA	Checked By:		
Date/Time: 5/25/07		S/N NaI- 190205	BKG NaI (cpm) 950
		S/N Mod19- 101662	BKG Mod19 (uR/hr) 6

Elevation	Depth (feet)	Casing Blows/Foot	DHG cpm	Sample No. & Penetration/ Recovery (feet)	Sample Type	Sample Description and Classification	Group Designation	Remarks	Equipment Installed	Lab Tests Performed
	1		2843		SOIL	6 µR/hr @ bore hole				
	2		3652							
	3		3036							
	4		1796							
	5		2306							
	6		1710							
	7		1787							
	8		2073							
	9		3604							
	10		1919							
	11		1818							

Notes

CABRERA SERVICES

RADIOLOGICAL · ENVIRONMENTAL · REMEDIATION

SOIL CORE SCAN LOG

Project: Sylvania-Corning FUSRAP Site
Date/Time: 5/29/07
Project #: ~~07-1005.00~~ 07-102200 II
Instr. Model / SN: 2221 w/44-10; SN# 163685
Location ID: SBR1-SU10-06
Cal Due: 10/27/07
Total Depth: 16
Ambient Bkg: 1701 cpm
Page: 1 of 1
Technician Init: DA/GMT

Sleeve #	Depth Range	Core & Scan Info (Top → Bottom)			
1	0' - 4'	VOID	1500	1300	1400	1450
	Core Scan Results (cpm):				
2	4' - 8'	1700	1550	1475	1450
	Core Scan Results (cpm):				
3	8 - 12'	1700	1600	1550	1800
	Core Scan Results (cpm):				
4	12' - 16'	VOID	1450	1400	1350	1400
	Core Scan Results (cpm):				
5	16' - 20'				
	Core Scan Results (cpm):	N			A

Comments: (record any drilling/sampling issues, e.g., refusal, groundwater, poor recovery, etc. here)

6 μR/hr @ BKGD

CABRERA SERVICES, INC.	PROJECT NAME: Sylvania-Corning FUSRAP LOCATION: Hicksville, NY CLIENT: E & E	BORING LOG Location ID: S821-SU10-06 Page No.: 1 of 1

Contractor: F&E	Driller: ZEBRA	Date Started: 5/29/07	Rock Refusal Depth:
Method: 4' MACRO CORE GEOPROBE	Water Elevation: N/A	Date Finished: 5/29/07	Rock Cored (FT):
Elevation: N/A	Soil Drilled:	Total Depth: 13'	Casing Size:
			Core Size: 1.5" x 4'
Logged By: DA/GMT	Checked By: [illegible]		
Date/Time: 5/29/07		S/N NaI- 190205	BKG NaI (cpm) ~~1769~~ 821
		S/N Mod19- 101662	BKG Mod19 (uR/hr) [illegible]

Elevation	Depth (feet)	Casing Blows/Foot	DHG cpm	Sample No. & Penetration/ Recovery (feet)	Sample Type	Sample Description and Classification	Group Designation	Remarks	Equipment Installed	Lab Tests Performed
N/A	1	N/A	2123	N/A	Soil	6 µR/hr @ borehole	N/A			
	2		2854							
	3		1853							
	4		1674							
	5		1633							
	6		1794							
	7		1794							
	8		2122							
	9		1608							
	10		1571							
	11		1413							
	12		1384							
	13		1463							
N/A	N/A	N/A	N/A							
	A	A			A					

Notes

CABRERA SERVICES

RADIOLOGICAL · ENVIRONMENTAL · REMEDIATION

SOIL CORE SCAN LOG

Project: Sylvania-Corning FUSRAP Site
Date/Time: 5/29/07
Project #: ~~07-1005.00~~ 07-1022.00 II
Instr. Model / SN: 2221 w/ 44-10 ; SN # 163685
Location ID: SBR1-SU10-01
Cal Due: 10/27/07
Total Depth: 9'
Ambient Bkg: 1480 cpm
Page: 1 of 1
Technician Init: DA / GMT

Sleeve #	Depth Range	Core & Scan Info			
		Top VOID			3ft liner Bottom
1	0' - 3'		1450	1425	
	Core Scan Results (cpm):				
2	3' - 6'	1450	1550	1500	
	Core Scan Results (cpm):				
3	6' - 9'	1450	1400	1400	
	Core Scan Results (cpm):				
4	9' - 12'				
	Core Scan Results (cpm):				
5	12' - 15'				
	Core Scan Results (cpm):				

NA

Comments (record any drilling or sampling issues, e.g. refusal, groundwater, poor recovery, etc. here)

Using 3ft. Cores (3 ft. Liners)
5μR/hr = Bkgd

CABRERA SERVICES, INC.	PROJECT NAME: Sylvania-Corning FUSRAP LOCATION: Hicksville, NY CLIENT: E & E	BORING LOG Location ID: SBR1-SU18-01 Page No.: 1 of 1

Contractor: E&E	Driller: ZEBRA	Date Started: 5/29/07	Rock Refusal Depth:
Method: 3' MACRO CORE GEOPROBE	Water Elevation: NA	Date Finished: 5/29/07	Rock Cored (FT):
Elevation: NA	Soil Drilled:	Total Depth:	Casing Size:
			Core Size: 1.5" x 3'
Logged By: DA/GMT	Checked By: [illegible]		
Date/Time: 5/29/07		S/N NaI- 190205	BKG NaI (cpm) 1060
		S/N Mod19- 101662	BKG Mod19 (uR/hr) 5

Elevation	Sample Information: Depth (feet)	Casing Blows/Foot	DHG cpm	Sample No. & Penetration/ Recovery (feet)	Sample Type	Sample Description and Classification	Group Designation	Remarks	Equipment Installed	Lab Tests Performed
	1		2004		SOIL	5 μR/hr @ Bore hole				
	2		2069							
	3		1960							
	4		1865							
	5		1319							
	6		1822							

Notes

CABRERA SERVICES

RADIOLOGICAL · ENVIRONMENTAL · REMEDIATION

SOIL CORE SCAN LOG

Project: Sylvania-Corning FUSRAP Site
Project #: ~~07-1005.00~~ 07-1022.00 II
Location ID: SBR1-SU10-07
Total Depth: 12'
Page: 1 of 1

Date/Time: 5/29/07
Instr. Model / SN: 2221 W/ 44-10; SN# 163685
Cal Due: 10/27/07
Ambient Bkg: 1600 cpm
Technician Init: DA & GMT

Sleeve #	Depth Range	Core & Scan Info			
1	0'-3'	Top VOID	1600	1500	3ft liners Bottom
Core Scan Results (cpm):					
2	3'-6'	VOID	1500	1500	1500
Core Scan Results (cpm):					
3	6-9'		1575	1600	1600
Core Scan Results (cpm):					
4	9'-12'		1450	1550	1500
Core Scan Results (cpm):					
5	16'-20'				
Core Scan Results (cpm):					

N A

Comments: (record any drilling or sampling issues, e.g., refusal, groundwater, poor recovery, etc. here)

Using 3Ft cores (3 Ft. Liners)
6 μR/hr = Bkgd.

CABRERA SERVICES, INC.

PROJECT NAME: Sylvania-Corning FUSRAP
LOCATION: Hicksville, NY
CLIENT: E & E

BORING LOG
Location ID: SB21-SU18-07
Page No.: 1 of 1

Contractor: E&E	Driller: ZEBRA	Date Started: 5/29/07	Rock Refusal Depth:
Method: 3' MACRO CORE GEOPROBE	Water Elevation: NA	Date Finished: 5/29/07	Rock Cored (FT):
Elevation: NA	Soil Drilled:	Total Depth: 12'	Casing Size:
			Core Size: 1.5" x 3'
Logged By: DA	Checked By:		
Date/Time: 5/29/07		S/N NaI- 190205	BKG NaI (cpm) 977
		S/N Mod19- 101662	BKG Mod19 (uR/hr) 6μR

Elevation	Depth (feet)	Casing Blows/Foot	DHG cpm	Sample No. & Penetration/Recovery (feet)	Sample Type	Sample Description and Classification	Group Designation	Remarks	Equipment Installed	Lab Tests Performed
	1		1887		SOIL	6μR/hr @ bore hole				
	2		2060							
	3		2355							
	4		2178							
	5		2540							
	6		2826							
	7		4070							
	8		4182							
	9		2726							
	10		2106							
	11		2271							
	12		1990							

Notes

CABRERA SERVICES

RADIOLOGICAL • ENVIRONMENTAL • REMEDIATION

SOIL CORE SCAN LOG

Project: Sylvania-Corning FUSRAP Site
Project #: ~~07-1005.00~~ 07-1022.00 II
Location ID: SBR1-SU10-08
Total Depth: 9
Page: 1 of 1

Date/Time: 5/29/07
Instr. Model / SN: 2221 w/ 44-10; SN#163685
Cal Due: 10/27/07
Ambient Bkg: 1594 cpm
Technician Init: DA/GMT

Sleeve #	Depth Range	Core & Scan Info (Top → Bottom; 3 ft. liner)			
1	0'-3'		1500	1700	1550
2	3'-6'	1550	1550	1450	
3	6'-9'	1500	1400	1450	
4	9'-12'	N		A	
5	16' - 20'	N			A

Core Scan Results (cpm):

Comments: (record any drilling or sampling issues, e.g. refusal, groundwater, poor recovery, etc. here)

Bkgd = 6 μR/hr ; 3 ft. Cores (Liner)

CABRERA SERVICES, INC.

PROJECT NAME: Sylvania-Corning FUSRAP
LOCATION: Hicksville, NY
CLIENT: E & E

BORING LOG
Location ID: SBR1-SB10-08
Page No.: 1 of 1

Contractor: E&E	Driller: ZEBRA	Date Started: 5/29/07	Rock Refusal Depth:
Method: 3" MACRO CORE GEOPROBE	Water Elevation: NA	Date Finished: 5/29/07	Rock Cored (FT):
Elevation: NA	Soil Drilled:	Total Depth: 7'	Casing Size:
Logged By: DA/GMT	Checked By: GMT		Core Size: 1.5" x 3'
Date/Time: 5/29/07		S/N NaI- 190205	BKG NaI (cpm) 1017
		S/N Mod19- 101662	BKG Mod19 (uR/hr) 6

Elevation	Sample Information: Depth (feet)	Casing Blows/Foot	DHG cpm	Sample No. & Penetration/Recovery (feet)	Sample Type	Sample Description and Classification	Group Designation	Remarks	Equipment Installed	Lab Tests Performed
	1		4056		SOIL	6μR/hr @ bore hole				
	2		3862							
	3		3428							
	4		1772							
	5		1524							
	6		1563							
	7		1648							

Notes

CABRERA SERVICES

RADIOLOGICAL · ENVIRONMENTAL · REMEDIATION

SOIL CORE SCAN LOG

Project: Sylvania-Corning FUSRAP Site
Project #: 07-1005.00
Location ID: SU12-16
Total Depth: 13'
Page: 1 of 1

Date/Time: 5/08/07 1505
Instr. Model / SN: 2221 w/44-10 108862
Cal Due: 04-30-08
Ambient Bkg: 1642 cpm
Technician Init: KMA, AC

Sleeve #	Depth Range	Core & Scan Info (Top → Bottom)			
1	0' - 4'	1600	1550	1500	1575
Core Scan Results (cpm):		6" Voids			
2	4' - 8'	1600	1650	1550	1550
Core Scan Results (cpm):					
3 *	8 - 12'	1550	1500	1600	1550
Core Scan Results (cpm):					
4	12' - 16'				
Core Scan Results (cpm):					
5	16' - 20'				
Core Scan Results (cpm):					

Comments: (record any drilling or sampling issues, e.g. refusal, groundwater, poor recovery, etc. here)

CABRERA SERVICES, INC.

PROJECT NAME: Sylvania-Corning FUSRAP
LOCATION: Hicksville, NY
CLIENT: E & E

BORING LOG

Location ID: SU12-16
Page No.: of

Contractor: ZEBRA	Driller: L. CABRERA	Date Started: 5/29/07	Rock Refusal Depth:
Method: DIRECT PUSH	Water Elevation: N/A	Date Finished: 5/29/07	Rock Cored (FT):
Elevation:	Soil Drilled: SAND, SILT	Total Depth: 13'	Casing Size:
		METER INFO	Core Size:
Logged By: KMA, AC	Checked By:	222 w/gl 216482	MODEL 19 #221521
Date/Time: 05/29/07 1600		CAL DUE 05-04-08	CAL DUE 10/15/07
			BKG 4 uR/hr CON 4 uR/hr

Elevation	Depth (feet)	Casing Blows/Foot	DHG cpm	Sample No. & Penetration/ Recovery (feet)	Sample Type	Sample Description and Classification	Group Designation	Remarks	Equipment Installed	Lab Tests Performed
	1		1455		SOIL					
	2		2146							
	3		3055							
	4		3087							
	5		2006							
	6		1587							
	7		1878							
	8		2189							
	9		1779							
	10		1692							
	11		1643							
	12		1267							
	13		1311			REFUSAL @ THIS DEPTH, DUE TO CAVING				

Notes BKG 815

CABRERA SERVICES

RADIOLOGICAL · ENVIRONMENTAL · REMEDIATION

SOIL CORE SCAN LOG

Project: Sylvania-Corning FUSRAP Site
Project #: 07-1005.00
Location ID: SU 12-18
Total Depth: 12'
Page: 1 of 1

Date/Time: 05/29/07
Instr. Model / SN: 2221 w/44-10 108862
Cal Due: 04-30-08
Ambient Bkg: 1602 cpm
Technician Init: KMA, AC

Sleeve #	Depth Range	Core & Scan Info (Top → Bottom)			
1	0' - 4'	1550	1600	1750	1700
Core Scan Results (cpm):		4' void			
2	4' - 8'	1600	1550	1650	1725
Core Scan Results (cpm):					
3	8 - 12'	1625	1700	1600	1650
Core Scan Results (cpm):					
4	12' - 16'				
Core Scan Results (cpm):					
5	16' - 20'				
Core Scan Results (cpm):					

Comments (record any drilling or sampling issues, e.g. refusal, groundwater, poor recovery, etc. here)

CABRERA SERVICES, INC.

PROJECT NAME: Sylvania-Corning FUSRAP
LOCATION: Hicksville, NY
CLIENT: E & E

BORING LOG
Location ID: SU 1218
Page No.: 1 of 1

Contractor: ZEBRA	Driller: L. CABELLARO	Date Started: 05/29/07	Rock Refusal Depth:
Method: DIRECT PUSH	Water Elevation: N/A	Date Finished: 05/29/07	Rock Cored (FT):
Elevation: O.G.	Soil Drilled: SAND, SILT	Total Depth: 8'	Casing Size:
Logged By: KMA, AC	Checked By: [signature]	METER INFO	Core Size:
Date/Time: 5/29/07		2221 W/GI 216482	MODEL 19 #221521
		CAL DUE 05-04-08	CAL DUE 10/15/07
			BKG. 4 mr/hr. CON. 4

Elevation	Depth (feet)	Casing Blows/Foot	DHG cpm	Sample No. & Penetration/ Recovery (feet)	Sample Type	Sample Description and Classification	Group Designation	Remarks	Equipment Installed	Lab Tests Performed
	1		1311		SOIL					
	2		2944							
	3		3028							
	4		2928							
	5		1715							
	6		1491							
	7		1653							
	8		1787			REFUSAL DEPTH DUE TO CAVE, IN				

Notes

KY

CABRERA SERVICES

RADIOLOGICAL · ENVIRONMENTAL · REMEDIATION

SOIL CORE SCAN LOG

Project: Sylvania-Corning FUSRAP Site
Project #: 07-1005.00
Location ID: SU 12-15
Total Depth: 16'
Page: 1 of 1

Date/Time: 5/29/07
Instr. Model / SN: 2221 w/44-10 108862
Cal Due: 04-30-08
Ambient Bkg: 1630 cpm
Technician Init: KMA, AC

Sleeve #	Depth Range	Core & Scan Info (Top)			(Bottom)
1	0' - 4'	~~1450~~	1600	1450	1650
Core Scan Results (cpm):		12" void			
2	4' - 8'	1550	1500	1600	1700
Core Scan Results (cpm):					
3	8 - 12'	1500	1550	1600	1550
Core Scan Results (cpm):					
4	12' - 16'	1550	1600	1450	1600
Core Scan Results (cpm):					
5	16' - 20'				
Core Scan Results (cpm):					

Comments (record any drilling or sampling issues e.g. refusal, groundwater, poor recovery, etc.)

CABRERA SERVICES, INC.

PROJECT NAME: Sylvania-Corning FUSRAP
LOCATION: Hicksville, NY
CLIENT: E & E

BORING LOG
Location ID: SU 12-15
Page No.: 1 of 1

Contractor: ZEBRA	Driller:	Date Started: 5/29/07	Rock Refusal Depth:
Method: DIRECT PUSH	Water Elevation:	Date Finished:	Rock Cored (FT):
Elevation:	Soil Drilled:	Total Depth:	Casing Size:
Logged By: alGraig	Checked By: gmt	METER INFO 2221 w/GI 216482 CAL DUE 05-04-08	Core Size:
Date/Time: 5/29/07			

Elevation	Depth (feet)	Casing Blows/Foot (DHG cpm)	DHG cpm	Sample No. & Penetration/ Recovery (feet)	Sample Type	Sample Description and Classification	Group Designation	Remarks	Equipment Installed	Lab Tests Performed
	1	1128								
	2	1758								
	3	2226								
	4	1808								
	5	1728								
	6	1941								
	7	1653								
	8	2630								
	9	1309								
	10	1421								
	11	1682								
	12	1289								

Notes BKG 847

CABRERA SERVICES

RADIOLOGICAL • ENVIRONMENTAL • REMEDIATION

SOIL CORE SCAN LOG

Project: Sylvania-Corning FUSRAP Site
Date/Time: 5/30/07
Project #: ~~07-1005.00~~ 07-1022.00 II
Instr. Model / SN: 2221 w/ 44-10; SN#163685
Location ID: SBR1-SU1Ø-12
Cal Due: 10/27/07
Total Depth: 12'
Ambient Bkg: 1618 cpm
Page: 1 of 1
Technician Init: DA/GMT

Sleeve #	Depth Range	Core & Scan Info			
1	0'-3'	Top VOID 1375	1450	1450	*3' liners Bottom
Core Scan Results (cpm):					
2	3'-6'	1475	1500	1450	*
Core Scan Results (cpm):					
3	6'-9'	VOID 1550	1500	1450	*
Core Scan Results (cpm):					
4	9'-12'	1500	1650	1600	*
Core Scan Results (cpm):					
5	16' - 20'		A		*
Core Scan Results (cpm):		N			

Comments (record any drilling or sampling issues, e.g. refusal, groundwater, poor recovery, etc. here)

Bkgd-6 μR/hr ; *using 3' MACROCORE (LINERS)

CABRERA SERVICES, INC.

PROJECT NAME: Sylvania-Corning FUSRAP
LOCATION: Hicksville, NY
CLIENT: E & E

BORING LOG
Location ID: SBR1-SB10-12
Page No.: 1 of

Contractor: E&E	Driller: ZEBRA	Date Started: 5/30/07	Rock Refusal Depth:
Method: 3" MACRO CORE GEOPROBE	Water Elevation: NA	Date Finished: 5/30/07	Rock Cored (FT):
Elevation: NA	Soil Drilled:	Total Depth: 12'	Casing Size:
			Core Size: 1.5" x 3'
Logged By: DA/GMT	Checked By: GMT		
Date/Time:		S/N NaI- 190205	BKG NaI (cpm) 889
		S/N Mod19- 101662	BKG Mod19 (μR/hr) 6

Elevation	Depth (feet)	Casing Blows/Foot	DHG cpm	Sample No. & Penetration/Recovery (feet)	Sample Type	Sample Description and Classification	Group Designation	Remarks	Equipment Installed	Lab Tests Performed
	1		2649		SOIL	6 μR/hr @ Bore Hole				
	2		3455							
	3		2888	N						
	4		3104	A						
	5		4052							
	6		3793							
	7		3448							
	8		2136	N						
	9		2010	A						
Z	10		3382							
	11	Z	4287							
	12		2956	N						
	N	A	N	A						
	A		A							
	N		N	N						
	A		A	A						
	N			N						
	A			A						
	N			N						
	A			A						

Notes

CABRERA SERVICES

RADIOLOGICAL • ENVIRONMENTAL • REMEDIATION

SOIL CORE SCAN LOG

Project: Sylvania-Corning-FUSRAP Site
Project #: ~~07-1005.00~~ 07-1022.00 II
Location ID: SBR1-SU1Ø-13
Total Depth: 9'
Page: 1 of 1

Date/Time: 5/30/07
Instr. Model / SN: 2221 w/ 44-10; SN #163685
Cal Due: 10/27/07
Ambient Bkg: 1610 cpm
Technician Init: DA/GMT

Sleeve #	Depth Range	Core & Scan Info
1	0' - 3'	Top VOID; 1450; 1450; Bottom
		Core Scan Results (cpm):
2	3' - 6'	1700; 1800; 1650
		Core Scan Results (cpm):
3	6 - 9'	VOID; 1650; 1750
		Core Scan Results (cpm): ~7" VOID, 1800's
4	9 - 12	
		Core Scan Results (cpm):
5	16' - 20'	
		Core Scan Results (cpm):

Comments: (record any drilling or sampling issues, e.g. refusal, groundwater, poor recovery, etc. here)

3 ft. Cores (Liners)
approximately 1 ft. concrete
6 mr/hr @ Bldg

CABRERA SERVICES, INC.

PROJECT NAME: Sylvania-Corning FUSRAP
LOCATION: Hicksville, NY
CLIENT: E & E

BORING LOG

Location ID: SBR1-SB10-13
Page No.: 1 of 1

Contractor: E&E	Driller: ZEBRA	Date Started: 5/30/07	Rock Refusal Depth:
Method: 3" MACRO CORE GEOPROBE	Water Elevation: NA	Date Finished: 5/30/07	Rock Cored (FT):
Elevation: NA	Soil Drilled:	Total Depth: 9'	Casing Size:
			Core Size: 1.5" x 3'
Logged By: DA/GMT	Checked By: GMT		
Date/Time: 5/30/07		S/N NaI- 190205	BKG NaI (cpm) 920
		S/N Mod19- 101662	BKG Mod19 (uR/hr) 6

Elevation	Depth (feet)	Casing Blows/Foot	DHG cpm	Sample No. & Penetration/ Recovery (feet)	Sample Type	Sample Description and Classification	Group Designation	Remarks	Equipment Installed	Lab Tests Performed
	1		2769		SOIL	6 μR/hr @ Borehole				
	2		3582							
	3		3171							
	4		2285							
	5		2635							
	6		3022							
	7		4069							
	8		2226							
	9		1918							

Notes

CABRERA SERVICES

RADIOLOGICAL · ENVIRONMENTAL · REMEDIATION

SOIL CORE SCAN LOG

Project: Sylvania-Corning-FUSRAP Site
Project #: ~~07-1005.00~~ 07-1022.00 II
Location ID: SBRI-SU10-09
Total Depth: 6'
Page: 1 of 1

Date/Time: 5/30/07
Instr. Model / SN: 2221 w/ 44-10; SN #163685
Cal Due: 10/27/07
Ambient Bkg: ~~1648~~ 1616 cpm
Technician Init: DA/GMT

Sleeve #	Depth Range	Core & Scan Info (Top → Bottom)			
1	0'-3'		1450	1350	
Core Scan Results (cpm):					
2	3'-6'	1500	1450	1350	
Core Scan Results (cpm):					
3	8 - 12'				
Core Scan Results (cpm):					
4	12' - 16'				
Core Scan Results (cpm):					
5	16' - 20'				
Core Scan Results (cpm):					

Comments: (record any drilling or sampling issues, e.g. refusal, groundwater, poor recovery, etc. here)

3' x 1.5" Core tubes

6μR/hr = Bkgd

CABRERA SERVICES, INC.

PROJECT NAME: Sylvania-Corning FUSRAP
LOCATION: Hicksville, NY
CLIENT: E & E

BORING LOG
Location ID: SBR1-SB10-09
Page No.: 1 of 1

Contractor: E&E	Driller: ZEBRA	Date Started: 5/30/07	Rock Refusal Depth:
Method: 3' MACRO CORE GEOPROBE	Water Elevation: NA	Date Finished: 5/30/07	Rock Cored (FT):
Elevation: NA	Soil Drilled:	Total Depth: 4'	Casing Size:
Logged By: [illegible]/DA	Checked By: [illegible]		Core Size: 1.5" x 3'
Date/Time: 5/30/07		S/N NaI- 190205	BKG NaI (cpm) 728
		S/N Mod19- 101662	BKG Mod19 (uR/hr) 6

Elevation	Depth (feet)	Casing Blows/Foot	DHG cpm	Sample No. & Penetration/ Recovery (feet)	Sample Type	Sample Description and Classification	Group Designation	Remarks	Equipment Installed	Lab Tests Performed
	1		2031		SOIL	6μR/hr @ borehole				
	2		1993	N						
	3		2478	A						
	4		2033							

Notes

CABRERA SERVICES

RADIOLOGICAL · ENVIRONMENTAL · REMEDIATION

SOIL CORE SCAN LOG

Project: Sylvania-Corning FUSRAP Site
Project #: ~~07-1005.00~~ 07-1022.00 II
Location ID: SBR1-SU11-07
Total Depth: 16
Page: 1 of 1

Date/Time: 5/30/07
Instr. Model / SN: 2221 w/ 44-10; SN#163685
Cal Due: 10/27/07
Ambient Bkg: 1546 cpm
Technician Init: DA/GMT

Sleeve #	Depth Range	Core & Scan Info (Top → Bottom)			
1	0' - 4'	VOID	1500	1300	1300
Core Scan Results (cpm):					
2	4' - 8'	1600	1600	1450	1400
Core Scan Results (cpm):					
3	8 - 12'				
Core Scan Results (cpm):		NO RECOVERY			
4	12' - 16'	1400	1400	1600	1550
Core Scan Results (cpm):					
5	16' - 20'		A		
Core Scan Results (cpm):		N			

Comments: (record any drilling or sampling issues, e.g. refusal, groundwater, poor recovery, etc. here)

5μR/hr @ BKGD

CABRERA SERVICES, INC.

PROJECT NAME: Sylvania-Corning FUSRAP
LOCATION: Hicksville, NY
CLIENT: E & E

BORING LOG
Location ID: SBR1-SB11-07
Page No.: 1 of 1

Contractor: E&E	Driller: ZEBRA	Date Started: 5/30/07	Rock Refusal Depth:
Method: 4" MACRO CORE GEOPROBE	Water Elevation: NA	Date Finished: 5/30/07	Rock Cored (FT):
Elevation: NA	Soil Drilled:	Total Depth: 12'	Casing Size:
			Core Size: 1.5" x 4'
Logged By: DA/GMT	Checked By: GMT		
Date/Time: 5/30/07		S/N NaI- 190205	BKG NaI (cpm) 752
		S/N Mod19- 101662	BKG Mod19 (μR/hr) 5μR/hr

Elevation	Depth (feet)	Casing Blows/Foot	DHG cpm	Sample No. & Penetration/Recovery (feet)	Sample Type	Sample Description and Classification	Group Designation	Remarks	Equipment Installed	Lab Tests Performed
	1		1852		SOIL	5μR/hr @ Bore hole				
	2		2948							
	3		2231							
	4		1909							
	5		2011							
	6		1859							
	7		1441							
	8		2141							
	9		1586							
Z	10		1208							
	11	Z	1190							
	12		1191							
		A								
N										
				N						
					A					
		A								
								A		
									Z	

Notes

CABRERA SERVICES

RADIOLOGICAL · ENVIRONMENTAL · REMEDIATION

SOIL CORE SCAN LOG

Project: Sylvania-Corning FUSRAP Site
Project #: ~~07-1005.00~~ 07-102200
Location ID: SBR1-SW11-08
Total Depth: 16'
Page: 1 of 1

Date/Time: 5/30/07
Instr. Model / SN: 2221 W/44-10, SN# 163685
Cal Due: 10/27/07
Ambient Bkg: 1581 cpm
Technician Init: DA/GMT

Sleeve #	Depth Range	Core & Scan Info (Top → Bottom)			
1	0' - 4'	VOID	1450	1600	1650
Core Scan Results (cpm):					
2	4' - 8'	1500	1450	1400	1400
Core Scan Results (cpm):					
3	8 - 12'	VOID 1450	1325	1375	1375
Core Scan Results (cpm):					
4	12' - 16'	VOID 1550	1600	1400	1500
Core Scan Results (cpm):					
5	16' - 20'		A		
Core Scan Results (cpm):		N			

Comments: (record anything of sampling issues, e.g. refusal, groundwater, poor recovery, etc. here)

BKGD = 5μR/hr

CABRERA SERVICES, INC.

PROJECT NAME: Sylvania-Corning FUSRAP
LOCATION: Hicksville, NY
CLIENT: E & E

BORING LOG
Location ID: S[illegible]-Sul1-08
Page No.: 1 of 1

Contractor: E&E	Driller: ZEBRA	Date Started: 5/30/07	Rock Refusal Depth:
Method: 4' MACRO CORE GEOPROBE	Water Elevation: NA	Date Finished: 5/30/07	Rock Cored (FT):
Elevation: NA	Soil Drilled:	Total Depth: 6'	Casing Size:
Logged By: DA/GMT	Checked By: [illegible]		Core Size: 1.5" x 4'
Date/Time: 5/30/07		S/N NaI- 190205	BKG NaI (cpm) 723
		S/N Mod 19- 101662	BKG Mod19 (uR/hr) 5μR/hr

Elevation	Depth (feet)	Casing Blows/Foot	DHG cpm	Sample No. & Penetration/ Recovery (feet)	Sample Type	Sample Description and Classification	Group Designation	Remarks	Equipment Installed	Lab Tests Performed
	1		1407	N/A	SOIL	5μR/hr @ Borehole				
	2		2526							
	3		3103							
	4		3065							
	5		1616							
	6		1483							
	N/A									
		Z								
	N	A								
								Z		
								A		
	A									

Notes

CABRERA SERVICES

RADIOLOGICAL • ENVIRONMENTAL • REMEDIATION

SOIL CORE SCAN LOG

Project: Sylvania-Corning FUSRAP Site
Project #: 07-1005.00
Location ID: SU 12-10
Total Depth: 16'
Page: 1 of 1

Date/Time: 5/30/07
Instr. Model / SN: 2221 w/44-10 108862
Cal Due: 04-30-08
Ambient Bkg: 1593 cpm
Technician Init: KMA, AC

Sleeve #	Depth Range	Core & Scan Info (Top / Bottom)			
1	0' - 4'	1400	1400	1550	1625
	Core Scan Results (cpm):	9" void			
2	4' - 8'	1550	void		
	Core Scan Results (cpm):				
3	8 - 12'	1500	1550	1600	1350
	Core Scan Results (cpm):				
4	12' - 16'	1450	1600		
	Core Scan Results (cpm):	No recovery from 14'-16'			
5	16' - 20'	1550	1675	1450	1500
	Core Scan Results (cpm):				

Comments: (record any drilling or sampling issues, e.g. refusal, groundwater, poor recovery, etc. here)

CABRERA SERVICES, INC.

PROJECT NAME: Sylvania-Corning FUSRAP
LOCATION: Hicksville, NY
CLIENT: E & E

BORING LOG
Location ID: SU 12-10
Page No.: 1 of 1

Contractor: ZEBRA	Driller: L. CABGHANO	Date Started: 5/30/07	Rock Refusal Depth:
Method: DIRECT PUSH	Water Elevation: N/A	Date Finished: 5/30/07	Rock Cored (FT):
Elevation: O.G.	Soil Drilled: SAND, SILT	Total Depth: 10'	Casing Size:
		MODEL INFO	Core Size:
Logged By: KMA, AC	Checked By:	2221 W/GI 216482	MODEL 19 #22521
Date/Time: 05/30/07 1210		CAL DUE 05-01-08	CAL DUE 10/15/07
		BKG 858 CPM	BKG 9 ur/hr, CON 4 ur/hr

Elevation	Depth (feet)	Casing Blows/Foot	DHG cpm	Sample No. & Penetration/ Recovery (feet)	Sample Type	Sample Description and Classification	Group Designation	Remarks	Equipment Installed	Lab Tests Performed
	1		1162		SOIL					
	2		1389							
	3		3053							
	4		3106							
	5		1786							
	6		1710							
	7		1813							
	8		2001							
	9		1715							
	10		1481							
						HOLE CAVED-IN @ THIS DEPTH.				
			N	A						

Notes BKG 858

CABRERA SERVICES

RADIOLOGICAL · ENVIRONMENTAL · REMEDIATION

SOIL CORE SCAN LOG

Project: Sylvania-Corning FUSRAP Site
Project #: 07-1005.00
Location ID: SU 12-06
Total Depth: 20'
Page: 1 of 1

Date/Time: 5/30/07
Instr. Model / SN: 2221 w/44-10 108862
Cal Due: 04-30-08
Ambient Bkg: 1593 cpm
Technician Init: KMA, AC

Sleeve #	Depth Range	Core & Scan Info (Top → Bottom)			
1	0' - 4'		1550	1500	1550
Core Scan Results (cpm):		0'-1' VOID			
2	4' - 8'	1475	1400	1475	1450
Core Scan Results (cpm):					
3 *	8 - 12'	1500	1600	1650	1600
Core Scan Results (cpm):					
4	12' - 16'	1500	1500	1450	1350
Core Scan Results (cpm):					
5	16' - 20'	1425	1350	1400	1400
Core Scan Results (cpm):					

Comments (recordable drilling/sampling issues, e.g. refusal, groundwater, poor recovery, etc. here)

CABRERA SERVICES, INC.

PROJECT NAME: Sylvania-Corning FUSRAP
LOCATION: Hicksville, NY
CLIENT: E & E

BORING LOG
Location ID: SU 12-06
Page No.: 1 of 1

Contractor: ZEBRA	Driller: L. CABELLARO	Date Started: 5/30/07	Rock Refusal Depth:
Method: DIRECT PUSH	Water Elevation: N/A	Date Finished: 5/30/07	Rock Cored (FT):
Elevation: O.G.	Soil Drilled: SAND, SILT	Total Depth: 13'	Casing Size:
Logged By: KMA, AC	Checked By: [illegible]	METER INFO	Core Size:
Date/Time: 05/30/07		2221 w/GI 216482	MODEL 19 #221521
		CAL DUE 05-04-08	CAL DUE 10/15/07
			BKG. 4 ur/hr. Con 4 ur/hr

Elevation	Sample Information: Depth (feet)	Casing Blows/Foot	DHG cpm	Sample No. & Penetration/ Recovery (feet)	Sample Type	Sample Description and Classification	Group Designation	Remarks	Equipment Installed	Lab Tests Performed
	1		2659		SOIL					
	2		1485							
	3		2689							
	4		1686							
	5		1417							
	6		1719							
	7		1886							
	8		2290							
	9		1639							
	10		1432							
	11		1498							
	12		1315							
	13	12	1526							

Notes BKG 850

KX

CABRERA SERVICES

RADIOLOGICAL · ENVIRONMENTAL · REMEDIATION

SOIL CORE SCAN LOG

Project: Sylvania-Corning FUSRAP Site
Project #: 07-1005.00
Location ID: SU 12-05
Total Depth: 16'
Page: 1 of 1

Date/Time: 5/30/08
Instr. Model / SN: 2221 w/44-10 108862
Cal Due: 04-30-08
Ambient Bkg: 1506 cpm
Technician Init: KMA, AC

Sleeve #	Depth Range	Core & Scan Info (Top → Bottom)			
1	0' - 4'	void		1550	1700
Core Scan Results (cpm):		2 ft			
2	4' - 8'	1500	void	1650	1500
Core Scan Results (cpm):			9in void		
3	8 - 12'	1600	1500		1500
Core Scan Results (cpm):				1'-6" void	
4	12' - 16'	1450	1500	1400	1450
Core Scan Results (cpm):					
5	16' - 20'				
Core Scan Results (cpm):					

Comments: (record any drilling/sampling issues, refusal, groundwater, core recovery, etc. here)

CABRERA SERVICES, INC.

PROJECT NAME: Sylvania-Corning FUSRAP
LOCATION: Hicksville, NY
CLIENT: E & E

BORING LOG

Location ID: SU 12-05
Page No.: 1 of 1

Contractor: ZEBRA	Driller: C. CARGUARO	Date Started: 5/30/07	Rock Refusal Depth:
Method: DIRECT PUSH	Water Elevation: N/A	Date Finished: 5/30/07	Rock Cored (FT):
Elevation: O.G.	Soil Drilled: SAND, SILT	Total Depth: 11	Casing Size:
		MODEL INFO	Core Size:
Logged By: KMA, AC	Checked By:	2221 w/GI 216482	MODEL 19 221521
Date/Time: 05/30/07 1600		CAL DUE 05-04-08	CAL DUE 10/15/07
		BKG 761	BKG. 4 ur/hr CON 4 ur/hr

Elevation	Sample Information: Depth (feet)	Casing Blows/Foot	DHG cpm	Sample No. & Penetration/Recovery (feet)	Sample Type	Sample Description and Classification	Group Designation	Remarks	Equipment Installed	Lab Tests Performed
	1		1744		SOIL					
	2		2131							
	3		3555							
	4		1958							
	5		1634							
	6		1713							
	7		1962							
	8		1723							
	9		1558							
	10		1280							
	11		1267			REFUSAL/CAVE-IN @ 11' DEPTH				

Notes BKG 761

CABRERA SERVICES

RADIOLOGICAL · ENVIRONMENTAL · REMEDIATION

SOIL CORE SCAN LOG

Project: Sylvania-Corning FUSRAP Site
Date/Time: 5/31/07
Project #: ~~07-1005.00~~ 07-1022.00 II
Instr. Model / SN: 2221 w/ 44-10 ; SN# 163685
Location ID: SBRI-SU10-10
Cal Due: 10/27/07
Total Depth: 20'
Ambient Bkg: 1635 cpm
Page: 1 of 1
Technician Init: DA

Sleeve #	Depth Range	Core & Scan Info (Top → Bottom)			
1	0' - 4'	VOID	1400	1450	1400
	Core Scan Results (cpm):				
2	4' - 8'	1500	1350	1450	1250
	Core Scan Results (cpm):				
3	8 - 12'	VOID	1300	1350	1400	VOID
	Core Scan Results (cpm):				
4	12' - 16'	VOID	1300	1350	1400	VOID
	Core Scan Results (cpm):				
5	16' - 20'		1300		
	Core Scan Results (cpm):	SLEEVE Deformed 1' no recovery from somewhere in 16-20'			

Comments: (record any drilling or sampling issues, e.g. refusal, groundwater, poor recovery, etc. here)

4μR/hr @ BKGD

CABRERA SERVICES, INC.

PROJECT NAME: Sylvania-Corning FUSRAP
LOCATION: Hicksville, NY
CLIENT: E & E

BORING LOG
Location ID: SC21-SU10-40
Page No.: 1 of 1

Contractor: E & E	Driller: ZEBRA	Date Started: 5/31/07	Rock Refusal Depth:
Method: 4' MACRO CORE GEOPROBE	Water Elevation: N/A	Date Finished: 5/31/07	Rock Cored (FT):
Elevation: N/A	Soil Drilled:	Total Depth: 16'	Casing Size:
Logged By: DA	Checked By: [signature]		Core Size: 1.5" x 4'
Date/Time: 5/31/07		S/N NaI- 190205	BKG NaI (cpm) 1818
		S/N Mod19- 101662	BKG Mod19 (uR/hr) 4

Elevation	Depth (feet)	Casing Blows/Foot	DHG cpm	Sample No. & Penetration/ Recovery (feet)	Sample Type	Sample Description and Classification	Group Designation	Remarks	Equipment Installed	Lab Tests Performed
N/A	1		1959	N/A	Soil	4 uR/hr @ bore hole	N/A	N/A	N/A	N/A
	2		2070							
	3		3438							
	4		3279							
	5		1931							
	6		1643							
	7		2141							
	8		1847							
	9		2180							
	10		1353							
	11		1563							
	12		1202							
	13		1115							
	14		1243							
	15		1160							
	16		1162							

Notes

CABRERA SERVICES

RADIOLOGICAL • ENVIRONMENTAL • REMEDIATION

SOIL CORE SCAN LOG

Project: Sylvania-Corning FUSRAP Site
Project #: ~~07-1005.00~~ 07-1022.00 II
Location ID: SB21-SU10-18
Total Depth: 16
Page: 1 of 1

Date/Time: 5/31/07
Instr. Model / SN: 2221 w/ 44-10 ; SN# 163685
Cal Due: 10/27/07
Ambient Bkg: 1433 cpm
Technician Init: DA/GMT

Sleeve #	Depth Range	Core & Scan Info				
1	0' - 4'	Top VOID	1300	1300	1350	Bottom
	Core Scan Results (cpm):					
2	4' - 8'	VOID	1300	1400	1400	1500
	Core Scan Results (cpm):					
3	8 - 12'		1300	1400	1250	1300
	Core Scan Results (cpm):					
4	12' - 16'	VOID	1250	1500	1350	1450
	Core Scan Results (cpm):					
5	16' - 20'		N		A	
	Core Scan Results (cpm):					

Comments: (record any drilling or sampling issues, e.g., refusal, groundwater, poor recovery, etc. here)

4 mR/hr @ BLGD

CABRERA SERVICES, INC.

PROJECT NAME: Sylvania-Corning FUSRAP
LOCATION: Hicksville, NY
CLIENT: E & E

BORING LOG
Location ID: SA21-SU10-18
Page No.: 1 of 1

Contractor: E&E	Driller: ZEBRA	Date Started: 5/31/07	Rock Refusal Depth:
Method: 4" Macro Core Geoprobe	Water Elevation: N/A	Date Finished: 5/31/07	Rock Cored (FT):
Elevation: N/A	Soil Drilled:	Total Depth:	Casing Size:
			Core Size:
Logged By: DA	Checked By:		
Date/Time: 5/31/07		S/N NaI- 190205	BKG NaI (cpm) 827
		S/N Mod19- 101662	BKG Mod19 (uR/hr) 4

Elevation	Depth (feet)	Casing Blows/Foot	DHG cpm	Sample No. & Penetration/ Recovery (feet)	Sample Type	Sample Description and Classification	Group Designation	Remarks	Equipment Installed	Lab Tests Performed
N/A	1	N/A	1489	N/A	Soil	4 uR/hr @ bore hole	N/A	N/A	N/A	N/A
	2		1609							
	3		2179							
	4		2184							
	5		2501							
	6		1643							
	7		1436							
	8		1046							
	9		1630							
	10		2053							
	11		1379							
	12		1261							
	13		1958							
	14		1507							

Notes

CABRERA SERVICES

RADIOLOGICAL · ENVIRONMENTAL · REMEDIATION

SOIL CORE SCAN LOG

Project: Sylvania-Corning FUSRAP Site
Project #: ~~07-1005.00~~ 07-1022.00 II
Location ID: SBU-SW11-19
Total Depth: 16
Page: 1 of 1

Date/Time: 5/31/07
Instr. Model / SN: 2221 w/ 44-10 ; SN# 163685
Cal Due: 10/27/07
Ambient Bkg: 13 68 cpm
Technician Init: OA

Sleeve #	Depth Range	Core & Scan Info				
1	0' - 4'	Top VOID	1450	1600	1500	Bottom
	Core Scan Results (cpm):					
2	4' - 8'	VOID	1500	1400	1350	1400
	Core Scan Results (cpm):					
3	8 - 12'	VOID	1300	1400	1350	1500
	Core Scan Results (cpm):					
4	12' - 16'	VOID	1400	1400	1250	1300
	Core Scan Results (cpm):					
5	16' - 20'					
	Core Scan Results (cpm):					

Comments: (record any drilling or sampling issues, e.g. refusal, groundwater, poor recovery, etc. here)

4 mR/hr = BKGD

CABRERA SERVICES, INC.

PROJECT NAME: Sylvania-Corning FUSRAP
LOCATION: Hicksville, NY
CLIENT: E & E

BORING LOG
Location ID: SA21-SU11-19
Page No.: 1 of 1

Contractor: E&E	Driller: ZEBRA	Date Started: 5/31/07	Rock Refusal Depth:
Method: 4' MACRO CORE GEOPROBE	Water Elevation: N/A	Date Finished: 5/31/07	Rock Cored (FT):
Elevation: N/A	Soil Drilled:	Total Depth: 15'	Casing Size:
			Core Size: 1.5" x 4'
Logged By: DA	Checked By:		
Date/Time: 5/31/07		S/N NaI - 190205	BKG NaI (cpm) 752
		S/N Mod19 - 101662	BKG Mod19 (uR/hr) 4

Elevation	Depth (feet)	Casing Blows/Foot	DHG cpm	Sample No. & Penetration/Recovery (feet)	Sample Type	Sample Description and Classification	Group Designation	Remarks	Equipment Installed	Lab Tests Performed
N/A	1	N/A	1977	N/A	Soil	4μR/hr @ bore hole	N/A		N/A	
	2		2998							
	3		3435							
	4		4475							
	5		2985							
	6		1776							
	7		1534							
	8		2134							
	9		2963							
	10		1570							
	11		1233							
	12		1589							
	13		1187							
	14		1186							
	15		1260							

Notes

CABRERA SERVICES

RADIOLOGICAL • ENVIRONMENTAL • REMEDIATION

SOIL CORE SCAN LOG

Project: Sylvania-Corning FUSRAP Site
Date/Time: 5/31/07
Project #: ~~07-1005.00~~ 07-1022.00 II
Instr. Model / SN: 2221 w/ 44-10 ; SN# 163685
Location ID: SBRII-5411-20
Cal Due: 10/27/07
Total Depth: 16'
Ambient Bkg: 1440 cpm cpm
Page: 1 of 1
Technician Init: DA/GMT

Sleeve #	Depth Range	Core & Scan Info				
1	0' - 4'	Top VOID	1300	1275	1400	Bottom
	Core Scan Results (cpm):					
2	4' - 8'	1400	1475	1350	1250	
	Core Scan Results (cpm):					
3	8 - 12'	VOID 1250	1275	1250	1100	
	Core Scan Results (cpm):					
4	12' - 16'	VOID	1300	1300	1350	
	Core Scan Results (cpm):					
5	16' - 20'		A			
	Core Scan Results (cpm):	N				

Comments: (record any drilling or sampling issues, e.g. refusal, groundwater, poor recovery, etc. here)

4μR/hr = BKGD

CABRERA SERVICES, INC.

PROJECT NAME: Sylvania-Corning FUSRAP
LOCATION: Hicksville, NY
CLIENT: E & E

BORING LOG
Location ID: 5921-SU11-B0
Page No.: 1 of 1

Contractor: E&E	Driller: ZEBRA	Date Started: 5/31/07	Rock Refusal Depth:
Method: 4' Macro Core Geoprobe	Water Elevation: N/A	Date Finished: 5/31/07	Rock Cored (FT):
Elevation: N/A	Soil Drilled:	Total Depth: 13'	Casing Size:
			Core Size: 1.5" x 4'
Logged By: DA/GMT	Checked By:		
Date/Time: 5/31/07		S/N NaI- 190205	BKG NaI (cpm) 843
		S/N Mod19- 1018662	BKG Mod19 (uR/hr) 4

Elevation	Depth (feet)	Casing Blows/Foot	DHG cpm	Sample No. & Penetration/ Recovery (feet)	Sample Type	Sample Description and Classification	Group Designation	Remarks	Equipment Installed	Lab Tests Performed
N/A	1	N	1498	N	Soil	4 µR/hr @ Borehole		N	A	
	2		3223							
	3		3058							
	4		2126							
	5		1635							
N/A	6		1670							
	7		1500							
	8		1773							
	9		2042							
	10		1528							
N/A	11		1342							
	12		859							
	13		992							
	N/A	A	N/A	A	N/A					
N/A		N		A						
N/A										
N/A										

Notes

CABRERA SERVICES

RADIOLOGICAL · ENVIRONMENTAL · REMEDIATION

SOIL CORE SCAN LOG

Project: Sylvania-Corning FUSRAP Site
Project #: ~~07-1005.00~~ 07-1022.00 II
Location ID: SBRI-SW11-16
Total Depth: 20'
Page: 1 of 1

Date/Time: 5/31/07
Instr. Model / SN: 2221 w/ 44-10; SN# 163685
Cal Due: 10/27/07
Ambient Bkg: 1394 cpm
Technician Init: DA/GMT

Sleeve #	Depth Range	Core & Scan Info (Top / Bottom)			
1	20' - 24'	VOID	1350	1300	1325
2	4' - 8'	VOID 1400	1350	1300	1325
3	8 - 12'	VOID	VOID	VOID	1350
4	12' - 16'	VOID	VOID	VOID	1250
5	16' - 20'	1325	1325	1275	1250

Core Scan Results (cpm):

Comments: (record any drilling or sampling issues, e.g., refusal, groundwater, poor recovery, etc. here)

4 μR/hr @ BKGD

CABRERA SERVICES, INC.

PROJECT NAME: Sylvania-Corning FUSRAP
LOCATION: Hicksville, NY
CLIENT: E & E

BORING LOG
Location ID: S321-SU11-16
Page No.: 1 of 1

Contractor: E&E	Driller: ZEBRA	Date Started: 5/31/07	Rock Refusal Depth:
Method: 4' MACRO CORE GEOPROBE	Water Elevation: N/A	Date Finished: 5/31/07	Rock Cored (FT):
Elevation: N/A	Soil Drilled:	Total Depth: 19	Casing Size:
			Core Size: 1.5" * 4'
Logged By: DA/GMT	Checked By:		
Date/Time: 5/31/07		S/N NaI- 190205	BKG NaI (cpm)
		S/N Mod 19- 101662	BKG Mod 19 (uR/hr)

Elevation	Depth (feet)	Casing Blows/Foot	DHG cpm	Sample No. & Penetration/ Recovery (feet)	Sample Type	Sample Description and Classification	Group Designation	Remarks	Equipment Installed	Lab Tests Performed
	1		1443		Soil	4 μR/hr @ Borehole				
	2	N	2997							
	3		3526							
N	4		2094							
	5		1854							
	6		1652							
	7		2289	N						
	8		2006							
	9		1876							
	10		1402							
	11		1695							
	12		1752							
	13		1337							
	14		1124							
	15		1181					N		
	16		1107							
	17		1042						A	
	18		969							
	19		980							
			N							
	N			A						
A		A								

Notes

CABRERA SERVICES

RADIOLOGICAL · ENVIRONMENTAL · REMEDIATION

SOIL CORE SCAN LOG

Project: Sylvania-Corning FUSRAP Site
Project #: 07-1005.00
Location ID: SU12-03-I
Total Depth: 35'
Page: 1 of 2

Date/Time: 5/31/07, 10:10
Instr. Model / SN: 2221 w/44-10 108862
Cal Due: 04-30-08
Ambient Bkg: 2069 cpm
Technician Init: KMA, AC

Sleeve #	Depth Range	Core & Scan Info (Top)			(Bottom)
1	0' - 4'	~~[illegible]~~	2000	2000	2300
Core Scan Results (cpm):		void 12"			
2	4' - 8'	2250	~~[illegible]~~	~~[illegible]~~ 2300	2150
Core Scan Results (cpm):			void 1.5'		
3	8 - 12'	2100	2250	VOID	VOID
Core Scan Results (cpm):					
4	12' - 16'	VOID	2150	2350	VOID
Core Scan Results (cpm):					
5	16' - 20'	VOID	VOID	VOID	2150
Core Scan Results (cpm):					

Comments: (record any drilling or sampling issues, e.g. refusal, groundwater, poor recovery, etc. here)

CABRERA SERVICES

RADIOLOGICAL • ENVIRONMENTAL • REMEDIATION

SOIL CORE SCAN LOG

Project: Sylvania-Corning FUSRAP Site
Project #: 07-1005.00
Location ID: SU12-03-I
Total Depth: 35'
Page: 2 of 2

Date/Time: 5/31/07 1130
Instr. Model / SN: 2221 w/44-10 108862
Cal Due: 04-30-08
Ambient Bkg: 2069 cpm
Technician Init: KMA, AC

Sleeve #	Depth Range	Core & Scan Info (Top → Bottom)
1	20'-~~#~~25	Void
2	~~4'-8'~~ 25'-30'	Void
3	~~8'-12'~~ 30'-32'	void
4	12' - 16'	N/A
5	16' - 20'	N/A

Core Scan Results (cpm):

Comments: (record any drilling or sampling issues, e.g. refusal, groundwater, poor recovery, etc. here)

CABRERA SERVICES, INC.

PROJECT NAME: Sylvania-Corning FUSRAP
LOCATION: Hicksville, NY
CLIENT: E & E

BORING LOG

Location ID: SU 12-03-I
Page No.: 1 of 1

Contractor: ZEBRA	Driller: C. CABRALO	Date Started: 05/31/07	Rock Refusal Depth:
Method: DIRECT PUSH	Water Elevation: N/A	Date Finished: 05/31/07	Rock Cored (FT):
Elevation: O.G.	Soil Drilled: SAND, SILT	Total Depth: 28'	Casing Size:
Logged By: KMA, AC	Checked By:	METER INFO	Core Size:
Date/Time: 5/31/07		2221 w/ 91 216482	MODEL 19 # 221521
		CAL DUE 05-04-08	CAL DUE 10/15/07
		BKG 92	BKG 5 UR/HR, CAN 5 UR/HR

Elevation	Depth (feet)	Casing Blows/Foot	DHG cpm	Sample No. & Penetration/ Recovery (feet)	Sample Type	Sample Description and Classification	Group Designation	Remarks	Equipment Installed	Lab Tests Performed
	1		1476		SONIC					
	2		2946							
	3		3146							
	4		3319							
	5		3006							
	6		2387							
	7		1588							
	8		1369							
	9		1900							
	10		1970							
	11		1922							
	12		1960							
	13		2767							
	14		1836							
	15		2373							
	16		9607			- 2½ x's BKG CPM				
	17		4322			- 10 x's BKG CPM				
	18		1508			- 3½ TO 4 x's BKG CPM				
	19		1891							
	20		1315							
	21		1311							
	22		1268							
	23		1254							
	24		1284							
	25		1681							
	26		1213							
	27		1067							
	28		1009							
			N/A			INACCESSABLE FROM THIS DEPTH DUE TO HOLE COLLAPSE				

Notes BKG 92

CABRERA SERVICES

RADIOLOGICAL • ENVIRONMENTAL • REMEDIATION

SOIL CORE SCAN LOG

Project: Sylvania-Corning FUSRAP Site
Project #: 07-1005.00
Location ID: SU 12-02
Total Depth: 20'
Page: 1 of 1

Date/Time: 05/31/07
Instr. Model / SN: 2221 w/44-10 108862
Cal Due: 04-30-08
Ambient Bkg: 2069 cpm
Technician Init: KMA, AC

Sleeve #	Depth Range	Core & Scan Info (Top → Bottom)			
1	0' - 4'	~~[illegible]~~	2250	2150	2200
Core Scan Results (cpm):		Void 12"			
2	4' - 8'	2300	2100	2150	2100
Core Scan Results (cpm):					
3	8 - 12'	2200	1900	2100	2200
Core Scan Results (cpm):					
4	12' - 16'	2050	2150	2000	////
Core Scan Results (cpm):					Void
5	16' - 20'	//// 2150	2050	2000	1950
Core Scan Results (cpm):		Void			

Comments: (record any drilling or sampling issues, e.g. refusal, groundwater, poor recovery, etc.)

CABRERA SERVICES, INC.

PROJECT NAME: Sylvania-Corning FUSRAP
LOCATION: Hicksville, NY
CLIENT: E & E

BORING LOG

Location ID: 5012-02
Page No.: 1 of 1

Contractor: ZEBRA	Driller: L. CABELLARO	Date Started: 05/31/07	Rock Refusal Depth:
Method: DIRECT PUSH	Water Elevation: N/A	Date Finished: 05/31/07	Rock Cored (FT):
Elevation: O.G.	Soil Drilled: SAND, SILT	Total Depth:	Casing Size:
Logged By: KMA, AC	Checked By: [signature]	METER INFO	Core Size:
Date/Time: 05/31/07		2221 w/GI 216482	MODEL 19 #221521
		CAL DUE 05-04-08	CAL DUE 10/15/07
		BKG 992 cpm	BKG 5 ur/hr, Con 5 ur/hr

Elevation	Depth (feet)	Casing Blows/Foot	DHG cpm	Sample No. & Penetration/ Recovery (feet)	Sample Type	Sample Description and Classification	Group Designation	Remarks	Equipment Installed	Lab Tests Performed
	1		1905		SOIL					
	2		1675							
	3		3528							
	4		2197							
	5		1901							
	6		2009							
	7		2045							
	8		1985							
	9		1377							
	10		1520							
	11		1359							
						AFTER 11' DEPTH HOLE COLLAPSED AND WAS INACCESSABLE. KMA				
			N/A							

Notes

KY

CABRERA SERVICES

RADIOLOGICAL · ENVIRONMENTAL · REMEDIATION

SOIL CORE SCAN LOG

Project: Sylvania-Corning FUSRAP Site
Project #: 07-1005.00
Location ID: DR-K
Total Depth: 20'
Page: 1 of 1

Date/Time: 5/31/07 1345
Instr. Model / SN: 2221 w/44-10 108862
Cal Due: 04-30-08
Ambient Bkg: 2151 cpm
Technician Init: KMA, AC

Sleeve #	Depth Range	Core & Scan Info (Top → Bottom)			
1	0' - 4'	XXXX	2250	2175	2200
Core Scan Results (cpm):		Void 12"			
2	4' - 8'	250	2250	2100	2000
Core Scan Results (cpm):		6" VOID FROM 4' TO 4'6"			
3 *	8 - 12'			2100	2300
Core Scan Results (cpm):		VOID FROM 8' TO 10'			
4	12' - 16'				2800
Core Scan Results (cpm):		VOID FROM 12' TO 15'			
5	16' - 20'		2150	2200	2200
Core Scan Results (cpm):		VOID 1.5'			

Comments: (record any drilling or sampling issues, e.g. refusal, groundwater encountered, etc. here)

CABRERA SERVICES, INC.

PROJECT NAME: Sylvania-Corning FUSRAP
LOCATION: Hicksville, NY
CLIENT: E & E

BORING LOG

Location ID: DR-K
Page No.: 1 of 1

Contractor: ZEBRA	Driller: L. CARBUANO	Date Started: 5/31/07	Rock Refusal Depth:
Method: DIRECT PUSH	Water Elevation: N/A	Date Finished: 5/31/07	Rock Cored (FT):
Elevation: O.G.	Soil Drilled: SAND, SILT ROCK	Total Depth: 17'	Casing Size:
Logged By: KMA AC	Checked By:	METER INFO	Core Size:
Date/Time: 05/31/07		2221 w/gl 216482	MODEL 19 # 221521
		CAL DUE 05-04-08	CAL DUE 10/15/07
		BKG 872 cpm	5 ur/hr BKG 5 ur/hr Con.

Elevation	Depth (feet)	Casing Blows/Foot	DHG cpm	Sample No. & Penetration/Recovery (feet)	Sample Type	Sample Description and Classification	Group Designation	Remarks	Equipment Installed	Lab Tests Performed
	1		900							
	2		1302							
	3		2114							
	4		3460							
	5		3059							
	6		1997							
	7		1722							
	8		2002							
	9		2097							
	10		2362							
	11		2490							
	12		2384							
	13		3461							
	14		2210							
	15		2292							
	16		3977							
	17		1573							

Notes

4864 cpm γ @ 16' 6" INTERVAL.

CABRERA SERVICES

RADIOLOGICAL · ENVIRONMENTAL · REMEDIATION

SOIL CORE SCAN LOG

Project: Sylvania-Corning FUSRAP Site
Project #: 07-1005.00
Location ID: DR-L
Total Depth: 16'
Page: 1 of 1

Date/Time: 5/31/07
Instr. Model / SN: 2221 w/44-10 108862
Cal Due: 04-30-08
Ambient Bkg: 2151 cpm
Technician Init: KMA, AC

Sleeve #	Depth Range	Core & Scan Info (Top → Bottom)			
1	0' - 4'	Void		2100	2150
Core Scan Results (cpm):					
2	4' - 8'	2150	2200	2300	2300
Core Scan Results (cpm):					
3 *	8 - 12'	~~Void~~	2200	2050	2000
Core Scan Results (cpm):		1' Void			
4	12' - 16'	2100	2050	2000	2250
Core Scan Results (cpm):					
5	16' - 20'				
Core Scan Results (cpm):					

Comments: (record any drilling/sampling issues such as refusal, groundwater, poor recovery, etc. here)

CABRERA SERVICES, INC.

PROJECT NAME: Sylvania-Corning FUSRAP
LOCATION: Hicksville, NY
CLIENT: E & E

BORING LOG

Location ID: DR-L
Page No.: of

Contractor: ZEBRA	Driller: L. CARELLARO	Date Started: 5/31/07	Rock Refusal Depth:
Method: DIRECT PUSH	Water Elevation: N/A	Date Finished: 5/31/07	Rock Cored (FT):
Elevation: O.G.	Soil Drilled: SAND, SILT	Total Depth: 15'	Casing Size:
Logged By: RMA, AC	Checked By:	METER INFO	Core Size:
Date/Time: 05/31/07		2221 w/ GI 216482	MODEL 19 221521
		CAL DUE 05-04-08	CAL DUE 10/15/07
		BKG 1198 cpm	BKG 6 UR, CON 6 UR

Elevation	Depth (feet)	Casing Blows/Foot	DHG cpm	Sample No. & Penetration/ Recovery (feet)	Sample Type	Sample Description and Classification	Group Designation	Remarks	Equipment Installed	Lab Tests Performed
	1		2499		SOIL					
	2		2867							
	3		2569							
	4		2059							
	5		2039							
	6		1894							
	7		1748							
	8		2168							
	9		1819							
	10		1471							
	11		1509							
	12		1132							
	13		1280							
	14		1206							
	15		1038							
						LAST 1' (16' DEPTH)				
			N	A						

Notes

CABRERA SERVICES

RADIOLOGICAL · ENVIRONMENTAL · REMEDIATION

SOIL CORE SCAN LOG

Project: Sylvania-Corning FUSRAP Site
Project #: 07-1005.00
Location ID: DR - J
Total Depth: 16'
Page: 1 of 1

Date/Time: 05/31/07
Instr. Model / SN: 2221 w/44-10 108762
Cal Due: 04-30-08
Ambient Bkg: 2151 cpm
Technician Init: KMA, AC

Sleeve #	Depth Range	Core & Scan Info (Top → Bottom)			
1	0' - 4'			2200	2250
Core Scan Results (cpm):	Top 2' void				
2	4' - 8'			2050	2150
Core Scan Results (cpm):	2' void from 4' to 6'				
3	8 - 12'		2100	2300	2200
Core Scan Results (cpm):	1'6" void from				
4	12' - 16'		2075	2050	2050
Core Scan Results (cpm):	1' void from 12' - 13'				
5	16' - 20'				
Core Scan Results (cpm):					

Comments: (record any drilling & sampling issues e.g. refusal, groundwater, poor recovery, etc. here)

CABRERA SERVICES, INC.

PROJECT NAME: Sylvania-Corning FUSRAP
LOCATION: Hicksville, NY
CLIENT: E & E

BORING LOG

Location ID: DR-J
Page No.: 1 of 1

Contractor: ZEBRA	Driller: L. CABELLARO	Date Started: 05/31/07	Rock Refusal Depth:
Method: DIRECT PUSH	Water Elevation: N/A	Date Finished: 05/31/07	Rock Cored (FT):
Elevation: O.G.	Soil Drilled: SAND, SILT	Total Depth: 14	Casing Size:
Logged By: KMA, AC	Checked By: SMT	METER INFO	Core Size:
Date/Time: 05/31/07,		2221 w/GI 216482	MODEL 19 #221521
		CAL DUE 05-04-08	CAL DUE 10/15/07
		BKG 1142 cpm	BKG 5 uR/hr CON 5 uR/hr

Elevation	Sample Information: Depth (feet)	Casing Blows/Foot	DHG cpm	Sample No. & Penetration/Recovery (feet)	Sample Type	Sample Description and Classification	Group Designation	Remarks	Equipment Installed	Lab Tests Performed
	1		4046							
	2		2411							
	3		1799							
	4		1689							
	5		2120							
	6		3452							
	7		3190							
	8		2751							
	9		2827							
	10		2525							
	11		1775							
	12		1659							
	13		1497							
	14		1328							

N/A

Notes

KX

CABRERA SERVICES

RADIOLOGICAL · ENVIRONMENTAL · REMEDIATION

SOIL CORE SCAN LOG

Project: Sylvania-Corning FUSRAP Site
Date/Time: 6/1/07
Project #: ~~07-1005.00~~ 07-1022.00 II
Instr. Model / SN: 2221 w/ 44-10 ; SN# 163685
Location ID: SBR1-SU11-14
Cal Due: 10/27/07
Total Depth:
Ambient Bkg: 1493 cpm
Page: 1 of 1
Technician Init: DA/GMT

Sleeve #	Depth Range	Core & Scan Info				
1	~~0'-4'~~ (0-5')	Top VOID	VOID	1400	1450	Bottom 1300
Core Scan Results (cpm):						
2	~~4'-8'~~ (5-10')	VOID	1200	1250	1350	1350
Core Scan Results (cpm):						
3	~~8-12'~~ (10-15')					
Core Scan Results (cpm):						
4	12' - 16'					
Core Scan Results (cpm):						
5	16' - 20'					
Core Scan Results (cpm):						

Comments: (record any drilling or sampling issues, e.g., refusal, groundwater, poor recovery, etc. here)

4 µR/hr @ BKGD

CABRERA SERVICES, INC.

PROJECT NAME: Sylvania-Corning FUSRAP
LOCATION: Hicksville, NY
CLIENT: E & E

BORING LOG
Location ID: SB21-SW-14
Page No.: 1 of 1

Contractor: E&E	Driller: ZEBRA	Date Started: 6/1/07	Rock Refusal Depth:
Method: 4" MACRO CORE GEOPROBE	Water Elevation: N/A	Date Finished: 6/1/07	Rock Cored (FT):
Elevation: N/A	Soil Drilled:	Total Depth:	Casing Size:
			Core Size: 3" x 5'
Logged By: DA/GMT	Checked By:		
Date/Time: 6/1/07		S/N NaI- 190205	BKG NaI (cpm) 80K
		S/N Mod19- 1018662	BKG Mod19 (uR/hr) 4

Elevation	Sample Information: Depth (feet)	Casing Blows/Foot	DHG cpm	Sample No. & Penetration/Recovery (feet)	Sample Type	Sample Description and Classification	Group Designation	Remarks	Equipment Installed	Lab Tests Performed
N/A						4 μR/hr @ Bore hole	N/A		N/A	

Notes

CABRERA SERVICES

RADIOLOGICAL · ENVIRONMENTAL · REMEDIATION

SOIL CORE SCAN LOG

Project: Sylvania-Corning FUSRAP Site
Project #: ~~07-1005.00~~ 07-1022.00 II
Location ID: SBR1-BRLC
Total Depth: 20
Page: 1 of 1

Date/Time: 6/1/07
Instr. Model / SN: 2221 w/ 44-10 ; SN# 163685
Cal Due: 10/27/07
Ambient Bkg: 1500 cpm
Technician Init: DA/GMT

Sleeve #	Depth Range	Core & Scan Info (Top / Bottom)			
1	0' - 4'	VOID	1325	1275	1500
	Core Scan Results (cpm):				
2	4' - 8'	1450	1400	1300	1450
	Core Scan Results (cpm):				
3	8 - 12'	VOID 1375	1400	1450	VOID
	Core Scan Results (cpm):	inverse void space			
4	12' - 16'	VOID	VOID	VOID	1400
	Core Scan Results (cpm):				
5	16' - 20'	1550	1400	1200	1300
	Core Scan Results (cpm):				

Comments: (record any drilling or sampling issues, e.g. refusal, groundwater, poor recovery, etc. here)

5 µR/hr @ BKGD

CABRERA SERVICES, INC.

PROJECT NAME: Sylvania-Corning FUSRAP
LOCATION: Hicksville, NY
CLIENT: E & E

BORING LOG
Location ID: 5921-DR-C
Page No.: 1 of 1

Contractor: E&E	Driller: ZEBRA	Date Started: 6/1/07	Rock Refusal Depth:
Method: 4' Macro Core Geoprobe	Water Elevation: N/A	Date Finished: 6/1/07	Rock Cored (FT):
Elevation: N/A	Soil Drilled:	Total Depth: 18'	Casing Size:
			Core Size: 1.5" x 4'
Logged By: DA/GMT	Checked By: gmt		
Date/Time: 6/1/07		S/N NaI- 190205	BKG NaI (cpm) 790
		S/N Mod19- 1018662	BKG Mod19 (μR/hr) 5

Elevation	Depth (feet)	Casing Blows/Foot	DHG cpm	Sample No. & Penetration/ Recovery (feet)	Sample Type	Sample Description and Classification	Group Designation	Remarks	Equipment Installed	Lab Tests Performed
N	1		1540		Soil	5μR/hr @ bore hole				
	2		2540							
	3		2365							
	4		1838							
	5		1491							
	6		1537							
	7		1597							
	8	N	2086	N			N	A	N	
	9	A	1648	A			A		A	
	10		1276							
	11		1700							
	12		1697							
	13		1197							
	14		190							
	15		1158							
	16		1103							
	17		1112							
	18		1015							
	N/A		N	A						
			N	A						
A										

Notes

CABRERA SERVICES

RADIOLOGICAL · ENVIRONMENTAL · REMEDIATION

SOIL CORE SCAN LOG

Project: Sylvania-Corning FUSRAP Site
Project #: ~~07-1005.00~~ 07-102200 II
Location ID: DR-E
Total Depth: 16
Page: 1 of ~~#~~ DA 1

Date/Time: 6/1/07
Instr. Model / SN: 2221 w/ 44-10; SN# 163685
Cal Due: 10/27/07
Ambient Bkg: 1440 cpm
Technician Init: DA / GMT

Sleeve #	Depth Range	Core & Scan Info (Top → Bottom)			
1	0' - 4'			1350	1400
Core Scan Results (cpm):					
2	4' - 8'		1400	1400	1300	1275
Core Scan Results (cpm):					
3	8 - 12'		1275	1300	1375	1300
Core Scan Results (cpm):					
4	12' - 16'		1400	1250	1300	
Core Scan Results (cpm):					
5	16' - 20'					
Core Scan Results (cpm):					

Comments: (record any drilling or sampling issues, e.g., refusal, groundwater, poor recovery, etc. here)

4 μR/hr @ BKGD

CABRERA SERVICES, INC.

PROJECT NAME: Sylvania-Corning FUSRAP
LOCATION: Hicksville, NY
CLIENT: E & E

BORING LOG
Location ID: 5021-BH-E
Page No.: 1 of 1

Contractor: E&E	Driller: ZEBRA	Date Started: 6/1/07	Rock Refusal Depth:
Method: 4" MACRO CORE GEOPROBE	Water Elevation: N/A	Date Finished: 6/1/07	Rock Cored (FT):
Elevation: N/A	Soil Drilled:	Total Depth: 11'	Casing Size:
			Core Size: 1.5" x 4'
Logged By: DA/GMT	Checked By:		
Date/Time: 6/1/07		S/N NaI- 190205	BKG NaI (cpm) 966-663
		S/N Mod19- 1018662	BKG Mod19 (uR/hr) 4

Elevation	Depth (feet)	Casing Blows/Foot	DHG cpm	Sample No. & Penetration/ Recovery (feet)	Sample Type	Sample Description and Classification	Group Designation	Remarks	Equipment Installed	Lab Tests Performed
N/A	1	N/A	1121	N/A	Soil	4 µR/hr @ Bore hole	N/A	N/A	N/A	N/A
	2		1429							
	3		2675							
	4		1793							
	5		1667							
	6		1668							
	7		1561							
	8		2065							
	9		1450							
	10		1661							
	11		1575							
	11		1575		DA					

Notes

CABRERA SERVICES

RADIOLOGICAL · ENVIRONMENTAL · REMEDIATION

SOIL CORE SCAN LOG

Project: Sylvania-Corning FUSRAP Site
Date/Time: 6/1/07
Project #: ~~07-1005.00~~ 07-1022.00 II
Instr. Model / SN: 2221 w/ 44-10 ; SN# 163685
Location ID: SBRI-SU11-15
Cal Due: 10/27/07
Total Depth: 16
Ambient Bkg: 1356 cpm
Page: 1 of 1
Technician Init: gmt

Sleeve #	Depth Range	Core & Scan Info				
1	0' - 4'	Top VOID 1300	1300	1400	1450	Bottom
	Core Scan Results (cpm):					
2	4' - 8'	VOID 1400	1375	1300	1250	
	Core Scan Results (cpm):					
3	8 - 12'	VOID 1475	1375	1350	1350	VOID
	Core Scan Results (cpm):					
4	12' - 16'					
	Core Scan Results (cpm):	1475, ½ GALLON OF SOIL Collected, Entire distance				
5	16' - 20'		A			
	Core Scan Results (cpm):	N				

Comments: (record any drilling or sampling issues, e.g. refusal, groundwater, poor recovery, etc. here)

CABRERA SERVICES, INC.

PROJECT NAME: Sylvania-Corning FUSRAP
LOCATION: Hicksville, NY
CLIENT: E & E

BORING LOG
Location ID: S201-SU11-15
Page No.: 1 of 1

Contractor: E&E	Driller: ZEBRA	Date Started: 6/1/07	Rock Refusal Depth:
Method: 4' MACRO CORE GEOPROBE	Water Elevation: N/A	Date Finished: 6/1/07	Rock Cored (FT):
Elevation: N/A	Soil Drilled:	Total Depth: 13'	Casing Size:
			Core Size: 1.5" x 4'
Logged By: BA / GMT	Checked By: GMT		
Date/Time: 6/1/07		S/N NaI - 190205	BKG NaI (cpm) 732
		S/N Mod 19 - 1018602	BKG Mod 19 (uR/hr) 4

Elevation	Depth (feet)	Casing Blows/Foot	DHG cpm	Sample No. & Penetration/Recovery (feet)	Sample Type	Sample Description and Classification	Group Designation	Remarks	Equipment Installed	Lab Tests Performed
N	1	N	1102	N	S017	4 μR/hr @ Borehole	N	A	N	A
	2		1431							
	3		3301							
	4		2525							
	5		1603							
	6		1330							
	7		1880							
	8		1918							
	9		1848							
	10		1207							
	11		1846							
	12		2013							
	13		1203							
A		A	N	A						

Notes

CABRERA SERVICES

RADIOLOGICAL · ENVIRONMENTAL · REMEDIATION

SOIL CORE SCAN LOG

Project: Sylvania-Corning FUSRAP Site
Project #: 07-1005.00
Location ID: DR-U
Total Depth: 16'
Page: 1 of 1

Date/Time: 06/01/07, 1020
Instr. Model / SN: 2221 w/44-10 108862
Cal Due: 04-30-08
Ambient Bkg: 1590 cpm
Technician Init: KMA, AC

Sleeve #	Depth Range	Core & Scan Info (Top → Bottom)			
1	0' - 4'		1450	1550	1675
Core Scan Results (cpm):		1' VOID			
2	4' - 8'	1550	1790	1520	1645
Core Scan Results (cpm):		6" VOID			
3	8 - 12'		1550		1600
Core Scan Results (cpm):		1' VOID		1' VOID	
4	12' - 16'		1500 (13'6")	(14'6") 1570	1675
Core Scan Results (cpm):		1' VOID		1' VOID	
5	16' - 20'				
Core Scan Results (cpm):					

Comments: (record any drilling or sampling issues, e.g. refusal, groundwater, poor recovery, etc. here)

CABRERA SERVICES, INC.

PROJECT NAME: Sylvania-Corning FUSRAP
LOCATION: Hicksville, NY
CLIENT: E & E

BORING LOG

Location ID: DR-U
Page No.: 1 of 1

Contractor: ZEBRA	Driller: L. CABELLARO	Date Started: 06/01/07	Rock Refusal Depth:
Method: DIRECT PUSH	Water Elevation: N/A	Date Finished: 06/01/07	Rock Cored (FT):
Elevation: O.G.	Soil Drilled: SAND, SILT	Total Depth: 14'	Casing Size:
		METER INFO	Core Size:
Logged By: KMA	Checked By: [illegible]	2221 w/GI 216482	MODEL 19 #221521
Date/Time: 06/01/07 1040		CAL DUE 05-04-08	CAL DUE 10/15/07
		BKG 965 cpm	BKG 5 ur/hr, Con 5 ur/hr

Elevation	Sample Information: Depth (feet)	Casing Blows/Foot	DHG cpm	Sample No. & Penetration/ Recovery (feet)	Sample Type	Sample Description and Classification	Group Designation	Remarks	Equipment Installed	Lab Tests Performed
	1		1579		SOIL					
	2		2008							
	3		3356							
	4		3757							
	5		3344							
	6		2124							
	7		1723							
	8		1604							
	9		1914							
	10		1434							
	11		1418							
	12		1421							
	13		1164							
	14		1124		SOIL					

N/A

Notes

KY

CABRERA SERVICES

RADIOLOGICAL · ENVIRONMENTAL · REMEDIATION

SOIL CORE SCAN LOG

Project: Sylvania-Corning FUSRAP Site
Project #: 07-1005.00
Location ID: BR-H
Total Depth: 16'
Page: 1 of 1

Date/Time: 06/01/07, 0935
Instr. Model / SN: 2221 w/44-10 108862
Cal Due: 04-30-08
Ambient Bkg: 1590 cpm
Technician Init: KMA, AC

Sleeve #	Depth Range	Core & Scan Info (Top → Bottom)			
1	0' - 4'		1450	1400	1450
Core Scan Results (cpm):	1' VOID				
2	4' - 8'	1500	1450	1475	1550
Core Scan Results (cpm):	6" VOID				
3	8 - 12'		1460	1650	1525
Core Scan Results (cpm):	1' VOID				
4	12' - 16'		1450	1475	1400
Core Scan Results (cpm):	1' VOID				
5	16' - 20'				
Core Scan Results (cpm):					

Comments: (recovery, drilling or sampling issues, oil, release, groundwater, poor recovery, etc. here)

CABRERA SERVICES, INC.

PROJECT NAME: Sylvania-Corning FUSRAP
LOCATION: Hicksville, NY
CLIENT: E & E

BORING LOG

Location ID: DR-H
Page No.: 1 of 1

Contractor: ZEBRA	Driller: L. CABRERA	Date Started: 06/01/07	Rock Refusal Depth:
Method: DIRECT PUSH	Water Elevation: N/A	Date Finished: 06/01/07	Rock Cored (FT):
Elevation: O.G.	Soil Drilled: SAND, SILT	Total Depth: 14'	Casing Size:
		MODEL INFO	Core Size:
Logged By: KMA, AC	Checked By:	2221 W/G1 216482	MODEL A 22521
Date/Time: 06/01/07		CAL DUE 05-04-08	CAL. DUE 10/15/07
		BKG 965	BKG 5 uR/hr, CON 5 uR/hr

Elevation	Depth (feet)	Casing Blows/Foot	DHG cpm	Sample No. & Penetration/ Recovery (feet)	Sample Type	Sample Description and Classification	Group Designation	Remarks	Equipment Installed	Lab Tests Performed
	1		1938		SOIL					
	2		1678							
	3		2177							
	4		2499							
	5		2591							
	6		2788							
	7		2290							
	8		2043							
	9		2114							
	10		1596							
	11		1450							
	12		1596							
	13		1264							
	14		1099		SOIL					
			N	A						

Notes

CABRERA SERVICES

RADIOLOGICAL · ENVIRONMENTAL · REMEDIATION

SOIL CORE SCAN LOG

Project: Sylvania-Corning FUSRAP Site
Project #: 07-1005.00
Location ID: AR - I
Total Depth: 20'
Page: 1 of 1

Date/Time: 06/01/07 08
Instr. Model / SN: 2221 w/44-10 108862
Cal Due: 04-30-08
Ambient Bkg: 1558 cpm
Technician Init: KMA, AC

Sleeve #	Depth Range	Core & Scan Info (Top → Bottom)			
1	0' - 4'		1450	1550	1625
Core Scan Results (cpm):		1st 12" VOID			
2	4' - 8'	1475	1600	1750	1575
Core Scan Results (cpm):					
3 *	8 - 12'		1550	1475	1500
Core Scan Results (cpm):		1' VOID			
4	12' - 16'		1600	1525	1425
Core Scan Results (cpm):		1' VOID			
5	16' - 20'			1700	1375
Core Scan Results (cpm):		2' VOID			

Comments (recordable drilling or sampling issues, e.g. refusal, groundwater, poor recovery, etc.) here:

CABRERA SERVICES, INC.

PROJECT NAME: Sylvania-Corning FUSRAP
LOCATION: Hicksville, NY
CLIENT: E & E

BORING LOG

Location ID: DR - I
Page No.: 1 of 1

Contractor: ZEBRA	Driller: L. CABERALO	Date Started: 06/01/07	Rock Refusal Depth:
Method: DIRECT PUSH	Water Elevation: N/A	Date Finished: 06/01/07	Rock Cored (FT):
Elevation: O.G.	Soil Drilled: SAND, SILT	Total Depth: 16'	Casing Size:
		METER INFO	Core Size:
Logged By: KMA, AC	Checked By:	2221 W/G1 216482	MODEL 19 #221521
Date/Time: 06/01/07		CAL DUE 05-04-08	CAL DUE 10/15/07
		BKG 429 cpm	BKG 5 ur/hr, CON 5 ur/hr

Elevation	Depth (feet)	Casing Blows/Foot	DHG cpm	Sample No. & Penetration/ Recovery (feet)	Sample Type	Sample Description and Classification	Group Designation	Remarks	Equipment Installed	Lab Tests Performed
	1		1266		SOIL					
	2		1775							
	3		2838							
	4		2323							
	5		2258							
	6		1976							
	7		1986							
	8		1890							
	9		1427							
	10		1425							
	11		1243							
	12		1212							
	13		1478							
	14		1249							
	15		1095							
	16		919		SOIL	HOLE COLLAPSED AFTER THIS DEPTH				
			N	A						

Notes

CABRERA SERVICES

RADIOLOGICAL · ENVIRONMENTAL · REMEDIATION

SOIL CORE SCAN LOG

Project: Sylvania-Corning FUSRAP Site
Project #: 07-1005.00
Location ID: DL - M
Total Depth: 12'
Page: 1 of 1

Date/Time: 06/01/07 1120
Instr. Model / SN: 2221 w/44-10 108862
Cal Due: 04-30-08
Ambient Bkg: 1859 cpm
Technician Init: RMA, AC

Sleeve #	Depth Range	Core & Scan Info (Top → Bottom)			
1	0' - 4'		1800	1725	1770
Core Scan Results (cpm):		1' VOID			
2	4' - 8'	1800	1800	1800	1600
Core Scan Results (cpm):		9" VOID			
3 *	8 - 12'	1750	1850	1800	1800
Core Scan Results (cpm):					
4	12' - 16'	←	N/A		→
Core Scan Results (cpm):		NO SAMPLES OR SCANS BARRELS STUCK IN HOLE.			
5	16' - 20'				
Core Scan Results (cpm):					

Comments (record any drilling or sampling issues, e.g. refusal, groundwater, poor recovery, etc.):

CABRERA SERVICES

RADIOLOGICAL · ENVIRONMENTAL · REMEDIATION

SOIL CORE SCAN LOG

Project: Sylvania-Corning FUSRAP Site
Date/Time: 6/1/07
Project #: ~~07-1005.00~~ 07-1022.00 II
Instr. Model / SN: 2221 w/ 44-10 ; SN# 163685
Location ID: SBR1 - ~~SB~~ DR-D
Cal Due: 10/27/07
Total Depth: 8'
Ambient Bkg: 1572 cpm
Page: 1 of 1
Technician Init: DA/GMT

Sleeve #	Depth Range	Core & Scan Info				
1	0' - 4'	Top VOID		1250	1250	1300 Bottom
	Core Scan Results (cpm):					
2	4' - 8'	VOID	1350	1300	1375	1275
	Core Scan Results (cpm):					
3	8 - 12'					
	Core Scan Results (cpm):	REFUSAL @ 8 ft				
4	12' - 16'					
	Core Scan Results (cpm):	A				
5	16' - 20'	N				
	Core Scan Results (cpm):					

Comments: (record any drilling or sampling issues, e.g., refusal, groundwater, poor recovery, etc. here)

5 μR/hr @ BKGD

CABRERA SERVICES, INC.

PROJECT NAME: Sylvania-Corning FUSRAP
LOCATION: Hicksville, NY
CLIENT: E & E

BORING LOG
Location ID: S921-BR-D
Page No.: 1 of 1

Contractor: E&E	Driller: ZEBRA	Date Started: 6/1/07	Rock Refusal Depth:
Method: 4" MACRO CORE GEOPROBE	Water Elevation: N/A	Date Finished: 6/1/07	Rock Cored (FT):
Elevation: N/A	Soil Drilled:	Total Depth:	Casing Size:
			Core Size: 1.5" x 4'
Logged By: DA/GMF	Checked By: gw		
Date/Time: 6/1/07		S/N NaI- 190205	BKG NaI (cpm) 733
		S/N Mod19- 1018662	BKG Mod19 (uR/hr) 5

Elevation	Sample Information: Depth (feet)	Casing Blows/Foot	DHG cpm	Sample No. & Penetration/Recovery (feet)	Sample Type	Sample Description and Classification	Group Designation	Remarks	Equipment Installed	Lab Tests Performed
N/A						uR/hr @ bore hole	N/A		N/A	

Notes

Borehole collapsed, no DHG possible

CABRERA SERVICES

RADIOLOGICAL · ENVIRONMENTAL · REMEDIATION

SOIL CORE SCAN LOG

Project: Sylvania-Corning FUSRAP Site
Project #: 07-1005.00
Location ID: DRY-E
Total Depth: 16'
Page: 1 of 1

Date/Time: 06/04/07, 1530
Instr. Model / SN: 2221 W/44-10 108862
Cal Due: 04-30-08
Ambient Bkg: 1620 cpm
Technician Init: KMA, AJC

Sleeve #	Depth Range	Core & Scan Info (Top / Bottom)			
1	0' - 4'		1650	1650	1550
	Core Scan Results (cpm):	1' VOID			
2	4' - 8'	1600	1450	1500	1500
	Core Scan Results (cpm):				
3	8 - 12'		1525	1535	1440
	Core Scan Results (cpm):	8'-9' VOID			
4	12' - 16'		1525	1500	1525
	Core Scan Results (cpm):	12'-13' VOID			
5	16' - 20'		N		
	Core Scan Results (cpm):	A			

Comments: (recorder, drilling or sampling issues, e.g. refusal, groundwater, cor recovery, etc. here)

CABRERA SERVICES, INC.

PROJECT NAME: Sylvania-Corning FUSRAP
LOCATION: Hicksville, NY
CLIENT: E & E

BORING LOG
Location ID: DTY-E
Page No.: 1 of 1

Contractor: ZEBRA	Driller:	Date Started: 6/4/07	Rock Refusal Depth:
Method: DIRECT PUSH	Water Elevation: N/A	Date Finished: 6/4/07	Rock Cored (FT):
Elevation: O.G.	Soil Drilled: SAND, SILT	Total Depth: 15'	Casing Size:
		METER INFO	Core Size:
Logged By: RMA, AJC	Checked By: [illegible]	2221 w/GI 216482	MODEL 19 221521
Date/Time: 06/04/07, 1600		CAL DUE 05-04-08	CAL DUE 10/15/07
		BKG CPM 1239	BKG 5 UR/HR CON 5 UR/HR

Elevation	Depth (feet)	Casing Blows/Foot	DHG cpm	Sample No. & Penetration/Recovery (feet)	Sample Type	Sample Description and Classification	Group Designation	Remarks	Equipment Installed	Lab Tests Performed
	1		1639							
	2		1478							
	3		1592							
	4		1637							
	5		1869							
	6		1620							
	7		2150							
	8		1771							
	9		1663							
	10		1124							
	11		1289							
	12		1046							
	13		943							
	14		1008							
	15		907							

Notes

CABRERA SERVICES

RADIOLOGICAL • ENVIRONMENTAL • REMEDIATION

SOIL CORE SCAN LOG

Project: Sylvania-Corning FUSRAP Site
Date/Time: 06/04/07
Project #: 07-1005.00
Instr. Model / SN: 2221 w/44-10 108862
Location ID: SU 10-17
Cal Due: 04-30-08
Total Depth: 9'
Ambient Bkg: 2204 cpm
Page: 1 of 1
Technician Init: KMA, AJC

Sleeve #	Depth Range	Core & Scan Info (Top / Bottom)			
1	0' - 4'			1700	1700
	Core Scan Results (cpm):	2' VOID			
2	4' - 8'	1750	1850	1750	1700
	Core Scan Results (cpm):				
3 *	8 - ~~12'~~ 9'	1850	9'	N/A	
	Core Scan Results (cpm):	REFUSAL @ 9' DEPTH, KMA			
4	12' - 16'		N	A	
	Core Scan Results (cpm):				
5	16' - 20'		N	A	
	Core Scan Results (cpm):				

Comments: (record any drilling or sampling issues, e.g. refusal, groundwater, poor recovery, etc. here)

CABRERA SERVICES, INC.

PROJECT NAME: Sylvania-Corning FUSRAP
LOCATION: Hicksville, NY
CLIENT: E & E

BORING LOG
Location ID: SU10-17
Page No.: of

Contractor: ZEBRA	Driller:	Date Started: 06/04/07	Rock Refusal Depth:
Method: DIRECT PUSH	Water Elevation: N/A	Date Finished: 06/04/07	Rock Cored (FT):
Elevation: O.G.	Soil Drilled: SAND, SILT	Total Depth: 2'	Casing Size:
		MODEL INFO	Core Size:
Logged By: AMA, AJC	Checked By: GWK	2221 w/GI 216482	MODEL 19 #22152
Date/Time: 06/04/07		CAL DUE 05-01-08	CAL DUE 10/15/07
		BKG 1239	BKG 5 uR/hr, Con. 5 uR/hr

Elevation	Depth (feet)	Casing Blows/Foot	DHG cpm	Sample No. & Penetration/ Recovery (feet)	Sample Type	Sample Description and Classification	Group Designation	Remarks	Equipment Installed	Lab Tests Performed
	1		1680		SOIL					
	2		1008		SOIL					
						- REFUSAL @ THIS DEPTH FOR LOGS, HOLE COLLAPSED - CAVED-IN.				
			N	A						

Notes BKG ~~555~~

CABRERA SERVICES

RADIOLOGICAL · ENVIRONMENTAL · REMEDIATION

SOIL CORE SCAN LOG

Project: Sylvania-Corning FUSRAP Site
Date/Time: 06/04/07, 930
Project #: 07-1005.00
Instr. Model / SN: 2221 w/44-10 108862
Location ID: SU 10-16
Cal Due: 04-30-08
Total Depth: 12'
Ambient Bkg: 2204 cpm
Page: 1 of 1
Technician Init: KMA, AJC

Sleeve #	Depth Range	Core & Scan Info (Top → Bottom)			
1	0' - 4'	1900	1900	1750	1875
Core Scan Results (cpm):		6" VOID			9" VOID
2	4' - 8'	1825	1825	1775	1780
Core Scan Results (cpm):					
3	8 - 12'	1890	1900	1850	1825
Core Scan Results (cpm):					
4	12' - 16'	←	N	A	→
Core Scan Results (cpm):					
5	16' - 20'	←	N	A	→
Core Scan Results (cpm):					

Comments: (recovery, drilling or sampling issues, e.g. refusal, groundwater, non-recovery, etc. here)

CABRERA SERVICES, INC.

PROJECT NAME: Sylvania-Corning FUSRAP
LOCATION: Hicksville, NY
CLIENT: E & E

BORING LOG

Location ID: SU 10-16
Page No.: of

Contractor: ZEBRA	Driller:	Date Started: 06/04/07	Rock Refusal Depth:
Method: DIRECT PUSH	Water Elevation: N/A	Date Finished: 06/04/07	Rock Cored (FT):
Elevation: O.G.	Soil Drilled: SAND, SILT	Total Depth: 10'	Casing Size:
		MODEL INFO	Core Size:
Logged By: KMA, AJC	Checked By: GW	2221 w/GI 216482	MODEL 19 221527
Date/Time: 06/04/07		CAL DUE 05-04-08	CAL DUE 10/15/07
		BKG 1239 cpm	BKG 5 ur/hr, CON 5 ur/hr

Elevation	Depth (feet)	Casing Blows/Foot	DHG cpm	Sample No. & Penetration/ Recovery (feet)	Sample Type	Sample Description and Classification	Group Designation	Remarks	Equipment Installed	Lab Tests Performed
	1		3565		SOIL					
	2		3261							
	3		1862							
	4		1633							
	5		1736							
	6		2509							
	7		2848							
	8		2272							
	9		2305							
	10		1877		SOIL	HOLE COLLAPSED @ 10' DEPTH				
			N	A						

Notes

CABRERA SERVICES

RADIOLOGICAL • ENVIRONMENTAL • REMEDIATION

SOIL CORE SCAN LOG

Project: Sylvania-Corning FUSRAP Site
Date/Time: 06/04/07 1025
Project #: 07-1005.00
Instr. Model / SN: 2221 w/44-10 108862
Location ID: SU 10-14
Cal Due: 04-30-08
Total Depth: 14'
Ambient Bkg: 2204 cpm
Page: 1 of 1
Technician Init: RMA, AJC

Sleeve #	Depth Range	Core & Scan Info (Top / Bottom)
1	0' - 4'	1700 / 1750
	Core Scan Results (cpm):	0" - 1'6" VOID NO -
2	4' - 8'	2075
	Core Scan Results (cpm):	RECOVERY 3'-6', VOID 6'-7'
3	8 - 12'	2000 / 1700 / 1675
	Core Scan Results (cpm):	VOID ~~@70~~ 9'-10'
4	12' - 16'	14' / 1800 / 1825
	Core Scan Results (cpm):	NO RECOVERY / REFUSAL @ 14'
5	16' - 20'	
	Core Scan Results (cpm):	

Comments: (record any drilling or sampling issues, e.g. refusal, groundwater, poor recovery, etc. here)

CABRERA SERVICES, INC.

PROJECT NAME: Sylvania-Corning FUSRAP
LOCATION: Hicksville, NY
CLIENT: E & E

BORING LOG

Location ID: 5010-14
Page No.: 1 of 1

Contractor: ZEBRA	Driller:	Date Started: 06/04/07	Rock Refusal Depth: 14'
Method: DIRECT PUSH	Water Elevation: N.A	Date Finished: 06/04/07	Rock Cored (FT):
Elevation: O.G.	Soil Drilled: SAND, SILT	Total Depth: 13'	Casing Size:
	ROCK	MODEL INFO	Core Size:
Logged By: KMA, AJC.	Checked By:	2221 W/GI 216482	MODEL 19 227521
Date/Time: 06/04/07 1100		CAL DUE 05-04-08	CAL DUE 10/15/07
		BKGD 1239 CPM	BKGD 5 ur/hr CON 5 ur/hr

Elevation	Depth (feet)	Casing Blows/Foot	DHG cpm	Sample No. & Penetration/ Recovery (feet)	Sample Type	Sample Description and Classification	Group Designation	Remarks	Equipment Installed	Lab Tests Performed
	1		1924		SOIL					
	2		1869							
	3		1942							
	4		2006							
	5		2107							
	6		1895							
	7		1939							
	8		2136							
	9		1541							
	10		1476							
	11		2023							
	12		1886							
	13		1220		SOIL					

Notes

CABRERA SERVICES

RADIOLOGICAL · ENVIRONMENTAL · REMEDIATION

SOIL CORE SCAN LOG

Project: Sylvania-Corning FUSRAP Site
Date/Time: 06/04/07
Project #: 07-1005.00
Instr. Model / SN: 2221 w/44-10 108862
Location ID: SU 11-02
Cal Due: 04-30-08
Total Depth: 12'
Ambient Bkg: 1620 cpm
Page: 1 of 1
Technician Init: KMA, AC

Sleeve #	Depth Range	Core & Scan Info (Top)			(Bottom)
1	0' - 4'	XX/X/	1700	1780	1550
Core Scan Results (cpm):		void 12"			
2	4' - 8'	1675	1725	1650	1600
Core Scan Results (cpm):					
3	8 - 12'	1750	1600	1625	1625
Core Scan Results (cpm):					
4	12' - 16'		N		
Core Scan Results (cpm):					
5	16' - 20'		A		
Core Scan Results (cpm):					

Comments: (record any drilling or sampling issues, e.g. refusal, groundwater, poor recovery, etc. here)

CABRERA SERVICES, INC.

PROJECT NAME: Sylvania-Corning FUSRAP
LOCATION: Hicksville, NY
CLIENT: E & E

BORING LOG

Location ID: SU 11-02
Page No.: 1 of 1

Contractor: ZEBRA	Driller:	Date Started: 06/04/07	Rock Refusal Depth:
Method: DIRECT PUSH	Water Elevation: N/A.	Date Finished: 06/04/07	Rock Cored (FT):
Elevation: O.G.	Soil Drilled: SAND, SILT	Total Depth: 10'	Casing Size:
		MODEL INFO	Core Size:
Logged By: KMA, AJC	Checked By:	2221 w/GL 216482	MODEL 19 #221521
Date/Time: 06/04/07 1215		CAL DUE 05-04-08	CAL DUE 10/15/07
		BKG ~~[illegible]~~	BKG 4 ur/hr CON 4 ur/hr

Elevation	Depth (feet)	Casing Blows/Foot	DHG cpm	Sample No. & Penetration/ Recovery (feet)	Sample Type	Sample Description and Classification	Group Designation	Remarks	Equipment Installed	Lab Tests Performed
	1		3251		SOIL					
	2		3251							
	3		2806							
	4		1906							
	5		1631							
	6		1861							
	7		1557							
	8		1886							
	9		1865							
	10		1430		SOIL					

Notes

CABRERA SERVICES, INC.

PROJECT NAME: Sylvania-Corning FUSRAP
LOCATION: Hicksville, NY
CLIENT: E & E

BORING LOG

Location ID: SU 11-06
Page No.: 1 of 1

Contractor: ZEBRA	Driller:	Date Started: 06/04/07	Rock Refusal Depth:
Method: DIRECT PUSH	Water Elevation: N/A	Date Finished: 06/04/07	Rock Cored (FT):
Elevation: O.G.	Soil Drilled: SAND, SILT	Total Depth: 7'	Casing Size:
		METER INFO	Core Size:
Logged By: KMA, AJC	Checked By: [illegible]	2221 w/GI 216482	MODEL PI #221 SL1
Date/Time: 06/04/07		CAL DUE 05-04-08	CAL DUE 10/15/07
		BKG CPM 958	BKG 5 ur/hr Con 5 ur/hr

Elevation	Sample Information: Depth (feet)	Casing Blows/Foot	DHG cpm	Sample No. & Penetration/ Recovery (feet)	Sample Type	Sample Description and Classification	Group Designation	Remarks	Equipment Installed	Lab Tests Performed
	1		3829		SOIL					
	2		3636							
	3		3404							
	4		2549							
	5		1421							
	6		1584							
	7	~~1840~~	1890		SOIL					

N

A

Notes BKG 958

KX

CABRERA SERVICES

RADIOLOGICAL · ENVIRONMENTAL · REMEDIATION

SOIL CORE SCAN LOG

Project: Sylvania-Corning FUSRAP Site
Date/Time: 06/04/07
Project #: 07-1005.00
Instr. Model / SN: 2221 w/44-10 108762
Location ID: SU 11-06
Cal Due: 04-30-08
Total Depth: 9'
Ambient Bkg: 1620 cpm
Page: 1 of 1
Technician Init: KMA, AJC

Sleeve #	Depth Range	Core & Scan Info (Top → Bottom)			
1	0' - 4'	1625	1700	1800	1700
Core Scan Results (cpm):					
2	4' - 8'	1650	1650	1550	1550
Core Scan Results (cpm):					
3	8 - 12'	1550			
Core Scan Results (cpm):					
4	12' - 16'				
Core Scan Results (cpm):		N/A			
5	16' - 20'				
Core Scan Results (cpm):		N/A			

Comments: (record any drilling or sampling issues e.g. refusal, groundwater, poor recovery, etc.)

CABRERA SERVICES

RADIOLOGICAL · ENVIRONMENTAL · REMEDIATION

SOIL CORE SCAN LOG

Project: Sylvania-Corning FUSRAP Site
Date/Time: 06/04/07
Project #: 07-1005.00
Instr. Model / SN: 2221 W/44-10 108862
Location ID: SU 11-01
Cal Due: 04-30-08
Total Depth: 16'
Ambient Bkg: 1620 cpm
Page: 1 of 1
Technician Init: KMA, AJC

Sleeve #	Depth Range	Core & Scan Info (Top / Bottom)			
1	0' - 4'		1825	1850	1875
	Core Scan Results (cpm):	1' VOID			
2	4' - 8'	1550	1575	1650	1750
	Core Scan Results (cpm):				
3	8 - 12'		1550	1650	1700
	Core Scan Results (cpm):	8'-9' VOID			
4	12' - 16'	1550	1600	1450	1525
	Core Scan Results (cpm):				
5	16' - 20'				
	Core Scan Results (cpm):				

Comments: (record any drilling or sampling issues, e.g. refusal, groundwater, log recovery, etc. here)

CABRERA SERVICES, INC.

PROJECT NAME: Sylvania-Corning FUSRAP
LOCATION: Hicksville, NY
CLIENT: E & E

BORING LOG
Location ID: SU11-07
Page No.: 1 of 1

Contractor: ZEBRA	Driller:	Date Started: 6/4/07	Rock Refusal Depth:
Method: DIRECT PUSH	Water Elevation: NA	Date Finished: 06/04/07	Rock Cored (FT):
Elevation: O.G	Soil Drilled: SAND, SILT	Total Depth: 15	Casing Size:
		METER INFO	Core Size:
Logged By: KMA, AJC	Checked By: [illegible]	2221 W/GI 216482	MODEL 19 221521
Date/Time: 06/04/07		CAL DUE 05-04-08	CAL DUE 10/15/07
		BKG CPM 945	BKG 5 UR/HR CON 5 UR/HR

Elevation	Depth (feet)	Casing Blows/Foot	DHG cpm	Sample No. & Penetration/ Recovery (feet)	Sample Type	Sample Description and Classification	Group Designation	Remarks	Equipment Installed	Lab Tests Performed
	1		2196							
	2		3534							
	3		2569							
	4		1633							
	5		1429							
	6		1350							
	7		1447							
	8		1456							
	9		1769							
	10		1521							
	11		1452							
	12		1367							
	13		1228							
	14		1127							
	15		1019							

NA

Notes BKG 985

CABRERA SERVICES

RADIOLOGICAL • ENVIRONMENTAL • REMEDIATION

SOIL CORE SCAN LOG

Project: Sylvania-Corning FUSRAP Site
Date/Time: 6/4/07
Project #: ~~07-1005.00~~ 07-1022.00 II
Instr. Model / SN: 2221 w/ 44-10 ; SN# 163685
Location ID: SBL1-SU11-14
Cal Due: 10/27/07
Total Depth: 32'
Ambient Bkg: 1447 cpm
Page: 1 of 2
Technician Init: DA/GMT

Sleeve #	Depth Range	Core & Scan Info					
1	~~10'-15'~~ 8-13' **	Top / VOID	1550	1325	1350	1375	Bottom 1300
Core Scan Results (cpm):							
2	~~15'-20'~~ 13-16'	VOID			1300	1275	1325
Core Scan Results (cpm):							
3	16'-20'	VOID		VOID	VOID	1400	1400
Core Scan Results (cpm):							
4	20'-24	VOID		VOID	1400	1350	1375
Core Scan Results (cpm):							
5	24'-28'	VOID		1400	1400	1300	1300
Core Scan Results (cpm):							

Comments: (record any drilling or sampling issues, e.g. refusal, groundwater, poor recovery, etc. here)

* Continuation of Last week.

** 5ft borings for sleeve, #1

* 4 ft depth for sleeve #2 etc... (Sleeves are 5' though.)

CABRERA SERVICES

RADIOLOGICAL • ENVIRONMENTAL • REMEDIATION

SOIL CORE SCAN LOG

Project: Sylvania-Corning FUSRAP Site
Date/Time: 6/4/07
Project #: ~~07-1005.00~~ 07-1022.00 II
Instr. Model / SN: 2221/W/44-10 ; SN# 163685
Location ID: SBR1-SU11-14
Cal Due: 10/27/07
Total Depth: 32'
Ambient Bkg: 1447 cpm cpm
Page: 2 of 2
Technician Init: DA/GMT

Sleeve #	Depth Range	Core & Scan Info (Top / Bottom)				
1	28-32'	VOID	1550	1500	1300	1500
Core Scan Results (cpm):						
2	4' - 8'					
Core Scan Results (cpm):						
3	8 - 12'					
Core Scan Results (cpm):						
4	12' - 16'					
Core Scan Results (cpm):						
5	16' - 20'					
Core Scan Results (cpm):						

NA

Comments: (record any drilling or sampling issues, e.g., refusal, groundwater, poor recovery, etc. here)

BKG @ 4μR/hr

CABRERA SERVICES, INC.

PROJECT NAME: Sylvania-Corning FUSRAP
LOCATION: Hicksville, NY
CLIENT: E & E

BORING LOG
Location ID: SW1-SC11-14
Page No.: 1 of 1

Contractor: E&E	Driller: ZEBRA	Date Started: 6/4/07	Rock Refusal Depth:
Method: 5' MACRO CORE GEOPROBE	Water Elevation: N/A	Date Finished: 6/4/07	Rock Cored (FT):
Elevation: N/A	Soil Drilled:	Total Depth: 16'	Casing Size:
			Core Size: 2.0" x 5'
Logged By: DA/GMT	Checked By: GMT		
Date/Time: 6/4/07		S/N NaI- 190205	BKG NaI (cpm) 731
		S/N Mod19- 1018662	BKG Mod19 (uR/hr) 4uR

Elevation	Depth (feet)	Casing Blows/Foot	DHG cpm	Sample No. & Penetration/ Recovery (feet)	Sample Type	Sample Description and Classification	Group Designation	Remarks	Equipment Installed	Lab Tests Performed
N	1		1446		SOIL	4µR/hr @ BKG hole	N	A	N	A
	2		3219							
	3		2260							
	4		1558							
	5		1538							
	6		1625							
	7	N	1662							
	8	A	2130	N						
	9		1447	A						
	10		1402							
	11		2040							
	12		1352							
	13		1285							
	14		1325							
	15		1085							
	16		1294							
			N	A						
A										

Notes

CABRERA SERVICES

RADIOLOGICAL • ENVIRONMENTAL • REMEDIATION

SOIL CORE SCAN LOG

Project: Sylvania-Corning FUSRAP Site
Date/Time: 6/4/07
Project #: ~~07-1005.00~~ 07-1022.00 II
Instr. Model / SN: 2221 w/ 44-10 ; SN# 163685
Location ID: SBR1-SU11-13
Cal Due: 10/27/07
Total Depth: (491) 50
Ambient Bkg: 1465 cpm
Page: 1 of 2
Technician Init: DA/GMT

Sleeve #	Depth Range	Core & Scan Info				
1	0'-~~4'~~ 5	Top VOID	VOID	1450	1400	Bottom VOID
	Core Scan Results (cpm):					
2	5'-10' ~~4'-8'~~	VOID	1400	1500	1450	1450
	Core Scan Results (cpm):					
3	10'-15'	VOID	VOID	1350	1400	1400
	Core Scan Results (cpm):					
4	15'-20'		1400	1500	1300	1350
	Core Scan Results (cpm):					
5	~~16'-20'~~ 20-25			1400	1550	1400
	Core Scan Results (cpm):					

Comments: (record any drilling or sampling issues, e.g. refusal, groundwater, poor recovery, etc. here)

BKGD.@ 4mR/hr

CABRERA SERVICES

RADIOLOGICAL · ENVIRONMENTAL · REMEDIATION

SOIL CORE SCAN LOG

Project: Sylvania-Corning FUSRAP Site
Date/Time: 6/4/07
Project #: ~~07-1005.00~~ 07-102200 II
Instr. Model / SN: 2221 w/ 4440; SN# 163685
Location ID: SBR1-SW1-13
Cal Due: 10/27/07
Total Depth: 44' (50)
Ambient Bkg: 1465 cpm
Page: 2 of 2
Technician Init: DA / GMT

Sleeve #	Depth Range	Core & Scan Info (Top → Bottom)				
1	20'			1300	1300	1325
	Core Scan Results (cpm):					
2	25'-30			1450	1350	1400
	Core Scan Results (cpm):					
3	~~8-12'~~ 30-35	VOID		1450	1300	1400
	Core Scan Results (cpm):					
4	~~12'-16'~~ 35-40	VOID		1500	1350	1300
	Core Scan Results (cpm):					
5	~~16'-20'~~ 40-45			1300	1350	1350
	Core Scan Results (cpm):					

Comments: *(record any drilling or sampling issues, e.g., refusal, groundwater, poor recovery, etc. here)*

CABRERA SERVICES, INC.

PROJECT NAME: Sylvania-Corning FUSRAP
LOCATION: Hicksville, NY
CLIENT: E & E

BORING LOG
Location ID: SB21-SU 11-13
Page No.: 1 of 2

Contractor: E&E	Driller: ZEBRA	Date Started: 6/4/07	Rock Refusal Depth:
Method: 4" MACRO CORE GEOPROBE	Water Elevation: N/A	Date Finished: 6/4/07	Rock Cored (FT):
Elevation: N/A	Soil Drilled: 50	Total Depth: 50	Casing Size:
			Core Size: 2" x 5'
Logged By: 6/4/07	Checked By: SMJ		
Date/Time: SMJ		S/N NaI- 190205	BKG NaI (cpm) 834
		S/N Mod19- 1016662	BKG Mod19 (uR/hr) 4

Elevation	Depth (feet)	Casing Blows/Foot	DHG cpm	Sample No. & Penetration/ Recovery (feet)	Sample Type	Sample Description and Classification	Group Designation	Remarks	Equipment Installed	Lab Tests Performed
	1	1544	→		SOIL	4 µR/hr @ bore hole				
	2	1700	→							
	3	2072	→							
	4	1486	→							
	5	1567	→							
	6	2018	→							
	7	1638	→							
	8	2357	→							
	9	2220	→							
	10	1620	→							
	11	1625	→							
	12	1876	→	N						
	13	1504	→							
	14	1206	→				N	A	N	A
	15	1600	→	A						
	16	1134	→							
	17	1116	→							
	18	929	→							
	19	872	→							
	20	892	→							
	21	920	→							
	22	1007	→							
	23	859	→							
	24	964	→							
	25	1044	→							
	26	880	→							
	27	841	→							
	28	791	→							
	29	915	→							
	30	734	→							

Notes

CABRERA SERVICES, INC.

PROJECT NAME: Sylvania-Corning FUSRAP
LOCATION: Hicksville, NY
CLIENT: E & E

BORING LOG
Location ID: SB21-SU11-13
Page No.: 2 of 2

Contractor: E&E	Driller: ZEBRA	Date Started: 6/4/07	Rock Refusal Depth:
Method: 4' MACRO CORE GEOPROBE	Water Elevation: N/A	Date Finished: "	Rock Cored (FT):
Elevation: N/A	Soil Drilled: 55	Total Depth: 50'	Casing Size:
			Core Size: 2" x 5'
Logged By: RMT	Checked By: RMT		
Date/Time: 6/4/07		S/N NaI- 190205	BKG NaI (cpm) 834
		S/N Mod19- 1018602	BKG Mod19 (uR/hr) 4 uR/hr

Elevation	Depth (feet)	Casing Blows/Foot	DHG cpm	Sample No. & Penetration/ Recovery (feet)	Sample Type	Sample Description and Classification	Group Designation	Remarks	Equipment Installed	Lab Tests Performed
	31	730	→							
	32	881	→							
	33	1044	→							
	34	937	→							
	35	725	→							
	36	827	→							
	37	855	→							
N	38	818	→							
	39	875	→							
	40	1099	→							
	41	1156	→							
	42	934	→							
	43	820	→	N						
A	44	842	→				N	A	N	
	45	1036	→		A					
	46	734	→							
	47	690	→							
	48	623	→						A	
	49	827	→							
	50	958	→							
		N								
					N					
		A								
					A					

Notes

CABRERA SERVICES

RADIOLOGICAL • ENVIRONMENTAL • REMEDIATION

SOIL CORE SCAN LOG

Project: Sylvania-Corning FUSRAP Site
Date/Time: 6/4/07
Project #: ~~07-1005.00~~ 07-1022.00 II
Instr. Model / SN: 2221W/44-10 ; SN #163685
Location ID: DR-0
Cal Due: 10/27/07
Total Depth: 20'
Ambient Bkg: ~~1382~~ DA 1382 cpm
Page: 1 of 1
Technician Init: DA/GMT

Sleeve #	Depth Range	Core & Scan Info (Top / Bottom)				
1	~~0'-4'~~ 0-5	VOID	1650	1550	1475	1300
Core Scan Results (cpm):						
2	~~4'-8'~~ 5-10	VOID	VOID	VOID	1350	1300
Core Scan Results (cpm):						
3	~~8'-12'~~ 10-15'	VOID		1225	1350	1400
Core Scan Results (cpm):						
4	~~12'-16'~~ 15'-20'	VOID	VOID	1325	1300	1450
Core Scan Results (cpm):						
5	~~16'-20'~~ 20'-25'			A		
Core Scan Results (cpm):		N				

Comments: (record any drilling or sampling issues, e.g., refusal, groundwater, poor recovery, etc. here)

Bkgd @ 4mR/hr
5ft' liners

CABRERA SERVICES, INC.

PROJECT NAME: Sylvania-Corning FUSRAP
LOCATION: Hicksville, NY
CLIENT: E & E

BORING LOG
Location ID: ~~SB21-DR-0~~ DR-0
Page No.: 1 of 1

Contractor: F&E	Driller: ZEBRA	Date Started: 6/4/07	Rock Refusal Depth:
Method: 4' MACRO CORE GEOPROBE	Water Elevation: N/A	Date Finished: 6/4/07	Rock Cored (FT):
Elevation: N/A	Soil Drilled:	Total Depth: 20	Casing Size:
			Core Size: 2" x 5'
Logged By: DA/GMT	Checked By: gmt		
Date/Time: 6/4/07		S/N NaI-190205	BKG NaI (cpm)
		S/N Mod19-101662	BKG Mod19 (uR/hr) 4

Elevation	Depth (feet)	Casing Blows/Foot	DHG cpm	Sample No. & Penetration/ Recovery (feet)	Sample Type	Sample Description and Classification	Group Designation	Remarks	Equipment Installed	Lab Tests Performed
	1	2278	→		Soil	4 μR/hr @ Borehole				
	2	2368	→							
	3	1849	→							
	4	2111	→	N						
	5	2218	→							
	6	2235	→							
	7	2186	→							
N	8	2085	→							
	9	1787	→							
	10	1478	→							
	11	1415	→	A						
	12	1367	→							
A	13	1239	→							
	14	1148	→				N	A	N	
	15	957	→							
	16	1061	→							
	17	1069	→							A
	18	962	→							
	19	1012	→							
	20	936	→							
			N							
				A						

Notes

CABRERA SERVICES

RADIOLOGICAL · ENVIRONMENTAL · REMEDIATION

SOIL CORE SCAN LOG

Project: Sylvania-Corning FUSRAP Site
Date/Time: 6/4/07
Project #: ~~07-1005.00~~ 07-1022.00 II
Instr. Model / SN: 2221 w/ 44-10 ; SN# 163685
Location ID: DR-N
Cal Due: 10/27/07
Total Depth: 15
Ambient Bkg: 1531 cpm
Page: 1 of 1
Technician Init: JA

Sleeve #	Depth Range	Core & Scan Info (Top / Bottom)	Core Scan Results (cpm)
1	~~0'-4'~~ 0-5	1480 / 1375	
2	~~4'-8'~~ 5-10	1450 / 1550 / 1350	
3	~~8-12'~~ 10-15	VOID / VOID / 1250 / 1350 ~~1250~~ / 1350	
4	~~12'-16'~~ ~~15-20~~		
5	~~16'-20'~~ 20-25	N	

Core Scan Results (cpm):

Comments: (record any drilling or sampling issues, e.g. refusal, groundwater, non-recovery, etc. here)

1 μR/hr @ Bkg
5' cores (Liners)

CABRERA SERVICES, INC.

PROJECT NAME: Sylvania-Corning FUSRAP
LOCATION: Hicksville, NY
CLIENT: E & E

BORING LOG
Location ID: 5921-DA-N
Page No.: 1 of 1

Contractor: E&E	Driller: ZEBRA	Date Started: 6/4/07	Rock Refusal Depth:
Method: 4' MACRO CORE GEOPROBE	Water Elevation: N/A	Date Finished: 6/4/07	Rock Cored (FT):
Elevation: N/A	Soil Drilled:	Total Depth: 11'	Casing Size:
			Core Size: 2" x 5'
Logged By: DA/GMT	Checked By: GMT		
Date/Time: 6/4/07		S/N NaI- 190205	BKG NaI (cpm) 994
		S/N Mod 19- 1018662	BKG Mod 19 (uR/hr) 4u

Elevation	Depth (feet)	Casing Blows/Foot	DHG cpm	Sample No. & Penetration/ Recovery (feet)	Sample Type	Sample Description and Classification	Group Designation	Remarks	Equipment Installed	Lab Tests Performed
	1		2321		Soil	4μR/hr @ bore hole				
	2		2425							
	3		2534							
N	4		2334	N						
	5		2476							
	6	N	2290	A						
	7		1815							
	8		1969							
	9		1768							
	10	A	1461							
	11		1372							
			N	A			N	A	N	A
A										

Notes

CABRERA SERVICES

RADIOLOGICAL · ENVIRONMENTAL · REMEDIATION

SOIL CORE SCAN LOG

Project: Sylvania-Corning FUSRAP Site
Date/Time: 6/5/07
Project #: ~~07-1005.00~~ 07-1022.00 II
Instr. Model / SN: 2221 w/ 44-10 ; SN# 163685
Location ID: SBRI - SU11-17
Cal Due: 10/27/07
Total Depth: 20
Ambient Bkg: 1473 cpm
Page: 1 of 1
Technician Init: DA/GMT

Sleeve #	Depth Range	Core & Scan Info (Top / Bottom)				
1	~~0'-4'~~ (0-5)'	VOID	1550	1575	1600	1500
Core Scan Results (cpm):						
2	~~4'-8'~~ (5-10)'	VOID	1450	1475	1450	1450	1550
Core Scan Results (cpm):						
3	~~8-12'~~ (10-15)'	VOID		1350	1400	1480
Core Scan Results (cpm):						
4	~~12'-16'~~ (15-20)'	VOID		1350	1400	1300
Core Scan Results (cpm):						
5	~~16'-20'~~ (20-25)'					
Core Scan Results (cpm):						

Comments: record any drilling or sampling issues e.g. refusal, groundwater, poor recovery, etc. here

BKGD @ 5 μR/h.

CABRERA SERVICES, INC.

PROJECT NAME: Sylvania-Corning FUSRAP
LOCATION: Hicksville, NY
CLIENT: E & E

BORING LOG
Location ID: 5221-SU11-17
Page No.: 1 of 1

Contractor: E&E	Driller: ZEBRA	Date Started: 6/5/07	Rock Refusal Depth:
Method: 4" MACRO CORE GEOPROBE	Water Elevation: N/A	Date Finished: 6/5/07	Rock Cored (FT):
Elevation: N/A	Soil Drilled:	Total Depth: 20'	Casing Size:
			Core Size:
Logged By: DA/GMT	Checked By: GMT		
Date/Time: 6/5/07		S/N NaI- 190205	BKG NaI (cpm) 859
		S/N Mod19- 1018602	BKG Mod19 (uR/hr) 5

Elevation	Depth (feet)	Casing Blows/Foot	DHG cpm	Sample No. & Penetration/ Recovery (feet)	Sample Type	Sample Description and Classification	Group Designation	Remarks	Equipment Installed	Lab Tests Performed
	1		1470		Soil	5μR/hr @ Bore hole				
	2		3485							
	3		2330							
	4		1790							
	5		1785							
	6		1797							
	7		1827							
	8		2541							
N	9	N	2162	N			N	A	N	A
	10	A	1439	A						
	11		1424							
	12		1182							
	13		1253							
	14		1171							
	15		1061							
	16		1076							
	17		1033							
	18		982							
	19		847							
	20		970							
			N	A						

Notes

CABRERA SERVICES

RADIOLOGICAL • ENVIRONMENTAL • REMEDIATION

SOIL CORE SCAN LOG

Project: Sylvania-Corning FUSRAP Site
Date/Time: 6/05/07
Project #: ~~07-1005.00~~ 07-1022.00 II
Instr. Model / SN: 2221 w/ 44-10 ; SN# 163685
Location ID: SBRI-SU11-21
Cal Due: 10/27/07
Total Depth: 11'
Ambient Bkg: 1503 cpm
Page: 1 of 1
Technician Init: DA/GMT

Sleeve #	Depth Range	Core & Scan Info (Top / Bottom)				
1	~~0'-4'~~ (0-5)'	VOID	1350	1375	1600	1450
Core Scan Results (cpm):						
2	~~4'-8'~~ (5-10)'	VOID	1350	1400	1250	1300
Core Scan Results (cpm):						
3	~~8-12'~~ (10-15)'	VOID	VOID	VOID	1300	1425
Core Scan Results (cpm):						
4	12' - 16'		A			
Core Scan Results (cpm):						
5	16' - 20'	N				
Core Scan Results (cpm):						

Comments: (record any drilling or sampling issues, e.g. refusal, groundwater, poor recovery, etc. here)

BKGD @ 4 mR/hr
Refusal @ 11 ft.

CABRERA SERVICES, INC.

PROJECT NAME: Sylvania-Corning FUSRAP
LOCATION: Hicksville, NY
CLIENT: E & E

BORING LOG gmt
Location ID: S921-SU11-B21
Page No.: 1 of 1

Contractor: E&E	Driller: ZEBRA	Date Started: 6/5/07	Rock Refusal Depth:
Method: 4" MACRO CORE GEOPROBE	Water Elevation: N/A	Date Finished: 6/5/07	Rock Cored (FT):
Elevation: N/A	Soil Drilled:	Total Depth: 11	Casing Size:
			Core Size: 2" x 5'
Logged By: gmt	Checked By: gmt		
Date/Time: 6/5/07		S/N NaI- 190205	BKG NaI (cpm) 925
		S/N Mod19- 101662	BKG Mod19 (uR/hr) 4 µR/hr

Elevation	Depth (feet)	Casing Blows/Foot	DHG cpm	Sample No. & Penetration/ Recovery (feet)	Sample Type	Sample Description and Classification	Group Designation	Remarks	Equipment Installed	Lab Tests Performed
N/A	1		1216		Soil	4µR/hr @ bore hole				
	2		2420							
	3		3743							
	4		2874							
	5	N	1599	N						
N/A	6		1596							
	7	A	1856	A						
	8		2714							
	9		2017							
	10		1708							
	11		1100							
N/A							N	A	N	A
N/A			N							
N/A				A						
N/A										

Notes: Refusal @ 11 ft bgs.

CABRERA SERVICES

RADIOLOGICAL · ENVIRONMENTAL · REMEDIATION

SOIL CORE SCAN LOG

Project: Sylvania-Corning FUSRAP Site
Date/Time: 6/5/07
Project #: ~~07-1005.00~~ 07-1022.00 II
Instr. Model / SN: 2221 w/ 44-10 ; SN# 163685
Location ID: SBR1-SU11-18
Cal Due: 10/27/07
Total Depth: 20'
Ambient Bkg: 1676 cpm
Page: 1 of 1
Technician Init: DA/GMT

Sleeve #	Depth Range	Core & Scan Info (Top / Bottom)				
1	~~0'-4'~~ (0-5)'	VOID	1250	1275	1350	1375
Core Scan Results (cpm):						
2	~~4'-8'~~ (5-10)'	VOID	1325	1450	1450	1400
Core Scan Results (cpm):						
3	~~8-12'~~ (10-15)'		1425	1300	1300	1300
Core Scan Results (cpm):						
4	12' - 16'				1375	1375
Core Scan Results (cpm):						
5	~~16'-20'~~					
Core Scan Results (cpm):						

Comments: record any drilling or sampling issues, e.g. refusal, groundwater, poor recovery, etc. here

4μR/h @ BKGD

last push ~ to 17' bgs

CABRERA SERVICES, INC.

PROJECT NAME: Sylvania-Corning FUSRAP
LOCATION: Hicksville, NY
CLIENT: E & E

BORING LOG
Location ID: SR21-SU11-18
Page No.: 1 of 1

Contractor: F&E	Driller: ZEBRA	Date Started: 6/5/07	Rock Refusal Depth:
Method: 4' MACRO CORE GEOPROBE	Water Elevation: N/A	Date Finished: 6/5/07	Rock Cored (FT):
Elevation: N/A	Soil Drilled:	Total Depth: 18'	Casing Size:
			Core Size: 2" x 5'
Logged By: DA/GMT	Checked By: gmt		
Date/Time: 6/5/07		S/N NaI- 190205	BKG NaI (cpm) 890
		S/N Mod19- 101662	BKG Mod19 (uR/hr) 4

Elevation	Depth (feet)	Casing Blows/Foot	DHG cpm	Sample No. & Penetration/ Recovery (feet)	Sample Type	Sample Description and Classification	Group Designation	Remarks	Equipment Installed	Lab Tests Performed
N/A	1		1014		Soil	4 uR/hr @ Bore hole				
	2		2148							
	3		3472							
	4		2035							
	5		1672							
N/A	6	N	1841							
	7		2263							
	8		1446							
	9		1567							
	10		1311	N						
N/A	11	A	1070				N	A		
	12		1107							
	13		1183						N	A
	14		951	A						
	15		980							
N/A	16		946							
	17		865							
	18		837							
	N/A		~~834~~							
N/A			N							
N/A				A						

Notes

CABRERA SERVICES

RADIOLOGICAL • ENVIRONMENTAL • REMEDIATION

SOIL CORE SCAN LOG

Project: Sylvania-Corning FUSRAP Site
Date/Time: 6/5/07
Project #: ~~07-1005.00~~ 07-1022.00 II
Instr. Model / SN: 2221 w/ 44-10 ; SN# 163685
Location ID: SBR1-~~SU18~~ SU11-12
Cal Due: 10/27/07
Total Depth: 20
Ambient Bkg: 1532 cpm
Page: 1 of 1
Technician Init: DA/GMT

Sleeve #	Depth Range	Core & Scan Info (Top)				Bottom
1	0' - ~~4~~ 5	1350	1450	1800	1450	1350
Core Scan Results (cpm):						
2	5-10' ~~4' - 8'~~	1350	1300	1500	1500	1450
Core Scan Results (cpm):						
3	10-15' ~~8 - 12'~~	VOID 1350	1300	1400	1450	1400
Core Scan Results (cpm):						
4	~~12' - 16'~~ 15-20			1200	1300	1225
Core Scan Results (cpm):						
5	16' - 20'	N	A			
Core Scan Results (cpm):						

Comments: record any drilling & sampling issues, e.g. repeat groundwater, poor recovery, etc. here.

4 μR/hr @ BKGD

CABRERA SERVICES, INC.

PROJECT NAME: Sylvania-Corning FUSRAP
LOCATION: Hicksville, NY
CLIENT: E & E

BORING LOG
Location ID: SB21-SU 11-12
Page No.: 1 of 1

Contractor: E&E	Driller: ZEBRA	Date Started: 6/5/07	Rock Refusal Depth:
Method: 4" MACRO CORE GEOPROBE	Water Elevation: N/A	Date Finished: 6/5/07	Rock Cored (FT):
Elevation: N/A	Soil Drilled:	Total Depth: 20'	Casing Size:
			Core Size: 2" X 5'
Logged By: ~~6/5/07~~ DN/GMT	Checked By: GMT		
Date/Time: 6/5/07		S/N NaI- 190205	BKG NaI (cpm) 740
		S/N Mod19- 1018602	BKG Mod19 (μR/hr) 4 μR/hr

Elevation	Depth (feet)	Casing Blows/Foot	DHG cpm	Sample No. & Penetration/ Recovery (feet)	Sample Type	Sample Description and Classification	Group Designation	Remarks	Equipment Installed	Lab Tests Performed
N/A	1	N	1835	N	Soil	4 μR/hr @ BKGD	N	A	N	A
	2		2675							
	3		3147							
	4		2449							
	5		2189							
N/A	6	A	1893	A						
	7		1894							
	8		2165							
	9		1578							
	10		1412							
N/A	11	N	1837	N						
	12		1248							
	13		1248							
	14		1260							
	15		1021							
N/A	16	A	1099	A						
	17		950							
	18		878							
	19		931							
	20		927							
N/A		N		A						
N/A										

Notes

CABRERA SERVICES

RADIOLOGICAL · ENVIRONMENTAL · REMEDIATION

SOIL CORE SCAN LOG

Project: Sylvania-Corning FUSRAP Site
Date/Time: 6/5/07
Project #: ~~07-1005.00~~ 07-1022.00 II
Instr. Model / SN: 2221 w/ 44-10 ; SN# 163685
Location ID: ~~SBR1-SUH~~ DR-G
Cal Due: 10/27/07
Total Depth: 20'
Ambient Bkg: 1352 cpm
Page: 1 of 1
Technician Init: DA/GMT

Sleeve #	Depth Range	Core & Scan Info (Top / Bottom)				
1	0' - ~~4~~ 5	VOID	1350	1450	1350	1200
Core Scan Results (cpm):						
2	~~2-15~~ ~~4' - 8'~~ 5-10	1250	~~1400~~ 1500	1400	1375	1300
Core Scan Results (cpm):						
3	10-15 ~~8 - 12'~~	VOID	1400	1400	1300	1375
Core Scan Results (cpm):						
4	15-20 ~~12' - 16'~~	VOID	VOID	1325	1350	1200
Core Scan Results (cpm):						
5	16' - 20'		A			
Core Scan Results (cpm):			N			

Comments: [illegible]

4 mR/hr @ BKGD

CABRERA SERVICES, INC.

PROJECT NAME: Sylvania-Corning FUSRAP
LOCATION: Hicksville, NY
CLIENT: E & E

BORING LOG

Location ID: 5921-DA-G1
Page No.: 1 of 1

Contractor: E&E	Driller: ZEBRA	Date Started: 6/5/07	Rock Refusal Depth:
Method: 4" MACRO CORE GEOPROBE	Water Elevation: N/A	Date Finished: 6/5/07	Rock Cored (FT):
Elevation: N/A	Soil Drilled:	Total Depth: 20'	Casing Size:
			Core Size: 2" X 5'
Logged By: DA/GMT	Checked By: GMT		
Date/Time: 6/5/07		S/N NaI- 190205	BKG NaI (cpm) 883
		S/N Mod19- 1018602	BKG Mod19 (uR/hr) 4

Elevation	Depth (feet)	Casing Blows/Foot	DHG cpm	Sample No. & Penetration/Recovery (feet)	Sample Type	Sample Description and Classification	Group Designation	Remarks	Equipment Installed	Lab Tests Performed
N/A	1		1266		Soil	4uR/hr @ bore hole	N	A	N	A
	2		2603							
	3		3108							
	4		1918							
	5		1806							
N/A	6		1590							
	7	N	1770							
	8		1900							
	9	A	1556							
	10		1494							
N/A	11		1457	N						
	12		1290		A					
	13		1170							
	14		980							
	15		1165							
N/A	16		1051							
	17		1007							
	18		900							
	19		977							
	20		831							
N/A										
			N							
				A						
N/A										

Notes

CABRERA SERVICES

RADIOLOGICAL · ENVIRONMENTAL · REMEDIATION

SOIL CORE SCAN LOG

Project: Sylvania-Corning FUSRAP Site
Date/Time: 6/5/07
Project #: ~~07-1005.00~~ 07-1022.00 II
Instr. Model / SN: 2221 w/ 44-10 ; SN# 163685
Location ID: SBR1-SU11-10
Cal Due: 10/27/07
Total Depth: 14
Ambient Bkg: 1322 cpm
Page: 1 of 1
Technician Init: DA/GMT

Sleeve #	Depth Range	Core & Scan Info				
1	0-5 ~~0' - 4'~~	Top VOID	1450	1500	1400	Bottom 1400
Core Scan Results (cpm):						
2	5-10 ~~4' - 8'~~	1450	1300	1250	1475	1300
Core Scan Results (cpm):						
3	10-15 ~~8 - 12'~~			1600	1300	1200
Core Scan Results (cpm):						
4	12' - 16'					
Core Scan Results (cpm):						
5	16' - 20'	N				
Core Scan Results (cpm):						

A

Comments: Record any drilling or sampling issues, e.g., refusal, groundwater, poor recovery, etc. here.

4 μR/hr @ BKGD

CABRERA SERVICES, INC.

PROJECT NAME: Sylvania-Corning FUSRAP
LOCATION: Hicksville, NY
CLIENT: E & E

BORING LOG

Location ID: SA21-SU11-10
Page No.: 1 of 1

Contractor: F-S E	Driller: ZEBRA	Date Started: 6/5/07	Rock Refusal Depth:
Method: 4" MACRO CORE GEOPROBE	Water Elevation: N/A	Date Finished: 6/5/07	Rock Cored (FT):
Elevation: N/A	Soil Drilled:	Total Depth: 14'	Casing Size:
			Core Size: 2" X 5'
Logged By: BA/GMT	Checked By: GMT		
Date/Time: 6/5/07		S/N NaI- 190205	BKG NaI (cpm)
		S/N Mod19- 1018662	BKG Mod19 (uR/hr) 4uR/hr

Elevation	Depth (feet)	Casing Blows/Foot	DHG cpm	Sample No. & Penetration/ Recovery (feet)	Sample Type	Sample Description and Classification	Group Designation	Remarks	Equipment Installed	Lab Tests Performed
N/A	1		1267		Soil		N	A	N	A
	2		2090							
	3		3001							
	4		2807							
	5		1831							
N/A	6		1742							
	7		1789							
	8		1858							
	9		1706							
	10		1613							
N/A	11		1861							
	12		1488							
	13		1208							
	14		972							
N/A										
N/A			N	A						
N/A										

Notes

CABRERA SERVICES

RADIOLOGICAL • ENVIRONMENTAL • REMEDIATION

SOIL CORE SCAN LOG

Project: Sylvania-Corning FUSRAP Site
Project #: 07-1005.00
Location ID: DRY-D
Total Depth: 32'
Page: 1 of 2

Date/Time: 06/05/07 0820
Instr. Model / SN: 2221 w/44-10 108862
Cal Due: 04-30-08
Ambient Bkg: KMA ~~3408~~ 2377 cpm
Technician Init: KMA, AJC

Sleeve #	Depth Range	Core & Scan Info (Top / Bottom)			
1	0' - 4'		2250	2100	2050
	Core Scan Results (cpm):	1' VOID			
2	4' - 8'	2400	2300	2400	2150
	Core Scan Results (cpm):				
3	8 - 12'		2300	2250	2225
	Core Scan Results (cpm):	1' VOID			
4	12' - 16'		2400	2175	2125
	Core Scan Results (cpm):	1' VOID			
5	16' - 20'		2350	2000	1925
	Core Scan Results (cpm):	1' VOID			

Comments: (recording drilling or sampling issues, e.g. refusal, groundwater, poor recovery, etc. here)

CABRERA SERVICES

RADIOLOGICAL · ENVIRONMENTAL · REMEDIATION

SOIL CORE SCAN LOG

Project: Sylvania-Corning FUSRAP Site
Date/Time: 06/05/07 0820
Project #: 07-1005.00
Instr. Model / SN: 2221 w/44-10 108862
Location ID: DR4 - D
Cal Due: 04-30-08
Total Depth: 32'
Ambient Bkg: 2377 cpm
Page: 2 of 2
Technician Init: KMA, AJC

Sleeve #	Depth Range	Core & Scan Info (Top / Bottom)			
1	20'-24'		2450	2500	2100
	Core Scan Results (cpm):	1'; 6" VOID			
2	24'-28'		2100	1875	1900
	Core Scan Results (cpm):	1' 3" VOID			
3	28-32'		2000	2050	1900
	Core Scan Results (cpm):	1' VOID			
4	32'-36'		N	A	
	Core Scan Results (cpm):				
5	36'-40'		N	A	
	Core Scan Results (cpm):				

Comments: (recordable drilling or sampling issues, e.g. refusal, groundwater, poor recovery, etc. where)

CABRERA SERVICES, INC.

PROJECT NAME: Sylvania-Corning FUSRAP
LOCATION: Hicksville, NY
CLIENT: E & E

BORING LOG
Location ID: DLY-D
Page No.: 1 of 2

Contractor: ZEBRA	Driller: C. GREEN	Date Started: 06/05/07	Rock Refusal Depth:
Method: DIRECT PUSH	Water Elevation: N/A	Date Finished: 06/05/07	Rock Cored (FT):
Elevation: D.G.	Soil Drilled: SAND, SILT	Total Depth: 32'	Casing Size:
Logged By: KMA, AJC	Checked By: [illegible]	METER INFO	Core Size:
Date/Time: 06/05/07, 1010		2221 W/GI 216482	MODEL 19 221521
		CAL DUE 05-04-08	CAL DUE 10/15/07
		BKG 3PM 1253	BKG 5 UR/HR CON 5 UR/HR

Elevation	Depth (feet)	Casing Blows/Foot	DHG cpm	Sample No. & Penetration/ Recovery (feet)	Sample Type	Sample Description and Classification	Group Designation	Remarks	Equipment Installed	Lab Tests Performed
	1		2645		SOIL					
	2		1706							
	3		1566							
	4		1446							
	5		1335							
	6		1637							
	7		1924							
	8		2600							
	9		1606							
	10		1197							
	11		1056							
	12		1233							
	13		1175							
	14		1006							
	15		1071							
	16		1132							
	17		950							
	18		846							
	19		792							
	20		796							
	21		882							
	22		883							
	23		939							
	24		940							
	25		933							
	26		763							
	27		750							
	28		846							
	29		917							
	30		804		SOIL					

Notes

CABRERA SERVICES, INC.

PROJECT NAME: Sylvania-Corning FUSRAP
LOCATION: Hicksville, NY
CLIENT: E & E

BORING LOG

Location ID: DRY-D
Page No.: 2 of 2

Contractor: ZEBRA	Driller: C. GLEGN	Date Started: 06/05/07	Rock Refusal Depth:
Method: DIRECT PUSH	Water Elevation: N.A.	Date Finished: 06/05/07	Rock Cored (FT):
Elevation: O.G.	Soil Drilled: SAND, SILT	Total Depth: 32'	Casing Size:
Logged By: KMA, AJC	Checked By:	MODEL INFO	Core Size:
Date/Time: 06/05/07, 1010		2221 W/GI 216482	MODEL A 221521
		CAL DUE 05-01-08	CAL DUE 10/15/07
		BKG CPM	BKG 5 UR/HR CON 5 UR/HR

Elevation	Depth (feet)	Casing Blows/Foot	DHG cpm	Sample No. & Penetration/ Recovery (feet)	Sample Type	Sample Description and Classification	Group Designation	Remarks	Equipment Installed	Lab Tests Performed
	31		822		SOIL					
	32		899		SOIL					
			N	A						

Notes

CABRERA SERVICES

RADIOLOGICAL · ENVIRONMENTAL · REMEDIATION

SOIL CORE SCAN LOG

Project: Sylvania-Corning FUSRAP Site
Date/Time: 06/05/07 1/10
Project #: 07-1005.00
Instr. Model / SN: 2221 N/44-10 108862
Location ID: LP-HB
Cal Due: 04-30-08
Total Depth: 16'
Ambient Bkg: 2150 cpm
Page: 1 of 1
Technician Init: KMA, AJC

Sleeve #	Depth Range	Core & Scan Info (Top / Bottom)			
1	0' - 4'		2100	2050	2150
	Core Scan Results (cpm):	1' void			
2	4' - 8'		2150	2050	2100
	Core Scan Results (cpm):	1' void			
3	8 - 12'		2050	2050	2100
	Core Scan Results (cpm):	1' void			
4	12' - 16'		2025	2075	2000
	Core Scan Results (cpm):				
5	16' - 20'		N	A	
	Core Scan Results (cpm):				

Comments: (recording drilling, sampling issues, e.g. refusal, groundwater, poor recovery, etc. here)

CABRERA SERVICES, INC.

PROJECT NAME: Sylvania-Corning FUSRAP
LOCATION: Hicksville, NY
CLIENT: E & E

BORING LOG

Location ID: LPH-B
Page No.: 1 of 1

Contractor: ZEBRA	Driller: C. GREEN	Date Started: 06/05/07	Rock Refusal Depth:
Method: DIRECT PUSH	Water Elevation: N.A.	Date Finished: 06/05/07	Rock Cored (FT):
Elevation: O.G.	Soil Drilled: SAND, SILT	Total Depth: 16'	Casing Size:
Logged By: KMA, AJC	Checked By: GMT	METER INFO	Core Size:
Date/Time: 06/05/07		2221 W/GI 216482	MODEL 19 221521
		CAL DUE 05-04-08	CAL DUE 10/15/07
		BKG CPM	BKG 6 UR/HR CON 6 UR/HR

Elevation	Depth (feet)	Casing Blows/Foot	DHG cpm	Sample No. & Penetration/ Recovery (feet)	Sample Type	Sample Description and Classification	Group Designation	Remarks	Equipment Installed	Lab Tests Performed
	1		1725		SOIL					
	2		2548							
	3		2399							
	4		2363							
	5		2021							
	6		1972							
	7		1892							
	8		1996							
	9		1790							
	10		1391							
	11		1231							
	12		1289							
	13		1155							
	14		921							
	15		1043							
	16		1180		SOIL					

NA

Notes

CABRERA SERVICES

RADIOLOGICAL • ENVIRONMENTAL • REMEDIATION

SOIL CORE SCAN LOG

Project: Sylvania-Corning FUSRAP Site
Date/Time: 1305/06/05/07
Project #: 07-1005.00
Instr. Model / SN: 2221 w/44-10 108862
Location ID: SM4-B
Cal Due: 04-30-08
Total Depth: 16'
Ambient Bkg: 2150 cpm
Page: 1 of 1
Technician Init: KMA, AJC

Sleeve #	Depth Range	Core & Scan Info (Top / Bottom)			
1	0' - 4'		1975	2050	1975
	Core Scan Results (cpm):	1' VOID			
2	4' - 8'		2000	2025	2050
	Core Scan Results (cpm):	1' VOID			
3	8 - 12'			2025	1925
	Core Scan Results (cpm):	2' VOID			
4	12' - 16'		2000	2050	2075
	Core Scan Results (cpm):	1' VOID			
5	16' - 20'		N A		
	Core Scan Results (cpm):				

Comments: (recovery, drilling or sampling issues, e.g., refusal, groundwater, poor recovery, etc. here)

CABRERA SERVICES, INC.

PROJECT NAME: Sylvania-Corning FUSRAP
LOCATION: Hicksville, NY
CLIENT: E & E

BORING LOG

Location ID: DRY - B
Page No.: 1 of 1

Contractor: ZEBRA	Driller: C. GREEN	Date Started: 06/05/07	Rock Refusal Depth:
Method: DIRECT PUSH	Water Elevation: N.A.	Date Finished: 06/05/07	Rock Cored (FT):
Elevation: O.G.	Soil Drilled: SAND, SILT	Total Depth: 16'	Casing Size:
		MODEL NPO	Core Size:
Logged By: KMA, AJC	Checked By: gmt	2221 w/GI 216482	MODEL A 221521
Date/Time: 06/05/07 1335		CAL DUE 05-01-08	CAL DUE 10/15/07
		BKG CPM 1295	BKG 7 uR/hr CPM 7 uR/hr

Elevation	Depth (feet)	Casing Blows/Foot	DHG cpm	Sample No. & Penetration/ Recovery (feet)	Sample Type	Sample Description and Classification	Group Designation	Remarks	Equipment Installed	Lab Tests Performed
	1		1512		SOIL					
	2		1405		"					
	3		1335							
	4		1808							
	5		1542							
	6		1403							
	7		1607							
	8		1651							
	9		1597							
	10		1862							
	11		1531							
	12		1274							
	13		1253							
	14		1130							
	15		1105							
	16		1082		SOIL					

Notes

CABRERA SERVICES

RADIOLOGICAL · ENVIRONMENTAL · REMEDIATION

SOIL CORE SCAN LOG

Project: Sylvania-Corning FUSRAP Site
Date/Time: 06/05/07, 1425
Project #: 07-1005.00
Instr. Model / SN: 2221 W/44-10 108862
Location ID: DRY H-A
Cal Due: 04-30-08
Total Depth: 16'
Ambient Bkg: 2252 cpm
Page: 1 of 1
Technician Init: KMA, AJC

Sleeve #	Depth Range	Core & Scan Info (Top / Bottom)			
1	0' - 4'		2150	2200	2100
	Core Scan Results (cpm):				
2	4' - 8'	2000	2250	2325	2450
	Core Scan Results (cpm):				
3	8 - 12'	2100	2300	2250	2250
	Core Scan Results (cpm):				
4	12' - 16'		2400	2300	2225
	Core Scan Results (cpm):				
5	16' - 20'				
	Core Scan Results (cpm):				

Comments: (recordable drilling or sampling issues, e.g. refusal, groundwater, poor recovery, etc. here)

CABRERA SERVICES, INC.

PROJECT NAME: Sylvania-Corning FUSRAP
LOCATION: Hicksville, NY
CLIENT: E & E

BORING LOG

Location ID: DRY H-A
Page No.: 1 of 1

Contractor: ZEBRA	Driller: C. GREEN	Date Started: 06/05/07	Rock Refusal Depth:
Method: DIRECT PUSH	Water Elevation: N.A.	Date Finished: 06/05/07	Rock Cored (FT):
Elevation: O.G.	Soil Drilled: SAND, SILT	Total Depth: 15'	Casing Size:
		MODEL NO.	Core Size:
Logged By: KMA, AJC	Checked By:	2221 W/GI 216482	MODEL A 221521
Date/Time: 06/05/07, 1500		CAL DUE 05-04-08	CAL DUE 10/15/07
		BKG CPM 1090	BKG 8 UR/HR CON 7 UR/HR

Elevation	Depth (feet)	Casing Blows/Foot	DHG cpm	Sample No. & Penetration/ Recovery (feet)	Sample Type	Sample Description and Classification	Group Designation	Remarks	Equipment Installed	Lab Tests Performed
	1		1215		SOIL					
	2		1171							
	3		2112							
	4		3501							
	5		3371							
	6		1961							
	7		1695							
	8		2058							
	9		1770							
	10		1581							
	11		1232							
	12		1306							
	13		1290							
	14		1304							
	15		1237		SOIL					
			N	A						

Notes

CABRERA SERVICES

RADIOLOGICAL · ENVIRONMENTAL · REMEDIATION

SOIL CORE SCAN LOG

Project: Sylvania-Corning FUSRAP Site
Date/Time: 1535, 06/05/07
Project #: 07-1005.00
Instr. Model / SN: 2221 w/44-10 108862
Location ID: DR-U
Cal Due: 04-30-08
Total Depth: 16'
Ambient Bkg: 1738 cpm
Page: 1 of 1
Technician Init: KMA, AJC

Sleeve #	Depth Range	Core & Scan Info (Top / Bottom)			
1	0' - 4'		1625	1600	1750
	Core Scan Results (cpm):	1' VOID			
2	4' - 8'	1650	1650	1650	1675
	Core Scan Results (cpm):				
3	8 - 12'		1800	1700	1550
	Core Scan Results (cpm):	1' VOID			
4	12' - 16'			1550	1625
	Core Scan Results (cpm):	2' VOID			
5	16' - 20'		N	A	
	Core Scan Results (cpm):				

Comments: (record any drilling or sampling issues, e.g., refusal, groundwater, poor recovery, etc. here)

CABRERA SERVICES, INC.

PROJECT NAME: Sylvania-Corning FUSRAP
LOCATION: Hicksville, NY
CLIENT: E & E

BORING LOG

Location ID: DR-U
Page No.: 1 of 1

Contractor: ZEBRA	Driller: C. GREEN	Date Started: 06/05/07	Rock Refusal Depth:
Method: DIRECT PUSH	Water Elevation:	Date Finished: 06/05/07	Rock Cored (FT):
Elevation: O.G.	Soil Drilled: SAND, SILT	Total Depth: 14'	Casing Size:
		MODEL INFO	Core Size:
Logged By: KMA, AJC	Checked By: GW	2221 W/GI 216482	MODEL A 221521
Date/Time: 06/05/07 1615		CAL DUE 05-01-08	CAL DUE 10/15/07
		BKG CPM 1171	BKG 5 UR/HR COR 6 UR/HR

Elevation	Depth (feet)	Casing Blows/Foot	DHG cpm	Sample No. & Penetration/ Recovery (feet)	Sample Type	Sample Description and Classification	Group Designation	Remarks	Equipment Installed	Lab Tests Performed
	1		2267		SOIL					
	2		2677							
	3		3315							
	4		1938							
	5		2096							
	6		1496							
	7		1877							
	8		2802							
	9		1540							
	10		1908							
	11		1361							
	12		1222							
	13		1202							
	14		1316		SOIL					

Notes

CABRERA SERVICES, INC.

PROJECT NAME: Sylvania-Corning FUSRAP
LOCATION: Hicksville, NY
CLIENT: E & E

BORING LOG
Location ID: DR A2
Page No.: 1 of 1

Contractor: ZEBRA	Driller: C. GREEN	Date Started: 06/05/07	Rock Refusal Depth:
Method: DIRECT PUSH	Water Elevation: N.A	Date Finished: 06/05/07	Rock Cored (FT):
Elevation: O.G.	Soil Drilled: SAND SILT	Total Depth: 10'	Casing Size:
Logged By: KMA, AJC	Checked By: [illegible]	METER INFO	Core Size:
Date/Time: 06/05/07		2221 w/GI 216482	MODEL 19 221521
		CAL DUE 05-04-08	CAL DUE 10/15/07
		BKG CPM 709	BKG 5 UR/HR CON 6 UR/HR

Elevation	Depth (feet)	Casing Blows/Foot	DHG cpm	Sample No. & Penetration/ Recovery (feet)	Sample Type	Sample Description and Classification	Group Designation	Remarks	Equipment Installed	Lab Tests Performed
	1		1529		SOIL					
	2	57	5757							
	3		5431			2.5', 6,237 cpm				
	4		4035							
	5		2570							
	6		2088							
	7		1783							
	8		1935							
	9		2413							
	10		2085		SOIL					
						REFUSAL				

Notes

CABRERA SERVICES

RADIOLOGICAL · ENVIRONMENTAL · REMEDIATION

SOIL CORE SCAN LOG

Project: Sylvania-Corning FUSRAP Site
Date/Time: 06/05/07, 1635
Project #: 07-1005.00
Instr. Model / SN: 2221 w/44-10 108862
Location ID: DR A-2
Cal Due: 04-30-08
Total Depth: 16'
Ambient Bkg: 1717 cpm
Page: 1 of 1
Technician Init: KMA, AJC

Sleeve #	Depth Range	Core & Scan Info (Top / Bottom)
1	0' - 4'	1650 / 1850
	Core Scan Results (cpm):	2' 6" VOID
2	4' - 8'	1700 / 1950
	Core Scan Results (cpm):	2' 9" VOID
3 *	8 - 12'	1650 / 1500 / 1700
	Core Scan Results (cpm):	15" void
4	12' - 16'	1925 / 1550
	Core Scan Results (cpm):	2' VOID
5	16' - 20'	N
	Core Scan Results (cpm):	A

Comments: (recommend drilling or sampling issues, e.g. refusal, groundwater, poor recovery, etc. here)

CABRERA SERVICES

RADIOLOGICAL · ENVIRONMENTAL · REMEDIATION

SOIL CORE SCAN LOG

Project: Sylvania-Corning FUSRAP Site
Date/Time: 6/6/07
Project #: ~~07-1005.00~~ 07-1022.00 II
Instr. Model / SN: 2221 w/ 44-10 ; SN# 163685
Location ID: DR-F
Cal Due: 10/27/07
Total Depth: 20'
Ambient Bkg: 1370 cpm
Page: 1 of 1
Technician Init: DA/GMT

Sleeve #	Depth Range	Core & Scan Info (Top)				Bottom
1	~~0'-4'~~ (0-5)'		1400	1400	1350	1450
Core Scan Results (cpm):						
2	~~4'-8'~~ (5-10)'		1375	1350	1400	1350
Core Scan Results (cpm):						
3	~~8-12'~~ (10-15)'		1400	1400	1200	1350
Core Scan Results (cpm):						
4	~~12'-16'~~ (15-20)'			1400	1350	1250
Core Scan Results (cpm):						
5	~~16'-20'~~ (20-25)'	N	A			
Core Scan Results (cpm):						

Comments: [illegible]

4 μR/hr @ BKGD

CABRERA SERVICES, INC.

PROJECT NAME: Sylvania-Corning FUSRAP
LOCATION: Hicksville, NY
CLIENT: E & E

BORING LOG
Location ID: ~~S321-S01~~ DR-F
Page No.: 1 of 1

Contractor: E&E	Driller: ZEBRA	Date Started: 6/6/07	Rock Refusal Depth:
Method: 4" MACRO CORE GEOPROBE	Water Elevation: N/A	Date Finished: 6/6/07	Rock Cored (FT):
Elevation: N/A	Soil Drilled:	Total Depth: 20'	Casing Size:
			Core Size: 2" x 5'
Logged By: DA	Checked By: gmt		
Date/Time: 6/6/07		S/N NaI- 190205	BKG NaI (cpm) 826
		S/N Mod19- 101062	BKG Mod19 (μR/hr) 4

Elevation	Depth (feet)	Casing Blows/Foot	DHG cpm	Sample No. & Penetration/ Recovery (feet)	Sample Type	Sample Description and Classification	Group Designation	Remarks	Equipment Installed	Lab Tests Performed
N/A	1		2447		Soil	4 μR/hr	N	A	N	A
	2		2130							
	3		2906							
	4		1780							
	5		1531							
N/A	6		1649							
	7		1524							
	8		2264							
	9		1913							
	10		1371							
N/A	11		1553							
	12		1823							
	13		1167							
	14		1080							
	15		983							
N/A	16		1080							
	17		1253							
	18		987							
	19		782							
	20		751							
N/A										
N/A										

Notes

CABRERA SERVICES

RADIOLOGICAL · ENVIRONMENTAL · REMEDIATION

SOIL CORE SCAN LOG

Project: Sylvania-Corning FUSRAP Site
Date/Time: 6/6/07
Project #: ~~07-1005.00~~ 07-1022.00 II
Instr. Model / SN: 2221 w/ 44-10 ; SN # 163685
Location ID: SBRI - HSU11-11
Cal Due: 10/27/07
Total Depth: 20
Ambient Bkg: 1479 cpm
Page: 1 of 1
Technician Init: DA/GMT

Sleeve #	Depth Range	Core & Scan Info (Top)					Bottom
1	0-5 ~~0' - 4'~~		1600	1325	1600		1600
Core Scan Results (cpm):							
2	5-10 ~~4' - 8'~~	1600	1350	1200	1550		1400
Core Scan Results (cpm):							
3	10-15 ~~8 - 12'~~		1275	1300	1250		1450
Core Scan Results (cpm):							
4	15-20 ~~12' - 16'~~			1350	1425		1350
Core Scan Results (cpm):							
5	~~16' - 20'~~		A				
Core Scan Results (cpm):		N					

Comments: (record any timing of sampling issues, e.g., refusal, groundwater, poor recovery, etc. here)

4 μR/hr @ BKGD

CABRERA SERVICES, INC.

PROJECT NAME: Sylvania-Corning FUSRAP
LOCATION: Hicksville, NY
CLIENT: E & E

BORING LOG

Location ID: 5321-SU11-11
Page No.: 1 of 1

Contractor: E&E	Driller: ZEBRA	Date Started: 6/6/07	Rock Refusal Depth:
Method: 4" MACRO CORE GEOPROBE	Water Elevation: N/A	Date Finished: 6/6/07	Rock Cored (FT):
Elevation: N/A	Soil Drilled:	Total Depth: 20'	Casing Size:
			Core Size: 2" X 5'
Logged By: DA/GMT	Checked By: [illegible]		
Date/Time: 6/6/07		S/N NaI- 190205	BKG NaI (cpm) 761
		S/N Mod19- 101662	BKG Mod19 (uR/hr) 4

Elevation	Sample Information: Depth (feet)	Casing Blows/Foot	DHG cpm	Sample No. & Penetration/Recovery (feet)	Sample Type	Sample Description and Classification	Group Designation	Remarks	Equipment Installed	Lab Tests Performed
N/A	1		1460		Soil	4 μR/hr @ Bore hole				
	2		2482							
	3		3338							
	4		1831							
	5		1349							
N/A	6		1747							
	7		1786							
	8		2002							
	9		1748							
	10		1376							
N/A	11		2257							
	12		1579							
	13		1470							
	14		1170							
	15		1012							
N/A	16		1087							
	17		923							
	18		958							
	19		835							
	20		954							
N/A										
N/A										

N/A

Notes

CABRERA SERVICES

RADIOLOGICAL · ENVIRONMENTAL · REMEDIATION

SOIL CORE SCAN LOG

Project: Sylvania-Corning FUSRAP Site
Date/Time: 6/6/07
Project #: ~~07-1005.00~~ 07-1022.00 II
Instr. Model / SN: 2221 w/ 44-10 ; SN# 163685
Location ID: DRYH-F
Cal Due: 10/27/07
Total Depth: 20'
Ambient Bkg: 1462 cpm
Page: 1 of 1
Technician Init: JA/GMT

Sleeve #	Depth Range	Core & Scan Info (Top)				(Bottom)
1	0-5 ~~0'-4'~~			1500	1500	1450
Core Scan Results (cpm):						
2	5-10 ~~4'-8'~~	1400	1400	1300	1600	1400
Core Scan Results (cpm):						
3	10-15 ~~8-12'~~		1400	1250	1225	1300
Core Scan Results (cpm):						
4	15-20 ~~12'-16'~~			1300	1250	1300
Core Scan Results (cpm):						
5	16'-20'	N/A				
Core Scan Results (cpm):						

Comments: (record any drilling or sampling issues, e.g., refusal, groundwater, poor recovery, etc. here)

4 μR/hr @ BKGD

CABRERA SERVICES, INC.

PROJECT NAME: Sylvania-Corning FUSRAP
LOCATION: Hicksville, NY
CLIENT: E & E

BORING LOG
Location ID: ~~BH45~~ DH4-5
Page No.: 1 of 1

Contractor: F&E	Driller: ZEBRA	Date Started: 6/6/07	Rock Refusal Depth:
Method: 4' MACRO CORE GEOPROBE	Water Elevation: N/A	Date Finished: 6/6/07	Rock Cored (FT):
Elevation: N/A	Soil Drilled:	Total Depth: 26'	Casing Size:
			Core Size: 2" X 5'
Logged By: DA/GMT	Checked By:		
Date/Time: 6/6/07		S/N NaI - 190205	BKG NaI (cpm) 733
		S/N Mod 19 - 1010602	BKG Mod19 (uR/hr) 4uR/hr

Elevation	Depth (feet)	Casing Blows/Foot	DHG cpm	Sample No. & Penetration/Recovery (feet)	Sample Type	Sample Description and Classification	Group Designation	Remarks	Equipment Installed	Lab Tests Performed
	1		1425		Sml	4μR/hr @ borehole				
	2		2670							
	3		2088							
	4		2403							
	5		3207							
	6		1932							
	7		1758							
	8		2013							
	9		1713							
	10		1372							
	11		1211							
	12		1106							
	13		1194							
	14		1162							
	15		1192							
	16		1141							
	17		1083							
	18		879							
	19		989							
	20		937							
			N	A			N	A	N	A

Notes

CABRERA SERVICES

RADIOLOGICAL • ENVIRONMENTAL • REMEDIATION

SOIL CORE SCAN LOG

Project: Sylvania-Corning FUSRAP Site
Date/Time: 6/6/07
Project #: ~~07-1005.00~~ 07-1022.00 II
Instr. Model / SN: 2221 w/ 44-10; SN# 163685
Location ID: DR-P
Cal Due: 10/27/07.
Total Depth: 20'
Ambient Bkg: 1554 cpm
Page: 1 of 1
Technician Init: DA/GMT

Sleeve #	Depth Range	Core & Scan Info (Top → Bottom)	
1	0-5 ~~0'-4'~~	1400, 1300	1500
2	5-10 ~~4'-8'~~	1450, 1500	1550
3	10-15 ~~8'-12'~~	1600, 1425, 1250	1250
4	15-20 ~~12'-16'~~	1300, 1350	1400
5	16'-20'		

Core Scan Results (cpm):

Comments: [illegible]

CABRERA SERVICES, INC.

PROJECT NAME: Sylvania-Corning FUSRAP
LOCATION: Hicksville, NY
CLIENT: E & E

BORING LOG
Location ID: ~~DR-1a~~ (DRP)
Page No.: 1 of 1

Contractor: E&E	Driller: ZEBRA	Date Started: 6/6/07	Rock Refusal Depth:
Method: 4' MACRO CORE GEOPROBE	Water Elevation: N/A	Date Finished: 6/6/07	Rock Cored (FT):
Elevation: N/A	Soil Drilled:	Total Depth: 18'	Casing Size:
			Core Size: 2" x 5'
Logged By: DA/GMT	Checked By: GMT		
Date/Time: 6/6/07		S/N NaI- 190205	BKG NaI (cpm) 796
		S/N Mod19- 101662	BKG Mod19 (uR/hr) 4

Elevation	Depth (feet)	Casing Blows/Foot	DHG cpm	Sample No. & Penetration/Recovery (feet)	Sample Type	Sample Description and Classification	Group Designation	Remarks	Equipment Installed	Lab Tests Performed
	1		2276		Soil	4 μR/hr @ Borehole				
	2		2438							
	3		2562							
	4		2623							
M	5		2525							
	6	N	2456							
	7		1904	N						
	8		1913							
A	9		1563							
	10	A	1453							
	11		1526							
	12		1200							
N	13		1125						N	A
	14		1143							
	15		942	A						
	16		961				N	A		
	17		1060							
	18		872							
A	N/A	N/A	N/A	N/A	N/A					
N										
		N								
A				A						

Notes

CABRERA SERVICES

RADIOLOGICAL • ENVIRONMENTAL • REMEDIATION

SOIL CORE SCAN LOG

Project: Sylvania-Corning FUSRAP Site
Date/Time: 6/6/07
Project #: ~~07-1005.00~~ 07-1022.00 II
Instr. Model / SN: 2221w / 44-10 ; SN# 163685
Location ID: SB21-5411-05
Cal Due: 10/27/07
Total Depth: 12
Ambient Bkg: 1431 cpm
Page: 1 of 1
Technician Init: DA / GMT

Sleeve #	Depth Range	Core & Scan Info (Top → Bottom)				
1	0' - 4'		1450	1550		1550
	Core Scan Results (cpm):					
2	4' - 8'	1350	1400	1500	1475	1450
	Core Scan Results (cpm):					
3	8 - 12'					1400
	Core Scan Results (cpm):					
4	12' - 16'					
	Core Scan Results (cpm):					
5	16' - 20'					
	Core Scan Results (cpm):					

Comments: Refusal 12'

CABRERA SERVICES, INC.

PROJECT NAME: Sylvania-Corning FUSRAP
LOCATION: Hicksville, NY
CLIENT: E & E

BORING LOG
Location ID: SB21-SU11-05
Page No.: 1 of 1

Contractor: E&E	Driller: ZEBRA	Date Started: 6/6/07	Rock Refusal Depth:
Method: 4" MACRO CORE GEOPROBE	Water Elevation: N/A	Date Finished: 6/6/07	Rock Cored (FT):
Elevation: N/A	Soil Drilled:	Total Depth: 12'	Casing Size:
			Core Size: 2" x 5'
Logged By: DA/GMT	Checked By:	S/N NaI - 190205	BKG NaI (cpm) 785
Date/Time: 6/6/07		S/N Mod19 - 101662	BKG Mod19 (μR/hr) 4

Elevation	Depth (feet)	Casing Blows/Foot	DHG cpm	Sample No. & Penetration/Recovery (feet)	Sample Type	Sample Description and Classification	Group Designation	Remarks	Equipment Installed	Lab Tests Performed
	1		3308		SU11	4 μR/hr @ Borehole				
	2		3003							
	3		1964							
N	4		1466							
	5		1584							
	6		2217	N						
	7		1978							
	8		2029	A						
	9		1492							
A	10		1739							
	11		1151							
	12		1118							
N							N	A	N	
			N							
A									A	
				A						
N										
A										

Notes

~~Refusal~~

Refusal @ 12" bgs.

CABRERA SERVICES

RADIOLOGICAL · ENVIRONMENTAL · REMEDIATION

SOIL CORE SCAN LOG

Project: Sylvania-Corning FUSRAP Site
Date/Time: 6/6/07
Project #: ~~07-1005.00~~ 07-1022.00 II
Instr. Model / SN: 2221w/44-10; SN# 163685
Location ID: SBR1-SU11-09
Cal Due: 10/27/07
Total Depth: 20
Ambient Bkg: 1503 cpm
Page: 1 of 1
Technician Init: DA/GMT

Sleeve #	Depth Range	Top				Bottom
1	~~0' - 4'~~ (0-5)'		1275	1350	1350	1400
Core Scan Results (cpm):						
2	~~4' - 8'~~ (5-10)'		1550	1500	1400	1450	1350
Core Scan Results (cpm):						
3	~~8 - 12'~~ (10-15)'	VOID	1350	1300	1400	1450
Core Scan Results (cpm):						
4	~~12' - 16~~ (15-20)'			1450	1300	1250
Core Scan Results (cpm):						
5	16' - 20'					
Core Scan Results (cpm):						

Comments: 5 μR/hr @ Bkg

CABRERA SERVICES, INC.

PROJECT NAME: Sylvania-Corning FUSRAP
LOCATION: Hicksville, NY
CLIENT: E & E

BORING LOG
Location ID: SA11-SA11-09
Page No.: 1 of 1

Contractor: F&E	Driller: ZEBRA	Date Started: 6/6/07	Rock Refusal Depth:
Method: 4" MACRO CORE GEOPROBE	Water Elevation: N/A	Date Finished: 6/6/07	Rock Cored (FT):
Elevation: N/A	Soil Drilled:	Total Depth: 20'	Casing Size:
			Core Size: 2" x 5'
Logged By: DA/GMT	Checked By: GMT		
Date/Time: 6/6/07		S/N NaI - 190205	BKG NaI (cpm) 728
		S/N Mod 19 - 1018602	BKG Mod19 (μR/hr) 5

Elevation	Depth (feet)	Casing Blows/Foot	DHG cpm	Sample No. & Penetration/Recovery (feet)	Sample Type	Sample Description and Classification	Group Designation	Remarks	Equipment Installed	Lab Tests Performed
N	1		1378		Soil	5μR/hr @ BKGD	N	A	N	A
	2		3063							
	3	N	3142	N						
	4		1989							
	5		1619							
	6		1912							
	7		1787							
	8		1956							
	9		1613							
	10		1384							
	11		1469							
	12		1187							
	13		1370	A						
	14		1088							
	15		1078							
	16	A	938							
	17		941							
	18		942							
	19		862							
A	20		948							
N										
			N							
				A						
A										

Notes

CABRERA SERVICES

RADIOLOGICAL • ENVIRONMENTAL • REMEDIATION

SOIL CORE SCAN LOG

Project: Sylvania-Corning FUSRAP Site
Date/Time: 6/6/07
Project #: ~~07-1005.00~~ 07-1022.00 II
Instr. Model / SN: 2221 w/ 44-10; SN# 163685
Location ID: SBR1-SU11-04
Cal Due: 10/27/07
Total Depth: 20'
Ambient Bkg: 1547 cpm
Page: 1 of 1
Technician Init: DA/GMT

Sleeve #	Depth Range	Core & Scan Info				
		Top VOID				Bottom
1	~~0' - 4'~~ 0-5 gmt		1550	1450	1300	1450
	Core Scan Results (cpm):					
2	~~4' - 8'~~ 5-10 gmt	1350	1400	1450	1450	1350
	Core Scan Results (cpm):					
3	~~8 - 12'~~ 10-15 gmt		1350	1375	1575	1300
	Core Scan Results (cpm):					
4	~~12' - 16'~~ 15-20 gmt			1350	1300	1450
	Core Scan Results (cpm):					
5	16' - 20'	N	A			
	Core Scan Results (cpm):					

Comments: (record any drilling or sampling issues, e.g. vertical gouting/water, poor recovery, etc. here)

CABRERA SERVICES, INC.

PROJECT NAME: Sylvania-Corning FUSRAP
LOCATION: Hicksville, NY
CLIENT: E & E

BORING LOG
Location ID: S221-SU11-64
Page No.: 1 of 1

Contractor: F&E	Driller: ZEBRA	Date Started: 6/06/07	Rock Refusal Depth:
Method: 4' MACRO CORE GEOPROBE	Water Elevation: N/A	Date Finished: 6/06/07	Rock Cored (FT):
Elevation: N/A	Soil Drilled:	Total Depth: 20	Casing Size:
			Core Size: 2" x 5'
Logged By: DA/GMT	Checked By: GMT		
Date/Time: 6/6/07		S/N NaI- 190205	BKG NaI (cpm) 734
		S/N Mod19- 101662	BKG Mod19 (uR/hr) 5

Elevation	Depth (feet)	Casing Blows/Foot	DHG cpm	Sample No. & Penetration/ Recovery (feet)	Sample Type	Sample Description and Classification	Group Designation	Remarks	Equipment Installed	Lab Tests Performed
N/A	1	N/A	1221	N/A	Soil	5 μR/hr @ Bore hole.				
	2		2734							
	3		2715							
	4		1875							
	5		1588							
	6		1584							
	7		1627							
	8		2199							
	9		1584							
	10		1464							
N/A	11		1281							
	12		1215							
	13		1282							
	14		1001							
	15		1265							
	16		1509							
	17		1150							
	18		942							
	19		1061							
	20		872							
N/A			N/A							

Notes

CABRERA SERVICES

RADIOLOGICAL · ENVIRONMENTAL · REMEDIATION

SOIL CORE SCAN LOG

Project: Sylvania-Corning FUSRAP Site
Date/Time: 6/6/07 1630
Project #: 07-1005.00
Instr. Model / SN: 2221 w/44-10 108862
Location ID: SU8-10
Cal Due: 04-30-08
Total Depth: 20'
Ambient Bkg: 2427 cpm
Page: 1 of 1
Technician Init: KMA, AJC

Sleeve #	Depth Range	Core & Scan Info (Top / Bottom)
1	0' - 4'	2350 / 2275 / 2275
	Core Scan Results (cpm):	1'6" VOID
2	4' - 8'	2200 / 2300 / 2150
	Core Scan Results (cpm):	1'9" VOID
3	8 - 12'	2250 / 2425 / 2350
	Core Scan Results (cpm):	1' VOID
4	12' - 16'	2100 / 2150 / 2250
	Core Scan Results (cpm):	
5	16' - 20'	2050 / 2100 / 2200
	Core Scan Results (cpm):	

Comments: (record any drilling or sampling issues, e.g., refusal, groundwater, poor recovery, etc. here)

CABRERA SERVICES, INC.

PROJECT NAME: Sylvania-Corning FUSRAP
LOCATION: Hicksville, NY
CLIENT: E & E

BORING LOG
Location ID: SU8-10
Page No.: 1 of 1

Contractor: ZEBRA	Driller: C. GREEN	Date Started: 6/6/07	Rock Refusal Depth:
Method: DIRECT PUSH	Water Elevation: N/A	Date Finished: 6/6/07	Rock Cored (FT):
Elevation: O.G.	Soil Drilled: SAND, SILT	Total Depth: 19'	Casing Size:
		METER INFO	Core Size:
Logged By: KMA, AJC	Checked By: [signature]	2221 w/GI 216482	MODEL 19 221521
Date/Time: 06/06/07, 1650		CAL DUE 05-04-08	CAL DUE 10/15/07
		BKG CPM	BKG 5 ur/hr CAN 5 ur/hr

Elevation	Depth (feet)	Casing Blows/Foot	DHG cpm	Sample No. & Penetration/ Recovery (feet)	Sample Type	Sample Description and Classification	Group Designation	Remarks	Equipment Installed	Lab Tests Performed
	1		2338		SOIL					
	2		2491							
	3		1745							
	4		1756							
	5		1924							
	6		2223							
	7		1663							
	8		2795							
	9		2756							
	10		1550							
	11		1130							
	12		1256							
	13		1133							
	14		1119							
	15		1180							
	16		986							
	17		785							
	18		981							
	19		918		SOIL					

N/A

Notes

CABRERA SERVICES

RADIOLOGICAL · ENVIRONMENTAL · REMEDIATION

SOIL CORE SCAN LOG

Project: Sylvania-Corning FUSRAP Site
Project #: 07-1005.00
Location ID: DR-14A1
Total Depth: 15'
Page: 1 of 1

Date/Time: 06/06/07, 0830
Instr. Model / SN: 2221 w/44-10 108862
Cal Due: 04-30-08
Ambient Bkg: 1570 cpm
Technician Init: KMA, AJC

Sleeve #	Depth Range	Core & Scan Info (Top / Bottom)			
1	0' - 4'		1600	2000	1750
	Core Scan Results (cpm):	1' VOID			
2	4' - 8'	1500	1475	1450	1600
	Core Scan Results (cpm):				
3	8 - 12'	1550	1575	1500	1475
	Core Scan Results (cpm):	8'-8'4" VOID 9'-9'6" VOID			
4	12' - 16'				
	Core Scan Results (cpm):				
5	16' - 20'				
	Core Scan Results (cpm):				

Comments: (recordable drilling or sampling issues, e.g. refusal, groundwater, poor recovery, etc. here)

CABRERA SERVICES, INC.

PROJECT NAME: Sylvania-Corning FUSRAP
LOCATION: Hicksville, NY
CLIENT: E & E

BORING LOG

Location ID: DRHA 1
Page No.: 1 of 1

Contractor: ZEBRA	Driller: C. GREEN	Date Started: 06/06/07	Rock Refusal Depth:
Method: DIRECT PUSH	Water Elevation: N/A	Date Finished: 06/06/07	Rock Cored (FT):
Elevation: D.G.	Soil Drilled: SAND, SILT	Total Depth: 12'	Casing Size:
Logged By: KMA, AJC	Checked By: [signature]	METER INFO	Core Size:
Date/Time: 06/06/07, 0920		2221 W/GI 216482	MODEL 19 221521
		CAL DUE 05-04-08	CAL DUE 10/15/07
		BKG CPM 891	BKG 5 UR/HR CON 5 UR/HR

Elevation	Depth (feet)	Casing Blows/Foot	DHG cpm	Sample No. & Penetration/ Recovery (feet)	Sample Type	Sample Description and Classification	Group Designation	Remarks	Equipment Installed	Lab Tests Performed
	1		1492		SOIL					
	2		3790							
	3		5236							
	4		2952							
	5		1612							
	6		1612							
	7		1724							
	8		1641							
	9		1552							
	10		1421							
	11		1273							
	12		1124		SOIL					

N/A

Notes

CABRERA SERVICES

RADIOLOGICAL · ENVIRONMENTAL · REMEDIATION

SOIL CORE SCAN LOG

Project: Sylvania-Corning FUSRAP Site
Project #: 07-1005.00
Location ID: DR H-B
Total Depth: 20
Page: 1 of 1

Date/Time: 06/06/07, 1030
Instr. Model / SN: 2221 N/44-10 108862
Cal Due: 04-30-08
Ambient Bkg: 1786 cpm
Technician Init: KMA, AJC

Sleeve #	Depth Range	Core & Scan Info (Top → Bottom)			
1	0-5 ~~0'-4'~~	1800	1750	1900	1850
Core Scan Results (cpm):		6" VOID			
2	5-10 ~~4'-8'~~	1900	1850	1800	1650
Core Scan Results (cpm):					
3	10-15 ~~8'-12'~~		2000	1975	1850
Core Scan Results (cpm):		1' VOID			
4	15-20 ~~12'-16'~~	1725	1775	1650	1800
Core Scan Results (cpm):		6" VOID			
5	16' - 20'				
Core Scan Results (cpm):					

Comments (record any drilling or sampling issues e.g. refusal, groundwater, poor recovery, etc. here)

CABRERA SERVICES, INC.

PROJECT NAME: Sylvania-Corning FUSRAP
LOCATION: Hicksville, NY
CLIENT: E & E

BORING LOG

Location ID: DR-H-B
Page No.: 1 of 1

Contractor: ZEBRA	Driller: C. GREEN	Date Started: 06/06/07	Rock Refusal Depth:
Method: DIRECT PUSH	Water Elevation: N.A.	Date Finished: 06/06/07	Rock Cored (FT):
Elevation: O.G.	Soil Drilled: SAND, SILT	Total Depth: 15'	Casing Size:
		MODEL 1470	Core Size:
Logged By: RMA, AJC	Checked By:	2221 W/GI 216482	MODEL A 221521
Date/Time:		CAL DUE 05-04-08	CAL DUE 10/15/07
		BKG CPM 889	BKG 5 UR/HR CON 5 UR/HR

Elevation	Depth (feet)	Casing Blows/Foot	DHG cpm	Sample No. & Penetration/ Recovery (feet)	Sample Type	Sample Description and Classification	Group Designation	Remarks	Equipment Installed	Lab Tests Performed
	1		1939		SOIL					
	2		2139							
	3		2424							
	4		2229							
	5		1916							
	6		1996							
	7		2425							
	8		2046							
	9		2877							
	10		1924							
	11		1345							
	12		1180							
	13		1097							
	14		1121							
	15		1348		SOIL					

Notes

CABRERA SERVICES

RADIOLOGICAL • ENVIRONMENTAL • REMEDIATION

SOIL CORE SCAN LOG

Project: Sylvania-Corning FUSRAP Site
Project #: 07-1005.00
Location ID: SU8-0~~8~~9
Total Depth: 20'
Page: 1 of 1

Date/Time: 06/06/07, 1330
Instr. Model / SN: 2221 W/44-10 108862
Cal Due: 04-30-08
Ambient Bkg: 2427 cpm
Technician Init: KMA, AJC

Sleeve #	Depth Range	Core & Scan Info (Top → Bottom)			
1	0' - 4'	2400	2325	2500	2300
	Core Scan Results (cpm):				
2	4' - 8'	2350	2575	2400	2250
	Core Scan Results (cpm):	9" VOID			
3	8 - 12'	2175	2250		2350
	Core Scan Results (cpm):	1' VOID			
4	12' - 16'	2300	2250	2050	
	Core Scan Results (cpm):	1' VOID			
5	16' - 20'			2250	2100
	Core Scan Results (cpm):	2' 6" VOID			

Comments: (recorded, drilling or sampling stress, e.g. refusal, groundwater, poor recovery, etc. here)

POOR RECOVERY FROM 15' TO 18' 6"

CABRERA SERVICES, INC.

PROJECT NAME: Sylvania-Corning FUSRAP
LOCATION: Hicksville, NY
CLIENT: E & E

BORING LOG

Location ID: SU 8-09
Page No.: 1 of 1

Contractor: ZEBRA	Driller: C. GREEN	Date Started: 06/06/07	Rock Refusal Depth:
Method: DIRECT PUSH	Water Elevation: N/A	Date Finished: 06/06/07	Rock Cored (FT):
Elevation: O.G.	Soil Drilled: SAND, SILT	Total Depth: 20'	Casing Size:
Logged By: KMA, AJC	Checked By: [signature]	METER INFO	Core Size:
Date/Time: 06/06/07, 1450		2221 W/GI 216482	MODEL 19 221521
		CAL DUE 05-04-08	CAL DUE 10/15/07
		BKG 1294	BKG 6 UR/HR CON 5 UR/HR

Elevation	Depth (feet)	Casing Blows/Foot	DHG cpm	Sample No. & Penetration/ Recovery (feet)	Sample Type	Sample Description and Classification	Group Designation	Remarks	Equipment Installed	Lab Tests Performed
	1		1821		SOIL					
	2		2153							
	3		2559							
	4		2264							
	5		1586							
	6		1655							
	7		2188							
	8		1653							
	9		1751							
	10		1467							
	11		1259							
	12		1062							
	13		1192							
	14		1167							
	15		1053							
	16		1041							
	17		944							
	18		904							
	19		936							
	20		758		SOIL					

Notes

CABRERA SERVICES

RADIOLOGICAL · ENVIRONMENTAL · REMEDIATION

SOIL CORE SCAN LOG

Project: Sylvania-Corning FUSRAP Site
Date/Time: 6/6/07, 1530
Project #: 07-1005.00
Instr. Model / SN: 2221 N/44-10 108862
Location ID: SU 8-13
Cal Due: 04-30-08
Total Depth: 20
Ambient Bkg: 2427 cpm
Page: 1 of 1
Technician Init: KML, AJC

Sleeve #	Depth Range	Core & Scan Info (Top / Bottom)
1	0' - 4'	2450 / 2200
	Core Scan Results (cpm):	2' VOID
2	4' - 8'	2100 / 2350 / 2300
	Core Scan Results (cpm):	1'6" VOID
3	8 - 12'	2350 / 2150 / 2150 / 2250
	Core Scan Results (cpm):	
4	12' - 16'	2225 / 2075 / 2100
	Core Scan Results (cpm):	1' VOID
5	16' - 20'	2175 / 2050 / 2025
	Core Scan Results (cpm):	1' VOID

Comments: (recordable drilling or sampling issues, e.g. refusal, groundwater, no recovery, etc. here)

CABRERA SERVICES, INC.

PROJECT NAME: Sylvania-Corning FUSRAP
LOCATION: Hicksville, NY
CLIENT: E & E

BORING LOG

Location ID: SU 8-13
Page No.: 1 of 1

Contractor: ZEBRA	Driller: C. GLEGN	Date Started: 06/06/07	Rock Refusal Depth:
Method: DIRECT PUSH	Water Elevation: N/A	Date Finished: 06/06/07	Rock Cored (FT):
Elevation: G.G.	Soil Drilled: SAND, SILT	Total Depth: 20'	Casing Size:
		MODEL INFO	Core Size:
Logged By: RMA, AJC	Checked By: SMT	2221 W/GL 216482	MODEL 19 221521
Date/Time: 06/06/07		CAL DUE 05-01-08	CAL DUE 10-15-07
		BKG CPM 1178	BKG 5 UR/HR CON 5 UR/HR

Elevation	Depth (feet)	Casing Blows/Foot	DHG cpm	Sample No. & Penetration/ Recovery (feet)	Sample Type	Sample Description and Classification	Group Designation	Remarks	Equipment Installed	Lab Tests Performed
	1		2151		SOIL					
	2		1985							
	3		1748							
	4		1888							
	5		2291							
	6		2180							
	7		2779							
	8		2970							
	9		3102							
	10		2228							
	11		1259							
	12		1189							
	13		1265							
	14		1297							
	15		1001							
	16		1043							
	17		990							
	18		946							
	19		894							
	20		970		SOIL					

Notes

CABRERA SERVICES, INC.

PROJECT NAME: Sylvania-Corning FUSRAP
LOCATION: Hicksville, NY
CLIENT: E & E

BORING LOG

Location ID: 100-07
Page No.: 1 of 1

Contractor: ZEBRA	Driller: C. GREEN	Date Started: 06/07/07	Rock Refusal Depth:
Method: DIRECT PUSH	Water Elevation: N/A	Date Finished: 06/07/07	Rock Cored (FT):
Elevation: O.G.	Soil Drilled: SAND, SILT	Total Depth: 17'	Casing Size:
		MODEL NPO	Core Size:
Logged By: KMA, AJC	Checked By: [illegible]	2221 w/GI 216482	MODEL A 221521
Date/Time: 06/07/07		CAL DUE 05-01-08	CAL DUE 10/15/07
		BKG CPM 1120	BKG 5 uR/hr CPM 5 uR/hr

Elevation	Depth (feet)	Casing Blows/Foot	DHG cpm	Sample No. & Penetration/ Recovery (feet)	Sample Type	Sample Description and Classification	Group Designation	Remarks	Equipment Installed	Lab Tests Performed
	1		1978		SOIL					
	2		2462							
	3		2162							
	4		2915							
	5		3395							
	6		1764							
	7		1585							
	8		1857							
	9		1992							
	10		1303							
	11		1469							
	12		1208							
	13		1313							
	14		1323							
	15		1257							
	16		968							
	17		788		SOIL					

Notes

CABRERA SERVICES

RADIOLOGICAL · ENVIRONMENTAL · REMEDIATION

SOIL CORE SCAN LOG

Project: Sylvania-Corning FUSRAP Site
Date/Time: 06/07/07
Project #: 07-1005.00
Instr. Model / SN: 2221 W/44-10 108862
Location ID: 100-07
Cal Due: 04-30-08
Total Depth: 17
Ambient Bkg: 1916 cpm
Page: 1 of 1
Technician Init: KMA

Sleeve #	Depth Range	Core & Scan Info (Top / Bottom)			
1	0' - 4'			2000	1975
	Core Scan Results (cpm):	2' VOID			
2	4' - 8'	1875		2000	2000
	Core Scan Results (cpm):	1' 6" VOID			
3 *	8 - 12'	1975	1875		1950
	Core Scan Results (cpm):	1' VOID			
4	12' - 16'	1900	1875	1900	1850
	Core Scan Results (cpm):				
5	16' - 20'		N		
	Core Scan Results (cpm):	A			

Comments: * (record any drilling or sampling issues, e.g. refusal, groundwater, poor recovery, etc. here)

CABRERA SERVICES

RADIOLOGICAL · ENVIRONMENTAL · REMEDIATION

SOIL CORE SCAN LOG

Project: Sylvania-Corning FUSRAP Site
Project #: 07-1005.00
Location ID: 100-08
Total Depth: 16'
Page: 1 of 1

Date/Time: 06/07/07, 1340
Instr. Model / SN: 2221 w/44-10 108862
Cal Due: 04-30-08
Ambient Bkg: 1916 cpm
Technician Init: KMA, AJC

Sleeve #	Depth Range	Core & Scan Info (Top / Bottom)				
1	0' - 4'			1900	1900	2050
	Core Scan Results (cpm):	1' 6" VOID				
2	4' - 8'	2050			2050	1950
	Core Scan Results (cpm):	1' VOID				
3	8 - 12'	1850	1875			
	Core Scan Results (cpm):	2' VOID				
4	12' - 16'	1900	1900	1850	1775	
	Core Scan Results (cpm):					
5	16' - 20'		N	A		
	Core Scan Results (cpm):					

Comments: (recording drilling or sampling issues, e.g. refusal, groundwater, poor recovery, etc. here)

CABRERA SERVICES, INC.

PROJECT NAME: Sylvania-Corning FUSRAP
LOCATION: Hicksville, NY
CLIENT: E & E

BORING LOG
Location ID: 100-08
Page No.: 1 of 1

Contractor: ZEBRA	Driller: C. GREEN	Date Started: 06/07/07	Rock Refusal Depth:
Method: DIRECT PUSH	Water Elevation: N/A	Date Finished: 06/07/07	Rock Cored (FT):
Elevation: O.G.	Soil Drilled: SAND, SILT	Total Depth: 17'	Casing Size:
Logged By: KMA, AJC	Checked By: [signature]	METER INFO 2221 w/GI 216482	Core Size:
Date/Time: 06/07/07		CAL DUE 05-04-08	MODEL 19 221521
		BKG CPM	CAL DUE 10/15/07
			BKG 5 UR/HR CON 5 UR/HR

Elevation	Depth (feet)	Casing Blows/Foot	DHG cpm	Sample No. & Penetration/ Recovery (feet)	Sample Type	Sample Description and Classification	Group Designation	Remarks	Equipment Installed	Lab Tests Performed
	1		1160		SOIL					
	2		1673							
	3		3014							
	4		3542							
	5		1789							
	6		2010							
	7		2285							
	8		2390							
	9		1688							
	10		1220							
	11		1054							
	12		1077							
	13		1243							
	14		1417							
	15		1042							
	16		985							
	17		1062		SOIL					

N/A

Notes

CABRERA SERVICES

RADIOLOGICAL • ENVIRONMENTAL • REMEDIATION

SOIL CORE SCAN LOG

Project: Sylvania-Corning FUSRAP Site
Project #: 07-1005.00
Location ID: 100 - 09
Total Depth: 17
Page: 1 of 1

Date/Time: 06/07/07 1130
Instr. Model / SN: 2221 W/44-10 108862
Cal Due: 04-30-08
Ambient Bkg: 1916 cpm
Technician Init: KMA, AJC

Sleeve #	Depth Range	Core & Scan Info (Top / Bottom)
1	0' - 4'	1900 / 1900 / 1725
	Core Scan Results (cpm):	1' 9" VOID
2	4' - 8'	19500 / 1750 / 1775
	Core Scan Results (cpm):	1' 6" VOID
3 *	8 - 12'	1800 / 2025 / 1850
	Core Scan Results (cpm):	1' VOID
4	12' - 16'	1825 / 2100 / 1885 / 2000
	Core Scan Results (cpm):	
5	16' - 20'	N / A
	Core Scan Results (cpm):	

Comments: (recordable drilling or sampling issues, e.g. refusal, groundwater, poor recovery, etc. here)

CABRERA SERVICES, INC.

PROJECT NAME: Sylvania-Corning FUSRAP
LOCATION: Hicksville, NY
CLIENT: E & E

BORING LOG

Location ID: 100-09
Page No.: 1 of 1

Contractor: ZEBRA	Driller: C. GREEN	Date Started: 06/07/07	Rock Refusal Depth:
Method: DIRECT PUSH	Water Elevation: N/A	Date Finished: 06/07/07	Rock Cored (FT):
Elevation: O.G.	Soil Drilled: SAND, SILT	Total Depth:	Casing Size:
Logged By: KMA, AJC	Checked By: [signature]	METER INFO	Core Size:
Date/Time: 06/07/07		2221 W/GI 216482	MODEL 19 221521
		CAL DUE 05-04-08	CAL DUE 10/15/07
		BKG CPM 1178	BKG 5 UR/HR CON 5 UR/HR

Elevation	Depth (feet)	Casing Blows/Foot	DHG cpm	Sample No. & Penetration/ Recovery (feet)	Sample Type	Sample Description and Classification	Group Designation	Remarks	Equipment Installed	Lab Tests Performed
	1		1465		SOIL					
	2		1361							
	3		1630							
	4		1679							
	5		1444							
	6		1368							
	7		1419							
	8		1793							
	9		1517							
	10		1355							
	11		2492							
	12		1512							
	13		1164							
	14		1360							
	15		978							
	16		982							
	17		816		SOIL					

Notes

CABRERA SERVICES

RADIOLOGICAL · ENVIRONMENTAL · REMEDIATION

SOIL CORE SCAN LOG

Project: Sylvania-Corning FUSRAP Site
Project #: 07-1005.00
Location ID: 140-10
Total Depth: 16'
Page: 1 of 1

Date/Time: 06/07/07, 1010
Instr. Model / SN: 2221 w/44-10 108862
Cal Due: 04-30-08
Ambient Bkg: 1916 cpm
Technician Init: KMA, AJC

Sleeve #	Depth Range	Core & Scan Info (Top / Bottom)
1	0' - 4'	1815 / 1925 / 1925
	Core Scan Results (cpm):	1'6" UOID
2	4' - 8'	1900 / 1850 / 1825
	Core Scan Results (cpm):	1'6" UOID
3 *	8 - 12'	1850 / 1725
	Core Scan Results (cpm):	
4	12' - 16'	1850 / 1775 / 1800 / 2000
	Core Scan Results (cpm):	
5	16' - 20'	N / A
	Core Scan Results (cpm):	

Comments: (record any drilling or sampling issues, e.g. refusal, groundwater, poor recovery, etc. here)

CABRERA SERVICES, INC.

PROJECT NAME: Sylvania-Corning FUSRAP
LOCATION: Hicksville, NY
CLIENT: E & E

BORING LOG

Location ID: 140-10
Page No.: 1 of 1

Contractor: ZEBRA	Driller: C. GREEN	Date Started: 06/07/07	Rock Refusal Depth:
Method: DIRECT PUSH	Water Elevation: N/A	Date Finished: 06/07/07	Rock Cored (FT):
Elevation: O.G.	Soil Drilled: SAND, SILT	Total Depth:	Casing Size:
		MODEL NPO	Core Size:
Logged By: RMA, AJC	Checked By:	2221 W/GI 216482	MODEL P 221521
Date/Time: 06/07/07 1035		CAL DUE 05-04-08	CAL DUE 10/15/07
		BKG CPM	BKG 5 UR/HR CPM 9 UR/HR

Elevation	Depth (feet)	Casing Blows/Foot	DHG cpm	Sample No. & Penetration/Recovery (feet)	Sample Type	Sample Description and Classification	Group Designation	Remarks	Equipment Installed	Lab Tests Performed
	1		2708		SOIL					
	2		3604		↑					
	3		2347							
	4		1767							
	5		1563							
	6		1791							
	7		2569							
	8		2095							
	9		1705							
	10		1226							
	11		1167							
	12		1135							
	13		1170							
	14		1135							
	15		1073							
	16		1160		↓					
	17		966		SOIL					
			N	A						

Notes

CABRERA SERVICES

RADIOLOGICAL · ENVIRONMENTAL · REMEDIATION

SOIL CORE SCAN LOG

Project: Sylvania-Corning-FUSRAP Site
Date/Time: 6/7/07
Project #: ~~07-1005.00~~ 07-1022.00 II
Instr. Model / SN: 2221 w/ 44-10, SN #163685
Location ID: SBRI-SV10-02
Cal Due: 10/27/07
Total Depth: 11'
Ambient Bkg: 1562 cpm
Page: 1 of 1
Technician Init: DA/GMT

Sleeve	Depth Range	Core & Scan Info (Top → Bottom)			
1	~~0' - 4'~~ 0-3		1300	1500	
Core Scan Results (cpm):					
2	4' - 8' 3-6		1475	1300	
Core Scan Results (cpm):					
3	8 - 12' 6-9	1500	1375	1300	
Core Scan Results (cpm):					
4	~~12' - 16'~~ 9-12		1300	1350	
Core Scan Results (cpm):					
5	16' - 20'				
Core Scan Results (cpm):					

Comments: (recovery, drilling/sampling issues, refusal, groundwater, poor recovery, etc.)

CABRERA SERVICES, INC.

PROJECT NAME: Sylvania-Corning FUSRAP
LOCATION: Hicksville, NY
CLIENT: E & E

BORING LOG
Location ID: SA01-SB18-02
Page No.: 1 of 1

Contractor: E&E	Driller: ZEBRA	Date Started: 6/7/07	Rock Refusal Depth:
Method: 4" MACRO CORE GEOPROBE	Water Elevation: N/A	Date Finished: 6/7/07	Rock Cored (FT):
Elevation: N/A	Soil Drilled:	Total Depth: 9	Casing Size:
			Core Size: 1.5" x 3
Logged By: PA/GMT	Checked By:		
Date/Time: 6/7/07		S/N NaI - 190205	BKG NaI (cpm) 958
		S/N Mod19 - 101662	BKG Mod19 (uR/hr) 4

Elevation	Depth (feet)	Casing Blows/Foot	DHG cpm	Sample No. & Penetration/Recovery (feet)	Sample Type	Sample Description and Classification	Group Designation	Remarks	Equipment Installed	Lab Tests Performed
N/A	1	N/A	1950	N/A	Soil		N/A	N/A	N/A	N/A
	2		2204							
	3		2104							
	4		1774							
	5		1705							
	6		1946							
	7		2121							
	8		1780							
	9		2513							
N/A										
N/A										

Notes

CABRERA SERVICES

RADIOLOGICAL · ENVIRONMENTAL · REMEDIATION

SOIL CORE SCAN LOG

Project: Sylvania-Corning FUSRAP Site
Date/Time: 06/07/07 0930
Project #: 07-1005.00
Instr. Model / SN: 2221 w/44-10 108862
Location ID: 140 - 11
Cal Due: 04-30-08
Total Depth: 16'
Ambient Bkg: 1916 cpm
Page: 1 of 1
Technician Init: KMA, AJC

Sleeve #	Depth Range	Core & Scan Info (Top / Bottom)			
1	0' - 4'			2300	2100
	Core Scan Results (cpm):	2' VOID			
2	4' - 8'	2150			1750
	Core Scan Results (cpm):	2' VOID			
3 *	8 - 12'	1925	1800		1850
	Core Scan Results (cpm):	1' 9" VOID			
4	12' - 16'	2000	1975	2050	1925
	Core Scan Results (cpm):				
5	16' - 20'				
	Core Scan Results (cpm):				

Comments: (recorder, drilling, sampling, spoils, e.g. refusal, groundwater, soil recovery, etc. here)

CABRERA SERVICES, INC.

PROJECT NAME: Sylvania-Corning FUSRAP
LOCATION: Hicksville, NY
CLIENT: E & E

BORING LOG

Location ID: 140-11
Page No.: 1 of 1

Contractor: ZEBRA	Driller: C. GREEN	Date Started: 06/07/07	Rock Refusal Depth:
Method: DIRECT PUSH	Water Elevation: N.A	Date Finished:	Rock Cored (FT):
Elevation: O.G.	Soil Drilled: SAND, SILT	Total Depth:	Casing Size:
Logged By: KMA, AJC	Checked By: [illegible]	METER INFO	Core Size:
Date/Time: 06/07/07 0955		2221 w/GI 216482	MODEL 19 221521
		CAL DUE 05-04-08	CAL DUE 10/15/07
		BKG CPM	BKG 5 UR/HR CON 5 UR/HR

Elevation	Depth (feet)	Casing Blows/Foot	DHG cpm	Sample No. & Penetration/ Recovery (feet)	Sample Type	Sample Description and Classification	Group Designation	Remarks	Equipment Installed	Lab Tests Performed
	1		2106		SOIL					
	2		2986							
	3		3357							
	4		1922							
	5		1395							
	6		1515							
	7		2018							
	8		2505							
	9		2024							
	10		1909							
	11		1156							
	12		1101							
	13		1104							
	14		1216							
	15		960							
	16		995							
	17		996		SOIL					

N
A

Notes

CABRERA SERVICES

RADIOLOGICAL · ENVIRONMENTAL · REMEDIATION

SOIL CORE SCAN LOG

Project: Sylvania-Corning FUSRAP Site
Date/Time: 6/7/07 0830
Project #: 07-1005.00
Instr. Model / SN: 2221 w/44-10 108862
Location ID: SUB-15
Cal Due: 04-30-08
Total Depth: 16'
Ambient Bkg: 1916 cpm
Page: 1 of 1
Technician Init: KMA, AJC

Sleeve #	Depth Range	Core & Scan Info (Top / Bottom)			
1	0' - 4'		1900	1950	1850
	Core Scan Results (cpm):	1' VOID			
2	4' - 8'	1950		1950	1850
	Core Scan Results (cpm):	1'6" void			
3 *	8 - 12'	1750	1850		1950
	Core Scan Results (cpm):	1' VOID			
4	12' - 16'	1950	1750	1700	2000
	Core Scan Results (cpm):				
5	16' - 20'		N		
	Core Scan Results (cpm):	A			

Comments: (record any drilling or sampling issues, e.g. refusal, groundwater, poor recovery, etc., here)

CABRERA SERVICES, INC.

PROJECT NAME: Sylvania-Corning FUSRAP
LOCATION: Hicksville, NY
CLIENT: E & E

BORING LOG

Location ID: SY8-15
Page No.: 1 of 1

Contractor: ZEBRA	Driller: C. GREGG	Date Started: 6/7/07	Rock Refusal Depth:
Method: DIRECT PUSH	Water Elevation: N/A	Date Finished: 6/7/07	Rock Cored (FT):
Elevation: O.G.	Soil Drilled: SAND, SILT	Total Depth: 17'	Casing Size:
		MODEL NPD	Core Size:
Logged By: KMA, AYC	Checked By: GNN	2221 W/GI 216482	MODEL A 221521
Date/Time: 06/07/07, 0905		CAL DUE 05-01-08	CAL DUE 10/15/07
		1095 BKG CPM	BKG 5 UR/HR COR 6 UR/HR

Elevation	Depth (feet)	Casing Blows/Foot	DHG cpm	Sample No. & Penetration/Recovery (feet)	Sample Type	Sample Description and Classification	Group Designation	Remarks	Equipment Installed	Lab Tests Performed
	1		2540		SOIL					
	2		3468							
	3		3358							
	4		1899							
	5		2098							
	6		1749							
	7		1757							
	8		2110							
	9		1654							
	10		1578							
	11		1241							
	12		1409							
	13		1120							
	14		967							
	15		1038							
	16		1075							
	17		990		SOIL					

Notes

CABRERA SERVICES

RADIOLOGICAL · ENVIRONMENTAL · REMEDIATION

SOIL CORE SCAN LOG

Project: Sylvania-Corning FUSRAP Site
Date/Time: 06/07/07, 1520
Project #: 07-1005.00
Instr. Model / SN: 2221 w/44-10 108862
Location ID: 100 - 11
Cal Due: 04-30-08
Total Depth: 16'
Ambient Bkg: 1916 cpm
Page: 1 of 1
Technician Init: KMA, AJC

Sleeve #	Depth Range	Core & Scan Info (Top / Bottom)			
1	0' - 4'			2000	3700
	Core Scan Results (cpm):	2' VOID			
2	4' - 8'	2300		2200	2200
	Core Scan Results (cpm):	2' VOID			
3 *	8 - 12'	3000	2300		
	Core Scan Results (cpm):	2' VOID			
4	12' - 16'				2150
	Core Scan Results (cpm):	3' VOID			
5	16' - 20'				
	Core Scan Results (cpm):				

Comments: (recovery, drilling, sampling, sides, e.g. wet/sat, groundwater, no recovery, etc. here)

CABRERA SERVICES, INC.

PROJECT NAME: Sylvania-Corning FUSRAP
LOCATION: Hicksville, NY
CLIENT: E & E

BORING LOG
Location ID: 100-11
Page No.: 1 of 1

Contractor: ZEBRA	Driller: C. GREEN	Date Started: 6/7/07	Rock Refusal Depth:
Method: DIRECT PUSH	Water Elevation:	Date Finished: 06/07/07	Rock Cored (FT):
Elevation: 0.G.	Soil Drilled:	Total Depth: 13'	Casing Size:
Logged By: RMA, AJC	Checked By: [signature]	METER INFO	Core Size:
Date/Time:		2221 w/ GI 216482	MODEL 19 221521
		CAL DUE 05-04-08	CAL DUE 10/15/07
		BKG 0.20	BKG 5 UR/HR CON 7 UR/HR

Elevation	Depth (feet)	Casing Blows/Foot	DHG cpm	Sample No. & Penetration/ Recovery (feet)	Sample Type	Sample Description and Classification	Group Designation	Remarks	Equipment Installed	Lab Tests Performed
	1		1965							
	2		4655							
	3		7833							
	4		4135							
	5		4081							
	6		6019							
	7		6485							
	8		4370							
	9		2207							
	10		1257							
	11		1332							
	12		1299							
	13		1482							

Notes

CABRERA SERVICES

RADIOLOGICAL • ENVIRONMENTAL • REMEDIATION

SOIL CORE SCAN LOG

Project: Sylvania-Corning FUSRAP Site
Date/Time: 6/7/07
Project #: ~~07-1005.00~~ 07-1022.00 II
Instr. Model / SN: 2221 w/ 44-10 ; SN # 163685
Location ID: SMP 1
Cal Due: 10/27/07
Total Depth: 20
Ambient Bkg: 1535 cpm
Page: 1 of 1
Technician Init: DA/GMT

Sleeve #	Depth Range	Core & Scan Info				
		Top				Bottom
1	~~0' - 4'~~ (0-5)'		1475	1350	1300	1300
	Core Scan Results (cpm):					
2	~~4' - 8'~~ (5-10)'		1400	1400	1450	1300
	Core Scan Results (cpm):					
3	~~8 - 12'~~ 10-15	1350	1400	1300	1300	1400
	Core Scan Results (cpm):					
4	~~12' - 16'~~ 15-20			1400	1300	1450
	Core Scan Results (cpm):					
5	~~16' - 20'~~ 20-25					
	Core Scan Results (cpm):					

Comments: (record any unusual or sampling issues, e.g., refusal, groundwater, poor recovery, or other)

CABRERA SERVICES, INC.

PROJECT NAME: Sylvania-Corning FUSRAP
LOCATION: Hicksville, NY
CLIENT: E & E

BORING LOG
Location ID: ~~SYP~~ SYP-1
Page No.: 1 of 1

Contractor: E&E	Driller: ZEBRA	Date Started: 6/8/07	Rock Refusal Depth:
Method: 4" Macro Core GeoProbe	Water Elevation: N/A	Date Finished: 6/9/07	Rock Cored (FT):
Elevation: N/A	Soil Drilled:	Total Depth: 20	Casing Size:
			Core Size: 2" x 5'
Logged By: DA/GMT	Checked By: GMT		
Date/Time: 6/9/07		S/N NaI - 190205	BKG NaI (cpm) 831
		S/N Mod 19 - 1018662	BKG Mod 19 (uR/hr) 5

Elevation	Depth (feet)	Casing Blows/Foot	DHG cpm	Sample No. & Penetration/ Recovery (feet)	Sample Type	Sample Description and Classification	Group Designation	Remarks	Equipment Installed	Lab Tests Performed
N	1		1153		Soil	5 μR/hr @ Borehole				
	2		1989							
	3		3058							
	4		1629							
	5		1650							
	6		1717							
	7		1735							
A	8		1722	N						
	9	N	2005							
	10		1782	A						
	11		1497							
	12	A	1134							
	13		1237							
N	14		1232							
	15		1253				N	A	N	A
	16		1149							
	17		1091							
	18		956							
	19		879							
	20		873							
			N							
				A						
A										

Notes

CABRERA SERVICES

RADIOLOGICAL · ENVIRONMENTAL · REMEDIATION

SOIL CORE SCAN LOG

Project: Sylvania-Corning FUSRAP Site
Date/Time: 6/7/07
Project #: ~~07-1005.00~~ 07-1022.00 II
Instr. Model / SN: 2221 w/ 44-10, SN #163685
Location ID: SBR1-SW11-03
Cal Due: 10/27/07
Total Depth: 8'
Ambient Bkg: 1464 cpm
Page: 1 of 1
Technician Init: DA/GMT

Sleeve #	Depth Range	Core & Scan Info (Top / Bottom)			
1	0' - 4' (0-3)		1300	1450	1425
Core Scan Results (cpm):					
2	4' - 8' (3-6)		1550	1600	1625
Core Scan Results (cpm):					
3	8 - 12' (6-9)				
Core Scan Results (cpm):		* SEE COMMENTS			
4	12' - 16' (9-12)				
Core Scan Results (cpm):			N		
5	16' - 20'		A		
Core Scan Results (cpm):					

Comments: (record any drilling or sampling issues such as refusal, groundwater, poor recovery, etc. here)

*Refusal @ 8' bgs. Acetate sleeve ~~st~~ stuck in core barrel. soil "tapped" out on plastic and scanned w/ 44-9 probe. Scan results ranged from 40-60 cpm. 44-9 #229277; Bkg 40cpm.

CABRERA SERVICES, INC.

PROJECT NAME: Sylvania-Corning FUSRAP
LOCATION: Hicksville, NY
CLIENT: E & E

BORING LOG
Location ID: S221-SU11-03
Page No.: 1 of 1

Contractor: E-2 E	Driller: ZEBRA	Date Started: 6/7/07	Rock Refusal Depth:
Method: 4" MICRO CORE GEOPROBE	Water Elevation: N/A	Date Finished: 6/7/07	Rock Cored (FT):
Elevation: N/A	Soil Drilled:	Total Depth:	Casing Size:
			Core Size: 1.5 x 3'
Logged By: DN/GMT	Checked By: SWA		
Date/Time: 6/7/07		S/N NaI - 190205	BKG NaI (cpm) 1139
		S/N Mod19 - 1018662	BKG Mod19 (uR/hr) 5

Elevation	Depth (feet)	Casing Blows/Foot	DHG cpm	Sample No. & Penetration/ Recovery (feet)	Sample Type	Sample Description and Classification	Group Designation	Remarks	Equipment Installed	Lab Tests Performed
N	1	N	1934	N	SU1	5 μR/hr @ bore hole	N	N	N	
	2		3804							
	3		2925							
	4		1692							
	5	A	1424	A						
	6		1694							
	7		1623							
	8		1748							
	N/A		N/A		N/A					
N/A			N	A						
N/A										

Notes

CABRERA SERVICES

RADIOLOGICAL • ENVIRONMENTAL • REMEDIATION

SOIL CORE SCAN LOG

Project: Sylvania-Corning FUSRAP Site
Date/Time: 6/7/07
Project #: ~~07-1005.00~~ 07-1022.00 II
Instr. Model / SN: 2221 w/ 44-10, SN#163685
Location ID: SBRI-SU11-22
Cal Due: 10/27/07
Total Depth: 8'
Ambient Bkg: 1413 cpm
Page: 1 of 1
Technician Init: DA/GMT

Sleeve #	Depth Range	Core & Scan Info (Top / Bottom)			
1	0-3 ~~0'-4'~~		1325	1350	
Core Scan Results (cpm):					
2	3-6 ~~4'-8'~~	1260	1400	1350	
Core Scan Results (cpm):					
3	6-9 ~~8-12'~~	1400	1450	1500	
Core Scan Results (cpm):					
4	12' - 16'				
Core Scan Results (cpm):					
5	16' - 20'				
Core Scan Results (cpm):					

N/A

Comments: (record any drilling or sampling issues, e.g. refusal, groundwater, poor recovery, etc. here)

Bkgd @ 4mR/hr Refusal @ 8' bgs per driller.

CABRERA SERVICES, INC.

PROJECT NAME: Sylvania-Corning FUSRAP
LOCATION: Hicksville, NY
CLIENT: E & E

BORING LOG
Location ID: S221-SU11-22
Page No.: 1 of 1

Contractor: E&E	Driller: ZEBRA	Date Started: 6/7/07	Rock Refusal Depth:
Method: 4' MACRO CORE GEOPROBE	Water Elevation: N/A	Date Finished: 6/7/07	Rock Cored (FT):
Elevation: N/A	Soil Drilled:	Total Depth: 7	Casing Size:
			Core Size: 1.5" x 3'
Logged By: DA/GMT	Checked By: [illegible]		
Date/Time: 6/7/07		S/N NaI - 190205	BKG NaI (cpm) 1016
		S/N Mod 19 - 101662	BKG Mod 19 (uR/hr) 4

Elevation	Depth (feet)	Casing Blows/Foot	DHG cpm	Sample No. & Penetration/ Recovery (feet)	Sample Type	Sample Description and Classification	Group Designation	Remarks	Equipment Installed	Lab Tests Performed
N/A	1		1005	N/A	Soil	4μR/hr @ bore hole	N/A	N/A	N/A	N/A
	2		2710							
	3		3419							
	4		1858							
	5		1424							
	6		1675							
	7		2503							
	8									

Notes

CABRERA SERVICES

RADIOLOGICAL • ENVIRONMENTAL • REMEDIATION

SOIL CORE SCAN LOG

Project: Sylvania-Corning FUSRAP Site
Project #: ~~07-1005.00~~ 07-1022.00 II
Location ID: DR-R1/R2
Total Depth: 8'
Page: 1 of 1

Date/Time: 6/7/07
Instr. Model / SN: 2221 w/ 44-10, SN #163685
Cal Due: 10/27/07
Ambient Bkg: 1492 cpm
Technician Init: DA/GMT

Sleeve #	Depth Range	Core & Scan Info (Top → Bottom)			
1	~~0'-4'~~ 0-3			1500	
Core Scan Results (cpm):					
2	~~4'-8'~~ 3-6	1550	1525	1500	
Core Scan Results (cpm):					
3	~~8-12'~~ 6-9	1450	1550	1450	
Core Scan Results (cpm):					
4	12' - 16'				
Core Scan Results (cpm):		N			
5	16' - 20'		A		
Core Scan Results (cpm):					

Comments: (recovery, drilling/sampling issues, e.g. refusal, groundwater, poor recovery, etc. here)

Refusal at 8' bgs per drillers.

CABRERA SERVICES, INC.

PROJECT NAME: Sylvania-Corning FUSRAP
LOCATION: Hicksville, NY
CLIENT: E & E

BORING LOG
Location ID: 5221-~~SCT~~ Smw DR-R1/R2
Page No.: 1 of 1

Contractor: E&E	Driller: ZEBRA	Date Started: 6/6/07	Rock Refusal Depth:
Method: 4' MACRO CORE GEOPROBE	Water Elevation: N/A	Date Finished: 6/6/07	Rock Cored (FT):
Elevation: N/A	Soil Drilled:	Total Depth:	Casing Size:
			Core Size: 1.5" X 3'
Logged By: DA/GMT	Checked By: [signature]		
Date/Time: 6/6/07		S/N NaI - 190205	BKG NaI (cpm) 1128
		S/N Mod 19 - 101662	BKG Mod 19 (uR/hr) 4

Elevation	Depth (feet)	Casing Blows/Foot	DHG cpm	Sample No. & Penetration/Recovery (feet)	Sample Type	Sample Description and Classification	Group Designation	Remarks	Equipment Installed	Lab Tests Performed
N/A	1	N/A	1386	N/A	Soil	µR/hr @ borehole	N/A	N/A	N/A	N/A
	2		1655							
	3		2503							
	4		2785							
	5		2331							
	6		1745							
	7		1850							

Notes

CABRERA SERVICES

RADIOLOGICAL · ENVIRONMENTAL · REMEDIATION

SOIL CORE SCAN LOG

Project: Sylvania-Corning FUSRAP Site
Project #: ~~07-1005.00~~ 07-1022.00 II
Location ID: SBR1-SU10-11
Total Depth: 11'
Page: 1 of 1

Date/Time: 6/8/07
Instr. Model / SN: 2221 w/ 44-10, SN#163685
Cal Due: 10/27/07
Ambient Bkg: 1987 cpm
Technician Init: DA/GMT

Sleeve #	Depth Range	Core & Scan Info: Top				Bottom
1	~~0'-4'~~ 0-3	1875	1900	1900		
Core Scan Results (cpm):						
2	~~4'-8'~~ 3-6	2000	1950	1950		
Core Scan Results (cpm):						
3	8-~~12'~~ 6-9	2150	2100	2125		
Core Scan Results (cpm):						
4	~~12'-16'~~ 9-12	1900	1875	1825		
Core Scan Results (cpm):						
5	16' - 20'		N			
Core Scan Results (cpm):			A			

Comments: (record any drilling or sampling issues, e.g. refusal, groundwater, poor recovery, etc. here)

6 μR/hr @ BKGD. Refusal @ 11' bgs

CABRERA SERVICES, INC.

PROJECT NAME: Sylvania-Corning FUSRAP
LOCATION: Hicksville, NY
CLIENT: E & E

BORING LOG
Location ID: S321-SU10-11
Page No.: 1 of 1

Contractor: F&E	Driller: ZEBRA	Date Started: 6/8/07	Rock Refusal Depth:
Method: 4' Macro Core Geoprobe	Water Elevation: N/A	Date Finished: 6/8/07	Rock Cored (FT):
Elevation: N/A	Soil Drilled:	Total Depth: 9'	Casing Size:
			Core Size: 1.5" x 3'
Logged By: DA/GMT	Checked By: SMT		
Date/Time: 6/8/07		S/N NaI - 190205	BKG NaI (cpm) - 1373
		S/N Mod 19 - 101662	BKG Mod 19 (uR/hr) 5

Elevation	Depth (feet)	Casing Blows/Foot	DHG cpm	Sample No. & Penetration/Recovery (feet)	Sample Type	Sample Description and Classification	Group Designation	Remarks	Equipment Installed	Lab Tests Performed
	1		2157		Soil	5μR/hr @ Borehole				
	2		2158							
	3	N	1868							
	4		2387							
	5		2893							
	6	A	3809	N						
	7		2983	A						
	8		1883							
	9		2358							
	N/A		N/A		N/A		N	A	N	A
			N	A						

Notes

CABRERA SERVICES

RADIOLOGICAL · ENVIRONMENTAL · REMEDIATION

SOIL CORE SCAN LOG

Project: Sylvania-Corning FUSRAP Site
Project #: ~~07-1085.00~~ 07-1022.00 II
Location ID: SBRI - SU10-15
Total Depth: 1
Page: 1 of 1

Date/Time: 6/8/07
Instr. Model / SN: 2221 w/ 44-10, SN #163685
Cal Due: 10/27/07
Ambient Bkg: 2056 cpm
Technician Init: DA/GMT

Sleeve #	Depth Range	Core & Scan Info (Top → Bottom)			
1	0-3 ~~0'-4'~~		1900	~~1925~~ 1925	
2	3-6 ~~4'-8'~~		2100	1900	
3	6-9 ~~8-12'~~	2025	1875	1850	
4	9-12 ~~12'-16'~~	2000	1875	2150	
5	16' - 20'		N/A		

Core Scan Results (cpm):

Comments: (record any drilling or sampling issues, e.g., refusal, groundwater, poor recovery, etc. here)

6 µR/hr @ BKGND
3' sample liners
Refusal @ 11'

CABRERA SERVICES, INC.

PROJECT NAME: Sylvania-Corning FUSRAP
LOCATION: Hicksville, NY
CLIENT: E & E

BORING LOG
Location ID: SA21-SU 10-15
Page No.: 1 of 1

Contractor: E&E	Driller: CABRERA	Date Started: 6/8/07	Rock Refusal Depth:
Method: 4" MACRO CORE GEOPROBE	Water Elevation: N/A	Date Finished: 6/8/07	Rock Cored (FT):
Elevation: N/A	Soil Drilled:	Total Depth: 5'	Casing Size:
			Core Size: 1.5" x 3'
Logged By: ~~6/08/07~~ DA/CMT	Checked By: gmt		
Date/Time: 6/08/07		S/N NaI - 190205	BKG NaI (cps) 1490
		S/N Mod 19 - 101862	BKG Mod 19 (uR/hr) 5

Elevation	Depth (feet)	Casing Blows/Foot	DHG cpm	Sample No. & Penetration/ Recovery (feet)	Sample Type	Sample Description and Classification	Group Designation	Remarks	Equipment Installed	Lab Tests Performed
N/A	1	N/A	2027	N/A	Soil	SUR/N	N/A	N/A	N/A	N/A
	2		2189							
	3		2485							
	4		2471							
	5		2561							

Notes

CABRERA SERVICES

RADIOLOGICAL • ENVIRONMENTAL • REMEDIATION

SOIL CORE SCAN LOG

Project: Sylvania-Corning FUSRAP Site
Date/Time: 6/ 8 /07
Project #: ~~07-1005.00~~ 07-1022.00 II
Instr. Model / SN: 2221 w/ 44-10; SN #163685
Location ID: SBRI-SV10-19
Cal Due: 10/27/07
Total Depth: 11
Ambient Bkg: 1129 cpm
Page: 1 of 1
Technician Init: DA/GMT

Sleeve #	Depth Range	Core & Scan Info (Top / Bottom)			
1	0-3' ~~0'-4'~~		2100	1925	
Core Scan Results (cpm):					
2	3'-6' ~~4'-8'~~		1975	2000	
Core Scan Results (cpm):					
3	6'-9' ~~8'-12'~~	2200	1800	1850	
Core Scan Results (cpm):					
4	9'-12' ~~12'-16'~~	1850	2100	1850	
Core Scan Results (cpm):					
~~5~~	~~16'-20'~~		NA		
Core Scan Results (cpm):					

Comments: (record any drilling or sampling issues, e.g. refusal, groundwater, poor recovery, etc. here)

Bkgd @ 6 μR/hr
Refusal @ 11'
using 1.5" x 3' cores

CABRERA SERVICES, INC.

PROJECT NAME: Sylvania-Corning FUSRAP
LOCATION: Hicksville, NY
CLIENT: E & E

BORING LOG
Location ID: S221-SU10-19
Page No.: 1 of 1

Contractor: F&E	Driller: ZEBRA	Date Started: 6/8/07	Rock Refusal Depth:
Method: 4' Macro Core Geoprobe	Water Elevation: N/A	Date Finished: 6/8/07	Rock Cored (FT):
Elevation: N/A	Soil Drilled:	Total Depth: 9'	Casing Size:
			Core Size:
Logged By: DAVGIRT	Checked By: SMT		
Date/Time:		S/N NaI-190205	BKG NaI (cpm) 1129
		S/N Mod19-101862	BKG Mod19 (uR/hr) 6

Elevation	Depth (feet)	Casing Blows/Foot	DHG cpm	Sample No. & Penetration/Recovery (feet)	Sample Type	Sample Description and Classification	Group Designation	Remarks	Equipment Installed	Lab Tests Performed
N/A	1	N/A	2159	N/A	Soil	6 µR/hr @ bore hole	N/A	N/A	N/A	
	2		2810							
	3		3392							
	4		2557							
	5		2364							
N/A	6		1585							
	7		1280							
	8		1525							
	9		1758							
N/A										
N/A										
N/A										

Notes

CABRERA SERVICES

RADIOLOGICAL • ENVIRONMENTAL • REMEDIATION

SOIL CORE SCAN LOG

Project: Sylvania-Corning FUSRAP Site
Project #: ~~07-1005.00~~ 07-1022.00 II
Location ID: SBRI-SU10-03
Total Depth: 8'
Page: 1 of 1

Date/Time: 6/8/07
Instr. Model / SN: 2221 w/44-10; SN#163685
Cal Due: 10/27/07
Ambient Bkg: 2042 cpm
Technician Init: DA/GMT

Sleeve #	Depth Range	Core & Scan Info (Top / Bottom)			
1	0' - 4'		1900	1875	
	Core Scan Results (cpm):				
2	4' - 8'	1950	2000	1825	
	Core Scan Results (cpm):				
3	8 - 12'		1850	1825	
	Core Scan Results (cpm):				
4	12' - 16'		A		
	Core Scan Results (cpm):				
5	16' - 20'	N			
	Core Scan Results (cpm):				

Comments: (recommend any drilling or sampling issues, e.g. refusal, groundwater, poor recovery, etc. here)

6 μR/hr @ BKGD
15" x 3' Cores
REFUSAL @ 8 ft

CABRERA SERVICES, INC.

PROJECT NAME: Sylvania-Corning FUSRAP
LOCATION: Hicksville, NY
CLIENT: E & E

BORING LOG
Location ID: S2R1-SU10-03
Page No.: 1 of 1

Contractor: F&E	Driller: ZEBRA	Date Started: 6-8-07	Rock Refusal Depth:
Method: 4' MACRO CORE GEOPROBE	Water Elevation: N/A	Date Finished: 6-8-07	Rock Cored (FT):
Elevation: N/A	Soil Drilled:	Total Depth: 6'	Casing Size:
			Core Size: 1.5" x 3'
Logged By: DA	Checked By: SWT		
Date/Time: 6/08/07		S/N NaI-190205	BKG NaI (cpm) 1238
		S/N Mod19-101862	BKG Mod19 (uR/hr) 6

Elevation	Depth (feet)	Casing Blows/Foot	DHG cpm	Sample No. & Penetration/Recovery (feet)	Sample Type	Sample Description and Classification	Group Designation	Remarks	Equipment Installed	Lab Tests Performed
N/A	1	N/A	2514	N/A	SOIL		N/A	N/A	N/A	N/A
	2		2403							
	3		1717							
	4		1819							
	5		1576							
	6		1748							

Notes

CABRERA SERVICES, INC.

PROJECT NAME: Sylvania-Corning FUSRAP
LOCATION: Hicksville, NY
CLIENT: E & E

BORING LOG

Location ID: 508-07
Page No.: 1 of 1

Contractor: ZEBRA	Driller: C. GREEN	Date Started: 06/08/07	Rock Refusal Depth:
Method: DIRECT PUSH	Water Elevation: N/A	Date Finished: 06/08/07	Rock Cored (FT):
Elevation:	Soil Drilled: SAND SILT	Total Depth:	Casing Size:
		METER INFO	Core Size:
Logged By: KMA, AJC	Checked By: [signature]	2221 w/GI 216482	MODEL 19 221521
Date/Time: 06/08/07, 1410		CAL DUE 05-04-08	CAL DUE 10/15/07
		BKG CPM 1108	BKG 5 ur/hr CON 5 ur/hr

Elevation	Depth (feet)	Casing Blows/Foot	DHG cpm	Sample No. & Penetration/ Recovery (feet)	Sample Type	Sample Description and Classification	Group Designation	Remarks	Equipment Installed	Lab Tests Performed
	1		1728		SOIL					
	2		1908							
	3		2383							
	4		2206							
	5		1942							
	6		1883							
	7		1862							
	8		1703							
	9		1347							
	10		1194							
	11		1322							
	12		1102							
	13		987							
	14		954							
	15		1053							
	16		719		SOIL					

Notes

CABRERA SERVICES

RADIOLOGICAL · ENVIRONMENTAL · REMEDIATION

SOIL CORE SCAN LOG

Project: Sylvania-Corning FUSRAP Site
Project #: 07-1005.00
Location ID: SU 08-07
Total Depth: 16'
Page: 1 of 1

Date/Time: 06/08/07
Instr. Model / SN: 2221 W/44-10 108862
Cal Due: 04-30-08
Ambient Bkg: 2631 cpm
Technician Init: KMA, AJC

Sleeve #	Depth Range	Core & Scan Info (Top / Bottom)			
1	0' - 4'	2575	2750	2850	2725
Core Scan Results (cpm):					
2	4' - 8'	2700			
Core Scan Results (cpm):		3' VOID			
3	8 - 12'	2825	2700		2650
Core Scan Results (cpm):		1' VOID			
4	12' - 16'	2775	2650	2400	2350
Core Scan Results (cpm):					
5	16' - 20'		N	A	
Core Scan Results (cpm):					

Comments: (recommend drilling or sampling issues, e.g. refusal, groundwater, poor recovery, etc. here)

1ST 3' INTERVAL WAS HAND AUGERED IN 1' SECTIONS
3RD INTERVAL, 1' VOID @ 10' TO 11'.

CABRERA SERVICES

RADIOLOGICAL · ENVIRONMENTAL · REMEDIATION

SOIL CORE SCAN LOG

Project: Sylvania-Corning FUSRAP Site
Project #: 07-1005.00
Location ID: 100 · 10
Total Depth: 16'
Page: 1 of 1

Date/Time: 06/08/07, 0830
Instr. Model / SN: 2221 W/44-10 108862
Cal Due: 04-30-08
Ambient Bkg: 1981 cpm
Technician Init: KMA, ATC

Sleeve #	Depth Range	Core & Scan Info			
		Top			[redacted]
1	0' - 4'	//////	2000	2100	2250
	Core Scan Results (cpm):	VOID			
2	4' - 8'	2100	~~XXXX~~	2100	2000
	Core Scan Results (cpm):	void			
3	8 - 12'	1950	2000	\\\\\	1925
	Core Scan Results (cpm):	void			
4	12' - 16'	1925	2100	2050	1850
	Core Scan Results (cpm):				
5	16' - 20'	—	— N	A —	—
	Core Scan Results (cpm):				

Comments: (record any drilling or sampling issues, e.g. refusal, groundwater, cog recovery, etc. here)

CABRERA SERVICES, INC.

PROJECT NAME: Sylvania-Corning FUSRAP
LOCATION: Hicksville, NY
CLIENT: E & E

BORING LOG

Location ID: 100-10
Page No.: 1 of 1

Contractor: ZEBRA	Driller: C. GREEN	Date Started: 06/08/07	Rock Refusal Depth:
Method: DIRECT PUSH	Water Elevation: N/A	Date Finished: 06/08/07	Rock Cored (FT):
Elevation: O.G.	Soil Drilled: SAND, SILT	Total Depth: 15'	Casing Size:
Logged By: KMA, AJC	Checked By:	MODEL INFO	Core Size:
Date/Time: 06/08/07		RADIAGI 216482	MODEL M 221521
		CAL DUE 05-01-08	CAL DUE 10/15/07
		BKG CPM 1155	BKG 5 UR/HR CON 5 UR/HR

Elevation	Depth (feet)	Casing Blows/Foot	DHG cpm	Sample No. & Penetration/ Recovery (feet)	Sample Type	Sample Description and Classification	Group Designation	Remarks	Equipment Installed	Lab Tests Performed
	1		1554		SOIL					
	2		2764							
	3		2777							
	4		2787							
	5		1529							
	6		1582							
	7		1538							
	8		1497							
	9		1656							
	10		1177							
	11		1190							
	12		1181							
	13		1251							
	14		1099							
	15		1022		SOIL					
			N	A						

Notes

CABRERA SERVICES

RADIOLOGICAL · ENVIRONMENTAL · REMEDIATION

SOIL CORE SCAN LOG

Project: Sylvania-Corning FUSRAP Site
Project #: 07-1005.00
Location ID: SU 8-12
Total Depth: 16'
Page: 1 of 1

Date/Time: 6/8/07, 0945
Instr. Model / SN: 2221 w/44-10 108862
Cal Due: 04-30-08
Ambient Bkg: 2631 cpm
Technician Init: KMA, AJC

Sleeve #	Depth Range	Core & Scan Info (Top / Bottom)			
1	0' - 4'			2550	2750
	Core Scan Results (cpm):	2' VOID			
2	4' - 8'	2600	2600	2550	2550
	Core Scan Results (cpm):	4" VOID			
3 *	8 - 12'	2500	2450	2300	2450
	Core Scan Results (cpm):				
4	12' - 16'	2400	2325	2275	2250
	Core Scan Results (cpm):				
5	16' - 20'		N	A	
	Core Scan Results (cpm):				

Comments: (recordable drilling or sampling issues, e.g. refusal, groundwater, poor recovery, etc. where)

CABRERA SERVICES, INC.

PROJECT NAME: Sylvania-Corning FUSRAP
LOCATION: Hicksville, NY
CLIENT: E & E

BORING LOG
Location ID: S08-12
Page No.: of

Contractor: ZEBRA	Driller: C. GREEN	Date Started: 6/8/07	Rock Refusal Depth:
Method: DIRECT PUSH	Water Elevation: N/A	Date Finished: 6/8/07	Rock Cored (FT):
Elevation: O.G.	Soil Drilled: SAND, SILT	Total Depth: 16'	Casing Size:
Logged By: KMA, AJC	Checked By: [signature]	METER INFO	Core Size:
Date/Time: 06/08/07, 1025		2221 W/GI 216482	MODEL 19 221521
		CAL DUE 05-04-08	CAL DUE 10/15/07
		BKG 1026	BKG 5 UR/HR CON 6 UR/HR

Elevation	Depth (feet)	Casing Blows/Foot	DHG cpm	Sample No. & Penetration/ Recovery (feet)	Sample Type	Sample Description and Classification	Group Designation	Remarks	Equipment Installed	Lab Tests Performed
	1		3193		SOIL					
	2		3679							
	3		2451							
	4		1568							
	5		1406							
	6		1772							
	7		1443							
	8		1592							
	9		1277							
	10		1204							
	11		1167							
	12		1277							
	13		1145							
	14		1007							
	15		1051							
	16		722		SOIL					

N

A

Notes

CABRERA SERVICES

RADIOLOGICAL • ENVIRONMENTAL • REMEDIATION

SOIL CORE SCAN LOG

Project: Sylvania-Corning FUSRAP Site
Date/Time: 6/8/07, 1110
Project #: 07-1005.00
Instr. Model / SN: 2221 w/44-10 108862
Location ID: SU8-8
Cal Due: 04-30-08
Total Depth: 16'
Ambient Bkg: 2631 cpm
Page: 1 of 1
Technician Init: RMA, AJC

Sleeve #	Depth Range	Core & Scan Info (Top / Bottom)
1	0' - 4'	2450 / 2475
	Core Scan Results (cpm):	2' VOID
2	4' - 8'	2575 / 2500
	Core Scan Results (cpm):	2' 6" VOID
3	8 - 12'	2625 / 2325 / 2400 / 2375
	Core Scan Results (cpm):	6" VOID
4	12' - 16'	2325 / 2150 / 2450 / 2450
	Core Scan Results (cpm):	
5	16' - 20'	N / A
	Core Scan Results (cpm):	

Comments: (recordary drilling or sampling issues, e.g. refusal, groundwater, poor recovery, etc. here)

CABRERA SERVICES, INC.

PROJECT NAME: Sylvania-Corning FUSRAP
LOCATION: Hicksville, NY
CLIENT: E & E

BORING LOG
Location ID: SU8-08
Page No.: 1 of 1

Contractor: ZEBRA	Driller: C. GREEN	Date Started: 6/8/07	Rock Refusal Depth:
Method: DIRECT PUSH	Water Elevation: N/A	Date Finished: 6/8/07	Rock Cored (FT):
Elevation:	Soil Drilled: SAND, SILT	Total Depth: 16'	Casing Size:
Logged By: RMA, AJC	Checked By: [signature]	METER INFO	Core Size:
Date/Time: 6/8/07, 1130		2221 W/GI 216482	MODEL 19 221521
		CAL DUE 05-04-08	CAL DUE 10/15/07
		BKG. CPM 996	BKG 5 UR/HR CON 5 UR/HR

Elevation	Depth (feet)	Casing Blows/Foot	DHG cpm	Sample No. & Penetration/ Recovery (feet)	Sample Type	Sample Description and Classification	Group Designation	Remarks	Equipment Installed	Lab Tests Performed
		N	A							
	1		2382		SOIL					
	2		1915							
	3		2110							
	4		2226							
	5		2479							
	6		1731							
	7		1387							
	8		1062							
	9		1144							
	10		1039							
	11		1112							
	12		1164							
	13		1062							
	14		997							
	15		967							
	16		869		SOIL					
			N	A						

Notes

CABRERA SERVICES

RADIOLOGICAL • ENVIRONMENTAL • REMEDIATION

SOIL CORE SCAN LOG

Project: Sylvania-Corning FUSRAP Site
Date/Time: 6/11/07
Project #: ~~07-1005.00~~ 07-1022.00 II
Instr. Model / SN: 2221 w/44-10, SN#163685
Location ID: SBR1 ~~[illegible]~~ (SU08-06)
Cal Due: 10/27/07
Total Depth: 16
Ambient Bkg: 2317 cpm
Page: 1 of 1
Technician Init: DA/GMT

Sleeve #	Depth Range	Core & Scan Info (Top / Bottom)				
1	0' - 4' 0-5	* 2585				2150
Core Scan Results (cpm):		* Sample from (1-2)' Bag Sample				
2	~~4' - 8'~~ 5-10			2450	2250	2000
Core Scan Results (cpm):						
3	8 - 12' 10-15			2200	2250	2050 / 1450
Core Scan Results (cpm):						
4	~~12' - 16'~~ ~~16~~					
Core Scan Results (cpm):						
5	16' - 20'					
Core Scan Results (cpm):						

Comments: (recordably drilling or sampling issues, e.g. refusal, groundwater, poor recovery, etc. here)

Hand auger used from (1-4)'

CABRERA SERVICES, INC.

PROJECT NAME: Sylvania-Corning FUSRAP
LOCATION: Hicksville, NY
CLIENT: E & E

BORING LOG
SBR1-SU08-06
Location ID: [redacted]
Page No.: 1 of 1

Contractor: E&E	Driller: ZEBRA	Date Started: 6/11/07	Rock Refusal Depth:
Method: 4' MACRO CORE GEOPROBE	Water Elevation: N/A	Date Finished: 6/11/07	Rock Cored (FT):
Elevation: N/A	Soil Drilled:	Total Depth: 16'	Casing Size:
			Core Size: 2.4 x 5'
Logged By: DA/GMT	Checked By: GMT		
Date/Time: 6/11/07		S/N NaI - 190205	BKG NaI (cpm) 1647
		S/N Mod 19 - 101662	BKG Mod 19 (uR/hr) 8

Elevation	Depth (feet)	Casing Blows/Foot	DHG cpm	Sample No. & Penetration/ Recovery (feet)	Sample Type	Sample Description and Classification	Group Designation	Remarks	Equipment Installed	Lab Tests Performed
	1		1097		Soil	8 μR/hr @ Bore hole				
	2		1883							
	3		2027							
	4		2075							
	5		1732							
	6		1590							
	7		1978							
	8		1576							
	9		1419							
	10		1420							
	11		1320							
	12		1324							
	13		1257							
	14		1167							
	15		1036							
	16		846							

NA NA NA NA NA

Notes

CABRERA SERVICES

RADIOLOGICAL • ENVIRONMENTAL • REMEDIATION

SOIL CORE SCAN LOG

Project: Sylvania-Corning FUSRAP Site
Date/Time: 6/ \\ /07
Project #: ~~07-1005.00~~ 07-1022.00 II
Instr. Model / SN: 2221 w/ 44-10; SN #163685
Location ID: SBR1-SW08-B4
Cal Due: 10/27/07
Total Depth: 12'
Ambient Bkg: 1612 cpm
Page: 1 of 1
Technician Init: DA/GMT

Sleeve #	Depth Range	Core & Scan Info				
1	0-4; 4-5' ~~0-4~~	Top	HAND AUGER		1 ft sample core	Bottom
		1525	1525		1325	
	Core Scan Results (cpm):	(0-2)' Hand Auger 1 gal Zip lock Bag				
2	5-10' ~~4-8'~~		1450	1500	1400	1250
	Core Scan Results (cpm):					
3	10-15 ~~8-12'~~					1450
	Core Scan Results (cpm):					
4	12' - 16'					
	Core Scan Results (cpm):					
5	16' - 20'					
	Core Scan Results (cpm):					

A

N

Comments: (record any drilling or sampling issues, e.g., refusal, groundwater, poor recovery, etc. here)

Hand augered 0-4'. ~~FS~~ First core was 4-5' to complete interval.

Refusal @ 12'.

CABRERA SERVICES, INC.

PROJECT NAME: Sylvania-Corning FUSRAP
LOCATION: Hicksville, NY
CLIENT: E & E

BORING LOG
Location ID: 5001-SB08-04
Page No.: 1 of 1

Contractor: E&E	Driller: CABRERA	Date Started: 6/11/07	Rock Refusal Depth:
Method: 4" MACRO CORE GEOPROBE	Water Elevation: N/A	Date Finished: 6/11/07	Rock Cored (FT):
Elevation: N/A	Soil Drilled:	Total Depth:	Casing Size:
			Core Size:
Logged By: DA/GMT	Checked By: GMT		
Date/Time: 6/11/07		S/N NaI - 190205	BKG NaI (cpm) 558
		S/N Mod 19 - 1018602	BKG Mod 19 (uR/hr) 5

Elevation	Depth (feet)	Casing Blows/Foot	DHG cpm	Sample No. & Penetration/ Recovery (feet)	Sample Type	Sample Description and Classification	Group Designation	Remarks	Equipment Installed	Lab Tests Performed
N	1		1517		Soil	5 μR/hr @ Bore hole				
	2		2198							
	3		1684							
	4	N	1548							
	5		1546							
	6		1908	N						
	7		1721							
	8		1708	A						
	9		1666							
	10	A	1528							
	11		1394							
A	12		1306							
							N	A	N	A
			N							
N										
				A						
A										

Notes

CABRERA SERVICES

RADIOLOGICAL • ENVIRONMENTAL • REMEDIATION

SOIL CORE SCAN LOG

Project: Sylvania-Corning FUSRAP Site
Date/Time: 6/11/07
Project #: ~~07-1005.00~~ 07-1022.00 II
Instr. Model / SN: 2221 w/ 44-10, SN #163685
Location ID: SBR1-SU08-03
Cal Due: 10/27/07
Total Depth: 16
Ambient Bkg: 1581 cpm
Page: 1 of 1
Technician Init: DA/GMT

Sleeve #	Depth Range	Core & Scan Info (Top → Bottom)				
1	0-4.5 ~~0-4'~~	1375	1375		1400	
	Core Scan Results (cpm):					
2	5-10 ~~4'-8'~~		1500	1450	1350	1350
	Core Scan Results (cpm):					
3	10-15 ~~8-12'~~	1400	1375	1350	1250	1300
	Core Scan Results (cpm):					
4	12' - 16'					
	Core Scan Results (cpm):					
5	16' - 20'					
	Core Scan Results (cpm):					

Comments: (record any drilling disruption issues, e.g. refusal, ground water, poor recovery, etc. here)

Hand auger first 4 ft bgs. First core tube collected 4-5 ft. bgs.

CABRERA SERVICES, INC.

PROJECT NAME: Sylvania-Corning FUSRAP
LOCATION: Hicksville, NY
CLIENT: E & E

BORING LOG
Location ID: SAR1-SU08-03
Page No.: 1 of 1

Contractor: F&E	Driller: ZEBRA	Date Started: 6/11/07	Rock Refusal Depth:
Method: 4' MACRO CORE GEOPROBE	Water Elevation: N/A	Date Finished: 6/11/07	Rock Cored (FT):
Elevation: N/A	Soil Drilled:	Total Depth: 16'	Casing Size:
			Core Size: 2" x 5'
Logged By: DA/GMT	Checked By: GMT		
Date/Time: 6/11/07		S/N NaI - 190205	BKG NaI (cpm) ~~858~~ 1022
		S/N Mod 19 - 101862	BKG Mod 19 (uR/hr) 5

Elevation	Depth (feet)	Casing Blows/Foot	DHG cpm	Sample No. & Penetration/Recovery (feet)	Sample Type	Sample Description and Classification	Group Designation	Remarks	Equipment Installed	Lab Tests Performed
N/A	1	N/A	1655	N/A	Soil	5 μR/hr @ Bore hole	N/A	N/A	N/A	N/A
	2		1773							
	3		1922							
	4		1883							
	5		2409							
	6		3683							
	7		1957							
	8		1297							
	9		1425							
	10		1335							
	11		1121							
	12		1135							
	13		1294							
	14		1135							
	15		979							
	16		1078							

Notes

CABRERA SERVICES

RADIOLOGICAL • ENVIRONMENTAL • REMEDIATION

SOIL CORE SCAN LOG

Project: Sylvania-Corning FUSRAP Site
Date/Time: 6/11/07
Project #: ~~07-1005.00~~ 07-1022.00 II
Instr. Model / SN: 2221 w/ 44-10; SN #163685
Location ID: SBR1-SU08-05
Cal Due: 10/27/07
Total Depth: 16'
Ambient Bkg: 2201 cpm
Page: 1 of 1
Technician Init: DA/GMT

Sleeve #	Depth Range	Core & Scan Info (Top / Bottom)					
1	~~0' - 4'~~	* 1650	x				1600
Core Scan Results (cpm):		* Bag Sample					
2	~~4' - 8'~~ ~~10-15~~ 5-10			1650	1750		1900
Core Scan Results (cpm):							
3	~~8 - 12'~~ 10-16		1600	1350	1550	1500	1625
Core Scan Results (cpm):							
4	12' - 16'						
Core Scan Results (cpm):							
5	16' - 20'						
Core Scan Results (cpm):							

NA

Comments: (record any drilling or sampling issues, e.g. refusal, groundwater, poor recovery, etc. here)

BKGD @ mR/hr

*(0-2)' used Hand Auger, placed Sample in 1 GAL. BAG

CABRERA SERVICES, INC.

PROJECT NAME: Sylvania-Corning FUSRAP
LOCATION: Hicksville, NY
CLIENT: E & E

BORING LOG SU08-05
Location ID: [redacted] 100 #1
Page No.: 1 of 1

Contractor: E&E	Driller: ZEBRA	Date Started: 6/11/07	Rock Refusal Depth:
Method: 4" MARD CORE GEOPROBE	Water Elevation: N/A	Date Finished: 6/11/07	Rock Cored (FT):
Elevation: N/A	Soil Drilled:	Total Depth: 16'	Casing Size:
			Core Size: 2" x 5
Logged By: DA/GMT	Checked By: GMT		
Date/Time: 6/11/07		S/N NaI - 190205	BKG NaI (cpm) 1018
		S/N Mod 19 - 1018662	BKG Mod 19 (uR/hr) 5

Elevation	Sample Information: Depth (feet)	Casing Blows/Foot	DHG cpm	Sample No. & Penetration/Recovery (feet)	Sample Type	Sample Description and Classification	Group Designation	Remarks	Equipment Installed	Lab Tests Performed
	1		1748		SOIL	5 µR/hr @ Bore hole				
	2		2050							
	3		2023							
N	4		2145							
	5	N	2207							
	6		2503							
	7		2098							
	8		1928	N						
	9		1936							
	10	A	1615	A						
	11		1249							
	12		1112							
A	13		1229							
	14		1082							
	15		1009							
	16		1076							
N/A										
N			N	A						
A										

Notes

CABRERA SERVICES

RADIOLOGICAL • ENVIRONMENTAL • REMEDIATION

SOIL CORE SCAN LOG

Project: Sylvania-Corning FUSRAP Site
Project #: ~~07-1005.00~~ 07-1022.00 II
Location ID: SU06-01
Total Depth: 16
Page: 1 of 1

Date/Time: 6/12/07
Instr. Model / SN: 2221 w/ 44-10, SN #163685
Cal Due: 10/27/07
Ambient Bkg: _____ cpm
Technician Init: DA/GMT

Sleeve #	Depth Range	Core & Scan Info					
		Top				Bottom	
1	0' - 4' ; 4-5						No Recovery
Core Scan Results (cpm):		HAND Augur — ~~1650~~ 1450					
2	~~4'-8'~~ 5-10	VOID		1700	1550		1400
Core Scan Results (cpm):							
3	~~8-12'~~ ~~10-15~~ 10-16	VOID	1400	1375	1500	1400	1350
Core Scan Results (cpm):							
4	12' - 16'						
Core Scan Results (cpm):		N					
5	16' - 20'		A				
Core Scan Results (cpm):							

Comments: (recordings, drilling or sampling issues, e.g. refusal, groundwater, poor recovery, etc. here)

HAND Augur 0-4'. First core 4'-5' No Recovery. Sleeve 10'-16' was overdriven to include extra foot.

CABRERA SERVICES, INC.

PROJECT NAME: Sylvania-Corning FUSRAP
LOCATION: Hicksville, NY
CLIENT: E & E

BORING LOG
Location ID: SA21-SU018-02
Page No.: 1 of 1

Contractor: F&E	Driller: ZEBRA	Date Started: 6-12-07	Rock Refusal Depth:
Method: 4' MICRO CORE GEOPROBE	Water Elevation: N/A	Date Finished: 6-12-07	Rock Cored (FT):
Elevation: N/A	Soil Drilled:	Total Depth: 16'	Casing Size:
Logged By: DA / GMT	Checked By: gmt		Core Size: 2" x 5"
Date/Time: 6-12-07		S/N NaI - 190205	BKG NaI (cpm) 1039
		S/N Mod 19 - 101662	BKG Mod 19 (uR/hr) 5

Elevation	Depth (feet)	Casing Blows/Foot	DHG cpm	Sample No. & Penetration/ Recovery (feet)	Sample Type	Sample Description and Classification	Group Designation	Remarks	Equipment Installed	Lab Tests Performed
	1		1878		Soil	5 μR/hr @ Borehole				
	2		1903							
N	3	N	1910							
	4		1974							
	5		2148							
	6		2135							
	7		1825							
	8		1705	N						
	9		1612							
	10		1750	A						
	11	A	1621							
	12		1265							
A	13		1183							
	14		1226							
	15		1211				N	A	N	A
N	16		1261							
A										
			N							
N										
				A						
A										

Notes

CABRERA SERVICES

RADIOLOGICAL · ENVIRONMENTAL · REMEDIATION

SOIL CORE SCAN LOG

Project: Sylvania-Corning FUSRAP Site
Date/Time: 6/12/07
Project #: ~~07-1005.00~~ 07-1022.00 II
Instr. Model / SN: 2221 w/44-10; SN#163685
Location ID: 140-06
Cal Due: 10/27/07
Total Depth: 16'
Ambient Bkg: 1585 cpm
Page: 1 of 1
Technician Init: DA/GMT

Sleeve #	Depth Range	Core & Scan Info				
1	~~0-4'~~ 0-5	Top void	1600	2550	1550	1550
Core Scan Results (cpm):						
2	~~4'-8'~~ 5-10	1500	1600	1500	1450	~~1700~~ 1700
Core Scan Results (cpm):						
3	8 - 12'	1500	1500	1600	1500	1500
Core Scan Results (cpm):						
4	12' - 16'					
Core Scan Results (cpm):						
5	16' - 20'					
Core Scan Results (cpm):						

N A

Comments: (recording drilling, sampling issues, e.g. refusal, groundwater, poor recovery, etc. here)

6 mR/hr @ BKGD
Elevated band of soil at the 3' depth. Scan of sample jar was 180 cpm w/ BKGD of 40 cpm.

CABRERA SERVICES, INC.

PROJECT NAME: Sylvania-Corning FUSRAP
LOCATION: Hicksville, NY
CLIENT: E & E

BORING LOG
Location ID: ~~SAT~~ ~~SCP~~ 140-010
Page No.: 1 of 1

Contractor: E&E	Driller: ZEBRA	Date Started: 6-12-07	Rock Refusal Depth:
Method: 4' MACRO CORE GEOPROBE	Water Elevation: N/A	Date Finished: 6-12-07	Rock Cored (FT):
Elevation: N/A	Soil Drilled:	Total Depth:	Casing Size:
			Core Size: 2" x 5'
Logged By: DA/GMT	Checked By: SMT		
Date/Time: 6-12-07		S/N NaI - 190205	BKG NaI (cpm) 1149
		S/N Mod 19 - 101662	BKG Mod 19 (uR/hr) 6

Elevation	Depth (feet)	Casing Blows/Foot	DHG cpm	Sample No. & Penetration/Recovery (feet)	Sample Type	Sample Description and Classification	Group Designation	Remarks	Equipment Installed	Lab Tests Performed
	1		2059		Soil	6 uR/hr @ Bore hole				
	2		2321							
N	3		3564							
	4		3963							
	5	N	1792							
	6		1815							
	7		2004							
	8		1675	N						
	9		1657	A			N	A		
	10		1646							
	11		1243							
	12		1176							
A	13	A	1295						N	A
	14		1469							
	15		1278							
	16		1249							
N										
			N							
				A						
A										

Notes

CABRERA SERVICES

RADIOLOGICAL · ENVIRONMENTAL · REMEDIATION

SOIL CORE SCAN LOG

Project: Sylvania-Corning FUSRAP Site
Date/Time: 6/12/07
Project #: ~~07-1005.00~~ 07-1022.00 II
Instr. Model / SN: 2221 w/44-10, SN#163685
Location ID: 140-08
Cal Due: 10/27/07
Total Depth: 16'
Ambient Bkg: 1729 ~~1585~~ cpm
Page: 1 of 1
Technician Init: DA/GMT

Sleeve	Depth Range	Core & Scan Info					
		Top				Bottom	
1	0-5 ~~0'-4'~~			1750	1800		1750
Core Scan Results (cpm):							
2	5-10 ~~4'-8'~~			1500	1725		1650
Core Scan Results (cpm):							
3	10-16 ~~8-12'~~		1575	1525	1450		1500
Core Scan Results (cpm):							
4	12' - 16'		X				
Core Scan Results (cpm):							
5	16' - 20'						
Core Scan Results (cpm):							

Comments: (record by drilling, sampling issues, etc. refusal, groundwater, poor recovery, etc. here)

Bkgd @ 5 pm/hr

CABRERA SERVICES, INC.

PROJECT NAME: Sylvania-Corning FUSRAP
LOCATION: Hicksville, NY
CLIENT: E & E

BORING LOG
Location ID: SAI-SCA 140-18
Page No.: 1 of 1

tractor: E&E	Driller: ZEBRA	Date Started: 6-12-07	Rock Refusal Depth:
hod: 4' MACRO CORE GEOPROBE	Water Elevation: N/A	Date Finished: 6-12-07	Rock Cored (FT):
Elevation: N/A	Soil Drilled:	Total Depth: 16'	Casing Size:
			Core Size: 2" x 5'
Logged By: DA/GMT	Checked By: gmt		
Date/Time: 6-12-07		S/N NaI - 190205	BKG NaI (cpm) 1281
		S/N Mod 19 - 101662	BKG Mod 19 (uR/hr) 5

Elevation	Depth (feet)	Casing Blows/Foot	DHG cpm	Sample No. & Penetration/ Recovery (feet)	Sample Type	Sample Description and Classification	Group Designation	Remarks	Equipment Installed	Lab Tests Performed
	1		1681		Soil	5 uR/hr @ Bore hole				
	2		2810							
N	3		3468							
	4		3572							
	5		2286							
	6	N	1713							
	7		2329	N						
	8		2294							
	9		1636	A						
	10	A	1332							
	11		1208							
	12		1239							
A	13		1150							
	14		1170							
	15		1246							
N	16		1141							
			N							
				A						
A										

Notes

CABRERA SERVICES

RADIOLOGICAL • ENVIRONMENTAL • REMEDIATION

Rest early left - [illegible]

SOIL CORE SCAN LOG

Project: Sylvania-Corning FUSRAP Site
Project #: ~~07-1005.00~~ 07-1022.00 II
Location ID: SBRI-SW09-03
Total Depth: 13
Page: 1 of 1

Date/Time: 6/12/07
Instr. Model / SN: 2221 w/44-10, SN #163685
Cal Due: 10/27/07
Ambient Bkg: 1479 cpm
Technician Init: DA/GMT

Sleeve	Depth Range	Core & Scan Info (Top / Bottom)				
1	0' - 4' ~~0-5~~					
Core Scan Results (cpm):						
2	4' - 8' 5-10					
Core Scan Results (cpm):						
3	~~8 - 12'~~ 10 - 13			1480	1500	1400
Core Scan Results (cpm):						
4	12' - 16'					
Core Scan Results (cpm):						
5	16' - 20'					
Core Scan Results (cpm):						

A

N

A

N

Comments (record any drilling or sampling issues, e.g. refusal, groundwater, poor recovery, etc. here)

* Resample

CABRERA SERVICES

RADIOLOGICAL • ENVIRONMENTAL • REMEDIATION

SOIL CORE SCAN LOG

Project: Sylvania-Corning FUSRAP Site
Project #: ~~07-1005.00~~ 07-1022.00 II
Location ID: SBR1-5409 - 13
Total Depth: 15'
Page: 1 of 1

Date/Time: 6/12/07
Instr. Model / SN: 2221 w/ 44-10, SN#163685
Cal Due: 10/27/07
Ambient Bkg: 1938 cpm
Technician Init: DA/GMT

Sleeve	Depth Range	Core & Scan Info (Top / Bottom)				
1	0' - 4' 0-5					
Core Scan Results (cpm):		A				
2	4' - 8' 5-10	N				
Core Scan Results (cpm):						
3*	8 - 12' 10-15	VOID	1450	1400	1400	1500 / 1450
Core Scan Results (cpm):						
4	12' - 16'					
Core Scan Results (cpm):		A				
5	16' - 20'	N				
Core Scan Results (cpm):						

Comments: (record any drilling or sampling issues, e.g. refusal, groundwater, poor recovery, etc. here)

* Resample

CABRERA SERVICES

RADIOLOGICAL · ENVIRONMENTAL · REMEDIATION

SOIL CORE SCAN LOG

Project: Sylvania-Corning FUSRAP Site
Date/Time: 6/12/07
Project #: ~~07-1005.00~~ 07-1022.00 II
Instr. Model / SN: 2221 w/44-10, SN#163685
Location ID: SBR1 SU09-02
Cal Due: 10/27/07
Total Depth: 0-5
Ambient Bkg: 1938 cpm
Page: 1 of 1
Technician Init: DA/GMT

Sleeve	Depth Range	Core & Scan Info				
		Top void				Bottom
1 *	~~0'-4'~~ 0-5	1650	1700	1600	1500	1950
Core Scan Results (cpm):						
2	4' - 8'					
Core Scan Results (cpm):						
3	8 - 12'					
Core Scan Results (cpm):						
4	12' - 16'	N				
Core Scan Results (cpm):						
5	16' - 20'					
Core Scan Results (cpm):						

A

Comments: (record by drilling or sampling issues, e.g. refusal, groundwater, poor recovery, etc. here)

* Resample

CABRERA SERVICES

RADIOLOGICAL • ENVIRONMENTAL • REMEDIATION

SOIL CORE SCAN LOG

Project: Sylvania-Corning FUSRAP Site
Project #: ~~07-1005.00~~ 07-1022.00 II
Location ID: 100-01
Total Depth: 11'
Page: 1 of 1

Date/Time: 6/13/07
Instr. Model / SN: 2221 w/44-10, SN #163655
Cal Due: 10/27/07
Ambient Bkg: 1360 cpm
Technician Init: DA/GMT

Sleeve	Depth Range	Core & Scan Info (Top / Bottom)			
1	~~0'-4'~~ 0-3		1450	1500	
Core Scan Results (cpm):					
2	~~4'-8'~~ 3-6	1200	1250	1200	
Core Scan Results (cpm):					
3	~~8-12'~~ 6-9	1350	1425	1375	
Core Scan Results (cpm):					
4	~~12'-16'~~ 9-12	1200	1250	1350	
Core Scan Results (cpm):					
5	16' - 20'		N/A		
Core Scan Results (cpm):					

Comments: (record by drilling, sampling issues, etc. refusal, groundwater, poor recovery, etc. here)

BKGD @ 5μR/hr
refusal @ 11ft

CABRERA SERVICES, INC.

PROJECT NAME: Sylvania-Corning FUSRAP
LOCATION: Hicksville, NY
CLIENT: E & E

BORING LOG
Location ID: S221-S4 100-01
Page No.: 1 of 1

Contractor: F&E	Driller: ZEBRA	Date Started: 6-13-07	Rock Refusal Depth:
Method: 3' MACRO CORE GEOPROBE	Water Elevation: N/A	Date Finished: 6-13-07	Rock Cored (FT):
Elevation: N/A	Soil Drilled:	Total Depth: 9'	Casing Size:
Logged By: DA / GMT	Checked By: [signature]		Core Size: 1.5" x 3'
Date/Time: 6-13-07		S/N NaI - 190205	BKG NaI (cpm) 790
		S/N Mod 19 - 101662	BKG Mod 19 (uR/hr) ~~790~~ 5

Elevation	Depth (feet)	Casing Blows/Foot	DHG cpm	Sample No. & Penetration/Recovery (feet)	Sample Type	Sample Description and Classification	Group Designation	Remarks	Equipment Installed	Lab Tests Performed
N	1	N/A	1994	N/A	Soil	5 μR/hr @ Bore hole	N	A	N	A
	2		2000							
	3		2009							
	4		1971							
	5		2010							
	6		2414							
	7		2765							
	8		1979							
	9		1442							
A										
N			N	A						
A										

Notes

CABRERA SERVICES

RADIOLOGICAL · ENVIRONMENTAL · REMEDIATION

SOIL CORE SCAN LOG

Project: Sylvania-Corning FUSRAP Site
Project #: ~~07-1005.00~~ 07-1022.00 II
Location ID: 100-04
Total Depth: 8'
Page: 1 of 1

Date/Time: 6/13/07
Instr. Model / SN: 2221 w/ 44-10, SN #163685
Cal Due: 10/27/07
Ambient Bkg: 1316 cpm
Technician Init: DA/GMT

Sleeve	Depth Range	Core & Scan Info (Top / Bottom)				
1	~~0'-4'~~ 0-3		1250	1350	1325	
Core Scan Results (cpm):						
2	~~4'-8'~~ 3-6		1225	1325	1275	
Core Scan Results (cpm):						
3	~~8-12'~~ 6-9		1400	1200	1250	
Core Scan Results (cpm):						
4	12'-16'					
Core Scan Results (cpm):						
5	16'-20'					
Core Scan Results (cpm):						

N

A

Comments (recovery, drilling or sampling issues, e.g. refusal, groundwater, poor recovery, etc. here)

Refusal @ 8ft

CABRERA SERVICES, INC.

PROJECT NAME: Sylvania-Corning FUSRAP
LOCATION: Hicksville, NY
CLIENT: E & E

BORING LOG
Location ID: ~~SA21~~ SU 100-04
Page No.: 1 of 1

Contractor: E&E	Driller: ZEBRA	Date Started: 6-13-07	Rock Refusal Depth:
Method: 4' MICRO CORE GEOPROBE	Water Elevation: N/A	Date Finished: 6-13-07	Rock Cored (FT):
Elevation: N/A	Soil Drilled:	Total Depth: 8'	Casing Size:
Logged By: DA/GMT	Checked By: [illegible]		Core Size: 1.5" x 3
Date/Time: 6-13-07		S/N NaI - 190205	BKG NaI (cpm) 1127
		S/N Mod 19 - 101662	BKG Mod 19 (uR/hr) 5

Sample Information

Elevation	Depth (feet)	Casing Blows/Foot	DHG cpm	Sample No. & Penetration/Recovery (feet)	Sample Type	Sample Description and Classification	Group Designation	Remarks	Equipment Installed	Lab Tests Performed
N	1		1604		Soil	5 μR/hr @ Bkgd				
	2		2599							
	3	N	2634							
	4		2828	N						
	5	A	2912	A						
	6		2330							
	7		1404							
	8		1758							
A							N	A	N	A
N										
A										

Notes

CABRERA SERVICES

RADIOLOGICAL · ENVIRONMENTAL · REMEDIATION

SOIL CORE SCAN LOG

Project: Sylvania-Corning FUSRAP Site
Project #: ~~07-1005.00~~ 07-1022.00 II
Location ID: 100-05
Total Depth: 12'
Page: 1 of 1

Date/Time: 6/13 /07
Instr. Model / SN: 2221 w/44-10, SN#163685
Cal Due: 10/27/07
Ambient Bkg: 1370 cpm
Technician Init: DA / GMT

Sleeve	Depth Range	Core & Scan Info (Top)			(Bottom)
1	~~0'-4'~~ 0-3	1350	1375	1400	
Core Scan Results (cpm):					
2	~~4'-8'~~ 3-6	1375	1500	1400	~~1375~~
Core Scan Results (cpm):					
3	~~8-12'~~ 6-9	1300	1425	1400	
Core Scan Results (cpm):					
4	~~12'-16'~~ 9-12	1450	1600	1450	
Core Scan Results (cpm):					
5	16'-20'				
Core Scan Results (cpm):					

Comments: (recorded, drilling or sampling series, e.g. refusal, groundwater, poor recovery, etc. here)

Refusal @ 12'
BKGD @ 5 μR/hr

CABRERA SERVICES, INC.

PROJECT NAME: Sylvania-Corning FUSRAP
LOCATION: Hicksville, NY
CLIENT: E & E

BORING LOG
Location ID: SU 100-05
Page No.: 1 of 1

tractor: E&E	Driller: ZEBRA	Date Started: 6/13/07	Rock Refusal Depth:
hod: 4' MACRO CORE GEOPROBE	Water Elevation: N/A	Date Finished: 6/13/07	Rock Cored (FT):
Elevation: N/A	Soil Drilled:	Total Depth: 12'	Casing Size:
Logged By: DA/GMT	Checked By: GMT		Core Size: 1.5" x 3'
Date/Time: 6/13/07		S/N NaI - 190205	BKG NaI (cpm) 1138
		S/N Mod 19 - 101862	BKG Mod 19 (uR/hr) 5

Elevation	Depth (feet)	Casing Blows/Foot	DHG cpm	Sample No. & Penetration/Recovery (feet)	Sample Type	Sample Description and Classification	Group Designation	Remarks	Equipment Installed	Lab Tests Performed
	1		2238		Soil					
	2		3324			5μR/hr @ BLED				
	3		3400							
N	4		3084							
	5		2822							
	6	N	2335							
	7		2658							
	8		3844	N						
	9	A	4340	A						
	10		4377							
	11		2286							
A	12		1434				N	A	N	
N									A	
		N								
				A						
A										

Notes

CABRERA SERVICES

RADIOLOGICAL · ENVIRONMENTAL · REMEDIATION

SOIL CORE SCAN LOG

Project: Sylvania-Corning-FUSRAP Site
Project #: ~~07-1005.00~~ 07-1022.00 II
Location ID: 140-03
Total Depth: 9'
Page: 1 of 1

Date/Time: 6/13/07
Instr. Model / SN: 2221 w/ 44-10, SN#163685
Cal Due: 10/27/07
Ambient Bkg: 1278 cpm
Technician Init: DA/GMT

Sleeve	Depth Range	Core & Scan Info (Top / Bottom)			
1	0-3 ~~0'-4'~~	1500	1550	1300	
Core Scan Results (cpm):					
2	4' - 8'	1400	1350	1200	
Core Scan Results (cpm):					
3	8 - 12'	1350	1200	1225	
Core Scan Results (cpm):					
4	12' - 16'				
Core Scan Results (cpm):					
5	16' - 20'				
Core Scan Results (cpm):					

A

N

Comments: (recycled, drilling or sampling series, e.g. refusal or undwater poor recovery etc. here)

BKWD @ 4 μR/hr
hole closed up @ 9ft

CABRERA SERVICES, INC.

PROJECT NAME: Sylvania-Corning FUSRAP
LOCATION: Hicksville, NY
CLIENT: E & E

BORING LOG
Location ID: 5321-SU 140-03
Page No.: 1 of 1

Contractor: E&E
Method: 4" Macro Core Geoprobe
Elevation: N/A
Logged By: DA / GMT
Date/Time: 6/13/07

Driller: ZEBRA
Water Elevation: N/A
Soil Drilled:
Checked By: [illegible]

Date Started: 6/13/07
Date Finished: 6/13/07
Total Depth: 5'
S/N NaI - 190205
S/N Mod 19 - 101662

Rock Refusal Depth:
Rock Cored (FT):
Casing Size:
Core Size: 1.5" x 3'
BKG NaI (cpm) 726
BKG Mod19 (uR/hr) 4

Elevation	Depth (feet)	Casing Blows/Foot	DHG cpm	Sample No. & Penetration/Recovery (feet)	Sample Type	Sample Description and Classification	Group Designation	Remarks	Equipment Installed	Lab Tests Performed
N/A	1	N/A	1899	N/A	Soil	4 µR/hr @ bore hole	N/A	N/A	N/A	N/A
	2		1638							
	3		2394							
	4		1852							
	5		1494							

Notes

CABRERA SERVICES

RADIOLOGICAL · ENVIRONMENTAL · REMEDIATION

SOIL CORE SCAN LOG

Project: Sylvania-Corning-FUSRAP Site
Project #: ~~07-1005.00~~ 07-1022.00 II
Location ID: 140-05
Total Depth: 11'
Page: 1 of 1

Date/Time: 6/13/07
Instr. Model / SN: 2221 w/44-10, SN#163685
Cal Due: 10/27/07
Ambient Bkg: 1342 cpm
Technician Init: DA/GMT

Sleeve	Depth Range	Core & Scan Info (Top)			Bottom
1	~~0'-4'~~ (0-3)'	1375	1450	1300	X
Core Scan Results (cpm):					
2	~~4'-8'~~ (3-6)'	1400	1400	1300	X
Core Scan Results (cpm):					
3	~~8-12'~~ (6-9)'	1325	1300	1375	X
Core Scan Results (cpm):					
4	~~12'-16'~~ (9-12)'	VOID 1300	1275	1225	X
Core Scan Results (cpm):					
5	16' - 20'	N	A		
Core Scan Results (cpm):					

Comments: (record any drilling/sampling issues, e.g. refusal, groundwater, poor recovery, etc. here)

BKGD @ 4mR/hr

CABRERA SERVICES, INC.

PROJECT NAME: Sylvania-Corning FUSRAP
LOCATION: Hicksville, NY
CLIENT: E & E

BORING LOG
Location ID: ~~SB~~ SB 100-05
Page No.: 1 of 1

tractor: E&E	Driller: ZEBRA	Date Started: 6/13/05	Rock Refusal Depth:
thod: 4" MACRO CORE GEOPROBE	Water Elevation: N/A	Date Finished: 6/13/05	Rock Cored (FT):
Elevation: N/A	Soil Drilled:	Total Depth: 10	Casing Size:
			Core Size: 1.5" x 3'
Logged By: DA/GMM	Checked By: GMM	S/N NaI - 190205	BKG NaI (cpm) 911
Date/Time: 6/13/05		S/N Mod 19 - 1018662	BKG Mod 19 (uR/hr) 4

Elevation	Depth (feet)	Casing Blows/Foot	DHG cpm	Sample No. & Penetration/ Recovery (feet)	Sample Type	Sample Description and Classification	Group Designation	Remarks	Equipment Installed	Lab Tests Performed
N/A	1	N/A	2637	N/A	Soil	4μR/hr @ Borehole	N/A	N/A	N/A	N/A
	2		2582							
	3		2864							
	4		3297							
	5		3987							
	6		4557							
	7		4384							
	8		4374							
	9		4154							
	10		2285							
	11		2376							

Notes

CABRERA SERVICES

RADIOLOGICAL · ENVIRONMENTAL · REMEDIATION

SOIL CORE SCAN LOG

Project: Sylvania-Corning FUSRAP Site
Date/Time: 6/14/07
Project #: ~~07-1005.00~~
Instr. Model / SN: 2221 w/ 44-10 ; SN# 163685
Location ID: SBR1-SU09 -09
Cal Due: 10/27/07
Total Depth: 15'
Ambient Bkg: 1496 cpm
Page: 1 of 1
Technician Init: DA / GMT

Sleeve #	Depth Range	Core & Scan Info. (Top → Bottom)			
1	~~0' - 4'~~ 0 - 5				
Core Scan Results (cpm):		N/A			
2	~~4' - 8'~~ 5 - 10				
Core Scan Results (cpm):		N/A			
3	~~8 - 12'~~ 10 - 14	1456	1400	1525	1350
Core Scan Results (cpm):					
4	12' - 16'				
Core Scan Results (cpm):					
5	16' - 20'				
Core Scan Results (cpm):					

Comments: (record any drilling or sampling issues, e.g., refusal, groundwater, poor recovery, etc. here)

5 μR/hr @ BKGD
RESAMPLE

CABRERA SERVICES

RADIOLOGICAL · ENVIRONMENTAL · REMEDIATION

SOIL CORE SCAN LOG

Project: Sylvania-Corning FUSRAP Site
Date/Time: 6/14/07
Project #: ~~07-1005.00~~ 07-1022.00 II
Instr. Model / SN: 2221 w/ 44-10 ; SN# 163685
Location ID: SU10-19
Cal Due: 10/27/07
Total Depth: 11'
Ambient Bkg: 1603 cpm
Page: 1 of 1
Technician Init: DA

Sleeve #	Depth Range	Core & Scan Info (Top / Bottom)			
1	~~0' - 4'~~ (0 - 3)		1425	1475	
2	~~4' - 8'~~ (3-6)'		1450	1500	
3	~~8 - 12'~~ (6-9)'	1400	1475	1375	
4	~~12' - 16'~~ (9-12)'	1500	1425	1550	
5	16' - 20'	N		A	

Core Scan Results (cpm):

Comments: (record any drilling or sampling issues, e.g., refusal, groundwater, poor recovery, etc. here)

5 µR/hr @ BKGD

RESAMPLE

CABRERA SERVICES

RADIOLOGICAL • ENVIRONMENTAL • REMEDIATION

SOIL CORE SCAN LOG

Project: Sylvania-Corning FUSRAP Site
Date/Time: 6/14/07
Project #: ~~07-1005.00~~ 07-1022.00 II
Instr. Model / SN: 2221-w / 44-10 ; SN# 163685
Location ID: SBR1-SW10-15
Cal Due: 10/27/07
Total Depth: 10'
Ambient Bkg: 1648 cpm
Page: 1 of 1
Technician Init: DA

Sleeve #	Depth Range	Core & Scan Info (Top / Bottom)			
1	0-3 ~~0-4~~		1550	1500	
Core Scan Results (cpm):					
2	3-6 ~~4-8~~	1550	1450	1600	
Core Scan Results (cpm):					
3	6-9 ~~8-12~~	1475	1550	1500	
Core Scan Results (cpm):					
4	12' - 16'				
Core Scan Results (cpm):					
5	16' - 20'				
Core Scan Results (cpm):					

A

N

Comments: (record any drilling or sampling issues, e.g. refusal, groundwater, poor recovery, etc. here)

* Resample

4 mR/hr @ Bkgd

CABRERA SERVICES

RADIOLOGICAL • ENVIRONMENTAL • REMEDIATION

SOIL CORE SCAN LOG

Project: Sylvania-Corning FUSRAP Site
Date/Time: 6/14/07
Project #: ~~07-1005.00~~ 07-1022.00 II
Instr. Model / SN: 2221 w/44-10, SN#163655
Location ID: SBR1-~~SU10-11~~ SU10-11
Cal Due: 10/27/07
Total Depth: 11'
Ambient Bkg: 1499 cpm
Page: 1 of 1
Technician Init: DA/GMT

Sleeve #	Depth Range	Core & Scan Info (Top / Bottom)			
1	~~0' - 4'~~ 0-3	1650	1675	1500	
Core Scan Results (cpm):					
2	~~4' - 8'~~ 3-6	1500	1450	1550	
Core Scan Results (cpm):					
3	~~8 - 12'~~ 6-9	1500	1575	1550	
Core Scan Results (cpm):					
4	~~12' - 16'~~	1500	1475	1500	
Core Scan Results (cpm):					
5	~~16' - 20'~~	N	A		
Core Scan Results (cpm):					

Comments: (record any drilling or sampling issues, e.g. refusal, groundwater, poor recovery, etc. here)

* Bkg @ 4 mR/hr
* Resample
* Stop @ 11'

CABRERA SERVICES

RADIOLOGICAL · ENVIRONMENTAL · REMEDIATION

SOIL CORE SCAN LOG

Project: Sylvania-Corning FUSRAP Site
Date/Time: 6/14/07
Project #: ~~07-1005.00~~ 07-1022.00 II
Instr. Model / SN: 2221 w/44-10, SN#163685
Location ID: 140-04
Cal Due: 10/27/07
Total Depth: 11'
Ambient Bkg: 1249 cpm
Page: 1 of 1
Technician Init: DA/GMT

Sleeve	Depth Range	Core Scan Info (Top / Bottom)			
1	0' - ~~4'~~ 3'	1250	1200	1300	
Core Scan Results (cpm):					
2	~~4' - 8'~~ 3' - 6'	1100	1075	1275	
Core Scan Results (cpm):					
3	~~8 - 12'~~ 6' - 9'	1225	1175	1200	
Core Scan Results (cpm):					
4	~~12' - 16'~~ 9' - 12'	1125	1250	1200	
Core Scan Results (cpm):					
5	16' - 20'	N	A		
Core Scan Results (cpm):					

Comments: (recorded by drilling, sampling, sides, e.g. refusal, groundwater, poor recovery, etc. here)

BKGD @ 4 mR/hr
Refusal @ 11'

CABRERA SERVICES, INC.

PROJECT NAME: Sylvania-Corning FUSRAP
LOCATION: Hicksville, NY
CLIENT: E & E

BORING LOG
Location ID: ~~SB-SU~~ 140-04
Page No.: 1 of 1

tractor: F&E	Driller: ZEBRA	Date Started: 6-14-07	Rock Refusal Depth:
thod: 4' MACRO CORE GEOPROBE	Water Elevation: N/A	Date Finished: 6-14-07	Rock Cored (FT):
Elevation: N/A	Soil Drilled:	Total Depth: 10'	Casing Size:
			Core Size: 1.5" x 30
Logged By: DA	Checked By: [illegible]		
Date/Time: 6-14-07		S/N NaI - 190205	BKG NaI (cpm) 876
		S/N Mod 19 - 101662	BKG Mod 19 (uR/hr) 4

Elevation	Depth (feet)	Casing Blows/Foot	DHG cpm	Sample No. & Penetration/Recovery (feet)	Sample Type	Sample Description and Classification	Group Designation	Remarks	Equipment Installed	Lab Tests Performed
N	1		2887		Soil	4 uR/hr @ Borehole				
	2		2305							
	3		1992							
	4	N	1946							
	5		1709							
	6		1876							
	7	A	2679							
	8		2496	N A						
	9		1809							
	10		1659							
A									N A	
N										
A										

Notes

CABRERA SERVICES

RADIOLOGICAL • ENVIRONMENTAL • REMEDIATION

SOIL CORE SCAN LOG

Project: Sylvania-Corning FUSRAP Site
Date/Time: 6/14/07
Project #: ~~07-1005.00~~ 07-1022.00 II
Instr. Model / SN: 2221 w/44-10, SN#163685
Location ID: 140-02
Cal Due: 10/27/07
Total Depth: 1
Ambient Bkg: 1260 cpm
Page: 1 of 1
Technician Init: DA/GMT

Sleeve #	Depth Range	Core & Scan Info (Top / Bottom)			
1	0' - 4'	1200	1450	1300	
Core Scan Results (cpm):					
2	4' - 8'		1225	1275	
Core Scan Results (cpm):					
3	8 - 12'	1225	1275	1300	
Core Scan Results (cpm):					
4	12' - 16'	1125	1150	1150	
Core Scan Results (cpm):					
5	16' - 20'	A			
Core Scan Results (cpm):		N			

Comments: (recordable drilling or sampling issues, e.g. refusal, groundwater, poor recovery, etc. here)

BKgD @ 9 [illegible] hr
REFWN @ 11'

CABRERA SERVICES, INC.

PROJECT NAME: Sylvania-Corning FUSRAP
LOCATION: Hicksville, NY
CLIENT: E & E

BORING LOG
Location ID: ~~SB1~~ Std 140-02
Page No.: 1 of 1

Contractor: E&E	Driller: Cabrera	Date Started: 6/14/07	Rock Refusal Depth:
Method: Micro Gas Geoprobe	Water Elevation: N/A	Date Finished: 6/14/07	Rock Cored (FT):
Elevation: N/A	Soil Drilled:	Total Depth: 6'	Casing Size:
			Core Size: 1.5" x 3'
Logged By: DA	Checked By: [illegible]		
Date/Time: 6/14/07		S/N NaI - 190205	BKG NaI (cpm) 969
		S/N Mod19 - 101062	BKG Mod19 (cpm) 4

Elevation	Depth (feet)	Casing Blows/Foot	DHG cpm	Sample No. & Penetration/Recovery (feet)	Sample Type	Sample Description and Classification	Group Designation	Remarks	Equipment Installed	Lab Tests Performed
N	1		1657			4 μR/hr @ Bore hole				
	2		2842							
	3	N	2796	N						
	4	A	2852							
	5		1524	A						
	6		1485							
A			N					N	A	
N				A						
A										

Notes

CABRERA SERVICES

RADIOLOGICAL · ENVIRONMENTAL · REMEDIATION

SOIL CORE SCAN LOG

Project: Sylvania-Corning FUSRAP Site
Date/Time: 6/14/07
Project #: ~~07-1005.00~~ 07-1022.00 II
Instr. Model / SN: 2221 / 44-10, SN 163685
Location ID: SBR1-SU08-07
Cal Due: 10/27/07
Total Depth: 16'
Ambient Bkg: 1367 cpm
Page: 1 of 1
Technician Init: DA

Sleeve #	Depth Range	Core & Scan Info (Top → Bottom)				
1	~~0'-4'~~ (0-5)'	1250	1175	1200	1325	1325
Core Scan Results (cpm):						
2	~~4'-8'~~ (5-10)'	VOID		1200	1150	1175
Core Scan Results (cpm):						
3	8 - 12' (10-16)'		1200	1200	1250	1125
Core Scan Results (cpm):						
4	12' - 16'					
Core Scan Results (cpm):						
5	16' - 20'					
Core Scan Results (cpm):						

Comments: (record any drilling or sampling issues, e.g., refusal, groundwater, poor recovery, etc. here)

7 μR/hr @ BKGD
RESAMPLE

CABRERA SERVICES

RADIOLOGICAL · ENVIRONMENTAL · REMEDIATION

SOIL CORE SCAN LOG

Project: Sylvania-Corning-FUSRAP Site
Date/Time: 6/15/07
Project #: ~~07-1005.00~~ 07-1022.00 II
Instr. Model / SN: 2221 w/44-10; SN#163655
Location ID: SU08-08
Cal Due: 10/27/07
Total Depth: 15'
Ambient Bkg: 1328 cpm
Page: 1 of 1
Technician Init: DA/GMT

Sleeve	Depth Range	Core & Scan Info (Top)					(Bottom)
1	~~0' - 4'~~ 0-5	~~1250~~ VOID	1250	1300	1350	1200	1250
Core Scan Results (cpm):							
2	~~4' - 8'~~ 5-10						
Core Scan Results (cpm):		NA					
3	~~8 - 12'~~ 10-15		1350	1400	1300	1275	1300
Core Scan Results (cpm):							
4	12' - 16'						
Core Scan Results (cpm):							
5	16' - 20'			N			
Core Scan Results (cpm):							

A

Comments: (record any drilling or sampling issues, e.g. refusal, groundwater, poor recovery, etc. here)

Recollect sample. No sample collected from 5-10'.

CABRERA SERVICES

RADIOLOGICAL · ENVIRONMENTAL · REMEDIATION

SOIL CORE SCAN LOG

Project: Sylvania-Corning FUSRAP Site
Date/Time: 6/15/07
Project #: ~~07-1005.00~~ 07-1022.00 II
Instr. Model / SN: 2221 w/ 44-10, SN#163685
Location ID: SBR1-SU08-12
Cal Due: 10/27/07
Total Depth: 15'
Ambient Bkg: 1328 cpm
Page: 1 of 1
Technician Init: DA/GMT

Sleeve	Depth Range	Core & Scan Info					
		Top				Bottom	
1	0-5 ~~0'-4'~~	1350	1300	1600 ~~1250~~	1250 ~~1600~~		1200
Core Scan Results (cpm):							
2	5-10 ~~4'-8'~~						
Core Scan Results (cpm):							
3	10-15 ~~8-12'~~		1250	1200	1125		1175
Core Scan Results (cpm):		VOID					
4	12' - 16'						
Core Scan Results (cpm):							
5	16' - 20'						
Core Scan Results (cpm):							

Comments: [illegible]

No sample collected 5-10 ft.
Re-collect previous sample

CABRERA SERVICES

RADIOLOGICAL · ENVIRONMENTAL · REMEDIATION

SOIL CORE SCAN LOG

Project: Sylvania-Corning FUSRAP Site
Date/Time: 6/15/07
Project #: ~~07-1005.00~~ 07-1022.00 II
Instr. Model / SN: 2221 w/ 44-10; SN #163685
Location ID: SU 08-10
Cal Due: 10/27/07
Total Depth: 4'
Ambient Bkg: 1328 cpm
Page: 1 of 1
Technician Init: DA/GMT

Sleeve	Depth Range	Core & Scan Info (Top / Bottom)				
1	0' - 4'			1300	1275	1400
Core Scan Results (cpm):						
2	4' - 8'					
Core Scan Results (cpm):						
3	8 - 12'					
Core Scan Results (cpm):		2				
4	12' - 16'		A			
Core Scan Results (cpm):						
5	16' - 20'					
Core Scan Results (cpm):						

Comments: (record any unique sampling issues, e.g. refusal, groundwater, poor recovery, etc. here)

Re Collect samples

CABRERA SERVICES

RADIOLOGICAL · ENVIRONMENTAL · REMEDIATION

SOIL CORE SCAN LOG

Project: Sylvania-Corning FUSRAP Site
Date/Time: 6/15/07
Project #: ~~07-1005.00~~ 07-1022.00 II
Instr. Model / SN: 2221 w/ 44-10, SN #163655
Location ID: 100-10
Cal Due: 10/27/07
Total Depth: 15'
Ambient Bkg: 1199 cpm
Page: 1 of 1
Technician Init: DA/GMT

Sleeve	Depth Range	Core & Scan Info (Top / Bottom)					
1	~~0'-4'~~ 0-5				1200		1275
Core Scan Results (cpm):							
2	~~4'-8'~~ 5-10						
Core Scan Results (cpm):		N/A					
3	8-12' 10-15		1200	1275	1150		1175
Core Scan Results (cpm):							
4	12' - 16'						
Core Scan Results (cpm):		A					
5	16' - 20'	N					
Core Scan Results (cpm):							

Comments: (recordably [illegible] sampling issues, [illegible] refusal, groundwater, poor recovery, etc. here)

5 μR/hr @ BKGD

No sample collected from 5-10 ft.

CABRERA SERVICES

RADIOLOGICAL · ENVIRONMENTAL · REMEDIATION

SOIL CORE SCAN LOG

Project: Sylvania-Corning FUSRAP Site
Project #: 07-1005.00
Location ID: SU 10-03
Total Depth: 8'
Page: 1 of 1

Date/Time: 06/18/07, 1720
Instr. Model / SN: 222, w/44-10,
Cal Due: 10/ /07
Ambient Bkg: 1458 cpm
Technician Init: KMA

Sleeve #	Depth Range	Core & Scan Info (Top → Bottom)			
1	0' - 4'				
Core Scan Results (cpm):					
2	4' - 8'			1550	1425
Core Scan Results (cpm):					
3	8 - 12'		N	A	
Core Scan Results (cpm):					
4	12' - 16'		N	A	
Core Scan Results (cpm):					
5	16' - 20'		N	A	
Core Scan Results (cpm):					

Comments: *(record any drilling or sampling issues, e.g., refusal, groundwater, poor recovery, etc. here)*

ONLY COLLECTED 6' TO 8 SECTION FOR VOC'S

CABRERA SERVICES, INC.

PROJECT NAME: Sylvania-Corning FUSRAP
LOCATION: Hicksville, NY
CLIENT: E & E

BORING LOG

Location ID: SU-10-03
Page No.: 1 of 1

Contractor: ZEBRA	Driller: L. CABELLARO	Date Started: 06/18/07	Rock Refusal Depth:
Method: DIRECT PUSH	Water Elevation: N/A	Date Finished: 06/18/07	Rock Cored (FT):
Elevation: O.G.	Soil Drilled: SAND, SILT	Total Depth: 7'	Casing Size:
		METER INFO	Core Size:
Logged By: KMA	Checked By:	2221 w/GI 216482	MODEL 19 101662
Date/Time: 06/18/07 1800		CAL DUE 05-04-08	CAL. DUE. 10/07/07
		BKG CPM 1051	BKG 5 ur/hr, CON 5 uR/hr

Elevation	Depth (feet)	Casing Blows/Foot	DHG cpm	Sample No. & Penetration/ Recovery (feet)	Sample Type	Sample Description and Classification	Group Designation	Remarks	Equipment Installed	Lab Tests Performed
	1		1981							
	2		2484							
	3		1750							
	4		1780							
	5		1561							
	6		159							
	7		1990							
	~~8~~	N/A								
			N	A						

Notes

CABRERA SERVICES

RADIOLOGICAL · ENVIRONMENTAL · REMEDIATION

SOIL CORE SCAN LOG

Project: Sylvania-Corning FUSRAP Site
Date/Time: 06/18/07 0845
Project #: 07-1005.00
Instr. Model / SN: 2221 W/44-10 ~~108862~~
Location ID: 140-01
Cal Due: 04-30-08
Total Depth: 9'
Ambient Bkg: 1832 cpm
Page: 1 of 1
Technician Init: KMA, GT

Sleeve #	Depth Range	Core & Scan Info (Top / Bottom)			
1	0' - 4'	1750	2025	1875	
Core Scan Results (cpm):		VOID			
2	4' - 8'	2000	1900	1875	
Core Scan Results (cpm):		VOID			
3	8 - 12'	2100	1925	1950	
Core Scan Results (cpm):					
4	12' - 16'				
Core Scan Results (cpm):					
5	16' - 20'				
Core Scan Results (cpm):					

Comments: (record any drilling or sampling issues, e.g. refusal, groundwater, poor recovery, etc. here)

CABRERA SERVICES, INC.

PROJECT NAME: Sylvania-Corning FUSRAP
LOCATION: Hicksville, NY
CLIENT: E & E

BORING LOG

Location ID: 140-01
Page No.: 1 of 1

Contractor: ZEBRA	Driller: NA	Date Started: 06/18/07	Rock Refusal Depth: NA
Method: DIRECT PUSH	Water Elevation: NA	Date Finished: 06/18/07	Rock Cored (FT): NA
Elevation: NA	Soil Drilled: ~~4'~~ 5'	Total Depth: ~~4'~~ 5'	Casing Size: NA
		METER INFO	Core Size: 1.5" x 3'
Logged By: SMT	Checked By: SMT	2221 w/GI 216482	
Date/Time: 6/18/07		CAL DUE 05-04-08	
		1025 cpm	

Elevation	Depth (feet)	Casing Blows/Foot	~~DHG cpm~~ SMT	Sample No. & Penetration/ Recovery (feet)	~~Sample Type~~ DHG CPM	Sample Description and Classification	Group Designation	Remarks	Equipment Installed	Lab Tests Performed
	1		~~2050~~		2357					
	2	V	~~1901~~	SMT	2759	5 μR/hr @ 1 meter above hole				
	3		~~1821~~		1601					
	4	A	~~2050~~		1821					
	5			~~2005~~	2050					

Notes

CABRERA SERVICES

RADIOLOGICAL · ENVIRONMENTAL · REMEDIATION

SOIL CORE SCAN LOG

Project: Sylvania-Corning FUSRAP Site
Date/Time: 06/18/07
Project #: 07-1005.00
Instr. Model / SN: 2221 w/44-10 108862
Location ID: 140-09
Cal Due: 04-30-08
Total Depth: 11'6"
Ambient Bkg: 1548 cpm
Page: 1 of 1
Technician Init: KMA, GS

Sleeve #	Depth Range	Core & Scan Info (Top → Bottom)				
1	0-3 ~~0'-4'~~		1600	1650	1550	
Core Scan Results (cpm):		6" VOID				
2	3-6 ~~4'-8'~~		1600	2000	1750	
Core Scan Results (cpm):		6" VOID				
3	6-9 ~~8-12'~~		1650	1750	1900	
Core Scan Results (cpm):						
4	9'-12' ~~12'-16'~~		1800	1700	1550	
Core Scan Results (cpm):						
5	16' - 20'					
Core Scan Results (cpm):						

Comments: (record any drilling or sampling issues, e.g. wet soil, groundwater, poor recovery, etc. here)

CABRERA SERVICES, INC.

PROJECT NAME: Sylvania-Corning FUSRAP
LOCATION: Hicksville, NY
CLIENT: E & E

BORING LOG
Location ID: 140-09
Page No.: 1 of 1

Contractor: ZEBRA	Driller: L. CABELLARO	Date Started: 06/18/07	Rock Refusal Depth:
Method: DIRECT PUSH	Water Elevation: N/A	Date Finished: 06/18/07	Rock Cored (FT):
Elevation:	Soil Drilled: SAND, SILT	Total Depth: 11'	Casing Size:
		METER INFO	Core Size:
Logged By: KMA, GT	Checked By: [signature]	2221 W/GI 216482	MODEL 19 101662
Date/Time: 06/18/07		CAL DUE 05-04-08	CAL DUE 10-07-07
		BKG CPM 942	BKG 6 MICRO R/HR CON 6 MICRO R/HR

Elevation	Sample Information: Depth (feet)	Casing Blows/Foot	DHG cpm	Sample No. & Penetration/ Recovery (feet)	Sample Type	Sample Description and Classification	Group Designation	Remarks	Equipment Installed	Lab Tests Performed
	1		1895							
	2		2476							
	3		2273							
	4		2878							
	5		2109							
	6		2661							
	7		2871							
	8		3110							
	9		1764							
	10		1371							
	11		1262							

N

A

Notes

CABRERA SERVICES

RADIOLOGICAL · ENVIRONMENTAL · REMEDIATION

SOIL CORE SCAN LOG

Project: Sylvania-Corning FUSRAP Site
Date/Time: 06/18/07
Project #: 07-1005.00
Instr. Model / SN: 2221 w/44-10 108862
Location ID: 100-02
Cal Due: 04-30-08
Total Depth: 12'
Ambient Bkg: 1325 cpm
Page: 1 of 1
Technician Init: KMA

Sleeve #	Depth Range	Core & Scan Info (Top → Bottom)	Core Scan Results (cpm)
1	0' - 3'	1575 / 1400	1' 6" VOID
2	3' - 6'	1700 / 1600	1' VOID
3 *	6 - 9'	1450 / 1400	1' VOID
4	9' - 12' ~~12' - 16'~~	1475 / 1550 / 1500	
5	16' - 20'	N / A	

Comments: (record any drilling or sampling issues, e.g. refusal, groundwater, poor recovery, etc. here)

CABRERA SERVICES, INC.

PROJECT NAME: Sylvania-Corning FUSRAP
LOCATION: Hicksville, NY
CLIENT: E & E

BORING LOG

Location ID: 100-02
Page No.: 1 of 1

Contractor: ZEBRA	Driller: L. CABRERA	Date Started: 06/18/07	Rock Refusal Depth:
Method: DIRECT PUSH	Water Elevation: N.A.	Date Finished: 06/18/07	Rock Cored (FT):
Elevation: 0.0	Soil Drilled: SAND, SILT	Total Depth: 11'	Casing Size:
		MODEL INFO	Core Size:
Logged By: KMA	Checked By: SMT	2221 W/GI 216482	MODEL 19 # 101662
Date/Time: 06/18/07 1600		CAL DUE 05-04-08	CAL DUE 10/07/07
		BKG CPM 923	BKG 5 uR/hr, Cor. 6 uR/hr

Elevation	Depth (feet)	Casing Blows/Foot	DHG cpm	Sample No. & Penetration/ Recovery (feet)	Sample Type	Sample Description and Classification	Group Designation	Remarks	Equipment Installed	Lab Tests Performed
	1		1228							
	2		2110							
	3		2241							
	4		2096							
	5		2083							
	6		2165							
	7		2067							
	8		1819							
	9		3151							
	10		1989							
	11		1587							

Notes

CABRERA SERVICES

RADIOLOGICAL • ENVIRONMENTAL • REMEDIATION

SOIL CORE SCAN LOG

Project: Sylvania-Corning FUSRAP Site
Project #: 07-1005.00
Location ID: 100 - 03
Total Depth: 10'
Page: 1 of 1

Date/Time: 06/18/07
Instr. Model / SN: 222, w/ 44-10, 163685,
Cal Due: 10-27-07
Ambient Bkg: 1325 cpm
Technician Init: KMA, GT

Sleeve #	Depth Range	Core & Scan Info (Top → Bottom)			
1	0'-3' ~~0'-3~~		1350	1400	N/A
Core Scan Results (cpm):		1' VOID			
2	3'-6' ~~4'-8'~~		1350	1400	1350	N/A
Core Scan Results (cpm):					
3	6'-9' ~~8-12'~~	1550	1425	1375	N/A
Core Scan Results (cpm):					
4	12' - 16'	1450		N/A	
Core Scan Results (cpm):		REFUSAL @ 10'			
5	16' - 20'		N	A	
Core Scan Results (cpm):					

Comments: *(record any drilling or sampling issues, e.g., refusal, groundwater, poor recovery, etc. here)*

CABRERA SERVICES, INC.

PROJECT NAME: Sylvania-Corning FUSRAP
LOCATION: Hicksville, NY
CLIENT: E & E

BORING LOG

Location ID: 100-03
Page No.: 1 of 1

Contractor: ZEBRA	Driller: L. CABELLARO	Date Started: 06/18/07	Rock Refusal Depth:
Method: DIRECT PUSH	Water Elevation: N/A	Date Finished: 06/18/07	Rock Cored (FT):
Elevation: 0.0	Soil Drilled: SAND, SILT	Total Depth:	Casing Size:
		METER INFO	Core Size:
Logged By: KMA	Checked By: [illegible]	2221 W/GL 216482	MODEL 19 10/662
Date/Time: 06/18/07		CAL DUE 05-04-08	CAL DUE 10/07/07
		BKG CPM	BKG 5 ur/hr, Con 5 ur/hr

Elevation	Depth (feet)	Casing Blows/Foot	DHG cpm	Sample No. & Penetration/ Recovery (feet)	Sample Type	Sample Description and Classification	Group Designation	Remarks	Equipment Installed	Lab Tests Performed
	1		1556		SOIL					
	2		2609							
	3		2883							
	4		2707							
	5		2390							
	6		1823							
	7		1475							
	8		2134							
	9		3232							
	10		2120		SOIL					
			N	A						

Notes

CABRERA SMEAR COUNTING WORKSHEET (Rev 6)

α eff	β eff
0.3450	0.1590

Sample Count Time (min)	Daily Background Count Time (min)
2.0	20.0

dpm/100 cm^2 α Flag	dpm/100 cm^2 β Flag
100	1000

* Morning Daily Count

seq. #	Sample ID# and Description	Date	Background Total Counts* α	Background Total Counts* β	Sample Total Counts α	Sample Total Counts β	Background (cpm) α	Background (cpm) β	Sample Counts (cpm) α	Sample Counts (cpm) β	Sample (dpm/100 cm^2) α	Sample (dpm/100 cm^2) β	> α flag	> β flag	Tech. Initial
1	Survey001-01	5/15/2007	3	859	0	94	0.2	43.0	0.00	47	-0.4	25			AC
2	Survey001-02	5/15/2007	3	859	0	90	0.2	43.0	0.00	45	-0.4	13			AC
3	Survey002-01	5/16/2007	4	781	0	98	0.2	39.1	0.00	49	-0.6	63			AC
4	Survey002-02	5/16/2007	4	781	0	79	0.2	39.1	0.00	40	-0.6	3			AC
5	Survey002-03	5/16/2007	4	781	0	60	0.2	39.1	0.00	30	-0.6	-57			AC
6	Survey003-01	5/16/2007	4	781	0	83	0.2	39.1	0.00	42	-0.6	15			AC
7	Survey003-02	5/16/2007	4	781	1	70	0.2	39.1	0.50	35	0.9	-25			AC
8	Survey003-03	5/16/2007	4	781	0	81	0.2	39.1	0.00	41	-0.6	9			AC
9	Survey003-04	5/16/2007	4	781	0	68	0.2	39.1	0.00	34	-0.6	-32			AC
10	Survey003-05	5/16/2007	4	781	0	76	0.2	39.1	0.00	38	-0.6	-7			KMA
11	Survey003-06	5/16/2007	4	781	1	72	0.2	39.1	0.50	36	0.9	-19			KMA
12	Survey004-01	5/16/2007	4	781	0	69	0.2	39.1	0.00	35	-0.6	-29			DA
13	Survey004-02	5/16/2007	4	781	1	83	0.2	39.1	0.50	42	0.9	15			DA
14	Survey004-03	5/16/2007	4	781	1	71	0.2	39.1	0.50	36	0.9	-22			DA
15	Survey004-04	5/16/2007	4	781	0	72	0.2	39.1	0.00	36	-0.6	-19			DA
16	Survey004-05	5/16/2007	4	781	2	62	0.2	39.1	1.00	31	2.3	-51			DA
17	Survey004-06	5/16/2007	4	781	0	69	0.2	39.1	0.00	35	-0.6	-29			DA
18	Survey018-01	5/16/2007	4	781	10	80	0.2	39.1	5.00	40	13.9	6			DA
19	Survey018-02	5/16/2007	4	781	0	55	0.2	39.1	0.00	28	-0.6	-73			DA
20	Survey019-01	5/16/2007	4	781	1	75	0.2	39.1	0.50	38	0.9	-10			DA
21	Survey019-02	5/16/2007	4	781	0	74	0.2	39.1	0.00	37	-0.6	-13			DA
22	Survey020-01	5/16/2007	4	781	1	73	0.2	39.1	0.50	37	0.9	-16			DA
23	Survey020-02	5/16/2007	4	781	0	69	0.2	39.1	0.00	35	-0.6	-29			DA
24	Survey021-01	5/17/2007	1	826	0	72	0.1	41.3	0.00	36	-0.1	-33			DA
25	Survey021-02	5/17/2007	1	826	3	94	0.1	41.3	1.50	47	4.2	36			DA
26	Survey022-01	5/17/2007	1	826	2	76	0.1	41.3	1.00	38	2.8	-21			DA
27	Survey022-02	5/17/2007	1	826	0	66	0.1	41.3	0.00	33	-0.1	-52			DA
28	Survey023-01	5/17/2007	1	826	2	89	0.1	41.3	1.00	45	2.8	20			DA
29	Survey023-02	5/17/2007	1	826	1	77	0.1	41.3	0.50	39	1.3	-18			DA
30	Survey024-01	5/17/2007	1	826	0	81	0.1	41.3	0.00	41	-0.1	-5			DA
31	Survey024-02	5/17/2007	1	826	3	95	0.1	41.3	1.50	48	4.2	39			DA
32	Survey007-01	5/18/2007	3	669	0	70	0.2	33.5	0.00	35	-0.4	10			DA
33	Survey007-02	5/18/2007	3	669	0	62	0.2	33.5	0.00	31	-0.4	-15			DA
34	Survey007-03	5/18/2007	3	669	0	76	0.2	33.5	0.00	38	-0.4	29			DA
35	Survey007-04	5/18/2007	3	669	5	86	0.2	33.5	2.50	43	6.8	60			DA
36	Survey007-05	5/18/2007	3	669	1	90	0.2	33.5	0.50	45	1.0	73			DA
37	Survey007-06	5/18/2007	3	669	0	80	0.2	33.5	0.00	40	-0.4	41			DA
38	Survey007-07	5/18/2007	3	669	5	85	0.2	33.5	2.50	43	6.8	57			DA
39	Survey007-08	5/18/2007	3	669	0	69	0.2	33.5	0.00	35	-0.4	7			DA
40	Survey008-01	5/21/2007	4	722	0	81	0.2	36.1	0.00	41	-0.6	28			DA
41	Survey008-02	5/21/2007	4	722	0	0	0.2	36.1	0.00	0	-0.6	-227			DA
42	Survey008-03	5/21/2007	4	722	1	78	0.2	36.1	0.50	39	0.9	18			DA
43	Survey008-04	5/21/2007	4	722	1	76	0.2	36.1	0.50	38	0.9	12			DA
44	Survey008-05	5/21/2007	4	722	0	65	0.2	36.1	0.00	33	-0.6	-23			DA
45	SU14-18	5/21/2007	4	722	0	57	0.2	36.1	0.00	29	-0.6	-48			DA

CABRERA SMEAR COUNTING WORKSHEET (Rev 6)

46	SU14-17	5/21/2007	4	722	0	50	0.2	36.1	0.00	25	-0.6	-70			DA
47	Survey009-01	5/22/2007	3	721	0	58	0.2	36.1	0.00	29	-0.4	-44			DA
48	Survey009-02	5/22/2007	3	721	0	50	0.2	36.1	0.00	25	-0.4	-69			DA
49	Survey009-03	5/22/2007	3	721	0	65	0.2	36.1	0.00	33	-0.4	-22			DA
50	Survey009-04	5/22/2007	3	721	1	66	0.2	36.1	0.50	33	1.0	-19			DA
51	Survey009-05	5/22/2007	3	721	1	47	0.2	36.1	0.50	24	1.0	-79			DA
52	Survey009-06	5/22/2007	3	721	0	68	0.2	36.1	0.00	34	-0.4	-13			DA
53	SU09-01	5/23/2007	0	646	1	77	0.0	32.3	0.50	39	1.4	39			DA
54	SU14-01	5/23/2007	0	646	0	84	0.0	32.3	0.00	42	0.0	61			DA
55	SU14-02	5/23/2007	0	646	0	74	0.0	32.3	0.00	37	0.0	30			DA
56	DRYH-C-Z1	5/23/2007	0	646	0	68	0.0	32.3	0.00	34	0.0	11			DA
57	Survey011-01	6/7/2007	1	942	1	80	0.1	47.1	0.50	40	1.3	-45			DA
58	Survey011-02	6/7/2007	1	942	0	71	0.1	47.1	0.00	36	-0.1	-73			DA
59	Survey011-03	6/7/2007	1	942	0	79	0.1	47.1	0.00	40	-0.1	-48			DA
60	Survey011-04	6/7/2007	1	942	0	76	0.1	47.1	0.00	38	-0.1	-57			DA
61	Survey011-05	6/7/2007	1	942	1	83	0.1	47.1	0.50	42	1.3	-35			DA
62	Survey012-01	6/11/2007	3	817	4	87	0.2	40.9	2.00	44	5.4	17			DA
63	Survey012-02	39244	3	817	6	84	0.2	40.9	3.00	42	8.3	7			KA
64	Survey012-03	39244	3	817	1	70	0.2	40.9	0.50	35	1.0	-37			KA
65	Survey012-04	39244	3	817	2	67	0.2	40.9	1.00	34	2.5	-46			KA
66	Survey012-05	39244	3	817	3	73	0.2	40.9	1.50	37	3.9	-27			KA
67	Survey012-06	39244	3	817	3	90	0.2	40.9	1.50	45	3.9	26			KA
68	Survey012-07	39244	3	817	1	82	0.2	40.9	0.50	41	1.0	1			KA
69	Survey012-08	39244	3	817	0	78	0.2	40.9	0.00	39	-0.4	-12			KA
70	Survey012-09	39244	3	817	0	66	0.2	40.9	0.00	33	-0.4	-49			KA
71	dr-u	39244	3	817	0	87	0.2	40.9	0.00	44	-0.4	17			KA
72	su 12-21	39244	3	817	0	56	0.2	40.9	0.00	28	-0.4	-81			KA
73	su 11-01	39244	3	817	0	86	0.2	40.9	0.00	43	-0.4	14			KA
74	su 11-06	39244	3	817	1	72	0.2	40.9	0.50	36	1.0	-31			KA
75	dr -h	39244	3	817	0	65	0.2	40.9	0.00	33	-0.4	-53			KA
76	dr-m	39244	3	817	0	93	0.2	40.9	0.00	47	-0.4	36			KA
77	su 10-17	39244	3	817	0	89	0.2	40.9	0.00	45	-0.4	23			KA
78	su 10-16	39244	3	817	4	81	0.2	40.9	2.00	41	5.4	-2			KA
79	dr-i	39244	3	817	0	83	0.2	40.9	0.00	42	-0.4	4			KA
80	su12-12	39244	3	817	1	84	0.2	40.9	0.50	42	1.0	7			KA
81	su12-20	39244	3	817	0	72	0.2	40.9	0.00	36	-0.4	-31			KA
82	su12-05	39244	3	817	1	84	0.2	40.9	0.50	42	1.0	7			KA
83	su12-06	39244	3	817	1	72	0.2	40.9	0.50	36	1.0	-31			KA
84	su12-10	39244	3	817	1	70	0.2	40.9	0.50	35	1.0	-37			KA
85	su12-15	39244	3	817	1	78	0.2	40.9	0.50	39	1.0	-12			KA
86	su12-16	39244	3	817	0	77	0.2	40.9	0.00	39	-0.4	-15			KA
87	su12-18	39244	3	817	1	62	0.2	40.9	0.50	31	1.0	-62			KA
88	Truck Release Probe	39244	3	817	0	59	0.2	40.9	0.00	30	-0.4	-71			KA
89	Truck Release	39244	3	817	0	75	0.2	40.9	0.00	38	-0.4	-21			KA
90	Truck Release	39244	3	817	2	63	0.2	40.9	1.00	32	2.5	-59			KA
91	Truck Release	39244	3	817	0	101	0.2	40.9	0.00	51	-0.4	61			KA
92	Truck Release	39244	3	817	0	84	0.2	40.9	0.00	42	-0.4	7			KA
93	Truck Release	39244	3	817	1	79	0.2	40.9	0.50	40	1.0	-8			KA
94	Truck Release	39244	3	817	1	65	0.2	40.9	0.50	33	1.0	-53			KA
95	GPR-F Nugget	39245	1	787	29	193	0.1	39.4	14.50	97	41.9	359			KA
96	su10-11	39245	1	787	6	60	0.1	39.4	3.00	30	8.6	-59			KA
97	su10-15	39245	1	787	0	61	0.1	39.4	0.00	31	-0.1	-56			KA
98	su10-19	39245	1	787	4	64	0.1	39.4	2.00	32	5.7	-46			KA
99	su10-03	39245	1	787	1	78	0.1	39.4	0.50	39	1.3	-2			KA

CABRERA SMEAR COUNTING WORKSHEET (Rev 6)

100	su08-06	39245	1	787	0	70	0.1	39.4	0.00	35	-0.1	-27			KA
101	su08-05	39245	1	787	0	67	0.1	39.4	0.00	34	-0.1	-37			KA
102	su08-04	39245	1	787	0	92	0.1	39.4	0.00	46	-0.1	42			KA
103	su08-03	39245	1	787	0	63	0.1	39.4	0.00	32	-0.1	-49			KA
104	su08-01	39245	1	787	1	73	0.1	39.4	0.50	37	1.3	-18			KA
105	140-06	39245	1	787	1	61	0.1	39.4	0.50	31	1.3	-56			KA
106	140-08	39245	1	787	1	68	0.1	39.4	0.50	34	1.3	-34			KA
107	em15 Cab	39246	2	826	1	80	0.1	41.3	0.50	40	1.2	-8			KA
108	em15 l tires	39246	2	826	0	61	0.1	41.3	0.00	31	-0.3	-68			KA
109	em15 r tires	39246	2	826	0	65	0.1	41.3	0.00	33	-0.3	-55			KA
110	em15 hoe	39246	2	826	0	66	0.1	41.3	0.00	33	-0.3	-52			KA
111	em 15 bucket	39246	2	826	0	76	0.1	41.3	0.00	38	-0.3	-21			KA
112	em 15 gen area	39246	2	826	1	78	0.1	41.3	0.50	39	1.2	-14			KA
113	100-01	39246	2	826	0	76	0.1	41.3	0.00	38	-0.3	-21			KA
114	100-04	39246	2	826	0	73	0.1	41.3	0.00	37	-0.3	-30			KA
115	100-05	39246	2	826	0	63	0.1	41.3	0.00	32	-0.3	-62			KA
116	140-03	39246	2	826	0	71	0.1	41.3	0.00	36	-0.3	-36			KA
117	140-05	39246	2	826	0	70	0.1	41.3	0.00	35	-0.3	-40			KA

CABRERA SMEAR COUNTING WORKSHEET (Rev 6)

α eff	β eff
0.3480	0.1820

Sample Count Time (min)	Daily Background Count Time (min)
2.0	20.0

dpm/100 cm^2 α Flag	dpm/100 cm^2 β Flag
20	1000

* Morning Daily Count

seq. #	Sample ID# and Description	Date	Background Total Counts* α	Background Total Counts* β	Sample Total Counts α	Sample Total Counts β	Background (cpm) α	Background (cpm) β	Sample Counts (cpm) α	Sample Counts (cpm) β	Sample (dpm/100 cm^2) α	Sample (dpm/100 cm^2) β	> α flag	> β flag	Tech. Initial
1	Survey005-01	5/16/2007	2	681	0	69	0.1	34.1	0.00	35	-0.3	2			AJC
2	Survey005-02	5/16/2007	2	681	1	83	0.1	34.1	0.50	42	1.1	41			AJC
3	Survey006-01	5/17/2007	5	679	0	64	0.3	34.0	0.00	32	-0.7	-11			AJC
4	Survey006-02	5/17/2007	5	679	1	68	0.3	34.0	0.50	34	0.7	0			AJC
5	SU09-06	5/21/2007	4	685	2	57	0.2	34.3	1.00	29	2.3	-32			AJC
6	SU09-12	5/21/2007	4	685	1	79	0.2	34.3	0.50	40	0.9	29			AJC
7	SU13-01	5/21/2007	4	685	1	64	0.2	34.3	0.50	32	0.9	-12			AJC
8	SU13-02	5/21/2007	4	685	1	79	0.2	34.3	0.50	40	0.9	29			AJC
9	SU13-03	5/21/2007	4	685	1	73	0.2	34.3	0.50	37	0.9	12			AJC
10	SU13-04	5/22/2007	5	687	2	64	0.3	34.4	1.00	32	2.2	-13			AJC
11	SU13-05	5/22/2007	5	687	1	72	0.3	34.4	0.50	36	0.7	9			AJC
12	SU13-06	5/22/2007	5	687	2	56	0.3	34.4	1.00	28	2.2	-35			AJC
13	SU13-07	5/22/2007	5	687	3	95	0.3	34.4	1.50	48	3.6	72			AJC
14	SU13-08	5/22/2007	5	687	2	50	0.3	34.4	1.00	25	2.2	-51			AJC
15	SU13-09	5/22/2007	5	687	3	95	0.3	34.4	1.50	48	3.6	72			DA
16	SU13-10	5/22/2007	5	687	4	72	0.3	34.4	2.00	36	5.0	9			DA
17	SU14-16	5/22/2007	5	687	0	63	0.3	34.4	0.00	32	-0.7	-16			DA
18	SU14-15	5/22/2007	5	687	0	72	0.3	34.4	0.00	36	-0.7	9			DA
19	SU14-14	5/22/2007	5	687	2	63	0.3	34.4	1.00	32	2.2	-16			DA
20	SU14-13	5/22/2007	5	687	2	57	0.3	34.4	1.00	29	2.2	-32			DA
21	SU14-07	5/24/2007	4	680	0	95	0.2	34.0	0.00	48	-0.6	74			DA
22	SU14-20	5/24/2007	4	680	1	101	0.2	34.0	0.50	51	0.9	91			DA
23	SU14-12	5/24/2007	4	680	0	82	0.2	34.0	0.00	41	-0.6	38			DA
24	SU14-11	5/24/2007	4	680	1	95	0.2	34.0	0.50	48	0.9	74			DA
25	Truck Release Probe	5/24/2007	4	680	1	77	0.2	34.0	0.50	39	0.9	25			DA
26	Truck Release Bed	5/24/2007	4	680	1	56	0.2	34.0	0.50	28	0.9	-33			DA
27	Truck Release LF Tire	5/24/2007	4	680	1	78	0.2	34.0	0.50	39	0.9	27			AC
28	Truck Release RFTire	5/24/2007	4	680	2	60	0.2	34.0	1.00	30	2.3	-22			AC
29	Truck Release RR Tire	5/24/2007	4	680	0	52	0.2	34.0	0.00	26	-0.6	-44			AC
30	Truck Release LF Tire	5/24/2007	4	680	0	69	0.2	34.0	0.00	35	-0.6	3			AC
31	Truck Release Tool Box LT	5/24/2007	4	680	0	65	0.2	34.0	0.00	33	-0.6	-8			AC
32	Truck Release Tool Box RT	5/24/2007	4	680	2	67	0.2	34.0	1.00	34	2.3	-3			AC
33	Truck Release Floor Left	5/24/2007	4	680	0	75	0.2	34.0	0.00	38	-0.6	19			AC
34	Truck Release Floor Right	5/24/2007	4	680	0	71	0.2	34.0	0.00	36	-0.6	8			AC
35	SU12 -09	5/24/2007	4	680	0	61	0.2	34.0	0.00	31	-0.6	-19			AC
36	SU12 -13	5/24/2007	4	680	0	76	0.2	34.0	0.00	38	-0.6	22			AC
37	SU14-04	5/24/2007	4	680	0	60	0.2	34.0	0.00	30	-0.6	-22			AC
38	SU14-05	5/24/2007	4	680	0	71	0.2	34.0	0.00	36	-0.6	8			AC
39	SU14-06	5/24/2007	4	680	1	68	0.2	34.0	0.50	34	0.9	0			AC
41	SU14-08	5/24/2007	4	680	0	92	0.2	34.0	0.00	46	-0.6	66			AC
42	Survey010-01	5/25/2007	4	663	0	75	0.2	33.2	0.00	38	-0.6	24			AC
43	Survey010-02	5/25/2007	4	663	0	69	0.2	33.2	0.00	35	-0.6	7			AC
44	Survey010-03	5/25/2007	4	663	1	50	0.2	33.2	0.50	25	0.9	-45			AC
45	Survey010-04	5/25/2007	4	663	0	90	0.2	33.2	0.00	45	-0.6	65			AC
46	Survey010-05	5/25/2007	4	663	0	79	0.2	33.2	0.00	40	-0.6	35			AC

CABRERA SMEAR COUNTING WORKSHEET (Rev 6)

47	Survey010-06	5/25/2007	4	663	0	75	0.2	33.2	0.00	38	-0.6	24			AC
48	Survey010-07	5/25/2007	4	663	1	60	0.2	33.2	0.50	30	0.9	-17			AC
49	Survey010-08	5/25/2007	4	663	0	68	0.2	33.2	0.00	34	-0.6	5			AC
50	Survey010-09	5/25/2007	4	663	0	63	0.2	33.2	0.00	32	-0.6	-9			AC
51	Survey010-10	5/25/2007	4	663	0	73	0.2	33.2	0.00	37	-0.6	18			AC
52	SU10-04	5/25/2007	4	663	1	78	0.2	33.2	0.50	39	0.9	32			AC
53	SU10-05	5/25/2007	4	663	0	58	0.2	33.2	0.00	29	-0.6	-23			AC
54	SU10-06	5/29/2007	5	657	0	66	0.3	32.9	0.00	33	-0.7	1			AC
55	SU10-01	5/29/2007	5	657	1	49	0.3	32.9	0.50	25	0.7	-46			AC
56	SU10-07	5/29/2007	5	657	1	70	0.3	32.9	0.50	35	0.7	12			AC
57	SU10-08	5/29/2007	5	657	1	56	0.3	32.9	0.50	28	0.7	-27			AC
58	SU12-18	5/29/2007	5	657	2	61	0.3	32.9	1.00	31	2.2	-13			AC
59	SU12-16	5/29/2007	5	657	1	54	0.3	32.9	0.50	27	0.7	-32			AC
60	SU10-12	5/31/2007	0	772	0	72	0.0	38.6	0.00	36	0.0	-14			AC
61	SU10-13	5/31/2007	0	772	1	77	0.0	38.6	0.50	39	1.4	-1			AC
62	SU10-06	5/31/2007	0	772	0	80	0.0	38.6	0.00	40	0.0	8			AC
63	SU10-09	5/31/2007	0	772	1	69	0.0	38.6	0.50	35	1.4	-23			AC
64	SU11-07	5/31/2007	0	772	0	71	0.0	38.6	0.00	36	0.0	-17			AC
65	SU11-08	5/31/2007	0	772	1	86	0.0	38.6	0.50	43	1.4	24			AC
66	SU10-10	5/31/2007	0	772	1	54	0.0	38.6	0.50	27	1.4	-64			AC
67	SU10-18	5/31/2007	0	772	0	69	0.0	38.6	0.00	35	0.0	-23			AC
68	SU11-19	5/31/2007	0	772	0	57	0.0	38.6	0.00	29	0.0	-55			AC
69	SU11-20	5/31/2007	0	772	0	69	0.0	38.6	0.00	35	0.0	-23			AC
70	SU11-16	5/31/2007	0	772	0	75	0.0	38.6	0.00	38	0.0	-6			AC
71	DR-C	6/4/2007	1	695	0	64	0.1	34.8	0.00	32	-0.1	-15			AC
72	DR-D	6/4/2007	1	695	0	61	0.1	34.8	0.00	31	-0.1	-23			AC
73	DR-E	6/4/2007	1	695	0	80	0.1	34.8	0.00	40	-0.1	29			AC
74	SU11-15	6/4/2007	1	695	1	70	0.1	34.8	0.50	35	1.3	1			AC
75	SU11-14	6/4/2007	1	695	0	83	0.1	34.8	0.00	42	-0.1	37			AC
76	SU11-13	6/4/2007	1	695	1	64	0.1	34.8	0.50	32	1.3	-15			AC
77	DR-O	6/4/2007	1	695	0	74	0.1	34.8	0.00	37	-0.1	12			AC
78	DR-N	6/4/2007	1	695	0	86	0.1	34.8	0.00	43	-0.1	45			AC
79	SU11-17	6/5/2007	2	704	1	78	0.1	35.2	0.50	39	1.1	21			AC
80	SU11-21	6/5/2007	2	704	2	77	0.1	35.2	1.00	39	2.6	18			AC
81	SU11-18	6/5/2007	2	704	0	66	0.1	35.2	0.00	33	-0.3	-12			DA
82	SU11-12	6/5/2007	2	704	0	75	0.1	35.2	0.00	38	-0.3	13			DA
83	DR-F	6/5/2007	2	704	2	62	0.1	35.2	1.00	31	2.6	-23			DA
84	SU11-10	6/5/2007	2	704	0	72	0.1	35.2	0.00	36	-0.3	4			DA
85	DR-F	6/6/2007	4	723	0	78	0.2	36.2	0.00	39	-0.6	16			DA
86	SU11-11	6/6/2007	4	723	1	65	0.2	36.2	0.50	33	0.9	-20			DA
87	DRYH-F	6/6/2007	4	723	0	78	0.2	36.2	0.00	39	-0.6	16			DA
88	DR-P	6/6/2007	4	723	0	67	0.2	36.2	0.00	34	-0.6	-15			DA
89	SU11-05	6/6/2007	4	723	1	73	0.2	36.2	0.50	37	0.9	2			DA
90	SU11-09	6/6/2007	4	723	1	79	0.2	36.2	0.50	40	0.9	18			DA
91	SU11-04	6/6/2007	4	723	0	79	0.2	36.2	0.00	40	-0.6	18			DA
92	SMP-1	6/7/2007	3	702	1	52	0.2	35.1	0.50	26	1.0	-50			DA
93	SU11-03	6/7/2007	3	702	0	69	0.2	35.1	0.00	35	-0.4	-3			DA
94	SU11-22	6/7/2007	3	702	1	63	0.2	35.1	0.50	32	1.0	-20			DA
95	DR-R1/R2	6/7/2007	3	702	0	70	0.2	35.1	0.00	35	-0.4	-1			DA
96	SU10-02	6/7/2007	3	702	0	61	0.2	35.1	0.00	31	-0.4	-25			DA
97	Survey013-01	6/15/2007	2	689	1	77	0.1	34.5	0.50	39	1.1	22			DA
98	Survey013-02	6/15/2007	2	689	0	63	0.1	34.5	0.00	32	-0.3	-16			DA
99	Survey013-03	6/15/2007	2	689	0	68	0.1	34.5	0.00	34	-0.3	-2			DA
100	Survey013-04	6/15/2007	2	689	0	80	0.1	34.5	0.00	40	-0.3	30			DA

CABRERA SMEAR COUNTING WORKSHEET (Rev 6)

101	Survey013-05	6/15/2007	2	689	1	63	0.1	34.5	0.50	32	1.1	-16			DA
102	Survey013-06	6/15/2007	2	689	0	66	0.1	34.5	0.00	33	-0.3	-8			DA
103	Survey013-07	6/15/2007	2	689	0	69	0.1	34.5	0.00	35	-0.3	0			DA
104	Survey015-01	6/15/2007	2	689	1	67	0.1	34.5	0.50	34	1.1	-5			DA
105	Survey015-02	6/15/2007	2	689	1	68	0.1	34.5	0.50	34	1.1	-2			DA
106	Survey015-03	6/15/2007	2	689	1	70	0.1	34.5	0.50	35	1.1	3			DA
107	Survey015-04	6/15/2007	2	689	0	70	0.1	34.5	0.00	35	-0.3	3			DA
108	Survey015-05	6/15/2007	2	689	0	64	0.1	34.5	0.00	32	-0.3	-13			DA
109	Survey015-06	6/15/2007	2	689	0	80	0.1	34.5	0.00	40	-0.3	30			DA
110	Survey015-07	6/15/2007	2	689	1	71	0.1	34.5	0.50	36	1.1	6			DA
111	Survey015-08	6/15/2007	2	689	1	76	0.1	34.5	0.50	38	1.1	20			DA
112	Survey015-09	6/15/2007	2	689	1	64	0.1	34.5	0.50	32	1.1	-13			DA
113	Survey014-01	6/15/2007	2	689	0	74	0.1	34.5	0.00	37	-0.3	14			DA
114	Survey014-02	6/15/2007	2	689	2	72	0.1	34.5	1.00	36	2.6	9			DA
115	Survey014-03	6/15/2007	2	689	0	62	0.1	34.5	0.00	31	-0.3	-19			DA
116	Survey014-04	6/15/2007	2	689	2	68	0.1	34.5	1.00	34	2.6	-2			DA
117	Survey014-05	6/15/2007	2	689	0	80	0.1	34.5	0.00	40	-0.3	30			DA
118	Survey014-06	6/15/2007	2	689	0	55	0.1	34.5	0.00	28	-0.3	-38			DA
119	Survey014-07	6/15/2007	2	689	0	68	0.1	34.5	0.00	34	-0.3	-2			DA
120	Survey014-08	6/15/2007	2	689	1	83	0.1	34.5	0.50	42	1.1	39			DA
121	Survey014-09	6/15/2007	2	689	0	75	0.1	34.5	0.00	38	-0.3	17			DA
122	Survey014-10	6/15/2007	2	689	1	64	0.1	34.5	0.50	32	1.1	-13			DA
123	Survey014-11	6/15/2007	2	689	0	69	0.1	34.5	0.00	35	-0.3	0			DA
124	Geoprobe-01	6/15/2007	2	689	0	77	0.1	34.5	0.00	39	-0.3	22			DA
125	Geoprobe-02	6/15/2007	2	689	1	77	0.1	34.5	0.50	39	1.1	22			DA
126	Geoprobe-03	6/15/2007	2	689	0	68	0.1	34.5	0.00	34	-0.3	-2			DA
127	Geoprobe-04	6/15/2007	2	689	0	85	0.1	34.5	0.00	43	-0.3	44			DA
128	Geoprobe-05	6/15/2007	2	689	0	82	0.1	34.5	0.00	41	-0.3	36			DA
129	Geoprobe-06	6/15/2007	2	689	1	65	0.1	34.5	0.50	33	1.1	-11			DA
130	Geoprobe-07	6/15/2007	2	689	0	76	0.1	34.5	0.00	38	-0.3	20			DA
131	Geoprobe-08	6/15/2007	2	689	0	71	0.1	34.5	0.00	36	-0.3	6			DA
132	Survey016-01	6/19/2007	5	702	0	52	0.3	35.1	0.00	26	-0.7	-50			DA
133	Survey016-02	6/19/2007	5	702	1	50	0.3	35.1	0.50	25	0.7	-55			DA
134	Survey016-03	6/19/2007	5	702	0	65	0.3	35.1	0.00	33	-0.7	-14			DA
135	Survey016-04	6/19/2007	5	702	0	78	0.3	35.1	0.00	39	-0.7	21			DA
136	Survey017-01	6/19/2007	5	702	1	80	0.3	35.1	0.50	40	0.7	27			DA
137	Survey017-02	6/19/2007	5	702	1	68	0.3	35.1	0.50	34	0.7	-6			DA
138	Survey017-03	6/19/2007	5	702	0	73	0.3	35.1	0.00	37	-0.7	8			DA
139	Survey017-04	6/19/2007	5	702	0	79	0.3	35.1	0.00	40	-0.7	24			DA
140	Survey017-05	6/19/2007	5	702	0	64	0.3	35.1	0.00	32	-0.7	-17			DA
141	Survey017-06	6/19/2007	5	702	1	62	0.3	35.1	0.50	31	0.7	-23			DA
142	Survey025-01	6/19/2007	5	702	0	76	0.3	35.1	0.00	38	-0.7	16			DA
143	Survey025-02	6/19/2007	5	702	0	61	0.3	35.1	0.00	31	-0.7	-25			DA
144	Survey025-03	6/19/2007	5	702	1	59	0.3	35.1	0.50	30	0.7	-31			DA
145	Survey025-04	6/19/2007	5	702	0	66	0.3	35.1	0.00	33	-0.7	-12			DA
146	Survey025-05	6/19/2007	5	702	0	64	0.3	35.1	0.00	32	-0.7	-17			DA
147	Survey025-06	6/19/2007	5	702	0	74	0.3	35.1	0.00	37	-0.7	10			KA
148	Survey025-07	6/19/2007	5	702	0	60	0.3	35.1	0.00	30	-0.7	-28			KA
149	Survey025-08	6/19/2007	5	702	1	82	0.3	35.1	0.50	41	0.7	32			KA
150	Survey026-01	6/19/2007	5	702	1	65	0.3	35.1	0.50	33	0.7	-14			KA
151	Survey026-02	6/19/2007	5	702	1	68	0.3	35.1	0.50	34	0.7	-6			KA
152	Survey026-03	6/19/2007	5	702	1	64	0.3	35.1	0.50	32	0.7	-17			KA
153	Survey026-04	6/19/2007	5	702	1	61	0.3	35.1	0.50	31	0.7	-25			KA
154	Survey026-05	6/19/2007	5	702	0	78	0.3	35.1	0.00	39	-0.7	21			KA

CABRERA SMEAR COUNTING WORKSHEET (Rev 6)

155	Survey026-06	6/19/2007	5	702	0	80	0.3	35.1	0.00	40	-0.7	27			KA
156	Survey026-07	6/19/2007	5	702	0	70	0.3	35.1	0.00	35	-0.7	-1			KA
157	Survey026-08	6/19/2007	5	702	1	72	0.3	35.1	0.50	36	0.7	5			KA
158	Survey026-09	6/19/2007	5	702	0	74	0.3	35.1	0.00	37	-0.7	10			KA
159	Survey026-10	6/19/2007	5	702	1	55	0.3	35.1	0.50	28	0.7	-42			KA
160	Survey026-11	6/19/2007	5	702	0	59	0.3	35.1	0.00	30	-0.7	-31			KA
161	Survey026-12	6/19/2007	5	702	0	69	0.3	35.1	0.00	35	-0.7	-3			KA
162	Survey026-13	6/19/2007	5	702	2	74	0.3	35.1	1.00	37	2.2	10			KA
163	Survey027-01	6/19/2007	5	702	1	66	0.3	35.1	0.50	33	0.7	-12			KA
164	Survey027-02	6/19/2007	5	702	0	63	0.3	35.1	0.00	32	-0.7	-20			KA
165	Survey027-03	6/19/2007	5	702	1	67	0.3	35.1	0.50	34	0.7	-9			KA
166	Survey027-04	6/19/2007	5	702	0	69	0.3	35.1	0.00	35	-0.7	-3			KA
167	Survey027-05	6/19/2007	5	702	0	73	0.3	35.1	0.00	37	-0.7	8			KA
168	Survey027-06	6/19/2007	5	702	1	62	0.3	35.1	0.50	31	0.7	-23			KA
169	Survey027-07	6/19/2007	5	702	1	75	0.3	35.1	0.50	38	0.7	13			KA
170	Survey027-08	6/19/2007	5	702	0	59	0.3	35.1	0.00	30	-0.7	-31			KA

CABRERA SMEAR COUNTING WORKSHEET (Rev 6)

α eff	β eff
0.3400	0.2010

Sample Count Time (min)	Daily Background Count Time (min)
2.0	10.0

dpm/100 cm^2 α Flag	dpm/100 cm^2 β Flag
20	100

* Morning Daily Count

seq. #	Sample ID# and Description	Date	Background Total Counts* α	Background Total Counts* β	Sample Total Counts α	Sample Total Counts β	Background (cpm) α	Background (cpm) β	Sample Counts (cpm) α	Sample Counts (cpm) β	Sample (dpm/100 cm^2) α	Sample (dpm/100 cm^2) β	> α flag	> β flag	Tech. Initial
1	Survey028-01	7/11/2007	2	416	0	80	0.2	41.6	0.00	40	-0.6	-8			gmt
2	Survey028-02	7/11/2007	2	416	0	87	0.2	41.6	0.00	44	-0.6	9			gmt
3	Survey028-03	7/11/2007	2	416	2	90	0.2	41.6	1.00	45	2.4	17			gmt
4	Survey028-04	7/11/2007	2	416	1	83	0.2	41.6	0.50	42	0.9	0			gmt
5	Survey028-05	7/11/2007	2	416	0	105	0.2	41.6	0.00	53	-0.6	54			gmt
6	Survey028-06	7/11/2007	2	416	1	83	0.2	41.6	0.50	42	0.9	0			gmt
7	Survey028-07	7/11/2007	2	416	0	83	0.2	41.6	0.00	42	-0.6	0			gmt
8	Survey028-08	7/11/2007	2	416	1	91	0.2	41.6	0.50	46	0.9	19			gmt
9	Survey028-09	7/11/2007	2	416	1	88	0.2	41.6	0.50	44	0.9	12			gmt
10	Survey028-10	7/11/2007	2	416	1	83	0.2	41.6	0.50	42	0.9	0			gmt
11	Survey029-01	7/12/2007	3	508	0	76	0.3	50.8	0.00	38	-0.9	-64			gmt
12	Survey029-02	7/12/2007	3	508	2	93	0.3	50.8	1.00	47	2.1	-21			gmt
13	Survey029-03	7/12/2007	3	508	0	81	0.3	50.8	0.00	41	-0.9	-51			gmt
14	Survey029-04	7/12/2007	3	508	1	93	0.3	50.8	0.50	47	0.6	-21			gmt
15	Survey029-05	7/12/2007	3	508	0	101	0.3	50.8	0.00	51	-0.9	-1			gmt
16	Survey029-06	7/12/2007	3	508	1	105	0.3	50.8	0.50	53	0.6	8			gmt
17	Survey029-07	7/12/2007	3	508	2	101	0.3	50.8	1.00	51	2.1	-1			gmt
18	Survey029-08	7/12/2007	3	508	0	109	0.3	50.8	0.00	55	-0.9	18			gmt
19	Survey029-09	7/12/2007	3	508	0	104	0.3	50.8	0.00	52	-0.9	6			gmt
20	Survey029-10	7/12/2007	3	508	1	93	0.3	50.8	0.50	47	0.6	-21			gmt
21	Survey029-11	7/12/2007	3	508	1	99	0.3	50.8	0.50	50	0.6	-6			gmt
22	Survey029-12	7/12/2007	3	508	0	106	0.3	50.8	0.00	53	-0.9	11			gmt
23	Survey029-13	7/12/2007	3	508	0	88	0.3	50.8	0.00	44	-0.9	-34			gmt
24	Survey029-14	7/12/2007	3	508	2	111	0.3	50.8	1.00	56	2.1	23			gmt
25	Survey029-15	7/12/2007	3	508	0	104	0.3	50.8	0.00	52	-0.9	6			gmt
26	Survey029-16	7/12/2007	3	508	1	97	0.3	50.8	0.50	49	0.6	-11			gmt
27	Survey029-17	7/12/2007	3	508	0	83	0.3	50.8	0.00	42	-0.9	-46			gmt
28	Survey029-18	7/12/2007	3	508	1	100	0.3	50.8	0.50	50	0.6	-4			gmt
29	Survey029-19	7/12/2007	3	508	1	109	0.3	50.8	0.50	55	0.6	18			gmt
30	Survey029-20	7/12/2007	3	508	2	99	0.3	50.8	1.00	50	2.1	-6			gmt

Location: Site: EM-2	RWP# 07-1022.00-001	Survey # NA	Survey Type: TEST PIT	pg. 1 of 1

~~Smear (CPM/100 cm²)~~
Direct Count (CPM/Direct Frisk)

No.	α	β	No.	α	β
1	Ø	35.5	26		
2			27		
3			28		
4			29		
5			30		
6			31		
7			32		
8			33		
9			34		
10			35		
11			36		
12			37		
13			38		
14			39		
15			40		
16			41		
17			42		
18			43		
19			44		
20			45		
21			46		
22			47		
23			48		
24			49		
25			50		

circle one SHIELDED unshielded μR

	SHIELDED	unshielded
1 ft	1800 2580	5500 6400
2 ft	1600 2490	5000 6800
3 ft	1600 2500	5900 6800
4 ft	2500 3000	6000 8600
5 ft		
6 ft		
7 ft		
8 ft		
9 ft		
10 ft		

6

Comments	Surveyed By:	Date:	Instrument	Serial #	α Eff.	β Eff.	α Bkg.	β Bkg	γ Bkg	Cal. Due
	KA AC	6/14/07	2221-S	108862					1820	4/30/08
			2221-NS	149952					6000	4/30/08
			MOD 19	221521					6	10/15/07
			2929	147736	34.5	15.9				4/30/08

Reviewed By:	Date:
gmt	6/14/07

Key	
■	A/S Location
⋯	Boundary
○	Smear
□	Dose Rate _____/hr
*	Direct Reading CPM/direct frisk
△	Grab Sample

Location: Site: EM-3 | RWP# 07-1022.00-001 | Survey # NA | Survey Type: TEST PIT | pg. 1 of 1

Smear (CPM/100 cm²) / Direct Count (CPM/Direct Frisk)

No.	α	β	No.	α	β
1	1	40	26		
2	3.5	44.5	27		
3			28		
4			29		
5			30		
6			31		
7			32		
8			33		
9			34		
10			35		
11			36		
12			37		
13			38		
14			39		
15			40		
16			41		
17			42		
18			43		
19			44		
20			45		
21			46		
22			47		
23			48		
24			49		
25			50		

circle one: SHIELDED unshielded μR

	SHIELDED	unshielded
1 ft	1900 2350	6000 6700
2 ft	1900 2400	5100 6700
3 ft	1900 3000	6000 8500
4 ft		
5 ft		
6 ft		
7 ft		
8 ft		
9 ft		
10 ft		

② general area as left.

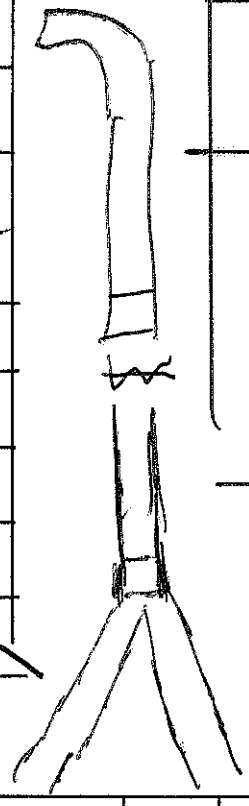

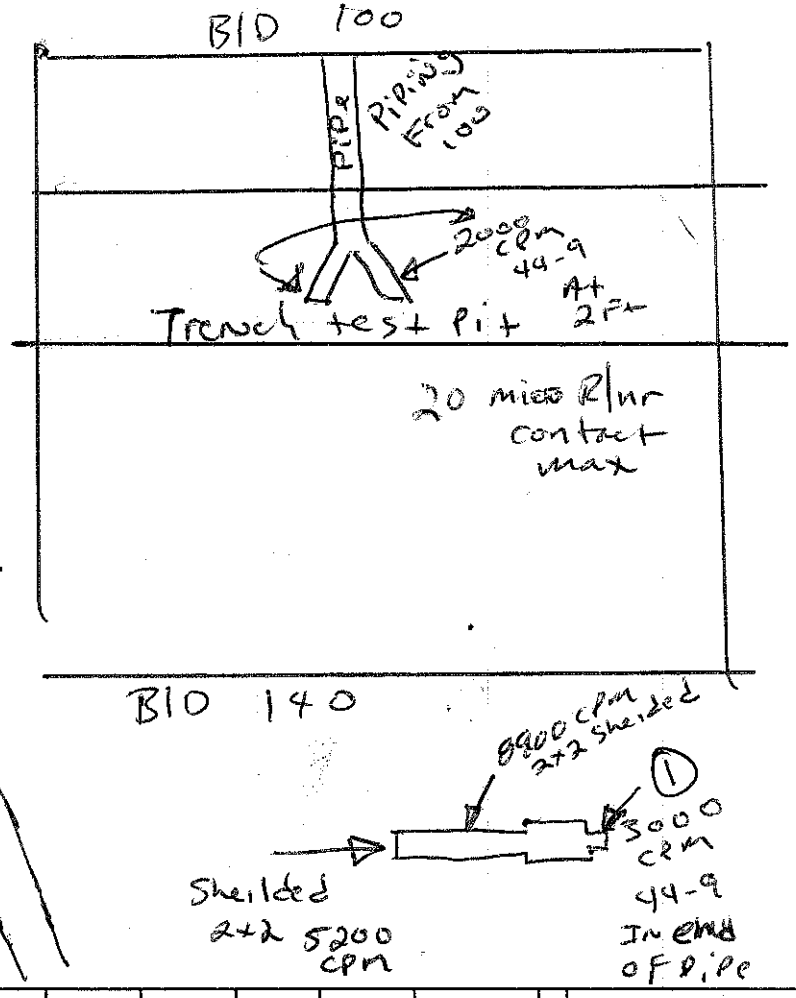

Comments	Surveyed By:	Date:	Instrument	Serial #	α Eff.	β Eff.	α Bkg.	β Bkg	γ Bkg	Cal. Due
	KA AC	6/14/07	2221-S	108862				1819		4/30/08
			2221-NS	149952				5985		4/30/08
			MOD 19	221521				6		10/15/07
			2929	147736	34.5	15.9				4/30/08
	Reviewed By:	Date:								
	SMA	6/14/07								

Key: ■ A/S Location; ⋯ Boundary; ○ Smear; □ Dose Rate ____/hr; * Direct Reading CPM/direct frisk; △ Grab Samp

Location: Site:	RWP#	Survey #	Survey Type:	
~~EM-5~~ EM-5	07-1022.00-001	NA	TEST PIT	pg. 1 of 1

Smear (CPM/100 cm²) / Direct Count (CPM/Direct Frisk)

No.	α	β	No.	α	β
1	10.5	60	26		
2	4	45	27		
3			28		
4			29		
5			30		
6			31		
7			32		
8			33		
9			34		
10			35		
11			36		
12			37		
13			38		
14			39		
15			40		
16			41		
17			42		
18			43		
19			44		
20			45		
21			46		
22			47		
23			48		
24			49		
25			50		

circle one

	SHIELDED	unshielded	μR
1 ft	1900 / 2300	5200 / 6500	6
2 ft	1800 / 2400	5800 / 6300	6
3 ft	1800 / 2300	5500 / 6500	6
4 ft	1800 / 2400	5300 / 7300	6
5 ft			
6 ft			
7 ft			
8 ft			
9 ft			
10 ft			

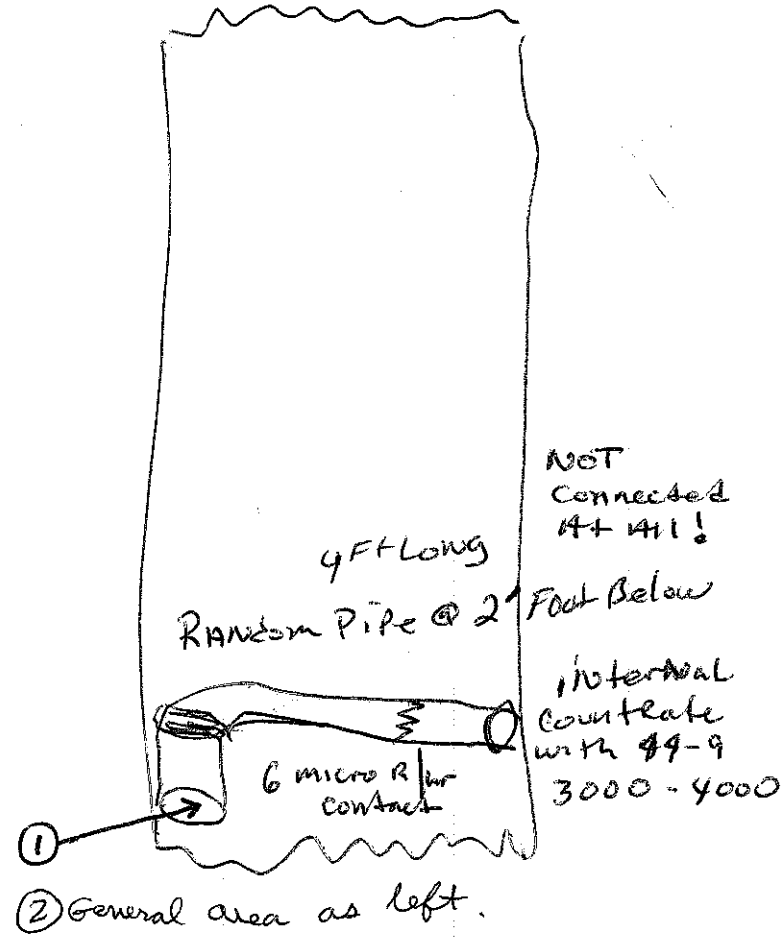

Comments	Surveyed By:	Date:	Instrument	Serial #	α Eff.	β Eff.	α Bkg.	β Bkg	γ Bkg	Cal. Due
	KA AL	6/14/07	2221-S	108862					1896	4/30/08
			2221-NS	149952					5290	4/30/08
			MOD 19	~~221521~~					5	10/15/07
			2929	147736	34.5	15.9				4/30/08
	Reviewed By:	Date:								
	gmt	6/14/07								

Key

■	A/S Location
·-·	Boundary
○	Smear
□	Dose Rate _____/hr
*	Direct Reading CPM/direct frisk
△	Grab Sample

OP-001-02 Radiological Survey Sheet

Revision 2

Survey # NA | Survey Type: TEST PIT | pg. 1 of 2

RWP# 07-1022.00-001

Location: EM-15-1B

Site:

Smear (CPM/100 cm²)					
Direct Count (CPM/Direct Frisk)					
No.	α	β	No.	α	β
1	.05	35	26		
2	0	30.5	27		
3	0	32.5	28		
4	0	33	29		
5	0	36	30		
6	0	40	31		
7			32		
8			33		
9			34		
10			35		
11			36		
12			37		
13			38		
14			39		
15			40		
16			41		
17			42		
18			43		
19			44		
20			45		
21			46		
22			47		
23			48		
24			49		
25			50		

circle one	SHIELDED	unshielded	μR
1ft	2000 3000	5500 11500	40
2ft	3600 6500	6000 18000	70
3ft	1200 1800	2000 3500	10-15
4ft	1000 1800	2000 3500	10-15
5ft			
6ft			
7ft			
8ft			
9ft			
10ft			

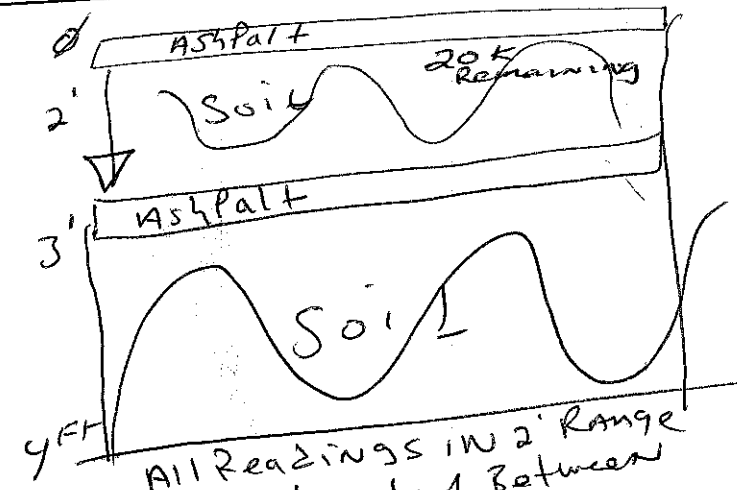

All Readings in 2' Range were elevated Between Ashpalt Layers

Unshielded 20K still left in west wall of Test Pit

Micro R/hr @ 1 meter 6

Comments

Surveyed By:	Date:	Instrument	Serial #	α Eff.	β Eff.	α Bkg.	β Bkg	γ Bkg	Cal. Due
KA AC	6/13/07	2221-S	108862		N			1650	4/30/08
		2221-NS	145992			A		4968	4/30/08
		Mod 19	221521					5	10/05/07
					N				
					A				

Reviewed By: Date:

Key

■	A/S Location
⋯	Boundary
○	Smear
□	Dose Rate _____ /hr
•	Direct Reading CPM/direct frisk
△	Grab Samp

Location: Site: EM-15-1A	RWP# 07-1022.00-001	Survey # NA	Survey Type: TEST PIT	pg. 2 of 2

Smear (CPM/100 cm²) / Direct Count (CPM/Direct Frisk)					
No.	α	β	No.	α	β
1			26		
2			27		
3			28		
4			29		
5			30		
6			31		
7			32		
8			~~33~~		
9			~~34~~		
10			35		
11			36		
12			37		
13			38		
14			39		
15			40		
16			41		
17			42		
18			43		
19			44		
20			45		
21			46		
22			47		
23			48		
24			49		
25			50		

circle one	SHIELDED	unshielded	μR
1 ft	1700 2600	5000 7400	6-7
2 ft	1600 2200	5000 7200	6-7
3 ft	1650 3000	5000 8100	9-10
4 ft			
5 ft			
6 ft			
7 ft			
8 ft			
9 ft			
10 ft			

Comments	Surveyed By:	Date:	Instrument	Serial #	α Eff.	β Eff.	α Bkg.	β Bkg	γ Bkg	Cal. Due	Key	
	KA AC	6/13/07	See page 1									
											■	A/S Location
											-	Boundary
											○	Smear
											□	Dose Rate _____ /hr
	Reviewed By:	Date:									*	Direct Reading CPM/direct frisk
	SMT	6/13/07									△	Grab Samp

Location: Site: EM-21	RWP# 07-1022.00-001	Survey # TEST PIT →	Survey Type:	pg. 1 of 1

Smear (CPM/100 cm²) / Direct Count (CPM/Direct Frisk)

No.	α	β	No.	α	β
1			26		
2			27		
3			28		
4			29		
5			30		
6			31		
7			32		
8			33		
9			34		
10			35		✓
11			36		
12			37		
13			38	A	
14		✓	39		
15			40		
16			41		
17	A		42		
18			43		
19			44		
20			45		
21			46		
22			47		
23			48		
24			49		
25			50		

circle one

	SHIELDED	unshielded	μR
1 ft	1500 1800	3900 4600	5
2 ft	1500 1800	3900 5700	5
3 ft	1500 1800	3900 5000	
4 ft	1300 1600	4600 5500	
5 ft	1300 1600	3000 6000	
6 ft	1300 1600	3000 6000	
7 ft	1200 1500	2500 4500	✓
8 ft			
9 ft	✓		
10 ft	A		

Comments	Surveyed By:	Date:	Instrument	Serial #	α Eff.	β Eff.	α Bkg.	β Bkg	γ Bkg	Cal. Due
	KA AC	6/12/07	2221-5	108862		AC			1466	4/30/08
			2221-NS	149992					2683	4/30/08
			mod 19	221521			A		5	10/05/07
						✓				
	Reviewed By:	Date:				A				
	SMT	6/12/07								

Key
- ■ A/S Location
- "-" Boundary
- ○ Smear
- □ Dose Rate _____ /hr
- * Direct Reading CPM/direct frisk
- △ Grab Sample

Location: Site: EM 26	RWP# 1022.00-001 07-100	Survey # NA	Survey Type: TEST PIT	pg. 1 of 1

→ Smear (CPM/100 cm²)
Direct Count (CPM/Direct Frisk)

No.	α	β	No.	α	β
1			26		
2			27		
3			28		
4			29		
5			30		
6			31		
7		N	32		
8			33		
9			34		
10			35		
11			36		
12		A	37		
13			38		
14			39		
15			40		
16			41		
17			42		
18			43		
19			44		
20			45		
21			46		
22			47		
23			48		
24			49		
25			50		

circle one	SHIELDED	unshielded	μR
1 ft	1800-2300	4800-5600	6
2 ft	1800 2300	4700-5500	6
3 ft	2100-2600	4600-5500	6
4 ft	2200-2450	4600-5200	6
5 ft			
6 ft		A	
7 ft			
8 ft	N		
9 ft			
10 ft			

Comments	Surveyed By:	Date:	Instrument	Serial #	α Eff.	β Eff.	α Bkg.	β Bkg	γ Bkg	Cal. Due
	KA/AC	6/11/07	2221-S	108962	N/A	N/A	N/A	N/A	4543	4/30/08
		6/11/07	2221-NS	149942	N/A	N/A	N/A	N/A	1828	4/30/08
		6/11/07	MODIG	221521	N/A	N/A	N/A	N/A	5	10/5/07
	Reviewed By:	Date:				A				

Key
- ■ A/S Location
- ·-· Boundary
- ○ Smear
- ▭ Dose Rate _____ /hr
- * Direct Reading CPM/direct frisk
- △ Grab Samp

Location: Site: EM 29	RWP# 07-1022.00-001	Survey # 012	Survey Type: Contamination	pg. 1 of 1

circle one: Smear (CPM/100 cm²) / Direct Count (CPM/Direct Frisk)

No.	α	β	No.	α	β
1	4	87	26		
2	6	84	27		
3	1	70	28		
4	2	67	29		
5			30		
6			31		
7			32		
8			33		
9			34		
10			35		
11			36		
12			37		
13			38		
14			39		
15			40		
16			41		
17			42		
18			43		
19			44		
20			45		
21			46		
22			47		
23			48		
24			49		
25			50		

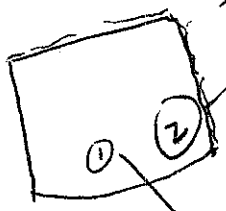

* 6,500 cpm w/ shielded 44-10
* 800 cpm (44-9)
~~10~~ 15 μR/hr
* 62 α, 1833 β (43-93)
* 500 cpm β/γ
10 μR/hr

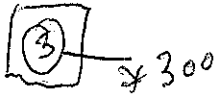

* 300 cpm (44-9)

(4) general area
(5) ~~Bucket~~ Bung of drum

Drum carcass found @ 3' bgs @ EM-29. Drum had elevated activity in seams & folds (bung). Drum appears to have lead.

(6) Bucket of Backhoe
(7) general area
(8) "
(9) "

Comments	Surveyed By:	Date:	Instrument	Serial #	α Eff.	β Eff.	α Bkg.	β Bkg	γ Bkg	Cal. Due		Key	
	Al Craig	6/4/07	44-9	~~229804~~ 229304	NA	10%	NA	40	NA				
			Mod 19	221521	NA	NA	NA	NA	5			■	A/S Location
			44-10 shield	108862	NA	NA	NA	NA	~~1850~~ 1833			*-*	Boundary
			43-93	168040	15%	10%	2	86	NA			○	Smear
			2929	147736	34.5	15.9						□	Dose Rate _____/hr
	Reviewed By:	Date:										*	Direct Reading CPM/direct frisk
	Smit	6/4/07										△	Grab Sample

Location: Site: EM-29A	RWP# 07-1022.00-001	Survey # NA	Survey Type: TEST PIT	pg. 1 of 1

Smear (CPM/100 cm²) / Direct Count (CPM/Direct Frisk)

No.	α	β	No.	α	β
1			26		
2			27		
3			28		
4			29		
5			30		
6			31		
7		N	32		
8			33		
9		A	34		
10			35		
11			36		
12			37		
13			38		
14			39		
15			40		
16			41		
17			42		
18			43		
19			44		
20			45		
21			46		
22			47		
23			48		
24			49		
25			50		

circle one: SHIELDED unshielded μR

1 ft	2,600 – 3600	N/A	7
2 ft	2,200 – 2800	N/A	7
3 ft	2,200 → 6,500	N/A	7
4 ft	2100 → 2300	N/A	6
5 ft	2100 → 2300	N/A	7
6 ft	2300 – 2600	N/A	7
7 ft	2300 – 2600	N/A	7
8 ft		N/A	
9 ft		N/A	
10 ft		N/A	
		N/A	

Top 3' soil has misc. debris throughout (wire, plastic, tile, glass, etc.). Soil is black and appears to be residue from a burn. Top 3' soil is approximately x2 background. Drum carcass found at a depth of 3' bgs. Survey a drum performed that notes the extent of elevated activity.

Drum up to 15 mR/hr on contact

See survey #012

Comments	Surveyed By:	Date:	Instrument	Serial #	α Eff.	β Eff.	α Bkg.	β Bkg	γ Bkg	Cal. Due
10' long trench, depth 7'	AC i KA	6/11/07	~~NA-10~~							
lifts @ 1' layed out on			2221-S	108862	NA	NA	NA	NA	2464	4/30/08
plastic & scanned w/			2221-N5	149992	NA	NA	NA	NA	6090	4/30/08
shielded 2"x2". Bkg 1990			Mod 19	221521	NA	NA	NA	NA	5	10/15/07
	Reviewed By:	Date:					A			
	J. Mtanel	6/11/07								

Key:
- ■ A/S Location
- "-" Boundary
- ○ Smear
- □ Dose Rate _____ /hr
- * Direct Reading CPM/direct frisk
- △ Grab Sampl

Location: Site: EM 29B	RWP# 07-1022.00-001	Survey # EM 29B	Survey Type: TEST PIT	pg. 1 of 1

→ Smear (CPM/100 cm²)
Direct Count (CPM/Direct Frisk)

No.	α	β	No.	α	β
1			26		
2			27		
3			28		
4			29		
5			30		
6			31		
7			32		
8			33		
9			34		
10			35		
11			36		
12			~~37~~		
13			~~38~~		
14			39		
15			40		
16			41		
17			42		
18			43		
19			44		
20			45		
21			46		
22			47		
23			48		
24			49		
25			50		

circle one: SHIELDED / unshielded

	SHIELDED	unshielded
1 ft	2,100-2400	5,100-6000
2 ft	2,100-2300	5,100-6000
3 ft	2000-2400	5300-6200
4 ft	2000-2400	5300-6000
5 ft	~~[illegible]~~	~~[illegible]~~
6 ft	~~[illegible]~~	~~[illegible]~~
7 ft		
8 ft		
9 ft		
10 ft		

μR: 5

Comments	Surveyed By:	Date:	Instrument	Serial #	α Eff.	β Eff.	α Bkg.	β Bkg	γ Bkg	Cal. Due
	KA/AC	6/1/07	2221NS	199992	N/A	N/A	N/A	N/A	6090	4/30/08
		6/1/07	2221-S	108862	N/A	N/A	N/A	N/A	2164	4/30/08
		6/1/07	MODIA	221521	N/A	N/A	N/A	N/A	5	10/15/07
	Reviewed By:	Date:								

Key
- ■ A/S Location
- ·-· Boundary
- ○ Smear
- □ Dose Rate _____/hr
- • Direct Reading CPM/direct frisk
- △ Grab Samp

Location: Site: GPR-F	RWP# 07-1022.00-001	Survey # TEST PIT →	Survey Type: ~~SCAN~~	pg. 1 of 1

Smear (CPM/100 cm²) / Direct Count (CPM/Direct Frisk)

No.	α	β	No.	α	β
1			26		
2			27		
3			28		
4			29		
5			30		
6			31		
7			32		
8			33		
9			34		
10			35		
11			36		
12			37		
13			38		
14			39		
15			40		
16			41		
17			42		
18			43		
19			44		
20			45		
21			46		
22			47		
23			48		
24			49		
25			50		

N

A

circle one

	SHIELDED	unshielded	μR
1 ft	2000 / 2400	5200 / 6500	6
2 ft	1900 / 2300	5100 / 7300	6
3 ft	2000 / 2500	5300 / 6800	
4 ft	1800 / 2300	4900 / 5900	
5 ft			
6 ft			
7 ft			
8 ft			
9 ft			
10 ft			

N

A

Left side wall

Found Rocklike Piece & Soils
unshielded 82K
Shielded - 60K
70 micro R/hr
on contact

magget 42 α dpm 4293
350 β dpm w/
80,000 cpm β
w/ 44-9.

Rt side wall

Comments	Surveyed By:	Date:	Instrument	Serial #	α Eff.	β Eff.	α Bkg.	β Bkg	γ Bkg	Cal. Due
	KA AC	6/12/07	2221-S	108862			N		1476	4/30/08
			2221-NS	149992					4520	4/30/08
			MOD 19	221521	A				5	10/5/07
						N				
	Reviewed By:	Date:				A				
	[illegible]	6/12/07								

Key
- ■ A/S Location
- Boundary
- ○ Smear
- □ Dose Rate ____/hr
- * Direct Reading CPM/direct frisk
- △ Grab Sampl

TECHNICAL MEMORANDUM

Results of Phase IIB Radiological Surveys and Support
Sylvania Corning FUSRAP Site
Hicksville, New York

Prepared for:

Ecology and Environment, Inc.
368 Pleasant View Drive
Lancaster, NY 14086

Prepared by:

CABRERA SERVICES
RADIOLOGICAL · ENVIRONMENTAL · REMEDIATION

103 East Mount Royal Ave, Suite 2B
Baltimore, MD 21202

February 2008

1.0 INTRODUCTION

The Sylvania Corning site (hereafter referred to as the 'Site') occupies 10.5 acres divided into three contiguous properties located at 70, 100, and 140 Cantiague Rock Road, in the westernmost portion of Hicksville, Long Island, approximately 30 miles east of lower Manhattan. Industrial and commercial properties adjoin the Site to the north (the Nassau County Department of Public Works), to the south (General Instruments' inactive waste disposal site, currently unoccupied), to the west by Cantiague Rock Road, and to the east by the golf driving range of Cantiague Park.

The Site was added to the Formerly Used Sites Remedial Action Program (FUSRAP) in 2006 to evaluate radioactive contamination resulting from former operations conducted under contract to the federal government. The US Army Corps of Engineers (USACE), Kansas City District has responsibility for the FUSRAP investigation of the Site. Ecology and Environment, Inc. (E & E) has been contracted by USACE to conduct a remedial investigation of uranium and thorium contamination at the Site.

2.0 SCOPE OF WORK

Cabrera Services, Inc. (CABRERA) was contracted by E & E to perform health physics (HP) support services for Phase IIB of the FUSRAP remedial investigation at the Site. These services included the performance of soil core scanning surveys, down-hole gamma logging (DHG) surveys, and providing radiological support for the following activities:

- Geoprobe drilling using a Geoprobe model 54LT at eight previously probed locations to obtain deeper soil samples (i.e., 16-ft to 24-ft);
- Auger drilling at 13 previously probed Phase IIA locations to obtain deeper soil samples (i.e., 16-ft to 72-ft);
- Auger drilling and combination Geoprobe/auger drilling at 44 new locations (20-ft to 72-ft).
- Test pit excavations at 11 new locations to investigate geophysical anomalies identified during Phase IIA.

CABRERA personnel were on-site to support this scope of work beginning October 15 and continuing through November 21, 2007.

3.0 SURVEY METHODOLOGY

CABRERA provided two teams to accomplish the previously defined scope of work. Each team consisted of two personnel; a team leader and a technician. All work was performed in accordance with *Final Remedial Investigation Work Plan (Phase I & Phase II) for the Sylvania Corning FUSRAP Site, 2007* (WP) and applicable CABRERA procedures (incorporated in the E & E work plan).

3.1 Soil Core Scanning Surveys

Sample core scan results were used to aid in the selection of biased samples. Soil sample cores were scanned for gross gamma radiation using a lead shielded Ludlum Model 44-10 2-inch by 2-inch (2x2) sodium-iodide (NaI) probe connected to a Ludlum Model 2221 ratemeter/scaler. Soil cores were placed in a counting jig and scanned at a rate of one to two inches per second. Scanning results were recorded on data sheets in increments of one foot with the highest measured increment noted. Ambient background measurements at each survey area were also recorded for the 44-10 detector to ensure accuracy of the locally recorded data. All soil core scanning surveys were performed in accordance with CABRERA'S soil core scan field procedure.

3.2 Downhole Gamma Logging

Boreholes were surveyed for gross gamma radiation using a Bicron Model G1 1x1 NaI probe connected to a Ludlum Model 2221 ratemeter/scaler. Once the target depth was reached by the drilling contractor, each open borehole was sleeved with 1.5-in outside diameter (OD) poly-vinyl chloride (PVC) pipe. The pipe was used to maintain the integrity of the borehole (i.e., prevent collapse) once the auger or rods were removed. One-minute integrated measurements were collected in one foot increments within the borehole, starting at the bottom, and recorded on a DHG data sheet. All DHG surveys were performed in accordance with CABRERA'S downhole gamma logging field procedure.

3.3 Radiological Monitoring

Radiological controls were maintained and contamination monitoring was performed by team members during all sampling and subsurface activities. All contamination monitoring was performed in accordance with CABRERA procedures and the approved WP (E & E, 2007). Radiological controls included the implementation of exclusion zones surrounding active work areas, treating all equipment in work areas as if contaminated, and performing clearance, i.e.,

free-release, surveys for all equipment and personnel exiting either exclusion zones or the site completely. Radiological monitoring included the following:

- Ambient Gamma Monitoring (Bicron micro-Rem dose rate meter)
- Masselin Cloth (Ludlum Model 2221 ratemeter/scaler with 43-93 alpha-beta scintillation probe)
- Surface scans (Ludlum Model 12C with 44-9 pancake Geiger-Mueller (GM) probe and Ludlum Model 2221 with 43-93 probe)
- Frisking of Personnel and Equipment (Ludlum Model 12C with 44-9 GM probe and Ludlum Model 2221 with 43-93 probe)
- Swipe Samples (Cloth swipes counted on a Ludlum Model 2929 smear counter)

All contamination monitoring results were compared to the acceptable levels of surface contamination provided in Section 3.5.

3.4 Monitoring During Test Pit Excavation

Exclusion zones were set up around the test pits prior to excavation. Pre-excavation surveys of the work areas were performed using an unshielded 44-10 NaI probe, a Ludlum 44-9 GM pancake probe, and Bicron micro-Rem dose rate meter. Plastic sheeting was then laid over an asphalt or gravel area adjacent to the pit location where excavated spoils were to be placed. The plastic sheeting served as an impermeable barrier between the spoils pile and the ground for contamination control purposes. Using the three detectors listed above, excavated soil was scanned in the bucket of the backhoe before being placed on the spoils pile/plastic sheeting. Once a uniform depth of soil had been removed from the test pit, the spoils pile was then spread out to a relatively uniform thickness, visually examined, and scanned again using the suite of detectors.

3.5 Acceptable Levels of Surface Contamination

Table 1 provides acceptable surface contamination limits for various radionuclides as applied to surface contamination measurements. The lowest values (transuranics) in the table were used as a conservative measure despite the fact that the predominant radionuclide of potential concern at this site is uranium. The alpha removable contamination limit used throughout was 20 disintegrations per minute per 100 square centimeters (dpm/100cm^2), while the maximum and average contamination limits are 300 and 100 dpm/100cm^2, respectively. The beta-gamma removable contamination limit is 1000 dpm/100cm^2.

TABLE 1: ACCEPTABLE LEVELS OF SURFACE CONTAMINATION

Radionuclide[a]	Acceptable Surface Contamination Levels (DPM/100 cm^2)		
	Removable[b, e]	Average[b, c]	Maximum[b, d]
Transuranics, ^{226}Ra, ^{227}Ra, ^{230}Th, ^{228}Th, ^{231}Pa, ^{221}Ac, ^{125}I, ^{129}I,	20	100	300
Th-Natural, ^{232}Th, ^{90}Sr, ^{223}Ra, ^{224}Ra, ^{232}U, ^{126}I, ^{131}I, ^{133}I	200	1,000	3,000
U-Natural, ^{235}U, ^{238}U, and associated decay products	1,000 α	5,000 α	15,000 α
Beta-Gamma emitters (radionuclides with decay modes other than alpha emission or spontaneous fission) except ^{90}Sr and others noted above.	1,000 β γ	5,000 β γ	15,000 β γ

Reference: Table 6-4 of USACE Radiation Protection Manual EM-385-1-80.

a Where surface contamination by both alpha- and beta-gamma emitting nuclides exists, the limits established for alpha- and beta-gamma emitting nuclides should apply independently.

b As used in this table, dpm (disintegrations per minute) means the rate of emission by radioactive material as determined by correcting the counts per minute observed by an appropriate detector for background, efficiency, and geometric factors associated with the instrumentation.

c Measurements of average contaminant should not be averaged over more than 1 square meter. For objects of less surface area, the average should be derived for each object.

d The maximum contamination level applies to an area not more than 100 cm^2.

e The amount of removable radioactive material per 100 cm^2 of surface area should be determined by wiping that area with dry filter or soft absorbent paper, applying moderate pressure, and assessing the amount of radioactive material on the wipe with an appropriate instrument of known efficiency. When removable contamination on objects of less surface area is determined, the pertinent levels should be reduced proportionately and the entire surface should be wiped.

4.0 RESULTS

4.1 Soil Core Scanning Surveys

A total of 66 core scan surveys were performed during the Phase IIB investigation. Core scan results ranged from a minimum of 1,000 cpm to a maximum of 4,350 cpm using a shielded 44-10 NaI detector. The median range of results within a typical borehole was 265 cpm. However, results from Borehole C09-03/D had a range of 2,700 cpm with a maximum value of 4,350 cpm (between 45-ft and 46-ft depth). A visual inspection of this core identified a green salt-like material that appeared to be consistent with contamination found during Phase IIA of the project. The activity of the green salts registered up to 3,000 cpm using a Ludlum 44-9 GM pancake probe. Swipe samples performed on the core sample and the work area did not identify any removable activity in excess of the values listed in Table 1. Spoils from this hole were drummed with labels reading 'pending laboratory analysis,' and stored in the temporary radioactive materials storage area.

A summary of soil core scan results by borehole is presented in Attachment 1. Electronic copies of all completed soil core scanning survey data sheets are included in Attachment 2, a compact disk (CD).

4.2 Downhole Gamma Logging Surveys

A total of 69 DHG surveys were performed during this phase of the project. DHG results ranged from a minimum of 366 cpm to a maximum of 28,391 cpm. The highest DHG result was in borehole C09-03/D at a depth of 47-ft, which corroborated the soil core scanning results from that depth. The median range of results within the boreholes was 1,463 cpm. A summary of DHG results by borehole is presented in Attachment 1. Electronic copies of all DHG data sheets are included on Attachment 2, the electronic Data CD.

4.3 Test Pits

A total of twelve test pits were excavated during Phase IIB. Soil scanning results ranged from a low of 4,300 cpm to a high of 13,700 cpm with an unshielded Ludlum 44-10 NaI probe and from 30 cpm to 1,200 cpm with a Ludlum 44-9 GM pancake probe. Table 2 summarizes the survey results for each test pit. Electronic copies of all test pit survey forms are located on the enclosed data CD. Locations EM-8 and EM-9 were close in proximity and therefore reported on one data sheet (i.e., EM-8/9).

Test Pit EM-28 exhibited the highest activity of all the test pits. EM-28 consisted of a circular concrete dry well that was 7-ft in diameter and 12-ft deep with a concrete bottom. The top of the capped well was detected approximately 3 ft below ground surface. The well was filled to capacity with soil, sand, and building debris. Small particles of elevated activity were identified throughout the well and appeared to be associated with the presence of black soil-like material although not all of the black soil present contained elevated activity. No other features of the elevated activity were visually discernable. No entry or exit pipes or drains were identified within the well.

Scan results on the excavated soils from the well ranged from 30 to 1,200 net cpm on a Ludlum 44-9 GM probe and from 6,000 to 13,700 net cpm with an unshielded Ludlum 44-10. Dose rates on soil ranged from 4 to 8 microRem/hr on contact and at 1-meter, above the spoils. No removable activity in excess of the release criteria was identified in the work area (e.g., backhoe bucket, shovels, sampling equipment, etc.). Soils excavated from the test pit/drywell were returned to the pit with the exception of a volume equivalent to two 55-gallon drums which were segregated and stored in the radioactive materials storage area pending laboratory analysis.

Soil scan results in the remaining test pits ranged from background levels to marginally elevated, as summarized in Table 2.

TABLE 2. TEST PIT SURVEY RESULTS

Location ID	Total Depth (ft)	Ludlum 44-10 Scan Result (cpm)		Ludlum 44-9 Scan Results (cpm)		Dose Rate Range (µrem/hr)
		Min	Max	Min	Max	
EM-35	8	4,500	6,300	30	70	5-7
EM-28	12	6,300	12,000	30	1,200	4-9
EM-11	9	5,600	10,000	30	90	5-8
GPR-C	6	4,300	6,800	40	200	4-5
EM-16	4	5,200	7,000	40	150	4-8
EM-13	4	5,800	10,800	40	80	4-8
EM-7	4	4,500	8,130	30	60	3-5
EM-31	5	5,500	6,910	30	80	3-5
EM-8/9	5	4,500	10,500	40	150	3-5
EM-30	4	5,800	7,500	30	60	2-4
EM-34	5	4,500	7,100	40	60	3-4

4.4 Contamination Monitoring

All sampling and subsurface activities were monitored for the presence of elevated radiological activity. Results of routine contamination monitoring were recorded in site log books. All of the routine contamination monitoring results were below the applicable limits listed in Table 1. Electronic copies of the site logbooks with routine contamination monitoring results are included in Attachment 2 on the data CD.

At the request of E & E, two lead-lined drains in Building 70 (DR-BB-1 and DR-BB-2) were surveyed for radiological activity. Both floor drains are approximately 3-inches in diameter and extend approximately 1.5-ft vertically below floor grade, where they connect to a single pipe, extending westward. Elevated activity was identified within both drains. Drain DR-BB-1 measured 600 net cpm using a Ludlum 44-9 GM and had removable activity of 104 alpha and 623 beta dpm/100cm^2 present within the drain. Drain DR-BB-2 measured 400 net cpm using a Ludlum 44-9 and had removable activity of 228 alpha and 802 beta dpm/100cm^2 present within the drain.

A contamination survey (i.e., Radiological Survey #15) was performed in the room containing the drains. This survey confirmed the elevated activity present inside the drains (i.e., survey smears #10 & #11, respectively) but found no removable activity in excess of the values listed in Table 1 in the areas surrounding the drains. Following the survey, yellow and magenta tape was place over the drain covers to indicate the hazard. Electronic copies of Radiological Survey #15 and Cabrera's Smear Counting Worksheet results are presented on the attached Data CD. The data flags present on the Cabrera Smear Counting Worksheet indicate smear results in excess of the values listed in Table 1.

In addition to monitoring sampling and subsurface activities, all equipment leaving the site was surveyed for free release. Equipment that was surveyed for free release included drilling rigs, backhoes, and all associated support equipment. Survey results for all release surveys were below the applicable removable release criteria (i.e., Table 1). Electronic copies of all radiological surveys are located in Attachment 2 on the attached Data CD.

5.0 QUALITY CONTROL

5.1 Quality Control Measures

Quality control (QC) measurements for field instrumentation included initial response to a radioactive source and daily operability checks. All instruments were calibrated within the last twelve months by the instrument vendor, a certified calibration laboratory, using sources traceable to the National Institute of Standards and Technology (NIST). Calibration certificates for each instrument are provided in Attachment 2 on the attached Data CD.

Prior to commencing any surveys, ten (10) initial readings were collected on each detector using Technicium-99 (^{99}Tc) and Thorium-230 (^{230}Th) sources to establish a control chart for each unit to determine daily operability. The bases for the daily operability of these instruments were ± 20% of the average for the initial ten measurements for the Ludlum Model 44-9 probe, Ludlum Model 44-10 probe, Bicron G1 probe, and Bicron MicroRem, and ±3-standard deviations from the average for the initial ten measurements for the Ludlum Model 43-93 and Ludlum 2929 detectors.

A review of the alpha/beta counting instrument QC sheets identified instances where instrument response was outside the two sigma value of the initial 10 measurements resulting in a "Question" Flag and one instance on 10/19/08 where the instrument response for detector #196226 exceeded the three sigma value resulting in a "Failure" flag. The QC data was reviewed in the field per Cabrera's *OP-058 Health Physics General Instrument Quality Control Procedure*. The instrument response on 10/19/08 was immediately repeated per procedure and fell within the acceptance criteria. The review of the initial data set on which the control chart was based found the statistical groupings of the initial 10 measurements to be relatively narrow. This narrow grouping resulted in relatively narrow acceptance criteria of two and three sigma. None of the project data was impacted by this occurrence. All quality control data are included electronically on the attached Data CD.

6.0 REFERENCES

(E & E, 2007) *Final Remedial Investigation Work Plan (Phase I & Phase II) for the Sylvania Corning FUSRAP Site, Environment and Ecology, Inc. March 2007*

ATTACHMENT 1

SUMMARY OF SOIL CORE SCANNING SURVEY AND DOWNHOLE GAMMA LOGGING SURVEY RESULTS

Date	Location ID	Soil Core Scanning Survey Results (Shielded 44-10 NaI)			DHG Survey Results (1x1 NaI)			Ambient Exposure Rate Result (µR/hr)
		Total Depth (ft)	Minimum Result (cpm)	Maximum Result (cpm)	Total Depth (ft)	Minimum Result (cpm)	Maximum Result (cpm)	
10/16/2007	C13-01	16	1,460	1,600	16	790	1,935	6
10/16/2007	C13-02	16	1,640	1,740	16	997	1,881	5
10/16/2007	C08-01	30	1,400	1,630	30	963	1,874	10
10/16/2007	C08-02	30	1,370	1,420	30	945	1,373	10
10/16/2007	SU09-10	72	1,300	1,550	64	866	1,120	5
10/17/2007	SU13-07/D	66	1,600	1,920	66	717	2,571	6
10/17/2007	DR-7	n/a	n/a	n/a	2	1,321	1,601	5
10/17/2007	DR-Y	n/a	n/a	n/a	1	1,282	1,282	5
10/17/2007	C07-01	40	1,250	1,480	40	1,039	1,673	4
10/17/2007	C07-02	32	1,380	1,540	32	839	1,321	5
10/17/2007	C13-03	24	1,300	1,560	24	935	2,398	5
10/18/2007	SU14-10/D	66	1,400	1,950	64	733	3,166	5
10/18/2007	C04-03	32	1,190	1,320	31	891	1,125	4
10/18/2007	C11-02	56	1,150	1,670	56	949	3,692	8
10/19/2007	C11-01	56	1,220	1,500	56	921	4,166	4
10/19/2007	LPH-C/D	68	1,150	1,500	66	678	3,866	4
10/22/2007	C10-01	30	1,300	1,350	30	959	1,602	5
10/22/2007	C10-02	30	1,450	1,500	30	734	899	5
10/22/2007	C12-02	32	1,570	1,570	32	835	1,503	5
10/22/2007	C12-01	34	1,500	1,580	34	767	961	5
10/22/2007	C04-02	32	1,450	1,450	32	859	2,002	5
10/22/2007	C09-01	50	1,550	1,750	50	887	2,714	5
10/23/2007	C09-02/D	69	1,600	1,850	64	366	6,059	4
10/23/2007	C09-04/D	64	1,600	1,950	63	757	6,592	4
10/23/2007	SU08-2/D	61	1,250	1,670	61	786	2,263	5

Date	Location ID	Soil Core Scanning Survey Results (Shielded 44-10 NaI)			DHG Survey Results (1x1 NaI)			Ambient Exposure Rate Result (µR/hr)
		Total Depth (ft)	Minimum Result (cpm)	Maximum Result (cpm)	Total Depth (ft)	Minimum Result (cpm)	Maximum Result (cpm)	
10/24/2007	SU08-11/D	64	1,480	2,140	64	730	3,160	5
10/24/2007	C09-03/D	68	1,650	4,350	65	869	28,391	6
10/25/2007	C04-01/D	59	1,500	1,800	45	964	1,497	4
10/25/2007	C06-02/D	54	1,660	1,950	55	413	3,334	5
10/25/2007	C06-03	22	1,320	1,650	22	814	1,608	5
10/25/2007	SU14-03/D	65	2,030	2,500	65	805	3,651	5
10/26/2007	C03-01	30	1,350	1,500	30	753	1,429	5
10/26/2007	C02-02	36	1,350	1,450	35	837	3,014	5
10/29/2007	LPH-A/D	50	1,550	2,000	49	695	2,554	7
10/30/2007	100-11	26	1,450	1,650	24	970	6,277	4
10/30/2007	C03-02	32	1,200	1,600	32	779	1,591	5
10/30/2007	C02-01	34	1,400	1,500	34	746	3,078	4
10/30/2007	SU11-05/D	66	1,020	1,290	66	524	2,991	5
10/31/2007	SU11-16/D	66	1,010	1,330	65	583	1,819	4
10/31/2007	DR-D	16	1,030	1,110	15	957	1,720	4
10/31/2007	C06-01	56	1,350	1,600	57	981	1,941	4
10/31/2007	C05-02	32	1,300	1,600	33	698	1,669	4
11/1/2007	C01-01	32	1,220	1,350	33	746	1,734	4
11/1/2007	C01-02	23	1,350	1,650	23	1,105	1,562	4
11/1/2007	C01-03	25	1,200	1,600	25	912	2,398	5
11/1/2007	C05-01	30	1,300	1,400	30	735	1,827	4
11/2/2007	SU12-07/D	66	1,120	1,470	66	677	3,709	4
11/2/2007	SU12-08/I	32	1,230	1,630	31	809	2,919	4
11/2/2007	DRH-A1	32	1,000	1,400	32	758	3,700	4
11/5/2007	SU12-03	32	1,800	2,250	32	1,003	3,358	4

Date	Location ID	Soil Core Scanning Survey Results (Shielded 44-10 NaI)			DHG Survey Results (1x1 NaI)			Ambient Exposure Rate Result (µR/hr)
		Total Depth (ft)	Minimum Result (cpm)	Maximum Result (cpm)	Total Depth (ft)	Minimum Result (cpm)	Maximum Result (cpm)	
11/5/2007	DR-K	32	1,700	2,000	32	1,082	5,321	6
11/6/2007	SU12-04	32	1,500	2,300	31	779	3,174	5
11/6/2007	DR-J	24	1,400	1,550	24	1,084	3,307	6
11/6/2007	140-07/D	66	1,580	2,050	65	468	2,992	4
11/6/2007	DRH-A2	24	1,070	1,220	24	905	1,168	5
11/7/2007	SU12-12/I	32	1,000	1,550	30	663	1,596	4
11/7/2007	SU12-11/I	32	1,150	1,500	27	721	3,756	5
11/7/2007	DRM	n/a	n/a	n/a	7	1,376	2,713	5
11/7/2007	11-06/D	58	1200	1580	58	875	2877	5
11/8/2007	DR-CC	16	1,200	1,500	10	1,377	3,377	4
11/8/2007	DR-Y	12	1,400	1,650	5	1,740	2,259	4
11/8/2007	DR-BB	11	2,100	2,300	9	1,283	2,113	3
11/9/2007	DR-AA	14	1,600	1,800	13	1,241	3,843	4
11/9/2007	DR-X	10	1,500	1,750	8	1,616	3,303	4
11/9/2007	DR-W	7	1,450	1,650	5	1,424	2,877	4
11/9/2007	DR-Z	2	1,700	1,750	2	2,679	3,232	4
11/12/2007	SU12-01/D	66	1,300	1,610	66	716	3,662	5
11/13/2007	SU12-17/I	32	1,200	1,440	32	723	3,069	5
11/14/2007	SU12-22/D	66	1,370	1,700	65	531	3,214	4
11/15/2007	DR-Z #2	8	1,750	2,150	8	1,769	3,020	4

N/A- No core scan survey performed per the direction of E & E.

ATTACHMENT 2

Instrument QC Checks and Swipe Results

(included on compact disc)

Inst.#149400 (2241)		
QC Daily Source		
Date	Result (cpm)	P/F
10/15/2007	234417	Pass
10/16/2007	226579	Pass
10/17/2007	222945	Pass
10/18/2007	222563	Pass
10/19/2007	224812	Pass
10/22/2007	219387	Pass
10/23/2007	229797	Pass
10/24/2007	244964	Pass
10/25/2007	245649	Pass
10/26/2007	244551	Pass
10/29/2007	228209	Pass
10/30/2007	242521	Pass
10/31/2007	239996	Pass
11/1/2007	249700	Pass
11/2/2007	247435	Pass
11/5/2007	238691	Pass
11/6/2007	246402	Pass
11/7/2007	239218	Pass
11/8/2007	243155	Pass
11/9/2007	238893	Pass
11/12/2007	241922	Pass
11/13/2007	239807	Pass
11/14/2007	237893	Pass
11/15/2007	235899	Pass

Inst.#149400 (2241)		Source Ser. #	1228
Initial Source Readings		Nuclide	Cs-137
Date	Result (cpm)		
10/15/2007	230379		
10/15/2007	229649		
10/15/2007	229719		
10/15/2007	235262		
10/15/2007	235405		
10/15/2007	234631		
10/15/2007	235608		
10/15/2007	235460		
10/15/2007	235747		
10/15/2007	234417		
	Average		
	233628		

Inst.#149408 (2241)		
QC Daily Source		
Date	Result (cpm)	P/F
10/15/2007	208536	Pass
10/16/2007	195164	Pass
10/17/2007	208170	Pass
10/18/2007	208321	Pass
10/19/2007	212289	Pass
10/22/2007	207958	Pass
10/23/2007	209526	Pass
10/24/2007	208287	Pass
10/25/2007	211119	Pass
10/26/2007	213698	Pass
10/29/2007	211527	Pass
10/30/2007	207211	Pass
10/31/2007	203951	Pass
11/1/2007	210592	Pass
11/2/2007	213245	Pass
11/5/2007	210933	Pass
11/6/2007	206816	Pass
11/7/2007	217714	Pass
11/8/2007	211442	Pass
11/9/2007	207420	Pass
11/12/2007	205213	Pass
11/13/2007	203814	Pass
11/14/2007	209165	Pass
11/15/2007	210144	Pass

Inst.#149408 (2241)		Source Ser. #	1228
Initial Source Readings		Nuclide	Cs-137
Date	Result (cpm)		
10/15/2007	208960		
10/15/2007	208910		
10/15/2007	209151		
10/15/2007	208658		
10/15/2007	208136		
10/15/2007	208265		
10/15/2007	208189		
10/15/2007	207932		
10/15/2007	208817		
10/15/2007	208536		
	Average		
	208555		

Inst.#148089		
QC Daily Source		
Date	Result (cpm)	P/F
11/12/2007	240924	Pass
11/13/2007	249707	Pass
11/14/2007	237854	Pass
11/15/2007	235732	Pass

Inst.#148089		Source Ser. #	1228
Initial Source Readings		Nuclide	Cs-137
Date	Result (cpm)		
11/12/2007	241142		
11/12/2007	241770		
11/12/2007	241238		
11/12/2007	240972		
11/12/2007	241128		
11/12/2007	241128		
11/12/2007	241968		
11/12/2007	240258		
11/12/2007	240578		
11/12/2007	240600		
	Average		
	241078		

MJW Technical Services
243 Root St.
Suite 100
Olean, New York 14760
Voice: (716) 372-5300
Fax: (716) 372-5307

Certificate Of Calibration

This Certificate will be accompanied by Calibration Charts or Readings where Applicable

Customer

Customer Name: Cabrera Services Inc

Address: 473 Silver Lane
East Hartford, CT 06118

Contact Name: Chuck Mikaitis

Customer PO/ CC. Number: 08-1090

Work Order Number: 2007-347

Instrument

Manufacturer: Ludlum Measurements, Inc.

Model: 3 Serial Number: 166511

Detector Manufacturer: Ludlum Measurements, Inc.

Det. Model: 44-9 Serial Number: PR073107

Meterface: 202-002 Calibration Method: Electronic

Instrument Received: ☑ Within Toler. +-10% ☐ 10-20% ☐ Out of Tol. ☐ Requiring Repair ☐ Other (See Comments)

☑ Geotropism ☑ Meter Zero ☑ Mech. Ck. ☐ HV Readout ☑ Battery Check ☑ Reset

☑ Audio ☐ Window Status ☑ FS Response ☐ Linearity ☐ Background Subtract ☐ Alarm Set

Temperature: 71.2 F Humidity: 61 % Pressure: 726.4 mm Hg Altitude: 1455 ft

Instrument Calibration

Multiplier\Range	Calibration Point	Instrument Response	
		Before Calibration	After Calibration
X 0.1	100 cpm	95 cpm	100 cpm
X 0.1	400 cpm	395 cpm	400 cpm
X 1	1 Kcpm	1 Kcpm	1 Kcpm
X 1	4 Kcpm	4 Kcpm	4 Kcpm
X 10	10 Kcpm	10 Kcpm	10 Kcpm
X 10	40 Kcpm	40 Kcpm	40 Kcpm
X 100	100 Kcpm	100 Kcpm	100 Kcpm
X 100	400 Kcpm	400 Kcpm	400 Kcpm

Reference instruments and / or Sources

Pulser: LUD500-2	220099		
Th-230	C7-643	C-14	C7-804
SrY-90	C7-661	Tc-99	C7-641

Comments

Inst. Voltage: 900 V Input Sensitivity: 36 mV

4 Pi Efficiency @ 1/4 inch

Th-230 4.0%

C-14 2.4%

Tc-99 11.0%

SrY-90 27.3%

Statement of Certification

MJW Technical Sevices, Inc certifies that the above instrument has been calibrated by standards traceable to the National Institute of Standards and Technology, or to the calibration facilities of other International Standards organization members, or have been derived from accepted values of natural physical constants or have been derived by the ratio type of calibration techniques. The calibration system conforms to the requirements of ANS/NCSL Z540-1-1994 and ANSI N323. The instrument listed above was inspected prior to shipment and it met all the manufacturer's published operating specifications. (MJW technical Services is not responsible for damage incurred during shipment or use of this instrument).

Instrument Calibrated By: [signature]

Reviewed By: Linda M. Lund Date 10/3/07

Calibration Date: 10/02/2007

Calibration Due: 10/02/2008

Certificate of Calibration

2 Channel Scaler Certificate of Calibration

ERG
Environmental Restoration Group, Inc.
8809 Washington St. NE, Suite 150
Albuquerque, NM 87113
(505) 298-4224

Manufacturer: Ludlum Model: 2929 Serial No.: 196226

All Ranges Calibrated Electronically; Ludlum Pulser Generator Serial No.: 97743 ☐ 201932 ☑

This calibration conforms to the requirements and acceptable calibration conditions of ANSI N323A - 1997.
NMRCB Registration No. 481-3 • Calibration of Radiation Detection Instruments & Devices

☑ Mechanical ck. ☐ Meter Zeroed ☐ Geotropism ck. ☐ F/S Response ck. ☑ Audio ck.

☐ THR/WIN ck. High Voltage ck. ☑ 500v ☑ 1000v ☑ 1500v ☐ Battery ck. (min 4.4 vdc)

Alpha Threshold.: 175 mV Beta Threshold.: 4 mV Beta Window.: 50 mV

Voltage setting: 550 volts = 2.26 on HV Dial (Pot.)

Instrument found within tolerance (+/- 10%) ☑ Yes ☐ No

Reference Setting	Alpha Channel Digital Readout		Beta Channel Digital Readout	
	Instrument "As Found Reading"	Integrated Counts (1-minute count)	Instrument "As Found Reading"	Integrated Counts (1-minute count)
400 Kcpm	+/- 10%	398888	+/- 10%	398894
40 Kcpm	+/- 10%	39891	+/- 10%	39890
4 Kcpm	+/- 10%	3989	+/- 10%	3989
400 cpm	+/- 10%	399	+/- 10%	399

Calibrated By: [signature] Calibration Date: 9-26-07

Calibration Due: 9-26-08

Reviewed By: [signature] Date: 9/27/07

Certificate of Calibration

Voltage Plateau Form

ERG
Environmental Restoration Group, Inc.
8809 Washington St. NE, Suite 150
Albuquerque, NM 87113
(505) 298-4224

Detector Mfg.: Ludlum Model: 43-10-1 Serial No.: PR215943

Counter Mfg.: Ludlum Model: 2929 Serial No.: 196226

This calibration conforms to the requirements and acceptable calibration conditions of ANSI N323A - 1997.
NMRCB Registration No. 481-3 • Calibration of Radiation Detection Instruments & Devices

Alpha Threshold: 175 mV Beta Threshold: 4 mV Beta Window: 50 mV

Geometry / Distance to source: In planchett Cable Length: ☑ 39 inch ☐ Other:

Alpha Source: ☑ Th230 @ 13,300 dpm (1/19/07) sn: 4098-03 ☐ Other:

Beta Source: ☑ Tc99 @ 17,800 dpm (1/15/07) sn: 4099-03 ☐ Other:

Count Time: 1 minute(s)

High Voltage	Alpha Source Counts		Beta Source Counts		Background Counts		Pot. Setting
	Alpha	Beta	Alpha	Beta	Alpha	Beta	
500	4383	263	7	2535	4	42	2.06
550	4752	414	3	3735	3	59	2.26
600	4822	765	4	4768	2	83	2.46
650	4849	1489	4	4853	2	67	2.66

Comments: Recommended Operating High Voltage: 550 volts

Calibrated By: Calibration Date: 9-26-07

Calibration Due: 9-26-08

Reviewed By: Date: 9/27/07

Certificate of Calibration

2 Channel Scaler Certificate of Calibration

ERG
Environmental Restoration Group, Inc.
8809 Washington St. NE, Suite 150
Albuquerque, NM 87113
(505) 298-4224

Manufacturer: Ludlum Model: 2929 Serial No.: 137607

All Ranges Calibrated Electronically; Ludlum Pulser Generator Serial No.: 97743 ☐ 201932 ☑

This calibration conforms to the requirements and acceptable calibration conditions of ANSI N323A - 1997.
NMRCB Registration No. 481-3 • Calibration of Radiation Detection Instruments & Devices

☑ Mechanical ck. ☐ Meter Zeroed ☐ Geotropism ck. ☐ F/S Response ck. ☑ Audio ck.

☐ THR/WIN ck. High Voltage ck. ☑ 500v ☑ 1000v ☑ 1500v ☐ Battery ck. (min 4.4 vdc)

Alpha Threshold.: 170 mV Beta Threshold.: 4 mV Beta Window.: 50 mV

Voltage setting: 700 volts = 2.92 on HV Dial (Pot.)

Instrument found within tolerance (+/- 10%) ☑ Yes ☐ No

Reference Setting	Alpha Channel Digital Readout		Beta Channel Digital Readout	
	Instrument "As Found Reading"	Integrated Counts (1-minute count)	Instrument "As Found Reading"	Integrated Counts (1-minute count)
400 Kcpm	+/- 10%	398865	+/- 10%	398813
40 Kcpm	+/- 10%	39889	+/- 10%	39880
4 Kcpm	+/- 10%	3988	+/- 10%	3989
400 cpm	+/- 10%	398	+/- 10%	399

Calibrated By: [signature] Calibration Date: 9-26-07

Calibration Due: 9-26-08

Reviewed By: [signature] Date: 9/26/07

Certificate of Calibration

Voltage Plateau Form

ERG
Environmental Restoration Group, Inc.
8809 Washington St. NE, Suite 150
Albuquerque, NM 87113
(505) 298-4224

Detector Mfg.: Ludlum Model: 43-10-1 Serial No.: PR142936

Counter Mfg.: Ludlum Model: 2929 Serial No.: 137607

This calibration conforms to the requirements and acceptable calibration conditions of ANSI N323A - 1997.
NMRCB Registration No. 481-3 • Calibration of Radiation Detection Instruments & Devices

Alpha Threshold: 170 mV Beta Threshold: 4 mV Beta Window: 50 mV

Geometry / Distance to source: In planchett Cable Length: ☑ 39 inch ☐ Other:

Alpha Source: ☑ Th230 @ 13,300 dpm (1/19/07) sn: 4098-03 ☐ Other:

Beta Source: ☑ Tc99 @ 17,800 dpm (1/15/07) sn: 4099-03 ☐ Other:

Count Time: 1 minute(s)

High Voltage	Alpha Source Counts		Beta Source Counts		Background Counts		Pot. Setting
	Alpha	Beta	Alpha	Beta	Alpha	Beta	
600	4520	264	3	2732	0	64	2.52
650	4782	309	6	3546	0	68	2.74
700	4816	502	3	4222	1	71	2.92
750	4815	816	10	4142	3	89	3.14

Comments: Recommended Operating High Voltage: 700 volts

Calibrated By: Calibration Date: 9-26-07

Calibration Due: 9-26-07

Reviewed By: Date: 9/26/07

Certificate of Calibration

Ratemeter Certificate of Calibration

ERG
Environmental Restoration Group, Inc.
8809 Washington St. NE, Suite 150
Albuquerque, NM 87113
(505) 298-4224

Manufacturer: Ludlum Model: 2241 Serial No.: 148089

All Ranges Calibrated Electronically; Ludlum Pulser Generator Serial No.: ☐ 97743 ☑ 201932

This calibration conforms to the requirements and acceptable calibration conditions of ANSI N323A - 1997.
NMRCB Registration No. 481-3 • Calibration of Radiation Detection Instruments & Devices

☑ Mechanical ck. ☑ Meter Zeroed ☐ Geotropism ck. ☑ F/S Response ck. ☑ Audio ck.

☐ THR/WIN ck. High Voltage ck.: ☐ 500v ☐ 1000v ☐ 1500v ☐ Battery ck. (min 4.4 vdc)

Threshold Setting: 10 mV

Instrument found within tolerance (+/- 10%) ☑ Yes ☐ No

Reference Setting	Instrument "As Found Reading"	Instrument Meter Reading
400 Kcpm	+/- 10%	399 kC/m
100 Kcpm	+/- 10%	99.0 kC/m
40 Kcpm	+/- 10%	39.8 kC/m
10 Kcpm	+/- 10%	9.95 kC/m
4 Kcpm	+/- 10%	3.98 kC/m
1 Kcpm	+/- 10%	0.99 kC/m
400 cpm	+/- 10%	395 C/m
100 cpm	+/- 10%	103 C/m

Reference Setting	Instrument "As Found Reading"	Integrated Counts (1-minute count)
400 Kcpm	+/- 10%	398803
40 Kcpm	+/- 10%	39881
4 Kcpm	+/- 10%	3988
400 cpm	+/- 10%	399

Calibrated By: [signature] Calibration Date: 9-25-07

Calibration Due: 9-25-08

Reviewed By: [signature] Date: 9/25/07

ERG Form 1.02E

Certificate of Calibration

Voltage Plateau Form

ERG
Environmental Restoration Group, Inc.
8809 Washington St. NE, Suite 150
Albuquerque, NM 87113
(505) 298-4224

Detector Mfg.: Ludlum Model: 44-10 Serial No.: PR154617

Counter Mfg.: Ludlum Model: 2241 Serial No.: 148089

This calibration conforms to the requirements and acceptable calibration conditions of ANSI N323A - 1997.
NMRCB Registration No. 481-3 • Calibration of Radiation Detection Instruments & Devices

Counter Threshold Setting: 10 mV Cable Length: ☑ 39 inch, ☐ 5 foot, ☐ Other: ~~Curly~~

Detector geometry to source: ☐ Face, ☑ Side, ☐ Below, ☐ Other:

Distance to source: ☐ Contact, ☑ 6-Inches, ☐ Other:

Gamma Source : ☑ Cs-137 @ 5.81μCi (3/07/07) sn: 4097-03 ☐ Other:

Count Time: 1 Minute

High Voltage	Gross Source Counts	Background Counts
600	20863	
700	47046	
800	72973	
900	82776	
1000	83467	9491
1100	83593	
1200	84000	

Comments: Recommended Operating High Voltage: 1000 volts

Calibrated By: [signature] Calibration Date: 9-25-07

Calibration Due: 9-25-08

Reviewed By: [signature] Date: 9/25/07

Certificate of Calibration

Ratemeter Certificate of Calibration

ERG
Environmental Restoration Group, Inc.
8809 Washington St. NE, Suite 150
Albuquerque, NM 87113
(505) 298-4224

Manufacturer: Ludlum Model: 2241 Serial No.: 150711

All Ranges Calibrated Electronically; Ludlum Pulser Generator Serial No.: ☐ 97743 ☑ 201932

This calibration conforms to the requirements and acceptable calibration conditions of ANSI N323A - 1997.
NMRCB Registration No. 481-3 • Calibration of Radiation Detection Instruments & Devices

☑ Mechanical ck. ☑ Meter Zeroed ☐ Geotropism ck. ☑ F/S Response ck. ☑ Audio ck.

☐ THR/WIN ck. High Voltage ck.: ☐ 500v ☐ 1000v ☐ 1500v ☐ Battery ck. (min 4.4 vdc)

Threshold Setting: 10 mV

Instrument found within tolerance (+/- 10%) ☑ Yes ☐ No

Reference Setting	Instrument "As Found Reading"	Instrument Meter Reading
400 Kcpm	+/- 10%	398 kC/m
100 Kcpm	+/- 10%	100 kC/m
40 Kcpm	+/- 10%	39.8 kC/m
10 Kcpm	+/- 10%	10.0 kC/m
4 Kcpm	+/- 10%	3.99 kC/m
1 Kcpm	+/- 10%	1.00 kC/m
400 cpm	+/- 10%	398 C/m
100 cpm	+/- 10%	99 C/m

Reference Setting	Instrument "As Found Reading"	Integrated Counts (1-minute count)
400 Kcpm	+/- 10%	398957
40 Kcpm	+/- 10%	39896
4 Kcpm	+/- 10%	3990
400 cpm	+/- 10%	399

Calibrated By: [signature] Calibration Date: 9-25-07

Calibration Due: 9-25-08

Reviewed By: [signature] Date: 9/25/07

ERG Form 1.02E

Certificate of Calibration

Voltage Plateau Form

ERG
Environmental Restoration Group, Inc.
8809 Washington St. NE, Suite 150
Albuquerque, NM 87113
(505) 298-4224

Detector Mfg.: Ludlum Model: 44-10 Serial No.: PR150852

Counter Mfg.: Ludlum Model: 2241 Serial No.: 150711

This calibration conforms to the requirements and acceptable calibration conditions of ANSI N323A - 1997.
NMRCB Registration No. 481-3 • Calibration of Radiation Detection Instruments & Devices

Counter Threshold Setting: 10 mV Cable Length: ☑ 39 inch, ☐ 5 foot, ☐ Other: ~~Curly~~

Detector geometry to source: ☐ Face, ☑ Side, ☐ Below, ☐ Other:

Distance to source: ☐ Contact, ☑ 6-Inches, ☐ Other:

Gamma Source :☑Cs-137 @ 5.81μCi (3/07/07) sn: 4097-03 ☐ Other:

Count Time: 1 Minute

High Voltage	Gross Source Counts	Background Counts
600	173	
700	2142	
800	40493	
900	63943	
1000	76205	
1100	80777	9358
1200	84428	

Comments: Recommended Operating High Voltage: 1100 volts

Calibrated By: [signature] Calibration Date: 9-25-07

Calibration Due: 9-25-08

Reviewed By: [signature] Date: 9/25/07

ERG Form 1.03A1

Certificate of Calibration

Ratemeter Certificate of Calibration

ERG
Environmental Restoration Group, Inc.
8809 Washington St. NE, Suite 150
Albuquerque, NM 87113
(505) 298-4224

Manufacturer: Ludlum Model: 2241 Serial No.: 149408

All Ranges Calibrated Electronically; Ludlum Pulser Generator Serial No.: ☐ 97743 ☑ 201932

This calibration conforms to the requirements and acceptable calibration conditions of ANSI N323A - 1997.
NMRCB Registration No. 481-3 • Calibration of Radiation Detection Instruments & Devices

☑ Mechanical ck. ☑ Meter Zeroed ☐ Geotropism ck. ☑ F/S Response ck. ☑ Audio ck.

☐ THR/WIN ck. High Voltage ck.: ☐ 500v ☐ 1000v ☐ 1500v ☐ Battery ck. (min 4.4 vdc)

Threshold Setting: 10 mV

Instrument found within tolerance (+/- 10%) ☑ Yes ☐ No

Reference Setting	Instrument "As Found Reading"	Instrument Meter Reading
400 Kcpm	+/- 10%	398 kC/m
100 Kcpm	+/- 10%	99.8 kC/m
40 Kcpm	+/- 10%	39.8 kC/m
10 Kcpm	+/- 10%	9.97 kC/m
4 Kcpm	+/- 10%	3.98 kC/m
1 Kcpm	+/- 10%	0.99 kC/m
400 cpm	+/- 10%	392 C/m
100 cpm	+/- 10%	94 C/m

Reference Setting	Instrument "As Found Reading"	Integrated Counts (1-minute count)
400 Kcpm	+/- 10%	398960
40 Kcpm	+/- 10%	39897
4 Kcpm	+/- 10%	3989
400 cpm	+/- 10%	399

Calibrated By: [signature] Calibration Date: 9-25-07

Calibration Due: 9-25-08

Reviewed By: [signature] Date: 9/25/07

ERG Form 1.02E

Certificate of Calibration

Voltage Plateau Form

ERG
Environmental Restoration Group, Inc.
8809 Washington St. NE, Suite 150
Albuquerque, NM 87113
(505) 298-4224

Detector Mfg.: Ludlum Model: 44-10 Serial No.: PR150507

Counter Mfg.: Ludlum Model: 2241 Serial No.: 149408

This calibration conforms to the requirements and acceptable calibration conditions of ANSI N323A - 1997.
NMRCB Registration No. 481-3 • Calibration of Radiation Detection Instruments & Devices

Counter Threshold Setting: 10 mV Cable Length: ☑ 39 inch, ☐ 5 foot, ☐ Other: ~~Curly~~

Detector geometry to source: ☐ Face, ☑ Side, ☐ Below, ☐ Other:

Distance to source: ☐ Contact, ☑ 6-Inches, ☐ Other:

Gamma Source : ☑ Cs-137 @ 5.81μCi (3/07/07) sn: 4097-03 ☐ Other:

Count Time: 1 Minute

High Voltage	Gross Source Counts	Background Counts
600	49369	
700	71261	
800	78028	
900	81625	
1000	82381	9870
1100	82408	
1200	90919	

Comments: Recommended Operating High Voltage: 1000 volts

Calibrated By: [signature] Calibration Date: 9-25-07

Calibration Due: 9-25-08

Reviewed By: [signature] Date: 9/25/07

Certificate of Calibration

Ratemeter Certificate of Calibration

ERG
Environmental Restoration Group, Inc.
8809 Washington St. NE, Suite 150
Albuquerque, NM 87113
(505) 298-4224

Manufacturer: Ludlum Model: 2241 Serial No.: 149400

All Ranges Calibrated Electronically; Ludlum Pulser Generator Serial No.: ☐ 97743 ☑ 201932

This calibration conforms to the requirements and acceptable calibration conditions of ANSI N323A - 1997.
NMRCB Registration No. 481-3 • Calibration of Radiation Detection Instruments & Devices

☑ Mechanical ck. ☑ Meter Zeroed ☐ Geotropism ck. ☑ F/S Response ck. ☑ Audio ck.

☐ THR/WIN ck. High Voltage ck.: ☐ 500v ☐ 1000v ☐ 1500v ☐ Battery ck. (min 4.4 vdc)

Threshold Setting: 10 mV

Instrument found within tolerance (+/- 10%) ☑ Yes ☐ No

Reference Setting	Instrument "As Found Reading"	Instrument Meter Reading
400 Kcpm	+/- 10%	399 kC/m
100 Kcpm	+/- 10%	99.5 kC/m
40 Kcpm	+/- 10%	39.8 kC/m
10 Kcpm	+/- 10%	9.99 kC/m
4 Kcpm	+/- 10%	3.97 kC/m
1 Kcpm	+/- 10%	0.99 kC/m
400 cpm	+/- 10%	399 C/m
100 cpm	+/- 10%	99 C/m

Reference Setting	Instrument "As Found Reading"	Integrated Counts (1-minute count)
400 Kcpm	+/- 10%	399320
40 Kcpm	+/- 10%	39933
4 Kcpm	+/- 10%	3993
400 cpm	+/- 10%	399

Calibrated By: [signature] Calibration Date: 9-25-07

Calibration Due: 9-25-08

Reviewed By: [signature] Date: 9/25/07

Certificate of Calibration

Voltage Plateau Form

ERG
Environmental Restoration Group, Inc.
8809 Washington St. NE, Suite 150
Albuquerque, NM 87113
(505) 298-4224

Detector Mfg.: Ludlum Model: 44-10 Serial No.: PR112840

Counter Mfg.: Ludlum Model: 2241 Serial No.: 149400

This calibration conforms to the requirements and acceptable calibration conditions of ANSI N323A - 1997.
NMRCB Registration No. 481-3 • Calibration of Radiation Detection Instruments & Devices

Counter Threshold Setting: 10 mV Cable Length: ☑ 39 inch, ☐ 5 foot, ☐ Other: ~~Curly~~

Detector geometry to source: ☐ Face, ☑ Side, ☐ Below, ☐ Other:

Distance to source: ☐ Contact, ☑ 6-Inches, ☐ Other:

Gamma Source : ☑ Cs-137 @ 5.81μCi (3/07/07) sn: 4097-03 ☐ Other:

Count Time: 1 Minute

High Voltage	Gross Source Counts	Background Counts
600	709	
700	30860	
800	55762	
900	69892	
1000	76075	
1100	80584	9714
1200	81475	

Comments: Recommended Operating High Voltage: 1100 volts

Calibrated By: [signature] Calibration Date: 9-25-07

Calibration Due: 9-25-08

Reviewed By: [signature] Date: 9/25/07

Certificate of Calibration

Ratemeter Certificate of Calibration

ERG
Environmental Restoration Group, Inc.
8809 Washingtion St. NE, Suite 150
Albuquerque, NM 87113
(505) 298-4224

Manufacturer: Ludlum Model: 2360 Serial No.: 193652

All Ranges Calibrated Electronically; Ludlum Pulser Generator Serial No.: ☐ 97743 ☑ 201932

This calibration conforms to the requirements and acceptable calibration conditions of ANSI N323A - 1997.
NMRCB Registration No. 481-3 • Calibration of Radiation Detection Instruments & Devices

☑ Mechanical ck. ☑ Meter Zeroed ☑ Geotropism ck. ☐ F/S Response ck. ☑ Audio ck.

☐ THR/WIN ck. High Voltage ck. ☑ 500v ☑ 1000v ☑ 1500v ☑ Battery ck. (min 4.4 vdc)

Alpha Threshold.: 120 mV Beta Threshold.: 4 mV Beta Window.: 30 mV

Internal Calibration Date Reset ☑ Instrument found within tolerance (+/- 10%) Yes ☑ No ☐

Reference Setting	Instrument "As Found Reading"	Instrument Meter Reading
400 Kcpm	+/- 10%	400 Kcpm
100 Kcpm	+/- 10%	100 Kcpm
40 Kcpm	+/- 10%	40 Kcpm
10 Kcpm	+/- 10%	10 Kcpm
4 Kcpm	+/- 10%	4 Kcpm
1 Kcpm	+/- 10%	1 Kcpm
400 cpm	+/- 10%	400 cpm
100 cpm	+/- 10%	100 cpm

Reference Setting	Instrument "As Found Reading"	Integrated Counts (1-minute count)
400 Kcpm	+/- 10%	398719
40 Kcpm	+/- 10%	39874
4 Kcpm	+/- 10%	3987
400 cpm	+/- 10%	399

Calibrated By: [signature] Calibration Date: 10-5-07

Calibration Due: 10-5-08

Reviewed By: [signature] Date: 10/5/07

ERG Form 1.02C

Certificate of Calibration

Voltage Plateau Form

ERG
Environmental Restoration Group, Inc.
8809 Washington St. NE, Suite 150
Albuquerque, NM 87113
(505) 298-4224

Detector Mfg.: Ludlum Model: 43-93 Serial No.: PR 199836

Counter Mfg.: Ludlum Model: 2360 Serial No.: 193652

This calibration conforms to the requirements and acceptable calibration conditions of ANSI N323A - 1997.
NMRCB Registration No. 481-3 • Calibration of Radiation Detection Instruments & Devices

Alpha Threshold: 120 mV Beta Threshold: 4 mV Beta Window: 30 mV

Detector geometry to source: ☑ Face, ☐ Side, ☐ Below, ☐ Other:

Distance to source: ☑ Contact, ☐ 6-Inches, ☐ Other:

Alpha Source : ☑ Th230 @ 13,300 dpm (1/19/07) sn: 4098-03 ☐ Other:

Beta Source: ☑ Tc99 @ 17,800 dpm (1/15/07) sn: 4099-03 ☐ Other:

Count Time: 1 Minute

High Voltage	Alpha Source Counts		Beta Source Counts		Background Counts	
	Alpha	Beta	Alpha	Beta	Alpha	Beta
650	1827	286	19	282	1	55
700	2678	358	19	1555	0	141
→ 750	2884	639	24	2891	2	254
775	2889	920	20	3437	2	319
800	2971	1182	19	3950	4	351

Comments: Recommended Operating High Voltage: 750 volts

Calibrated By: Calibration Date: 10-5-07

Calibration Due: 10-5-08

Reviewed By: Date: 10/5/07

Certificate of Calibration

Ratemeter Certificate of Calibration

ERG
Environmental Restoration Group, Inc.
8809 Washington St. NE, Suite 150
Albuquerque, NM 87113
(505) 298-4224

Manufacturer: Ludlum Model: 2360 Serial No.: 168043

All Ranges Calibrated Electronically; Ludlum Pulser Generator Serial No.: ☐ 97743 ☑ 201932

This calibration conforms to the requirements and acceptable calibration conditions of ANSI N323A - 1997.
NMRCB Registration No. 481-3 • Calibration of Radiation Detection Instruments & Devices

☑ Mechanical ck. ☑ Meter Zeroed ☑ Geotropism ck. ☐ F/S Response ck. ☑ Audio ck.

☐ THR/WIN ck. High Voltage ck. ☑ 500v ☑ 1000v ☑ 1500v ☑ Battery ck. (min 4.4 vdc)

Alpha Threshold.: 120 mV Beta Threshold.: 4 mV Beta Window.: 30 mV

Internal Calibration Date Reset ☑ Instrument found within tolerance (+/- 10%) Yes ☑ No ☐

Reference Setting	Instrument "As Found Reading"	Instrument Meter Reading
400 Kcpm	+/- 10%	400 Kcpm
100 Kcpm	+/- 10%	100 Kcpm
40 Kcpm	+/- 10%	40 Kcpm
10 Kcpm	+/- 10%	10 Kcpm
4 Kcpm	+/- 10%	4 Kcpm
1 Kcpm	+/- 10%	1 Kcpm
400 cpm	+/- 10%	400 cpm
100 cpm	+/- 10%	100 cpm

Reference Setting	Instrument "As Found Reading"	Integrated Counts (1-minute count)
400 Kcpm	+/- 10%	398655
40 Kcpm	+/- 10%	39868
4 Kcpm	+/- 10%	3987
400 cpm	+/- 10%	399

Calibrated By: [signature] Calibration Date: 10-5-07

Calibration Due: 10-5-08

Reviewed By: [signature] Date: 10/5/07

ERG Form 1.02C

Certificate of Calibration

Voltage Plateau Form

ERG
Environmental Restoration Group, Inc.
8809 Washington St. NE, Suite 150
Albuquerque, NM 87113
(505) 298-4224

Detector Mfg.: Ludlum Model: 43-93 Serial No.: PR 179861

Counter Mfg.: Ludlum Model: 2360 Serial No.: 168043

This calibration conforms to the requirements and acceptable calibration conditions of ANSI N323A - 1997.
NMRCB Registration No. 481-3 • Calibration of Radiation Detection Instruments & Devices

Alpha Threshold: 120 mV Beta Threshold: 4 mV Beta Window: 30 mV

Detector geometry to source: ☑ Face, ☐ Side, ☐ Below, ☐ Other:

Distance to source: ☑ Contact, ☐ 6-Inches, ☐ Other:

Alpha Source : ☑ Th230 @ 13,300 dpm (1/19/07) sn: 4098-03 ☐ Other:

Beta Source: ☑ Tc99 @ 17,800 dpm (1/15/07) sn: 4099-03 ☐ Other:

Count Time: 1 Minute

High Voltage	Alpha Source Counts		Beta Source Counts		Background Counts	
	Alpha	Beta	Alpha	Beta	Alpha	Beta
750	2027	274	6	124	4	45
800	2599	293	5	865	1	125
850	2817	613	9	1833	2	196
875	2762	875	20	2494	2	311
900	2761	1338	11	3090	4	366

Comments: Recommended Operating High Voltage: 850 volts

Calibrated By: Calibration Date: 10-5-07

Calibration Due: 10-5-08

Reviewed By: Date: 10/5/07

Certificate of Calibration

Ratemeter Certificate of Calibration

ERG
Environmental Restoration Group, Inc.
8809 Washingtion St. NE, Suite 150
Albuquerque, NM 87113
(505) 298-4224

Manufacturer: Ludlum Model: 2360 Serial No.: 184952

All Ranges Calibrated Electronically; Ludlum Pulser Generator Serial No.: ☐ 97743 ☑ 201932

This calibration conforms to the requirements and acceptable calibration conditions of ANSI N323A - 1997.
NMRCB Registration No. 481-3 • Calibration of Radiation Detection Instruments & Devices

☑ Mechanical ck. ☑ Meter Zeroed ☑ Geotropism ck. ☐ F/S Response ck. ☑ Audio ck.

☐ THR/WIN ck. High Voltage ck. ☑ 500v ☑ 1000v ☑ 1500v ☑ Battery ck. (min 4.4 vdc)

Alpha Threshold.: 120 mV Beta Threshold.: 4 mV Beta Window.: 30 mV

Internal Calibration Date Reset ☑ Instrument found within tolerance (+/- 10%) Yes ☑ No ☐

Reference Setting	Instrument "As Found Reading"	Instrument Meter Reading
400 Kcpm	+/- 10%	400 Kcpm
100 Kcpm	+/- 10%	100 Kcpm
40 Kcpm	+/- 10%	40 Kcpm
10 Kcpm	+/- 10%	10 Kcpm
4 Kcpm	+/- 10%	4 Kcpm
1 Kcpm	+/- 10%	1 Kcpm
400 cpm	+/- 10%	400 cpm
100 cpm	+/- 10%	100 cpm

Reference Setting	Instrument "As Found Reading"	Integrated Counts (1-minute count)
400 Kcpm	+/- 10%	398746
40 Kcpm	+/- 10%	39875
4 Kcpm	+/- 10%	3988
400 cpm	+/- 10%	399

Calibrated By: [signature] Calibration Date: 10-5-07

Calibration Due: 10-5-08

Reviewed By: [signature] Date: 10/5/07

ERG Form 1.02C

Certificate of Calibration

Voltage Plateau Form

ERG
Environmental Restoration Group, Inc.
8809 Washington St. NE, Suite 150
Albuquerque, NM 87113
(505) 298-4224

Detector Mfg.: Ludlum Model: 43-93 Serial No.: PR 199827

Counter Mfg.: Ludlum Model: 2360 Serial No.: 184952

This calibration conforms to the requirements and acceptable calibration conditions of ANSI N323A - 1997.
NMRCB Registration No. 481-3 • Calibration of Radiation Detection Instruments & Devices

Alpha Threshold: 120 mV Beta Threshold: 4 mV Beta Window: 30 mV

Detector geometry to source: ☑ Face, ☐ Side, ☐ Below, ☐ Other:

Distance to source: ☑ Contact, ☐ 6-Inches, ☐ Other:

Alpha Source : ☑ Th230 @ 13,300 dpm (1/19/07) sn: 4098-03 ☐ Other:

Beta Source: ☑ Tc99 @ 17,800 dpm (1/15/07) sn: 4099-03 ☐ Other:

Count Time: 1 Minute

High Voltage	Alpha Source Counts		Beta Source Counts		Background Counts	
	Alpha	Beta	Alpha	Beta	Alpha	Beta
800	2113	185	14	229	1	41
850	2522	266	9	1029	2	96
900	2746	433	16	2016	2	162
925	2707	481	17	2494	3	227
950	2835	679	22	2875	3	295

Comments: Recommended Operating High Voltage: 925 volts

Calibrated By: [signature] Calibration Date: 10-5-07

Calibration Due: 10-5-08

Reviewed By: [signature] Date: 10/5/07

Certificate of Calibration

Ratemeter Certificate of Calibration

ERG
Environmental Restoration Group, Inc.
8809 Washington St. NE, Suite 150
Albuquerque, NM 87113
(505) 298-4224

Manufacturer: Ludlum Model: 2360 Serial No.: 220246

All Ranges Calibrated Electronically; Ludlum Pulser Generator Serial No.: ☐ 97743 ☑ 201932

This calibration conforms to the requirements and acceptable calibration conditions of ANSI N323A - 1997.
NMRCB Registration No. 481-3 • Calibration of Radiation Detection Instruments & Devices

☑ Mechanical ck. ☑ Meter Zeroed ☑ Geotropism ck. ☐ F/S Response ck. ☑ Audio ck.

☐ THR/WIN ck. High Voltage ck. ☑ 500v ☑ 1000v ☑ 1500v ☑ Battery ck. (min 4.4 vdc)

Alpha Threshold.: 120 mV Beta Threshold.: 4 mV Beta Window.: 30 mV

Internal Calibration Date Reset ☑ Instrument found within tolerance (+/- 10%) Yes ☑ No ☐

Reference Setting	Instrument "As Found Reading"	Instrument Meter Reading
400 Kcpm	+/- 10%	400 Kcpm
100 Kcpm	+/- 10%	100 Kcpm
40 Kcpm	+/- 10%	40 Kcpm
10 Kcpm	+/- 10%	10 Kcpm
4 Kcpm	+/- 10%	4 Kcpm
1 Kcpm	+/- 10%	1 Kcpm
400 cpm	+/- 10%	400 cpm
100 cpm	+/- 10%	100 cpm

Reference Setting	Instrument "As Found Reading"	Integrated Counts (1-minute count)
400 Kcpm	+/- 10%	398492
40 Kcpm	+/- 10%	39878
4 Kcpm	+/- 10%	3988
400 cpm	+/- 10%	399

Calibrated By: [signature] Calibration Date: 10-5-07

Calibration Due: 10-5-08

Reviewed By: [signature] Date: 10/5/07

ERG Form 1.02C

Certificate of Calibration

Voltage Plateau Form

ERG
Environmental Restoration Group, Inc.
8809 Washington St. NE, Suite 150
Albuquerque, NM 87113
(505) 298-4224

Detector Mfg.: Ludlum Model: 43-93 Serial No.: PR 199826

Counter Mfg.: Ludlum Model: 2360 Serial No.: 220246

This calibration conforms to the requirements and acceptable calibration conditions of ANSI N323A - 1997.
NMRCB Registration No. 481-3 • Calibration of Radiation Detection Instruments & Devices

Alpha Threshold: 120 mV Beta Threshold: 4 mV Beta Window: 30 mV

Detector geometry to source: ☑ Face, ☐ Side, ☐ Below, ☐ Other:

Distance to source: ☑ Contact, ☐ 6-Inches, ☐ Other:

Alpha Source : ☑ Th230 @ 13,300 dpm (1/19/07) sn: 4098-03 ☐ Other:

Beta Source: ☑ Tc99 @ 17,800 dpm (1/15/07) sn: 4099-03 ☐ Other:

Count Time: 1 Minute

High Voltage	Alpha Source Counts		Beta Source Counts		Background Counts	
	Alpha	Beta	Alpha	Beta	Alpha	Beta
700	2053	281	7	448	0	80
750	2537	376	5	1718	0	134
775	2688	481	5	2248	1	235
800	2739	618	6	2657	0	397

Comments: Recommended Operating High Voltage: 775 volts

Calibrated By: [signature] Calibration Date: 10-5-07

Calibration Due: 10-5-08

Reviewed By: [signature] Date: 10/5/07

Designer and Manufacturer of Scientific and Industrial Instruments

CERTIFICATE OF CALIBRATION

LUDLUM MEASUREMENTS, INC.
POST OFFICE BOX 810 PH. 325-235-5494
501 OAK STREET FAX NO. 325-235-4672
SWEETWATER, TEXAS 79556, U.S.A.

CUSTOMER ERG ORDER NO. 279730/315084

Mfg. Thermo Model MICRO REM Serial No. 1716

Mfg. Model Serial No.

Cal. Date 9-Jul-07 Cal Due Date 9-Jul-08 Cal. Interval 1 Year Meterface 0-200µrem

Check mark ☑ applies to applicable instr. and/or detector IAW mfg. spec. T. 73 °F RH 58 % Alt 698.8 mm Hg

☐ New Instrument Instrument Received ☑ Within Toler. +-10% ☐ 10-20% ☐ Out of Tol. ☐ Requiring Repair ☐ Other-See comments

☑ Mechanical ck. ☑ Meter Zeroed ☐ Background Subtract ☐ Input Sens. Linearity
☐ F/S Resp. ck ☑ Reset ck. ☐ Window Operation ☐ Geotropism
☐ Audio ck. ☐ Alarm Setting ck. ☑ Batt. ck. (Min. Volt) VDC
☐ Calibrated in accordance with LMI SOP 14.8 rev 12/05/89. ☑ Calibrated in accordance with LMI SOP 14.9 rev 02/07/97.

Instrument Volt Set V Input Sens. mV Det. Oper. V at mV Threshold Dial Ratio = mV

☐ HV Readout (2 points) Ref./Inst. / V Ref./Inst. / V

COMMENTS:

Gamma Calibration: GM detectors positioned perpendicular to source except for M 44-9 in which the front of probe faces source.

RANGE/MULTIPLIER	REFERENCE CAL. POINT	INSTRUMENT REC'D "AS FOUND READING"	INSTRUMENT METER READING*
x1000	150 mR/hr	150	150
x1000	50 mR/hr	50	50
x100	15 mR/hr	152	150
x100	5 mR/hr	50	50
x10	1500 µR/hr	150	150
x10	500 µR/hr	45	45
x1	150 µR/hr	150	150
x1	100 µR/hr	100	100
x0.1	15 µR/hr	150	150
x0.1			

*Uncertainty within ± 10% C.F. within ± 20% **Range(s) Calibrated Electronically**

	REFERENCE CAL. POINT	INSTRUMENT RECEIVED	INSTRUMENT METER READING*		REFERENCE CAL. POINT	INSTRUMENT RECEIVED	INSTRUMENT METER READING*
Digital Readout				Log Scale			

Ludlum Measurements, Inc. certifies that the above instrument has been calibrated by standards traceable to the National Institute of Standards and Technology, or to the calibration facilities of other International Standards Organization members, or have been derived from accepted values of natural physical constants or have been derived by the ratio type of calibration techniques.
The calibration system conforms to the requirements of ANSI/NCSL Z540-1-1994 and ANSI N323-1978 State of Texas Calibration License No. LO-1963

Reference Instruments and/or Sources: ☐ S-394/1122 ☐ 1131 ☐ 781

Cs-137 Gamma S/N ☐ 1162 ☑ G112 ☑ M565 ☐ 5105 ☐ T1008 ☐ T879 ☐ E552 ☑ E551 ☐ 720 ☐ 734 ☐ 1616 ☐ Neutron Am-241 Be S/N T-304

☐ Alpha S/N ☐ Beta S/N ☑ Other CS-137 20µci

☐ m 500 S/N ☐ Oscilloscope S/N ☐ Multimeter S/N

Calibrated By: Duane Jackson Date 9-Jul-07

Reviewed By: Rhonda Harris Date 10 Jul 07

This certificate shall not be reproduced except in full, without the written approval of Ludlum Measurements, Inc.
FORM C22A 01/24/2007

AC Inst. Only ☐ Passed Dielectric (Hi-Pot) and Continuity Test ☐ Failed:

Calibration Certificate
ID Number: 19020511653-0

Calibration Technology
A Division of RSCS, Inc.

Customer: Chuck Mikaitis
Cabrera Services, Inc.
473 Silver Lane
East Hartford, CT 06118-

Instrument
Ludlum Model 2221

Serial Number
190205

Probe Model
Bicron G-1

Serial Number
C436E

Precision Check				
Test 1	Test 2	Test 3	Mean	Results
4.00 Kcpm	**4.00 Kcpm**	**4.00 Kcpm**	**4.00 Kcpm**	**Satisfactory**

Accuracy Check			
Range	Target Value	As Found	As Left
X1000	400 Kcpm	399.133 Kcpm #	399.133 Kcpm #
X1000	100 Kcpm	98.969 Kcpm #	98.969 Kcpm #
X100	40 Kcpm	39.932 Kcpm #	39.932 Kcpm #
X100	10 Kcpm	9.912 Kcpm #	9.912 Kcpm #
X10	4 Kcpm	3.997 Kcpm #	3.997 Kcpm #
X10	1 Kcpm	0.992 Kcpm #	0.992 Kcpm #
X1	400 cpm	399 cpm #	399 cpm #
X1	100 cpm	100 cpm #	100 cpm #

Readings with * indicate ranges where As-Found readings are >20% of Target value. Readings with ** indicate As-left readings are >10% of Target value
Readings with # indicate ranges were calibrated using a pulser

Probe Model & SN	Isotope	Efficiency	NIST Source ID	Geometry
G-1 C436E	Ba-133	0.1685 C/D	Ba-133 (SN: 380-39-1)	@1cm
G-1 C436E	Co-57	0.1439 C/D	Co-57 (SN: 14288)	@1cm
G-1 C436E	Cs-137	0.0425 C/D	Cs-137 (SN: 14290)	@1cm
G-1 C436E	I-129	0.0616 C/D	I-129 (SN: NES-186S)	@1cm

MTE Instrument Type	Model	CalDueDate
Pulser	Ludlum 500-4SN: 66151	01/15/2008

Outer Physical Check: *Pass*
Internal Check: *Pass*
Geotropism Check: *Pass*
Mechanical Zero: *Pass*
Tap Test: *Pass*

Electronics Checks	As Found	As Left
High Voltage	**850 Volts**	**850 Volts**
Low Level Discriminator #1	**10 mV**	**10 mV**
Window	**Out**	**Out**

Comments: Analog and digital displays reflect appropriate congruence.

Calibrated by: QA Review:

Date: 05/04/2007
Expires: 05/04/2008

Atmospheric Conditions - Temperature: 74° F Humidity: 21 % Barometric Pressure: 29.99 in/hg
This calibration was performed by RSCS using a NIST Traceable radiation source, in conformance to the following standards: ANSI N323A (1997). RSCS New Hampshire Radioactive Material License Number: 381R. RSCS calibration services are performed in accordance with the RSCS Radiation Protection Program Manual and Standard Operating Procedure 2.4.
This calibration certificate shall not be reproduced except in full without the express written consent of RSCS, Inc

Radiation Safety and Control Services, Inc.
91 Portsmouth Ave. Stratham, NH 03885
1-800-525-8339 (603) 778-2871 Fax (603) 778-6879 www.radsafety.com

Calibration Technology

A Division of RSCS, Inc.

Calibration Certificate
ID Number: 21651211656-0

Customer: Chuck Mikaitis
Cabrera Services, Inc.
473 Silver Lane
East Hartford, CT 06118-

Instrument	Serial Number
Ludlum Model 2221	216512

Probe Model	Serial Number
Bicron G-1	C442E

Precision Check

Test 1	Test 2	Test 3	Mean	Results
4.00 Kcpm	**4.00 Kcpm**	**4.00 Kcpm**	**4.00 Kcpm**	**Satisfactory**

Accuracy Check

Range	Target Value	As Found	As Left
X1000	400 Kcpm	399.781 Kcpm #	399.781 Kcpm #
X1000	100 Kcpm	99.797 Kcpm #	99.797 Kcpm #
X100	40 Kcpm	39.978 Kcpm #	39.978 Kcpm #
X100	10 Kcpm	9.997 Kcpm #	9.997 Kcpm #
X10	4 Kcpm	3.998 Kcpm #	3.998 Kcpm #
X10	1 Kcpm	0.999 Kcpm #	0.999 Kcpm #
X1	400 cpm	400 cpm #	400 cpm #
X1	100 cpm	100 cpm #	100 cpm #

Readings with * indicate ranges where As-Found readings are >20% of Target value. Readings with ** indicate As-left readings are >10% of Target value
Readings with # indicate ranges were calibrated using a pulser

Probe Model & SN	Isotope	Efficiency	NIST Source ID	Geometry
G-1 C442E	Ba-133	0.1694 C/D	Ba-133 (SN: 380-39-1)	@1cm
G-1 C442E	Co-57	0.1493 C/D	Co-57 (SN: 14288)	@1cm
G-1 C442E	Cs-137	0.0435 C/D	Cs-137 (SN: 14290)	@1cm
G-1 C442E	I-129	0.0632 C/D	I-129 (SN: NES-186S)	@1cm

MTE Instrument Type	Model	CalDueDate
Pulser	Ludlum 500-4SN: 66151	01/15/2008

Outer Physical Check: *Pass*
Internal Check: *Pass*
Geotropism Check: *Pass*
Mechanical Zero: *Pass*
Tap Test: *Pass*

Electronics Checks	As Found	As Left
High Voltage	**895 Volts**	**895 Volts**
Low Level Discriminator #1	**10 mV**	**10 mV**
Window	**Out**	**Out**

Comments: Analog and digital displays reflect appropriate congruence.

Calibrated by: QA Review:

Date: 05/04/2007
Expires: 05/04/2008

Atmospheric Conditions - Temperature: 74° F Humidity: 21 % Barometric Pressure: 29.99 in/hg
This calibration was performed by RSCS using a NIST Traceable radiation source, in conformance to the following standards: ANSI N323A (1997). RSCS New Hampshire Radioactive Material License Number: 381R. RSCS calibration services are performed in accordance with the RSCS Radiation Protection Program Manual and Standard Operating Procedure 2.4.
This calibration certificate shall not be reproduced except in full without the express written consent of RSCS, Inc

Radiation Safety and Control Services, Inc.
91 Portsmouth Ave. Stratham, NH 03885
1-800-525-8339 (603) 778-2871 Fax (603) 778-6879 www.radsafety.com

Calibration Certificate
ID Number: 19606211654-0

Calibration Technology
A Division of RSCS, Inc.

Customer: Chuck Mikaitis
Cabrera Services, Inc.
473 Silver Lane
East Hartford, CT 06118-

Instrument	Serial Number
Ludlum Model 2221	196062

Probe Model	Serial Number
Bicron G-1	C443E

Precision Check

Test 1	Test 2	Test 3	Mean	Results
9.99 Kcpm	**9.99 Kcpm**	**9.99 Kcpm**	**9.99 Kcpm**	**Satisfactory**

Accuracy Check

Range	Target Value	As Found	As Left
X1000	400 Kcpm	399.622 Kcpm #	399.622 Kcpm #
X1000	100 Kcpm	100.139 Kcpm #	100.139 Kcpm #
X100	40 Kcpm	39.987 Kcpm #	39.987 Kcpm #
X100	10 Kcpm	9.993 Kcpm #	9.993 Kcpm #
X10	4 Kcpm	4.007 Kcpm #	4.007 Kcpm #
X10	1 Kcpm	0.999 Kcpm #	0.999 Kcpm #
X1	400 cpm	401 cpm #	401 cpm #
X1	100 cpm	100 cpm #	100 cpm #

Readings with * indicate ranges where As-Found readings are >20% of Target value. Readings with ** indicate As-left readings are >10% of Target value
Readings with # indicate ranges were calibrated using a pulser

Probe Model & SN	Isotope	Efficiency	NIST Source ID	Geometry
G-1 C443E	Ba-133	0.1736 C/D	Ba-133 (SN: 380-39-1)	@1cm
G-1 C443E	Co-57	0.1515 C/D	Co-57 (SN: 14288)	@1cm
G-1 C443E	Cs-137	0.0450 C/D	Cs-137 (SN: 14290)	@1cm
G-1 C443E	I-129	0.0684 C/D	I-129 (SN: NES-186S)	@1cm

MTE Instrument Type	Model	CalDueDate
Pulser	Ludlum 500-4SN: 66151	01/15/2008

Outer Physical Check: *Pass*
Internal Check: *Pass*
Geotropism Check: *Pass*
Mechanical Zero: *Pass*
Tap Test: *Pass*

Electronics Checks	As Found	As Left
High Voltage	**880 Volts**	**880 Volts**
Low Level Discriminator #1	**3.4 mV**	**10 mV**
Window	**In**	**Out**

Comments: Analog and digital displays reflect appropriate congruence.

Calibrated by: QA Review:

Date: 05/04/2007
Expires: 05/04/2008

Atmospheric Conditions - Temperature: 74° F Humidity: 21 % Barometric Pressure: 29.99 in/hg
This calibration was performed by RSCS using a NIST Traceable radiation source, in conformance to the following standards: ANSI N323A (1997). RSCS New Hampshire Radioactive Material License Number: 381R. RSCS calibration services are performed in accordance with the RSCS Radiation Protection Program Manual and Standard Operating Procedure 2.4.
This calibration certificate shall not be reproduced except in full without the express written consent of RSCS, Inc

Radiation Safety and Control Services, Inc.
91 Portsmouth Ave. Stratham, NH 03885
1-800-525-8339 (603) 778-2871 Fax (603) 778-6879 www.radsafety.com

Calibration Certificate
ID Number: 21648211655-0

Calibration Technology
A Division of RSCS, Inc.

Customer: Chuck Mikaitis
Cabrera Services, Inc.
473 Silver Lane
East Hartford, CT 06118-

Instrument
Ludlum Model 2221

Serial Number
216482 ✓

Probe Model
Bicron G-1

Serial Number
C358C ✓

Precision Check				
Test 1	Test 2	Test 3	Mean	Results
9.95 Kcpm	**9.96 Kcpm**	**9.96 Kcpm**	**9.95 Kcpm**	**Satisfactory**

Accuracy Check			
Range	Target Value	As Found	As Left
X1000	400 Kcpm	400.549 Kcpm #	400.549 Kcpm #
X1000	100 Kcpm	99.530 Kcpm #	99.530 Kcpm #
X100	40 Kcpm	40.016 Kcpm #	40.016 Kcpm #
X100	10 Kcpm	9.953 Kcpm #	9.953 Kcpm #
X10	4 Kcpm	4.010 Kcpm #	4.010 Kcpm #
X10	1 Kcpm	0.995 Kcpm #	0.995 Kcpm #
X1	400 cpm	400 cpm #	400 cpm #
X1	100 cpm	99 cpm #	99 cpm #

Readings with * indicate ranges where As-Found readings are >20% of Target value. Readings with ** indicate As-left readings are >10% of Target value
Readings with # indicate ranges were calibrated using a pulser

Probe Model & SN	Isotope	Efficiency	NIST Source ID	Geometry
G-1 C358C	Ba-133	0.1638 C/D	Ba-133 (SN: 380-39-1)	@1cm
G-1 C358C	Co-57	0.1404 C/D	Co-57 (SN: 14288)	@1cm
G-1 C358C	Cs-137	0.0427 C/D	Cs-137 (SN: 14290)	@1cm
G-1 C358C	I-129	0.0598 C/D	I-129 (SN: NES-186S)	@1cm

MTE Instrument Type	Model	CalDueDate
Pulser	Ludlum 500-4SN: 66151	01/15/2008

Outer Physical Check: *Pass*
Internal Check: *Pass*
Geotropism Check: *Pass*
Mechanical Zero: *Pass*
Tap Test: *Pass*

Electronics Checks	As Found	As Left
High Voltage	**945 Volts**	**945 Volts**
Low Level Discriminator #1	**10 mV**	**10 mV**
Window	**Out**	**Out**

Comments: Analog and digital displays reflect appropriate congruence.

Calibrated by: [signature]

QA Review: [signature]

Date: 05/04/2007
Expires: 05/04/2008

Atmospheric Conditions - Temperature: 74° F Humidity: 21 % Barometric Pressure: 29.99 in/hg
This calibration was performed by RSCS using a NIST Traceable radiation source, in conformance to the following standards: ANSI N323A (1997). RSCS New Hampshire Radioactive Material License Number: 381R. RSCS calibration services are performed in accordance with the RSCS Radiation Protection Program Manual and Standard Operating Procedure 2.4.
This calibration certificate shall not be reproduced except in full without the express written consent of RSCS, Inc

Radiation Safety and Control Services, Inc.
91 Portsmouth Ave. Stratham, NH 03885
1-800-525-8339 (603) 778-2871 Fax (603) 778-6879 www.radsafety.com

Designer and Manufacturer of Scientific and Industrial Instruments

CERTIFICATE OF CALIBRATION

LUDLUM MEASUREMENTS, INC.
POST OFFICE BOX 810 PH. 325-235-5494
501 OAK STREET FAX NO. 325-235-4672
SWEETWATER, TEXAS 79556, U.S.A.

CUSTOMER CABRERA SERVICES ORDER NO. 269547/309433

Mfg. Ludlum Measurements, Inc. Model 3 Serial No. 79511 ✓

Mfg. Ludlum Measurements, Inc. Model 44-9 Serial No. PR137499 ✓

Cal. Date 17-Jan-07 Cal Due Date 17-Jan-08 Cal. Interval 1 Year Meterface 202-002

Check mark ☑ applies to applicable instr. and/or detector IAW mfg. spec. T. 73 °F RH 20 % Alt 708.8 mm Hg

☐ New Instrument Instrument Received ☑ Within Toler. +-10% ☐ 10-20% ☐ Out of Tol. ☐ Requiring Repair ☐ Other-See comments

☑ Mechanical ck. ☑ Meter Zeroed ☐ Background Subtract ☐ Input Sens. Linearity
☑ F/S Resp. ck ☑ Reset ck. ☐ Window Operation ☑ Geotropism
☑ Audio ck. ☐ Alarm Setting ck. ☑ Batt. ck. (Min. Volt) 2.2 VDC
☑ Calibrated in accordance with LMI SOP 14.8 rev 12/05/89. ☐ Calibrated in accordance with LMI SOP 14.9 rev 02/07/97.

Instrument Volt Set 900 V Input Sens. 27 mV Det. Oper. 900 V at 27 mV Threshold Dial Ratio = mV

☐ HV Readout (2 points) Ref./Inst. / V Ref./Inst. / V

COMMENTS:

TH-230 #121495 act.19,800dpm ct.2800cpm -Bg40 ct.2760cpm 14% 4Pi
TC-99 #5279 act.28,800dpm ct.6500cpm -Bg40 ct.6460cpm 22% 4Pi
Ni-63 #4017 act.289,562dpm ct.1100cpm -Bg40 ct.1060cpm 0.4% 4Pi
Sr90y90 #4016 act.58,269dpm ct.19000cpm -Bg40 ct.18960cpm 33% 4Pi

Cal with a 4Ft. cable.

Gamma Calibration: GM detectors positioned perpendicular to source except for M 44-9 in which the front of probe faces source.

RANGE/MULTIPLIER	REFERENCE CAL. POINT	INSTRUMENT REC'D "AS FOUND READING"	INSTRUMENT METER READING*
X 100	400kcpm	4K	4K
X 100	100kcpm	1K	1K
X 10	40kcpm	4K	4K
X 10	10kcpm	1K	1K
X 1	4kcpm	4K	4K
X 1	1kcpm	1K	1K
X 0.1	400cpm	4K	4K
X 0.1	100cpm	1K	1K

*Uncertainty within ± 10% C.F. within ± 20% ALL Range(s) Calibrated Electronically

	REFERENCE CAL. POINT	INSTRUMENT RECEIVED	INSTRUMENT METER READING*		REFERENCE CAL. POINT	INSTRUMENT RECEIVED	INSTRUMENT METER READING*
Digital Readout				Log Scale			

Ludlum Measurements, Inc. certifies that the above instrument has been calibrated by standards traceable to the National Institute of Standards and Technology, or to the calibration facilities of other International Standards Organization members, or have been derived from accepted values of natural physical constants or have been derived by the ratio type of calibration techniques.
The calibration system conforms to the requirements of ANSI/NCSL Z540-1-1994 and ANSI N323-1978 State of Texas Calibration License No. LO-1963

Reference Instruments and/or Sources: ☐ S-394 ☐ 1122 ☐ 781

Cs-137 Gamma S/N ☐ 1162 ☑ G112 ☐ M565 ☐ 5105 ☐ T1006 ☐ T879 ☐ E552 ☑ E551 ☐ 720 ☐ 734 ☐ 1616 ☐ Neutron Am-241 Be S/N T-304

☐ Alpha S/N ☐ Beta S/N ☐ Other

☑ m 500 S/N 54683 ☐ Oscilloscope S/N ☑ Multimeter S/N 70602489

Calibrated By: Dwain Jackson Date 17JAN07

Reviewed By: Rhonda Harris Date 18Jan07

This certificate shall not be reproduced except in full, without the written approval of Ludlum Measurements, Inc.
FORM C22A 06/02/2006

AC Inst. Only ☐ Passed Dielectric (Hi-Pot) and Continuity Test ☐ Failed:

Designer and Manufacturer
of
Scientific and Industrial
Instruments

LUDLUM MEASUREMENTS, INC.
POST OFFICE BOX 810 PH. 325-235-5494
501 OAK STREET FAX NO. 325-235-4672
SWEETWATER, TEXAS 79556, U.S.A.

CONVERSION CHART

Customer CABRERA SERVICES Date 17-Jan-07 Order #. 269547/309433

Model 3 Serial No. 79511 Detector Model 44-9 Serial No. PR137499

Source Cs-137 194.6 mCi Cs-137 20 mCi High Voltage 900 V

Input Sensitivity 27 mV

Reference Point	"As Found" Readings (CPM): Meter Reading	Range/Scale	After Adjustment Readings (CPM): Meter Reading	Range/Scale
150 mR/hr	2K	x100	2K	x100
50 mR/hr	1.1K	x100	1.1K	x100
15 mR/hr	0.41K	x100	0.4K	x100
5 mR/hr	1.5K	x10	1.5K	x10
1.5 mR/hr	0.45K	x10	0.45K	x10
1.0 mR/hr	3.2K	x1	3.2K	x1

Signature: Duaine Jackson Date 17-JAN07

FORM C17-1A 04/09/2003

MJW Technical Services
243 Root St.
Suite 100
Olean, New York 14760
Voice: (716) 372-5300
Fax: (716) 372-5307

Certificate Of Calibration

This Certificate will be accompanied by Calibration Charts or Readings where Applicable

Customer	Instrument
Customer Name: Cabrera Services Inc	Manufacturer: Ludlum Measurements, Inc.
Address: 473 Silver Lane East Hartford, CT 06118	Model: 3 Serial Number: 79552 ✓
	Detector Manufacturer: Ludlum Measurements, Inc.
Contact Name: Chuck M	Det. Model: 44-9 Serial Number: PR085991 ✓
Customer PO/ CC. Number: Work Order Number: 2007-189	Meterface: 202-002 Calibration Method: Electronic

Instrument Received: ☑ Within Toler. +-10% ☐ 10-20% ☐ Out of Tol. ☐ Requiring Repair ☐ Other (See Comments)

☑ Geotropism ☑ Meter Zero ☑ Mech. Ck. ☐ HV Readout ☑ Battery Check ☑ Reset

☑ Audio ☐ Window Status ☑ FS Response ☐ Linearity ☐ Background Subtract ☐ Alarm Set

Temperature: 71.3 F Humidity: 22 % Pressure: 726.4 mm Hg Altitude: 1451 ft

Instrument Calibration

Multiplier\Range	Calibration Point	Instrument Response		Reference instruments and / or Sources			
		Before Calibration	After Calibration	Pulser: LUD500-2	220099		
X 0.1	100 cpm	100 cpm	100 cpm	Th-230	C7644	C-14	C7804
X 0.1	400 cpm	400 cpm	400 cpm	Sr-90	C7661	Tc-99	C7641
X 1	1 Kcpm	0.9 Kcpm	1 Kcpm				
X 1	4 Kcpm	3.8 Kcpm	4.1 Kcpm				
X 10	10 Kcpm	9.5 Kcpm	10 Kcpm				
X 10	40 Kcpm	39.5 Kcpm	41 Kcpm				
X 100	100 Kcpm	100 Kcpm	100 Kcpm				
X 100	400 Kcpm	405 Kcpm	405 Kcpm				

Comments

Inst. Voltage: 900 V Input Sensitivity: 27 mV

Efficiencies:

4 PI at 0.25 "

Th230 6.3%

Tc99 11.1%

SrY90 21.1%

C14 2.7%

Statement of Certification

MJW Technical Sevices, Inc certifies that the above instrument has been calibrated by standards traceable to the National Institute of Standards and Technology, or to the calibration facilities of other International Standards organization members, or have been derived from accepted values of natural physical constants or have been derived by the ratio type of calibration techniques. The calibration system conforms to the requirements of ANS/NCSL Z540-1-1994 and ANSI N323. The instrument listed above was inspected prior to shipment and it met all the manufacturer's published operating specifications. (MJW technical Services is not responsible for damage incurred during shipment or use of this instrument).

Instrument Calibrated By: [signature] Reviewed By: Linda M. Lund Date 2/12/07.

Calibration Date: 02/12/2007 Calibration Due: 02/12/2008

MJW Technical Services
243 Root St.
Suite 100
Olean, New York 14760
Voice: (716) 372-5300
Fax: (716) 372-5307

Certificate Of Calibration

This Certificate will be accompanied by Calibration Charts or Readings where Applicable

Customer	Instrument
Customer Name: Cabrera Services Inc	Manufacturer: Ludlum Measurements, Inc.
Address: 473 Silver Lane East Hartford, CT 06118	Model: 3 Serial Number: 79498
	Detector Manufacturer: Ludlum Measurements, Inc.
Contact Name: Chuck Mikaitis	Det. Model: 44-9 Serial Number: PR073106
Customer PO/ CC. Number: 07-444 / Work Order Number: 2007-229	Meterface: 202-002 Calibration Method: Electronic

Instrument Received: ☑ Within Toler. +-10% ☐ 10-20% ☐ Out of Tol. ☐ Requiring Repair ☐ Other (See Comments)

☑ Geotropism ☑ Meter Zero ☑ Mech. Ck. ☐ HV Readout ☑ Battery Check ☑ Reset

☑ Audio ☐ Window Status ☑ FS Response ☐ Linearity ☐ Background Subtract ☐ Alarm Set

Temperature: 71.1 F Humidity: 28 % Pressure: 723.9 mm Hg Altitude: 1451 ft

Instrument Calibration

Multiplier\Range	Calibration Point	Instrument Response		Reference instruments and / or Sources			
		Before Calibration	After Calibration	Pulser: LUD500-2	220099		
X 0.1	100 cpm	100 cpm	100 cpm	C-14	C7804	SrY-90	C7-661
X 0.1	400 cpm	400 cpm	400 cpm	Th-230	C7-644	Tc-99	C7-641
X 1	1 Kcpm	1 Kcpm	1 Kcpm				
X 1	4 Kcpm	4 Kcpm	4 Kcpm				
X 10	10 Kcpm	10 Kcpm	10 Kcpm				
X 10	40 Kcpm	40 Kcpm	40 Kcpm				
X 100	100 Kcpm	100 Kcpm	100 Kcpm				
X 100	400 Kcpm	400 Kcpm	400 Kcpm				

Comments

Inst. Voltage: 900 V Input Sensitivity: 25 mV

4 Pi Efficiency @ 1/4 inch

Th-230 9.6%

C-14 3.2%

Tc-99 10.5%

SrY-90 21.6%

Statement of Certification

MJW Technical Sevices, Inc certifies that the above instrument has been calibrated by standards traceable to the National Institute of Standards and Technology, or to the calibration facilities of other International Standards organization members, or have been derived from accepted values of natural physical constants or have been derived by the ratio type of calibration techniques. The calibration system conforms to the requirements of ANS/NCSL Z540-1-1994 and ANSI N323. The instrument listed above was inspected prior to shipment and it met all the manufacturer's published operating specifications. (MJW technical Services is not responsible for damage incurred during shipment or use of this instrument).

Instrument Calibrated By: [signature] Reviewed By: Linda M. Zund Date 4/12/07

Calibration Date: 04/11/2007 Calibration Due: 04/11/2008

Calibration Technology

A Division of RSCS, Inc.

Calibration Certificate
ID Number: B985Y13328-0

Customer: Hank Siegrist
Cabrera Services, Inc.
473 Silver Lane
East Hartford, CT 06118-

Instrument
Bicron Model MicroRem

Serial Number
B985Y

Precision Check				
Test 1	Test 2	Test 3	Mean	Results
4.00 mrem/hr	4.00 mrem/hr	4.00 mrem/hr	4.00 mrem/hr	Satisfactory

Accuracy Check			
Range	Target Value	As Found	As Left
X1000	160 mrem/hr	160 mrem/hr	175 mrem/hr
X1000	40 mrem/hr	35 mrem/hr	40 mrem/hr
X100	16 mrem/hr	15.5 mrem/hr	17.5 mrem/hr
X100	4 mrem/hr	3.5 mrem/hr	4.0 mrem/hr
X10	1.6 mrem/hr	1.45 mrem/hr	1.65 mrem/hr
X10	0.4 mrem/hr	0.35 mrem/hr	0.4 mrem/hr
X1	160 µrem/hr	160 µrem/hr	160 µrem/hr
X1	40 µrem/hr	40 µrem/hr #	40 µrem/hr #
X0.1	16 µrem/hr	16 µrem/hr #	16 µrem/hr #
X0.1	4 µrem/hr	4 µrem/hr #	4 µrem/hr #

Readings with * indicate ranges where As-Found readings are >20% of Target value. Readings with ** indicate As-left readings are >10% of Target value
Readings with # indicate ranges where pulser was used.

MTE Instrument Type	Model	CalDueDate
Pulser	Ludlum 500-4 SN: 66151	01/15/2008

Outer Physical Check: *Pass*
Internal Check: *Pass*
Geotropism Check: *Pass*
Mechanical Zero: *Pass*
Tap Test: *Pass*

Calibrated by: QA Review:

Calibration Date: 07/24/2007
Expires: 07/24/2008

Atmospheric Conditions - Temperature: 79°F Humidity: 42% Barometric Pressure: 29.81"hg
This calibration was performed by RSCS Inc. 91 Portsmouth ave, Stratham NH 03885 using a NIST Traceable radiation source, in conformance to the following standards: ANSI N323A (1997). RSCS New Hampshire Radioactive Material License Number: 381R. RSCS calibration services are performed in accordance with the RSCS Radiation Protection Program Manual and Standard Operating Procedure 2.4. This calibration certificate shall not be reproduced except in full without the express written consent of RSCS, Inc

Radiation Safety and Control Services, Inc.
91 Portsmouth Ave. Stratham, NH 03885
1-800-525-8339 (603) 778-2871 Fax (603) 778-6879 www.radsafety.com

EBERLINE SERVICES

CERTIFICATE OF CALIBRATION

Electroplated Alpha Standard

S.O.# 6481
P.O.# 06-735

Description of Standard:

Model No. DNS-11 Serial No. 2888-01 Isotope Th-230

Electroplated on polished SS disc, 0.79 mm thick.

Total diameter of 4.77 cm and an active diameter of 4.45 cm.

The radioactive material is permanently fixed to the disc by heat treatment without any covering over the active surface.

Measurement Method:

The 2pi alpha emission rate was measured using an internal gas flow proportional chamber. Absolute counting of alpha particles emitted in the hemisphere above the active surface was verified by counting above, below, and at the operative voltage. The calibration is traceable to NIST by reference to an NIST calibrated alpha source S/N 4001-02.

Measurement Result:

The observed alpha particles emitted from the surface of the disc per minute (cpm) on the calibration date was:

9,720 ± 388

The total disintegration rate (dpm) assuming 1.5% backscatter of alpha particles from the surface of the disc, was:

19,200 ± 766 (0.00863 μCi)

The uncertainty of the measurement is 4 %, which is the sum of random counting error at the 99% confidence level, and the estimated upper limit of systematic error in this measurement.

Calibrated by: ART REUST Reviewed by: Anthony W. Toth

Calibration Technician: Art Reust Q.A. Representative: Anthony W. Toth

Calibration Date: 6-14-2006 Reviewed Date: 6-15-06

7021 Pan American Freeway NE
Albuquerque, New Mexico 87109-4238
(505) 262-2694 Fax (505) 262-2698
www.eberlineservices.com

EBERLINE SERVICES

CERTIFICATE OF CALIBRATION

Electroplated Beta Standard

S.O.# 3759
P.O.# 01-325

Description of Standard:

Model No. DNS-12 Serial No. 2898-01 Isotope Tc-99

Electroplated on polished SS disc, 0.79 mm thick.

Total diameter of 4.77 cm and an active diameter of 4.45 cm.

The radioactive material is permanently fixed to the disc by heat treatment without any covering over the active surface.

Measurement Method:

The 2pi beta emission rate was measured using an internal gas flow proportional chamber. Absolute counting of beta particles emitted in the hemisphere above the active surface was verified by counting above, below, and at the operative voltage. The calibration is traceable to NIST by reference to an NIST calibrated beta source S/N 2148/90.

Measurement Result:

The observed beta count rate from the surface of the disc per minute (cpm) on the calibration date was:

10,800 ± 432

The total disintegration rate (dpm) assuming 25 % backscatter of beta particles from the surface of the disc, was:

17,300 ± 692 (0.00780 μCi)

The uncertainty of the measurement is 4 %, which is the sum of random counting error at the 99% confidence level, and the estimated upper limit of systematic error in this measurement.

Calibrated by: ART REUST Reviewed by: Barbara M. Friberg

Calibration Technician: Q.A. Representative:

Calibration Date: 6-05-2001 Reviewed Date: 6/11/01

Analytical Services
7021 Pan American Freeway NE
Albuquerque, New Mexico 87109-4238
(505) 345-3461 Fax (505) 761-5416
Toll Free (866) RAD-LABS (723-5227)
www.eberlineservices.com

Inst.#196062 (2221)		
QC Daily Source		
Date	Result (cpm)	P/F
10/15/2007	215250	Pass
10/16/2007	225560	Pass
10/17/2007	223425	Pass
10/18/2007	221304	Pass
10/19/2007	220706	Pass
10/22/2007	208867	Pass
10/23/2007	209238	Pass
10/24/2007	213847	Pass
10/25/2007	227106	Pass
10/26/2007	227868	Pass
10/29/2007	227445	Pass
10/30/2007	215451	Pass
10/31/2007	228172	Pass
11/1/2007	223911	Pass
11/2/2007	222219	Pass
11/5/2007	224847	Pass
11/6/2007	228360	Pass
11/7/2007	221124	Pass
11/8/2007	216396	Pass
11/9/2007	218821	Pass
11/12/2007	217613	Pass
11/13/2007	225435	Pass
11/14/2007	223795	Pass
11/15/2007	215554	Pass

Inst.#196062 (2221)		Source Ser. #	1228
Initial Source Readings		Nuclide	Cs-137
Date	Result (cpm)		
10/15/2007	210536		
10/15/2007	212316		
10/15/2007	216401		
10/15/2007	216814		
10/15/2007	216600		
10/15/2007	216759		
10/15/2007	216552		
10/15/2007	216904		
10/15/2007	215250		
10/15/2007	225560		
	Average		
	216369		

Inst.#216512 (2221)		
QC Daily Source		
Date	Result (cpm)	P/F
10/15/2007	216421	Pass
10/16/2007	222166	Pass
10/17/2007	223742	Pass
10/18/2007	223777	Pass
10/19/2007	216965	Pass
10/22/2007	222043	Pass
10/23/2007	219601	Pass
10/24/2007	221202	Pass
10/25/2007	220021	Pass
10/26/2007	218636	Pass
10/29/2007	210349	Pass
10/30/2007	223580	Pass
10/31/2007	210900	Pass
11/1/2007	223232	Pass
11/2/2007	222219	Pass
11/5/2007	216866	Pass
11/6/2007	221530	Pass
11/7/2007	213564	Pass
11/8/2007	223687	Pass
11/9/2007	215009	Pass
11/12/2007	206869	Pass
11/13/2007	222274	Pass

Inst.#216512 (2221)		Source Ser. #	1228
Initial Source Readings		Nuclide	Cs-137
Date	Result (cpm)		
10/15/2007	217475		
10/15/2007	217212		
10/15/2007	217100		
10/15/2007	217193		
10/15/2007	216510		
10/15/2007	216262		
10/15/2007	216295		
10/15/2007	216599		
10/15/2007	216923		
10/15/2007	216421		
	Average		
	216799		

Inst.#B985Y (uRem)		
QC Daily Source		
Date	Result (µrem/hr)	P/F
10/15/2007	100	Pass
10/16/2007	110	Pass
10/17/2007	100	Pass
10/18/2007	110	Pass
10/19/2007	100	Pass
10/22/2007	110	Pass
10/23/2007	100	Pass
10/24/2007	100	Pass
10/25/2007	100	Pass
10/26/2007	100	Pass
10/29/2007	100	Pass
10/30/2007	100	Pass
10/31/2007	100	Pass
11/1/2007	100	Pass
11/2/2007	100	Pass
11/5/2007	100	Pass
11/6/2007	110	Pass
11/7/2007	100	Pass
11/8/2007	100	Pass
11/9/2007	100	Pass
11/12/2007	110	Pass
11/13/2007	100	Pass
11/14/2007	110	Pass

Inst.#B985Y (uRem)		Source Ser. #	1228
Initial Source Readings		Nuclide	Cs-137
Date	Result (µrem/hr)		
10/15/2007	100		
10/15/2007	100		
10/15/2007	110		
10/15/2007	100		
10/15/2007	100		
10/15/2007	110		
10/15/2007	100		
10/15/2007	110		
10/15/2007	110		
10/15/2007	100		
	Average		
	104		

Inst.#1716 (uRem)		
QC Daily Source		
Date	Result (µrem/hr)	P/F
10/15/2007	140	Pass
10/16/2007	150	Pass
10/17/2007	140	Pass
10/18/2007	140	Pass
10/19/2007	140	Pass
10/22/2007	150	Pass
10/23/2007	140	Pass
10/24/2007	150	Pass
10/25/2007	150	Pass
10/26/2007	150	Pass
10/29/2007	150	Pass
10/30/2007	140	Pass
10/31/2007	150	Pass
11/1/2007	140	Pass
11/2/2007	140	Pass
11/5/2007	150	Pass
11/6/2007	140	Pass
11/7/2007	150	Pass
11/8/2007	140	Pass
11/9/2007	140	Pass
11/12/2007	140	Pass
11/13/2007	140	Pass
11/14/2007	140	Pass
11/15/2007	140	Pass

Inst.#1716 (uRem)		Source Ser. #	1228
Initial Source Readings		Nuclide	Cs-137
Date	Result (µrem/hr)		
10/15/2007	140		
10/15/2007	150		
10/15/2007	150		
10/15/2007	140		
10/15/2007	140		
10/15/2007	150		
10/15/2007	140		
10/15/2007	150		
10/15/2007	150		
10/15/2007	140		
	Average		
	145		

Equipment Chi-Square Distribution Worksheet

Count No.	X_i	X_m-X_i	$(X_m-X_i)^2$
1	6825	146.6	21491.56
2	6909	62.6	3918.76
3	6999	-27.4	750.76
4	7090	-118.4	14018.56
5	7123	-151.4	22921.96
6	6895	76.6	5867.56
7	6993	-21.4	457.96
8	7080	-108.4	11750.56
9	6905	66.6	4435.56
10	6957	14.6	213.16
11	6765	206.6	42683.56
12	6917	54.6	2981.16
13	7020	-48.4	2342.56
14	7136	-164.4	27027.36
15	6946	25.6	655.36
16	6896	75.6	5715.36
17	6973	-1.4	1.96
18	6950	21.6	466.56
19	7081	-109.4	11968.36
20	6972	-0.4	0.16
Sum total	139432		179668.8
X_m	6971.6		

Instrument/Detector	2929 / 43-10-1
Serial # / Serial#	196226 / PR215943
Date Performed	15-Oct-07
Count time interval (minutes)	1
Source Used	Th-230

X^2 = 25.77

Note: Accept χ^2 if between 8.91 and 32.8

Equipment Chi-Square Distribution Worksheet

Count No.	X_i	X_m-X_i	$(X_m-X_i)^2$
1	7434	-213.45	45560.9
2	7264	-43.45	1887.902
3	7302	-81.45	6634.102
4	7242	-21.45	460.1025
5	7088	132.55	17569.5
6	7331	-110.45	12199.2
7	7057	163.55	26748.6
8	7246	-25.45	647.7025
9	7143	77.55	6014.003
10	7108	112.55	12667.5
11	7274	-53.45	2856.902
12	7240	-19.45	378.3025
13	7339	-118.45	14030.4
14	7284	-63.45	4025.902
15	7144	76.55	5859.903
16	7189	31.55	995.4025
17	7088	132.55	17569.5
18	7246	-25.45	647.7025
19	7157	63.55	4038.603
20	7235	-14.45	208.8025
Sum total	144411		181001
X_m	7220.55		

Instrument/Detector	2929 / 43-10-1
Serial # / Serial#	137607 / PR142936
Date Performed	15-Oct-07
Count time interval (minutes)	1
Source Used	Th-230

X^2 = 25.07

Note: Accept χ^2 if between 8.91 and 32.8

CABRERA ALPHA-BETA COUNTING INSTRUMENT (Rev 6)

Counting Instrument:			2929		Detector:	43-10-1		Calibration Date:		9/28/2008								
Serial #:			137607		Serial #:	PR142936		12 month calibration:		OK								
Detector Active Area or Area Covered by Smear (cm^2):						100												
	Efficiency (fraction)	Source Nuclide	Source Number	Original Source Activity (DPM)	Source Creation Date	$T_{1/2}$ (yr)	Source Decayed Activity	Required MDA ($DPM/100cm^2$)	Control Chart & Daily Bkg Count Time	Control Chart & Daily Source-Sample Count Time	Control Chart bkg Average α/β cpm	Control Chart bkg 1 sigma, cpm	Control Chart Source-bkg Average α/β cpm	Control Chart source 1 sigma, cpm				
Alpha	0.3760	Th-230	2888-01	19,200	6/14/2006	7.54E+04	19,200	20	10	1	0.26	0.20	7221.2	120.28				
Beta	0.1370	Tc-99	2898-01	17,300	6/5/2001	2.11E+05	17,300	1000	10	1	44.69	2.42	2765.8	43.30				

Date	Daily Bkg Counts		Daily Check Source Counts		Daily Bkg Rate (cpm)		Net Daily Source Rate (cpm)		Bkg QC Pass/Fail		Source QC Pass/Fail				α MDA OK?	β MDA OK?	H.P. Technician	Technician Initials
	Alpha	Beta	Alpha	Beta	Alpha	Beta	Alpha	Beta	Alpha	Beta	Alpha	Beta	MDA α (dpm)	MDA β (dpm)				
10/15/2007	3	435	7274	2837	0.3	43.5	7273.7	2793.5	PASS	PASS	PASS	PASS	13.01	188	Yes	Yes	MMD	MMD
10/16/2007	6	424	7154	2777	0.6	42.4	7153.4	2734.6	PASS	PASS	PASS	PASS	15.09	186	Yes	Yes	MMD	MMD
10/17/2007	1	467	7053	2710	0.1	46.7	7052.9	2663.3	PASS	PASS	PASS	*QUESTION*	10.88	194	Yes	Yes	MMD	MMD
10/18/2007	3	465	7220	2763	0.3	46.5	7219.7	2716.5	PASS	PASS	PASS	PASS	13.01	194	Yes	Yes	MMD	MMD
10/19/2007	0	385	7060	2692	0.0	38.5	7060.0	2653.5	PASS	*QUESTION*	PASS	*QUESTION*	7.98	178	Yes	Yes	MMD	MMD
10/19/2007	4	460	7060	2763	0.4	46.0	7059.6	2717.0	PASS	PASS	PASS	PASS	13.78	193	Yes	Yes	MMD	MMD
10/22/2007	6	437	7258	2817	0.6	43.7	7257.4	2773.3	PASS	PASS	PASS	PASS	15.09	188	Yes	Yes	MMD	MMD
10/23/2007	3	445	7006	2846	0.3	44.5	7005.7	2801.5	PASS	PASS	PASS	PASS	13.01	190	Yes	Yes	MMD	MMD
10/24/2007	4	433	7228	2832	0.4	43.3	7227.6	2788.7	PASS	PASS	PASS	PASS	13.78	188	Yes	Yes	MMD	MMD
10/25/2007	1	454	6999	2841	0.1	45.4	6998.9	2795.6	PASS	PASS	PASS	PASS	10.88	192	Yes	Yes	MMD	MMD
10/26/2007	0	409	7165	2858	0.0	40.9	7165.0	2817.1	PASS	PASS	PASS	PASS	7.98	183	Yes	Yes	MMD	MMD
10/29/2007	0	402	6997	2770	0.0	40.2	6997.0	2729.8	PASS	PASS	PASS	PASS	7.98	182	Yes	Yes	DA	DA
10/30/2007	6	460	7119	2810	0.6	46.0	7118.4	2764.0	PASS	PASS	PASS	PASS	15.09	193	Yes	Yes	DA	DA
10/31/2007	6	433	6984	2695	0.6	43.3	6983.4	2651.7	PASS	PASS	PASS	*QUESTION*	15.09	188	Yes	Yes	DA	DA
11/1/2007	3	508	7154	2796	0.3	50.8	7153.7	2745.2	PASS	*QUESTION*	PASS	PASS	13.01	201	Yes	Yes	DA	DA
11/2/2007	5	465	6993	2806	0.5	46.5	6992.5	2759.5	PASS	PASS	PASS	PASS	14.47	194	Yes	Yes	DA	DA
11/5/2007	1	471	7152	2736	0.1	47.1	7151.9	2688.9	PASS	PASS	PASS	PASS	10.88	195	Yes	Yes	DA	DA
11/6/2007	2	517	7176	2776	0.2	51.7	7175.8	2724.3	PASS	*QUESTION*	PASS	PASS	12.08	203	Yes	Yes	DA	DA
11/7/2007	1	441	7186	2846	0.1	44.1	7185.9	2801.9	PASS	PASS	PASS	PASS	10.88	189	Yes	Yes	DA	DA
11/8/2007	3	438	7132	2753	0.3	43.8	7131.7	2709.2	PASS	PASS	PASS	PASS	13.01	189	Yes	Yes	DA	DA
11/9/2007	6	471	7240	2898	0.6	47.1	7239.4	2850.9	PASS	PASS	PASS	PASS	15.09	195	Yes	Yes	DA	DA
11/12/2007	5	494	6915	2785	0.5	49.4	6914.5	2735.6	PASS	PASS	*QUESTION*	PASS	14.47	199	Yes	Yes	DA	DA
11/13/2007	2	490	7038	2820	0.2	49.0	7037.8	2771.0	PASS	PASS	PASS	PASS	12.08	198	Yes	Yes	DA	DA
11/14/2007	1	469	7039	2825	0.1	46.9	7038.9	2778.1	PASS	PASS	PASS	PASS	10.88	194	Yes	Yes	DA	DA
11/15/2007	4	454	7250	2845	0.4	45.4	7249.6	2799.6	PASS	PASS	PASS	PASS	13.78	192	Yes	Yes	DA	DA

CABRERA ALPHA-BETA COUNTING INSTRUMENT (Rev 6)

Counting Instrument:			2929		Detector:	43-10-1		Calibration Date:		9/26/2008								
Serial #:			196226		Serial #:	PR215943		12 month calibration:		OK								
Detector Active Area or Area Covered by Smear (cm^2):						100												
	Efficiency (fraction)	Source Nuclide	Source Number	Original Source Activity (DPM)	Source Creation Date	$T_{1/2}$ (yr)	Source Decayed Activity	Required MDA ($DPM/100cm^2$)	Control Chart & Daily Bkg Count Time	Control Chart & Daily Source-Sample Count Time	Control Chart bkg Average α/β cpm	Control Chart bkg 1 sigma, cpm	Control Chart Source-bkg Average α/β cpm	Control Chart source 1 sigma, cpm				
Alpha	0.3630	Th-230	2888-01	19,200	6/14/2006	7.54E+04	19,200	20	10	1	0.12	0.11	6977.5	97.39				
Beta	0.1230	Tc-99	2898-01	17,300	6/5/2001	2.11E+05	17,300	1000	10	1	37.09	2.06	2460.0	42.46				

Date	Daily Bkg Counts		Daily Check Source Counts		Daily Bkg Rate (cpm)		Net Daily Source Rate (cpm)		Bkg QC Pass/Fail		Source QC Pass/Fail				α MDA OK?	β MDA OK?	H.P. Technician	Technician Initials
	Alpha	Beta	Alpha	Beta	Alpha	Beta	Alpha	Beta	Alpha	Beta	Alpha	Beta	MDA α (dpm)	MDA β (dpm)				
10/15/2007	1	365	6972	2468	0.1	36.5	6971.9	2431.5	PASS	PASS	PASS	PASS	11.27	194	Yes	Yes	MMD	MMD
10/16/2007	0	390	6969	2504	0.0	39.0	6969.0	2465.0	PASS	PASS	PASS	PASS	8.26	200	Yes	Yes	MMD	MMD
10/17/2007	1	376	7011	2491	0.1	37.6	7010.9	2453.4	PASS	PASS	PASS	PASS	11.27	196	Yes	Yes	MMD	MMD
10/18/2007	0	409	6919	2558	0.0	40.9	6919.0	2517.1	PASS	PASS	PASS	PASS	8.26	204	Yes	Yes	MMD	MMD
10/18/2007	2	398	6919	2558	0.2	39.8	6918.8	2518.2	PASS	PASS	PASS	PASS	12.52	201	Yes	Yes	MMD	MMD
10/19/2007	0	417	6971	2692	0.0	41.7	6971.0	2650.3	PASS	*QUESTION*	PASS	**FAIL**	8.26	206	Yes	Yes	MMD	MMD
10/19/2007	2	357	6971	2526	0.2	35.7	6970.8	2490.3	PASS	PASS	PASS	PASS	12.52	192	Yes	Yes	MMD	MMD
10/22/2007	2	379	6935	2441	0.2	37.9	6934.8	2403.1	PASS	PASS	PASS	PASS	12.52	197	Yes	Yes	MMD	MMD
10/23/2007	0	377	6982	2596	0.0	37.7	6982.0	2558.3	PASS	PASS	PASS	*QUESTION*	8.26	197	Yes	Yes	MMD	MMD
10/24/2007	2	386	6983	2516	0.2	38.6	6982.8	2477.4	PASS	PASS	PASS	PASS	12.52	199	Yes	Yes	MMD	MMD
10/25/2007	1	351	6840	2422	0.1	35.1	6839.9	2386.9	PASS	PASS	PASS	PASS	11.27	191	Yes	Yes	MMD	MMD
10/26/2007	1	395	7000	2597	0.1	39.5	6999.9	2557.5	PASS	PASS	PASS	*QUESTION*	11.27	201	Yes	Yes	MMD	MMD
10/29/2007	1	372	6982	2529	0.1	37.2	6981.9	2491.8	PASS	PASS	PASS	PASS	11.27	195	Yes	Yes	DA	DA
10/30/2007	3	381	7133	2604	0.3	38.1	7132.7	2565.9	PASS	PASS	PASS	*QUESTION*	13.47	198	Yes	Yes	DA	DA
10/31/2007	1	376	6945	2578	0.1	37.6	6944.9	2540.4	PASS	PASS	PASS	PASS	11.27	196	Yes	Yes	DA	DA
11/1/2007	0	365	6833	2486	0.0	36.5	6833.0	2449.5	PASS	PASS	PASS	PASS	8.26	194	Yes	Yes	DA	DA
11/2/2007	3	339	7061	2569	0.3	33.9	7060.7	2535.1	PASS	PASS	PASS	PASS	13.47	188	Yes	Yes	DA	DA
11/5/2007	1	363	7204	2545	0.1	36.3	7203.9	2508.7	PASS	PASS	*QUESTION*	PASS	11.27	193	Yes	Yes	DA	DA
11/6/2007	2	388	7138	2530	0.2	38.8	7137.8	2491.2	PASS	PASS	PASS	PASS	12.52	199	Yes	Yes	DA	DA
11/7/2007	0	362	7078	2558	0.0	36.2	7078.0	2521.8	PASS	PASS	PASS	PASS	8.26	193	Yes	Yes	DA	DA
11/8/2007	3	329	6998	2560	0.3	32.9	6997.7	2527.1	PASS	*QUESTION*	PASS	PASS	13.47	185	Yes	Yes	DA	DA
11/9/2007	2	391	7042	2497	0.2	39.1	7041.8	2457.9	PASS	PASS	PASS	PASS	12.52	200	Yes	Yes	DA	DA
11/12/2007	3	352	6901	2600	0.3	35.2	6900.7	2564.8	PASS	PASS	PASS	*QUESTION*	13.47	191	Yes	Yes	DA	DA
11/13/2007	2	344	7075	2555	0.2	34.4	7074.8	2520.6	PASS	PASS	PASS	PASS	12.52	189	Yes	Yes	DA	DA
11/14/2007	1	366	6945	2586	0.1	36.6	6944.9	2549.4	PASS	PASS	PASS	*QUESTION*	11.27	194	Yes	Yes	DA	DA
11/15/2007	4	393	7107	2525	0.4	39.3	7106.6	2485.7	*QUESTION*	PASS	PASS	PASS	14.28	200	Yes	Yes	DA	DA

CABRERA ALPHA-BETA COUNTING INSTRUMENT (Rev 5)

Counting Instrument:			2360		Detector:	43/93		Calibration Date:		10/5/2008								
Serial #:			193652		Serial #:	199836		12 month calibration:		OK								
Detector Active Area or Area Covered by Smear (cm^2):						100		NRC 6 Mo Cal. Due Date?		OK								
	Efficiency (fraction)	Source Nuclide	Source Number	Original Source Activity (DPM)	Source Creation Date	$T_{1/2}$ (yr)	Source Decayed Activity	Required MDA ($DPM/100cm^2$)	Control Chart & Daily Bkg Count Time	Control Chart & Daily Source-Sample Count Time	Control Chart bkg Average α/β cpm	Control Chart bkg 1 sigma, cpm	Control Chart Source-bkg Average α/β cpm	Control Chart source 1 sigma, cpm				
Alpha	0.1500	Th230	2888-01	19,200	3/30/2004	7.54E+04	19,199	100	1	1	0.70	0.95	4378.5	59.29				
Beta	0.1000	Tc99	2898-01	17,300	3/30/2004	2.11E+02	17,100	1000	1	1	183.30	10.60	2437.7	54.18				

Date	Daily Bkg Counts		Daily Check Source Counts		Daily Bkg Rate (cpm)		Net Daily Source Rate (cpm)		Bkg QC Pass/Fail		Source QC Pass/Fail				α MDA OK?	β MDA OK?	H.P. Technician	Technician Initials
	Alpha	Beta	Alpha	Beta	Alpha	Beta	Alpha	Beta	Alpha	Beta	Alpha	Beta	MDA α (dpm)	MDA β (dpm)				
10/15/2007	0	190	4403	2587	0.0	190.0	4403.0	2397.0	PASS	PASS	PASS	PASS	20.00	671	Yes	Yes	GT	DA
10/18/2007	1	200	4477	2600	1.0	200.0	4476.0	2400.0	PASS	PASS	PASS	PASS	51.02	688	Yes	Yes	GT	DA
10/19/2007	0	190	4460	2687	0.0	190.0	4460.0	2497.0	PASS	PASS	PASS	PASS	20.00	671	Yes	Yes	GT	DA
10/22/2007	0	189	4429	2692	0.0	189.0	4429.0	2503.0	PASS	PASS	PASS	PASS	20.00	670	Yes	Yes	GT	DA
10/23/2007	2	196	4430	2609	2.0	196.0	4428.0	2413.0	PASS	PASS	PASS	PASS	63.87	681	Yes	Yes	GT	DA
10/24/2007	1	189	4399	2773	1.0	189.0	4398.0	2584.0	PASS	PASS	PASS	*QUESTION*	51.02	670	Yes	Yes	GT	DA
10/25/2007	0	191	4506	2603	0.0	191.0	4506.0	2412.0	PASS	PASS	*QUESTION*	PASS	20.00	673	Yes	Yes	GT	DA
10/26/2007	1	174	4428	2603	1.0	174.0	4427.0	2429.0	PASS	PASS	PASS	PASS	51.02	644	Yes	Yes	GT	DA

CABRERA ALPHA-BETA COUNTING INSTRUMENT (Rev 5)

Counting Instrument:			2360		Detector:	43/93		Calibration Date:		10/5/2008								
Serial #:			220246		Serial #:	199826		12 month calibration:		OK								
Detector Active Area or Area Covered by Smear (cm^2):						100		NRC 6 Mo Cal. Due Date?		OK								
	Efficiency (fraction)	Source Nuclide	Source Number	Original Source Activity (DPM)	Source Creation Date	$T_{1/2}$ (yr)	Source Decayed Activity	Required MDA ($DPM/100cm^2$)	Control Chart & Daily Bkg Count Time	Control Chart & Daily Source-Sample Count Time	Control Chart bkg Average α/β cpm	Control Chart bkg 1 sigma, cpm	Control Chart Source-bkg Average α/β cpm	Control Chart source 1 sigma, cpm				
Alpha	0.1500	Th230	2888-01	19,200	3/30/2004	7.54E+04	19,199	100	1	1	0.70	0.67	4349.2	87.91				
Beta	0.1000	Tc99	2898-01	17,300	3/30/2004	2.11E+02	17,099	1000	1	1	171.20	10.52	2052.4	63.68				

Date	Daily Bkg Counts		Daily Check Source Counts		Daily Bkg Rate (cpm)		Net Daily Source Rate (cpm)		Bkg QC Pass/Fail		Source QC Pass/Fail				α MDA OK?	β MDA OK?	H.P. Technician	Technician Initials
	Alpha	Beta	Alpha	Beta	Alpha	Beta	Alpha	Beta	Alpha	Beta	Alpha	Beta	MDA α (dpm)	MDA β (dpm)				
10/22/2007	0	177	4410	2237	0.0	177.0	4410.0	2060.0	PASS	PASS	PASS	PASS	20.00	649	Yes	Yes	GT	DA
10/23/2007	0	187	4311	2242	0.0	187.0	4311.0	2055.0	PASS	PASS	PASS	PASS	20.00	666	Yes	Yes	GT	DA
10/24/2007	1	193	4312	2347	1.0	193.0	4311.0	2154.0	PASS	*QUESTION*	PASS	PASS	51.02	676	Yes	Yes	GT	DA
10/25/2007	0	168	4246	2124	0.0	168.0	4246.0	1956.0	PASS	PASS	PASS	PASS	20.00	633	Yes	Yes	GT	DA
10/26/2007	1	168	4236	2258	1.0	168.0	4235.0	2090.0	PASS	PASS	PASS	PASS	51.02	633	Yes	Yes	GT	DA
10/29/2007	0	164	4299	2219	0.0	164.0	4299.0	2055.0	PASS	PASS	PASS	PASS	20.00	626	Yes	Yes	GT	DA
10/30/2007	0	167	4269	2279	0.0	167.0	4269.0	2112.0	PASS	PASS	PASS	PASS	20.00	631	Yes	Yes	GT	DA
10/31/2007	1	174	4229	2193	1.0	174.0	4228.0	2019.0	PASS	PASS	PASS	PASS	51.02	644	Yes	Yes	GT	DA
11/1/2007	1	160	4263	2334	1.0	160.0	4262.0	2174.0	PASS	PASS	PASS	PASS	51.02	619	Yes	Yes	GT	DA
11/2/2007	0	159	4227	2353	0.0	159.0	4227.0	2194.0	PASS	PASS	PASS	*QUESTION*	20.00	617	Yes	Yes	GT	DA
11/5/2007	2	166	4277	2262	2.0	166.0	4275.0	2096.0	PASS	PASS	PASS	PASS	63.87	629	Yes	Yes	GT	DA
11/6/2007	0	165	4283	2247	0.0	165.0	4283.0	2082.0	PASS	PASS	PASS	PASS	20.00	628	Yes	Yes	GT	DA
11/7/2007	1	173	4364	2271	1.0	173.0	4363.0	2098.0	PASS	PASS	PASS	PASS	51.02	642	Yes	Yes	GT	DA
11/8/2007	1	179	4260	2349	1.0	179.0	4259.0	2170.0	PASS	PASS	PASS	PASS	51.02	652	Yes	Yes	GT	DA
11/9/2007	1	169	4295	2330	1.0	169.0	4294.0	2161.0	PASS	PASS	PASS	PASS	51.02	635	Yes	Yes	GT	DA
11/12/2007	1	173	4303	2306	1.0	173.0	4302.0	2133.0	PASS	PASS	PASS	PASS	51.02	642	Yes	Yes	GT	DA
11/13/2007	1	166	4284	2226	1.0	166.0	4283.0	2060.0	PASS	PASS	PASS	PASS	51.02	629	Yes	Yes	GT	DA
11/14/2007	1	166	4293	2235	1.0	166.0	4292.0	2069.0	PASS	PASS	PASS	PASS	51.02	629	Yes	Yes	GT	DA
11/15/2007	1	156	4198	2287	1.0	156.0	4197.0	2131.0	PASS	PASS	PASS	PASS	51.02	611	Yes	Yes	GT	DA

CABRERA ALPHA-BETA COUNTING INSTRUMENT (Rev 5)

Counting Instrument:			2360		Detector:	43/93		Calibration Date:		10/5/2008								
Serial #:			184952		Serial #:	199827		12 month calibration:		OK								
Detector Active Area or Area Covered by Smear (cm^2):						100		NRC 6 Mo Cal. Due Date?		OK								
	Efficiency (fraction)	Source Nuclide	Source Number	Original Source Activity (DPM)	Source Creation Date	$T_{1/2}$ (yr)	Source Decayed Activity	Required MDA ($DPM/100cm^2$)	Control Chart & Daily Bkg Count Time	Control Chart & Daily Source-Sample Count Time	Control Chart bkg Average α/β cpm	Control Chart bkg 1 sigma, cpm	Control Chart Source-bkg Average α/β cpm	Control Chart source 1 sigma, cpm				
Alpha	0.1500	Th230	2888-01	19,200	3/30/2004	7.54E+04	19,199	100	1	1	0.90	0.88	4453.7	52.82				
Beta	0.1000	Tc99	2898-01	17,300	3/30/2004	2.11E+02	17,100	1000	1	1	174.10	13.44	2270.9	66.03				

Date	Daily Bkg Counts		Daily Check Source Counts		Daily Bkg Rate (cpm)		Net Daily Source Rate (cpm)		Bkg QC Pass/Fail		Source QC Pass/Fail				α MDA OK?	β MDA OK?	H.P. Technician	Technician Initials
	Alpha	Beta	Alpha	Beta	Alpha	Beta	Alpha	Beta	Alpha	Beta	Alpha	Beta	MDA α (dpm)	MDA β (dpm)				
10/15/2007	2	170	4448	2467	2.0	170.0	4446.0	2297.0	PASS	PASS	PASS	PASS	63.87	637	Yes	Yes	GT	DA
10/16/2007	0	174	4469	2480	0.0	174.0	4469.0	2306.0	PASS	PASS	PASS	PASS	20.00	644	Yes	Yes	GT	DA
10/17/2007	0	176	4469	2485	0.0	176.0	4469.0	2309.0	PASS	PASS	PASS	PASS	20.00	647	Yes	Yes	GT	DA
10/18/2007	0	173	4406	2438	0.0	173.0	4406.0	2265.0	PASS	PASS	PASS	PASS	20.00	642	Yes	Yes	GT	DA
10/19/2007	1	170	4472	2429	1.0	170.0	4471.0	2259.0	PASS	PASS	PASS	PASS	51.02	637	Yes	Yes	GT	DA
10/29/2007	0	164	4513	2532	0.0	164.0	4513.0	2368.0	PASS	PASS	PASS	PASS	20.00	626	Yes	Yes	GT	DA
11/8/2007	1	169	4422	2540	1.0	169.0	4421.0	2371.0	PASS	PASS	PASS	PASS	51.02	635	Yes	Yes	GT	DA
11/9/2007	1	167	4425	2505	1.0	167.0	4424.0	2338.0	PASS	PASS	PASS	PASS	51.02	631	Yes	Yes	GT	DA
11/12/2007	1	174	4561	2551	1.0	174.0	4560.0	2377.0	PASS	PASS	*QUESTION*	PASS	51.02	644	Yes	Yes	GT	DA
11/13/2007	1	193	4415	2579	1.0	193.0	4414.0	2386.0	PASS	PASS	PASS	PASS	51.02	676	Yes	Yes	GT	DA
11/14/2007	1	180	4333	2446	1.0	180.0	4332.0	2266.0	PASS	PASS	*QUESTION*	PASS	51.02	654	Yes	Yes	GT	DA
11/15/2007	1	192	4488	2537	1.0	192.0	4487.0	2345.0	PASS	PASS	PASS	PASS	51.02	675	Yes	Yes	GT	DA

CABRERA ALPHA-BETA COUNTING INSTRUMENT (Rev 5)

Counting Instrument:			2360		Detector:	43/93		Calibration Date:		10/5/2008								
Serial #:			168043		Serial #:	179861		12 month calibration:		OK								
Detector Active Area or Area Covered by Smear (cm^2):						100		NRC 6 Mo Cal. Due Date?		OK								
	Efficiency (fraction)	Source Nuclide	Source Number	Original Source Activity (DPM)	Source Creation Date	$T_{1/2}$ (yr)	Source Decayed Activity	Required MDA ($DPM/100cm^2$)	Control Chart & Daily Bkg Count Time	Control Chart & Daily Source-Sample Count Time	Control Chart bkg Average α/β cpm	Control Chart bkg 1 sigma, cpm	Control Chart Source-bkg Average α/β cpm	Control Chart source 1 sigma, cpm				
Alpha	0.1500	Th230	2888-01	19,200	3/30/2004	7.54E+04	19,199	100	1	1	0.40	0.52	4434.7	188.53				
Beta	0.1000	Tc99	2898-01	17,300	3/30/2004	2.11E+02	17,098	1000	1	1	182.70	10.88	2120.7	155.99				

Date	Daily Bkg Counts		Daily Check Source Counts		Daily Bkg Rate (cpm)		Net Daily Source Rate (cpm)		Bkg QC Pass/Fail		Source QC Pass/Fail				α MDA OK?	β MDA OK?	H.P. Technician	Technician Initials
	Alpha	Beta	Alpha	Beta	Alpha	Beta	Alpha	Beta	Alpha	Beta	Alpha	Beta	MDA α (dpm)	MDA β (dpm)				
10/25/2007	1	177	4477	2316	1.0	177.0	4476.0	2139.0	PASS	PASS	PASS	PASS	51.02	649	Yes	Yes	GT	DA
10/26/2007	0	180	4339	2392	0.0	180.0	4339.0	2212.0	PASS	PASS	PASS	PASS	20.00	654	Yes	Yes	GT	DA
10/29/2007	0	170	4395	2227	0.0	170.0	4395.0	2057.0	PASS	PASS	PASS	PASS	20.00	637	Yes	Yes	GT	DA
10/30/2007	0	180	4389	2325	0.0	180.0	4389.0	2145.0	PASS	PASS	PASS	PASS	20.00	654	Yes	Yes	GT	DA
10/31/2007	0	167	4396	2300	0.0	167.0	4396.0	2133.0	PASS	PASS	PASS	PASS	20.00	631	Yes	Yes	GT	DA
11/1/2007	1	164	4440	2315	1.0	164.0	4439.0	2151.0	PASS	PASS	PASS	PASS	51.02	626	Yes	Yes	GT	DA
11/2/2007	0	184	4598	2287	0.0	184.0	4598.0	2103.0	PASS	PASS	PASS	PASS	20.00	661	Yes	Yes	GT	DA
11/5/2007	1	164	4504	2386	1.0	164.0	4503.0	2222.0	PASS	PASS	PASS	PASS	51.02	626	Yes	Yes	GT	DA
11/6/2007	1	178	4436	2231	1.0	178.0	4435.0	2053.0	PASS	PASS	PASS	PASS	51.02	651	Yes	Yes	GT	DA
11/7/2007	0	176	4461	2320	0.0	176.0	4461.0	2144.0	PASS	PASS	PASS	PASS	20.00	647	Yes	Yes	GT	DA
11/8/2007	1	172	4380	2250	1.0	172.0	4379.0	2078.0	PASS	PASS	PASS	PASS	51.02	640	Yes	Yes	GT	DA

CABRERA SERVICES
RADIOLOGICAL · ENVIRONMENTAL · REMEDIATION

Sylvania-Corning, Phase IIB, Hicksville, NY
Instrument Inventory Log

Vendor	Model (Det/Pr)	Inst S/N	Probe S/N	Cal Due	Date Rec'd	Date Ret'd	Comments
Cabrera	2221 / Bicron G1	190205	C436E	05/04/08	10/15/07	11/16/08	
Cabrera	2221 / Bicron G1	216512	C442E	05/04/08	10/15/07	11/16/08	
Cabrera	2221 / Bicron G1	196062	C443E	05/04/08	10/15/07	11/16/08	
Cabrera	2221 / Bicron G1	216482	C358C	05/04/08	10/15/07	11/16/08	
Cabrera	3 / 44-9	79511	PR137499	01/17/08	10/15/07	11/16/08	
Cabrera	3 / 44-9	79552	PR085991	02/12/08	10/15/07	11/16/08	
Cabrera	3 / 44-9	79498	PR073106	04/12/08	10/15/07	11/16/08	
Cabrera	Bicron microRem	B985Y	N/A	07/24/08	10/15/07	11/16/08	
ERG	2929 / 43-10-1	196226	PR215943	09/26/08	10/15/07	11/16/08	
ERG	2929 / 43-10-1	137607	PR142936	09/26/08	10/15/07	11/16/08	
ERG	2241 / 44-10	148089	PR154617	09/15/08	10/15/07	11/16/08	
ERG	2241 / 44-10	150711	PR150852	09/25/08	10/15/07	11/16/08	
ERG	2241 / 44-10	149408	PR150507	09/25/08	10/15/07	11/16/08	
ERG	2241 / 44-10	149400	PR112840	09/25/08	10/15/07	11/16/08	
ERG	2360 / 43-93	193652	PR199836	10/05/08	10/15/07	11/16/08	
ERG	2360 / 43-93	168043	PR179861	10/05/08	10/15/07	11/16/08	
ERG	2360 / 43-93	184952	PR199827	10/05/08	10/15/07	11/16/08	
ERG	2360 / 43-93	220246	PR199826	10/05/08	10/15/07	11/16/08	
ERG	Bicron microRem	1716	N/A	07/09/08	10/15/07	11/16/08	
Cabrera	3 / 44-9	166511	PR073107	10/03/08	10/15/07	11/16/08	

Inst.#79511 (44-9)		
QC Daily Source		
Date	Result (cpm)	P/F
10/15/2007	1200	Pass
10/16/2007	1400	Pass
10/17/2007	1300	Pass
10/18/2007	1300	Pass
10/19/2007	1400	Pass
10/22/2007	1300	Pass
10/23/2007	1400	Pass
10/24/2007	1400	Pass
10/25/2007	1400	Pass
10/26/2007	1400	Pass
10/29/2007	1400	Pass
10/30/2007	1400	Pass
10/31/2007	1300	Pass
11/1/2007	1500	Pass
11/2/2007	1400	Pass
11/5/2007	1300	Pass
11/6/2007	1300	Pass
11/7/2007	1400	Pass
11/8/2007	1400	Pass
11/9/2007	1400	Pass
11/12/2007	1300	Pass
11/13/2007	1300	Pass
11/14/2007	1400	Pass
11/15/2007	1400	Pass

Inst.#79511 (44-9)		Source Ser. #	2898-01
Initial Source Readings		Nuclide	Tc-99
Date	Result (cpm)		
10/15/2007	1200		
10/15/2007	1300		
10/15/2007	1400		
10/15/2007	1200		
10/15/2007	1300		
10/15/2007	1200		
10/15/2007	1400		
10/15/2007	1300		
10/15/2007	1200		
10/15/2007	1200		
	Average		
	1270		

Inst.#79498 (44-9)		
QC Daily Source		
Date	Result (cpm)	P/F
10/15/2007	1400	Pass
10/16/2007	1400	Pass
10/17/2007	1400	Pass
10/18/2007	1400	Pass
10/19/2007	1300	Pass
10/22/2007	1400	Pass
10/23/2007	1400	Pass
10/24/2007	1400	Pass
10/25/2007	1400	Pass
10/26/2007	1400	Pass
10/29/2007	1400	Pass
10/30/2007	1400	Pass
10/31/2007	1400	Pass
11/1/2007	1400	Pass
11/2/2007	1400	Pass
11/5/2007	1300	Pass
11/6/2007	1400	Pass
11/7/2007	1400	Pass
11/8/2007	1400	Pass
11/9/2007	1400	Pass
11/12/2007	1400	Pass
11/13/2007	1300	Pass
11/14/2007	1400	Pass

Inst.#79498 (44-9)		Source Ser. #	2898-01
Initial Source Readings		Nuclide	Tc-99
Date	Result (cpm)		
10/15/2007	1400		
10/15/2007	1400		
10/15/2007	1300		
10/15/2007	1400		
10/15/2007	1500		
10/15/2007	1300		
10/15/2007	1400		
10/15/2007	1300		
10/15/2007	1500		
10/15/2007	1400		
	Average		
	1390		

Inst.#79552 (44-9)		
QC Daily Source		
Date	Result (cpm)	P/F
10/15/2007	1300	Pass
10/24/2007	1300	Pass
10/25/2007	1400	Pass
10/26/2007	1300	Pass
10/29/2007	1300	Pass
10/30/2007	1300	Pass
10/31/2007	1400	Pass
11/1/2007	1300	Pass
11/2/2007	1300	Pass
11/5/2007	1400	Pass
11/6/2007	1400	Pass
11/7/2007	1300	Pass
11/8/2007	1300	Pass
11/9/2007	1300	Pass
11/12/2007	1300	Pass
11/13/2007	1400	Pass
11/14/2007	1400	Pass
11/15/2007	1400	Pass

Inst.#79552 (44-9)		Source Ser. #	2898-01
Initial Source Readings		Nuclide	Tc-99
Date	Result (cpm)		
10/15/2007	1200		
10/15/2007	1300		
10/15/2007	1100		
10/15/2007	1300		
10/15/2007	1200		
10/15/2007	1300		
10/15/2007	1100		
10/15/2007	1300		
10/15/2007	1200		
10/15/2007	1300		
	Average		
	1230		

08-1007.00 HICKSVILLE PHASE IIB

OP-001-01
ROUTINE SURVEY SCHEDULE

Survey Designation	Location of Survey
01	Incoming Drill Rig
02	Incoming Supply TRUCK
03	RELEASE Supply TRUCK
04	Incoming Bobcat Geoprobe
05	Release Geoprobe
06	Release Drill RIG
07	Release Drill RIG
08	Release Geoprobe
09	Incomming Drill Rig
10	Release Supply TRUCK
11	Release Drill Rig
12	Release Drill Rig
13	RELEASE SUPPLY TRUCK
14	Incoming Geoprobe
15	CONTAMINATION SURVEY of DR-BB1 & DR-BB2 AREA
16	Release Geoprobe
17	RELEASE CORE BORING DRILL

Prepared By: [signature] Date: 11/15/07

Reviewed By: [signature] Date: 11/15/07

OP-001-01
ROUTINE SURVEY SCHEDULE

Survey Designation	Location of Survey
18	Incoming HAMMER / SAMPLER
19	Release HAMMER/SAMPLER
20	Incoming BACKHOE
21	Release Geoprobe
22	Release BACKHOE
23	Contamination survey of RAD DRUM Storage.
	A
	N

Prepared By: G. M. TANNAHILL Date: 11/15/07

Reviewed By: [signature] Date: 11/15/07

Location: BLDG 70 PARKING LOT
Site: HICKSVILLE

RWP# OR-1007.00-001

Survey # Ø1

Survey Type: Contamination BASELINE

pg. 1 of 1

Smear (~~CPM/~~100 cm²)
~~Direct Count (CPM/Direct Frisk)~~

circle one

No.	α	β	No.	α	β
1	1	79	26	0	67
2	Ø	84	27	0	75
3	2	78	28	0	68
4	2	87	29	1	82
5	2	84	30	1	71
6	2	87	31		
7	Ø	86	32		
8	Ø	82	33		
9	0	77	34		
10	0	90	35		
11	0	65	36		
12	0	66	37		
13	0	67	38		
14	1	72	39		
15	1	82	40		
16	3	76	41		
17	Ø	60	42		
18	0	78	43		
19	0	64	44		
20	0	87	45		
21	0	76	46		
22	0	68	47		
23	0	67	48		
24	1	72	49		
25	0	69	50		

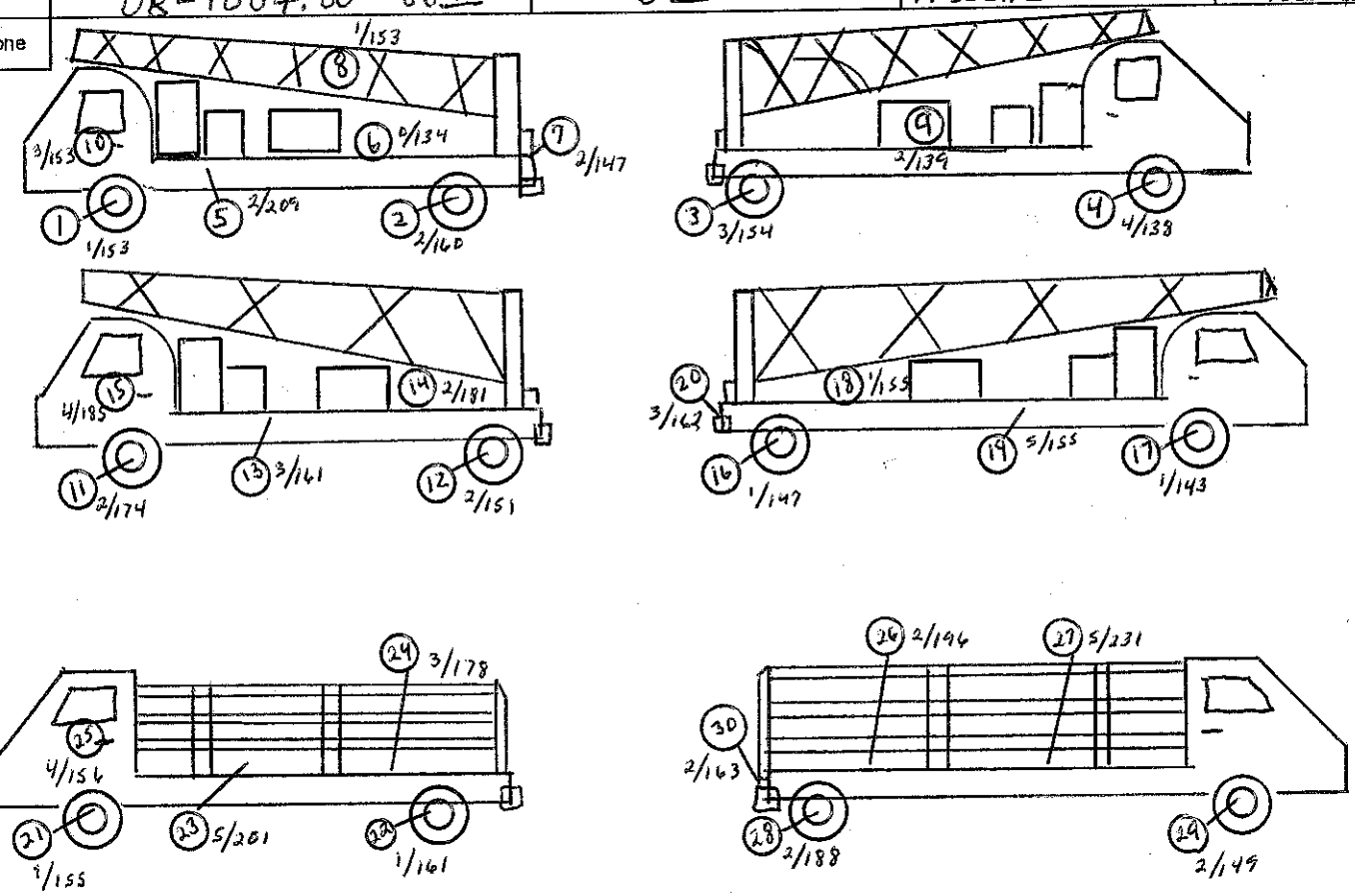

α/β cpm

Comments	Surveyed By:	Date:	Instrument	Serial #	α Eff.	β Eff.	α Bkg.	β Bkg	γ Bkg	Cal. Due
Scanned 50-75% of	Kyle Gordon	10/15/07	Bicron	B985Y	NA	NA	NA	NA	4 μRad/hr	7/08
all accessible surfaces			43-93	184952	0.15	0.10	1	159	NA	10/08
and equipment. Swipe			2929	196226	0.363	0.123	0.1	39.1	NA	9/08
Results in counts per										
2 minute count time.										
	Reviewed By:	Date:								
	[signature]	10/16/07								

Key

■	A/S Location
-	Boundary
○	Smear
□	Dose Rate _____/hr
*	Direct Reading CPM/direct frisk
△	Grab Sample

Location: BLDG 70 Parking Lot Site: Hicksville	RWP# OR-1007.00-001	Survey # 02	Survey Type: Release	pg. 1 of 1

Smear (CPM/100 cm²)
Direct Count (CPM/Direct Frisk)

circle one

No.	α	β	No.	α	β
1	0	73	26		
2	1	73	27		
3	3	77	28		
4	2	81	29	N	
5	0	83	30		
6	0	89	31		
7	2	77	32		A
8	0	64	33		
9	0	66	34		
10	0	87	35		
11			36		
12			37		
13			38		
14			39		
15			40		
16		N	41		
17			42		
18			43		
19			44		
20			45	A	
21			46		
22			47		
23			48		
24			49		
25			50		

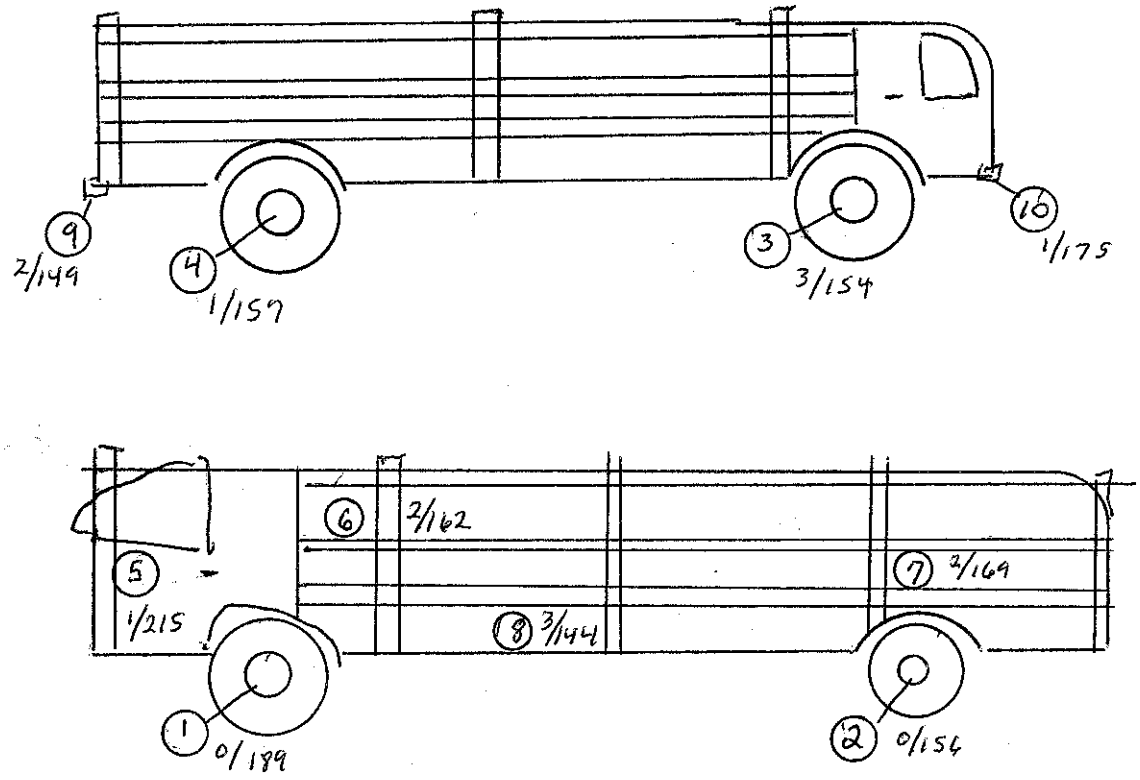

α/β - cpm

Comments	Surveyed By:	Date:	Instrument	Serial #	α Eff.	β Eff.	α Bkg.	β Bkg	γ Bkg	Cal. Due
Scanned 50-75% of	K. Gordon	10/19/07	2360	193652	15%	10%	1	156	N/A	10-5-08
All Accessible Surfaces			2929	196226	0.363	0.123	.2	357	N/A	9-26-08
And Equipment. Swipe										
Results In Counts Per								A		
2 minute Count Time										
	Reviewed By:	Date:			N					
	[signature]	10/19/07								

Key

■	A/S Location
-	Boundary
○	Smear
□	Dose Rate _____ /hr
*	Direct Reading CPM/direct frisk
△	Grab Sample

Location: BLDG 140 PARKING LOT	RWP#	Survey #	Survey Type:	
Site: HICKSVILLE	08-1007.00-001	03	RELEASE	pg. 1 of 1

Smear (CPM/100 cm²) / Direct Count (CPM/Direct Frisk)						circle one
No.	α	β	No.	α	β	
1	0	98	26			
2	0	80	27			
3	0	79	28			
4	0	78	29			
5	1	64	30	N		
6	1	72	31			
7	1	73	32		A	
8	1	82	33			
9	0	93	34			
10	0	84	35			
11			36			
12			37			
13			38			
14			39			
15			40			
16		N	41			
17			42			
18			43			
19			44			
20			45		A	
21			46			
22			47			
23			48			
24			49			
25			50			

α/β cpm

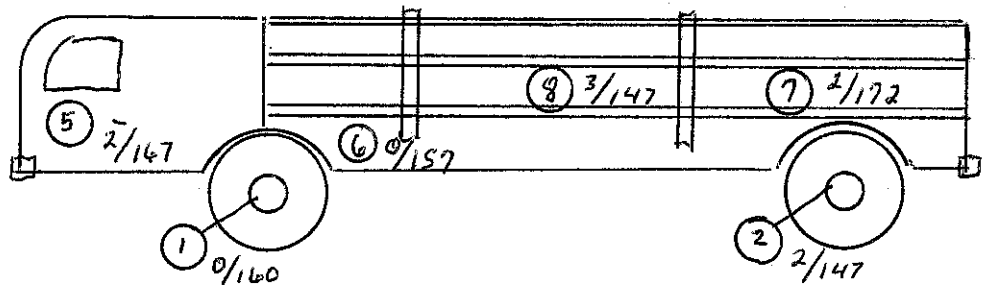

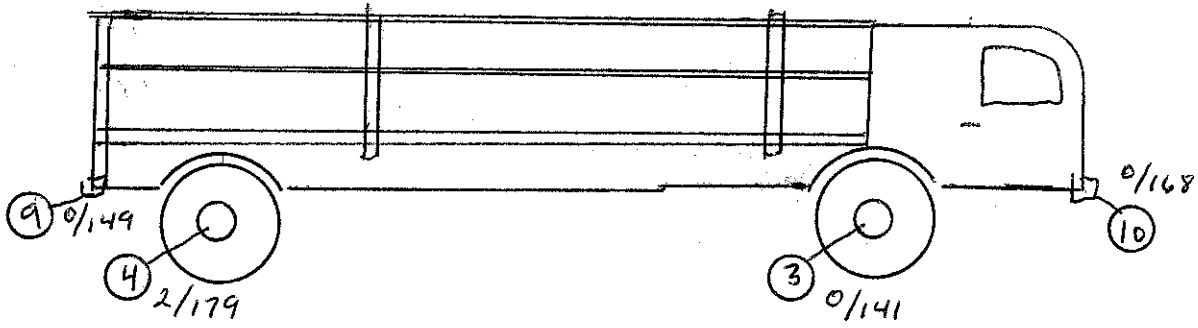

Comments	Surveyed By:	Date:	Instrument	Serial #	α Eff.	β Eff.	α Bkg.	β Bkg	γ Bkg	Cal. Due
SCANNED 75% OF ACCESSABLE	K. GORDON	10-22-07	220246	2360	15%	10%	1	149	N	10-5-08
SURFACES AND EQUIPMENT.			196226	2929	.363	.123	.2	37.9	A	9-26-08
SWIPE RESULTS IN COUNTS										
PER 2 MINUTE COUNT TIME.										
				N						
	Reviewed By:	Date:						A		
	[signature]	10/22/07								

Key	
■	A/S Location
-	Boundary
○	Smear
□	Dose Rate _____ /hr
*	Direct Reading CPM/direct frisk
△	Grab Sample

Location: HICKSVILLE Site: Building 70 PARKING LOT	RWP# 08-1007.00-01	Survey # 04	Survey Type: Incoming Contamination	pg. 1 of 1

~~Smear (CPM/100 cm²)~~ ~~Circle one~~
Direct Count (CPM/~~Direct Frisk~~)

No.	α	β	No.	α	β
1	2	75	26		
2	2	66	27		
3	Ø	76	28		
4	1	82	29		
5	~~Ø~~ 1	~~77~~ 83	30		
6	Ø	77	31		
7	Ø	71	32		
8	Ø	82	33		
9	1	68	34		
10	Ø	86	35		
11			36		
12			37		
13			38		
14			39		
15			40		
16			41		
17			42		
18			43		
19			44		
20			45		
21			46		
22			47		
23			48		
24			49		
25			50		

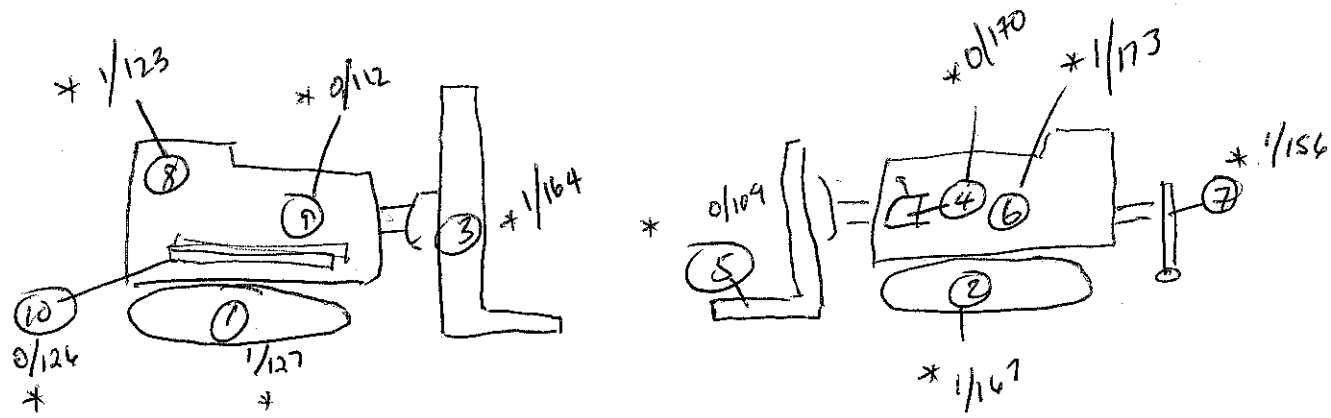

Comments	Surveyed By:	Date:	Instrument	Serial #	α Eff.	β Eff.	α Bkg.	β Bkg	γ Bkg	Cal. Due		Key	
all swipes are counts	Kyle GORDON	10/23/07	43-93	220216	0.15	0.10	1	131	NA	10/08			
per 2 minutes. Scanned			Bicron	B958Y	NA	NA	NA	NA	5	~~09/08~~ 11/08		■	A/S Location
100% accessible area		✓	2929	196226	0.363	0.123	Ø	37.7	NA	9/08		*-*	Boundary
w/ 44-9. all readings were			44-9	19498	NA	0.10	NA	40cpm	NA	4/08		○	Smear
30-40 cpm.												□	Dose Rate _____/hr
	Reviewed By:	Date:										*	Direct Reading CPM/direct frisk
	[illegible]	10/23/07										△	Grab Sample

Location: Hicksville Site: Building 70 Parking Lot	RWP# 08-1007.00-01	Survey # 05	Survey Type: Release Survey	pg. 1 of 1

~~Smear (CPM/100 cm²)~~
~~Direct Count (CPM/Direct Frisk)~~
circle one

No.	α	β	No.	α	β
1	Ø	73	26		
2	1	67	27		
3	Ø	76	28		
4	1	81	29		
5	2	72	30		
6	2	66	31		
7	1	65	32		
8	Ø	91	33		
9	1	74	34		
10	1	74	35		
11			36		
12			37		
13			38		
14			39		
15			40		
16			41		
17			42		
18			43		
19			44		
20			45		
21			46		
22			47		
23			48		
24			49		
25			50		

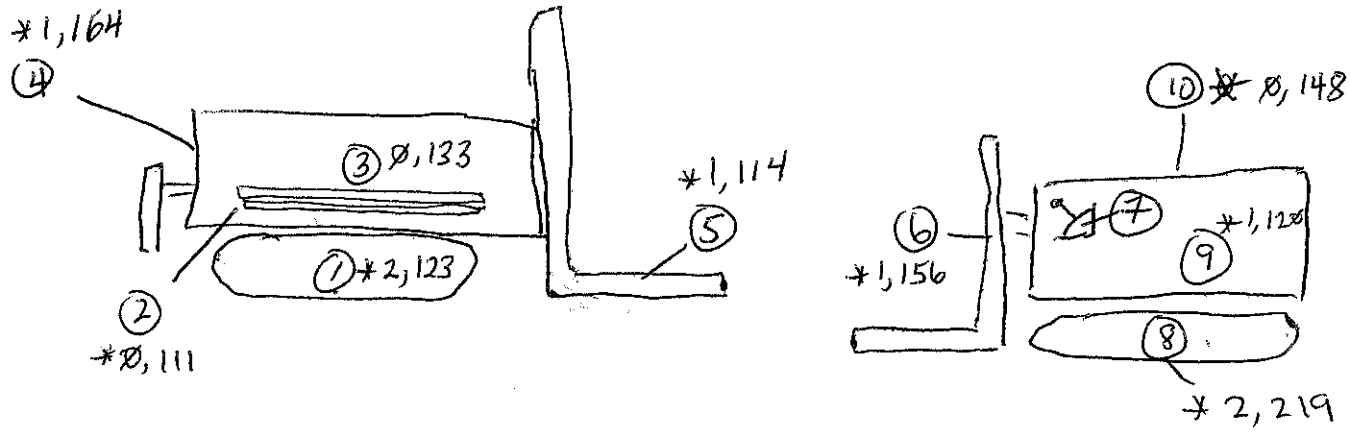

Comments	Surveyed By:	Date:	Instrument	Serial #	α Eff.	β Eff.	α Bkg.	β Bkg	γ Bkg	Cal. Due
all swipes results ARE	G. TANNAHILL	10/25/07	43-93	220246	0.15	0.10	Ø	147	NA	10/08
counts per two minutes.			BICRON	B9587	NA	NA	NA	NA	4	7/08
Scanned 100% of			2929	196226	Ø.363	0.123	0.18	35.1	NA	9/08
geoprobe and equipment			44-9	79498	NA	0.10	NA	30	NA	4/08
w/ 44-9. Scan results										
were 30-40 cpm	Reviewed By:	Date:								
		10/25/07								

Key

■	A/S Location
-	Boundary
○	Smear
□	Dose Rate _____ /hr
*	Direct Reading CPM/direct frisk
△	Grab Sample

Location: Site:	RWP#	Survey #	Survey Type:	
HICKEVILLE BLDG. 70 PARKING LOT	08-1007.00-01	06	RELEASE	pg. 1 of 1

Smear (CPM/100 cm²) / Direct Count (CPM/Direct Frisk)						circle one
No.	α	β	No.	α	β	
1	0	68	26			
2	0	76	27			
3	0	59	28			
4	0	83	29	N		
5	0	86	30			
6	1	92	31			
7	0	55	32			
8	0	75	33			A
9	1	55	34			
10	2	77	35			
11			36			
12			37			
13			38			
14			39			
15			40			
16		N	41			
17			42			
18			43			
19			44			
20			45			A
21			46			
22			47			
23			48			
24			49			
25			50			

α/β cpm

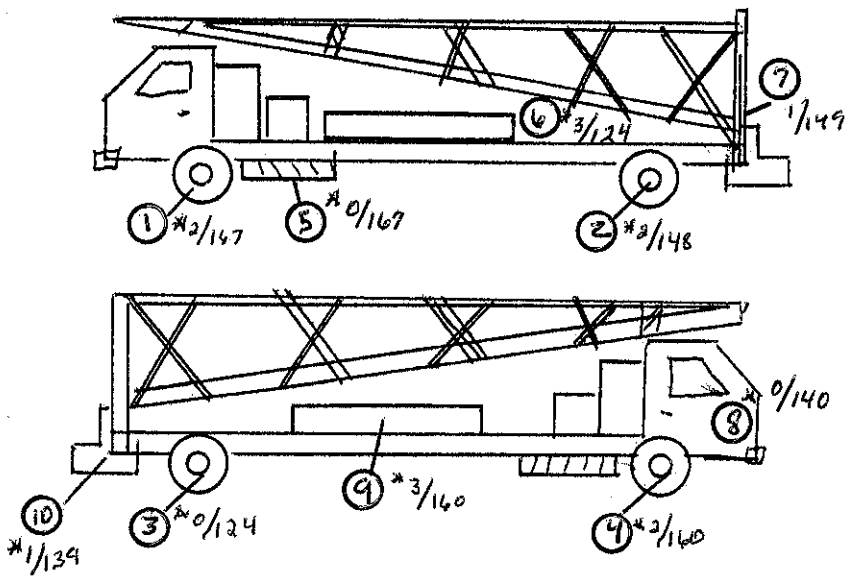

Comments	Surveyed By:	Date:	Instrument	Serial #	α Eff.	β Eff.	α Bkg.	β Bkg	γ Bkg	Cal. Due
ALL SMEAR RESULTS ARE	K. GORDON	10/25/07	2929	196226	0.363	0.123	0.1	35.1	N	9/26/08
COUNTS PER 2 MINUTES			2360	220246	15%	10%	1	109	A	10/5/08
SCANNED 100% OF	N		MOD. 3	79498	N/A	10%	N/A	30cpm	N/A	4/11/08
DRILL RIG AND EQUIPMENT		A	BERTHOLD	B985Y	N/A	N/A	N/A	N/A	A	7/24/08
W/44.9 SCAN RESULTS				N						
WERE 30 TO 50cpm	Reviewed By:	Date:								
	[signature]	10/25/07							A	

Key
- ■ A/S Location
- *-* Boundary
- ○ Smear
- ▭ Dose Rate _____ /hr
- * Direct Reading CPM/direct frisk
- △ Grab Sample

Location: HICKSVILLE Site: BUILDING 70 PARKING LOT	RWP# Ø8-1007.ØØ-Ø1	Survey # Ø7	Survey Type: Release Survey	pg. 1 of 1

~~Smear (CPM/100 cm²)~~ ~~Direct Count (CPM/Direct Frisk)~~ circle one

No.	α	β	No.	α	β
1	Ø	81	26		
2	1	72	27		
3	1	65	28		
4	Ø	76	29		
5	0	59	30		
6	2	63	31		
7	1	77	32		
8	Ø	66	33		
9	2	72	34		
10	0	68	35		
11			36		
12			37		
13			38		
14			39		
15			40		
16			41		
17			42		
18			43		
19			44		
20			45		
21			46		
22			47		
23			48		
24			49		
25			50		

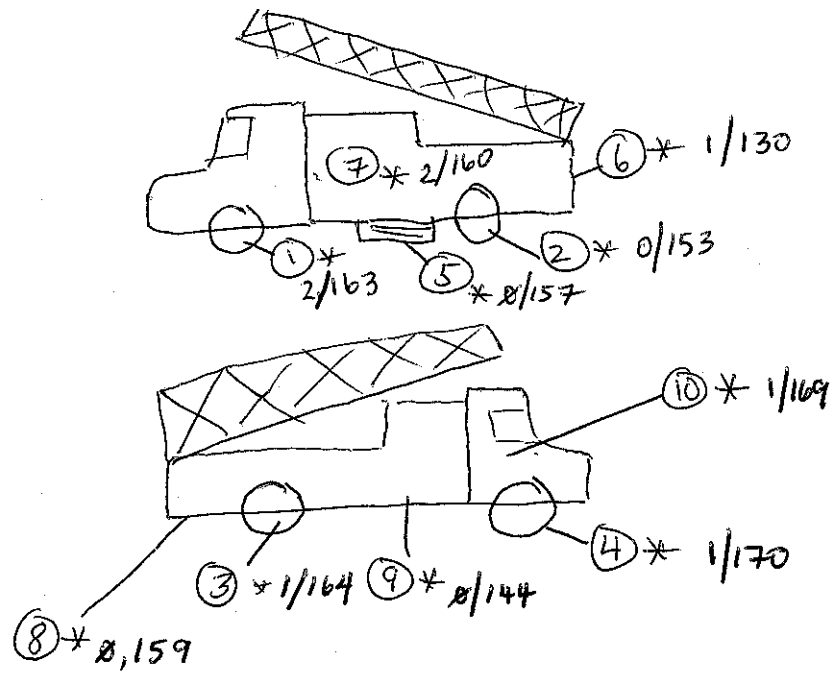

Ø/Ø

Comments	Surveyed By:	Date:	SN# ~~Instrument~~	Instrument ~~Serial #~~	α Eff.	β Eff.	α Bkg.	β Bkg	γ Bkg	Cal. Due
Swipe results in counts	G TANANAHILL	10/26/07	196226	2929	0.363	0.123	Ø.1	39.5	N/A	9/08
per 2 minutes. Scanned			220246	43-93	0.15	0.10	1	151	N/A	10/08
100% of accessible			79498	44-9	N/A	0.10	N/A	40	N/A	4/08
rig & equipment w/			B985Y	BICRON	N/A	N/A	N/A	N/A	4	7/08
44-9. Scan results										
ranged from	Reviewed By:	Date:								
	[signature]	10/26/07								

Key	
■	A/S Location
-	Boundary
○	Smear
□	Dose Rate _____ /hr
*	Direct Reading CPM/direct frisk
△	Grab Sample

Location: Hicksville	RWP# 08-1007.00-01	Survey # ~~08~~ 08	Survey Type: Contamination Baseline	pg. 1 of 1
Site: BLDG 70 Parking Lot				

Smear (CPM/100 cm²) circle one

Direct Count (CPM/Direct Frisk)

No.	α	β	No.	α	β
1	0	62	26		
2	2	78	27		
3	0	76	28		
4	0	72	29	N	
5	0	67	30		
6	0	61	31		A
7	0	73	32		
8	1	79	33		
9	0	72	34		
10	2	81	35		
11			36		
12			37		
13			38		
14			39		
15			40		
16	N		41		
17			42		
18			43		
19			44		A
20			45		
21			46		
22			47		
23			48		
24			49		
25			50		

Rig #239

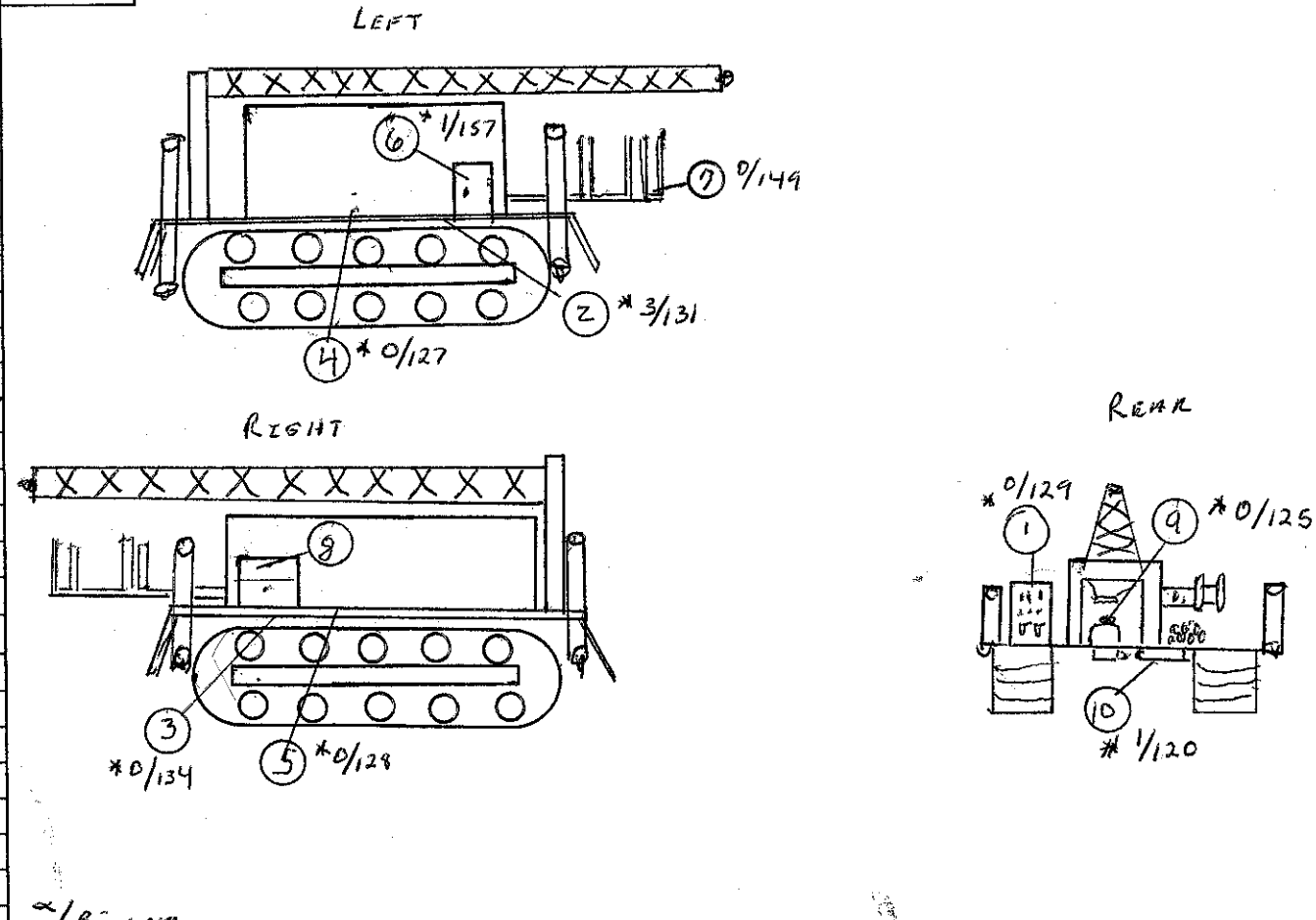

α/β cpm

Comments	Surveyed By:	Date:	Instrument	Serial #	α Eff.	β Eff.	α Bkg.	β Bkg	γ Bkg	Cal. Due
All Smear Results	K. Gordon	10/26/07	2929	196226	.363	.123	.1	39.5	N	9/26/08
Are in Counts Per			2360	220246	15%	10%	1	129		10/5/08
2 minutes	N		Model 3	79498	N/A	10%	N/A	30	A	4/11/08
		A	Bicron	B9854	N/A	N/A	N/A	N/A	S	7/24/08
				N						
	Reviewed By:	Date:								
	[signature]	10/26/07							A	

Key

■	A/S Location
⁘	Boundary
○	Smear
□	Dose Rate ____/hr
*	Direct Reading CPM/direct frisk
△	Grab Sample

Location: HICKSVILLE	RWP# 08-1007.00-01	Survey # Ø9	Survey Type: Initial Contamination	Radiolog[illegible] Surveys
Site:				pg. 1

Smear (CPM/100 cm²) ~~circle one~~

Direct Count (CPM/Direct Frisk)

No.	α	β	No.	α	β
1	Ø	75	26		
2	Ø	69	27		
3	Ø	63	28		
4	Ø	72	29		
5	1	71	30		
6	2	68	31		
7	1	73	32		
8	1	66	33		
9	1	76	34		
10	Ø	75	35		
11			36		
12			37		N
13			38		
14			39		
15			40	A	
16			41		
17			42		
18		N	43		
19			44		
20			45		
21	A		46		
22			47		
23			48		
24			49		
25			50		

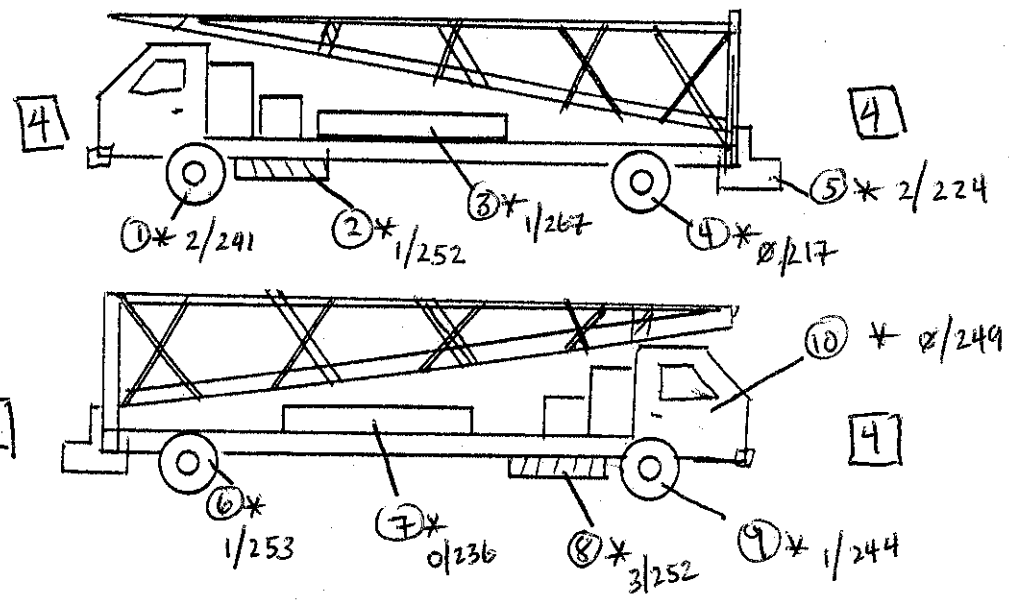

Scan results w/ 44-9 ranged between 30-40 cpm.

Comments	Surveyed By:	Date:	Instrument	Serial #	α Eff.	β Eff.	α Bkg.	β Bkg	γ Bkg	Cal. Due
Swipe results listed in counts per 2 minutes. Scanned 100% of accessible surfaces of rig and equipment w/ 44-9.	gmt	10/29/07	43-93	168043	0.15	0.10	1	224	N/A	10/08
			BICRON	1716	N/A	N/A	N/A	N/A	4	7/08
	N		44-9	79511	N/A	0.10	N/A	40	N/A	1/Ø8
	A		2929	196226	0.363	0.123	Ø.1	~~0~~ 39.5 gmt	N/A	9/Ø8
	Reviewed By:	Date:					N			
	gmt	10/29/07					A			

Key

■	A/S Location
-	Boundary
○	Smear
▭	Dose Rate _____ /hr
*	Direct Reading CPM/direct frisk
△	Grab Sample

Location: HICKSVILLE Site: BLDG 70	RWP# 08-1007.00	Survey # 10	Survey Type: RELEASE	pg. 1 of 1

Smear (CPM/100 cm²) / Direct Count (CPM/Direct Frisk)						circle one
No.	α	β	No.	α	β	
1	0	77	26			
2	0	70	27			
3	2	85	28			
4	0	59	29			
5	0	87	30			
6	0	85	31			
7	1	71	32	N		
8	0	74	33			
9	0	84	34			
10	2	80	35			
11			36			
12			37			
13			38			
14	N		39			
15			40			
16			41			
17			42			
18			43			A
19			44			
20			45			
21			46			
22		A	47			
23			48			
24			49			
25			50			

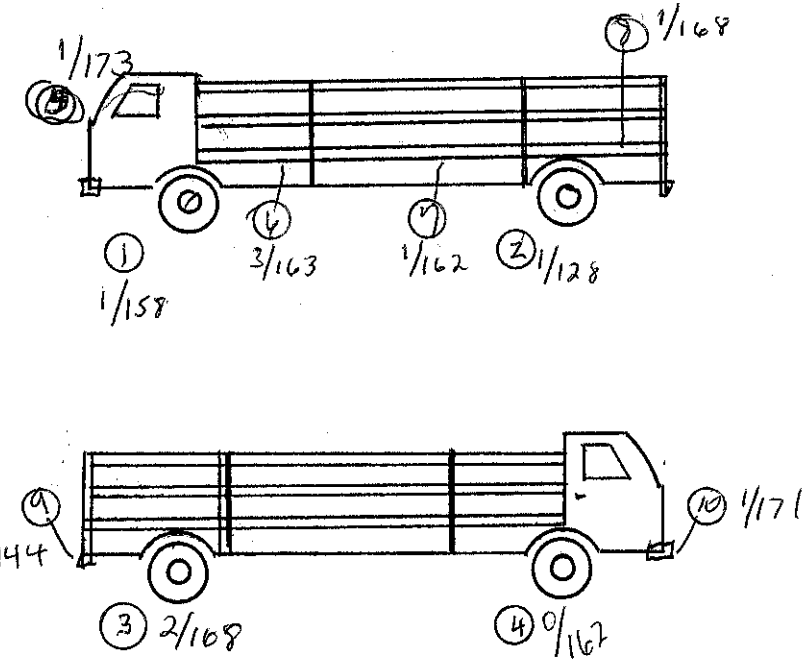

α/β⁻ cpm

Comments	Surveyed By:	Date:	Instrument	Serial #	α Eff.	β Eff.	α Bkg.	β Bkg	γ Bkg	Cal. Due		Key	
SMEAR RESULTS ARE	K LONDON	10/30/07	~~2360~~	~~220196~~	~~15%~~	~~10%~~	~~1~~	~~137~~	~~N~~	~~10/5/08~~	10-30-07		
IN COUNTS PER 2 MINUTES			2929	196226	.363	123	.3	38.1		9/26/08		■	A/S Location
SCANNED 100% OF			MODEL 3	79498	N/A	10%	N/A	40cpm	A	4/11/08		*-*	Boundary
ACCESSIBLE AREAS REQ'D			2360	168093	15%	10%	1	137	N/A	10/5/08		○	Smear
WITH 44-9. SEND RESULTS												▭	Dose Rate _____ /hr
40-60 cpm	Reviewed By:	Date:		N								*	Direct Reading CPM/direct frisk
	[signature]	10/30/07							A			△	Grab Sample

Location: Site: HICKSVILLE	RWP# 08-1007.00-01	Survey # ~~110~~ DA #11	Survey Type: OUT	pg. 1 of 1

Smear (CPM/100 cm²) / Direct Count (CPM/Direct Frisk)						circle one
No.	α	β	No.	α	β	
1	0	81	26			
2	0	83	27			
3	1	95	28			
4	1	93	29			
5	1	91	30			
6	2	72	31			
7	0	68	32			
8	0	77	33			
9	1	71	34			
10	1	62	35			
11			36			
12			37			
13			38			
14			39			
15			40			
16			41			
17			42			
18			43			
19			44			
20			45			
21			46			
22			47			
23			48			
24			49			
25			50			

N A

N A

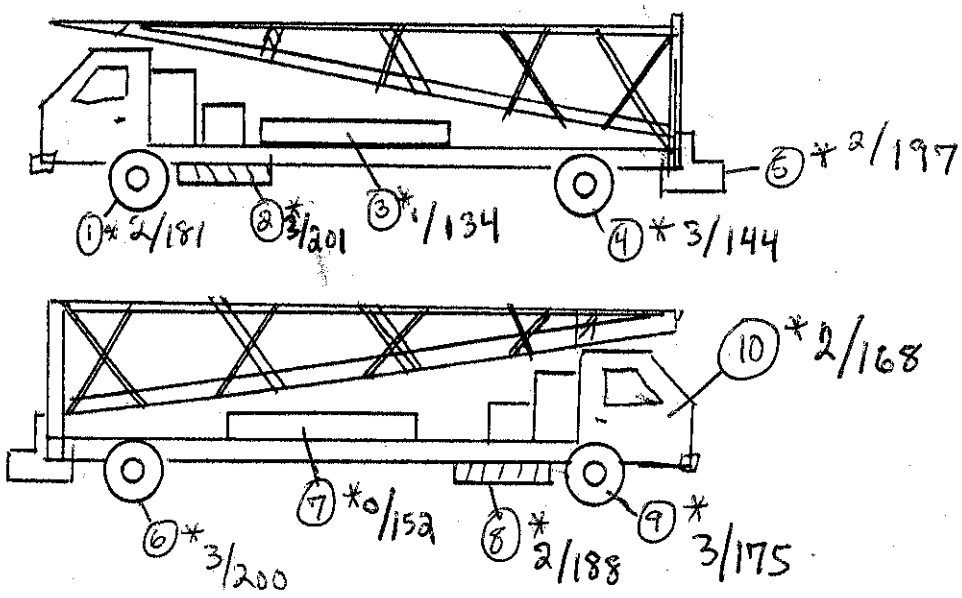

Scan results w/ 44-9 ranged between 30-40 cpm.

Comments	Surveyed By:	Date:	Instrument	Serial #	α Eff.	β Eff.	α Bkg.	β Bkg	γ Bkg	Cal. Due	Key
Results listed in counts per two minutes. 100% of accessible equipment surfaces w/ 44-9, includes rig.	D. Albert	11/02/07	43-93	168043	0.15	0.10	0	184	N/A	10/08	α/β
	N A		BICRON	1716	N/A	N/A	N/A	N/A	5	7/08	▬ A/S Location
			44-9	79511	N/A	0.10	N/A	40	N/A	1/08	⁘ Boundary
			2929	196226	0.363	0.123	0.3	339	N/A	9/08	○ Smear
								A			▭ Dose Rate ____ /hr
	Reviewed By:	Date:									* Direct Reading CPM/direct frisk
	[signature]	11/2/07									△ Grab Sample

N

Location: HICKSVILLE
Site: SYLVANIA

RWP# 08-1007.00-01

Survey # 12

Survey Type: (Out Going) RELEASE

pg. 1 of 1

circle one

Smear (CPM/100 cm²)					
Direct Count (CPM/Direct Frisk)					
No.	α	β	No.	α	β
1	1	71	26		
2	0	98	27		
3	1	76	28		
4	3	83	29		
5	0	87	30		
6	0	63	31		
7	0	77	32		
8	0	66	33		
9	1	75	34		
10	2	58	35		
11			36		
12			37		
13			38		
14			39		
15			40		
16	N	A	41	N	A
17			42		
18			43		
19			44		
20			45		
21			46		
22			47		
23			48		
24			49		
25			50		

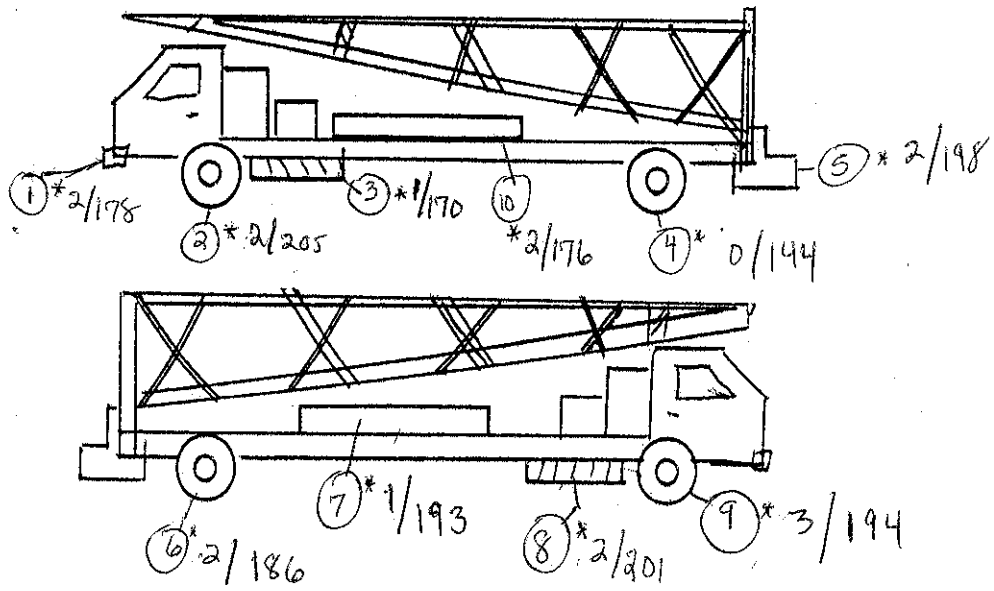

* All Scans of vehicle & equipment resulted in Average of no greater than 30-40 cpm.

Comments	Surveyed By:	Date:	Instrument	Serial #	α Eff.	β Eff.	α Bkg.	β Bkg	γ Bkg	Cal. Due
SMEAR RESULTS IN	D. Albert	11/7/07	2929	196226	0.363	0.123	0	36.2	N/A	09/08
COUNTS PER 2 MINUTES			2360	168043	0.15	0.10	0	176		10/08
100% of ACCESSIBLE	N A	N A	Model 3	79511	N/A	0.10	N/A	40		01/08
SURFACES & EQUIPMENT			BICRON	1716	N/A	N/A	N/A	N/A	5	07/08
SCANNED W/ 44-9						A				
SCAN RESULTS: 30-40 cpm	Reviewed By:	Date:			N					
	[signature]	11/7/07								

Key
- ■ A/S Location
- *-* Boundary
- ○ Smear
- ▭ Dose Rate ____ /hr
- * Direct Reading CPM/direct frisk
- △ Grab Sample

Location: HICKSVILLE Site:	RWP# 08-1007.00-01	Survey # 13	Survey Type: RELEASE	pg. 1 of 1

circle one

Smear (CPM/100 cm²) / Direct Count (CPM/Direct Frisk)					
No.	α	β	No.	α	β
1	1	91	26		
2	0	77	27		
3	0	86	28		
4	0	73	29		
5	1	82	30		
6	0	84	31		
7	0	73	32		
8	0	79	33		
9	0	63	34		
10	1	77	35		
11			36		
12			37		
13			38		
14			39		
15			40		
16			41		
17	N	A	42	N	A
18			43		
19			44		
20			45		
21			46		
22			47		
23			48		
24			49		
25			50		

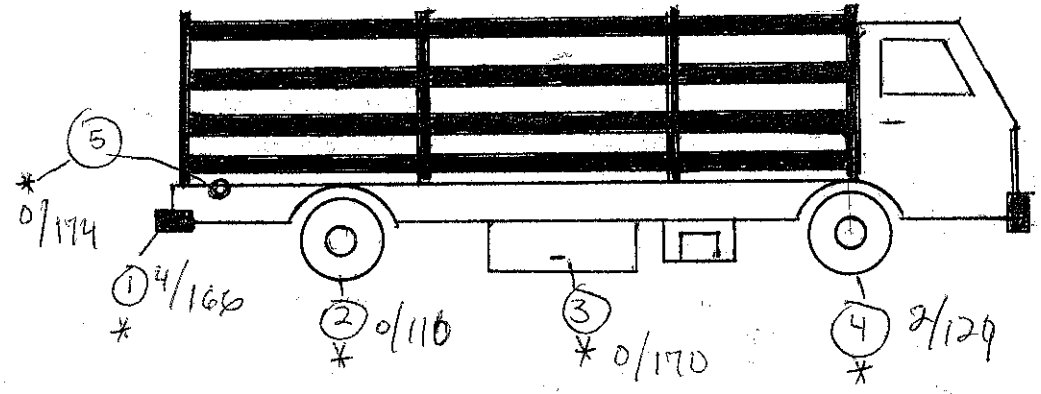

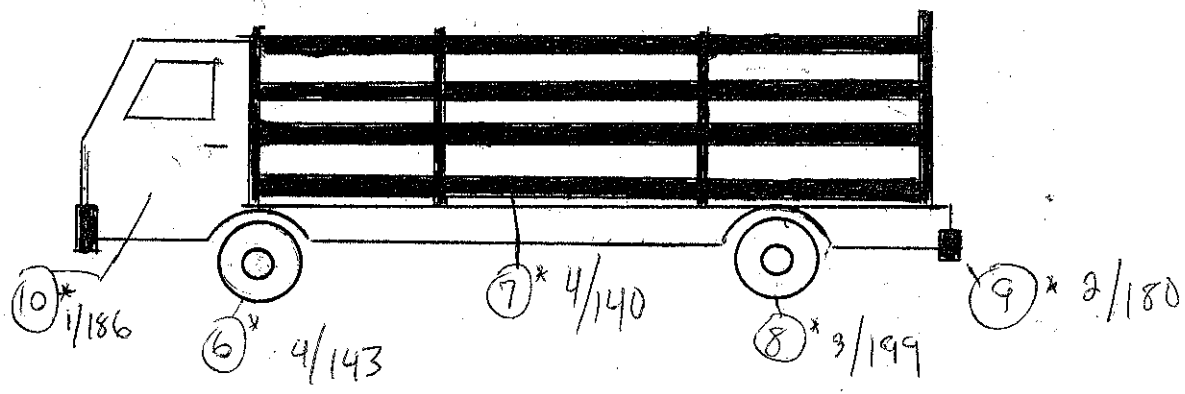

Comments	Surveyed By:	Date:	Instrument	Serial #	α Eff.	β Eff.	α Bkg.	β Bkg	γ Bkg	Cal. Due	Key	
SMEAR RESULTS IN	D. Albert	11/7/07	2929	196226	.363	.123	0	36.2	N	09/08		
COUNTS PER 2 MINUTES			2360	168043	.15	.10	0	176		10/08	■	A/S Location
100% OF ACCESSIBLE	A	A	MODEL 3	79511	N/A	.10	N/A	40	A	01/08	*-*	Boundary
SURFACES + EQUIPMENT	N	N	BICRON	1716	N/A	N/A	N/A	N/A	5	07/08	○	Smear
SCANNED W/44.9.						A					□	Dose Rate ____ /hr
SCAN RESULTS: 30-40.	Reviewed By:	Date:		N							*	Direct Reading CPM/direct frisk
CPM	[illegible]	11/7/07									△	Grab Sample

Location: HICKSVILLE
Site:
RWP# 08-1007.00-01
Survey # 14
Survey Type: INCOMING
pg. 1 of 1

Smear (CPM/100 cm²) circle one

Direct Count (CPM/Direct Frisk)

No.	α	β	No.	α	β
1	0	33	26		
2	0	83	27		
3	0	77	28		
4	0	64	29		
5	0	66	30		
6	0	66	31		
7	0	77	32		
8	0	71	33		
9	1	94	34		
10	0	76	35		
11			36		
12			37		
13			38		
14			39		
15			40		
16			41		
17			42		
18			43		
19			44		
20			45		
21			46		
22			47		
23			48		
24			49		
25			50		

N/A

N/A

Rig #
GEOPROBE

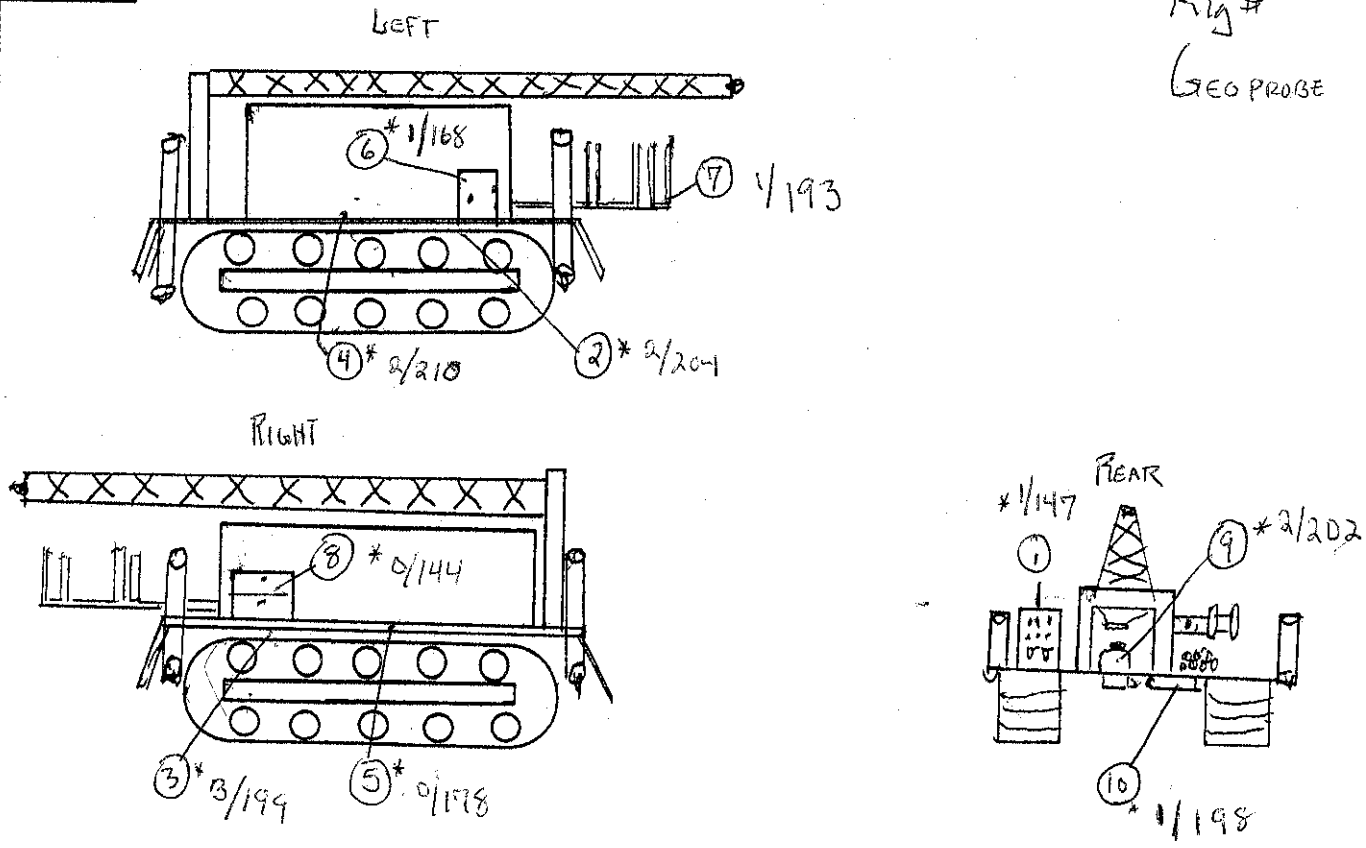

Comments	Surveyed By:	Date:	Instrument	Serial #	α Eff.	β Eff.	α Bkg.	β Bkg	γ Bkg	Cal. Due
ALL SMEAR RESULTS	[signature]	11/8/07	2929	196226	.363	.123	0.3	32.9		09/08
IN COUNTS PER			2360	168043	0.15	0.10	1	172	N/A	10/08
TWO MINUTES	N	A	Model 3	79511	N/A	0.10	N/A	40		01/08
100% OF ACCESSIBLE SURFACES			BICRON	1716		N/A	N/A	N/A	5	07/08
& EQUIPMENT SCANNED					N					
W/ 44-9. SCAN RESULTS	Reviewed By:	Date:						A		
WERE 30-40 cpm	[signature]	11/8/07								

Key
- ■ A/S Location
- Boundary
- ○ Smear
- □ Dose Rate ____/hr
- • Direct Reading CPM/direct frisk
- △ Grab Sample

Location: HICKSVILLE Site: BUILDING 70; DRAIN DRBB1 & DRBB2	RWP# Ø8-1007.00-Ø1	Survey # 15	Survey Type: Contamination DR-BB1 & DR-BB2	pg. 1 of 1

Smear ~~(CPM/100 cm²)~~ ~~circle one~~
~~Direct Count (CPM/Direct Frisk)~~

No.	α	β	No.	α	β
1	1	66	26		
2	1	79	27		
3	1	76	28		
4	1	82	29		
5	1	68	30		
6	1	73	31		
7	1	75	32		
8	1	78	33		
9	1	67	34		
10	121	330	35		
11	66	137	36		
12	Ø	82	37		
13	Ø	81	38		
14	3	94	39		
15			40		
16			41	N	A
17			42		
18			43		
19			44		
20			45		
21	N	A	46		
22			47		
23			48		
24			49		
25			50		

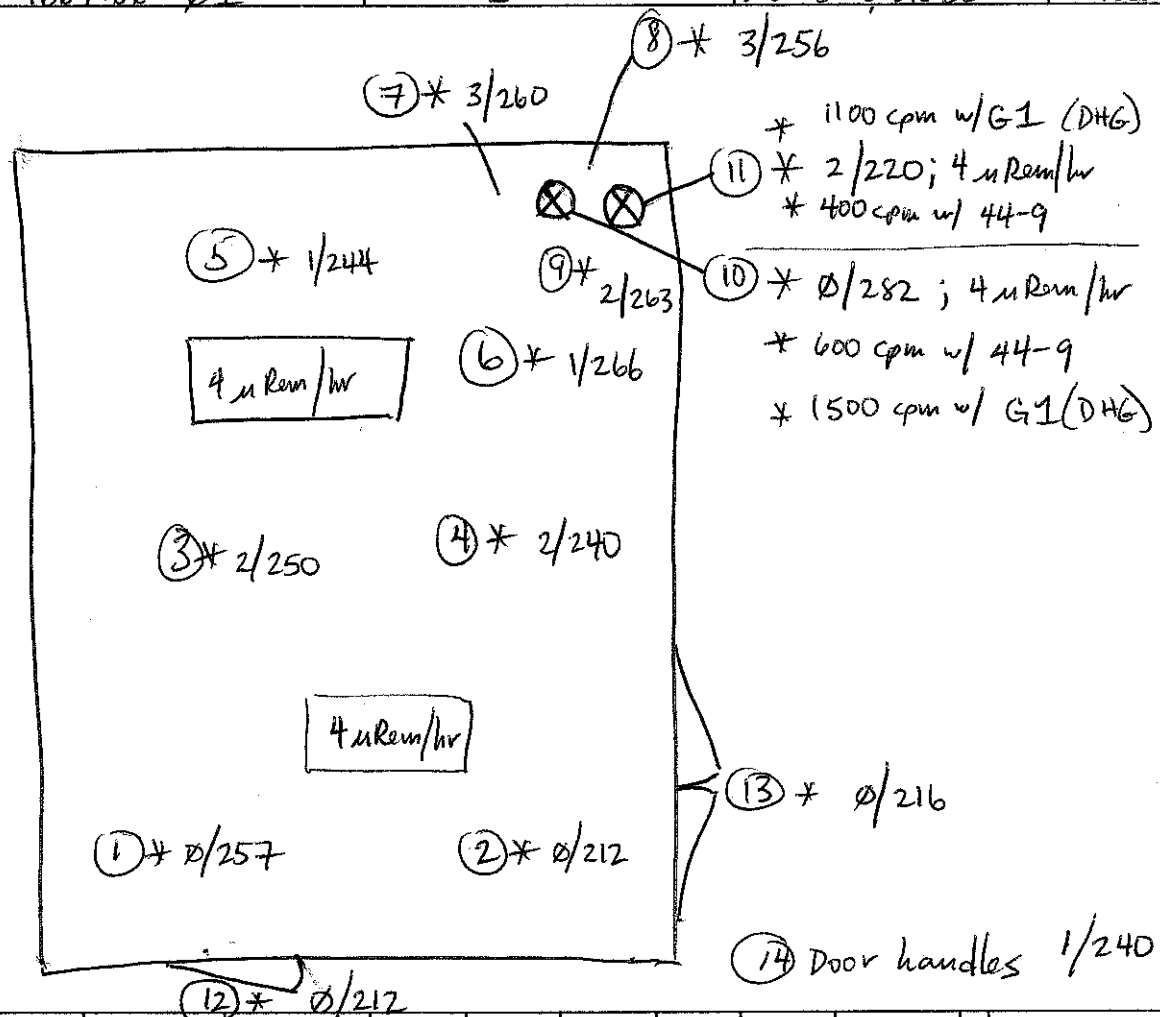

* = α/β⁻ cpm w/ 43-93

Comments	Surveyed By:	Date:	Instrument	Serial #	α Eff.	β Eff.	α Bkg.	β Bkg	γ Bkg	Cal. Due
Smear results in counts	D. Albert	11/8/07	2929	196226	0.363	Ø.123	0.3	32.9	N/A	9/08
per 2 minutes. 100% of			43-93	184952	0.15	0.10	1	242	N/A	10/08
Accessible area scanned	N		44-9	79511	N/A	0.10	N/A	40	N/A	1/08
w/ ~~44~~ 43-93 & μRem.			BICRON μR	1716	N/A	N/A	N/A	N/A	5	7/08
Swipe #10 = 166α/1074β⁻ dpm/100 cm²	A		BICRON G1	196062	N/A	N/A	N/A	N/A	1202	5/08
Swipe #11 = 90α/289β⁻ dpm/100 cm²	Reviewed By:	Date:					A			
	G M Jannabill	11/8/07				N				

Key	
■	A/S Location
-	Boundary
○	Smear
□	Dose Rate μRem/hr
*	Direct Reading CPM/direct frisk
△	Grab Sample

Location: HICKSVILLE	RWP# 08-1007.00-01	Survey # 16	Survey Type: RELEASE	pg. 1 of 1
Site:				

Smear (CPM/100 cm²) / Direct Count (CPM/Direct Frisk) — circle one

No.	α	β	No.	α	β
1	0	85	26		
2	0	80	27		
3	1	73	28		
4	0	86	29		
5	1	70	30		
6	1	93	31		
7	0	71	32		
8	0	93	33		
9	1	60	34		
10	0	102	35		
11			36		
12			37		
13			38		
14			39		
15			40		
16			41		
17			42		
18			43		
19			44		
20			45		
21			46		
22			47		
23			48		
24			49		
25			50		

N/A

GEO PROBE

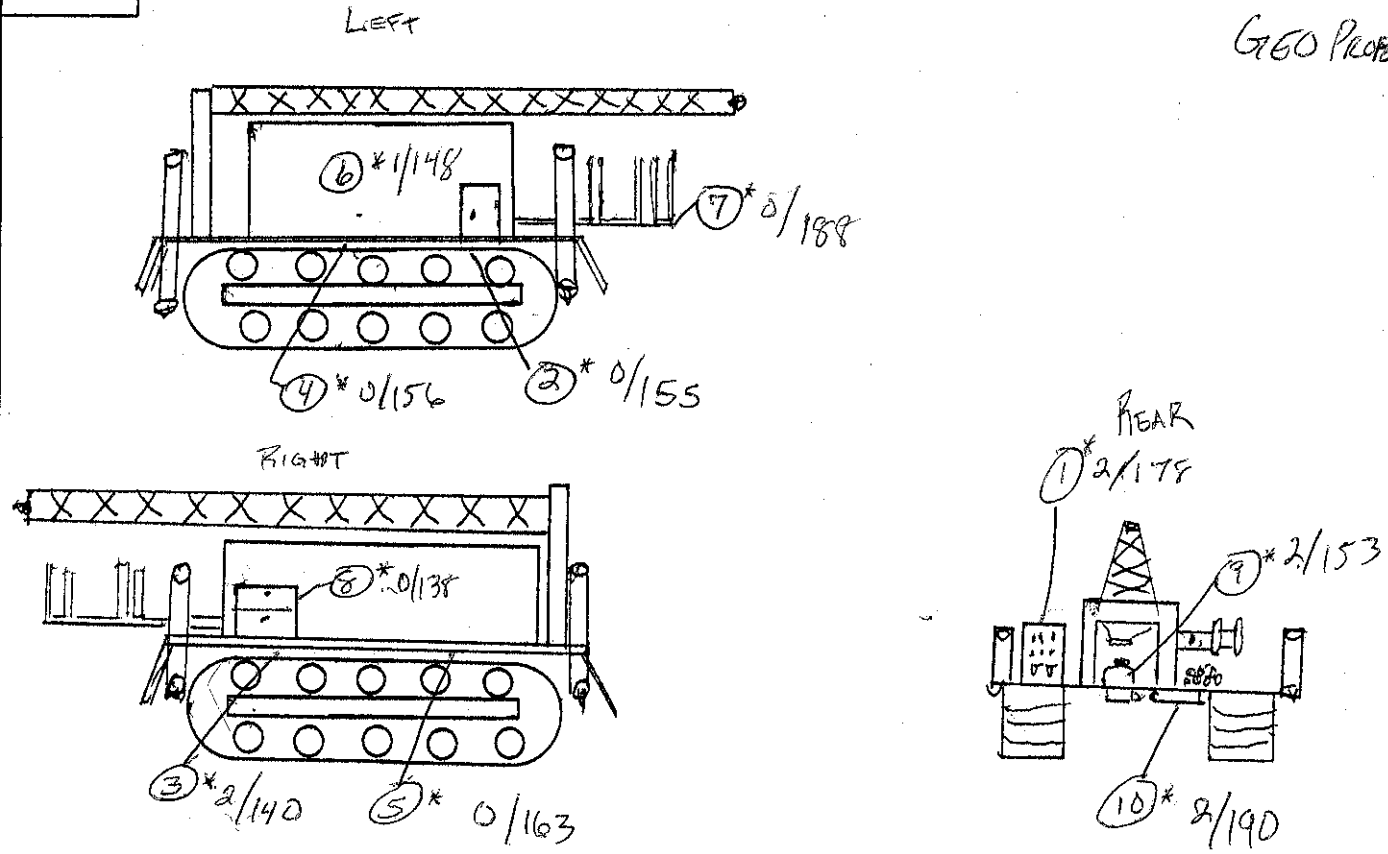

Comments	Surveyed By:	Date:	Instrument	Serial #	α Eff.	β Eff.	α Bkg.	β Bkg	γ Bkg	Cal. Due
ALL SMEAR RESULTS	D. Albert	11/9/07	2929	196226	.363	.123	.2	39.1		09/08
IN COUNTS PER			2360	184952	0.15	0.10	1	167	N/A	10/08
TWO MINUTES	N/A	N/A	Model 3	79511	N/A	0.10	N/A	40		01/08
100% of ACCESSIBLE			BICRON	1716		N/A	N/A	A	5	07/08
SURFACES & EQUIPMENT										
SCANNED W/ 44-9	Reviewed By:	Date:								
SCAN RESULTS: 30-40 cpm		11/9/07								

Key: ■ A/S Location; ⋯ Boundary; ○ Smear; □ Dose Rate ____ /hr; • Direct Reading CPM/direct frisk; △ Grab Sample

Location: Hicksville Site:	RWP# 08-1007.00-01	Survey # 17	Survey Type: RELEASE	pg. 1 of 1

Smear (CPM/100 cm²) Direct Count (CPM/Direct Frisk) circle one					
No.	α	β	No.	α	β
1	0	82	26	N	A
2	0	67	27		
3	1	86	28		
4			29		
5			30		
6			31		
7			32		
8			33		
9			34		
10			35		
11			36		
12			37		
13	N		38	N	
14			39		
15			40		
16			41		
17			42		
18			43		
19			44		
20			45		
21			46		
22			47		
23			48		
24			49		
25			50		

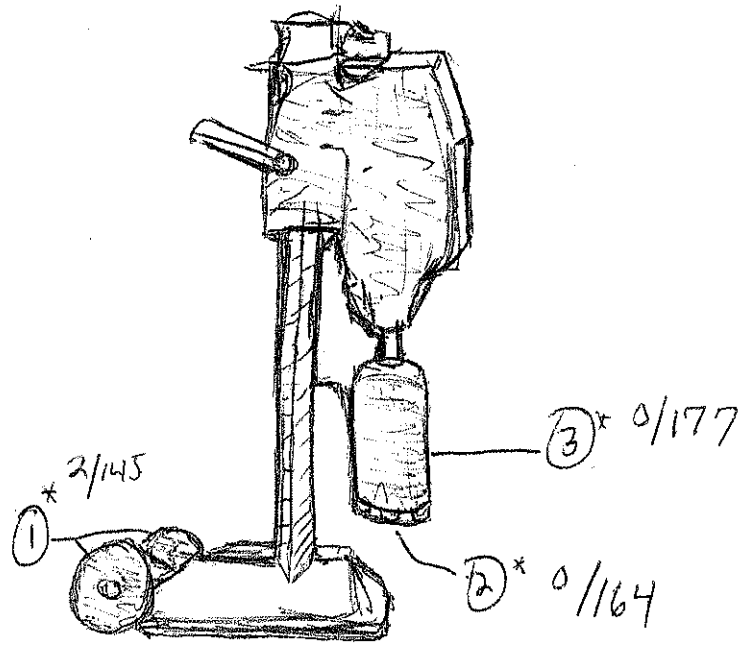

Comments	Surveyed By:	Date:	Instrument	Serial #	α Eff.	β Eff.	α Bkg.	β Bkg	γ Bkg	Cal. Due
ALL SMEARS ARE RESULTS	D. Allred	11/9/07	2929	196226	.363	.123	0.2	39.1		09/08
OF COUNTS PER TWO			2360	184952	0.15	0.10	1	167	N/A	10/08
MINUTE. 100% OF	N/A	N/A	Model 3	79511	N/A	0.10	N/A	40		01/08
ACCESSIBLE SURFACES			BICRON	1716		N/A	A	N/A		07/08
& EQUIPMENT										
SCANNED w/44-9	Reviewed By:	Date:								
RESULTS: 30-40 cpm	[illegible]	11/9/07			N					

Key	
■	A/S Location
-	Boundary
○	Smear
□	Dose Rate ____/hr
*	Direct Reading CPM/direct frisk
△	Grab Sample

Location: Site: HICKSVILLE	RWP# 08-1007.00-01	Survey # 18	Survey Type: INCOMING	pg. 1 of 1

Smear (CPM/100 cm²) circle one

Direct Count (CPM/Direct Frisk)

No.	α	β	No.	α	β
1	2	78	26		
2	0	89	27	N/A	
3			28		
4			29		
5			30		
6			31		
7			32		
8			33		
9			34		
10			35		
11			36		
12			37		
13	N		38		
14			39	A	
15			40		
16			41		
17			42		
18			43		
19			44		
20			45		
21			46		
22			47		
23			48		
24			49		
25			50		

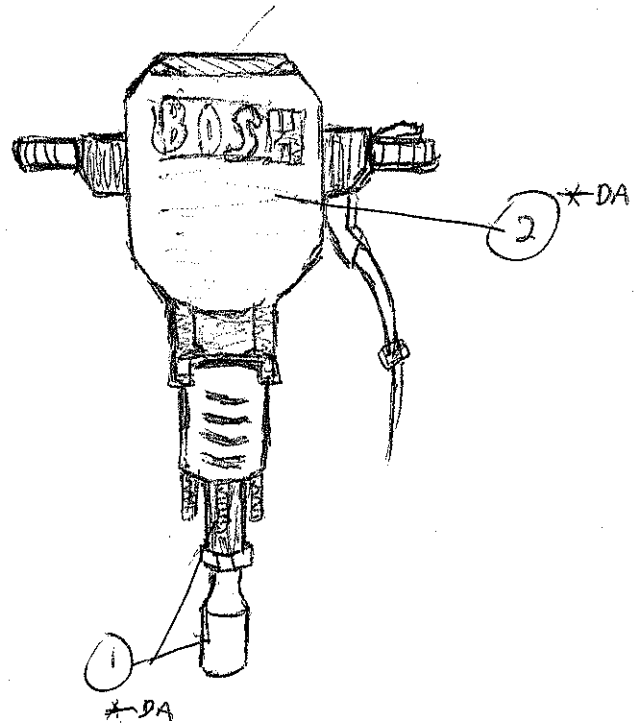

Comments	Surveyed By:	Date:	Instrument	Serial #	α Eff.	β Eff.	α Bkg.	β Bkg	γ Bkg	Cal. Due
ALL SMEAR RESULTS	D. Albert	11/9/07	2929	196226	.363	.123	0.2	39.1		09/08
IN COUNTS PER	Gordon T.	11/9/07	2360	184952	0.15	0.10	1	167	N/A	10/08
TWO MINUTES			Model 3	79511	N/A	0.10	N/A	40		01/08
100% of ACCESSIBLE	N/A	N/A	BICRON	1716		N/A		N/A	5	07/08
SURFACES & EQUIPMENT					A					
SCANNED W/ 44-9	Reviewed By:	Date:								
SCAN RESULTS: 30-40 cpm	G M Lee	11/9/07		N						

Key

■	A/S Location
-	Boundary
○	Smear
□	Dose Rate ____/hr
*	Direct Reading CPM/direct frisk
△	Grab Sample

Location: HICKSVILLE Site:	RWP# 08-100700-01	Survey # 19	Survey Type: RELEASE	pg. 1 of 1

Smear (CPM/100 cm²) / Direct Count (CPM/Direct Frisk)						circle one
No.	α	β	No.	α	β	
1	3	87	26	N	A	
2	0	97	27			
3			28			
4			29			
5			30			
6			31			
7			32			
8		N	33			
9			34		A	
10			35			
11			36			
12			37			
13			38			
14			39			
15			40			
16			41			
17			42			
18			43			
19			44			
20			45			
21			46			
22			47			
23			48			
24			49			
25			50			

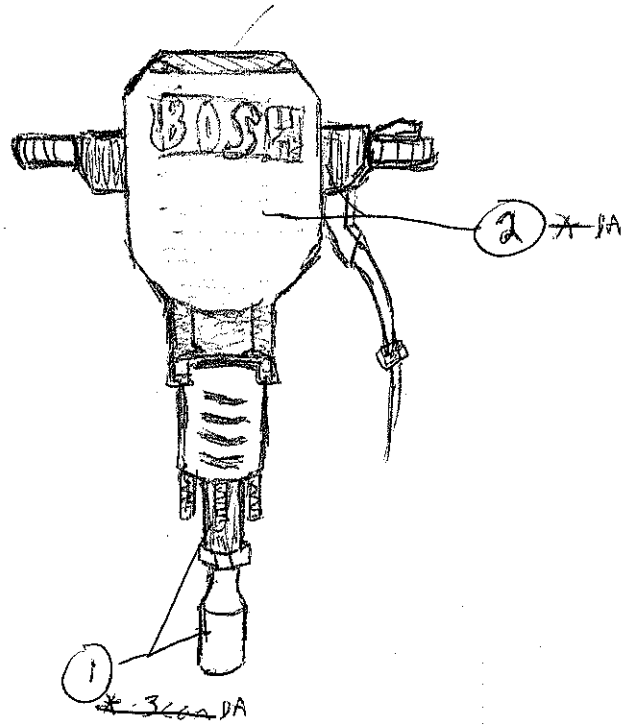

Comments	Surveyed By:	Date:	Instrument	Serial #	α Eff.	β Eff.	α Bkg.	β Bkg	γ Bkg	Cal. Due
ALL SMEAR RESULTS	D. ALBERT	11/9/07	2929	196926	0.363	0.123	0.2	39.1		09/08
IN COUNTS PER TWO			2360	184952	0.15	0.10	1	167	N/A	10/08
MINUTES 100% OF			Model 3	79511	N/A	0.10	N/A	40		01/08
ACCESSIBLE SURFACES	N	A	BICRON	1716					5	07/08
AND EQUIPMENT SCANNED					N					
W/ 44-9 SCAN	Reviewed By:	Date:	N					A	N	A
RESULTS = 30-40 cpm	[signature]	11/9/07								

Key	
■	A/S Location
⋯	Boundary
○	Smear
□	Dose Rate ____ /hr
•	Direct Reading CPM/direct frisk
△	Grab Sample

Location: Hillsboro	RWP#	Survey #	Survey Type:	
Site: Bldg 70	08-1007.00	20		pg. 1 of 1

Smear (CPM/100 cm²)
Direct Count (CPM/Direct Frisk)
circle one

No.	α	β	No.	α	β
1	0	73	26		
2	1	76	27		
3	0	77	28		
4	1	72	29		
5	0	97	30		
6	3	97	31		
7	0	69	32		
8	2	92	33		
9	0	97	34	N	
10	0	79	35		
11			36		
12			37		
13			38		
14			39		
15	N		40		
16			41		
17			42		
18			43		A
19		A	44		
20			45		
21			46		
22			47		
23			48		
24			49		
25			50		

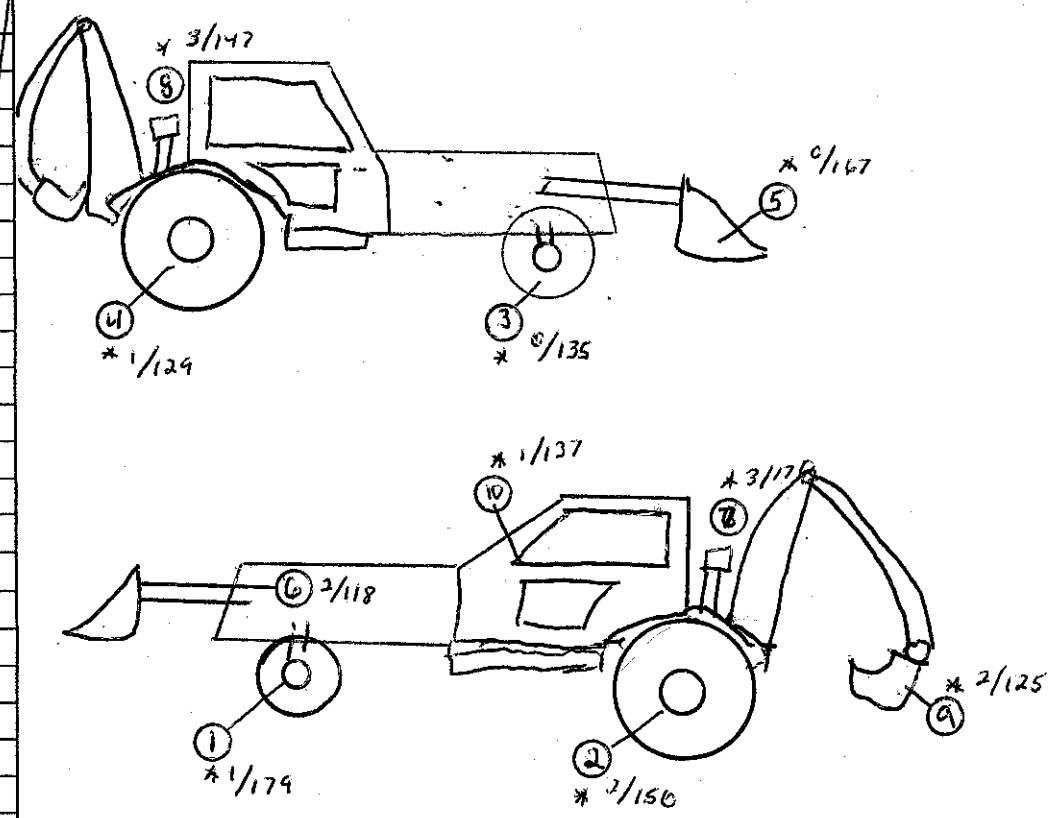

α/β cpm

Comments	Surveyed By:	Date:	Instrument	Serial #	α Eff.	β Eff.	α Bkg.	β Bkg	γ Bkg	Cal. Due
Smear Results Are In	K Gordon	11/9/07	2929	196226	.363	.123	.2	39.1	N	9-26-08
Counts Per 2 minutes			2360	220246	.15	.10	1	135		10-5-08
100% of All Accessible			Model 3	79498	N/A	.10	N/A	40	A	4-11-08
Area Scanned with										
44-9 40-60 cpm				N						
	Reviewed By:	Date:					A			
	[signature]	11/9/07								

Key	
■	A/S Location
-	Boundary
○	Smear
□	Dose Rate _____/hr
*	Direct Reading CPM/direct frisk
△	Grab Sample

Location: HICKSVILLE	RWP# 08-1007.00	vey # 21	Survey Type: RELEASE	pg. 1 of 1
Site: BLDG 70				

Smear (CPM/100 cm²) | circle one | TRACK RIG

Direct Count (CPM/Direct Frisk)

No.	α	β	No.	α	β
1	1	90	26		
2	1	101	27		
3	0	82	28		
4	2	80	29		
5	2	98	30		
6	0	91	31		
7	2	84	32	N	
8	1	92	33		
9	0	88	34		
10	0	78	35		
11			36		
12			37		
13			38		
14			39		
15	N		40		
16			41		
17			42		
18			43		
19			44		
20			45		
21			46		
22			47		A
23		A	48		
24			49		
25			50		

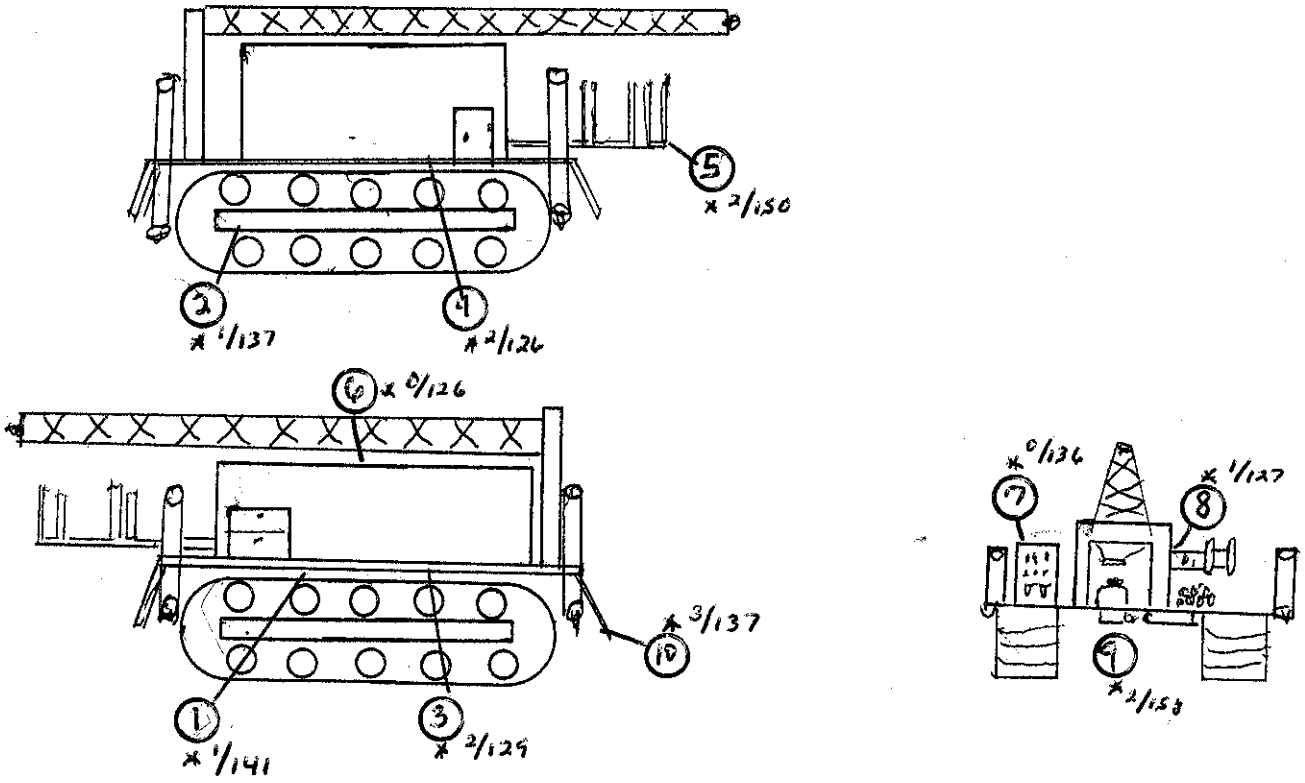

x/β- cpm

Comments	Surveyed By:	Date:	Instrument	Serial #	α Eff.	β Eff.	α Bkg.	β Bkg	γ Bkg	Cal. Due
Smear Results In Counts	K Gordon	11/14/07	~~2929~~	~~137607~~	~~.10~~		~~.1~~	~~48~~		~~9-28-08~~
Per 2 minutes, 100%			~~2360~~	~~220246~~	~~.47~~			~~47~~		
Scan or All Accessible			2929	137607			.1	47	N	9-28-08
Surfaces with 44.9,			2360	220246	.15	.10	1	126		10-5-08
40.70cpm			Model 3	79498	N/A	.10	N/A	40	A	4-11-08
	Reviewed By:	Date:		N						
	[signature]	11/15/07							A	

Key

■	A/S Location
⁘	Boundary
○	Smear
□	Dose Rate ____/hr
*	Direct Reading CPM/direct frisk
△	Grab Sample

Location: HICKSVILLE Site: BLDG 70	RWP# 08-1007.00-001	Survey # 22	Survey Type: RELEASE SURVEY	pg. 1 of 1

Smear (CPM/100 cm²) / Direct Count (CPM/Direct Frisk) — circle one

No.	α	β	No.	α	β
1	0	72	26		
2	0	88	27		
3	0	90	28		
4	0	63	29		
5	0	92	30		
6	0	74	31		
7	0	78	32		
8	0	79	33		
9	1	86	34		
10	0	93	35		
11			36		
12			37		
13			38		
14			39		
15			40		
16			41		
17			42		
18			43		
19			44		
20			45		
21			46		
22			47		
23			48		
24			49		
25			50		

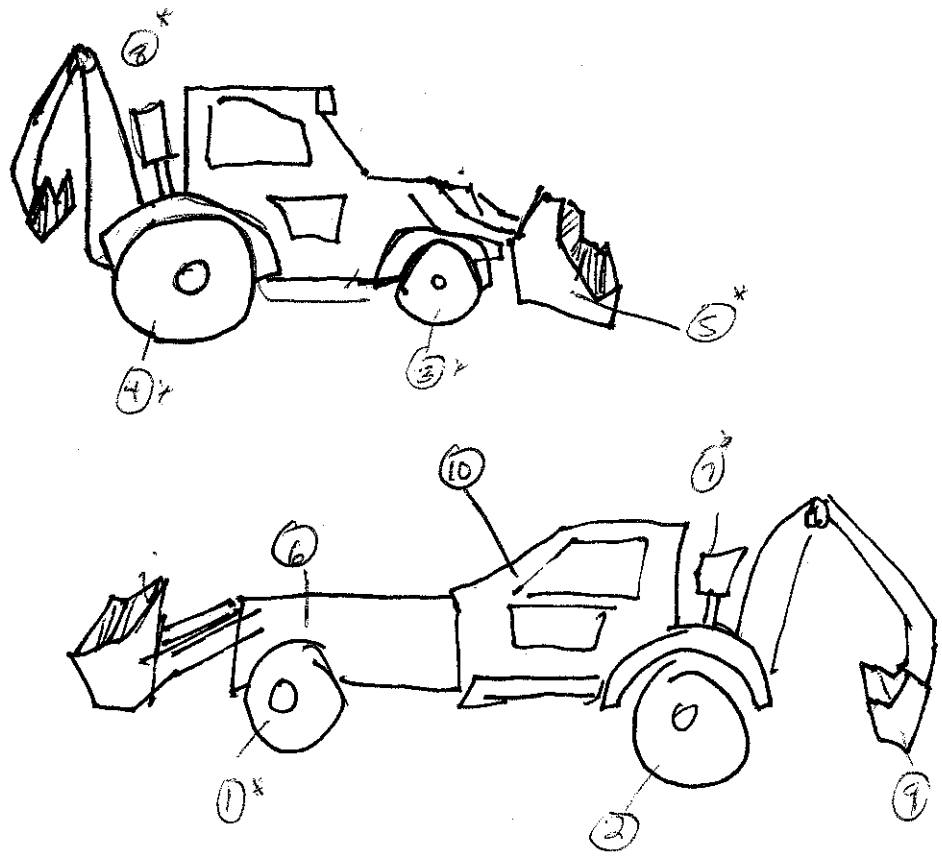

Comments	Surveyed By:	Date:	Instrument	Serial #	α Eff.	β Eff.	α Bkg.	β Bkg	γ Bkg	Cal. Due
Smear results listed in	D. Albert	11/15/07	2929	196226	0.363	0.123	0.4	39.3	N/A	9/08
counts per 2 minutes.			BICRON	1716	N/A	N/A	N/A	N/A	5	7/08
Scanned 100% of		A	44-9	79552	N/A	0.10	N/A	40	N/A	2/08
accessible surfaces w/44-9.	N		43-93	220246	0.15	0.10	1	156 ~~192~~	N/A	10/08
Results were 30-40 cpm.										
	Reviewed By:	Date:								
	[signature]	11/15/07		N						

Key

■	A/S Location
-	Boundary
○	Smear
□	Dose Rate _____ /hr
*	Direct Reading CPM/direct frisk
△	Grab Sample

Location: HICKSVILLE Site: BUILDING 70 RAD STORAGE AREA	RWP# 08-1007.00	Survey # 23	Survey Type: CONTAMINATION	pg. 1 of 1

~~Smear (CPM/100 cm²)~~ ~~Direct Count (CPM/Direct Frisk)~~ circle one

No.	α	β	No.	α	β
1	2	76	26		
2	0	69	27		
3	3	66	28		
4	0	71	29		
5	0	89	30		
6	1	79	31		
7	2	54	32		
8	2	86	33		
9	0	65	34		
10	1	70	35		
11	1	75	36		
12	0	87	37		
13	0	78	38	N	A
14	0	72	39		
15	0	88	40		
16			41		
17			42		
18			43		
19	N	A	44		
20			45		
21			46		
22			47		
23			48		
24			49		
25			50		

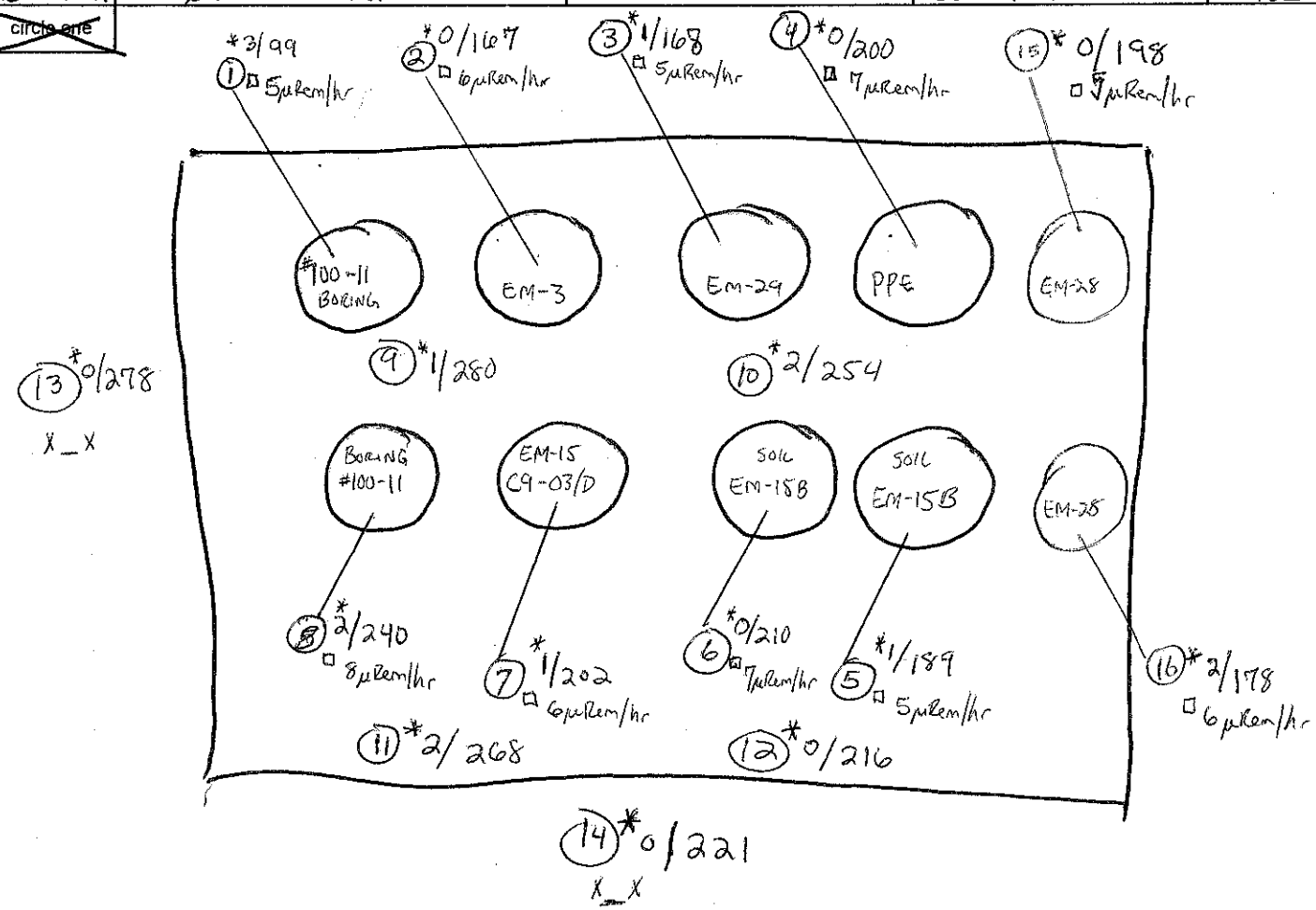

Comments	Surveyed By:	Date:	Instrument	Serial #	α Eff.	β Eff.	α Bkg.	β Bkg	γ Bkg	Cal. Due
Smear results listed in	D. Albert	11/15/07	2929	196226	0.363	0.123	0.4	39.3	N/A	9/08
counts per 2 minutes.			BICRON	1716	N/A	N/A	N/A	N/A	50	07/08
SCANNED 100% of access-			44-9	79552	N/A	0.10	N/A	40	N/A	2/08
ible surfaces w/ 44-9.	N		43-93	220246	0.15	0.10	1	156	N/A	10/08
ALL RESULTS WERE BELOW										
50 cpm.	Reviewed By:	Date:				N	A			
GENERAL AREA DOSE RATE = 4μRem/hr	[signature]	11/15/07								

Key

■	A/S Location
-	Boundary
○	Smear
□	Dose Rate μRem/hr
*	Direct Reading CPM/direct frisk
△	Grab Sample

CABRERA SMEAR COUNTING WORKSHEET (Rev 6)

α eff	β eff
0.3630	0.1230

Sample Count Time (min)	Daily Background Count Time (min)
2.0	10.0

dpm/100 cm^2 α Flag	dpm/100 cm^2 β Flag
20	1000

* Morning Daily Count

seq. #	Sample ID# and Description	Date	Background Total Counts* α	Background Total Counts* β	Sample Total Counts α	Sample Total Counts β	Background (cpm) α	Background (cpm) β	Sample Counts (cpm) α	Sample Counts (cpm) β	Sample (dpm/100 cm^2) α	Sample (dpm/100 cm^2) β	> α flag	> β flag	Tech. Initial
1	Survey01-01	10/15/2007	1	365	1	79	0.1	36.5	0.50	40	1.1	24			DD
2	Survey01-02	10/15/2007	1	365	0	84	0.1	36.5	0.00	42	-0.3	45			DD
3	Survey01-03	10/15/2007	1	365	2	78	0.1	36.5	1.00	39	2.5	20			DD
4	Survey01-04	10/15/2007	1	365	2	87	0.1	36.5	1.00	44	2.5	57			DD
5	Survey01-05	10/15/2007	1	365	2	84	0.1	36.5	1.00	42	2.5	45			DD
6	Survey01-06	10/15/2007	1	365	2	87	0.1	36.5	1.00	44	2.5	57			DD
7	Survey01-07	10/15/2007	1	365	0	86	0.1	36.5	0.00	43	-0.3	53			DD
8	Survey01-08	10/15/2007	1	365	0	82	0.1	36.5	0.00	41	-0.3	37			DD
9	Survey01-09	10/15/2007	1	365	0	77	0.1	36.5	0.00	39	-0.3	16			DD
10	Survey01-10	10/15/2007	1	365	0	90	0.1	36.5	0.00	45	-0.3	69			DD
11	Survey01-11	10/15/2007	1	365	0	65	0.1	36.5	0.00	33	-0.3	-33			DD
12	Survey01-12	10/15/2007	1	365	0	66	0.1	36.5	0.00	33	-0.3	-28			DD
13	Survey01-13	10/15/2007	1	365	0	67	0.1	36.5	0.00	34	-0.3	-24			DD
14	Survey01-14	10/15/2007	1	365	1	72	0.1	36.5	0.50	36	1.1	-4			DD
15	Survey01-15	10/15/2007	1	365	1	82	0.1	36.5	0.50	41	1.1	37			DD
16	Survey01-16	10/15/2007	1	365	3	76	0.1	36.5	1.50	38	3.9	12			DD
17	Survey01-17	10/15/2007	1	365	0	60	0.1	36.5	0.00	30	-0.3	-53			DD
18	Survey01-18	10/15/2007	1	365	0	78	0.1	36.5	0.00	39	-0.3	20			DD
19	Survey01-19	10/15/2007	1	365	0	64	0.1	36.5	0.00	32	-0.3	-37			DD
20	Survey01-20	10/15/2007	1	365	0	87	0.1	36.5	0.00	44	-0.3	57			DD
21	Survey01-21	10/15/2007	1	365	0	76	0.1	36.5	0.00	38	-0.3	12			DD
22	Survey01-22	10/15/2007	1	365	0	68	0.1	36.5	0.00	34	-0.3	-20			DD
23	Survey01-23	10/15/2007	1	365	0	67	0.1	36.5	0.00	34	-0.3	-24			DD
24	Survey01-24	10/15/2007	1	365	1	72	0.1	36.5	0.50	36	1.1	-4			DD
25	Survey01-25	10/16/2007	0	390	0	69	0.0	39.0	0.00	35	0.0	-37			DD
26	Survey01-26	10/16/2007	0	390	0	67	0.0	39.0	0.00	34	0.0	-45			DD
27	Survey01-27	10/16/2007	0	390	0	75	0.0	39.0	0.00	38	0.0	-12			DD
28	Survey01-28	10/16/2007	0	390	0	68	0.0	39.0	0.00	34	0.0	-41			DD
29	Survey01-29	10/16/2007	0	390	1	82	0.0	39.0	0.50	41	1.4	16			DD
30	Survey01-30	10/16/2007	0	390	1	71	0.0	39.0	0.50	36	1.4	-28			DD
31	C13-01	10/16/2007	0	390	0	64	0.0	39.0	0.00	32	0.0	-57			DD
32	C13-02	10/16/2007	0	390	0	78	0.0	39.0	0.00	39	0.0	0			DD
33	C08-01	10/16/2007	0	390	0	86	0.0	39.0	0.00	43	0.0	33			DD
34	C08-02	10/16/2007	0	390	0	74	0.0	39.0	0.00	37	0.0	-16			DD
35	SU09-10/D	10/16/2007	0	390	0	73	0.0	39.0	0.00	37	0.0	-20			MMD
36	SU13-07/D	10/17/2007	1	376	1	67	0.1	37.6	0.50	34	1.1	-33			MMD
37	DR-7	10/17/2007	1	376	1	75	0.1	37.6	0.50	38	1.1	-1			MMD
38	DR-Y	10/17/2007	1	376	1	81	0.1	37.6	0.50	41	1.1	24			MMD
39	C07-01	10/17/2007	1	376	0	90	0.1	37.6	0.00	45	-0.3	60			MMD
41	C07-02	10/17/2007	1	376	3	57	0.1	37.6	1.50	29	3.9	-74			MMD
42	C13-03	10/17/2007	1	376	1	67	0.1	37.6	0.50	34	1.1	-33			MMD
43	SU14-10/D	10/18/2007	0	398	0	73	0.0	39.8	0.00	37	0.0	-27			MMD
44	C04-07	10/18/2007	0	398	0	66	0.0	39.8	0.00	33	0.0	-55			DD
45	C11-07	10/18/2007	0	398	0	59	0.0	39.8	0.00	30	0.0	-84			DD
46	C10-01	10/22/2007	2	379	0	73	0.2	37.9	0.00	37	-0.6	-11			MMD

CABRERA SMEAR COUNTING WORKSHEET (Rev 6)

47	C10-02	10/22/2007	2	379	0	86	0.2	37.9	0.00	43	-0.6	41			MMD
48	C12-01	10/22/2007	2	379	0	67	0.2	37.9	0.00	34	-0.6	-36			MMD
49	C12-02	10/22/2007	2	379	0	73	0.2	37.9	0.00	37	-0.6	-11			MMD
50	C04-02	10/22/2007	2	379		77	0.2	37.9		39	-0.6	5			MMD
51	C09-01	10/22/2007	2	379	0	85	0.2	37.9	0.00	43	-0.6	37			MMD
52	Survey02-01	10/19/2007	2	357	0	73	0.2	35.7	0.00	37	-0.6	7			MMD
53	Survey02-02	10/19/2007	2	357	1	73	0.2	35.7	0.50	37	0.8	7			MMD
54	Survey02-03	10/19/2007	2	357	3	77	0.2	35.7	1.50	39	3.6	23			MMD
55	Survey02-04	10/19/2007	2	357	2	81	0.2	35.7	1.00	41	2.2	39			MMD
56	Survey02-05	10/19/2007	2	357	0	83	0.2	35.7	0.00	42	-0.6	47			MMD
57	Survey02-06	10/19/2007	2	357	0	89	0.2	35.7	0.00	45	-0.6	72			MMD
58	Survey02-07	10/19/2007	2	357	2	77	0.2	35.7	1.00	39	2.2	23			MMD
59	Survey02-08	10/19/2007	2	357	0	64	0.2	35.7	0.00	32	-0.6	-30			MMD
60	Survey02-09	10/19/2007	2	357	0	66	0.2	35.7	0.00	33	-0.6	-22			MMD
61	Survey02-10	10/19/2007	2	357	0	87	0.2	35.7	0.00	44	-0.6	63			MMD
62	Survey03-01	10/22/2007	2	379	0	98	0.2	37.9	0.00	49	-0.6	90			MMD
63	Survey03-02	10/22/2007	2	379	0	80	0.2	37.9	0.00	40	-0.6	17			MMD
64	Survey03-03	10/22/2007	2	379	0	79	0.2	37.9	0.00	40	-0.6	13			MMD
65	Survey03-04	10/22/2007	2	379	0	78	0.2	37.9	0.00	39	-0.6	9			MMD
66	Survey03-05	10/22/2007	2	379	1	64	0.2	37.9	0.50	32	0.8	-48			MMD
67	Survey03-06	10/22/2007	2	379	1	72	0.2	37.9	0.50	36	0.8	-15			MMD
68	Survey03-07	10/22/2007	2	379	1	73	0.2	37.9	0.50	37	0.8	-11			MMD
69	Survey03-08	10/22/2007	2	379	1	82	0.2	37.9	0.50	41	0.8	25			MMD
70	Survey03-09	10/22/2007	2	379	0	93	0.2	37.9	0.00	47	-0.6	70			MMD
71	Survey03-10	10/22/2007	2	379	0	84	0.2	37.9	0.00	42	-0.6	33			MMD
72	Survey04-01	10/23/2007	0	377	2	75	0.0	37.7	1.00	38	2.8	-2			MMD
73	Survey04-02	10/23/2007	0	377	2	66	0.0	37.7	1.00	33	2.8	-38			MMD
74	Survey04-03	10/23/2007	0	377	0	76	0.0	37.7	0.00	38	0.0	2			MMD
75	Survey04-04	10/23/2007	0	377	1	82	0.0	37.7	0.50	41	1.4	27			MMD
76	Survey04-05	10/23/2007	0	377	1	83	0.0	37.7	0.50	42	1.4	31			MMD
77	Survey04-06	10/23/2007	0	377	0	77	0.0	37.7	0.00	39	0.0	7			MMD
78	Survey04-07	10/23/2007	0	377	0	71	0.0	37.7	0.00	36	0.0	-18			MMD
79	Survey04-08	10/23/2007	0	377	0	82	0.0	37.7	0.00	41	0.0	27			MMD
80	Survey04-09	10/23/2007	0	377	1	68	0.0	37.7	0.50	34	1.4	-30			MMD
81	Survey04-10	10/23/2007	0	377	0	86	0.0	37.7	0.00	43	0.0	43			MMD
82	C09-02/D	10/23/2007	0	377	0	61	0.0	37.7	0.00	31	0.0	-59			MMD
83	C09-04/D	10/23/2007	0	377	2	77	0.0	37.7	1.00	39	2.8	7			MMD
84	SU08-02/D	10/23/2007	0	377	1	59	0.0	37.7	0.50	30	1.4	-67			MMD
85	SU08-11/D	10/24/2007	2	386	1	78	0.2	38.6	0.50	39	0.8	3			MMD
86	C09-03/D	10/24/2007	2	386	0	96	0.2	38.6	0.00	48	-0.6	76			MMD
87	C04-01/D	10/25/2007	1	351	1	80	0.1	35.1	0.50	40	1.1	40			MMD
88	C06-02/D	10/25/2007	1	351	0	92	0.1	35.1	0.00	46	-0.3	89			MMD
89	C06-03	10/25/2007	1	351	3	85	0.1	35.1	1.50	43	3.9	60			MMD
90	Survey05-01	10/25/2007	1	351	0	73	0.1	35.1	0.00	37	-0.3	11			MMD
91	Survey05-02	10/25/2007	1	351	1	67	0.1	35.1	0.50	34	1.1	-13			MMD
92	Survey05-03	10/25/2007	1	351	0	76	0.1	35.1	0.00	38	-0.3	24			MMD
93	Survey05-04	10/25/2007	1	351	1	81	0.1	35.1	0.50	41	1.1	44			MMD
94	Survey05-05	10/25/2007	1	351	2	72	0.1	35.1	1.00	36	2.5	7			MMD
95	Survey05-06	10/25/2007	1	351	2	66	0.1	35.1	1.00	33	2.5	-17			MMD
96	Survey05-07	10/25/2007	1	351	1	65	0.1	35.1	0.50	33	1.1	-21			MMD
97	Survey05-08	10/25/2007	1	351	0	91	0.1	35.1	0.00	46	-0.3	85			MMD
98	Survey05-09	10/25/2007	1	351	1	74	0.1	35.1	0.50	37	1.1	15			MMD
99	Survey05-10	10/25/2007	1	351	1	74	0.1	35.1	0.50	37	1.1	15			MMD
100	Survey06-01	10/25/2007	1	351	0	68	0.1	35.1	0.00	34	-0.3	-9			MMD

CABRERA SMEAR COUNTING WORKSHEET (Rev 6)

101	Survey06-02	10/25/2007	1	351	0	76	0.1	35.1	0.00	38	-0.3	24			MMD
102	Survey06-03	10/25/2007	1	351	0	59	0.1	35.1	0.00	30	-0.3	-46			MMD
103	Survey06-04	10/25/2007	1	351	0	83	0.1	35.1	0.00	42	-0.3	52			MMD
104	Survey06-05	10/25/2007	1	351	0	86	0.1	35.1	0.00	43	-0.3	64			MMD
105	Survey06-06	10/25/2007	1	351	1	82	0.1	35.1	0.50	41	1.1	48			MMD
106	Survey06-07	10/25/2007	1	351	0	55	0.1	35.1	0.00	28	-0.3	-62			MMD
107	Survey06-08	10/25/2007	1	351	0	75	0.1	35.1	0.00	38	-0.3	20			MMD
108	Survey06-09	10/25/2007	1	351	1	55	0.1	35.1	0.50	28	1.1	-62			MMD
109	Survey06-10	10/25/2007	1	351	2	77	0.1	35.1	1.00	39	2.5	28			MMD
110	Survey07-01	10/26/2007	1	395	0	81	0.1	39.5	0.00	41	-0.3	8			MMD
111	Survey07-02	10/26/2007	1	395	1	65	0.1	39.5	0.50	33	1.1	-57			MMD
112	Survey07-03	10/26/2007	1	395	1	72	0.1	39.5	0.50	36	1.1	-28			MMD
113	Survey07-04	10/26/2007	1	395	0	76	0.1	39.5	0.00	38	-0.3	-12			MMD
114	Survey07-05	10/26/2007	1	395	0	59	0.1	39.5	0.00	30	-0.3	-81			MMD
115	Survey07-06	10/26/2007	1	395	2	63	0.1	39.5	1.00	32	2.5	-65			MMD
116	Survey07-07	10/26/2007	1	395	1	77	0.1	39.5	0.50	39	1.1	-8			MMD
117	Survey07-08	10/26/2007	1	395	0	66	0.1	39.5	0.00	33	-0.3	-53			MMD
118	Survey07-09	10/26/2007	1	395	1	78	0.1	39.5	0.50	39	1.1	-4			MMD
119	Survey07-10	10/26/2007	1	395	0	68	0.1	39.5	0.00	34	-0.3	-45			MMD
120	Survey08-01	10/26/2007	1	395	0	62	0.1	39.5	0.00	31	-0.3	-69			DD
121	Survey08-02	10/26/2007	1	395	2	78	0.1	39.5	1.00	39	2.5	-4			DD
122	Survey08-03	10/26/2007	1	395	0	76	0.1	39.5	0.00	38	-0.3	-12			DD
123	Survey08-04	10/26/2007	1	395	0	72	0.1	39.5	0.00	36	-0.3	-28			DD
124	Survey08-05	10/26/2007	1	395	0	67	0.1	39.5	0.00	34	-0.3	-49			DD
125	Survey08-06	10/26/2007	1	395	0	61	0.1	39.5	0.00	31	-0.3	-73			DD
126	Survey08-07	10/26/2007	1	395	0	73	0.1	39.5	0.00	37	-0.3	-24			DD
127	Survey08-08	10/26/2007	1	395	1	79	0.1	39.5	0.50	40	1.1	0			DD
128	Survey08-09	10/26/2007	1	395	0	72	0.1	39.5	0.00	36	-0.3	-28			DD
129	Survey08-10	10/26/2007	1	395	2	81	0.1	39.5	1.00	41	2.5	8			DD
130	Survey09-01	10/29/2007	1	395	0	75	0.1	39.5	0.00	38	-0.3	-16			DD
131	Survey09-02	10/29/2007	1	395	0	69	0.1	39.5	0.00	35	-0.3	-41			DD
132	Survey09-03	10/29/2007	1	395	0	63	0.1	39.5	0.00	32	-0.3	-65			DD
133	Survey09-04	10/29/2007	1	395	0	72	0.1	39.5	0.00	36	-0.3	-28			DD
134	Survey09-05	10/29/2007	1	395	1	71	0.1	39.5	0.50	36	1.1	-33			DD
135	Survey09-06	10/29/2007	1	395	2	68	0.1	39.5	1.00	34	2.5	-45			DD
136	Survey09-07	10/29/2007	1	395	1	73	0.1	39.5	0.50	37	1.1	-24			DD
137	Survey09-08	10/29/2007	1	395	1	66	0.1	39.5	0.50	33	1.1	-53			DD
138	Survey09-09	10/29/2007	1	395	1	76	0.1	39.5	0.50	38	1.1	-12			DD
139	Survey09-10	10/29/2007	1	395	0	75	0.1	39.5	0.00	38	-0.3	-16			DD
140	100-11	10/30/2007	3	381	0	73	0.3	38.1	0.00	37	-0.8	-13			DA
141	C03-02	10/30/2007	3	381	0	76	0.3	38.1	0.00	38	-0.8	-1			DA
142	C02-01	10/30/2007	3	381	1	84	0.3	38.1	0.50	42	0.6	32			DA
143	LPH-A/D	10/30/2007	3	381	0	71	0.3	38.1	0.00	36	-0.8	-21			DA
144	C03-01	10/30/2007	3	381	1	67	0.3	38.1	0.50	34	0.6	-37			DA
145	C02-02	10/30/2007	3	381	1	79	0.3	38.1	0.50	40	0.6	11			DA
146	Survey10-01	10/30/2007	3	381	0	77	0.3	38.1	0.00	39	-0.8	3			DA
147	Survey10-02	10/30/2007	3	381	0	70	0.3	38.1	0.00	35	-0.8	-25			DA
148	Survey10-03	10/30/2007	3	381	2	85	0.3	38.1	1.00	43	1.9	36			DA
149	Survey10-04	10/30/2007	3	381	0	59	0.3	38.1	0.00	30	-0.8	-70			DA
150	Survey10-05	10/30/2007	3	381	0	89	0.3	38.1	0.00	45	-0.8	52			DA
151	Survey10-06	10/30/2007	3	381	0	86	0.3	38.1	0.00	43	-0.8	40			DA
152	Survey10-07	10/30/2007	3	381	1	71	0.3	38.1	0.50	36	0.6	-21			DA
153	Survey10-08	10/30/2007	3	381	0	74	0.3	38.1	0.00	37	-0.8	-9			DA
154	Survey10-09	10/30/2007	3	381	0	84	0.3	38.1	0.00	42	-0.8	32			DA

CABRERA SMEAR COUNTING WORKSHEET (Rev 6)

155	Survey10-10	10/30/2007	3	381	2	80	0.3	38.1	1.00	40	1.9	15			DA
156	C01-01	11/1/2007	0	365	1	64	0.0	36.5	0.50	32	1.4	-37			DA
157	C01-02	11/1/2007	0	365	0	63	0.0	36.5	0.00	32	0.0	-41			DA
158	C01-03	11/1/2007	0	365	0	85	0.0	36.5	0.00	43	0.0	49			DA
159	C05-01	11/1/2007	0	365	0	59	0.0	36.5	0.00	30	0.0	-57			DA
160	Rad Drum Storage Area-01	11/1/2007	0	365	2	83	0.0	36.5	1.00	42	2.8	41			DA
161	Rad Drum Storage Area-02	11/1/2007	0	365	0	65	0.0	36.5	0.00	33	0.0	-33			DA
162	Rad Drum Storage Area-03	11/1/2007	0	365	0	70	0.0	36.5	0.00	35	0.0	-12			DA
163	Rad Drum Storage Area-04	11/1/2007	0	365	1	68	0.0	36.5	0.50	34	1.4	-20			DA
164	Rad Drum Storage Area-05	11/1/2007	0	365	1	76	0.0	36.5	0.50	38	1.4	12			DA
165	Rad Drum Storage Area-06	11/1/2007	0	365	0	81	0.0	36.5	0.00	41	0.0	33			DA
166	Survery 11 -01	11/2/2007	0	184	0	81	0.0	18.4	0.00	41	0.0	180			DA
167	Survery 11-02	11/2/2007	0	184	0	83	0.0	18.4	0.00	42	0.0	188			DA
168	Survery 11-03	11/2/2007	0	184	1	95	0.0	18.4	0.50	48	1.4	237			DA
169	Survery 11-04	11/2/2007	0	184	1	93	0.0	18.4	0.50	47	1.4	228			DA
170	Survery 11-05	11/2/2007	0	184	1	91	0.0	18.4	0.50	46	1.4	220			DA
171	Survery 11-06	11/2/2007	0	184	2	72	0.0	18.4	1.00	36	2.8	143			DA
172	Survery 11-07	11/2/2007	0	184	0	68	0.0	18.4	0.00	34	0.0	127			DA
173	Survery 11-08	11/2/2007	0	184	0	77	0.0	18.4	0.00	39	0.0	163			DA
174	Survery 11-09	11/2/2007	0	184	1	71	0.0	18.4	0.50	36	1.4	139			DA
175	Survery 11-10	11/2/2007	0	184	1	62	0.0	18.4	0.50	31	1.4	102			DA
176	DR-K	11/5/2007	1	363	1	69	0.1	36.3	0.50	35	1.1	-15			DA
177	SU12-03	11/5/2007	1	363	0	78	0.1	36.3	0.00	39	-0.3	22			DA
178	SU12-04	11/6/2007	2	388	1	70	0.2	38.8	0.50	35	0.8	-31			DA
179	DR-J	11/6/2007	2	388	1	80	0.2	38.8	0.50	40	0.8	10			DA
180	DRH-A2	11/6/2007	2	388	1	72	0.2	38.8	0.50	36	0.8	-23			DA
181	140-07/D	11/6/2007	2	388	1	75	0.2	38.8	0.50	38	0.8	-11			DA
182	SU12-11/I	11/7/2007	0	362	0	58	0.0	36.2	0.00	29	0.0	-59			DA
183	SU12-12/I	11/7/2007	0	362	0	64	0.0	36.2	0.00	32	0.0	-34			DA
184	Survey 12-01	11/7/2007	0	362	1	71	0.0	36.2	0.50	36	1.4	-6			DA
185	Survey 12-02	11/7/2007	0	362	0	78	0.0	36.2	0.00	39	0.0	23			DA
186	Survey 12-03	11/7/2007	0	362	1	76	0.0	36.2	0.50	38	1.4	15			DA
187	Survey 12-04	11/7/2007	0	362	3	83	0.0	36.2	1.50	42	4.1	43			DA
188	Survey 12-05	11/7/2007	0	362	0	87	0.0	36.2	0.00	44	0.0	59			DA
189	Survey 12-06	11/7/2007	0	362	0	63	0.0	36.2	0.00	32	0.0	-38			DA
190	Survey 12-07	11/7/2007	0	362	0	77	0.0	36.2	0.00	39	0.0	19			DA
191	Survey 12-08	11/7/2007	0	362	0	66	0.0	36.2	0.00	33	0.0	-26			DA
192	Survey 12-09	11/7/2007	0	362	1	75	0.0	36.2	0.50	38	1.4	11			DA
193	Survey 12-10	11/7/2007	0	362	2	58	0.0	36.2	1.00	29	2.8	-59			DA
194	Survey 13-01	11/7/2007	0	362	1	91	0.0	36.2	0.50	46	1.4	76			DA
195	Survey 13-02	11/7/2007	0	362	0	77	0.0	36.2	0.00	39	0.0	19			DA
196	Survey 13-03	11/7/2007	0	362	0	86	0.0	36.2	0.00	43	0.0	55			DA
197	Survey 13-04	11/7/2007	0	362	0	73	0.0	36.2	0.00	37	0.0	2			DA
198	Survey 13-05	11/7/2007	0	362	1	82	0.0	36.2	0.50	41	1.4	39			DA
199	Survey 13-06	11/7/2007	0	362	0	89	0.0	36.2	0.00	45	0.0	67			DA
200	Survey 13-07	11/7/2007	0	362	0	73	0.0	36.2	0.00	37	0.0	2			DA
201	Survey 13-08	11/7/2007	0	362	0	79	0.0	36.2	0.00	40	0.0	27			DA
202	Survey 13-09	11/7/2007	0	362	0	63	0.0	36.2	0.00	32	0.0	-38			DA
203	Survey 13-10	11/7/2007	0	362	1	77	0.0	36.2	0.50	39	1.4	19			DA
204	DRM	11/7/2007	0	362	0	75	0.0	36.2	0.00	38	0.0	11			DA
205	Survey 14-01	11/8/2007	3	329	0	33	0.3	32.9	0.00	17	-0.8	-133			DA
206	Survey 14-02	11/8/2007	3	329	0	83	0.3	32.9	0.00	42	-0.8	70			DA
207	Survey 14-03	11/8/2007	3	329	0	77	0.3	32.9	0.00	39	-0.8	46			DA
208	Survey 14-04	11/8/2007	3	329	0	64	0.3	32.9	0.00	32	-0.8	-7			DA

CABRERA SMEAR COUNTING WORKSHEET (Rev 6)

209	Survey 14-05	11/8/2007	3	329	0	66	0.3	32.9	0.00	33	-0.8	1			DA
210	Survey 14-06	11/8/2007	3	329	0	66	0.3	32.9	0.00	33	-0.8	1			DA
211	Survey 14-07	11/8/2007	3	329	0	77	0.3	32.9	0.00	39	-0.8	46			DA
212	Survey 14-08	11/8/2007	3	329	0	71	0.3	32.9	0.00	36	-0.8	21			DA
213	Survey 14-09	11/8/2007	3	329	1	94	0.3	32.9	0.50	47	0.6	115			DA
214	Survey 14-10	11/8/2007	3	329	0	76	0.3	32.9	0.00	38	-0.8	41			DA
215	DR-BB1	11/8/2007	3	329	76	219	0.3	32.9	38.00	110	103.9	623	**FLAG**		DA
216	DR-BB2	11/8/2007	3	329	166	263	0.3	32.9	83.00	132	227.8	802	**FLAG**		DA
217	Survey 15-01	11/8/2007	3	329	1	66	0.3	32.9	0.50	33	0.6	1			DA
218	Survey 15-02	11/8/2007	3	329	1	79	0.3	32.9	0.50	40	0.6	54			DA
219	Survey 15-03	11/8/2007	3	329	1	76	0.3	32.9	0.50	38	0.6	41			DA
220	Survey 15-04	11/8/2007	3	329	1	82	0.3	32.9	0.50	41	0.6	66			DA
221	Survey 15-05	11/8/2007	3	329	1	68	0.3	32.9	0.50	34	0.6	9			DA
222	Survey 15-06	11/8/2007	3	329	1	73	0.3	32.9	0.50	37	0.6	29			DA
223	Survey 15-07	11/8/2007	3	329	1	75	0.3	32.9	0.50	38	0.6	37			DA

CABRERA SMEAR COUNTING WORKSHEET (Rev 6)

α eff	β eff
0.3630	0.1230

Sample Count Time (min)	Daily Background Count Time (min)
2.0	10.0

dpm/100 cm^2 α Flag	dpm/100 cm^2 β Flag
20	1000

* Morning Daily Count

seq. #	Sample ID# and Description	Date	Background Total Counts* α	Background Total Counts* β	Sample Total Counts α	Sample Total Counts β	Background (cpm) α	Background (cpm) β	Sample Counts (cpm) α	Sample Counts (cpm) β	Sample (dpm/100 cm^2) α	Sample (dpm/100 cm^2) β	> α flag	> β flag	Tech. Initial
1	Survey 15-08	11/8/2007	3	329	1	78	0.3	32.9	0.50	39	0.6	50			DD
2	Survey 15-09	11/8/2007	3	329	1	67	0.3	32.9	0.50	34	0.6	5			DD
3	Survey 15-10	11/8/2007	3	329	121	330	0.3	32.9	60.50	165	165.8	1074	FLAG	FLAG	DD
4	Survey 15-11	11/8/2007	3	329	66	137	0.3	32.9	33.00	69	90.1	289	FLAG		DD
5	Survey 15-12	11/8/2007	3	329	0	82	0.3	32.9	0.00	41	-0.8	66			DD
6	Survey 15-13	11/8/2007	3	329	0	81	0.3	32.9	0.00	41	-0.8	62			DD
7	Survey 15-14	11/8/2007	3	329	3	94	0.3	32.9	1.50	47	3.3	115			DD
8	Survey 16-1	11/9/2007	2	391	0	85	0.2	39.1	0.00	43	-0.6	28			DA
9	Survey 16-2	11/9/2007	2	391	0	80	0.2	39.1	0.00	40	-0.6	7			DA
10	Survey 16-3	11/9/2007	2	391	1	73	0.2	39.1	0.50	37	0.8	-21			DA
11	Survey 16-4	11/9/2007	2	391	0	86	0.2	39.1	0.00	43	-0.6	32			DA
12	Survey 16-5	11/9/2007	2	391	1	70	0.2	39.1	0.50	35	0.8	-33			DA
13	Survey 16-6	11/9/2007	2	391	1	93	0.2	39.1	0.50	47	0.8	60			DA
14	Survey 16-7	11/9/2007	2	391	0	71	0.2	39.1	0.00	36	-0.6	-29			DA
15	Survey 16-8	11/9/2007	2	391	0	93	0.2	39.1	0.00	47	-0.6	60			DA
16	Survey 16-9	11/9/2007	2	391	1	60	0.2	39.1	0.50	30	0.8	-74			DA
17	Survey 16-10	11/9/2007	2	391	0	102	0.2	39.1	0.00	51	-0.6	97			DA
18	Survey 17-1	11/9/2007	2	391	0	82	0.2	39.1	0.00	41	-0.6	15			DA
19	Survey 17-2	11/9/2007	2	391	0	67	0.2	39.1	0.00	34	-0.6	-46			DA
20	Survey 17-3	11/9/2007	2	391	1	86	0.2	39.1	0.50	43	0.8	32			DA
21	Survey 18-1	11/9/2007	2	391	2	78	0.2	39.1	1.00	39	2.2	-1			DA
22	Survey 18-2	11/9/2007	2	391	0	89	0.2	39.1	0.00	45	-0.6	44			DA
23	Survey 19-1	11/9/2007	2	391	3	87	0.2	39.1	1.50	44	3.6	36			DA
24	Survey 19-2	11/9/2007	2	391	0	97	0.2	39.1	0.00	49	-0.6	76			DA
25	Survey 20-1	11/9/2007	2	391	0	73	0.2	39.1	0.00	37	-0.6	-21			KG
26	Survey 20-2	11/9/2007	2	391	1	76	0.2	39.1	0.50	38	0.8	-9			KG
27	Survey 20-3	11/9/2007	2	391	0	77	0.2	39.1	0.00	39	-0.6	-5			KG
28	Survey 20-4	11/9/2007	2	391	1	72	0.2	39.1	0.50	36	0.8	-25			KG
29	Survey 20-5	11/9/2007	2	391	0	97	0.2	39.1	0.00	49	-0.6	76			KG
30	Survey 20-6	11/9/2007	2	391	3	97	0.2	39.1	1.50	49	3.6	76			KG
31	Survey 20-7	11/9/2007	2	391	0	69	0.2	39.1	0.00	35	-0.6	-37			KG
32	Survey 20-8	11/9/2007	2	391	3	92	0.2	39.1	1.50	46	3.6	56			KG
33	Survey 20-9	11/9/2007	2	391	0	97	0.2	39.1	0.00	49	-0.6	76			KG
34	Survey 20-10	11/9/2007	2	391	0	79	0.2	39.1	0.00	40	-0.6	3			KG
35	EM 35-01	11/12/2007	3	352	0	79	0.3	35.2	0.00	40	-0.8	35			DA
36	EM 35-02	11/12/2007	3	352	0	73	0.3	35.2	0.00	37	-0.8	11			DA
37	EM 28-01	11/12/2007	3	352	0	60	0.3	35.2	0.00	30	-0.8	-42			DA
38	EM 28-02	11/12/2007	3	352	4	106	0.3	35.2	2.00	53	4.7	145			DA
39	EM 28-03	11/12/2007	3	352	1	72	0.3	35.2	0.50	36	0.6	7			DA
41	EM 28-04	11/12/2007	3	352	0	81	0.3	35.2	0.00	41	-0.8	43			DA
42	EM 28-05	11/12/2007	3	352	0	70	0.3	35.2	0.00	35	-0.8	-2			DA
43	DR-CC	11/12/2007	3	352	1	74	0.3	35.2	0.50	37	0.6	15			DA
44	DR-Y	11/12/2007	3	352	1	82	0.3	35.2	0.50	41	0.6	47			DA
45	DR-BB	11/12/2007	3	352	0	88	0.3	35.2	0.00	44	-0.8	72			DA
46	100-06/D	11/12/2007	3	352	5	91	0.3	35.2	2.50	46	6.1	84			DA

CABRERA SMEAR COUNTING WORKSHEET (Rev 6)

47	DR-AA	11/12/2007	3	352	1	101	0.3	35.2	0.50	51	0.6	124			DA
48	DR-X	11/12/2007	3	352	0	85	0.3	35.2	0.00	43	-0.8	59			DA
49	DR-W	11/12/2007	3	352	0	82	0.3	35.2	0.00	41	-0.8	47			DA
50	DR-Z	11/12/2007	3	352	2	89	0.3	35.2	1.00	45	1.9	76			DA
51	SU12-01/D	11/12/2007	3	352	0	68	0.3	35.2	0.00	34	-0.8	-10			DA
52	GPR C -01	11/13/2007	2	344	0	80	0.2	34.4	0.00	40	-0.6	46			DA
53	GPR C -02	11/13/2007	2	344	0	69	0.2	34.4	0.00	35	-0.6	1			DA
54	GPR C -03	11/13/2007	2	344	0	72	0.2	34.4	0.00	36	-0.6	13			DA
55	GPR C -04	11/13/2007	2	344	0	71	0.2	34.4	0.00	36	-0.6	9			DA
56	EM 16-01	11/13/2007	2	344	1	90	0.2	34.4	0.50	45	0.8	86			DA
57	EM 16-02	11/13/2007	2	344	0	89	0.2	34.4	0.00	45	-0.6	82			DA
58	EM 16-03	11/13/2007	2	344	0	72	0.2	34.4	0.00	36	-0.6	13			DA
59	EM 16-04	11/13/2007	2	344	0	75	0.2	34.4	0.00	38	-0.6	25			DA
60	EM 13-01	11/13/2007	2	344	0	71	0.2	34.4	0.00	36	-0.6	9			DA
61	EM 13-02	11/13/2007	2	344	0	72	0.2	34.4	0.00	36	-0.6	13			DA
62	EM 13-03	11/13/2007	2	344	0	80	0.2	34.4	0.00	40	-0.6	46			DA
63	EM 13-04	11/13/2007	2	344	0	78	0.2	34.4	0.00	39	-0.6	37			DA
64	EM 11-01	11/13/2007	2	344	0	63	0.2	34.4	0.00	32	-0.6	-24			DA
65	EM 11-02	11/13/2007	2	344	1	70	0.2	34.4	0.50	35	0.8	5			DA
66	EM 11-03	11/13/2007	2	344	1	97	0.2	34.4	0.50	49	0.8	115			DA
67	EM 11-04	11/13/2007	2	344	2	78	0.2	34.4	1.00	39	2.2	37			DA
68	EM 8/9-01	11/14/2007	1	366	1	66	0.1	36.6	0.50	33	1.1	-29			DA
69	EM 8/9-02	11/14/2007	1	366	1	110	0.1	36.6	0.50	55	1.1	150			DA
70	EM 8/9-03	11/14/2007	1	366	1	76	0.1	36.6	0.50	38	1.1	11			DA
71	EM 8/9-04	11/14/2007	1	366	0	87	0.1	36.6	0.00	44	-0.3	56			DA
72	Pipe Anomally	11/14/2007	1	366	0	74	0.1	36.6	0.00	37	-0.3	3			DA
73	EM 7-01	11/14/2007	1	366	0	88	0.1	36.6	0.00	44	-0.3	60			DA
74	EM 7-02	11/14/2007	1	366	0	81	0.1	36.6	0.00	41	-0.3	32			DA
75	EM 7-03	11/14/2007	1	366	0	86	0.1	36.6	0.00	43	-0.3	52			DA
76	EM 7-04	11/14/2007	1	366	0	96	0.1	36.6	0.00	48	-0.3	93			DA
77	EM 31-01	11/14/2007	1	366	0	91	0.1	36.6	0.00	46	-0.3	72			DA
78	EM 31-02	11/14/2007	1	366	1	97	0.1	36.6	0.50	49	1.1	97			DA
79	EM 31-03	11/14/2007	1	366	1	78	0.1	36.6	0.50	39	1.1	20			DA
80	EM 31-04	11/14/2007	1	366	0	87	0.1	36.6	0.00	44	-0.3	56			DA
81	DR-Z #2	11/15/2007	4	393	1	61	0.4	39.3	0.50	31	0.3	-72			DA
82	EM 34-01	11/15/2007	4	393	0	92	0.4	39.3	0.00	46	-1.1	54			DA
83	EM 34-02	11/15/2007	4	393	2	76	0.4	39.3	1.00	38	1.7	-11			DA
84	EM 34-03	11/15/2007	4	393	0	82	0.4	39.3	0.00	41	-1.1	14			DA
85	EM 34-04	11/15/2007	4	393	2	80	0.4	39.3	1.00	40	1.7	6			DA
86	EM 30-01	11/15/2007	4	393	0	82	0.4	39.3	0.00	41	-1.1	14			DA
87	EM 30-02	11/15/2007	4	393	0	64	0.4	39.3	0.00	32	-1.1	-59			DA
88	EM 30-03	11/15/2007	4	393	0	77	0.4	39.3	0.00	39	-1.1	-7			DA
89	EM 30-04	11/15/2007	4	393	0	92	0.4	39.3	0.00	46	-1.1	54			DA
90	Survey 22-01	11/15/2007	4	393	0	72	0.4	39.3	0.00	36	-1.1	-27			DA
91	Survey 22-02	11/15/2007	4	393	0	88	0.4	39.3	0.00	44	-1.1	38			DA
92	Survey 22-03	11/15/2007	4	393	0	90	0.4	39.3	0.00	45	-1.1	46			DA
93	Survey 22-04	11/15/2007	4	393	0	63	0.4	39.3	0.00	32	-1.1	-63			DA
94	Survey 22-05	11/15/2007	4	393	0	92	0.4	39.3	0.00	46	-1.1	54			DA
95	Survey 22-06	11/15/2007	4	393	0	74	0.4	39.3	0.00	37	-1.1	-19			DA
96	Survey 22-07	11/15/2007	4	393	0	78	0.4	39.3	0.00	39	-1.1	-2			DA
97	Survey 22-08	11/15/2007	4	393	0	79	0.4	39.3	0.00	40	-1.1	2			DA
98	Survey 22-09	11/15/2007	4	393	1	86	0.4	39.3	0.50	43	0.3	30			DA
99	Survey 22-10	11/15/2007	4	393	0	93	0.4	39.3	0.00	47	-1.1	59			DA
100	Survey 23-01	11/15/2007	4	393	2	76	0.4	39.3	1.00	38	1.7	-11			DA

CABRERA SMEAR COUNTING WORKSHEET (Rev 6)

101	Survey 23-02	11/15/2007	4	393	0	69	0.4	39.3	0.00	35	-1.1	-39			DA
102	Survey 23-03	11/15/2007	4	393	3	66	0.4	39.3	1.50	33	3.0	-51			DA
103	Survey 23-04	11/15/2007	4	393	0	71	0.4	39.3	0.00	36	-1.1	-31			DA
104	Survey 23-05	11/15/2007	4	393	0	89	0.4	39.3	0.00	45	-1.1	42			DA
105	Survey 23-06	11/15/2007	4	393	1	79	0.4	39.3	0.50	40	0.3	2			DA
106	Survey 23-07	11/15/2007	4	393	2	84	0.4	39.3	1.00	42	1.7	22			DA
107	Survey 23-08	11/15/2007	4	393	2	86	0.4	39.3	1.00	43	1.7	30			DA
108	Survey 23-09	11/15/2007	4	393	0	65	0.4	39.3	0.00	33	-1.1	-55			DA
109	Survey 23-10	11/15/2007	4	393	1	70	0.4	39.3	0.50	35	0.3	-35			DA
110	Survey 23-11	11/15/2007	4	393	1	75	0.4	39.3	0.50	38	0.3	-15			DA
111	Survey 23-12	11/15/2007	4	393	0	87	0.4	39.3	0.00	44	-1.1	34			DA
112	Survey 23-13	11/15/2007	4	393	0	78	0.4	39.3	0.00	39	-1.1	-2			DA
113	Survey 23-14	11/15/2007	4	393	0	72	0.4	39.3	0.00	36	-1.1	-27			DA
114	Survey 23-15	11/15/2007	4	393	0	88	0.4	39.3	0.00	44	-1.1	38			DA

C Photo Logs

Photo No.: 1 Sylvania FUSRAP **Direction of View:** NA
Date: May 2007 **Subject:** Typical setup of cart mounted Geoprobe 420M power pack inside Building 70 office space.

Photographer: Ben Cole, E & E

Photo No.: 2 Sylvania FUSRAP **Direction of View:** West
Date: May 2007 **Subject:** Typical view of truck mounted Geoprobe 66 DT drilling rig inside east warehouse of Building 70.

Photographer: Ben Cole, E & E

Photo No.: 3 Sylvania FUSRAP
Date: May 2007
Photographer: George Lukert, E & E
Direction of View: North
Subject: Typical geoprobe operations on west side of Building 70.

Photo No.: 4 Sylvania FUSRAP
Date: May 2007
Photographer: Marcia Galloway, E & E
Direction of View: East
Subject: Typical core fixed geometry scanning with 2-inch NaI detector.

Photo No.: 5 Sylvania FUSRAP **Direction of View:** NA
Date: May 2007 **Subject:** Typical setup of concrete coring machine inside office space in B70.
Photographer: Ben Cole, E & E

Photo No.: 6 Sylvania FUSRAP **Direction of View:** NA
Date: May 2007 **Subject:** Radiological scanning of concrete core.
Photographer: Ben Cole, E & E

Photo No.: 7 Sylvania FUSRAP **Direction of View:** NA
Date: May 2007 **Subject:** Typical concrete core section from B70.
Photographer: Ben Cole, E & E

Photo No.: 8 Sylvania FUSRAP **Direction of View:** North
Date: May 2007 **Subject:** View of concrete filled structure (potential sump [SMP-1]) near northwest corner of B70 central warehouse. (SMP-1).
Photographer: Gene Florentino, E & E

Photo No.: 9 Sylvania FUSRAP **Direction of View:** Northeast
Date: June 2007 **Subject:** Typical view of track mounted Geoprobe 66 DT drilling rig on east side of Building 140.

Photographer: Marcy Werth, E & E

Photo No.: 10 Sylvania FUSRAP **Direction of View:** Southwest
Date: June 2007 **Subject:** Typical view of test pit scanning with gamma detectors.

Photographer: Marcy Werth, E & E

Photo No.: 11 Sylvania FUSRAP **Direction of View:** N/A
Date: June 2007 **Subject:** Piping debris from Test Pit EM-2 located between B40 and B100.

Photographer: Marcy Werth, E & E

Photo No.: 12 Sylvania FUSRAP **Direction of View:** N/A
Date: June 2007 **Subject:** Piping debris in Test Pit EM-3/GPR-A located between B140 and B100.

Photographer: Marcy Werth, E & E

Photo No.: 13 Sylvania FUSRAP **Direction of View:** N/A
Date: June 2007 **Subject:** Piping debris excavated from Test Pit EM-3/GPR-A.

Photographer: Marcy Werth, E & E

Photo No.: 14 Sylvania FUSRAP **Direction of View:** Northwest
Date: June 2007 **Subject:** Two separate metal pipes located in the shallow subsurface of EM-5. Excavation approximately 2 feet BGS.

Photographer: Marcy Werth, E & E

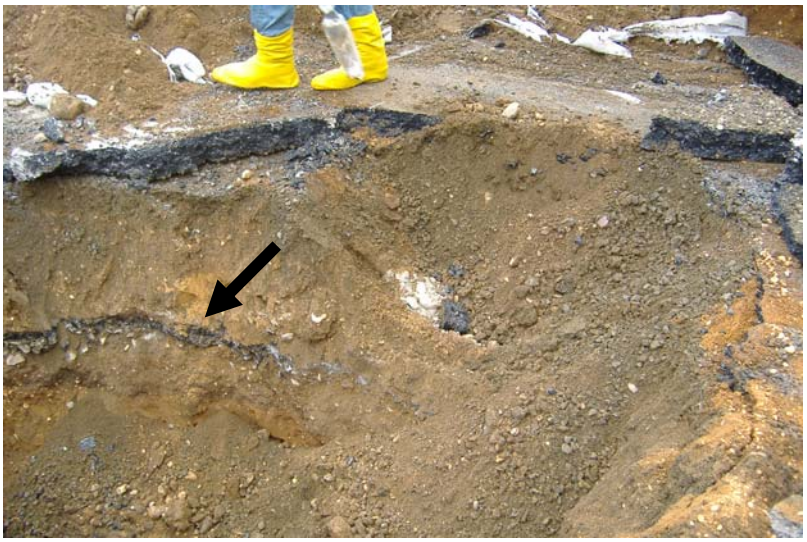

Photo No.: 15 Sylvania FUSRAP **Direction of View:** Northwest
Date: June 2007 **Subject:** In EM-15b, most elevated radiation levels were shallow (2 feet BGS) above the asphalt layer (arrow in photo points to asphalt layer) that may have been a historic parking lot.

Photographer: Marcy Werth, E & E

Photo No.: 16 Sylvania FUSRAP **Direction of View:** North
Date: June 2007 **Subject:** Concrete wall observed in test pit EM-26 located on north side of B70.

Photographer: Marcy Werth, E & E

Photo No.: 17 Sylvania FUSRAP **Direction of View:** N/A
Date: June 2007 **Subject:** Slag "nugget" observed in test pit GPR-F. Note nugget is approximately 3-inches in diameter.

Photographer: Marcy Werth, E & E

Photo No.: 18 Sylvania FUSRAP **Direction of View:** North
Date: June 2007 **Subject:** Excavated to a total depth of 4 feet BGS in GPR-F (both trenches)

Photographer: Marcy Werth, E & E

Photo No.: 19 Sylvania FUSRAP **Direction of View:** NA
Date: August 2007 **Subject:** Drain DR-AA
Photographer: Dan Kennedy, E & E Note that drain is filled with concrete

Photo No.: 20 Sylvania FUSRAP **Direction of View:** NA
Date: August 2007 **Subject:** Drain DR-Z
Photographer: Dan Kennedy, E & E

Photo No.: 21 Sylvania FUSRAP **Direction of View:** Northwest
Date: October 2007 **Subject:** Downhole gamma logging at C12-02
Photographer: Marcy Werth, E & E

Photo No.: 22 Sylvania FUSRAP **Direction of View:** East
Date: November 2007 **Subject:** Geoprobe at Drain DR-CC
Photographer: Dan Kennedy, E & E

Photo No.: 23 Sylvania FUSRAP **Direction of View:** Southwest
Date: November 2007 **Subject:** Jackhammer driving Macrocore on borehole DR-W
Photographer: Marcy Werth, E & E

Photo No.: 24 Sylvania FUSRAP **Direction of View:** South
Date: November 2007 **Subject:** Test Pit EM-7
Photographer: Marcy Werth, E & E

Photo No.: 25 Sylvania FUSRAP **Direction of View:** NA
Date: November 2007 **Subject:** Metal pipe removed from Test Pit EM-7 at 1 foot BGS
Photographer: Marcy Werth, E & E

Photo No.: 26 Sylvania FUSRAP **Direction of View:** NA
Date: November 2007 **Subject:** 3 inch diameter metal pipe found at 2 feet BGS in Test Pit EM-7
Photographer: Marcy Werth, E & E

Photo No.: 27 Sylvania FUSRAP **Direction of View:** NA
Date: November 2007 **Subject:** Rebar found in Test Pit EM-8 at approximately 4.5 feet BGS
Photographer: Marcy Werth, E & E

Photo No.: 28 Sylvania FUSRAP **Direction of View:** NA
Date: November 2007 **Subject:** Concrete and metal debris removed from Test Pit EM-8
Photographer: Marcy Werth, E & E

Photo No.: 29 Sylvania FUSRAP **Direction of View:** North
Date: November 2007 **Subject:** Test Pit EM-9
Photographer: Marcy Werth, E & E

Photo No.: 30 Sylvania FUSRAP **Direction of View:** NA
Date: November 2007 **Subject:** Concrete debris removed from Test Pit EM-9
Photographer: Marcy Werth, E & E

Photo No.: 31 Sylvania FUSRAP **Direction of View:** Southwest
Date: November 2007 **Subject:** Test Pit EM-11
Photographer: Marcy Werth, E & E

Photo No.: 32 Sylvania FUSRAP **Direction of View:** NA
Date: November 2007 **Subject:** Test Pit EM-11 excavated to 10 feet BGS
Photographer: Marcy Werth, E & E

Photo No.: 33 Sylvania FUSRAP **Direction of View:** East
Date: November 2007 **Subject:** Soil excavated from Test Pit EM-11
Photographer: Marcy Werth, E & E

Photo No.: 34 Sylvania FUSRAP **Direction of View:** Northeast
Date: November 2007 **Subject:** Radiation and PID scan of soil in backhoe from Test Pit EM-13.
Photographer: Marcy Werth, E & E

Photo No.: 35 Sylvania FUSRAP **Direction of View:** NA
Date: November 2007 **Subject:** Black staining found at 3 feet BGS in Test Pit EM-13
Photographer: Marcy Werth, E & E

Photo No.: 36 Sylvania FUSRAP **Direction of View:** NA
Date: November 2007 **Subject:** Soil removed from Test Pit EM-13, from approximately 3 feet BGS
Photographer: Marcy Werth, E & E

Photo No.: 37 Sylvania FUSRAP **Direction of View:** NA
Date: November 2007 **Subject:** Metal pipe found in Test Pit EM-13. Pipe runs north-south at approximately 4 feet BGS.
Photographer: Marcy Werth, E & E

Photo No.: 38 Sylvania FUSRAP **Direction of View:** NA
Date: November 2007 **Subject:** Black plastic wire conduit found in Test Pit EM-16
Photographer: Marcy Werth, E & E

Photo No.: 39 Sylvania FUSRAP **Direction of View:** West
Date: November 2007 **Subject:** Test Pit EM-16 showing gray PVC found during excavation
Photographer: Marcy Werth, E & E

Photo No.: 40 Sylvania FUSRAP **Direction of View:** North
Date: November 2007 **Subject:** Concrete wall found in Test Pit EM-28
Photographer: Marcy Werth, E & E

Photo No.: 41 Sylvania FUSRAP **Direction of View:** Southwest
Date: November 2007 **Subject:** Soil from Test Pit EM-28 being scanned for radiation
Photographer: Marcy Werth, E & E

Photo No.: 42 Sylvania FUSRAP **Direction of View:** NA
Date: November 2007 **Subject:** Buried drywell found in Test Pit EM-28
Photographer: Marcy Werth, E & E

Photo No.: 43 Sylvania FUSRAP **Direction of View:** NA
Date: June 2007 **Subject:** Crushed lead lined container observed in Test Pit EM-29a on east side of B70
Photographer: Marcy Werth, E & E

Photo No.: 44 Sylvania FUSRAP **Direction of View:** South
Date: November 2007 **Subject:** Test Pit EM-30
Photographer: Marcy Werth, E & E

Photo No.: 45 Sylvania FUSRAP **Direction of View:** East
Date: November 2007 **Subject:** Test Pit EM-30
Photographer: Marcy Werth, E & E

Photo No.: 46 Sylvania FUSRAP **Direction of View:** NA
Date: November 2007 **Subject:** 4 inch by 2 foot section of metal pipe found in Test Pit EM-30 at 1 foot BGS
Photographer: Marcy Werth, E & E

Photo No.: 47 Sylvania FUSRAP **Direction of View:** NA
Date: November 2007 **Subject:** 4 inch diameter pipe found at 2 feet BGS in Test Pit EM-31
Photographer: Marcy Werth, E & E

Photo No.: 48 Sylvania FUSRAP **Direction of View:** NA
Date: November 2007 **Subject:** Example of debris found in Test Pit EM-31, at 1 foot BGS
Photographer: Marcy Werth, E & E

Photo No.: 49 Sylvania FUSRAP **Direction of View:** NA
Date: November 2007 **Subject:** Pipe found in Test Pit EM-31
Photographer: Marcy Werth, E & E

Photo No.: 50 Sylvania FUSRAP **Direction of View:** East
Date: November 2007 **Subject:** Cable found in Test Pit EM-34
Photographer: Marcy Werth, E & E

Photo No.: 51 Sylvania FUSRAP **Direction of View:** East
Date: November 2007 **Subject:** Test Pit EM-34 and cable uncovered during excavation
Photographer: Marcy Werth, E & E

Photo No.: 52 Sylvania FUSRAP **Direction of View:** Southeast
Date: November 2007 **Subject:** View of Test Pit EM-35
Photographer: Marcy Werth, E & E

Photo No.: 53 Sylvania FUSRAP **Direction of View:** NA
Date: November 2007 **Subject:** Pipe found at 1.5 feet BGS in EM-35.
Photographer: Marcy Werth, E & E

Photo No.: 54 Sylvania FUSRAP **Direction of View:** East
Date: October 2008 **Subject:** Vacuum truck removing soil, clearing boring for underground utility lines.
Photographer: Dan Kennedy, E & E

Photo No.: 55 Sylvania FUSRAP **Direction of View:** Southeast
Date: October 2008 **Subject:** Video camera survey of DR-E inside B70.
Photographer: Dan Kennedy, E & E

Photo No.: 56 Sylvania FUSRAP **Direction of View:** North
Date: November 2008 **Subject:** Soil core from MW-13D (286' to 296').
Photographer: Ben Cole, E & E

Photo No.: 57 Sylvania FUSRAP **Direction of View:** Northeast
Date: November 2008 **Subject:** View of setup at offsite well MW-15D.
Photographer: Marcy Werth, E & E

Photo No.: 58 Sylvania FUSRAP **Direction of View:** North
Date: November 2008 **Subject:** Soil core from MW-15D. Clay layer from 173' to 186'.
Photographer: Marcy Werth, E & E

Photo No.: 59 Sylvania FUSRAP **Direction of View:** Northwest
Date: November 2008 **Subject:** Sample filtering for radiation analysis at MW-20D.
Photographer: Sarah Craig, E & E

Photo No.: 60 Sylvania FUSRAP **Direction of View:** Northeast
Date: December 2008 **Subject:** Drilling setup at MW-22D.
Photographer: Marcy Werth

Photo No.: 61 Sylvania FUSRAP **Direction of View:** North
Date: December 2008 **Subject:** Drilling setup at MW-22D.
Photographer: Marcy Werth, E & E

Photo No.: 62 Sylvania FUSRAP **Direction of View:** South
Date: February 2009 **Subject:** Soil core from MW-31D (277' to 297').
Photographer: Ben Cole, E & E

Photo No.: 63 Sylvania FUSRAP **Direction of View:** NA
Date: March 2009 **Subject:** E & E personnel collecting groundwater samples from boring 32D.
Photographer: Dan Kennedy, E & E

Photo No.: 64 Sylvania FUSRAP **Direction of View:** NE
Date: March 2009 **Subject:** Setup to begin developing on well MW-26.
Photographer: Marcy Werth, E & E

Photo No.: 65 Sylvania FUSRAP **Direction of View:** NE
Date: November 2009 **Subject:** Drilling setup at MW-22I.
Photographer: Ben Cole, E & E

Photo No.: 66 Sylvania FUSRAP **Direction of View:** East
Date: March 2010 **Subject:** Drilling setup at MW-27D.
Photographer: Ben Cole, E & E

Photo No.: 67 Sylvania FUSRAP **Direction of View:** East
Date: February 2010 **Subject:** Drilling setup at MW-52D on the driving range.
Photographer: Ben Cole, E & E

Photo No.: 68 Sylvania FUSRAP **Direction of View:** SW
Date: March 2009 **Subject:** 24DD
Photographer: Ben Cole, E & E

Photo No.: 69 Sylvania FUSRAP **Direction of View:** North
Date: March 2010 **Subject:** Drilling setup on MW-56S on the driving range.
Photographer: Marcy Werth, E & E

Photo No.: 69 Sylvania FUSRAP **Direction of View:** NE
Date: March 2010 **Subject:** Well development setup on MW-27I.
Photographer: Marcy Werth, E & E

Photo No.: 70 Sylvania FUSRAP **Direction of View:** SE
Date: March 2010 **Subject:** Drilling setup on RI-P-45.
Photographer: Marcy Werth, E & E

Photo No.: 70 Sylvania FUSRAP **Direction of View:** SE
Date: March 2010 **Subject:** Drilling setup on 16S.
Photographer: Marcy Werth, E & E

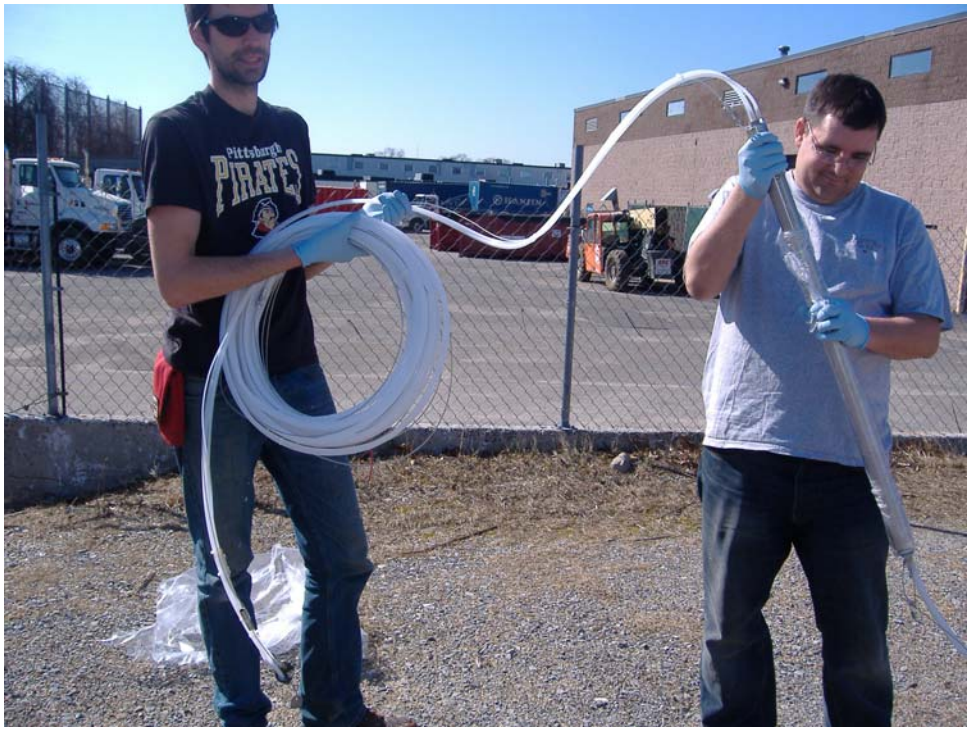

Photo No.: 71 Sylvania FUSRAP **Direction of View:** South
Date: March 2010 **Subject:** Installing the designated pump into monitoring well MW-28D.
Photographer: Marcy Werth, E & E

Photo No.: 72 Sylvania FUSRAP **Direction of View:** East
Date: March 2009 **Subject:** Groundwater sampling at MW-13D.
Photographer: Ben Cole, E & E