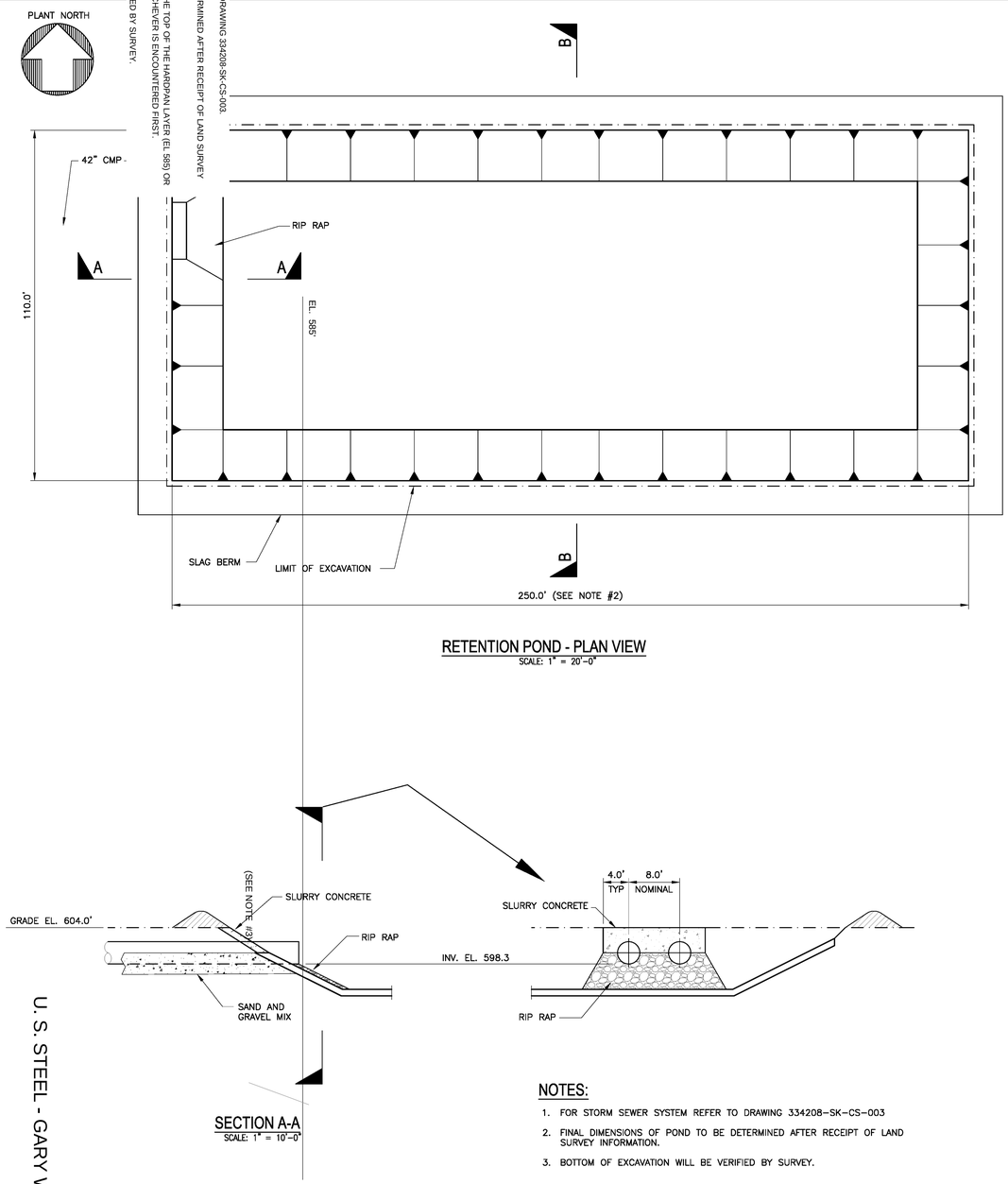

RETENTION POND - PLAN VIEW
SCALE: 1" = 20'-0"

SECTION A-A
SCALE: 1" = 10'-0"

NOTES:

1. FOR STORM SEWER SYSTEM REFER TO DRAWING 334208-SK-CS-003
2. FINAL DIMENSIONS OF POND TO BE DETERMINED AFTER RECEIPT OF LAND SURVEY INFORMATION.
3. BOTTOM OF EXCAVATION WILL BE VERIFIED BY SURVEY.

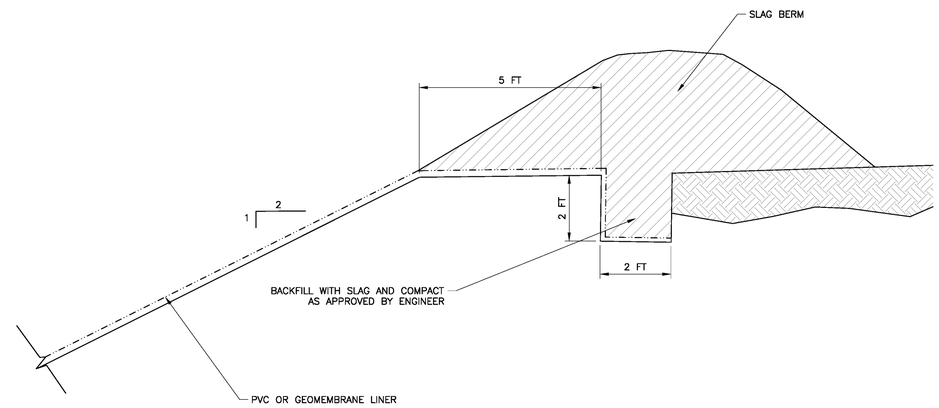

DETAIL A-TYPICAL ANCHOR TRENCH
SCALE: NTS

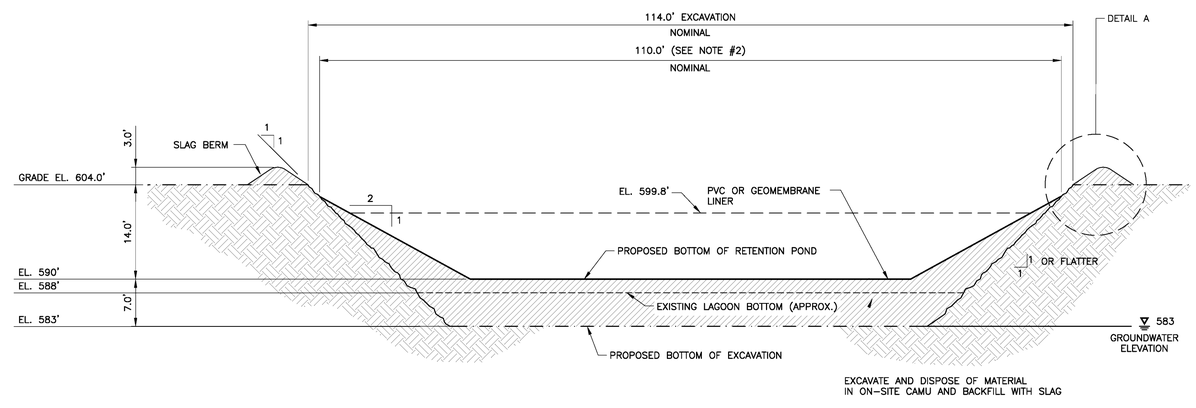

SECTION B-B
SCALE: 1" = 10'-0"

Scale: N.T.S.

REGIONAL SITE LOCATION MAP

DRAFT

Figure 5

STRATEGIC COKE IMPROVEMENT PROJECT
RETENTION POND PLAN
U.S. STEEL-GARY WORKS, GARY, INDIANA

REVISION 0
JUNE 2010

U. S. STEEL - GARY WORKS, GARY, INDIANA

JUNE 2011 1

6

X:\ussgworks\6000_Reports\SWMAs\East Side\ELA1 ISM\ELA1 ISM WP Deliverable_060410\ELA1 ISM WP Fig\FIGURE 5--STRATEGIC COKE IMPROVEMENTS.dwg