State of Illinois
ENVIRONMENTAL PROTECTION AGENCY

Mary A. Gade, Director

2200 Churchill Road, Springfield, IL 62794-9276

MEMORANDUM

DATE: September 22, 1992

TO: DAPC Central File

FROM: Robert Hutton RSH

SUBJECT: Chemetco, Inc.
P.O. Box 187
Alton, IL 62002
I.D. Number 119 801 AC

RECEIVED
SEP 30 1992
REGULATION DEVELOPMENT BRANCH
U.S. EPA, REGION V

During the second calendar quarter of 1992 (April-June), two of the three lead monitoring stations operated by Chemetco at its rural Madison County facility measured violations of the ambient air quality standard. Station "OE" to the south of the facility recorded a quarterly arithmetic average of 6.9 ug lead/m3 while station "N3" to the north recorded 2.25 ug lead/m3. The other station,"03", produced a value of 1.3 lead/m3, very close to an exceedance of the 1.5 ug lead/m3 standard. This is the fifth consecutive quarter that this set of source oriented monitors have recorded such exceedances.

Comparative analysis of split samples between Chemetco and the Agency continue to demonstrate reasonable agreement (±20% at significant concentrations). Unfortunately, Chemetco's analysis of audit samples from USEPA did not fare well, with results that were 56% low and 42% high in the two ranges audited. Based upon Chemetco's acceptable past performance in such audits and the fact that the errors are in different directions-one low, one high-it is very likely that the cause of these discrepancies lies in documentation and/or transcription rather than analytical procedure. Chemetco will investigate further and report their findings to the Agency.

BH:km

cc: Kendall Magnuson, USEPA-Region V
Penni Livingston, IEPA

006-25

Printed on Recycled Paper

Chemetco
FIRST IN PEOPLE – QUALITY – SERVICE
P.O. BOX 187 • ALTON, ILLINOIS 62002

RECEIVED
SEP 0 2 1992
REGULATION DEVELOPMENT BRANCH
U.S. EPA, REGION V

AMBIENT AIR MONITORING

QUARTERLY REPORT

April - June 1992

for

TOTAL PARTICULATE

and LEAD

CHEMETCO, INC.
August 1992

RECEIVED
IEPA
AUG 1 0 1992
COLLINSVILLE OFFICE

3.2 Sampler Quarterly Averages

The simple quarterly average for each set of data from a particular sampler are calculated in the following tables, 3.1 through 3.4.

TABLE 3.1 - Sampler Location N3**

DATE	FILTER NO.	LEAD (ug/m³)	TSP* (ug/m³)
04/06/92	0142495	12.79	196.06
04/12/92	0142501	0.29	35.73
04/18/92	0142506	5.47	71.24
04/24/92	0142512	0.04	43.93
04 30/92	0142518	3.06	101.57
05/06/92	invalid	-	-
05/12/92	invalid	-	-
05/18/92	0142535	0.42	65.82
05/24/92	0142540	0.00	24.77
05/30/92	0142547	0.81	107.69
06/05/92	0142552	0.18	62.62
06/11/92	0142557	0.18	57.67
06/17/92	invalid	-	-
06/23/92	invalid	-	-
06/29/92	0142573	1.49	121.50
	Average Lead:	2.25	Average Particulate: 80.75

TABLE 3.2 - Sampler Location OE

DATE	FILTER NO.	LEAD (ug/m³)	TSP* (ug/m³)
04/06/92	0142497	0.25	52.52
04/12/92	0142503	0.04	23.23
04/18/92	0142508	0.09	24.82
04/24/92	0142515	32.88	145.37
04/30/92	0142520	0.04	58.29
05/06/92	0142525	1.72	112.16
05/12/92	0142530	10.82	71.25
05/18/92	0142537	0.20	47.94
05/24/92	0142542	0.44	32.60
05/30/92	0142548	24.50	181.30
06/05/92	0142554	24.65	172.26
06/11/92	0142559	0.30	75.80
06/17/92	0142564	0.19	82.76
06/23/92	0142570	0.70	107.94
06/29/92	invalid		
	Average Lead:	6.92	Average Particulate: 85.09

TABLE 3.3 - Sampler Location O3

DATE	FILTER NO.	LEAD (ug/m³)	TSP* (ug/m³)
04/06/92	0142498	0.04	45.38
04/12/92	0142504	0.00	19.79
04/18/92	0142509	0.00	35.20
04/24/92	0142516	3.96	54.44
04/30/92	0142521	0.00	62.82
05/06/92	0142526	0.12	72.08
05/12/92	0142531	2.41	35.89
05/18/92	0142538	0.06	29.57
05/24/92	0142543	0.00	21.88
05/30/92	0142549	9.15	93.95
06/05/92	0142555	3.85	77.89
06/11/92	0142560	0.02	41.57
06/17/92	0142565	0.12	62.64
06/23/92	0142571	0.35	48.78
06/29/92	0142576	0.09	99.15
	Average Lead:	1.34	Average Particulate: 53.40

TABLE 3.4 - Filter Blank

DATE	FILTER NO.	LEAD (ug/filter)	TSP* (ug/filter
04/06/92	0142499	68	2000
04/12/92	0142505	6	-3000
04/18/92	0142510	65	-2000
04/24/92	0142517	6	-1000
04/30/92	0142522	6	-1000
05/06/92	0142527	6	0
05/12/92	0142532	6	-2000
05/18/92	0142539	6	-2000
05/24/92	0142544	6	0
05/30/92	0142550	155	-2000
06/05/92	0142556	33	3000
06/11/92	0142561	33	1000
06/17/92	0142566	97	-3000
06/23/92	0142572	88	2000
06/29/92	0142577	94	0
	Average Lead:	45.00	Average Particulate: - 244.17

*TSP - Total Suspended Particulate

** Results for the sampler N3-QC were actually used in the average due to the motor malfunction of the "Official Sampler."

SECTION II: OECA ISSUES (NON-CONFIDENTIAL)

2. Significant Court Developments

UNITED STATES FILES CONSENT DECREE RESOLVING ACTION AGAINST CHEMETCO, INC., HARTFORD, ILLINOIS, FOR ITS VIOLATIONS OF THE CLEAN AIR ACT, 42 U.S.C. §§ 7401 et seq.

IMPACT: On October 18, 1999, the United States filed a Consent Decree with the United States District Court for the Southern District of Illinois, resolving its action against Chemetco, Inc., Hartford, Illinois, for its violations of the Clean Air Act, 42 U.S.C. §§ 7401 et seq., ("the Act"). The Consent Decree requires Respondent to comply with the Act, to initiate, *inter alia*, a Raw Materials Management System Protocol, to install a Continuous Particulate Mass Monitor System, and to pay to the Treasurer, United States of America, a civil penalty in the amount of $305,267.

BACKGROUND: On July 2, 1992, J. David Mobley, Chief, Emission Inventory Branch, Office of Air Quality, Planning and Standards, found Chemetco, Inc., to be the nations's leading emitter of air-borne lead, producing annual toxic emissions of 78.11 tons of lead. On July 12, 1993, the United States filed a civil complaint against Chemetco, Inc., for its failure to comply with the National Ambient Air Quality Standards ("NAAQS") for lead (particulate matter), its Illinois State Implementation Plan ("SIP") Operating Permit, and the particulate matter limit of the Illinois SIP.

CONTACT: Jeffery M. Trevino
Section II
Multimedia Branch I
(312) 886-6729.

U.S. Department of Justice

Environment and Natural Resources Division

90-5-2-1-1845: gls

Environmental Enforcement Section
P.O. Box 7611
Washington, DC 20044-7611

Telephone (202) 514-2068
Facsimile (202) 616-6584

June 24, 1999

Honorable William D. Stiehl
Federal Courthouse
750 Missouri Ave.
East St. Louis, Illinois 62202

Re: United States v. Chemetco. Inc., No. 93-482-WDS, S.D. Ill.

Dear Judge Stiehl:

Enclosed please find a proposed Final Pre-Trial Order for the referenced matter, which you requested during the pretrial conference of June 18, 1999.

Counsel for Chemetco was unable to identify Chemetco's witnesses in sufficient time to allow their names to be presented in the proposed Order. Chemetco's counsel will file a proposed Order which includes those names within the next few days.

Sincerely,

Gregory L. Sukys

Enclosure

cc: Gerald Burke, Esq.
John F. Cowling, Esq.
Jeffery Trevino, Esq.

IN THE UNITED STATES DISTRICT COURT
FOR THE SOUTHERN DISTRICT OF ILLINOIS

UNITED STATES OF AMERICA,	)	
	)	
Plaintiff,	)	CIV. NO. 93-482-WDS
	)	
v.	)	Judge Stiehl
	)	
CHEMETCO, INC.,	)	
	)	
Defendant.	)	
	)	

FINAL PRE-TRIAL ORDER

This matter comes before the Court at a Final Pre-Trial Conference held pursuant to Rule 16, Federal Rules of Civil Procedure.

PLAINTIFF'S COUNSEL:

Gregory L. Sukys
United States Department of Justice
Environment and Natural Resources Division
Environmental Enforcement Section
P.O. Box 7611
Washington, D.C. 20044
(202) 514-2068/616-6584 (FAX)

GERALD M. BURKE
Assistant U.S. Attorney
9 Executive Drive - Suite 300
Fairview Heights, IL 62208
(618) 628-3700/3720 (FAX)

DEFENDANT'S COUNSEL:

John F. Cowling
Armstrong Teasdale LLP
One Metropolitan Square, Suite 2600
St. Louis, Missouri 63102-2740
(314) 621-5070/5065 (FAX)

I. NATURE OF THE CASE

This is an action by the United States seeking civil penalties and injunctive relief for violations of the Clean Air Act.

II. JURISDICTION

A. This is an action brought by the United States seeking civil penalties and injunctive relief for violations of the Clean Air Act.

B. The jurisdiction of the Court is not disputed.

III. UNCONTROVERTED FACTS

The following facts are not disputed or have been agreed to or stipulated to by the parties:

A. Chemetco is a corporation organized under the laws of the State of Delaware. At all times relevant to this Complaint, Chemetco has been a "person" within the meaning of Clean Air Act ("CAA") Sections 113 and 302(e), 42 U.S.C. §§ 7413 and 7602(e).

B. At all times relevant to this action, Chemetco has been an "operator," within the meaning of CAA Section 113, 42 U.S.C. § 7413, of a secondary copper smelter at a facility located on Illinois Route 3 at Oldenburg Road, Hartford, Madison County, Illinois (the "Hartford Facility" or "Facility").

C. In response to the United States' complaint, and as a result of negotiations between the parties, Chemetco has undertaken a variety of actions to address compliance with the Clean Air Act. These actions include, but are not limited to, construction of a "fines" building, and the installation of air pollution control equipment that is designed to control the emissions from Defendant's exhaust stacks.

IV. ISSUES FOR TRIAL

The issues to be decided by the Court at trial are:

(1) the appropriate particular matter limit for Chemetco's new air pollution control equipment; and

(2) the amount of the penalty to be paid by Chemetco.

V. WITNESSES:

A. Witnesses the Plaintiff expects to call:

1. **Nhien Pham**, U.S. EPA Region 5, Air and Radiation Division. Mr. Pham will testify as to the government's view of the appropriate particulate matter limit that should be applied to Chemetco's Facility.

2. The United States reserves the right to call additional witnesses, to be identified prior to trial, depending on information provided during discovery.

B. Witnesses the Defendant expects to call:

Defendant will identify its probable witnesses as promptly as possible.

C. Rebuttal Witnesses. Each of the parties may call such rebuttal witnesses as may be necessary, without prior notice thereof to the other party.

VI. EXHIBITS:

Each party will provide an exhibit list to the other party no later than 15 days prior to trial. Plaintiff will prepare a joint exhibit list.

VII. DAMAGES/PENALTIES

The Complaint seeks penalties of up to $25,000 per day for each of Chemetco's violations of the Clean Air Act and its implementing regulations, however, as noted above, the parties have agreed on a penalty

amount.

VIII. BIFURCATED TRIAL

The parties do not desire a bifurcated trial in this matter.

IX. TRIAL BRIEFS

The parties will submit trial briefs to the Court no later than August 30, 1999.

X. LIMITATIONS, RESERVATIONS AND OTHER MATTERS

A. **Trial Date.** Trial of this cause is set for the week of September 7, 1999.

B. **Length of Trial.** The probable length of trial is 2 to 3 days. The case will be listed on the trial calendar to be tried when reached.

C. This is a **Non-Jury** case.

IT IS ORDERED that this Final Pre-Trial Order may be modified at the trial of this action, or prior thereto, to prevent manifest injustice or for good cause shown. Such modification may be made either on application of counsel for the parties or on motion of the Court.

DATED:_____

_____
WILLIAM D. STIEHL
CHIEF U.S. DISTRICT JUDGE

Final Pre-Trial Order, United States v. Chemetco. Inc., No. 93-482-WDS, S.D. Ill.

Approved as to form and substance:

GREGORY L. SUKYS
United States Department of Justice
Environmental Enforcement Section
P.O. Box 7611
Washington, D.C. 20044

JOHN F. COWLING
Armstrong Teasdale LLP
One Metropolitan Square, Suite 2600
St. Louis, Missouri 63102-2740

Chemetco
FIRST IN PEOPLE – QUALITY – SERVICE
P.O. BOX 187 • ALTON, ILLINOIS 62002

PLANT COPY

RETURN TO ENVIRONMENTAL OFF.

AMBIENT AIR MONITORING QUARTERLY REPORT

January - March 1992

for

TOTAL PARTICULATE and LEAD

CHEMETCO, INC.
April 1992

3.2 Sampler Quarterly Averages

The simple quarterly average for each set of data from a particular sampler are calculated in the following tables, 3.1 through 3.4.

TABLE 3.1 - Sampler Location N3**

DATE	FILTER NO.	LEAD (ug/m³)	TSP* (ug/m³)
01/01/92	invalid		
01/07/92	8176272	3.02	109.29
01/13/92	8176278	0.25	27.36
01/19/92	8176284	7.49	131.09
01/25/92	8176290	1.87	50.07
01/31/92	8176296	0.22	41.81
02/06/92	8176302	0.15	65.03
02/12/92	8176307	0.19	27.36
02/18/92	invalid		
02/24/92	8176318	0.31	65.04
03/01/92	8176324	2.53	215.36
03/07/92	8176329	0.40	37.77
03/13/92	8176334	1.47	65.37
03/19/92	8176339	0.10	25.01
03/25/92	0142484	0.29	53.24
03/31/92	0142490	0.17	39.14

Average Lead: 1.32 Average Particulate: 70.32

TABLE 3.2 - Sampler Location OE

DATE	FILTER NO.	LEAD (ug/m³)	TSP* (ug/m³)
01/01/92	8176269	-0.09	31.51
01/07/92	8176274	-0.09	31.96
01/13/92	invalid		
01/19/92	invalid		
01/25/92	8176293	22.96	144.60
01/31/92	8176298	6.08	73.08
02/06/92	8176304	22.88	203.64
02/12/92	8176309	0.15	27.08
02/18/92	invalid		
02/24/92	8176320	27.00	173.14
03/01/92	8176326	1.14	60.88
03/07/92	8176331	5.56	57.67
03/13/92	8176336	0.63	36.30
03/19/92	invalid		
03/25/92	0142486	26.52	159.14
03/31/92	0142492	28.29	122.40

Average Lead: [redacted] Average Particulate: 93.45

TABLE 3.3 - Sampler Location O3

DATE	FILTER NO.	LEAD (ug/m³)	TSP* (ug/m³)
01/01/92	8176270	0.08	30.83
01/07/92	8176276	0.00	96.26
01/13/92	8176281	0.26	21.67
01/19/92	8176288	0.18	26.28
01/25/92	8176294	3.98	69.36
01/31/92	8176299	3.27	70.69
02/06/92	8176305	2.77	121.07
02/12/92	8176310	0.05	25.51
02/18/92	8176316	0.11	20.04
02/24/92	8176322	0.43	56.87
03/01/92	8176327	0.15	63.89
03/07/92	8176332	3.43	50.74
03/13/92	8176337	0.32	32.89
03/19/92	8176342	1.41	25.45
03/25/92	0142487	2.01	33.12
03/31/92	invalid		
	Average Lead:	1.23	Average Particulate: 49.64

TABLE 3.4 - Filter Blank

DATE	FILTER NO.	LEAD (ug/filter)	TSP* (ug/filter
01/01/92	8176271	160	1000
01/07/92	8176277	-252	0
01/13/92	8176282	81	-4000
01/19/92	8176289	81	-1000
01/25/92	8176295	161	0
01/31/92	8176301	86	-1000
02/06/92	8176306	188	-2000
02/12/92	8176311	0	-1000
02/18/92	8176316	-99	1000
02/24/92	8176323	0	1000
03/01/92	8176328	89	1000
03/07/92	8176333	87	-1000
03/13/92	8176338	0	2000
03/19/92	8176343	193	-5000
03/25/92	0142489	66	-2000
03/31/92	0142494	-31	0
	Average Lead:	50.63	Average Particulate: - 687.5

*TSP - Total Suspended Particulate

** Results for the sampler N3-QC were actually used in the average due to the erratic behaviour of the "Official Sampler."

Chemetco
FIRST IN PEOPLE — QUALITY — SERVICE
P.O. Box 67 • Hartford, IL 62048
618-254-4381 • 800-444-5564

October 30, 2001

Illinois Environmental Protection Agency
Air Monitoring Section
c/o Mr. Terry Sweitzer
P.O. Box 19276
Springfield, Illinois 62794-9276

RE: Third Quarter 2001 Ambient Air Monitoring Report

Dear Mr. Sweitzer,

Enclosed are two copies of the report entitled, "Ambient Air Monitoring Quarterly Report July - September, 2001 for Total Particulate and Lead."

A table of results from the extra sampler located at the northwest corner and within the fence (the former N3 and N3-QC locations) is attached to this letter. This monitor is not included in the official approved ambient air monitoring program and is included as an attachment to this letter at the request of the Illinois EPA.

If you have any questions or require additional information, please contact me at 618/254-4381 ext. 268.

Sincerely,

Heather Young, CHMM
Environmental Manager
Chemetco, Inc.

Attachment

cc: Jim Henry, IEPA--Collinsville Region
Jeff Trevino, USEPA
Chief, Air Enforcement Assurance Branch, USEPA
George von Stamwitz, Armstrong, Teasdale, Schlafly & Davis
File

2001 3RD QUARTER AVERAGE CALCULATION

LOCATION Extra

DATE	FILTER NO	TIME FINISH	TIME START	ELAPSED TIME	CFM	CUBIC METERS	LEAD ug/fltr	TSP ug/fltr	LEAD ug/m3	TSP ug/m3	
7/6/01	G6048716	30409.7	28989.7	1420	46	1960	9714	158100	4.96	80.68	
7/12/01	G6048723	31850.8	30410.8	1440	46.6	2013	1106	76300	0.55	37.90	
7/18/01	G0031462	33291.9	31851.9	1440	45.4	1961	4105	260200	2.09	132.67	
7/25/01	*										Not enough filters
7/30/01	G0031469	34733.2	33293.2	1440	44.2	1909	4344	229800	2.28	120.35	
8/05/01	G0031479	36174.3	34734.3	1440	45.4	1961	121	53400	0.06	27.23	
8/11/01	*										Not enough time,wrong day
8/17/01	G0031491	38274.2	36834.2	1440	45.4	1961	360	75300	0.18	38.39	
8/23/01	*										Not enough filters
8/29/01	G0031493	39715.1	38275.1	1440	45.4	1961	1017	103200	0.52	52.62	
9/04/01	G0031503	41156.2	39716.2	1440	45.4	1961	1105	137000	0.56	69.85	
9/10/01	G0031515*	41157.2	41157.2	0							Power failure
9/16/01	G0031514	42597.1	41157.2	1439.9	45.4	1961	1878	115300	0.96	58.79	
9/22/01	*										Not enough filters
9/28/01	G0031592	45477.9	44038	1439.9	45	1944	153	69600	0.08	35.80	
								AVERAGE	1.22	65.43	

*Not included in average due to reason noted

AMBIENT AIR MONITORING

QUARTERLY REPORT

JULY - SEPTEMBER 2001

FOR

TOTAL PARTICULATE

AND LEAD

CHEMETCO, INC.
October 2001

TABLE OF CONTENTS

		page
1.0	INTRODUCTION	1
1.1	Monitoring Description	1
1.2	Monitoring Report	1
2.0	SAMPLING DATE ACCOUNTING	5
3.0	MONITORING DATA	7
3.1	Quarterly Averages Calculation	7
3.2	Sampler Quarterly Averages	12
3.3	Instrument Precision Calculation	16
3.4	Single Instrument Accuracy	18
3.5	Documentation	18

APPENDIX A Calculation Worksheets
APPENDIX B Laboratory Analyses
APPENDIX C Filter Conditioning Logsheets

0

1.0 INTRODUCTION

This document presents the summary of the third calendar quarter year 2001 ambient air monitoring performed at the Chemetco, Inc. facility in Madison County.

1.1 Monitoring Description

The third quarter ambient air monitoring began on July 1, 2001, and sampling for total suspended particulates and lead in the particulate was performed on a once every sixth day basis. The quarterly sampling ended on September 30, 2001. Each day, a weather log was maintained documenting wind speed, wind direction, temperature, relative humidity and precipitation. Site data is utilized unless there is problem with the computer or program. In such a case, the information is obtained from the Nation Weather Service and recorded by the security guard. Chemetco also set up an account with the Midwest Climate Center who records data at two different locations near the facility. Chemetco has purchased a new weather station. The new weather station was set up during last quarter. Currently the rainfall gauge is not functioning and has been sent back to the manufacturer for calibration.

The location of the monitoring sites was based on a modeling report done by Versar, Inc. and approved by IEPA. All locations are shown on a map in Figure 1-1.

Standard operating procedures were followed for the filter conditioning, sampling, sampler operation, analyses, etc, are shown in Table 1.1. Complete copies of the SOP's were provided in the Ambient Air Monitoring Quality Assurance/Quality Control Plan.

1.2 Monitoring Report

The following pages contain the results of the second quarter monitoring. Section 2 contains an accounting of all the test dates and reasons for eliminating data from certain test dates. Section 3 contains the quarterly averages, the quality assurance data and meteorological data. The Appendices include copies of the Filter Conditioning Logsheets with total suspended particulate calculation, the laboratory analysis, and the calculation worksheets.

Relocation of Colocated Northern Monitors

Chemetco believed that all data collected from N3 and N3-QC at their former location just south of the facility's northern fence was highly questionable and not valid. As evidenced by an analysis of quarterly ambient air monitoring, the monitors in their former location had been significantly impacted by nearby facility activities, structures, microclimatic influences, and/or surrounding entrained materials. The IEPA agreed with Chemetco regarding the need to relocate the northern monitors as outlined below.

Chemetco requested in a letter dated June 18, 1998, to IEPA to move the colocated ambient air monitors located in the northern portion of the facility in order to obtain samples which truly represent ambient air. The relocation was approved by IEPA in a letter dated June 24, 1998.

Sampling of the ambient air monitors in the new location was initiated July 25, 1998. Additional sampling events were scheduled that same week to allow the collection of the appropriate number of samples for the third quarter 1998. Sampling proceeded as scheduled in the current location until the new monitors were in place. Chemetco is also utilizing dedicated Dickson recorders for all four official air monitors, the new colocated N3 and N3-QC, OS and O3. The aforementioned relocation of the northern ambient air monitors has allowed the collection of a more representative sample of ambient air similar to that collected by the ambient air monitors OS and O3.

FIGURE 1-1
MONITORING SITE LOCATIONS

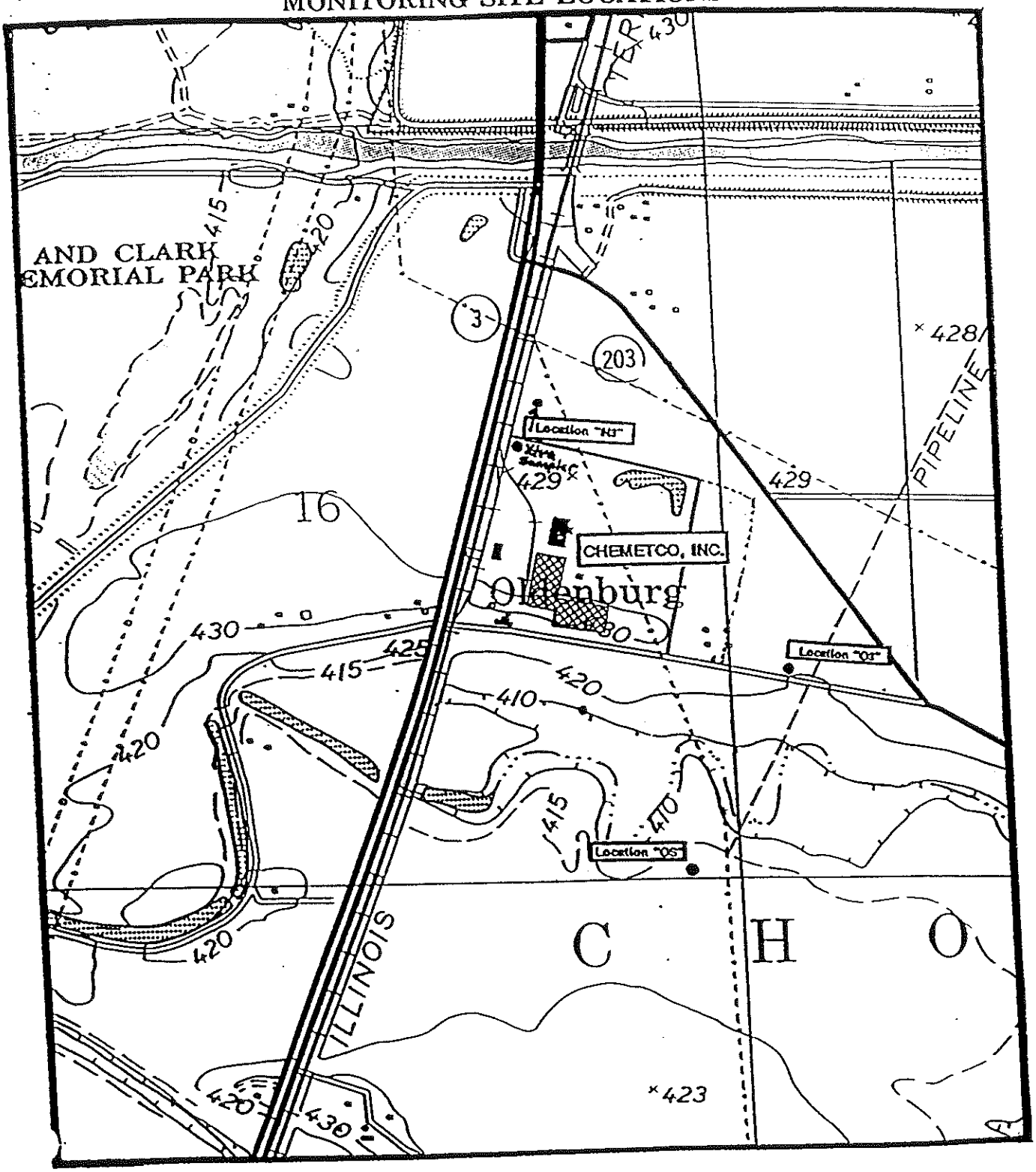

TABLE 1-1
STANDARD OPERATING PROCEDURES

Determination of Total Suspended Particulates in Ambient Air Filters

Filter Conditioning

Lead Analysis in Ambient Air Filters

Operation of GMW 2310 TSP Samplers

Packaging and Shipment of Samples

2.0 SAMPLING DATE ACCOUNTING

Following is a list of the dates the monitors were to have run. Table 2.1 accounts the dates and events.

TABLE 2.1 - Sample Date Accounting

DATE	SAMPLER	RUN STATUS	QUALIFICATION	ERROR REASON
7-06-01	N3-QC	OK	Yes	
	N3	OK	Yes	
	OS	OK	Yes	
	O3	OK	Yes	
7-12-01	N3QC	OK	Yes	
	N3	OK	Yes	
	OS	OK	Yes	
	O3	OK	Yes	
7-18-01	N3-QC	No	No	Power failure, did not run
	N3	No	No	Ran over, did not analyze
	OS	No	No	Ran over, did not analyze
	O3	OK	Yes	
7-25-01	N3-QC	OK	Yes	
	N3	OK	Yes	
	OS	OK	Yes	
	O3	OK	Yes	
7-30-01	N3-QC	OK	Yes	
	N3	OK	Yes	
	OS	OK	Yes	
	O3	OK	Yes	
8-05-01	N3-QC	OK	Yes	
	N3	OK	Yes	
	OS	OK	Yes	
	O3	OK	Yes	
8-11-01	N3-QC	No	No	Operator error, did not run
	N3	OK	Yes	
	OS	OK	Yes	
	O3	OK	Yes	
8-17-01	N3-QC	OK	Yes	
	N3	OK	Yes	
	OS	OK	Yes	
	O3	OK	Yes	
8-23-01	N3-QC	OK	Yes	
	N3	OK	Yes	
	OS	OK	Yes	
	O3	OK	Yes	

TABLE 2.1 - Sample Date Accounting (con't)

DATE	SAMPLER	RUN STATUS	QUALIFICATION	ERROR REASON
8-29-01	N3-QC	OK	Yes	
	N3	OK	Yes	
	OS	OK	Yes	
	O3	OK	Yes	
9-04-01	N3-QC	OK	Yes	
	N3	OK	Yes	
	OS	OK	Yes	
	O3	OK	Yes	
9-10-01	N3-QC	OK	Yes	
	N3	OK	Yes	
	OS	OK	Yes	
	O3	OK	Yes	
9-16-01	N3-QC	OK	Yes	
	N3	OK	Yes	
	OS	OK	Yes	
	O3	OK	Yes	
9-22-01	N3-QC	OK	Yes	
	N3	OK	Yes	
	OS	OK	Yes	
	O3	OK	Yes	
9-28-01	N3-QC	OK	Yes	
	N3	OK	Yes	
	OS	OK	Yes	
	O3	OK	Yes	

3.0 MONITORING DATA

After the receipt from the laboratory of all data for the quarterly report, averages for each monitoring site were calculated from the pool of data. In addition, at site N3, two samplers were set up for quality assurance purposes. A standard deviation, lower and upper range was determined based on those samples and under normal circumstances can be assumed to represent accuracy for all locations.

Each day, meteorological data was noted. The weather information was obtained from either the National Weather Service, the Midwest Climate Center or the on-site weather station. These logs are shown in Figure 3.1 and quarterly averages are discussed in Section 3.2.

3.1 Quarterly Averages Calculation

From the pool of acceptable data, quarterly averages were calculated by using the simple arithmetic mean determination shown in Equation 1.

$$X = \frac{\Sigma X_i}{n} \qquad \textit{Equation 1}$$

where,

X_i = individual sampling data,

n = the number of valid sampling points in the quarter.

FIGURE 3-1
METEOROLOGICAL DATA SHEET

DAILY WEATHER LOGSHEET

Date	Wind Speed	Wind Direction	Wind Sigma	Temperature (F)	Relative Humidity %	Precipitation
7-01-01	8	180		79	66	0.10
7-02-01	9	135		77	72	0.03
7-03-01	9	112		75	62	0.04
7-04-01	8	112		79	59	0.00
7-05-01	7	180		83	33	0.50
*7-06-01	7	157		79	32	0.10
7-07-01	12	90		79	23	0.00
7-08-01	12	180		86	53	0.00
7-09-01	8	247		90	30	0.00
7-10-01	7	135		89	31	0.00
7-11-01	7	0		87	65	0.00
*7-12-01	— —	— —		82	57	0.00
7-13-01	8	90		74	57	0.50
7-14-01	3	202		73	61	0.00
7-15-01	3	315		75	55	0.00
7-16-01	11	135		79	41	0.00
7-17-01	10	157		82	46	0.00
*7-18-01	9	180		78	63	1.20
7-19-01	8	157		73	83	0.51
7-20-01	8	135		76	83	3.20
7-21-01	7	203		79	82	0.15
7-22-01	5	225		84	55	0.00
7-23-01	7	180		85	68	0.00
7-24-01	6	202		85	75	0.50
*7-25-01	7	202		83	70	0.51

* Denotes Air Sampling Date

FIGURE 3-1 (cont.)

DAILY WEATHER LOGSHEET

Date	Wind Speed	Wind Direction	Wind Sigma	Temperature (F)	Relative Humidity %	Precipitation
7-26-01	7	90		83	73	0.10
7-27-01	7	157		79	78	0.00
7-28-01	9	202		77	84	0.00
7-29-01	5	45		80	83	0.00
*7-30-01	5	45		84	68	0.00
7-31-01	12	112		87	62	0.00
8-01-01	12	135		88	61	0.00
8-02-01	9	180		89	63	0.00
8-03-01	15	45		74	87	0.10
8-04-01	5	0		78	76	0.00
*8-05-01	8	90		84	65	0.00
8-06-01	8	90		84	54	0.00
8-07-01	6	45		85	56	0.00
8-08-01	5	90		88	58	0.00
8-09-01	5	225		81	82	0.00
8-10-01	10	180		81	71	0.58
*8-11-01	6	315		78	76	0.00
8-12-01	6	45		79	71	0.00
8-13-01	0	0		79	66	0.00
8-14-01	6	0		75	61	0.00
8-15-01	5	0		73	54	0.00
8-16-01	14	225		80	55	0.00
*8-17-01	7	315		76	57	0.20
8-18-01	5	90		78	59	0.50
8-19-01	9	315		73	57	0.30

* Denotes Air Sampling Date

FIGURE 3-1 (cont.)

DAILY WEATHER LOGSHEET

Date	Wind Speed	Wind Direction	Wind Sigma	Temperature (F)	Relative Humidity %	Precipitation
8-20-01	7	315		74	62	0.00
8-21-01	12	90		79	61	0.00
8-22-01	13	180		87	69	0.00
*8-23-01	12	180		89	59	0.00
8-24-01	10	90		77	84	0.00
8-25-01	8	90		76	93	0.58
8-26-01	8	180		75	90	0.10
8-27-01	0	90		78	66	0.20
8-28-01	6	315		85	47	0.00
*8-29-01	6	0		82	60	0.00
8-30-01	6	135		81	67	0.00
8-31-01	9	0		72	97	0.30
9-01-01	5	0		73	61	0.10
9-02-01	7	90		75	61	0.00
9-03-01	9	90		78	61	0.00
*9-04-01	0	0		81	67	0.00
9-05-01	8	45		83	74	0.00
9-06-01	10	135		81	76	0.00
9-07-01	15	135		83	65	0.20
9-08-01	20	180		81	71	0.00
9-09-01	7	0		80	62	0.58
*9-10-01	3	270		65	78	0.30
9-11-01	0	0		69	60	0.00
9-12-01	0	0		73	59	0.00
9-13-01	0	0		74	53	0.00

* Denotes Air Sampling Date

FIGURE 3-1 (cont.)

DAILY WEATHER LOGSHEET

Date	Wind Speed	Wind Direction	Sigma	Temperature (F)	Relative Humidity %	Precipitation
9-14-01	14	45		70	56	0.00
9-15-01	3	90		64	49	0.00
*9-16-01	7	90		67	47	0.00
9-17-01	6	180		71	49	0.00
9-18-01	6	225		70	84	0.00
9-19-01	12	180		73	93	1.30
9-20-01	0	0		60	89	0.00
9-21-01	18	180		71	75	0.30
*9-22-01	6	315		68	65	0.20
9-23-01	6	90		70	63	0.00
9-24-01	6	315		62	72	0.00
9-25-01	6	0		53	59	0.00
9-26-01	6	315		53	54	0.00
9-27-01	6	270		59	53	0.00
*9-28-01	0	0		62	62	0.00
9-29-01	9	45		59	69	0.00
9-30-01	5	0		63	60	0.00

* Denotes Air Sampling Date

3.2 Sampler Quarterly Averages

The simple quarterly average for each set of data from a particular sampler are calculated in the following tables, 3.1 through 3.4.

TABLE 3.1 - Sampler Location N3

DATE	FILTER NO	LEAD (ug/m^3)	TSP* (ug/m^3)
7-06-01	G6048721	1.79	65.89
7-12-01	G6048726	0.46	45.91
7-18-01	G6048731	Ran over, did not analyze	----------
7-25-01	G0031466	1.14	83.79
7-30-01	G0031468	0.76	64.52
8-05-01	G0031476	0.06	34.82
8-11-01	G0031481	0.22	32.78
8-17-01	G0031490	0.10	55.55
8-23-01	G0031494	0.09	35.76
8-29-01	G0031498	0.71	63.75
9-04-01	G0031508	0.41	84.19
9-10-01	G0031512	0.47	44.28
9-16-01	G0031517	0.36	53.59
9-22-01	G0031524	0.64	61.20
9-28-01	G0031593	0.00	34.73
		=========	=========
	AVERAGE	0.48	54.32

TABLE 3.2 - Sampler Location OS

DATE	FILTER NO.	LEAD (ug/m^3)	TSP* (ug/m^3)
7-06-01	G6048718	0.00	34.46
7-12-01	G6048724	0.00	26.81
7-18-01	G6048729	Ran over,did nt analyze	----------
7-25-01	G0031464	0.42	30.05
7-30-01	G00.1472	0.21	29.63
8-05-01	G0031475	0.00	25.80
8-11-01	G0031484	0.05	27.87
8-17-01	G0031487	0.37	29.04
8-23-01	G0031495	0.09	26.39
8-29-01	G0031500	0.03	45.29
9-04-01	G0031506	0.16	52.77
9-10-01	G0031511	0.40	19.38
9-16-01	G0031519	0.01	33.08
9-22-01	G0031522	0.25	31.75
9-28-01	G0031595	0.08	38.33
		=========	=========
	AVERAGE	0.33	32.19

TABLE 3.3 - Sampler Location O3

DATE	FILTER NO.	LEAD (ug/m^3)	TSP* (ug/m^3)
7-06-01	G6048717	0.00	31.90
7-12-01	G6048725	0.00	21.62
7-18-01	G6048730	0.11	37.63
7-25-01	G0031465	1.37	38.86
7-30-01	G0031471	0.20	31.36
8-05-01	G0031474	0.00	27.38
8-11-01	G0031483	0.05	29.01
8-17-01	G0031488	0.45	37.02
8-23-01	G0031496	0.00	26.86
8-29-01	G0031501	0.03	51.19
9-04-01	G0031505	0.33	64.07
9-10-01	G0031510	0.40	24.56
9-16-01	G0031518	0.01	39.39
9-22-01	G0031523	0.23	34.26
9-28-01	G0031594	0.08	33.83
		==========	==========
	AVERAGE	0.22	33.06

TABLE 3.4 - Filter Blank

DATE	FILTER NO.	LEAD (ug/filter)	TSP* (ug/filter)
7-06-01	G6048722	6	7500
7-12-01	G6048728	6	4600
7-18-01	G0031463	89	900
7-25-01	G0031467	6	-2700
7-30-01	G0031473	84	-4700
8-05-01	G0031480	6	-7100
8-11-01	G0031486	6	-600
8-17-01	G0031492	6	-400
8-23-01	G0031497	6	-3500
8-29-01	G0031502	212	100
9-04-01	G0031509	6	-200
9-10-01	Not enough filters	---------	--------
9-16-01	G0031521	192	-500
9-22-01	G0031591	18	1100
9-28-01	G0031597	6	2600

*TSP - Total Suspended Particulate

3.3 Instrument Precision Calculation

The estimates of precision for ambient air quality measurements from the TSP method are calculated from results obtained from the collection of two samplers at one sampling site, N3. The calculated precision from this one sampling site is considered indicative of the precision at all sampling sites for the TSP method.

Using the paired measurements for the official sampler, labeled "N3" and the secondary sampler, labeled "N3-QC," the precision was calculated from the following equations. These numbers are reported on the Data Assessment Report shown in Figure 3-2.

Percentage Difference, d_i

$$d_i = \frac{Y_i - X_i}{X_i} \times 100\%$$

where: Y_i = the concentration TSP measured by the secondary sampler; and
X_i = the concentration TSP measured by the official sampler.

Average Percentage Difference, d_j

$$d_j = \frac{\Sigma d_i}{n}$$

where: n = the number of comparisons.

Standard Deviation, S_j

$$S_j = \sqrt{\frac{\Sigma(d_i)^2 - n(d_j)^2}{n - 1}}$$

96% Probability Limits

$$\text{Upper Limit} = d_j + \frac{1.96(S_j)}{2}$$

$$\text{Lower Limit} = d_j - \frac{1.96(S_j)}{2}$$

FIGURE 3-2
DATA ASSESSMENT REPORT

Date: October 30, 2001
Auditor: Heather Young

Allocated Samplers

d_i = **12.62%**
d_j = **-7.10%**
S_j = **19.89%**

Upper Limit = 12.39 %

Lower Limit = -26.59%

Range = 27.73 to 63.71

Flow Rate Percentage Differences:

Sampler #1:(See Sect. 3-4) **Sampler #2:**(See Sect. 3-4)

Sampler #3:(See Sect. 3-4) **Sampler #4:**(See Sect. 3-4)

3.4 Single Instrument Accuracy

Estimates of accuracy for ambient air quality measurements from the TSP method are calculated from the results of independent audits. Once each sampling quarter, the flow rate of each high-volume sampler is audited.

Jim Henry with the IEPA Collinsville Field Office audits the sampler motors.

3.5 Documentation

For each of the sampling episodes, data packages have been assembled to facilitate the retrieval of necessary data to perform and check calculations, assumptions and determinations and to generate accurate reports. These packages are maintained in a central project file at Chemetco.

Data forms are attached with backup and confirmatory information in Appendices A through C. They include:

- Filter Conditioning and TSP Calculation Logsheets;
- Calculation pages; and,
- Laboratory Analyses Report Sheet.

APPENDIX A

CALCULATION COVER SHEET

Company Name: Chemetco, Inc.

Project Name: Ambient Air Monitoring

Project Number: 03QTR1

Purpose: Sampler Averages

Total Number of Pages: 6 (including this one)

Date: October 30, 2001

Originator's Signature:

2001 3RD QUARTER AVERAGE CALCULATION

LOCATION N3-QC

DATE	FILTER NO	TIME FINISH	TIME START	ELAPSED TIME	CFM	CUBIC METERS	LEAD ug/fltr	TSP ug/fltr	LEAD ug/m3	TSP ug/m3	
7/6/01	G6048720	63178	61738	1440	44.4	1893	4385	432400	2.32	228.42	
7/12/01	G6048727	64619.1	63179.1	1440	43.8	1892	446	44600	0.24	23.57	
7/18/01	*										Power Failure,did not run
7/25/01	G0031461	66060.3	64620.2	1440.1	45.7	1974	642	84100	0.33	42.60	
7/30/01	G0031469	67501.6	66061.6	1440	46.4	2004	2823	175500	1.41	87.55	
8/05/01	G0031478	68942.9	67503	1439.9	46.4	2004	121	70700	0.06	35.27	
8/11/01	*	68944.8	68944.8	0							Operator error,did not run
8/17/01	G0031482	70385.4	68945.4	1440	46.4	2004	360	95400	0.18	47.59	
8/23/01	G0031489	71827	70387.1	1439.9	45.7	1974	371	66200	0.19	33.53	
8/29/01	G0031499	73283.5	71843.4	1440.1	47	1918	1500	147800	0.78	77.06	
9/04/01	G0031507	74725.2	73285.2	1440	46.4	2004	143	72400	0.07	36.12	
9/10/01	G0031513	76167.5	74727.5	1440	45	1944	1070	91600	0.55	47.12	
9/16/01	G0031516	77608.8	76168.9	1439.9	44.3	1914	866	92700	0.45	48.44	
9/22/01	G0031525	79050.1	77610.1	1440	45.7	1974	1080	102800	0.55	52.07	
9/28/01	G0031592	80491	79051	1440	45	1944	153	69800	0.08	35.91	
								AVERAGE	0.55	61.17	

*Not included in average due to reason noted

2001 3RD QUARTER AVERAGE CALCULATION

LOCATION N3

DATE	FILTER NO	TIME FINISH	TIME START	ELAPSED TIME	CFM	CUBIC METERS	LEAD ug/fltr	TSP ug/fltr	LEAD ug/m3	TSP ug/m3	
7/6/01	G6048721	1413	0	1413	45.4	1925	3445	126800	1.79	65.89	
7/12/01	G6048726	1412	0	1412	45.4	1923	886	88300	0.46	45.91	
7/18/01	G6048731*	2048	0	2048							Ran over,did not analyze
7/25/01	G0031466	1411	0	1411	44.8	1896	2163	158900	1.14	83.79	
7/30/01	G0031468	1415	0	1415	44.8	1902	1453	122700	0.76	64.52	
8/05/01	G0031476	1416	0	1416	44.8	1903	121	65700	0.06	34.52	
8/11/01	G0031481	1412	0	1412	44.8	1898	415	62200	0.22	32.78	
8/17/01	G0031490	1417	0	1417	44.8	1904	192	105800	0.10	55.55	
8/23/01	G0031494	1413	0	1413	44.2	1874	168	67000	0.09	35.76	
8/29/01	G0031498	1416	0	1416	44.2	1878	1339	119700	0.71	63.75	
9/04/01	G0031508	1412	0	1412	45.4	1923	784	161900	0.41	84.19	
9/10/01	G0031512	1416	0	1416	45.4	1929	916	85400	0.47	44.28	
9/16/01	G0031517	1417	0	1417	46	1955	698	104800	0.36	53.59	
9/22/01	G0031524	1412	0	1412	45.4	1923	1231	117700	0.64	61.20	
9/28/01	G0031593	1412	0	1412	45.4	1923	6	66800	0.00	34.73	
								AVERAGE	0.48	54.32	

*Not included in average due to reason noted

2001 3RD QUARTER AVERAGE CALCULATION

LOCATION OS

DATE	FILTER NO	TIME FINISH	TIME START	ELAPSED TIME	CFM	CUBIC METERS	LEAD ug/fltr	TSP ug/fltr	LEAD ug/m3	TSP ug/m3	
7/6/01	G6048718	1440	0	1440	44.2	1909	6	65800	0.00	34.46	
7/12/01	G6048724	1440	0	1440	43.6	1884	6	50500	0.00	26.81	
7/18/01	G6048729*	1980	0	1980							Ran over, did not analyze
7/25/01	G0031464	1440	0	1440	43.6	1884	794	56600	0.42	30.05	
7/30/01	G0031472	1440	0	1440	43.6	1884	388	55800	0.21	29.63	
8/05/01	G0031475	1440	0	1440	43.6	1884	6	48600	0.00	25.80	
8/11/01	G0031484	1440	0	1440	43.6	1884	102	52500	0.05	27.87	
8/17/01	G0031487	1440	0	1440	43.6	1884	698	54700	0.37	29.04	
8/23/01	G0031495	1440	0	1440	43.6	1884	168	49700	0.09	26.39	
8/29/01	G0031500	1440	0	1440	43.6	1884	51	85300	0.03	45.29	
9/04/01	G0031506	1440	0	1440	43.6	1884	303	99400	0.16	52.77	
9/10/01	G0031511	1440	0	1440	43.6	1884	762	36500	0.40	19.38	
9/16/01	G0031519	1440	0	1440	43.6	1884	23	62300	0.01	33.08	
9/22/01	G0031522	1440	0	1440	43.6	1884	473	59800	0.25	31.75	
9/28/01	G0031595	1440	0	1440	43.6	1884	153	72200	0.08	38.33	
								AVERAGE	0.33	32.19	

*Not included in average due to reason noted

2001 3RD QUARTER AVERAGE CALCULATION

LOCATION O3

DATE	FILTER NO	TIME FINISH	TIME START	ELAPSED TIME	CFM	CUBIC METERS	LEAD ug/fltr	TSP ug/fltr	LEAD ug/m3	TSP ug/m3
7/6/01	G6048717	34717.4	33277.4	1440	45.5	1966	6	62700	0.00	31.90
7/12/01	G6048725	36158.7	34718.7	1440	45.5	1966	6	42500	0.00	21.62
7/18/01	G6048730	37599.9	36159.8	1440.1	44.9	1940	209	73000	0.11	37.63
7/25/01	G0031465	39041.1	37601	1440.1	44.2	1910	2620	74200	1.37	38.86
7/30/01	G0031471	40482.3	39043	1439.3	44.9	1939	388	60800	0.20	31.36
8/05/01	G0031474	41923.8	40483.9	1439.9	44.9	1940	6	53100	0.00	27.38
8/11/01	G0031483	43365.1	41925	1440.1	44.2	1910	102	55400	0.05	29.01
8/17/01	G0031488	44806.5	43366.5	1440	44.9	1940	866	71800	0.45	37.02
8/23/01	G0031496	46247.4	44807.5	1439.9	44.9	1940	6	52100	0.00	26.86
8/29/01	G0031501	47688.7	46248.6	1440.1	43.5	1879	51	96200	0.03	51.19
9/04/01	G0031505	49130	47690	1440	43.5	1879	624	120400	0.33	64.07
9/10/01	G0031510	50571.3	49131.2	1440.1	44.2	1910	762	46900	0.40	24.56
9/16/01	G0031518	52012.4	50572.5	1439.9	44.2	1909	23	75200	0.01	39.39
9/22/01	G0031523	53453.7	52013.7	1440	44.9	2017	473	69100	0.23	34.26
9/28/01	G0031594	54896.4	53456.5	1439.9	45.5	1965	153	66500	0.08	33.83
								AVERAGE	0.22	33.06

*Not included in average due to reason noted

2001 3RD QUARTER AVERAGE CALCULATION

LOCATION FB

DATE	FILTER NO	LEAD ug/filter	TSP ug/filter	
7/6/01	G6048722	6	7500	
7/12/01	G6048728	6	4600	
7/18/01	G0031463	89	900	
7/25/01	G0031467	6	-2700	
7/30/01	G0031473	84	-4700	
8/05/01	G0031480	6	-7100	
8/11/01	G0031486	6	-600	
8/17/01	G0031492	6	-400	
8/23/01	G0031497	6	-3500	
8/29/01	G0031502	212	100	
9/04/01	G0031509	6	-200	
9/10/01	*			Not enough filters
9/16/01	G0031521	192	-500	
9/22/01	G0031591	18	1100	
9/28/01	G0031597	6	2600	

CALCULATION COVER SHEET

Company Name: Chemetco, Inc.

Project Name: Ambient Air Monitoring

Project Number: 03QTR1

Purpose: Sampler Precision Calculation

Total Number of Pages: 2 (including this one)

Date: October 30, 2001

Originator's Signature: _____

SAMPLER PRECISION CALCULATION (PARTICULATE)

Sampling Date	Duplicate Sampler	Official Sampler	Difference	Difference (Square)
7-06-01	69.03	65.89	3.23	10.43
7-12-01	23.57	45.91	-22.34	499.08
7-18-01	Power failure	Ran over	———	———
7-25-01	42.60	83.79	-41.10	1689.21
7-30-01	87.55	64.52	23.03	530.38
8-05-01	35.27	34.52	0.75	0.56
8-11-01	Operator error	32.78	———	———
8-17-01	47.59	55.55	-8.05	64.80
8-23-01	33.53	35.76	-2.23	4.97
8-29-01	77.06	63.75	13.31	177.16
9-04-01	36.12	84.19	-48.07	2310.72
9-10-01	47.12	44.28	2.32	5.38
9-16-01	48.44	53.59	-5.15	26.52
9-22-01	52.07	61.20	-9.13	83.36
9-28-01	35.91	34.73	1.18	1.39
		$\Sigma d_i =$	-92.25	$\Sigma d_i^2 =$ 5403.96

n=13

$$d_j = \frac{\Sigma d_j}{n} = \frac{-92.25}{13} = -7.10\%$$

$$S_j = \sqrt{\frac{\Sigma(d_j)^2 - n(d_j)^2}{n-1}} = \sqrt{\frac{5403.96 - 13(-7.10)}{13-1}} = \sqrt{\frac{5403.96 - 655}{12}} = 19.89\%$$

$$\text{Upper Limit} = d_j + \frac{1.96(S_j)}{2} = -7.10\% + \frac{1.96(19.89)}{2} = -7.10 + 19.49 = 12.39\%$$

$$\text{Lower Limit} = d_j - \frac{1.96(S_j)}{2} = -7.10\% - \frac{1.96(19.89)}{2} = -7.10 - 19.49 = -26.59\%$$

Official Average Particulate: 54.32 mg/m^3

Range: 27.73 to 66.71

APPENDIX B

Chemetco, Inc.
Rt. 3 at Chemetco Lane
Hartford, IL 62048

ATTN: Heather Young Date: 2-Aug-01

Sample type: Hi-Vol Air Monitoring Program

Sample Identification: Listed below

Filter ID	Location	Pb, ug/filter	TSP,mg/filter
G6048718	OS	<6	65.8
G6048717	O3	<6	62.7
G6048721	N3	3,445	126.8
G6048720	N3QC	4,385	132.4
G6048716	Extra	9,714	158.1
G6048722	FB	<6	7.5

Analyst: Matt Shoemaker

Title: Laboratory Technician

Chemetco, Inc.
Rt. 3 at Chemetco Lane
Hartford, IL 62048

ATTN: Heather Young

Date: 2-Aug-01

Sample type: Hi-Vol Air Monitoring Program

Sample Identification: Listed below

Filter ID	Location	Pb, ug/filter	TSP,mg/filter
G6048724	OS	<6	50.5
G6048725	O3	<6	42.5
G6048726	N3	886	88.3
G6048727	N3QC	446	44.6
G6048723	Extra	1,106	76.3
G6048728	FB	<6	4.6

Analyst: Matt Shoemaker

Title: Laboratory Technician

Chemetco, Inc.
Rt. 3 at Chemetco Lane
Hartford, IL 62048

ATTN: Heather Young Date: 9-Aug-01

Sample type: Hi-Vol Air Monitoring Program

Sample Identification: Listed below

Filter ID	Location	Pb, ug/filter	TSP,mg/filter
G6048730	O3	209	73
G0031462	Extra	4,105	260.2
G0031463	FB	89	0.9

Analyst: Matt Shoemaker

Title: Laboratory Technician

Chemetco, Inc.
Rt. 3 at Chemetco Lane
Hartford, IL 62048

ATTN: Heather Young

Date: 9-Aug-01

Sample type: Hi-Vol Air Monitoring Program

Sample Identification: Listed below

Filter ID	Location	Pb, ug/filter	TSP,mg/filter
G0031464	OS	794	56.6
G0031465	O3	2,620	74.2
G0031466	N3	2,163	158.9
G0031461	N3QC	642	84.1
G0031467	FB	<6	-2.7

Analyst: Matt Shoemaker

Title: Laboratory Technician

Chemetco, Inc.
Rt. 3 at Chemetco Lane
Hartford, IL 62048

ATTN: Heather Young

Date: 16-Aug-01

Sample type: Hi-Vol Air Monitoring Program

Sample Identification: Listed below

Filter ID	Location	Pb, ug/filter	TSP,mg/filter
G0031472	OS	388	55.8
G0031471	O3	388	60.8
G0031468	N3	1,453	122.7
G0031470	N3QC	2,823	175.5
G0031469	Extra	4,344	229.8
G0031473	FB	84	-4.7

Analyst: Matt Shoemaker

Title: Laboratory Technician

Chemetco, Inc.
Rt. 3 at Chemetco Lane
Hartford, IL 62048

ATTN: Heather Young

Date: 16-Aug-01

Sample type: Hi-Vol Air Monitoring Program

Sample Identification: Listed below

Filter ID	Location	Pb, ug/filter	TSP,mg/filter
G0031475	OS	<6	48.6
G0031474	O3	<6	53.1
G0031476	N3	121	65.7
G0031478	N3QC	121	70.7
G0031479	Extra	121	53.4
G0031480	FB	<6	-7.1

Analyst: Matt Shoemaker

Title: Laboratory Technician

Chemetco, Inc.
Rt. 3 at Chemetco Lane
Hartford, IL 62048

ATTN: Heather Young Date: 30-Aug-01

Sample type: Hi-Vol Air Monitoring Program

Sample Identification: Listed below

Filter ID	Location	Pb, ug/filter	TSP,mg/filter
G0031484	OS	102	52.5
G0031483	O3	102	55.4
G0031481	N3	415	62.2
G0031486	FB	<6	-6

Analyst: Matt Shoemaker

Title: Laboratory Technician

Chemetco, Inc.
Rt. 3 at Chemetco Lane
Hartford, IL 62048

ATTN: Heather Young

Date: 30-Aug-01

Sample type: Hi-Vol Air Monitoring Program

Sample Identification: Listed below

Filter ID	Location	Pb, ug/filter	TSP,mg/filter
G0031487	OS	698	54.7
G0031488	O3	866	71.8
G0031490	N3	192	105.8
G0031482	N3QC	360	95.4
G0031491	Extra	360	75.3
G0031492	FB	<6	-4

Analyst: Matt Shoemaker

Title: Laboratory Technician

Chemetco, Inc.
Rt. 3 at Chemetco Lane
Hartford, IL 62048

ATTN: Heather Young

Date: 13-Sep-01

Sample type: Hi-Vol Air Monitoring Program

Sample Identification: Listed below

Filter ID	Location	Pb, ug/filter	TSP,mg/filter
G0031495	OS	168	49.7
G0031496	O3	<6	52.1
G0031494	N3	168	67
G0031489	N3QC	371	66.2
G0031497	FB	<6	-3.5

Analyst: Matt Shoemaker

Title: Laboratory Technician

Chemetco, Inc.
Rt. 3 at Chemetco Lane
Hartford, IL 62048

ATTN: Heather Young Date: 24-Sep-01

Sample type: Hi-Vol Air Monitoring Program

Sample Identification: Listed below

Filter ID	Location	Pb, ug/filter	TSP,mg/filter
G0031500	OS	51	85.3
G0031501	O3	51	96.2
G0031498	N3	1,339	119.7
G0031499	N3QC	1,500	147.8
G0031493	Extra	1,017	103.2
G0031502	FB	212	0.1

Analyst: Matt Shoemaker

Title: Laboratory Technician

Chemetco, Inc.
Rt. 3 at Chemetco Lane
Hartford, IL 62048

ATTN: Heather Young Date: 24-Sep-01

Sample type: Hi-Vol Air Monitoring Program

Sample Identification: Listed below

Filter ID	Location	Pb, ug/filter	TSP,mg/filter
G0031506	OS	303	99.4
G0031505	O3	624	120.4
G0031508	N3	784	161.9
G0031507	N3QC	143	72.4
G0031503	Extra	1,105	137
G0031509	FB	<6	-0.2

Analyst: Matt Shoemaker

Title: Laboratory Technician

Chemetco, Inc.
Rt. 3 at Chemetco Lane
Hartford, IL 62048

ATTN: Heather Young Date: 2-Oct-01

Sample type: Hi-Vol Air Monitoring Program

Sample Identification: Listed below

Filter ID	Location	Pb, ug/filter	TSP,mg/filter
G0031511	OS	762	36.5
G0031510	O3	762	46.9
G0031512	N3	916	85.4
G0031513	N3QC	1,070	91.6
G0031515	Extra	298	-3.4

Analyst: Matt Shoemaker

Title: Laboratory Technician

Chemetco, Inc.
Rt. 3 at Chemetco Lane
Hartford, IL 62048

ATTN: Heather Young

Date: 2-Oct-01

Sample type: Hi-Vol Air Monitoring Program

Sample Identification: Listed below

Filter ID	Location	Pb, ug/filter	TSP,mg/filter
G0031519	OS	23	62.3
G0031518	O3	23	75.2
G0031517	N3	698	104.8
G0031516	N3QC	866	92.7
G0031514	Extra	1,878	115.3
G0031521	FB	192	-0.5

Analyst: Matt Shoemaker

Title: Laboratory Technician

Chemetco, Inc.
Rt. 3 at Chemetco Lane
Hartford, IL 62048

ATTN: Heather Young

Date: 8-Oct-01

Sample type: Hi-Vol Air Monitoring Program

Sample Identification: Listed below

Filter ID	Location	Pb, ug/filter	TSP,mg/filter
G0031522	OS	473	59.8
G0031523	O3	473	69.1
G0031524	N3	1,231	117.7
G0031525	N3QC	1,080	102.8
G0031591	FB	18	1.1

Analyst: Matt Shoemaker

Title: Laboratory Technician

Chemetco, Inc.
Rt. 3 at Chemetco Lane
Hartford, IL 62048

ATTN: Heather Young

Date: 11-Oct-01

Sample type: Hi-Vol Air Monitoring Program

Sample Identification: Listed below

Filter ID	Location	Pb, ug/filter	TSP,mg/filter
G0031595	OS	153	72.2
G0031594	O3	153	66.5
G0031593	N3	<6	66.8
G0031592	N3QC	153	69.8
G0031596	Extra	153	69.6
G0031597	FB	<6	2.6

Analyst: Matt Shoemaker

Title: Laboratory Technician

APPENDIX C

Chemetco Environmental Management
Filter Conditioning Logsheet

	Pre Sampling Conditioning				Post Sampling Conditioning			
Filter Number	Date In	Date Out	Weight, mg	Date In	Date Out	Weight, mg	W_{net}, mg	W_{net}, ug
G0031591	9/18/01	9/21/01	4383.1	9/26/01	10/5/01	4384.2	1.1	
G0031592	9/18/01	9/21/01	4422.1	10/8/01	10/10/01	4491.9	69.8	
G0031593	9/18/01	9/21/01	4400.6	10/8/01	10/10/01	4467.4	66.8	
G0031594	9/18/01	9/21/01	4371.6	10/8/01	10/10/01	4438.1	66.5	
~~G0031595~~	~~9/18/01~~	~~9/21/01~~	4368.5	10/8/01	10/10/01	4440.7	72.2	
G0031596	9/18/01	9/21/01	4378.0	10/8/01	10/10/01	4447.6	69.6	
G0031597	9/18/01	9/21/01	4364.3	10/8/01	10/10/01	4366.9	2.6	
G0031598	9/18/01	9/21/01	4355.9					
G0031599	9/18/01	9/21/01	4364.0					
G0031600	9/18/01	9/21/01	4387.2					
~~G0031601~~	~~9/18/01~~	~~9/21/01~~						
G0031602	9/18/01	9/21/01	4365.8					
G0031603	9/18/01	9/21/01	4352.7					
G0031604	9/18/01	9/21/01	4343.3					
G0031605	9/18/01	9/21/01	4356.3					
G0031606	9/18/01	9/21/01	4345.8					

Chemetco Environmental Management
Filter Conditioning Logsheet

	Pre Sampling Conditioning				Post Sampling Conditioning			
Filter Number	Date In	Date Out	Weight, mg	Date In	Date Out	Weight, mg	W_{net}, mg	W_{net}, ug
G0031525	8/27/01	8/29/01	4364.6	9/26/01	10/5/01	4467.4	102.8	
G0031526								
G0031527								
G0031528								
G0031529								
G0031530								
G0031531								
G0031532								
G0031533								
G0031534								
G0031535								
G0031536								
G0031537								
G0031538								
G0031539								
G0031540								

Chemetco Environmental Management
Filter Conditioning Logsheet

	Pre Sampling Conditioning				Post Sampling Conditioning			
Filter Number	Date In	Date Out	Weight, mg	Date In	Date Out	Weight, mg	W_{net}, mg	W_{net}, ug
G0031509	8/27/01	8/29/01	4439.6	9/12/01	9/20/01	4439.4	-0.2	
G0031510	8/27/01	8/29/01	4454.3	9/18/01	9/26/01	4501.2	46.9	
G0031511	8/27/01	8/29/01	4443.8	9/18/01	9/26/01	4480.3	36.5	
G0031512	8/27/01	8/29/01	4542.0	9/18/01	9/26/01	4627.4	85.4	
G0031513	8/27/01	8/29/01	4521.8	9/18/01	9/26/01	4613.4	91.6	
G0031514	8/27/01	8/29/01	4530.4	9/20/01	10/01/01	4645.7	115.3	
G0031515	8/27/01	8/29/01	4537.1	9/18/01	9/26/01	4533.7	-3.4	
G0031516	8/27/01	8/29/01	4527.2	9/20/01	10/01/01	4619.9	92.7	
G0031517	8/27/01	8/29/01	4401.1	9/20/01	10/01/01	4505.9	104.8	
G0031518	8/27/01	8/29/01	4402.2	9/20/01	10/01/01	4477.4	75.2	
G0031519	8/27/01	8/29/01	4369.3	9/20/01	10/01/01	4431.6	62.3	
G0031520								
G0031521	8/27/01	8/29/01	4378.2	9/20/01	10/01/01	4377.7	-0.5	
G0031522	8/27/01	8/29/01	4353.3	9/26/01	10/5/01	4413.1	59.8	
G0031523	8/27/01	8/29/01	4350.6	9/26/01	10/5/01	4419.7	69.1	
G0031524	8/27/01	8/29/01	4376.5	9/26/01	10/5/01	4494.2	117.7	

Chemetco Environmental Management
Filter Conditioning Logsheet

	Pre Sampling Conditioning				Post Sampling Conditioning			
Filter Number	Date In	Date Out	Weight, mg	Date In	Date Out	Weight, mg	W_{net}, mg	W_{net}, ug
G0031493	8/6/01	8/8/01	4474.8	9/11/01	9/18/01	4578.0	103.2	
G0031494	8/6/01	8/8/01	4479.0	9/4/01	9/11/01	4546.0	67.0	
G0031495	8/6/01	8/8/01	4448.8	9/4/01	9/11/01	4498.5	49.7	
G0031496	8/6/01	8/8/01	4449.6	9/4/01	9/11/01	4501.7	52.1	
G0031497	8/6/01	8/8/01	4450.4	9/4/01	9/11/01	4446.9	-3.5	
G0031498	8/6/01	8/8/01	4424.9	9/11/01	9/18/01	4544.6	119.7	
G0031499	8/6/01	8/8/01	4450.6	9/11/01	9/18/01	4598.4	147.8	
G0031500	8/6/01	8/8/01	4433.2	9/11/01	9/18/01	4518.5	85.3	
G0031501	8/6/01	8/8/01	4435.0	9/11/01	9/18/01	4531.2	96.2	
G0031502	8/6/01	8/8/01	4430.1	9/11/01	9/18/01	4430.2	0.1	
G0031503	8/6/01	8/8/01	4423.6	9/12/01	9/20/01	4560.6	137.0	
G0031504								
G0031505	8/6/01	8/8/01	4401.0	9/12/01	9/20/01	4521.4	120.4	
G0031506	8/27/01	8/29/01	4404.2	9/12/01	9/20/01	4503.6	99.4	
G0031507	8/27/01	8/29/01	4393.2	9/12/01	9/20/01	4465.6	72.4	
G0031508	8/27/01	8/29/01	4420.9	9/12/01	9/20/01	4582.8	161.9	

Chemetco Environmental Management
Filter Conditioning Logsheet

	Pre Sampling Conditioning				Post Sampling Conditioning			
Filter Number	Date In	Date Out	Weight, mg	Date In	Date Out	Weight, mg	W_{net}, mg	W_{net}, ug
G0031477								
G0031478	7/24/01	7/26/01	4372.6	8/9/01	8/15/01	4443.3	70.7	
G0031479	7/24/01	7/26/01	4374.2	8/9/01	8/15/01	4427.6	53.4	
G0031480	7/24/01	7/26/01	4377.3	8/9/01	8/15/01	4370.2	-7.1	
G0031481	7/24/01	7/26/01	4333.3	8/17/01	8/23/01	4395.2	62.2	
G0031482	7/24/01	7/26/01	4340.3	8/23/01	8/28/01	4435.7	95.4	
G0031483	7/24/01	7/26/01	4329.7	8/17/01	8/23/01	4385.1	55.4	
G0031484	7/24/01	7/26/01	4339.4	8/17/01	8/23/01	4391.9	52.5	
G0031485	7/24/01	7/26/01	4360.7					
G0031486	7/24/01	7/26/01	4390.8	8/17/01	8/23/01	4384.8	-6.0	
G0031487	8/6/01	8/8/01	4379.8	8/23/01	8/28/01	4434.5	54.7	
G0031488	8/6/01	8/8/01	4460.9	8/23/01	8/28/01	4532.7	71.8	
G0031489	8/6/01	8/8/01	4454.4	9/4/01	9/4/01	4520.6	66.2	
G0031490	8/6/01	8/8/01	4459.8	8/23/01	8/28/01	4565.6	105.8	
G0031491	8/6/01	8/8/01	4492.2	8/23/01	8/28/01	4567.5	75.3	
G0031492	8/6/01	8/8/01	4466.3	8/23/01	8/28/01	4462.3	-4.0	

Chemetco Environmental Management
Filter Conditioning Logsheet

	Pre Sampling Conditioning			Post Sampling Conditioning				
Filter Number	Date In	Date Out	Weight, mg	Date In	Date Out	Weight, mg	W_{net}, mg	W_{net}, ug
G0031461	6/22/01	6/25/01	4590.7	8/2/01	8/6/01	4674.8	84.1	
G0031462	6/22/01	6/25/01	4591.2	7/29/01	8/6/01	4851.8	260.6	
G0031463	6/22/01	6/25/01	4601.8	7/29/01	8/6/01	4602.7	0.9	
G0031464	6/22/01	6/25/01	4613.6	8/2/01	8/6/01	4670.2	56.6	
G0031465	6/22/01	6/25/01	4617.8	8/2/01	8/6/01	4692.0	74.2	
G0031466	6/22/01	6/25/01	4621.2	8/2/01	8/6/01	4780.1	158.9	
G0031467	7/24/01	7/26/01	4626.9	8/2/01	8/6/01	4624.2	-2.7	
G0031468	7/24/01	7/26/01	4616.9	8/6/01	8/14/01	4739.6	122.7	
G0031469	7/24/01	7/26/01	4396.2	8/6/01	8/14/01	4626.0	229.8	
G0031470	7/24/01	7/26/01	4426.7	8/6/01	8/14/01	4602.2	175.5	
G0031471	7/24/01	7/26/01	4375.2	8/6/01	8/14/01	4436.0	60.8	
G0031472	7/24/01	7/26/01	4380.3	8/6/01	8/14/01	4436.1	55.8	
G0031473	7/24/01	7/26/01	4397.3	8/6/01	8/14/01	4392.6	-4.7	
G0031474	7/24/01	7/26/01	4367.0	8/9/01	8/15/01	4420.1	53.1	
G0031475	7/24/01	7/26/01	4361.9	8/9/01	8/15/01	4410.5	48.6	
G0031476	7/24/01	7/26/01	4375.4	8/9/01	8/15/01	4441.1	65.7	

Chemetco Environmental Management
Filter Conditioning Logsheet

	Pre Sampling Conditioning			Post Sampling Conditioning				
Filter Number	Date In	Date Out	Weight, mg	Date In	Date Out	Weight, mg	W_{net}, mg	W_{net}, ug
G6048718			4283.2	7/18/01	7/25/01	4349.0	65.8	
G6048719	6/8/01	6/12/01	4259.4	7/3/01	7/10/01	4316.1	56.7	
G6048720	6/22/01	6/25/01	4262.7	7/18/01	7/25/01	4395.1	132.4	
G6048721	6/22/01	6/25/01	4287.9	7/18/01	7/25/01	4414.7	126.8	
G6048722	6/22/01	6/25/01	4259.2	7/18/01	7/25/01	4266.7	7.5	
G6048723	6/22/01	6/25/01	4231.3	7/20/01	7/26/01	4307.6	-76.3	
G6048724	6/22/01	6/25/01	4275.6	7/20/01	7/26/01	4326.1	50.5	
G6048725	6/22/01	6/25/01	4279.0	7/20/01	7/26/01	4321.5	42.5	
G6048726	6/22/01	6/25/01	4279.2	7/20/01	7/26/01	4367.5	88.3	
G6048727	6/22/01	6/25/01	4238.4	7/20/01	7/26/01	4283.0	44.6	
G6048728	6/22/01	6/25/01	4267.5	7/20/01	7/26/01	4272.1	4.6	
G6048729	6/22/01	6/25/01	4253.6					
G6048730	6/22/01	6/25/01	4280.3	7/29/01	8/6/01	4353.3	73.0	
G6048731	6/22/01	6/25/01	4282.2					
~~G6048732~~								
~~G6048733~~								

ON NEXT PAGE

Chemetco Environmental Management
Filter Conditioning Logsheet

	Pre Sampling Conditioning			Post Sampling Conditioning				
Filter Number	Date In	Date Out	Weight, mg	Date In	Date Out	Weight, mg	W_{net}, mg	W_{net}, ug
G6048702								
G6048703	6/8/01	6/12/01	4348.1	7/3/01	7/10/01	4396.3	48.2	
G6048704			4342.2	7/3/01	7/10/01	4419.8	77.6	
G6048705			4340.5	7/3/01	7/10/01	4427.9	87.4	
G6048706			4345.4	7/3/01	7/10/01	4450.3	104.9	
G6048707			4337.1	6/23/01	7/5/01	4333.7	-3.4	
G6048708			4349.5	7/6/01	7/17/01	4417.0	67.5	
G6048709			4359.0	7/6/01	7/17/01	4453.8	94.8	
G6048710			4367.7	7/6/01	7/17/01	4506.2	138.5	
G6048711			4347.4	7/6/01	7/17/01	4479.1	131.7	
G6048712			4328.9	7/6/01	7/17/01	4485.4	156.5	
G6048713			4325.3	7/3/01	7/10/01	4320.2	-5.1	
G6048714								
G6048715			4280.4	7/6/01	7/17/01	4281.4	1.0	
G6048716			4258.2	7/18/01	7/25/01	4416.3	158.1	
G6048717	6/8/01	6/12/01	4285.6	7/18/01	7/25/01	4348.3	62.7	

Chemetco
FIRST IN PEOPLE — QUALITY — SERVICE
P.O. Box 67 • Hartford, IL 62048
618-254-4381 • 800-444-5564

RECEIVED
AUG 03 2001
AIR ENFORCEMENT BRANCH,
U.S. EPA, REGION 5

July 30, 2001

Illinois Environmental Protection Agency
Air Monitoring Section
c/o Mr. Terry Sweitzer
P.O. Box 19276
Springfield, Illinois 62794-9276

RE: Second Quarter 2001 Ambient Air Monitoring Report

Dear Mr. Sweitzer,

Enclosed are two copies of the report entitled, "Ambient Air Monitoring Quarterly Report April - June, 2001 for Total Particulate and Lead."

A table of results from the extra sampler located at the northwest corner and within the fence (the former N3 and N3-QC locations) is attached to this letter. This monitor is not included in the official approved ambient air monitoring program and is included as an attachment to this letter at the request of the Illinois EPA.

If you have any questions or require additional information, please contact me at 618/254-4381 ext. 268.

Sincerely,

Heather Young, CHMM
Environmental Manager
Chemetco, Inc.

Attachment

cc: Jim Henry, IEPA--Collinsville Region
Jeff Trevino, USEPA
Chief, Air Enforcement Assurance Branch, USEPA
George von Stamwitz, Armstrong, Teasdale, Schlafly & Davis
File

AMBIENT AIR MONITORING

QUARTERLY REPORT

APRIL - JUNE 2001

FOR

TOTAL PARTICULATE

AND LEAD

CHEMETCO, INC.
July 2001

TABLE OF CONTENTS

		page
1.0	INTRODUCTION	1
1.1	Monitoring Description	1
1.2	Monitoring Report	1
2.0	SAMPLING DATE ACCOUNTING	5
3.0	MONITORING DATA	7
3.1	Quarterly Averages Calculation	7
3.2	Sampler Quarterly Averages	12
3.3	Instrument Precision Calculation	16
3.4	Single Instrument Accuracy	18
3.5	Documentation	19

APPENDIX A Calculation Worksheets
APPENDIX B Laboratory Analyses
APPENDIX C Filter Conditioning Logsheets

2001 2ND QUARTER AVERAGE CALCULATION

LOCATION N3

DATE	FILTER NO	TIME FINISH	TIME START	ELAPSED TIME	CFM	CUBIC METERS	LEAD ug/fltr	TSP ug/fltr	LEAD ug/m3	TSP ug/m3	
04/01/01	6048556*	1835	0	1835	46.7	2571	3499	89500	1.36	34.81	Timer problem
04/07/01	6048566*	617	0	617	44.4	822	3499	89500	4.26	108.90	Undertime
04/09/01	6048571	1421	0	1421	44.4	1893	2824	202000	1.49	106.72	Rerun
04/13/01	6048575*	2770	0	2770	46.7	3881	369	52000	0.10	13.40	Overtime ?
04/19/01	6048579**	1405	0	1405	46	1939	22130	436700	11.41	225.23	Upset condition
04/21/01	6048588	1412	0	1412	46	1949	1036	234800	0.53	120.50	
04/25/01	6048589	1414	0	1414	46	1951	3555	239700	1.82	122.84	
04/28/01	6048595	1415	0	1415	45.3	1923	6	127000	0.00	66.04	
05/01/01	6048600	1415	0	1415	45.3	2016	9975	329900	4.95	163.64	Possible field activites
05/03/01	6048603***	1415	0	1415	46	1953	17830	427500	9.13	218.93	Upset condition
05/07/01	6048610	1414	0	1414	46	1951	679	73200	0.35	37.51	
05/13/01	6048616	1414	0	1414	45.3	1922	967	88900	0.50	46.26	
05/19/01	6048687	1413	0	1413	46.7	1980	6	86500	0.00	43.70	
05/25/01	6048696	1415	0	1415	46	1953	6	30600	0.00	15.67	
05/31/01	6048699	1410	0	1410	46	1946	599	95200	0.31	48.93	
06/06/01	6048738	1415	0	1415	46	1953	58	57700	0.03	29.55	
06/12/01	6048743*										Motor out
06/18/01	6048701	1413	0	1413	47.3	2005	7279	319700	3.63	159.45	
06/24/01	6048704	1414	0	1414	45.4	1926	1042	77600	0.54	40.29	
06/30/01	6048710	1416	0	1416	44.8	1903	2839	138500	1.49	72.78	
								AVERAGE	1.12	76.71	

*Not included in average due to reason noted

**Cooling water to the snorkel for the #3 furnace shut down in the middle of a charge which caused the furnace to blow a hole in the snorkel caused compartments 2, 3, and 4 of #2 baghouse (foundry baghouse) to shut down because burnt bags were detected.

***Flare out in #2 furnace and the bagouse fan went down on the roof baghouse. In addition, The primary baghouse at slag granulation went down with many bags being lost.

2.26 w/ n=16

Chemetco
FIRST IN PEOPLE — QUALITY — SERVICE
P.O. Box 67 • Hartford, IL 62048
618-254-4381 • 800-444-5564

July 30, 2001

Illinois Environmental Protection Agency
Air Monitoring Section
c/o Mr. Terry Sweitzer
P.O. Box 19276
Springfield, Illinois 62794-9276

RE: Second Quarter 2001 Ambient Air Monitoring Report

Dear Mr. Sweitzer,

Enclosed are two copies of the report entitled, "Ambient Air Monitoring Quarterly Report April - June, 2001 for Total Particulate and Lead."

A table of results from the extra sampler located at the northwest corner and within the fence (the former N3 and N3-QC locations) is attached to this letter. This monitor is not included in the official approved ambient air monitoring program and is included as an attachment to this letter at the request of the Illinois EPA.

If you have any questions or require additional information, please contact me at 618/254-4381 ext. 268.

Sincerely,

Heather Young, CHMM
Environmental Manager
Chemetco, Inc.

Attachment

cc: Jim Henry, IEPA--Collinsville Region
Jeff Trevino, USEPA
Chief, Air Enforcement Assurance Branch, USEPA
George von Stamwitz, Armstrong, Teasdale, Schlafly & Davis
File

2001 2ND QUARTER AVERAGE CALCULATION

LOCATION Extra

DATE	FILTER NO	TIME FINISH	TIME START	ELAPSED TIME	CFM	CUBIC METERS	LEAD ug/fltr	TSP ug/fltr	LEAD ug/m3	TSP ug/m3	
04/01/01	6048557*										No motor
04/07/01	6048558	10230.3	8785.3	1445	45.4	1968	242	18500	0.12	9.40	
04/13/01	6048569*	10232.3	10232.3	0							Power failure
04/19/01	6048582**	11672.9	10232.3	1440.6	46	1988	21648	389100	10.89	195.72	Upset Condtion
04/25/01	6048569	13114.2	11674.2	1440	46	1987	5411	226400	2.72	113.93	
04/28/01											Did not rerun
05/01/01	6048591	14555.3	13114.8	1440.5	46	1988	7845	343500	3.95	172.80	
05/03/01	6048607***	15596.8	14556.8	1040	46	1435	25997	487100	18.11	339.40	Undertime/Upset condition
05/07/01	6048611	17437.9	15997.9	1440	46.6	2013	231	61600	0.11	30.60	
05/13/01	6048619	18878.8	17438.8	1440	46.6	2013	5905	122900	2.93	61.05	
05/19/01											Power failure
05/25/01	6048691	20320.5	18880.4	1440.1	46	1987	6	23000	0.00	11.57	
05/31/01	6048697	21761.6	20321.6	1440	46.6	2013	1755	89200	0.87	44.31	
06/06/01	6048740	23202.6	21762.6	1440	46.6	2013	58	49900	0.03	24.79	
06/12/01	6048747	24644.2	23204.7	1439.5	46	1987	44	119300	0.02	60.06	
06/18/01	6048748	26085.5	24645.5	1440	46	1987	7410	295700	3.73	148.80	
06/24/01	6048706	27526.9	26086.9	1440	46	1987	2508	104900	1.26	52.79	
06/30/01	6048712	28988.5	27528.5	1460	46	2015	3248	156500	1.61	77.68	
								AVERAGE	1.45	67.31	

*Not included in average due to reason noted

**Cooling water to the snorkel for the #3 furnace shut down in the middle of a charge which caused the furnace to blow a hole in the snorkel caused compartments 2, 3, and 4 of #2 baghouse (foundry baghouse) to shut down because burnt bags were detected.

***Flare out in #2 furnace and the bagouse fan went down on the roof baghouse. In addition, The primary baghouse at slag granulation went down with many bags being lost.

AMBIENT AIR MONITORING

QUARTERLY REPORT

APRIL - JUNE 2001

FOR

TOTAL PARTICULATE

AND LEAD

CHEMETCO, INC.
July 2001

TABLE OF CONTENTS

		page
1.0	INTRODUCTION	1
1.1	Monitoring Description	1
1.2	Monitoring Report	1
2.0	SAMPLING DATE ACCOUNTING	5
3.0	MONITORING DATA	7
3.1	Quarterly Averages Calculation	7
3.2	Sampler Quarterly Averages	12
3.3	Instrument Precision Calculation	16
3.4	Single Instrument Accuracy	18
3.5	Documentation	19

APPENDIX A Calculation Worksheets
APPENDIX B Laboratory Analyses
APPENDIX C Filter Conditioning Logsheets

TABLE OF TABLES

		page
TABLE 1-1	Standard Operating Procedures	4
TABLE 2-1	Sample Date Accounting	5
TABLE 3-1	Sampler Location N3	12
TABLE 3-2	Sampler Location OS	13
TABLE 3-3	Sampler Location O3	14
TABLE 3-4	Filter Field Blank	15

TABLE OF FIGURES

		page
FIGURE 1-1	Monitoring Site Locations	3
FIGURE 3-1	Daily Weather Logsheets	8
FIGURE 3-2	Data Assessment Report	17

0

1.0 INTRODUCTION

This document presents the summary of the first calendar quarter year 2001 ambient air monitoring performed at the Chemetco, Inc. facility in Madison County.

1.1 Monitoring Description

The second quarter ambient air monitoring began on April 1, 2001, and sampling for total suspended particulates and lead in the particulate was performed on a once every sixth day basis. The quarterly sampling ended on June 30, 2001. Each day, a weather log was maintained documenting wind speed, wind direction, temperature, relative humidity and precipitation. Site data is utilized unless there is problem with the computer or program. In such a case, the information is obtained from the Nation Weather Service and recorded by the security guard. Chemetco also set up an account with the Midwest Climate Center who records data at two different locations near the facility. Chemetco has purchased a new weather station. The new weather station was set up during this quarter.

The location of the monitoring sites was based on a modeling report done by Versar, Inc. and approved by IEPA. All locations are shown on a map in Figure 1-1.

Standard operating procedures were followed for the filter conditioning, sampling, sampler operation, analyses, etc, are shown in Table 1.1. Complete copies of the SOP's were provided in the Ambient Air Monitoring Quality Assurance/Quality Control Plan.

1.2 Monitoring Report

The following pages contain the results of the second quarter monitoring. Section 2 contains an accounting of all the test dates and reasons for eliminating data from certain test dates. Section 3 contains the quarterly averages, the quality assurance data and meteorological data. The Appendices include copies of the Filter Conditioning Logsheets with total suspended particulate calculation, the laboratory analysis, and the calculation worksheets.

The quarter started out with several problems that were thought to be a timer problem. It was later discovered that many of the timing problems could be attributed to the training of a new individual. Several reruns were executed to try and makeup for these events. Two upset conditions were experienced during the sampling quarter. The first condition occurred on April 19, 2001. The cooling water to the snorkel for the #3 furnace shut down in the middle of a charge which caused the furnace to blow a hole in the snorkel that caused compartments 2, 3, and 4 of the #2 baghouse or the foundry roof baghouse, to shut down because of the detection of burnt bags. The furnace had to be tilted straight up away from the snorkel to allow it to be repaired. The system was overwhelmed and an upset condition was experienced. The second upset condition occurred on May 3, 2001. A flare out was experienced on the #2 furnace and the #2 baghouse (foundry roof baghouse) fan went down. In a separate incident, the primary baghouse at the slag granualtion plant went down with many bags being lost. The combination of these two events caused an upset condition. In addition, a few events showed higher than normal TSP readings. Quite a bit of plowing and field activity took place during this quarter.

Relocation of Colocated Northern Monitors

Chemetco believed that all data collected from N3 and N3-QC at their former location just south of the facility's northern fence was highly questionable and not valid. As evidenced by an analysis of quarterly ambient air monitoring, the monitors in their former location had been significantly impacted by nearby facility activities, structures, microclimatic influences, and/or surrounding entrained materials. The IEPA agreed with Chemetco regarding the need to relocate the northern monitors as outlined below.

Chemetco requested in a letter dated June 18, 1998, to IEPA to move the colocated ambient air monitors located in the northern portion of the facility in order to obtain samples which truly represent ambient air. The relocation was approved by IEPA in a letter dated June 24, 1998. Sampling of the ambient air monitors in the new location was initiated July 25, 1998. Additional sampling events were scheduled that same week to allow the collection of the appropriate number of samples for the third quarter 1998. Sampling proceeded as scheduled in the current location until the new monitors were in place. Chemetco is also utilizing dedicated Dickson recorders for all four official air monitors, the new colocated N3 and N3-QC, OS and O3. The aforementioned relocation of the northern ambient air monitors has allowed the collection of a more representative sample of ambient air similar to that collected by the ambient air monitors OS and O3.

FIGURE 1-1
MONITORING SITE LOCATIONS

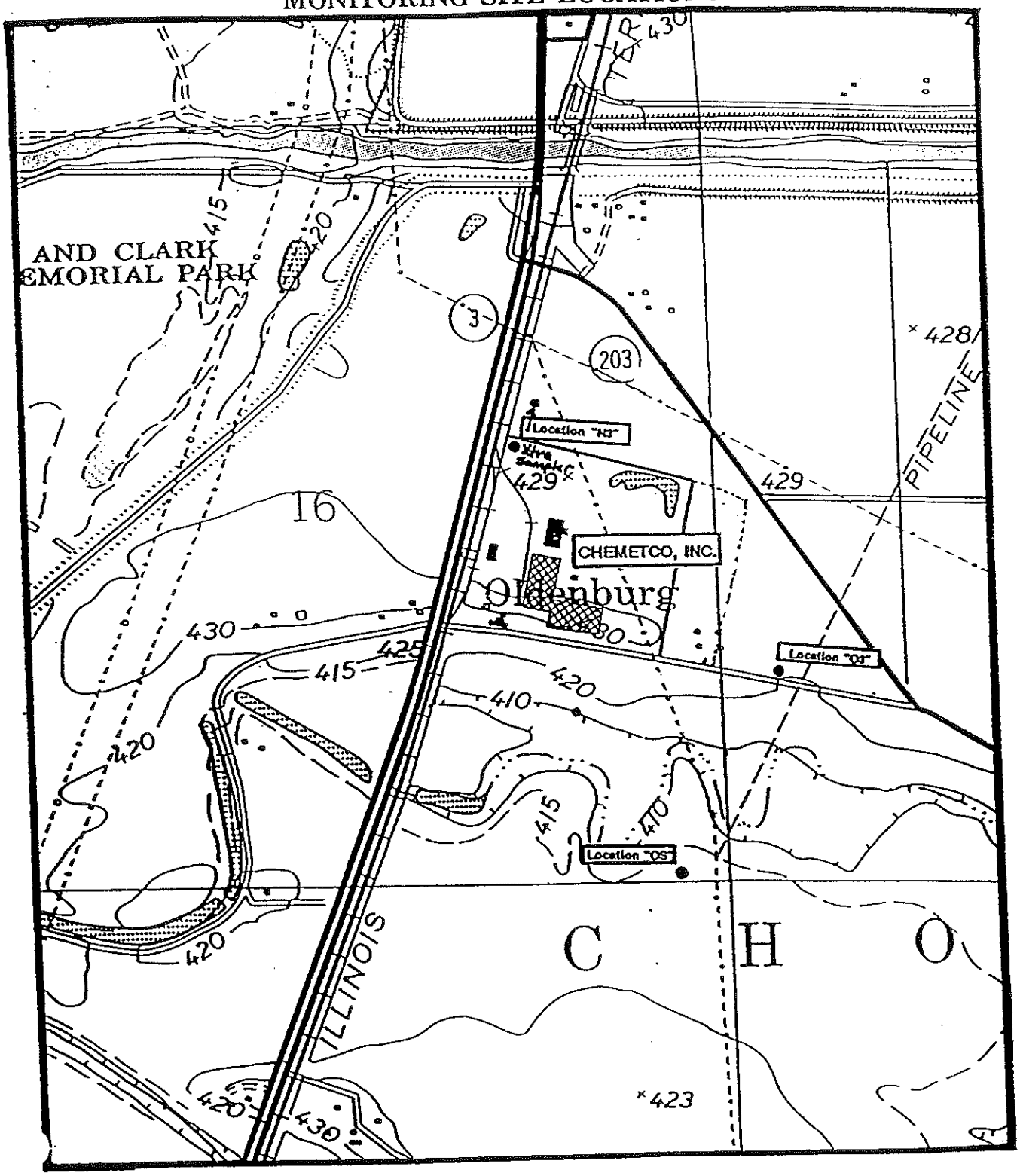

TABLE 1-1
STANDARD OPERATING PROCEDURES

Determination of Total Suspended Particulates in Ambient Air Filters

Filter Conditioning

Lead Analysis in Ambient Air Filters

Operation of GMW 2310 TSP Samplers

Packaging and Shipment of Samples

2.0 SAMPLING DATE ACCOUNTING

Following is a list of the dates the monitors were to have run. Table 2.1 accounts the dates and events.

TABLE 2.1 - Sample Date Accounting

DATE	SAMPLER	RUN STATUS	QUALIFICATION	ERROR REASON
4-01-01	N3-QC	No	No	Wrong day/inadequate time
	N3	No	No	Timer problem
	OS	OK	Yes	
	O3	OK	Yes	
4-07-01	N3QC	No	No	Rerun lacked time
	N3	No	No	Rerun lacked time
	OS	OK	Yes	Plowing fields
	O3	No	No	Overtime/Plowing fields
4-09-01	N3-QC	OK	Yes	Rerun
	N3	Yes	Yes	Rerun
4-13-01	N3-QC	OK	Yes	
	N3	No	No	Overtime
	OS	OK	Yes	
	O3	OK	Yes	
4-19-01	N3-QC	No	No	Upset condition
	N3	No	No	Upset condition
	OS	No	No	Upset condition
	O3	No	No	Undertime/Upset condition
4-21-01	N3-QC	OK	Yes	Rerun
	N3	OK	Yes	
4-25-01	N3-QC	OK	Yes	
	N3	OK	Yes	
	OS	No	No	Motor Out
	O3	No	No	Ran over/wrong day
4-28-01	N3-QC	No	No	Undertime
	N3	OK	Yes	
	OS	OK	Yes	
	O3	No	No	Undertime
5-01-01	N3-QC	OK	Yes	
	N3	OK	Yes	
	OS	OK	Yes	
	O3	OK	Yes	
5-03-01	N3-QC	No	No	Upset condition
	N3	No	No	Upset condition
	OS	No	No	Upset condition
	O3	No	No	Upset condition
5-07-01	N3-QC	OK	Yes	
	N3	OK	Yes	
	OS	OK	Yes	
	O3	OK	Yes	

TABLE 2.1 - Sample Date Accounting (con't)

DATE	SAMPLER	RUN STATUS	QUALIFICATION	ERROR REASON
5-13-01	N3-QC	OK	Yes	
	N3	OK	Yes	
	OS	OK	Yes	
	O3	OK	Yes	
5-19-01	N3-QC	No	No	Did not run
	N3	OK	Yes	
	OS	OK	Yes	
	O3	OK	Yes	
5-25-01	N3-QC	OK	Yes	
	N3	OK	Yes	
	OS	OK	Yes	
	O3	OK	Yes	
5-31-01	N3-QC	OK	Yes	
	N3	OK	Yes	
	OS	OK	Yes	
	O3	OK	Yes	
6-06-01	N3-QC	OK	Yes	
	N3	OK	Yes	
	OS	OK	Yes	
	O3	OK	Yes	
6-12-01	N3-QC	No	No	N3 did not run
	N3	No	No	Motor out
	OS	OK	Yes	
	O3	OK	Yes	
6-18-01	N3QC	OK	Yes	
	N3	OK	Yes	
	OS	OK	Yes	
	O3	OK	Yes	
6-24-01	N3QC	OK	Yes	
	N3	OK	Yes	
	OS	OK	Yes	
	O3	OK	Yes	
6-30-01	N3QC	OK	Yes	
	N3	OK	Yes	
	OS	OK	Yes	
	O3	OK	Yes	

3.0 MONITORING DATA

After the receipt from the laboratory of all data for the quarterly report, averages for each monitoring site were calculated from the pool of data. In addition, at site N3, two samplers were set up for quality assurance purposes. A standard deviation, lower and upper range was determined based on those samples and under normal circumstances can be assumed to represent accuracy for all locations.

Each day, meteorological data was noted. The weather information was obtained from either the National Weather Service, the Midwest Climate Center or the on-site weather station. These logs are shown in Figure 3.1 and quarterly averages are discussed in Section 3.2.

3.1 Quarterly Averages Calculation

From the pool of acceptable data, quarterly averages were calculated by using the simple arithmetic mean determination shown in Equation 1.

$$X = \frac{\Sigma X_i}{n} \qquad \textit{Equation 1}$$

where,

X_i = individual sampling data,

n = the number of valid sampling points in the quarter.

FIGURE 3-1
METEOROLOGICAL DATA SHEET

DAILY WEATHER LOGSHEET

Date	Wind Speed	Wind Direction	Wind Sigma	Temperature (F)	Relative Humidity %	Precipitation
*4-01-01	6	247		44	81	0.02
4-02-01	5	292		45	66	0.00
4-03-01	7	225		52	68	0.30
4-04-01	6	112		54	85	0.51
4-05-01	9	67		58	70	0.03
4-06-01		135		65	79	0.00
*4-07-01	13	180		72	77	0.00
4-08-01	13	202		76	44	0.00
4-09-01	12	202		78	36	0.00
4-10-01	10	135		81	55	0.30
4-11-01	12	90		75	74	2.30
4-12-01	18	135		69	74	0.10
*4-13-01	13	225		65	56	0.00
4-14-01	9	202		63	48	0.00
4-15-01	12	135		67	50	0.00
4-16-01	9	90		65	60	0.40
4-17-01	12	157		53	50	0.02
4-18-01	11	315		46	39	0.00
*4-19-01	8	247		50	44	0.00
4-20-01	16	225		59	40	0.00
4-21-01	17	247		66	56	0.00
4-22-01	11	202		70	71	0.10
4-23-01	11	180		73	56	0.00
4-24-01	15	247		64	50	0.10
*4-25-01	10	157		54	48	0.00

* Denotes Air Sampling Date

FIGURE 3-1 (cont.)

DAILY WEATHER LOGSHEET

Date	Wind Speed	Wind Direction	Wind Sigma	Temperature (F)	Relative Humidity %	Precipitation
4-26-01	5	45		59	40	0.00
4-27-01	5	135		69	35	0.00
4-28-01	4	225		75	39	0.00
4-29-01	8	180		72	18	0.00
4-30-01	12	112		73	34	0.00
*5-01-01	5	164		75	47	0.20
5-02-01	7	141		74	48	0.00
5-03-01	5	146		75	43	0.00
5-04-01	9	202		77	45	0.00
5-05-01	9	202		79	44	0.00
5-06-01	10	180		73	59	0.00
*5-07-01	9	135		68	78	0.30
5-08-01	7	67		65	66	0.02
5-09-01	5	90		65	39	0.00
5-10-01	10	72		72	36	0.00
5-11-01	10	79		79	41	0.00
5-12-01	5	75		75	57	0.00
*5-13-01	5	202		68	55	0.00
5-14-01	7	90		66	44	0.00
5-15-01	7	157		72	52	0.00
5-16-01	7	225		81	56	0.00
5-17-01	7	225		84	56	0.00
5-18-01	1	179		73	76	1.90
*5-19-01	2	273		74	66	0.50

* Denotes Air Sampling Date

FIGURE 3-1 (cont.)

DAILY WEATHER LOGSHEET

Date	Wind Speed	Wind Direction	Wind Sigma	Temperature (F)	Relative Humidity %	Precipitation
5-20-01	4	149		72	73	0.06
5-21-01	6	207		65	69	0.19
5-22-01	4	231		59	54	0.08
5-23-01	5	198		59	60	0.02
5-24-01	3	223		54	63	0.01
*5-25-01	4	209		53	76	0.02
5-26-01	6	219		62	63	0.02
5-27-01	8	247		52	85	0.10
5-28-01	6	157		62	67	0.01
5-29-01	7	45		66	58	0.00
5-30-01	9	67		70	67	0.02
*5-31-01	12	90		69	46	1.80
6-01-01	9	360		47	62	1.90
6-02-01	13	247		66	40	0.20
6-03-01	6	270		66	60	0.00
6-04-01	3	327		61	83	2.20
6-05-01	4	152		73	73	0.50
*6-06-01	2	245		75	71	0.20
6-07-01	1	244		76	66	0.20
6-08-01	2	123		73	62	0.00
6-09-01	1	229		74	58	0.00
6-10-01	3	169		76	60	0.00
6-11-01	2	187		83	57	0.00
*6-12-01	3	157		84	56	0.00
613-01	6	138		83	55	0.00

* Denotes Air Sampling Date

FIGURE 3-1 (cont.)

DAILY WEATHER LOGSHEET

Date	Wind Speed	Wind Direction	Sigma	Temperature (F)	Relative Humidity %	Precipitation
6-14-01	7	143		84	56	0.00
6-15-01	3	251		76	61	0.52
6-16-01	3	205		77	52	0.00
6-17-01	2	181		81	48	0.00
*6-18-01	4	160		84	43	0.00
6-19-01	3	217		82	55	0.00
6-20-01	8	90		82	57	0.00
6-21-01	8	45		74	38	1.50
6-22-01	8	67		67	81	0.70
6-23-01	8	180		66	74	0.00
*6-24-01	5	202		71	57	0.00
6-25-01	6	135		75	53	0.00
6-26-01	8	135		79	46	0.00
6-27-01	10	90		80	41	0.00
6-28-01	9	90		75	45	0.00
6-29-01	6	135		79	73	0.00
6-30-01	7	180		77	65	0.00

* Denotes Air Sampling Date

3.2 Sampler Quarterly Averages

The simple quarterly average for each set of data from a particular sampler are calculated in the following tables, 3.1 through 3.4.

TABLE 3.1 - Sampler Location N3

DATE	FILTER NO	LEAD (ug/m^3)	TSP* (ug/m^3)
4-01-01	6048556	Timer Problem	----------
4-07-01	6048566	Undertime	----------
4-09-01	6048571	1.49 (Rerun)	106.72
4-13-01	6048575	Overtime	----------
4-19-01	6048579	Upset condition	----------
4-21-01	6048588	0.53	120.50
4-25-01	6048589	1.82	122.84
4-28-01	6048595	0.00	66.04
5-01-01	6048600	4.95	163.64
5-03-01	6048603	Upset condition	----------
5-07-01	6048610	0.35	37.51
5-13-01	6048616	0.50	46.26
5-19-01	6048687	0.00	43.70
5-25-01	6048696	0.00	15.67
5-31-01	6048699	0.31	48.93
6-06-01	6048738	0.0.	29.55
6-12-01	6048743	Motor Out	----------
6-18-01	6048701	3.63	159.45
6-24-01	6048704	0.54	40.29
6-30-01	6048710	1.49	17.12
		=========	=========
	AVERAGE	1.12	76.71

TABLE 3.2 - Sampler Location OS

DATE	FILTER NO.	LEAD (ug/m^3)	TSP* (ug/m^3)
4-01-01	6048559	0.10	20.35
4-07-01	6048563	0.00 (Plowing field)	149.93
4-13-01	6048572	0.65	42.50
4-19-01	6048577	Upset condition	----------
4-25-01	6048586	Motor out	----------
4-28-01	6048592	0.00	60.54
5-01-01	6048599	0.00	99.82
5-03-01	6048606	Upset condition	----------
5-07-01	6048609	0.24	26.55
5-13-01	6048615	0.00	33.61
5-19-01	6048688	2.03	51.76
5-25-01	6048694	0.00	8.36
5-31-01	6048732	0.00	22.18
6-06-01	6048739	0.46	17.31
6-12-01	6048746	0.23	239.39
6-18-01	6048749	0.00	64.72
6-24-01	6048703	0.00	28.59
6-30-01	6048708	0.13	35.83
		=========	=========
	AVERAGE	0.26	59.90

TABLE 3.3 - Sampler Location O3

DATE	FILTER NO.	LEAD (ug/m^3)	TSP* (ug/m^3)
4-01-01	6048560	1.72	32.22
4-07-01	6048565	Overtime	---------
4-13-01	6048573	1.72	56.86
4-19-01	6048578	Undertime/upset condition	---------
4-25-01	6048585	Ran over/wrong day	---------
4-28-01	6048593	Undertime	---------
5-01-01	6048598	0.02	112.65
5-03-01	6048605	Upset condition	---------
5-07-01	6048608	3.12	80.42
5-13-01	6048618	0.00	38.61
5-19-01	6048689	0.00	48.49
5-25-01	6048693	0.00	10.05
5-31-01	6048733	0.97	27.53
6-06-01	6048739	0.23	44.47
6-12-01	6048745	5.59	190.71
6-18-01	6048750	0.00	72.13
6-24-01	6048719	0.00	28.85
6-30-01	6048709	0.13	48.87
		==========	==========
	AVERAGE	1.04	56.56

TABLE 3.4 - Filter Blank

DATE	FILTER NO.	LEAD (ug/filter)	TSP* (ug/filter)
4-01-01	6048562	6	4600
4-07-01	6048568	6	200
4-13-01	6048574	58	-1500
4-19-01	6048583	6	-1500
4-25-01	6048584	6	-1000
4-28-01	6048597	6	-900
5-01-01	6048602	6	3500
5-03-01	Not enough filters		
5-07-01	6048613	6	1200
5-13-01	6048620	6	-1700
5-19-01	6048692	6	600
5-25-01	6048698	6	-900
5-31-01	6048734	6	-1300
6-06-01	6048741	6	-1600
6-12-01	6048744	6	-3600
6-18-01	6048707	6	-3400
6-24-01	6048713	6	-5100
6-30-01	6048715	6	1000
		=========	=========
	AVERAGE	9.06	-670.59

*TSP - Total Suspended Particulate

3.3 Instrument Precision Calculation

The estimates of precision for ambient air quality measurements from the TSP method are calculated from results obtained from the collection of two samplers at one sampling site, N3. The calculated precision from this one sampling site is considered indicative of the precision at all sampling sites for the TSP method.

Using the paired measurements for the official sampler, labeled "N3" and the secondary sampler, labeled "N3-QC," the precision was calculated from the following equations. These numbers are reported on the Data Assessment Report shown in Figure 3-2.

Percentage Difference, d_i

$$d_i = \frac{Y_i - X_i}{X_i} \times 100\%$$

where: Y_i = the concentration TSP measured by the secondary sampler; and
X_i = the concentration TSP measured by the official sampler.

Average Percentage Difference, d_j

$$d_j = \frac{\Sigma d_i}{n}$$

where: n = the number of comparisons.

Standard Deviation, S_j

$$S_j = \sqrt{\frac{\Sigma(d_i)^2 - n(d_j)^2}{n - 1}}$$

96% Probability Limits

$$\text{Upper Limit} = d_j + \frac{1.96(S_j)}{2}$$

$$\text{Lower Limit} = d_j - \frac{1.96(S_j)}{2}$$

FIGURE 3-2
DATA ASSESSMENT REPORT

Date: July 30, 2001
Auditor: Heather Young

Allocated Samplers

d_i = **9.48%**
d_j = **2.35%**
S_j = **8.24%**

Upper Limit = 10.43%

Lower Limit = -5.73%

Range = 70.98 to 87.14

Flow Rate Percentage Differences:

Sampler #1:(See Sect. 3-4) **Sampler #2:**(See Sect. 3-4)

Sampler #3:(See Sect. 3-4) **Sampler #4:**(See Sect. 3-4)

3.4 Single Instrument Accuracy

Estimates of accuracy for ambient air quality measurements from the TSP method are calculated from the results of independent audits. Once each sampling quarter, the flow rate of each high-volume sampler is audited.

Jim Henry with the IEPA Collinsville Field Office audited the sampler motors. Results of the audit were forwarded to Chemetco via email and are on record at the facility.

3.5 Documentation

For each of the sampling episodes, data packages have been assembled to facilitate the retrieval of necessary data to perform and check calculations, assumptions and determinations and to generate accurate reports. These packages are maintained in a central project file at Chemetco.

Data forms are attached with backup and confirmatory information in Appendices A through C. They include:

- Filter Conditioning and TSP Calculation Logsheets;
- Calculation pages; and,
- Laboratory Analyses Report Sheet.

APPENDIX A

CALCULATION COVER SHEET

Company Name: Chemetco, Inc.

Project Name: Ambient Air Monitoring

Project Number: 02QTR1

Purpose: Sampler Averages

Total Number of Pages: 6 (including this one)

Date: July 30, 2001

Originator's Signature: _____

2001 2ND QUARTER AVERAGE CALCULATION

LOCATION N3-QC

DATE	FILTER NO	TIME FINISH	TIME START	ELAPSED TIME	CFM	CUBIC METERS	LEAD ug/fltr	TSP ug/fltr	LEAD ug/m3	TSP ug/m3	
04/01/01	6048557*	37924.6	37507.9	416.7	45.6	570	1356	67800	2.38	118.94	Wrong day, inadequate time
04/07/01	6048567*	38040.1	37929.6	110.5	46.4						Lacked time
04/09/01	6048571	39463	38041.9	1421.1	44.4	1893	2824	196000	1.49	103.54	Rerun
04/13/01	6048576	40904.3	39464.1	1440.2	43.2	1866	1262	211700	0.68	113.42	
04/19/01	6048581**	42345.6	40905.7	1439.9	43.8	1892	20084	444300	10.62	234.83	Upset Condition
04/21/01	6048587	43787.3	42347.4	1439.9	46.4	2004	6804	223700	3.39	111.61	Rerun
04/25/01	6048590	45228.4	43788.5	1439.9	43.2	1866	3555	257100	1.91	137.77	
04/28/01	6048596*	45879.1	45229.9	649.2	43.8	853	198	62100	0.23	72.80	Undertime
05/01/01	6048601	47320.8	45880.8	1440	44.4	1918	9265	340600	4.83	177.57	
05/03/01	6048604***	48762.1	47322	1440.1	44.4	1918	17830	429500	9.30	223.93	Upset Condition
05/07/01	6048612	50203.5	48763.4	1440.1	44.4	1918	903	80200	0.47	41.81	
05/13/01	6048617	51644.8	50204.7	1440.1	44.4	1918	1201	93100	0.63	48.53	
05/19/01	6048686*										Did not run
05/25/01	6048686	53086.4	51646.3	1440.1	44.4	1918	6	31300	0.00	16.32	
05/31/01	6048695	54527.8	53087.8	1440	43.8	1892	727	102800	0.38	54.33	
06/06/01	6048737	55969.6	54529.2	1440.4	44.4	1918	193	54100	0.10	28.21	
06/12/01	6048742*	57411.1	55971	1440.1	3.7						Did not analyze N3 did not run
06/18/01	6048700	58852.8	57412.8	1440	46	1987	6757	284000	3.40	142.91	
06/24/01	6048705	60295.5	58854.7	1440.8	43.8	1893	1175	87400	0.62	46.16	
06/30/01	6048711	61736.4	60296.4	1440	43.8	1892	2975	131700	1.57	69.60	
								AVERAGE	1.50	83.98	

*Not included in average due to reason noted

**Cooling water to the snorkel for the #3 furnace shut down in the middle of a charge which caused the furnace to blow a hole in the snorkel caused compartments 2, 3, nd 4 of #2 baghouse (foundry baghouse) to shut down because burnt bags were detected.

***Flare out in #2 furnace and the bagouse fan went down on the roof baghouse. In addition, The primary baghouse at slag granulation went down with many bags being lost.

2001 2ND QUARTER AVERAGE CALCULATION

LOCATION N3

DATE	FILTER NO	TIME FINISH	TIME START	ELAPSED TIME	CFM	CUBIC METERS	LEAD ug/fltr	TSP ug/fltr	LEAD ug/m3	TSP ug/m3	
04/01/01	6048556*	1835	0	1835	46.7	2571	3499	89500	1.36	34.81	Timer problem
04/07/01	6048566*	617	0	617	44.4	822	3499	89500	4.26	108.90	Undertime
04/09/01	6048571	1421	0	1421	44.4	1893	2824	202000	1.49	106.72	Rerun
04/13/01	6048575*	2770	0	2770	46.7	3881	369	52000	0.10	13.40	Overtime
04/19/01	6048579**	1405	0	1405	46	1939	22130	436700	11.41	225.23	Upset condition
04/21/01	6048588	1412	0	1412	46	1949	1036	234800	0.53	120.50	
04/25/01	6048589	1414	0	1414	46	1951	3555	239700	1.82	122.84	
04/28/01	6048595	1415	0	1415	45.3	1923	6	127000	0.00	66.04	
05/01/01	6048600	1415	0	1415	45.3	2016	9975	329900	4.95	163.64	Possible field activites
05/03/01	6048603***	1415	0	1415	46	1953	17830	427500	9.13	218.93	Upset condition
05/07/01	6048610	1414	0	1414	46	1951	679	73200	0.35	37.51	
05/13/01	6048616	1414	0	1414	45.3	1922	967	88900	0.50	46.26	
05/19/01	6048687	1413	0	1413	46.7	1980	6	86500	0.00	43.70	
05/25/01	6048696	1415	0	1415	46	1953	6	30600	0.00	15.67	
05/31/01	6048699	1410	0	1410	46	1946	599	95200	0.31	48.93	
06/06/01	6048738	1415	0	1415	46	1953	58	57700	0.03	29.55	
06/12/01	6048743*										Motor out
06/18/01	6048701	1413	0	1413	47.3	2005	7279	319700	3.63	159.45	
06/24/01	6048704	1414	0	1414	45.4	1926	1042	77600	0.54	40.29	
06/30/01	6048710	1416	0	1416	44.8	1903	2839	138500	1.49	72.78	
								AVERAGE	1.12	76.71	

*Not included in average due to reason noted

**Cooling water to the snorkel for the #3 furnace shut down in the middle of a charge which caused the furnace to blow a hole in the snorkel caused compartments 2, 3, and 4 of #2 baghouse (foundry baghouse) to shut down because burnt bags were detected.

***Flare out in #2 furnace and the bagouse fan went down on the roof baghouse. In addition, The primary baghouse at slag granulation went down with many bags being lost.

2001 2ND QUARTER AVERAGE CALCULATION

LOCATION OS

DATE	FILTER NO	TIME FINISH	TIME START	ELAPSED TIME	CFM	CUBIC METERS	LEAD ug/fltr	TSP ug/fltr	LEAD ug/m3	TSP ug/m3	
04/01/01	6048559	1440	0	1440	44.6	1927	186	39200	0.10	20.35	
04/07/01	6048563	1440	0	1440	45.3	1957	6	293400	0.00	149.93	Plowing field
04/13/01	6048572	1440	0	1440	44.6	1927	1262	81900	0.65	42.50	
04/19/01	6048577**	1440	0	1440	43.9	1896	6	176100	0.00	92.86	Upset condition Motor out
04/25/01	6048586*	1440	0	1440							
04/28/01	6048592	1440	0	1440	44.2	1909	6	115600	0.00	60.54	
05/01/01	6048599	1440	0	1440	42.3	1827	6	182400	0.00	99.82	
05/03/01	6048606***	1440	0	1440	43.6	1884	6	135200	0.00	71.78	Upset Condition
05/07/01	6048609	1440	0	1440	43.6	1884	455	50000	0.24	26.55	
05/13/01	6048615	1440	0	1440	43.6	1884	6	63300	0.00	33.61	
05/19/01	6048688	1440	0	1440	43.6	1884	3815	97500	2.03	51.76	
05/25/01	6048694	1440	0	1440	42.9	1853	6	15500	0.00	8.36	
05/31/01	6048732	1440	0	1440	42.9	1853	6	41100	0.00	22.18	
06/06/01	6048739	1440	0	1440	43.6	1884	866	32600	0.46	17.31	
06/12/01	6048746	1440	0	1440	43.6	1884	437	450900	0.23	239.39	Potential field activities
06/18/01	6048749	1440	0	1440	43.6	1884	6	121900	0.00	64.72	
06/24/01	6048703	1440	0	1440	43.6	1884	6	48200	0.00	25.59	
06/30/01	6048708	1440	0	1440	43.6	1884	248	67500	0.13	35.83	
								AVERAGE	0.26	59.90	

*Not included in average due to reason noted

**Cooling water to the snorkel for the #3 furnace shut down in the middle of a charge which caused the furnace to blow a hole in the snorkel caused compartments 2, 3, and 4 of #2 baghouse (foundry baghouse) to shut down because burnt bags were detected.

***Flare out in #2 furnace and the bagouse fan went down on the roof baghouse. In addition, The primary baghouse at slag granulation went down with many bags being lost.

2001 2ND QUARTER AVERAGE CALCULATION

LOCATION O3

DATE	FILTER NO	TIME FINISH	TIME START	ELAPSED TIME	CFM	CUBIC METERS	LEAD ug/fltr	TSP ug/fltr	LEAD ug/m3	TSP ug/m3	
04/01/01	6048560	6639.6	5199.7	1439.9	44.9	1940	3345	62500	1.72	32.22	
04/07/01	6048565	9525	6645.2	2879.8	44.2	3819	6	462400	0.00	121.09	Overtime/plowing field
04/13/01	6048573	10966.3	9526.4	1439.9	45.6	1970	3384	112000	1.72	56.86	
04/19/01	6048578**	12314.5	10967.4	1347.1	44.9	1815	6	207200	0.00	114.19	Undertime/Upset condition
04/25/01	6048585*	14638.3	12315.8	2322.5							Ran over/wrong day
04/28/01	6048593*	15977.9	14640.8	1337.1	44.2	1909	6	93000	0.00	48.72	Undertime
05/01/01	6048598	17419.1	15979.1	1440	44.2	1909	37	215100	0.02	112.65	
05/03/01	6048605***	18864.3	17424.3	1440	44.9	1940	6	192100	0.00	99.04	Upset condition
05/07/01	6048608	20305.3	18865.2	1440.1	44.9	1940	6055	156000	3.12	80.42	
05/13/01	6048618	21746.4	20306.4	1440	45.5	1966	6	75900	0.00	38.61	
05/19/01	6048689	23187.5	21747.6	1439.9	45.5	1965	6	95300	0.00	48.49	
05/25/01	6048693	26069.9	24629.9	1440	44.9	1940	6	19500	0.00	10.05	
05/31/01	6048733	26069.9	24629.9	1440	44.9	1940	1883	53400	0.97	27.53	
06/06/01	6048739	27511	26071	1440	44.9	2017	462	89700	0.23	44.47	
06/12/01	6048745	28952.4	27512.2	1440.2	44.2	1910	10675	364200	5.59	190.71	
06/18/01	6048750	30393.4	28953.4	1440	44.9	1940	6	139900	0.00	72.13	
06/24/01	6048719	31834.9	30394.9	1440	45.5	1966	6	56700	0.00	28.85	
06/30/01	6048709	33276.2	31836.2	1440	44.9	1940	248	94800	0.13	48.87	
								AVERAGE	1.04	56.56	

*Not included in average due to reason noted

**Cooling water to the snorkel for the #3 furnace shut down in the middle of a charge which caused the furnace to blow a hole in the snorkel caused compartments 2, 3, and 4 of #2 baghouse (foundry baghouse) to shut down because burnt bags were detected.

***Flare out in #2 furnace and the bagouse fan went down on the roof baghouse. In addition, The primary baghouse at slag granulation went down with many bags being lost.

2001 2ND QUARTER AVERAGE CALCULATION

LOCATION FB

DATE	FILTER NO	LEAD ug/filter	TSP ug/filter
04/01/01	6048562	6	4600
04/07/01	6048568	6	200
04/13/01	6048574	58	-1500
04/19/01	6048583	6	-1500
04/25/01	6048584	6	-1000
04/28/01	6048597	6	-900
05/01/01	6048602	6	3500
05/03/01	Not enough filters		
05/07/01	6048613	6	1200
05/13/01	6048620	6	-1700
05/19/01	6048692	6	600
05/25/01	6048698	6	-900
05/31/01	6048734	6	-1300
06/06/01	6048741	6	-1600
06/12/01	6048744	6	-3600
06/18/01	6048707	6	-3400
06/24/01	6048713	6	-5100
06/30/01	6048715	6	1000
	AVERAGES	9.06	-670.59

CALCULATION COVER SHEET

Company Name: Chemetco, Inc.

Project Name: Ambient Air Monitoring

Project Number: 02QTR1

Purpose: Sampler Precision Calculation

Total Number of Pages: 2 (including this one)

Date: Julyl 30, 2001

Originator's Signature: _____

SAMPLER PRECISION CALCULATION (PARTICULATE)

Sampling Date	Duplicate Sampler	Official Sampler	Difference	Difference (Square)
4-01-01	Inadequate time	Timer problem	------	------
4-07-01	Lacked time	Under time	------	------
4-09-01	103.54	106.72	-3.18	10.11
4-13-01	113.42	Over time	------	------
4-19-01	Upset condition	------	------	------
4-21-01	118.23	120.50	-2.27	5.15
4-25-01	137.77	122.84	14.93	222.90
4-28-01	72.80	66.04	6.76	45.70
5-01-01	177.57	163.64	13.93	194.04
5-03-01	Upset condition	------	------	------
5-07-01	41.81	37.51	7.31	53.44
5-13-01	48.53	46.26	2.27	5.15
5-19-01	Did not run	43.70	------	------
5-25-01	16.32	15.67	0.65	0.42
5-31-01	54.33	48.93	5.40	29.16
6-06-01	28.21	29.55	-1.34	1.80
6-12-01	Did not analyze see N3	Motor out	------	------
6-18-01	142.91	159.45	-16.54	273.57
6-24-01	46.16	40.29	5.87	34.46
6-30-01	69.60	72.78	-3.18	10.11
		$\Sigma d_i =$	30.61	$\Sigma d_i^2 =$ 886.01

n=13

$$d_j = \frac{\Sigma d_i}{n} = \frac{30.61}{13} = 2.35\%$$

$$S_j = \sqrt{\frac{\Sigma(d_i)^2 - n(d_j)^2}{n-1}} = \sqrt{\frac{886.01 - 13(5.52)}{13-1}} = \sqrt{\frac{886.01 - 72}{12}} = 8.24\%$$

$$\text{Upper Limit} = d_j + \frac{1.96(S_j)}{2} = 2.35\% + \frac{1.96(8.24)}{2} = 2.35 + 8.08 = 10.43\%$$

$$\text{Lower Limit} = d_j - \frac{1.96(S_j)}{2} = 2.35\% - \frac{1.96(8.24)}{2} = 2.35 - 8.08 = -5.73\%$$

Official Average Particulate: 76.71 mg/m^3

Range: 70.98 to 87.14

APPENDIX B

Chemetco, Inc.
Rt. 3 at Chemetco Lane
Hartford, IL 62048

ATTN: Heather Young Date: 10-Apr-01

Sample type: Hi-Vol Air Monitoring Program

Sample Identification: Listed below

Filter ID	Location	Pb, ug/filter	TSP,mg/filter
G6048559	OS	186	39.2
G6048560	O3	3,345	62.5
G6048556	N3	304	74
G6048557	N3QC	1,356	67.8
G6048562	FB	<6	4.6

Analyst: Matt Shoemaker

Title: Laboratory Technician

Chemetco, Inc.
Rt. 3 at Chemetco Lane
Hartford, IL 62048

ATTN: Heather Young Date: 17-Apr-01

Sample type: Hi-Vol Air Monitoring Program

Sample Identification: Listed below

Filter ID	Location	Pb, ug/filter	TSP,mg/filter
G6048563	OS	<6	293.4
G6048565	O3	<6	462.4
G6048566	N3	3,499	89.5
G6048567	N3QC	467	39.6
G6048558	Extra	242	18.5
G6048568	FB	<6	0.2

Analyst: Matt Shoemaker

Title: Laboratory Technician

Chemetco, Inc.
Rt. 3 at Chemetco Lane
Hartford, IL 62048

ATTN: Heather Young **Date:** 24-Apr-01

Sample type: Hi-Vol Air Monitoring Program

Sample Identification: Listed below

Filter ID	Location	Pb, ug/filter	TSP,mg/filter
G6048570	N3	2,824	202
G6048571	N3QC	2,824	196

Analyst: Matt Shoemaker

Title: Laboratory Technician

Chemetco, Inc.
Rt. 3 at Chemetco Lane
Hartford, IL 62048

ATTN: Heather Young Date: 25-Apr-01

Sample type: Hi-Vol Air Monitoring Program

Sample Identification: Listed below

Filter ID	Location	Pb, ug/filter	TSP,mg/filter
G6048572	OS	1,262	81.9
G6048573	O3	3,384	112
G6048575	N3	369	52
G6048576	N3QC	1,262	211.7
G6048574	FB	58	-1.5

Analyst: Matt Shoemaker

Title: Laboratory Technician

Chemetco, Inc.
Rt. 3 at Chemetco Lane
Hartford, IL 62048

ATTN: Heather Young

Date: 1-May-01

Sample type: Hi-Vol Air Monitoring Program

Sample Identification: Listed below

Filter ID	Location	Pb, ug/filter	TSP,mg/filter
G6048577	OS	<6	176.1
G6048578	O3	<6	207.2
G6048579	N3	22,130	436.7
G6048581	N3QC	20,084	444.3
G6048582	Extra	21,648	389.1
G6048583	FB	<6	-1.5

Analyst: Matt Shoemaker

Title: Laboratory Technician

Chemetco, Inc.
Rt. 3 at Chemetco Lane
Hartford, IL 62048

ATTN: Heather Young Date: 10-May-01

Sample type: Hi-Vol Air Monitoring Program

Sample Identification: Listed below

Filter ID	Location	Pb, ug/filter	TSP,mg/filter
G6048588	N3	7,036	234.8
G6048587	N3QC	6,804	223.7

Analyst: Matt Shoemaker

Title: Laboratory Technician

Chemetco, Inc.
Rt. 3 at Chemetco Lane
Hartford, IL 62048

ATTN: Heather Young Date: 10-May-01

Sample type: Hi-Vol Air Monitoring Program

Sample Identification: Listed below

Filter ID	Location	Pb, ug/filter	TSP,mg/filter
G6048589	N3	3,555	239.7
G6048590	N3QC	3,555	257.1
G6048569	Extra	5,411	226.4
G6048584	FB	<6	-1

Analyst: Matt Shoemaker

Title: Laboratory Technician

Chemetco, Inc.
Rt. 3 at Chemetco Lane
Hartford, IL 62048

ATTN: Heather Young

Date: 17-May-01

Sample type: Hi-Vol Air Monitoring Program

Sample Identification: Listed below

Filter ID	Location	Pb, ug/filter	TSP,mg/filter
G6048592	OS	<6	115.6
G6048593	O3	<6	93
G6048595	N3	<6	127
G6048596	N3QC	198	62.1
G6048597	FB	<6	-0.9

Analyst: Matt Shoemaker

Title: Laboratory Technician

Chemetco, Inc.
Rt. 3 at Chemetco Lane
Hartford, IL 62048

ATTN: Heather Young

Date: 22-May-01

Sample type: Hi-Vol Air Monitoring Program

Sample Identification: Listed below

Filter ID	Location	Pb, ug/filter	TSP,mg/filter
G6048599	OS	<6	182.4
G6048598	O3	37	215.1
G6048600	N3	9,975	329.9
G6048601	N3QC	9,265	340.6
G6048591	Extra	7,845	343.5
G6048602	FB	<6	3.5

Analyst: Matt Shoemaker

Title: Laboratory Technician

Chemetco, Inc.
Rt. 3 at Chemetco Lane
Hartford, IL 62048

ATTN: Heather Young Date: 22-May-01

Sample type: Hi-Vol Air Monitoring Program

Sample Identification: Listed below

Filter ID	Location	Pb, ug/filter	TSP,mg/filter
G6048606	OS	<6	135.2
G6048605	O3	<6	192.1
G6048603	N3	17,830	427.5
G6048604	N3QC	17,830	429.5
G6048607	Extra	25,997	487.1

Analyst: Matt Shoemaker

Title: Laboratory Technician

Chemetco, Inc.
Rt. 3 at Chemetco Lane
Hartford, IL 62048

ATTN: Heather Young

Date: 30-May-01

Sample type: Hi-Vol Air Monitoring Program

Sample Identification: Listed below

Filter ID	Location	Pb, ug/filter	TSP,mg/filter
G6048609	OS	455	50
G6048608	O3	6,055	156
G6048610	N3	679	73.2
G6048612	N3QC	903	80.2
G6048611	Extra	231	61.6
G60486613	FB	<6	1.2

Analyst: Matt Shoemaker

Title: Laboratory Technician

Chemetco, Inc.
Rt. 3 at Chemetco Lane
Hartford, IL 62048

ATTN: Heather Young Date: 5-Jun-01

Sample type: Hi-Vol Air Monitoring Program

Sample Identification: Listed below

Filter ID	Location	Pb, ug/filter	TSP,mg/filter
G6048615	OS	<6	63.3
G6048618	O3	<6	75.9
G6048616	N3	967	88.9
G6048617	N3QC	1,201	93.1
G6048619	Extra	5,905	122.9
G6048620	FB	<6	-1.7

Analyst: Matt Shoemaker

Title: Laboratory Technician

Chemetco, Inc.
Rt. 3 at Chemetco Lane
Hartford, IL 62048

ATTN: Heather Young

Date: 7-Jun-01

Sample type: Hi-Vol Air Monitoring Program

Sample Identification: Listed below

Filter ID	Location	Pb, ug/filter	TSP,mg/filter
G6048688	OS	3,815	97.5
G6048689	O3	<6	95.3
G6048687	N3	<6	86.5
G6048692	FB	<6	0.6

Analyst: Matt Shoemaker

Title: Laboratory Technician

Chemetco, Inc.
Rt. 3 at Chemetco Lane
Hartford, IL 62048

ATTN: Heather Young Date: 20-Jun-01

Sample type: Hi-Vol Air Monitoring Program

Sample Identification: Listed below

Filter ID	Location	Pb, ug/filter	TSP,mg/filter
G6048694	OS	<6	15.5
G6048693	O3	<6	19.5
G6048696	N3	<6	30.6
G6048686	N3QC	<6	31.3
G6048691	Extra	<6	23
G6048698	FB	<6	-0.9

Analyst: Matt Shoemaker

Title: Laboratory Technician

Chemetco, Inc.
Rt. 3 at Chemetco Lane
Hartford, IL 62048

ATTN: Heather Young Date: 20-Jun-01

Sample type: Hi-Vol Air Monitoring Program

Sample Identification: Listed below

Filter ID	Location	Pb, ug/filter	TSP,mg/filter
G6048732	OS	<6	41.1
G6048733	O3	1,883	53.4
G6048699	N3	599	95.2
G6048695	N3QC	727	102.8
G6048697	Extra	1,755	89.2
G6048734	FB	<6	-1.3

Analyst: Matt Shoemaker

Title: Laboratory Technician

Chemetco, Inc.
Rt. 3 at Chemetco Lane
Hartford, IL 62048

ATTN: Heather Young Date: 28-Jun-01

Sample type: Hi-Vol Air Monitoring Program

Sample Identification: Listed below

Filter ID	Location	Pb, ug/filter	TSP,mg/filter
G6048736	OS	866	32.6
G6048739	O3	462	89.7
G6048738	N3	58	57.7
G6048737	N3QC	193	54.1
G6048740	Extra	58	49.9
G6048741	FB	<6	-1.6

Analyst: Matt Shoemaker

Title: Laboratory Technician

Chemetco, Inc.
Rt. 3 at Chemetco Lane
Hartford, IL 62048

ATTN: Heather Young

Date: 3-Jul-01

Sample type: Hi-Vol Air Monitoring Program

Sample Identification: Listed below

Filter ID	Location	Pb, ug/filter	TSP,mg/filter
G6048746	OS	437	450.9
G6048745	O3	10,675	364.2
G6048747	Extra	44	119.3
G6048744	FB	<6	-3.6

Analyst: Matt Shoemaker

Title: Laboratory Technician

Chemetco, Inc.
Rt. 3 at Chemetco Lane
Hartford, IL 62048

ATTN: Heather Young

Date: 9-Jul-01

Sample type: Hi-Vol Air Monitoring Program

Sample Identification: Listed below

Filter ID	Location	Pb, ug/filter	TSP,mg/filter
G6048749	OS	<6	121.9
G6048750	O3	<6	139.9
G6048701	N3	7,279	319.7
G6048700	N3QC	6,757	284
G6048748	Extra	7,410	295.7
G6048707	FB	<6	-3.4

Analyst: Matt Shoemaker

Title: Laboratory Technician

Chemetco, Inc.
Rt. 3 at Chemetco Lane
Hartford, IL 62048

ATTN: Heather Young

Date: 11-Jul-01

Sample type: Hi-Vol Air Monitoring Program

Sample Identification: Listed below

Filter ID	Location	Pb, ug/filter	TSP,mg/filter
G6048703	OS	<6	48.2
G6048719	O3	<6	56.7
G6048704	N3	1,042	77.6
G6048705	N3QC	1,175	87.4
G6048706	Extra	2,508	104.9
G6048713	FB	<6	-5.1

Analyst: Matt Shoemaker

Title: Laboratory Technician

APPENDIX C

Chemetco Environmental Management
Filter Conditioning Logsheet

	Pre Sampling Conditioning				Post Sampling Conditioning			
Filter Number	Date In	Date Out	Weight, mg	Date In	Date Out	Weight, mg	W_{net}, mg	W_{net}, ug
G6048556	3/21/01	3/23/01	4329.9	4/4/01	4/9/01	4403.9	74.0	
G6048557	3/21/01	3/23/01	4289.8	4/4/01	4/9/01	4357.6	67.8	
G6048558	3/21/01	3/23/01	4308.3	4/14/01	4/16/01	4326.8	18.5	
G6048559	3/21/01	3/23/01	4315.5	4/4/01	4/9/01	4354.7	39.2	
G6048560	3/21/01	3/23/01	4302.5	4/4/01	4/9/01	4365.1	62.5	
G6048561	3/21/01	3/23/01	4286.9	3/29/01	4/3/01	4295.3	8.4	
G6048562	3/21/01	3/23/01	4314.5	4/4/01	4/9/01	4319.1	4.6	
G6048563	3/21/01	3/23/01	4296.3	4/14/01	4/16/01	4589.7	293.4	
G6048564								
G6048565	3/21/01	3/23/01	4308.2	4/14/01	4/16/01	4770.6	462.4	
G6048566	3/21/01	3/23/01	4305.0	4/14/01	4/16/01	4394.5	89.5	
G6048567	3/21/01	3/23/01	4282.9	4/14/01	4/16/01	4322.5	39.6	
G6048568	3/21/01	3/23/01	4297.5	4/14/01	4/16/01	4297.7	0.2	
G6048569	3/21/01	3/23/01	4292.3	5/04/01	5/08/01	4518.7	226.4	
G6048570	3/21/01	3/23/01	4424.5	4/19/01	4/23/01	4626.5	202	
G6048571	3/21/01	3/23/01	4434.5	4/19/01	4/23/01	4630.5	196	

Chemetco Environmental Management
Filter Conditioning Logsheet

	Pre Sampling Conditioning				Post Sampling Conditioning			
Filter Number	Date In	Date Out	Weight, mg	Date In	Date Out	Weight, mg	W_{net}, mg	W_{net}, ug
G6048572	3/21/01	3/23/01	4426.2	4/20/01	4/24/01	4508.1	81.9	
G6048573	3/21/01	3/23/01	4415.5	4/20/01	4/24/01	4527.5	112	
G6048574	3/21/01	3/23/01	4433.1	4/20/01	4/24/01	4431.6	-1.5	
G6048575	4/9/01	4/11/01	4401.2	4/20/01	4/24/01	4453.2	52	
G6048576	4/9/01	4/11/01	4421.2	4/20/01	4/24/01	4632.9	211.7	
G6048577	4/9/01	4/11/01	4405.8	4/23/01	4/30/01	4581.9	176.1	
G6048578	4/9/01	4/11/01	4402.2	4/23/01	4/30/01	4609.4	207.2	
G6048579	4/9/01	4/11/01	4428.4	4/23/01	4/30/01	4865.1	436.7	
G6048580								
G6048581	4/9/01	4/11/01	4401.8	4/23/01	4/30/01	4846.1	444.3	
G6048582	4/9/01	4/11/01	4390.8	4/23/01	4/30/01	4779.9	389.1	
G6048583	4/9/01	4/11/01	4381.2	4/23/01	4/30/01	4379.7	-1.5	
G6048584	4/9/01	4/11/01	4361.5	5/04/01	5/08/01	4360.5	-1.0	
G6048585	4/9/01	4/11/01	4350.6					
G6048586	4/9/01	4/11/01	4363.5					
G6048587	4/9/01	4/11/01	4358.7	5/04/01	5/08/01	4582.4	223.7	

Chemetco Environmental Management
Filter Conditioning Logsheet

	Pre Sampling Conditioning				Post Sampling Conditioning			
Filter Number	Date In	Date Out	Weight, mg	Date In	Date Out	Weight, mg	W_{net}, mg	W_{net}, ug
G6048588	4/9/01	4/11/01	4350.1	5/04/01	5/08/01	4584.9	234.8	
G6048589	4/9/01	4/11/01	4369.0	5/04/01	5/08/01	4608.7	239.7	
G6048590	4/9/01	4/11/01	4386.8	5/04/01	5/08/01	4643.9	257.1	
G6048591	4/9/01	4/11/01	4363.2	5/07/01	5/18/01	4706.7	343.5	
G6048592	4/9/01	4/11/01	4362.8	5/07/01	5/15/01	4478.4	115.6	
G6048593	4/9/01	4/11/01	4353.3	5/07/01	5/15/01	4446.3	93.0	
G6048594								
G6048595	4/24/01	4/26/01	4354.6	5/07/01	5/15/01	4481.6	127	
G6048596	4/24/01	4/26/01	4358.9	5/07/01	5/15/01	4421.0	62.1	
G6048597	4/24/01	4/26/01	4327.8	5/07/01	5/15/01	4326.9	-0.9	
G6048598	4/24/01	4/26/01	4358.5	5/07/01	5/18/01	4573.6	215.1	
G6048599	4/24/01	4/26/01.	4351.5	5/07/01	5/18/01	4533.9	182.4	
G6048600	4/24/01	4/26/01	4333.9	5/07/01	5/18/01	4663.8	329.9	
G6048601	4/24/01	4/26/01	4362.8	5/07/01	5/18/01	4703.4	340.6	
G6048602	4/24/01	4/26/01	4339.2	5/07/01	5/18/01	4342.7	3.5	
G6048603	4/24/01	4/26/01	4347.5	5/10/01	5/21/01	4775.0	427.5	

Chemetco Environmental Management
Filter Conditioning Logsheet

	Pre Sampling Conditioning			Post Sampling Conditioning				
Filter Number	Date In	Date Out	Weight, mg	Date In	Date Out	Weight, mg	W_{net}, mg	W_{net}, ug
G6048604	4/24/01	4/26/01	4367.2	5/10/01	5/21/01	4796.7	429.5	
G6048605	4/24/01	4/26/01	4354.9	5/10/01	5/21/01	4547.0	192.1	
G6048606	4/24/01	4/26/01	4334.4	5/10/01	5/21/01	4469.6	135.2	
G6048607	4/24/01	4/26/01	4319.9	5/10/01	5/21/01	4807.0	487.1	
G6048608	4/24/01	4/26/01	4350.7	5/14/01	5/29/01	4506.7	156.0	
G6048609	4/24/01	4/26/01	4315.9	5/14/01	5/29/01	4365.9	50.0	
G6048610	4/24/01	4/26/01	4309.6	5/14/01	5/29/01	4382.8	73.2	
G6048611	4/24/01	4/26/01	4295.7	5/14/01	5/29/01	4357.3	61.6	
G6048612	4/24/01	4/26/01	4299.8	5/14/01	5/29/01	4380.0	80.2	
G6048613	5/4/01	5/7/01	4302.9	5/14/01	5/29/01	4304.1	1.2	
G6048614								
G6048615	5/4/01	5/7/01	4293.7	5/19/01	6/04/01	4357.0	63.3	
G6048616	5/4/01	5/7/01	4285.9	5/19/01	6/4/01	4374.8	88.9	
G6048617	5/4/01	5/7/01	4297.8	5/19/01	6/4/01	4390.9	93.1	
G6048618	5/4/01	5/7/01	4302.8	5/19/01	6/4/01	4378.7	75.9	
G6048619	5/4/01	5/7/01	4331.2	5/19/01	6/4/01	4454.1	122.9	
G6048620	5/4/01	5/7/01	4355.1	5/19/01	6/4/01	4353.4	-1.7	

Chemetco Environmental Management
Filter Conditioning Logsheet

	Pre Sampling Conditioning				Post Sampling Conditioning			
Filter Number	Date In	Date Out	Weight, mg	Date In	Date Out	Weight, mg	W_{net}, mg	W_{net}, ug
G6048686	5/4/01	5/7/01	4275.8	6/2/01	6/18/01	4307.1	31.3	
G6048687	5/4/01	5/7/01	4258.9	5/29/01	6/6/01	4345.4	86.5	
G6048688	5/4/01	5/7/01	4270.5	5/29/01	6/6/01	4368.0	97.5	
G6048689	5/4/01	5/7/01	4331.0	5/29/01	6/6/01	4426.3	95.3	
G6048690	~~5/4/01~~	~~5/7/01~~	~~4323.8~~					
G6048691	5/4/01	5/7/01	4323.8	6/2/01	6/18/01	4346.8	23.0	
G6048692	5/4/01	5/7/01	4343.2	5/29/01	6/6/01	4343.8	0.6	
G6048693	5/4/01	5/7/01	4317.5	6/2/01	6/18/01	4337.0	19.5	
G6048694	5/4/01	5/7/01	4327.2	6/2/01	6/18/01	4342.7	15.5	
G6048695	5/4/01	5/7/01	4327.2	6/4/01	6/19/01	4430.0	102.8	
G6048696	5/4/01	5/7/01	4345.4	6/2/01	6/18/01	4376.0	30.6	
G6048697	5/4/01	5/7/01	4325.6	6/4/01	6/19/01	4414.8	89.2	
G6048698	5/4/01	5/7/01	4308.1	6/2/01	6/18/01	4307.2	-0.9	
G6048699	5/4/01	5/7/01	4312.5	6/4/01	6/19/01	4407.7	95.2	
G6048700	6/08/01	6/12/01	4317.8	6/23/01	7/5/01	4601.8	284.0	
G6048701	6/08/01	6/12/01	4329.9	6/23/01	7/5/01	4649.6	319.7	

Chemetco Environmental Management
Filter Conditioning Logsheet

	Pre Sampling Conditioning			Post Sampling Conditioning				
Filter Number	Date In	Date Out	Weight, mg	Date In	Date Out	Weight, mg	W_{net}, mg	W_{net}, ug
G6048702								
G6048703	6/8/01	6/12/01	4348.1	7/3/01	7/10/01	4396.3	48.2	
G6048704			4342.2	7/3/01	7/10/01	4419.8	77.6	
G6048705			4340.5	7/3/01	7/10/01	4427.9	87.4	
G6048706			4345.4	7/3/01	7/10/01	4450.3	104.9	
G6048707			4337.1	6/23/01	7/5/01	4333.7	-3.4	
G6048708			4349.5	7/6/01	7/17/01	4417.0	67.5	
G6048709			4359.0	7/6/01	7/17/01	4453.8	94.8	
G6048710			4367.7	7/6/01	7/17/01	4506.2	138.5	
G6048711			4347.4	7/6/01	7/17/01	4479.1	131.7	
G6048712			4328.9	7/6/01	7/17/01	4485.4	156.5	
G6048713			4325.3	7/3/01	7/10/01	4320.2	-5.1	
G6048714								
G6048715			4280.4	7/6/01	7/17/01	4281.4	1.0	
G6048716			4258.2					
G6048717	6/8/01	6/12/01	4285.6					

Chemetco Environmental Management
Filter Conditioning Logsheet

	Pre Sampling Conditioning			Post Sampling Conditioning				
Filter Number	Date In	Date Out	Weight, mg	Date In	Date Out	Weight, mg	W_{net}, mg	W_{net}, ug
G6048718			4283.2					
G6048719	6/8/01	6/12/01	4259.4	7/3/01	7/10/01	4316.1	56.7	
G6048720	6/22/01	6/25/01	4262.7					
G6048721	6/22/01	6/25/01	4287.9					
G6048722	6/22/01	6/25/01	4259.2					
G6048723	6/22/01	6/25/01	4231.3					
G6048724	6/22/01	6/25/01	4275.6					
G6048725	6/22/01	6/25/01	4279.0					
G6048726	6/22/01	6/25/01	4279.2					
G6048727	6/22/01	6/25/01	4238.4					
G6048728	6/22/01	6/25/01	4267.5					
G6048729	6/22/01	6/25/01	4253.6					
G6048730	6/22/01	6/25/01	4280.3					
G6048731	6/22/01	6/25/01	4282.2					
~~G6048732~~								
~~G6048733~~								

NEXT PAGE

Chemetco Environmental Management
Filter Conditioning Logsheet

	Pre Sampling Conditioning				Post Sampling Conditioning			
Filter Number	Date In	Date Out	Weight, mg	Date In	Date Out	Weight, mg	W_{net}, mg	W_{net}, ug
G6048732	5-21-01	5-25-01	4249.5	6/4/01	6/19/01	4290.6	41.1	
G6048733	5-21-01	5-25-01	4264.7	6/4/01	6/19/01	4318.1	53.4	
G6048734	5-21-01	5-25-01	4256.4	6/4/01	6/19/01	4255.1	-1.3	
G6048735								
G6048736	5-21-01	5-25-01	4260.9	6/16/01	6/27/01	4293.5	32.6	
G6048737	5-21-01	5-25-01	4266.5	6/16/01	6/27/01	4320.6	54.1	
G6048738	5-21-01	5-25-01	4249.3	6/16/01	6/27/01	4307.0	57.7	
G6048739	5-21-01	5-25-01	4273.7	6/16/01	6/27/01	4363.4	89.7	
G6048740	5-21-01	5-25-01	4249.5	6/16/01	6/27/01	4299.4	49.9	
G6048741	5-21-01	5-25-01	4258.1	6/16/01	6/27/01	4256.5	-1.6	
G6048742	5-21-01	5-25-01	4269.7					
G6048743	5-21-01	5-25-01	4273.5					
G6048744	5-21-01	5-25-01	4269.3	6/17/01	7/2/01	4633.5	364.2	
G6048745	5-21-01	5-25-01	4402.2	6/17/01	7/2/01	4553.1	150.9	
G6048746	5-21-01	5-25-01	4425.8	6/17/01	7/2/01	4545.1	119.3	
G6048747	5-21-01	5-25-01	4220.0	6/17/01	7/2/01	4216.4	-3.6	

Chemetco Environmental Management
Filter Conditioning Logsheet

	Pre Sampling Conditioning				Post Sampling Conditioning			
Filter Number	Date In	Date Out	Weight, mg	Date In	Date Out	Weight, mg	W_{net}, mg	W_{net}, ug
G6048748	5-21-01	5-25-01	4229.8	6/23/01	7/5/01	4525.5	295.7	
G6048749	5-21-01	5-25-01	4244.5	6/23/01	7/5/01	4366.4	121.9	
G6048750	5-21-01	5-25-01	4237.8	6/23/01	7/5/01	4377.4	139.6	
G6048751								
G6048752								
G6048753								
G6048754								
G6048755								
G6048756								
G6048757								
G6048758								
G6048759								
G6048760								
G6048761								
G6048762								
G6048763								

Chemetco
FIRST IN PEOPLE — QUALITY — SERVICE
P.O. Box 67 • Hartford, IL 62048
618-254-4381 • 800-444-5564

April 27, 2001

Illinois Environmental Protection Agency
Air Monitoring Section
c/o Mr. Terry Sweitzer
P.O. Box 19276
Springfield, Illinois 62794-9276

RE: First Quarter 2001 Ambient Air Monitoring Report

Dear Mr. Sweitzer,

Enclosed are two copies of the report entitled, "Ambient Air Monitoring Quarterly Report January - March, 2001 for Total Particulate and Lead."

A table of results from the extra sampler located at the northwest corner and within the fence (the former N3 and N3-QC locations) is attached to this letter. This monitor is not included in the official approved ambient air monitoring program and is included as an attachment to this letter at the request of the Illinois EPA.

If you have any questions or require additional information, please contact me at 618/254-4381 ext. 268.

Sincerely,

Heather Young, CHMM
Environmental Manager
Chemetco, Inc.

Attachment

cc: Jim Henry, IEPA--Collinsville Region
Jeff Trevino, USEPA
Chief, Air Enforcement Assurance Branch, USEPA
George von Stamwitz, Armstrong, Teasdale, Schlafly & Davis
File

2001 1ST QUARTER AVERAGE CALCULATION

LOCATION Extra

DATE	FILTER NO.	TIME FINISH	TIME START	ELAPSED TIME	CFM	CUBIC METERS	LEAD ug/fltr	TSP ug/fltr	LEAD ug/m3	TSP ug/m3	
1/01/01	6048368	88603.1	87163.1	1440	44.3	1914	6	5100	0.00	2.66	
1/04/01											Did not rerun
1/07/01	6048394*	90044.2	88604	1440.2	45	1944	6	39100	0.00	20.11	Upset Condition#2 Baghouse
1/09/01											Did not rerun/not official
1/13/01	6048399	91485.4	90045.4	1440	44.7	1931	21240	166800	11.00	86.38	
1/20/01	6048411	92926.2	91486.6	1439.6	44.3	1913	402	60600	0.21	31.67	
1/25/01	6048389	94367	92927.2	1439.8	44.3	1913	9281	253200	4.85	132.32	
1/31/01	6048428	95808	94368	1440	44.3	1914	66	44300	0.03	23.15	
2/06/01	6048434	97240	95809	1431	45	1932	1196	70800	0.62	36.65	
2/12/01	6048438	98689.9	97249.9	1440	44.3	1914	2936	100200	1.53	52.36	
2/18/01	6048445	100131	98690.9	1440	44.3	1914	8769	114700	4.58	59.93	
2/24/01	6048451*	1571.8	131.9	1439.9	44.3	1914	16800	124600	8.78	65.11	High Wind
3/02/01	6048458	3013.1	1573.1	1440	43.6	1884	355	50500	0.19	26.81	
3/08/01	6048468	4454.2	3014.2	1440	43.6	1884	6	61400	0.00	32.60	
3/14/01											Power failure/did not analyze
3/20/01	6048470	5895.4	4455.3	1440.1	43.6	1884	6	58600	0.00	31.11	
3/22/01	6048485	7337.2	5897	1440.2	45.7	1975	10	83000	0.01	42.04	Rerun for 3/14
3/26/01	6048490	8778.1	7338.1	1440	45.7	1974	6	14600	0.00	7.40	
								AVERAGE	1.77	43.47	

*Not included in average due to reason noted

AMBIENT AIR MONITORING

QUARTERLY REPORT

JANUARY - MARCH 2001

FOR

TOTAL PARTICULATE

AND LEAD

CHEMETCO, INC.
April 2001

TABLE OF CONTENTS

		page
1.0	INTRODUCTION	1
1.1	Monitoring Description	1
1.2	Monitoring Report	1
2.0	SAMPLING DATE ACCOUNTING	5
3.0	MONITORING DATA	7
3.1	Quarterly Averages Calculation	7
3.2	Sampler Quarterly Averages	12
3.3	Instrument Precision Calculation	16
3.4	Single Instrument Accuracy	18
3.5	Documentation	19

APPENDIX A Calculation Worksheets
APPENDIX B Laboratory Analyses
APPENDIX C Filter Conditioning Logsheets

TABLE OF TABLES

		page
TABLE 1-1	Standard Operating Procedures	5
TABLE 2-1	Sample Date Accounting	5
TABLE 3-1	Sampler Location N3	12
TABLE 3-2	Sampler Location OS	13
TABLE 3-3	Sampler Location O3	14
TABLE 3-4	Filter Field Blank	15

TABLE OF FIGURES

		page
FIGURE 1-1	Monitoring Site Locations	3
FIGURE 3-1	Daily Weather Logsheets	8
FIGURE 3-2	Data Assessment Report	17

0

1.0 INTRODUCTION

This document presents the summary of the first calendar quarter year 2001 ambient air monitoring performed at the Chemetco, Inc. facility in Madison County.

1.1 Monitoring Description

The first quarter ambient air monitoring began on January 1, 2001, and sampling for total suspended particulates and lead in the particulate was performed on a once every sixth day basis. The quarterly sampling ended on March 31, 2001. Each day, a weather log was maintained documenting wind speed, wind direction, temperature, relative humidity and precipitation. Site data is utilized unless there is problem with the computer or program. In such a case, the information is obtained from the Nation Weather Service and recorded by the security guard. Chemetco also set up an account with the Midwest Climate Center who records data at two different locations near the facility. Chemetco has purchased a new weather station. The new weather station is currently being set up.

The location of the monitoring sites was based on a modeling report done by Versar, Inc. and approved by IEPA. All locations are shown on a map in Figure 1-1.

Standard operating procedures were followed for the filter conditioning, sampling, sampler operation, analyses, etc, are shown in Table 1.1. Complete copies of the SOP's were provided in the Ambient Air Monitoring Quality Assurance/Quality Control Plan.

1.2 Monitoring Report

The following pages contain the results of the first quarter monitoring. Section 2 contains an accounting of all the test dates and reasons for eliminating data from certain test dates. Section 3 contains the quarterly averages, the quality assurance data and meteorological data. The Appendices include copies of the Filter Conditioning Logsheets with total suspended particulate calculation, the laboratory analysis, and the calculation worksheets.

Several problems were encountered this quarter. Several days either lacked time, ran on wrong days, or ran over time due to problems with timers, motors, and misc. power failures. There was an upset condition associated with a malfunction of the #2 baghouse (1/7). Monitors were immediately reset and a makeup day was run (1/9). In addition, a high wind day was experienced on 2/24/01. A one hour period experienced an average wind speed of over 25 mph.

<u>Relocation of Colocated Northern Monitors</u>

Chemetco believed that all data collected from N3 and N3-QC at their former location just south of the facility's northern fence was highly questionable and not valid. As evidenced by an analysis of quarterly ambient air monitoring, the monitors in their former location had been significantly impacted by nearby facility activities, structures, microclimatic influences, and/or

surrounding entrained materials. The IEPA agreed with Chemetco regarding the need to relocate the northern monitors as outlined below.

Chemetco requested in a letter dated June 18, 1998, to IEPA to move the colocated ambient air monitors located in the northern portion of the facility in order to obtain samples which truly represent ambient air. The relocation was approved by IEPA in a letter dated June 24, 1998. Sampling of the ambient air monitors in the new location was initiated July 25, 1998. Additional sampling events were scheduled that same week to allow the collection of the appropriate number of samples for the third quarter 1998. Sampling proceeded as scheduled in the current location until the new monitors were in place. Chemetco is also utilizing dedicated Dickson recorders for all four official air monitors, the new colocated N3 and N3-QC, OS and O3. The aforementioned relocation of the northern ambient air monitors has allowed the collection of a more representative sample of ambient air similar to that collected by the ambient air monitors OS and O3.

FIGURE 1-1
MONITORING SITE LOCATIONS

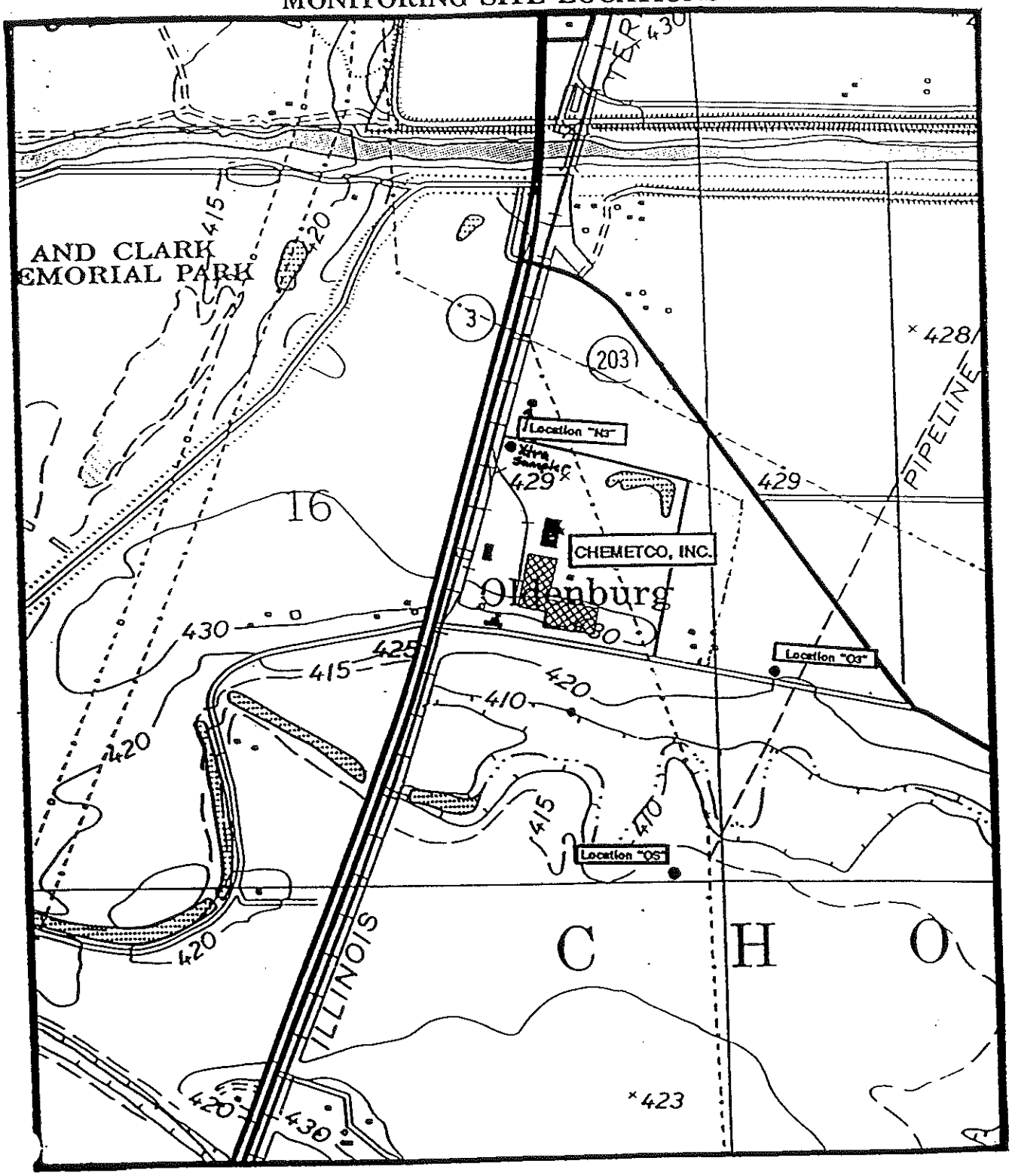

TABLE 1-1
STANDARD OPERATING PROCEDURES

Determination of Total Suspended Particulates in Ambient Air Filters

Filter Conditioning

Lead Analysis in Ambient Air Filters

Operation of GMW 2310 TSP Samplers

Packaging and Shipment of Samples

2.0 SAMPLING DATE ACCOUNTING

Following is a list of the dates the monitors were to have run. Table 2.1 accounts the dates and events.

TABLE 2.1 - Sample Date Accounting

DATE	SAMPLER	RUN STATUS	QUALIFICATION	ERROR REASON
1-01-01	N3-QC	OK	Yes	
	N3	OK	Yes	
	OS	No	No	Motor Out
	O3	No	No	Motor Out
1-04-01	OS	OK	Yes	Rerun
	O3	OK	Yes	Rerun
1-07-01	N3-QC	No	No	Upset Condition/#2 Baghouse
	N3	No	No	Upset Condition/#2 Baghouse
	OS	No	No	Upset Condition/#2 Baghouse
	O3	No	No	Upset Condition/#2 Baghouse
1-09-01	N3-QC	OK	Yes	Rerun
	N3	OK	Yes	Rerun
	OS	OK	Yes	Rerun
	O3	OK	Yes	Rerun
1-13-01	N3-QC	No	No	Over time
	N3	No	No	Over time
	OS	OK	Yes	
	O3	OK	Yes	
1-20-01	N3-QC	No	No	No motor available
	N3	OK	Yes	
	OS	OK	Yes	
	O3	OK	Yes	
1-25-01	N3-QC	OK	Yes	
	N3	OK	Yes	
	OS	OK	Yes	
	O3	OK	Yes	
1-31-01	N3-QC	OK	Yes	
	N3	OK	Yes	
	OS	OK	Yes	
	O3	No	No	Power failure
2-06-01	N3-QC	No	No	Wrong Day
	N3	OK	Yes	
	OS	OK	Yes	
	O3	OK	Yes	
2-12-01	N3-QC	OK	Yes	
	N3	OK	Yes	
	OS	OK	Yes	
	O3	OK	Yes	
2-18-01	N3-QC	No	No	Wrong day
	N3	OK	Yes	
	OS	OK	Yes	
	O3	OK	Yes	

TABLE 2.1 - Sample Date Accounting (con't)

DATE	SAMPLER	RUN STATUS	QUALIFICATION	ERROR REASON
2-24-01	N3-QC	No	No	High Wind
	N3	No	No	High Wind
	OS	No	No	High Wind
	O3	No	No	High Wind/Lacks time
3-02-01	N3-QC	OK	Yes	
	N3	OK	Yes	
	OS	OK	Yes	
	O3	No	No	Over time
3-08-01	N3-QC	OK	Yes	
	N3	OK	Yes	
	OS	OK	Yes	
	O3	No	No	Over time
3-14-01	N3-QC	No	No	Power failure
	N3	No	No	Power failure
	OS	No	No	Power failure
	O3	No	No	Power failure
3-20-01	N3-QC	OK	Yes	
	N3	No	No	Power failure(surge protector)
	OS	OK	Yes	
	O3	OK	Yes	
3-22-01	N3-QC	OK	Yes	
	N3	OK	Yes	
	OS	OK	Yes	
	O3	OK	Yes	
3-26-00	N3QC	No	No	Lacks time
	N3	OK	Yes	
	OS	No	No	Lacks time
	O3	OK	Yes	

3.0 MONITORING DATA

After the receipt from the laboratory of all data for the quarterly report, averages for each monitoring site were calculated from the pool of data. In addition, at site N3, two samplers were set up for quality assurance purposes. A standard deviation, lower and upper range was determined based on those samples and under normal circumstances can be assumed to represent accuracy for all locations.

Each day, meteorological data was noted. The weather information was obtained from either the National Weather Service, the Midwest Climate Center or the on-site weather station. These logs are shown in Figure 3.1 and quarterly averages are discussed in Section 3.2.

3.1 Quarterly Averages Calculation

From the pool of acceptable data, quarterly averages were calculated by using the simple arithmetic mean determination shown in Equation 1.

$$X = \frac{\Sigma X_i}{n} \qquad \textit{Equation 1}$$

where,

X_i = individual sampling data,

n = the number of valid sampling points in the quarter.

FIGURE 3-1
METEOROLOGICAL DATA SHEET

DAILY WEATHER LOGSHEET

Date	Wind Speed	Wind Direction	Wind Sigma	Temperature (F)	Relative Humidity %	Precipitation
*1-01-01	15	315		10	70	0.00
1-02-01	8	292		7	88	0.00
1-03-01	6	247		22	70	0.00
*1-04-01	6	248		26	81	0.00
1-05-01	14	292		38	79	0.00
1-06-01	5	292		34	88	0.00
*1-07-01	5	270		31	92	0.00
1-08-01	8	315		23	85	0.00
*1-09-01	8	0		26	84	0.00
1-10-01	6	90		27	75	0.00
1-11-01	6	180		30	61	0.00
1-12-01	7	180		35	89	0.00
*1-13-01	8	157		35	86	0.08
1-14-01	13	135		41	96	0.16
1-15-01	13	180		35	72	0.05
1-16-01	8	247		33	67	0.00
1-17-01	7	315		31	72	0.00
1-18-01	6	225		31	72	0.00
1-19-01	4	315		29	69	0.00
*1-20-01	8	292		22	81	0.00
1-21-01	10	247		27	71	0.00
1-22-01	0	0		29	78	0.00
1-23-01	3	0		32	75	0.00
1-24-01	5	270		29	78	0.00
*1-25-01	6	270		24	77	0.00

* Denotes Air Sampling Date

FIGURE 3-1 (cont.)

DAILY WEATHER LOGSHEET

Date	Wind Speed	Wind Direction	Wind Sigma	Temperature (F)	Relative Humidity %	Precipitation
1-26-01	10	202		32	54	0.00
1-27-01	18	247		28	75	0.20
1-28-01	15	22		32	77	0.00
1-29-01	11	112		43	69	0.05
1-30-01	11	135		39	92	0.70
*1-31-01	7	202		34	78	0.10
2-01-01	7	292		32	78	0.50
2-02-01	19	337		14	75	0.00
2-03-01	19	90		31	46	0.00
2-04-01	11	180		33	47	0.50
2-05-01	14	247		37	89	0.00
*2-06-01	12	247		44	38	0.00
2-07-01	7	112		41	67	0.00
2-08-01	9	90		59	69	0.00
2-09-01	8	157		45	73	0.50
2-10-01	19	247		23	75	0.70
2-11-01	16	0		27	66	0.00
*2-12-01	10	90		37	60	0.00
2-13-01	8	112		43	71	0.00
2-14-01	5	135		45	86	0.08
2-15-01	7	90		35	94	0.20
2-16-01	8	337		31	96	0.02
2-17-01	13	337		27	74	0.00
*2-18-01	12	0		44	57	0.00
2-19-01	9	90		42	55	0.00

* Denotes Air Sampling Date

FIGURE 3-1 (cont.)

DAILY WEATHER LOGSHEET

Date	Wind Speed	Wind Direction	Wind Sigma	Temperature (F)	Relative Humidity %	Precipitation
2-20-01	9	247		42	51	0.00
2-21-01	12	337		27	53	0.00
2-22-01	12	45		28	68	0.00
2-23-01	7	180		32	83	0.00
*2-24-01	17	180		50	85	0.14
2-25-01	17	157		45	70	0.18
2-26-01	13	270		35	62	0.06
2-27-01	6	225		45	66	0.00
2-28-01	9	90		40	72	0.00
3-01-01	7	143		32	69	0.00
*3-02-01	5	135		41	57	0.10
3-03-01	4	247		41	70	0.00
3-04-01	5	0		39	80	0.00
3-05-01	9	0		33	78	0.00
3-06-01	14	315		33	56	0.00
3-07-01	11	315		39	56	0.00
*3-08-01	7	292		37	69	0.00
3-09-01	8	135		33	66	0.00
3-10-01	4	0		32	56	0.14
3-11-01	7	90		46	41	0.025
3-12-01	13	180		52	74	0.00
3-13-01	13	225		50	61	0.10

* Denotes Air Sampling Date

FIGURE 3-1 (cont.)

DAILY WEATHER LOGSHEET

Date	Wind Speed	Wind Direction	Sigma	Temperature (F)	Relative Humidity %	Precipitation
*3-14-01	14	292		48	54	0.00
3-15-01	13	225		51	49	0.10
3-16-01	5	112		40	46	0.57
3-17-01	11	270		36	93	0.10
3-18-01	12	225		34	85	0.02
3-19-01	4	45		41	67	0.00
*3-20-01	7	45		45	56	0.02
3-21-01	8	23		46	58	0.00
*3-22-01	7	45		47	58	0.00
3-23-01	6	157		49	69	0.10
3-24-01	7	135		37	81	0.00
3-25-01	11	157		31	58	0.02
*3-26-01	13	157		30	45	0.00
3-27-01	6	0		35	50	0.00
3-28-01	4	45		40	41	0.00
3-29-01	10	135		45	44	0.00
3-30-01	10	135		48	86	0.00
3-31-01	7	135		43	76	0.00

* Denotes Air Sampling Date

3.2 Sampler Quarterly Averages

The simple quarterly average for each set of data from a particular sampler are calculated in the following tables, 3.1 through 3.4.

TABLE 3.1 - Sampler Location N3

DATE	FILTER NO	LEAD (ug/m^3)	TSP* (ug/m^3)
1-01-01	6048369	0.00	28.34
1-04-01	----------	----------	----------
1-07-01	6048392	Upset Condition	----------
1-09-01	6048400	0.46 (Rerun)	63.33
1-13-01	6048404	Ran over time	----------
1-20-01	6048383	1.47	33.39
1-25-01	6048388	0.32	105.96
1-31-01	6048430	3.26	19.65
2-06-01	6048435	0.09	40.11
2-12-01	6048440	0.37	36.08
2-18-01	6048446	0.52	56.14
2-24-01	6048455	High Wind	----------
3-02-01	6048457	9.35	25.08
3-08-01	6048466	0.05	37.75
3-14-01	----------	Power failure	----------
3-20-01	----------	Surge protector failed	----------
3-22-01	6048479	0.13 (Rerun)	48.30
3-26-01	6048481	0.00	22.21
		=========	=========
	AVERAGE	0.62	43.03

TABLE 3.2 - Sampler Location OS

DATE	FILTER NO.	LEAD (ug/m^3)	TSP* (ug/m^3)
1-01-01	6048367	Motor Out	----------
1-04-01	6048376	0.04 (Rerun)	57.54
1-07-01	6048379	Upset condition	----------
1-09-01	6048397	0.24 (Rerun)	53.49
1-13-01	6048405	0.00	21.49
1-20-01	6048380	0.80	30.04
1-25-01	6048387	0.13	36.23
1-31-01	6048391	0.00	13.38
2-06-01	6048433	0.79	30.15
2-12-01	6048443	0.06	31.66
2-18-01	6048447	0.01	23.30
2-24-01	6048453	High Wind	---------
3-02-01	6048460	0.37	18.86
3-08-01	6048465	1.31	46.45
3-14-01	----------	Power failure	----------
3-20-01	6048471	0.99	52.07
3-22-01	6048477	0.01 (Rerun)	36.64
3-26-01	6048488	Lack of time	----------
		=========	=========
	AVERAGE	0.37	34.72

TABLE 3.3 - Sampler Location O3

DATE	FILTER NO.	LEAD (ug/m^3)	TSP* (ug/m^3)
1-01-01	6048375	Motor Out	--------
1-04-01	6048377	0.04 (Rerun)	58.22
1-07-01	6048378	Upset Condition	--------
1-09-01	6048398	0.59 (Rerun)	57.43
1-13-01	6048406	0.00	18.61
1-20-01	6048381	1.30	33.05
1-25-01	6048386	0.58	51.98
1-31-01	6048429	Lacks time/Power failure	----------
2-06-01	6048432	0.60	27.36
2-12-01	6048442	0.12	33.76
2-18-01	6048448	0.01	24.57
2-24-01	6048454	High wind/lacks time	--------
3-02-01	6048461	Over time	--------
3-08-01	6048464	1.56	64.52
3-14-01	----------	Power failure	---------
3-20-01	6048476	0.00	25.48-
3-22-01	6048483	0.20(Rerun)	39.23
3-26-01	6048487	7.97	84.83
		==========	==========
	AVERAGE	1.08	39.93

TABLE 3.4 - Filter Blank

DATE	FILTER NO.	LEAD (ug/filter)	TSP* (ug/filter)
1-01-01	6048372	6	1200
1-04-01	----------	-------	-------
1-07-01	6048395	6	12800
1-09-01	6048402	6	4500
1-13-01	6048407	6	-1400
1-20-01	6048385	6	500
1-25-01	6048390	49	-1600
1-31-01	6048431	6	100
2-06-01	6048437	6	4900
2-12-01	6048444	145	4100
2-18-01	6048450	6	600
2-24-01	6048456	6	-3700
3-02-01	6048462	6134	-8800
3-08-01	6048469	6	-8800
3-14-01	Power failure	-------	-------
3-20-01	6048480	6	-4000
3-22-01	6048486	6	-700
3-26-01	6048561	6	8400
		=========	=========
	AVERAGE	25.38	506.25

*TSP - Total Suspended Particulate

3.3 Instrument Precision Calculation

The estimates of precision for ambient air quality measurements from the TSP method are calculated from results obtained from the collection of two samplers at one sampling site, N3. The calculated precision from this one sampling site is considered indicative of the precision at all sampling sites for the TSP method.

Using the paired measurements for the official sampler, labeled "N3" and the secondary sampler, labeled "N3-QC," the precision was calculated from the following equations. These numbers are reported on the Data Assessment Report shown in Figure 3-2.

Percentage Difference, d_i

$$d_i = \frac{Y_i - X_i}{X_i} \times 100\%$$

where: Y_i = the concentration TSP measured by the secondary sampler; and
X_i = the concentration TSP measured by the official sampler.

Average Percentage Difference, d_j

$$d_j = \frac{\Sigma d_i}{n}$$

where: n = the number of comparisons.

Standard Deviation, S_j

$$S_j = \sqrt{\frac{\Sigma(d_i)^2 - n(d_j)^2}{n - 1}}$$

96% Probability Limits

$$\text{Upper Limit} = d_j + \frac{1.96(S_j)}{2}$$

$$\text{Lower Limit} = d_j - \frac{1.96(S_j)}{2}$$

FIGURE 3-2
DATA ASSESSMENT REPORT

Date: April 26, 2001
Auditor: Heather Young

Allocated Samplers

d_i = **13%**
d_j = **4%**
S_j = **10.4%**

Upper Limit = 14.20%

Lower Limit = -6.2%

Range = 36.83 to 57.23

Flow Rate Percentage Differences:

Sampler #1:(See Sect. 3-4) **Sampler #2:**(See Sect. 3-4)

Sampler #3:(See Sect. 3-4) **Sampler #4:**(See Sect. 3-4)

3.4 Single Instrument Accuracy

Estimates of accuracy for ambient air quality measurements from the TSP method are calculated from the results of independent audits. Once each sampling quarter, the flow rate of each high-volume sampler is audited.

Jim Henry with the IEPA Collinsville Field Office audited the sampler motors. Results of the audit were forwarded to Chemetco via email and are on record at the facility.

3.5 Documentation

For each of the sampling episodes, data packages have been assembled to facilitate the retrieval of necessary data to perform and check calculations, assumptions and determinations and to generate accurate reports. These packages are maintained in a central project file at Chemetco.

Data forms are attached with backup and confirmatory information in Appendices A through C. They include:

- Filter Conditioning and TSP Calculation Logsheets;
- Calculation pages; and,
- Laboratory Analyses Report Sheet.

APPENDIX A

CALCULATION COVER SHEET

Company Name: Chemetco, Inc.

Project Name: Ambient Air Monitoring

Project Number: 01QTR1

Purpose: Sampler Averages

Total Number of Pages: 6 (including this one)

Date: April 26, 2001

Originator's Signature: _____

2001 1ST QUARTER AVERAGE CALCULATION

LOCATION N3-QC

DATE	FILTER NO.	TIME FINISH	TIME START	ELAPSED TIME	CFM	CUBIC METERS	LEAD ug/fltr	TSP ug/fltr	LEAD ug/m3	TSP ug/m3	
1/01/01	6048371	11526.2	10086.2	1440	44.3	1821	6	50200	0.00	27.57	
1/04/01											
1/07/01	6048393*	12967.6	11527.6	1440	45	2020	6	49800	0.00	24.65	Upset Condition, #2 Baghouse
1/09/01	6048401	14400.9	12969	1431.9	45	2020	263	118700	0.13	58.76	Rerun for 1/7
1/13/01	6048403*	16552	14410.2	2141.8	45	2020	2383	78900	1.18	39.06	Ran Over/Motor Out
1/20/01											No Motor
1/25/01	6048384	19435.7	17995.7	1440	45	2020	4190	202000	2.07	100.00	
1/31/01	6048427	20876.9	19437.9	1439	45	2020	66	44300	0.03	21.93	
2/06/01	6048436*	22318.2	20878.2	1440	45.6	1970	2588	85500	1.31	43.40	Ran wrong day
2/12/01	6048441	23760	22320	1440	45.6	1970	941	83000	0.48	42.13	
2/18/01	6048449*	25201.3	23761.2	1440.1	45.6	1970	7836	141100	3.98	71.62	Ran wrong day
2/24/01	6048452*	26642.5	25202.5	1440	45.6	1970	16931	123400	8.59	62.64	High Wind
3/02/01	6048459	28083.9	26643.8	1440.1	46.1	1992	6	80800	0.00	40.57	
3/08/01	6048467	29525.1	28085.1	1440	45	1944	82.3	123400	0.04	63.48	
3/14/01											Power failure/did notanalyze
3/20/01	6048478	32408.5	30968.4	1440.1	45	1944	6	68100	0.00	35.03	
3/22/01	6048482	33851	32410	1441	45.6	1971	134	96900	0.07	49.16	Rerun for 3/14
3/26/01	6048489*	37506	33851.6	3654.4							Wrong day/Ran over time
								AVERAGE	0.31	48.74	

*Not included in average due to reason noted

2001 1ST QUARTER AVERAGE CALCULATION

LOCATION N3

DATE	FILTER NO.	TIME FINISH	TIME START	ELAPSED TIME	CFM	CUBIC METERS	LEAD ug/fltr	TSP ug/fltr	LEAD ug/m3	TSP ug/m3	
1/01/01	6048369	1420	0	1420	47.3	2015	6	57100	0.00	28.34	
1/04/01											
1/07/01	6048392*	1421	0	1421	46.7	1991	6	43500	0.00	21.85	Upset Condition/#2 Baghouse
1/09/01	6048400	1421	0	1421	47.3	2016	922	127700	0.46	63.33	Rerun for 1/7
1/13/01	6048404*	1906	0	1906	47.3	2705	3974	102600	1.47	37.94	Over time
1/20/01	6048383	1410	0	1410	47.3	2001	641	66800	0.32	33.39	
1/25/01	6048388	1422	0	1422	46.7	1992	6504	211100	3.26	105.96	
1/31/01	6048430	1420	0	1420	47.3	2015	179	39600	0.09	19.65	
2/06/01	6048435	1440	0	1440	46.7	1992	732	79900	0.37	40.11	
2/12/01	6048440	1424	0	1424	47.3	2021	1059	72900	0.52	36.08	
2/18/01	6048446	1419	0	1419	46.7	1988	4336	111600	2.18	56.14	
2/24/01	6048455*	1423	0	1423	46.7	1994	18637	131100	9.35	65.76	High Wind
3/02/01	6048457	1420	0	1420	46.7	1989	109	49900	0.05	25.08	
3/08/01	6048466	1420	0	1420	46.7	1989	6	75100	0.00	37.75	
3/14/01											Power failure/did not analyze
3/20/01											surge protector/did not analyze
3/22/01	6048479	1423	0	1423	45.3	1934	257	93400	0.13	48.30	Rerun for 3/14
3/26/01	6048481	1417	0	1417	46.7	1985	6	44100	0.00	22.21	
								AVERAGE	0.62	43.03	

*Not included in average due to reason noted

2001 1ST QUARTER AVERAGE CALCULATION

LOCATION OS

DATE	FILTER NO.	TIME FINISH	TIME START	ELAPSED TIME	CFM	CUBIC METERS	LEAD ug/fltr	TSP ug/fltr	LEAD ug/m3	TSP ug/m3	
1/01/01	6048367*	1440	0	1440							Motor out/Will Rerun
1/04/01	6048376	1440	0	1440	45.3	1957	80.1	112600	0.04	57.54	Rerun for 1/1
1/07/01	6048379*	1440	0	1440	45.3	1957	3295	49600	1.68	25.35	Upset Condition#2 Baghouse
1/09/01	6048397	1440	0	1440	46	1987	483	106300	0.24	53.49	Rerun for 1/7
1/13/01	6048405	1440	0	1440	46	1987	6	42700	0.00	21.49	
1/20/01	6048380	1440	0	1440	46	1987	1599	59700	0.80	30.04	
1/25/01	6048387	1440	0	1440	45.3	1957	256	70900	0.13	36.23	
1/31/01	6048391	1440	0	1440	46.7	2017	6	27000	0.00	13.38	
2/06/01	6048433	1440	0	1440	45.3	1957	1544	59000	0.79	30.15	
2/12/01	6048443	1440	0	1440	46	1987	120	62900	0.06	31.66	
2/18/01	6048447	1440	0	1440	45.3	1957	19	45600	0.01	23.30	
2/24/01	6048453*	1440	0	1440	45.3	1957	6	36900	0.00	18.86	High wind
3/02/01	6048460	1440	0	1440	45.3	1957	723	36900	0.37	18.86	
3/08/01	6048465	1440	0	1440	44.6	1927	2523	89500	1.31	46.45	
3/14/01											Power failure/did not analyze
3/20/01	6048471	1440	0	1440	45.3	1957	1928	101900	0.99	52.07	
3/22/01	6048477	1440	0	1440	44.6	1927	10	70600	0.01	36.64	Rerun for 3/14
3/26/01	6048488*	844	0	844	45.3	1957	550	81500	0.28	41.65	Lack of time
								AVERAGE	0.37	34.72	

*Not included in average due to reason noted

2001 1ST QUARTER AVERAGE CALCULATION

LOCATION O3

DATE	FILTER NO.	TIME FINISH	TIME START	ELAPSED TIME	CFM	CUBIC METERS	LEAD ug/fltr	TSP ug/fltr	LEAD ug/m3	TSP ug/m3	
1/01/01	6048375*										Motor Out/Will Rerun
1/04/01	6048377	83686.1	82245.9	1440.2	45.6	1970	80.1	114700	0.04	58.22	Rerun for 1/1
1/07/01	6048378*	84913.9	83687.3	1226.6	44.9	1652	5220	56500	3.16	34.20	Upset Condition#2 Baghouse
1/09/01	6048398	86355.1	84915.1	1440	44.9	1940	1142	111400	0.59	57.43	Rerun for 1/7
1/13/01	6048406	87796.3	86356.3	1440	44.9	1940	6	36100	0.00	18.61	
1/20/01	6048381	89866.9	88427	1439.9	45.6	1970	2556	65100	1.30	33.05	
1/25/01	6048386	91308.2	89868.3	1439.9	46.9	2026	1181	105300	0.58	51.98	
1/31/01	6048429*	91508.7	91309.5	199.2	45.5	2017					Lack of time
2/06/01	6048432	92956.2	91510.6	1445.6	45.6	1978	1196	54100	0.60	27.36	
2/12/01	6048442	94393.2	92953.2	1440	45.6	1970	237	66500	0.12	33.76	
2/18/01	6048448	95835.1	94394.9	1440.2	45.6	1970	19	48400	0.01	24.57	
2/24/01	6048454*	97062	95836.5	1225.5	45.6	1676	262	106900	0.16	63.76	High Wind, Lack of time
3/02/01	6048461*	98675.8	97063.3	1612.5	44.9	2172	4530	249300	2.09	114.78	Overtime
3/08/01	6048464	100117	98677.4	1440	45.6	1970	3065	127100	1.56	64.52	
3/14/01											Power failure/did not analyze
3/20/01	6048476	2313.2	873.1	1440.1	46	2017	6	51400	0.00	25.48	
3/22/01	6048483	3756	2316	1440	44.9	1940	381	76100	0.20	39.23	Rerun for 3/14
3/26/01	6048487	5197.7	3757.8	1439.9	45.6	1970	15693	167100	7.97	84.83	
								AVERAGE	1.08	39.93	

*Not included in average due to reason noted

2001 1ST QUARTER AVERAGE CALCULATION

LOCATION FB

DATE	FILTER NO.	LEAD ug/filter	TSP ug/filter	
1/01/01	6048372	6	1200	
1/04/01				
1/07/01	6048395	6	12800	
1/09/01	6048402	6	4500	
1/13/01	6048407	6	-1400	
1/20/01	6048385	6	500	
1/25/01	6048390	49	-1600	
1/31/01	6048431	6	100	
2/06/01	6048437	6	4900	
2/12/01	6048444	145	4100	
2/18/01	6048450	6	600	
2/24/01	6048456	6	-3700	
3/02/01	6048462	134	-8800	
3/08/01	6048469	6	-8800	
3/14/01				Power failure/did not analyze
3/20/01	6048480	6	-4000	
3/22/01	6048486	6	-700	Rerun for 3/14
3/26/01	6048561	6	8400	
	AVERAGES:	25.38	506.25	

CALCULATION COVER SHEET

Company Name: Chemetco, Inc.

Project Name: Ambient Air Monitoring

Project Number: 01QTR1

Purpose: Sampler Precision Calculation

Total Number of Pages: 2 (including this one)

Date: April 26, 2001

Originator's Signature:

SAMPLER PRECISION CALCULATION (PARTICULATE)

Sampling Date	Duplicate Sampler	Official Sampler	Difference	Difference (Square)
1-01-01	27.57	28.34	-0.77	0.593
1-04-01	———	———	———	———
1-07-01	Upset condition	———	———	———
1-09-01	58.76	63.33	-4.57	20.885
1-13-01	Over time	21.49	———	———
1-20-01	No Motor	33.39	———	———
1-25-01	100.00	105.96	-5.96	35.522
1-31-01	21.93	19.65	2.28	5.198
2-06-01	43.40	40.11	———	——— N3QC ran on wrong day
2-12-01	42.13	36.08	6.05	36.60
2-18-01	71.62	56.14	———	——— N3QC ran on wrong day
2-24-01	62.64	65.76	-3.12	9.734 High Wind
3-02-01	40.57	25.08	15.49	239.94
3-08-01	63.48	37.75	25.73	662.03
3-14-01	Power failure	———	———	———
3-20-01	35.03	Power failure	———	———
3-22-01	49.16	48.30	0.86	0.740
3-26-01	Over time			
		$\Sigma d_i =$	35.99	$\Sigma d_i^2 =$ 1011.0

n=9

$$d_j = \frac{\Sigma d_j}{n} = \frac{35.99}{9} = 4.0\%$$

$$S_j = \sqrt{\frac{\Sigma(d_j)^2 - n(d_j)^2}{n-1}} = \sqrt{\frac{1011 - 9(16)}{9-1}} = \sqrt{\frac{1011 - 144}{8}} = 10.41\%$$

$$\text{Upper Limit} = d_j + \frac{1.96(S_j)}{2} = 4.0\% + \frac{1.96(10.41)}{2} = 4.0 + 10.20 = 14.20\%$$

$$\text{Lower Limit} = d_j - \frac{1.96(S_j)}{2} = 4.0\% - \frac{1.96(10.41)}{2} = 4.0 - 10.20 = -6.20\%$$

Official Average Particulate: 43.03 mg/m^3

Range: 36.83 to 57.23

APPENDIX B

Chemetco, Inc.
Rt. 3 at Chemetco Lane
Hartford, IL 62048

ATTN: Heather Young Date: 12-Jan-01

Sample type: Hi-Vol Air Monitoring Program

Sample Identification: Listed below

Filter ID	Location	Pb, ug/filter	TSP,mg/filter
G6048367	OS	<6	4.7
G6048375	O3	<6	4.5
G6048369	N3	<6	57.1
G6048371	N3QC	<6	50.2
G6048368	Extra	<6	5.1
G6048372	FB	<6	1.2

Analyst: Matt Shoemaker

Title: Laboratory Technician

Chemetco, Inc.
Rt. 3 at Chemetco Lane
Hartford, IL 62048

ATTN: Heather Young **Date:** 12-Jan-01

Sample type: Hi-Vol Air Monitoring Program

Sample Identification: Listed below

Filter ID	Location	Pb, ug/filter	TSP,mg/filter
G6048376	OS	80.1	112.6
G6048377	O3	80.1	114.7

Analyst: Matt Shoemaker

Title: Laboratory Technician

Chemetco, Inc.
Rt. 3 at Chemetco Lane
Hartford, IL 62048

ATTN: Heather Young

Date: 19-Jan-01

Sample type: Hi-Vol Air Monitoring Program

Sample Identification: Listed below

Filter ID	Location	Pb, ug/filter	TSP,mg/filter
G6048379	OS	3,295	49.6
G6048378	O3	5,220	56.5
G6048392	N3	<6	43.5
G6048393	N3QC	<6	49.8
G6048394	Extra	<6	39.1
G6048395	FB	<6	12.8

Analyst: Matt Shoemaker

Title: Laboratory Technician

Chemetco, Inc.
Rt. 3 at Chemetco Lane
Hartford, IL 62048

ATTN: Heather Young

Date: 19-Jan-01

Sample type: Hi-Vol Air Monitoring Program

Sample Identification: Listed below

Filter ID	Location	Pb, ug/filter	TSP,mg/filter
G6048397	OS	483	106.3
G6048398	O3	1,142	111.4
G6048400	N3	922	127.7
G6048401	N3QC	263	118.7
G6048402	FB	<6	4.5

Analyst: Matt Shoemaker

Title: Laboratory Technician

Chemetco, Inc.
Rt. 3 at Chemetco Lane
Hartford, IL 62048

ATTN: Heather Young

Date: 25-Jan-01

Sample type: Hi-Vol Air Monitoring Program

Sample Identification: Listed below

Filter ID	Location	Pb, ug/filter	TSP,mg/filter
G6048405	OS	<6	42.7
G6048406	O3	<6	36.1
G6048404	N3	3,974	102.6
G6048403	N3QC	2,383	78.9
G6048399	Extra	21,240	166.8
G6048407	FB	<6	-1.4

Analyst: Matt Shoemaker

Title: Laboratory Technician

Chemetco, Inc.
Rt. 3 at Chemetco Lane
Hartford, IL 62048

ATTN: Heather Young Date: 30-Jan-01

Sample type: Hi-Vol Air Monitoring Program

Sample Identification: Listed below

Filter ID	Location	Pb, ug/filter	TSP,mg/filter
G6048380	OS	1,599	59.7
G6048381	O3	2,556	65.1
G6048383	N3	641	66.8
G6048411	Extra	402	60.6
G6048385	FB	<6	0.5

Analyst: Matt Shoemaker

Title: Laboratory Technician

Chemetco, Inc.
Rt. 3 at Chemetco Lane
Hartford, IL 62048

ATTN: Heather Young

Date: 7-Feb-01

Sample type: Hi-Vol Air Monitoring Program

Sample Identification: Listed below

Filter ID	Location	Pb, ug/filter	TSP,mg/filter
G6048387	OS	256	70.9
G6048386	O3	1,181	105.3
G6048388	N3	6,504	211.1
G6048384	N3QC	4,190	202
G6048389	Extra	9,281	253.2
G6048390	FB	49	-1.6

Analyst: Matt Shoemaker

Title: Laboratory Technician

Chemetco, Inc.
Rt. 3 at Chemetco Lane
Hartford, IL 62048

ATTN: Heather Young

Date: 12-Feb-01

Sample type: Hi-Vol Air Monitoring Program

Sample Identification: Listed below

Filter ID	Location	Pb, ug/filter	TSP,mg/filter
G6048391	OS	<6	27
G6048429	O3	629	5.3
G6048430	N3	179	39.6
G6048427	N3QC	66	44.3
G6048428	Extra	66	44.3
G6048431	FB	<6	0.1

Analyst: Matt Shoemaker

Title: Laboratory Technician

Chemetco, Inc.
Rt. 3 at Chemetco Lane
Hartford, IL 62048

ATTN: Heather Young Date: 16-Feb-01

Sample type: Hi-Vol Air Monitoring Program

Sample Identification: Listed below

Filter ID	Location	Pb, ug/filter	TSP,mg/filter
G6048433	OS	1,544	59
G6048432	O3	1,196	54.1
G6048435	N3	732	79.9
G6048436	N3QC	2,588	85.5
G6048434	Extra	1,196	70.8
G6048437	FB	<6	4.9

Analyst: Matt Shoemaker

Title: Laboratory Technician

Chemetco, Inc.
Rt. 3 at Chemetco Lane
Hartford, IL 62048

ATTN: Heather Young

Date: 21-Feb-01

Sample type: Hi-Vol Air Monitoring Program

Sample Identification: Listed below

Filter ID	Location	Pb, ug/filter	TSP,mg/filter
G6048443	OS	120	62.9
G6048442	O3	237	66.5
G6048440	N3	1,059	72.9
G6048441	N3QC	941	83
G6048438	Extra	2,936	100.2
G6048444	FB	145	4.1

Analyst: Matt Shoemaker

Title: Laboratory Technician

Chemetco, Inc.
Rt. 3 at Chemetco Lane
Hartford, IL 62048

ATTN: Heather Young Date: 28-Feb-01

Sample type: Hi-Vol Air Monitoring Program

Sample Identification: Listed below

Filter ID	Location	Pb, ug/filter	TSP,mg/filter
G6048447	OS	19	45.6
G6048448	O3	19	48.4
G6048446	N3	4,336	111.6
G6048449	N3QC	7,836	141.1
G6048445	Extra	8,769	114.7
G6048450	FB	<6	0.6

Analyst: Matt Shoemaker

Title: Laboratory Technician

Chemetco, Inc.
Rt. 3 at Chemetco Lane
Hartford, IL 62048

ATTN: Heather Young

Date: 7-Mar-01

Sample type: Hi-Vol Air Monitoring Program

Sample Identification: Listed below

Filter ID	Location	Pb, ug/filter	TSP,mg/filter
G6048453	OS	<6	36.9
G6048454	O3	262	106.9
G6048455	N3	18,637	131.1
G6048452	N3QC	16,931	123.4
G6048451	Extra	16,800	124.6
G6048456	FB	<6	-3.7

Analyst: Matt Shoemaker

Title: Laboratory Technician

Chemetco, Inc.
Rt. 3 at Chemetco Lane
Hartford, IL 62048

ATTN: Heather Young Date: 14-Mar-01

Sample type: Hi-Vol Air Monitoring Program

Sample Identification: Listed below

Filter ID	Location	Pb, ug/filter	TSP,mg/filter
G6048460	OS	723	36.9
G6048461	O3	4,530	249.3
G6048457	N3	109	49.9
G6048459	N3QC	355	54.9
G6048458	Extra	355	50.5
G6048462	FB	134	-8.8

Analyst: Matt Shoemaker

Title: Laboratory Technician

Chemetco, Inc.
Rt. 3 at Chemetco Lane
Hartford, IL 62048

ATTN: Heather Young Date: 20-Mar-01

Sample type: Hi-Vol Air Monitoring Program

Sample Identification: Listed below

Filter ID	Location	Pb, ug/filter	TSP,mg/filter
G6048465	OS	2,523	89.5
G6048464	O3	3,065	127.1
G6048466	N3	<6	75.1
G6048467	N3QC	<6	80.8
G6048468	Extra	<6	61.4
G6048469	FB	<6	-8.8

Analyst: Matt Shoemaker

Title: Laboratory Technician

Chemetco, Inc.
Rt. 3 at Chemetco Lane
Hartford, IL 62048

ATTN: Heather Young Date: 26-Mar-01

Sample type: Hi-Vol Air Monitoring Program

Sample Identification: Listed below

Filter ID	Location	Pb, ug/filter	TSP,mg/filter
G6048474	OS	5,638	28.9
G6048472	N3	5,866	246.1
G6048473	N3QC	388	226.5
G6048475	FB	<6	-1.2

Analyst: Matt Shoemaker

Title: Laboratory Technician

Chemetco, Inc.
Rt. 3 at Chemetco Lane
Hartford, IL 62048

ATTN: Heather Young Date: 28-Mar-01

Sample type: Hi-Vol Air Monitoring Program

Sample Identification: Listed below

Filter ID	Location	Pb, ug/filter	TSP,mg/filter
G6048471	OS	1,928	101.9
G6048476	O3	<6	51.4
G6048478	N3QC	<6	68.1
G6048470	Extra	<6	58.6
G6048480	FB	<6	-4

Analyst: Matt Shoemaker

Title: Laboratory Technician

Chemetco, Inc.
Rt. 3 at Chemetco Lane
Hartford, IL 62048

ATTN: Heather Young

Date: 3-Apr-01

Sample type: Hi-Vol Air Monitoring Program

Sample Identification: Listed below

Filter ID	Location	Pb, ug/filter	TSP,mg/filter
G6048477	OS	10	70.6
G6048483	O3	381	76.1
G6048479	N3	257	93.4
G6048482	N3QC	134	96.9
G6048485	Extra	10	83
G6048486	FB	<6	-0.7

Analyst: Matt Shoemaker

Title: Laboratory Technician

Chemetco, Inc.
Rt. 3 at Chemetco Lane
Hartford, IL 62048

ATTN: Heather Young Date: 4-Apr-01

Sample type: Hi-Vol Air Monitoring Program

Sample Identification: Listed below

Filter ID	Location	Pb, ug/filter	TSP,mg/filter
G6048488	OS	550	81.5
G6048487	O3	15,693	167.1
G6048481	N3	<6	44.1
G6048489	N3QC	<6	126.5
G6048490	Extra	<6	14.6
G6048561	FB	<6	8.4

Analyst: Matt Shoemaker

Title: Laboratory Technician

APPENDIX C

Chemetco Environmental Management
Filter Conditioning Logsheet

	Pre Sampling Conditioning				Post Sampling Conditioning			
Filter Number	Date In	Date Out	Weight, mg	Date In	Date Out	Weight, mg	W_{net}, mg	W_{net}, ug
G6048556	3/21/01	3/23/01	4329.9					
G6048557	3/21/01	3/23/01	4289.8					
G6048558	3/21/01	3/23/01	4308.3					
G6048559	3/21/01	3/23/01	4315.5					
G6048560	3/21/01	3/23/01	4302.5					
G6048561	3/21/01	3/23/01	4286.9	3/29/01	4/3/01	4295.3	8.4	
G6048562	3/21/01	3/23/01	4314.5					
G6048563	3/21/01	3/23/01	4296.3					
G6048564								
G6048565	3/21/01	3/23/01	4308.2					
G6048566	3/21/01	3/23/01	4305.0					
G6048567	3/21/01	3/23/01	4282.9					
G6048568	3/21/01	3/23/01	4297.5					
G6048569	3/21/01	3/23/01	4292.3					
G6048570	3/21/01	3/23/01	4424.5					
G6048571	3/21/01	3/23/01	4434.5					

Chemetco Environmental Management
Filter Conditioning Logsheet

	Pre Sampling Conditioning				Post Sampling Conditioning			
Filter Number	Date In	Date Out	Weight, mg	Date In	Date Out	Weight, mg	W_{net}, mg	W_{net}, ug
G6048487	3/6/01	3/9/01	4349.2	3/29/01	4/3/01	4516.3	167.1	
G6048488	3/6/01	3/9/01	4346.7	3/29/01	4/3/01	4428.2	81.5	
G6048489	3/6/01	3/9/01	4364.1	3/29/01	4/3/01	4490.6	126.5	
G6048490	3/6/01	3/9/01	4314.2	3/29/01	4/3/01	4328.8	14.6	
G6048491								
G6048492								
G6048493								
G6048494								
G6048495								
G6048496								
G6048497								
G6048498								
G6048499								
G6048500								
G6048501								
G6048502								

Chemetco Environmental Management
Filter Conditioning Logsheet

	Pre Sampling Conditioning				Post Sampling Conditioning			
Filter Number	Date In	Date Out	Weight, mg	Date In	Date Out	Weight, mg	W_{net}, mg	W_{net}, ug
G6048471	2/14/01	2/16/01	4353.9	3/23/01	3/27/01	4455.8	101.9	
G6048472	3/6/01	3/9/01	4336.0	3/21/01	3/23/01	4582.1	246.1	
G6048473	3/6/01	3/9/01	4341.3	3/21/01	3/23/01	4567.8	226.5	
G6048474	3/6/01	3/9/01	4352.9	3/21/01	3/23/01	4381.8	28.9	
G6048475	3/6/01	3/9/01	4341.8	3/21/01	3/23/01	4340.6	-1.2	
G6048476	3/6/01	3/9/01	4353.4	3/23/01	3/27/01	4404.8	51.4	
G6048477	3/6/01	3/9/01	4335.3	3/29/01	4/2/01	4405.9	70.6	
G6048478	3/6/01	3/9/01	4344.4	3/23/01	3/27/01	4442.5	68.1	
G6048479	3/6/01	3/9/01	4357.9	3/20/01	4/2/01	4451.3	93.4	
G6048480	3/6/01	3/9/01	4341.9	3/23/01	3/27/01	4337.9	-4.0	
G6048481	3/6/01	3/9/01	4347.8	3/29/01	4/3/01	4391.6	44.1	
G6048482	3/6/01	3/9/01	4347.5	3/29/01	4/2/01	4444.4	96.9	
G6048483	3/6/01	3/9/01	4336.9	3/29/01	4/2/01	4413.0	76.1	
G6048484								
G6048485	3/6/01	3/9/01	4342.1	3/29/01	4/2/01	4425.1	83	
G6048486	3/6/01	3/9/01	4353.5	3/29/01	4/2/01	4352.8	-0.7	

Chemetco Environmental Management
Filter Conditioning Logsheet

	Pre Sampling Conditioning			Post Sampling Conditioning				
Filter Number	Date In	Date Out	Weight, mg	Date In	Date Out	Weight, mg	W_{net}, mg	W_{net}, ug
G6048455	2/14/01	2/16/01	4410.4	3/1/01	3/6/01	4541.5	131.1	
G6048456	2/14/01	2/16/01	4403.4	3/1/01	3/6/01	4399.7	-3.7	
G6048457	2/14/01	2/16/01	4414.9	3/09/01	3/13/01	4464.8	49.9	
G6048458	2/14/01	2/16/01	4425.6	3/9/01	3/13/01	4476.1	50.5	
G6048459	2/14/01	2/16/01	4407.4	3/9/01	3/13/01	4462.3	54.9	
G6048460	2/14/01	2/16/01	4411.1	3/9/01	3/13/01	4448.0	36.9	
G6048461	2/14/01	2/16/01	4396.9	3/9/01	3/13/01	4646.2	249.3	
G6048462	2/14/01	2/16/01	4426.3	3/9/01	3/13/01	4417.5	-8.8	
G6048463								
G6048464	2/14/01	2/16/01	4421.1	3/16/01	3/19/01	4548.2	127.1	
G6048465	2/14/01	2/16/01	4406.1	3/16/01	3/19/01	4495.6	89.5	
G6048466	2/14/01	2/16/01	4393.6	3/16/01	3/19/01	4468.7	75.1	
G6048467	2/14/01	2/16/01	4378.2	3/16/01	3/19/01	4459.0	80.8	
G6048468	2/14/01	2/16/01	4352.5	3/16/01	3/19/01	4413.9	61.4	
G6048469	2/14/01	2/16/01	4334.8	3/16/01	3/19/01	4326.0	-8.8	
G6048470	2/14/01	2/16/01	4347.7	3/23/01	3/27/01	4406.3	58.6	

Chemetco Environmental Management
Filter Conditioning Logsheet

	Pre Sampling Conditioning			Post Sampling Conditioning				
Filter Number	Date In	Date Out	Weight, mg	Date In	Date Out	Weight, mg	W_{net}, mg	W_{net}, ug
G6048439								
G6048440	1/30/01	2/01/01	4263.3	2/16/01	2/20/01	4336.2	72.9	
G6048441	1/30/01	2/01/01	4309.3	2/16/01	2/20/01	4392.3	83	
G6048442	1/30/01	2/01/01	4275.9	2/16/01	2/20/01	4342.4	66.5	
G6048443	1/30/01	2/01/01	4284.3	2/16/01	2/20/01	4347.2	62.9	
G6048444	1/30/01	2/01/01	4259.8	2/16/01	2/20/01	4263.9	4.1	
G6048445	1/30/01	2/01/01	4286.5	2/22/01	2/28/01	4401.2	114.7	
G6048446	1/30/01	2/01/01	4284.6	2/22/01	2/28/01	4396.2	111.6	
G6048447	1/30/01	2/01/01	4258.2	2/22/01	2/28/01	4303.8	45.6	
G6048448	1/30/01	2/01/01	4280.6	2/22/01	2/28/01	4329.0	48.4	
G6048449	1/30/01	2/01/01	4283.9	2/22/01	2/28/01	4425.0	141.1	
G6048450	1/30/01	2/01/01	4270.9	2/22/01	2/28/01	4271.5	0.6	
G6048451	1/30/01	2/01/01	4270.4	3/1/01	3/6/01	4395.0	124.6	
G6048452	1/30/01	2/01/01	4241.8	3/1/01	3/6/01	4365.2	123.4	
G6048453	2/14/01	2/16/01	4400.6	3/1/01	3/6/01	4437.5	36.9	
G6048454	2/14/01	2/16/01	4401.1	3/1/01	3/6/01	4508.0	106.9	

Chemetco Environmental Management
Filter Conditioning Logsheet

	Pre Sampling Conditioning			Post Sampling Conditioning				
Filter Number	Date In	Date Out	Weight, mg	Date In	Date Out	Weight, mg	W_{net}, mg	W_{net}, ug
G6048423	11/30/00	12/04/00	4229.9					
G6048424	11/30/00	12/04/00	4243.0	12/20/00	12/22/00	4378.8	135.8	
G6048425	11/30/00	12/04/00	4255.8	12/20/00	12/22/00	4409.5	153.7	
G6048426								
G6048427	1/15/01	1/17/01	4272.2	2/08/01	2/12/01	4316.5	44.3	
G6048428	1/15/01	1/17/01	4300.0	2/08/01	2/12/01	4344.3	44.3	
G6048429	1/15/01	1/17/01	4305.9	2/08/01	2/12/01	4311.2	5.3	
G6048430	1/15/01	1/17/01	4285.9	2/08/01	2/12/01	4325.5	39.6	
G6048431	1/15/01	1/17/01	4292.1	2/08/01	2/12/01	4292.2	0.1	
G6048432	1/15/01	1/17/01	4272.7	2/09/01	2/14/01	4326.8	54.1	
G6048433	1/15/01	1/17/01	4268.1	2/09/01	2/14/01	4327.1	59.0	
G6048434	1/30/01	2/01/01	4269.0	2/09/01	2/14/01	4339.8	70.8	
G6048435	1/30/01	2/01/01	4229.3	2/09/01	2/14/01	4309.2	79.9	
G6048436	1/30/01	2/01/01	4224.2	2/09/01	2/14/01	4309.7	85.5	
G6048437	1/30/01	2/01/01	4256.8	2/09/01	2/14/01	4261.7	4.9	
G6048438	1/30/01	2/01/01	4305.7	2/16/01	2/20/01	4405.9	100.2	

Chemetco Environmental Management
Filter Conditioning Logsheet

	Pre Sampling Conditioning			Post Sampling Conditioning				
Filter Number	Date In	Date Out	Weight, mg	Date In	Date Out	Weight, mg	W_{net}, mg	W_{net}, ug
G6048407	1/3/01	1/5/01	4343.9	1/22/01	1/24/01	4342.5	-1.4	
G6048408	1/3/01	1/5/01	4330.9					
G6048409	1/3/01	1/5/01	4300.4					
G6048410	[illegible]	[illegible]						
G6048411	1/3/01	1/5/01	4258.3	1/25/01	1/29/01	4318.9	60.6	
G6048412	11/30/00	12/04/00	4273.9	12/22/00	1/03/01	4334.6	60.7	
G6048413	11/30/00	12/04/00	4266.7	12/22/00	12/28/00	4308.2	41.5	
G6048414	11/30/00	12/04/00	4249.4	12/22/00	12/28/00	4297.0	-2.4	
G6048415	11/30/00	12/04/00	4279.2	12/22/00	12/28/00	4334.9	55.7	
G6048416	11/30/00	12/04/00	4263.0	12/22/00	12/28/00	4367.2	104.2	
G6048417	11/30/00	12/04/00	4267.5	12/22/00	12/28/00	4334.5	67	
G6048418	11/30/00	12/04/00	4270.3	12/20/00	12/22/00	4329.6	58.3	
G6048419	11/30/00	12/04/00	4247.9	12/22/00	12/28/00	4433.5	185.6	
G6048420	11/30/00	12/04/00	4287.7	12/14/00	12/18/00	4375.0	87.3	
G6048421	11/30/00	12/04/00	4291.0	12/14/00	12/18/00	4290.9	-0.1	
G6048422	11/30/00	12/04/00	4253.8	12/14/00	12/18/00	4356.2	102.4	

Chemetco Environmental Management
Filter Conditioning Logsheet

	Pre Sampling Conditioning			Post Sampling Conditioning				
Filter Number	Date In	Date Out	Weight, mg	Date In	Date Out	Weight, mg	W_{net}, mg	W_{net}, ug
G6048391	1/15/01	1/17/01	4324.7	2/8/01	2/12/01	4351.7	27.0	
G6048392	1/3/01	1/5/01	4314.4	1/15/01	1/17/01	4357.9	43.5	
G6048393	1/3/01	1/5/01	4312.6	1/15/01	1/17/01	4362.4	49.8	
G6048394	1/3/01	1/5/01	4312.7	1/15/01	1/17/01	4351.8	39.1	
G6048395	1/3/01	1/5/01	4314.6	1/15/01	1/17/01	4327.4	12.8	
G6048396	1/3/01	1/5/01	4324.5					
G6048397	1/3/01	1/5/01	4357.5	1/15/01	1/18/01	4463.8	106.3	
G6048398	1/3/01	1/5/01	4328.9	1/15/01	1/18/01	4440.3	111.4	
G6048399	1/3/01	1/5/01	4339.7	1/22/01	1/24/01	4506.5	166.8	
G6048400	1/3/01	1/5/01	4317.5	1/15/01	1/18/01	4445.2	127.7	
G6048401	1/3/01	1/5/01	4345.9	1/15/01	1/18/01	4464.6	118.7	
G6048402	1/3/01	1/5/01	4372.2	1/15/01	1/18/01	4376.7	4.5	
G6048403	1/3/01	1/5/01	4343.7	1/22/01	1/24/01	4422.6	78.9	
G6048404	1/3/01	1/5/01	4351.5	1/22/01	1/24/01	4454.1	102.6	
G6048405	1/3/01	1/5/01	4349.4	1/22/01	1/24/01	4392.1	42.7	
G6048406	1/5/01	1/5/01	4336.2	1/22/01	1/24/01	4372.3	36.1	

Chemetco Environmental Management
Filter Conditioning Logsheet

	Pre Sampling Conditioning			Post Sampling Conditioning				
Filter Number	Date In	Date Out	Weight, mg	Date In	Date Out	Weight, mg	W_{net}, mg	W_{net}, ug
G6048375	12/15/00	12/18/00	4283.7	1/09/01	1/11/01	4288.2	4.5	
G6048376	12/15/00	12/18/00	4276.3	1/09/01	1/11/01	4388.9	112.6	
G6048377	12/15/00	12/18/00	4263.5	1/09/01	1/11/01	4378.2	114.7	
G6048378	12/15/00	12/18/00	4307.2	1/15/01	1/17/01	4363.7	56.5	
G6048379	12/15/00	[illegible]/18/00	4272.0	1/15/01	1/17/01	4321.6	49.6	
G6048380	1/15/01	1/17/01	4274.1	1/25/01	1/29/01	4333.8	59.7	
G6048381	1/15/01	1/17/01	4301.9	1/25/01	1/29/01	4367.0	65.1	
G6048382	~~[illegible]~~	~~[illegible]~~	~~4285.2~~					
G6048383	1/15/01	1/17/01	4288.2	1/25/01	1/29/01	4355.0	66.8	
G6048384	1/15/01	1/17/01	4297.4	2/02/01	2/6/01	4499.4	202	
G6048385	1/15/01	1/17/01	4282.2	1/25/01	1/29/01	4283.7	0.5	
G6048386	1/15/01	1/17/01	4319.4	2/02/01	2/06/01	4424.7	105.3	
G6048387	1/15/01	1/17/01	4318.5	2/02/01	2/06/01	4389.4	70.9	
G6048388	1/15/01	1/17/01	4334.8	2/02/01	2/06/01	4545.9	211.1	
G6048389	1/15/01	1/17/01	4331.4	2/02/01	2/06/01	4584.6	253.2	
G6048390	1/15/01	1/17/01	4350.3	2/02/01	2/06/01	4348.1	-1.6	

Chemetco Environmental Management
Filter Conditioning Logsheet

	Pre Sampling Conditioning			Post Sampling Conditioning				
Filter Number	Date In	Date Out	Weight, mg	Date In	Date Out	Weight, mg	W_{net}, mg	W_{net}, ug
G9019174	11/30/00	12/04/00	4393.7	12/14/00	12/18/00	4561.3	167.6	
G9019175	11/30/00	12/04/00	4418.2	12/14/00	12/18/00	4538.9	120.7	
G6048361	12/15/00	12/18/00	4270.3	12/29/00	1/03/01	4333.3	63	
G6048362	12/15/00	12/18/00	4273.6	12/29/00	1/03/01	4328.3	54.7	
G6048363	12/15/00	12/18/00	4247.0	12/29/00	1/03/01	4309.9	62.9	
G6048364	12/15/00	12/18/00	4280.8	12/29/00	1/03/01	4329.3	48.5	
G6048365	12/15/00	12/18/00	4285.6	12/29/00	1/03/01	4286.1	0.5	
G6048366	12/15/00	12/18/00	4252.0					
G6048367	12/15/00	12/18/00	4271.1	1/09/01	1/11/01	4275.8	4.7	
G6048368	12/15/00	12/18/00	4270.5	1/09/01	1/11/01	4321.5	5.1	
G6048369	12/15/00	12/19/00	4257.2	1/09/01	1/11/01	4314.3	57.1	
G6048370 DON'T HAVE								
G6048371	12/15/00	12/18/00	4263.1	1/09/01	1/11/01	4313.3	50.2	
G6048372	12/15/00	12/18/00	4231.8	1/09/1	1/11/01	4233.0	1.2	
G6048373	12/15/00	12/18/00	4298.0	~~1/09/1~~	~~1/11/01~~	~~4299.2~~		
G6048374	12/15/00	12/18/00	4303.9					

Chemetco

FIRST IN PEOPLE – QUALITY – SERVICE

P.O. Box 67 • Hartford, IL 62048
618-254-4381 • 800-444-5564

January 30, 2001

Illinois Environmental Protection Agency
Air Monitoring Section
c/o Mr. Terry Sweitzer
P.O. Box 19276
Springfield, Illinois 62794-9276

RE: Fourth Quarter 2000 Ambient Air Monitoring Report

Dear Mr. Sweitzer,

Enclosed are two copies of the report entitled, "Ambient Air Monitoring Quarterly Report October - December, 2000 for Total Particulate and Lead."

A table of results from the extra sampler located at the northwest corner and within the fence (the former N3 and N3-QC locations) is attached to this letter. This monitor is not included in the official approved ambient air monitoring program and is included as an attachment to this letter at the request of the Illinois EPA.

If you have any questions or require additional information, please contact me at 618/254-4381 ext. 268.

Sincerely,

Heather Young, CHMM
Environmental Manager
Chemetco, Inc.

Attachment

cc: Jim Henry, IEPA--Collinsville Region
Jeff Trevino, USEPA
Chief, Air Enforcement Assurance Branch, USEPA
George von Stamwitz, Armstrong, Teasdale, Schlafly & Davis
File

AMBIENT AIR MONITORING

QUARTERLY REPORT

OCTOBER - DECEMBER 2000

FOR

TOTAL PARTICULATE

AND LEAD

CHEMETCO, INC.
January 2001

TABLE OF CONTENTS

		page
1.0	INTRODUCTION	1
1.1	Monitoring Description	1
1.2	Monitoring Report	1
2.0	SAMPLING DATE ACCOUNTING	5
3.0	MONITORING DATA	7
3.1	Quarterly Averages Calculation	7
3.2	Sampler Quarterly Averages	12
3.3	Instrument Precision Calculation	18
3.4	Single Instrument Accuracy	20
3.5	Documentation	21

APPENDIX A Calculation Worksheets
APPENDIX B Laboratory Analyses
APPENDIX C Filter Conditioning Logsheets

2000 4TH QUARTER AVERAGE CALCULATION

LOCATION O3

DATE	FILTER NO.	TIME FINISH	TIME START	ELAPSED TIME	CFM	CUBIC METERS	LEAD ug/fltr	TSP ug/fltr	LEAD ug/m3	TSP ug/m3	
10/03/00	9018888	54841.8	53401.8	1440	45.3	1957	163	123900	0.08	63.31	
10/09/00	9018912	56284.2	54844.2	1440	45.3	1957	3057	83200	1.56	42.51	
10/15/00	9018906	57725.3	56285.5	1439.8	44.6	1926	397	66300	0.21	34.42	
10/21/00	9019115	59166.7	57726.7	1440	44.6	1927	6	113500	0.00	58.91	
10/27/00	9019119	60608.2	59168.2	1440	45.3	1957	733	132100	0.37	67.50	
11/02/00	9019126	62050.1	60610	1440.1							Wrong day/did not analyze
11/09/00	9019134	63493	62053	1440	43.2	1866	6	7700	0.00	4.13	
11/14/00	9019140	64937.7	63496.9	1440.8	46	2017	1894	22500	0.94	11.16	
11/16/00	9019146*	66379.7	64939.7	1440	49.9	2156	10103	142500	4.69	66.10	Upset condition
11/20/00	9019152*	67821.4	66381.4	1440	49.3	2130	16346	203700	7.68	95.64	(hole in roof)
11/26/00	9019155*	69261.1	67824.1	1437	49.9	2151	11435	160400	5.32	74.56	weather prohibited
12/02/00	9019162	70706	69266	1440	48	2074	82.3	43800	0.04	21.12	
12/08/00	9019167	72147.6	70707.6	1440	47.3	2043	1307	111700	0.64	54.66	
12/14/00	6048420	75049.5	73629.5	1420	46.7	1989	3393	87300	1.71	43.88	
12/15/00	6048418	75049.5	73629.5	1420	46.7	1989	39	58300	0.02	29.31	
12/20/00	6048413*	77510	76441.7	1068.3	46	2017	785.6	41500	~~0.39~~	20.58	Not enough time
12/26/00	6048364	78951.5	77511.4	1440.1	45.3	1957	455	48500	0.23	24.78	
12/28/00	6048366*	80373.4	78953.1	1420.3							Fuse blown/did not run
12/30/00	6048373*	82240.4	80396.7	1843.7							Ran over/fuse/did run
								AVERAGE	0.48	39.76	

1.57 n=15

5% UCL

*Not included in average due to reason noted

Chemetco
FIRST IN PEOPLE — QUALITY — SERVICE
P.O. Box 67 • Hartford, IL 62048
618-254-4381 • 800-444-5564

January 30, 2001

Illinois Environmental Protection Agency
Air Monitoring Section
c/o Mr. Terry Sweitzer
P.O. Box 19276
Springfield, Illinois 62794-9276

RE: Fourth Quarter 2000 Ambient Air Monitoring Report

Dear Mr. Sweitzer,

Enclosed are two copies of the report entitled, "Ambient Air Monitoring Quarterly Report October - December, 2000 for Total Particulate and Lead."

A table of results from the extra sampler located at the northwest corner and within the fence (the former N3 and N3-QC locations) is attached to this letter. This monitor is not included in the official approved ambient air monitoring program and is included as an attachment to this letter at the request of the Illinois EPA.

If you have any questions or require additional information, please contact me at 618/254-4381 ext. 268.

Sincerely,

Heather Young, CHMM
Environmental Manager
Chemetco, Inc.

Attachment

cc: Jim Henry, IEPA--Collinsville Region
Jeff Trevino, USEPA
Chief, Air Enforcement Assurance Branch, USEPA
George von Stamwitz, Armstrong, Teasdale, Schlafly & Davis
File

2000 4TH QUARTER AVERAGE CALCULATION

LOCATION Extra

DATE	FILTER NO.	TIME FINISH	TIME START	ELAPSED TIME	CFM	CUBIC METERS	LEAD ug/fltr	TSP ug/fltr	LEAD ug/m3	TSP ug/m3	
10/03/00	9018890	66102.6	64774	1328.6	46.4	1849	6229	239200	3.37	129.34	Inadequate time
10/09/00	9018911*	68762.8	66183.5	2579.3							Did not get reset
10/15/00	*										
10/21/00	9019112*	70092.5	68764	1328.5	45.7	1821	2101	130900	1.15	71.87	Inadequate time
10/27/00	9019118*	71422.3	70093.8	1328.5	45.7	1821	6	104900	0.00	57.59	Inadequate time
11/09/00	9019130	74192.5	72752.5	1440	45	1944	96	16800	0.05	8.64	
11/14/00	9019136	75633.3	74193.4	1439.9	45	1944	30	39500	0.02	20.32	
11/16/00	9019144	77074.4	75634.4	1440	44.3	1914	451	73800	0.24	38.56	
11/20/00	9019150	78515.7	77075.6	1440.1	44.3	1914	96	46100	0.05	24.09	
11/26/00	9018870	79956.5	78516.5	1440	45	1944	6	73100	0.00	37.60	
12/02/00	9019158	82838.1	81398.2	1439.9	44.3	1914	6	97300	0.00	50.85	
12/08/00	9019160	81397.4	79957.4	1440	45	1944	6	44800	0.00	23.05	
12/14/00	9019169	82838.1	81398.2	1439.9	44.3	1914	6	97300	0.00	50.85	
12/15/00	6048424	84279.2	82839.2	1440	43.6	1884	851.9	135800	0.45	72.10	
12/20/00	6048419	85710.2	84280.2	1430	43.6	1870	17060	185600	9.12	99.23	
12/26/00	6048362	87162	85729.9	1432.1	43.6	1873	140	54700	0.07	29.20	
								AVERAGE	0.52	47.61	

AMBIENT AIR MONITORING

QUARTERLY REPORT

OCTOBER - DECEMBER 2000

FOR

TOTAL PARTICULATE

AND LEAD

CHEMETCO, INC.
January 2001

TABLE OF CONTENTS

		page
1.0	INTRODUCTION	1
1.1	Monitoring Description	1
1.2	Monitoring Report	1
2.0	SAMPLING DATE ACCOUNTING	5
3.0	MONITORING DATA	7
3.1	Quarterly Averages Calculation	7
3.2	Sampler Quarterly Averages	12
3.3	Instrument Precision Calculation	18
3.4	Single Instrument Accuracy	20
3.5	Documentation	21

APPENDIX A Calculation Worksheets
APPENDIX B Laboratory Analyses
APPENDIX C Filter Conditioning Logsheets

TABLE OF TABLES

		page
TABLE 1-1	Standard Operating Procedures	5
TABLE 2-1	Sample Date Accounting	5
TABLE 3-1	Sampler Location N3	12
TABLE 3-2	Sampler Location OS	13
TABLE 3-3	Sampler Location O3	14
TABLE 3-4	Filter Field Blank	15
TABLE 3-5	Annual Total suspended Particulate and Average Mean	16

TABLE OF FIGURES

		page
FIGURE 1-1	Monitoring Site Locations	3
FIGURE 3-1	Daily Weather Logsheets	8
FIGURE 3-2	Data Assessment Report	19

0

1.0 INTRODUCTION

This document presents the summary of the fourth calendar quarter year 2000 ambient air monitoring performed at the Chemetco, Inc. facility in Madison County.

1.1 Monitoring Description

The fourth quarter ambient air monitoring began on October 1, 2000, and sampling for total suspended particulates and lead in the particulate was performed on a once every sixth day basis. The quarterly sampling ended on December 31, 2000. Each day, a weather log was maintained documenting wind speed, wind direction, temperature, relative humidity and precipitation. Site data is utilized unless there is problem with the computer or program. In such a case, the information is obtained from the Nation Weather Service and recorded by the security guard. Chemetco also set up an account with the Midwest Climate Center who records data at two different locations near the area. Chemetco is in the process of evaluating the purchase of a new weather station. The weather station currently on site does no longer record wind speed.

The location of the monitoring sites was based on a modeling report done by Versar, Inc. and approved by IEPA. All locations are shown on a map in Figure 1-1.

Standard operating procedures were followed for the filter conditioning, sampling, sampler operation, analyses, etc, are shown in Table 1.1. Complete copies of the SOP's were provided in the Ambient Air Monitoring Quality Assurance/Quality Control Plan.

1.2 Monitoring Report

The following pages contain the results of the fourth quarter monitoring. Section 2 contains an accounting of all the test dates and reasons for eliminating data from certain test dates. Section 3 contains the quarterly averages, the quality assurance data and meteorological data. The Appendices include copies of the Filter Conditioning Logsheets with total suspended particulate calculation, the laboratory analysis, and the calculation worksheets.

Several problems were encountered this quarter. Several run days were either missed, lacked time, or ran on wrong days due to numerous problems with timers and motors. The problems experienced were compounded by the weather including extreme temperatures, wind chills and snowfall. A majority of the aforementioned problems afflicted monitors N3 and N3-QC though all 4 monitors did experience difficulty at some time during the quarter. Motors were changed out on N3 and N3QC, the timer was replaced on N3QC, and a fuse blew on O3 twice.

Several higher than normal readings were obtained from the O3 monitor which is located east of the facility. Since this monitor has consistently exhibited low lead levels in the past, Chemetco had the lab rerun the filters to confirm the numbers from the 11/20/00 and 11/26/00 sampling events. This reanalysis confirmed the original. In order to isolate the potential source of the abnormal results, Chemetco contacted Jim Henry at the IEPA. Standard operating procedure is to send the IEPA a portion of the filter so that they may run analyses to confirm Chemetco results. Chemetco requested to utilize the IEPA's portion of the filter to run an assay of metals on the filter to try and

isolate the potential source of impact to the east monitor. Mr. Henry said that this was acceptable. If the baghouses were suspect (#1, #2, DIS,), certain metals would be expected in higher concentrations than others in the different baghouses due to the differences in the air streams. This analysis did not indicate the #1 baghouse and the DIS did not necessarily operate on the run days. The #2 baghouse is inspected and no abnormal conditions were observed. Upon inspection of the roof from inside the foundry, a large break in the roof was discovered at the crest of the roof above the #4 furnace (south end of foundry). Due to extreme weather conditions experienced in November and December such as extreme temperature, wind chill and heavy snowfall, the contractors that repair the roof were unable to get to this area in a safe manner. The roof was temporarily covered in early January once the weather permitted. This area of the roof is very deteriorated and new struts/beams were ordered and have been received to replace this portion of the roof. The roofing and struts will have to be assembled on the ground prior to the placement because of the location (directly above #4) and the condition of the roof. Chemetco submitted a proposal to replace the entire roof to USEPA in year 2000. To date, no response has been received. Due to the circumstances discussed above, Chemetco believes this to have been an upset condition that was compounded by the weather. A review of lead values of O3 between 1996 and the present was performed, the last time O3 experienced a lead level of between 7 and 8 ug/m3 was in 1996. The lead values have consistently since 1997 been less than 1.0 ug/m3. Monitor O3 has experienced a few hits between 1.0 and 4.0 ug/m3 lead with even fewer between 4.0 and 6.0 ug/m3. Therefore, Chemetco did not include the samples dated 11/16/00, 11/20/00, and 11/26/00 in the quarterly average.

Relocation of Colocated Northern Monitors

Chemetco believed that all data collected from N3 and N3-QC at their former location just south of the facility's northern fence was highly questionable and not valid. As evidenced by an analysis of quarterly ambient air monitoring, the monitors in their former location had been significantly impacted by nearby facility activities, structures, microclimatic influences, and/or surrounding entrained materials. The IEPA agreed with Chemetco regarding the need to relocate the northern monitors as outlined below.

Chemetco requested in a letter dated June 18, 1998, to IEPA to move the colocated ambient air monitors located in the northern portion of the facility in order to obtain samples which truly represent ambient air. The relocation was approved by IEPA in a letter dated June 24, 1998. Sampling of the ambient air monitors in the new location was initiated July 25, 1998. Additional sampling events were scheduled that same week to allow the collection of the appropriate number of samples for the third quarter 1998. Sampling proceeded as scheduled in the current location until the new monitors were in place. Chemetco is also utilizing dedicated Dickson recorders for all four official air monitors, the new colocated N3 and N3-QC, OS and O3. The aforementioned relocation of the northern ambient air monitors has allowed the collection of a more representative sample of ambient air similar to that collected by the ambient air monitors OS and O3.

FIGURE 1-1
MONITORING SITE LOCATIONS

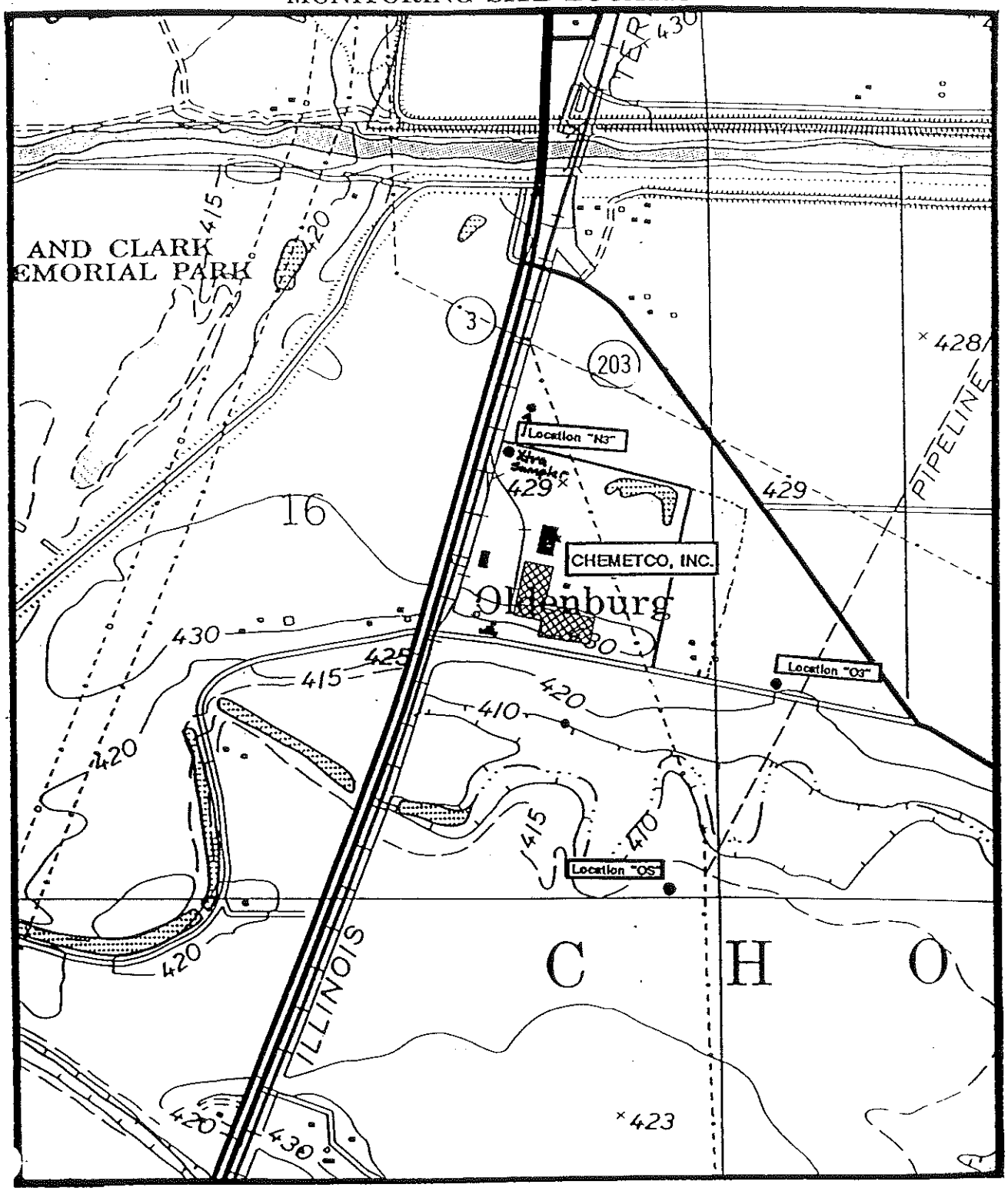

TABLE 1-1
STANDARD OPERATING PROCEDURES

Determination of Total Suspended Particulates in Ambient Air Filters

Filter Conditioning

Lead Analysis in Ambient Air Filters

Operation of GMW 2310 TSP Samplers

Packaging and Shipment of Samples

2.0 SAMPLING DATE ACCOUNTING

Following is a list of the dates the monitors were to have run. Table 2.1 accounts the dates and events.

TABLE 2.1 - Sample Date Accounting

DATE	SAMPLER	RUN STATUS	QUALIFICATION	ERROR REASON
10-03-00	N3-QC	OK	Yes	
	N3	No	No	Timer problem
	OS	OK	Yes	
	O3	OK	Yes	
10-04-00	N3-QC	OK	Yes	Reran along w/N3
	N3	OK	Yes	Rerun
10-09-00	N3-QC	No	No	Did not run/incorrect day
	N3	OK	Yes	
	OS	OK	Yes	
	O3	OK	Yes	
10-15-00	N3-QC	OK	Yes	
	N3	OK	Yes	
	OS	OK	Yes	
	O3	OK	Yes	
10-21-00	N3-QC	No	No	Did not run/incorrect day
	N3	OK	Yes	
	OS	OK	Yes	
	O3	OK	Yes	
10-27-00	N3-QC	OK	Yes	
	N3	OK	Yes	
	OS	OK	Yes	
	O3	OK	Yes	
11-02-00	N3-QC	No	No	Motor out
	N3	No	No	Motor out
	OS	No	No	Ran over/did not analyze
	O3	No	No	Wrong day/did not analyze
11-09-00	N3-QC	No	No	Timer problem
	N3	OK	Yes	
	OS	OK	Yes	
	O3	OK	Yes	
11-14-00	N3-QC	OK	Yes	
	N3	OK	Yes	
	OS	OK	Yes	
	O3	OK	Yes	
11-16-00	N3-QC	No	No	Timer problem
	N3	OK	Yes	
	OS	OK	Yes	
	O3	No	No	Upset condition, roof
11-20-00	N3-QC	OK	Yes	New timer installed
	N3	OK	Yes	
	OS	OK	Yes	
	O3	No	No	Upset condition, roof

TABLE 2.1 - Sample Date Accounting (con't)

DATE	SAMPLER	RUN STATUS	QUALIFICATION	ERROR REASON
11-26-00	N3-QC	OK	Yes	
	N3	OK	Yes	
	OS	OK	Yes	
	O3	No	No	Upset condition, roof
12-02-00	N3-QC	OK	Yes	Timer problem, skips Saturday
	N3	OK	Yes	
	OS	OK	Yes	
	O3	OK	Yes	
12-04-00	N3-QC	OK	Yes	Rerun
	N3	OK	Yes	Rerun
12-05-00	N3-QC	OK	Yes	Rerun
	N3	No	No	Lack of time
12-08-00	N3-QC	OK	Yes	
	N3	No	No	Lack of time
	OS	OK	Yes	
	O3	OK	Yes	
12-14-00	N3-QC	OK	Yes	
	N3	OK	Yes	
	OS	OK	Yes	
	O3	OK	Yes	
12-20-00	N3-QC	OK	Yes	
	N3	OK	Yes	
	OS	OK	Yes	
	O3	No	No	Lack of time
12-26-00	N3-QC	OK	Yes	
	N3	OK	Yes	
	OS	OK	Yes	
	O3	OK	Yes	
12-28-00	O3	No	No	Fuse blown
12-30-00	O3	No	No	Ran over, Fuse

3.0 MONITORING DATA

After the receipt from the laboratory of all data for the quarterly report, averages for each monitoring site were calculated from the pool of data. In addition, at site N3, two samplers were set up for quality assurance purposes. A standard deviation, lower and upper range was determined based on those samples and under normal circumstances can be assumed to represent accuracy for all locations.

Each day, meteorological data was noted. The weather information was obtained from either the National Weather Service, the Midwest Climate Center or the on-site weather station. Chemetco is currently evaluating the possible purchase of a new weather station. These logs are shown in Figure 3.1 and quarterly averages are discussed in Section 3.2.

3.1 Quarterly Averages Calculation

From the pool of acceptable data, quarterly averages were calculated by using the simple arithmetic mean determination shown in Equation 1.

$$X = \frac{\Sigma X_i}{n} \qquad \textit{Equation 1}$$

where,

X_i = individual sampling data,

n = the number of valid sampling points in the quarter.

FIGURE 3-1
METEOROLOGICAL DATA SHEET

DAILY WEATHER LOGSHEET

Date	Wind Speed	Wind Direction	Wind Sigma	Temperature (F)	Relative Humidity %	Precipitation
10-01-00	6.0	174		69	56	0.00
10-02-00	5.0	179		72	64	0.00
*10-03-00	4.0	167		73	70	0.00
*10-04-00	9.0	13.0		63	84	0.00
10-05-00	9.0	336		58	92	1.42
10-06-00	13.0	329		48	62	0.00
10-07-00	11.0	319		40	53	0.00
10-08-00	11.0	319		41	54	0.00
*10-09-00	3.0	313		41	59	0.00
10-10-00	1.0	198		43	61	0.00
10-11-00	2.0	148		50	59	0.00
10-12-00	4.0	1143		54	58	0.00
10-13-00	5.0	165		64	62	0.00
10-14-00	5.0	210		67	69	1.42
*10-15-00	2.0	226		62	94	0.25
10-16-00	6.0	35		59	95	0.30
10-17-00	6.0	353		56	76	0.60
10-18-00	0.0	233		55	72	0.00
10-19-00	2.0	153		58	69	0.00
10-20-00	2.0	158		59	69	0.00
*10-21-00	2.0	125		61	67	0.00
10-22-00	3.0	100		61	86	0.00
10-23-00	2.0	192		68	75	0.24
10-24-00	1.0	354		68	79	0.00
10-25-00	3.0	160		67	74	0.00

* Denotes Air Sampling Date

FIGURE 3-1 (cont.)

DAILY WEATHER LOGSHEET

Date	Wind Speed	Wind Direction	Wind Sigma	Temperature (F)	Relative Humidity %	Precipitation
10-26-00	4.0	178		69	62	0.00
*10-27-00	1.0	209		64	79	0.00
10-28-00	5.0	32.0		55	86	0.00
10-29-00	9.0	103		55	78	0.00
10-30-00	8.0	127		61	77	0.00
10-31-00	3.0	138		63	87	0.00
11-01-00	8.0	157		61	90	0.00
*11-02-00	9.0	157		64	73	0.00
11-03-00	10.0	180		66	73	0.40
11-04-00	2.0	64		66	72	0.00
11-05-00	8.0	131		59	65	0.00
11-06-00	20.0	135		53	60	0.00
11-07-00	8.0	202		50	64	1.35
11-08-00	12.0	292		53	78	0.05
*11-09-00	7.50	157		53	85	0.01
11-10-00	11.0	157		46	91	0.80
11-11-00	10.0	202		39	83	0.10
11-12-00	4.0	135		39	84	0.00
11-13-00	6.0	225		37	84	0.55
*11-14-00	14.0	270		39	73	0.07
11-15-00	11.0	270		36	72	0.00
*11-16-00	10.0	225		35	69	0.00
11-17-00	16.0	293		35	56	0.00
11-18-00	10.0	315		36	67	0.00
11-19-00	5.0	315		33	76	0.00

* Denotes Air Sampling Date

FIGURE 3-1 (cont.)

DAILY WEATHER LOGSHEET

Date	Wind Speed	Wind Direction	Wind Sigma	Temperature (F)	Relative Humidity %	Precipitation
*11-20-00	12.0	292		36	65	0.00
11-21-00	17.0	292		36	52	0.00
11-22-00	11.0	247		32	55	0.00
11-23-00	5.0	315		31	55	0.00
11-24-00	9.0	90		28	61	0.00
11-25-00	12.0	202		34	71	0.20
*11-26-00	12.0	315		38	89	0.50
11-27-00	8.0	292		40	96	0.00
11-28-00	4.0	270		40	85	0.00
11-29-00	8.0	247		57	70	0.00
11-30-00	8.0	270		35	68	0.00
12-01-00	11.0	202		37	75	0.00
*12-02-00	13.0	67		36	87	0.05
12-03-00	10.0	45		29	96	0.06
*12-04-00	5.0	223		32	75	0.00
*12-05-00	11.0	270		36	72	0.00
12-06-00	11.0	157		20	60	0.00
12-07-00	7.0	135		25	60	0.05
*12-08-00	7.0	270		33	77	0.00
12-09-00	6.0	202		33	75	0.00
12-10-00	8.0	113		30	81	0.00
12-11-00	10.0	113		39	80	0.10
12-12-00	13.0	202		25	79	0.50
12-13-00	13.0	225		13	76	0.00

* Denotes Air Sampling Date

FIGURE 3-1 (cont.)

DAILY WEATHER LOGSHEET

Date	Wind Speed	Wind Direction	Sigma	Temperature (F)	Relative Humidity %	Precipitation
*12-14-00	9.0	202		18	86	0.75
*12-15-00	8.0	203		19	86	0.00
12-16-00	8.0	158		25	88	0.00
12-17-00	17.0	225		18	86	0.00
12-18-00	14.0	225		22	73	0.00
12-19-00	9.0	225		13	70	0.00
*12-20-00	8.0	135		10	73	0.00
12-21-00	14.0	90		15	78	0.00
12-22-00	14.0	90		16	71	0.00
12-23-00	14.5	67		12	56	0.00
12-24-00	10.5	222		19	58	0.00
12-25-00	5.5	337		14	65	0.00
*12-26-00	5.5	45		10	69	0.00
12-27-00	5.5	90		18	82	0.00
12-28-00	4.5	67		17	81	0.00
12-29-00	6.0	112		17	69	0.10
12-30-00	10.5	247		20	76	0.00
12-31-00	16.0	315		18	82	0.00

* Denotes Air Sampling Date

3.2 Sampler Quarterly Averages

The simple quarterly average for each set of data from a particular sampler are calculated in the following tables, 3.1 through 3.4.

TABLE 3.1 - Sampler Location N3

DATE	FILTER NO	LEAD (ug/m^3)	TSP* (ug/m^3)
10-03-00	9018891	Timer Problem	----------
10-04-00	9018915	0.00	20.63
10-09-00	9018910	0.00	43.60
10-15-00	9018905	0.00	22.69
10-21-00	9019113	0.38	71.31
10-27-00	9019131	0.06	62.54
11-02-00	9019128	Motor Out	----------
11-09-00	9019132	0.00	11.28
11-14-00	9019137	0.01	17.56
11-16-00	9019142	2.03	53.46
11-20-00	9019148	0.05	14.72
11-26-00	9019157	0.00	38.34
12-02-00	9019161	0.04	27.79
12-04-00	9019170	0.54	65.19
12-05-00	9019171	Lack of time	----------
12-08-00	9019175	Lack of time	----------
12-14-00	9019172	0.02	57.85
12-20-00	6048417	2.31	52.38
12-26-00	6048412	0.00	17.12
		=========	=========
	AVERAGE	0.38	38.43

TABLE 3.2 - Sampler Location OS

DATE	FILTER NO.	LEAD (ug/m^3)	TSP* (ug/m^3)
10-03-00	9018889	0.13	68.35
10-09-00	9019913	0.19	33.64
10-15-00	9019907	0.01	22.37
10-21-00	9019114	0.00	62.74
10-27-00	9019120	0.00	48.16
11-02-00	9019127	Ran over	----------
11-09-00	9019133	0.17	25.97
11-14-00	9019139	0.08	10.81
11-16-00	9019145	0.00	24.44
11-20-00	9019151	0.00	15.18
11-26-00	9019156	0.00	41.44
12-02-00	9019163	0.00	28.78
12-08-00	9019168	5.07	85.03
12-14-00	6048422	0.00	53.15
12-20-00	6048415	0.07	28.91
12-26-00	6048363	0.07	32.64
		=========	=========
	AVERAGE	0.39	38.77

TABLE 3.3 - Sampler Location O3

DATE	FILTER NO.	LEAD (ug/m^3)	TSP* (ug/m^3)
10/03/00	9018888	0.08	63.31
10/09/00	9018912	1.56	42.51
10/15/00	9018906	0.21	34.42
10/21/00	9019115	0.00	58.91
10/27/00	9019119	0.37	67.50
11/02/00	9019126	Wrong Day	Did not analyze
11/09/00	9019134	0.00	4.13
11/14/00	9019140	0.94	11.16
11/16/00	9019146	Upset Condition	Roof unable to repair, weather
11/20/00	9019152	Upset Condition	Roof unable to repair, weather
11/26/00	9019155	Upset Condition	Roof unable to repair, weather
12/02/00	9019162	0.04	21.12
12/08/00	9019167	0.64	54.66
12/14/00	6048420	1.71	43.88
12/15/00	6048418	0.02	29.31
12/20/00	6048413	Lack of time	----------
12/26/00	6048364	0.23	24.78
12/28/00	6048366	Fuse blown	----------
12/30/00	6048373	Ran over/Fuse	----------
		==========	==========
	AVERAGE	0.48	39.76

TABLE 3.4 - Filter Blank

DATE	FILTER NO.	LEAD (ug/filter)	TSP* (ug/filter)
10/03/00	9018887	49.2	-6400
10/09/00	9018908	6	2500
10/15/00	9019116	6	1800
10/21/00	9019111	6	-4900
10/27/00	9019123	6	-3200
11/09/00	9019135	6	-3500
11/14/00	9019141	6	-400
11/16/00	9019153	6	-2200
11/20/00	9019154	6	-6100
11/26/00	9019159	6	-1200
12/02/00	9019165	6	13100
12/08/00	9019173	6	30700
12/14/00	6048421	6	-100
12/20/00	6048414	6	-2400
12/26/00	6048365	6	500
		=========	=========
	AVERAGE	8.88	1213.33

*TSP - Total Suspended Particulate

TABLE 3-5
ANNUAL TOTAL SUSPENDED PARTICULATE AVERAGE AND MEAN

*Unusual conditions were experienced in relation to the TSP values from April through mid May. Chemetco believes that the reason for the TSP values and their respective low lead values were caused by field dirt. Fields were plowed and planted in April and then replowed and replanted through mid May. Filters affected by field dirt are often tan in color rather than the gray normally observed. The lead levels associated with the high TSP numbers are very much lower than would be expected. Based on the low lead levels and color of the filters, those marked with an asterick were not counted in the annual average or geometric mean.

Date			N3		OS		O3
1/1/00			72.07		42.74		39.42
1/7/00			51.85		29.63		31.31
1/13/00			34.91		42.7		83.4
1/19/00			60.81		33.31		31.28
1/25/00			43.79		114.48		75.43
1/31/00			48.15		26.71		40.33
2/6/00			55.63		39.33		39.51
2/12/00			42.29		27.37		27.6
2/18/00			17.47		29.48		0
2/24/00			70.97		29.95		31.94
3/1/00			31.78		24.96		103.02
3/7/00			70.98		46.49		57.49
3/13/00			35.41		6.87		39.96
3/19/00			12.96		24.4		89.8
3/25/00			17.12		29.56		83.6
3/31/00			5.73		1.12		1.62
4/6/00			*216.11		103.21		*203.51
4/12/00			45.11		38.77		44.05
4/18/00			Motor out		40.54		49.67
4/24/00			52.58		33.37		22.12
4/30/00			114.22		58.44		75.54
5/6/00			105.88		89.83		43.67
5/12/00			111.49		*278.49		147.71
5/18/00			*216.72		80.74		110.54
5/24/00			59.97		48.25		103.11
5/30/00			174.32		37.73		46.74
6/5/00			33.67		77.49		92.88
6/11/00			64.49		36.13		35.05
6/17/00			30.84		27.09		25.13
6/23/00			117.87		36.49		48.61
6/27/00			17.12				
6/29/00			37.37		24.18		69.34

7/5/00			81.58		104.81		188.46
7/11/00			61.17		37.1		Power failure
7/17/00			61.65		29.74		31.9
7/23/00			25.17		19.78		44.99
7/29/00			31.67		24.13		21.64
8/4/00			27.03		22.9		22.02
8/10/00			43.08		50.55		38.14
8/16/00			65.89		61.49		63.36
8/22/00			118.2		58.58		59.18
8/28/00			83.09		52.78		45.69
9/3/00			82.72		75.15		64.11
9/9/00			100.84		11.21		40.51
9/15/00			25.36		39.15		26.72
9/21/00			Breaker blew out		32.79		31.67
9/27/00			17.12		34.77		35.97
10/3/00			Timer		68.35		63.31
10/4/00			20.63				
10/9/00			43.6		33.64		42.51
10/15/00			22.69		22.37		34.42
10/21/00			71.31		62.74		58.91
10/27/00			62.54		48.16		67.5
11/2/00			Motor		Ran over		Wrong day
11/9/00			11.28		25.97		4.13
11/14/00			17.56		10.81		11.16
11/16/00			53.46		24.44		66.1
11/20/00			14.72		15.18		95.64
11/26/00			38.34		41.44		74.56
12/2/00			27.79		28.78		21.12
12/4/00			65.19		Not run		Not run
12/5/00			68.25		Not run		Not run
12/8/00			60.17		85.03		54.66
12/14/00			57.85		53.15		43.88
12/20/00			52.38		28.91		29.31
12/26/00			17.12		32.64		24.78
	Average		55.459344		44.886333		52.478305
	Geometric	Mean	44.258846		35.454812		41.667774

3.3 Instrument Precision Calculation

The estimates of precision for ambient air quality measurements from the TSP method are calculated from results obtained from the collection of two samplers at one sampling site, N3. The calculated precision from this one sampling site is considered indicative of the precision at all sampling sites for the TSP method.

Using the paired measurements for the official sampler, labeled "N3" and the secondary sampler, labeled "N3-QC," the precision was calculated from the following equations. These numbers are reported on the Data Assessment Report shown in Figure 3-2.

Percentage Difference, d_i

$$d_i = \frac{Y_i - X_i}{X_i} \times 100\%$$

where: Y_i = the concentration TSP measured by the secondary sampler; and
X_i = the concentration TSP measured by the official sampler.

Average Percentage Difference, d_j

$$d_j = \frac{\Sigma d_i}{n}$$

where: n = the number of comparisons.

Standard Deviation, S_j

$$S_j = \frac{\Sigma(d_i)^2 - n(d_j)^2}{n - 1}$$

96% Probability Limits

$$\text{Upper Limit} = d_j + \frac{1.96(S_j)}{2}$$

$$\text{Lower Limit} = d_j - \frac{1.96(S_j)}{2}$$

FIGURE 3-2
DATA ASSESSMENT REPORT

Date: January 22, 2001
Auditor: Heather Young

Allocated Samplers

d_i = **-83.28**
d_j = **-8.33%**
S_j = **21.26%**

Upper Limit =12.5%

Lower Limit = -29.16%

Range = 9.27 to 50.93

Flow Rate Percentage Differences:

Sampler #1:(See Sect. 3-4) **Sampler #2:**(See Sect. 3-4)

Sampler #3:(See Sect. 3-4) **Sampler #4:**(See Sect. 3-4)

3.4 Single Instrument Accuracy

Estimates of accuracy for ambient air quality measurements from the TSP method are calculated from the results of independent audits. Once each sampling quarter, the flow rate of each high-volume sampler is audited.

Jim Henry with the IEPA Collinsville Field Office audited the sampler motors. Results of the audit are on record at the field office

3.5 Documentation

For each of the sampling episodes, data packages have been assembled to facilitate the retrieval of necessary data to perform and check calculations, assumptions and determinations and to generate accurate reports. These packages are maintained in a central project file at Chemetco.

Data forms are attached with backup and confirmatory information in Appendices A through C. They include:

- Filter Conditioning and TSP Calculation Logsheets;
- Calculation pages; and,
- Laboratory Analyses Report Sheet.

APPENDIX A

CALCULATION COVER SHEET

Company Name: Chemetco, Inc.

Project Name: Ambient Air Monitoring

Project Number: 00QTR4

Purpose: Sampler Averages

Total Number of Pages: 6 (including this one)

Date: Janaury 22, 2001

Originator's Signature:

2000 4TH QUARTER AVERAGE CALCULATION

LOCATION N3-QC

DATE	FILTER NO.	TIME FINISH	TIME START	ELAPSED TIME	CFM	CUBIC METERS	LEAD ug/fltr	TSP ug/fltr	LEAD ug/m3	TSP ug/m3	
10/03/00	9018892*	85019.3	83580.4	1438.9	45.7	1973	4741	236500	2.40	119.88	Ran along with N3
10/04/00	9018914	86451	85021	1430	46.4	2004	129	44000	0.06	21.96	
10/09/00	9018909*	86453.2	86453.2	0							Did not run/wrong day
10/15/00	9018909	87894.6	86454.8	1439.8	45.7	1973	6	53400	0.00	27.07	
10/21/00	9019117*	87896.6	87896.6	0							Did not run/wrong day
10/27/00	9019121	89335.8	87897.8	1438	46.4	2004	6	132200	0.00	65.97	
11/02/00	9019124*	91067.5	89337	1730.5							Motor Out
11/09/00	9019132*	91069.4	91069.4	0							Timer problem
11/14/00	9019138	92506.2	91070.9	1435.3	45	2020	30	36900	0.01	18.27	
11/16/00	9019143*	92508.1	92508.1	0							Timer problem.
11/20/00	9019143	93980	92508.7	1471.3	46.4	2048	96	42500	0.05	20.75	New timer installed
11/26/00	9019149	1441.8	1.8	1440	45.3	1957	6	42700	0.00	21.82	
12/02/00	9019164*	1443.2	1443.2	0							Timer problem
12/4/00	9019164	2882.5	1443.2	1439.3	45	1943	82.3	76900	0.04	39.58	(skips Saturdays)
12/05/00	9019166	4315.5	2884.4	1431.1	45.7	1962	1109	114800	0.57	58.51	
12/08/00	9019174	5757	4317	1440	48.3	2085	2697	167600	1.29	80.38	
12/14/00	6048425	7198.5	5758	1440.5	43.6	1884	1664	153.7	0.88	0.08	
12/20/00	6048417	8570.2	7200	1370.2	44.3	1821	4066	67000	2.23	36.79	
12/26/00	6048361	10085.1	8645	1440.1	43.6	1884	140	63000	0.07	33.45	
								AVERAGE	0.42	30.25	

*Not included in average due to reason noted

2000 4TH QUARTER AVERAGE CALCULATION

LOCATION N3

DATE	FILTER NO.	TIME FINISH	TIME START	ELAPSED TIME	CFM	CUBIC METERS	LEAD ug/fltr	TSP ug/fltr	LEAD ug/m3	TSP ug/m3	
10/03/00	9018891*	486.6	0	486.6							Timer problem
10/04/00	9018915	1434	0	1434	44.5	1914	6	39500	0.00	20.63	
10/09/00	9018910	1421	0	1421	43.9	1871	6	81600	0.00	43.60	
10/15/00	9018905	1420	0	1420	45.1	1921	6	43600	0.00	22.69	
10/21/00	9019113	1424	0	1424	45.1	1927	734	137400	0.38	71.31	
10/27/00	9019131	1424	0	1424	45.1	1927	117	120500	0.06	62.54	
11/02/00	9019128*										Motor Out
11/09/00	9019132	1425	0	1425	47.3	2022	6	22800	0.00	11.28	
11/14/00	9019137	1421	0	1421	47.3	2016	30	35400	0.01	17.56	
11/16/00	9019142	1421	0	1421	47.3	2016	4103	107800	2.03	53.46	
11/20/00	9019148	1420	0	1420	48	2045	96	30100	0.05	14.72	
11/26/00	9019157	1420	0	1420	47.7	2032	6	77900	0.00	38.34	
12/02/00	9019161	1420	0	1420	47.3	2015	82.3	56000	0.04	27.79	
12/04/00	9019170	1437	0	1437	48	2069	1109	134900	0.54	65.19	
12/05/00	9019171*	1393	0	1393	47.3	1977	1109	134900	0.56	68.25	Lack of time
12/08/00	9019175*	1393	0	1393	48	2006	333.4	120700	0.17	60.17	Lack of time
12/14/00	9019172	1424	0	1424	47.3	2021	39	116900	0.02	57.85	
12/20/00	6048417	1420	0	1420	46.7	1989	4591	104200	2.31	52.38	
12/26/00	6048412	1419	0	1419	46.7	1920	140	60700	0.00	17.12	
								AVERAGE	0.38	38.43	

*Not included in average due to reason noted

2000 4TH QUARTER AVERAGE CALCULATION

LOCATION OS

DATE	FILTER NO.	TIME FINISH	TIME START	ELAPSED TIME	CFM	CUBIC METERS	LEAD ug/fltr	TSP ug/fltr	LEAD ug/m3	TSP ug/m3	
10/03/00	9018889	1440	0	1440	50.6	2186	278.2	149400	0.13	68.35	
10/09/00	9018913	1440	0	1440	43.9	1896	369	63800	0.19	33.64	
10/15/00	9019907	1440	0	1440	47.3	2043	14.5	45700	0.01	22.37	
10/21/00	9019120	1440	0	1440	44.6	1927	6	120900	0.00	62.74	
10/27/00	9019120	1440	0	1440	44.6	1927	6	92800	0.00	48.16	
11/02/00	9019127*	1945	0	1945							Ran Over/did not analyze
11/09/00	9019133	1440	0	1440	46.7	2017	346	52400	0.17	25.97	
11/14/00	9019139	1440	0	1440	46.7	2017	154	21800	0.08	10.81	
11/16/00	9019145	1440	0	1440	46.7	2017	6	49300	0.00	24.44	
11/20/00	9019151	1440	0	1440	45.3	1957	6	29700	0.00	15.18	
11/26/00	9019156	1440	0	1440	45.3	1957	6	81100	0.00	41.44	
12/02/00	9019163	1440	0	1440	46	2043	6	58800	0.00	28.78	
12/08/00	9019168	1440	0	1440	45.3	1957	9929	166400	5.07	85.03	
12/14/00	6048422	1440	0	1440	44.6	1927	6	102400	0.00	53.15	
12/20/00	6048415	1440	0	1440	44.6	1927	129.4	55700	0.07	28.91	
12/26/00	6048363	1440	0	1440	44.6	1927	140	62900	0.07	32.64	
								AVERAGE	0.39	38.77	

*Not included in average due to reason noted

2000 4TH QUARTER AVERAGE CALCULATION

LOCATION O3

DATE	FILTER NO.	TIME FINISH	TIME START	ELAPSED TIME	CFM	CUBIC METERS	LEAD ug/fltr	TSP ug/fltr	LEAD ug/m3	TSP ug/m3	
10/03/00	9018888	54841.8	53401.8	1440	45.3	1957	163	123900	0.08	63.31	
10/09/00	9018912	56284.2	54844.2	1440	45.3	1957	3057	83200	1.56	42.51	
10/15/00	9018906	57725.3	56285.5	1439.8	44.6	1926	397	66300	0.21	34.42	
10/21/00	9019115	59166.7	57726.7	1440	44.6	1927	6	113500	0.00	58.91	
10/27/00	9019119	60608.2	59168.2	1440	45.3	1957	733	132100	0.37	67.50	
11/02/00	9019126	62050.1	60610	1440.1							Wrong day/did not analyze
11/09/00	9019134	63493	62053	1440	43.2	1866	6	7700	0.00	4.13	
11/14/00	9019140	64937.7	63496.9	1440.8	46	2017	1894	22500	0.94	11.16	
11/16/00	9019146*	66379.7	64939.7	1440	49.9	2156	10103	142500	4.69	66.10	Upset condition
11/20/00	9019152*	67821.4	66381.4	1440	49.3	2130	16346	203700	7.68	95.64	(hole in roof)
11/26/00	9019155*	69261.1	67824.1	1437	49.9	2151	11435	160400	5.32	74.56	weather prohibited
12/02/00	9019162	70706	69266	1440	48	2074	82.3	43800	0.04	21.12	
12/08/00	9019167	72147.6	70707.6	1440	47.3	2043	1307	111700	0.64	54.66	
12/14/00	6048420	75049.5	73629.5	1420	46.7	1989	3393	87300	1.71	43.88	
12/15/00	6048418	75049.5	73629.5	1420	46.7	1989	39	58300	0.02	29.31	
12/20/00	6048413*	77510	76441.7	1068.3	46	2017	785.6	41500	0.39	20.58	Not enough time
12/26/00	6048364	78951.5	77511.4	1440.1	45.3	1957	455	48500	0.23	24.78	
12/28/00	6048366*	80373.4	78953.1	1420.3							Fuse blown/did not run
12/30/00	6048373*	82240.4	80396.7	1843.7							Ran over/fuse/did run
								AVERAGE	0.48	39.76	

*Not included in average due to reason noted

2000 4TH QUARTER AVERAGE CALCULATION

LOCATION FB

DATE	FILTER NO.	LEAD ug/filter	TSP ug/filter
10/03/00	9018887	49.2	-6400
10/09/00	9018908	6	2500
10/15/00	9019116	6	1800
10/21/00	9019111	6	-4900
10/27/00	9019123	6	-3200
11/09/00	9019135	6	-3500
11/14/00	9019141	6	-400
11/16/00	9019153	6	-2200
11/20/00	9019154	6	-6100
11/26/00	9019159	6	-1200
12/02/00	9019165	6	13100
12/08/00	9019173	6	30700
12/14/00	6048421	6	-100
12/20/00	6048414	6	-2400
12/26/00	6048365	6	500
	AVERAGES:	8.88	1213.33

CALCULATION COVER SHEET

Company Name: Chemetco, Inc.

Project Name: Ambient Air Monitoring

Project Number: 00QTR4

Purpose: Sampler Precision Calculation

Total Number of Pages: 2 (including this one)

Date: Janaury 22, 2001

Originator's Signature:

SAMPLER PRECISION CALCULATION (PARTICULATE)

Sampling Date	Duplicate Sampler	Official Sampler	Difference	Difference (Square)
10-03-00	119.88	Timer problem	——	——
10-04-00	21.96	20.63	1.33	1.77
10-09-00	Incorrect day	43.60	——	——
10-15-00	27.07	22.69	4.38	19.18
10-21-00	Did not run	71.31	——	——
10-27-00	65.97	62.54	3.43	11.76
11-02-00	Motor out	Motor out	——	——
11-09-00	Timer	11.28	——	——
11-14-00	18.27	17.56	0.71	0.50
11-16-00	Timer problem	53.46	——	——
11-20-00	20.75	14.72	6.03	36.36
11-26-00	21.82	38.34	-16.52	272.91
12-02-00	Timer problem	27.79	——	——
12-04-00	39.58	65.19	-25.61	655.87
12-05-00	58.51	Lack of time	——	——
12-08-00	80.38	Lack of time	——	——
12-14-00	0.08	57.85	-57.77	3,337.37
12-20-00	36.79	52.38	-15.59	243.05
12-26-00	33.45	17.12	16.33	266.67
		$\Sigma d_i =$	-83.28	$\Sigma d_i^2 =$ 4845.4

n=10

$$d_j = \frac{\Sigma d_i}{n} = \frac{-83.28}{10} = -8.33\%$$

$$S_j = \frac{\Sigma(d_i)^2 - n(d_j)^2}{n-1} = \frac{4845 - 10(77.72)}{10-1} = \frac{4845 - 777.2}{9} = 21.26\%$$

$$\text{Upper Limit} = d_j + \frac{1.96(S_j)}{2} = -8.33\% + \frac{1.96(21.26)}{2} = -8.33 + 20.83 = 12.5\%$$

$$\text{Lower Limit} = d_j - \frac{1.96(S_j)}{2} = -8.33\% - \frac{1.96(21.26)}{2} = -8.33 - 20.83 = -29.16\%$$

Official Average Particulate: 38.43 mg/m^3

Range: 9.27 to 50.93

APPENDIX B

Chemetco, Inc.
Rt. 3 at Chemetco Lane
Hartford, IL 62048

ATTN: Heather Young

Date: 16-Oct-00

Sample type: Hi-Vol Air Monitoring Program

Sample Identification: Listed below

Filter ID	Location	Pb, ug/filter	TSP,mg/filter
G9018889	OS	278.2	149.4
G9018888	O3	163	123.9
G9018891	N3	393	53.6
G9018892	N3QC	4,741	236.5
G9018890	Extra	6,229	239.2
G9018887	FB	49.20	-6.4
G9018915	N3	<6	39.5
G9018914	N3QC	129	44

Analyst: Matt Shoemaker

Title: Laboratory Technician

Chemetco, Inc.
Rt. 3 at Chemetco Lane
Hartford, IL 62048

ATTN: Heather Young Date: 19-Oct-00

Sample type: Hi-Vol Air Monitoring Program

Sample Identification: Listed below

Filter ID	Location	Pb, ug/filter	TSP,mg/filter
G9018913	OS	369	63.8
G9018912	O3	3,057	83.2
G9018910	N3	<6	81.6
G9018908	FB	<6	2.5

Analyst: Matt Shoemaker

Title: Laboratory Technician

Chemetco, Inc.
Rt. 3 at Chemetco Lane
Hartford, IL 62048

ATTN: Heather Young Date: 19-Oct-00

Sample type: Hi-Vol Air Monitoring Program

Sample Identification: Listed below

Filter ID	Location	Pb, ug/filter	TSP,mg/filter
G9018907	OS	14.5	45.7
G9018906	O3	397	66.3
G9018905	N3	<6	43.6
G9018909	N3QC	<6	53.4
G9019116	FB	<6	1.8

Analyst: Matt Shoemaker

Title: Laboratory Technician

Chemetco, Inc.
Rt. 3 at Chemetco Lane
Hartford, IL 62048

ATTN: Heather Young Date: 30-Oct-00

Sample type: Hi-Vol Air Monitoring Program

Sample Identification: Listed below

Filter ID	Location	Pb, ug/filter	TSP,mg/filter
G9019114	OS	<6	120.9
G9019115	O3	<6	113.5
G9019113	N3	734	137.4
G9019117	N3QC	<6	-1
G9019112	Extra	2,101	130.9
G9019111	FB	<6	-4.9

Analyst: Matt Shoemaker

Title: Laboratory Technician

Chemetco, Inc.
Rt. 3 at Chemetco Lane
Hartford, IL 62048

ATTN: Heather Young

Date: 3-Nov-00

Sample type: Hi-Vol Air Monitoring Program

Sample Identification: Listed below

Filter ID	Location	Pb, ug/filter	TSP,mg/filter
G9019120	OS	<6	92.8
G9019119	O3	733	132.1
G9019122	N3	117	120.5
G9019121	N3QC	<6	132.2
G9019118	Extra	<6	104.9
G9019123	FB	<6	-3.2

Analyst: Matt Shoemaker

Title: Laboratory Technician

Chemetco, Inc.
Rt. 3 at Chemetco Lane
Hartford, IL 62048

ATTN: Heather Young Date: 17-Nov-00

Sample type: Hi-Vol Air Monitoring Program

Sample Identification: Listed below

Filter ID	Location	Pb, ug/filter	TSP,mg/filter
G9019133	OS	346	52.4
G9019134	O3	<6	7.7
G9019131	N3	<6	22.8
G9019132	N3QC	<6	-5
G9019130	Extra	96	16.8
G9019135	FB	<6	-3.5

Analyst: Matt Shoemaker

Title: Laboratory Technician

Chemetco, Inc.
Rt. 3 at Chemetco Lane
Hartford, IL 62048

ATTN: Heather Young Date: 21-Nov-00

Sample type: Hi-Vol Air Monitoring Program

Sample Identification: Listed below

Filter ID	Location	Pb, ug/filter	TSP,mg/filter
G9019139	OS	154	21.8
G9019140	O3	1,894	22.5
G9019137	N3	30	35.4
G9019138	N3QC	30	36.9
G9019136	Extra	30	39.5
G9019141	FB	<6	-0.4

Analyst: Matt Shoemaker

Title: Laboratory Technician

Chemetco, Inc.
Rt. 3 at Chemetco Lane
Hartford, IL 62048

ATTN: Heather Young Date: 29-Nov-00

Sample type: Hi-Vol Air Monitoring Program

Sample Identification: Listed below

Filter ID	Location	Pb, ug/filter	TSP,mg/filter
G9019145	OS	<6	49.3
G9019146	O3	10,103	142.5
G9019142	N3	4,103	107.8
G9019144	Extra	451	73.8
G9019153	FB	<6	-2.2

Analyst: Matt Shoemaker

Title: Laboratory Technician

Chemetco, Inc.
Rt. 3 at Chemetco Lane
Hartford, IL 62048

ATTN: Heather Young

Date: 4-Dec-00

Sample type: Hi-Vol Air Monitoring Program

Sample Identification: Listed below

Filter ID	Location	Pb, ug/filter	TSP,mg/filter
G9019151	OS	<6	29.7
G9019152	O3	16,346	203.7
G9019148	N3	96	30.1
G9019143	N3QC	96	42.5
G9019150	Extra	96	46.1
G9019154	FB	<6	-6.1

Analyst: Matt Shoemaker

Title: Laboratory Technician

Chemetco, Inc.
Rt. 3 at Chemetco Lane
Hartford, IL 62048

ATTN: Heather Young

Date: 6-Dec-00

Sample type: Hi-Vol Air Monitoring Program

Sample Identification: Listed below

Filter ID	Location	Pb, ug/filter	TSP,mg/filter
G9019156	OS	<6	81.1
G9019155	O3	11,435	160.4
G9019157	N3	<6	77.9
G9019149	N3QC	<6	42.7
G9019158	Extra	<6	73.1
G9019159	FB	<6	-1.2

Analyst: Matt Shoemaker

Title: Laboratory Technician

Chemetco, Inc.
Rt. 3 at Chemetco Lane
Hartford, IL 62048

ATTN: Heather Young Date: 12-Dec-00

Sample type: Hi-Vol Air Monitoring Program

Sample Identification: Listed below

Filter ID	Location	Pb, ug/filter	TSP,mg/filter
G9019163	OS	<6	58.8
G9019162	O3	82.3	43.8
G9019161	N3	82.3	56
G9019164	N3QC	DID NOT RUN	
G9019160	Extra	<6	44.8
G9019165	FB	<6	13.1

Analyst: Matt Shoemaker

Title: Laboratory Technician

Chemetco, Inc.
Rt. 3 at Chemetco Lane
Hartford, IL 62048

ATTN: Heather Young Date: 12-Dec-00

Sample type: Hi-Vol Air Monitoring Program

Sample Identification: Listed below

Filter ID	Location	Pb, ug/filter	TSP,mg/filter
G9019171	N3	1,109	134.9
G9019166	N3QC	1,109	114.8

Analyst: Matt Shoemaker

Title: Laboratory Technician

Chemetco, Inc.
Rt. 3 at Chemetco Lane
Hartford, IL 62048

ATTN: Heather Young Date: 12-Dec-00

Sample type: Hi-Vol Air Monitoring Program

Sample Identification: Listed below

Filter ID	Location	Pb, ug/filter	TSP,mg/filter
G9019170	N3	82.3	67.3
G9019164	N3QC	82.3	76.9

Analyst: Matt Shoemaker

Title: Laboratory Technician

Chemetco, Inc.
Rt. 3 at Chemetco Lane
Hartford, IL 62048

ATTN: Heather Young Date: 19-Dec-00

Sample type: Hi-Vol Air Monitoring Program

Sample Identification: Listed below

Filter ID	Location	Pb, ug/filter	TSP,mg/filter
G9019168	OS	9,929	166.4
G9019167	O3	1,307	111.7
G9019173	FB	<6	30.7

Analyst: Matt Shoemaker

Title: Laboratory Technician

Chemetco, Inc.
Rt. 3 at Chemetco Lane
Hartford, IL 62048

ATTN: Heather Young Date: 19-Dec-00

Sample type: Hi-Vol Air Monitoring Program

Sample Identification: Listed below

Filter ID	Location	Pb, ug/filter	TSP,mg/filter
G9019169	Extra	<6	97.3

Analyst: Matt Shoemaker

Title: Laboratory Technician

Chemetco, Inc.
Rt. 3 at Chemetco Lane
Hartford, IL 62048

ATTN: Heather Young Date: 19-Dec-00

Sample type: Hi-Vol Air Monitoring Program

Sample Identification: Listed below

Filter ID	Location	Pb, ug/filter	TSP,mg/filter
G9019175	N3	333.4	120.7
G9019174	N3QC	2,697	167.6

Analyst: Matt Shoemaker

Title: Laboratory Technician

Chemetco, Inc.
Rt. 3 at Chemetco Lane
Hartford, IL 62048

ATTN: Heather Young Date: 19-Dec-00

Sample type: Hi-Vol Air Monitoring Program

Sample Identification: Listed below

Filter ID	Location	Pb, ug/filter	TSP,mg/filter
G6048422	OS	<6	102.4
G6048420	O3	3,393	87.3
G6048421	FB	<6	-0.1

Analyst: Matt Shoemaker

Title: Laboratory Technician

Chemetco, Inc.
Rt. 3 at Chemetco Lane
Hartford, IL 62048

ATTN: Heather Young Date: 22-Dec-00

Sample type: Hi-Vol Air Monitoring Program

Sample Identification: Listed below

Filter ID	Location	Pb, ug/filter	TSP,mg/filter
G9019172	N3	39.0	116.9
G6048425	N3QC	1,664	153.7
G6048424	Extra	851.9	135.8

Analyst: Matt Shoemaker

Title: Laboratory Technician

Chemetco, Inc.
Rt. 3 at Chemetco Lane
Hartford, IL 62048

ATTN: Heather Young Date: 22-Dec-00

Sample type: Hi-Vol Air Monitoring Program

Sample Identification: Listed below

Filter ID	Location	Pb, ug/filter	TSP,mg/filter
G6048418	O3	39.0	58.3

Analyst: Matt Shoemaker

Title: Laboratory Technician

Chemetco, Inc.
Rt. 3 at Chemetco Lane
Hartford, IL 62048

ATTN: Heather Young Date: 28-Dec-00

Sample type: Hi-Vol Air Monitoring Program

Sample Identification: Listed below

Filter ID	Location	Pb, ug/filter	TSP,mg/filter
G6048415	OS	129.4	55.7
G6048413	O3	785.6	41.5
G6048416	N3	4,591	104.2
G6048417	N3QC	4,066	67
G6048419	Extra	17,060	185.6
G6048414	FB	<6	-2.4

Analyst: Matt Shoemaker

Title: Laboratory Technician

Chemetco, Inc.
Rt. 3 at Chemetco Lane
Hartford, IL 62048

ATTN: Heather Young Date: 5-Jan-01

Sample type: Hi-Vol Air Monitoring Program

Sample Identification: Listed below

Filter ID	Location	Pb, ug/filter	TSP,mg/filter
G6048363	OS	140	62.9
G6048364	O3	455	48.5
G6048412	N3	140	60.7
G6048361	N3QC	140	63
G6048362	Extra	140	54.7
G6048365	FB	<6	0.5

Analyst: Matt Shoemaker

Title: Laboratory Technician

APPENDIX C

Chemetco Environmental Management
Filter Conditioning Logsheet

	Pre Sampling Conditioning			Post Sampling Conditioning				
Filter Number	Date In	Date Out	Weight, mg	Date In	Date Out	Weight, mg	W_{net}, mg	W_{net}, ug
G9019174	11/30/00	12/04/00	4393.7	12/14/00	12/18/00	4561.3	167.6	
G9019175	11/30/00	12/04/00	4418.2	12/14/00	12/18/00	4538.9	120.7	
G6048361	12/15/00	12/18/00	4270.3	12/29/00	1/03/01	4333.3	63	
G6048362	12/15/00	12/18/00	4273.6	12/29/00	1/03/01	4328.3	54.7	
G6048363	12/15/00	12/18/00	4247.0	12/29/00	1/03/01	4309.9	62.9	
G6048364	12/15/00	12/18/00	4280.8	12/29/00	1/03/01	4329.3	48.5	
G6048365	12/15/00	12/18/00	4285.6	12/29/00	1/03/01	4286.1	0.5	
G6048366	12/15/00	12/18/00	4252.0					
G6048367	12/15/00	12/18/00	4271.1					
G6048368	12/15/00	12/18/00	4270.5					
G6048369	12/15/00	12/18/00	4257.2					
G6048370 DONT HAVE	—	—	—					
G6048371	12/15/00	12/18/00	4263.1					
G6048372	12/15/00	12/18/00	4231.8					
G6048373	12/15/00	12/18/00	4298.0					
G6048374	12/15/00	12/18/00	4303.9					

Chemetco Environmental Management
Filter Conditioning Logsheet

	Pre Sampling Conditioning			Post Sampling Conditioning				
Filter Number	Date In	Date Out	Weight, mg	Date In	Date Out	Weight, mg	W_{net}, mg	W_{net}, ug
G9019158	11/17/00	11/20/00	4479.5	11/28/00	12/04/00	4552.6	73.1	
G9019159	11/17/00	11/20/00	4466.7	11/28/00	12/04/00	4465.5	-1.2	
G9019160	11/17/00	11/20/00	4452.7	12/8/00	12/12/00	4497.5	44.8	
G9019161	11/17/00	11/20/00	4459.1	12/8/00	12/12/00	4515.1	56	
G9019162	11/17/00	11/20/00	4459.2	12/8/00	12/12/00	4503.0	43.8	
G9019163	11/17/00	11/20/00	4404.5	12/8/00	12/12/00	4463.3	58.8	
G9019164	11/17/00	11/20/00	4404.6	12/8/00	12/12/00	4481.5	76.9	
G9019165	11/17/00	11/20/00	4400.6	12/8/00	12/12/00	4413.7	13.1	
G9019166	11/17/00	11/20/00	4451.2	12/8/00	12/12/00	4566.0	114.8	
G9019167	11/17/00	11/20/00	4457.3	12/14/00	12/18/00	4569.0	111.7	
G9019168	11/17/00	11/20/00	4456.8	12/14/00	12/18/00	4623.2	166.4	
G9019169	11/17/00	11/20/00	4445.6	12/14/00	12/18/00	4542.9	97.3	
G9019170	11/17/00	11/20/00	4399.7	12/8/00	12/12/00	4467.0	67.3	
G9019171	11/17/00	11/20/00	4445.6	12/8/00	12/12/00	4580.5	134.9	
G9019172	11/30/00	12/04/00	4348.4	12/20/00	12/22/00	4465.3	116.9	
G9019173	11/30/00	12/04/00	4397.9	12/14/00	12/18/00	4428.6	30.7	

Chemetco Environmental Management
Filter Conditioning Logsheet

	Pre Sampling Conditioning			Post Sampling Conditioning				
Filter Number	Date In	Date Out	Weight, mg	Date In	Date Out	Weight, mg	W_{net}, mg	W_{net}, ug
G9019142	11/10/00	11/13/00	4457.8	11/24/00	11/28/00	4565.6	107.8	
G9019143	11/10/00	11/13/00	4462.1	11/27/00	12/01/00	4504.6	42.5	
G9019144	11/10/00	11/13/00	4485.2	11/24/00	11/28/00	4559.0	73.8	
G9019145	11/10/00	11/13/00	4454.8	11/24/00	11/28/00	4504.1	49.3	
G9019146	11/10/00	11/13/00	4442.8	11/24/00	11/28/00	4585.3	142.5	
G9019147	11/10/00	11/13/00	4459.9					
G9019148	11/10/00	11/13/00	4437.9	11/27/00	12/01/00	4468.0	30.1	
G9019149	11/10/00	11/13/00	4432.6	11/28/00	12/4/00	4475.3	42.7	
G9019150	11/10/00	11/13/00	4448.5	11/27/00	12/01/00	4494.6	46.1	
G9019151	11/10/00	11/13/00	4453.8	11/27/00	12/01/00	4483.5	29.7	
G9019152	11/10/00	11/13/00	4453.1	11/27/00	12/01/00	4656.8	203.7	
G9019153	11/10/00	11/13/00	4469.8	11/24/00	11/28/00	4467.6	-2.2	
G9019154	11/17/00	11/20/00	4485.9	11/27/00	12/01/00	4479.8	-6.1	
G9019155	11/17/00	11/20/00	4446.3	11/28/00	12/04/00	4606.7	160.4	
G9019156	11/17/00	11/20/00	4421.9	11/28/00	12/04/00	4503.0	81.1	
G9019157	11/17/00	11/20/00	4455.8	11/28/00	12/04/00	4533.7	77.9	

Chemetco Environmental Management
Filter Conditioning Logsheet

	Pre Sampling Conditioning			Post Sampling Conditioning				
Filter Number	Date In	Date Out	Weight, mg	Date In	Date Out	Weight, mg	W_{net}, mg	W_{net}, ug
G9019126	10/17/00	10/19/00	4448.1					
G9019127	10/17/00	10/19/00	4439.1					
G9019128	10/17/00	10/19/00	4463.4					
G9019129	10/17/00	10/19/00	4476.9					
G9019130	10/17/00	10/19/00	4436.2	11/14/00	11/16/00	4453.0	16.8	
G9019131	10/17/00	10/19/00	4405.9	11/14/00	11/16/00	4428.7	22.8	
G9019132	10/17/00	10/19/00	4458.6	11/14/00	11/16/00	4453.6	-5	
G9019133	10/17/00	10/19/00	4465.7	11/14/00	11/16/00	4518.1	52.4	
G9019134	10/17/00	10/19/00	4493.7	11/14/00	11/16/00	4501.4	7.7	
G9019135	10/17/00	10/19/00	4492.5	11/14/00	11/16/00	4489.0	-3.5	
G9019136	11/10/00	11/13/00	4469.6	11/17/00	11/20/00	4509.1	39.5	
G9019137	11/10/00	11/13/00	4478.4	11/17/00	11/20/00	4513.8	35.4	
G9019138	11/10/00	11/13/00	4448.0	11/17/00	11/20/00	4484.9	36.9	
G9019139	11/10/00	11/13/00	4478.5	11/17/00	11/20/00	4500.3	21.8	
G9019140	11/10/00	11/13/00	4480.1	11/17/00	11/20/00	4502.6	22.5	
G9019141	11/10/00	11/13/00	4473.3	11/17/00	11/20/00	4472.9	-0.4	

Chemetco Environmental Management
Filter Conditioning Logsheet

	Pre Sampling Conditioning			Post Sampling Conditioning				
Filter Number	Date In	Date Out	Weight, mg	Date In	Date Out	Weight, mg	W_{net}, mg	W_{net}, ug
G9018915	9/28/00	10/2/00	4433.6	10/9/00	10/11/00	4473.1	39.5	
G9019111	9/28/00	10/02/00	4429.5	10/25/00	10/30/00	4424.6	-4.9	
G9019112	9/28/00	10/02/00	4430.7	10/25/00	10/30/00	4561.6	130.9	
G9019113	9/28/00	10/02/00	4425.7	10/25/00	10/30/00	4563.1	137.4	
G9019114	9/28/00	10/02/00	4459.3	10/25/00	10/30/00	4580.2	120.9	
G9019115	9/28/00	10/02/00	4467.5	10/25/00	10/30/00	4581.0	113.5	
G9019116	9/28/00	10/02/00	4473.2	10/17/00	10/19/00	4475.0	1.8	
G9019117	9/28/00	10/02/00	4426.5	10/25/00	10/30/00	4425.5	-1	
G9019118	10/17/00	10/19/00	4480.9	11/1/00	11/3/00	4585.8	104.9	
G9019119	10/17/00	10/19/00	4443.6	11/1/00	11/3/00	4575.7	132.1	
G9019120	10/17/00	10/19/00	4414.1	11/1/00	11/3/00	4506.9	92.8	
G9019121	10/17/00	10/19/00	4432.7	11/1/00	11/3/00	4564.9	132.2	
G9019122	10/17/00	10/19/00	4447.9	11/1/00	11/3/00	4568.4	120.5	
G9019123	10/17/00	10/19/00	4410.1	11/1/00	11/3/00	4406.9	-3.2	
G9019124	10/17/00	10/19/00	4404.5					
G9019125	10/17/00	10/19/00	4452.3					

Chemetco Environmental Management
Filter Conditioning Logsheet

	Pre Sampling Conditioning			Post Sampling Conditioning				
Filter Number	Date In	Date Out	Weight, mg	Date In	Date Out	Weight, mg	W_{net}, mg	W_{net}, ug
G9018899	9/18/00	9/20/00	4479.0	9/28/00	10/02/00	4588.1	109.1	
G9018900	9/18/00	9/20/00	4422.6	9/27/00	9/29/00	4481.6	59	
G9018901	9/18/00	9/20/00	4425.4	9/27/00	9/29/00	4497.5	72.1	
G9018902	9/18/00	9/20/00	4441.9	9/27/00	9/29/00	4503.9	62	
G9018903	9/18/00	9/20/00	4407.9	9/27/00	9/29/00	4464.7	56.8	
G9018904	9/18/00	9-20-00	4400.6	9/27/00	9/29/00	4474.2	73.6	
G9018905	9/28/00	10/02/00	4451.8	10/17/00	10/19/00	4495.4	43.6	
G9018906	9/28/00	10/02/00	4454.5	10/17/00	10/19/00	4518.1	66.3	
G9018907	9/28/00	10/02/00	4490.2	10/17/00	10/19/00	4535.9	45.7	
G9018908	9/28/00	10/02/00	4471.9	10/17/00	10/19/00	4474.4	2.5	
G9018909	9/28/00	10/02/00	4467.7	10/17/00	10/19/00	4521.1	53.4	
G9018910	9/28/00	10/02/00	4447.5	10/17/00	10/19/00	4529.1	81.6	
G9018911	9/28/00	10/02/00	4421.5					
G9018912	9/28/00	10/02/00	4439.9	10/17/00	10/19/00	4523.1	83.2	
G9018913	9/28/00	10/02/00	4431.2	10/17/00	10/19/00	4495.0	63.8	
G9018914	9/28/00	10/02/00	4434.3	10/9/00	10/10/00	4478.3	44	

1

Chemetco Environmental Management
Filter Conditioning Logsheet

	Pre Sampling Conditioning			Post Sampling Conditioning				
Filter Number	Date In	Date Out	Weight, mg	Date In	Date Out	Weight, mg	W_{net}, mg	W_{net}, ug
G9018883	8/25/00	8/28/00	4458.7	9/18/00	9/20/00	4512.6	53.9	
G9018884	8/25/00	8/28/00	4420.8	9/18/00	9/20/00	4500.8	80	
G9018885	8/25/00	8/28/00	4503.5	9/18/00	9/20/00	4544.1	40.6	
G9018886	8/25/00	8/28/00	4475.0	9/18/00	9/20/00	4475.3	0.3	
G9018887	9/18/00	9/20/00	4443.4	10/9/00	10/11/00	4437.0	-6.4	
G9018888	9/18/00	9/20/00	4454.4	10/9/00	10/11/00	4578.3	123.9	
G9018889	9/18/00	9/20/00	4420.8	10/9/00	10/11/00	4570.2	149.4	
G9018890	9/18/00	9/20/00	4428.8	10/9/00	10/11/00	4668.0	239.2	
G9018891	9/18/00	9/20/00	4448.5	10/9/00	10/11/00	4502.1	53.6	
G9018892	9/18/00	9/20/00	4465.2	10/9/00	10/11/00	4701.7	236.5	
G9018893	9/18/00	9/20/00	4456.2	9/28/00	10/02/00	4458.5	0.3	
G9018894	9/18/00	9/20/00	4413.9	9/28/00	9/29/00	4412.0	-1.8	
G9018895	9/18/00	9/20/00	4474.4	9/28/00	10/02/00	4544.8	70.4	
G9018896	9/18/00	9/20/00	4438.0	9/28/00	10/02/00	4554.3	116.3	
G9018897	9/18/00	9/20/00	4465.1	9/28/00	10/02/00	4532.1	67	
G9018898	9/18/00	9/20/00	4422.4	9/28/00	10/02/00	4496.8	74.4	

Chemetco Environmental Management
Filter Conditioning Logsheet

	Pre Sampling Conditioning			Post Sampling Conditioning				
Filter Number	Date In	Date Out	Weight, mg	Date In	Date Out	Weight, mg	W_{net}, mg	W_{net}, ug
G6048423	11/30/00	12/04/00	4229.9					
G6048424	11/30/00	12/04/00	4243.0	12/20/00	12/22/00	4378.8	135.8	
G6048425	11/30/00	12/04/00	4255.8	12/20/00	12/22/00	4409.5	153.7	
G6048426								
G6048427								
G6048428								
G6048429								
G6048430								
G6048431								
G6048432								
G6048433								
G6048434								
G6048435								
G6048436								
G6048437								
G6048438								

Chemetco Environmental Management
Filter Conditioning Logsheet

	Pre Sampling Conditioning			Post Sampling Conditioning				
Filter Number	Date In	Date Out	Weight, mg	Date In	Date Out	Weight, mg	W_{net}, mg	W_{net}, ug
G6048407	1/3/01	1/5/01	4343.9					
G6048408	1/3/01	1/5/01	4330.9					
G6048409	1/3/01	1/5/01	4300.4					
G6048410	[illegible]	[illegible]						
G6048411	1/3/01	1/5/01	4258.3					
G6048412	11/30/00	12/04/00	4273.9	12/22/00	1/05/01	4334.6	60.7	
G6048413	11/30/00	12/04/00	4266.7	12/22/00	12/28/00	4308.2	41.5	
G6048414	11/30/00	12/04/00	4299.4	12/22/00	12/29/00	4297.0	-2.4	
G6048415	11/30/00	12/04/00	4279.2	12/22/00	12/29/00	4334.9	55.7	
G6048416	11/30/00	12/04/00	4263.0	12/22/00	12/28/00	4367.2	104.2	
G6048417	11/30/00	12/04/00	4267.5	12/22/00	12/28/00	4334.5	67	
G6048418	11/30/00	12/04/00	4270.3	12/22/00	12/22/00	4329.6	58.3	
G6048419	11/30/00	12/04/00	4247.9	12/22/00	12/28/00	4433.5	185.6	
G6048420	11/30/00	12/04/00	4287.7	12/14/00	12/15/00	4375.0	87.3	
G6048421	11/30/00	12/04/00	4291.0	12/14/00	12/18/00	4290.9	-0.1	
G6048422	11/30/00	12/04/00	4253.8	12/14/00	12/18/00	4356.2	102.4	

Chemetco
FIRST IN PEOPLE – QUALITY – SERVICE
P.O. Box 67 • Hartford, IL 62048
618-254-4381 • 800-444-5564

October 27, 2000

Illinois Environmental Protection Agency
Air Monitoring Section
c/o Mr. Terry Sweitzer
P.O. Box 19276
Springfield, Illinois 62794-9276

RE: ~~Second~~ THIRD Quarter 2000 Ambient Air Monitoring Report

Dear Mr. Sweitzer,

Enclosed are two copies of the report entitled, "Ambient Air Monitoring Quarterly Report July - September, 2000 for Total Particulate and Lead."

A table of results from the extra sampler located at the northwest corner and within the fence (the former N3 and N3-QC locations) is attached to this letter. This monitor is not included in the official approved ambient air monitoring program and is included as an attachment to this letter at the request of the Illinois EPA.

If you have any questions or require additional information, please contact me at 618/254-4381 ext. 268.

Sincerely,

Heather Young, CHMM
Environmental Manager
Chemetco, Inc.

Attachment

cc: Jim Henry, IEPA--Collinsville Region
Jeff Trevino, USEPA
Chief, Air Enforcement Assurance Branch, USEPA
George von Stamwitz, Armstrong, Teasdale, Schlafly & Davis
File

2000 3RD QUARTER AVERAGE CALCULATION

LOCATION: Extra

DATE	FILTER NO	TIME FINISH	TIME START	ELAPSED TIME	CFM	CUBIC METERS	LEAD ug/fltr	TSP ug/fltr	LEAD ug/m3	TSP ug/m3
07/05/00	6047792	47906	46466	1440	45.8	1979	879.2	500000	0.44	252.71
07/11/00	6047784	32194.4	49347.3	47907.3	45.2	1953	2891	162000	1.48	82.95
07/17/00	6047780	50788.4	49348.4	1440	44.6	1927	3424	207200	1.78	107.54
07/23/00	6047802	Power	Failure	Did not	run					
07/29/00	6047802	52229.3	50789.3	1440	44.6	1927	215	68500	0.11	35.55
08/04/00	6047808	53671.2	52231.2	1440	45.8	1979	6	64400	0.00	32.55
08/10/00	6047851	55112.6	53672.6	1440	45.8	1979	6	110900	0.00	56.05
08/16/00	9018857	56554	55114	1440	45.8	1979	6	177300	0.00	89.61
08/22/00	6047748	Power	Failure	Electrical	problem					
08/28/00	6047748	Motor	Failure	Ran out	of filters.					
09/03/00	9018870	59457.4	58130.2	1327.2	45.7	1964	1426	161000	0.73	81.98
09/09/00	9018880	60898.7	59458.7	1440	45.7	1964	25271	280000	12.87	142.57
09/15/00	9018885	62119.9	60890	1229.9	46.4	1712	196	40600	0.11	23.71
09/21/00	9018904	Power	failure.							
09/27/00	9018899	64770	63423.6	1346.4	45.7	1846	582	109100	0.32	59.10
								AVERAGE	1.62	87.67

AMBIENT AIR MONITORING

QUARTERLY REPORT

JULY - SEPTEMBER 2000

FOR

TOTAL PARTICULATE

AND LEAD

CHEMETCO, INC.
October 2000

TABLE OF CONTENTS

		page
1.0	INTRODUCTION	1
1.1	Monitoring Description	1
1.2	Monitoring Report	1
2.0	SAMPLING DATE ACCOUNTING	5
3.0	MONITORING DATA	7
3.1	Quarterly Averages Calculation	7
3.2	Sampler Quarterly Averages	12
3.3	Instrument Precision Calculation	16
3.4	Single Instrument Accuracy	18
3.5	Documentation	19

APPENDIX A Calculation Worksheets
APPENDIX B Laboratory Analyses
APPENDIX C Filter Conditioning Logsheets

TABLE OF TABLES

		page
TABLE 1-1	Standard Operating Procedures	5
TABLE 2-1	Sample Date Accounting	5
TABLE 3-1	Sampler Location N3	12
TABLE 3-2	Sampler Location OS	13
TABLE 3-3	Sampler Location O3	14
TABLE 3-4	Filter Field Blank	15

TABLE OF FIGURES

		page
FIGURE 1-1	Monitoring Site Locations	3
FIGURE 3-1	Daily Weather Logsheets	8
FIGURE 3-2	Data Assessment Report	17

0

1.0 INTRODUCTION

This document presents the summary of the third calendar quarter year 2000 ambient air monitoring performed at the Chemetco, Inc. facility in Madison County.

1.1 Monitoring Description

The third quarter ambient air monitoring began on July 1, 2000, and sampling for total suspended particulates and lead in the particulate was performed on a once every sixth day basis. The quarterly sampling ended on September 30, 2000. Each day, a weather log was maintained documenting wind speed, wind direction, temperature, relative humidity and precipitation. . Site data is utilized unless there is problem with the computer or program. In such a case, the information is obtained from the Nation Weather Service and recorded by the security guard.

The location of the monitoring sites was based on a modeling report done by Versar, Inc. and approved by IEPA. All locations are shown on a map in Figure 1-1.

Standard operating procedures were followed for the filter conditioning, sampling, sampler operation, analyses, etc, are shown in Table 1.1. Complete copies of the SOP's were provided in the Ambient Air Monitoring Quality Assurance/Quality Control Plan.

1.2 Monitoring Report

The following pages contain the results of the third quarter monitoring. Section 2 contains an accounting of all the test dates and reasons for eliminating data from certain test dates. Section 3 contains the quarterly averages, the quality assurance data and meteorological data. The Appendices include copies of the Filter Conditioning Logsheets with total suspended particulate calculation, the laboratory analysis, and the calculation worksheets.

Relocation of Colocated Northern Monitors

Chemetco believed that all data collected from N3 and N3-QC at their former location just south of the facility's northern fence was highly questionable and not valid. As evidenced by an analysis of quarterly ambient air monitoring, the monitors in their former location had been significantly impacted by nearby facility activities, structures, microclimatic influences, and/or surrounding entrained materials. The IEPA agreed with Chemetco regarding the need to relocate the northern monitors as outlined below.

Chemetco requested in a letter dated June 18, 1998, to IEPA to move the colocated ambient air monitors located in the northern portion of the facility in order to obtain samples which truly represent ambient air. The relocation was approved by IEPA in a letter dated June 24, 1998. Sampling of the ambient air monitors in the new location was initiated July 25, 1998. Additional sampling events were scheduled that same week to allow the collection of the appropriate number of samples for the third quarter 1998. Sampling proceeded as scheduled in the current location until the new monitors were in place. Chemetco is also utilizing dedicated Dickson recorders for all four

official air monitors, the new colocated N3 and N3-QC, OS and O3. The aforementioned relocation of the northern ambient air monitors has allowed the collection of a more representative sample of ambient air similar to that collected by the ambient air monitors OS and O3.

FIGURE 1-1
MONITORING SITE LOCATIONS

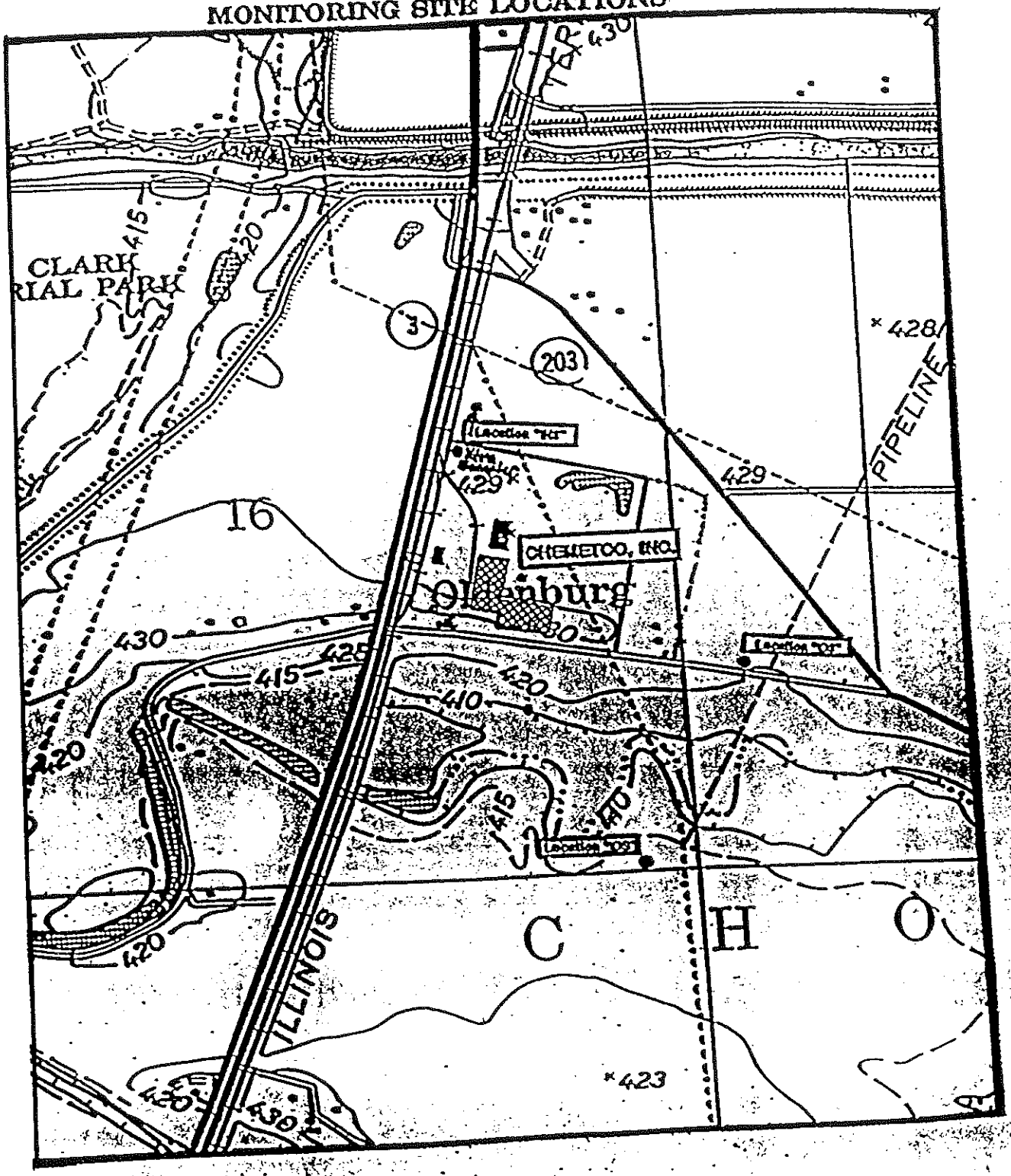

TABLE 1-1
STANDARD OPERATING PROCEDURES

Determination of Total Suspended Particulates in Ambient Air Filters

Filter Conditioning

Lead Analysis in Ambient Air Filters

Operation of GMW 2310 TSP Samplers

Packaging and Shipment of Samples

2.0 SAMPLING DATE ACCOUNTING

Following is a list of the dates the monitors were to have run. Table 2.1 accounts the dates and events.

TABLE 2.1 - Sample Date Accounting

DATE	SAMPLER	RUN STATUS	QUALIFICATION	ERROR REASON
07-05-00	N3-QC	OK	Yes	
	N3	OK	Yes	
	OS	OK	Yes	
	O3	OK	Yes	
07-11-00	N3-QC	OK	Yes	
	N3	OK	Yes	
	OS	OK	Yes	
	O3	No	No	Power failure
07-17-00	N3-QC	OK	Yes	
	N3	OK	Yes	
	OS	OK	Yes	
	O3	OK	Yes	
07-23-00	N3-QC	OK	Yes	
	N3	OK	Yes	
	OS	OK	Yes	
	O3	OK	Yes	
07-19-00	N3-QC	OK	Yes	
	N3	OK	Yes	
	OS	OK	Yes	
	O3	OK	Yes	
08-04-00	N3-QC	No	No	Did not run, new motor needed
	N3	OK	Yes	
	OS	OK	Yes	
	O3	OK	Yes	
08-10-00	N3-QC	OK	Yes	
	N3	OK	Yes	
	OS	OK	Yes	
	O3	OK	Yes	
08-16-00	N3-QC	OK	Yes	
	N3	OK	Yes	
	OS	OK	Yes	
	O3	OK	Yes	
08-22-00	N3-QC	OK	Yes	
	N3	OK	Yes	
	OS	OK	Yes	
	O3	OK	Yes	
08-28-00	N3-QC	OK	Yes	
	N3	OK	Yes	
	OS	OK	Yes	
	O3	OK	Yes	
09-03-00	N3-QC	OK	Yes	
	N3	OK	Yes	
	OS	OK	Yes	
	O3	OK	Yes	

TABLE 2.1 - Sample Date Accounting (con't)

DATE	SAMPLER	RUN STATUS	QUALIFICATION	ERROR REASON
09-09-00	N3-QC	OK	Yes	
	N3	OK	Yes	
	OS	OK	Yes	
	O3	OK	Yes	
09-15-00	N3-QC	OK	Yes	
	N3	OK	Yes	
	OS	OK	Yes	
	O3	OK	Yes	
09-21-00	N3-QC	OK	Yes	
	N3	No	No	Breaker blew out during run/Not enough time
	OS	OK	Yes	
	O3	OK	Yes	
09-27-00	N3-QC	OK	Yes	
	N3	OK	Yes	

3.0 MONITORING DATA

After the receipt from the laboratory of all data for the quarterly report, averages for each monitoring site were calculated from the pool of data. In addition, at site N3, two samplers were set up for quality assurance purposes. A standard deviation, lower and upper range was determined based on those samples and under normal circumstances can be assumed to represent accuracy for all locations.

Each day, meteorological data was noted. The weather information was obtained from both the National Weather Service and the on-site weather station. There were a few days during the last quarter where the information was not obtained by the guard from the National Weather Service and the on site program did not operate. In order to insure that data is available in the future, Chemetco is looking into a third source of weather information. Chemetco is looking at subscribing to the Midwest Climate Center's database. This should alleviate any future "holes" in the weather logs. These logs are shown in Figure 3.1 and quarterly averages are discussed in Section 3.2.

3.1 Quarterly Averages Calculation

From the pool of acceptable data, quarterly averages were calculated by using the simple arithmetic mean determination shown in Equation 1.

$$X = \frac{\Sigma X_i}{n} \qquad \textit{Equation 1}$$

where,

X_i = individual sampling data,

n = the number of valid sampling points in the quarter.

FIGURE 3-1
METEOROLOGICAL DATA SHEET

DAILY WEATHER LOGSHEET

Date	Wind Speed	Wind Direction	Wind Sigma	Temperature (F)	Relative Humidity %	Precipitation
07-01-00	6.50	45		71	77	0.02
07-02--00	9.00	135		71	82	0.00
07-03-00						0.00
07-04-00	8.00	202		78	87	0.00
*07-05-00	9.00	180		86	71	0.00
07-06-00						0.00
07-07-00	6.00	112		83	71	0.00
07-08-00	8.00	67		82	70	0.00
07-09-00	8.00	135		81	61	0.00
07-10-00	7.00	180		80	62	0.00
*07-11-00	9.00	180		82	72	0.00
07-12-00	12.00	180		80	90	0.50
07-13-00	4.00	157		86		0.00
07-14-00	5.00	250		87	76	0.00
07-15-00	3.00	306		85	62	0.00
07-16-00	4.00	152		82	59	0.00
*07-17-00	4.00	171		77	66	0.00
07-18-00	5.00	219		81	82	0.30
07-19-00	8.00	319		75		2.00
07-20-00	1.00	169		73		0.02
07-21-00	5.50	90		90	78	0.00
07-22-00	4.00	90		69	71	0.00
*07-23-00	5.00	0		71	70	0.00
07-24-00	6.00	338		85	73	0.00
07-25-00	4.0	137		76		0.00

* Denotes Air Sampling Date

FIGURE 3-1 (cont.)

DAILY WEATHER LOGSHEET

Date	Wind Speed	Wind Direction	Wind Sigma	Temperature (F)	Relative Humidity %	Precipitation
07-26-00	7.00	135		85		0.00
07-27-00	6.00	154		83		0.00
07-28-00	6.00	162		76	78	0.50
*07-29-00	3.00	213		75	78	0.00
07-30-00	2.00	296		77	93	0.10
07-31-00	3.00	264		76	91	0.20
08-01-00	2.50	208		81	89	0.00
08-02-00	5.50	182		83	77	0.00
08-03-00	5.00	184		83	66	0.00
*08-04-00	6.00	149		79		0.00
08-05-00						0.00
08-06-00	13.00	135		76	70	0.10
08-07-00	7.00	90		73	73	0.04
08-08-00						0.09
08-09-00	3.00	135		82	76	0.00
*08-10-00	6.00	173		84	75	0.00
08-11-00	2.00	332		83		0.00
08-12-00	4.00	145		81		0.00
08-13-00	5.00	117		77		0.00
08-14-00	6.00	129		82		0.00
08-15-00	4.50	175		88		0.00
*08-16-00	5.00	142		87	79	0.00
08-17-00	9.00	72		79	79	0.00
08-18-00	6.50	342		82	74	0.00
08-19-00	6.00	322		73	69	0.00

* Denotes Air Sampling Date

FIGURE 3-1 (cont.)

DAILY WEATHER LOGSHEET

Date	Wind Speed	Wind Direction	Wind Sigma	Temperature (F)	Relative Humidity %	Precipitation
08-20-00	7.00	133		71		0.30
08-21-00	8.00	120		75		0.00
*08-22-00	7.50	118		83		0.00
08-23-00	4.00	153		83		0.00
08-24-00	7.00	38		84	69	1.26
08-25-00	4.00	35		82	66	0.00
08-26-00	10.00	72		82	71	0.06
08-27-00	9.00	76		82	82	0.00
*08-28-00	7.00	77		83	81	0.00
08-29-00	10.00	77		86	74	0.00
08-30-00	7.00	60		87	87	0.00
08-31-00	8.00	102		83	28	0.00
09-01-00	10.00	103		73	88	0.00
09-02-00	5.00	74		85	70	0.00
*09-03-00	7.00	90		84	69	0.00
09-04-00	8.00	38		86	66	0.00
09-05-00	8.00	73		86	65	0.00
09-06-00	6.00	44		85	64	0.00
09-07-00						0.00
09-08-00						0.00
*09-09-00	12.00	105		78	78	0.00
09-10-00	12.00	157		76	73	0.00
09-11-00	11.00	157		77	75	0.55
09-12-00	12.00	157		80	73	0.41

* Denotes Air Sampling Date

FIGURE 3-1 (cont.)

DAILY WEATHER LOGSHEET

Date	Wind Speed	Wind Direction	Sigma	Temperature (F)	Relative Humidity %	Precipitation
09-13-00	10.00	90		81	68	0.10
09-14-00	12.00	180		73	74	0.62
*09-15-00						0.00
09-16-00	10.00	45		69	46	0.00
09-17-00	6.00	0		60	48	0.00
09-18-00	6.00	0		60	48	0.00
09-19-00	12.00	135		63	46	0.00
09-20-00	14.00	157		70	39	0.00
*09-21-00	1.00	246		64	69	2.00
09-22-00	1.00	146		72	51	0.00
09-23-00	2.00	215		78	65	0.00
09-24-00	2.00	347		64	74	0.10
09-25-00	0.00	318		54	89	0.10
09-26-00	0.00	266		59	80	1.25
*09-27-00	0.00	149		65	81	0.00
09-28-00	0.00	303		69	81	0.00
09-29-00	2.50	148		66	79	0.00
09-30-00	3.00	130		69	58	

* Denotes Air Sampling Date

3.2 Sampler Quarterly Averages

The simple quarterly average for each set of data from a particular sampler are calculated in the following tables, 3.1 through 3.4.

TABLE 3.1 - Sampler Location N3

DATE	FILTER NO	LEAD (ug/m^3)	TSP* (ug/m^3)
07/05/00	6047794	0.00	81.58
07/11/00	6047786	0.57	61.17
07/17/00	6047776	0.40	61.65
07/23/00	6047801	0.00	25.17
07/29/00	6047806	0.04	31.67
08/04/00	6047813	0.00	27.03
08/10/00	6047852	0.00	43.08
08/16/00	6047856	0.00	65.89
08/22/00	9018860	3.06	118.20
08/28/00	9018866	1.31	83.09
09/03/00	9018871	0.36	82.72
09/09/00	9018876	6.53	100.84
09/15/00	9018882	0.04	25.36
09/21/00	9018900	Breaker blew out	
09/27/00	9018896	0.00	17.12
		=========	=========
	AVERAGE	0.88	58.90

TABLE 3.2 - Sampler Location OS

DATE	FILTER NO.	LEAD (ug/m^3)	TSP* (ug/m^3)
07/05/00	6047790	0.14	104.81
07/11/00	6047788	0.00	37.10
07/17/00	6047778	0.00	29.74
07/23/00	6047797	0.00	19.78
07/29/00	6047804	0.00	24.13
08/04/00	6047812	0.00	22.90
08/10/00	6047818	1.66	50.55
08/16/00	9018855	0.00	61.49
08/22/00	9018864	0.00	58.58
08/28/00	9018868	0.00	52.78
09/03/00	9018872	0.00	75.15
09/09/00	9018879	0.00	11.21
09/15/00	9018884	2.10	39.15
09/21/00	9018903	0.43	32.79
09/27/00	9018897	0.00	34.77
		=========	=========
	AVERAGE	0.29	43.66

TABLE 3.3 - Sampler Location O3

DATE	FILTER NO.	LEAD (ug/m^3)	TSP* (ug/m^3)
07/05/00	6047791	0.44	188.46
07/11/00	6047789	Power failure	
07/17/00	6047789	0.06	31.90
07/23/00	6047800	0.11	44.99
07/29/00	6047805	0.04	21.64
08/04/00	6047811	0.00	22.02
08/10/00	6047817	0.00	38.14
08/16/00	9018858	0.00	63.36
08/22/00	9018863	0.00	59.18
08/28/00	9018867	0.00	45.69
09/03/00	9018873	0.00	64.11
09/09/00	9018878	0.00	40.51
09/15/00	9018883	0.10	26.72
09/21/00	9018902	0.14	31.67
09/27/00	9018895	0.00	35.97
		==========	==========
	AVERAGE	0.07	51.03

TABLE 3.4 - Filter Blank

DATE	FILTER NO.	LEAD (ug/filter)	TSP* (ug/filter)
07/05/00	6047783	6	160
07/11/00	6047781	6	300
07/17/00	6047779	6	600
07/23/00	6047803	6	4900
07/29/00	6047810	6	3300
08/04/00	6047816	6	4100
08/10/00	6047854	6	0
08/16/00	9018859	6	0
08/22/00	9018865	6	1600
08/28/00	9018869	6	-5800
09/03/00	9018875	6	-3300
09/09/00	9018886	6	300
09/15/00	Not enough filters		
09/21/00	9018894	6	-1800
09/27/00	9018893	6	300
		=========	=========
	AVERAGE	5.57	300.40

*TSP - Total Suspended Particulate

3.3 Instrument Precision Calculation

The estimates of precision for ambient air quality measurements from the TSP method are calculated from results obtained from the collection of two samplers at one sampling site, N3. The calculated precision from this one sampling site is considered indicative of the precision at all sampling sites for the TSP method.

Using the paired measurements for the official sampler, labeled "N3" and the secondary sampler, labeled "N3-QC," the precision was calculated from the following equations. These numbers are reported on the Data Assessment Report shown in Figure 3-2.

Percentage Difference, d_i

$$d_i = \frac{Y_i - X_i}{X_i} \times 100\%$$

where: Y_i = the concentration TSP measured by the secondary sampler; and
X_i = the concentration TSP measured by the official sampler.

Average Percentage Difference, d_j

$$d_j = \frac{\Sigma d_i}{n}$$

where: n = the number of comparisons.

Standard Deviation, S_j

$$S_j = \sqrt{\frac{\Sigma(d_i)^2 - n(d_j)^2}{n - 1}}$$

96% Probability Limits

$$\text{Upper Limit} = d_j + \frac{1.96(S_j)}{2}$$

$$\text{Lower Limit} = d_j - \frac{1.96(S_j)}{2}$$

FIGURE 3-2
DATA ASSESSMENT REPORT

Date: October 27, 2000
Auditor: Heather Young

Allocated Samplers

d_i = 45.51
d_j = 3.5 %
S_j = 11.26 %

Upper Limit = 14.53 %

Lower Limit = -7.53%

Range = 51.37 to 73.43

Flow Rate Percentage Differences:

Sampler #1:(See Sect. 3-4) **Sampler #2:**(See Sect. 3-4)

Sampler #3:(See Sect. 3-4) **Sampler #4:**(See Sect. 3-4)

3.4 Single Instrument Accuracy

Estimates of accuracy for ambient air quality measurements from the TSP method are calculated from the results of independent audits. Once each sampling quarter, the flow rate of each high-volume sampler is audited.

Jim Henry with the IEPA Collinsville Field Office audited the sampler motors. Results of the audit are on record at the field office

3.5 Documentation

For each of the sampling episodes, data packages have been assembled to facilitate the retrieval of necessary data to perform and check calculations, assumptions and determinations and to generate accurate reports. These packages are maintained in a central project file at Chemetco.

Data forms are attached with backup and confirmatory information in Appendices A through C. They include:

- Filter Conditioning and TSP Calculation Logsheets;
- Calculation pages; and,
- Laboratory Analyses Report Sheet.

APPENDIX A

CALCULATION COVER SHEET

Company Name: Chemetco, Inc.

Project Name: Ambient Air Monitoring

Project Number: 00QTR3

Purpose: Sampler Averages

Total Number of Pages: 6 (including this one)

Date: October 27, 2000

Originator's Signature: _____

2000 3RD QUARTER AVERAGE CALCULATION

LOCATION: N3

DATE	FILTER NO	TIME FINISH	TIME START	ELAPSED TIME	CFM	CUBIC METERS	LEAD ug/fltr	TSP ug/fltr	LEAD ug/m3	TSP ug/m3
07/05/00	6047794	1410	0	1410	43.9	1857	6	151500	0.00	81.58
07/11/00	6047786	1412	0	1412	44.5	1885	1071	115300	0.57	61.17
07/17/00	6047776	1409	0	1409	43.9	1856	751	114400	0.40	61.65
07/23/00	6047801	1411	0	1411	42.7	1807	6	45500	0.00	25.17
07/29/00	6047806	1412	0	1412	45.1	1910	72	60500	0.04	31.67
08/04/00	6047813	1411	0	1411	45.1	1909	6	51600	0.00	27.03
08/10/00	6047852	1409	0	1409	48	2029	6	87400	0.00	43.08
08/16/00	9018856	1410	0	1410	42.7	1809	6	119200	0.00	65.89
08/22/00	9018860	1410	0	1410	43.3	1832	5601	216500	3.06	118.20
08/28/00	9018866	1411	0	1411	43.9	1858	2426	154400	1.31	83.09
09/03/00	9018871	1408	0	1408	43.3	1829	653	151300	0.36	82.72
09/09/00	9018876	1407	0	1407	43.3	1828	11941	184300	6.53	100.84
09/15/00	9018882	1407	0	1407	43.9	1853	71	47000	0.04	25.36
09/21/00	9018900	Breaker	blew out.	Not	enough	time.				
09/27/00	9018896	1438	0	1438	44.5	1920	0	51800	0.00	17.12
								AVERAGE	0.88	58.90

2000 3RD QUARTER AVERAGE CALCULATION

LOCATION: N3-QC

DATE	FILTER NO	TIME FINISH	TIME START	ELAPSED TIME	CFM	CUBIC METERS	LEAD ug/fltr	TSP ug/fltr	LEAD ug/m3	TSP ug/m3
07/05/00	6047793	63406.4	61966.9	1439.5	43.7	1887	6	173400	0.00	91.88
07/11/00	6047787	64847.2	63407.7	1439.5	44.4	1917	1071	125000	0.56	65.19
07/17/00	6047777	66287.5	64848.5	1439	44.4	1917	1388	163900	0.72	85.51
07/23/00	6047799	67727.2	66289	1438.2	44.4	1916	6	54600	0.00	28.50
07/29/00	6047807	69168.6	67729.1	1439.5	44.4	1917	72	62100	0.04	32.39
08/04/00	Did not	run. New	Motor	needed.						
08/10/00	6047814	72050.8	70611.2	1439.6	44.6	1926	6	102300	0.00	53.11
08/16/00	9018853	73492.5	72053.4	1439.1	47	2020	6	133200	0.00	65.94
08/22/00	9018861	74933.5	73494	1439.5	47.7	2060	4665	191700	2.26	93.06
08/28/00	9018862	76375.2	74935.5	1439.7	46.4	2004	1546	177900	0.77	88.77
09/03/00	9018874	77816.8	76377.1	1439.7	45.3	1957	782	158600	0.40	81.06
09/09/00	9018877	79257.9	77817.9	1440	47	2030	14331	215300	7.06	106.04
09/15/00	9018881	80699.7	79259	1440.7	46.4	2005	71	53200	0.04	26.53
09/21/00	9018901	82138.7	80701.1	1437.6	46.4	2001	6	72100	0.00	36.03
09/27/00	9018898	83579	82139	1440	46.4	2004	6	50800	0.00	25.34
								AVERAGE	0.85	62.81

2000 3RD QUARTER AVERAGE CALCULATION

LOCATION: OS

DATE	FILTER NO	TIME FINISH	TIME START	ELAPSED TIME	CFM	CUBIC METERS	LEAD ug/fltr	TSP ug/fltr	LEAD ug/m3	TSP ug/m3
07/05/00	6047790	1440	0	1440	45.3	1957	279	205100	0.14	104.81
07/11/00	6047788	1440	0	1440	45.3	1957	6	72600	0.00	37.10
07/17/00	6047778	1440	0	1440	43.9	1896	6	56400	0.00	29.74
07/23/00	6047797	1440	0	1440	46.7	2017	6	39900	0.00	19.78
07/29/00	6047804	1440	0	1440	46.7	1927	6	46500	0.00	24.13
08/04/00	6047812	1440	0	1440	47.3	2043	6	46800	0.00	22.90
08/10/00	6047818	1440	0	1440	47.3	2043	3382	103300	1.66	50.55
08/16/00	9018855	1440	0	1440	48	2074	6	127500	0.00	61.49
08/22/00	9018864	1440	0	1440	48	2074	6	121500	0.00	58.58
08/28/00	9018868	1440	0	1440	45.3	1957	6	103300	0.00	52.78
09/03/00	9018872	1440	0	1440	44.6	1927	6	144800	0.00	75.15
09/09/00	9018879	1440	0	1440	47.3	2043	6	22900	0.00	11.21
09/15/00	9018884	1440	0	1440	47.3	2043	4296	80000	2.10	39.15
09/21/00	9018903	1440	0	1440	40.1	1732	752.9	56800	0.43	32.79
09/27/00	9018897	1440	0	1440	44.6	1927	6	67000	0.00	34.77
								AVERAGE	0.29	43.66

2000 3RD QUARTER AVERAGE CALCULATION

LOCATION: O3

DATE	FILTER NO	TIME FINISH	TIME START	ELAPSED TIME	CFM	CUBIC METERS	LEAD ug/fltr	TSP ug/fltr	LEAD ug/m3	TSP ug/m3
07/05/00	6047791	34655.5	33215.5	1440	46	1987	879.2	374500	0.44	188.46
07/11/00	6047789	34657	34657	Did not	run.	Power	failure.			
07/17/00	6047789	36101.5	34660.4	1441.1	46.7	2019	115	64400	0.06	31.90
07/23/00	6047800	37542.6	36102.6	1440	46	1987	222	89400	0.11	44.99
07/29/00	6047805	38983.7	37543.7	1440	46	1987	72	43000	0.04	21.64
08/04/00	6047811	40425	38985	1440	47.3	2043	6	45000	0.00	22.02
08/10/00	6047817	41866.5	40426.5	1440	46	1987	6	75800	0.00	38.14
08/16/00	9018858	43308.5	41868.5	1440	46.7	2017	6	127800	0.00	63.36
08/22/00	9018863	44749.9	43309.8	1440.1	46.7	2018	6	119400	0.00	59.18
08/28/00	9018867	46191.9	44751.9	1440	46	1987	6	90800	0.00	45.69
09/03/00	9018873	47633.4	46193.4	1440	46	1987	6	127400	0.00	64.11
09/09/00	9018878	49075.4	47635.4	1440	46	1987	6	80500	0.00	40.51
09/15/00	9018883	50517.2	49077.2	1440	46.7	2017	195.6	53900	0.10	26.72
09/21/00	9018902	51958.5	50518	1440.5	45.3	1958	282.3	62000	0.14	31.67
09/27/00	9018895	53400.4	51960.4	1440	45.3	1957	6	70400	0.00	35.97
								AVERAGE	0.07	51.03

2000 3RD QUARTER AVERAGE CALCULATION

LOCATION: FB

DATE	FILTER NO	LEAD ug/filter	TSP ug/filter
07/05/00	6047783	6	160
07/11/00	6047781	6	300
07/17/00	6047779	6	600
07/23/00	6047803	6	4900
07/29/00	6047810	6	3300
08/04/00	6047816	6	4100
08/10/00	6047854	6	0
08/16/00	9018859	6	0
08/22/00	9018865	6	1600
08/28/00	9018869	6	-5800
09/03/00	9018875	6	-3300
09/09/00	9018886	6	300
09/15/00	Not	enough	filters.
09/21/00	9018894	6	-1800
09/27/00	9018893	6	300
	AVERAGES	5.57	300.40

CALCULATION COVER SHEET

Company Name: Chemetco, Inc.

Project Name: Ambient Air Monitoring

Project Number: 00QTR3

Purpose: Sampler Precision Calculation

Total Number of Pages: 2 (including this one)

Date: October 27, 2000

Originator's Signature:

SAMPLER PRECISION CALCULATION (PARTICULATE)

Sampling Date	Duplicate Sampler	Official Sampler	Difference	Difference (Square)
07-05-00	91.88	81.58	10.03	106.09
07-11-00	65.19	61.17	4.02	16.16
07-17-00	85.51	61.65	23.86	569.30
07-23-00	28.50	25.17	3.33	11.09
07-29-00	32.39	31.67	0.72	0.52
08-04-00	——	27.03	——	——
08-10-00	53.11	43.08	10.03	100.60
08-16-00	65.94	65.89	0.05	0.0025
08-22-00	93.06	118.20	-25.14	632.02
09-28-00	88.77	83.09	5.68	32.26
09-03-00	81.06	82.72	-1.66	2.76
09-09-00	106.04	100.84	5.20	27.04
09-15-00	26.53	25.36	1.17	1.37
09-21-00	36.03	——	——	——
09-27-00	25.34	17.12	8.22	67.57
		$\Sigma d_i =$	45.51	$\Sigma d_i^2 =$ 1566.78

n=13

$$d_j = \frac{\Sigma d_j}{n} = \frac{45.51}{13} = 3.50\%$$

$$S_j = \sqrt{\frac{\Sigma(d_j)^2 - n(d_j)^2}{n-1}} = \sqrt{\frac{1567 - 13(3.5)}{13-1}} = \sqrt{\frac{1567 - 45.5}{12}} = 11.26\%$$

$$\text{Upper Limit} = d_j + \frac{1.96(S_j)}{2} = 3.5\% + \frac{1.96(11.26)}{2} = 3.5 + 11.03 = 14.53\%$$

$$\text{Lower Limit} = d_j - \frac{1.96(S_j)}{2} = 3.5\% - \frac{1.96(11.26)}{2} = 3.5 - 11.03 = -7.53\%$$

Official Average Particulate: 58.90 mg/m^3

Range: 51.37 to 73.43

APPENDIX B

Chemetco, Inc.
Rt. 3 at Chemetco Lane
Hartford, IL 62048

ATTN: Heather Young Date: 14-Jul-00

Sample type: Hi-Vol Air Monitoring Program

Sample Identification: Listed below

Filter ID	Location	Pb, ug/filter	TSP,mg/filter
G6047790	OS	<6	144.3
G6047791	O3	311	92
G6047794	N3	<6	151.5
G6047793	N3QC	<6	173.4
G6047792	Extra	<6	203.7
G6047783	FB	<6	1.6

Analyst: Matt Creasy

Title: Laboratory Technician

Chemetco, Inc.
Rt. 3 at Chemetco Lane
Hartford, IL 62048

ATTN: Heather Young Date: **21-Jul-00**

Sample type: **Hi-Vol Air Monitoring Program**

Sample Identification: **Listed below**

Filter ID	Location	Pb, ug/filter	TSP,mg/filter
G6047788	OS	<6	72.6
G6047789	O3	<6	0
G6047786	N3	1071	115.3
G6047787	N3QC	1071	125
G6047784	Extra	2891	162
G6047781	FB	<6	0.3

Analyst: Matt Creasy

Title: Laboratory Technician

Chemetco, Inc.
Rt. 3 at Chemetco Lane
Hartford, IL 62048

ATTN: Heather Young

Date: 21-Jul-00

Sample type: Hi-Vol Air Monitoring Program

Sample Identification: Listed below

Filter ID	Location	Pb, ug/filter	TSP,mg/filter
G6047778	OS	<6	56.4
G6047789	O3	115	64.4
G6047776	N3	751	114.4
G6047777	N3QC	1388	163.9
G6047780	Extra	3424	207.2
G6047779	FB	<6	0.6

Analyst: Matt Creasy

Title: Laboratory Technician

Chemetco, Inc.
Rt. 3 at Chemetco Lane
Hartford, IL 62048

ATTN: Heather Young Date: 1-Aug-00

Sample type: Hi-Vol Air Monitoring Program

Sample Identification: Listed below

Filter ID	Location	Pb, ug/filter	TSP,mg/filter
G6047797	OS	<6	39.9
G6047800	O3	222	89.4
G6047801	N3	<6	45.5
G6047799	N3QC	<6	54.6
G6047802	Extra	did not run	
G6047803	FB	<6	4.9

Matthew Creasy

Analyst: Matt Creasy

Title: Laboratory Technician

Chemetco, Inc.
Rt. 3 at Chemetco Lane
Hartford, IL 62048

ATTN: Heather Young

Date: 3-Aug-00

Sample type: Hi-Vol Air Monitoring Program

Sample Identification: Listed below

Filter ID	Location	Pb, ug/filter	TSP,mg/filter
G6047804	OS	<6	46.5
G6047805	O3	72	43
G6047806	N3	72	60.5
G6047807	N3QC	72	62.1
G6047802	Extra	215	68.5
G6047810	FB	<6	3.3

Matthew Creasy

Analyst: Matt Creasy

Title: Laboratory Technician

Chemetco, Inc.
Rt. 3 at Chemetco Lane
Hartford, IL 62048

ATTN: Heather Young

Date: 15-Aug-00

Sample type: Hi-Vol Air Monitoring Program

Sample Identification: Listed below

Filter ID	Location	Pb, ug/filter	TSP,mg/filter
G6047812	OS	<6	46.8
G6047811	O3	<6	45
G6047813	N3	<6	51.6
	N3QC	DID NOT RUN	
G6047808	Extra	<6	64.4
G6047816	FB	<6	4.1

Analyst: Matt Creasy

Title: Laboratory Technician

Chemetco, Inc.
Rt. 3 at Chemetco Lane
Hartford, IL 62048

ATTN: Heather Young Date: 16-Aug-00

Sample type: Hi-Vol Air Monitoring Program

Sample Identification: Listed below

Filter ID	Location	Pb, ug/filter	TSP,mg/filter
G6047818	OS	3,382	103.3
G6047817	O3	<6	75.8
G6047852	N3	<6	87.4
G6047814	N3QC	<6	102.3
G6047851	Extra	<6	110.9
G6047854	FB	<6	0

Analyst: Matt Creasy

Title: Laboratory Technician

Chemetco, Inc.
Rt. 3 at Chemetco Lane
Hartford, IL 62048

ATTN: Heather Young Date: 22-Aug-00

Sample type: Hi-Vol Air Monitoring Program

Sample Identification: Listed below

Filter ID	Location	Pb, ug/filter	TSP,mg/filter
G9018855	OS	<6	127.5
G9018858	O3	<6	127.8
G9018856	N3	<6	119.2
G9018853	N3QC	<6	133.2
G9018857	Extra	<6	177.3
G9018859	FB	<6	0

Analyst: Matt Creasy

Title: Laboratory Technician

Chemetco, Inc.
Rt. 3 at Chemetco Lane
Hartford, IL 62048

ATTN: Heather Young Date: **30-Aug-00**

Sample type: **Hi-Vol Air Monitoring Program**

Sample Identification: **Listed below**

Filter ID	Location	Pb, ug/filter	TSP,mg/filter
G9018860	N3	5,601	216.5
G9018861	N3QC	4665	191.7
G9018863	O3	<6	119.4
G9018864	OS	<6	121.5
G9018865	FB	<6	1.6

Analyst: **Matt Creasy**

Title: **Laboratory Technician**

Chemetco, Inc.
Rt. 3 at Chemetco Lane
Hartford, IL 62048

ATTN: Heather Young

Date: 12-Sept.-00

Sample type: Hi-Vol Air Monitoring Program

Sample Identification: Listed below

Filter ID	Location	Pb, ug/filter	TSP,mg/filter
G9018872	OS	<6	144.8
G9018873	O3	<6	127.4
G9018871	N3	653	151.3
G9018874	N3QC	782	158.6
G9018870	Extra	1,426	161
G9018875	FB	<6	-3.3

Analyst: Matt Creasy

Title: Laboratory Technician

Chemetco, Inc.
Rt. 3 at Chemetco Lane
Hartford, IL 62048

ATTN: Heather Young Date: 25-Sep-00

Sample type: Hi-Vol Air Monitoring Program

Sample Identification: Listed below

Filter ID	Location	Pb, ug/filter	TSP,mg/filter
G9018879	OS	<6	22.9
G9018878	O3	<6	80.5
G9018876	N3	11,941	184.3
G9018877	N3QC	14,331	215.3
G9018880	Extra	25,271	280
G9018886	FB	<6	0.3

Analyst: Matt Shoemaker

Title: Laboratory Technician

Chemetco, Inc.
Rt. 3 at Chemetco Lane
Hartford, IL 62048

ATTN: Heather Young Date: 25-Sep-00

Sample type: Hi-Vol Air Monitoring Program

Sample Identification: Listed below

Filter ID	Location	Pb, ug/filter	TSP,mg/filter
G9018884	OS	4296	80
G9018883	O3	195.6	53.9
G9018882	N3	71	47
G9018881	N3QC	71	53.2
G9018885	Extra	196	40.6

Analyst: Matt Shoemaker

Title: Laboratory Technician

Chemetco, Inc.
Rt. 3 at Chemetco Lane
Hartford, IL 62048

ATTN: Heather Young Date: 2-Oct-00

Sample type: Hi-Vol Air Monitoring Program

Sample Identification: Listed below

Filter ID	Location	Pb, ug/filter	TSP,mg/filter
G9018903	OS	752.9	56.8
G9018902	O3	282.3	62
G9018900	N3	<6	59
G9018901	N3QC	<6	72.1
G9018904	Extra	518	73.6
G9018894	FB	<6	-1.8

Analyst: Matt Shoemaker

Title: Laboratory Technician

Chemetco, Inc.
Rt. 3 at Chemetco Lane
Hartford, IL 62048

ATTN: Heather Young Date: 4-Oct-00

Sample type: Hi-Vol Air Monitoring Program

Sample Identification: Listed below

Filter ID	Location	Pb, ug/filter	TSP,mg/filter
G9018897	OS	<6	67
G9018895	O3	<6	70.4
G9018896	N3	725	116.3
G9018898	N3QC	840	74.4
G9018899	Extra	582	109.1
G9018893	FB	<6	0.3

Analyst: Matt Shoemaker

Title: Laboratory Technician

APPENDIX C

Chemetco Environmental Management
Filter Conditioning Logsheet

	Pre Sampling Conditioning			Post Sampling Conditioning				
Filter Number	Date In	Date Out	Weight, mg	Date In	Date Out	Weight, mg	W_{net}, mg	W_{net}, ug
G9018899	9/18/00	9/20/00	4479.0	9/28/00	10/02/00	4588.1	109.1	
G9018900	9/18/00	9/20/00	4422.6	9/27/00	9/29/00	4481.6	59	
G9018901	9/18/00	9/20/00	4425.4	9/27/00	9/29/00	4497.5	72.1	
G9018902	9/18/00	9/20/00	4441.9	9/27/00	9/29/00	4503.9	62	
G9018903	9/18/00	9/20/00	4407.9	9/27/00	9/29/00	4464.7	56.8	
G9018904	9/18/00	9-20-00	4400.6	9/27/00	9/29/00	4474.2	73.6	
G9018905	9/28/00	10/02/00	4451.8					
G9018906	9/28/00	10/02/00	4454.5					
G9018907	9/28/00	10/02/00	4490.2					
G9018908	9/28/00	10/02/00	4471.9					
G9018909	9/28/00	10/02/00	4467.7					
G9018910	9/28/00	10/02/00	4447.5					
G9018911	9/28/00	10/02/00	4421.5					
G9018912	9/28/00	10/02/00	4439.9					
G9018913	9/28/00	10/02/00	4431.2					
G9018914	9/28/00	10/02/00	4434.3					

Chemetco Environmental Management
Filter Conditioning Logsheet

	Pre Sampling Conditioning			Post Sampling Conditioning				
Filter Number	Date In	Date Out	Weight, mg	Date In	Date Out	Weight, mg	W_{net}, mg	W_{net}, ug
G9018883	8/25/00	8/28/00	4458.7	9/18/00	9/20/00	4512.6	53.9	
G9018884	8/25/00	8/28/00	4420.8	9/18/00	9/20/00	4500.8	80	
G9018885	8/25/00	8/28/00	4503.5	9/18/00	9/20/00	4544.1	40.6	
G9018886	8/25/00	8/28/00	4475.0	9/18/00	9/20/00	4475.3	0.3	
G9018887	9/18/00	9/20/00	4443.4					
G9018888	9/18/00	9/20/00	4454.4					
G9018889	9/18/00	9/20/00	4420.8					
G9018890	9/18/00	9/20/00	4428.8					
G9018891	9/18/00	9/20/00	4448.5					
G9018892	9/18/00	9/20/00	4465.2					
G9018893	9/18/00	9/20/00	4456.2	9/28/00	10/02/00	4458.5	0.3	
G9018894	9/18/00	9/20/00	4413.9	9/28/00	9/29/00	4412.0	-1.8	
G9018895	9/18/00	9/20/00	4474.4	9/28/00	10/02/00	4544.8	70.4	
G9018896	9/18/00	9/20/00	4438.0	9/28/00	10/02/00	4554.3	116.3	
G9018897	9/18/00	9/20/00	4465.1	9/28/00	10/02/00	4532.1	67	
G9018898	9/18/00	9/20/00	4422.4	9/28/00	10/02/00	4496.8	74.4	

Chemetco Environmental Management
Filter Conditioning Logsheet

	Pre Sampling Conditioning			Post Sampling Conditioning				
Filter Number	Date In	Date Out	Weight, mg	Date In	Date Out	Weight, mg	W_{net}, mg	W_{net}, ug
G9018867	7/31/00	8/03/00	4411.3	8/31/00	9/4/00	4502.1	90.8	
G9018868	7/31/00	8/03/00	4409.7	8/31/00	9/4/00	4513.0	103.3	
G9018869	8/25/00	8/28/00	4452.6	8/31/00	9/4/00	4446.8	-5.8	
G9018870	8/25/00	8/28/00	4466.5	9/7/00	9/10/00	4627.5	161	
G9018871	8/25/00	8/28/00	4424.1	9/7/00	9/10/00	4575.4	151.3	
G9018872	8/25/00	8/28/00	4418.1	9/7/00	9/10/00	4562.9	144.8	
G9018873	8/25/00	8/28/00	4458.2	9/7/00	9/10/00	4585.6	127.4	
G9018874	8/25/00	8/28/00	4442.0	9/7/00	9/10/00	4600.6	158.6	
G9018875	8/25/00	8/28/00	4425.9	9/7/00	9/10/00	4422.6	-3.3	
G9018876	8/25/00	8/28/00	4437.7	9/18/00	9/10/00	4622.0	184.3	
G9018877	8/25/00	8/28/00	4428.0	9/18/00	9/10/00	4643.3	215.3	
G9018878	8/25/00	8/28/00	4415.8	9/18/00	9/10/00	4496.3	80.5	
G9018879	8/25/00	8/28/00	4438.1	9/18/00	9/10/00	4461.0	22.9	
G9018880	8/25/00	8/28/00	4438.5	9/18/00	9/10/00	4718.5	280	
G9018881	8/25/00	8/28/00	4454.5	9/18/00	9/10/00	4487.7	53.2	
G9018882	8/25/00	8/28/00	4454.6	9/18/00	9/10/00	4501.6	47	

Chemetco Environmental Management
Filter Conditioning Logsheet

	Pre Sampling Conditioning			Post Sampling Conditioning				
Filter Number	Date In	Date Out	Weight, mg	Date In	Date Out	Weight, mg	W_{net}, mg	W_{net}, ug
G9018851	7/31/00	8/03/00	4392.6	8/14/00	8/16/00	4503.5	110.9	
G9018852	7/31/00	8/03/00	4372.4	8/14/00	8/16/00	4459.8	87.4	
G9018853	7/31/00	8/03/00	4370.6	8/18/00	8/21/00	4503.8	133.2	
G9018854	7/31/00	8/03/00	4396.1	8/14/00	8/16/00	4393.6	-2.5	
G9018855	7/31/00	8/03/00	4375.7	8/18/00	8/21/00	4503.2	127.5	
G9018856	7/31/00	8/03/00	4391.8	8/18/00	8/21/00	4511.0	119.2	
G9018857	7/31/00	8/03/00	4395.5	8/18/00	8/21/00	4572.8	177.3	
G9018858	7/31/00	8/03/00	4371.5	8/18/00	8/21/00	4499.3	127.8	
G9018859	7/31/00	8/03/00	4368.0	8/18/00	8/21/00	4368.0	0	
G9018860	7/31/00	8/03/00	4436.9	8/25/00	8/28/00	4653.4	216.5	
G9018861	7/31/00	8/03/00	4428.4	8/25/00	8/28/00	4620.1	191.7	
G9018862	7/31/00	8/03/00	4444.3	8/31/00	9/4/00	4622.2	177.9	
G9018863	7/31/00	8/03/00	4404.5	8/25/00	8/28/00	4523.9	119.4	
G9018864	7/31/00	8/03/00	4398.9	8/25/00	8/28/00	4520.4	121.5	
G9018865	7/31/00	8/03/00	4421.5	8/25/00	8/28/00	4419.9	1.6	
G9018866	7/31/00	8/03/00	4422.0	8/31/00	9/4/00	4576.4	154.4	

Chemetco Environmental Management
Filter Conditioning Logsheet

	Pre Sampling Conditioning				Post Sampling Conditioning			
Filter Number	Date In	Date Out	Weight, mg	Date In	Date Out	Weight, mg	W_{net}, mg	W_{net}, ug
G6047813	7-14-00	7-17-00	4330.2	8/10/00	8/14/00	4381.8	51.6	
G6047814	7-14-00	7-17-00	4346.8	8/14/00	8/16/00	4449.1	102.3	
G6047815								
G6047816	7-14-00	7-17-00	4339.2	8/10/00	8/14/00	4335.1	4.1	
G6047817	7-14-00	7-17-00	4324.4	8/14/00	8/16/00	4400.2	75.8	
G6047818	7-14-00	7-17-00	4340.6	8/14/00	8/16/00	4443.9	103.3	
G6047819								
G6047820								
G6047821								
G6047822								
G6047823								
G6047824								
G6047825								
G6047826								
G6047827								
G6047828								

Chemetco Environmental Management
Filter Conditioning Logsheet

	Pre Sampling Conditioning				Post Sampling Conditioning			
Filter Number	Date In	Date Out	Weight, mg	Date In	Date Out	Weight, mg	W_{net}, mg	W_{net}, ug
G6047797	7/14/00	7-17-00	4352.7	7/25/00	7/28/00	4392.6	39.9	
G6047798								
G6047799	7-14-00	7-17-00	4367.6	7/25/00	7/28/00	4422.2	54.6	
G6047800	7-14-00	7-17-00	4366.8	7/25/00	7/28/00	4456.2	89.4	
G6047801	7-14-00	7-17-00	4335.6	7/25/00	7/28/00	4381.1	45.5	
G6047802	7-14-00	7-17-00	4327.2	8/1/00	8/3/00	4395.7	68.5	
G6047803	7-14-00	7-17-00	4333.9	7/25/00	7/28/00	4329.0	4.9	
G6047804	7-14-00	7-17-00	4327.8	8/1/00	8/3/00	4374.3	46.5	
G6047805	7-14-00	7-17-00	4368.4	8/1/00	8/3/00	4411.4	43.0	
G6047806	7-14-00	7-17-00	4356.9	8/1/00	8/3/00	4417.4	60.5	
G6047807	7-14-00	7-17-00	4354.3	8/1/00	8/3/00	4416.4	62.1	
G6047808	7-14-00	7-17-00	4354.7	8/10/00	8/14/00	4419.1	64.4	
G6047809								
G6047810	7-14-00	7-17-00	4358.8	8/1/00	8/3/00	4355.5	3.3	
G6047811	7-14-00	7-17-00	4358.7	8/10/00	8/14/00	4403.7	45.0	
G6047812	7-14-00	7-17-00	4335.8	8/10/00	8/14/00	4382.6	46.8	

Chemetco Environmental Management
Filter Conditioning Logsheet

	Pre Sampling Conditioning			Post Sampling Conditioning				
Filter Number	Date In	Date Out	Weight, mg	Date In	Date Out	Weight, mg	W_{net}, mg	W_{net}, ug
G6047792	6/27/00	6/29/00	4361.2	7/10/00	7/12/00	4564.9	203.7	
G6047793	6/27/00	6/29/00	4339.5	7/10/00	7/12/00	4512.9	173.4	
G6047794	6/27/00	6/29/00	4351.9	7/10/00	7/12/00	4503.4	151.5	
G6047795								
G6047796	6/27/00	6/29/00	4348.2	7/9/00	7/11/00	4350.6	2.4	
G6047797								
G6047798								
G6047799								
G6047800								
G6047801								
G6047802								
G6047803								
G6047804								
G6047805								
G6047806								
G6047807								

Chemetco Environmental Management
Filter Conditioning Logsheet

	Pre Sampling Conditioning				Post Sampling Conditioning			
Filter Number	Date In	Date Out	Weight, mg	Date In	Date Out	Weight, mg	W_{net}, mg	W_{net}, ug
G6047776	6/27/00	6/29/00	4284.4	7/19/00	7/21/00	4398.8	114.4	
G6047777	6/27/00	6/29/00	4290.9	7/19/00	7/21/00	4454.8	163.9	
G6047778	6/27/00	6/29/00	4278.3	7/19/00	7/21/00	4334.7	56.4	
G6047779	6/27/00	6/29/00	4275.1	7/19/00	7/21/00	4275.7	0.6	
G6047780	6/27/00	6/29/00	4277.1	7/19/00	7/21/00	4484.3	207.2	
G6047781	6/27/00	6/29/00	4361.8	7/13/00	7/18/00	4361.5	0.3	
G6047782								
G6047783	6/27/00	6/29/00	4337.5	7/10/00	7/12/00	4339.1	1.6	
G6047784	6/27/00	6/29/00	4357.2	7/13/00	7/18/00	4519.2	162	
G6047785								
G6047786	6/27/00	6/29/00	4341.8	7/13/00	7/18/00	4457.1	115.3	
G6047787	6/27/00	6/29/00	4340.1	7/13/00	7/18/00	4465.1	125	
G6047788	6/27/00	6/29/00	4356.8	7/13/00	7/18/00	4429.4	72.6	
G6047789	6/27/00	6/29/00	4347.2	7/19/00	7/21/00	4411.6	64.4	
G6047790	6/27/00	6/29/00	4360.6	7/10/00	7/12/00	4504.9	144.3	
G6047791	6/27/00	6/29/00	4357.0	7/10/00	7/12/00	4449.0	92.0	

* US EPA - AIRData Monitor Values Report

* Wednesday, 26-Sep-2001 at 12:36:39 PM (USA Eastern time zone)
* Monitor Values In Micrograms Per Cubic Meter of Air (ug/m3)
* File Size : 36 Rows

* Illinois Air Quality Monitors for Lead (All Years)
* Counties Selected: Madison
* File Format: TSV - Tab Separated Values

* Field 1: No. of 24-hr Values
* Field 2: 1st Max of 24-hr values
* Field 3: 2nd Max of 24-hr values
* Field 4: Qtr 1 Mean value
* Field 5: Qtr 2 Mean value
* Field 6: Qtr 3 Mean value
* Field 7: Qtr 4 Mean value
* Field 8: No. of Quarters Exceeding Standard
* Field 9: Year
* Field 10: City
* Field 11: County
* Field 12: State
* Field 13: Region
* Field 14: Monitor ID

58	0.38	0.36	0.10	0.07	0.13	0.09	0	1996	Granite City Madison Co IL	05	171190010 - 1	
55	0.81	0.31	0.10	0.09	0.17	0.08	0	1997	Granite City Madison Co IL	05	171190010 - 1	
58	0.49	0.31	0.10	0.08	0.06	0.10	0	1998	Granite City Madison Co IL	05	171190010 - 1	
57	0.37	0.31	0.05	0.08	0.10	0.08	0	1999	Granite City Madison Co IL	05	171190010 - 1	
59	0.51	0.17	0.08	0.05	0.08	0.07	0	2000	Granite City Madison Co IL	05	171190010 - 1	
14	0.13	0.13	0.07	0.00	0.00	0.00	0	2001	Granite City Madison Co IL	05	171190010 - 1	
61	0.40	0.14	0.05	0.07	0.06	0.07	0	1996	Granite City Madison Co IL	05	171190023 - 1	
59	0.27	0.26	0.03	0.04	0.08	0.07	0	1997	Granite City Madison Co IL	05	171190023 - 1	
57	0.31	0.25	0.04	0.06	0.07	0.08	0	1998	Granite City Madison Co IL	05	171190023 - 1	
60	0.20	0.18	0.03	0.05	0.07	0.02	0	1996	Granite City Madison Co IL	05	171191007 - 1	
60	0.21	0.19	0.02	0.03	0.06	0.07	0	1997	Granite City Madison Co IL	05	171191007 - 1	
62	15.88	12.33	3.10	2.20	0.96	1.22	2	1996	Madison Co IL	05	171191012 - 1	Site 1 - N. Chemetco
65	11.19	10.80	1.08	1.16	1.08	2.11	1	1997	Madison Co IL	05	171191012 - 1	
28	13.74	10.58	1.37	2.59	0.00	0.00	1	1998	Madison Co IL	05	171191012 - 1	
60	8.38	7.53	1.40	0.71	0.72	1.20	0	1996	Madison Co IL	05	171191013 - 1	Site 2 - E Chemetco, Monitor 03
65	5.09	4.66	1.43	1.03	0.85	0.91	0	1997	Madison Co IL	05	171191013 - 1	
58	5.39	5.06	0.70	0.33	0.15	0.58	0	1998	Madison Co IL	05	171191013 - 1	
55	7.49	6.94	0.31	1.02	0.48	1.65	1	1999	Madison Co IL	05	171191013 - 1	
60	7.68	5.32	0.98	0.76	0.06	1.57	1	2000	Madison Co IL	05	171191013 - 1	
12	7.97	1.56	1.08	0.00	0.00	0.00	0	2001	Madison Co IL	05	171191013 - 1	
62	6.25	5.51	0.56	0.88	0.64	1.11	0	1996	Madison Co IL	05	171191015 - 1	Chemetco Site 4 - SE, Monitor 05
66	4.93	2.67	0.88	0.44	0.24	0.27	0	1997	Madison Co IL	05	171191015 - 1	
59	4.55	4.45	0.15	0.26	0.06	1.01	0	1998	Madison Co IL	05	171191015 - 1	
57	7.54	4.66	0.60	0.75	0.44	1.10	0	1999	Madison Co IL	05	171191015 - 1	
61	6.70	5.19	0.76	0.52	0.29	0.39	0	2000	Madison Co IL	05	171191015 - 1	
16	1.68	1.31	0.40	0.00	0.00	0.00	0	2001	Madison Co IL	05	171191015 - 1	
30	7.01	6.60	0.00	0.00	0.83	1.11	0	1998	Madison Co IL	05	171191016 - 1	Site 5 - N. Chemetco, Monitor N3
59	13.42	9.12	1.34	0.97	0.61	2.50	1	1999	Madison Co IL	05	171191016 - 1	
58	8.34	7.10	0.90	1.76	0.88	0.35	1	2000	Madison Co IL	05	171191016 - 1	
14	9.35	3.26	1.20	0.00	0.00	0.00	0	2001	Madison Co IL	05	171191016 - 1	
61	0.32	0.32	0.06	0.07	0.07	0.08	0	1996	Wood River Madison Co IL	05	171193007 - 2	
57	0.44	0.34	0.04	0.07	0.10	0.08	0	1997	Wood River Madison Co IL	05	171193007 - 2	
56	0.70	0.62	0.04	0.09	0.06	0.14	0	1998	Wood River Madison Co IL	05	171193007 - 2	
58	0.65	0.33	0.06	0.04	0.11	0.10	0	1999	Wood River Madison Co IL	05	171193007 - 2	
60	0.53	0.32	0.07	0.08	0.09	0.03	0	2000	Wood River Madison Co IL	05	171193007 - 2	
14	0.15	0.13	0.05	0.00	0.00	0.00	0	2001	Wood River Madison Co IL	05	171193007 - 2	

* US EPA - AIRData Monitor Address Report
* Thursday, 14-Jun-2001 at 8:55:45 AM (USA Eastern time zone)
* Illinois Air Quality Monitors for Lead (All Years)
*
* Counties Selected: Madison
* File Size : 8 Rows
* File Format: TSV - Tab Separated Values
* Field 1: Region
* Field 2: State
* Field 3: County
* Field 4: City
* Field 5: Site Address
* Field 6: Monitor Type
* Field 7: Land Use
* Field 8: Location Type
* Field 9: Years
* Field 10: Monitor ID
* Field 11: Latitude (Degrees)
* Field 12: Longitude (Degrees)

05	IL	Madison Co	Granite City	15th & Madison	SLAMS	Industrial	Urban / Center City	1995 - 2000 171190010 - 1	38.6942	-90.1536
05	IL	Madison Co	Granite City	Vfw Building, 2044 Washington Ave	SLAMS	Industrial	Urban / Center City	1995 - 1998 171190023 - 1	38.6997	-90.1481
05	IL	Madison Co	Granite City	23rd & Madison	SLAMS	Industrial	Urban / Center City	1995 - 1997 171191007 - 1	38.7044	-90.1394
05	IL	Madison Co		Site 1 - N, Chemetco	Industrial	Industrial	Rural	1995 - 1998 171191012 - 1	38.7992	-90.0992
05	IL	Madison Co		Site 2 - E, Chemetco	Industrial	Industrial	Rural	1995 - 2000 171191013 - 1	38.7953	-90.0928
05	IL	Madison Co		Chemetco Site 4-Se	Industrial	Industrial	Rural	1995 - 2000 171191015 - 1	38.7919	-90.0956
05	IL	Madison Co		Site 5-N ,Chemetco	Industrial	Industrial	Rural	1998 - 2000 171191016 - 1	38.8000	-90.0992
05	IL	Madison Co	Wood River	54 N. Walcott	SLAMS	Industrial	Suburban	1995 - 2000 171193007 - 2	38.8606	-90.1058

Chemetco
FIRST IN PEOPLE – QUALITY – SERVICE
P.O. Box 67 • Hartford, IL 62048
618-254-4381 • 800-444-5564

October 6, 2000

Don Sutton, Manager
Illinois EPA
BOA/Permits
1021 N. Grand Ave. E.
P.O. Box 19276
Springfield, IL 62794-9276

RE: Monthly Report – Fugitive Particulate Matter

Dear Mr. Sutton,

This report is being submitted monthly in accordance with the Consent Order filed and signed January 4, 2000. Pursuant to Condition 13.a.3 of the aforementioned Order, this report is to be submitted to both the Illinois EPA and USEPA within seven (7) working days of the end of the calendar month.

Dust Suppressant

All roads and areas requiring dust suppressant were treated as scheduled during the September 1999, reporting period. As stated in the letter to dated September 7, 2000, to the Illinois EPA, a 95% average control efficiency by means of ground inventory has been achieved and the dust suppressant is being put down in applications as specified by the maintenance program.

Water Flooding of Paved, Unpaved Areas and Piles

All area were documented as being as being flooded unless freezing temperatures, snow, or rain prevailed during the September 2000, reporting period with the following exceptions:

8/31-9/1 – No log was obtained for the 10:30 pm to 6:30 am shift.
9/1-9/3 – No water was put down at the scale receiving area due to the prepping and asphalting of the entire scale area.
9/7 – No log was obtained for the 6:30 am to 2:30 pm shift.

9/9 – All zones were missed due to an equipment malfunction. Problems arose with the ignition, brake/gas pedals and the water sprays.
9/10 – No log was obtained for the 2:30 am to 2:30 pm shift.
9/23-9/24 – No log was obtained for the 2:30 pm to 2:30 am shift.

Sweeping of Paved Roads

All areas were documented as being swept during the September 2000, reporting period with the following examples:

9/1 – One treatment in Zone 1 (Oldenburg Rd/Scale) was missed due to operator error.
9/3 - One treatment in Zone 1 (Oldenburg Rd/Scale) was missed due to operator error.
9/5 – One treatment in Zone 1 and Zones 3 and 4 were missed due to an equipment malfunction, a bad ball joint.
9/6 – All zones missed due to the above equipment malfunction.
9/7 - One treatment in Zone 1 (Oldenburg Rd/Scale) was missed due to operator error.
9/9 – No log was obtained for the 2:30 am to 2:30 pm shift.
9/10 - No log was obtained for the 2:30 am to 2:30 pm shift.
9/11 - One treatment in Zone 1 (Oldenburg Rd/Scale) was missed due to operator error.
9/19 - One treatment in Zone 1 (Oldenburg Rd/Scale) was missed due to operator error.
9/20 – Both treatments in Zone 1 (Oldenburg Rd/Scale) were missed due to preventative maintenance being performed on the sweeper.
9/23-9/25 – All zones missed due to the ball joint (tie rod) breaking again and were unable to get a tenant representative here on the weekend.

Corrective Action
The operator, which did not turn in logs, has recently been terminated and a replacement is being trained. In addition, Chemetco has gotten with Tenant and is working on revising service agreement to include 24 hrs per day, 7 days a week.

If you have any questions, please contact me at (618) 254-4381 ext.268.

Sincerely,

Heather Young, CHMM
Environmental Manager
Chemetco

Cc: Sarah Phelps, IEPA Collinsville Field Office
Jeff Trevino, USEPA, Region 5
Kim Fock, Chemetco
Maintenance/Labor Foremen
File

AMBIENT AIR MONITORING

QUARTERLY REPORT

APRIL - JUNE 2000

FOR

TOTAL PARTICULATE

AND LEAD

CHEMETCO, INC.
JULY 2000

TABLE OF CONTENTS

		page
1.0	INTRODUCTION	1
1.1	Monitoring Description	1
1.2	Monitoring Report	1
2.0	SAMPLING DATE ACCOUNTING	5
3.0	MONITORING DATA	7
3.1	Quarterly Averages Calculation	7
3.2	Sampler Quarterly Averages	12
3.3	Instrument Precision Calculation	16
3.4	Single Instrument Accuracy	18
3.5	Documentation	19

APPENDIX A Calculation Worksheets
APPENDIX B Laboratory Analyses
APPENDIX C Filter Conditioning Logsheets

TABLE OF TABLES

		page
TABLE 1-1	Standard Operating Procedures	5
TABLE 2-1	Sample Date Accounting	5
TABLE 3-1	Sampler Location N3	12
TABLE 3-2	Sampler Location OS	13
TABLE 3-3	Sampler Location O3	14
TABLE 3-4	Filter Field Blank	15

TABLE OF FIGURES

		page
FIGURE 1-1	Monitoring Site Locations	3
FIGURE 3-1	Daily Weather Logsheets	8
FIGURE 3-2	Data Assessment Report	17

0

1.0 INTRODUCTION

This document presents the summary of the second 2000 calendar quarter ambient air monitoring performed at the Chemetco, Inc. facility in Madison County.

1.1 Monitoring Description

The second quarter ambient air monitoring began on April 1, 2000, and sampling for total suspended particulates and lead in the particulate was performed on a once every sixth day basis. The quarterly sampling ended on June 30, 2000. Each day, a weather log was maintained documenting wind speed, wind direction, temperature, relative humidity and precipitation. This information has been obtained from the Nation Weather Service and recorded by the security guard. A new computer program was obtained and site data began to be collected on 3/6/00 once again.

The location of the monitoring sites was based on a modeling report done by Versar, Inc. and approved by IEPA. All locations are shown on a map in Figure 1-1.

Standard operating procedures were followed for the filter conditioning, sampling, sampler operation, analyses, etc, are shown in Table 1.1. Complete copies of the SOP's were provided in the Ambient Air Monitoring Quality Assurance/Quality Control Plan.

1.2 Monitoring Report

The following pages contain the results of the second quarter monitoring. Section 2 contains an accounting of all the test dates and reasons for eliminating data from certain test dates. Section 3 contains the quarterly averages, the quality assurance data and meteorological data. The Appendices include copies of the Filter Conditioning Logsheets with total suspended particulate calculation, the laboratory analysis, and the calculation worksheets.

Relocation of Colocated Northern Monitors

Chemetco believed that all data collected from N3 and N3-QC at their former location just south of the facility's northern fence was highly questionable and not valid. As evidenced by an analysis of quarterly ambient air monitoring, the monitors in their former location had been significantly impacted by nearby facility activities, structures, microclimatic influences, and/or surrounding entrained materials. The IEPA agreed with Chemetco regarding the need to relocate the northern monitors as outlined below.

Chemetco requested in a letter dated June 18, 1998, to IEPA to move the colocated ambient air monitors located in the northern portion of the facility in order to obtain samples which truly represent ambient air. The relocation was approved by IEPA in a letter dated June 24, 1998. Sampling of the ambient air monitors in the new location was initiated July 25, 1998. Additional sampling events were scheduled that same week to allow the collection of the appropriate number of samples for the third quarter 1998. Sampling proceeded as scheduled in the current location until the new monitors were in place. Chemetco is also utilizing dedicated Dickson recorders for all four

official air monitors, the new colocated N3 and N3-QC, OS and O3. The aforementioned relocation of the northern ambient air monitors has allowed the collection of truly ambient air similar to that collected by the ambient air monitors OS and O3.

Upset Conditions

Several upset conditions were experienced during the second quarter of 2000. Upset conditions were reflected in the TSP values on several occasions. The fields were plowed and planted in April. Some fields were replowed and replanted again through mid May. The monitors are located within or adjacent this active farmland.

The second upset condition was experienced during the May 6, 2000, sampling event. A temporary/trial test with a new type of crusher was run on the slag during that week. Several different types of crushers are being tested and/or evaluated. Chemetco is considering the purchase of a new crusher to enable 100% of the currently generated slag to be utilized more efficiently. The particular type of crusher tested during the week of May 6, 2000, created too much dust and slag outside the product range. The next type of crusher to be tested is a cone crusher, which should generate less dust and fines. These temporary tests are less than a week and are being documented in the operating record per a discussion with John Blazis of the air permits section of Illinois EPA. A makeup sample should have been run but due to operator error was not.

FIGURE 1-1
MONITORING SITE LOCATIONS

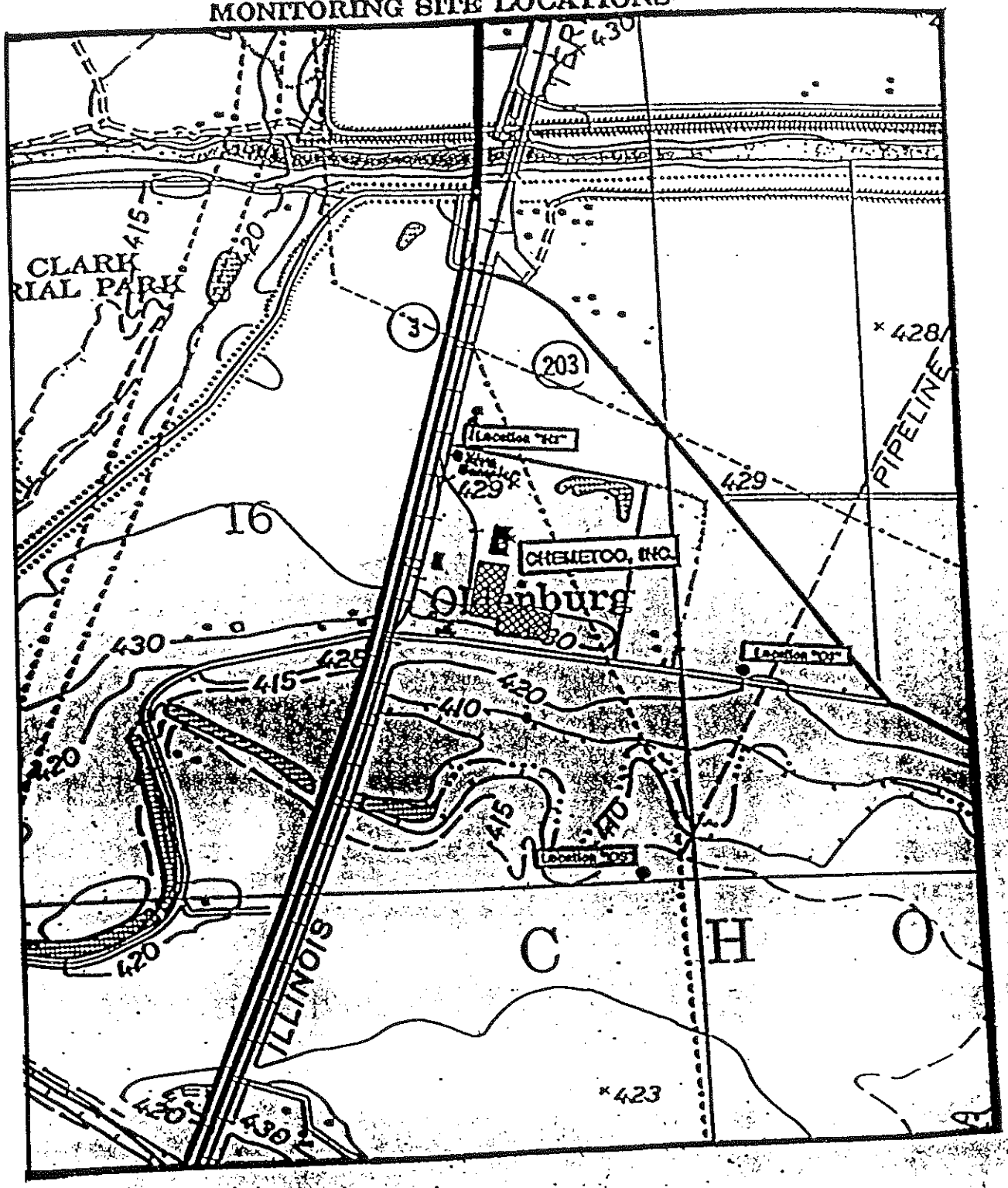

TABLE 1-1
STANDARD OPERATING PROCEDURES

Determination of Total Suspended Particulates in Ambient Air Filters

Filter Conditioning

Lead Analysis in Ambient Air Filters

Operation of GMW 2310 TSP Samplers

Packaging and Shipment of Samples

2.0 SAMPLING DATE ACCOUNTING

Following is a list of the dates the monitors were to have run. Table 2.1 accounts the dates and events.

TABLE 2.1 - Sample Date Accounting

DATE	SAMPLER	RUN STATUS	QUALIFICATION	ERROR REASON
04-06-00	N3-QC	OK	Yes	
	N3	OK	Yes	
	OS	OK	Yes	
	O3	OK	Yes	
04-012-00	N3-QC	OK	Yes	
	N3	OK	Yes	
	OS	OK	Yes	
	O3	OK	Yes	
04-18-00	N3-QC	OK	Yes	
	N3	No	No	Motor Out
	OS	OK	Yes	
	O3	OK	Yes	
04-24-00	N3-QC	OK	Yes	
	N3	OK	Yes	
	OS	OK	Yes	
	O3	OK	Yes	
04-30-00	N3-QC	OK	Yes	
	N3	OK	Yes	
	OS	OK	Yes	
	O3	OK	Yes	
05-06-00	N3-QC	No	No	Upset Condition
	N3	No	No	Upset Condition
	OS	No	No	Upset Condition
	O3	No	No	Upset Condition
05-12-00	N3-QC	OK	Yes	
	N3	OK	Yes	
	OS	OK	Yes	
	O3	OK	Yes	
05-18-00	N3-QC	OK	Yes	
	N3	OK	Yes	
	OS	OK	Yes	
	O3	OK	Yes	
05-24-00	N3-QC	OK	Yes	
	N3	OK	Yes	
	OS	OK	Yes	
	O3	OK	Yes	
05-30-00	N3-QC	OK	Yes	
	N3	OK	Yes	
	OS	OK	Yes	
	O3	OK	Yes	
06-05-00	N3-QC	OK	Yes	
	N3	OK	Yes	
	OS	OK	Yes	
	O3	OK	Yes	

TABLE 2.1 - Sample Date Accounting (con't)

DATE	SAMPLER	RUN STATUS	QUALIFICATION	ERROR REASON
06-11-00	N3-QC	OK	Yes	
	N3	OK	Yes	
	OS	OK	Yes	
	O3	OK	Yes	
06-17-00	N3-QC	OK	Yes	
	N3	OK	Yes	
	OS	OK	Yes	
	O3	OK	Yes	
06-23-00	N3-QC	No	No	Power Failure/Ran wrong day/Reran
	N3	No	No	Power Failure/Ran wrong day/Reran
	OS	OK	Yes	
	O3	OK	Yes	
06-27-00	N3-QC	OK	Yes	
	N3	OK	Yes	
06-29-00	N3-QC	OK	Yes	
	N3	OK	Yes	
	OS	OK	Yes	
	O3	OK	Yes	

3.0 MONITORING DATA

After the receipt from the laboratory of all data for the quarterly report, averages for each monitoring site were calculated from the pool of data. In addition, at site N3, two samplers were set up for quality assurance purposes. A standard deviation, lower and upper range was determined based on those samples and under normal circumstances can be assumed to represent accuracy for all locations.

Each day, meteorological data was noted. The weather information was obtained from both the National Weather Service and the on-site weather station. Most of the met data was obtained from the on-site weather station. A few of the data points were obtained from the National Weather Service when the on-site station/program experienced a problem. Calibration of the on-site weather is also being researched. These logs are shown in Figure 3.1 and quarterly averages are discussed in Section 3.2.

3.1 Quarterly Averages Calculation

From the pool of acceptable data, quarterly averages were calculated by using the simple arithmetic mean determination shown in Equation 1.

$$X = \frac{\Sigma X_i}{n} \qquad \textit{Equation 1}$$

where,

X_i = individual sampling data,

n = the number of valid sampling points in the quarter.

FIGURE 3-1
METEOROLOGICAL DATA SHEET

DAILY WEATHER LOGSHEET

Date	Wind Speed	Wind Direction	Wind Sigma	Temperature (F)	Relative Humidity %	Precipitation
04-01-00	2	64		56	49	0.00
04-02--00	3	288		60	49	0.00
04-03-00	9	268		---	---	0.00
04-04-00	11	254		53	74	0.75
04-05-00	14	139		52	63	0.00
*04-06-00	6	332		44	44	0.00
04-07-00	11	267		49	48	0.00
04-08-00	14	293		---	---	0.00
04-09-00	8	164		47	63	0.25
04-10-00	8	120		58	47	0.02
04-11-00	11	295		61	52	0.00
*04-12-00	6	23		54	55	0.00
04-13-00	12	9		49	63	0.00
04-14-00	10	0		60	48	0.00
04-15-00	13	135		61	61	0.00
04-16-00	12	154		64	73	0.00
04-17-00	10	272		61	73	0.21
*04-18-00	7	238		53	76	0.00
04-19-00	19	122		54	76	0.00
04-20-00	21	199		64	71	0.01
04-21-00	14	290		60	75	0.00
04-22-00	4	207		52	61	0.00
04-23-00	7	153		60	43	0.00
*04-24-00	10	345		59	71	0.00
04-25-00	8	331		54	88	0.00

* Denotes Air Sampling Date

FIGURE 3-1 (cont.)

DAILY WEATHER LOGSHEET

Date	Wind Speed	Wind Direction	Sigma	Temperature (F)	Relative Humidity %	Precipitation
04-26-00	2	344		56	66	0.00
04-27-00	4	16		56	57	0.00
04-28-00	4	278		57	64	0.00
04-29-00	6	155		57	76	0.00
*04-30-00	8	155		60	76	0.00
05-01-00	8	221		67	63	0.00
05-02-00	9	41		70	72	0.00
05-03-00	9	124		69	71	0.00
05-04-00	11	133		68	90	0.00
05-05-00	12	127		72	79	0.00
*05-06-00	13	132		74	70	0.00
05-07-00	8	127		72	79	0.00
05-08-00	7	202		72	89	0.00
05-09-00	15	258		75	84	0.00
05-10-00	9	169		56	80	0.00
05-11-00	16	138		58	73	0.00
*05-12-00	16	190		65	66	0.25
05-13-00	11	276		65	76	0.00
05-14-00	4	228		63	63	0.00
05-15-00	6	107		61	57	0.00
05-16-00	7	180		57	59	0.32
05-17-00	21	151		57	68	0.00
*05-18-00	18	163		66	67	0.41
05-19-00	7	320		73	69	2.25
05-20-00	3	263		73	76	0.10

* Denotes Air Sampling Date

FIGURE 3-1 (cont.)

DAILY WEATHER LOGSHEET

Date	Wind Speed	Wind Direction	Sigma	Temperature (F)	Relative Humidity %	Precipitation
05-21-00	7	112		68	76	0.00
05-22-00	3	112		58	76	0.00
05-23-00	4	301		61	79	0.00
*05-24-00	4	219		65	82	0.00
05-25-00	4	290		72	64	0.00
05-26-00	7	105		69	61	0.11
05-27-00	10	188		69	69	0.00
05-28-00	9	259		67	94	0.00
05-29-00	7	246		69	86	0.00
*05-30-00	13	202		69	83	0.00
05-31-00	13	225		68	83	0.00
06-01-00	12	180		72	65	0.00
06-02-00	5	309		81	62	0.00
06-03-00	7	188		81	58	0.25
06-04-00	6	177		69	58	0.00
*06-05-00	11	307		66	94	0.00
06-06-00	5	338		69	85	0.00
06-07-00	7	134		60	46	0.00
06-08-00	9	159		62	43	0.00
06-09-00	8	152		66	45	0.00
06-10-00	8	165		75	54	0.00
*06-11-00	8	225		76	76	0.14
06-12-00	7	180		74	91	0.00
06-13-00	6	180		75	87	0.00

* Denotes Air Sampling Date

FIGURE 3-1 (cont.)

DAILY WEATHER LOGSHEET

Date	Wind Speed	Wind Direction	Sigma	Temperature (F)	Relative Humidity %	Precipitation
06-14-00	12	180		79		0.00
06-15-00	12	160		72	78	0.00
06-16-00	6	226		75	55	0.00
*06-17-00	1	333		75	100	0.00
06-18-00	4	324		71	87	0.00
06-19-00	5	161		66	70	0.20
06-20-00	14	147		68	76	0.26
06-21-00	10	208		68	100	0.00
06-22-00	8	182		72	84	0.00
*06-23-00	8	225		78	90	0.00
06-24-00	14	198		76	90	1.03
06-25-00	10	189		79	91	0.00
06-26-00	12	135		76	76	0.00
06-27-00	5	315		76	87	0.00
06-28-00	6	270		70	61	0.00
06-29-00	6	270		71	75	0.00
06-30-00	5	239		73	61	0.00

* Denotes Air Sampling Date

3.2 Sampler Quarterly Averages

The simple quarterly average for each set of data from a particular sampler are calculated in the following tables, 3.1 through 3.4.

TABLE 3.1 - Sampler Location N3

DATE	FILTER NO	LEAD (ug/m^3)	TSP* (ug/m^3)
04/6/00	6047564	0.07	216.01 (Fields Plowed and Planted)
04/12/00	6047573	0.00	45.11 "
04/18/00	6047713	Motor Out	"
04/24/00	6047720	0.06	52.58 "
04/30/00	6047724	3.73	114.22 "
05/06/00	6047731	Upset Condition	"
05/12/00	6047739	2.54	111.49 "
05/18/00	6047745	1.80	216.72 "
05/24/00	6047752	0.00	59.97
05/30/00	6047759	8.34	174.32
06/05/00	6047766	0.01	33.67
06/11/00	6047774	0.91	64.49
06/17/00	6047767	0.00	30.84
06/23/00	6047828	Power Failure/Rerun	
06/27/00	6047833	0.00	17.12
06/29/00	6047840	0.00	37.37
		=========	=========
	AVERAGE	1.45	90.30

TABLE 3.2 - Sampler Location OS

DATE	FILTER NO.	LEAD (ug/m^3)	TSP* (ug/m^3)	
04/6/00	6047566	0.14	103.21	(Fields Plowed and Planted
04/12/00	6047570	0.00	38.77	"
04/18/00	6047578	0.00	40.54	"
04/24/00	6047718	0.00	33.37	"
04/30/00	6047722	0.16	58.44	"
05/06/00	6047733	Upset condition		"
05/12/00	6047737	1.32	278.49	"
05/18/00	6047743	0.00	80.74	"
05/24/00	6047751	0.81	48.25	
05/30/00	6047756	0.00	37.73	
06/05/00	6047765	5.19	77.49	
06/11/00	6047773	0.00	36.13	
06/17/00	6047825	0.00	27.09	
06/23/00	6047830	0.00	36.49	
06/29/00	6047837	0.21	24.18	
		=========	=========	
	AVERAGE	0.56	65.78	

TABLE 3.3 - Sampler Location O3

DATE	FILTER NO.	LEAD (ug/m^3)	TSP* (ug/m^3)
04/6/00	6047567	0.48	203.51 (Field plowed and planted))
04/12/00	6047571	0.00	44.05 "
04/18/00	6047579	0.00	49.67 "
04/24/00	6047717	0.73	22.12 "
04/30/00	6047723	0.09	75.54 "
04506/00	6047732	0.07	43.67 "
05/12/00	6047736	2.21	147.71 "
05/18/00	6047742	0.54	110.54 "
05/24/00	6047750	3.18	103.11
05/30/00	6047755	0.00	46.74
06/05/00	6047764	0.96	92.88
06/11/00	6047771	0.00	35.05
06/17/00	6047824	0.00	25.13
06/23/00	6047831	0.00	48.61
06/29/00	6047836	3.08	69.34
	AVERAGE	0.81	76.71

TABLE 3.4 - Filter Blank

DATE	FILTER NO.	LEAD (ug/filter)	TSP* (ug/filter)
01/1/00	6047458	6	1300
01/7/00	6047465	6	0
01/13/00	6047472	17	-100
01/19/00	6047477	66	-6800
01/25/00	6047484	0	1800
01/31/00	6047492	6	500
02/6/00	6047499	6	-500
02/12/00	6047506	6	700
02/18/00	6047513	7	-100
02/24/00	6047519	0	400
03/1/00	6047526	6	-300
03/7/00	6047534	2	800
03/13/00	6047541	49	700
03/19/00	6047548	0	800
03/25/00	6047554	0	700
03/31/00	6047568	6	7600
		=========	=========
	AVERAGE	11.44	468.75

*TSP - Total Suspended Particulate

3.3 Instrument Precision Calculation

The estimates of precision for ambient air quality measurements from the TSP method are calculated from results obtained from the collection of two samplers at one sampling site, N3. The calculated precision from this one sampling site is considered indicative of the precision at all sampling sites for the TSP method.

Using the paired measurements for the official sampler, labeled "N3" and the secondary sampler, labeled "N3-QC," the precision was calculated from the following equations. These numbers are reported on the Data Assessment Report shown in Figure 3-2.

Percentage Difference, d_i

$$d_i = \frac{Y_i - X_i}{X_i} \times 100\%$$

where: Y_i = the concentration TSP measured by the secondary sampler; and
X_i = the concentration TSP measured by the official sampler.

Average Percentage Difference, d_j

$$d_j = \frac{\Sigma d_i}{n}$$

where: n = the number of comparisons.

Standard Deviation, S_j

$$S_j = \sqrt{\frac{\Sigma(d_i)^2 - n(d_j)^2}{n - 1}}$$

96% Probability Limits

$$\text{Upper Limit} = d_j + \frac{1.96(S_j)}{2}$$

$$\text{Lower Limit} = d_j - \frac{1.96(S_j)}{2}$$

FIGURE 3-2
DATA ASSESSMENT REPORT

Date: July 21, 2000
Auditor: Heather Young

Allocated Samplers

d_i = **91.1**
d_j = **7 %**
S_j = **17.67 %**

Upper Limit = 24.32 %

Lower Limit = -10.32%

Range = 79.98 to 114.62

Flow Rate Percentage Differences:

Sampler #1:(See Sect. 3-4) **Sampler #2:**(See Sect. 3-4)

Sampler #3:(See Sect. 3-4) **Sampler #4:**(See Sect. 3-4)

3.4 Single Instrument Accuracy

Estimates of accuracy for ambient air quality measurements from the TSP method are calculated from the results of independent audits. Once each sampling quarter, the flow rate of each high-volume sampler is audited.

Jim Henry with the IEPA Collinsville Field Office audited the sampler motors. Results of the audit are on record at the field office

3.5 Documentation

For each of the sampling episodes, data packages have been assembled to facilitate the retrieval of necessary data to perform and check calculations, assumptions and determinations and to generate accurate reports. These packages are maintained in a central project file at Chemetco.

Data forms are attached with backup and confirmatory information in Appendices A through C. They include:

- Filter Conditioning and TSP Calculation Logsheets;
- Calculation pages; and,
- Laboratory Analyses Report Sheet.

APPENDIX A

CALCULATION COVER SHEET

Company Name: Chemetco, Inc.

Project Name: Ambient Air Monitoring

Project Number: 00QTR2

Purpose: Sampler Averages

Total Number of Pages: 6 (including this one)

Date: July 21, 2000

Originator's Signature: _____

2000 2ND QUARTER AVERAGE CALCULATION

LOCATION N3-QC

DATE	FILTER NO	TIME FINISH	TIME START	ELAPSED TIME	CFM	CUBIC METERS	LEAD ug/fltr	TSP ug/fltr	LEAD ug/m3	TSP ug/m3
4/6/00*	6047565	40377	38937.7	1439.3	46.4	2004	654	452000	0.33	225.60
4/12/00	6047575	41816.1	40378.9	1437.2	45.7	1970	6	78900	0.00	40.04
4/18/00	6047580	43257	41818.4	1438.6	46.4	2003	1882	182400	0.94	91.08
4/24/00	6047716	44697.9	43259.5	1438.4	47	2028	109	70900	0.05	34.96
4/30/00	6047726	46138.8	44699.6	1439.2	46.4	2017	7459	255800	3.70	126.82
5/6/00 **	6047730	47580.1	46140.6	1439.5	45.1	1948	13744	250400	7.06	128.57
5/12/00	6047738	49021.2	47581.4	1439.8	45.1	1948	5898	248000	3.03	127.31
5/18/00	6047746	50463.1	49023.1	1440	44.4	1918	4275	516000	2.23	269.03
5/24/00	6047753	51903.3	50463.9	1439.4	44.4	1917	6	124500	0.00	64.94
5/30/00	6047758	53353.5	51904.5	1449	44.4	1930	16142	358600	8.36	185.80
6/5/00	6047763	54783.6	53344.8	1438.8	43.7	1886	6	54400	0.00	28.84
6/11/00	6047775	56224.1	54785.4	1438.7	44.4	1916	2000	126800	1.04	66.17
6/17/00	6047827	57663.7	56226.3	1437.4	44.4	1915	6	60300	0.00	31.49
6/23/00***	6047829	59100	57665.7	1434.3	44.4	1910	2331	253500	1.22	132.69
6/27/00	6047834	60524.8	59101.6	1423.2	45.1	1926	6	50800	0.00	26.38
6/29/00	6047839	61965.5	60526.1	1439.4	44.4	1917	6	72100	0.00	37.61
								AVERAGE	1.41	96.86

* Fields plowed/planted on this day and several days through mid May.

** Upset condition - A trial test (not a normal activity) for a different type of crusher was being performed on the slag.

*** Ran on wrong day and questions as to the amount of time it actually ran due to a power failure. A makeup test was performed on 6/26 - 6/27.

(and *** lead not included in averages.)**

2000 2ND QUARTER AVERAGE CALCULATION

LOCATION N3

DATE	FILTER NO	TIME FINISH	TIME START	ELAPSED TIME	CFM	CUBIC METERS	LEAD ug/fltr	TSP ug/fltr	LEAD ug/m3	TSP ug/m3
4/6/00*	6047564	2941.92	2918.42	1412	46	1949	129.2	420900	0.07	216.01
4/12/00	6047573	2965.52	2941.98	1412	46	1949	6	87900	0.00	45.11
4/18/00	6047713	2989.1	2965.56	1412	Motor Out					
4/24/00	6047720	3012.7	2989.17	1412	42.7	1809	109	95100	0.06	52.58
4/30/00	6047724	3036.26	3012.74	1412	43.9	1860	6939	212400	3.73	114.22
5/6/00**	6047731	3059.8	3036.29	1412	43.9	1860	13205	196900	7.10	105.88
5/12/00	6047739	3083.34	3059.82	1412	45.1	1910	4858	213000	2.54	111.49
5/18/00	6047745	3106.9	3083.4	1412	42.7	1809	3247	392000	1.80	216.72
5/24/00	6047752	3130.47	3106.96	1412	43.3	1834	6	110000	0.00	59.97
5/30/00	6047759	3154.03	3130.52	1412	42.7	1809	15092	315300	8.34	174.32
6/5/00	6047766	3177.56	3154.05	1412	42.7	1809	21	60900	0.01	33.67
6/11/00	6047774	3201.09	3177.59	1412	42.1	1783	1629	115000	0.91	64.49
6/17/00	6047767	3224.59	3201.11	1412	42.1	1783	6	55000	0.00	30.84
6/23/00***	6047828	3248.14	3224.62	1412	42.1	1783	2055	210200	1.15	117.87
6/27/00	6047833	3271.88	3248.17	1412	43.3	1834	0	51800	0.00	17.12
6/29/00	6047840	3295.42	3271.91	1412	43.9	1860	6	69500	0.00	37.37
								AVERAGE	1.45	90.30

* Fields plowed/planted on this day and several days through mid May.

** Upset condition - A trial test (not a normal activity) for a different type of crusher was being performed on the slag.

*** Ran on wrong day and questions as to the amount of time it actually ran due to apower failure. A makeup test was performed on 6/26 - 6/27.

(and *** not included in averages.)**

2000 2ND QUARTER AVERAGE CALCULATION

LOCATION OS

DATE	FILTER NO	TIME FINISH	TIME START	ELAPSED TIME	CFM	CUBIC METERS	LEAD ug/fltr	TSP ug/fltr	LEAD ug/m3	TSP ug/m3
4/6/00*	6047566	1440	0	1440	46	1987	279	205100	0.14	103.21
4/12/00	6047570	1440	0	1440	44.6	1927	6	74700	0.00	38.77
4/18/00	6047578	1440	0	1440	44.6	1927	6	78100	0.00	40.54
4/24/00	6047718	1440	0	1440	44.6	1927	6	64300	0.00	33.37
4/30/00	6047722	1440	0	1440	44.6	1927	307	112600	0.16	58.44
5/6/00**	6047733	1440	0	1440	45.3	1957	6	175800	0.00	89.83
5/12/00	6047737	1440	0	1440	45.3	1957	2588	545000	1.32	278.49
5/18/00	6047743	1440	0	1440	45.3	1957	6	158000	0.00	80.74
5/24/00	6047751	1440	0	1440	45.3	1940	1579	93600	0.81	48.25
5/30/00	6047756	1440	0	1440	44.6	1940	6	73200	0.00	37.73
6/5/00	6047765	1440	0	1440	44.6	1927	10009	149300	5.19	77.49
6/11/00	6047773	1440	0	1440	44.6	1940	6	70100	0.00	36.13
6/17/00	6047825	1440	0	1440	44.6	1927	6	52200	0.00	27.09
6/23/00	6047830	1440	0	1440	44.6	1927	6	70300	0.00	36.49
6/27/00										
6/29/00	6047837	1440	0	1440	49.3	2130	456	51500	0.21	24.18
								AVERAGE	0.56	65.78

* Fields plowed/planted on this day and several days through mid May.

** Upset condition - A trial test (not a normal activity) for a different type of crusher was being performed on the slag.

(Not included in average.)**

2000 2ND QUARTER AVERAGE CALCULATION

LOCATION O3

DATE	FILTER NO	TIME FINISH	TIME START	ELAPSED TIME	CFM	CUBIC METERS	LEAD ug/fltr	TSP ug/fltr	LEAD ug/m3	TSP ug/m3
4/6/00*	6047567	12651.2	11211.3	1439.9	42.6	1840	879.2	374500	0.48	203.51
4/12/00	6047571	14098.2	12658.2	1440	45.3	1957	6	86200	0.00	44.05
4/18/00	6047579	15540.1	14100.1	1440	46.7	2017	6	100200	0.00	49.67
4/24/00	6047717	16981.7	15541.7	1440	47.3	2043	1488	45200	0.73	22.12
4/30/00	6047723	18422.9	16982.9	1440	46.7	2017	177	152400	0.09	75.54
5/6/00**	6047732	19864.2	18424.3	1439.9	46.7	2017	147	88100	0.07	43.67
5/12/00	6047736	21682.7	20242.7	1440	46.7	2017	4468	298000	2.21	147.71
5/18/00	6047742	23124.1	21684.1	1440	46.7	2017	1090	223000	0.54	110.54
5/24/00	6047750	24565.8	23125.8	1440	47.3	2043	6491	210700	3.18	103.11
5/30/00	6047755	26007.3	24567.2	1440.1	46.7	2018	6	94300	0.00	46.74
6/5/00	6047764	27449.9	26008.9	1441	46.7	2019	1947	187500	0.96	92.88
6/11/00	6047771	28890.2	27449.7	1440	46.7	2017	6	70700	0.00	35.05
6/17/00	6047824	30331.6	28891.6	1440	46.7	2017	6	50700	0.00	25.13
6/23/00	6047831	31772.9	30332.9	1440	46	1987	6	96600	0.00	48.61
6/27/00										
6/29/00	6047836	33213.9	31773.9	1440	46	1987	6115	137800	3.08	69.34
								AVERAGE	0.81	76.71

* Fields plowed/planted on this day and several days through mid May.

** Upset condition - A trial test (not a normal activity) for a different type of crusher was being performed on the slag.

(Not included in average.)**

2000 2ND QUARTER AVERAGE CALCULATION

LOCATION FB

DATE	FILTER NO	LEAD ug/filter	TSP ug/filter
4/6/00	6047569	0	9800
4/12/00	6047577	6	18400
4/18/00	6047714	0	3300
4/24/00	6047721	6	7500
4/30/00	6047729	6	3600
5/6/00	6047734	6	-191500
5/12/00	6047741	6	2000
5/18/00	6047747	6	6000
5/24/00	6047754	6	2200
5/30/00	6047761	6	-100
6/5/00	6047762	6	2200
6/11/00	6047770	6	5500
6/17/00	6047823	6	500
6/23/00	6047838	6	1400
6/27/00			
6/29/00	6047796	6	2200
	AVERAGES	5.20	-8603.60

CALCULATION COVER SHEET

Company Name: Chemetco. Inc.

Project Name: Ambient Air Monitoring

Project Number: 00QTR2

Purpose: Sampler Precision Calculation

Total Number of Pages: 2 (including this one)

Date: July 21, 2000

Originator's Signature:

SAMPLER PRECISION CALCULATION (PARTICULATE)

Sampling Date	Duplicate Sampler	Official Sampler	Difference	Difference (Square)
04-06-00	225.60	216.01	9.59	91.97
04-12-00	40.04	45.11	-5.07	25.70
04-18-00	91.08	Motor Out	-----	-----
04-24-00	34.96	52.58	-17.62	310.46
04-30-00	126.82	114.22	12.60	158.76
05-06-00	128.57	Upset Condition	-----	-----
05-12-00	127.31	111.49	15.82	250.27
05-18-00	269.03	216.72	52.31	2736.34
05-24-00	64.94	59.97	4.97	24.70
05-30-00	185.80	174.32	11.48	131.79
06-05-00	28.84	33.67	-4.83	23.32
06-11-00	66.17	64.49	1.68	2.82
06-17-00	31.49	30.84	0.67	0.449
06-23-00	PF/Reran 6/27	PF/Reran 6/27	------	------
06-27-00	26.38	17.12	9.26	85.75
06-29-00	37.61	37.37	0.24	0.058
			$\Sigma d_i = 91.1$	$\Sigma d_i^2 = 3842.39$

n=13

$$d_j = \frac{\Sigma d_i}{n} = \frac{91.1}{13} = 7.00\% \qquad S_j = \frac{\Sigma (d_i)^2 - n(d_j)^2}{n-1} = \frac{3842 - 13(7.0)}{13-1} = \frac{3842 - 91.0}{12} = 17.67\%$$

$$\text{Upper Limit} = d_j + \frac{1.96(S_j)}{2} = 7.0\% + \frac{1.96(17.67)}{2} = 7.0 + 17.32 = 24.32\%$$

$$\text{Lower Limit} = d_j - \frac{1.96(S_j)}{2} = 7.0\% - \frac{1.96(17.67)}{2} = 7.0 - 17.32 = -10.32\%$$

Official Average Particulate: 90.30 mg/m^3

Range: 79.98 to 114.62

APPENDIX B

Chemetco, Inc.
Rt. 3 at Chemetco Lane
Hartford, IL 62048

ATTN: Heather Young **Date:** 27-Apr-00

Sample type: Hi-Vol Air Monitoring Program

Sample Identification: Listed below

Filter ID	Location	Pb, ug/filter	TSP,mg/filter
G6047563	EX	879.2	500
G6047564	N3	129.2	420.9
G6047565	N3QC	654	452
G6047566	OS	279	205.1
G6047567	O3	879.2	374.5
G6047569	FB	0	9.8

Matthew Creasy

Analyst: Matt Creasy

Title: Laboratory Technician

Chemetco, Inc.
Rt. 3 at Chemetco Lane
Hartford, IL 62048

ATTN: Heather Young **Date:** 27-Apr-00

Sample type: Hi-Vol Air Monitoring Program

Sample Identification: Listed below

Filter ID	Location	Pb, ug/filter	TSP,mg/filter
G6047570	OS	<6	74.7
G6047571	O3	<6	86.2
G6047573	N3	<6	87.9
G6047575	N3Qc	<6	78.9
G6047576	EX	<6	93.5
G6047577	FB	<6	18.4

Matthew Creasy

Analyst: Matt Creasy

Title: Laboratory Technician

Chemetco, Inc.
Rt. 3 at Chemetco Lane
Hartford, IL 62048

ATTN: Heather Young Date: **12-May-00**

Sample type: **Hi-Vol Air Monitoring Program**

Sample Identification: **Listed below**

Filter ID	Location	Pb, ug/filter	TSP,mg/filter
G6047578	OS	<6	78.1
G6047579	O3	<6	100.2
G6047713	N3	229	87.9
G6047580	N3QC	1,882	182.4
G6047712	EX	5685	190.3
G6047714	FB	0	3.3

Matthew Creasy

Analyst: Matt Creasy

Title: Laboratory Technician

Chemetco, Inc.
Rt. 3 at Chemetco Lane
Hartford, IL 62048

ATTN: Heather Young Date: **22-May-00**

Sample type: **Hi-Vol Air Monitoring Program**

Sample Identification: **Listed below**

Filter ID	Location	Pb, ug/filter	TSP,mg/filter
G6047716	N3QC	109	70.9
G6047720	N3	109	95.1
G6047717	O3	1,488	45.2
G6047718	OS	<6	64.3
G6047721	FB	<6	7.5

Matthew Creasy

Analyst: **Matt Creasy**

Title: **Laboratory Technician**

Chemetco, Inc.
Rt. 3 at Chemetco Lane
Hartford, IL 62048

ATTN: Heather Young Date: **22-May-00**

Sample type: **Hi-Vol Air Monitoring Program**

Sample Identification: **Listed below**

Filter ID	Location	Pb, ug/filter	TSP,mg/filter
G6047722	OS	307	112.6
G6047723	O3	177	152.4
G6047724	N3	6,939	212.4
G6047726	N3QC	7,459	255.8
G6047715	Ex	15,001	290.4
G6047729	FB	<6	3.6

Matthew Creasy

Analyst: Matt Creasy

Title: Laboratory Technician

Chemetco, Inc.
Rt. 3 at Chemetco Lane
Hartford, IL 62048

ATTN: Heather Young Date: **23-May-00**

Sample type: **Hi-Vol Air Monitoring Program**

Sample Identification: **Listed below**

Filter ID	Location	Pb, ug/filter	TSP,mg/filter
G6047733	OS	<6	-175.8
G6047732	O3	147	88.1
G6047731	N3	13,205	196.9
G6047730	N3QC	13,744	250.4
G6047728	Ex	15,521	296.5
G6047734	FB	<6	-191.5

Matthew Creasy

Analyst: Matt Creasy

Title: Laboratory Technician

Chemetco, Inc.
Rt. 3 at Chemetco Lane
Hartford, IL 62048

ATTN: Heather Young

Date: 31-May-00

Sample type: Hi-Vol Air Monitoring Program

Sample Identification: Listed below

Filter ID	Location	Pb, ug/filter	TSP,mg/filter
G6047737	OS	2588	545
G6047736	O3	4468	298
G6047739	N3	4,858	213
G6047738	N3QC	5,898	248
G6047735	Ex	8,889	291
G6047741	FB	<6	2

Matthew Creasy

Analyst: Matt Creasy

Title: Laboratory Technician

Chemetco, Inc.
Rt. 3 at Chemetco Lane
Hartford, IL 62048

ATTN: Heather Young

Date: **1-Jun-00**

Sample type: **Hi-Vol Air Monitoring Program**

Sample Identification: **Listed below**

Filter ID	Location	Pb, ug/filter	TSP,mg/filter
G6047743	OS	<6	158
G6047742	O3	1090	223
G6047745	N3	3,247	392
G6047746	N3QC	4,275	516
G6047744	Ex	21,899	727
G6047747	FB	<6	6

Matthew Creasy

Analyst: **Matt Creasy**

Title: **Laboratory Technician**

Chemetco, Inc.
Rt. 3 at Chemetco Lane
Hartford, IL 62048

ATTN: Heather Young Date: **14-Jun-00**

Sample type: **Hi-Vol Air Monitoring Program**

Sample Identification: **Listed below**

Filter ID	Location	Pb, ug/filter	TSP,mg/filter
G6047765	Os	10,009	149.3
G6047764	O3	1947	187.5
G6047766	N3	21	60.9
G6047763	N3QC	<6	54.4
G6047748	Extra	21	79.7
G6047762	FB	<6	2.2

Matthew Creasy

Analyst: Matt Creasy

Title: Laboratory Technician

Chemetco, Inc.
Rt. 3 at Chemetco Lane
Hartford, IL 62048

ATTN: Heather Young Date: **21-Jun-00**

Sample type: **Hi-Vol Air Monitoring Program**

Sample Identification: **Listed below**

Filter ID	Location	Pb, ug/filter	TSP,mg/filter
G6047760	EX	2,372	153.8
G6047770	FB	<6	5.5
G6047771	O3	<6	70.7
G6047773	OS	<6	70.1
G6047774	N3	1,629	115
G6047775	N3QC	2000	126.8

Analyst: Matt Creasy

Title: Laboratory Technician

Chemetco, Inc.
Rt. 3 at Chemetco Lane
Hartford, IL 62048

ATTN: Heather Young Date: **2-Jul-00**

Sample type: **Hi-Vol Air Monitoring Program**

Sample Identification: **Listed below**

Filter ID	Location	Pb, ug/filter	TSP,mg/filter
G6047767	N3	<6	55
G6047768	EX	<6	62.1
G6047823	FB	<6	0.5
G6047824	O3	<6	50.7
G6047825	OS	<6	52.2
G6047827	N3QC	<6	60.3

Matthew Creasy

Analyst: Matt Creasy

Title: Laboratory Technician

Chemetco, Inc.
Rt. 3 at Chemetco Lane
Hartford, IL 62048

ATTN: Heather Young Date: **6-Jul-00**

Sample type: **Hi-Vol Air Monitoring Program**

Sample Identification: **Listed below**

Filter ID	Location	Pb, ug/filter	TSP,mg/filter
G6047822	EX	5,923	187.2
G6047828	N3	2055	210.2
G6047829	N3QC	2,331	253.5
G6047830	OS	<6	70.3
G6047831	O3	<6	96.6
G6047833	N3	<6	51.8
G6047834	N3QC	<6	50.8
G6047838	BK	<6	1.4

Matthew Creasy

Analyst: **Matt Creasy**

Title: **Laboratory Technician**

Chemetco, Inc.
Rt. 3 at Chemetco Lane
Hartford, IL 62048

ATTN: Heather Young Date: **14-Jul-00**

Sample type: **Hi-Vol Air Monitoring Program**

Sample Identification: **Listed below**

Filter ID	Location	Pb, ug/filter	TSP,mg/filter
G6047837	OS	456	51.5
G6047836	O3	6115	137.8
G6047840	N3	<6	69.5
G6047839	N3QC	<6	72.1
G6047835	Extra	<6	98
G6047796	FB	<6	2.2

Matthew Creasy

Analyst: **Matt Creasy**

Title: **Laboratory Technician**

APPENDIX C

Chemetco Environmental Management
Filter Conditioning Logsheet

	Pre Sampling Conditioning				Post Sampling Conditioning			
Filter Number	Date In	Date Out	Weight, mg	Date In	Date Out	Weight, mg	W_{net}, mg	W_{net}, ug
G6047563	1/28/00	2/3/00	4374	4/22/00	4/24/00	4871.4	500.0	
G6047564	1/28/00	2/3/00	4355.4	4/22/00	4/24/00	4776.3	420.9	
G6047565	1/28/00	2/3/00	4372.0	4/22/00	4/24/00	4824.0	452.0	
G6047566	1/28/00	2/3/00	4250.8	4/22/00	4/24/00	4455.9	205.1	
G6047567	1/28/00	2/3/00	4380.5	4/22/00	4/24/00	4755.0	374.5	
G6047568	1/28/00	2/3/00	4365.5	4/5/00	4/11/00	4373.1	7.6	
G6047569	1/28/00	2/3/00	4366.8	4/22/00	4/24/00	4376.6	9.8	
G6047570	1/28/00	2/3/00	4355.8	4/22/00	4/24/00	4430.5	74.7	
G6047571	1/28/00	2/3/00	4370.7	4/22/00	4/24/00	4456.9	86.2	
G6047572								
G6047573	1/28/00	2/3/00	4348.5	4/22/00	4/24/00	4436.4	87.9	
G6047574								
G6047575	1/28/00	2/3/00	4386.8	4/22/00	4/24/00	4465.7	78.9	
G6047576	1/28/00	2/3/00	4364.2	4/22/00	4/24/00	4457.7	93.5	
G6047577	1/28/00	2/3/00	4329.2	4/22/00	4/24/00	4347.6	18.4	
G6047578	1/28/00	2/3/00	4340.0	5/5/00	5/8/00	4418.1	78.1	

Chemetco Environmental Management
Filter Conditioning Logsheet

	Pre Sampling Conditioning				Post Sampling Conditioning			
Filter Number	Date In	Date Out	Weight, mg	Date In	Date Out	Weight, mg	W_{net}, mg	W_{net}, ug
G6047579	1/28/00	2/3/00	4331.2	5/5/00	5/8/00	4431.4	100.2	
G6047580	1/28/00	2/3/00	4322.5	5/5/00	5/8/00	4504.9	182.4	
G6047581								
G6047582								
G6047583								
G6047584								
G6047585								
G6047586								
G6047587								
G6047588								
G6047589								
G6047590								
G6047591								
G6047592								
G6047593								
G6047594								

Chemetco Environmental Management
Filter Conditioning Logsheet

	Pre Sampling Conditioning				Post Sampling Conditioning			
Filter Number	Date In	Date Out	Weight, mg	Date In	Date Out	Weight, mg	W_{net}, mg	W_{net}, ug
G6047712	4/10/00	4/12/00	4284.1	5/5/00	5/8/00	4474.4	190.3	
G6047713	4/10/00	4/12/00	4305.8	5/5/00	5/8/00	4378.2	72.4	
G6047714	4/10/00	4/12/00	4295.8	5/5/00	5/8/00	4299.1	3.3	
G6047715	4/10/00	4/12/00	4289.8	5/19/00	5/22/00	4580.2	290.4	
G6047716	4/10/00	4/12/00	4319.5	5/5/00	5/8/00	4390.4	70.9	
G6047717	4/10/00	4/12/00	4308.7	5/5/00	5/8/00	4403.8	95.1	
G6047718	4/10/00	4/12/00	4337.1	5/5/00	5/8/00	4382.3	45.2	
G6047719								
G6047720	4/10/00	4/12/00	4292.0	5/5/00	5/8/00	4356.3	64.3	
G6047721	4/10/00	4/12/00	4294.6	5/5/00	5/8/00	4302.1	7.5	
G6047722	4/10/00	4/12/00	4302.5	5/19/00	5/22/00	4415.1	112.6	
G6047723	4/10/00	4/12/00	4296.5	5/19/00	5/22/00	4448.9	152.4	
G6047724	4/10/00	4/12/00	4323.4	5/19/00	5/22/00	4535.7	212.4	
G6047725								
G6047726	4/10/00	4/12/00	4280.7	5/19/00	5/22/00	4536.5	255.8	
G6047727								

Chemetco Environmental Management
Filter Conditioning Logsheet

	Pre Sampling Conditioning			Post Sampling Conditioning				
Filter Number	Date In	Date Out	Weight, mg	Date In	Date Out	Weight, mg	W_{net}, mg	W_{net}, ug
G6047728	4/10/00	4/12/00	4292.4	5/19/00	5/22/00	4588.9	296.5	
G6047729	4/10/00	4/12/00	4273.5	5/19/00	5/22/00	4277.1	3.6	
G6047730	4/10/00	4/12/00	4295.5	5/19/00	5/22/00	4545.9	250.4	
G6047731	4/10/00	4/12/00	4303.7	5/19/00	5/22/00	4500.6	196.9	
G6047732	4/10/00	4/12/00	4360.1	5/19/00	5/22/00	4448.2	88.1	
G6047733	4/10/00	4/12/00	4562.4	5/19/00	5/22/00	4386.6	-175.8	
G6047734	4/10/00	4/12/00	4547.9	5/19/00	5/22/00	4356.4	-191.5	
G6047735	4/10/00	4/12/00	4363.7	5/26/00	5/31/00	4654.4	290.7	
G6047736	5/2/00	5/5/00	4349.3	5/26/00	5/31/00	4616.0	296.7	
G6047737	5/2/00	5/5/00	4352.2	5/26/00	5/31/00	4897.2	545.0	
G6047738	5/2/00	5/5/00	4357.5	5/26/00	5/31/00	4605.0	247.50	
G6047739	5/2/00	5/5/00	4354.9	5/26/00	5/31/00	4568.1	213.20	
G6047740								
G6047741	5/2/00	5/5/00	4358.4	5/26/00	5/31/00	4360.2	1.8	
G6047742	5/2/00	5/5/00	4346.5	5/26/00	5/31/00	4569.2	222.7	
G6047743	5/2/00	5/5/00	4350.8	5/26/00	5/31/00	4509.2	158.4	

Chemetco Environmental Management
Filter Conditioning Logsheet

	Pre Sampling Conditioning			Post Sampling Conditioning				
Filter Number	Date In	Date Out	Weight, mg	Date In	Date Out	Weight, mg	W_{net}, mg	W_{net}, ug
G6047744	5/2/00	5/5/00	4362.7	5/26/00	5/31/00	5089.2	726.5	
G6047745	5/2/00	5/5/00	4360.8	5/26/00	5/31/00	4753.1	392.3	
G6047746	5/2/00	5/5/00	4335.2	5/26/00	5/31/00	4851.7	516.2	
G6047747	5/2/00	5/5/00	4353.9	5/26/00	5/31/00	4359.7	5.8	
G6047748	5/2/00	5/5/00	4356.4	6/9/00	6/12/00	4436.1	79.7	
G6047749								
G6047750	5/2/00	5/5/00	4358.0	[illegible]	6/02/00	4568.7	210.7	
G6047751	5/2/00	5/5/00	4348.2	[illegible]	6/02/00	4441.8	93.6	
G6047752	5/2/00	5/5/00	4343.4	5/31/00	6/02/00	4453.4	110	
G6047753	5/2/00	5/5/00	4356.8	5/31/00	6/02/00	4481.3	124.5	
G6047754	5/2/00	5/5/00	4334.6	5/31/00	6/02/00	4336.8	2.2	
G6047755	5/2/00	5/5/00	4363.2	6/02/00	6/05/00	4457.5	94.3	
G6047756	5/19/00	5/22/00	4261.9	6/02/00	6/05/00	4335.1	73.2	
G6047757								
G6047758	5/19/00	5/22/00	4280.8	6/02/00	6/05/00	4639.4	358.6	
G6047759	5/19/00	5/22/00	4306.5	6/02/00	6/05/00	4621.8	315.3	

Chemetco Environmental Management
Filter Conditioning Logsheet

	Pre Sampling Conditioning			Post Sampling Conditioning				
Filter Number	Date In	Date Out	Weight, mg	Date In	Date Out	Weight, mg	W_{net}, mg	W_{net}, ug
G6047760	5/19/00	5/22/00	4276.1	6/16/00	6/19/00	4429.9	153.8	
G6047761	5/19/00	5/22/00	4281.9	6/02/00	6/05/00	4281.8	−0.1	
G6047762	5/19/00	5/22/00	4313.9	6/09/00	6/12/00	4316.1	2.2	
G6047763	5/19/00	5/22/00	4306.0	6/09/00	6/12/00	4360.4	54.4	
G6047764	5/19/00	5/22/00	4263.3	6/09/00	6/12/00	4450.8	187.5	
G6047765	5/19/00	5/22/00	4282.0	6/09/00	6/12/00	4431.3	149.3	
G6047766	5/19/00	5/22/00	4290.3	6/09/00	6/12/00	4351.2	60.9	
G6047767	6/5/00	6/7/00	4289.1	6/23/00	6/27/00	4344.1	55.0	
G6047768	6/5/00	6/7/00	4270.4	6/23/00	6/27/00	4332.5	62.1	
G6047769	6/5/00	6/7/00						
G6047770	6/5/00	6/7/00	4283.5	6/16/00	6/19/00	4289.0	5.5	
G6047771	6/5/00	6/7/00	4300.2	6/16/00	6/19/00	4370.9	70.7	
G6047772	6/5/00	6/7/00						
G6047773	6/5/00	6/7/00	4302.8	6/16/00	6/19/00	4372.9	70.1	
G6047774	6/5/00	6/7/00	4304.4	6/16/00	6/19/00	4419.4	115	
G6047775	6/5/00	6/7/00	4270.2	6/16/00	6/19/00	4397.0	126.8	

Chemetco Environmental Management
Filter Conditioning Logsheet

	Pre Sampling Conditioning				Post Sampling Conditioning			
Filter Number	Date In	Date Out	Weight, mg	Date In	Date Out	Weight, mg	W_{net}, mg	W_{net}, ug
G6047776	6/27/00	6/29/00	4284.4	7/19/00	7/21/00	4398.8	114.4	
G6047777	6/27/00	6/29/00	4290.9	7/19/00	7/21/00	4454.8	163.9	
G6047778	6/27/00	6/29/00	4278.3	7/19/00	7/21/00	4334.7	56.4	
G6047779	6/27/00	6/29/00	4275.1	7/19/00	7/21/00	4275.7	0.6	
G6047780	6/27/00	6/29/00	4277.1	7/19/00	7/21/00	4484.3	207.2	
G6047781	6/27/00	6/29/00	4361.8	7/13/00	7/18/00	4361.5	0.3	
G6047782								
G6047783	6/27/00	6/29/00	4337.5	7/10/00	7/12/00	4339.1	1.6	
G6047784	6/27/00	6/29/00	4357.2	7/13/00	7/18/00	4519.2	162	
G6047785								
G6047786	6/27/00	6/29/00	4341.8	7/13/00	7/18/00	4457.1	115.3	
G6047787	6/27/00	6/29/00	4340.1	7/13/00	7/18/00	4465.1	125	
G6047788	6/27/00	6/29/00	4356.8	7/13/00	7/18/00	4429.4	72.6	
G6047789	6/27/00	6/29/00	4347.2	7/19/00	7/21/00	4411.6	64.4	
G6047790	6/27/00	6/29/00	4360.6	7/10/00	7/12/00	4504.9	144.3	
G6047791	6/27/00	6/29/00	4357.0	7/10/00	7/12/00	4449.0	92.0	

Chemetco Environmental Management
Filter Conditioning Logsheet

	Pre Sampling Conditioning			Post Sampling Conditioning				
Filter Number	Date In	Date Out	Weight, mg	Date In	Date Out	Weight, mg	W_{net}, mg	W_{net}, ug
G6047792	6/27/00	6/29/00	4361.2	7/10/00	7/12/00	4564.9	203.7	
G6047793	6/27/00	6/29/00	4339.5	7/10/00	7/12/00	4512.9	173.4	
G6047794	6/27/00	6/29/00	4351.9	7/10/00	7/12/00	4503.4	151.5	
G6047795								
G6047796	6/27/00	6/29/00	4348.2	7/9/00	7/11/00	4350.6	2.4	
G6047797								
G6047798								
G6047799								
G6047800								
G6047801								
G6047802								
G6047803								
G6047804								
G6047805								
G6047806								
G6047807								

Chemetco Environmental Management
Filter Conditioning Logsheet

	Pre Sampling Conditioning			Post Sampling Conditioning				
Filter Number	Date In	Date Out	Weight, mg	Date In	Date Out	Weight, mg	W_{net}, mg	W_{net}, ug
G6047820								
G6047821								
G6047822	6/5/00	6/7/00	4306.4	7/3/00	7/5/00	4493.6	187.2	
G6047823	6/5/00	6/7/00	4323.6	6/23/00	6/27/00	4324.1	0.5	
G6047824	6/5/00	6/7/00	4327.8	6/23/00	6/27/00	4378.5	50.7	
G6047825	6/5/00	6/7/00	4326.2	6/23/00	6/27/00	4378.4	52.2	
G6047826								
G6047827	6/5/00	6/7/00	4327.7	6/23/00	6/27/00	4388.0	60.3	
G6047828	6/5/00	6/7/00	4326.6	7/3/00	7/5/00	4536.8	210.2	
G6047829	6/5/00	6/7/00	4339.6	7/3/00	7/5/00	4593.1	253.5	
G6047830	6/5/00	6/7/00	4268.6	7/3/00	7/5/00	4338.9	70.3	
G6047831	6/5/00	6/7/00	4290.8	7/3/00	7/5/00	4387.4	96.6	
G6047832								
G6047833	6/5/00	6/7/00	4292.1	7/3/00	7/5/00	4343.9	51.8	
G6047834	6/5/00	6/7/00	4303.1	7/3/00	7/5/00	4353.9	50.8	
G6047835	6/5/00	6/7/00	4318.2	7/9/00	7/11/00	4416.2	98.0	

Chemetco Environmental Management
Filter Conditioning Logsheet

	Pre Sampling Conditioning			Post Sampling Conditioning				
Filter Number	Date In	Date Out	Weight, mg	Date In	Date Out	Weight, mg	W_{net}, mg	W_{net}, ug
G6047836	6/5/00	6/7/00	4297.9	7/9/00	7/11/00	4435.7	137.8	
G6047837	6/5/00	6/7/00	4262.6	7/9/00	7/11/00	4314.1	51.5	
G6047838	6/5/00	6/7/00	4288.8	7/3/00	7/5/00	4290.2	1.4	
G6047839	6/5/00	6/7/00	4290.3	7/9/00	7/11/00	4362.4	72.1	
G6047840	6/5/00	6/7/00	4259.6	7/9/00	7/11/00	4329.1	69.5	
G6047841								
G6047842								
G6047843								
G6047844								
G6047845								
G6047846								
G6047847								
G6047848								
G6047849								
G6047850								
G6047851								

Chemetco
FIRST IN PEOPLE — QUALITY — SERVICE
P.O. Box 67 • Hartford, IL 62048
618-254-4381 • 800-444-5564

July 28, 2000

Illinois Environmental Protection Agency
Air Monitoring Section
c/o Mr. Terry Sweitzer
P.O. Box 19276
Springfield, Illinois 62794-9276

RE: Second Quarter 2000 Ambient Air Monitoring Report

Dear Mr. Sweitzer,

Enclosed are two copies of the report entitled, "Ambient Air Monitoring Quarterly Report Aprily - June, 2000 for Total Particulate and Lead."

A table of results from the extra sampler located at the northwest corner and within the fence (the former N3 and N3-QC locations) is attached to this letter. Since this is not included in the official ambient air monitoring program, it is not included in the report.

If you have any questions or require additional information, please contact me at 618/254-4381 ext. 268.

Sincerely,

Heather Young
Environmental Manager
Chemetco, Inc.

Attachment

cc: Jim Henry, IEPA--Collinsville Region
Jeff Trevino, USEPA
Chief, Air Enforcement Assurance Branch, USEPA
George von Stamwitz, Armstrong, Teasdale, Schlafly & Davis
File

ETS/VB
Rec
8-3-00

AMBIENT AIR MONITORING

QUARTERLY REPORT

APRIL - JUNE 2000

FOR

TOTAL PARTICULATE

AND LEAD

CHEMETCO, INC.
JULY 2000

TABLE OF TABLES

		page
TABLE 1-1	Standard Operating Procedures	5
TABLE 2-1	Sample Date Accounting	5
TABLE 3-1	Sampler Location N3	12
TABLE 3-2	Sampler Location OS	13
TABLE 3-3	Sampler Location O3	14
TABLE 3-4	Filter Field Blank	15

TABLE OF FIGURES

		page
FIGURE 1-1	Monitoring Site Locations	3
FIGURE 3-1	Daily Weather Logsheets	8
FIGURE 3-2	Data Assessment Report	17

2000 2ND QUARTER AVERAGE CALCULATION

LOCATION N3

DATE	FILTER NO	TIME FINISH	TIME START	ELAPSED TIME	CFM	CUBIC METERS	LEAD ug/fltr	TSP ug/fltr	LEAD ug/m3	TSP ug/m3
4/6/00*	6047564	2941.92	2918.42	1412	46	1949	129.2	420900	0.07	216.01
4/12/00	6047573	2965.52	2941.98	1412	46	1949	6	87900	0.00	45.11
4/18/00	6047713	2989.1	2965.56	1412	Motor Out					
4/24/00	6047720	3012.7	2989.17	1412	42.7	1809	109	95100	0.06	52.58
4/30/00	6047724	3036.26	3012.74	1412	43.9	1860	6939	212400	3.73	114.22
5/6/00**	6047731	3059.8	3036.29	1412	43.9	1860	13205	196900	7.10	105.88
5/12/00	6047739	3083.34	3059.82	1412	45.1	1910	4858	213000	2.54	111.49
5/18/00	6047745	3106.9	3083.4	1412	42.7	1809	3247	392000	1.80	216.72
5/24/00	6047752	3130.47	3106.96	1412	43.3	1834	6	110000	0.00	59.97
5/30/00	6047759	3154.03	3130.52	1412	42.7	1809	15092	315300	8.34	174.32
6/5/00	6047766	3177.56	3154.05	1412	42.7	1809	21	60900	0.01	33.67
6/11/00	6047774	3201.09	3177.59	1412	42.1	1783	1629	115000	0.91	64.49
6/17/00	6047767	3224.59	3201.11	1412	42.1	1783	6	55000	0.00	30.84
6/23/00***	6047828	3248.14	3224.62	1412	42.1	1783	2055	210200	1.15	117.87
6/27/00	6047833	3271.88	3248.17	1412	43.3	1834	0	51800	0.00	17.12
6/29/00	6047840	3295.42	3271.91	1412	43.9	1860	6	69500	0.00	37.37
								AVERAGE	1.45	90.30

* Fields plowed/planted on this day and several days through mid May.

** Upset condition - A trial test (not a normal activity) for a different type of crusher was being performed on the slag.

*** Ran on wrong day and questions as to the amount of time it actually ran due to apower failure. A makeup test was performed on 6/26 - 6/27.

(and *** not included in averages.)**

n=12 or 15

n=15, avg = 1.714

n=12, avg = 1.45

IN THE UNITED STATES DISTRICT COURT
FOR THE SOUTHERN DISTRICT OF ILLINOIS

FILED
09 JAN -4 PM 4:25

UNITED STATES OF AMERICA,

Plaintiff, CIV. NO. 93-482-WDS

v. Judge Stiehl

CHEMETCO, INC.,

Defendant.

_____/

CONSENT DECREE

A. Plaintiff, United States of America, on behalf of the Administrator of the United States Environmental Protection Agency ("U.S. EPA"), filed a Complaint in this action against Defendant, Chemetco, Inc. ("Chemetco" or "Defendant"), alleging civil violations of the Clean Air Act, 42 U.S.C. §§ 7401 et seq. ("CAA" or "Act"), and the Federally approved and enforceable regulations comprising the State of Illinois Air Pollution Implementation Plan ("Illinois SIP"), codified at 40 C.F.R. § 52.720-52.742.

B. Pursuant to the authority of CAA Section 113(b), 42 U.S.C. § 7413(b), the Complaint seeks injunctive relief and the imposition of civil penalties for violations of the Act;

C. At all times relevant to the Complaint, Chemetco has been the "operator," within the meaning of CAA Section 113, 42 U.S.C. § 7413, of a secondary copper smelter at a Facility located on Illinois Route 3 at Oldenburg Road, City of Hartford, Madison County, Illinois;

D. The Facility is a "stationary source" within the meaning of CAA Section 302(z), 42 U.S.C. § 7602(z), because it emits lead and particulate matter into the environment;

E. Illinois Pollution Control Board ("IPCB") Rule 101 defines "existing emission source" as any emission source, the construction or modification of which commenced prior to May 31, 1972, the effective date of IPCB Rule 101. See 35 Ill. Adm. Code § 212.322;

F. The Facility has been a "major stationary source" as defined in CAA Section 302(j), 42 U.S.C. § 7602(j), because it has emitted more than one hundred tons per year of an air pollutant;

G. Defendant's secondary copper smelter at the Facility is comprised, in part, of four furnaces ("Furnace Nos. 1, 2, 3, and 4") (also known as "converters"), which process scrap materials (including brasses and bronzes that contain lead) and which generate particulate matter emissions in varying amounts.

H. Furnace Nos. 1, 2, and 3 at the Facility were operated prior to May 31, 1972, and are "existing emission sources" within the meaning of the IPCB Rule 101, 35 Ill. Adm. Code § 212.322.

I. IPCB Rule 101 defines "new emission source" as any emission source the construction or modification of which commenced after May 31, 1972, the effective date of IPCB Rule 101. See 35 Ill. Adm. Code § 212.321.

J. Furnace No. 4 at the Facility was constructed after May 31, 1972, and is a "new emission source" within the meaning of the IPCB Rule 101, 35 Ill. Adm. Code § 212.321.

K. IPCB Rule 103 prohibits any person from causing or allowing the operation of any new emission source or new air pollution control equipment, for which a construction permit is required by IPCB Rule 103, without first obtaining an operating permit from IEPA. See 35 Ill. Adm. Code § 201.143.

L. As discussed in detail herein, as part of this settlement, Chemetco has agreed to install and operate a continuous particulate mass monitoring system ("CPMMS") at its Facility. The parties agree that the purposes of such system include, but are not limited to:

Providing Chemetco with near real time emissions data for improving operation and maintenance of the Furnaces and the associated air pollution control devices at the Facility;

Minimizing the number of required stack tests that would otherwise be necessary for determining "continuous compliance;"

Providing Chemetco and U.S. EPA with continuous particulate mass emissions information in standard units of measurement, thereby minimizing reliance on surrogate measurements of emissions from the Facility's emission points (stacks), such as opacity and pressure drop across control devices, that have been contested in other cases as not accurately reflecting the existence of particulate limit excursions; and

Providing an agreed source of credible evidence for demonstrating continuous compliance with particulate emission limits.

M. Chemetco previously paid the State of Illinois a total of $305,000 in settlement of some of the violations set forth in the United States' Complaint.

N. The parties recognize and the Court, by approving and entering this Consent Decree, finds that this Consent Decree has been negotiated by the Parties in good faith, and implementation of this Consent Decree will avoid prolonged and complicated litigation between the Parties, and that this Consent Decree is fair, reasonable, and in the public interest.

NOW, THEREFORE, IT IS ADJUDGED, ORDERED, AND DECREED THAT:

I. JURISDICTION AND VENUE

1. The Complaint in this action states a claim upon which relief can be granted under the Act.

2. This Court has jurisdiction over the subject matter and parties to this action pursuant to CAA Section 113(b), 42 U.S.C. § 7413(b).

3. Venue properly lies in this Judicial District under 28 U.S.C. §§ 1391(b) and 1395(a).

II. DEFINITIONS

4. The terms used in this Consent Decree that are defined in the Clean Air Act, 42 U.S.C. §§ 7401 et seq., and the Federally approved and enforceable regulations comprising the Illinois SIP, 40 C.F.R. §§ 52.720-52.742, have the meanings contained therein.

5. Whenever the terms listed below are used in this Consent Decree or in any of the Appendices hereto the following definitions shall apply:

a. "Defendant" shall mean "Chemetco, Inc." or "Chemetco;"

b. "BACT" shall mean "Best Available Control Technology," as defined in Clean Air Act Section 169(3), 42 U.S.C. § 7479(3);

c. "Clean Air Act," "Act" and "CAA" shall mean the Clean Air Act, 42 U.S.C. § 7401, et seq.;

d. "Consent Decree" shall mean this Consent Decree and all appendices hereto, including all modifications to the Consent Decree that are made pursuant to Paragraph 55 hereof;

e. "Continuous Particulate Mass Monitoring System" or "CPMMS" shall mean the system that measures the particulate matter that is released from the emission points (stacks) at the Hartford Facility into the ambient air: the system includes, but is not limited to, a continuous

particulate mass monitor (Mass Monitor), and a monitoring device or system for measuring or computing the exhaust gas flow on an hourly basis (Flow Monitor);

f. "Daily Weighted Average" shall mean the average of the zinc and/or lead percentages of all the Furnace Charges in one day, taking into account the weight of the material comprising each Furnace Charge;

g. "Direct Injection System" or "DI System" shall mean the system by which copper bearing fines are injected directly into a Furnace: the system includes the conveyor system, sizing machine, kiln dryer, pneumatic transporters, storage silo, and a large injector;

h. "Facility" or "Plant" shall mean Defendant's secondary copper smelter, and all associated processing, transfer, storage operations and equipment located on Illinois Route 3 at Oldenburg Road, City of Hartford, County of Madison, State of Illinois;

i. "Fines" shall mean all scrap materials acquired at the Facility that are stored, dried, screened or processed in any way for direct injection through the DI System into any of the Furnaces;

j. "Foundry" shall mean the building in which the Hartford Facility's Furnaces are located;

k. "Furnace" shall mean any rotary copper smelting device at the Facility;

l. "Furnace Charge" or "Charge" shall mean any material placed into a Furnace for processing;

m. "Furnace Mode" or "Mode" shall mean any of the four phases of processing in any Furnace, which include Slag Treatment (Mode 1); Refining (Cold Charge) (Mode 2); Smelting

(Smelt) (Mode 3); and Injection (Mode 4);

n. "IEPA" shall mean the State of Illinois Environmental Protection Agency and any successor departments or agencies of the State of Illinois;

o. "Illinois SIP" shall mean the State of Illinois Air Pollution Implementation Plan, codified at 40 C.F.R. §§ 52.720-52.742;

p. "IPCB" shall mean the State of Illinois Pollution Control Board;

q. "Malfunction" shall mean any sudden, infrequent, and not reasonably preventable failure of air pollution control equipment, process equipment, or a process to operate in a normal or usual manner. Failures that are caused in part by poor maintenance or careless operation are not malfunctions (See 40 C.F.R. § 60.2);

r. "National Ambient Air Quality Standards" or "NAAQS" shall mean the standards set forth at 40 C.F.R. §§ 50.1-50.12;

s. "Paragraph" shall mean a portion of this Consent Decree designated by an Arabic numeral outside of a parentheses, e.g., "19";

t. "Pressure Drop" shall mean the decrease in pressure between two monitoring points;

u. "Pressure Drop Monitor" shall mean any device(s) installed and operated to determine the Pressure Drop that occurs between any two points;

v. "Process Weight" shall mean the total weight in pounds, of all material charged to a Furnace during a Furnace Mode;

w. "Process Weight Rate" shall have the same meaning as set forth in 35 Ill. Adm.

Code § 211.122. See also 35 Ill. Adm. Code Part 266;

x. "Raw Material Data Base" shall mean the record keeping system whereby the pertinent information concerning all raw material received at the Facility for processing in the refining and/or smelt/slag treatment modes is logged and maintained;

y. "Recipe" shall mean the chemical composition of a Furnace Charge or Smelting Heat;

z. "Residue" shall mean any material remaining in a Furnace after completion of a Furnace Mode;

aa. "Secondary Capture System and Control Device" shall mean the hood, duct work, fans, and baghouse that control all fugitive emissions that escape from the Furnaces or are otherwise produced by activities in the Facility;

bb. "Smelting Heat" shall mean one or more Furnace Charges excluding any Residue in that Furnace from any previous smelting mode processed in that furnace;

cc. (1) Stack Test" shall mean a measurement of the amount of any pollutant including, but not limited to, particulate matter and lead, emitted by a source of air emissions, that is conducted in accordance with U.S. EPA-approved test methods found at 40 C.F.R. Part 60, Appendix A;

(2) "Baseline Stack Test" shall mean the initial testing of combined Furnace Nos. 1 and 3, and combined Furnace Nos. 2 and 4, and/or combined Furnace Modes for those units, following any modification to the process and/or air pollution control equipment;

dd. "State" shall mean the State of Illinois and all its departments, agencies and

instrumentalities;

ee. "United States" shall mean the United States of America and all its departments, agencies and instrumentalities;

ff. "U.S. EPA" shall mean the United States Environmental Protection Agency and any successor departments or agencies of the United States.

III. APPLICABILITY

6. The provisions of this Consent Decree shall apply to and be binding upon Defendant and Defendant's agents, officers, directors, employees, successors, assigns, contractors, and consultants solely in their capacities as such. Defendant shall be responsible for the acts of its agents, officers, directors, employees, successors, assigns, contractors, and consultants, who violate, cause or permit Defendant to violate the terms of this Consent Decree.

7. No change in ownership or corporate status shall in any way alter the responsibilities of Defendant under this Consent Decree. In the event of any conveyance of title, easement, or other interest in the Facility, Defendant shall continue to meet all obligations under this Consent Decree.

8. In the event that Defendant proposes to sell or transfer any real property or operations subject to this Consent Decree, Defendant shall notify U.S. EPA and IEPA in the manner specified in 40 C.F.R. § 270.72(a) prior to the conveyance of title, easement, or any other interest, including a leasehold interest. Defendant shall make the purchasing party's compliance with the Consent Decree a condition of any sale of any portion of the Hartford Facility that is subject to this Consent Decree.

9. Defendant shall notify each contractor retained to perform work required by this

Consent Decree of each of the requirements of this Consent Decree relevant to the activities to be performed by that contractor, including all relevant work schedules and reporting deadlines. Defendant shall further require that each such contractor notify in writing each subcontractor retained to perform work required by this Consent Decree of the requirements of this Consent Decree applicable to the work to be performed by such subcontractor.

10. In any action to enforce this Consent Decree, Defendant shall not raise as a defense the failure by any of the Defendant's officers, directors, employees, agents, servants, and successors and assigns to take actions necessary to comply with the provisions hereof. Nothing in this Paragraph shall diminish the Defendant's rights under Section XIV (Force Majeure) or any other available legal defenses.

IV. CLEAN AIR ACT COMPLIANCE

11. Buildings and Sheds

a. Defendant operates on the west side of the Facility's Dust Injection System Hall, an approximately 50,000 square foot building dedicated to the storage of fines ("Fines Building").

b. Any fines not stored in the Fines Building shall be stored in another building or a closed container.

c. Beginning with the date of entry of this Consent Decree, Defendant shall not charge materials purchased as fines to any Furnace by any means other than the Dust Injection System.

d. Defendant shall pay a stipulated penalty of $500 per day for any violations of any provision of this Paragraph.

12. Designated Modes of Furnace Operation

a. Defendant has designated each of its four Furnaces to operate in specific process Modes, as follows: Mode 1 - Slag Treatment; Mode 2 - Refining (Cold Charge); Mode 3 - Smelting (Smelt); and Mode 4 - Injection.

b. Defendant's operations shall comply with the production process depicted on the chart at Appendix A.

c. Defendant shall limit production for all four of its Furnaces to 900 tons per day: Provided, should Defendant, at its discretion, utilize fewer than four Furnaces at any one time, Defendant's daily maximum production shall be equal to the maximum capacity of the Furnaces being utilized, as depicted on the chart at Appendix A.

13. Fugitive Emissions Control.

a. Defendant shall comply with all the terms of the Facility's IEPA-approved Fugitive Emissions Control Program dated September 1993, as revised (incorporated herein by reference) . Specifically, Defendant shall:

(1) continue to implement all measures as outlined in the approved Fugitive Emissions Control Program;

(2) maintain daily records of all actions taken pursuant to the approved Fugitive Emissions Control Program and the results thereof. Daily records shall be retained for a period of five (5) years; and

(3) submit to IEPA and U.S. EPA within seven (7) working days of the end of each calendar month a fugitive emissions report, which shall contain any and all records

indicating or demonstrating the Defendant's failure to adhere to the approved fugitive emissions control program, including, but not limited to, the dates of such failure, the duration of such failure, the reasons for such failure, and all actions taken to correct such failure.

b. The results of the fugitive emissions control program shall be available for inspection and copying by IEPA and U.S. EPA; and

c. Upon demand by U.S. EPA, Defendant shall pay a stipulated penalty of $500 per day for each day that a fugitive emission report is not timely submitted, and $1,000 per day for each day that such a submitted report fails to contain any information required by Paragraph 13.a.(3). Upon receipt of a fugitive emission report indicating that Defendant has failed to comply with the Fugi tive Emissions Control Program, U.S. EPA, taking into consideration the factors set forth in Paragraph 13.a.(3), may demand that Defendant pay a stipulated penalty of $500 per day for each violation set forth in the report.

14. Furnace Emission Limitations

a. Furnace Nos. 1, 2, and 3 at the Facility were operated prior to May 31, 1972, and are "existing emission sources" within the meaning of IPCB Rule 101, 35 Ill. Adm. Code § 212.322. Furnace No. 4 at the Facility was constructed after May 31, 1972, and is a "new emission source" within the meaning of IPCB Rule 101, 35 Ill. Adm. Code § 212.321. However, under Defendant's current operational and emissions control programs, Furnace No. 1 is paired with Furnace No. 3 as a "Process Emission Unit" (discussed in more detail in the CPMMS Protocol (Appendix D)) and Furnace No. 2 is paired with Furnace No. 4 as a "Process Emission Unit ." As such, for purposes of this Consent Decree only, the combined emissions from Furnace Nos. 1 and 3 will be subject to 35

Ill. Adm. Code § 212.322, and the combined emissions from Furnace Nos. 2 and 4 will be subject to 35 Ill. Adm. Code § 212.321. Chemetco, at its discretion, may separate Furnace Nos. 2 and 4, with the result that the emission limit for Furnace No. 2 would once again be subject to 35 Ill. Adm. Code § 212.322: Provided, such action may be undertaken only in accordance with the Clean Air Act and its implementing regulations, including the State of Illinois SIP, 40 C.F.R. § 52.720-52.742.

b. Defendant shall comply with each of the following emission limitations at all times.

(1) The opacity limitation for visible emissions from each Furnace's control device, vent, or emission point (stack), as required by 35 Ill. Adm. Code § 212.123(a);

(2) The total particulate emissions limitation for each Process Emissions Unit (as established pursuant to 35 Ill. Adm. Code § 212.321 or § 212.322, as applicable. See Paragraph 14.a.) during each process mode, including Furnace charging and tapping emissions.

c. The Process Weight Rate calculation shall not include the Residue as part of the Furnace Charge.

d. During any 12-month period described in Paragraph 20.a., Defendant shall be subject to stipulated penalties of $500 per day for each day of violation of Paragraph 14.b.(1) not caused by a Malfunction.

15. Secondary Capture System and Control Device

a.(1) Within 60 days following the entry of this Consent Decree, Defendant shall submit for U.S. EPA's review and approval a detailed proposal for assessing and/or improving the efficiency of the Secondary Capture System and Control Device for the Foundry. The proposal shall

address the various components of the Foundry, including, but not limited to, the integrity of the roof, supporting structure, walls, duct work and baghouse.

(2) Defendant shall complete the assessment within 120 days of Defendant's receipt of U.S. EPA's written approval of the assessment proposal.

(3) A report of the results of the assessment shall be submitted to U.S. EPA and IEPA within thirty (30) calendar days following completion of the assessment. The report shall include modification descriptions, schedules for implementation, and cost estimates.

b. Defendant shall operate the Secondary Capture System and Control Device in a manner that meets all applicable emission limitations, including the opacity limitation for visible emissions as required by 35 Ill. Adm. Code § 212.123(a).

c. Within 180 days following entry of this Consent Decree, Defendant shall install pressure drop monitors for each of the eight compartments of the baghouse.

(1) Defendant shall insure that each pressure drop monitor includes a continuous monitoring and recording device that allows pressure drop monitoring of the baghouse compartments by the operators in the control room.

(2) Defendant shall establish a baseline range of operation for pressure drop, and operate the baghouse at all times within the baseline range.

(3) Defendant shall record and maintain at the Facility, for three years after installation of the last installed pressure drop monitor, the date, time, and duration, of all time periods that the baghouse operates outside of the baseline range, and the cause of and methods used to correct such deficiency.

d. Beginning 240 days following the entry of this Consent Decree, Defendant shall achieve and maintain zero visible fugitive emissions from the Foundry.

e. A violation of any provision of this Paragraph not caused by a Malfunction shall subject Defendant to stipulated penalties of $500 per day for each violation.

16. Baseline Stack Testing

a. Baseline Stack Testing shall be performed for all mode scenarios depicted on the chart at Appendix A pursuant to the Stack Test Protocol set forth in Appendix B.

b. Within 30 days following U.S. EPA's certification of the Continuous Particulate Mass Monitor System under Paragraph 18.c., Defendant shall conduct the Baseline Stack Tests on its Furnaces.

c. During the Baseline Stack Tests, Defendant shall confirm the calibration curve for the Continuous Particulate Mass Monitoring System installed and certified pursuant to the Continuous Mass Monitoring Plan required by Paragraph 18.a.

d. Defendant shall establish baseline operating ranges of pressure drop for the control device systems of each Furnace and of scrubbant nozzle pressure for all new active air pollution control equipment.

e. Defendant may establish new baseline operating ranges for the control devices during subsequent Stack Tests, if any, provided the Stack Tests indicate compliance with all applicable limits. U.S. EPA shall be notified of any additional Stack Tests sixty (60) days prior to commencement of such tests.

f. Defendant shall require its contractor(s) to submit the results of, and a final

report on, all Stack Tests to IEPA and U.S. EPA at the same time that the contractor(s) submits such results and report to Defendant, but not later than thirty (30) days after completion of each Stack Test. Defendant's Stack Test results and final report shall include the following for each test run:

(1) The Mode being tested;

(2) The Process Weight Rate with supporting calculations;

(3) The allowable particulate matter emission rate in pounds per hour (lbs/hr), calculated pursuant to Paragraph 14.b.(2) of this Consent Decree.

(4) For Baseline Stack Tests, the actual controlled emissions rate of particulate matter;

(5) The actual concentration of particulate matter in pounds per day; and

(6) Copies of the continuous monitoring charts for pressure drops and scrubbant nozzle pressure rates across each control device.

g. Defendant shall allow IEPA and U.S. EPA, without warning or advance notice, to inspect the Furnace Charges and conduct any sampling of the Charges that either IEPA or U.S. EPA deems necessary during Stack Tests.

h. Defendant shall pay stipulated penalties of $1,000 per day per Furnace for each day that:

(1) A Baseline Stack Test is not completed in a timely manner; and

(2) A stack test report is not timely submitted, or fails to contain any information required by the Stack Test Protocol (Appendix B) or Paragraph 16.f, respectively, of this Consent Decree.

17. Raw Materials Management System.

a. Within 180 days following the entry of this Consent Decree, Defendant, in accordance with the Raw Materials Management System Protocol (Appendix C), shall develop, utilize and maintain a computer-based Raw Material Data Base Program to calculate and record the Daily Weighted Average of zinc and lead percentages for each recipe for each Furnace Charge.

b. Defendant shall pay stipulated penalties of $500 per day for each violation of Paragraph 17.a.

18. Continuous Mass Monitoring of Particulates. The schedule and enforcement methodology set forth in this Paragraph shall apply to Defendant's installation and utilization of a Continuous Particulate Mass Monitoring System ("CPMMS"). Such a monitoring system has not previously been utilized in the United States on a system similar to Chemetco's.

a. Within 120 days following the entry of this Consent Decree, Defendant shall submit for review and approval by U.S. EPA a Continuous Particulate Mass Monitoring Plan. Such plan shall satisfy all the elements of the protocol for installing, certifying, operating, maintaining, and reporting from the CPMMS. (See Appendix D).

b. Within 60 days following Defendant's receipt of U.S. EPA's approval of the plan submitted pursuant to Paragraph 18.a., Defendant shall install, calibrate, operate and maintain a CPMMS on each of the emission points (stacks) servicing the Facility's four Furnaces and their air pollution control devices. Defendant also shall provide a means of computing and recording the allowable particulate emission rate in pounds per hour for each "Process Emission Unit" using the equations set forth at 35 Ill. Adm. Code §§ 212.321 and 212.322, as applicable. See Paragraph 14.a.

c. Within 30 days following the first day of operation of the CPMMS, Defendant shall perform certification tests and, within 30 days following completion of such tests, Defendant shall provide to U.S. EPA, for purposes of U.S. EPA's approval and certification of the CPMMS, all data (including all test results) developed by Defendant to demonstrate that the CPMMS satisfies all of the certification requirements set forth in the CPMMS Protocol (Appendix D).

d. After the CPMMS is operational on each of the Facility's emission points (stacks) and certification testing is completed, Defendant shall demonstrate continuous compliance with the emission limits established pursuant to Paragraph 14.b.(2) of this Consent Decree, using the emission measurements provided by the CPMMS.

e. No later than the 30 days following the last day of each calendar quarter, starting with the calendar quarter in which U.S. EPA certifies the CPMMS, Chemetco shall submit to U.S. EPA and IEPA a report, using the data obtained from the CPMMS (in standard units of measure and the appropriate averaging time), of all one-hour periods of emissions that are in excess of the emission limitations established pursuant to Paragraph 14.b.(2) of this Consent Decree. Each such report shall include the date, time and magnitude of excess particulate emissions, statements as to the probable cause of the excess emissions, descriptions of the corrective action(s) that may have been undertaken by Chemetco, and information as to the periods of and reasons for non-operation or malfunction of the CPMMS, if appropriate.

f. Until this Consent Decree is terminated, U.S. EPA will review and evaluate the excess emission reports required by subparagraph "e" of this Paragraph, and any other monitoring reports or incident reports provided to U.S. EPA by Defendant, and will determine, based on those

reports, whether violations of this Paragraph have occurred: Provided, recorded and reported excess emissions solely attributable to a malfunction of the CPMMS shall not form the basis of a claim for stipulated penalties under this Consent Decree.

g. Chemetco shall be subject to a stipulated penalty of $500 per day for violations of any provision of this Paragraph.

19. Election of Optional Stack Testing and Potential Operational Restrictions. The following provisions shall apply to the performance of stack tests if either party concludes that the CPMMS or the data derived therefrom is unreliable:

a. At any time following 180 days after the U.S. EPA's certification of the CPMMS under Paragraph 18.c., U.S. EPA may require, or Defendant at its discretion may perform, a Stack Test on a particular emission point (stack) if:

(1) U.S. EPA has demanded stipulated penalties under Paragraph 18.f. for more than two consecutive calendar quarters;

(2) the CPMMS for a particular stack has malfunctioned for more than 25% of the calendar quarter; or

(3) U.S. EPA and Defendant disagree on the validity of the information set forth in the reports required under Paragraph 18.e. of this Consent Decree.

b. Should U.S. EPA require the performance of Stack Tests under the provisions of Paragraph 19.a., such Stack Tests shall be initiated within 60 days following Defendant's receipt of U.S. EPA's written notification that Stack Tests must be conducted.

c. The provisions of Paragraph 16.f. and 16.g. of this Consent Decree,

applicable to Baseline Stack Tests, shall apply equally to any Stack Tests that may be performed under this Paragraph.

d. Should a Stack Test conducted under this Paragraph demonstrate that a combination of Furnace Modes has exceeded an emission limitation for a Process Emission Unit established pursuant to Paragraph 14.b.(2) of this Consent Decree, and such exceedance is not the result of a Malfunction, Defendant shall stop operation of such Furnace Mode combination immediately upon receipt of the Stack Test results (but no later than fifteen (15) days after the last Stack Test date) except that:

(1) Defendant, upon written concurrence of U.S. EPA, may engage in full operation of the subject Furnace Mode combination, without incurring a penalty, only for the purposes of conducting retests to identify which Furnace Mode or Modes caused the emissions limitation to be exceeded, and the emissions reduction impact of remedial measures or changes to Furnace Charges: Provided, operations under this subparagraph shall not exceed fourteen (14) days without the written approval of U.S. EPA;

(2) If a Furnace Mode combination is shut down or its operations restricted pursuant to this Paragraph, unlimited operation of the subject Furnace shall not recommence until all of the following occur:

(a) Defendant certifies to IEPA and U.S. EPA that it has completed construction of or improvements to the air pollution control devices or changes in Charges;

(b) U.S. EPA receives the results of completed emissions tests that demonstrate compliance with the emissions limitations established pursuant to Paragraph 14.b.(2) of

this Consent Decree, and

(c) Defendant pays any stipulated penalty that may have accrued under this Paragraph.

e. Defendant shall pay stipulated penalties of:

(1) $500 for each day that a Stack Test, the performance of which is required by U.S. EPA under Paragraph 19.a., is not timely conducted, beginning on the 60th day following Chemetco's receipt of a written notification under Paragraph 19.b.;

(2) $2500 per day for violations of Paragraph 19.d.

20. Governance of Stack Test Data Instead of CPMMS Data.

a. If either U.S. EPA or Chemetco elects to impose a Stack Test requirement pursuant to Paragraph 19.a, the data generated through such Stack Tests (as opposed to any data generated by the CPMMS) shall govern, for a period of 12 months beginning on the date that U.S. EPA receives the Stack Test report (See Paragraphs 16.f. and 19.c.) , Chemetco's compliance with the emission limitations established pursuant to Paragraph 14.b.(2) of this Consent Decree.

b. During any 12-month period described in Paragraph 20.a. , Defendant shall ensure that the Daily Weighted Average of lead and zinc percentages of each charge, as maintained in the Raw Material Data Base, do not exceed those percentages determined for each of the materials utilized to create the Recipes for Furnace Charges processed during the Stack Tests demonstrating compliance with air emissions limitations established pursuant to Paragraph 14.b.(2) of this Consent Decree.

c. (1) Defendant has installed new air pollution control devices on the

emission points (stacks) for the Hartford Facility's four rotary Furnaces.

(2) Defendant has equipped each new air pollution control device with appropriate monitoring and recording devices, including, but not limited to:

(a) continuous pressure drop monitors and recording devices for all new active air pollution control equipment; and

(b) continuous scrubbant nozzle pressure monitors and recording devices for all new active air pollution control equipment.

d. During any 12-month period in which stack test data shall govern Defendant's compliance with the limitations established pursuant to Paragraph 14.b.(2) of this Consent Decree (See Paragraph 20.a.), the data derived from the monitors described in preceding Paragraph 20.c.(2)(a) and (b) shall be used in lieu of the data derived from the CPMMS to assess Defendant's compliance with the limitations established pursuant to Paragraph 14.b.(2) of this Consent Decree.

e. Defendant shall operate the control device systems at all times following the initial baseline stack tests within the established baseline operating ranges

f. Defendant shall calibrate, operate, and maintain all new air pollution control devices and all continuous monitoring and recording devices in a manner that ensures accurate and precise operation.

g. During any 12-month period in which stack test data shall govern Defendant's compliance with the limitations established pursuant to Paragraph 14.b.(2) of this Consent Decree (See Paragraph 20.a.), Defendant shall collect and record the following information for each new air pollution control device system as each such device becomes operational:

(1) Continuous pressure drop monitoring data and continuous scrubbant nozzle pressure monitoring data;

(2) Operating times for each Furnace control device system, associated monitoring equipment, and each Furnace;

(3) Records of all routine and non-routine maintenance performed on each control device system and associated monitoring equipment, including dates and duration of any outages; and,

(4) The date, duration, cause, and response to all periods of operation during which the pressure drop of the control device system is outside of the baseline range established during the baseline stack test.

h. Defendant shall maintain for at least three years the information collected pursuant to Paragraph 20.g.

i. Defendant shall pay stipulated penalties of $500 per day for each violation of any provision of Paragraph 20.e. thru 20.h.

21. Maintenance of Ambient Air Quality Standard

a. Beginning with the first full calendar quarter following entry of this Consent Decree, Defendant shall not violate any applicable ambient air quality standard for lead or particulate matter required by IPCB Rule 102 (See 35 Ill. Adm. Code §§ 243.126, 243.108), as demonstrated by the approved ambient air monitoring program at the Facility.

b. Defendant shall carry out immediately and in their entirety the terms of the Facility's IEPA-approved Ambient Air Monitoring Program dated August 1993, as revised (which is

incorporated herein by reference), including but not limited to:

(1) Compliance with all requirements for sampling, validation, location, analysis, operating procedures, maintenance, calibration, data reduction, reporting, quality assurance, monitoring methodology, and instrumentation;

(2) Collection of enough samples to ensure the compilation of valid quarterly emissions data, as set forth in the terms of the approved ambient air monitoring program;

(3) Refraining from any and all actions that could potentially undermine the efficiency or accuracy of the approved ambient air monitoring program, including but not limited to the construction, placement or use of water screens or spraying devices at or near the Facility's ambient air monitors;

(4) Not moving the Facility's ambient air monitors, without prior written approval from IEPA and U.S. EPA;

(5) Not deviating from the approved ambient air monitoring program without prior written approval from IEPA and U.S. EPA; and

(6) Continuing to submit the results of the ambient air monitoring program to IEPA and U.S. EPA on a quarterly basis within thirty (30) calendar days of the end of each quarter.

c. Defendant shall continue the approved ambient air monitoring program until:

(1) Defendant demonstrates to IEPA and U.S. EPA that it has been in compliance with the NAAQS for lead for a period of twelve (12) consecutive calendar quarters after entry of this Consent Decree; and

(2) Defendant receives written notice from U.S. EPA that Defendant may

cease the approved ambient air monitoring program.

d. Defendant shall pay the stipulated penalties set forth below for violations of the provisions of this Paragraph not caused by a Malfunction:

(1) $1,000 for each violation of a quarterly NAAQS arithmetic mean limitation;

(2) $5,000 for each violation of an annual NAAQS arithmetic mean limitation; and

(3) $1,000 per day for each day that Defendant fails to comply with the approved ambient air monitoring program.

V. AUDIT REQUIREMENTS

22. Nothing in this Consent Decree shall be construed to limit or otherwise affect the right of U.S. EPA to conduct and resolve any audit, or render any report authorized pursuant to the Inspector General Act of 1978, Pub.L. 95-452, Oct. 12, 1978, 92 Stat. 1101, as amended, 5 U.S.C. App. 3.

VI. CIVIL PENALTY

23. Defendant shall pay a civil penalty in the amount of $305,267 in full satisfaction of the United States' claims for civil penalties as alleged in the Complaint through the date of lodging of this Consent Decree, recognizing that Defendant has previously paid $305,000 to the State of Illinois. Defendant shall pay $150,000 of the civil penalty amount within thirty (30) days following the date of entry of this Consent Decree, and shall pay the remaining $155,267 within 12 months of the date of the first payment. The payments will be made by Fed Wire Electronic Funds Transfer ("EFT") to the

Department of Justice Lockbox Bank in accordance with specific instructions to be timely provided to Defendant upon entry of this Consent Decree and will reference DOJ Case No. 90-5-2-1-1845; United States Attorney, Southern District of Illinois, File No. 1998V00228. Funds received at the Lockbox Bank after 11:00 a.m. (Eastern Time) will be credited on the next business day. Defendant will advise the Financial Litigation Unit of the United States Attorney's Office for the Southern District of Illinois at the time payment is being wire-transferred. In addition, Defendant will confirm to U.S. EPA and the Department of Justice that payment has been made in accordance with Section X (Notices and Submissions). Interest and late charges will be paid as specified in Paragraph 24.

24. Commencing thirty (30) days after the date this Consent Decree is entered, interest shall accrue on the penalty, or any portion thereof that is overdue, at the rate set by 31 U.S.C. § 3717 and shall continue to accrue until the penalty is paid. A late payment handling charge of $20.00 shall be imposed after thirty (30) days, with an additional charge of $10.00 for each subsequent thirty (30) day period over which an unpaid balance remains. In addition, a six (6) percent per annum penalty shall be applied on any principal amount not paid within ninety (90) days of the entry of this Consent Decree.

25. Upon entry of this Consent Decree, the civil penalty provided for in this Section shall be a debt owed to the United States. Collection of this debt shall be subject to the Federal Debt Collection Procedures Act, 28 U.S.C. § 3001 *et seq.*

26. Chemetco shall not deduct its payment of the civil penalty provided for in this Section for any tax purpose or otherwise obtain any favorable tax treatment of, or for, such civil penalty payment.

VII. STIPULATED PENALTIES

27. The stipulated penalties herein shall be in addition to, and shall in no way limit, other remedies or sanctions available to the United States by reason of the Defendant's failure to comply with the requirements of this Consent Decree, the CAA or the Illinois SIP. However, if the United States collects a stipulated penalty from the Defendant under this Consent Decree and subsequently seeks and is awarded a monetary penalty under the CAA or the Illinois SIP for the same act or omission, the Defendant shall receive a credit against the judgment for the amount of the paid stipulated penalty.

28. Failure by the United States to demand stipulated penalties shall have no effect on the accrual of such penalties.

29. a. Stipulated penalties are due by the 15th day of the month following the month in which the violations occurred or in which U.S. EPA made a stipulated penalty demand under the provisions of this Consent Decree.

b. Payments of Stipulated Penalties shall be made in accordance with the procedures set forth in Paragraph 23.

c. At the same time Defendant submits a payment of stipulated penalty, Defendant shall send a letter to U.S. EPA, the U.S. Department of Justice, and IEPA notifying those entities of the payment of the stipulated penalty and identifying the case name, court, docket number, specific stipulated penalty provision involved, and a description of the violations of this Consent Decree for which the stipulated penalties were tendered.

d. The United States may, in its discretion and not subject to judicial review,

determine that stipulated penalties for violations of any provision of this Consent Decree need not be paid.

30. Any dispute with respect to Defendant's liability for a stipulated penalty shall be resolved by this Court pursuant to the dispute resolution provisions of Section VIII of this Consent Decree.

31. All penalties shall begin to accrue on the day after the complete performance is due or the day a violation occurs, and shall continue to accrue through the final day of the correction of the noncompliance or completion of the activity: Provided, stipulated penalties shall not accrue: (1) with respect to a deficient submission under Paragraphs 13.c., 16.f., and 18.e., during the period, if any, beginning on the 31st day after EPA's receipt of such submission until the date that EPA notifies Defendant of any deficiency; (2) with respect to Dispute Resolution under Section VIII, during the period, if any, beginning on the date of U.S. EPA's receipt of Defendant's statement of position and ending on the date that the Director issues a final decision regarding such dispute or, (3) with respect to judicial review, if any, under Paragraph 35, from the date that all briefs described in Paragraph 35 are received by the Court until the Court issues its final decision regarding such dispute. Nothing herein shall prevent the simultaneous accrual of separate penalties for separate violations of this Consent Decree.

VIII. DISPUTE RESOLUTION

32. Unless otherwise expressly provided for in this Consent Decree, the dispute resolution procedures of this Section shall be the exclusive mechanism to resolve disputes arising under or with respect to this Consent Decree. However, the procedures set forth in this Section shall not

apply to actions by the United States to enforce obligations of the Settling Defendants that have not been disputed in accordance with this Section.

33. The parties shall make reasonable, good faith efforts to resolve informally all disputes or differences of opinion regarding the meaning or implementation of this Consent Decree. If the parties cannot resolve any such dispute, the interpretation advanced by U.S. EPA shall be considered binding unless, within 15 days after the conclusion of the informal negotiation period, Defendant invokes the dispute resolution provisions of this Section.

34. Defendant shall invoke the formal dispute resolution procedures set forth in Paragraphs 34 thru 38 by serving on the United States a written Statement of Position on the matter in dispute, including, but not limited to, any factual data, analysis or opinion supporting that position and any supporting documentation relied upon by the Defendant. Within 15 days after receipt of Defendant's Statement of Position, U.S. EPA will serve on Defendant its Statement of Position, which shall include, but not limited to, any factual data, analysis, or opinion supporting that position and all supporting documentation relied upon by U.S. EPA. Within 10 days after receipt of U.S. EPA's Statement of Position, Defendant may submit a Reply.

35. Following receipt of Defendant's Statement of Position and reply, if any, submitted pursuant to Paragraph 34, the Director of the Air Division, U.S. EPA Region 5, will issue a final decision resolving the dispute. The Air Division Director's decision shall be binding on the Defendant unless, within 15 days of receipt of such decision, the Defendant files with the Court and serves on the United States a motion for judicial review of the decision setting forth the matter in dispute, the relief requested, and the schedule, if any, within which the dispute must be resolved to ensure orderly

implementation of the Consent Decree. Any response by the United States must be filed within 15 days of the date that Defendant's motion is due.

36. Judicial review of any dispute governed by this Paragraph shall be governed by applicable principles of law.

37. The invocation of formal dispute resolution procedures under this Section shall not extend, postpone or affect in any way any obligation of the Defendant under this Consent Decree, not directly in dispute, unless U.S. EPA or the Court agrees otherwise. Stipulated penalties with respect to the disputed matter shall continue to accrue from the first day of noncompliance with any applicable provision of this Consent Decree, except as set forth in Paragraph 31, but payment shall be stayed pending resolution of the dispute. In the event that Defendant does not prevail on the disputed issue, stipulated penalties shall be paid as provided in Paragraph 29.

38. In proceedings on any dispute governed by this Paragraph, Settling Defendants shall have the burden of demonstrating that the decision of the Air Division Director is arbitrary and capricious or otherwise not in accordance with law.

IX. INSPECTIONS

39. Until termination of this Consent Decree, U.S. EPA and their representatives, contractors, consultants, and attorneys shall have the authority to enter the Facility at all times upon proper presentation of credentials to the manager or managers of the Facility for the purposes of:

a. monitoring the progress of activities required by this Consent Decree;

b. verifying any data or information submitted to EPA in accordance with the terms of this Consent Decree;

c. conducting, pursuant to written protocols, any sampling or testing that U.S. EPA believes necessary to determine Defendant's compliance with this Consent Decree; or

d. otherwise assessing Defendant's compliance with this Consent Decree.

This provision in no way limits or affects any rights of entry and inspection held by either U.S. EPA pursuant to applicable federal or state laws or regulations.

X. NOTICES AND SUBMISSIONS

40. a. Whenever, under the terms of this Consent Decree, notice is required to be given or a document is required to be submitted by one party to another, such notices or submissions shall be directed to the individuals at the addresses specified in subparagraph "d" below, unless those individuals or their successors give notice of a change to all listed individuals, and their successors. Receipt of written notice as specified herein shall constitute complete satisfaction of any written notice requirement of this Consent Decree with respect to the United States, U.S. EPA and Defendant, respectively.

b. Defendant's notifications to or communications with U.S. EPA shall be deemed submitted on the date they are postmarked and sent by certified mail, return receipt requested. Such notifications and communications that are sent to U.S. EPA using sources other than the U.S. Postal Service will be deemed submitted on the day they are received by the United States.

c. All notifications and submissions required under this Consent Decree by Chemetco shall be signed by a responsible agent of Chemetco and shall include the following certification:

I certify under penalty of law that this document and all attachments were prepared

under my direction or supervision in accordance with a system designed to assure that qualified personnel properly gather and evaluate the information submitted. Based on my inquiry of the person or persons who manage the system, or those persons directly responsible for gathering the information, the information submitted is, to the best of my knowledge and belief, true, accurate, and complete. I am aware that there are significant penalties for submitting false information, including the possibility of fine and imprisonment for knowing violations.

d. Except as specified otherwise herein, all written notifications or communications between the parties relating to this Consent Decree shall be addressed as follows:

As to the U.S. Dept. of Justice:

[By U.S. Mail]

Chief, Environmental Enforcement Section
U.S. Department of Justice
Re: 90-5-2-1845
P.O. Box 7611
Washington, D.C. 20044

[By Overnight/Courier]

Chief, Environmental Enforcement Section
Re: 90-5-2-1845
U.S. Department of Justice
1425 New York Ave., N.W.
13th Floor
Washington, D.C. 20005
As to U.S. EPA:

Jeffery Trevino
Assistant Regional Counsel
U.S. Environmental Protection Agency
Region 5
77 West Jackson Boulevard (C-14J)
Chicago, Illinois 60604-3590

Chief, Air Enforcement Assurance Branch
U.S. Environmental Protection Agency
Region 5
77 West Jackson Boulevard (AE-17J)
Chicago, Illinois 60604-3590

As to Defendant:

Chemetco, Inc.
Director of Environmental Health and Safety
Route 3 and Oldenburg Road
Hartford, Illinois 62048

XI. SCOPE OF SETTLEMENT

41. a. Compliance with each and every requirement of this Consent Decree shall satisfy all civil liability of the Defendant for the United States' civil claims under the Clean Air Act specifically alleged in the Complaint through the date of lodging of this Consent Decree.

b. The United States does not, by its consent to the entry of this Consent Decree, warrant or aver in any manner that Defendant's complete compliance with this Consent Decree will result in compliance with the provisions of the Act, its implementing regulations, any permit, or this Consent Decree. Notwithstanding U.S. EPA's review and approval of any plans formulated pursuant to this Consent Decree, Defendant shall remain solely responsible for compliance with the Act, its implementing regulations, and this Consent Decree.

XII. EFFECTIVE DATE

42. This Consent Decree shall be effective upon entry by this Court.

XIII. TERMINATION

43. This Consent Decree may be terminated by this Court upon the Court's granting a

motion by Defendant, after certification by Defendant to the United States, and the Court, that Defendant has achieved compliance with all provisions of this Consent Decree, has been in compliance with all applicable requirements of this Consent Decree, the Act and the regulations promulgated pursuant thereto for twelve (12) consecutive calendar quarters following entry of this Consent Decree and has paid all civil and stipulated penalties due. The United States shall advise the Court, within 30 days of the filing of Defendant's motion, as to the propriety of such motion to terminate.

XIV. FORCE MAJEURE

44. If any event occurs that causes or may cause the Defendant to violate any provision of this Consent Decree, Defendant shall notify the United States in writing within five (5) days of the date on which the Defendant knew or should have known of such event. The notice shall describe in detail the anticipated length of time the violation may persist, the precise cause or causes of the violation, the measures taken or to be taken by the Defendant to prevent or minimize the violation and the timetable by which those measures will be implemented. The Defendant shall adopt all reasonable measures to avoid or minimize any such violation. Defendant's failure to comply with the notice requirements of this Section shall render this Section void and of no effect as to the particular incident involved, and shall constitute a waiver of the Defendant's right to obtain an extension of time under this Section for its obligations based on such incident.

45. If the parties agree that the violation has been or will be caused by circumstances entirely beyond the control of the Defendant, or any entity controlled by or under the common control of the Defendant, including the Defendant's consultants and contractors, and the Defendant could not

have prevented such violation, the time for performance of such requirement may be extended for a period not to exceed the actual delay resulting from such circumstances, and stipulated penalties shall not be due for said delay. In the event the parties are unable to agree, the matter may be submitted by either party to the Court for resolution pursuant to Section VIII. If the violation is determined by the Court to have been caused entirely by circumstances beyond the control of the Defendant, or any entity controlled by or under the common control of the Defendant, the Defendant may be excused as to that violation for the period of time the violation continues due to such circumstances.

46. The Defendant shall bear the burden of proving that any delay was caused by circumstances entirely beyond the control of the Defendant or any entity controlled by or under the common control of the Defendant.

47. Unanticipated or increased costs or expenses associated with the implementation of actions called for by this Consent Decree or changed financial circumstances shall not, in any event, be a force majeure event and shall not serve as a basis for changes in this Consent Decree or extensions of time under this Consent Decree.

48. Compliance with any requirements of this Consent Decree by itself shall not constitute compliance with any other requirement. An extension of one compliance date based on a particular incident does not result in an extension of a subsequent compliance date or dates. The Defendant must make an individual showing of proof regarding each delayed incremental step or other requirement for which an extension is sought.

XV. CONTINUING JURISDICTION

49. The Court shall retain jurisdiction after entry of this Consent Decree to modify or enforce its terms or to take any action necessary or appropriate for its construction or execution.

XVI. APPENDICES

50. The following documents are appended to and incorporated in this Consent Decree: Appendix A is a Chart Identifying the Furnace Mode Combinations for Maximum Operations; Appendix B is the Stack Test Protocol; Appendix C is the Raw Materials Management System Protocol Requirements; and Appendix D is the CPMMS Protocol.

XVII. GENERAL PROVISIONS

51. Compliance with the terms of this Consent Decree does not affect Defendant's obligation to comply with all applicable requirements of the Clean Air Act and regulations promulgated thereunder, and all other applicable requirements of Federal, State or local law.

52. This Consent Decree does not limit the ability of the United States to pursue its rights and remedies under any law or regulation or any Order of this Court.

53. Defendant acknowledges that it has been advised that it also may be subject to the applicable requirements of CAA Section 120, 42 U.S.C. Section 7420, providing for assessment of non-compliance penalties for violations occurring after the date of lodging of this Consent Decree.

54. Each party shall bear its own costs and attorney's fees in this action.

55. Except for technical or schedule changes, any modification of this Consent Decree must be in writing, signed by each of the parties, and approved by this Court before it becomes effective. Proposed modifications that do not result in a written agreement may be subject to dispute

resolution.

56. The public shall be given notice of this Consent Decree and an opportunity to comment on its provisions, pursuant to CAA Section 113(g), 42 U.S.C. § 7413(g), and 28 C.F.R. § 50.7. Following the close of the comment period, the United States may withdraw or modify its consent to the terms of this Consent Decree on the basis of comments received.

XVIII. SIGNATORIES

57. The undersigned representative of Chemetco, Inc., and the Chief, Environmental Enforcement Section, Environment and Natural Resources Division, United States Department of Justice each certifies that he or she is fully authorized to enter into the terms and conditions of this Consent Decree, to execute it and bind the party each person represents to this document.

FOR THE UNITED STATES OF AMERICA:

JOEL GROSS
Chief, Environmental Enforcement Section
Environment and Natural Resources Division
U.S. Department of Justice

GREGORY L. SUKYS
Environmental Enforcement Section
U.S. Department of Justice
P.O. Box 7611
Washington, D.C. 20044
(202) 514-2068/616-6584 (FAX)

FOR THE UNITED STATES OF AMERICA:

W. CHARLES GRACE
United States Attorney
Southern District of Illinois

Gerald Burke / gb.

GERALD BURKE
Assistant U.S. Attorney
Southern District of Illinois
9 Executive Drive, Suite 300
Fairview Heights, IL 62208
(618) 628-3700/3720 (FAX)

FOR THE UNITED STATES OF AMERICA:

_____

FRANCIS X. LYONS
Regional Administrator
U.S. Environmental Protection Agency
Region 5
77 West Jackson Boulevard
Chicago, Illinois 60604-3590

_____

JEFFERY TREVINO
Associate Regional Counsel
U.S. Environmental Protection Agency
Region 5
77 West Jackson Boulevard
Chicago, Illinois 60604-3590

Consent Decree: United States of America v. Chemetco, Inc., Civ. No. 93-482-WDS (S.D. Ill.).

FOR CHEMETCO, INC.:

Patrick M. Flynn, Secretary

Chemetco, Inc.
Route 3 and Oldenburg Road
Hartford, IL 62048

ARMSTRONG TEASDALE LLP

By:

JOHN F. COWLING
GEORGE M. VON STAMWITZ
One Metropolitan Sq., Suite 2600
St. Louis, Missouri 63102
(314) 621-5070

Attorneys for Chemetco, Inc.

IT IS SO ORDERED.

Date: 4 January 2000

UNITED STATES DISTRICT COURT JUDGE

IN THE UNITED STATES DISTRICT COURT
FOR THE SOUTHERN DISTRICT OF ILLINOIS

UNITED STATES OF AMERICA,

Plaintiff, CIV. NO. 93-482-WDS

v. Judge Stiehl

CHEMETCO, INC.,

Defendant.
_____/

CONSENT DECREE

APPENDIX A

(CHART IDENTIFYING MODE COMBINATIONS FOR MAXIMUM OPERATIONS)

FURNACE OPERATIONS

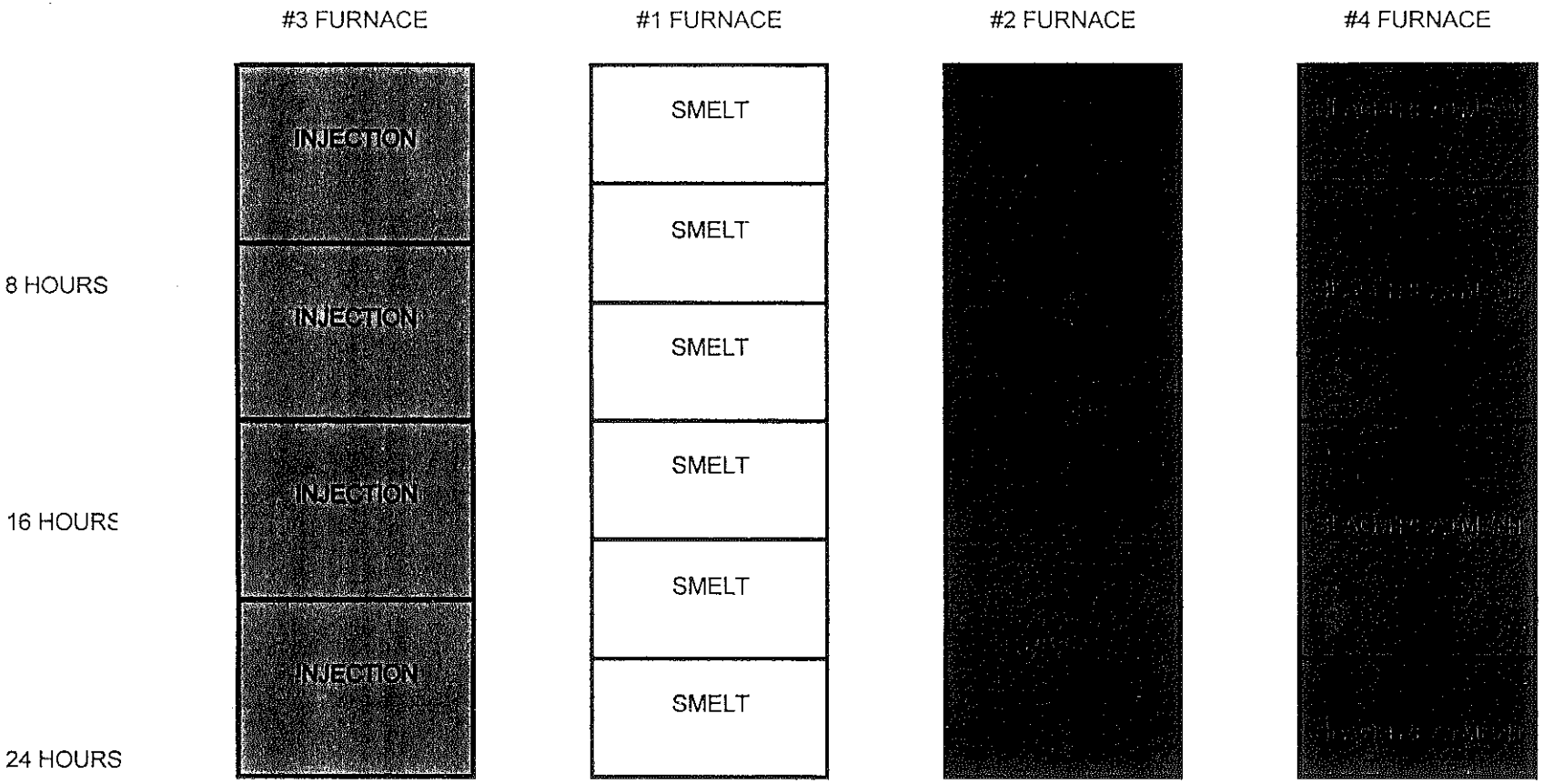

IN THE UNITED STATES DISTRICT COURT
FOR THE SOUTHERN DISTRICT OF ILLINOIS

UNITED STATES OF AMERICA,

Plaintiff, CIV. NO. 93-482-WDS

v. Judge Stiehl

CHEMETCO, INC.,

Defendant.
_____/

CONSENT DECREE

APPENDIX B

(STACK TEST PROTOCOL)

IN THE UNITED STATES DISTRICT COURT
FOR THE SOUTHERN DISTRICT OF ILLINOIS

UNITED STATES OF AMERICA,

Plaintiff, CIV. NO. 93-482-WDS

v. Judge Stiehl

CHEMETCO, INC.,

Defendant.
_____/

CONSENT DECREE

APPENDIX C

(RAW MATERIALS MANAGEMENT SYSTEM PROTOCOL REQUIREMENTS)

Raw Materials Management System Protocol Requirements

Chemetco shall utilize the raw materials management system and process analyses described in this Protocol.

a. Within 180 days after entry of this Consent Decree, Chemetco shall develop and utilize and maintain a computer-based Raw Material Data Base program to calculate and record the Weighted Average of zinc and lead percentages for each recipe for each Furnace Charge.

(1) Chemetco shall generate its Raw Material Data Base each day and retain it at the Facility until termination of this Consent Decree;

(2) Chemetco shall make the Raw Material Data Base available to IEPA and U.S. EPA upon request for inspection and photocopying.

b. Chemetco shall employ sampling and analytical standard operating procedures conducted in accordance with Chemetco's Standard Operating Procedure No. 1 or 2, where applicable, as set forth in Appendix C, whenever Chemetco handles, accepts, or stores any scrap material and assigns an assay based on sampling and analyses, historical data, or sight-grading, to any scrap material it accepts for use in the Facility's Furnaces.

c. Chemetco shall maintain a scrap material history file: after Chemetco assigns any scrap material an assay, that assignment shall become a part of the scrap material history file and added to the Raw Material Data Base.

d. Chemetco shall transfer to a storage area assigned a specific location code any scrap material after it is accepted for processing. Chemetco shall include this code in the Raw Material Data Base.

e. Chemetco shall maintain any scrap material in a separate stockpile area and assign such separate stockpile area a separate location code in Chemetco's Raw Material Data Base if Chemetco accepts such scrap material for processing and the zinc or lead percentage in such scrap material exceeds the Weighted Average determined for that type of material during the stack tests.

IN THE UNITED STATES DISTRICT COURT
FOR THE SOUTHERN DISTRICT OF ILLINOIS

UNITED STATES OF AMERICA,

Plaintiff, CIV. NO. 93-482-WDS

v. Judge Stiehl

CHEMETCO, INC.,

Defendant.
_____/

CONSENT DECREE

APPENDIX D

(CPMMS PROTOCOL)

CONTINUOUS PARTICULATE MASS MONITOR SYSTEM PROTOCOL (FOR CONSENT DECREE IN U.S. v. CHEMETCO, INC., NO. 93-482-WDS, S.D. ILL)

I. Purpose

U.S. EPA and Chemetco agree that the Chemetco shall procure, install, calibrate, operate, and maintain a Continuous Particulate Mass Monitoring System ("CPMMS") on each of the emission points (stacks) serving the Furnaces and their air pollution control devices to:

A. Provide Chemetco with near real time, particulate mass emissions rate data for improving operation and maintenance of the Furnaces and the associated air pollution control devices and thereby minimizing particulate and lead emissions at all times;

B. Provide U.S. EPA and Chemetco with continuous particulate mass emissions information in the units of the applicable Illinois emissions standard and thereby minimize their reliance upon surrogate measurements, like opacity and pressure drop across control devices, for monitoring compliance with the Furnaces' particulate emissions rate;

C. Minimize the number of stack tests that would be required, by the Consent Decree to which this Protocol is appended ("Consent Decree"), for determining 'continuous compliance' with the Furnaces' particulate emissions rate and for potentially eliminating the need for stack tests after the certification of the CPMMSs and through the life of the Consent Decree;

D. Provide an agreed source of credible evidence for demonstrating 'continuous compliance' with the particulate emission limits;

E. Demonstrate the utility of a CPMMS for monitoring a secondary copper smelter's furnace emissions.

II. Monitoring Equipment

A. The CPMMS shall be comprised of a continuous particulate mass monitor ("Mass Monitor") measuring particulate matter concentration on an hourly basis and a monitoring device or system ("Flow Monitor") for measuring the exhaust gas flow on an hourly basis. Chemetco shall provide a means of computing and recording the values of the particulate emission rate in pounds per hour from the Mass Monitor hourly mass concentration values and the Flow Monitor hourly values. Chemetco shall also provide a means of computing and recording the allowable particulate emission rate on an hourly basis for each "Process Emission Unit" using the equations in Illinois Administrative Code Title 35, §212.321 and §212.322 and information on the Furnace charges from the Raw Materials Management System.

III. Process Emission Units

A. CPMMSs shall be installed to monitor continuously the particulate mass emissions rate from the Process Emission Units - Furnaces No. 1 and 3 discharging through Stacks No. 1 and 3, and Furnaces No. 2 and 4 discharging through Stacks No. 2 and 4.

B. Furnaces No. 1 and 3, as a Process Emission Unit, shall be subject to a process weight rate emission limitation pursuant to Illinois Administrative Code Title 35, §212.322. For each hour of operation of the Process Emission Unit, Chemetco shall compute and record the allowable particulate emission limit and shall combine the CPMMSs' measured emissions from each stack to provide, in pounds per hour, the particulate matter emission rate.

C. Furnaces No. 2 and 4, as a Process Emission Unit, shall be subject to a process weight rate emission limitation pursuant to Illinois Administrative Code Title 35, §212.321.For each hour of operation of the Process Emission Unit, Chemetco shall compute and record the allowable particulate emission limit and shall combine the CPMMSs' measured emissions from each stack to provide, in pounds per hour, the particulate matter emission rate.

IV. Installation and Certification Schedule

A. Within 60 days following Chemetco's receipt of U.S. EPA's approval of the Continuous Particulate Mass Monitoring Plan required by Paragraph 18 of the Consent Decree, Chemetco shall procure and install a CPPMS on each stack serving Furnaces No. 1 & 3 and on each stack serving Furnaces No. 2 & 4. Chemetco shall install the Mass Monitors pursuant to the installation requirements found in Section 5 of ISO 10155:1995(E); (with the exception that the particulate matter reference measurement method to be used should be Reference Method 5, Appendix A, 40 C.F.R. Part 60 instead of ISO 9096) and shall install the Flow Monitors pursuant to the installation requirements found in Section 1.2.1 of Appendix A, 40 C.F.R. Part 75. If Chemetco chooses to install CPMMSs which require heated bypass duct systems for proper sampling and processing of wet, aerosol-laden exhaust gases, the installation and certification schedule shall be extended an additional 60 days to provide for the design and engineering of those bypass systems.

B. No later than 30 days after Chemetco installs and begins to operate its CPMMS, Chemetco shall conduct and complete tests to demonstrate that the "Mass Monitor" conforms to the performance characteristics and test specifications found in the international standard for the automated monitoring of the mass concentration of particulate matter in stationary source gas streams, ISO 10155:1995(E);

C. No later than 30 days after Chemetco installs and begins to operate its CPMMS, Chemetco shall conduct and complete tests to demonstrate that the installed "Flow Monitor" conforms to the performance characteristics and test specifications found in the 40 C.F.R. Part 75 Appendix A, Sections 2.1.4, 2.2.2, 6.3.2, 6.5.2, 6.5.8, 6.5.9, 6.5.10, 7.2.2 and 7.3

D. From the date of installation and operation of the CPMMS to no later than 210 days after entry of the Consent Decree, Chemetco's combined emissions from Furnaces 1 & 3 discharged through stacks 1 & 3 shall comply with an interim particulate matter emission rate of 32.00 pounds per hour and Chemetco's combined emissions from Furnaces 2 & 4 discharged through stacks 2 & 4 shall comply with an interim particulate matter emission rate of 13.00 pounds per hour.

V. Certification

A. Chemetco shall test each CPMMS to demonstrate conformance with the certification requirements;

B. Chemetco shall test the Mass Monitor in each CPMMS to demonstrate conformance with the Response Time, Zero Drift, Span, Span Drift and Calibration specifications found in be Section 6 of ISO 10155:1995(E); using the test procedures in Section 7;

C. During the Mass Monitor Calibration test, Chemetco shall acquire at least nine sets of particulate concentration measurements for each CPMMS (each set a minimum of one hour duration). The Chemetco shall arrange for acquisition of at least three sets of such data reflecting a combination of Furnace Modes within a Process Emission Unit that are associated with low emission rates, at least three sets of data reflecting a combination of Furnace Modes within a Process Emission Unit associated with intermediate emission rates, and at least three sets of data reflecting a combination of Furnace Modes within a Process Emission Unit associated with high emission rates.

D. Chemetco shall test the Flow Monitor in each CPMMS to demonstrate conformance with the Calibration Error specification - less than or equal to 3.0 percent of span - using the test procedures in Sections 6.3.2 and 7.2.2 of 40 C.F.R. Part 75 Appendix A; the span of the Flow Monitor shall be 125 percent of either the maximum potential velocity or maximum potential flow (scfh -wet basis) in the monitored stack;

E. Chemetco shall test the Flow Monitor in each CPMMS to demonstrate conformance with the Relative Accuracy specification - 15 percent - using the test procedures in Sections 6.5.2, 6.5.4, 6.5.8, 6.5.9 and 6.5.10.

VI. Quality Control

A. Chemetco shall perform on the Flow Monitor a daily calibration error test and an interference check (40 C.F.R. Part 75, Appendix A, Sections 2.2.2.1 and 2.2.2.2, respectively). The Chemetco shall perform on the Mass Monitor a daily Zero and Span Drift Check (ISO 10155:1995(E) Section 7.3.3). Corrective actions or adjustments are required on the monitors if calibration error or drift values or accumulated automatic adjustments exceed 6 percent of the

span or interference is detected.

VII. Record Keeping & Reporting

A. Within 30 days following completion of certification tests required by Paragraph 18.c. of the Consent Decree, Chemetco shall report to U.S. EPA, in accord with provisions in the Consent Decree, test results and supporting data on the certification of each of the continuous particulate mass monitoring systems.

B. Chemetco shall maintain in an electronic database records of its process weight (furnace charge) in tons per hour, the Process Emission Unit's allowable emission rate in pounds per hour, each Mass Monitor's hourly values, each Flow Monitor's hourly value, each CPMMS emission rate in pounds per hour, the Process Emission Unit's emission rate in pounds per hour, and the percentage of lead in the charge. Those records should be available for review and inspection by U.S. EPA and IEPA.

C. Chemetco shall compute and store the allowable emission rates for Furnaces No. 1 & 3 using the equation $E = C + A(P)^B$.

E = allowable emission rate in pounds per hour.
C = 0 for process weight rates up to 30 tons per hour or -40 for process rates in excess of 30 tons per hour.
A = 4.10 for process weight rates up to 30 tons per hour or 55.0 tons per hour for process weight rates in excess of 30 tons per hour.
^{B} = 0.67 for process weight rates up to 30 tons per hour or 0.11 tons per hour for process weight rates in excess of 30 tons per hour.
P = process weight rate in tons per hour.

D. Subject to the provisions of Paragraph 14.a. of the Consent Decree, Chemetco shall compute and store the allowable emission rates for Furnaces No. 2 & 4 using the equation $E = A(P)^B$.

E = allowable emission rate in pounds per hour.
A = 2.54 for process weight rates up to 450 tons per hour or 24.8 tons per hour for process weight rates in excess of 450 tons per hour.
^{B} = 0.534 for process weight rates up to 450 tons per hour or 0.16 tons per hour for process weight rates in excess of 450 tons per hour.
P = process weight rate in tons per hour.

E. No later than 30 days after the end of a calendar quarter, starting with the calendar quarter containing the certification of the CPMMS, Chemetco shall submit to U.S. EPA a report for the calendar quarter of all one hour periods of particulate emissions rates (pounds per hour) for each Process Emission Unit that were in excess of the limits established in Illinois Administrative Code Title 35, §212.321 or §212.322. The report shall include: date, time, magnitude of

particulate emission rate, the corresponding allowable emission rate, statements on the probable cause of the excess emissions, statements on any corrective action taken, claims for exemptions, and information on any periods of non-operation or malfunction of the CPMMS. The report should contain a signed statement certifying that "the information contained in the report is true, accurate, and complete." If there were no emission rates in excess of the allowable emission limits for the whole calendar quarter, Chemetco should report that fact.

VIII. Facility Changes

If during the duration of the Consent Decree, Chemetco materially changes the pollution control devices at its facility, Chemetco shall adjust, recalibrate, or recertify its CPMMS or install additional monitoring equipment if necessary, to accomplish the continuous mass monitoring requirements of this Decree.

APPENDIX B

STACK TEST PROTOCOLS

I. PURPOSE

U.S. EPA and Chemetco agree that Chemetco shall provide an agreed upon source of credible evidence for demonstrating "continuous compliance" with particulate emission limits for Illinois Administrative Code Title 35, § 212.321 and § 212.322.

In accordance with this Consent Decree, Chemetco shall install and operate a continuous particulate mass monitoring system ("CPMMS"). The CPMMS certification requirements as outlined under Appendix D - IV require that stack testing be performed to establish a calibration curve for each Mass Monitor.

The three emissions testing activities outlined in the consent decree are the following:

1. CPMMS Calibration Testing Activity
   Chemetco will establish the CPMMS calibration curves through regression analysis of stack test data and Mass Monitor data for each of the four Mass Monitors.

2. Baseline Stack Testing Activity
   Baseline stack emissions testing will be conducted to demonstrate that each combination of Chemetco's secondary copper smelting furnaces, as a Process Emission Unit, is in compliance with the particulate emission limit in pounds per hour when it is operated in the mode scenario associated with maximum emissions.

3. Optional Stack Testing Activity
   The Consent Decree, under paragraph 19, provisions Chemetco to conduct "optional stack testing activity" under the provision of unreliable CPMMS data. Chemetco may attempt to demonstrate through stack testing that fewer than all of the elements of the facility's pollution control system are sufficient to meet the applicable standards for one or more furnace modes.

   Appendix B provides stack test protocols for the last two of the three above mentioned activities which are to be certified by a third party stack testing firm. The first protocol is the "Baseline Stack Testing Protocol" and the second protocol is the "Optional Stack Testing" protocol.

II. BASELINE STACK TESTING PROTOCOL

Baseline emissions testing shall be performed in accordance with Section IV. (Methods and Sampling Procedures). The baseline stack testing shall be performed for the maximum mode scenario which is presented in Appendix A. The testing shall be conducted to determine the actual controlled emissions rate of the particulate matter in pounds per hour for each of the two process emission units. The first foundry process emission unit is the combination of Furnace No. 2 & 4. The second process emission unit is the combination of Furnace No. 1 & 3. The stack testing locations shall be in the furnace stacks which are identified by their furnace number. Section IV. C. describes the simultaneous sampling of the two stacks of each process unit and the sampling locations. The minimum testing is presented in Table 1. The allowable particulate matter emission rate in pounds per hour shall be calculated by actual process weight rate of the batch tested.

Chemetco shall be responsible for the monitoring and recording process operating parameters during the emissions testing as described in Section IV. D. Chemetco shall establish baseline operating ranges of pressure drop for the control device systems of each furnace or process unit and of scrubant nozzle pressure for all new active air pollution control equipment. The baseline operating ranges for the control devices shall be recorded and established.

The CPMMS for each stack consists of a Mass Monitor which measures particulate matter concentration and a Flow Monitor which measures the volumetric air flow in the stack. The testing will establish the acceptable range for the CPMMS. The Reference Method ("RM") testing shall be conducted in such a way, that the results are representative of the source emissions and can be correlated to the CPMMS data in pounds per hour.

In summary, a minimum of twelve (12) one-hour runs of Method 5 particulate matter sampling shall be conducted over three (3) batch cycles on the four (4) furnace stacks to determine the compliance with allowable emissions limits; associated operating baseline parameters; and the acceptable range of each CPMMS system. The Method 1, 3, 4, and 5 sampling procedures and equipment are presented later in detail in Section IV.

III. OPTIONAL STACK TESTING PROTOCOL

Paragraph 19 of this Consent Decree, contains a provision for the use of emission limits achieved during optional stack testing instead of CPMMS data. The provision shall apply to the performance

of stack tests if either party concludes that the CPMMS or the data derived there from is unreliable, pursuant to the terms of the Consent Decree. The testing shall be performed in accordance with Section IV. and establish the particulate matter emission rates in pounds per hour to compare with actual batch process weight rates for each process unit. The same parameters shall be tested and recorded as presented in Section II. and IV.

IV. METHODS AND SAMPLING PROCEDURES

A. EMISSIONS TEST METHODS

The third party testing firm shall conduct particulate matter (PM) emissions testing at the four furnace stack locations. Table 1 presents a sampling and analytical matrix for this test program.

The testing firm shall conduct the testing program in accordance with the recent EPA reference test methodology as outlined in Title 40, Part 60, Appendix A of The Code of Federal Regulations (40 CFR 60). Specifically:

i)	EPA Method 1	Determination of traverse points for velocity and PM sampling.
ii)	EPA Method 2	Stack gas velocity determination with calibrated Type "S" pitot tubes and calibrated Type "K" thermocouples.
iii)	EPA Method 3	Dry gas molecular weight determination through analysis of CO, O_2, and CO_2.
iv)	EPA Method 4	Volumetric flow rate and moisture content determination with calibrated dry gas meters and calibrated Type "K" thermocouples.
v)	EPA Method 5	Isokinetic determination of particulate matter (PM) with a complete borosilicate glass (and/or quartz) sample train.

B. PARTICULATE MATTER SAMPLING EQUIPMENT AND PROCEDURES

The sampling equipment will consist of the following:

1. Pitot Assembly
   a. Glass with a sharp, tapered leading edge.
   b. Probe — Stainless steel sheath with a ⅝" OD glass liner wrapped with nichrome wire rheostat controlled and capable of maintaining a temperature of 248°F ±25°F.

Table 1 Sampling and Analytical Matrix Typical for Four Furnaces Chemetco, Inc.					
Sampling Location	**Parameter**	**Sampling Method**	**Analytical Method**	**Duration of Test Runs**	**Total Number of Test Runs**
Location (Exhaust stack)	Sampling Point Determination	Method 1	Calculated	---	
	Velocity & Volumetric Flow Rate	Method 2	Type S - Pitot Tube	1 Hr.	3
	Molecular Weight	Method 3	Orsat	1 Hr.	3
	Moisture	Method 4	Volumetrically	1 Hr.	3
	Particulate Matter	Method 5	Particulate-Gravimetrically	1 Hr.	3

Simultaneously sampling for each process emission unit: Furnace No. 2 & 4; Furnace No. 1 & 3

c. Pitot — Type "S" constructed and attached to probe according to specifications outlined in the "Code of Federal Regulations, Chapter I, Title 40, Part 60, Appendix A, Method 2."
d. Orsat probe — Stainless steel ¼" tubing attached to pitot tube in an interference-free arrangement.
e. Thermocouple — Type "K" attached to the pitot tube such that the tip has no contact with the metal and does not interfere with the pitot tube face openings.

2. Filter Holder — Borosilicate glass with a glass fritted filter support and a silicone rubber sealing gasket.

3. Filter Heating Assembly — Controlled heating element in aluminum module attached to end of probe; capable of maintaining 248°F ±25°F.

4. Impingers — Four glass impingers connected in series with glass fittings and placed in an ice bath. The first, third, and fourth impingers will be of the modified Greenburg-Smith design. The second impinger will be of the Greenburg-Smith design with a standard tip. Final gas exit temperature will be measured to within ±5°F with a thermometer immersed in the gas stream.

5. Control Box — Module containing the vacuum gauge, leak-free pump, thermometer capable of measuring temperature to within ±5°F, dry gas meter with a minimum of 2% accuracy, valves and related equipment as required to maintain an isokinetic sampling rate and to determine sample volume.

6. Nomograph — To determine isokinetic sampling rate.

A schematic of the sampling train is shown in Figure 2.

Prior to leaving the laboratory, glass fiber filters are numbered for identification purposes, heated for 2 hours at 220°F, desiccated for 2 hours, and preweighed to the nearest 0.1 mg.

Upon arrival at the sampling site, the control box will be leak-checked from the pump to the orifice at 5" to 7" of water.

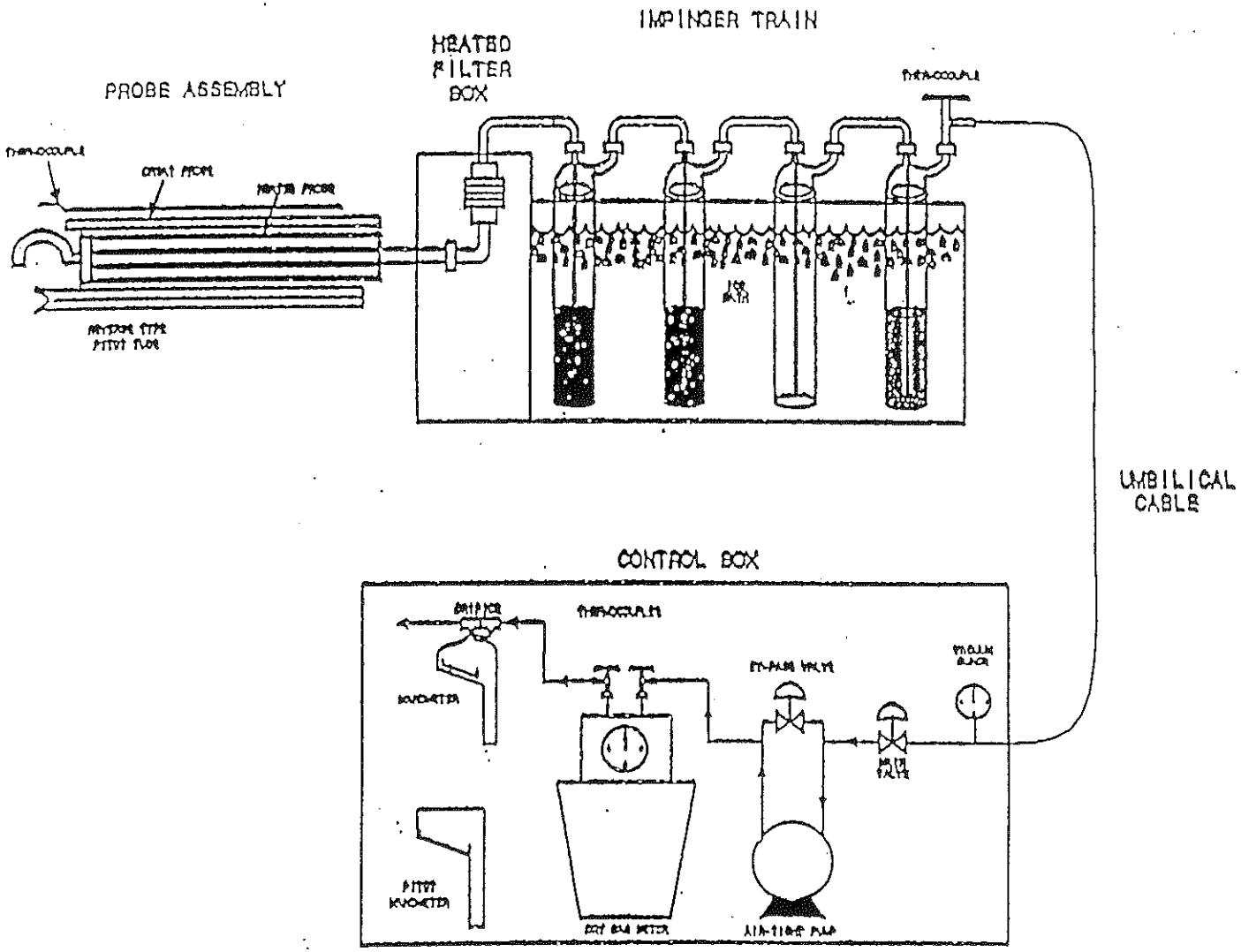

FIGURE 2
Particulate and Lead Sampling Train
EPA Method 12

Figure 2

The sampling train will be prepared in the following manner: 100 ml of distilled water added to each of the first two impingers. The third impinger will be left empty and the fourth impinger will contain approximately 250 grams of silica gel.

After assembling the train with the pitot tube, as shown on the schematic, the system will be leak-checked by plugging the inlet to the probe nozzle and pulling a 15" mercury vacuum. A leakage rate not to exceed 0.02 cfm is considered acceptable. The pitot tube system will also be leak-checked at 2" to 3" of water, and any leaks found will be corrected.

The probe nozzle size and moisture content will be derived from a preliminary velocity and temperature traverse measurement. Sampling points within the stack will be selected in accordance with EPA Method 1 (40 CFR 60, Appendix A). The sampling probe will be attached and the heater adjusted to provide a gas temperature of approximately 248°F ±25°F.

The filter heating system will be turned on, and ice placed around the impingers. After a suitable warmup period, the nozzle will be placed at the first traverse point with the flow adjusted to isokinetic conditions. Using calculated sampling points and sampling times, the probe is repositioned to the next traverse point, and isokinetic sampling is reestablished. This will be accomplished for each point along the traverse until the run is completed. Readings are taken at each traverse point and at the calculated time interval. At the conclusion of each run, the pump will be turned off and the final readings recorded. A final leak check of the sampling system will be performed, as previously described at the highest vacuum encountered during the test run. A leak check of the pitot system will also be repeated.

C. SAMPLING LOCATIONS

The emission samples for particulate matter (PM) shall be collected simultaneously from two different locations. The two locations shall be the exhaust stacks from each process emission unit. The emission samples at this stack location shall be collected from the existing 4 foot 10 inch circular duct equipped with two, 4 inch I.D. sampling ports. The upstream and downstream diameters are configured such that the maximum number of sample points shall be required. Exact measurements shall be conducted in the field the day of the testing, but the testing firm expects to use twelve sampling points on each traverse, for a total of at least 24 sampling points. See Figures 1-A and 1-B for the process layout.

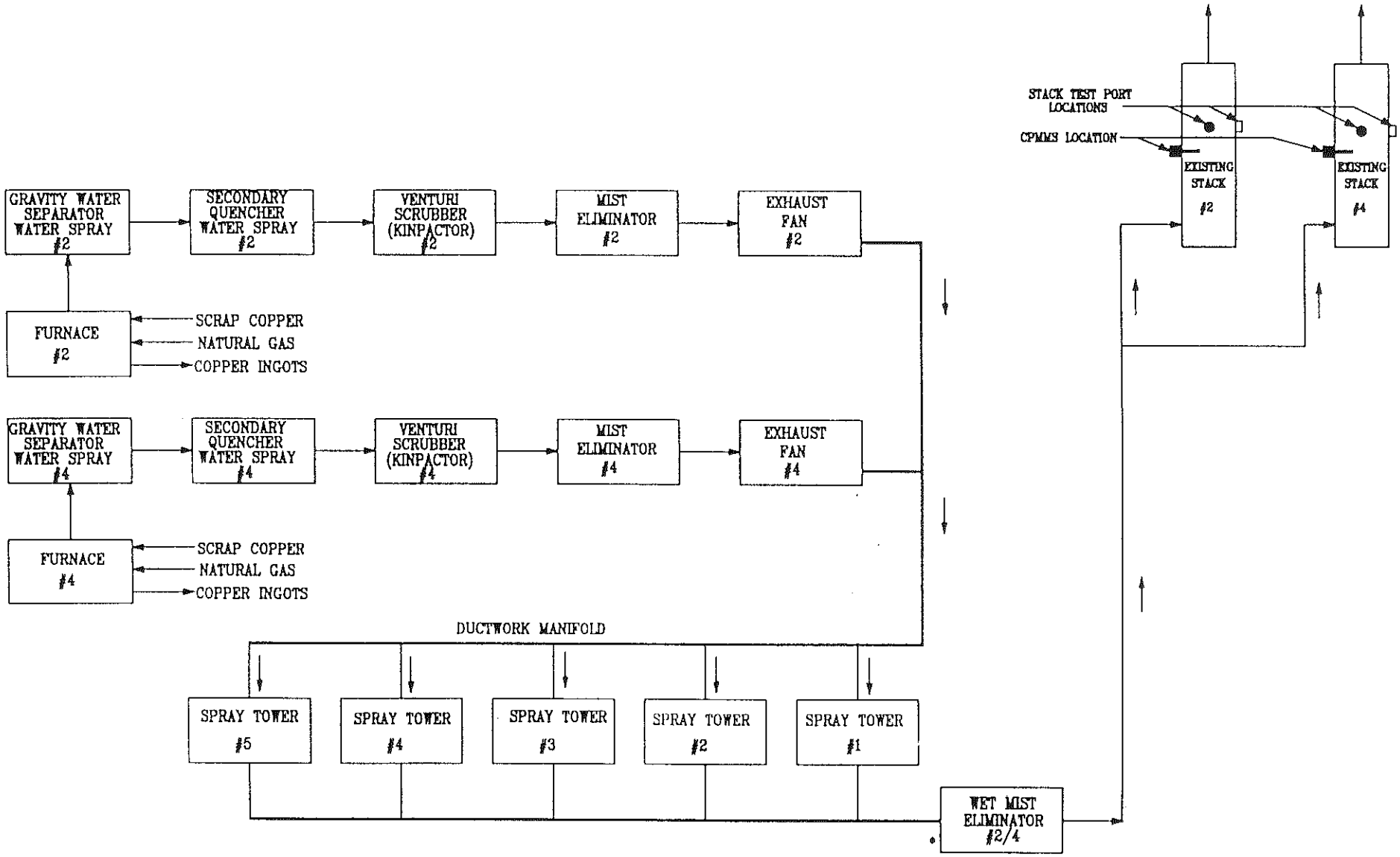

FIGURE 1-A

* INCLUDES SPRAY VANE SECTION, MIST ELIMINATOR SECTION, AND DRY FILTER SECTION

CHEMETCO
CPMMS CERTIFICATION
PROCESS EMISSION UNIT 2/4
DATE: 10-15-99

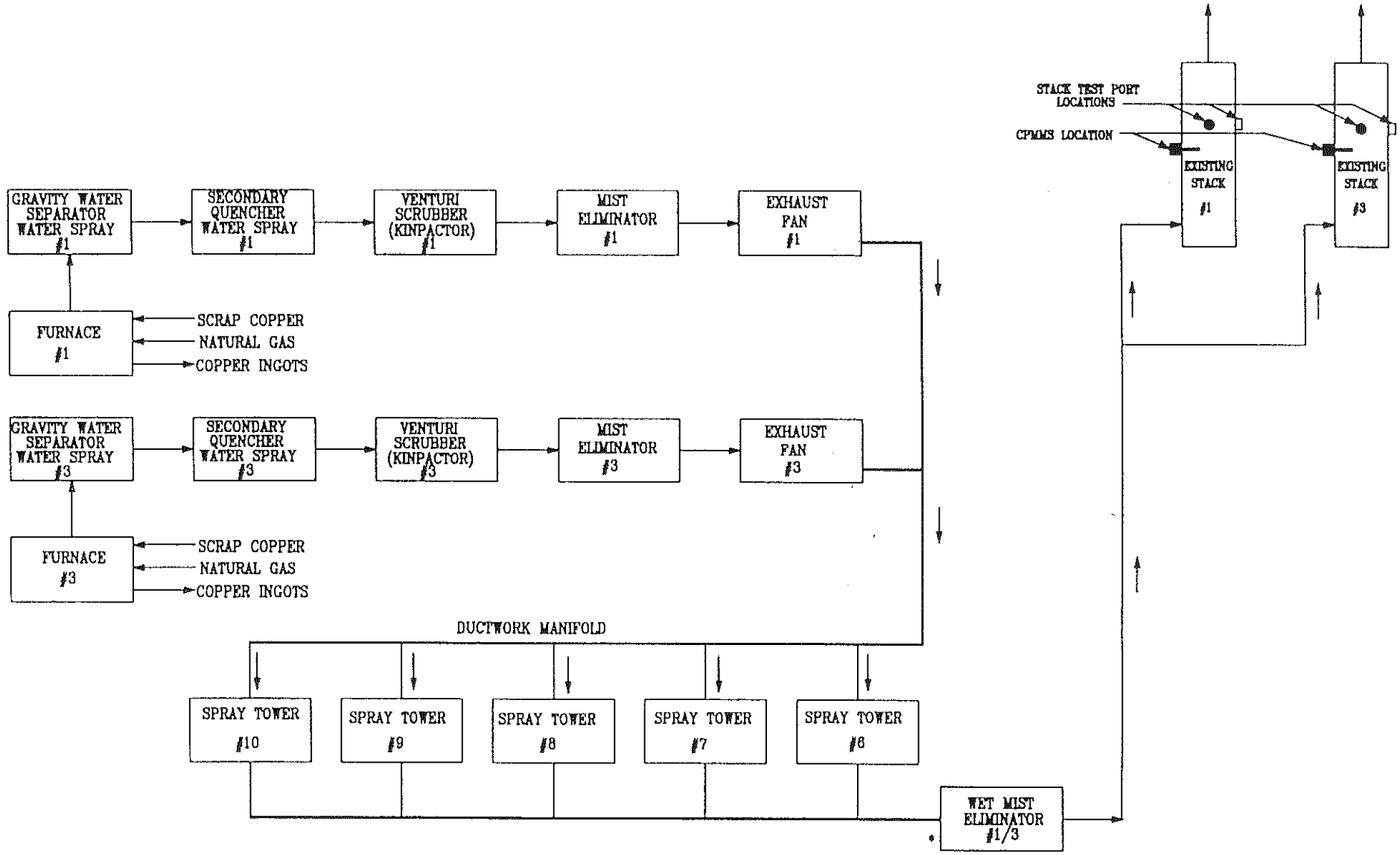

FIGURE 1-B

* INCLUDES SPRAY VANE SECTION, MIST ELIMINATOR SECTION, AND DRY FILTER SECTION

CHEMETCO
CPMMS CERTIFICATION
PROCESS EMISSION UNIT 1/3
DATE: 10-15-99

D. OPERATION PARAMETERS TO BE MONITORED

Chemetco personnel shall be responsible for monitoring and recording process operating parameters during the emissions testing program. These shall include at a minimum the following:

- heat logs for the furnaces being rested,
- pressure drop across the Venturi scrubbers, and
- water flow rate to each water spray tower.

Chemetco personnel shall observe readings from the appropriate instrumentation and document the readings at a minimum of every 15 minutes during the test runs. The process operations data shall be compiled and averaged for each of the 1-hour test runs.

Chemetco shall develop recipes for furnace changes that are representative of worst case normal operations for generation of process particulate emissions. Each type of material in each charge shall be sampled for analysis or graded to determine lead and zinc percentages by weight. Sampling and analysis of the charge materials shall be conducted in accordance with Chemetco's Standard Operating Procedures (SOP) Number 1 or 2.

Chemetco shall provide written notice to IEPA upon its decision on the charge recipes. The recipes shall be kept in the Maintenance Engineering Department under the supervision of Mr. Kim Fock.

E. SAMPLE RECOVERY

The tester will rotate and agitate each impinger, so that the impinger contents serve as a rinse solution, and transfer the contents to a graduated cylinder to measure the volume. After the determination of the volume, the solution will be transferred to the "postfilter" container.

The probe nozzle, and all sample-exposed surfaces are washed with reagent-grade acetone and put into a clean sample bottle marked "prefilter." A brush will be used to loosen any adhering particulate matter, and subsequent washings will be put into the "prefilter" container. Any filter material that adhered to the filter support surfaces will be carefully removed and added to the filter container. The silica gel will be removed from the fourth impinger and transferred to its original container.

F. ANALYTICAL PROCEDURES

PM will be determined by the gravimetric analysis of the probe/front half wash (acetone solution) and glass fiber filters in accordance Method 5. The filter and any loose particulate matter will be transferred from the filter container to a clean, tared glass weighing dish. The filter will be placed in a desiccator for 24 hours and weighed to a constant weight. The original weight of the filter will be deducted, and the weight gain recorded to the nearest 0.1 mg.

The "prefilter" wash and blank acetone solutions will be transferred to individual clean, tared beakers, then evaporated to dryness and desiccated to a constant weight. The weight gain of the "prefilter" is adjusted for the blank and recorded to the nearest 0.1 mg. The silica gel is weighed, and the weight gain is recorded to the nearest 0.1 gram.

All samples and blanks will be analyzed by the recommended procedures stipulated for each EPA Reference Method. Field blanks and QA/QC practices will be strictly followed as outlined in the EPA analytical procedures. Chain of Custody worksheets will accompany all samples from collection at the facility, throughout transportation, and during the analysis period. The testing firm has requested 7 day turnaround of laboratory sample analysis.

G. OXYGEN (O_2) AND CARBON DIOXIDE (CO_2) SAMPLING

As required by EPA Method 3 (40 CFR 60, Appendix A), oxygen and carbon dioxide samples will be collected by an integrated bag system. The collected sample is then analyzed using a Fyrite gas analyzer. Oxygen and carbon dioxide concentrations will be determined in percent of stack gas and stack gas molecular weight is then calculated.

A schematic of the integrated bag sampling train is presented in Figure 3.

H. SAMPLING PROCEDURES

The sampling procedure consists of the following leak check and sampling techniques. Prior to sampling, the bag is leak-checked to 2 to 4 in. of water. The inlet to the condenser is plugged, and a vacuum of 10 in. of Hg is created. The outlet of the pump is then plugged and the pump turned off. The vacuum is observed for 30 seconds to determine any leakage. The vacuum must hold steady for at least 30 seconds for the leak test to be acceptable. The sample line is then purged with stack gas and the bag is connected. Sampling is conducted at an appropriate constant rate at the same traverse points and for the same length of time as the other testing parameters. At the conclusion of the run, the pump is turned off and the bag sealed.

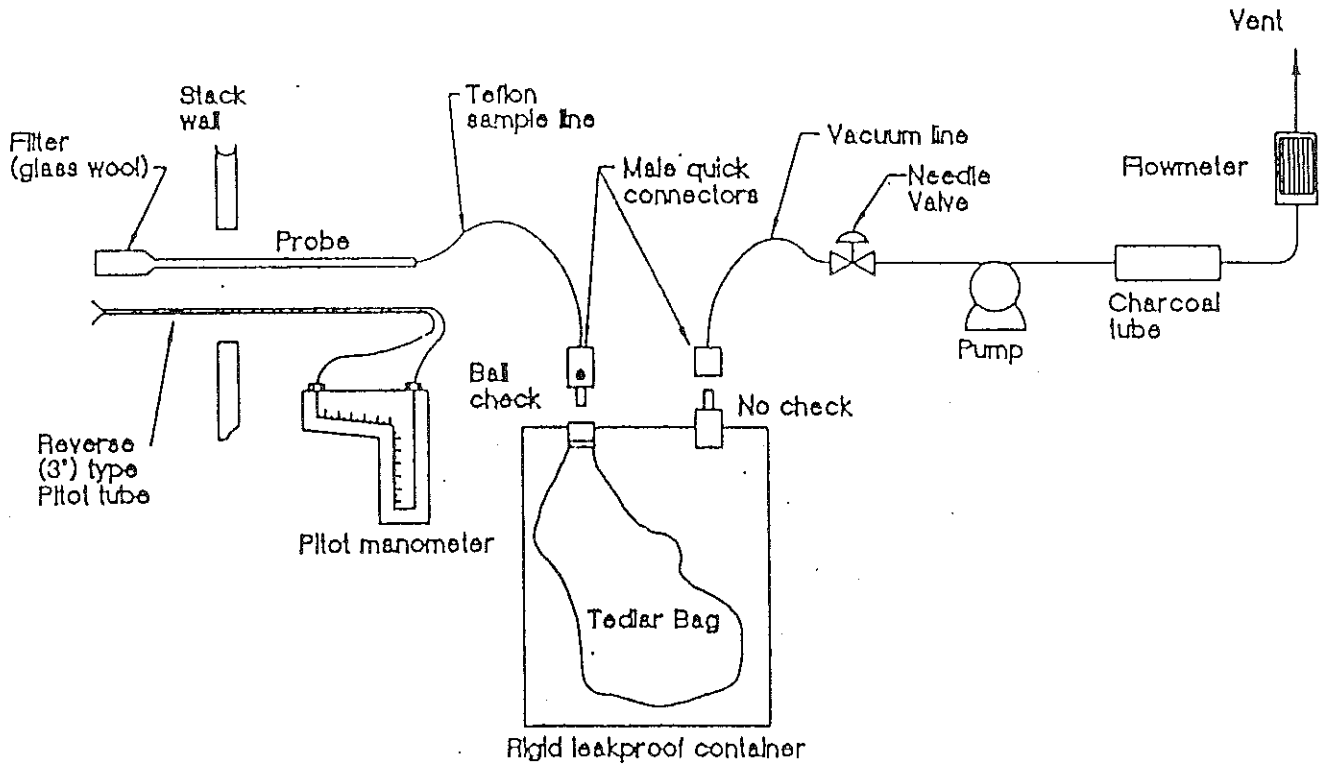

SOURCE: ENVIRONMENT REPORTER

FIGURE 3
Integrated Bag Sampling Train

Figure 3

I. ANALYTICAL PROCEDURES

The percentage of effluent gas which was O_2 and CO_2 are measured directly. Nitrogen and CO content are determined by subtracting the sum of CO_2 and O_2 percent from 100 percent.

The dry molecular weight is calculated using the following equation:

$$M_d = 0.440 \times \% CO_2 + 0.320 \times \% O_2 + 0.280 \times (\% N_2 + \% CO)$$

J. QUALITY ASSURANCE/QUALITY CONTROL

Strict Quality Assurance/Quality Control (QA/QC) measures will be observed for all sampling and analysis performed for the Chemetco test program. The QA/QC program is designed to provide the highest quality data in terms of the accuracy and precision of the measurements as well as the representativeness and comparability of the results. All procedures and quality control guidelines specified in the appropriate methods and in the EPA Quality Assurance Handbook for Air Pollution Measurement Systems - Volume II will be strictly followed during the test program, in addition to the testing firm's more stringent internal quality control standards. All sampling will be conducted in a manner so that each test run of each method is conducted as simultaneously as possible with other methods.

1. Manual Methods QA/QC

The QA/QC program for this test series includes all of the QA/QC guidelines given by EPA in the attached test methods and procedures in the testing firm's more stringent internal QA/QC standards. Primary components of the QA/QC program are listed below:

- Equipment Calibrations - including meter boxes, thermocouples, pitot tubes and analytical balance.

- Equipment Leak Checks - including pre- and post-test sample train leak checks, meter and pump leak checks, pitot leak checks and ORSAT system leak checks.

- Careful monitoring and documentation of sample train critical parameters including temperatures and meter pressure.

- Preliminary measurements to aid in calculating the sampling K-factor used to determine isokinetic sampling rate.

- Maintaining an isokinetic sampling rate so that the velocity through the sampling nozzle matches the surrounding flue gas stream velocity to within +/- 10%.

- Field and Laboratory Blanks will be conducted for each set of samples.

- Careful chain of Custody procedures will be observed for all samples and all samples will be refrigerated after collection and recovery and during shipping and storage in the laboratory prior to analysis.

- All samples will be analyzed within the required hold times of each individual method.

All sampling trains will be leak checked prior to and after each sampling run. If the leak rates exceed the maximum acceptable leak rate of 0.02 cubic feet per minute, corrective action will be taken. Sample train leak checks will be performed at a vacuum of at least 5" Hg greater than the highest observed vacuum observed during sampling. All sample trains will meet the +/- 10% criterion for isokinetic sampling or corrective action will be taken. All particulate matter samples will be desiccated and replicate analyses will be performed until agreement of 0.5 mg between weighing's which will be six hours apart. Blanks and other quality control indicators as specified for each technique will be collected and analyzed as appropriate.

2. **Chain of Custody**

Chain of Custody worksheets are prepared daily at the test location detailing the person(s) immediately responsible for the recovery of every sample. The Chain-of-Custody forms are prepared with detailed identifications of each sample, the analysis requirements, and the persons immediately responsible for the recovery. Signatures of every person in contact with the samples from the test location to the laboratory are recorded. Test date, sample identification, and the laboratory performing the analyses are identified on the Chain of Custody worksheet.

K. PROJECT CONTACTS

Chemetco, Inc.
Route 3 and Chemetco Lane
Hartford, Illinois 62048
Mr. Kim Fock
Manager, Maintenance & Engineering
Telephone: 618-254-4381
Fax: 618-254-0138

Shell Engineering & Associates, Inc.
2403 W Ash Street
Columbia, MO 65203-0045
David L. Seidel, P.E.
Manager, Special Engineering Projects
Telephone: 573-445-0106
Fax: 573-445-0137

ILLINOIS ENVIRONMENTAL PROTECTION AGENCY

2009 MALL STREET, COLLINSVILLE, ILLINOIS 62234
THOMAS V. SKINNER, DIRECTOR

Collinsville Regional Office
Telephone: 618/346-5120
Fax: 618/346-5155

DATE: 12/6/99

TO: Nhien Pham

FROM: Jeff Benbenek

MESSAGE: re. Chemetco; I have copied pages from the three Consent orders since 1988 requiring compliance w/ 35 IAC 212.321. Also, some other info that may be useful.

Number of Pages: 16
(Including This Cover Page)

To Recipient: If all pages are not received, please call 618/346-5120.

Illinois Environmental Protection Agency · P. O. Box 19276, Springfield, IL 62794-9276

217/782-2113

PERMIT DENIAL

CERTIFIED MAIL
P 435 094 645

February 23, 1993

Chemetco, Inc.
Attn: David A. Hoff
Rt. 3 and Chemetco Lane
Hartford, IL 62048

Application No.:	92110099
I.D. No.:	119801AAC
Applicant's Designation:	COPPERFDRY
Received:	November 25, 1992
Operation of:	Copper Refinery
Location:	Rt. 3 and Chemetco Lane, Hartford

This Agency has reviewed your Application for Operating Permit for the above referenced project. The permit application is DENIED because Section 9 of the Illinois Environmental Protection Act, and 35 Ill. Adm. Code 212.321 and amended Consent Order No. 88-CH-200 might be violated.

The following are specific reasons why the Act and the Rules and Regulations may not be met:

1. The stack test report submitted with the application indicates that the particulate matter emission rate, from the #3 furnaces' scrubber stack during test run #2, was 16.33 lbs/hr. The allowable particulate emission rate, per 35 Ill. Adm. Code 212.321 and Part 5(a)(2) of Consent Order No. 88-CH-200, was calculated to be 15.32 lbs/hr.

2. The stack test report does not provide information concerning the copper, zinc, and lead contents of each of the charges to the furnaces during the tested heats. This is required by Part 5(b)(7)(G) of the Consent Order. Therefore, the report has not shown that the grade of material charged was representative of worst-case as required by Part 5(b)(2) of the Consent Order.

3. The lack of submission of the information referenced in #2, above, indicates that the applicant is not capable of keeping the records required by Part 4(m) of the Consent Order.

4. The applicant has not yet submitted an approvable fugitive dust control plan, as required by Part 4(d) of the Consent Order.

The Agency will be pleased to review a reapplication for this permit that includes the necessary information and documentation to correct the deficiencies noted above. In accordance with 35 Ill. Adm. Code 201.157, this reapplication may incorporate by reference the data and information submitted to the Agency in the original permit application, provided that you certify that the data and information previously submitted remains true, correct and

current. The reapplication will be considered filed on the date it is received by the Agency and will constitute a new permit application for purposes of Section 39(a) of the Act. Two copies of this information must be submitted and should reference the application and I.D. numbers assigned above.

If you have any questions on this, please call Mangu Patel at 217/782-2113.

Donald E. Sutton

Donald E. Sutton, P.E.
Manager, Permit Section
Division of Air Pollution Control

12/27/93

DES:MJP:jmm/sp/43P/49-50

cc: Region 3
Bob Sharpe, Enforcement

STATE OF ILLINOIS
IN THE CIRCUIT COURT FOR THE THIRD JUDICIAL CIRCUIT
MADISON COUNTY, ILLINOIS

PEOPLE OF THE STATE OF ILLINOIS, Plaintiff,	)	
vs.	)	No. 88 CH 200
CHEMETCO, INC., a Delaware corporation, Defendant.	)	

SUPPLEMENTAL CONSENT ORDER

WHEREAS, Plaintiff, PEOPLE OF THE STATE OF ILLINOIS, and Defendant, CHEMETCO, INC., believing that litigation of this matter would be neither in the parties' best interests nor in the best interests of the public;

WHEREAS, CHEMETCO, INC., desires and agrees to cease violation of the Illinois Environmental Protection Act, the Illinois Pollution Control Board's Air Pollution Regulations, and the Amended Consent Order entered on June 17, 1992, in case number 88-CH-200 captioned, PEOPLE OF THE STATE OF ILLINOIS VS. CHEMETCO, INC., a Delaware corporation;

WHEREAS, CHEMETCO, INC., desires and consents to, among other things, adhere to the compliance program as described herein;

WHEREAS, the parties, including the Illinois Environmental Protection Agency, by their representatives have each agreed to the making of this Supplemental Consent Order;

RECEIVED
IEPA
JAN 13 1994
COLLINSVILLE OFFICE

ILEPA-COLLINSVILLE ID:618-346-5155 DEC 06 99 15:58 NO.012 P.04

Uncaptured fugitive particulate emissions from the four furnaces operations are captured and controlled by a baghouse. Fugitive particulate emissions are also released from material handling and separation, roadways, parking lots, and storage piles.

C. <u>Alleged Violations</u>

1. The June 17, 1992, Amended Consent Order provided that:

> 4. a. The pressure drop across the venturi scrubbers used to control process particulate emissions from the four furnaces must be maintained at a minimum of 55 inches of water [by July 1, 1992]. Continuous monitoring and recording of pressure drops across each scrubber is required. Pressure drop shall be recorded in inches of water. Alarms shall be installed to signal furnace operators of any problems maintaining these parameters. A detailed description of this monitoring equipment, must be submitted within 30 days of [June 17, 1992]. If no baghouse system is required pursuant to paragraph 4(i) of [the June 17, 1992, Amended Consent Order], flow meters shall be installed to continuously monitor and record scrubbant flow to each furnace's scrubber system in gallons per minute [by March 30, 1993].
>
> b. Deep well and rain water will be used for all makeup water for the scrubber control system and steps shall be taken to lower suspended solids in the scrubbant prior to compliance testing. Samples to determine the suspended solids, dissolved solids, and pH in the scrubbant will be taken during stack testing conducted pursuant to paragraph 5.b. The test protocol submitted to the Agency prior to stack testing pursuant to paragraph 5b shall detail the methods of sampling and analysis of the scrubbant liquid. Scrubbant liquid shall be maintained at a quality at least as good as that measured during testing.
>
> c. The foundry building must be repaired by [June 17, 1992] and shall be maintained thereafter to minimize the escape of fugitive

h. Chemetco has failed to establish that the grade of material used during the September 1992 stack testing was a worst-case representative of the grade of material used during normal operations, based on zinc, copper, and lead content in violation of paragraph 5(b)(1) of the Amended Consent Order.

i. Chemetco emitted particulate matter at the rate of 16.33 lb/hr from furnace three during stack test run #2 conducted September 25, 1992, in violation of the allowable limit of 15.32 lb/hr under 212.321 and paragraph 5(a) of the Amended Consent Order.

j. Chemetco, after June 17, 1992, and including September 22-25, 1992, has failed to demonstrate that the particulate matter emissions from its four furnace do not exceed the limitations of 35 Ill. Adm. Code 212.321 and in violation of paragraph 5 (a) of the Amended Consent Order.

k. During the second calendar quarter 1993, Chemetco exceeded the 1.5 micrograms per cubic meter air (ug/m^3) ambient air quality standard for lead set forth in 35 Ill. Adm. Code 243.126 triggering the requirements of paragraph 4(l) of the Amended Consent Order.

4. The plaintiff alleges that the above events occurring on or after June 17, 1992, constitute violations of the terms of paragraphs 4(d), (g), (m), 5(b)(7)(g), 5(b)(1) and 5(a) of the Amended Consent Order entered by this Court on June 17, 1992, and

furnace will not exceed applicable emission standards; and

v. there have been no exceedances of ambient standards within the previous twelve months.

Said request for extension of time shall be submitted no later than six months before the applicable due date. Chemetco shall repeat the stack testing every six months until the baghouse has been installed. In the event that Chemetco has been granted an extension, Chemetco shall cease operation of the subject furnace until the baghouse is constructed and the requirements of paragraph 8 are met, if it exceeds an applicable emission standard or there is an exceedance of an ambient air quality standard at any time during the extension.

4. Chemetco shall within sixty (60) days of completion of installation of each baghouse, perform stack testing to determine lead and total particulate matter emissions from each furnace/baghouse in order to demonstrate compliance with the following air emissions limitations:

a) The limitations set forth in 35 Ill. Adm. Code 212.123 for opacity of visible emissions from baghouse

vents or stacks, roof monitors, any foundry building openings, or any other emission points.

b) The limitations set forth in 35 Ill. Adm. Code 212.321 for total particulate emissions from each furnace during each process cycle. This shall include furnace charging and tapping emissions.

5. Such stack testing shall be performed in accordance with the applicable federal test methods, pursuant to an Agency approved testing procedure, and subject to the following conditions:

a) The process weight rate for any given cycle shall begin with the initial raw material charge for that cycle. Any residues left from a previous heat shall not be included in a determination of the process weight rate for the cycle being tested. Black copper resulting from a smelting heat shall not be considered a residue.

b) The Agency shall be notified in writing of the testing schedule a minimum of thirty (30) days prior to the date of such testing. The information required by the Agency's stack test notification form shall be submitted with the above notification.

c) Testing shall be performed by an Agency-approved, independent testing service.

d) The results of the tests shall be submitted, in triplicate, to the Agency within seven (7) days of

PEOPLE OF THE STATE OF ILLINOIS

By Roland W. Burris
Illinois Attorney General

DATE: 9-27-93 By: Shawn W. Denney
Shawn W. Denney
First Assistant Attorney General

ILLINOIS ENVIRONMENTAL PROTECTION AGENCY

DATE: 9/22/93 By: Joseph E. Svoboda
Joseph E. Svoboda
General Counsel
Division of Legal Counsel

CHEMETCO, INC.

DATE: _____ By: _____
David Hoff
President

ENTERED: _____ _____
Judge

STATE OF ILLINOIS
IN THE CIRCUIT COURT FOR THE THIRD JUDICIAL CIRCUIT
MADISON COUNTY, ILLINOIS

FILED

JUN 17 1992

WILLARD V. PORTELL
CLERK OF CIRCUIT COURT
THIRD JUDICIAL CIRCUIT
MADISON COUNTY ILLINOIS

PEOPLE OF THE STATE OF ILLINOIS, Plaintiff,	)	
vs.	)	No. 88-CH-[illegible]
CHEMETCO, INC., a Delaware corporation, Defendant.	)	

AGREEMENT BY PARTIES TO AMEND THE COURT ORDER ENTERED JUNE 30, 1988 AND MOTION FOR COURT APPROVAL OF SAME

NOW COME the parties in the above entitled cause by their respective attorneys of record and stipulate and agree as follows:

1. The Consent Order entered herein on June 30,1988, specifically provides that the Court retains jurisdiction of the matter and that the settlement set forth in the Consent Order may be amended by mutual agreement of the parties, with the approval of the Court.

2. The Consent Order provides in paragraph 14 that "Chemetco shall not exceed the following air emission limitations upon the completion of the compliance program set forth in paragraph 13:

"a. A maximum of 20% opacity from the scrubber stacks, roof monitors, any other foundry building openings, or any other emission points;

"b. A concentration of particulate matter in the exhaust gas from any piece of air pollution control equipment of 50 mg/dscm (0.022 gr/dscf); and

"c. The limitations set forth in 35 Ill. Adm. Code 212.321 for total particulate emissions from each furnace during each process cycle. This shall include furnace charging and tapping emissions."

3. The compliance program was completed on December 7, 1990. Stack testing was performed on the dates of February 19-25, 1991, which showed that the particulate matter concentration in the gas stream from the venturi scrubber stacks exceeded 50 mg/dscm (0.022 gr/dscf) and that the 20% opacity limit was also exceeded from the scrubber stacks and by visible fugitives from the foundry building. These standards are applicable to Brass and Bronze Ingot production in 35 Ill. Adm. Code Section 230.230. The Agency believes the limitations of 35 Ill. Adm. Code 212.321 and 212.123 were also exceeded. Chemetco denies the limitations were exceeded.

4. These violations of the Consent Order are being resolved by Amending the Consent Order to include a new compliance program as follows:

a. The pressure drop across the venturi scrubbers used to control process particulate emissions from the four furnaces must be maintained at a minimum of 55 inches of water. This requirement must be attained by July 1, 1992. Continuous monitoring and recording of pressure drops across each scrubber is required. Pressure drop shall be recorded in inches of water. Alarms shall be installed to signal furnace operators of any problems maintaining these parameters. A detailed description of this monitoring equipment must be submitted within 30 days of the date of this order. If no baghouse system is required pursuant to paragraph 4(i) of this Agreement, flow meters shall be installed to continuously monitor and record scrubbant flow to each furnace's scrubber system in gallons per minute. These water flow meters shall be installed by March 30, 1993.

b. Deep well and rain water will be used for all makeup water for the scrubber control system and steps shall be taken to lower suspended solids in the scrubbant prior to the compliance testing. Samples to determine the suspended solids, dissolved solids, and pH in the scrubbant will be taken during stack testing conducted prusuant to paragraph 5.b. of this Agreement. The test protocol submitted to the Agency prior to stack

ILEPA-COLLINSVILLE ID:618-346-5155 DEC 06'99 16:01 No.012 P.11

m. Chemetco shall keep records of the content of all scrap and copper-bearing materials charged to the furnaces. These records shall, at a minimum, indicate the amount of each charge; the lead, copper, and zinc contents of each charge to each furnace and the amount of fines charged to furnace #1. These records shall be kept for a minimum of two years, and shall be reasonably available upon oral or written request by the Agency.

5. Furthermore, Paragraph 14 of the Consent Order is hereby deleted in its entirety and the following is hereby inserted in lieu thereof:

a. Chemetco shall not exceed the following air emission limitations at any time:

(1) The limitations set forth in 35 Ill. Adm. Code 212.123 for opacity of visible emissions from scrubber stacks, baghouse vents or stacks, roof monitors, any other foundry building openings, or any other emission points;

(2) The limitations set forth in 35 Ill. Adm. Code 212.321 for total particulate emissions from each furnace during each process cycle. This shall include furnace charging and tapping emissions.

b. Stack testing to determine lead and total particulate matter emissions shall be performed beginning September 21, 1992 in order to demonstrate compliance with the paragraph 5.a. limitations. Such stack testing and any other testing required pursuant to conditions of this Agreement shall be performed in accordance with the applicable federal test methods, pursuant to an IEPA approved testing procedure, and with the following conditions:

(1) The grade of material used shall be a worst case representative of the grade of material used during normal operations, based on zinc, copper, and lead content.

ILEPA-COLLINSVILLE ID:618-346-5155 DEC 06'99 16:02 NO.012 P.12

RECEIVED
JUN 14 1991
IEPA-DAPC-SPFLD.

CHEMETCO, INC.

COMPLIANCE TESTING
FINAL REPORT
APRIL 19, 1991

Prepared for:
CHEMETCO, INCORPORATED
HARTFORD, ILLINOIS

By:
SVERDRUP CORPORATION
801 NORTH 11TH STREET
ST. LOUIS, MO 63101
and
ENTROPY ENVIRONMENTAL, INC.
P. O. BOX 12291
RESEARCH TRIANGLE PARK, NC 27709

RECEIVED
IEPA
JUN 19 1991
COLLINSVILLE OFFICE

ILEPA-COLLINSVILLE ID:618-346-5155 DEC 06'99 16:02 No.012 P.13

TABLE 3-1
OVERALL SUMMARY OF RESULTS

Source	Mode	Parameter	Results		Standards		
			Concentration	Emission Rate	Process Weight Rate	Allowable Emissions(1)	Other Applicable Standard
Furnace Stack No. 1	Smelt	Particulate	0.0193 gr/dscf	3.81 lb/hr	9.35 ton/hr	8.38 lb/hr	0.022 gr/dscf(2)
Furnace Stack No. 1	Melt	Particulate	0.0249 gr/dscf	5.06 lb/hr	25.35 ton/hr	14.27 lb/hr	0.022 gr/dscf
Furnace Stack No. 1	Refine	Particulate	0.0262 gr/dscf	5.10 lb/hr	23.77 ton/hr	13.79 lb/hr	0.022 gr/dscf
Furnace Stack No. 2	Refine	Particulate	0.0371 gr/dscf	4.95 lb/hr	21.31 ton/hr	13.01 lb/hr	0.022 gr/dscf
Furnace Stack No. 3	Smelt	Particulate	0.0244 gr/dscf	4.65 lb/hr	9.56 ton/hr	8.48 lb/hr	0.022 gr/dscf
Furnace Stack No. 4	Refine	Particulate	0.0652 gr/dscf	7.70 lb/hr	25.63 ton/hr	14.36 lb/hr	0.022 gr/dscf
Wheelabrator Baghouse	Continuous	Particulate	0.0004 gr/dscf	1.95 lb/hr	-	-	0.022 gr/dscf
Furnace Stack No. 1	Smelt	Opacity	3%, 6 minute	-	-	-	20%
Furnace Stack No. 1	Melt	Opacity	-	-	-	-	20%
Furnace Stack No. 1	Refine	Opacity	7%, 6 minute	-	-	-	20%
Furnace Stack No. 2	Refine	Opacity	6%, 6 minute	-	-	-	20%
Furnace Stack No. 3	Smelt	Opacity	-	-	-	-	20%
Furnace Stack No. 4	Refine	Opacity	-	-	-	-	20%
Wheelabrator Baghouse	-	Opacity	0%, 6 minute	-	-	-	20%
Furnace Floor	-	Opacity	20%, 6 minute	-	-	-	20%
Furnace Stack No. 1	Smelt	Dioxins	13.5 ng/dscf	1.08 E-6 lb/hr	-	-	None(3)
Furnace Stack No. 1	Smelt	Furans	34.9 ng/dscf	2.78 E-6 lb/hr	-	-	None(3)

(1) From 35 Illinois Administrative Code 212.321, New Process Emission Sources
(2) From 40CFR60, Subpart M, NSPS for Secondary Brass and Bronze Production Facilities
(3) The 40CFR60, Subpart Ea standard for Municipal Waste Combustors is 30 ng/dscf for PCDD/PCDF

FILED

JUN 30 1988

CLERK OF CIRCUIT COURT
THIRD JUDICIAL CIRCUIT
MADISON COUNTY, ILLINOIS

IN THE CIRCUIT COURT FOR THE THIRD JUDICIAL CIRCUIT
MADISON COUNTY, ILLINOIS

PEOPLE OF THE STATE OF ILLINOIS, Plaintiff,	)	
-vs-	)	No. 88-CH-200
CHEMETCO, INC., a Delaware corporation, Defendant.	)	

RECEIVED
ENFORCEMENT PROGRAMS

JUL 05 1988
119 801 AAC
Environmental Protection Agency

CONSENT ORDER

This action was commenced by Neil F. Hartigan, Attorney General of the State of Illinois, on behalf of the People of the State of Illinois, and at the request of the Illinois Environmental Protection Agency ("IEPA") against Chemetco, Inc. ("Chemetco"). The parties have agreed to this Consent Order and submit it to the court for approval. The parties stipulate that this statement of facts is made exclusively for the purpose of settlement of this cause and is conditioned upon the court approving and disposing of this matter on each and every one of the terms and conditions set forth in this proposal for settlement.

NOW THEREFORE, it is hereby ordered and adjudged as follows:

I. JURISDICTION

Chemetco stipulates that this Consent Order, and all matters to which it refers, are within the jurisdiction of the court.

cc: N. Schlenger

under which those modifications will be carried out, for IEPA review and approval pursuant to Section P below. The proposed modifications shall be submitted within ninety (90) days of IEPA's notification of failure of the performance testing.

e. Chemetco shall submit its proposed performance testing procedures and protocols to IEPA for approval with its construction permit application.

14. Chemetco shall not exceed the following air emission limitations upon completion of the compliance program set forth in paragraph 13:

a. A maximum of 20% opacity from the scrubber stacks, roof monitors, any other foundry building openings, or any other emission points;

b. A concentration of particulate matter in the exhaust gas from any piece of air pollution control equipment of 50 mg/dscm (0.022 gr/dscf); and

c. The limitations set forth in 35 Ill. Adm. Code 212.321 for total particulate emissions from each furnace during each process cycle. This shall include furnace charging and tapping emissions.

D. NOTIFICATION OF CHANGE IN HANDLING

Any changes in the raw materials accepted or in the handling, processing or marketing of the slag generated from Chemetco's furnaces, the zinc oxide, or the tin and lead solder shall be implemented only pursuant to written IEPA approval. The IEPA shall respond within forty-five (45) days of receipt of

IN THE UNITED STATES DISTRICT COURT
FOR THE SOUTHERN DISTRICT OF ILLINOIS

FILED
99 OCT 18 PM 3:00
CLERK
U.S. DISTRICT COURT
SOUTHERN DISTRICT OF IL
EAST ST. LOUIS OFFICE

UNITED STATES OF AMERICA,

Plaintiff, CIV. NO. 93-482-WDS

v. Judge Stiehl

CHEMETCO, INC.,

Defendant.

_____/

NOTICE OF LODGING OF CONSENT DECREE

Plaintiff United States by and through its undersigned attorneys, respectfully lodges the attached proposed consent decree with this Court.

1. Plaintiff United States filed a Complaint in this action against Defendant Chemetco, Inc. ("Chemetco" or "Defendant"), alleging civil violations of the Clean Air Act, 42 U.S.C. §§ 7401 *et seq.* ("CAA" or "Act"), and the Federally approved and enforceable regulations comprising the State of Illinois Air Pollution Implementation Plan ("Illinois SIP"), codified at 40 C.F.R. § 52.720-52.742, at the Defendant's secondary copper smelting facility in Hartford, Illinois..

2. The United States and Chemetco have entered into, and the United States has lodged with this Court, a proposed consent decree that would resolve the United States' claims alleged in the Complaint.

3. In accordance with 28 C.F.R. § 50.7 the United States will publish notice of the lodging of the consent decree in the Federal Register to commence a thirty (30)-day public comment period.

4. The Court should not approve or sign the proposed consent decree until the public has had an opportunity to comment and the United States has addressed those comments, if any.

5. The United States may withhold its consent to the proposed consent decree if the comments disclose facts or considerations which indicate that the proposed consent decree is improper, inappropriate, inadequate, or not in the public interest.

6. At the conclusion of the public comment period, the United States will: (1) file with the Court any written comments that it received pertaining to the proposed consent decree; and (2) either notify the Court of its withdrawal of the proposed consent decree, or respond to comments received and request this Court to sign and enter the proposed consent decree.

Respectfully submitted,

LOIS J. SCHIFFER
Assistant Attorney General
Environment and Natural Resources Division

GREGORY L. SUKYS
Environmental Enforcement Section
U.S. Department of Justice
P.O. Box 7611
Washington, D.C. 20044
(202) 514-2068/616-6584 (FAX)

W. CHARLES GRACE
United States Attorney
Southern District of Illinois

GERALD BURKE
Assistant U.S. Attorney
Southern District of Illinois
9 Executive Drive, Suite 300
Fairview Heights, IL 62208
(618) 628-3700/3720 (FAX)

OF COUNSEL

JEFFERY TREVINO
Associate Regional Counsel
U.S. Environmental Protection Agency
Region 5
77 West Jackson Boulevard
Chicago, Illinois 60604-3590

IN THE UNITED STATES DISTRICT COURT
FOR THE SOUTHERN DISTRICT OF ILLINOIS

UNITED STATES OF AMERICA,

Plaintiff,

CIV. NO. 93-482-WDS

v.

Judge Stiehl

CHEMETCO, INC.,

Defendant.

/

CONSENT DECREE

TABLE OF CONTENTS

SECTION		PAGE
I.	JURISDICTION AND VENUE	3
II.	DEFINITIONS	4
III.	APPLICABILITY	8
IV.	CLEAN AIR ACT COMPLIANCE	9
V.	AUDIT REQUIREMENTS	24
VI.	CIVIL PENALTY	24
VII.	STIPULATED PENALTIES	26
VIII.	DISPUTE RESOLUTION	27
IX.	INSPECTIONS	29
X.	NOTICES AND SUBMISSIONS	30
XI.	SCOPE OF SETTLEMENT	32
XII.	EFFECTIVE DATE	32
XIII.	TERMINATION	32
XIV.	FORCE MAJEURE	33
XV.	CONTINUING JURISDICTION	35
XVI.	APPENDICES	35
XVII.	GENERAL PROVISIONS	35
XVIII.	SIGNATORIES	36

Appendix A - Chart Identifying Mode Combinations for Maximum Operations

Appendix B - Stack Test Protocol

Appendix C - Raw Materials Management System Protocol Requirements

Appendix D - CPMMS Protocol

IN THE UNITED STATES DISTRICT COURT
FOR THE SOUTHERN DISTRICT OF ILLINOIS

UNITED STATES OF AMERICA,

Plaintiff, CIV. NO. 93-482-WDS

v. Judge Stiehl

CHEMETCO, INC.,

Defendant.

/

CONSENT DECREE

A. Plaintiff, United States of America, on behalf of the Administrator of the United States Environmental Protection Agency ("U.S. EPA"), filed a Complaint in this action against Defendant, Chemetco, Inc. ("Chemetco" or "Defendant"), alleging civil violations of the Clean Air Act, 42 U.S.C. §§ 7401 et seq. ("CAA" or "Act"), and the Federally approved and enforceable regulations comprising the State of Illinois Air Pollution Implementation Plan ("Illinois SIP"), codified at 40 C.F.R. § 52.720-52.742.

B. Pursuant to the authority of CAA Section 113(b), 42 U.S.C. § 7413(b), the Complaint seeks injunctive relief and the imposition of civil penalties for violations of the Act;

C. At all times relevant to the Complaint, Chemetco has been the "operator," within the meaning of CAA Section 113, 42 U.S.C. § 7413, of a secondary copper smelter at a Facility located on Illinois Route 3 at Oldenburg Road, City of Hartford, Madison County, Illinois;

D. The Facility is a "stationary source" within the meaning of CAA Section 302(z), 42 U.S.C. § 7602(z), because it emits lead and particulate matter into the environment;

E. Illinois Pollution Control Board ("IPCB") Rule 101 defines "existing emission source" as any emission source, the construction or modification of which commenced prior to May 31, 1972, the effective date of IPCB Rule 101. See 35 Ill. Adm. Code § 212.322;

F. The Facility has been a "major stationary source" as defined in CAA Section 302(j), 42 U.S.C. § 7602(j), because it has emitted more than one hundred tons per year of an air pollutant;

G. Defendant's secondary copper smelter at the Facility is comprised, in part, of four furnaces ("Furnace Nos. 1, 2, 3, and 4") (also known as "converters"), which process scrap materials (including brasses and bronzes that contain lead) and which generate particulate matter emissions in varying amounts.

H. Furnace Nos. 1, 2, and 3 at the Facility were operated prior to May 31, 1972, and are "existing emission sources" within the meaning of the IPCB Rule 101, 35 Ill. Adm. Code § 212.322.

I. IPCB Rule 101 defines "new emission source" as any emission source the construction or modification of which commenced after May 31, 1972, the effective date of IPCB Rule 101. See 35 Ill. Adm. Code § 212.321.

J. Furnace No. 4 at the Facility was constructed after May 31, 1972, and is a "new emission source" within the meaning of the IPCB Rule 101, 35 Ill. Adm. Code § 212.321.

K. IPCB Rule 103 prohibits any person from causing or allowing the operation of any new emission source or new air pollution control equipment, for which a construction permit is required by IPCB Rule 103, without first obtaining an operating permit from IEPA. See 35 Ill. Adm. Code § 201.143.

L. As discussed in detail herein, as part of this settlement, Chemetco has agreed to install and operate a continuous particulate mass monitoring system ("CPMMS") at its Facility. The parties agree that the purposes of such system include, but are not limited to:

Providing Chemetco with near real time emissions data for improving operation and maintenance of the Furnaces and the associated air pollution control devices at the Facility;

Minimizing the number of required stack tests that would otherwise be necessary for determining "continuous compliance;"

Providing Chemetco and U.S. EPA with continuous particulate mass emissions information in standard units of measurement, thereby minimizing reliance on surrogate measurements of emissions from the Facility's emission points (stacks), such as opacity and pressure drop across control devices, that have been contested in other cases as not accurately reflecting the existence of particulate limit excursions; and

Providing an agreed source of credible evidence for demonstrating continuous compliance with particulate emission limits.

M. Chemetco previously paid the State of Illinois a total of $305,000 in settlement of some of the violations set forth in the United States' Complaint.

N. The parties recognize and the Court, by approving and entering this Consent Decree, finds that this Consent Decree has been negotiated by the Parties in good faith, and implementation of this Consent Decree will avoid prolonged and complicated litigation between the Parties, and that this Consent Decree is fair, reasonable, and in the public interest.

NOW, THEREFORE, IT IS ADJUDGED, ORDERED, AND DECREED THAT:

I. JURISDICTION AND VENUE

1. The Complaint in this action states a claim upon which relief can be granted under the Act.

2. This Court has jurisdiction over the subject matter and parties to this action pursuant to CAA Section 113(b), 42 U.S.C. § 7413(b).

3. Venue properly lies in this Judicial District under 28 U.S.C. §§ 1391(b) and 1395(a).

II. DEFINITIONS

4. The terms used in this Consent Decree that are defined in the Clean Air Act, 42 U.S.C. §§ 7401 et seq., and the Federally approved and enforceable regulations comprising the Illinois SIP, 40 C.F.R. §§ 52.720-52.742, have the meanings contained therein.

5. Whenever the terms listed below are used in this Consent Decree or in any of the Appendices hereto the following definitions shall apply:

a. "Defendant" shall mean "Chemetco, Inc." or "Chemetco;"

b. "BACT" shall mean "Best Available Control Technology," as defined in Clean Air Act Section 169(3), 42 U.S.C. § 7479(3);

c. "Clean Air Act," "Act" and "CAA" shall mean the Clean Air Act, 42 U.S.C. § 7401, et seq.;

d. "Consent Decree" shall mean this Consent Decree and all appendices hereto, including all modifications to the Consent Decree that are made pursuant to Paragraph 55 hereof;

e. "Continuous Particulate Mass Monitoring System" or "CPMMS" shall mean the system that measures the particulate matter that is released from the emission points (stacks) at the Hartford Facility into the ambient air: the system includes, but is not limited to, a continuous

particulate mass monitor (Mass Monitor), and a monitoring device or system for measuring or computing the exhaust gas flow on an hourly basis (Flow Monitor);

f. "Daily Weighted Average" shall mean the average of the zinc and/or lead percentages of all the Furnace Charges in one day, taking into account the weight of the material comprising each Furnace Charge;

g. "Direct Injection System" or "DI System" shall mean the system by which copper bearing fines are injected directly into a Furnace: the system includes the conveyor system, sizing machine, kiln dryer, pneumatic transporters, storage silo, and a large injector;

h. "Facility" or "Plant" shall mean Defendant's secondary copper smelter, and all associated processing, transfer, storage operations and equipment located on Illinois Route 3 at Oldenburg Road, City of Hartford, County of Madison, State of Illinois;

i. "Fines" shall mean all scrap materials acquired at the Facility that are stored, dried, screened or processed in any way for direct injection through the DI System into any of the Furnaces;

j. "Foundry" shall mean the building in which the Hartford Facility's Furnaces are located;

k. "Furnace" shall mean any rotary copper smelting device at the Facility;

l. "Furnace Charge" or "Charge" shall mean any material placed into a Furnace for processing;

m. "Furnace Mode" or "Mode" shall mean any of the four phases of processing in any Furnace, which include Slag Treatment (Mode 1); Refining (Cold Charge) (Mode 2); Smelting

(Smelt) (Mode 3); and Injection (Mode 4);

n. "IEPA" shall mean the State of Illinois Environmental Protection Agency and any successor departments or agencies of the State of Illinois;

o. "Illinois SIP" shall mean the State of Illinois Air Pollution Implementation Plan, codified at 40 C.F.R. §§ 52.720-52.742;

p. "IPCB" shall mean the State of Illinois Pollution Control Board;

q. "Malfunction" shall mean any sudden, infrequent, and not reasonably preventable failure of air pollution control equipment, process equipment, or a process to operate in a normal or usual manner. Failures that are caused in part by poor maintenance or careless operation are not malfunctions (See 40 C.F.R. § 60.2);

r. "National Ambient Air Quality Standards" or "NAAQS" shall mean the standards set forth at 40 C.F.R. §§ 50.1-50.12;

s. "Paragraph" shall mean a portion of this Consent Decree designated by an Arabic numeral outside of a parentheses, e.g., "19";

t. "Pressure Drop" shall mean the decrease in pressure between two monitoring points;

u. "Pressure Drop Monitor" shall mean any device(s) installed and operated to determine the Pressure Drop that occurs between any two points;

v. "Process Weight" shall mean the total weight in pounds, of all material charged to a Furnace during a Furnace Mode;

w. "Process Weight Rate" shall have the same meaning as set forth in 35 Ill. Adm.

Code § 211.122. See also 35 Ill. Adm. Code Part 266;

x. "Raw Material Data Base" shall mean the record keeping system whereby the pertinent information concerning all raw material received at the Facility for processing in the refining and/or smelt/slag treatment modes is logged and maintained;

y. "Recipe" shall mean the chemical composition of a Furnace Charge or Smelting Heat;

z. "Residue" shall mean any material remaining in a Furnace after completion of a Furnace Mode;

aa. "Secondary Capture System and Control Device" shall mean the hood, duct work, fans, and baghouse that control all fugitive emissions that escape from the Furnaces or are otherwise produced by activities in the Facility;

bb. "Smelting Heat" shall mean one or more Furnace Charges excluding any Residue in that Furnace from any previous smelting mode processed in that furnace;

cc. (1) Stack Test" shall mean a measurement of the amount of any pollutant including, but not limited to, particulate matter and lead, emitted by a source of air emissions, that is conducted in accordance with U.S. EPA-approved test methods found at 40 C.F.R. Part 60, Appendix A;

(2) "Baseline Stack Test" shall mean the initial testing of combined Furnace Nos. 1 and 3, and combined Furnace Nos. 2 and 4, and/or combined Furnace Modes for those units, following any modification to the process and/or air pollution control equipment;

dd. "State" shall mean the State of Illinois and all its departments, agencies and

instrumentalities;

ee. "United States" shall mean the United States of America and all its departments, agencies and instrumentalities;

ff. "U.S. EPA" shall mean the United States Environmental Protection Agency and any successor departments or agencies of the United States.

III. APPLICABILITY

6. The provisions of this Consent Decree shall apply to and be binding upon Defendant and Defendant's agents, officers, directors, employees, successors, assigns, contractors, and consultants solely in their capacities as such. Defendant shall be responsible for the acts of its agents, officers, directors, employees, successors, assigns, contractors, and consultants, who violate, cause or permit Defendant to violate the terms of this Consent Decree.

7. No change in ownership or corporate status shall in any way alter the responsibilities of Defendant under this Consent Decree. In the event of any conveyance of title, easement, or other interest in the Facility, Defendant shall continue to meet all obligations under this Consent Decree.

8. In the event that Defendant proposes to sell or transfer any real property or operations subject to this Consent Decree, Defendant shall notify U.S. EPA and IEPA in the manner specified in 40 C.F.R. § 270.72(a) prior to the conveyance of title, easement, or any other interest, including a leasehold interest. Defendant shall make the purchasing party's compliance with the Consent Decree a condition of any sale of any portion of the Hartford Facility that is subject to this Consent Decree.

9. Defendant shall notify each contractor retained to perform work required by this

Consent Decree of each of the requirements of this Consent Decree relevant to the activities to be performed by that contractor, including all relevant work schedules and reporting deadlines. Defendant shall further require that each such contractor notify in writing each subcontractor retained to perform work required by this Consent Decree of the requirements of this Consent Decree applicable to the work to be performed by such subcontractor.

10. In any action to enforce this Consent Decree, Defendant shall not raise as a defense the failure by any of the Defendant's officers, directors, employees, agents, servants, and successors and assigns to take actions necessary to comply with the provisions hereof. Nothing in this Paragraph shall diminish the Defendant's rights under Section XIV (Force Majeure) or any other available legal defenses.

IV. CLEAN AIR ACT COMPLIANCE

11. Buildings and Sheds

a. Defendant operates on the west side of the Facility's Dust Injection System Hall, an approximately 50,000 square foot building dedicated to the storage of fines ("Fines Building").

b. Any fines not stored in the Fines Building shall be stored in another building or a closed container.

c. Beginning with the date of entry of this Consent Decree, Defendant shall not charge materials purchased as fines to any Furnace by any means other than the Dust Injection System.

d. Defendant shall pay a stipulated penalty of $500 per day for any violations of any provision of this Paragraph.

12. Designated Modes of Furnace Operation

a. Defendant has designated each of its four Furnaces to operate in specific process Modes, as follows: Mode 1 - Slag Treatment; Mode 2 - Refining (Cold Charge); Mode 3 - Smelting (Smelt); and Mode 4 - Injection.

b. Defendant's operations shall comply with the production process depicted on the chart at Appendix A.

c. Defendant shall limit production for all four of its Furnaces to 900 tons per day: Provided, should Defendant, at its discretion, utilize fewer than four Furnaces at any one time, Defendant's daily maximum production shall be equal to the maximum capacity of the Furnaces being utilized, as depicted on the chart at Appendix A.

13. Fugitive Emissions Control.

a. Defendant shall comply with all the terms of the Facility's IEPA-approved Fugitive Emissions Control Program dated September 1993, as revised (incorporated herein by reference). Specifically, Defendant shall:

(1) continue to implement all measures as outlined in the approved Fugitive Emissions Control Program;

(2) maintain daily records of all actions taken pursuant to the approved Fugitive Emissions Control Program and the results thereof. Daily records shall be retained for a period of five (5) years; and

(3) submit to IEPA and U.S. EPA within seven (7) working days of the end of each calendar month a fugitive emissions report, which shall contain any and all records

indicating or demonstrating the Defendant's failure to adhere to the approved fugitive emissions control program, including, but not limited to, the dates of such failure, the duration of such failure, the reasons for such failure, and all actions taken to correct such failure.

b. The results of the fugitive emissions control program shall be available for inspection and copying by IEPA and U.S. EPA; and

c. Upon demand by U.S. EPA, Defendant shall pay a stipulated penalty of $500 per day for each day that a fugitive emission report is not timely submitted, and $1,000 per day for each day that such a submitted report fails to contain any information required by Paragraph 13.a.(3). Upon receipt of a fugitive emission report indicating that Defendant has failed to comply with the Fugi tive Emissions Control Program, U.S. EPA, taking into consideration the factors set forth in Paragraph 13.a.(3), may demand that Defendant pay a stipulated penalty of $500 per day for each violation set forth in the report.

14. Furnace Emission Limitations

a. Furnace Nos. 1, 2, and 3 at the Facility were operated prior to May 31, 1972, and are "existing emission sources" within the meaning of IPCB Rule 101, 35 Ill. Adm. Code § 212.322. Furnace No. 4 at the Facility was constructed after May 31, 1972, and is a "new emission source" within the meaning of IPCB Rule 101, 35 Ill. Adm. Code § 212.321. However, under Defendant's current operational and emissions control programs, Furnace No. 1 is paired with Furnace No. 3 as a "Process Emission Unit" (discussed in more detail in the CPMMS Protocol (Appendix D)) and Furnace No. 2 is paired with Furnace No. 4 as a "Process Emission Unit ." As such, for purposes of this Consent Decree only, the combined emissions from Furnace Nos. 1 and 3 will be subject to 35

Ill. Adm. Code § 212.322, and the combined emissions from Furnace Nos. 2 and 4 will be subject to 35 Ill. Adm. Code § 212.321. Chemetco, at its discretion, may separate Furnace Nos. 2 and 4, with the result that the emission limit for Furnace No. 2 would once again be subject to 35 Ill. Adm. Code § 212.322. Provided, such action may be undertaken only in accordance with the Clean Air Act and its implementing regulations, including the State of Illinois SIP, 40 C.F.R. § 52.720-52.742.

b. Defendant shall comply with each of the following emission limitations at all times.

(1) The opacity limitation for visible emissions from each Furnace's control device, vent, or emission point (stack), as required by 35 Ill. Adm. Code § 212.123(a);

(2) The total particulate emissions limitation for each Process Emissions Unit (as established pursuant to 35 Ill. Adm. Code § 212.321 or § 212.322, as applicable. See Paragraph 14.a.) during each process mode, including Furnace charging and tapping emissions.

c. The Process Weight Rate calculation shall not include the Residue as part of the Furnace Charge.

d. During any 12-month period described in Paragraph 20.a., Defendant shall be subject to stipulated penalties of $500 per day for each day of violation of Paragraph 14.b.(1) not caused by a Malfunction.

15. Secondary Capture System and Control Device

a.(1) Within 60 days following the entry of this Consent Decree, Defendant shall submit for U.S. EPA's review and approval a detailed proposal for assessing and/or improving the efficiency of the Secondary Capture System and Control Device for the Foundry. The proposal shall

address the various components of the Foundry, including, but not limited to, the integrity of the roof, supporting structure, walls, duct work and baghouse.

(2) Defendant shall complete the assessment within 120 days of Defendant's receipt of U.S. EPA's written approval of the assessment proposal.

(3) A report of the results of the assessment shall be submitted to U.S. EPA and IEPA within thirty (30) calendar days following completion of the assessment. The report shall include modification descriptions, schedules for implementation, and cost estimates.

b. Defendant shall operate the Secondary Capture System and Control Device in a manner that meets all applicable emission limitations, including the opacity limitation for visible emissions as required by 35 Ill. Adm. Code § 212.123(a).

c. Within 180 days following entry of this Consent Decree, Defendant shall install pressure drop monitors for each of the eight compartments of the baghouse.

(1) Defendant shall insure that each pressure drop monitor includes a continuous monitoring and recording device that allows pressure drop monitoring of the baghouse compartments by the operators in the control room.

(2) Defendant shall establish a baseline range of operation for pressure drop, and operate the baghouse at all times within the baseline range.

(3) Defendant shall record and maintain at the Facility, for three years after installation of the last installed pressure drop monitor, the date, time, and duration, of all time periods that the baghouse operates outside of the baseline range, and the cause of and methods used to correct such deficiency.

d. Beginning 240 days following the entry of this Consent Decree, Defendant shall achieve and maintain zero visible fugitive emissions from the Foundry.

e. A violation of any provision of this Paragraph not caused by a Malfunction shall subject Defendant to stipulated penalties of $500 per day for each violation.

16. Baseline Stack Testing

a. Baseline Stack Testing shall be performed for all mode scenarios depicted on the chart at Appendix A pursuant to the Stack Test Protocol set forth in Appendix B.

b. Within 30 days following U.S. EPA's certification of the Continuous Particulate Mass Monitor System under Paragraph 18.c., Defendant shall conduct the Baseline Stack Tests on its Furnaces.

c. During the Baseline Stack Tests, Defendant shall confirm the calibration curve for the Continuous Particulate Mass Monitoring System installed and certified pursuant to the Continuous Mass Monitoring Plan required by Paragraph 18.a.

d. Defendant shall establish baseline operating ranges of pressure drop for the control device systems of each Furnace and of scrubbant nozzle pressure for all new active air pollution control equipment.

e. Defendant may establish new baseline operating ranges for the control devices during subsequent Stack Tests, if any, provided the Stack Tests indicate compliance with all applicable limits. U.S. EPA shall be notified of any additional Stack Tests sixty (60) days prior to commencement of such tests.

f. Defendant shall require its contractor(s) to submit the results of, and a final

report on, all Stack Tests to IEPA and U.S. EPA at the same time that the contractor(s) submits such results and report to Defendant, but not later than thirty (30) days after completion of each Stack Test. Defendant's Stack Test results and final report shall include the following for each test run:

(1) The Mode being tested;

(2) The Process Weight Rate with supporting calculations;

(3) The allowable particulate matter emission rate in pounds per hour (lbs/hr), calculated pursuant to Paragraph 14.b.(2) of this Consent Decree.

(4) For Baseline Stack Tests, the actual controlled emissions rate of particulate matter;

(5) The actual concentration of particulate matter in pounds per day; and

(6) Copies of the continuous monitoring charts for pressure drops and scrubbant nozzle pressure rates across each control device.

g. Defendant shall allow IEPA and U.S. EPA, without warning or advance notice, to inspect the Furnace Charges and conduct any sampling of the Charges that either IEPA or U.S. EPA deems necessary during Stack Tests.

h. Defendant shall pay stipulated penalties of $1,000 per day per Furnace for each day that:

(1) A Baseline Stack Test is not completed in a timely manner; and

(2) A stack test report is not timely submitted, or fails to contain any information required by the Stack Test Protocol (Appendix B) or Paragraph 16.f, respectively, of this Consent Decree.

17. Raw Materials Management System.

a. Within 180 days following the entry of this Consent Decree, Defendant, in accordance with the Raw Materials Management System Protocol (Appendix C), shall develop, utilize and maintain a computer-based Raw Material Data Base Program to calculate and record the Daily Weighted Average of zinc and lead percentages for each recipe for each Furnace Charge.

b. Defendant shall pay stipulated penalties of $500 per day for each violation of Paragraph 17.a.

18. Continuous Mass Monitoring of Particulates. The schedule and enforcement methodology set forth in this Paragraph shall apply to Defendant's installation and utilization of a Continuous Particulate Mass Monitoring System ("CPMMS"). Such a monitoring system has not previously been utilized in the United States on a system similar to Chemetco's.

a. Within 120 days following the entry of this Consent Decree, Defendant shall submit for review and approval by U.S. EPA a Continuous Particulate Mass Monitoring Plan. Such plan shall satisfy all the elements of the protocol for installing, certifying, operating, maintaining, and reporting from the CPMMS. (See Appendix D).

b. Within 60 days following Defendant's receipt of U.S. EPA's approval of the plan submitted pursuant to Paragraph 18.a., Defendant shall install, calibrate, operate and maintain a CPMMS on each of the emission points (stacks) servicing the Facility's four Furnaces and their air pollution control devices. Defendant also shall provide a means of computing and recording the allowable particulate emission rate in pounds per hour for each "Process Emission Unit" using the equations set forth at 35 Ill. Adm. Code §§ 212.321 and 212.322, as applicable. See Paragraph 14.a.

c. Within 30 days following the first day of operation of the CPMMS, Defendant shall perform certification tests and, within 30 days following completion of such tests, Defendant shall provide to U.S. EPA, for purposes of U.S. EPA's approval and certification of the CPMMS, all data (including all test results) developed by Defendant to demonstrate that the CPMMS satisfies all of the certification requirements set forth in the CPMMS Protocol (Appendix D).

d. After the CPMMS is operational on each of the Facility's emission points (stacks) and certification testing is completed, Defendant shall demonstrate continuous compliance with the emission limits established pursuant to Paragraph 14.b.(2) of this Consent Decree, using the emission measurements provided by the CPMMS.

e. No later than the 30 days following the last day of each calendar quarter, starting with the calendar quarter in which U.S. EPA certifies the CPMMS, Chemetco shall submit to U.S. EPA and IEPA a report, using the data obtained from the CPMMS (in standard units of measure and the appropriate averaging time), of all one-hour periods of emissions that are in excess of the emission limitations established pursuant to Paragraph 14.b.(2) of this Consent Decree. Each such report shall include the date, time and magnitude of excess particulate emissions, statements as to the probable cause of the excess emissions, descriptions of the corrective action(s) that may have been undertaken by Chemetco, and information as to the periods of and reasons for non-operation or malfunction of the CPMMS, if appropriate.

f. Until this Consent Decree is terminated, U.S. EPA will review and evaluate the excess emission reports required by subparagraph "e" of this Paragraph, and any other monitoring reports or incident reports provided to U.S. EPA by Defendant, and will determine, based on those

reports, whether violations of this Paragraph have occurred: Provided, recorded and reported excess emissions solely attributable to a malfunction of the CPMMS shall not form the basis of a claim for stipulated penalties under this Consent Decree.

g. Chemetco shall be subject to a stipulated penalty of $500 per day for violations of any provision of this Paragraph.

19. Election of Optional Stack Testing and Potential Operational Restrictions. The following provisions shall apply to the performance of stack tests if either party concludes that the CPMMS or the data derived therefrom is unreliable:

a. At any time following 180 days after the U.S. EPA's certification of the CPMMS under Paragraph 18.c., U.S. EPA may require, or Defendant at its discretion may perform, a Stack Test on a particular emission point (stack) if:

(1) U.S. EPA has demanded stipulated penalties under Paragraph 18.f. for more than two consecutive calendar quarters;

(2) the CPMMS for a particular stack has malfunctioned for more than 25% of the calendar quarter; or

(3) U.S. EPA and Defendant disagree on the validity of the information set forth in the reports required under Paragraph 18.e. of this Consent Decree.

b. Should U.S. EPA require the performance of Stack Tests under the provisions of Paragraph 19.a., such Stack Tests shall be initiated within 60 days following Defendant's receipt of U.S. EPA's written notification that Stack Tests must be conducted.

c. The provisions of Paragraph 16.f. and 16.g. of this Consent Decree,

applicable to Baseline Stack Tests, shall apply equally to any Stack Tests that may be performed under this Paragraph.

d. Should a Stack Test conducted under this Paragraph demonstrate that a combination of Furnace Modes has exceeded an emission limitation for a Process Emission Unit established pursuant to Paragraph 14.b.(2) of this Consent Decree, and such exceedance is not the result of a Malfunction, Defendant shall stop operation of such Furnace Mode combination immediately upon receipt of the Stack Test results (but no later than fifteen (15) days after the last Stack Test date) except that:

(1) Defendant, upon written concurrence of U.S. EPA, may engage in full operation of the subject Furnace Mode combination, without incurring a penalty, only for the purposes of conducting retests to identify which Furnace Mode or Modes caused the emissions limitation to be exceeded, and the emissions reduction impact of remedial measures or changes to Furnace Charges: Provided, operations under this subparagraph shall not exceed fourteen (14) days without the written approval of U.S. EPA;

(2) If a Furnace Mode combination is shut down or its operations restricted pursuant to this Paragraph, unlimited operation of the subject Furnace shall not recommence until all of the following occur:

(a) Defendant certifies to IEPA and U.S. EPA that it has completed construction of or improvements to the air pollution control devices or changes in Charges;

(b) U.S. EPA receives the results of completed emissions tests that demonstrate compliance with the emissions limitations established pursuant to Paragraph 14.b.(2) of

this Consent Decree, and

(c) Defendant pays any stipulated penalty that may have accrued under this Paragraph.

e. Defendant shall pay stipulated penalties of:

(1) $500 for each day that a Stack Test, the performance of which is required by U.S. EPA under Paragraph 19.a., is not timely conducted, beginning on the 60th day following Chemetco's receipt of a written notification under Paragraph 19.b.;

(2) $2500 per day for violations of Paragraph 19.d.

20. Governance of Stack Test Data Instead of CPMMS Data.

a. If either U.S. EPA or Chemetco elects to impose a Stack Test requirement pursuant to Paragraph 19.a, the data generated through such Stack Tests (as opposed to any data generated by the CPMMS) shall govern, for a period of 12 months beginning on the date that U.S. EPA receives the Stack Test report (See Paragraphs 16.f. and 19.c.) , Chemetco's compliance with the emission limitations established pursuant to Paragraph 14.b.(2) of this Consent Decree.

b. During any 12-month period described in Paragraph 20.a. , Defendant shall ensure that the Daily Weighted Average of lead and zinc percentages of each charge, as maintained in the Raw Material Data Base, do not exceed those percentages determined for each of the materials utilized to create the Recipes for Furnace Charges processed during the Stack Tests demonstrating compliance with air emissions limitations established pursuant to Paragraph 14.b.(2) of this Consent Decree.

c. (1) Defendant has installed new air pollution control devices on the

emission points (stacks) for the Hartford Facility's four rotary Furnaces.

(2) Defendant has equipped each new air pollution control device with appropriate monitoring and recording devices, including, but not limited to:

(a) continuous pressure drop monitors and recording devices for all new active air pollution control equipment; and

(b) continuous scrubbant nozzle pressure monitors and recording devices for all new active air pollution control equipment.

d. During any 12-month period in which stack test data shall govern Defendant's compliance with the limitations established pursuant to Paragraph 14.b.(2) of this Consent Decree (See Paragraph 20.a.), the data derived from the monitors described in preceding Paragraph 20.c.(2)(a) and (b) shall be used in lieu of the data derived from the CPMMS to assess Defendant's compliance with the limitations established pursuant to Paragraph 14.b.(2) of this Consent Decree.

e. Defendant shall operate the control device systems at all times following the initial baseline stack tests within the established baseline operating ranges

f. Defendant shall calibrate, operate, and maintain all new air pollution control devices and all continuous monitoring and recording devices in a manner that ensures accurate and precise operation.

g. During any 12-month period in which stack test data shall govern Defendant's compliance with the limitations established pursuant to Paragraph 14.b.(2) of this Consent Decree (See Paragraph 20.a.), Defendant shall collect and record the following information for each new air pollution control device system as each such device becomes operational:

(1) Continuous pressure drop monitoring data and continuous scrubbant nozzle pressure monitoring data;

(2) Operating times for each Furnace control device system, associated monitoring equipment, and each Furnace;

(3) Records of all routine and non-routine maintenance performed on each control device system and associated monitoring equipment, including dates and duration of any outages; and,

(4) The date, duration, cause, and response to all periods of operation during which the pressure drop of the control device system is outside of the baseline range established during the baseline stack test.

h. Defendant shall maintain for at least three years the information collected pursuant to Paragraph 20.g.

i. Defendant shall pay stipulated penalties of $500 per day for each violation of any provision of Paragraph 20.e. thru 20.h.

21. Maintenance of Ambient Air Quality Standard

a. Beginning with the first full calendar quarter following entry of this Consent Decree, Defendant shall not violate any applicable ambient air quality standard for lead or particulate matter required by IPCB Rule 102 (See 35 Ill. Adm. Code §§ 243.126, 243.108), as demonstrated by the approved ambient air monitoring program at the Facility.

b. Defendant shall carry out immediately and in their entirety the terms of the Facility's IEPA-approved Ambient Air Monitoring Program dated August 1993, as revised (which is

incorporated herein by reference), including but not limited to:

(1) Compliance with all requirements for sampling, validation, location, analysis, operating procedures, maintenance, calibration, data reduction, reporting, quality assurance, monitoring methodology, and instrumentation;

(2) Collection of enough samples to ensure the compilation of valid quarterly emissions data, as set forth in the terms of the approved ambient air monitoring program;

(3) Refraining from any and all actions that could potentially undermine the efficiency or accuracy of the approved ambient air monitoring program, including but not limited to the construction, placement or use of water screens or spraying devices at or near the Facility's ambient air monitors;

(4) Not moving the Facility's ambient air monitors, without prior written approval from IEPA and U.S. EPA;

(5) Not deviating from the approved ambient air monitoring program without prior written approval from IEPA and U.S. EPA; and

(6) Continuing to submit the results of the ambient air monitoring program to IEPA and U.S. EPA on a quarterly basis within thirty (30) calendar days of the end of each quarter.

c. Defendant shall continue the approved ambient air monitoring program until:

(1) Defendant demonstrates to IEPA and U.S. EPA that it has been in compliance with the NAAQS for lead for a period of twelve (12) consecutive calendar quarters after entry of this Consent Decree; and

(2) Defendant receives written notice from U.S. EPA that Defendant may

cease the approved ambient air monitoring program.

d. Defendant shall pay the stipulated penalties set forth below for violations of the provisions of this Paragraph not caused by a Malfunction:

(1) $1,000 for each violation of a quarterly NAAQS arithmetic mean limitation;

(2) $5,000 for each violation of an annual NAAQS arithmetic mean limitation; and

(3) $1,000 per day for each day that Defendant fails to comply with the approved ambient air monitoring program.

V. AUDIT REQUIREMENTS

22. Nothing in this Consent Decree shall be construed to limit or otherwise affect the right of U.S. EPA to conduct and resolve any audit, or render any report authorized pursuant to the Inspector General Act of 1978, Pub.L. 95-452, Oct. 12, 1978, 92 Stat. 1101, as amended, 5 U.S.C. App. 3.

VI. CIVIL PENALTY

23. Defendant shall pay a civil penalty in the amount of $305,267 in full satisfaction of the United States' claims for civil penalties as alleged in the Complaint through the date of lodging of this Consent Decree, recognizing that Defendant has previously paid $305,000 to the State of Illinois. Defendant shall pay $150,000 of the civil penalty amount within thirty (30) days following the date of entry of this Consent Decree, and shall pay the remaining $155,267 within 12 months of the date of the first payment. The payments will be made by Fed Wire Electronic Funds Transfer ("EFT") to the

Department of Justice Lockbox Bank in accordance with specific instructions to be timely provided to Defendant upon entry of this Consent Decree and will reference DOJ Case No. 90-5-2-1-1845; United States Attorney, Southern District of Illinois, File No. 1998V00228. Funds received at the Lockbox Bank after 11:00 a.m. (Eastern Time) will be credited on the next business day. Defendant will advise the Financial Litigation Unit of the United States Attorney's Office for the Southern District of Illinois at the time payment is being wire-transferred. In addition, Defendant will confirm to U.S. EPA and the Department of Justice that payment has been made in accordance with Section X (Notices and Submissions). Interest and late charges will be paid as specified in Paragraph 24.

24. Commencing thirty (30) days after the date this Consent Decree is entered, interest shall accrue on the penalty, or any portion thereof that is overdue, at the rate set by 31 U.S.C. § 3717 and shall continue to accrue until the penalty is paid. A late payment handling charge of $20.00 shall be imposed after thirty (30) days, with an additional charge of $10.00 for each subsequent thirty (30) day period over which an unpaid balance remains. In addition, a six (6) percent per annum penalty shall be applied on any principal amount not paid within ninety (90) days of the entry of this Consent Decree.

25. Upon entry of this Consent Decree, the civil penalty provided for in this Section shall be a debt owed to the United States. Collection of this debt shall be subject to the Federal Debt Collection Procedures Act, 28 U.S.C. § 3001 *et seq.*

26. Chemetco shall not deduct its payment of the civil penalty provided for in this Section for any tax purpose or otherwise obtain any favorable tax treatment of, or for, such civil penalty payment.

VII. STIPULATED PENALTIES

27. The stipulated penalties herein shall be in addition to, and shall in no way limit, other remedies or sanctions available to the United States by reason of the Defendant's failure to comply with the requirements of this Consent Decree, the CAA or the Illinois SIP. However, if the United States collects a stipulated penalty from the Defendant under this Consent Decree and subsequently seeks and is awarded a monetary penalty under the CAA or the Illinois SIP for the same act or omission, the Defendant shall receive a credit against the judgment for the amount of the paid stipulated penalty.

28. Failure by the United States to demand stipulated penalties shall have no effect on the accrual of such penalties.

29. a. Stipulated penalties are due by the 15th day of the month following the month in which the violations occurred or in which U.S. EPA made a stipulated penalty demand under the provisions of this Consent Decree.

b. Payments of Stipulated Penalties shall be made in accordance with the procedures set forth in Paragraph 23.

c. At the same time Defendant submits a payment of stipulated penalty, Defendant shall send a letter to U.S. EPA, the U.S. Department of Justice, and IEPA notifying those entities of the payment of the stipulated penalty and identifying the case name, court, docket number, specific stipulated penalty provision involved, and a description of the violations of this Consent Decree for which the stipulated penalties were tendered.

d. The United States may, in its discretion and not subject to judicial review,

determine that stipulated penalties for violations of any provision of this Consent Decree need not be paid.

30. Any dispute with respect to Defendant's liability for a stipulated penalty shall be resolved by this Court pursuant to the dispute resolution provisions of Section VIII of this Consent Decree.

31. All penalties shall begin to accrue on the day after the complete performance is due or the day a violation occurs, and shall continue to accrue through the final day of the correction of the noncompliance or completion of the activity: Provided, stipulated penalties shall not accrue: (1) with respect to a deficient submission under Paragraphs 13.c., 16.f., and 18.e., during the period, if any, beginning on the 31st day after EPA's receipt of such submission until the date that EPA notifies Defendant of any deficiency; (2) with respect to Dispute Resolution under Section VIII, during the period, if any, beginning on the date of U.S. EPA's receipt of Defendant's statement of position and ending on the date that the Director issues a final decision regarding such dispute or, (3) with respect to judicial review, if any, under Paragraph 35, from the date that all briefs described in Paragraph 35 are received by the Court until the Court issues its final decision regarding such dispute. Nothing herein shall prevent the simultaneous accrual of separate penalties for separate violations of this Consent Decree.

VIII. DISPUTE RESOLUTION

32. Unless otherwise expressly provided for in this Consent Decree, the dispute resolution procedures of this Section shall be the exclusive mechanism to resolve disputes arising under or with respect to this Consent Decree. However, the procedures set forth in this Section shall not

apply to actions by the United States to enforce obligations of the Settling Defendants that have not been disputed in accordance with this Section.

33. The parties shall make reasonable, good faith efforts to resolve informally all disputes or differences of opinion regarding the meaning or implementation of this Consent Decree. If the parties cannot resolve any such dispute, the interpretation advanced by U.S. EPA shall be considered binding unless, within 15 days after the conclusion of the informal negotiation period, Defendant invokes the dispute resolution provisions of this Section.

34. Defendant shall invoke the formal dispute resolution procedures set forth in Paragraphs 34 thru 38 by serving on the United States a written Statement of Position on the matter in dispute, including, but not limited to, any factual data, analysis or opinion supporting that position and any supporting documentation relied upon by the Defendant. Within 15 days after receipt of Defendant's Statement of Position, U.S. EPA will serve on Defendant its Statement of Position, which shall include, but not limited to, any factual data, analysis, or opinion supporting that position and all supporting documentation relied upon by U.S. EPA. Within 10 days after receipt of U.S. EPA's Statement of Position, Defendant may submit a Reply.

35. Following receipt of Defendant's Statement of Position and reply, if any, submitted pursuant to Paragraph 34, the Director of the Air Division, U.S. EPA Region 5, will issue a final decision resolving the dispute. The Air Division Director's decision shall be binding on the Defendant unless, within 15 days of receipt of such decision, the Defendant files with the Court and serves on the United States a motion for judicial review of the decision setting forth the matter in dispute, the relief requested, and the schedule, if any, within which the dispute must be resolved to ensure orderly

implementation of the Consent Decree. Any response by the United States must be filed within 15 days of the date that Defendant's motion is due.

36. Judicial review of any dispute governed by this Paragraph shall be governed by applicable principles of law.

37. The invocation of formal dispute resolution procedures under this Section shall not extend, postpone or affect in any way any obligation of the Defendant under this Consent Decree, not directly in dispute, unless U.S. EPA or the Court agrees otherwise. Stipulated penalties with respect to the disputed matter shall continue to accrue from the first day of noncompliance with any applicable provision of this Consent Decree, except as set forth in Paragraph 31, but payment shall be stayed pending resolution of the dispute. In the event that Defendant does not prevail on the disputed issue, stipulated penalties shall be paid as provided in Paragraph 29.

38. In proceedings on any dispute governed by this Paragraph, Settling Defendants shall have the burden of demonstrating that the decision of the Air Division Director is arbitrary and capricious or otherwise not in accordance with law.

IX. INSPECTIONS

39. Until termination of this Consent Decree, U.S. EPA and their representatives, contractors, consultants, and attorneys shall have the authority to enter the Facility at all times upon proper presentation of credentials to the manager or managers of the Facility for the purposes of:

a. monitoring the progress of activities required by this Consent Decree;

b. verifying any data or information submitted to EPA in accordance with the terms of this Consent Decree;

c. conducting, pursuant to written protocols, any sampling or testing that U.S. EPA believes necessary to determine Defendant's compliance with this Consent Decree; or

d. otherwise assessing Defendant's compliance with this Consent Decree.

This provision in no way limits or affects any rights of entry and inspection held by either U.S. EPA pursuant to applicable federal or state laws or regulations.

X. NOTICES AND SUBMISSIONS

40. a. Whenever, under the terms of this Consent Decree, notice is required to be given or a document is required to be submitted by one party to another, such notices or submissions shall be directed to the individuals at the addresses specified in subparagraph "d" below, unless those individuals or their successors give notice of a change to all listed individuals, and their successors. Receipt of written notice as specified herein shall constitute complete satisfaction of any written notice requirement of this Consent Decree with respect to the United States, U.S. EPA and Defendant, respectively.

b. Defendant's notifications to or communications with U.S. EPA shall be deemed submitted on the date they are postmarked and sent by certified mail, return receipt requested. Such notifications and communications that are sent to U.S. EPA using sources other than the U.S. Postal Service will be deemed submitted on the day they are received by the United States.

c. All notifications and submissions required under this Consent Decree by Chemetco shall be signed by a responsible agent of Chemetco and shall include the following certification:

I certify under penalty of law that this document and all attachments were prepared

under my direction or supervision in accordance with a system designed to assure that qualified personnel properly gather and evaluate the information submitted. Based on my inquiry of the person or persons who manage the system, or those persons directly responsible for gathering the information, the information submitted is, to the best of my knowledge and belief, true, accurate, and complete. I am aware that there are significant penalties for submitting false information, including the possibility of fine and imprisonment for knowing violations.

d. Except as specified otherwise herein, all written notifications or communications between the parties relating to this Consent Decree shall be addressed as follows:

As to the U.S. Dept. of Justice:

[By U.S. Mail]

Chief, Environmental Enforcement Section
U.S. Department of Justice
Re: 90-5-2-1845
P.O. Box 7611
Washington, D.C. 20044

[By Overnight/Courier]

Chief, Environmental Enforcement Section
Re: 90-5-2-1845
U.S. Department of Justice
1425 New York Ave., N.W.
13th Floor
Washington, D.C. 20005
As to U.S. EPA:

Jeffery Trevino
Assistant Regional Counsel
U.S. Environmental Protection Agency
Region 5
77 West Jackson Boulevard (C-14J)
Chicago, Illinois 60604-3590

Chief, Air Enforcement Assurance Branch
U.S. Environmental Protection Agency
Region 5
77 West Jackson Boulevard (AE-17J)
Chicago, Illinois 60604-3590

As to Defendant:

Chemetco, Inc.
Director of Environmental Health and Safety
Route 3 and Oldenburg Road
Hartford, Illinois 62048

XI. SCOPE OF SETTLEMENT

41. a. Compliance with each and every requirement of this Consent Decree shall satisfy all civil liability of the Defendant for the United States' civil claims under the Clean Air Act specifically alleged in the Complaint through the date of lodging of this Consent Decree.

b. The United States does not, by its consent to the entry of this Consent Decree, warrant or aver in any manner that Defendant's complete compliance with this Consent Decree will result in compliance with the provisions of the Act, its implementing regulations, any permit, or this Consent Decree. Notwithstanding U.S. EPA's review and approval of any plans formulated pursuant to this Consent Decree, Defendant shall remain solely responsible for compliance with the Act, its implementing regulations, and this Consent Decree.

XII. EFFECTIVE DATE

42. This Consent Decree shall be effective upon entry by this Court.

XIII. TERMINATION

43. This Consent Decree may be terminated by this Court upon the Court's granting a

motion by Defendant, after certification by Defendant to the United States, and the Court, that Defendant has achieved compliance with all provisions of this Consent Decree, has been in compliance with all applicable requirements of this Consent Decree, the Act and the regulations promulgated pursuant thereto for twelve (12) consecutive calendar quarters following entry of this Consent Decree and has paid all civil and stipulated penalties due. The United States shall advise the Court, within 30 days of the filing of Defendant's motion, as to the propriety of such motion to terminate.

XIV. FORCE MAJEURE

44. If any event occurs that causes or may cause the Defendant to violate any provision of this Consent Decree, Defendant shall notify the United States in writing within five (5) days of the date on which the Defendant knew or should have known of such event. The notice shall describe in detail the anticipated length of time the violation may persist, the precise cause or causes of the violation, the measures taken or to be taken by the Defendant to prevent or minimize the violation and the timetable by which those measures will be implemented. The Defendant shall adopt all reasonable measures to avoid or minimize any such violation. Defendant's failure to comply with the notice requirements of this Section shall render this Section void and of no effect as to the particular incident involved, and shall constitute a waiver of the Defendant's right to obtain an extension of time under this Section for its obligations based on such incident.

45. If the parties agree that the violation has been or will be caused by circumstances entirely beyond the control of the Defendant, or any entity controlled by or under the common control of the Defendant, including the Defendant's consultants and contractors, and the Defendant could not

have prevented such violation, the time for performance of such requirement may be extended for a period not to exceed the actual delay resulting from such circumstances, and stipulated penalties shall not be due for said delay. In the event the parties are unable to agree, the matter may be submitted by either party to the Court for resolution pursuant to Section VIII. If the violation is determined by the Court to have been caused entirely by circumstances beyond the control of the Defendant, or any entity controlled by or under the common control of the Defendant, the Defendant may be excused as to that violation for the period of time the violation continues due to such circumstances.

46. The Defendant shall bear the burden of proving that any delay was caused by circumstances entirely beyond the control of the Defendant or any entity controlled by or under the common control of the Defendant.

47. Unanticipated or increased costs or expenses associated with the implementation of actions called for by this Consent Decree or changed financial circumstances shall not, in any event, be a force majeure event and shall not serve as a basis for changes in this Consent Decree or extensions of time under this Consent Decree.

48. Compliance with any requirements of this Consent Decree by itself shall not constitute compliance with any other requirement. An extension of one compliance date based on a particular incident does not result in an extension of a subsequent compliance date or dates. The Defendant must make an individual showing of proof regarding each delayed incremental step or other requirement for which an extension is sought.

XV. CONTINUING JURISDICTION

49. The Court shall retain jurisdiction after entry of this Consent Decree to modify or enforce its terms or to take any action necessary or appropriate for its construction or execution.

XVI. APPENDICES

50. The following documents are appended to and incorporated in this Consent Decree: Appendix A is a Chart Identifying the Furnace Mode Combinations for Maximum Operations; Appendix B is the Stack Test Protocol; Appendix C is the Raw Materials Management System Protocol Requirements; and Appendix D is the CPMMS Protocol.

XVII. GENERAL PROVISIONS

51. Compliance with the terms of this Consent Decree does not affect Defendant's obligation to comply with all applicable requirements of the Clean Air Act and regulations promulgated thereunder, and all other applicable requirements of Federal, State or local law.

52. This Consent Decree does not limit the ability of the United States to pursue its rights and remedies under any law or regulation or any Order of this Court.

53. Defendant acknowledges that it has been advised that it also may be subject to the applicable requirements of CAA Section 120, 42 U.S.C. Section 7420, providing for assessment of non-compliance penalties for violations occurring after the date of lodging of this Consent Decree.

54. Each party shall bear its own costs and attorney's fees in this action.

55. Except for technical or schedule changes, any modification of this Consent Decree must be in writing, signed by each of the parties, and approved by this Court before it becomes effective. Proposed modifications that do not result in a written agreement may be subject to dispute

resolution.

56. The public shall be given notice of this Consent Decree and an opportunity to comment on its provisions, pursuant to CAA Section 113(g), 42 U.S.C. § 7413(g), and 28 C.F.R. § 50.7. Following the close of the comment period, the United States may withdraw or modify its consent to the terms of this Consent Decree on the basis of comments received.

XVIII. SIGNATORIES

57. The undersigned representative of Chemetco, Inc., and the Chief, Environmental Enforcement Section, Environment and Natural Resources Division, United States Department of Justice each certifies that he or she is fully authorized to enter into the terms and conditions of this Consent Decree, to execute it and bind the party each person represents to this document.

FOR THE UNITED STATES OF AMERICA:

JOEL GROSS
Chief, Environmental Enforcement Section
Environment and Natural Resources Division
U.S. Department of Justice

GREGORY L. SUKYS
Environmental Enforcement Section
U.S. Department of Justice
P.O. Box 7611
Washington, D.C. 20044
(202) 514-2068/616-6584 (FAX)

FOR THE UNITED STATES OF AMERICA:

W. CHARLES GRACE
United States Attorney
Southern District of Illinois

Gerald Burke / gk.

GERALD BURKE
Assistant U.S. Attorney
Southern District of Illinois
9 Executive Drive, Suite 300
Fairview Heights, IL 62208
(618) 628-3700/3720 (FAX)

FOR THE UNITED STATES OF AMERICA:

FRANCIS X. LYONS
Regional Administrator
U.S. Environmental Protection Agency
Region 5
77 West Jackson Boulevard
Chicago, Illinois 60604-3590

JEFFERY M. TREVINO
Associate Regional Counsel
U.S. Environmental Protection Agency
Region 5
77 West Jackson Boulevard
Chicago, Illinois 60604-3590

Consent Decree: United States of America v. Chemetco, Inc., Civ. No. 93-482-WDS (S.D. Ill.).

FOR CHEMETCO, INC.:

Patrick M. Flynn, Secretary

Chemetco, Inc.
Route 3 and Oldenburg Road
Hartford, IL 62048

ARMSTRONG TEASDALE LLP

By: _____
JOHN F. COWLING
GEORGE M. VON STAMWITZ
One Metropolitan Sq., Suite 2600
St. Louis, Missouri 63102
(314) 621-5070

Attorneys for Chemetco, Inc.

IT IS SO ORDERED.

Date: _____
UNITED STATES DISTRICT COURT JUDGE

IN THE UNITED STATES DISTRICT COURT
FOR THE SOUTHERN DISTRICT OF ILLINOIS

UNITED STATES OF AMERICA,

Plaintiff, CIV. NO. 93-482-WDS

v. Judge Stiehl

CHEMETCO, INC.,

Defendant.
_____/

CONSENT DECREE

APPENDIX A

(CHART IDENTIFYING MODE COMBINATIONS FOR MAXIMUM OPERATIONS)

FURNACE OPERATIONS

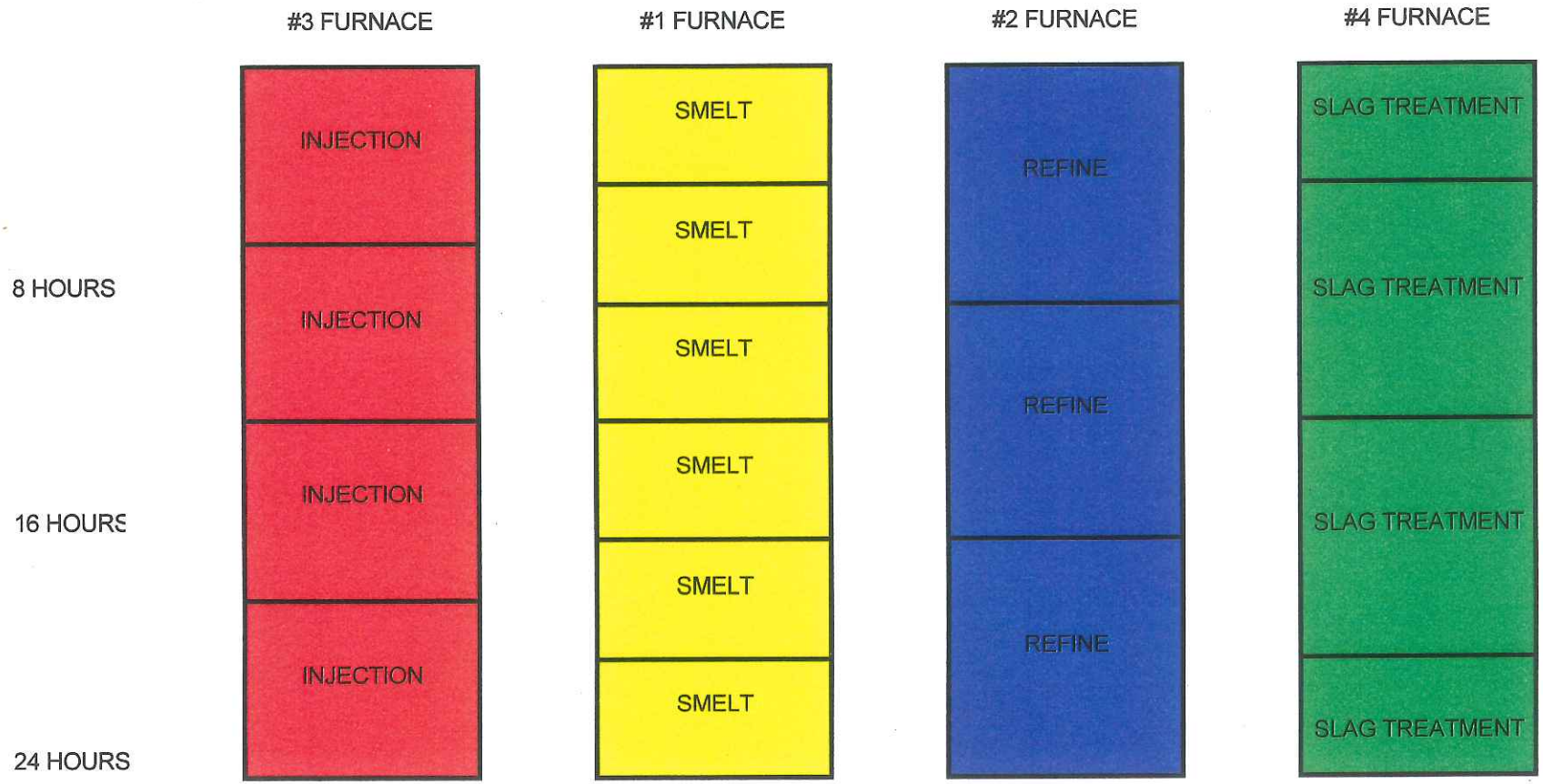

IN THE UNITED STATES DISTRICT COURT
FOR THE SOUTHERN DISTRICT OF ILLINOIS

UNITED STATES OF AMERICA,

Plaintiff, CIV. NO. 93-482-WDS

v. Judge Stiehl

CHEMETCO, INC.,

Defendant.

_____/

CONSENT DECREE

APPENDIX B

(STACK TEST PROTOCOL)

APPENDIX B

STACK TEST PROTOCOLS

I. PURPOSE

U.S. EPA and Chemetco agree that Chemetco shall provide an agreed upon source of credible evidence for demonstrating "continuous compliance" with particulate emission limits for Illinois Administrative Code Title 35, § 212.321 and § 212.322.

In accordance with this Consent Decree, Chemetco shall install and operate a continuous particulate mass monitoring system ("CPMMS"). The CPMMS certification requirements as outlined under Appendix D - IV require that stack testing be performed to establish a calibration curve for each Mass Monitor.

The three emissions testing activities outlined in the consent decree are the following:

1. CPMMS Calibration Testing Activity
   Chemetco will establish the CPMMS calibration curves through regression analysis of stack test data and Mass Monitor data for each of the four Mass Monitors.

2. Baseline Stack Testing Activity
   Baseline stack emissions testing will be conducted to demonstrate that each combination of Chemetco's secondary copper smelting furnaces, as a Process Emission Unit, is in compliance with the particulate emission limit in pounds per hour when it is operated in the mode scenario associated with maximum emissions.

3. Optional Stack Testing Activity
   The Consent Decree, under paragraph 19, provisions Chemetco to conduct "optional stack testing activity" under the provision of unreliable CPMMS data. Chemetco may attempt to demonstrate through stack testing that fewer than all of the elements of the facility's pollution control system are sufficient to meet the applicable standards for one or more furnace modes.

   Appendix B provides stack test protocols for the last two of the three above mentioned activities which are to be certified by a third party stack testing firm. The first protocol is the "Baseline Stack Testing Protocol" and the second protocol is the "Optional Stack Testing" protocol.

II. BASELINE STACK TESTING PROTOCOL

Baseline emissions testing shall be performed in accordance with Section IV. (Methods and Sampling Procedures). The baseline stack testing shall be performed for the maximum mode scenario which is presented in Appendix A. The testing shall be conducted to determine the actual controlled emissions rate of the particulate matter in pounds per hour for each of the two process emission units. The first foundry process emission unit is the combination of Furnace No. 2 & 4. The second process emission unit is the combination of Furnace No. 1 & 3. The stack testing locations shall be in the furnace stacks which are identified by their furnace number. Section IV. C. describes the simultaneous sampling of the two stacks of each process unit and the sampling locations. The minimum testing is presented in Table 1. The allowable particulate matter emission rate in pounds per hour shall be calculated by actual process weight rate of the batch tested.

Chemetco shall be responsible for the monitoring and recording process operating parameters during the emissions testing as described in Section IV. D. Chemetco shall establish baseline operating ranges of pressure drop for the control device systems of each furnace or process unit and of scrubant nozzle pressure for all new active air pollution control equipment. The baseline operating ranges for the control devices shall be recorded and established.

The CPMMS for each stack consists of a Mass Monitor which measures particulate matter concentration and a Flow Monitor which measures the volumetric air flow in the stack. The testing will establish the acceptable range for the CPMMS. The Reference Method ("RM") testing shall be conducted in such a way, that the results are representative of the source emissions and can be correlated to the CPMMS data in pounds per hour.

In summary, a minimum of twelve (12) one-hour runs of Method 5 particulate matter sampling shall be conducted over three (3) batch cycles on the four (4) furnace stacks to determine the compliance with allowable emissions limits; associated operating baseline parameters; and the acceptable range of each CPMMS system. The Method 1, 3, 4, and 5 sampling procedures and equipment are presented later in detail in Section IV.

III. OPTIONAL STACK TESTING PROTOCOL

Paragraph 19 of this Consent Decree, contains a provision for the use of emission limits achieved during optional stack testing instead of CPMMS data. The provision shall apply to the performance

of stack tests if either party concludes that the CPMMS or the data derived there from is unreliable, pursuant to the terms of the Consent Decree. The testing shall be performed in accordance with Section IV. and establish the particulate matter emission rates in pounds per hour to compare with actual batch process weight rates for each process unit. The same parameters shall be tested and recorded as presented in Section II. and IV.

IV. METHODS AND SAMPLING PROCEDURES

A. EMISSIONS TEST METHODS

The third party testing firm shall conduct particulate matter (PM) emissions testing at the four furnace stack locations. Table 1 presents a sampling and analytical matrix for this test program.

The testing firm shall conduct the testing program in accordance with the recent EPA reference test methodology as outlined in Title 40, Part 60, Appendix A of The Code of Federal Regulations (40 CFR 60). Specifically:

i)	EPA Method 1	Determination of traverse points for velocity and PM sampling.
ii)	EPA Method 2	Stack gas velocity determination with calibrated Type "S" pitot tubes and calibrated Type "K" thermocouples.
iii)	EPA Method 3	Dry gas molecular weight determination through analysis of CO, O_2, and CO_2.
iv)	EPA Method 4	Volumetric flow rate and moisture content determination with calibrated dry gas meters and calibrated Type "K" thermocouples.
v)	EPA Method 5	Isokinetic determination of particulate matter (PM) with a complete borosilicate glass (and/or quartz) sample train.

B. PARTICULATE MATTER SAMPLING EQUIPMENT AND PROCEDURES

The sampling equipment will consist of the following:

1. Pitot Assembly
   a. Glass with a sharp, tapered leading edge.
   b. Probe — Stainless steel sheath with a ⅝" OD glass liner wrapped with nichrome wire rheostat controlled and capable of maintaining a temperature of 248°F ±25°F.

Table 1 Sampling and Analytical Matrix Typical for Four Furnaces Chemetco, Inc.					
Sampling Location	**Parameter**	**Sampling Method**	**Analytical Method**	**Duration of Test Runs**	**Total Number of Test Runs**
Location (Exhaust stack)	Sampling Point Determination	Method 1	Calculated	---	
	Velocity & Volumetric Flow Rate	Method 2	Type S - Pitot Tube	1 Hr.	3
	Molecular Weight	Method 3	Orsat	1 Hr.	3
	Moisture	Method 4	Volumetrically	1 Hr.	3
	Particulate Matter	Method 5	Particulate-Gravimetrically	1 Hr.	3

Simultaneously sampling for each process emission unit: Furnace No. 2 & 4; Furnace No. 1 & 3

c. Pitot — Type "S" constructed and attached to probe according to specifications outlined in the "Code of Federal Regulations, Chapter I, Title 40, Part 60, Appendix A, Method 2."
d. Orsat probe — Stainless steel ¼" tubing attached to pitot tube in an interference-free arrangement.
e. Thermocouple — Type "K" attached to the pitot tube such that the tip has no contact with the metal and does not interfere with the pitot tube face openings.

2. Filter Holder — Borosilicate glass with a glass fritted filter support and a silicone rubber sealing gasket.

3. Filter Heating Assembly — Controlled heating element in aluminum module attached to end of probe; capable of maintaining 248°F ±25°F.

4. Impingers — Four glass impingers connected in series with glass fittings and placed in an ice bath. The first, third, and fourth impingers will be of the modified Greenburg-Smith design. The second impinger will be of the Greenburg-Smith design with a standard tip. Final gas exit temperature will be measured to within ±5°F with a thermometer immersed in the gas stream.

5. Control Box — Module containing the vacuum gauge, leak-free pump, thermometer capable of measuring temperature to within ±5°F, dry gas meter with a minimum of 2% accuracy, valves and related equipment as required to maintain an isokinetic sampling rate and to determine sample volume.

6. Nomograph — To determine isokinetic sampling rate.

A schematic of the sampling train is shown in Figure 2.

Prior to leaving the laboratory, glass fiber filters are numbered for identification purposes, heated for 2 hours at 220°F, desiccated for 2 hours, and preweighed to the nearest 0.1 mg.

Upon arrival at the sampling site, the control box will be leak-checked from the pump to the orifice at 5" to 7" of water.

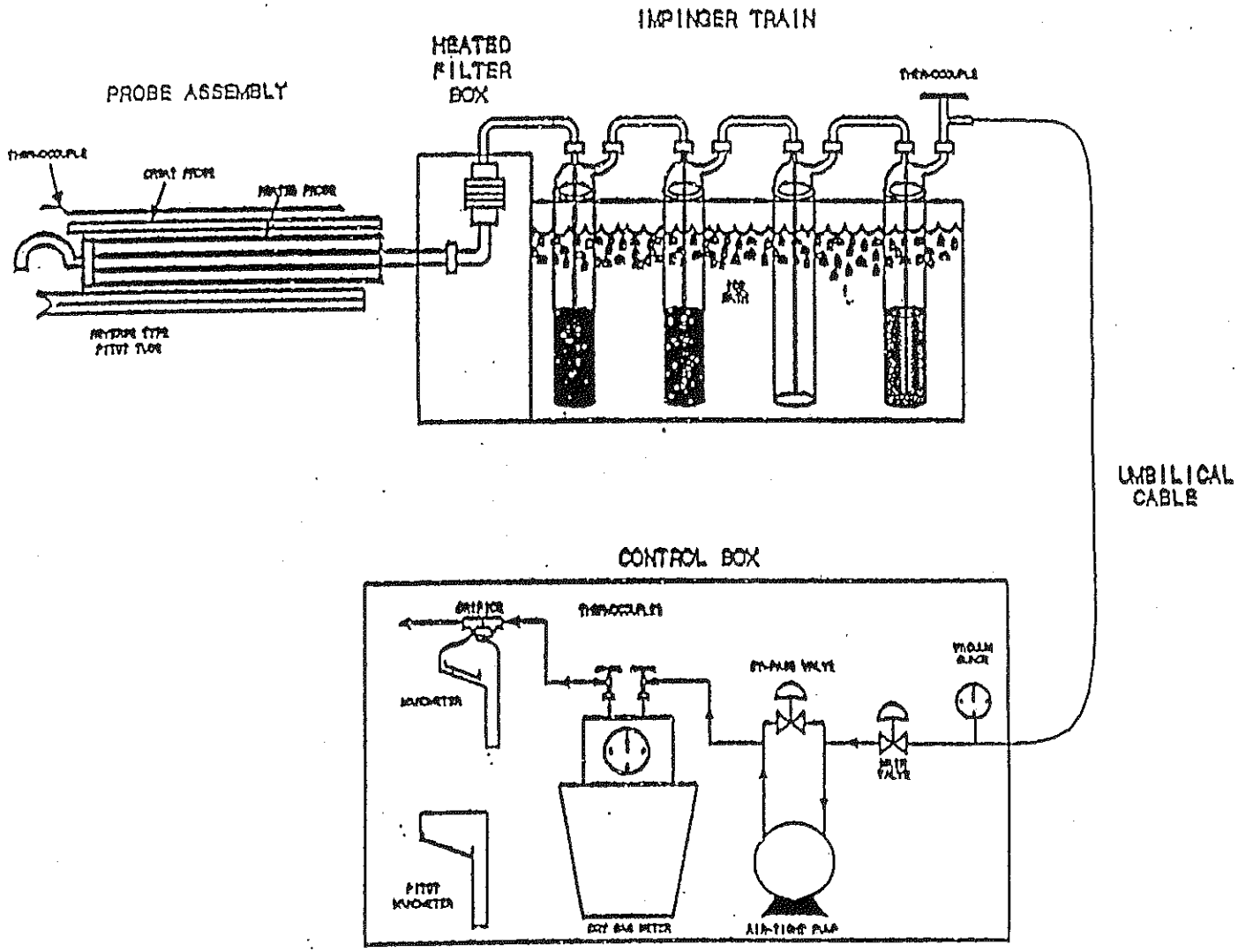

FIGURE 2
Particulate and Lead Sampling Train
EPA Method 12

Figure 2

The sampling train will be prepared in the following manner: 100 ml of distilled water added to each of the first two impingers. The third impinger will be left empty and the fourth impinger will contain approximately 250 grams of silica gel.

After assembling the train with the pitot tube, as shown on the schematic, the system will be leak-checked by plugging the inlet to the probe nozzle and pulling a 15" mercury vacuum. A leakage rate not to exceed 0.02 cfm is considered acceptable. The pitot tube system will also be leak-checked at 2" to 3" of water, and any leaks found will be corrected.

The probe nozzle size and moisture content will be derived from a preliminary velocity and temperature traverse measurement. Sampling points within the stack will be selected in accordance with EPA Method 1 (40 CFR 60, Appendix A). The sampling probe will be attached and the heater adjusted to provide a gas temperature of approximately 248°F ±25°F.

The filter heating system will be turned on, and ice placed around the impingers. After a suitable warmup period, the nozzle will be placed at the first traverse point with the flow adjusted to isokinetic conditions. Using calculated sampling points and sampling times, the probe is repositioned to the next traverse point, and isokinetic sampling is reestablished. This will be accomplished for each point along the traverse until the run is completed. Readings are taken at each traverse point and at the calculated time interval. At the conclusion of each run, the pump will be turned off and the final readings recorded. A final leak check of the sampling system will be performed, as previously described at the highest vacuum encountered during the test run. A leak check of the pitot system will also be repeated.

C. SAMPLING LOCATIONS

The emission samples for particulate matter (PM) shall be collected simultaneously from two different locations. The two locations shall be the exhaust stacks from each process emission unit. The emission samples at this stack location shall be collected from the existing 4 foot 10 inch circular duct equipped with two, 4 inch I.D. sampling ports. The upstream and downstream diameters are configured such that the maximum number of sample points shall be required. Exact measurements shall be conducted in the field the day of the testing, but the testing firm expects to use twelve sampling points on each traverse, for a total of at least 24 sampling points. See Figures 1-A and 1-B for the process layout.

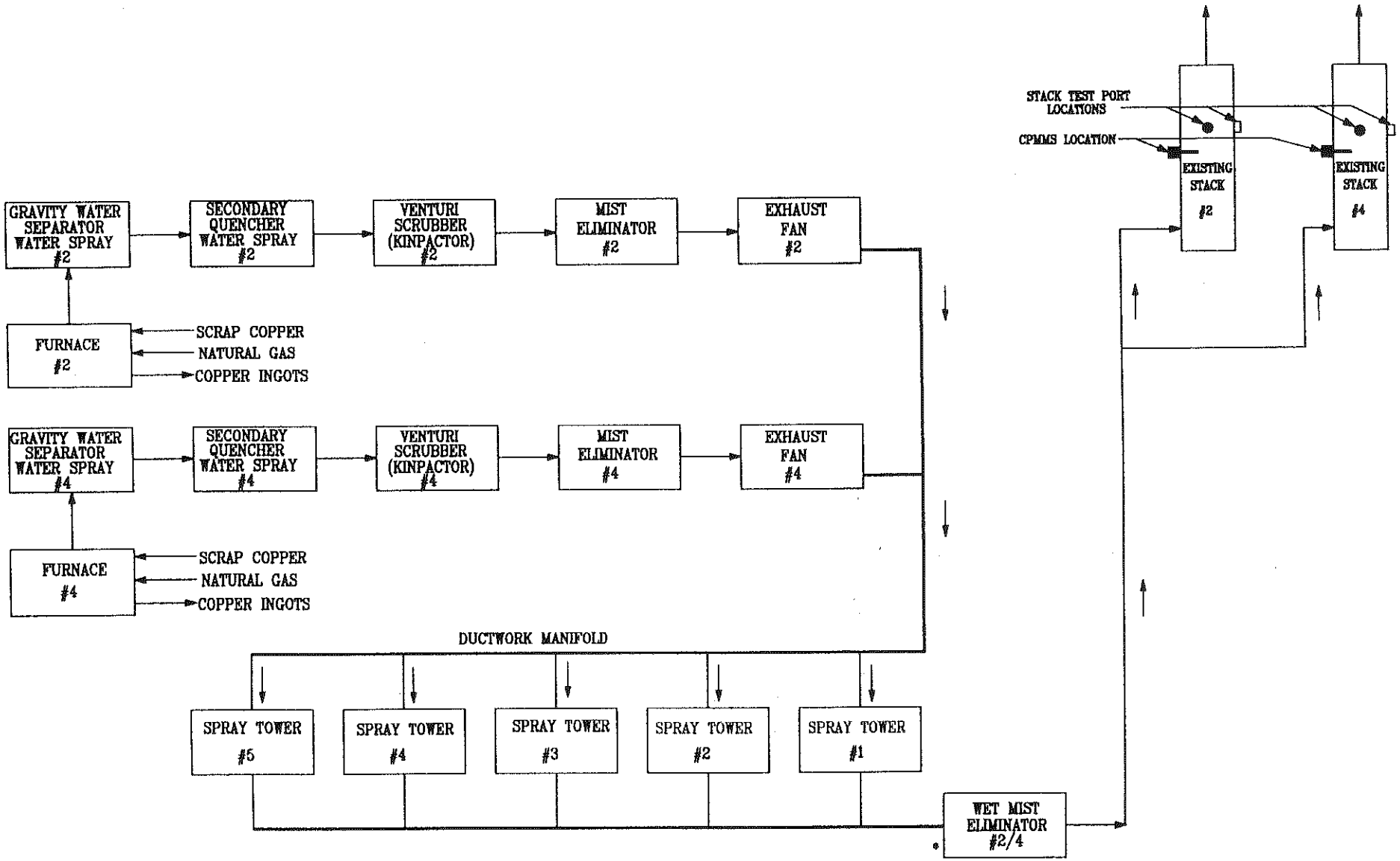

FIGURE 1-A

* INCLUDES SPRAY VANE SECTION, MIST ELIMINATOR SECTION, AND DRY FILTER SECTION

CHEMETCO
CPMMS CERTIFICATION
PROCESS EMISSION UNIT 2/4
DATE: 10-15-99

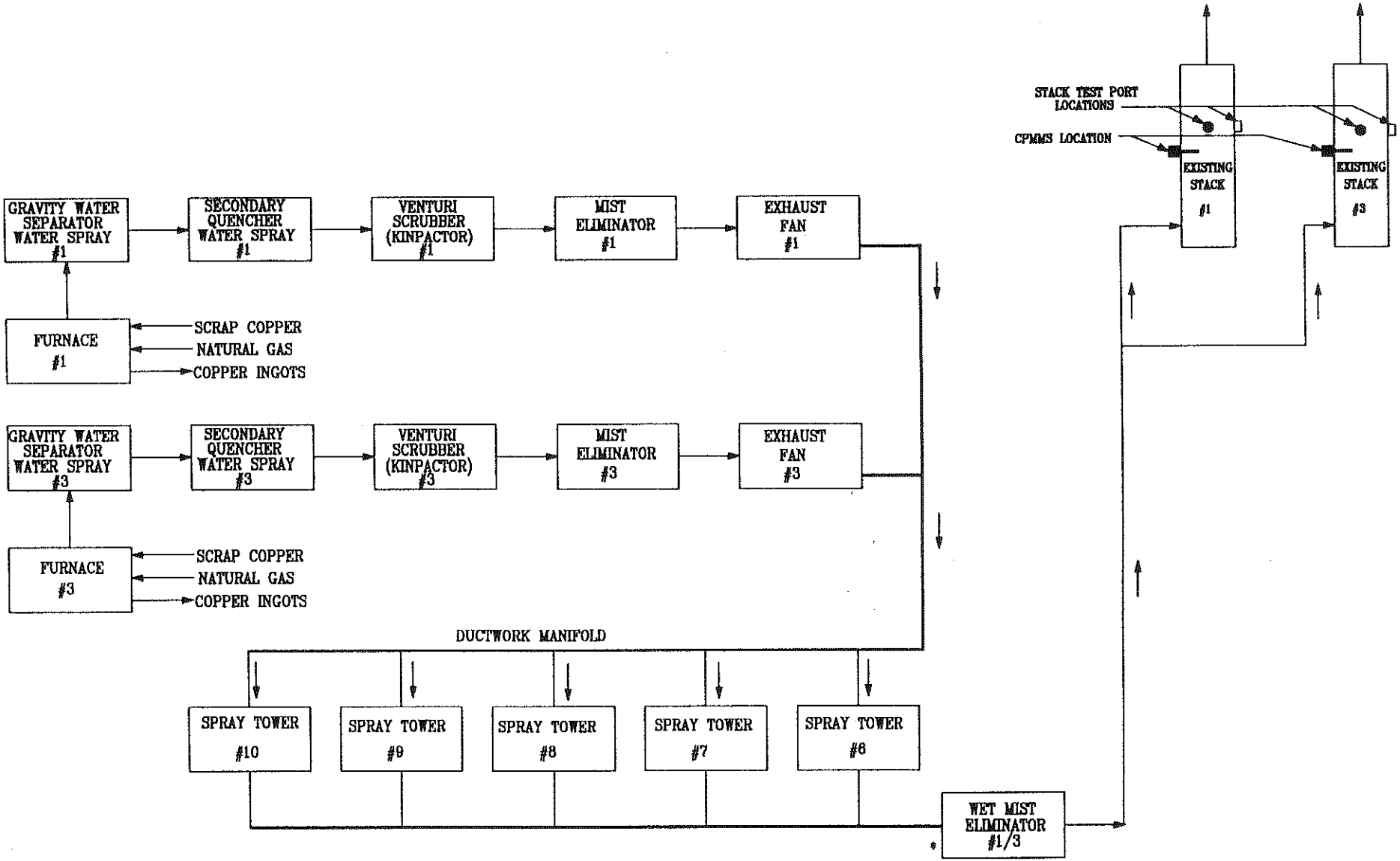

FIGURE 1-B

* INCLUDES SPRAY VANE SECTION, MIST ELIMINATOR SECTION, AND DRY FILTER SECTION

CHEMETCO
CPMMS CERTIFICATION
PROCESS EMISSION UNIT 1/3
DATE: 10-15-99

D. OPERATION PARAMETERS TO BE MONITORED

Chemetco personnel shall be responsible for monitoring and recording process operating parameters during the emissions testing program. These shall include at a minimum the following:

- heat logs for the furnaces being rested,
- pressure drop across the Venturi scrubbers, and
- water flow rate to each water spray tower.

Chemetco personnel shall observe readings from the appropriate instrumentation and document the readings at a minimum of every 15 minutes during the test runs. The process operations data shall be compiled and averaged for each of the 1-hour test runs.

Chemetco shall develop recipes for furnace changes that are representative of worst case normal operations for generation of process particulate emissions. Each type of material in each charge shall be sampled for analysis or graded to determine lead and zinc percentages by weight. Sampling and analysis of the charge materials shall be conducted in accordance with Chemetco's Standard Operating Procedures (SOP) Number 1 or 2.

Chemetco shall provide written notice to IEPA upon its decision on the charge recipes. The recipes shall be kept in the Maintenance Engineering Department under the supervision of Mr. Kim Fock.

E. SAMPLE RECOVERY

The tester will rotate and agitate each impinger, so that the impinger contents serve as a rinse solution, and transfer the contents to a graduated cylinder to measure the volume. After the determination of the volume, the solution will be transferred to the "postfilter" container.

The probe nozzle, and all sample-exposed surfaces are washed with reagent-grade acetone and put into a clean sample bottle marked "prefilter." A brush will be used to loosen any adhering particulate matter, and subsequent washings will be put into the "prefilter" container. Any filter material that adhered to the filter support surfaces will be carefully removed and added to the filter container. The silica gel will be removed from the fourth impinger and transferred to its original container.

F. ANALYTICAL PROCEDURES

PM will be determined by the gravimetric analysis of the probe/front half wash (acetone solution) and glass fiber filters in accordance Method 5. The filter and any loose particulate matter will be transferred from the filter container to a clean, tared glass weighing dish. The filter will be placed in a desiccator for 24 hours and weighed to a constant weight. The original weight of the filter will be deducted, and the weight gain recorded to the nearest 0.1 mg.

The "prefilter" wash and blank acetone solutions will be transferred to individual clean, tared beakers, then evaporated to dryness and desiccated to a constant weight. The weight gain of the "prefilter" is adjusted for the blank and recorded to the nearest 0.1 mg. The silica gel is weighed, and the weight gain is recorded to the nearest 0.1 gram.

All samples and blanks will be analyzed by the recommended procedures stipulated for each EPA Reference Method. Field blanks and QA/QC practices will be strictly followed as outlined in the EPA analytical procedures. Chain of Custody worksheets will accompany all samples from collection at the facility, throughout transportation, and during the analysis period. The testing firm has requested 7 day turnaround of laboratory sample analysis.

G. OXYGEN (O_2) AND CARBON DIOXIDE (CO_2) SAMPLING

As required by EPA Method 3 (40 CFR 60, Appendix A), oxygen and carbon dioxide samples will be collected by an integrated bag system. The collected sample is then analyzed using a Fyrite gas analyzer. Oxygen and carbon dioxide concentrations will be determined in percent of stack gas and stack gas molecular weight is then calculated.

A schematic of the integrated bag sampling train is presented in Figure 3.

H. SAMPLING PROCEDURES

The sampling procedure consists of the following leak check and sampling techniques. Prior to sampling, the bag is leak-checked to 2 to 4 in. of water. The inlet to the condenser is plugged, and a vacuum of 10 in. of Hg is created. The outlet of the pump is then plugged and the pump turned off. The vacuum is observed for 30 seconds to determine any leakage. The vacuum must hold steady for at least 30 seconds for the leak test to be acceptable. The sample line is then purged with stack gas and the bag is connected. Sampling is conducted at an appropriate constant rate at the same traverse points and for the same length of time as the other testing parameters. At the conclusion of the run, the pump is turned off and the bag sealed.

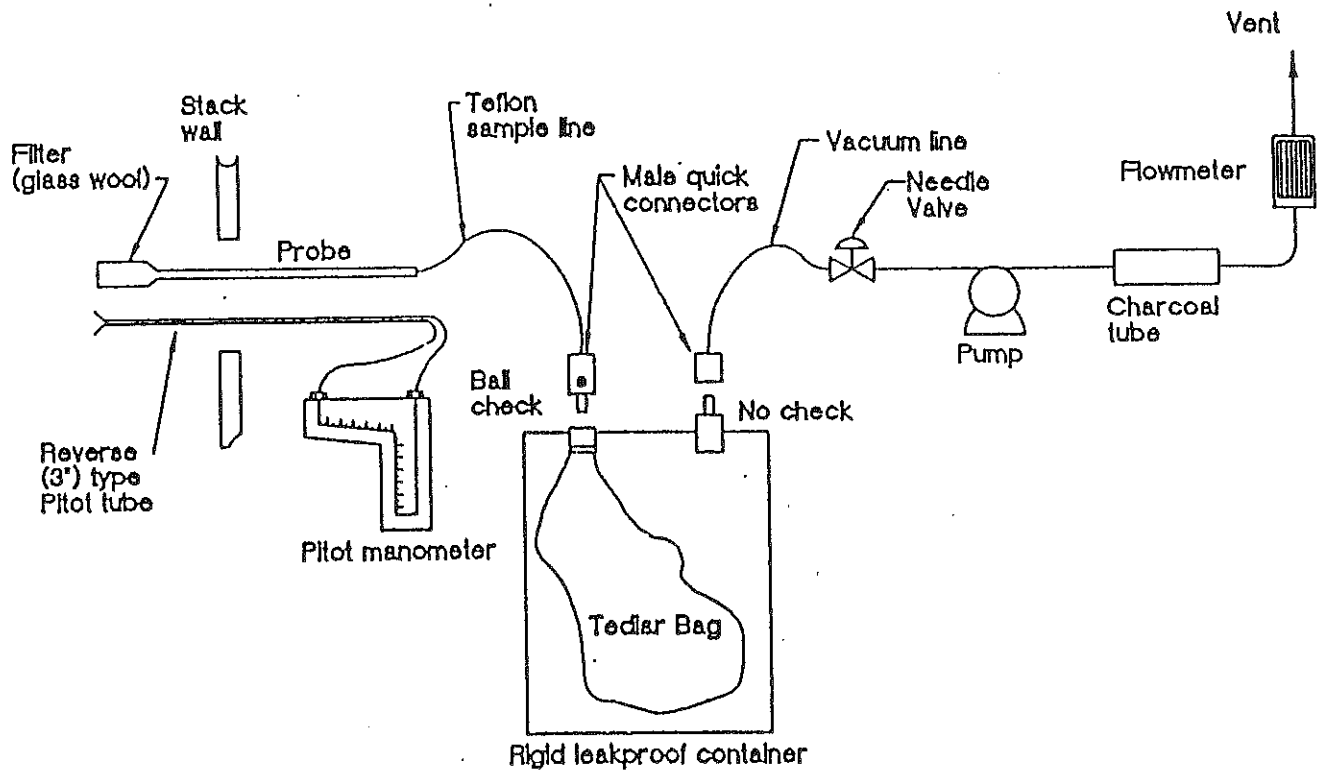

SOURCE: ENVIRONMENT REPORTER

FIGURE 3
Integrated Bag Sampling Train

Figure 3

I. ANALYTICAL PROCEDURES

The percentage of effluent gas which was O_2 and CO_2 are measured directly. Nitrogen and CO content are determined by subtracting the sum of CO_2 and O_2 percent from 100 percent.

The dry molecular weight is calculated using the following equation:

$$M_d = 0.440 \times \% CO_2 + 0.320 \times \% O_2 + 0.280 \times (\% N_2 + \% CO)$$

J. QUALITY ASSURANCE/QUALITY CONTROL

Strict Quality Assurance/Quality Control (QA/QC) measures will be observed for all sampling and analysis performed for the Chemetco test program. The QA/QC program is designed to provide the highest quality data in terms of the accuracy and precision of the measurements as well as the representativeness and comparability of the results. All procedures and quality control guidelines specified in the appropriate methods and in the EPA Quality Assurance Handbook for Air Pollution Measurement Systems - Volume II will be strictly followed during the test program, in addition to the testing firm's more stringent internal quality control standards. All sampling will be conducted in a manner so that each test run of each method is conducted as simultaneously as possible with other methods.

1. Manual Methods QA/QC

The QA/QC program for this test series includes all of the QA/QC guidelines given by EPA in the attached test methods and procedures in the testing firm's more stringent internal QA/QC standards. Primary components of the QA/QC program are listed below:

- Equipment Calibrations - including meter boxes, thermocouples, pitot tubes and analytical balance.

- Equipment Leak Checks - including pre- and post-test sample train leak checks, meter and pump leak checks, pitot leak checks and ORSAT system leak checks.

- Careful monitoring and documentation of sample train critical parameters including temperatures and meter pressure.

- Preliminary measurements to aid in calculating the sampling K-factor used to determine isokinetic sampling rate.

- Maintaining an isokinetic sampling rate so that the velocity through the sampling nozzle matches the surrounding flue gas stream velocity to within +/- 10%.

- Field and Laboratory Blanks will be conducted for each set of samples.

- Careful chain of Custody procedures will be observed for all samples and all samples will be refrigerated after collection and recovery and during shipping and storage in the laboratory prior to analysis.

- All samples will be analyzed within the required hold times of each individual method.

All sampling trains will be leak checked prior to and after each sampling run. If the leak rates exceed the maximum acceptable leak rate of 0.02 cubic feet per minute, corrective action will be taken. Sample train leak checks will be performed at a vacuum of at least 5" Hg greater than the highest observed vacuum observed during sampling. All sample trains will meet the +/- 10% criterion for isokinetic sampling or corrective action will be taken. All particulate matter samples will be desiccated and replicate analyses will be performed until agreement of 0.5 mg between weighing's which will be six hours apart. Blanks and other quality control indicators as specified for each technique will be collected and analyzed as appropriate.

2. **Chain of Custody**

Chain of Custody worksheets are prepared daily at the test location detailing the person(s) immediately responsible for the recovery of every sample. The Chain-of-Custody forms are prepared with detailed identifications of each sample, the analysis requirements, and the persons immediately responsible for the recovery. Signatures of every person in contact with the samples from the test location to the laboratory are recorded. Test date, sample identification, and the laboratory performing the analyses are identified on the Chain of Custody worksheet.

K. PROJECT CONTACTS

Chemetco, Inc.
Route 3 and Chemetco Lane
Hartford, Illinois 62048
Mr. Kim Fock
Manager, Maintenance & Engineering
Telephone: 618-254-4381
Fax: 618-254-0138

Shell Engineering & Associates, Inc.
2403 W Ash Street
Columbia, MO 65203-0045
David L. Seidel, P.E.
Manager, Special Engineering Projects
Telephone: 573-445-0106
Fax: 573-445-0137

IN THE UNITED STATES DISTRICT COURT
FOR THE SOUTHERN DISTRICT OF ILLINOIS

UNITED STATES OF AMERICA,

Plaintiff, CIV. NO. 93-482-WDS

v. Judge Stiehl

CHEMETCO, INC.,

Defendant.
_____/

CONSENT DECREE

APPENDIX C

(RAW MATERIALS MANAGEMENT SYSTEM PROTOCOL REQUIREMENTS)

Raw Materials Management System Protocol Requirements

Chemetco shall utilize the raw materials management system and process analyses described in this Protocol.

a. Within 180 days after entry of this Consent Decree, Chemetco shall develop and utilize and maintain a computer-based Raw Material Data Base program to calculate and record the Weighted Average of zinc and lead percentages for each recipe for each Furnace Charge.

(1) Chemetco shall generate its Raw Material Data Base each day and retain it at the Facility until termination of this Consent Decree;

(2) Chemetco shall make the Raw Material Data Base available to IEPA and U.S. EPA upon request for inspection and photocopying.

b. Chemetco shall employ sampling and analytical standard operating procedures conducted in accordance with Chemetco's Standard Operating Procedure No. 1 or 2, where applicable, as set forth in Appendix C, whenever Chemetco handles, accepts, or stores any scrap material and assigns an assay based on sampling and analyses, historical data, or sight-grading, to any scrap material it accepts for use in the Facility's Furnaces.

c. Chemetco shall maintain a scrap material history file: after Chemetco assigns any scrap material an assay, that assignment shall become a part of the scrap material history file and added to the Raw Material Data Base.

d. Chemetco shall transfer to a storage area assigned a specific location code any scrap material after it is accepted for processing. Chemetco shall include this code in the Raw Material Data Base.

e. Chemetco shall maintain any scrap material in a separate stockpile area and assign such separate stockpile area a separate location code in Chemetco's Raw Material Data Base if Chemetco accepts such scrap material for processing and the zinc or lead percentage in such scrap material exceeds the Weighted Average determined for that type of material during the stack tests.

IN THE UNITED STATES DISTRICT COURT
FOR THE SOUTHERN DISTRICT OF ILLINOIS

UNITED STATES OF AMERICA,

Plaintiff, CIV. NO. 93-482-WDS

v. Judge Stiehl

CHEMETCO, INC.,

Defendant.
_____/

CONSENT DECREE

APPENDIX D

(CPMMS PROTOCOL)

CONTINUOUS PARTICULATE MASS MONITOR SYSTEM PROTOCOL
(FOR CONSENT DECREE IN U.S. v. CHEMETCO, INC., NO. 93-482-WDS, S.D. ILL)

I. Purpose

U.S. EPA and Chemetco agree that the Chemetco shall procure, install, calibrate, operate, and maintain a Continuous Particulate Mass Monitoring System ("CPMMS") on each of the emission points (stacks) serving the Furnaces and their air pollution control devices to:

A. Provide Chemetco with near real time, particulate mass emissions rate data for improving operation and maintenance of the Furnaces and the associated air pollution control devices and thereby minimizing particulate and lead emissions at all times;

B. Provide U.S. EPA and Chemetco with continuous particulate mass emissions information in the units of the applicable Illinois emissions standard and thereby minimize their reliance upon surrogate measurements, like opacity and pressure drop across control devices, for monitoring compliance with the Furnaces' particulate emissions rate;

C. Minimize the number of stack tests that would be required, by the Consent Decree to which this Protocol is appended ("Consent Decree"), for determining 'continuous compliance' with the Furnaces' particulate emissions rate and for potentially eliminating the need for stack tests after the certification of the CPMMSs and through the life of the Consent Decree;

D. Provide an agreed source of credible evidence for demonstrating 'continuous compliance' with the particulate emission limits;

E. Demonstrate the utility of a CPMMS for monitoring a secondary copper smelter's furnace emissions.

II. Monitoring Equipment

A. The CPMMS shall be comprised of a continuous particulate mass monitor ("Mass Monitor") measuring particulate matter concentration on an hourly basis and a monitoring device or system ("Flow Monitor") for measuring the exhaust gas flow on an hourly basis. Chemetco shall provide a means of computing and recording the values of the particulate emission rate in pounds per hour from the Mass Monitor hourly mass concentration values and the Flow Monitor hourly values. Chemetco shall also provide a means of computing and recording the allowable particulate emission rate on an hourly basis for each "Process Emission Unit" using the equations in Illinois Administrative Code Title 35, §212.321 and §212.322 and information on the Furnace charges from the Raw Materials Management System.

III. Process Emission Units

A. CPMMSs shall be installed to monitor continuously the particulate mass emissions rate from the Process Emission Units - Furnaces No. 1 and 3 discharging through Stacks No. 1 and 3, and Furnaces No. 2 and 4 discharging through Stacks No. 2 and 4.

B. Furnaces No. 1 and 3, as a Process Emission Unit, shall be subject to a process weight rate emission limitation pursuant to Illinois Administrative Code Title 35, §212.322. For each hour of operation of the Process Emission Unit, Chemetco shall compute and record the allowable particulate emission limit and shall combine the CPMMSs' measured emissions from each stack to provide, in pounds per hour, the particulate matter emission rate.

C. Furnaces No. 2 and 4, as a Process Emission Unit, shall be subject to a process weight rate emission limitation pursuant to Illinois Administrative Code Title 35, §212.321.For each hour of operation of the Process Emission Unit, Chemetco shall compute and record the allowable particulate emission limit and shall combine the CPMMSs' measured emissions from each stack to provide, in pounds per hour, the particulate matter emission rate.

IV. Installation and Certification Schedule

A. Within 60 days following Chemetco's receipt of U.S. EPA's approval of the Continuous Particulate Mass Monitoring Plan required by Paragraph 18 of the Consent Decree, Chemetco shall procure and install a CPPMS on each stack serving Furnaces No. 1 & 3 and on each stack serving Furnaces No. 2 & 4. Chemetco shall install the Mass Monitors pursuant to the installation requirements found in Section 5 of ISO 10155:1995(E); (with the exception that the particulate matter reference measurement method to be used should be Reference Method 5, Appendix A, 40 C.F.R. Part 60 instead of ISO 9096) and shall install the Flow Monitors pursuant to the installation requirements found in Section 1.2.1 of Appendix A, 40 C.F.R. Part 75. If Chemetco chooses to install CPMMSs which require heated bypass duct systems for proper sampling and processing of wet, aerosol-laden exhaust gases, the installation and certification schedule shall be extended an additional 60 days to provide for the design and engineering of those bypass systems.

B. No later than 30 days after Chemetco installs and begins to operate its CPMMS, Chemetco shall conduct and complete tests to demonstrate that the "Mass Monitor" conforms to the performance characteristics and test specifications found in the international standard for the automated monitoring of the mass concentration of particulate matter in stationary source gas streams, ISO 10155:1995(E);

C. No later than 30 days after Chemetco installs and begins to operate its CPMMS, Chemetco shall conduct and complete tests to demonstrate that the installed "Flow Monitor" conforms to the performance characteristics and test specifications found in the 40 C.F.R. Part 75 Appendix A, Sections 2.1.4, 2.2.2, 6.3.2, 6.5.2, 6.5.8, 6.5.9, 6.5.10, 7.2.2 and 7.3

D. From the date of installation and operation of the CPMMS to no later than 210 days after entry of the Consent Decree, Chemetco's combined emissions from Furnaces 1 & 3 discharged through stacks 1 & 3 shall comply with an interim particulate matter emission rate of 32.00 pounds per hour and Chemetco's combined emissions from Furnaces 2 & 4 discharged through stacks 2 & 4 shall comply with an interim particulate matter emission rate of 13.00 pounds per hour.

V. Certification

A. Chemetco shall test each CPMMS to demonstrate conformance with the certification requirements;

B. Chemetco shall test the Mass Monitor in each CPMMS to demonstrate conformance with the Response Time, Zero Drift, Span, Span Drift and Calibration specifications found in be Section 6 of ISO 10155:1995(E); using the test procedures in Section 7;

C. During the Mass Monitor Calibration test, Chemetco shall acquire at least nine sets of particulate concentration measurements for each CPMMS (each set a minimum of one hour duration). The Chemetco shall arrange for acquisition of at least three sets of such data reflecting a combination of Furnace Modes within a Process Emission Unit that are associated with low emission rates, at least three sets of data reflecting a combination of Furnace Modes within a Process Emission Unit associated with intermediate emission rates, and at least three sets of data reflecting a combination of Furnace Modes within a Process Emission Unit associated with high emission rates.

D. Chemetco shall test the Flow Monitor in each CPMMS to demonstrate conformance with the Calibration Error specification - less than or equal to 3.0 percent of span - using the test procedures in Sections 6.3.2 and 7.2.2 of 40 C.F.R. Part 75 Appendix A; the span of the Flow Monitor shall be 125 percent of either the maximum potential velocity or maximum potential flow (scfh -wet basis) in the monitored stack;

E. Chemetco shall test the Flow Monitor in each CPMMS to demonstrate conformance with the Relative Accuracy specification - 15 percent - using the test procedures in Sections 6.5.2, 6.5.4, 6.5.8, 6.5.9 and 6.5.10.

VI. Quality Control

A. Chemetco shall perform on the Flow Monitor a daily calibration error test and an interference check (40 C.F.R. Part 75, Appendix A, Sections 2.2.2.1 and 2.2.2.2, respectively). The Chemetco shall perform on the Mass Monitor a daily Zero and Span Drift Check (ISO 10155:1995(E) Section 7.3.3). Corrective actions or adjustments are required on the monitors if calibration error or drift values or accumulated automatic adjustments exceed 6 percent of the

span or interference is detected.

VII. Record Keeping & Reporting

A. Within 30 days following completion of certification tests required by Paragraph 18.c. of the Consent Decree, Chemetco shall report to U.S. EPA, in accord with provisions in the Consent Decree, test results and supporting data on the certification of each of the continuous particulate mass monitoring systems.

B. Chemetco shall maintain in an electronic database records of its process weight (furnace charge) in tons per hour, the Process Emission Unit's allowable emission rate in pounds per hour, each Mass Monitor's hourly values, each Flow Monitor's hourly value, each CPMMS emission rate in pounds per hour, the Process Emission Unit's emission rate in pounds per hour, and the percentage of lead in the charge. Those records should be available for review and inspection by U.S. EPA and IEPA.

C. Chemetco shall compute and store the allowable emission rates for Furnaces No. 1 & 3 using the equation $E = C + A(P)^B$.

E = allowable emission rate in pounds per hour.
C = 0 for process weight rates up to 30 tons per hour or -40 for process rates in excess of 30 tons per hour.
A = 4.10 for process weight rates up to 30 tons per hour or 55.0 tons per hour for process weight rates in excess of 30 tons per hour.
^{B} = 0.67 for process weight rates up to 30 tons per hour or 0.11 tons per hour for process weight rates in excess of 30 tons per hour.
P = process weight rate in tons per hour.

D. Subject to the provisions of Paragraph 14.a. of the Consent Decree, Chemetco shall compute and store the allowable emission rates for Furnaces No. 2 & 4 using the equation $E = A(P)^B$.

E = allowable emission rate in pounds per hour.
A = 2.54 for process weight rates up to 450 tons per hour or 24.8 tons per hour for process weight rates in excess of 450 tons per hour.
^{B} = 0.534 for process weight rates up to 450 tons per hour or 0.16 tons per hour for process weight rates in excess of 450 tons per hour.
P = process weight rate in tons per hour.

E. No later than 30 days after the end of a calendar quarter, starting with the calendar quarter containing the certification of the CPMMS, Chemetco shall submit to U.S. EPA a report for the calendar quarter of all one hour periods of particulate emissions rates (pounds per hour) for each Process Emission Unit that were in excess of the limits established in Illinois Administrative Code Title 35, §212.321 or §212.322. The report shall include: date, time, magnitude of

particulate emission rate, the corresponding allowable emission rate, statements on the probable cause of the excess emissions, statements on any corrective action taken, claims for exemptions, and information on any periods of non-operation or malfunction of the CPMMS. The report should contain a signed statement certifying that "the information contained in the report is true, accurate, and complete." If there were no emission rates in excess of the allowable emission limits for the whole calendar quarter, Chemetco should report that fact.

VIII. Facility Changes

If during the duration of the Consent Decree, Chemetco materially changes the pollution control devices at its facility, Chemetco shall adjust, recalibrate, or recertify its CPMMS or install additional monitoring equipment if necessary, to accomplish the continuous mass monitoring requirements of this Decree.

RECEIVED
JUN 0 4 1999
AIR ENFORCEMENT BRANCH
U.S. EPA, REG. 5

CHEMETCO
FESOP Request & Air Pollution Emissions Determination

June 26, 1995
(Revised - April 23, 1996)

Shell Engineering
& Associates, Inc.
2403 West Ash, Columbia, MO 65203
573-445-0106 ▪ FAX (573) 445-0137

TABLE OF CONTENTS

		Page
1.0	Introduction	1
2.0	Process Descriptions	2
2.1	Incoming Material Processing	2
2.1.1	Yard Stockpile Maintenance	2
2.1.2	Dust Material Preparation and Injection System	2
2.2	Converter Processes	4
2.2.1	Smelting/Slag Treatment	4
2.2.2	Refining	5
2.2.3	Melting	5
2.3	Anode Casting	5
2.4	Slag Screening Plant	6
2.5	Granulated Slag Plant	6
2.6	Fugitive Emissions	7
3.0	Emission Control Devices	7
3.1	Dust Injection System (DIS) Controls	7
3.2	Direct Furnace Exhaust	8
3.3	Furnace Room Exhaust	9
3.3.1	Wheelabrator Jet III Baghouse	9
3.3.2	ITK Baghouse	10
3.4	Sand Silo	10
3.5	Fugitive Dust Controls	11
4.0	Emission Estimates (Potential and Allowable)	11
4.1	Foundry Emissions	11
4.2	Natural Gas Usage	12
4.3	Dust Injection System	12
4.4	Slag Screening Plant	12
4.5	Granulated Slag Plant	13
4.6	Fugitive Dust Control Plan	13
5.0	Operation and Maintenance Procedures	13
5.1	Furnaces and Control Systems	13
5.2	Dust Injection System (DIS)	14
5.3	Slag Screening Plant	14
5.4	Granulated Slag Plant	14
6.0	Compliance Program	14
6.1	Proposed Emission Limitations	14
6.2	Emissions Testing Program	17
6.3	Record Keeping and Reporting Program	20
6.4	Ambient Air Monitoring Program	21
6.5	Fugitive Emission Control	22
7.0	Summary and Recommendations	23
	Table 6.1 Emission Limitations	15-16
	Appendix A - Process Flow Diagrams	A-1
	Appendix B - Emissions Summaries	B-1

In January 1995, Chemetco, Inc., commissioned Shell Engineering & Associates, Inc. (SEA) to provide assistance in determining air emissions and preparing this FESOP application document for Illinois Environmental Protection Agencies' (IEPA) review..

2.0 Process Descriptions

Secondary copper recyclers reclaim the metal values from low grade copper, brass and bronze scrap, refinery slags, skimmings and other non-ferrous scrap. Chemetco is a producer of unalloyed copper (versus "alloyed", i.e., brass and bronze). Chemetco utilizes Top Blown Rotary Converters (TBRC's) to produce four products from the smelting of copper materials. Each furnace rotates at varying speeds to make processing more efficient. The overall process has a flexibility that enables Chemetco to economically process the broadest range of copper-bearing materials available at any time.

2.1 Incoming Material Processing

Chemetco receives the most varied types of secondary copper materials and scrap in the United States. This is due to the flexibility of the furnace operation itself. It is the function of the grading and receiving personnel to compare incoming lots to purchase contracts; grade or sample material for both payment and inventory; and design and assemble charge lots for the foundry operations. Part of the material preparation is the dust separation and collection system.

2.1.1 Yard Stockpile Maintenance

Yard Stockpile Maintenance includes unloading, grading and sampling, stockpile construction and charge make-up. A smelt charge may be made up of foundry recyclables, motors, copper-bearing material (CBM) and other low grades until the overall desirable constituents percentages are achieved.

2.1.2 Dust Material Preparation and Injection System

The Dust Material Preparation and Injection System is a system for maximizing the recovery of materials such as grinding fines, metal spills and spatters, powders, skimmings and other materials suitable for this processing because of moisture and/or size. This process also contributes to a decrease in both yard and processing emissions. This is because prior to the construction of this operation the above types of materials were stored loose, outside in piles subject to various weather conditions

and wind erosion thereby contributing to metallurgical losses. In addition, wet material hazards caused by charging to a hot furnace are eliminated. Process and combustion emissions from the system itself are minimal.

As shown in Appendix A, the dust injection system consists of a screening plant, dryer, cyclone, baghouse, pneumatic conveying system and dust storage silo. The metal-bearing materials will be stored in various piles in the building depending on content. All materials will be fed via a front-end loader into a skip hoist bucket. From the bucket, they will discharge to a grizzly. The grizzly will separate out oversize materials. Oversize pieces will fall to the side in an oversize bunker and will eventually be charged to a furnace in the normal manner. The materials passing through the grizzly will drop to a pan feeder with a slotted discharge plate which will remove long, thin pieces. The long pieces will be added to the oversize pile and undersize will be sent to the dryer drum.

The drying unit is fired by a natural gas burner that heats the inside chamber to drive moisture out of the -2" material. Combustion at the natural gas burner is the only combustion taking place in this unit.

Feed into the dryer is automatically controlled based on the exhaust temperature and the negative pressure measured inside the dryer. Sensors are used to control the feed rate input, the burner rate and the discharge damper on the fan.

Although cyclones and baghouses are generally considered control equipment, in this instance they also function as effective equipment for the collection and return of the dry dusts to the fines screen. Fines from the dryer are captured by the cyclone and baghouse exhaust systems and the dry particle product will be returned to the "fines screen." Combustion products from the natural gas burner exhausted to the baghouse for control.

The fines screen separates the material greater than 1 mm from the less than 1 mm fines. Oversize pieces will be transferred to a "Dry Side" bunker via the Return Conveyor which is covered. The fines will be transferred via the covered screw conveyor to the Pneumatic Transporter.

From the first two small Pneumatic Transporters, the fines will be transferred to the Storage Silo. Fines will be stored until they are needed for smelt charges in Furnace No. 1 or No. 4. The storage silo is equipped with a bin vent filter.

The method of charging differs from normal scrap charges. A large pneumatic transporter, through a combination of piping and flexible hoses, injects dust under the molten bath directly into the slag layer of the converters.

2.2 Converter Processes

Chemetco operates a two-converter process in which two convertors work as a team: one for Smelting/Slag Treatment (reduction) and one for Refining (oxidation) and Melting (melting). There are several benefits to this including higher metallurgical yields, more efficient furnace use, and fewer hot transfers which reduce fugitive emissions into the building and free the crane for other use.

The following very simply describes the converter processes which is generally known as "extractive metallurgy." That is because Chemetco uses the oxidation/reduction reactions to "extract" the metals necessary to finally achieve anode copper.

2.2.1 Smelting/Slag Treatment

A pre-mix of low grade copper materials such as slags, skims, refinery metals and irony copper metals, is charged to a smelting furnace with gas and flux materials (i.e., iron, lime, sand). The smelting of the copper bearing secondary materials is a reduction process because a portion (up to 30%) of the pre-mix charge is slags. The copper contained in these is often in the form of an oxide, Cu_20 and Cu0 (copper has two valence states). This copper oxide must be reduced to metallic oxide so that it may be extracted from the slag and other metals. This is accomplished by the presence of a reducing atmosphere and the presence of metallic iron and any metallic zinc in the charge materials.

Any copper oxide not reduced passes out with the smelting slag and goes to slag granulation or slag screening. An excess of iron is usually included in the charge to insure that the copper oxide contained in the charge is reduced to a low level since no metal value is realized from the slag.

Any excess iron and zinc, over that required to reduce the copper oxide, reports to the impure metallic intermediary termed "black copper metal." The black copper metal is then transferred to the refining furnace.

Generally, an entire Smelt/Slag Treatment cycle lasts 12 to 16 hours depending on available materials.

2.2.2 Refining

Refining heats are a combination of the black copper product of the Smelt/Slag Treatment cycles, cold charges of mid-grade copper bearing materials, sand oxygen and a fast rotate. This oxidizing atmosphere produces a Refined copper. The copper content in the converter, of course, remains the same, but most of the impurities are driven off into the Refining Slag or zinc oxide.

The destination of the metals in the refining process, depends much on the state of the metal (metallic or oxidic) in the scrap and other material as it becomes part of the molten bath.

At the conclusion of the Refining process, the metallic bath assays greater than 98.5% copper, .5% nickel and less than 1% other impurities including tin, lead, zinc and precious metals. The entire process cycle generally lasts 5-8 hours.

2.2.3 Melting

Following the Refining step, the Melting process may take place. In this step, high grade copper scrap materials, copper skulls and anode rejects, etc. are added to the furnace. These materials are pure copper or are very close to it. The incoming material serves to cool the molten bath somewhat so that it may be transferred to the anode holding furnace where only enough heat is used to keep the metal in a molten state.

The time spent in the Melt cycle depends largely on the amount of high grade materials available and if it is necessary at all.

2.3 Anode Casting

Refined copper metal from the converter process is transferred to the anode holding furnace where it is kept molten until is cast into anodes. Natural gas is used to fire the furnace. During the casting shift, the furnace is slightly tipped to pour a stream of metal into the launder. The launder drains into the intermediate ladle, which is warmed by natural gas inspirators, then into the casting spoon. The casting spoon sits on load cells and the spoon

tilts to empty the metal into the anode mold. Warming inspirators are used to keep the metal in the casting spoon from solidifying.

After the metal is poured into the mold, the casting wheel rotates to the next mold. After several anodes, the first mold is sprayed with water to cool the metal and completely solidify it so that by the time it arrives at the Take-Off station, the anode can be pushed up and the hooks can lift the anode up by the ears.

The anode is lifted into the Bosch tank for final cooling. After ten anodes are in the Bosch tank, a lift pulls them out and sets them aside where a fork truck can pick them up and take them directly to the railcar for shipment.

The empty mold now makes its way to be filled again. At the beginning of the casting shift gas fired inspirators are used to warm the molds. All during the shift, inspirators are used to keep the anode mold ears warm before molten copper is poured into them.

2.4 Slag Screening Plant

Chemetco's secondary copper smelted slag will be screened to form stockpiles of various sizes. Raw material is fed to a hopper and grizzly by a front-end loader. Material over 10" is diverted to a stockpile by the grizzly. The rest of the slag is passed through the hopper and conveyed to a screen. Prior to the screen, metallic scrap is separated by a magnetic head pulley and stockpiled. This material is then removed for pyrometallurgical processing. The remaining material is screened and divided into various sizes. Products are each conveyed and stockpiled. Products are loaded by a front-end loader into contractors' trucks and hauled off Chemetco's property, for road and building construction projects and other uses.

2.5 Granulated Slag Plant

Molten slag can also be granulated and dried for shipment to a shingle manufacturer. At the granulation station molten slag is slowly poured into a jet of high pressure water. The slag is broken into small granules and falls into a water reservoir for cooling. Each day, the water reservoir is drained to a holding tank so that the slag can be front loaded to the drying operation.

Granulated slag is deposited into a hopper which feeds the conveyor to the rotary dryer. The dryer is fueled by natural gas and all emissions are exhausted through a baghouse for

control. Once the material is dried, it is sized through a series of screens to meet customer specifications. The sized product is stored in a closed gravity fed silo for loadout.

2.6 Fugitive Emissions

Fugitive emissions are generated by a wide variety of sources at Chemetco, Inc. The term "fugitive emissions" is meant to include pollutants that enter the atmosphere without passing through a stack or duct designed to control the flow. This could include pollutants from certain types of processes or from open sources.

To identify sources that may contribute to open fugitive emissions, the following criteria were applied:

- Areas where the pulverization and abrasion of surface materials by the mechanical force of equipment (such as tires) caused dust;
- Actions of turbulent air currents, such as wind erosion of piles or the passing of trucks causing entrainment of dust particles in the air.

Following the identification of those areas, samples were collected of the materials that may be affected by mechanical grinding or turbulent air to determine the silt content. The sampling and analysis of these samples was done in accordance with EPA 450/3-88-088, "Control of Open Fugitive Dust Sources". Determination of the size of the dust becomes important because of the potential to drift of smaller sized particles. The greater percentage of these small sized particles, the more intense the control has to be. The percentage of particles that pass a 200 mesh screen are those considered to be "silt."

3.0 Emission Control Devices

3.1 Dust Injection System (DIS) Controls

All fines piles in the scrap storage yard will be stored in a building adjacent to the DIS hall. The screening and processing equipment for the DIS is enclosed in a building. Material that enters the grizzly and pan feeder is controlled by a water fog. The screened material (-50 mm particles) averages 8% moisture and is conveyed to the dryer in enclosed equipment.

Natural gas combustion and particulate emissions from the dryer are completely exhausted by a cyclone and baghouse. Emission from the fines screen are also exhausted through the cyclone and baghouse.

All conveyors are covered. Once the material passes through the fines screen, it enters a completely pneumatic system that transports to a storage silo. Dust is then injected into the furnaces by pneumatic piping, hose and lance pipe.

3.2 Direct Furnace Exhaust

The four (4) converter furnaces will be served by a wet scrubber/rotofilter system to clean the exhaust gas. Each furnace is fitted with a snorkel that fits over the entire mouth and pulls the exhaust gas. The gas stream then enters a large quencher to cool the stream and remove some large, heavy particles. Water is sprayed in an inverted cone section to flood the gas stream which then travels to a gravity separator to remove the water droplets.

The gas stream then reaches the secondary quencher elbow section for further cooling by tangentially arranged sprays which flood the section. Particulates from the gas stream are suspended in the quencher water. The quencher elbow acts as an impingement area for the water which then drains to a water recycle tank.

Gases are cleaned as they pass through the AAF Kinpactor Kinetic scrubber. The scrubber contains a converging section to accelerate the gas stream. The gas then enters a Venturi-throat section lined with deflector plates at which high pressure water sprays are aimed. This creates an atomized wall of water across the throat area. Pressure drop is maintained by an end-block damper for an optimum level of cleaning (50 in. W.G.). Particles passing through the water "wall" are removed by impaction into the scrubber water droplets.

The gas stream leaves the scrubber through a diverging section and enters a mist eliminator with a tangentially arranged entry duct. Mist is removed from the gas stream by centrifugal force action which spins the water to the sides to be recycled.

A 50,000 CFM exhaust fan pulls the gas stream through the scrubber cleaning system and into the rotofilters.

A total of ten rotofilter cleaning units will serve the four furnaces as shown in the diagrams in Appendix A. The gas streams of furnaces #1 and #3 will pass through five rotofilters in

parallel after scrubber cleaning. The gas streams of furnaces #2 and #4 will also pass through a venturi scrubber system and then into five rotofilters in parallel.

The rotofilter units achieve gas cleaning using water and the airfoil action of many rotating wheels. Each wheel rotates against one another to produce a centrifugal mechanical force. On each wheel are a number of spokes, which act as airfoils, to pull a vacuum. The gas stream flows perpendicular to the plane of rotation of the wheels. Particles and gases are trapped in the water which flows radially outward, along the spokes, to the walls of the chamber.

Once the gas stream (from two furnaces) passes through the rotofilters, the water in the stream is removed by a mist eliminator. The gas stream is then exhausted through two stacks and into the ambient air.

3.3 Furnace Room Exhaust

The charging and metal tapping processes of a furnace take place after the furnace is removed from the primary snorkel collection system and rotated so its mouth faces the west foundry wall. A baghouse collects emissions escaping the primary system and any emissions created when the hot metal is transferred. A second baghouse exhausts the Shaking Ladle area.

3.3.1 Wheelabrator Jet III Baghouse

During 1990, Chemetco installed a Wheelabrator Jet III, 8 section baghouse with a cubic foot per minute draw of approximately 572,000. This baghouse is located at the south end of the foundry with a 14 foot diameter duct running the length of the foundry and mounted at the building's ridge. The foundry is divided into four separate areas using steel panels at the roof, walls and trusses. In each of the four divided areas, there is an opening with louvers to draw air from that particular section. The louvers are capable of being completely opened, closed or any degree thereof. This enables the foundry operator to direct the flow from the furnace that is being handled, several furnaces in use, or split equally from the entire building as when all furnaces are on the primary exhaust. The foundry building and roof are sealed and maintained so emissions are captured by the secondary exhaust instead of being released into the atmosphere.

The charging procedure for all four furnaces is similar. A crane feeds one furnace at a time. During charging, the louver over the furnace will be closed completely while the other louvers are open. For the metal tapping procedures, the louver over the furnace being tapped will remain open also.

Emissions are reduced during the transferring of hot metal by keeping the black copper in the same furnace for a final reduction after a smelt rather than move it to another furnace. During the final reduction, the metal is refined to a higher purity copper before it is transferred to the refining furnace. This reduces particulate lead and zinc emissions. The refined copper that is transferred to the holding furnace is ready to be cast into anodes. Copper kept just above the melting point is emission-less. The Wheelabrator Jet III baghouse effectively captures any emissions released when the metal pots are moved.

3.3.2 ITK Baghouse

This baghouse exhausts the area above the Shaking Ladle with 80,000 scfm air flow. The ladle is used to centrifugally separate the cupro from the solder metal There is an off-shoot duct that exhausts the back-up shaking ladle. If necessary, a duct and damper reroutes air through the Wheelabrator baghouse.

3.4 Sand Silo

Sand is used at Chemetco as a flux material that enhances the metallurgical reaction thermodynamics to conserve fuel consumption and serves as an oxidant and solvent for some of the impurities in the metallic phase. The sand, along with other oxides, becomes what is known as "slag." Chemetco is able to add sand to the furnace pneumatically for certain operations. This system is separate from the Dust Injection System and isn't restricted to only furnace No. 1.

Sand that is pneumatically blown into the furnace is stored in an 80-ton silo just outside the east wall of the foundry building. This is equipped with a bin vent filter to contain any dusty emissions. As needed, the stored sand is blown into two smaller 20-ton silos located on the foundry floor. These also are equipped with bin vent filtration units.

3.5 Fugitive Dust Controls

Chemetco's "Open Source Fugitive Emission Control Plan Amended 1995", is the document containing the applicable requirements as under 3.5 Ill Adm. Code 212.304 and 212.310. This document focuses on the open source fugitive emissions at the facility that contribute to the total lead and particulate emissions and on the measures that will be taken to control them. Haul roads, parking lots, stockpiles, and other material handling not controlled through stacks will fall into the fugitive emissions category.

Typical measures applied to these sources are:

- Limiting vehicular speed
- Application of a surfactant spray or water to roads and storage piles
- Better work practices such as sweeping and maintaining equipment

The previously referenced report details the actions Chemetco will take to control emissions at each of the fugitive sources.

4.0 Emissions Estimates (Potential and Allowable)

In the potential emissions summaries found in Appendix B (Table 1), the emission point numbers have been matched with those in the most recent annual emissions report. Point numbers that do not match with the annual emissions report have been given different numerical designations.

4.1 Foundry Emissions

All emissions from the foundry building are exhausted through the four furnace stacks, the roof monitor baghouse and the ITK baghouse. In Appendix B, the foundry emission table (Table 2) shows potential calculations for the furnaces based on maximum operating hours and the maximum emission rates submitted in the current construction permit application. For the furnaces, particulate matter is limited to .0079 gr/dscf with the associated emission rate in pounds per hour. The emission rates for both baghouses are taken from stack tests performed in 1991.

All potential emissions are calculated with the given emission rates for 8500 hours of furnace operation. The furnaces are off-line the remaining time for maintenance.

The total potential controlled emissions for the foundry processes are 67.06 tons per year particulate and 9.10 tons per year lead.

4.2 Natural Gas Usage

The furnaces, inspirators, and dryer at Chemetco are all fueled with natural gas. The emissions from each type of fuel burning equipment are shown in Table 3. Summarized below are the total potential emissions based on a facility wide natural gas useage limit of 1454.75 MMSCF per year:

Pollutant	Emissions (ton/year)
Particulates	0.915
PM_{10}	0.915
Sulfur Dioxide	0.445
Nitrogen Dioxide	98.717
Carbon Monoxide	24.055
Volatile Organics	2.386

4.3 Dust Injection System

Table 4 summarizes the emissions calculations for the dust injection system. Potential emissions are calculated using the maximum production rate for all the equipment and 2080 hours per year. The total potential controlled emissions for the DIS are 0.69 tons/year TSP/PM_{10}, and 0.029 tons/year of lead.

4.4 Slag Screening Plant

Included in this section and Table 5 are the emissions from the slag screening processes only. Emissions from fugitive sources, piles and haul roads, are included in Chemetco's plant wide fugitive emissions. Potential emissions from each source are determined using the equipment's maximum hourly design rate and an operating schedule of 2080 hours. The total potential controlled emissions for the slag screening plant are, 7.99 and 3.54, 0.58 tons/year for TSP, PM_{10}, and lead respectively.

The allowable emissions were calculated in accordance with III. Reg. Section 212.322 for existing process sources. No point exceeded the allowable emission rate.

4.5 Granulated Slag Plant

The potential emissions summarized in Table 6 are based on the maximum operating rate of each source for 4160 hours per year. A fabric filter baghouse dust collector is collecting particulate matter from the rotary dryer and screen. Emissions from fugitive source, piles and haul roads are included in Chemetco's plant wide fugitive emissions. The total potential controlled emissions for the granulated slag plant are 6.33 tons/year TSP/PM_{10}, and 0.05 tons/year of lead.

4.6 Fugitive Dust Control Plan

The emissions from the fugitive sources are exclusively particulate matter and lead. As illustrated in Table 7, Chemetco follows a stringent dust control plan for its fugitive emissions. Thus, a high control efficiency is achieved.

Based on a 365 day usage, the potential uncontrolled emissions were calculated to be 199.90 tons/year for the total suspended particulates (TSP). When following the fugitive dust control plan the annual potential controlled emissions are 10.75 tons of TSP and 0.65 tons of lead.

5.0 Operation and Maintenance Procedures

5.1 Furnaces and Control Systems

Each furnace operates for a maximum of 8500 hours per year. The remaining downtime, 260 hours per year is used for maintenance. Each furnace receives a weekly p.m. and system cleaning. However, system conditions are monitored continuously.

The Flow Diagram in Appendix A shows bypass routes (dashed lines), should the furnaces or rotofilters need to be shut down for maintenance or cleaning. One rotofilter can be taken off-line for maintenance and cleaning while still maintaining total airflow. Dampers will be manually set to send 26,000 cfm exhaust air through the other four rotofilters.

The post-rotofilter mist eliminator (York) is self-cleaning. Should emergency maintenance be required on the mist eliminator, the exhaust air can temporarily be routed directly to the stacks, bypassing the rotofilters.

5.2 Dust Injection System (DIS)

The Dust Injection System operates for a maximum of 2080 hours per year. All equipment will operate as described in the process description (see section 2.1.2). Control equipment will be monitored daily. For the baghouse, filter bags will be inspected to ensure proper operation.

5.3 Slag Screening Plant

The slag screening plant operates for a maximum of 2080 hours per year. Equipment will operate as described in section 2.4.

5.4 Granulated Slag Plant

The granulated slag plant operates for a maximum of 4160 hours per year. All equipment will operate as described in section 2.5. Control equipment will be monitored daily. Pressure drop readings for the baghouse will be taken during each shift and filter bags will be inspected to ensure proper operation.

6.0 Compliance Program

The Compliance Program is detailed in a State of Illinois Consent Decree (No. 88 CH 200). This Decree describes future emission controls to be installed. These are the current Chemetco projects that are under construction:

- Fines Building (Fine scrap material storage)
- Four Smelting Furnace Emission Control Systems
- Fugitive Plan

The four smelting furnace emission control systems modifications consists of new venturi scrubbers (up-sized); new blowers (up-sized); new rotofilter bank (ten); new mist eliminators; and the associated control room, ductwork, water treatment systems. Appendix A contains a detailed layout of these furnace emission control systems.

6.1 Proposed Emission Limitations

Table 6.1 shows the emissions limitations that Chemetco has agreed upon to maintain compliance.

Table 6.1 - Emission Limitations

Process / Control	Restriction	Pollutant	Emission Limit*		Compliance Methods
			lbs/hr	TPY	
Foundry					
furnace #1 / scrubber/rotofilter	1) 8500 hours/year 2) 0.0079 gr/dscf @ 50000 scfm 3) 10% Pb emissions	TSP/PM10 Pb	3.386 0.339	14.389 1.439	T, M, RK
furnace #2 / scrubber/rotofilter	1) 8500 hours/year 2) 0.0079 gr/dscf @ 50000 scfm 3) 10% Pb emissions	TSP/PM10 Pb	3.386 0.339	14.389 1.439	T, M, RK
furnace #3 / scrubber/rotofilter	1) 8500 hours/year 2) 0.0079 gr/dscf @ 50000 scfm 3) 20% Pb emissions	TSP/PM10 Pb	3.386 0.677	14.389 2.878	T, M, RK
furnace #4 / scrubber/rotofilter	1) 8500 hours/year 2) 0.0079 gr/dscf @ 50000 scfm 3) 10% Pb emissions	TSP/PM10 Pb	3.386 0.339	14.389 1.439	T, M, RK
holding furnace rm exh / roof mon. baghouse	1) 0.0004 gr/dscf @ 572000 scfm 2) 20% Pb emissions	TSP/PM10 Pb	1.961 0.392	8.335 1.667	T, M, RK
furn rm exh/shaker ladle / ITK baghouse	1) 0.0004 gr/dscf @ 80000 scfm 2) 20% Pb emissions	TSP/PM10 Pb	0.274 0.055	1.167 0.233	T, M, RK
DIS					
rotary dryer/fine screen / cyclone/baghouse #Rb	1) 2080 hours/year 2) 0.003 gr/dscf @ 12000 scfm 3) Pb @ 4.4% TSP	TSP/PM10 Pb	0.309 0.014	0.321 0.014	T, M, RK
silo / dust collector	1) 2080 hours/year 2) 0.032 gr/dscf @ 600 scfm 3) Pb @ 4.4% TSP	TSP/PM10 Pb	0.165 0.007	0.1712 0.008	T, M, RK
other DIS equipment / building enclosed	1) 2080 hours/year 2) Enclosed in building 3) Pb @ 4.4% TSP	TSP/PM10 Pb	See Appendix B	0.142 0.005	T, M, RK
DIS stockpiles / building enclosed	1) Enclosed in building 2) Pb @ 4.4% TSP	TSP/PM10 Pb	See Appendix B	0.058 0.002	T, M, RK
Slag Screen Plant					
screening & conveying entire plant	1) 2080 hours or 276000 tons per year slag screening	TSP/PM10 Pb	7.686/3.403 0.056	7.993/3.539 0.058	M, RK

* Proposed allowable emissions.

Key: T = testing; M = monitoring;
RK = record keeping.

Table 6.1 - Emission Limitations (continued)

Process / Control	Restriction	Pollutant	Emission Limit*		Compliance Methods
			lbs/hr	TPY	
Granulated Slag Plant					
rotary dryer\screening / baghouse #GS	1) 4160 hours/year 2) 0.02 gr/dscf @ 15000 scfm 3) Pb 0.72% TSP	TSP/PM10 Pb	2.571 0.019	5.350 0.039	T, M, RK
other equipment	1) 4160 hours/year 2) Enclosed building 3) Pb 0.72% TSP	TSP/PM10 Pb	See Appendix B	0.981 0.008	M, RK
Fugitive Dust					
roads / watering & sweeping	Fugitive Dust Plan Points 56, 57, 58	TSP/PM10 Pb	See Appendix B	4.974 0.218	M, RK
scrap yards / watering & sweeping	Fugitive Dust Plan Points 59, 60, 61, 62, 63, 64, 65, 66	TSP/PM10 Pb	See Appendix B	5.7786 0.435	M, RK

Key: T = testing; M = monitoring;
RK = record keeping.

* Proposed allowable emissions.

i. The person(s) who will be performing sampling and analysis and their experience with similar tests.

ii. The conditions under which testing will be performed, including a discussion of why these conditions will be representative of the maximum operating rate, the levels of operating parameters at or within which compliance is intended to be shown, if applicable, and the means by which the operating parameters for the process and any control equipment will be determined.

e. The Agency shall be notified prior to these tests to enable the Agency to observe these tests. Notification for the expected date of testing shall be submitted a minimum of thirty (30) days prior to the expected date. Notification of the actual date and expected time of testing shall be submitted a minimum of five (5) working days prior to the actual date of the tests. The Agency may, at its discretion, accept notification with shorter advance notice provided that the Agency will not accept such notifications if it interferes with the Agency's ability to observe the testing.

In regards to the installation of the new air pollution control devices for the four rotary furnaces, the performance testing shall be conducted on each furnace to establish baseline emissions. The testing shall be conducted under the previous requirements and the following additional specific conditions:

a. The air emissions limitations are 1) the opacity limitation for visible emissions. (Ill Admin. code, Title 35, 6 212.123(a); 2) the total particulate emissions limitations from the furnace during each process cycle (IPCB Rule 203/a); 3) particulate matter limitation of 0.0079 grains per DSCF, corrected to 12% carbon dioxide; 4) lead limitation of 10% of the particulate matter for the complete control system on each furnace.

b. The performance testing shall demonstrate compliance with the particulate matter and lead limitations in b.

c. The raw materials management system described below shall be used to ensure that the maximum or upper limit of process and lead emission levels established during stack testing are not exceeded during subsequent smelting or refining heat.

i. Each lot of material accepted for use in the furnaces shall be assigned assays based on sampling and analyses, historical data or sight-grading.

ii. Material lots which are assigned an assay by sampling and analyses will use the sampling and analytical procedures described in Chemetco's SOP No. 1 or 2.

iii. The results of each assay assignment shall become part of the lot history file and be added to the raw material database.

iv. Once a lot is accepted for processing by Chemetco, it shall be transferred to a storage area which is assigned a specific location code. The raw material database shall include this location code.

v. The charge recipes processed during stack tests shall contain the maximum daily-weighted averages of lead percentages as maintained in the raw material database.

vi. Should the lead percentage of an accepted "lot" of material exceed the maximum percentages determined for that type of material during the stack tests, that lot of material shall be assigned a separate location code and shall be maintained in a separate stockpile area.

vii. At no time shall the "weighted-average" of lead percentages, as calculated from the charge recipes and raw material database, exceed the "weighted-averages" as determined during the stack tests for melting or refining, where applicable.

viii. Records documenting the "weighted-average" of lead percentages for each charge recipe shall be retained for a minimum of three years and available for Agency inspection and copying. A computer-based program is used to calculate and record the lead percentages.

ix. The raw material database shall be generated each day and shall be generated each day and shall be retained on the premises by Chemetco for ninety (90) calendar days.

x. A black copper sample shall be taken each and every smelting heat at the time the bath becomes molten in a furnace. Where the percentages of lead in a black copper sample exceed these percentages established during furnace heats at the time of stack testing, Chemetco shall review the recipe sample procedure and make the necessary adjustments. Sampling and analyses shall be conducted in accordance with Chemetco's SOP No. 3.

xi. Fines containing the maximum percentages of lead shall be used during stack testing.

xii. Chemetco shall begin a program to routinely sample and analyze fines conveyed to the storage silo for the injection. A sample shall be collected every two (2) hours during operation of the dryer from the enclosed conveyor that discharges to the pneumatic transporters to the storage silo. This sampling procedure shall follow Chemetco's SOP No. 4. Analyses of each sample for lead weight percents will be conducted on site in accordance with Chemetco's SOP No. 4.

xiii. Along with each sample that is taken, the throughput of material being processed in the system shall be recorded along with the date and time of each sample collection.

Chemetco shall conduct annual stack testing on each furnace at least once every calendar year following the initial baseline performance testing, provided that no more than one such annual stack test shall be performed on any one furnace during any six month period, unless either USEPA or IEPA requires Chemetco to retest after modifications following a failed test. Chemetco shall contract with a third party stack testing firm with IEPA approval to perform the testing. The test protocols developed and specified within the state consent decree shall be used for testing.

6.3 Record-Keeping & Reporting Program

Chemetco shall follow record-keeping as outlined below:

a. Each air pollution control system shall be monitored and operating pressure drop shall be recorded continually.

b. Wet system shall monitor and record water pressure and flow continually to verify that air pollution controls are in operation.

c. The two rotofilter banks of 5 rotofilters shall be monitored with one operating pressure drop device. The system shall be monitored and recorded continually.

d. The four kaldo furnaces emission control system shall be recorded in the Foundry control room continually.

e. All monitored parameters shall be maintained within the manufacturer's performance warranties. All values for the parameters shall be determined at the time of compliance testing for approval by IEPA.

f. Daily, monthly and yearly records of the DIS plant input feed (tons/day, tons/month and tons/year) shall be maintained.

g. Daily, monthly and yearly records of slag screening plant output (tons/day, tons/month and tons/year) shall be maintained.

h. Daily, monthly and yearly record of the slag granulation plant input feed rate (tons/day, tons/month and tons/year) shall be maintained.

i. Plant records from all above conditions, shall be retained at a readily accessible location for at least 3 years from the date of entry and shall be made available for inspection and copying by the Agency and USEPA upon request.

j. If the control arrangement on any emission unit is not operating properly while the emission unit is operated, or there is an exceedance of the requirements of this permit as determined by the records required by Conditions a through, shall submit a quarterly report to the Agency's Compliance Monitoring Section in Springfield, Illinois within 30 days after the end of the quarter. The report shall include the emissions on an hourly basis, a copy of the relevant records, and a description of the exceedance of violation and efforts to reduce emissions and future occurrences.

6.4 Ambient Air Monitoring Program

In order to demonstrate compliance with Ambient Air Standards, Chemetco shall continue its present ambient air monitoring program. Chemetco shall revise the monitoring plan upon completion of construction of the fines building or any future structures. Dispersion modeling of all new conditions shall be conducted. Chemetco proposes relocation of existing TSP/PB monitoring site and/or installation of additional sites with written approval from IEPA and USEPA.

The ambient air monitoring program includes but is not limited to the following:

a. compliance with all requirements for sampling, validation, location, analysis, operating procedures, maintenance, calibration, data reduction, reporting, quality assurance, monitoring methodology, and instrumentation;

b. collection of enough samples to ensure the compilation of valid quarterly emissions data, as set forth in the terms of the approved ambient air monitoring program; provided, Chemetco has the right to challenge any quarterly emission report on grounds of validity or lack of reasonableness;

c. refraining from any and all actions that could potentially undermine the efficiency or accuracy of the approved ambient air monitoring program, including but not limited to the construction, placement or use of water screens or spraying devices at or near the Facility's ambient air monitors;

d. not moving the Facility's ambient air monitors, without prior written approval from IEPA and USEPA;

e. not deviating from the approved ambient air monitoring program without prior written approval from IEPA and USEPA; and

f. continuing to submit the results of the ambient air monitoring program to IEPA on a quarterly basis.

Chemetco shall continue the approved ambient air monitoring program until Chemetco certifies to the IEPA and USEPA that it has been in compliance with the NAAQS for lead for a period of eight (8) consecutive calendar quarters after entry of this Consent Decree.

6.5 Fugitive Emission Control

Chemetco shall comply with all terms of the Facility's existing approved emissions control program (see Appendix C) and revise the plan to include the new fines building. Specifically, Chemetco shall:

1. continue to implement all measures as outlined in the approved fugitive emissions control program;

2. maintain daily records of all actions taken pursuant to the approved fugitive emissions control program and the results thereof;

   a. Daily records shall be retained for a period of three (3) years;

   b. The results of the fugitive emissions control program shall be available for inspection and copying by IEPA and USEPA; and

3. submit to IEPA within seven (7) working days of the end of each calendar month any and all records indicating or demonstrating Chemetco's failure to adhere to the approved fugitive emissions control program, including, but not limited to, the dates of such failure, the duration of such failure, the reasons for such failure, and all actions taken to correct such failure.

7.0 Summary and Recommendations

Chemetco, Inc. is requesting IEPA to modify Chemetco's current state operating permits, settlement agreements, and consent decrees into a comprehensive Federally Enforceable State Operating Permit (FESOP). The federally enforceable limits herein would prevent the secondary copper smelter from being a major source of emissions so that an operating permit does not have to be obtained under The Clean Air Act Permit Program (CAAP). The proposed limits would be accomplished by periodic emission testing, ambient air monitoring, record keeping, and reporting requirements to assure that the plant is operating as a non-major source. These conditions would be enforceable by both the State of Illinois (IEPA) and the USEPA.

For the purposes of this FESOP, the only significant HAP emissions that were quantified were for the lead emissions. Potential sources of lead are calculated for each process in the emissions summaries.

Chemetco, Inc. is requesting IEPA to include in the permit, the state provisions emissions during start-up, malfunction, and up-set conditions as granted under Section 201.261. This document formally requests permission to operate during a malfunction, breakdown or start-up situation.

SEA, Inc. recommends that IEPA grant Chemetco this request for the FESOP permit. The federally enforceable conditions herein would relinquish the present concerns of IEPA and USEPA regarding Chemetco and establish one comprehensive operating permit.

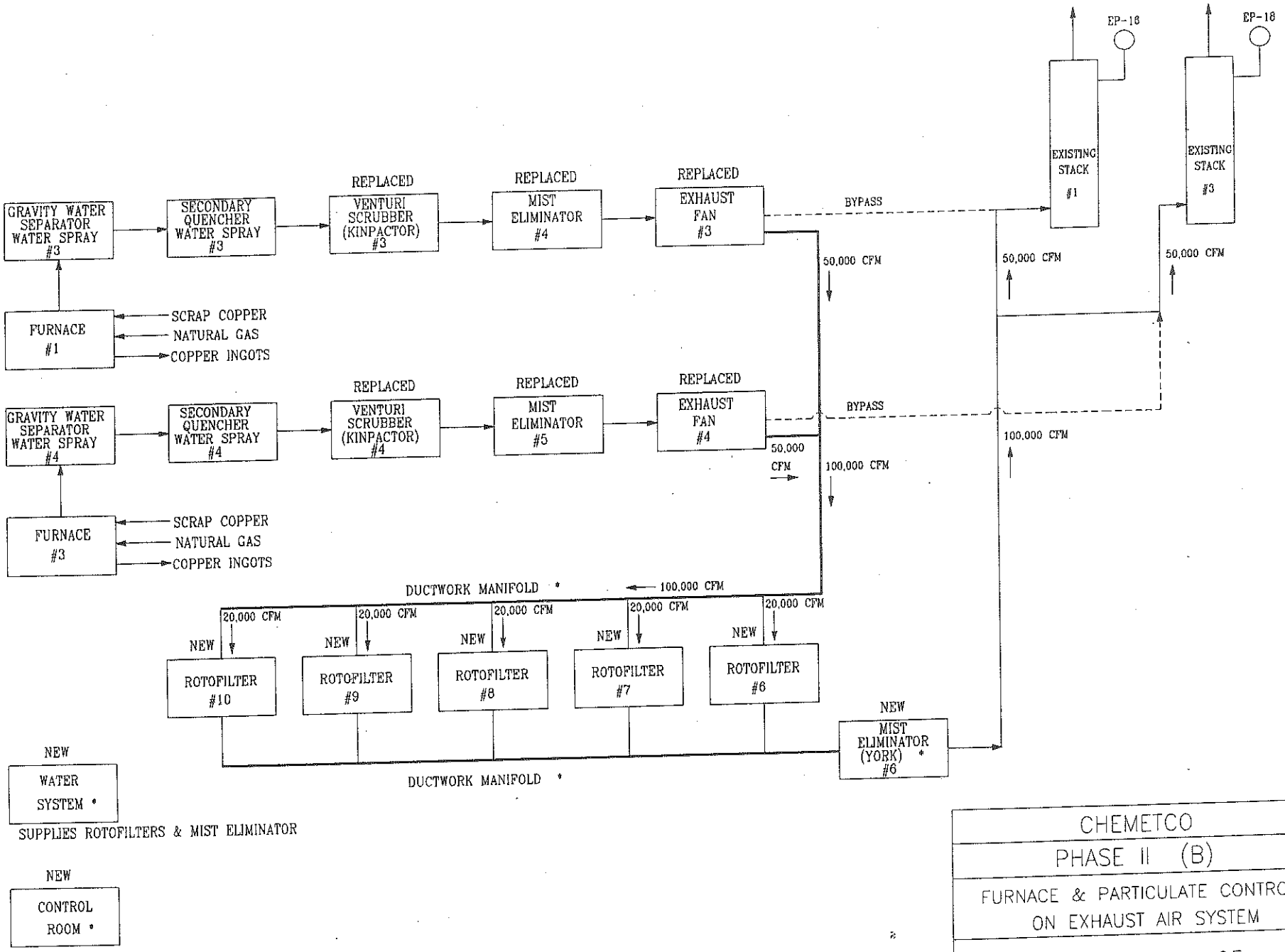

*Sized for five rotofilters and two furnaces

CHEMETCO

PHASE II (B)

FURNACE & PARTICULATE CONTROLS ON EXHAUST AIR SYSTEM

DATE: 6-21-95

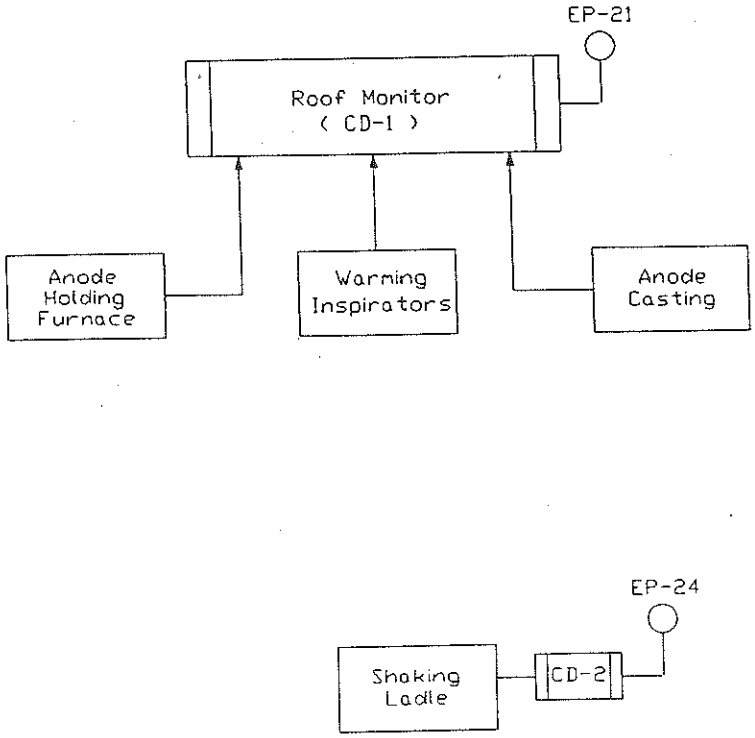

CONTROL DEVICES	
MARK NO.	DESCRIPTIONS
CD1	Wheelabrator Jet III Baghouse
CD2	ITK Baghouse

CHEMETCO

Foundry Baghouse Emissions

DWG NO.1 | DATE: 6-22-1995

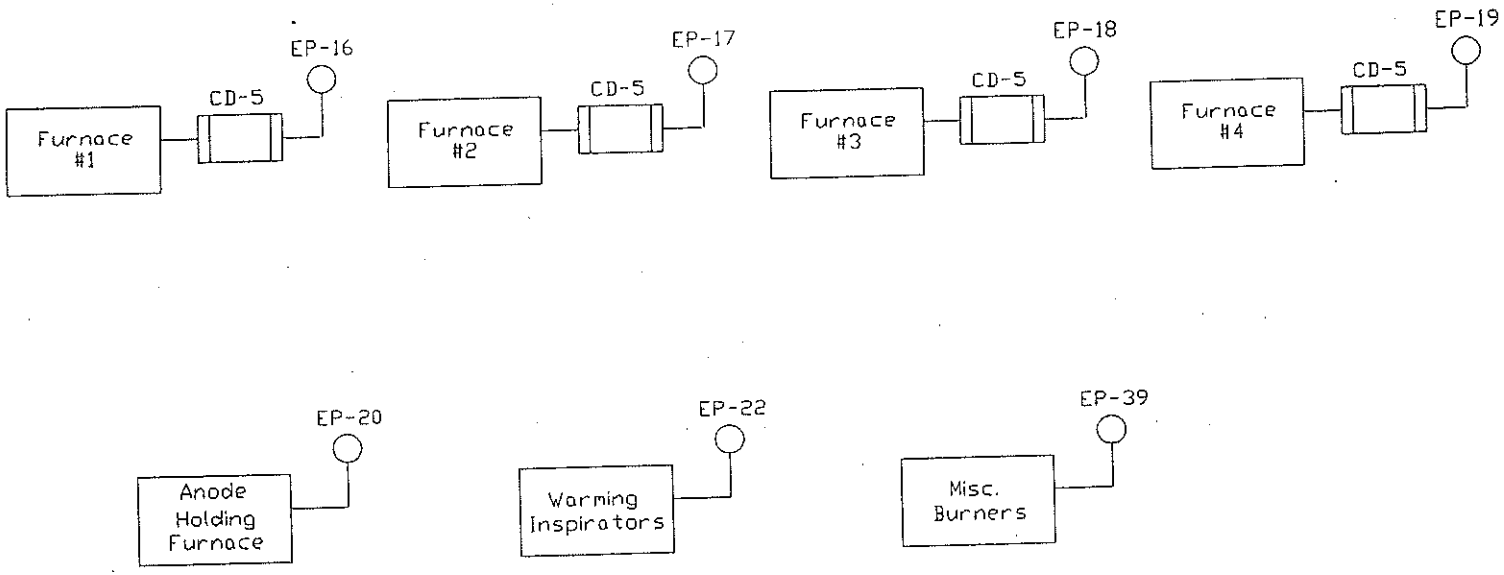

CONTROL DEVICES	
MARK NO.	DESCRIPTIONS
CD5	Venturi Scrubber/Rotofilter

CHEMETCO

Natural Gas Emissions

DWG NO.1	DATE: 6-22-95

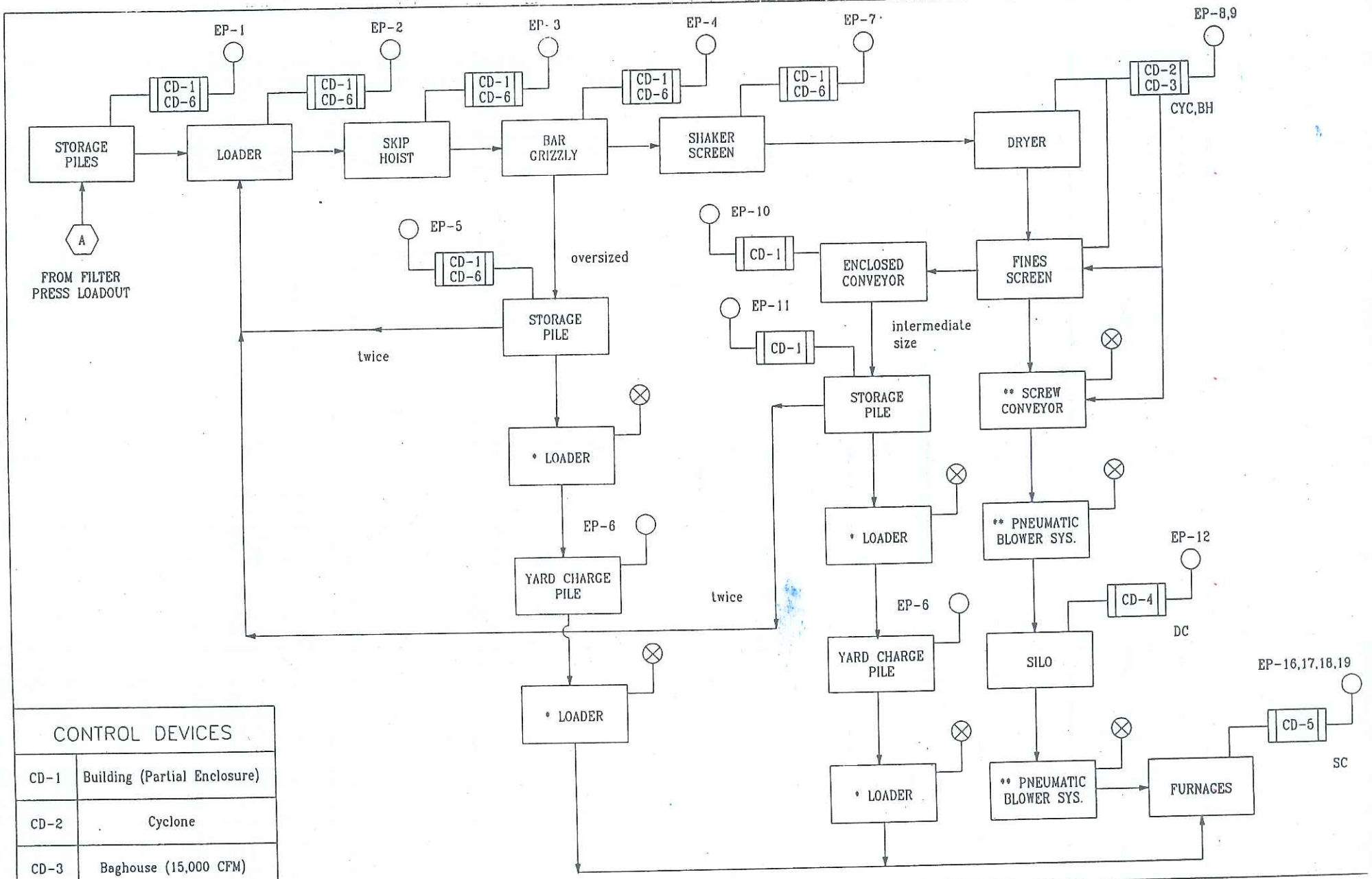

CONTROL DEVICES	
CD-1	Building (Partial Enclosure)
CD-2	Cyclone
CD-3	Baghouse (15,000 CFM)
CD-4	Dust Collector
CD-5	Wet Scrubber/ Rotofilters
CD-6	Wet Material (25% Moisture)

⊗ Indicates insignificant emissions.
* Loader emissions calculated in storage pile equation.
** System is entirely enclosed.

CHEMETCO

DUST INJECTION SYSTEM (DIS)

DWG NO.1 | DATE: 02-14-1995

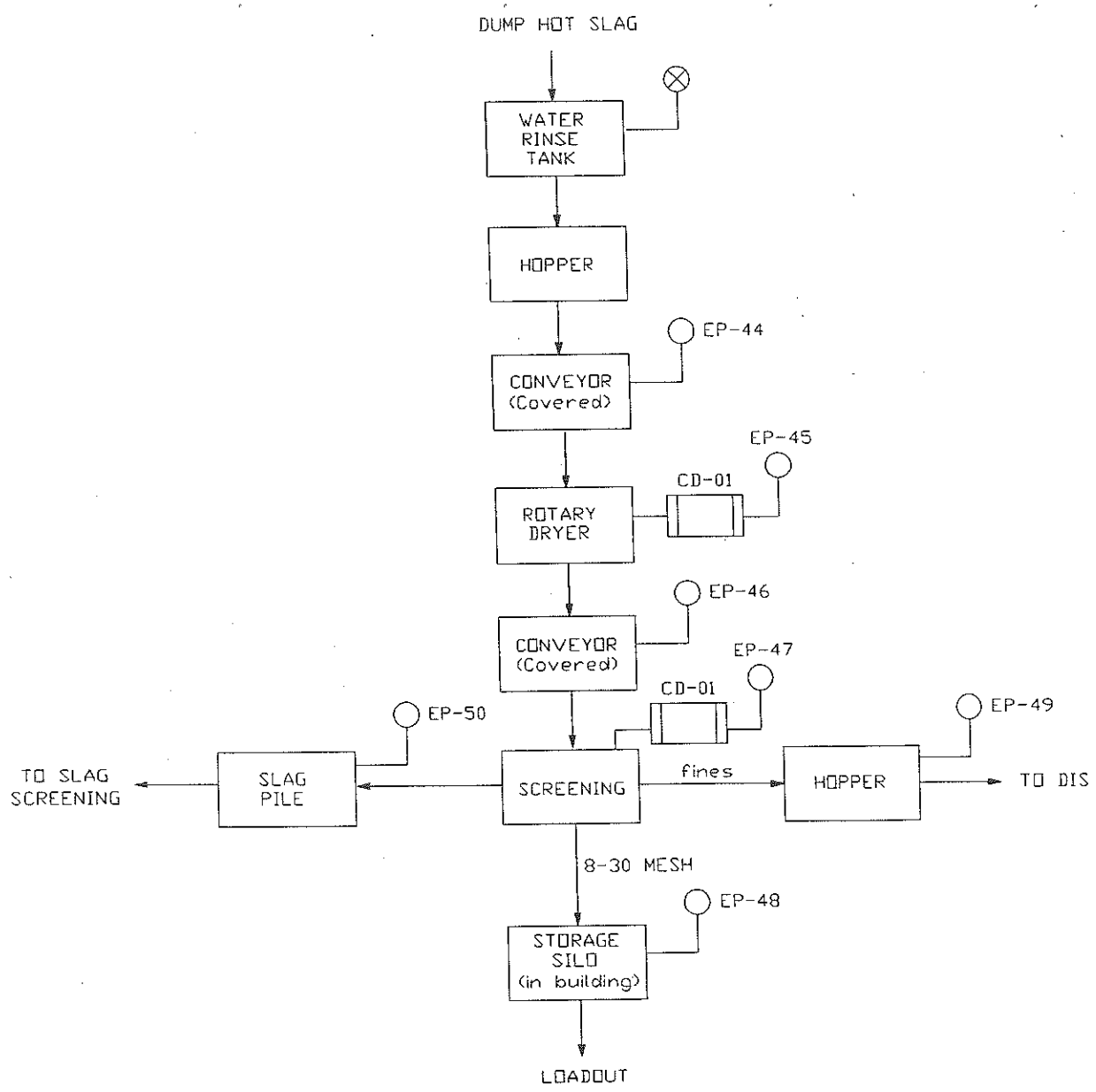

CONTROL DEVICES	
MARK NO.	DESCRIPTIONS
CD1	Baghouse

CHEMETCO	
Granulated Slag Plant	
DWG NO.2	DATE: 2-23-1995

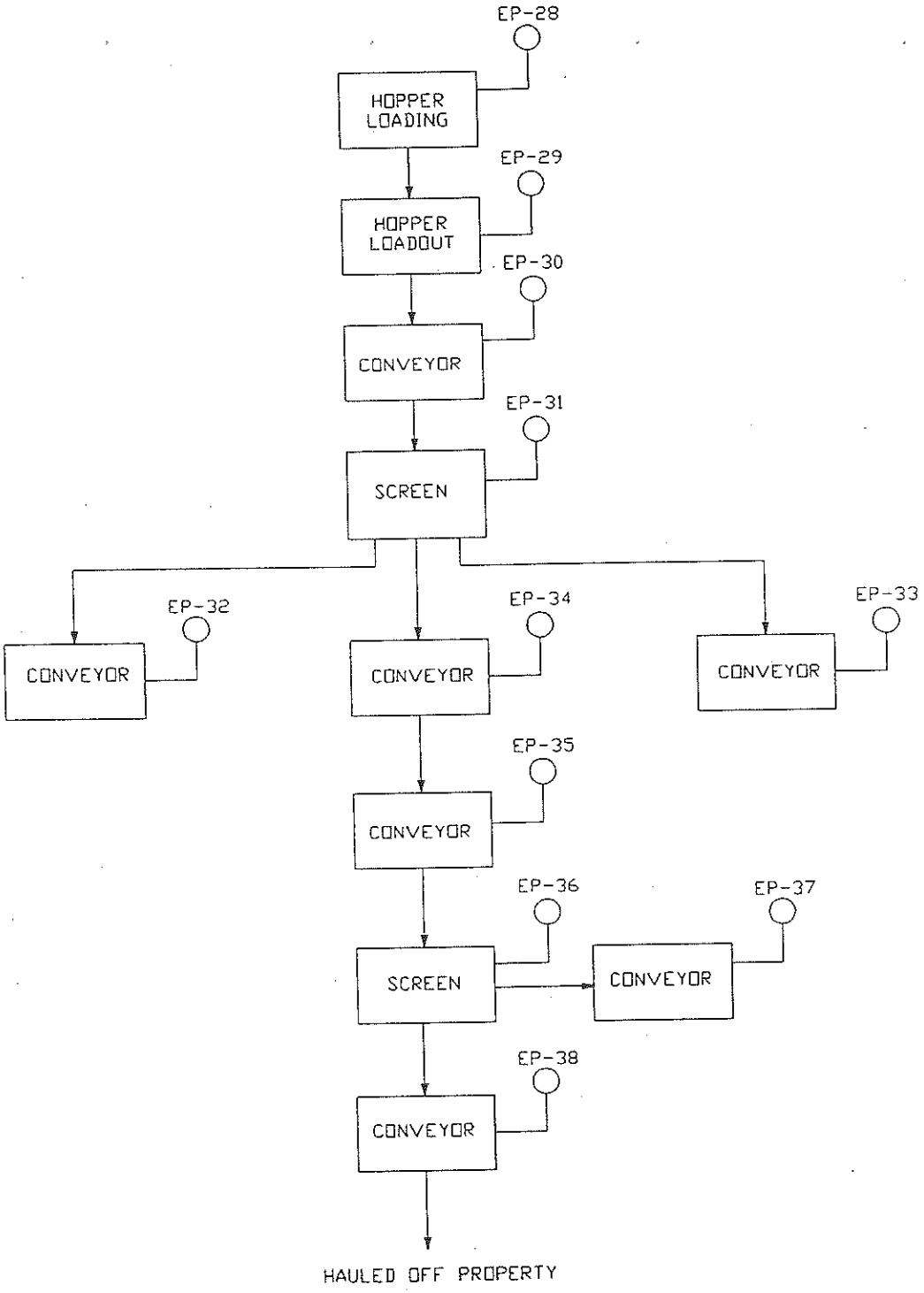

CHEMETCO	
Slag Screening Plant	
DWG NO.1	DATE: 2-23-1995

CHEMETCO - (DIS) Dust Injection System

Point	Description	Maximum Rate *** (tons/hour)	Hours	SCC Code or source	Control Device	TSP Control (%)	PM10 Control (%)	TSP (lb/ton)	Allowable Particulate (lb/hour)	Potential TSP (tons/year)	PM10 (lb/ton)	Potential PM10 (tons/year)	Potential Lead * (tons/year)	Potential Toxic (Cd)** (tons/year)
1	Storage Piles	500	8760	AP-42	bldg	90	70	0.418		0.010	0.209	0.016	0.000	0.000
2	Loader (to Skip Hoist)	25	2080		bldg	90	70	0.020	0.0500	0.052	0.002	0.019	0.002	0.000
3	Skip Hoist	25	2080	3-05-025-03	bldg	90	70	0.029	0.0725	0.075	0.006	0.050	0.003	0.000
4	Bar Grizzly	25	2080	3-05-020-21	bldg, wet	90	70	0.003	0.0075	0.008	0.002	0.016	0.000	0.000
5	Storage Pile (oversize)	200	8760	AP-42	bldg, wet	95	85	0.418		0.002	0.209	0.003	0.000	0.000
6	Yard Charge Pile	200	8760	AP-42				0.418		0.042	0.209	0.021	0.002	0.000
7	Shaker Table (screen)	21.25	2080	3-05-020-21	bldg, wet	90	70	0.003	0.0061	0.006	0.002	0.014	0.000	0.000
8	Dryer	21.25	2080	3-04-002-36	cyc, baghouse	99.7	99.6	4.430	0.2824	0.294	2.600	0.230	0.013	0.000
9	Fines Screen	21.25	2080	3-05-020-21	cyc, baghouse	99.7	99.6	0.240	0.0153	0.016	0.071	0.006	0.001	0.000
10	Enclosed Conveyor	2.5	2080			90	70	0.003	0.0009	0.001	0.000	0.000	0.000	0.000
11	Storage Pile (intermediate)	200	8760	AP-42	bldg	90	70	0.418		0.004	0.209	0.006	0.000	0.000
12	Silo	18.75	2080		dust collector	95	90	0.165	0.1547	0.161	0.083	0.162	0.007	0.000
								TOTALS		0.671		0.542	0.030	0.001

* TSP monitors report an average lead concentration of 4.4% of the particulate
** TSP monitors report an average cadmium concentration of 0.15% of the particulate
*** Storage piles are expressed in maximum storage amounts (tons)

Allowable emission rates for the baghouse are limited according to previous permit conditions

<u>AP-42 storage pile equation (using default values):</u>

Load In-Load Out Factor = .00224 x ({Mean Wind Speed} / 5)^1.3 / ({Moisture Content (%)} / 2)^1.4
= .00224 x (10/5)^1.3 / (0.7/2)^1.4 = 0.024

Wind Erosion Factor = 0.025 x ({Silt Content (%)} / 1.5) x ({Storage Duration(Days)} /90)
x ({Dry Days per Year} / 235) x ({% of Time Wind > 12 mph} / 15)

= 0.025 x (1.6/1.5) x (180/90) x (260/235) x (32/15) = .126

Activity Factor = 0.05 x ({Silt Content(%)} / 1.5) x ({Dry Days per Year} / 235) x {Vehicle Activity Factor}

= 0.05 x (1.6/1.5) x (260.235) x (1.0) = .059

PM10 Emission Factor = Load In-Load Out Factor + Wind Erosion Factor + Activity Factor

PM10 Emission Factor = 0.024 + 0.0629 + 0.059 = 0.209 lbs PM10/ton

TSP Emission Factor = 2 x PM10 Emission Factor = 0.418 lbs TSP/ton

Chemetco Natural Gas Usage

COMBUSTION PRODUCT	EP-16,17,18,19 70-TON FURNACES	EP-20 ANODE FURNACE	EP-22 INSPIRATORS	EP-8 ROTARY DRYER	EP-45 ROTARY DRYER	EP-39 MISC BURNERS	
BURNER, RATED BTU/HR	18885000	49661250	1000000	9000000	25000000	500000	
NUMBER OF BURNERS	4	1	12	1	1	15	
TOTAL RATED BTU/HR	75540000	49661250	12000000	9000000	25000000	7500000	
RATE OF OPERATION, %	90	100	100	100	100	100	
POTENTIAL BTU/HR	67986000	49661250	12000000	9000000	25000000	7500000	
RATIO OF BTU TO SCF, NAT. GAS	1000	1000	1000	1000	1000	1000	
SCF/HR, NATURAL GAS	67986.000	49661.250	12000.000	9000.000	25000.000	7500.000	= 171147.3 SCF/hr x 8500 hr/yr = 1454.75 MMSCF/yr limit
UNCONTROLLED EMISSION FACTOR*							
PARTICULATES, #/MMCF	3	3	3	3	3	3	
PM10, #/MMCF	3	3	3	3	3	3	
SOX, #/MMCF	0.6	0.6	0.6	0.6	0.6	0.6	
NOX, #/MMCF	140	140	100	100	140	100	
CO, #/MMCF	35	35	20	20	35	20	
VOLATILE ORGANICS, #/MMCF	2.8	2.8	5.3	5.3	2.8	5.3	
UNCONTROLLED EMISSION							
PARTICULATES, #/HR	0.2040	0.1490	0.0360	0.0270	0.0750	0.0225	
PM10, #/HR	0.2040	0.1490	0.0360	0.0270	0.0750	0.0225	
SOX, #/HR	0.0408	0.0298	0.0072	0.0054	0.0150	0.0045	
NOX, #/HR	9.5180	6.9526	1.2000	0.9000	3.5000	0.7500	
CO, #/HR	2.3795	1.7381	0.2400	0.1800	0.8750	0.1500	
VOLATILE ORGANICS, #/HR	0.1904	0.1391	0.0636	0.0477	0.0700	0.0398	
CONTROLLED EMISSION (Control Device)							
PARTICULATES (rotofilter/scrubbers), #/HR	0.0010	0.1490	0.036	0.000135	0.000375	0.0225	
PM10 (rotofilter/scrubbers), #/HR	0.0010	0.1490	0.036	0.000135	0.000375	0.0225	
SOX (venturi scrubber), #/HR	0.0408	0.0298	0.0072	0.0054	0.015	0.0045	
NOX (venturi scrubber), #/HR	9.5180	6.9526	1.2	0.9	3.5	0.75	
CO (venturi scrubber), #/HR	2.3795	1.7381	0.24	0.18	0.875	0.15	
VOLATILE ORGANICS (venturi scrubber), #/HR	0.1904	0.1391	0.0636	0.0477	0.07	0.03975	
ANNUAL EMISSIONS							**TOTALS**
PARTICULATES, TON/YR	0.0043	0.6526	0.1577	0.0006	0.0016	0.0986	**0.915**
PM10, TON/YR	0.0043	0.6526	0.1577	0.0006	0.0016	0.0986	**0.915**
SOX, TON/YR	0.1734	0.1305	0.0315	0.0237	0.0657	0.0197	**0.445**
NOX, TON/YR	40.4517	30.4524	5.2560	3.9420	15.3300	3.2850	**98.717**
CO, TON/YR	10.1129	7.6129	1.0512	0.7884	3.8325	0.6570	**24.056**
VOLATILE ORGANICS, TON/YR	0.8090	0.6093	0.2786	0.2089	0.3066	0.1741	**2.386**

* Emission factors from SCC codes 1-02-006-02 and 1-02-006-03

Note: Calculations based on maximum heating design rates for full-time operation with no restrictions

Limit facility to burn less than 1454.75 MMSCF/year of natural gas.

Chemetco - Granulated Slag Plant

Point	Description	Maximum Operating Rate	Maximum Operating Hours	SCC Code	TSP (lb/ton)	PM10 (lb/ton)	Control Device	TSP Control (%)	PM10 Control (%)	Potential TSP (tons/year)	Potential PM10 (tons/year)	Potential Lead*** (tons/year)	Allowable Particulate (lbs/hour)
44	Conveyor (to dryer)	40	4160		0.003	0.001	covered	**	**	0.250	0.083	0.0018	0.120
45	Rotary Dryer	40	4160	3-04-002-3	4.43	2.6	baghouse	98.63	97.67	5.049	5.040	0.0364	2.428
46	Conveyor (to screens)	34	4160		0.003	0.001	covered	**	**	0.212	0.071	0.0015	0.102
47	Screening	34	4160	3-05-020-2	0.24	0.071	baghouse	98.63	97.67	0.233	0.117	0.0017	0.112
48	Storage Silo	25.16	4160		0.165	0.083		95	90	0.432	0.434	0.0031	0.208
49	Hopper (undersize)	4.76	4160	3-03-008-0	0.0088	0.0044				0.087	0.044	0.0006	0.042
50	Storage Pile (oversize)*	3.74	4160						Totals	6.263	5.789	0.045	

* Pile emissions quantified and controlled under fugitive dust plan
** Enclosure controls included in emission factor for conveying
*** Average lead content of material is 0.72% by weight, average cadmium content is 0.001% (no emissions).

Allowable emission rates for the baghouse are limited according to previous permit conditions

CHEMETCO - Fugitive Dust Control Plan Emissions Summary

Point #	Description	Days	TSP Uncontrolled Emiss. Rate (lbs/day)	TSP Control Efficiency	TSP Controlled Emiss. Rate (lbs/day)	TSP Potential Controlled (tons/year)	Lead Controlled Emiss. Rate (lbs/day)	Lead Potential Controlled (tons/year)
56***	Oldenburg Road	365	381.53	95.00	19.08	3.482	0.84	0.15
57***	Kress Haul Road	365	23.07	99.77	0.05	0.010	0.00	0.00
58***	Slag Haul Road	365	162.52	95.00	8.13	1.483	0.36	0.07
59	Truck Lot	365	189.14	95.00	9.46	1.726	0.42	0.08
60	AAF and Stack Area	365	24.93	92.00	1.99	0.364	0.09	0.02
61***	Truck/Scale Drive	365	22.68	95.00	1.13	0.207	0.05	0.01
62	Employee Parking Lot	365	0.02	58.00	0.01	0.000	0.00	0.00
63	ZnO Loading/Baghouse	365	17.08	95.00	0.85	0.156	0.04	0.01
64	Scrap Yard	365	58.79	85.00	8.82	1.609	0.39	0.07
65	Zinc Oxide Bunker	365	182.72	99.90	0.18	0.033	0.01	0.00
66	*Slag Handling	365	32.86	72.00	9.20	1.679	1.39	0.25
				Totals	58.91	10.75	3.58	0.65

* Lead emission rates taken from fugitive dust control plan

** TSP monitors report an average lead concentration of 4.4% of the particulate

***Points have updated calculations, see following pages

(56) Oldenberg Road:

TSP Emission Factor Calculation:

	Dump Empty (6)	Dump Full (6)	Tandem Empty (10)	Tandem Full (10)	Units
k =	1	1	1	1	none
s =	3.7	3.7	3.7	3.7	%
S =	20	20	20	20	mph
W =	17.5	35	12.5	25	ton
w =	6	6	10	10	wheels
p =	104	104	104	104	days rain >.01 in
EF =	3.650197	5.929762	3.723497	6.048839	lb/VMT

East Entrance VMT:

Assume: 1) All slag is hauled using 75% tandem and 25% dump trucks
2) Maximum slag haul rate is equal to maximum hourly screen rate

		units
Maximum Hourly Screen Rate =	132.65	tons/hr
Load Capacity of Tandem Truck =	12.5	tons/load
Number of Tandem Loads per Hour	7.959	loads/hour
Load Capacity of Dump Truck =	17.5	tons/load
Number of Dump Loads per Hour =	1.895	loads/hour

3) Average one-way trip length =	2100	feet/trip
	0.397727	VMT/trip
or		
Tandem VMT/ Hour (one-way) =	3.165511	VMT/hr
Dump VMT / Hour (one-way) =	0.753693	VMT/hr

Uncontrolled East Entrance TSP Emissions:

Hourly :

Assume bulk majority of traffic occurs between 7:00 a.m. & 5:00 p.m.

Empty Tandem Emissions =	11.79	lb/hr
Loaded Tandem Emissions =	19.15	lb/hr
Empty Dump Emissions =	2.75	lb/hr
Loaded Dump Emissions =	4.47	lb/hr

Annual:

Total Tandem & Dump Emissions =	69.63	ton/year

Controlled East Entrance Emissions (95% control eff.):

Total Emissions =	3.48	ton/year

Annual Lead Emissions:

Uncontrolled =	3.06	ton/year
Controlled =	0.15	ton/year

(57) Kress Haul Road:

Emission Factor Calculation:

	Kress Empty (8)	Full (8)	Units
k =	1	1	none
s =	3.4	3.4	%
S =	15	5	mph
W =	31	103	ton
w =	8	8	wheels
p =	104	104	days rain >.01 in
EF =	4.334616	3.348592	lb/VMT

Kress Haul Road VMT:

Assume: 1) The Kress makes 12 round trips per 24 hours

		units
Number of Kress Loads per Hou	0.5	loads/hour
2) Average one-way trip length =	1322	feet/trip
or	0.250379	VMT/trip
Kress VMT / Hour (one-way) =	0.125189	VMT/hr

Uncontrolled Kress TSP Emissions:

Hourly:

Empty Kress Emissions =	0.54	lb/hr
Loaded Kress Emissions =	0.42	lb/hr

Annual:

Total Emissions =	4.21	ton/year

Controlled Kress Emissions (99.77% control eff.):

Total Emissions =	0.01	ton/year

Annual Lead Emissions:

Uncontrolled =	0.19	ton/year
Controlled =	0.00	ton/year

(61) Truck/Scale Drive:

TSP Emission Factor Calculation:

	Semi Empty (18)	Full (18)	Units
k =	1	1	none
s =	3.7	3.7	%
S =	20	20	mph
W =	17	40	ton
w =	18	18	wheels
p =	104	104	days rain >.01 in
EF =	6.195331	11.27697	lb/VMT

West Entrance VMT:

Assume: 1) All incoming raw material trucks have 18 wheels
2) Max. raw material incoming load rate is equal to max daily charge rate to furnaces

		units
Total Maximum Daily Charge Rate	167.9	tons/day
Load Capacity of Semi =	23	tons/load
Number of Loads per Day =	7.3	loads/day
3) Average one-way trip length =	940	feet/trip
or	0.17803	VMT/trip
Total Miles Traveled per Day (one-way) =	1.299621	VMT/day

Uncontrolled West Entrance TSP Emissions:

Daily :

Empty Semi Emissions =	8.05	lb/day
Loaded Semi Emissions =	14.66	lb/day

Annual :

Total Emissions =	4.14	ton/year

Controlled West Entrance TSP Emissions (95% control eff.):

Total Emissions =	0.207205	ton/year

Annual Lead Emissions:

Uncontrolled =	0.18	ton/year
Controlled =	0.01	ton/year

Chemetco
FIRST IN PEOPLE — QUALITY — SERVICE
P.O. Box 67 • Hartford, IL 62048
618-254-4381 • 800-444-5564

October 27, 1998

Illinois Environmental Protection Agency
Air Monitoring Section
c/o Mr. Terry Sweitzer
P.O. Box 19276
Springfield, Illinois 62794-9276

RE: Third Quarter 1998 Ambient Air Monitoring Report

Dear Mr. Sweitzer,

Enclosed are two copies of the report entitled, "Ambient Air Monitoring Quarterly Report July - September, 1998 for Total Particulate and Lead." The two northern ambient air monitors were relocated and data was collected from them for the third quarter 1998 reporting period.

Regular scheduled sampling events were performed in July prior to the relocation of the northern monitors. This data is included in Appendix D of the attached report and is not discussed in detail in the report and the associated readings are not included in the quarterly average. Obviously, inclusion of this data would not be valid. Fourteen samples were obtained from the new system which provides for a sufficient number of samples for the purpose of this report. In addition, samples were collected from a monitor adjacent to the northwest fence (former northern location) for informational purposes only. This data was tabulated and is included as an attachment to this letter.

Chemetco is pleased to report, as evidenced by the excellent correlation of the quarterly averages for the colocated northern monitors (0.83 ug/m^3 and 0.83 ug/m$^{3)}$, relocation of the monitors appears to be successful. To date, data collected form the official sampler can be verified by the colocated sampler (quality control sampler) which was not the case in the former location.

If you have any questions or require additional information, please contact Heather Young, CSD Environmental Services, Inc., at 618/254-4381 ext. 268 (pager - 618/338-1907) or Greg Cotter at ext. 219.

Sincerely,

Heather Young
Contractual Environmental Manager
CSD Environmental Services, Inc.

Attachment

cc: Jim Henry, Collinsville Region
George von Stamwitz, Armstrong, Teasdale, Schlafly & Davis
Heather Young, CSD Environmental Services, Inc.
File

AMBIENT AIR MONITORING

QUARTERLY REPORT

JULY - SEPTEMBER, 1998

FOR

TOTAL PARTICULATE

AND LEAD

CHEMETCO, INC.
OCTOBER 1998

TABLE OF CONTENTS

		page
1.0	INTRODUCTION	1
1.1	Monitoring Description	1
1.2	Monitoring Report	1
2.0	SAMPLING DATE ACCOUNTING	5
3.0	MONITORING DATA	7
3.1	Quarterly Averages Calculation	7
3.2	Sampler Quarterly Averages	12
3.3	Instrument Precision Calculation	16
3.4	Single Instrument Accuracy	18
3.5	Documentation	19

APPENDIX A Calculation Worksheets
APPENDIX B Laboratory Analyses
APPENDIX C Filter Conditioning Logsheets
APPENDIX D Test Data Collected Prior to Relocation of Northern Monitors

TABLE OF TABLES

		page
TABLE 1-1	Standard Operating Procedures	4
TABLE 2-1	Sample Date Accounting	5
TABLE 3-1	Sampler Location N3	12
TABLE 3-2	Sampler Location OS	13
TABLE 3-3	Sampler Location O3	14
TABLE 3-4	Filter Field Blank	15

TABLE OF FIGURES

		page
FIGURE 1-1	Monitoring Site Locations	3
FIGURE 3-1	Daily Weather Logsheet	8
FIGURE 3-2	Data Assessment Report	17

1.0 INTRODUCTION

This document presents the summary of the third 1998 calendar quarter ambient air monitoring performed at the Chemetco, Inc. facility in Madison County.

1.1 Monitoring Description

The third quarter ambient air monitoring began on July 1, 1998 and sampling for total suspended particulates and lead in the particulate was performed on a once every sixth day basis. The quarter sampling ended on September 30, 1998. Each day, a weather log was maintained documenting wind speed, wind direction, wind direction standard deviation (sigma), temperature, relative humidity and precipitation.

The location of the monitoring sites was based on a modeling report done by Versar, Inc. and approved by IEPA. All locations are shown on a map in Figure 1-1.

Standard operating procedures followed for the filter conditioning, sampling, sampler operation, analyses, etc, are shown in Table 1.1. Complete copies of the SOP's were provided in the Ambient Air Monitoring Quality Assurance/Quality Control Plan.

1.2 Monitoring Report

The following pages contain the results of the third quarter monitoring, including the new northern monitoring locations. Information reagarding sample results prior to the installation of the new monitors is included in Appendix D. This information is not included in the quarterly averages. Their inclusion is not appropriate since the physical location of the new monitoring station is not identical to the former location. IEPA and Chemetco feel that the new monitoring station represents actual ambient air, not air significantly impacted by nearby facility activities, structures, microclimatic influences, and/or surrounding entrained materials as seen in the former location. Section 2 contains an accounting of all the test dates and reasons for eliminating data from certain test dates. Section 3 contains the quarterly averages which includes the new norhtern monitoring locations only, the quality assurance data and meteorological data. The Appendices include copies of the Filter Conditioning Logsheets with total suspended particulate calculation, the laboratory analysis, the calculation worksheets, and test results of the monitoring network including the former northern monitoring locations (analyses prior to July 25, 1998).

Relocation of Colocated Northern Monitors

Chemetco believed that all data collected from N3 and N3-QC at their former location just south of the facility's northern fence was highly questionable and not valid. As evidenced by an analysis of quarterly ambient air monitoring, the monitors in their former location had been significantly impacted by nearby facility activities, structures, microclimatic influences, and/or surrounding entrained materials. The IEPA agreed with Chemetco regarding the need to relocate the northern monitors as outlined below.

Chemetco requested in a letter dated June 18, 1998, to IEPA to move the colocated ambient air monitors located in the northern portion of the facility in order to obtain samples which truly represent ambient air. The relocation was approved by IEPA in a letter dated June 24, 1998. Sampling of the ambient air monitors in the new location was initiated July 25, 1998. Additional sampling events were scheduled that same week to allow the collection of the appropriate number of samples for the third quarter 1998. Sampling proceeded as scheduled in the current location until the new monitors were in place. Chemetco is also utilizing dedicated Dickson recorders for all four official air monitors, the new colocated N3 and N3-QC, OS and O3. The aforementioned relocation of the northern ambient air monitors allowed the collection of truly ambient air similar to that collected by the ambient air monitors OS and O3.

FIGURE 1-1
MONITORING SITE LOCATIONS

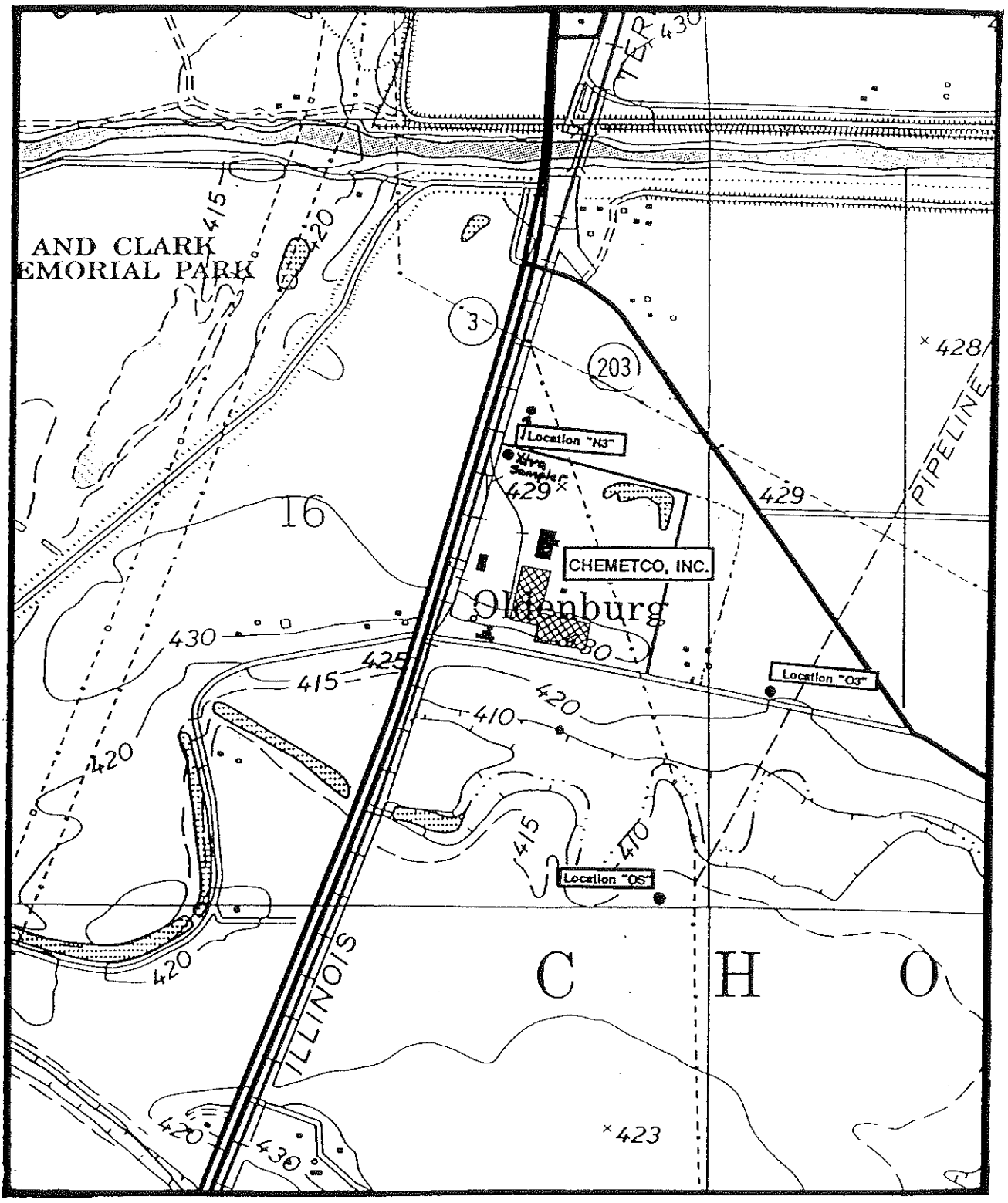

TABLE 1-1
STANDARD OPERATING PROCEDURES

Determination of Total Suspended Particulates in Ambient Air Filters

Filter Conditioning

Lead Analysis in Ambient Air Filters

Operation of GMW 2310 TSP Samplers

Packaging and Shipment of Samples

3.0 MONITORING DATA

After the receipt from the laboratory of all data for the quarterly report, averages for each monitoring site were calculated from the pool of data. In addition, at site N3, two samplers were set up for quality assurance purposes. A standard deviation, lower and upper range was determined based on those samples and under normal circumstances can be assumed to represent accuracy for all locations.

Each day, meteorological data was noted. These logs are shown in Figure 3.1 and quarterly averages are discussed in Section 3.2.

3.1 Quarterly Averages Calculation

From the pool of acceptable data, quarterly averages were calculated by using the simple arithmetic mean determination shown in Equation 1.

$$X = \frac{\Sigma X_i}{n} \qquad \textit{Equation 1}$$

where,

X_i = individual sampling data,

n = the number of valid sampling points in the quarter.

FIGURE 3-1
METEOROLOGICAL DATA SHEET

DAILY WEATHER LOGSHEET

Date	Wind Speed	Wind Direction	Wind Sigma	Temperature	Relative Humidity	Precipitation
7-01-98	5	270		79	90	0.00
7-02-98	3	135		79	86	0.00
7-03-98	4	113		79	75	0.00
*7-04-98	5	225		81	81	0.12
7-05-98	5	158		80	90	0.38
7-06-98	7	135		78	83	0.00
7-07-98	3	90		78	86	0.00
7-08-98	5	158		79	95	1.50
7-09-98	4	158		82	93	0.00
*7-10-98	0	0		81	85	0.00
7-11-98	5	180		80	87	0.01
7-12-98	7	90		78	87	0.00
7-13-98	6	90		75	82	0.00
7-14-98	7	90		76	83	0.00
7-15-98	7	90		77	84	0.00
*7-16-98	5	180		74	83	0.00
7-17-98	4	270		78	90	0.00
7-18-98	3	135		79	82	0.00
7-19-98	3	113		80	79	0.00
7-20-98	8	225		84	75	0.00
7-21-98	11	225		89	67	1.00
*7-22-98	10	225		89	70	0.00
7-23-98	8	113		87	83	0.00
7-24-98	6	23		82	81	0.00
*7-25-98	3	76		76	76	0.00

* Denotes Air Sampling Date
Conditions should be logged daily irregardless of whether the monitoring stations are operating.
Completed sheets should be returned to the Environmental Coordinator.

FIGURE 3-1 (cont.)

DAILY WEATHER LOGSHEET

Date	Wind Speed	Wind Direction	Wind Sigma	Temperature	Relative Humidity	Precipitation
7-26-98	5	66		74	84	0.00
7-27-98	6	90		69	97	0.20
*7-28-98	3	45		71	97	0.00
7-29-98	0	68		74	95	0.00
*7-30-98	0	67		77	95	0.00
7-31-98	0	0		74	95	4.00
*8-01-98	3	45		71	92	0.00
8-02-98	6	90		77	86	0.00
*8-03-98	5	90		81	77	0.00
8-04-98	6	135		80	80	0.00
8-05-98	8	158		80	90	3.25
8-06-98	7	180		81	92	0.50
8-07-98	5	225		79	91	0.00
8-08-98	5	203		78	91	0.22
*8-09-98	4	225		78	90	0.00
8-10-98	2	135		79	87	0.00
8-11-98	2	158		81	86	0.25
8-12-98	5	203		82	87	0.25
8-13-98	5	45		78	86	0.00
8-14-98	2	0		76	89	0.00
*8-15-98	2	135		76	92	0.00
8-16-98	2	135		78	87	0.00
8-17-98	2	113		79	89	0.00
8-18-98	3	225		81	87	0.00
8-19-98	10	90		90	80	1.00

* Denotes Air Sampling Date

Conditions should be logged daily irregardless of whether the monitoring stations are operating.

Completed sheets should be returned to the environmental Coordinator.

FIGURE 3-1 (cont.)

DAILY WEATHER LOGSHEET

Date	Wind Speed	Wind Direction	Wind Sigma	Temperature	Relative Humidity	Precipitation
8-20-98	8	113		81	87	0.00
*8-21-98	3	68		81	80	0.00
8-22-98	2	68		81	83	0.00
8-23-98	5	135		80	86	0.00
8-24-98	8	180		83	79	0.00
8-25-98	12	225		87	73	0.00
8-26-98	8	113		86	74	0.00
*8-27-98	2	45		81	80	0.00
8-28-98	2	45		79	80	0.00
8-29-98	3	158		80	88	0.00
8-30-98	3	158		80	88	0.00
8-31-98	0	0		82	83	0.00
9-01-98	0	0		80	86	0.01
*9-02-98	2	158		75	91	0.05
9-03-98	2	158		75	95	0.00
9-04-98	4	135		81	77	0.00
9-05-98	7	270		86	78	0.00
9-06-98	6	248		84	74	0.00
9-07-98	9	225		84	58	0.00
*9-08-98	10	113		82	72	0.00
9-09-98	5	45		74	79	0.00
9-10-98	3	90		67	82	0.00
9-11-98	0	45		66	86	0.00
9-12-98	0	0		70	81	0.00

* Denotes Air Sampling Date
Conditions should be logged daily irregardless of whether the monitoring stations are operating.
Completed sheets should be returned to the environmental Coordinator.

FIGURE 3-1 (cont.)

DAILY WEATHER LOGSHEET

Date	Wind Speed	Wind Direction	Sigma	Temperature	Relative Humidity	Precipitation
9-13-98	0	0		74	80	0.00
*9-14-98	3	68		76	88	0.04
9-15-98	6	135		75	97	0.02
9-16-98	6	156		76	97	0.00
9-17-98	8	45		75	93	0.04
9-18-98	4	23		75	97	0.70
9-19-98	0	0		75	95	0.00
*9-20-98	0	0		74	87	0.00
9-21-98	0	0		75	86	0.00
9-22-98	3	6		77	83	0.06
9-23-98	7	45		77	79	0.00
9-24-98	8	135		70	73	0.00
9-25-98	9	158		66	79	0.42
*9-26-98	9	158		73	85	0.36
9-27-98	8	180		81	77	0.00
9-28-98	7	135		82	74	0.00
9-29-98	6	135		78	72	0.00
9-30-98	6	135		77	80	0.00

* Denotes Air Sampling Date
Conditions should be logged daily irregardless of whether the monitoring stations are operating.
Completed sheets should be returned to the environmental Coordinator.

3.2 Sampler Quarterly Averages

The simple quarterly average for each set of data from a particular sampler are calculated in the following tables, 3.1 through 3.4.

TABLE 3.1 - Sampler Location N3

DATE	FILTER NO.	LEAD (ug/m^3)	TSP* (ug/m^3)
7/25/98	6748255	0.06	23.25
7/28/98	6748260	0.44	71.23
7/30/98	6748267	0.08	22.91
8/01/98	6748277	0.02	30.49
8/11/98	6748289	0.14	53.22
8/15/98	6748299	0.13	67.02
8/18/98	6748281	0.65	83.71
8/21/98	6748310	0.28	84.43
8/27/98	6748338	1.36	111.10
9/2/98	6748317	0.03	46.18
9/8/98	6748335	0.03	44.29
9/14/98	6748322	6.60	150.08
9/20/98	6748339	0.21	70.95
9/26/98	6748344	1.56	95.84
	AVERAGE =	0.83	68.19

TABLE 3.2 - Sampler Location OS

DATE	FILTER NO.	LEAD (ug/m^3)	TSP* (ug/m^3)
7/25/98	6748253	0.00	20.35
7/28/98	6748264	0.00	34.47
7/30/98	6748270	0.00	21.67
8/01/98	6748288	0.04	26.59
8/11/98	6748291	0.09	90.37
8/15/98	6748296	0.01	50.05
8/18/98	6748279	0.00	45.36
8/21/98	6748306	0.16	65.46
8/27/98	6748326	0.01	43.81
9/2/98	6748315	0.27	39.18
9/8/98	6748332	0.12	40.17
9/14/98	6747799	0.00	38.05
9/20/98	Motor Failure		
9/26/98	6748347	0.01	70.99
	AVERAGE:	0.06	45.12

TABLE 3.3 - Sampler Location O3

DATE	FILTER NO.	LEAD (ug/m^3)	TSP* (ug/m^3)
7/25/98	6748254	0.00	18.08
7/28/98	6748263	0.17	36.79
7/30/98	6748271	0.02	20.95
8/01/98	6748273	0.04	23.51
8/11/98	6748293	0.01	38.84
8/15/98	6748298	0.35	51.15
8/18/98	6748280	0.00	44.97
8/21/98	6748308	0.19	45.44
8/27/98	6748327	0.01	40.85
9/2/98	6748316	0.95	47.61
9/8/98	6748334	0.01	33.37
9/14/98	Motor Failure		
9/20/98	6747802	0.23	58.76
9/26/98	6748346	0.01	69.90
	AVERAGE:	0.28	40.79

TABLE 3.4 - Filter Blank

DATE	FILTER NO.	LEAD (ug/filter)	TSP* (ug/filter)
7/25/98	6748258	6	2000
7/28/98	6748265	6	-200
7/30/98	6748272	6	-300
8/01/98	6748278	6	-2000
8/11/98	6748295	6	3000
8/15/98	6748304	6	-10
8/18/98	6748284	2	-8900
8/21/98	6748312	6	800
8/27/98	6748331	6	300
9/02/98	6748319	6	9000
9/08/98	6748337	16	-400
9/14/98	6748325	6	1000
9/20/98	6748341	6	1000
9/26/98	6748349	6	1300
	AVERAGE:	6.71	410.71

*TSP - Total Suspended Particulate

3.3 Instrument Precision Calculation

The estimates of precision for ambient air quality measurements from the TSP method are calculated from results obtained from the collection of two samplers at one sampling site, N3. The calculated precision from this one sampling site is considered indicative of the precision at all sampling sites for the TSP method.

Using the paired measurements for the official sampler, labeled "N3" and the secondary sampler, labeled "N3-QC," the precision was calculated from the following equations. These numbers are reported on the Data Assessment Report shown in Figure 3-2.

Percentage Difference, d_i

$$d_i = \frac{Y_i - X_i}{X_i} \times 100\%$$

where: Y_i = the concentration TSP measured by the secondary sampler; and
X_i = the concentration TSP measured by the official sampler.

Average Percentage Difference, d_j

$$d_j = \frac{\Sigma d_i}{n}$$

where: n = the number of comparisons.

Standard Deviation, S_j

$$S_j = \sqrt{\frac{\Sigma(d_i)^2 - n(d_j)^2}{n - 1}}$$

96% Probability Limits

$$\text{Upper Limit} = d_j + \frac{1.96(S_j)}{2}$$

$$\text{Lower Limit} = d_j - \frac{1.96(S_j)}{2}$$

FIGURE 3-2
DATA ASSESSMENT REPORT

Date: October 14, 1998
Auditor: Heather Young

Allocated Samplers

d_i = -29.24
d_j = -2.09%
S_j = 11.93%

Upper Limit = 9.60%

Lower Limit = -13.78%

Range = 58.19 to 74.74

Flow Rate Percentage Differences:

Sampler #1: (See Sect. 3-4) **Sampler #2:** (See Sect. 3-4)

Sampler #3: (See Sect. 3-4) **Sampler #4:** (See Sect. 3-4)

3.4 Single Instrument Accuracy

Estimates of accuracy for ambient air quality measurements from the TSP method are calculated from the results of independent audits. Once each sampling quarter, the flow rate of each high-volume sampler is audited.

Jim Henry with the IEPA Collinsville Field Office audited the sampler motors.

3.5 Documentation

For each of the sampling episodes, data packages have been assembled to facilitate the retrieval of necessary data to perform and check calculations, assumptions and determinations and to generate accurate reports. These packages are maintained in a central project file at Chemetco.

Data forms are attached with backup and confirmatory information in Appendices A through C. They include:

- Filter Conditioning and TSP Calculation Logsheet;
- Calculation pages; and,
- Laboratory Analyses Report Sheet.

APPENDIX A

CALCULATION COVER SHEET

Company Name: Chemetco, Inc.

Project Name: Ambient Air Monitoring

Project Number: 98QTR3

Purpose: Sampler Averages

Total Number of Pages: 6 (including this one)

Date: October 14, 1998

Originator's Signature:

1998 3RD QUARTER AVERAGE CALCULATION

LOCATION: N3-QC - New Location

DATE	FILTER NO.	TIME FINISH	TIME START	ELAPSED TIME	CFM	CUBIC METERS	LEAD ug/fltr	TSP ug/fltr	LEAD ug/m3	TSP ug/m3
7/25/98	6748256	83225.1	81785.1	1440	46.3	2000	123	51000	0.06	25.50
7/28/98	6748261	84667.3	83227.8	1439.5	48	2073	796	136000	0.38	65.61
7/30/98	6748268	86109.5	84669.6	1439.9	48.6	2099	157	53000	0.07	25.25
8/01/98	6748276	87553.5	86113.5	1440	48	2074	6	60000	0.00	28.94
8/11/98	6748290	91877.7	90437.9	1439.8	46.3	2017	348	104000	0.17	51.56
8/15/98	6748302	93319.7	91879.7	1440	47.5	2052	254	128000	0.12	62.38
8/18/98	6748282	88995	87555.4	1439.6	47.5	2051	1249	161000	0.61	78.48
8/21/98	6748311	94761.4	93321.4	1440	46.9	1918	525	165000	0.27	86.03
8/27/98	6748329	96203.1	94763.1	1440	47.5	2052	2736	212000	1.33	103.31
9/2/98	6748318	97645.6	96205.6	1440	48	2074	89	89000	0.04	42.92
9/8/98	6748336	99087.9	97647.9	1440	48	2074	58	78000	0.03	37.62
9/14/98	6748323	100529.9	99089.9	1440	45.7	1974	13591	297000	6.88	150.44
9/20/98	6748340	1972.1	529.1	1443	46.9	2030	303	143000	0.15	70.43
9/26/98	6748345	3416.1	1976.3	1439.8	47.5	2052	3060	199000	1.49	96.99
								AVERAGES:	0.83	66.10

1998 3RD QUARTER AVERAGE CALCULATION

LOCATION: N3 - New Location

DATE	FILTER NO.	TIME FINISH	TIME START	ELAPSED TIME	CFM	CUBIC METERS	LEAD ug/fltr	TSP ug/fltr	LEAD ug/m3	TSP ug/m3
7/25/98	6748255	1440	0	1440	44.8	1935	123	45000	0.06	23.25
7/28/98	6748260	1440	0	1440	44.2	1909	839	136000	0.44	71.23
7/30/98	6748267	1410	0	1410	45.4	1920	157	44000	0.08	22.91
8/01/98	6748277	1440	0	1440	44.8	1935	45	59000	0.02	30.49
8/11/98	6748289	1440	0	1440	44.8	1935	274	103000	0.14	53.22
8/15/98	6748299	1410	0	1410	44.8	1895	254	127000	0.13	67.02
8/18/98	6748281	1440	0	1440	44.8	1935	1249	162000	0.65	83.71
8/21/98	6748310	1410	0	1410	44.8	1895	525	160000	0.28	84.43
8/27/98	6748338	1434	0	1434	45.4	1953	2655	217000	1.36	111.10
9/2/98	6748317	1434	0	1434	44.8	1927	50	89000	0.03	46.18
9/8/98	6748335	1428	0	1428	44.8	1919	58	85000	0.03	44.29
9/14/98	6748322	1434	0	1434	46	1979	13058	297000	6.60	150.08
9/20/98	6748339	1440	0	1440	46	1987	409	141000	0.21	70.95
9/26/98	6748344	1440	0	1440	47.1	2035	3175	195000	1.56	95.84
								AVERAGES:	0.83	68.19

1998 3RD QUARTER AVERAGE CALCULATION

LOCATION: OS

DATE	FILTER NO.	TIME FINISH	TIME START	ELAPSED TIME	CFM	CUBIC METERS	LEAD ug/fltr	TSP ug/fltr	LEAD ug/m3	TSP ug/m3
7/25/98	6748253	1440	0	1440	45.5	1966	6	40000	0.00	20.35
7/28/98	6748264	1440	0	1440	45	1944	6	67000	0.00	34.47
7/30/98	6748270	1440	0	1440	43.8	1892	6	41000	0.00	21.67
8/1/98	6748288	1440	0	1440	44.4	1918	85	51000	0.04	26.59
8/11/98	6748291	1440	0	1440	43.8	1892	163	171000	0.09	90.37
8/15/98	6748296	1440	0	1440	44.4	1918	21	96000	0.01	50.05
8/18/98	6748279	1440	0	1440	44.4	1918	6	87000	0.00	45.36
8/21/98	6748306	1440	0	1440	44.4	1940	318	127000	0.16	65.46
8/27/98	6748326	1440	0	1440	44.4	1940	27	85000	0.01	43.81
9/2/98	6748315	1440	0	1440	44.4	1940	527	76000	0.27	39.18
9/8/98	6748332	1440	0	1440	43.8	1892	227	76000	0.12	40.17
9/14/98	6747799	1440	0	1440	43.8	1892	6	72000	0.00	38.05
9/20/98	Motor Failure									
9/26/98	6748347	1440	0	1440	45	1944	23	138000	0.01	70.99
								AVERAGES:	0.06	45.12

1998 3RD QUARTER AVERAGE CALCULATION

LOCATION: O3

DATE	FILTER NO.	TIME FINISH	TIME START	ELAPSED TIME	CFM	CUBIC METERS	LEAD ug/fltr	TSP ug/fltr	LEAD ug/m3	TSP ug/m3
7/25/98	6748254	57722.3	56282.3	1440	44.8	1935	6	35000	0.00	18.08
7/28/98	6748263	59163.9	57723.9	1440	45.3	1957	329	72000	0.17	36.79
7/30/98	6748271	60605.7	59165.7	1440	45.3	1957	32	41000	0.02	20.95
8/1/98	6748273	62047.2	60607.2	1440	45.3	1957	85	46000	0.04	23.51
8/11/98	6748293	66371.3	64931.3	1440	45.3	1957	15	76000	0.01	38.84
8/15/98	6748298	67813.4	66373.4	1440	44.8	1935	680	99000	0.35	51.15
8/18/98	6748280	63488.8	62048.8	1440	45.3	1957	6	88000	0.00	44.97
8/21/98	6748308	69255.1	67815.1	1440	48.9	2112	400	96000	0.19	45.44
8/27/98	6748327	70697.6	69257.6	1440	45.7	1983	27	81000	0.01	40.85
9/2/98	6748316	72139.7	70699.7	1440	45.7	1974	1881	94000	0.95	47.61
9/8/98	6748334	73581.7	72141.7	1440	43.7	1888	16	63000	0.01	33.37
9/14/98	Motor Failure									
9/20/98	6747802	76464.7	75024.8	1439.9	45.7	1974	462	116000	0.23	58.76
9/27/98	6748346	77911.1	76471.1	1440	45.7	1974	23	138000	0.01	69.90
								AVERAGES:	0.28	40.79

1998 3RD QUARTER AVERAGE CALCULATION

LOCATION: FB

DATE	FILTER NO.	LEAD ug/filter	TSP ug/filter
7/25/98	6748258	6	2000
7/28/98	6748265	6	-200
7/30/98	6748272	6	-300
8/01/98	6748278	6	-2000
8/11/98	6748295	6	3000
8/15/98	6748304	6	-10
8/18/98	6748284	6	-8900
8/21/98	6748312	6	800
8/27/98	6748331	6	300
9/2/98	6748319	6	9000
9/8/98	6748337	16	-400
9/14/98	6748325	6	1000
9/20/98	6748341	6	1000
9/26/98	6748349	6	1300
	AVERAGES:	6.71	470.71

CALCULATION COVER SHEET

Company Name: Chemetco, Inc.

Project Name: Ambient Air Monitoring

Project Number: 98QTR3

Purpose: Sampler Precision Calculation

Total Number of Pages: 2 (including this one)

Date: October 14, 1998

Originator's Signature: Heather Hy

SAMPLER PRECISION CALCULATION (PARTICULATE)

Sampling Date	Duplicate Sampler	Official Sampler	Difference	Difference (Square)
07-25-98	25.50	23..25	2.25	5.06
07-28-98	65.61	71.23	-5.62	31.58
07-30-98	25.25	22.91	2.34	5.48
08-01-98	28.94	30.49	-1.55	2.40
08-11-98	51.56	53.22	-1.66	2.76
08-15-98	62.38	67.02	-4.64	21.53
08-18-98	78.48	83.71	-5.23	27.35
08-21-98	86.03	84.43	1.60	2.56
08-27-98	103.31	111.10	-7.79	60.68
09-02-98	42.92	46.18	-3.26	10.63
09-08-98	37.62	44.29	-6.67	44.49
09-14-98	150.44	150.08	0.36	0.13
09-20-98	70.43	70.95	-0.52	0.27
09-26-98	96.99	95.84	1.15	1.32
			$\Sigma d_i = -29.24$	$\Sigma d_i^2 = 216.24$

n=14

$$d_j = \frac{\Sigma d_i}{n} = \frac{-29.24}{14} = -2.09\%$$

$$S_j = \sqrt{\frac{\Sigma(d_i)^2 - n(d_i)^2}{n-1}} = \sqrt{\frac{216.24 - 61.15}{13}} = 11.93\%$$

$$\text{Upper Limit} = d_j + \frac{1.96(S_j)}{2} = -2.09\% + \frac{1.96(11.93)}{2} = -2.09 + 11.69 = 9.60\%$$

$$\text{Lower Limit} = d_j - \frac{1.96(S_j)}{2} = -2.09\% - \frac{1.96(11.93)}{2} = -2.09 - 11.69 = -13.78\%$$

Official Average Particulate: 68.19 mg/m^3

Range: 58.79 to 74.74

APPENDIX B

Chemetco, Inc.
Rt. 3 at Chemetco Lane
Hartford, IL 62048

ATTN: Heather Young

Date: 20-Jul-98

Sample type: Hi-Vol Air Monitoring Program

Sample Identification: Listed below

Filter ID	Location	Pb, ug/filter	TSP, mg/filter
G6747839	N3-QC	1963	59
G6747840	N3	179	73
G6747841	OS	1152	58
G6747842	O3	4030	13
G6747843	FB	<6	1

Analyst: James R. Parkinson

Title: Laboratory Manager

Chemetco, Inc.
Rt. 3 at Chemetco Lane
Hartford, IL 62048

ATTN: Heather Young

Date: 21-Jul-98

Sample type: Hi-Vol Air Monitoring Program

Sample Identification: Listed below

Filter ID	Location	Pb, ug/filter	TSP, mg/filter
G6748237	N3-QC	46	138
G6748238	N3	165	79
G6748239	OS	86	59
G6748240	O3	921	73
G6748241	FB	<6	58

Analyst: James R Parkinson

Title: Laboratory Manager

Chemetco, Inc.
Rt. 3 at Chemetco Lane
Hartford, IL 62048

ATTN: Heather Young

Date: 24-Jul-98

Sample type: Hi-Vol Air Monitoring Program

Sample Identification: Listed below

Filter ID	Location	Pb, ug/filter	TSP, mg/filter
G6748247	FB	<6	5
G6748248	OS	1436	93
G6748250	O3	4436	113
G6748251	N3	72	128
G6748252	N3-QC	118	135

Analyst: James Parkinson

Title: Laboratory Manager

Chemetco, Inc.
Rt. 3 at Chemetco Lane
Hartford, IL 62048

ATTN: Heather Young

Date: 24-Jul-98

Sample type: Hi-Vol Air Monitoring Program

Sample Identification: Listed below

Filter ID	Location	Pb, ug/filter	TSP, mg/filter
G6747742	FB	<6	3
G6748246	N3-QC	167	101
G6748244	N3	613	184
G6748242	OS	1771	149
G6748243	O3	1726	137

Analyst: James R Parkinson

Title: Laboratory Manager

Chemetco, Inc.
Rt. 3 at Chemetco Lane
Hartford, IL 62048

ATTN: Heather Young

Date: 30-Jul-98

Sample type: Hi-Vol Air Monitoring Program

Sample Identification: Listed below

Filter ID	Location	Pb, ug/filter	TSP, mg/filter
G6748253	OS	<6	40
G6748254	O3	<6	35
G6748255	N3	123	45
G6748256	N3-QC	123	51
G6748257	Xtra	721	53
G6748258	FB	<6	2

Analyst: James R Parkinson

Title: Laboratory Manager

Chemetco, Inc.
Rt. 3 at Chemetco Lane
Hartford, IL 62048

ATTN: Heather Young Date: 3-Aug-98

Sample type: Hi-Vol Air Monitoring Program

Sample Identification: Listed below

Filter ID	Location	Pb, ug/filter	TSP, mg/filter
G6748260	N3	839	136
G6748261	N3-QC	796	136
G6748262	Xtra	1349	146
G6748263	O3	329	72
G6748264	OS	<6	67
G6748265	FB	<6	0.2

Analyst: James R Parkinson

Title: Laboratory Manager

Chemetco, Inc.
Rt. 3 at Chemetco Lane
Hartford, IL 62048

ATTN: Heather Young Date: 4-Aug-98

Sample type: Hi-Vol Air Monitoring Program

Sample Identification: Listed below

Filter ID	Location	Pb, ug/filter	TSP, mg/filter
G6748267	N3	157	44
G6748268	N3-QC	157	53
G6748269	Xtra	157	42
G6748270	OS	<6	41
G6748271	O3	32	41
G6748272	FB	<6	-0.3

Analyst: Jane R Parkinson

Title: Laboratory Manager

Chemetco, Inc.
Rt. 3 at Chemetco Lane
Hartford, IL 62048

ATTN: Heather Young Date: 10-Aug-98

Sample type: Hi-Vol Air Monitoring Program

Sample Identification: Listed below

Filter ID	Location	Pb, ug/filter	TSP, mg/filter
G6748273	O3	85	46
G6748275	Xtra	85	52
G6748276	N3-QC	6	60
G6748277	N3	45	59
G6748278	FB	<6	-2
G6748288	OS	85	51

Analyst: James Parkinson

Title: Laboratory Manager

Chemetco, Inc.
Rt. 3 at Chemetco Lane
Hartford, IL 62048

ATTN: Heather Young Date: 20-Aug-98

Sample type: Hi-Vol Air Monitoring Program

Sample Identification: Listed below

Filter ID	Location	Pb, ug/filter	TSP, mg/filter
G6748289	N3	274	103
G6748290	N3-QC	348	104
G6748291	OS	163	171
G6748293	O3	15	76
G6748294	Xtra	311	89
G6748295	FB	<6	3

Analyst: James R Parkinson

Title: Laboratory Manager

Chemetco, Inc.
Rt. 3 at Chemetco Lane
Hartford, IL 62048

ATTN: Heather Young

Date: 1-Sep-98

Sample type: Hi-Vol Air Monitoring Program

Sample Identification: Listed below

Filter ID	Location	Pb, ug/filter	TSP, mg/filter
G6748296	OS	21	96
G6748298	O3	680	99
G6748299	N3	254	127
G6748302	N3-QC	254	128
G6748303	Xtra	292	115
G6748304	FB	<6	-0.01

Analyst: James B. Parkinson

Title: Laboratory Manager

Chemetco, Inc.
Rt. 3 at Chemetco Lane
Hartford, IL 62048

ATTN: Heather Young Date: 18-Aug-98

Sample type: Hi-Vol Air Monitoring Program

Sample Identification: Listed below

Filter ID	Location	Pb, ug/filter	TSP, mg/filter
G6748279	OS	<6	87
G6748280	O3	<6	88
G6748281	N3	1249	162
G6748282	N3-QC	1249	161
G6748283	Xtra	2139	181
G6748284	FB	<6	-8.9

Analyst: James R Parkinson

Title: Laboratory Manager

Chemetco, Inc.
Rt. 3 at Chemetco Lane
Hartford, IL 62048

ATTN: Heather Young

Date: 2-Sep-98

Sample type: Hi-Vol Air Monitoring Program

Sample Identification: Listed below

Filter ID	Location	Pb, ug/filter	TSP, mg/filter
G6748306	OS	318	127
G6748308	O3	400	96
G6748309	Xtra	1021	135
G6748310	N3	525	160
G6748311	N3-QC	525	165
G6748312	FB	<6	0.8

Analyst: James R Parkinson

Title: Laboratory Manager

Chemetco, Inc.
Rt. 3 at Chemetco Lane
Hartford, IL 62048

ATTN: Heather Young Date: 4-Sep-98

Sample type: Hi-Vol Air Monitoring Program

Sample Identification: Listed below

Filter ID	Location	Pb, ug/filter	TSP, mg/filter
G6748305	Xtra	7243	312
G6748326	OS	27	85
G6748327	O3	27	81
G6748328	N3	2655	217
G6748329	N3-QC	2736	212
G6748331	FB	<6	0.3

Analyst: James R Parkinson

Title: Laboratory Manager

Chemetco, Inc.
Rt. 3 at Chemetco Lane
Hartford, IL 62048

ATTN: Heather Young Date: 11-Sep-98

Sample type: Hi-Vol Air Monitoring Program

Sample Identification: Listed below

Filter ID	Location	Pb, ug/filter	TSP, mg/filter
G6748313	Xtra	1403	128
G6748315	OS	527	76
G6748316	O3	1881	94
G6748317	N3	50	89
G6748318	N3-QC	89	89
G6748319	FB	<6	9

Analyst: James R Parkinson

Title: Laboratory Manager

Chemetco, Inc.
Rt. 3 at Chemetco Lane
Hartford, IL 62048

ATTN: Heather Young

Date: Sept. 21,1998

Sample type: Hi-Vol Air Monitoring Program

Sample Identification: Listed below

Filter ID	Location	Pb, ug/filter	TSP, mg/filter
G6748332	Xtra	101	89
G6748333	OS	227	76
G6748334	O3	16	63
G6748335	N3	58	85
G6748336	N3-QC	58	78
G6748337	FB	16	-0.4

Analyst: James R Parkinson

Title: Laboratory Manager

Chemetco, Inc.
Rt. 3 at Chemetco Lane
Hartford, IL 62048

ATTN: Heather Young

Date: Sept. 21,1998

Sample type: Hi-Vol Air Monitoring Program

Sample Identification: Listed below

Filter ID	Location	Pb, ug/filter	TSP, mg/filter
G6747799	OS	<6	72
G6748321	XTRA	24251	355
G6748322	N3	13058	297
G6748323	N3-QC	13591	297
G6748325	FB	<6	1

Analyst: James R Parkinson

Title: Laboratory Manager

Chemetco, Inc.
Rt. 3 at Chemetco Lane
Hartford, IL 62048

ATTN: Heather Young

Date: Oct. 1, 1998

Sample type: Hi-Vol Air Monitoring Program

Sample Identification: Listed below

Filter ID	Location	Pb, ug/filter	TSP, mg/filter
G6748339	N3	409	141
G6748340	N3-QC	303	143
G6748341	FB	<6	1
G6747802	O3	462	116
G6748266	XTRA	1571	162

Analyst: James R Parkinson

Title: Laboratory Manager

Chemetco, Inc.
Rt. 3 at Chemetco Lane
Hartford, IL 62048

ATTN: Heather Young

Date: Oct. 7, 1998

Sample type: Hi-Vol Air Monitoring Program

Sample Identification: Listed below

Filter ID	Location	Pb, ug/filter	TSP, mg/filter
G6748343	XTRA	10550	282
G6748344	N3	3175	195
G6748345	N3-QC	3060	199
G6748346	O3	23	124
G6748347	0S	23	138
G6748349	FB	<6	1.3

Analyst: James R Parkinson

Title: Laboratory Manager

APPENDIX C

Chemetco Environmental Management
Filter Conditioning Logsheet

	Pre Sampling Conditioning			Post Sampling Conditioning				
Filter Number	Date In	Date Out	Weight, mg	Date In	Date Out	Weight, mg	W_{net}, mg	W_{net}, ug
G6748349	9-8-98	9-14-98	4236.1	9-28-98	10-5-98	4237.4	1.3	
G6748350	9-8-98	9-14-98	4265.2	10-8-98	10-12-98	4394.4	129.2	
G6748351	9-8-98	9-14-98	4254.4	10-8-98	10-12-98	4394.8	140.4	
G6748352	9-8-98	9-14-98	4276.1	10-8-98	10-12-98	4352.9	76.8	
G6748353								
G6748354	9-8-98	9-14-98	4246.6	10-8-98	10-12-98	4318.4	71.8	
G6748355	9-8-98	9-14-98	4224.9	10-8-98	10-12-98	4531.1	306.2	
G6748356	9-8-98	9-14-98	4234.0	10-8-98	10-12-98	4233.3	-.7	
G6748357	9-8-98	9-14-98	4260.0	10-12-98	10-14-98	4339.2	79.2	
G6748358	9-8-98	9-14-98	4233.1	10-12-98	10-14-98	4266.3	33.2	
G6748359	9-8-98	9-14-98	4251.6					
G6748360	9-8-98	9-14-98	4251.3	10-12-98	10-14-98	4291.6	40.3	
G6748361	9-8-98	9-14-98	4267.1	10-12-98	10-14-98	4304.9	37.8	
G6748362	9-8-98	9-14-98	4263.5	10-12-98	10-14-98	4315.9	52.4	
G6748363	9-8-98	9-14-98	4254.6	10-12-98	10-14-98	4249.9	-4.7	
G6748364								

Chemetco Environmental Management
Filter Conditioning Logsheet

	Pre Sampling Conditioning			Post Sampling Conditioning				
Filter Number	Date In	Date Out	Weight, mg	Date In	Date Out	Weight, mg	W_{net}, mg	W_{net}, ug
G6748333	8-24-98	8-26-98	4231.4	9-9-98	9-18-98	4307.8	76.4	
G6748334	8-24-98	8-26-98	4238.3	9-9-98	9-18-98	4301.6	63.3	
G6748335	8-24-98	8-26-98	4242.7	9-9-98	9-18-98	4327.9	85.2	
G6748336	8-24-98	8-26-98	4235.3	9-9-98	9-18-98	4313.3	78.	
G6748337	8-24-98	8-26-98	4255.1	9-9-98	9-18-98	4254.7	-.4	
G6748338								
G6748339	8-26-98	9-2-98	4245.7	9-22-98	9-29-98	4386.9	141.2	
G6748340	8-26-98	9-2-98	4233.6	9-22-98	9-29-98	4376.1	142.5	
G6748341	8-26-98	9-2-98	4251.0	9-22-98	9-29-98	4252.1	1.1	
G6748342								
G6748343	8-26-98	9-2-98	4229.6	9-28-98	10-5-98	4511.3	281.7	
G6748344	8-26-98	9-2-98	4241.1	9-28-98	10-5-98	4436.4	195.3	
G6748345	8-26-98	9-2-98	4255.8	9-28-98	10-5-98	4454.7	198.9	
G6748346	8-26-98	9-2-98	4272.2	9-28-98	10-5-98	4396.2	124.0	
G6748347	8-26-98	9-2-98	4249.3	9-28-98	10-5-98	4387.1	137.8	
G6748348								

Chemetco Environmental Management
Filter Conditioning Logsheet

	Pre Sampling Conditioning			Post Sampling Conditioning				
Filter Number	Date In	Date Out	Weight, mg	Date In	Date Out	Weight, mg	W_{net}, mg	W_{net}, ug
G6748316	8-3-98	8-5-98	4273.0	9-8-98	9-10-98	4367.4	94.4	
G6748317	8-3-98	8-5-98	4267.7	9-8-98	9-10-98	4356.8	89.1	
G6748318	8-3-98	8-5-98	4251.6	9-8-98	9-10-98	4340.7	89.1	
G6748319	8-3-98	8-5-98	4250.0	9-8-98	9-10-98	4240.6	9.4	
G6748320								
G6748321	8-3-98	8-5-98	4271.7	9-21-98	9-23-98	4627.0	355.3	
G6748322	8-3-98	8-5-98	4270.2	9-21-98	9-23-98	4567.4	297.2	
G6748323	8-3-98	8-5-98	4272.8	9-21-98	9-23-98	4569.9	297.1	
G6748324								
G6748325	8-3-98	8-5-98	4258.4	9-21-98	9-23-98	4259.4	1.0	
G6748326	8-17-98	8-21-98	4224.5	8-31-98	9-2-98	4309.2	84.7	
G6748327	8-17-98	8-21-98	4232.0	8-31-98	9-2-98	4312.5	80.5	
G6748328	8-17-98	8-21-98	4269.0	8-31-98	9-2-98	4485.9	216.9	
G6748329	8-17-98	8-21-98	4246.7	8-31-98	9-2-98	4458.3	211.6	
G6748330								
G6748331	8-17-98	8-21-98	4243.9	8-31-98	9-2-98	4244.2	0.3	

Chemetco Environmental Management
Filter Conditioning Logsheet

	Pre Sampling Conditioning			Post Sampling Conditioning				
Filter Number	Date In	Date Out	Weight, mg	Date In	Date Out	Weight, mg	W_{net}, mg	W_{net}, ug
G6748300								
G6748301								
G6748302	7-30-98	7-31-98	4212.2	8-20-98	8-21-98	4340.0	127.8	
G6748303	7-30-98	7-31-98	4268.0	8-20-98	8-21-98	4383.0	115.0	
G6748304	7-30-98	7-31-98	4269.9	8-20-98	8-21-98	4269.8	-0.1	
G6748305	8-3-98	8-17-98	4256.8	8-31-98	9-3-98	4568.4	311.6	
G6748306	8-3-98	8-5-98	4230.0	8-26-98	9-2-98	4356.7	126.7	
G6748307								
G6748308	8-3-98	8-5-98	4280.0	8-26-98	9-2-98	4376.0	96.0	
G6748309	8-3-98	8-5-98	4240.1	8-26-98	9-2-98	4374.9	134.8	
G6748310	8-3-98	8-5-98	4281.7	8-26-98	9-2-98	4441.9	160.2	
G6748311	8-3-98	8-5-98	4284.4	8-26-98	9-2-98	4449.7	165.3	
G6748312	8-3-98	8-5-98	4258.3	8-26-98	9-2-98	4259.1	0.8	
G6748313	8-3-98	8-5-98	4277.0	9-8-98	9-10-98	4405.3	128.3	
G6748314								
G6748315	8-3-98	8-5-98	4269.0	9-8-98	9-10-98	4345.3	76.3	

Chemetco Environmental Management
Filter Conditioning Logsheet

	Pre Sampling Conditioning			Post Sampling Conditioning				
Filter Number	Date In	Date Out	Weight, mg	Date In	Date Out	Weight, mg	W_{net}, mg	W_{net}, ug
G6748284	7-29-98	7-31-98	4243.7	8-4-98	8-17-98	4234.8	-8.9	
G6748285	7-29-98	7-31-98	4243.6					
G6748286								
G6748287								
G6748288	7-29-98	7-31-98	4249.5	8-3-98	8-6-98	4295.4	50.5	
G6748289	7-30-98	7-31-98	4244.9	8-17-98	8-18-98	4347.9	103.0	
G6748290	7-30-98	7-31-98	4263.1	8-17-98	8-18-98	4366.9	103.8	
G6748291	7-30-98	7-31-98	4236.3	8-17-98	8-18-98	4407.4	171.1	
G6748292								
G6748293	7-30-98	7-31-98	4265.0	8-17-98	8-18-98	4340.9	75.9	
G6748294	7-30-98	7-31-98	4232.7	8-17-98	8-18-98	4321.6	88.9	
G6748295	7-30-98	7-31-98	4236.6	8-17-98	8-18-98	4239.8	3.2	
G6748296	7-30-98	7-31-98	4265.1	8-20-98	8-21-98	4360.6	95.5	
G6748297								
G6748298	7-30-98	7-31-98	4256.3	8-20-98	8-21-98	4355.2	98.9	
G6748299	7-30-98	7-31-98	4236.4	8-20-98	8-21-98	4363.5	127.1	

Chemetco Environmental Management
Filter Conditioning Logsheet

	Pre Sampling Conditioning			Post Sampling Conditioning				
Filter Number	Date In	Date Out	Weight, mg	Date In	Date Out	Weight, mg	W_{net}, mg	W_{net}, ug
G6748268	7-24-98	7-27-98	4269.8	8-3-98	8-4-98	4322.4	52.6	
G6748269	7-24-98	7-27-98	4241.5	8-3-98	8-4-98	4283.6	42.1	
G6748270	7-24-98	7-27-98	4252.4	8-3-98	8-4-98	4293.0	40.6	
G6748271	7-24-98	7-27-98	4245.0	8-3-98	8-4-98	4285.5	40.5	
G6748272	7-24-98	7-27-98	4273.2	8-3-98	8-4-98	4272.9	-0.3	
G6748273	7-29-98	7-31-98	4262.6	8-3-98	8-6-98	4308.9	46.3	
G6748274								
G6748275	7-29-98	7-31-98	4248.2	8-~~0~~3-98	8-6-98	4300.4	52.2	
G6748276	7-29-98	7-31-98	4234.0	8-3-98	8-6-98	4294.0	60.0	
G6748277	7-29-98	7-31-98	4228.0	8-3-98	8-6-98	4287.0	59.0	
G6748278	7-29-98	7-31-98	4270.7	8-3-98	8-6-98	4268.8	-1.9	
G6748279	7-29-98	7-31-98	4247.6	8-4-98	8-17-98	4335.0	87.4	
G6748280	7-29-98	7-31-98	4264.8	8-4-98	8-17-98	4353.0	88.2	
G6748281	7-29-98	7-31-98	4264.5	8-4-98	8-17-98	4426.4	161.9	
G6748282	7-29-98	7-31-98	4266.0	8-4-98	8-17-98	4427.1	161.0	
G6748283	7-29-98	7-31-98	4255.4	8-4-98	8-17-98	4445.9	190.5	

Chemetco Environmental Management
Filter Conditioning Logsheet

	Pre Sampling Conditioning			Post Sampling Conditioning				
Filter Number	Date In	Date Out	Weight, mg	Date In	Date Out	Weight, mg	W_{net}, mg	W_{net}, ug
G6748252	7-10-98	7-13-98	4264.7	7-20-98	7-21-98	4399.7	135.0	
G6748253	7-16-98	7-20-98	4272.0	7-28-98	7-29-98	4312.2	40.2	
G6748254	7-16-98	7-20-98	4277.0	7-28-98	7-29-98	4312.3	35.3	
G6748255	7-16-98	7-20-98	4260.6	7-28-98	7-29-98	4305.4	44.8	
G6748256	7-16-98	7-20-98	4252.8	7-28-98	7-29-98	4304.0	51.2	
G6748257	7-16-98	7-20-98	4258.1	7-28-98	7-29-98	4310.7	52.6	
G6748258	7-20-98	7-21-98	4286.4	7-28-98	7-29-98	4287.9	1.5	
G6748259								
G6748260	7-20-98	7-21-98	4254.7	7-29-98	7-31-98	4390.4	135.7	
G6748261	7-20-98	7-21-98	4270.2	7-29-98	7-31-98	4405.7	135.5	
G6748262	7-20-98	7-21-98	4279.0	7-29-98	7-31-98	4425.4	146.4	
G6748263	7-20-98	7-21-98	4266.9	7-29-98	7-31-98	4338.4	71.5	
G6748264	7-20-98	7-21-98	4275.7	7-29-98	7-31-98	4342.3	66.6	
G6748265	7-20-98	7-21-98	4263.8	7-29-98	7-31-98	4264.0	0.2	
G6748266	7-20-98	7-21-98	4249.0	9-22-98	9-29-98	4411.4	162.4	
G6748267	7-24-98	7-27-98	4268.2	8-3-98	8-4-98	4312.0	43.8	

Chemetco Environmental Management
Filter Conditioning Logsheet

	Pre Sampling Conditioning			Post Sampling Conditioning				
Filter Number	Date In	Date Out	Weight, mg	Date In	Date Out	Weight, mg	W_{net}, mg	W_{net}, ug
G6748236	6-23-98	6-24-98	4246.1	7-13-98	7-15-98	4249.5	3.4	
G6748237	6-25-98	6-30-98	4237.6	7-13-98	7-15-98	4375.5	137.9	
G6748238	6-25-98	6-30-98	4235.9	7-13-98	7-15-98	4314.9	79.0	
G6748239	6-25-98	6-30-98	4245.3	7-13-98	7-15-98	4304.4	59.1	
G6748240	6-25-98	6-30-98	4250.1	7-13-98	7-15-98	4323.2	73.1	
G6748241	6-25-98	6-30-98	4249.3	7-13-98	7-15-98	4307.4	58.1	
G6748242	6-25-98	6-30-98	4209.4	7-23-98	7-24-98	4358.8	149.4	
G6748243	6-25-98	6-30-98	4258.6	7-23-98	7-24-98	4395.2	136.6	
G6748244	7-10-98	7-13-98	4254.7	7-23-98	7-24-98	4438.7	184.0	
G6748245								
G6748246	7-10-98	7-13-98	4357.4	7-23-98	7-24-98	4457.9	100.5	
G6748247	7-10-98	7-13-98	4275.3	7-20-98	7-21-98	4279.9	4.6	
G6748248	7-10-98	7-13-98	4263.1	7-20-98	7-21-98	4355.6	92.5	
G6748249								
G6748250	7-10-98	7-13-98	4257.4	7-20-98	7-21-98	4369.9	112.5	
G6748251	7-10-98	7-13-98	4264.7	7-20-98	7-21-98	4393.0	128.3	

Chemetco Environmental Management
Filter Conditioning Logsheet

	Pre Sampling Conditioning			Post Sampling Conditioning				
Filter Number	Date In	Date Out	Weight, mg	Date In	Date Out	Weight, mg	W_{net}, mg	W_{net}, ug
G6747841	6-23-98	6-24-98	4249.9	7-7-98	7-15-98	4265.1	15.2	
G6747842	6-23-98	6-24-98	4254.5	7-7-98	7-15-98	4419.5	165	
G6747843	6-23-98	6-24-98	4258.8	7-7-98	7-15-98	4260.3	1.5	
G6747844	7-10-98	7-13-98	4254.7					
G6747845								
G6747846	7-10-98	7-13-98	4357.4					
G6747847	7-10-98	7-13-98	4275.3					
G6747848	7-10-98	7-13-98	4263.1					
G6747849								
G6747850	7-10-98	7-13-98	4250.5					
G6747851	7-10-98	7-13-98	4257.4					
G6747852	7-10-98	7-13-98	4264.7					
G6747853								
G6747854								
G6747855								
G6747856								

Chemetco Environmental Management
Filter Conditioning Logsheet

	Pre Sampling Conditioning			Post Sampling Conditioning				
Filter Number	Date In	Date Out	Weight, mg	Date In	Date Out	Weight, mg	W_{net}, mg	W_{net}, ug
G6747793	4-29-98	5-5-98	4224.2	5-27-98	5-28-98	4225.5	1.3	
G6747794								
G6747795								
G6747796								
G6747797	5-7-98	5-20-98	4238.5	6-16-98	6-18-98	4312.7	74.2	
G6747798	5-7-98	5-20-98	4233.6	6-16-98	6-18-98	4295.2	61.6	
G6747799	5-7-98	5-20-98	4213.3	9-21-98	9-23-98	4285.6	72.3	
G6747800	5-7-98	5-20-98	4227.9	6-16-98	6-18-98	4230.9	3.0	
G6747801								
G6747802	5-7-98	5-20-98	4176.1	9-22-98	9-29-98	4291.8	115.7	
G6747803	5-20-98	5-28-98	4167.6	6-5-98	6-9-98	4238.5	70.9	
G6747804	5-20-98	5-28-98	4218.6	6-5-98	6-9-98	4302.2	83.6	
G6747805	5-20-98	5-28-98	4238.4	6-5-98	6-9-98	4240.4	2.0	
G6747806	5-20-98	5-28-98	4223.3	6-5-98	6-9-98	4297.1	73.8	
G6747807	5-20-98	5-28-98	4220.9	6-5-98	6-9-98	4304.5	83.6	
G6747808	5-28-98	6-15-98	4239.2	6-23-98	6-25-98	4297.5	58.3	

Chemetco Environmental Management
Filter Conditioning Logsheet

	Pre Sampling Conditioning			Post Sampling Conditioning				
Filter Number	Date In	Date Out	Weight, mg	Date In	Date Out	Weight, mg	W_{net}, mg	W_{net}, ug
G6747825	6-23-98	6-24-98	4211.6	6-30-98	7-6-98	4339.3	127.7	
G6747826	6-23-98	6-24-98	4221.1	6-30-98	7-6-98	4221.1	0	
G6747827	6-23-98	6-24-98	4197.1	6-30-98	7-6-98	4279.4	82.3	
G6747828								
G6747829	6-23-98	6-24-98	4243.2	6-30-98	7-6-98	4242.6	-0.6	
G6747830	6-23-98	6-24-98	4237.8	6-30-98	7-6-98	4353.7	115.9	
G6747831	6-23-98	6-24-98	4246.7	6-30-98	7-6-98	4372.9	126.2	
G6747832	6-23-98	6-24-98	4241.4	6-30-98	7-6-98	4324.4	83.0	
G6747833								
G6747834	6-23-98	6-24-98	4236.9	7-2-98	7-15-98	4381.0	144.1	
G6747835	6-23-98	6-24-98	4232.7	7-2-98	7-15-98	4293.8	61.1	
G6747836	6-23-98	6-24-98	4269.5	7-2-98	7-15-98	4343.5	74.0	
G6747837	6-23-98	6-24-98	4247.2					
G6747838	6-23-98	6-24-98	4252.8	7-2-98	7-15-98	4319.7	66.9	
G6747839	6-23-98	6-24-98	4266.0	7-7-98	7-15-98	4389.4	136.6	
G6747840	6-23-98	6-24-98	4265.1	7-7-98	7-15-98	4308.5	43.4	

Chemetco Environmental Management
Filter Conditioning Logsheet

	Pre Sampling Conditioning			Post Sampling Conditioning				
Filter Number	Date In	Date Out	Weight, mg	Date In	Date Out	Weight, mg	W_{net}, mg	W_{net}, ug
G6747729	2-19-98	2-24-98	4179.4	3-26-98	3-27-98	4216.3	36.9	
G6747730	2-19-98	2-24-98	4245.2	3-26-98	3-27-98	4249.9	4.7	
G6747731	2-19-98	2-24-98	4260.2	~~3-26-98~~				
G6747732	2-19-98	2-24-98	4211.3	3-26-98	3-27-98	4607.8	396.5	
G6747733	2-19-98	2-24-98	4225.2	3-26-98	3-27-98	4224.6	-.6	
G6747734	2-25-98	3-4-98	4243.6	3-17-98	3-18-98	4305.3	101.7	
G6747735	2-25-98	3-4-98	4253.8	3-17-98	3-18-98	4314.4	60.6	
G6747736	2-25-98	3-4-98	4233.2	3-17-98	3-18-98	4370.6	137.4	
G6747737	2-25-98	3-4-98	4233.3	3-17-98	3-18-98	4351.5	118.2	
G6747738	2-25-98	3-4-98	4255.9	3-17-98	3-18-98	4255.1	-.8	
G6747739	3-4-98	3-18-98	4258.9	4-6-98	4-7-98	4347.2	88.3	
G6747740								
G6747741	3-4-98	3-18-98	4263.9	4-6-98	4-7-98	4341.4	77.5	
G6747742	3-4-98	3-18-98	4237.8	7-23-98	7-24-98	4240.4	2.6	
G6747743	3-4-98	3-18-98	4246.0	4-6-98	4-7-98	4246.3	.3	
G6747744	3-4-98	3-18-98	4245.2	4-6-98	4-7-98	4295.8	50.6	

APPENDIX D

LOCATION: SAMPLING PRIOR TO INSTALLATION OF NEW MONITORS

DATE	FILTER NO.	TIME FINISH	TIME START	ELAPSED TIME	CFM	CUBIC METERS	LEAD ug/fltr	TSP ug/fltr	LEAD ug/m3	TSP ug/m3
N3-QC										
7/04/98	6747839	76394.2	75044.9	1349.3	46.7	1890	1963	59000	1.04	31.21
7/10/98	6748237	77746	76396	1350	46.7	1891	46	138000	0.02	72.96
7/16/98	6748252	79291.7	77941.8	1349.9	46.7	1891	118	135000	0.06	71.38
7/22/98	6748246	80642.7	79293.7	1349	47.3	1914	167	101000	0.09	52.76
N3										
7/04/98	6747840	77445.2	76005.2	1440	45.6	1970	179	73000	0.09	37.06
7/10/98	6748238	78898	77458	1410	46.1	1950	165	79000	0.08	40.51
7/16/98	6748251	80339.5	78900.1	1439.4	46.1	1991	72	128000	0.04	64.30
7/22/98	6748244	81781.8	80341.7	1440.1	47.3	2044	613	184000	0.30	17.12
OS										
7/04/98	6747841	1440	0	1440	44.4	1918	1152	58000	0.60	30.24
7/10/98	6748239	1440	0	1440	43.8	1892	86	59000	0.05	31.18
7/16/98	6748250	1440	0	1440	43.3	1871	1436	93000	0.77	49.72
7/22/98	6748242	1440	0	1440	43.8	1892	1771	149000	0.94	78.75
O3										
7/04/98	6747842	51955.4	50515.4	1440	45.3	1957	4030	13000	2.06	6.64
7/10/98	6748240	53397.3	51957.3	1440	45.3	1957	921	73000	0.47	37.30
7/16/98	6748248	54838.4	53398.4	1440	45.3	1957	4436	113000	2.27	57.74
7/22/98	6748243	56280.3	54840.3	1440	44.8	1935	1726	137000	0.89	70.79
FB										
7/04/98	6747843						6	1000		
7/10/98	6748241						6	58000		
7/16/98	6748247						6	5000		
7/22/98	6747742						6	3000		