Mercedes-Benz

Application for Certification – Part 1
2017 Model Year

Specific Sections

Test Group
HMBXD03.0HD1

Durability Group:	HMBXDPDNNPP3
Evaporative Family:	N/A
EPA Summary Sheet No.:	CSI-HMBXD03.0HD1
Durability Group Description:	Diesel Cycle - Four Stroke - water cooled – piston-diesel – direct injection Pt7Pd Oxidation Catalyst (OC) Diesel Particulate Filter (DPF) Selective Catalytic Reduction (SCR) Catalyst
Test Group Description(s):	3.0 ltr. V6
Applicable Standards:	Federal state: 40 CFR § 1816-08 Calif: LEV II (ULEV)
Vehicle(s) Covered:	Mercedes-Benz Sprinter 2500, Freightliner Sprinter 2500
OBD Group Name:	CRx_b
Vehicles Tested:	Exhaust: L906DE30TC – Z5051-2 Evap: N/A

EPA Response Requested By:

John Lipa, 734-997-2032

Table of Contents & Revisions

Table of Contents:

Specific Sections 1
Table of Contents & Revisions 2
S-01: Correspondence 3
S-02: Durability Group Description 3
S-03: Evaporative/Refueling Family Description 3
S-04: Durability Procedure Description 3
S-05: Test Group Description 3
S-06: Test Vehicle Description 4
S-07: Test Results 5
S-07-01: Test Vehicle Information 5
S-07-02: Test Results 7
S-08: Statements 8
S-09: OBD-System Information 8
S-10: Alternate Fuel (if applicable) 8
S-11: List of AECD 8
S-12: Identification and Description of certified vehicles 8
S-13: Projected US vehicle sales 8
S-14: Request for Certificate 9
S-14-01: Request for Certificate 9
S-14-02: OBD approval 9
S-14-03: Fee filing form 10
S-14-04: Approval Letters low ash oil 10
S-14-05: FFH approval 11
S-15: HEV-specific data (if applicable) 11
S-16: Confidential data 12
S-16-01: OBD-approval 12
S-16-02: Durability data 13
S-16-03: AAF 14
S-16-04: Description of AECDs 15
S-16-05: preconditioning procedure for emission testing 15
S-16-06 After treatment devices EDV 18
Included Attachments 19
S-17: California ARB Information 20
S-17-01: Certification Summary Sheet 22
S-17-02: ARB Certification Review Sheet 23
S-17-03: VECI Labels 24
S-17-04: Warranty Statement 24
S-17-05: General Compliance Statement 25

Revisions:

Issue Date / Revision Date	Affected Pages	Description of Changes
Mar-01-2017	all	Initial Version
April-28-17		Updated S-16 (AAF,DF), CSI attachment
Aug-08-17	Attachments	Updated Coast Down Data attachment
Sep-09-17	CSI	Updated with current CSI

S-01: Correspondence

(refer to S-01 in common section for a complete list of contacts)

Gary Wong
Manager, Government Liaison, CARB
Resp.: CARB Liaison
Phone: 310-547-6089, Fax: 310. 518.3080
e-mail: gary.wong@daimler.com

John Lipa
Manager, Government Liaison, EPA
Resp.:EPA Liaison
Phone: 734.997.2032
e-mail: john.lipa@daimler.com

S-02: Durability Group Description

Please refer to the common application for certification.

S-03: Evaporative/Refueling Family Description

ORVR Testing Waiver per CFR § 86.1810-01 (k) + (m)
Due to the low vapor pressure of diesel fuel and the vehicle tank temperatures, hydrocarbon vapor concentrations are low and the vehicle meets the 0.20 grams/gallon refueling emission standard without a control system.

S-04: Durability Procedure Description

Please refer to the common application for certification.

S-05: Test Group Description

The summary sheet numbers are provided on the cover page of this application. The Test Group Description is provided in section 2 of the common application as part of the durability group description.

S-06: Test Vehicle Description

Car Number	Vehicle Type	Engine Displ.	Engine Codes	Transm.	ETW [lbs]	Exhaust Emission Control System
Z5051-2 (4,53to) EDV	L906DE30TC (4,53to)	2987	OM642-30C	L-5	8500	DFI/TC/CAC/EGR/EGRC/OC+DPF/SCRC/NOXS(2)/WR-HO2S

DDV test data are according to agreement for interim DF and AAF. Final AAF and DF will be submitted after durability run has been completed. This is planned for March 2018.

S-07: Test Results

S-07-01: Test Vehicle Information

Test Vehicle Information Details
Information Process Code : N
EPA Manufacturer Code : MBX
Vehicle Identification Text : L906DE30TCZ5051-2
Vehicle Configuration Number : 0
Vehicle Configuration Details
Vehicle Description Details
Manufacturer Vehicle Configuration Number : 0
Test Group Name : HMBXD03.0HD1
Model Year : 2017
Actual Test Vehicle Make Text : Mercedes-Benz
Actual Test Vehicle Model Text : Sprinter 3500 /Freightliner 3500

Drive Source Details
Drive Source Identifier : C
Fuel Identifier : D

Test Drive Code : R
Shift Indicator Light Usage Identifier : 1
Aged Component Usage Identifier : 4
Odometer Correction Details
Correction Initial Value : 38
Correction Factor Value : 0.9974
Correction Sign Identifier : -
Correction Units Code : M

Engine Code Text : OM642-30C
Engine Rated Horsepower Value : 188
Engine Displacement Value : 2.987
Air Aspiration Details
Air Aspiration Method Identifier : TC
Air Aspiration Device Count : 1
Air Aspiration Configuration Identifier : N

Charge Air Cooler Identifier : A
Vehicle Specifications Details
Curb Weight Value : 7400
Equivalent Test Weight Value : 8500
Gross Vehicle Weight Rating Value : 9990
NV Ratio Value : 39.5
Axle Ratio Value : 4.2

Transmission Specifications Details
Light Duty Transmission Type Identifier : A
Transmission Lockup Indicator : Y
Transmission Creeper Gear Indicator : N
Transmission Gear Count : 5

Target Set Coefficient Details
Test Procedure Dynamometer Coefficients Category : C-H-E
Target CoefficientA Value : 88.451
Target CoefficientB Value : 0.06509
Target CoefficientC Value : 0.051995
Set CoefficientA Value : 51.077
Set CoefficientB Value : -0.78871
Set CoefficientC Value : 0.058691

Manufacturer Comment Text : CONTINENTAL Vanco four season longlife 215/85R16 x2

EPA Generated Test Vehicle Details
Original Receipt Date : 20170302
Hybrid Vehicle Indicator : N
Adjusted Loaded Vehicle Weight Value : 8695
Loaded Vehicle Weight Value : 7700
Total Road Load Horsepower Value : 29.6

Transaction Status Details
Transaction Status Identifier : ACCEPTED

S-07-02: Test Results

See attached files

	Designation	EVAP family	Date
1	Certification Summary Information Report	N/A	05/04/17

S-08: Statements

Please refer to the common application for certification.

S-09: OBD-System Information

The OBD approval will be forwarded upon availability.

S-10: Alternate Fuel (if applicable)

This test group does not cover flexible or dedicated alternate fuel vehicles.

S-11: List of AECD

Please refer to S-16 for a detailed description of AECDs including functional explanations.

S-12: Identification and Description of certified vehicles

The identification and description of all vehicles covered by the certificate is given
- in section 02 (common) for exhaust purposes
- in section 03 (common) for evaporative/refueling families.

All appropriate test parameters necessary to conduct an official certification exhaust or evaporative emission test are provided in sections 07 or 17.

S-13: Projected US vehicle sales

Please refer to the common application for certification.

S-14: Request for Certificate

S-14-01: Request for Certificate

Mercedes-Benz requests that EPA issues a certificate of conformity and that ARB issues an executive order for the test group listed on the cover page of this application.

The applicable test results are listed in section 07. The test group complies with all applicable regulations contained within 40 CFR Part 86. Production vehicles are in all material respects the same as the certification test vehicles. The application is current as of this date.

Felix Wellmann

Note: Compliance statements are listed in the common section 08.

S-14-02: OBD approval

For OBD approval see confidential section (S-16)

S-14-03: Fee filing form

S-14-04: Approval Letters low ash oil

UNITED STATES ENVIRONMENTAL PROTECTION AGENCY
NATIONAL VEHICLE AND FUEL EMISSIONS LABORATORY
2565 PLYMOUTH ROAD
ANN ARBOR, MICHIGAN 48105-2498

OFFICE OF
AIR AND RADIATION

September 27, 2005

RECEIVED
OCT 07 2005
R. R. MODLIN

Mr. Reginald Modlin
Director, Environmental and Energy Planning
DaimlerChrysler Corporation
800 Chrysler Drive
Auburn Hills, MI 48326-2757
CIMS 482-00-71

Mr. Modlin,

Thank you for your August 30, 2005 letter regarding DaimlerChrysler's desire to use low ash content engine oil to certify your clean light-duty diesel vehicles. As you correctly noted in your letter, EPA Guidance Documents CCD-01-12 (Use of GF-3 Engine Oil in Test Vehicles) and CCD-04-07 (Use of GF-4 Engine Oil in Certification and Fuel Economy Test Vehicles) are the basis for how EPA determines how to deal with unique engine oils with respect to certification and fuel economy testing.

EPA agrees that the use of low ash content engine oil (0.8%) will be beneficial to allowing new advanced particulate filter systems to meet their full potential for performing over the full useful life of the vehicles. Our primary concern with manufacturer's request to certify with unique engine oils is that these oils be readily available to consumers. We realize that the number of light-duty diesel vehicles in the U.S. is low and that the demand for clean light-duty diesel engine oil is also low and that it will be initially difficult to establish widespread distribution of low ash oil.

The plan proposed by DaimlerChrysler for the use and certification of low ash content engine oil, which includes the availability of the low ash engine oil at the 4,300 DaimlerChrysler dealerships in the U.S., the investigation of the potential for making the engine oil available through automotive aftermarket retail chains (Auto Zone, NAPA, etc.) through DaimlerChrysler's MOPAR aftermarket organization, and the continued work with oil manufacturers to market the oil through their outlets and promote the use of the oil at "quick oil change" facilities, appears to be reasonable. Therefore, we are approving DaimlerChrylser's plan to use low ash content engine oil for the certification of light-duty diesel vehicles.

Printed on Recycled Paper

Please let me know if you any additional questions. You can contact me at 734-214-4286.

Sincerely,

Linc Wehrly
Compliance and Innovative Strategies Division
Office of Transportation and Air Quality

S-14-05: FFH approval

For FFH approval see confidential section (S-16)

S-15: HEV-specific data (if applicable)

No Hybrid Electric Vehicles (HEV) are part of this test group.

Included Attachments

	Designation	EVAP family	Date
1	Certification Summary Information Report	N/A	12/09/2017
2	Approval for Fuel Fired Heater	N/A	05/02/2016
3	Coast Down Data Sprinter 4x2		08/08/17

Certification Summary Information Report

Manufacturer	Mercedes Benz	**Manufacturer Code**	MBX
Test Group	HMBXD03.0HD1	**Evaporative/Refueling Family**	--
Certificate Number	--	**CARB Executive Order #**	--
Certificate Issue Date	--	**Certificate Revision Date**	--
Certificate Effective Date	--	**Conditional Certificate**	--
CSI Revision #	--	**CSI Submission/Revision Date**	09/12/2017 01:56:57 AM
Model Year	2017		

Test Group Information

CSI Type	Update for Correction	**Running Change Reference Number**	--
GHG Exempt Status	Not Exempt		

Drive Sources and Fuel(s)

Drive Source #1: Combustion Engine

Fuel	Basic Fuel Metering System	Lean Burn Strategy Indicator
Diesel	Common Rail Direct Diesel Injection	--

Hybrid Indicator	No		
Multiple Fuel Storage	--	**Rechargeable Energy Storage System Indicator**	--
Multiple Fuel Combustion	--	**Off-board Charge Capable Indicator**	--
Fuel Cell Indicator	--	**EPA Vehicle Class**	HDV1, M6
Federal Clean Fuel Vehicle	No	**Federal Clean Fuel Vehicle Standard**	--
Federal Clean Fuel Vehicle ILEV	No	**California Partial Zero Emissions Vehicle Indicator**	No
Durability Group Name	HMBXDPDNNPP3	**Durability Group Equivalency Factor**	1.0
Reduced Fee Test Group	No	**Certification Region Code(s)**	FA, CA
Complies with HD GHG 2b/3 regulations?	Yes		
Introduction into Commerce Date	05/01/2017	**CAP2000 Conditional Certificate?**	N/A
Independent Commercial Importer?	--	**Alternative Fuel Converter Certificate?**	--
SFTP Federal Composite Compliance Identifier	Not Applicable	**SFTP Tier 2 Composite CO Option**	No
SFTP LEV-III Composite Compliance Indicator	No		
OBD Compliance Type	CARB	**OBD Demonstration Vehicle Test Group**	EMBXT03.0U2A
Test Group OBD Compliance Level	Partial - with deficiencies and penalty	**Number of Test Group OBD Deficiencies**	4
OBD Deficiencies Comments	--		
Mfr Test Group Comments	--		
Mfr Exhaust / Evap Standards Comments	--		

Certification Summary Information Report

Test Group	HMBXD03.0HD1	**Evaporative/Refueling Family**	--

Models Covered by this Certificate

Carline Manufacturer	Division	Carline	Certification Region Code(s)	Drive System	Trans - Type	- # of Gears	Trans - Lockup
Mercedes Benz	1 - Mercedes-Benz	630 - Sprinter 3500	Federal	2-Wheel Drive, Rear	Automatic	5	Yes
Mercedes Benz	1 - Mercedes-Benz	630 - Sprinter 3500	California + CAA Section 177 states	2-Wheel Drive, Rear	Automatic	5	Yes
Mercedes Benz	1 - Mercedes-Benz	628 - Sprinter 2500	Federal	2-Wheel Drive, Rear	Automatic	5	Yes
Mercedes Benz	1 - Mercedes-Benz	624 - Freightliner Sprinter 2500	Federal	2-Wheel Drive, Rear	Automatic	5	Yes
Mercedes Benz	1 - Mercedes-Benz	629 - Sprinter 2500	Federal	2-Wheel Drive, Rear	Automatic	5	Yes
Mercedes Benz	1 - Mercedes-Benz	626 - Freightliner Sprinter 3500	Federal	2-Wheel Drive, Rear	Automatic	5	Yes
Mercedes Benz	1 - Mercedes-Benz	625 - Freightliner Sprinter 2500	Federal	2-Wheel Drive, Rear	Automatic	5	Yes
Mercedes Benz	1 - Mercedes-Benz	629 - Sprinter 2500	California + CAA Section 177 states	2-Wheel Drive, Rear	Automatic	5	Yes
Mercedes Benz	1 - Mercedes-Benz	624 - Freightliner Sprinter 2500	California + CAA Section 177 states	2-Wheel Drive, Rear	Automatic	5	Yes
Mercedes Benz	1 - Mercedes-Benz	626 - Freightliner Sprinter 3500	California + CAA Section 177 states	2-Wheel Drive, Rear	Automatic	5	Yes
Mercedes Benz	1 - Mercedes-Benz	628 - Sprinter 2500	California + CAA Section 177 states	2-Wheel Drive, Rear	Automatic	5	Yes
Mercedes Benz	1 - Mercedes-Benz	625 - Freightliner Sprinter 2500	California + CAA Section 177 states	2-Wheel Drive, Rear	Automatic	5	Yes

Engine Description

Hybrid Type	--	**Hybrid Description**	--
Engine Type	4-Stroke Compression Ignition	**Mfr Engine Description**	--
Engine Block Arrangement	V-shaped engine	**Mfr Engine Block Arrangement Description**	--
Camless Valvetrain Indicator	No	**Oil Viscosity/Classification**	5W-30 DC 225-11
Number of Cylinders/Rotors	6	**Mechanically Variable Compression Ratio Indicator**	N

After Treatment Device(s) (ATD)

ATD Number	ATD Type	ATD Precious Metal	Substrate Material	Substrate Construction
1	Selective Catalytic Reduction	no precious metal / copper	Ceramic	Monolith
2	Oxidation catalyst	Platinum + Paladium	Ceramic	Monolith
3	Diesel Particulate Filter	Platinum + Paladium	Ceramic	Monolith

Mfr After Treatment Device (ATD) Comments	--
Direct Ozone Reduction (DOR) Device	Not Equipped
Mfr Emission Control Device Comments	--

Certification Summary Information Report

Test Group	HMBXD03.0HD1	**Evaporative/Refueling Family**	--

Engine Configuration Number 1

Engine Displacement (liters)	3.0	**Engine Rated Horsepower**	188
Number of Inlet Valves Per Cylinder	2	**Number of Exhaust Valves Per Cylinder**	2
Air Aspiration Method	Turbocharged	**Number of Air Aspiration Devices**	1
Air Aspiration Device Configuration	Single	**Charge Air Cooler Type**	Air
Air Aspiration Drive Method(s)	Mechanical		
Cylinder Deactivation	No		
Cylinder Deactivation Description	--		
Variable Valve Timing	Yes		
Variable Valve Timing System Description	Allows timing of the intake / exhaust valves to be changed while the engine is in operation		
Variable Valve Lift?	No		
Variable Valve Lift System Description	--		
Number of Knock Sensors	2	**Number of Air/Fuel Sensors**	1
Air/Fuel Sensor # 1 Type	Heated oxygen	**Air/Fuel Sensor # 1 Description**	--
Mfr Air/Fuel Sensor Comments	--		
Exhaust Gas Recirculation	Yes	**Cooled Exhaust Gas Recirculation**	Yes
EGR Type	Variable Valve Timing Control	**Exhaust Gas Recirculation Description if 'Other'**	--
Closed Loop Air Injection System	No		
Air Injection Type	Not Applicable	**Air Injection Type if 'Other'**	--
Mfr Engine Configuration Comments	--		

Official Test Numbers

Test Group Fuel	FTP	US06	SC03	Cold CO	Highway	EPA City Litmus Value	EPA City Litmus Threshold	EPA Highway Litmus Value	EPA Highway Litmus Threshold	CREE Weighting Factor
Diesel	HMBX10046936	--	--	--	HMBX10046935	--	13.6	--	16.1	--

Certification Summary Information Report

Test Group	HMBXD03.0HD1	**Evaporative/Refueling Family**	--

Emission Data Vehicle Information

Vehicle ID / Configuration	L906DE30TCZ5051-2 / 0	**Manufacturer Vehicle Configuration Number**	0
Original Test Group Name	HMBXD03.0HD1	**Original Evaporative/Refueling Family**	--
Original Test Vehicle Model Year	2017		

Vehicle Model

Represented Test Vehicle Make	Mercedes-Benz	**Represented Test Vehicle Model**	Sprinter 3500 /Freightliner 3500

Leak Family Details

Leak Family Identifier	--	**Leak Family Name**	--

Drive Sources and Fuel System Details

Drive Source and Fuel#	Drive Source	Fuel
1	Combustion Engine	Diesel

Hybrid Indicator	No		
Multiple Fuel Storage	--	**Multiple Fuel Combustion**	--
Fuel Cell Indicator	--	**Rechargeable Energy Storage System Indicator**	--
Rechargeable Energy Storage System	--	**Rechargeable Energy Storage System, if 'Other'**	--
Off-board charge Capable Indicator	--		
Odometer Correction -- Initial	38	**Odometer Correction Factor**	0.9974
Odometer Correction Sign	- = System Miles is equal to (Test odometer reading - Initial system miles) * Correction factor		
Odometer Correction Units	Miles		
Engine Code	OM642-30C	**Rated Horsepower**	188
Displacement (liters)	2.987		
Air Aspiration Method	Turbocharged	**Air Aspiration Method, if 'Other'**	
Number of Air Aspiration Devices	1	**Air Aspiration Device Configuration**	Single
Charge Air Cooler Type	Air	**Drive Mode While Testing**	2-Wheel Drive, Rear
Shift Indicator Light Usage	Not eqipped	**Aged Emission Components**	4,000 (mi)
Curb Weight (lbs)	7400	**Equivalent Test Weight (pounds)**	8500
GVWR (lbs)	9990	**N/V Ratio**	39.5
Axle Ratio	4.2		
Transmission Type	Automatic	**# of Transmission Gears**	5
Transmission Lockup	Yes	**Creeper Gear**	No

Dynamometer Coefficients:

	Target Coefficients			Set Coefficients			
Coefficient Category	**A (lbf)**	**B (lbf/mph)**	**C (lbf/mph**2)**	**A (lbf)**	**B (lbf/mph)**	**C (lbf/mph**2)**	**EPA Calculated Total Road Load Horse Power for City/Highway/Evap Coefficients**
City/Highway/Evap	88.451	0.06509	0.051995	51.077	-0.78871	0.058691	29.6

Emission Control Device Comments --

Certification Summary Information Report

Test Group	HMBXD03.0HD1	**Evaporative/Refueling Family**	--

Manufacturer Test Vehicle Comments CONTINENTAL Vanco four season longlife 215/85R16 x2

Certification Summary Information Report

Test Group	HMBXD03.0HD1	**Evaporative/Refueling Family**	--

Test #	**HMBX10046936**	**Test Procedure**	**2 - CVS 75 and later (w/o can. load)**
Exhaust Test # for this Evap Test	--	**Test Fuel Type**	19 - Federal Cert Diesel 7-15 PPM Sulfur
Test Date	02/22/2017	**Fuel**	Diesel
Fuel Batch ID	U17D01	**Fuel Calibration Number**	1
Vehicle Class	HDV1 (Federal HD chassis Class 2b GVW 8501-10000), MDV6 (Cal. LEV 2/3 MDV GVW 8501-10000)	**DF Type**	Mfr. Determined
Verify Test Lab ID	Ann Arbor Technology Center		
E10 Evaporative Test Measurement Method	--		
Test Start Odometer Reading	5516	**Odometer Units**	M
4WD Test Dyno	No	**Diesel Adjustment Factor Usage**	U
State of Charge Delta	--		
Drive Cycle Speed Tolerance Criteria	Used Part 86 (+/- 2 mph, +/- 1 sec)	**Road Speed Fan Usage**	No

Test Results

Test Result Name	Unrounded Test Result	Verify Calculated FE Equivalent Value (miles per gallon)
METHANE (CH4 - Methane)	0.00547	--
CO (Carbon Monoxide)	0.0499	--
METHANE-COMB (Combined CH4 for HD 2b/3 vehicles only)	0.0041785	--
N2O-COMB (Combined Nitrous Oxide for HD 2b/3 vehicles only)	0.04295	--
DT-ASCR (Drive Trace Absolute Speed Change Rating)	-0.36	--
DT-EER (Drive Trace Energy Economy Rating)	-0.64	--
DT-IWRR (Drive Trace Inertia Work Ratio Rating)	-0.48	--
HCHO (Formaldehyde)	0.00008	--
NOX (Nitrogen Oxide)	0.0969	--
N2O (Nitrous Oxide)	0.056	--
HC-NM (Non-methane Hydrocarbon)	0.0045	--
NMOG (Non-methane organic gas)	0.0045	--
PM (Particulate Matter)	0.0023	--
HC-TOTAL (Total Hydrocarbon)	0.0096	--

Test Result Name	Unrounded Test Result	Verify Calculated CREE/OPT-CREE
Carbon-Related Exhaust Emissions	586	586

Certification Summary Information Report

Test Group	HMBXD03.0HD1	**Evaporative/Refueling Family**	--

Test Result Name	Unrounded Test Result	Verify Calculated CO2
Carbon dioxide	585.66	--

Manufacturer Test Comments CONTINENTAL Vanco four season longlife 215/85R16 x2

Certification Summary Information Report

Test Group HMBXD03.0HD1 **Evaporative/Refueling Family** --

Certification Region	Useful Life	Standard Level	Emission Name	Rounded Result	RAF	NMOG/NMHC Ratio	Diesel Adjustment Factor	Add DF	Mult DF	Certification Level	Standard	Pass/Fail
Fed	120,000 miles	HDV1 (Federal HD chassis Class 2b GVW 8501-10000)	CO	0.05	--	--	0.0033 UP	0.0464	--	0.1	7.3	Pass
Fed	120,000 miles	HDV1 (Federal HD chassis Class 2b GVW 8501-10000)	CO2	586	--	--	0.0134 UP	0	--	586	--	--
Fed	120,000 miles	HDV1 (Federal HD chassis Class 2b GVW 8501-10000)	HCHO	0.0001	--	--	0.0 UP	0	--	0.000	0.032	Pass
Fed	120,000 miles	HDV1 (Federal HD chassis Class 2b GVW 8501-10000)	METHANE-COMB	0.004	--	--	0 UP	0	--	0.00	0.05	Pass
Fed	120,000 miles	HDV1 (Federal HD chassis Class 2b GVW 8501-10000)	N2O-COMB	0.043	--	--	0 UP	0	--	0.04	0.05	Pass
Fed	120,000 miles	HDV1 (Federal HD chassis Class 2b GVW 8501-10000)	NMOG	0.0045	--	1	0.0002 UP	0.0016	--	0.006	0.195	Pass
Fed	120,000 miles	HDV1 (Federal HD chassis Class 2b GVW 8501-10000)	NOX	0.10	--	--	0.0111 UP	0.0208	--	0.1	0.2	Pass
Fed	120,000 miles	HDV1 (Federal HD chassis Class 2b GVW 8501-10000)	PM	0.002	--	--	0.00 UP	0	--	0.00	0.02	Pass
CA	120,000 miles	California LEV-II ULEV	CO	0.05	--	--	0.0033 UP	0.0464	--	0.1	6.4	Pass
CA	120,000 miles	California LEV-II ULEV	CO2	586	--	--	0.00 UP	0	--	586	--	--
CA	120,000 miles	California LEV-II ULEV	HCHO	0.0001	--	--	0.0 UP	0	--	0.000	0.016	Pass
CA	120,000 miles	California LEV-II ULEV	NMOG	0.0045	--	1	0.0002 UP	0.0016	--	0.006	0.143	Pass
CA	120,000 miles	California LEV-II ULEV	NOX	0.10	--	--	0.0111 UP	0.0208	--	0.1	0.2	Pass
CA	120,000 miles	California LEV-II ULEV	PM	0.002	--	--	0.00 UP	0	--	0.00	0.06	Pass

NOTE: For Non-charge depleting tests, the Rounded Result for CO2 Emission name is a Verify-calculated value.

Certification Summary Information Report

Test Group	HMBXD03.0HD1	**Evaporative/Refueling Family**	--

Test #	**HMBX10046935**	**Test Procedure**	**3 - HWFE**
Exhaust Test # for this Evap Test	--	**Test Fuel Type**	19 - Federal Cert Diesel 7-15 PPM Sulfur
Test Date	02/22/2017	**Fuel**	Diesel
Fuel Batch ID	U17D01	**Fuel Calibration Number**	1
Vehicle Class	MDV6 (Cal. LEV 2/3 MDV GVW 8501-10000)	**DF Type**	Mfr. Determined
Verify Test Lab ID	Ann Arbor Technology Center		
E10 Evaporative Test Measurement Method	--		
Test Start Odometer Reading	5527	**Odometer Units**	M
4WD Test Dyno	No	**Diesel Adjustment Factor Usage**	U
State of Charge Delta	--		
Drive Cycle Speed Tolerance Criteria	Used Part 86 (+/- 2 mph, +/- 1 sec)	**Road Speed Fan Usage**	No

Test Results

Test Result Name	Unrounded Test Result	Verify Calculated FE Equivalent Value (miles per gallon)
METHANE (CH4 - Methane)	0.0026	--
CO (Carbon Monoxide)	0.0055	--
DT-ASCR (Drive Trace Absolute Speed Change Rating)	3	--
DT-EER (Drive Trace Energy Economy Rating)	0.08	--
DT-IWRR (Drive Trace Inertia Work Ratio Rating)	4.19	--
NOX (Nitrogen Oxide)	0.0235	--
N2O (Nitrous Oxide)	0.027	--
HC-NM (Non-methane Hydrocarbon)	0.001	--
HC-TOTAL (Total Hydrocarbon)	0.0034	--

Test Result Name	Unrounded Test Result	Verify Calculated CREE/OPT-CREE
Carbon-Related Exhaust Emissions	439	439

Test Result Name	Unrounded Test Result	Verify Calculated CO2
Carbon dioxide	438.7	--

Manufacturer Test Comments CONTINENTAL Vanco four season longlife 215/85R16X2

Certification Summary Information Report

Test Group	HMBXD03.0HD1	Evaporative/Refueling Family	--

Certification Region	Useful Life	Standard Level	Emission Name	Rounded Result	RAF	NMOG/NM HC Ratio	Diesel Adjustment Factor	Add DF	Mult DF	Certification Level	Standard	Pass/Fail
CA	120,000 miles	California LEV-II ULEV	CO2	439	--	--	0.0 UP	0	--	439	--	--
CA	120,000 miles	California LEV-II ULEV	NOX	0.02	--	--	0.0111 UP	0.0208	--	0.1	0.4	Pass

NOTE: For Non-charge depleting tests, the Rounded Result for CO2 Emission name is a Verify-calculated value.

Fuel Properties

Fuel Batch ID	**U17D01**	**Fuel Calibration Number**	**1**
Test Fuel Type	19 - Federal Cert Diesel 7-15 PPM Sulfur	**Fuel Batch Calibration Date**	04/14/2016
Fuel Batch Calibration Effective Date	02/01/2017	**Fuel Batch Calibration Ineffective Date**	--
Carbon Weight Fraction NMHC	--	**Carbon Weight Fraction HC**	--
Exhaust Carbon Weight Fraction	--	**Fuel Methanol Volume Fraction**	--
Fuel Density (grams/cubic ft)	--	**Fuel Specific Gravity**	0.854
Fuel Ethanol Volume Percent (%)	--	**Fuel Net Heating Value (BTU / lb)**	18328
Fuel Blend Carbon Weight Fraction	0.867	**Weight Fraction CO2**	--

Certification Summary Information Report

Test Group	HMBXD03.0HD1	**Evaporative/Refueling Family**	--

Consolidated List of Standards

Exhaust Standards

Cert Region	California + CAA Section 177 states	**Cert/In-Use Code**	Both
Vehicle Class	MDV6 (Cal. LEV 2/3 MDV GVW 8501-10000)	**Standard Level**	California LEV-II ULEV
Fuel	Diesel	**Test Procedure**	CVS 75 and later (w/o can. load)

Useful Life	Emission Name	Rounded Result	RAF	NMOG / NMHC	Upward Diesel Adjustment Factor	Downward Diesel Adjustment Factor	Mult DF	Add DF	Std
120,000 miles	CO	--	--	--	0.0033	0	--	0.0464	6.4
120,000 miles	CO2	--	--	--	0.00	0	--	0	999
120,000 miles	HCHO	--	--	--	0.0	0	--	0	0.016
120,000 miles	NMOG	--	--	1	0.0002	0	--	0.0016	0.143
120,000 miles	NOX	--	--	--	0.0111	0	--	0.0208	0.2
120,000 miles	PM	--	--	--	0.00	0	--	0	0.06

Cert Region	California + CAA Section 177 states	**Cert/In-Use Code**	Both
Vehicle Class	MDV6 (Cal. LEV 2/3 MDV GVW 8501-10000)	**Standard Level**	California LEV-II ULEV
Fuel	Diesel	**Test Procedure**	HWFE

Useful Life	Emission Name	Rounded Result	RAF	NMOG / NMHC	Upward Diesel Adjustment Factor	Downward Diesel Adjustment Factor	Mult DF	Add DF	Std
120,000 miles	CO2	--	--	--	0.0	0	--	0	999
120,000 miles	NOX	--	--	--	0.0111	0	--	0.0208	0.4

Certification Summary Information Report

Test Group	HMBXD03.0HD1	**Evaporative/Refueling Family**	--
Cert Region	Federal	**Cert/In-Use Code**	Both
Vehicle Class	HDV1 (Federal HD chassis Class 2b GVW 8501-10000)	**Standard Level**	HDV1 (Federal HD chassis Class 2b GVW 8501-10000)
Fuel	Diesel	**Test Procedure**	CVS 75 and later (w/o can. load)

Useful Life	Emission Name	Rounded Result	RAF	NMOG / NMHC	Upward Diesel Adjustment Factor	Downward Diesel Adjustment Factor	Mult DF	Add DF	Std
120,000 miles	CO	--	--	--	0.0033	0	--	0.0464	7.3
120,000 miles	CO2	--	--	--	0.0134	0	--	0	999
120,000 miles	HCHO	--	--	--	0.0	0	--	0	0.032
120,000 miles	METHANE-COMB	--	--	--	0	0	--	0	0.05
120,000 miles	N2O-COMB	--	--	--	0	0	--	0	0.05
120,000 miles	NMOG	--	--	1	0.0002	0	--	0.0016	0.195
120,000 miles	NOX	--	--	--	0.0111	0	--	0.0208	0.2
120,000 miles	PM	--	--	--	0.00	0	--	0	0.02

Certification Summary Information Report

Test Group	HMBXD03.0HD1	Evaporative/Refueling Family	--

Glossary

Useful Life			
4	4,000 miles	120	120,000 miles
50	50,000 miles	150	150,000 miles
100	100,000 miles		

Emission Name			
HC-TOTAL	Total Hydrocarbon	METHANOL	CH3OH - Methanol
CO	Carbon Monoxide	N2O	Nitrous Oxide
CO2	Carbon dioxide	SPITBACK	Spitback Hydrocarbon in grams
CREE	Carbon-Related Exhaust Emissions	AMP-HRS	Integrated Amp-hours
OPT-CREE	Optional Carbon-Related Exhaust Emissions	START-SOC	System Start State of Charge Watt-hours
NOX	Nitrogen Oxide	END-SOC	System End State of Charge Watt-hours
PM	Particulate Matter	ACT-DISTANCE	Actual Distance Driven (miles)
PM-COMP	SFTP Composite Particulate Matter	AS-VOLT	Average System Voltage
HC-NM	Non-methane Hydrocarbon	CO2 BAG 1	Bag 1 Carbon Dioxide
OMHCE	Organic material Hydrocarbon Equivalent	CO2 BAG 2	Bag 2 Carbon Dioxide
OMNMHCE	Organic material non-methane HC equivalent	CO2 BAG 3	Bag 3 Carbon Dioxide
NMOG	Non-methane organic gas	CO2 BAG 4	Bag 4 Carbon Dioxide
HCHO	Formaldehyde	NMOG+NOX	Non-methane organic gases plus Nitrogen Oxides
H3C2HO	Acetaldehyde	NMOG+NOX-COMP	SFTP Composite Non-methane Organic Gases + Nitrogen Oxides
HC-NM+NOX	SFTP Non-methane Hydrocarbon + Nitrogen Oxides for US06 or SC03	DT-IWRR	Drive Trace Inertia Work Ratio Rating
HC-NM+NOX-COMP	SFTP Composite Non-methane Hydrocarbon + Nitrogen Oxides	DT-ASCR	Drive Trace Absolute Speed Change Rating
CO-COMP	SFTP Composite Carbon Monoxide	DT-EER	Drive Trace Energy Economy Rating
ETHANOL	C2H5OH - Ethanol	COMB-CREE	Combined Carbon-Related Exhaust Emissions
FE BAG 1	Bag 1 Fuel Economy	COMB-OPT-CREE	Combined Optional Carbon-Related Exhaust Emissions
FE BAG 2	Bag 2 Fuel Economy	HC-TOTAL-EQUIV	Total Hydrocarbon equivalent - Evap only
FE BAG 3	Bag 3 Fuel Economy	METHANE-COMB	Combined CH4 for HD 2b/3 vehicles only
FE BAG 4	Bag 4 Fuel Economy	N2O-COMB	Combined Nitrous Oxide for HD 2b/3 vehicles only
MFR FE	Manufacturer Fuel Economy	LEAK-DIA	Effective Leak Diameter (inches)
HC	Hydrocarbon for Running Loss and ORVR	LEAK-GAS CAP	Gas Cap Leakage (cc/min)
METHANE	CH4 - Methane	CO2-COMB	Combined Carbon Dioxide for HD 2b/3 Vehicles Only

Certification Region			
CA	California + CAA Section 177 states	FA	Federal

Exhaust Emission Standard Level			
B1	Federal Tier 2 Bin 1	L3ULEV340	California LEV-III ULEV340
B2	Federal Tier 2 Bin 2	L3ULEV250	California LEV-III ULEV250
B3	Federal Tier 2 Bin 3	L3ULEV200	California LEV-III ULEV200
B4	Federal Tier 2 Bin 4	L3SULEV170	California LEV-III SULEV170
B5	Federal Tier 2 Bin 5	L3SULEV150	California LEV-III SULEV150

Certification Summary Information Report

Test Group	HMBXD03.0HD1	**Evaporative/Refueling Family**	--
B6	Federal Tier 2 Bin 6	L3LEV630	California LEV-III LEV630
B7	Federal Tier 2 Bin 7	L3ULEV570	California LEV-III ULEV570
B8	Federal Tier 2 Bin 8	L3ULEV400	California LEV-III ULEV400
B9	Federal Tier 2 Bin 9	L3ULEV270	California LEV-III ULEV270
B10	Federal Tier 2 Bin 10	L3SULEV230	California LEV-III SULEV230
B11	Federal Tier 2 Bin 11	L3SULEV200	California LEV-III SULEV200
HDV1	HDV1 (Federal HD chassis Class 2b GVW 8501-10000)	T3B160	Federal Tier 3 Bin 160
HDV2	HDV2 (Federal HD chassis Class 3 GVW 10001-14000)	T3B125	Federal Tier 3 Bin 125
L2	California LEV-II LEV	T3B110	Federal Tier 3 Transitional Bin 110
L2OP	California LEV-II LEV Optional	T3B85	Federal Tier 3 Transitional Bin 85
U2	California LEV-II ULEV	T3SULEV30	Federal Tier 3 Transitional LEV-II SULEV30 Carryover
S2	California LEV-II SULEV	T3B70	Federal Tier 3 Bin 70
ZEV	California ZEV	T3B50	Federal Tier 3 Bin 50
OT	Other	T3B30	Federal Tier 3 Bin 30
T1	Federal Tier 1	T3B20	Federal Tier 3 Bin 20
PZEV	California PZEV	T3B0	Federal Tier 3 Bin 0
L2LEV160	California LEV-II LEV160	HDV2B395	Federal Tier 3 HD Class 2b Transitional Bin 395
L2ULEV125	California LEV-II ULEV125	HDV2B340	Federal Tier 3 HD Class 2b Transitional Bin 340
L2SULEV30	California LEV-II SULEV30	HDV2B250	Federal Tier 3 HD Class 2b Bin 250
L2LEV395	California LEV-II LEV395	HDV2B200	Federal Tier 3 HD Class 2b Bin 200
L2ULEV340	California LEV-II ULEV340	HDV2B170	Federal Tier 3 HD Class 2b Bin 170
L2LEV630	California LEV-II LEV630	HDV2B150	Federal Tier 3 HD Class 2b Bin 150
L2ULEV570	California LEV-II ULEV570	HDV2B0	Federal Tier 3 HD Class 2b Bin 0
L3LEV160	California LEV-III LEV160	HDV3B630	Federal Tier 3 HD Class 3 Transitional Bin 630
L3ULEV125	California LEV-III ULEV125	HDV3B570	Federal Tier 3 HD Class 3 Transitional Bin 570
L3ULEV70	California LEV-III ULEV70	HDV3B400	Federal Tier 3 HD Class 3 Bin 400
L3ULEV50	California LEV-III ULEV50	HDV3B270	Federal Tier 3 HD Class 3 Bin 270
L3SULEV30	California LEV-III SULEV30	HDV3B230	Federal Tier 3 HD Class 3 Bin 230
L3SULEV20	California LEV-III SULEV20	HDV3B200	Federal Tier 3 HD Class 3 Bin 200
L3LEV395	California LEV-III LEV395	HDV3B0	Federal Tier 3 HD Class 3 Bin 0

Transmission Type Code			
AMS	Automated Manual- Selectable (e.g. Automated Manual with paddles)	M	Manual
A	Automatic	OT	Other
AM	Automated Manual	SA	Semi-Automatic
CVT	Continuously Variable	SCV	Selectable Continuously Variable (e.g. CVT with paddles)

Drive System Code			
4	4-Wheel Drive	P	Part-time 4-Wheel Drive
F	2-Wheel Drive, Front	A	All Wheel Drive
R	2-Wheel Drive, Rear		

Certification Summary Information Report

Test Group	HMBXD03.0HD1	**Evaporative/Refueling Family**	--

Additional Terms and Acronyms

AFC	Alternative Fuel Converter	ICI	Independent Commercial Importer
CSI	Certificate Summary Information	ORVR	Onboard Refueling Vapor Recovery
DF	Deterioration Factor	SIL	Shift Indicator Light
Evap	Evaporation, Evaporative	Trans	Transmission

APPROVED
Reference No. CL-2009-039
Air Resources Board
Mobile Source Operations Division
On-Road Certification/Audit Section
By
Title ARE
Date 12-7-09

Mercedes-Benz

Request for Approval

Fuel-Fired Heater on Diesel Concepts

The Fuel Fired Heater Application consists of a “4°C-Shut-Off” Criteria preventing Heater Operation above this Ambient Temperature Threshold.

To be installed additionally on following vehicles:

Vehicle	Engine	Test Group
Mercedes-Benz Sprinter 2500 CDI Freightliner 2500	V 6 CDI (Diesel)	HMBXD03.0HD1
Mercedes-Benz Sprinter 3500 CDI Freightliner 3500	V 6 CDI (Diesel)	HMBXD03.0HD2
Mercedes-Benz Sprinter 2500 CDI 4x4 Freightliner 2500 4x4	V 6 CDI (Diesel)	HMBXD03.0HD3
Mercedes-Benz Sprinter 3500 CDI 4x4 Freightliner 3500 4x4	V 6 CDI (Diesel)	HMBXD03.0HD4

Applicable Standards: Calif: LEV II (ULEV) for PC

EPA Response Requested By:
John Lipa, 734-997-2032

Table of Contents & Revisions

Table of Contents:

Table of Contents & Revisions 2
S-01: Correspondence 2
S-02: Technical Description 3
Modes of operation 3
Operation condition V6 CDI engine 3
System overview 4
Technical data 5
S-03: Test Results 9
Supporting documents 13
S-04: Location within the vehicle 14
Exhaust system overview 15
Fuel supply overview 16
S-05: OBD-System Information 17
System overview 17
Auxiliary Engine Coolant Heater 17
Auxiliary Passenger Compartment Heater 17
Operating Conditions 17
Monitoring Description 17
Safety Functions prior to FFH start 17
Starting Strategy 17
Safety Functions if the flame is extinguished 18
Fan motor speed decrease during operation 19
Fail Safe Strategy 19
S-06: Request for Certificate 19
S-06-01: Request for Certificate 19

Revisions:

Issue Date / Revision Date	Affected Pages	Description of Changes
May-2-16	all	Initial Version

S-01: Correspondence

(refer to S-01 in common section for a complete list of contacts)

Gary Wong
Manager, Government Liaison, CARB
Resp.: CARB Liaison
Phone: 310-547-6089, Fax: 310.803.0327
e-mail: gary.wong @daimler.com

John Lipa
Manager, Government Liaison, EPA
Resp.:EPA Liaison
Phone: 734-997-2032, Fax: 734.995.1342
e-mail: john.lipa@daimler.com

S-02: Technical Description

Modes of operation

On Diesel engines that option is used for a quick warm-up of the passenger compartment. Specifically on Diesel engines exists a lack of compartment heating during the cold season where ambient temperatures are possible at or below 10°C, because of the high thermal efficiency of this type of engine. The function of the auxiliary heater is automatically without any manual influence of the vehicle operator.

The Eberspaecher Hydronic D5 has an auxiliary heater function depending on the specific application and will be operated with Diesel fuel. The air-fuel mixture is constant for the full load and the part load operation maintained by a dosing pump and an electric fan for air supply. The fan can be operated at two stages of speed and the constant dosing pump is triggered with the related frequency.

When ambient temperature exceeds 40°F = 4°C the Fuel Fired Heater shuts-off.

Operation condition V6 CDI engine

The heater will be started together with the engine, if the ambient temperature is at or below 4 °C and engine coolant temperature (ECT) is below 75°C. The ambient temperature and the ECT are transmitted via vehicle CAN-BUS.

The heater switches “off” automatically, if the coolant temperature rises up to 85 °C.
Under normal vehicle operation the typical operation time of the FFH is approx 10-15min to increase ECT to the shut-off temperature of 85°C, if engine is started below 4° ambient temperature. **If ambient temperature exceeds 4°C before ECT shut-off temperature is met, the heater switches “off” either. Whatever occurs first.**

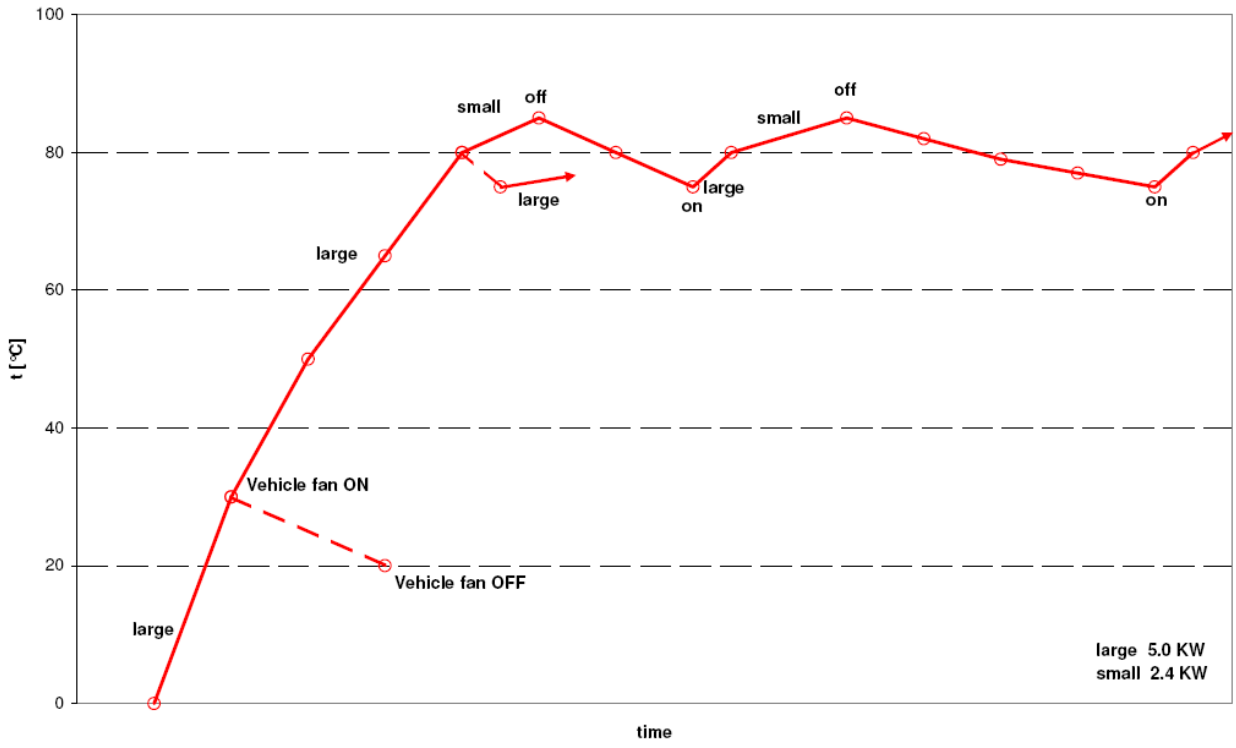

System overview

Sectional drawing *HYDRONIC* D 5 W S

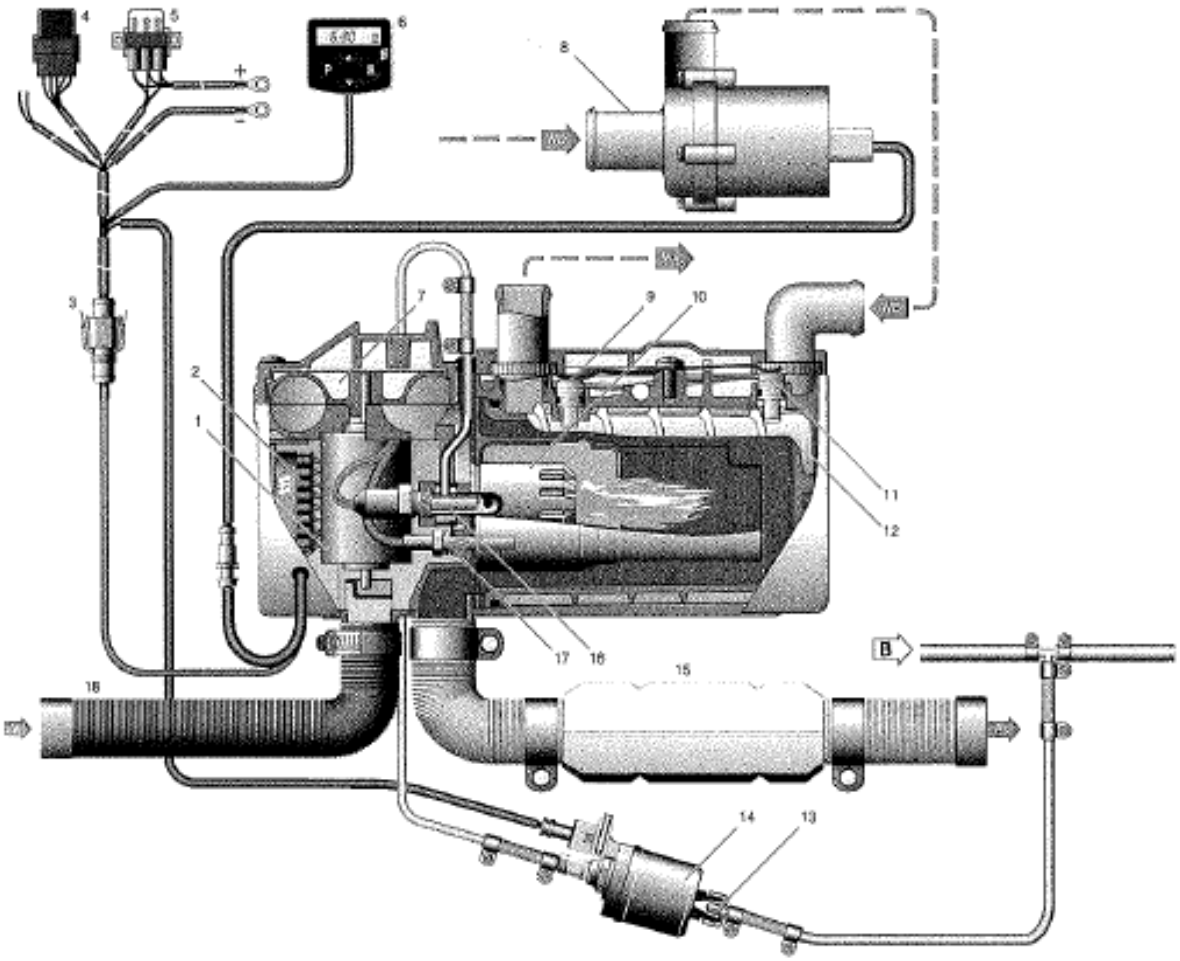

1 Electric motor
2 Controller
3 Interface / 8-pole connector
4 Fan relay
5 Fuse holder
6 Mini timer
7 Combustion air fan
8 Water pump
9 Temperature sensor
10 Combustion chamber
11 Overheating sensor
12 Heat exchanger
13 Cup filter, fitted in dosing pump
14 Dosing pump
15 Exhaust pipe with exhaust silencer
16 Glow plug
17 Flame sensor
18 Combustion air pipe

A = exhaust
B = fuel
C = combustion air
WA = water discharge
WE = water intake

Technical data

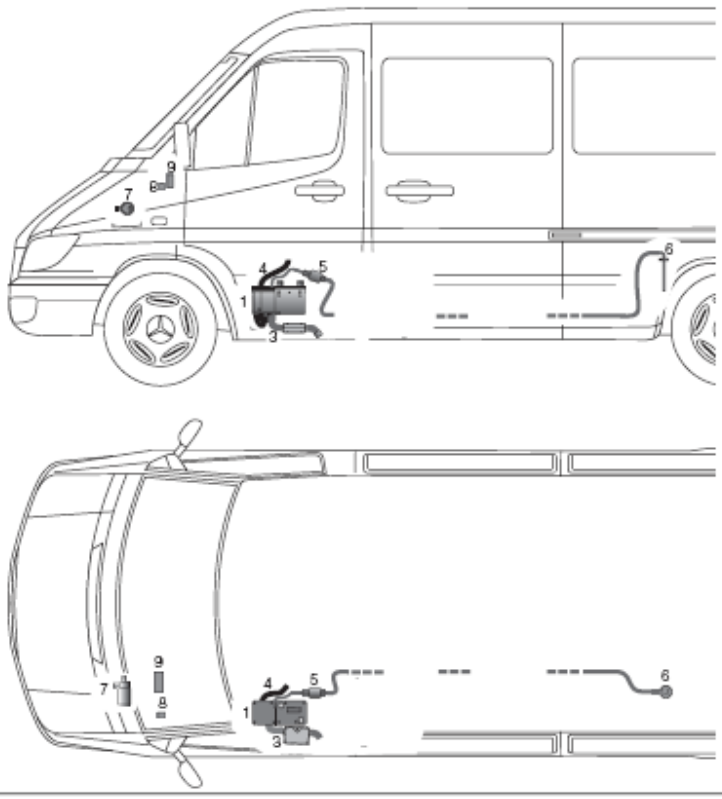

(D)

1 Hydronic B 5 W S, D 5 W S* oder D 5 W Z*
2 Hydronic D 5 W Z*
3 Abgasrohr mit Abgasschalldämpfer
4 Verbrennungsluftansaugrohr
5 Dosierpumpe
6 Tankanschluss
7 Wasserpumpe, MB-Teil
8 Einschalter, MB-Teil
9 Bedienteil, MB-Teil

* Verwendung als Standheizer oder Zuheizer durch Programmierung des Steuergerätes wählbar. Die Programmierung erfolgt durch MB.

(GB)

1 Hydronic B 5 W S, D 5 W S* or D 5 W Z*
2 Hydronic D 5 W Z*
3 Exhaust pipe with exhaust silencer
4 Combustion air intake pipe
5 Metering pump
6 Tank connection
7 Water pump, MB part
8 ON-switch, MB part
9 Control unit, MB part

* Use as pre-heater or auxiliary heater can be selected by programming the control box. Programming by MB.

GB

Technical data - Hydronic D 5 W S / D 5W Z
Version 25 2453 05 00 00

Heating medium	Water, coolant liquid
Fuel	commercially available diesel fuel DIN EN 590
Control stages	Large / Small
Thermal current	5000 / 2400 watt
Fuel consumption	0,63 / 0,3 l/h
Rated voltage	12 Volt
Operating range	10,2 bis 16 Volt

- Lower voltage limit
  Response time – undervoltage protection: 20 sec.
  Undervoltage protection fitted in the controller switches the heater off on reaching the voltage limit.

- Upper voltage limit:
  Response time – overvoltage' protection: 20 sec.
  Overvoltage protection fitted in the controller switches the heater off on reaching the voltage limit.

Electrical power consumption	
• at start	110 Watt
• during operation	37 / 10 Watt
Medium flow rate, Heater	min. 250 l/h
Tolerable operating pressure	up to max. 2.5 bar overpressure
Water volume, Heater	approx 0,13 l
Interference suppression	Suppression grade 3 to DIN EN 55025
Weight	approx 2,3 kg
Ambient temperature	
• Heater / Controller	
- in operation	-40 °C to + 80 °C
- not in operation	-40 °C to + 105 °C
• Dosing pump	
- in operation	-40 °C to + 80 °C
-not in operation	-40 °C to + 105 °C

Please note !

Provided no limit values are given, the technical data listed is subject to the tolerances usually applicable to heaters of ±10% for nominal voltage, ambient temperature 20 °C and reference altitude Esslingen.

GB

Installation position

The heater (B 5 W S, D 5 W S or D 5 W Z) is fastened with a bracket to the vehicle floor under the floor on the left side of the vehicle, behind the door entrance.

For the tandem version (D 5 W S and D 5 W Z), both heaters are fastened to the vehicle floor one behind the other.

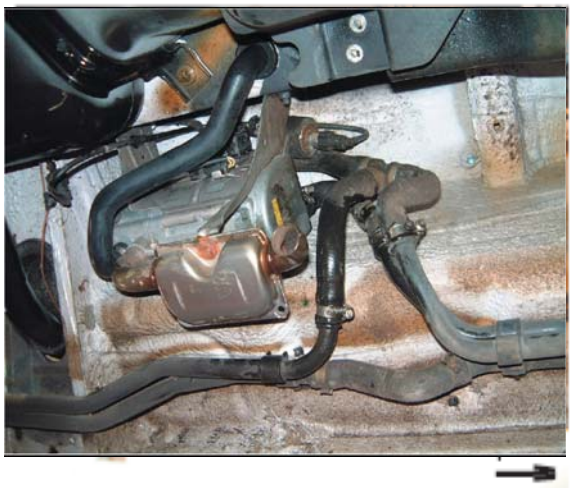

① Tandemvariante / Tandem version Hydronic D 5 W S
② Tandemvariante / Tandem version Hydronic D 5 W Z
③ Verbrennungsluftschlauch / Combustion air hose
④ Abgasschalldämpfer / Exhaust silencer
F Fahrtrichtung / Direction of travel

Combustion air
The combustion air is sucked in from the vehicle chassis beam with a rubber hose (MB part).
In the tandem version, the combustion air for heater D 5 W Z is sucked in with a flexible pipe above the heater.

Exhaust system
The exhaust system consists of a pipe bracket, an exhaust silencer and a short, bent exhaust pipe end (Daimler original spare part).

Metering pump
The metering pump is fastened to the heater console above the heater with a rubber holder.

GB

Fuel supply
The fuel is taken directly from the vehicle tank with a rising pipe, fitted in the original MB tank fitting.

Please note !

These vehicles have two tank versions
- 75 l tank (standard) – the heater only works when there are min. approx. 15 l in the tank
- 100 l tank (SA) – the heater only works when there are min. approx. 25 l in the tank

When the fuel level falls to the minimum quantities stated above, the heater is switched off (Daimler diagnosis reports the fault „fuel low").

Diagnosis

A diagnosis query can only be carried out via the CAN bus with the Daimler Star diagnosis.

GB

Water circuit 1

The heater and the waterpump are integrated in the water feed pipe from the vehicle engine to the vehicle heat exchanger.

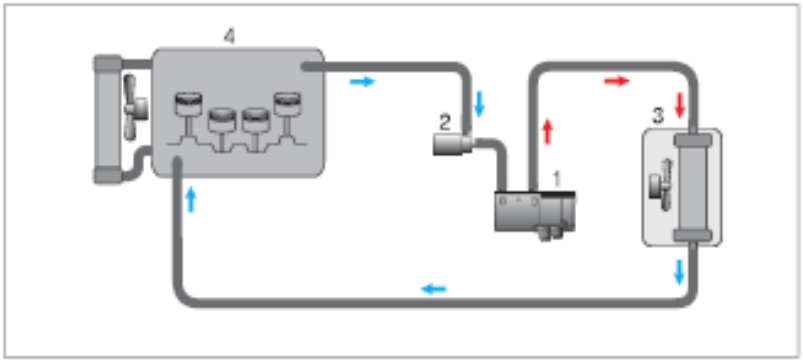

① Heizgerät
② Elektr. Wasserpume, MB-Teil
③ Fahrzeugwärmetauscher
④ Fahrzeugmotor

① Heater
② Electric water pump, MB part
③ Vehicle heat exchange
④ Vehicle engine

Wasserkreislauf 2

Das Heizgerät und die Wasserpumpe sind in die Wasservorlaufleitung vom Fahrzeugmotor zum Front- und Heck - Wärmetauscher eingebaut.

Water circuit 2

The heater and the water pump are integrated in the water feed pipe from the vehicle engine to the front and rear heat exchanger.

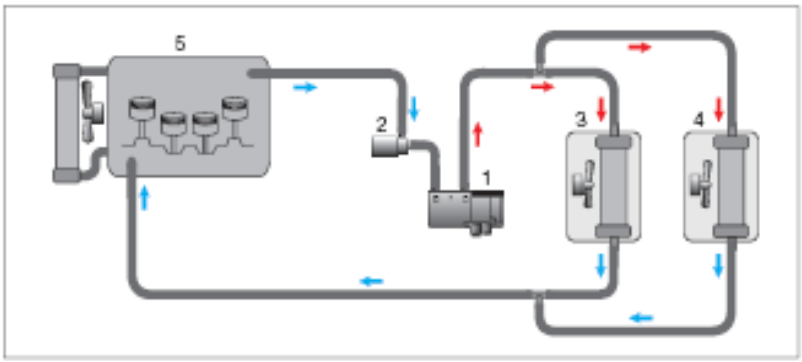

① Heizgerät
② Elektr. Wasserpume, MB-Teil
③ Front-Wärmetauscher
④ Heck-Wärmetauscher
⑤ Fahrzeugmotor

① Heater
② Electric water pump, MB part
③ Front vehicle heat exchanger
④ Rear vehicle heat exchanger
⑤ Vehicle engine

GB

Controls

The heater can be operated by a push-button (direct start) or using the buttons of the instrument cluster or the steering wheel buttons in combination with the corresponding display in the instrument cluster. Up to 3 ON-times can be programmed, together with the time.

A radio remote control is also available on request.
When using the „direct start" push-button, the user can choose between pre-heater (switched on once) and the auxiliary heater function (heater switches on automatically every time the engine is started until the auxiliary heater function is switched off).

Special features

- The operating time of the pre-heater runs for max. 60 minutes.
- The auxiliary heater only works when the vehicle engine is running.
- The heating output of the tandem version is 5 kW in pre-heating mode (only the pre-heater is working) and up to 10 kW in auxiliary heating mode (both pre-heater and auxiliary heater are working).
- An additional heat exchanger available on request for the passenger or load compartment is only available in combination with the tandem version and only works when the vehicle engine is running.
- In vehicles with Tempmatic, the pre-heater or auxiliary heater only works when the nominal value setting has been adjusted accordingly in the heater control unit.
- All functions are controlled by the vehicle CAN system.

① MB -Taster für Standheiz- und Zuheizfunktion
MB button for pre-heater and auxiliary heater function

MB-Taster für Standheiz- und Zuheizfunktion
MB button for pre-heater and auxiliary heater function

Standheizfunktion Pre-heater function	rote LED - gelbe LED -	Heizbetrieb Aktivierung
	Vorwahlbetrieb	
Zuheizfunktion Auxiliary heater function	red LED - yellow LED -	Heating mode Activation pre-set mode

MB-Taster für Zuheizfunktion
MB button for auxiliary heater function

Zuheizfunktion Auxiliary heater function		
	rote LED - red LED -	Heizbetrieb Heating mode

S-03: Test Results

Test Report No.:
200716943
California Exhaust Emission Standard and
Test Procedures – FTP 72

Type : **See section 0.2**
Manufacturer : **J. Eberspächer GmbH & Co. KG**

DEKRA

Test Report

California Exhaust Emission Standards and Test Procedures relating to Test the Emissions of a Heating System [Fuel Fired Heater] for Automobiles and their Trailers

Specification : *California LEV II ULEV Exhaust Emission Standards*

0.	General details		
0.1	Make (trade name of manufacturer)	:	EBERSPÄCHER
0.2	Type	:	Airtronic D2 Airtronic M/D4 Hydronic II-F/D5Z-F Hydronic II-H/D5Z-H Hydronic/D5WS
0.3	Commercial description(s)	:	Airtronic resp. Hydronic
0.4	Class [respectively heating power]	:	3,0 ... 15,0 kW
0.5	Manufacturer's name and address	:	J. Eberspächer GmbH & Co. KG Eberspächerstraße 24 D-73730 Esslingen
0.6	Address(es) of assembly plant(s)	:	not applicable

Test Report No.:
200716943
California Exhaust Emission Standard and
Test Procedures – FTP 72

DEKRA

Type : **See section 0.2**
Manufacturer : **J. Eberspächer GmbH & Co. KG**

1. Test object(s)

1.1 Description : Fuel-fired heater with heat exchanger (air/water) for the purpose of warming the cab or sleeper berth compart-ment of a vehicle or warming the engine oil/or coolant.

2. Emission test requirements : LEV II Exhaust Mass Emission Standards for New 2004 and Subsequent Model, LEVs, ULEVs, and SULEVs in the Passenger Car, Light-Duty Truck and Medium-Duty Vehicle Classes

3. Test Procedure : According to U.S. FTP- 72.
The tests runs in a climate chamber for automotive emission inspection. The fired heaters were installed on a specific test bench in these climate chamber.

4. Inspection sheet : See Appendix A

4.1 Place of testing : DEKRA Automobil GmbH, Technology Center (DATC) 01998 Klettwitz (Germany)

4.2 Date of testing : March 20th, 21st and 22nd , 2007

5. Appendices

Appendix A (20 sheets) : Inspection sheets A1 to A10

Appendix B (1 sheet) : California Certification Diesel Fuel Specifications

6. Statement of conformity

The itemized fuel-fired heaters have been tested concerning the exhaust emission characteristics and meets to the requirements under article 2. The Limit Values are not reached or exceeded.

The Test Report comprises pages 1 to 2.
The Test Report shall be reproduced and published in full only and by the client only. It shall be reproduced partially with the written permission of the Test Laboratory only.

TEST LABORATORY
accredited by accreditation authority of Kraftfahrt-Bundesamt,
Federal Republic of Germany

Klettwitz, April 12th, 2007

TECHNISCHER DIENST DEKRA 7080 DEKRA GMBH

Dipl.-Ing. Volkmar Höfer
Specialist

phone.: 035754 7344 562 – fax: 035754 7345 500 – e-mail: volkmar.hoefer@dekra.com
Q:\TestReport_16943_FTP72.doc

Test Report No.:
200716943

DEKRA

Inspection sheet

Appendix A9

Type : Hydronic / D5WS
Manufacturer : J. Eberspächer GmbH & Co. KG

1. Testing facilities

Typ of the sampling system		: CVS CFV 20 WT LE
Analyzer	CO	: Hartmann & Braun IRD 4000 CO
	CO_2	: Hartmann & Braun IRD 4000 CO_2
	THC	: Pierburg FID 4000
	CH_4	: Pierburg FID 4000
	NO_x	: Pierburg CLD 4000
	HCHO	: Perkin Elmer Autosystem (gas chromatography)
	NMOG	: Perkin Elmer Autosystem (gas chromatography)
Particulate sampler		: Pierburg PTS 2000
Measurement cycle		: Federal Test Procedure [FTP 72], Measurement in bag, modal diluted and modal raw
Duration of test [min.]		: 20
Referenze value		: [g/mi] = Measured value [g/min.] x 3
Reference fuel		: Diesel fuel *)

2. General details

Date	: March 21st, 2007
Remarks	: not applicable
Conditioning	: Conditioning of the fuel-fired heater at 68°F until 86°F for a time of minimum 12 hours
Test-bench setup	: - heater mounted on the test bench with exhaust system and silencer - introduction of the exhaust gases through the flexible tube into CVS-Diesel section, Depletion-air-filter Diesel closed, CVS-lavel (1,5 m^3 / min)

*) see Annex B

Test Report No.:
200716943

DEKRA

Inspection sheet

Appendix A9

Type : Hydronic / D5WS
Manufacturer : J. Eberspächer GmbH & Co. KG

3. Tests and test results			
3.1 Fuel-fired heater No. 9.2 (Water heating system)			
Seriel number	: G06053		
Status (durability, coefficient)	: after 120k miles resp. 2040h when heating		
3.1.1. Test conditions (Measurement: bag [clean], [D])			
Technical data of Diesel fuel			
Heat value (BTU/lb)	: 18550.000	Nox-Correction factor	: 0.81
Density [kg/l]	: 0.834	Dilution factor (bag)	: 29.65
C- Concentration	: 0.861	CVS Capacity at temp. 20°C	: 58.58
HC- ratio	: 0.157	CVS Capacity at temp. 0°C	: 54.58
Ambient temperature [°F]	:74.67	PTS Capacity at temp. 20°C	: 1987.30
Atmospheric pressure [mbar]	: 988.18	PTS Capacity at temp. 0°C	: 1851.73
Humidity (absolute) [g/kg]	: 3.74	Primary filter diff. [mg]	: 0.068
Humidity (relative) [%]	: 20.21	Secondary filter diff. [mg]	: 0.025

3.1.2. Test results

Heater No. 9.2	NMHC *) [g/mi]	NOx [g/mi]	CO [g/mi]	CO_2 *) [g/mi]	Particulates PM [g/mi]	HCHO [g/mi]	NMOG [g/mi]	Fuel consumtion [l/h] *)
Measurement: bag [clean], [D]								
	0.0039	**0.0290**	**0.1641**	65.6832	**0.0004**	**0.00005**	**0.00075**	--
Measurement: post+dil+bag [D]								
	0.0029	0.0305	0.1698	71.1190	--			--
Limit value:	--	**0.05**	**1.70**	--	**0.01**	**0.008**	**0.04**	--

*) Data logging for check up, only

Q:\Test report_16943_FTP72_Annex.A9.doc

Supporting documents

Air Resources Board

Linda S. Adams
Secretary for Environmental Protection

Robert F. Sawyer, Ph.D., Chair
9480 Telstar Avenue, Suite 4
El Monte, California 91731 www.arb.ca.gov

Arnold Schwarzenegger
Governor

June 6, 2007

Reference No: CHC-2007-002

Mr. John Dennehy, Vice President
Espar Products Inc.
6099A Vipond Drive
Mississauga, Ontario
Canada, L5T 2B2

Dear Mr. Dennehy:

By this letter, the Air Resources Board (ARB) hereby approves three diesel-fueled heaters manufactured and marketed by Espar, model numbers Airtronic D2 (small bunk heater), Airtronic D4 (large bunk heater), and Hydronic D5 (engine preheater), as meeting the idling emissions reduction requirements specified in Sections 1956.8(a)(6)(D) and 2485(c)(3)(B) of the Title 13, California Code of Regulations. The heaters are permitted to be installed and operated on all heavy-duty diesel-fueled vehicles with a gross vehicle weight rating (GVWR) over 14,000 pounds, and all diesel-fueled commercial motor vehicles with a GVWR over 10,000 pounds.

As an aid for field identification and enforcement purposes, Espar may voluntarily label the heaters to be produced under this approval. The label, either a new, separate one or being made part of an existing label, may make a reference to this approval, for example, "ARB Approval #CHC-2007-002" or some other phrase to this effect.

Unless specific ARB's approval is granted, no change can be made to the hardware or control calibrations of the heaters as described in Espar's application dated May 15, 2007 and all supplemental information provided for the approval herein.

If you have any questions concerning this approval, please contact Mr. Tom Chang, Staff Air Pollution Specialist, On-Road Certification/Audit Section, at (626)575-6809 or ychang@arb.ca.gov.

Sincerely,

Annette Hebert, Chief
Mobile Source Operations Division

The energy challenge facing California is real. Every Californian needs to take immediate action to reduce energy consumption. For a list of simple ways you can reduce demand and cut your energy costs, see our website: http://www.arb.ca.gov.

California Environmental Protection Agency

Printed on Recycled Paper

S-04: Location within the vehicle

Frameside underfloor installation of the fuel-fired heater.
Shown with two heat exchangers (Van installation).

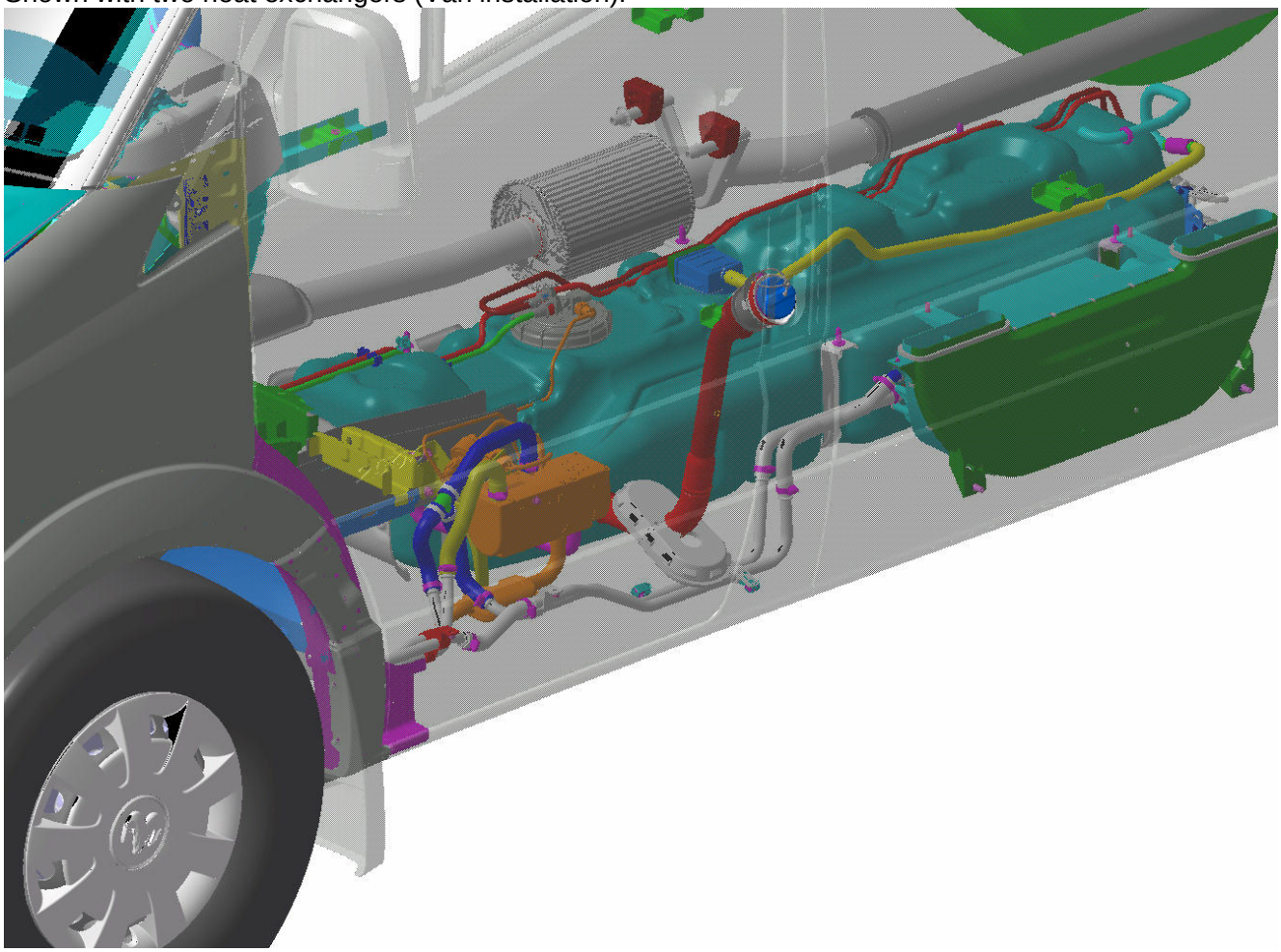

Exhaust system overview

The fuel-fired heater has its own tail pipe because of the back-pressure within the vehicle exhaust system, which could interfere the correct heater function. The muffler is directly mounted to the heater body.

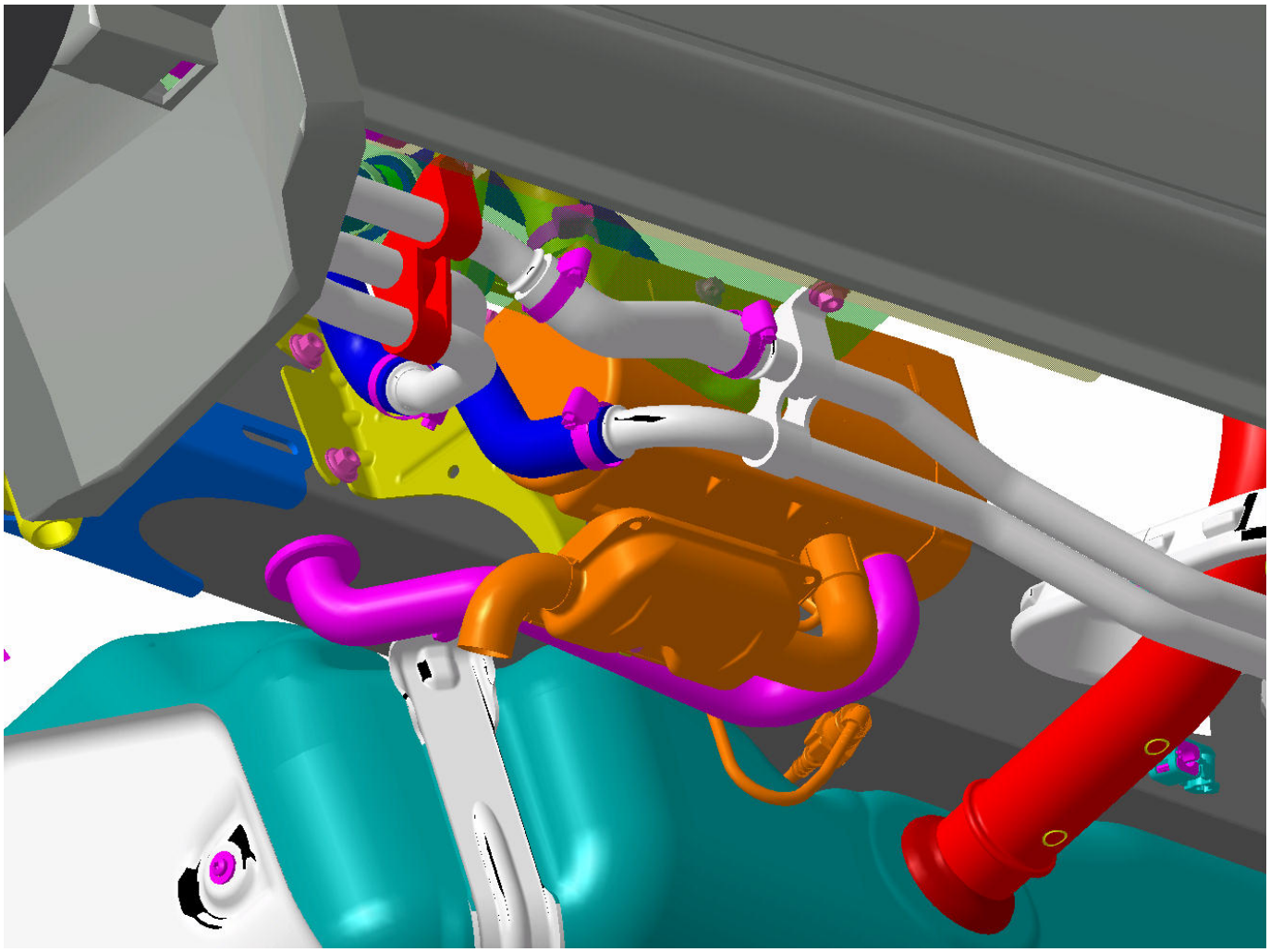

Fuel supply overview

The fuel supply of the fuel-fired heater is directly connected to the vehicles fuel system, using the same materials as used for fuel and return lines for the engine.

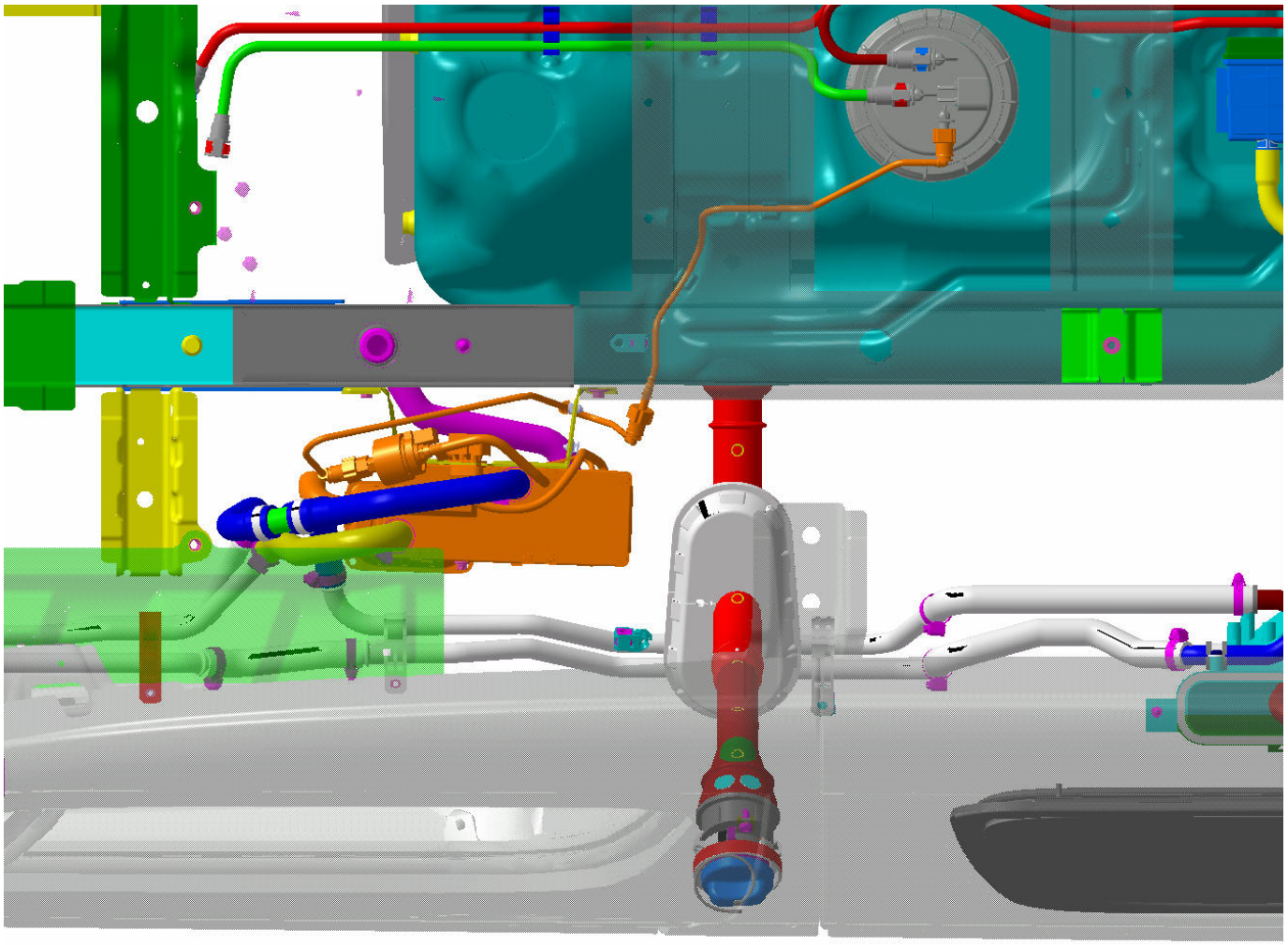

S-05: OBD-System Information

System overview

The Eberspächer system D5WS, 12V, MB A906 900 1100, A906 830 28 61, is a self-diagnosing system and not an emissions control unit for vehicle emissions. The heater control is not directly connected to the engine control module.
Auxiliary Engine Coolant Heater

- standard equipment for cargo vans w/o inside dividing wall
- comfort and safety functionality only
- de-icing function, required by NHTSA, of the windscreen at ambient air temperatures below zero degC

Auxiliary Passenger Compartment Heater

- optional equipment
- comfort functionality only
- heating of the passenger compartment independent of the engine status (on/off)

Operating Conditions

- automatically switched on after engine start and ECT below 75degC
- switched off at ECT $\geq$ 85degC
- can be disabled by the driver, operating recommendations according to the service manuals
- the driver is informed by the instrument cluster, when the FFH is running
- heating power 5 kW, below 80degC
- heating power 2,4 kW, from 80degC to 85degC

Monitoring Description

The control module integrated in the FFH has several monitoring functions as described below:

Safety Functions prior to FFH start

The following components are checked prior to FFH start

Component	Engine Coolant Heater	Passenger Compart.Heater
glow plug	x	x
flame sensor	x	x
overheating sensor	x	x
temperature control sensor	x	x
fan motor	x	x
fuel pump electrical connection	x	x

No start of the FFH is possible, if a malfunction is detected in one of the components above
Starting Strategy.

If no ignition is recognized within 90sec of fuel supply after start, a second attempt for another 90 sec of fuel supply is performed. If no flame after the second attempt is detected, the FFH will be switched off by its control module.
A restart of the engine coolant heater is no longer possible in the present driving cycle.

A restart of the passenger compartment heater can be triggered again by the vehicle operator.
(please refer to the fail safe strategy below)

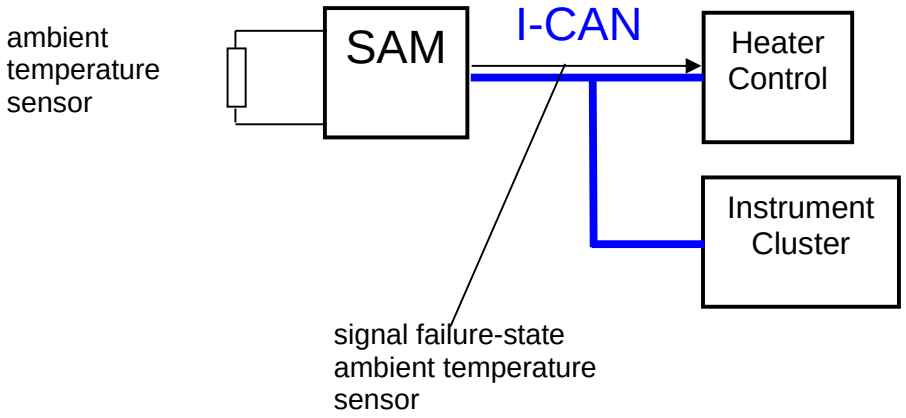

The ambient air temperature sensor is evaluated from the SAM control unit and this signal is also used from the engine control module, the instrument cluster display, the climate control unit and the fuel fired heater.

The ambient air sensor is fully monitored by the vehicles OBD-system.

Ambient Air Temperature sensor accuracy: 4°C ± 0.29K; **40°F ± 0.52°F**

Safety Functions if the flame is extinguished

If the flame is extinguished during normal operation, the FFH will be started again with 90 sec fuel supply. If no ignition is recognized the FFH will be switched off.
A restart of the engine coolant heater is no longer possible in the present driving cycle.
A restart of the passenger compartment heater can be triggered again by the vehicle operator.
(please refer to the fail safe strategy below)

Fuel supply is disabled if an electrical malfunction in one of the following components is detected after the flame is extinguished:

Component	Engine Coolant Heater	Passenger Compart.Heater
glow plug	x	x
flame sensor	x	x
overheating sensor	x	x
temperature control sensor	x	x
fan motor	x	x
fuel pump electrical connection	x	x

Additionally, all components are continuously monitored during normal operation.

Fan motor speed decrease during operation

The speed of the fan motor is monitored continuously. The FFH will be switched off, if the motor speed falls below specified thresholds as follows:

Heater	decrease [%]	switch off after sec.
engine coolant	40	60
passenger compartment	10	30

Fail Safe Strategy

The control unit of the FFH will be locked after 4 attempts of no ignition, which is equivalent to 2 driving cycles. The control unit can only be unlocked via a scan tool in the workshop.

S-06: Request for Certificate

S-06-01: Request for Certificate

Mercedes-Benz requests that EPA issues a certificate of conformity and that ARB issues an executive order for the combination of vehicles and fuel-fired heater as listed on the cover page of this application.

The applicable test results are listed in section 03. The fuel fired heater complies with all applicable regulations contained within California exhaust emission standards and test procedures for 2005 and subsequent model zero-emission vehicles, and 2001 and subsequent model hybrid electric vehicles, in the passenger car, light-duty truck and medium-duty vehicle classes.. The application is current as of this date.

Felix Wellmann

coast down data Mercedes-Benz Sprinter -all types-

4x2								coast down coefficients							
No.	gear box	type	roof height	inertia	tyre model	dimension	engine type	A0 [N]	A1 [N/(km/h)]	A2 [N/(km/h)²]	A0 [lbf]	A1 [lbf/mph]	A2 [lbf/mph²]	P80 [kW]	P50mph [HP]
1	A5	3,88 t panel van (without H08)	standard	6500	Continental Vanco Four Season	245/75R16	OM642	296,137	0,6141	0,0785	66,5742	0,2222	0,0457	18,84	25,59
2				7000			OM642	308,169	1,1667	0,0714	69,2791	0,4221	0,0416	19,08	25,91
3				7500			OM642	332,597	0,5702	0,0791	74,7708	0,2063	0,0460	19,65	26,70
4				8000			OM642	354,770	0,5702	0,0791	79,7555	0,2063	0,0460	20,15	27,36
5				6500	Continental Vanco Four Season (LongLife)	245/75R16	OM642	289,916	0,6960	0,0753	65,1757	0,2518	0,0438	18,39	24,98
6				7000			OM642	292,952	1,1325	0,0724	65,8581	0,4097	0,0421	18,82	25,56
7				7500			OM642	295,987	1,5690	0,0695	66,5405	0,5676	0,0405	19,25	26,15
8				8000			OM642	315,030	1,5690	0,0695	70,8217	0,5676	0,0405	19,67	26,72
9				6500	Kumho Road Venture	245/75R16	OM642	289,183	0,5738	0,0767	65,0109	0,2076	0,0446	18,35	24,94
10				7000			OM642	298,682	0,7258	0,0760	67,1463	0,2626	0,0442	18,74	25,45
11				7500			OM642	308,180	0,8779	0,0753	69,2816	0,3176	0,0438	19,12	25,97
12				8000			OM642	328,036	0,8779	0,0753	73,7455	0,3176	0,0438	19,56	26,56
13			high	6500	Continental Vanco Four Season	245/75R16	OM642	313,684	0,8071	0,0817	70,5190	0,2920	0,0475	20,02	27,20
14				7000			OM642	327,615	0,4855	0,0850	73,6507	0,1756	0,0495	20,23	27,48
15				7500			OM642	341,545	0,1639	0,0883	76,7824	0,0593	0,0514	20,44	27,77
16				8000			OM642	363,626	0,1639	0,0883	81,7463	0,0593	0,0514	20,93	28,43
17				6500	Continental Vanco Four Season (LongLife)	245/75R16	OM642	271,669	1,3516	0,0787	61,0736	0,4889	0,0458	19,63	26,68
18				7000			OM642	330,668	-0,0977	0,0883	74,3371	-0,0353	0,0514	19,73	26,81
19				7500			OM642	389,667	-1,5469	0,0978	87,6006	-0,5596	0,0569	19,82	26,94
20				8000			OM642	414,956	-1,5469	0,0978	93,2858	-0,5596	0,0569	20,38	27,69
21				6500	Kumho Road Venture	245/75R16	OM642	314,770	-0,2694	0,0894	70,7631	-0,0975	0,0520	19,23	26,14
22				7000			OM642	326,336	-0,2913	0,0909	73,3632	-0,1054	0,0529	19,66	26,72
23				7500			OM642	335,647	0,0790	0,0892	75,4564	0,0286	0,0519	20,29	27,56
24				8000			OM642	357,334	0,0790	0,0892	80,3320	0,0286	0,0519	20,77	28,21
25			extra high	6500	Continental Vanco Four Season	245/75R16	OM642	274,021	1,7086	0,0734	61,6024	0,6181	0,0427	19,57	26,58
26				7000			OM642	295,100	1,7086	0,0734	66,3411	0,6181	0,0427	20,03	27,21
27				7500			OM642	316,178	1,7086	0,0734	71,0797	0,6181	0,0427	20,50	27,84
28				8000			OM642	337,257	1,7086	0,0734	75,8184	0,6181	0,0427	20,97	28,48
29				6500	Continental Vanco Four Season (LongLife)	245/75R16	OM642	238,895	2,1905	0,0743	53,7057	0,7924	0,0433	19,77	26,86
30				7000			OM642	257,271	2,1905	0,0743	57,8369	0,7924	0,0433	20,18	27,42
31				7500			OM642	275,648	2,1905	0,0743	61,9681	0,7924	0,0433	20,59	27,97
32				8000			OM642	324,123	1,6682	0,0765	72,8657	0,6035	0,0445	21,05	28,59
33				6500	Kumho Road Venture	245/75R16	OM642	304,435	-0,0226	0,0936	68,4397	-0,0082	0,0545	20,03	27,23
34				7000			OM642	316,001	-0,0445	0,0951	71,0398	-0,0161	0,0554	20,47	27,83
35				7500			OM642	325,312	0,3258	0,0934	73,1330	0,1179	0,0543	21,09	28,66
36				8000			OM642	346,999	0,3258	0,0934	78,0086	0,1179	0,0543	21,57	29,31
37		3,88 t crew bus (with H08)	standard	6500	Continental Vanco Four Season	245/75R16	OM642	285,802	0,8609	0,0794	64,2508	0,3114	0,0462	19,17	26,05
38				7000			OM642	297,834	1,4135	0,0723	66,9557	0,5113	0,0421	19,41	26,37
39				7500			OM642	316,439	1,3548	0,0742	71,1383	0,4901	0,0432	19,99	27,15
40				8000			OM642	337,535	1,3548	0,0742	75,8809	0,4901	0,0432	20,46	27,79
41				6500	Continental Vanco Four Season (LongLife)	245/75R16	OM642	279,581	0,9428	0,0762	62,8523	0,3411	0,0444	18,73	25,44
42				7000			OM642	282,617	1,3793	0,0733	63,5347	0,4990	0,0427	19,16	26,02
43				7500			OM642	285,652	1,8158	0,0704	64,2171	0,6569	0,0410	19,59	26,61
44				8000			OM642	304,695	1,8158	0,0704	68,4983	0,6569	0,0410	20,01	27,18
45				6500	Kumho Road Venture	245/75R16	OM642	278,848	0,8206	0,0776	62,6875	0,2968	0,0452	18,69	25,40
46				7000			OM642	288,347	0,9726	0,0769	64,8229	0,3519	0,0448	19,07	25,91
47				7500			OM642	297,845	1,1247	0,0762	66,9582	0,4069	0,0444	19,46	26,43
48				8000			OM642	317,701	1,1247	0,0762	71,4221	0,4069	0,0444	19,90	27,02
49			high	6500	Continental Vanco Four Season	245/75R16	OM642	303,349	1,0539	0,0826	68,1956	0,3812	0,0481	20,36	27,66
50				7000			OM642	317,280	0,7323	0,0859	71,3273	0,2649	0,0500	20,57	27,94
51				7500			OM642	331,210	0,4107	0,0892	74,4590	0,1486	0,0519	20,78	28,23
52				8000			OM642	353,291	0,4107	0,0892	79,4229	0,1486	0,0519	21,27	28,89
53				6500	Continental Vanco Four Season (LongLife)	245/75R16	OM642	261,334	1,5984	0,0796	58,7502	0,5782	0,0463	19,97	27,14
54				7000			OM642	320,333	0,1491	0,0892	72,0137	0,0540	0,0519	20,06	27,27
55				7500			OM642	379,332	-1,3001	0,0987	85,2772	-0,4703	0,0575	20,16	27,40
56				8000			OM642	404,621	-1,3001	0,0987	90,9624	-0,4703	0,0575	20,72	28,15
57				6500	Kumho Road Venture	245/75R16	OM642	304,435	-0,0226	0,0903	68,4397	-0,0082	0,0526	19,57	26,60
58				7000			OM642	316,001	-0,0445	0,0918	71,0398	-0,0161	0,0534	20,00	27,18

59				7500	Kumho Road Venture	245/75R16	OM642	325,312	0,3258	0,0901	73,1330	0,1179	0,0524	20,62	28,02
60				8000			OM642	346,999	0,3258	0,0901	78,0086	0,1179	0,0524	21,10	28,67
61		4,49 t/4,53 t/5,0 t panel van (without H08)	standard	7000	Continental Vanco Four Season	215/85R16	OM642	274,457	1,5913	0,0751	61,7004	0,5757	0,0437	19,61	26,64
62				7500			OM642	294,061	1,5913	0,0751	66,1075	0,5757	0,0437	20,04	27,23
63				8000			OM642	313,665	1,5913	0,0751	70,5147	0,5757	0,0437	20,48	27,82
64				8500			OM642	333,269	1,5913	0,0751	74,9219	0,5757	0,0437	20,92	28,40
65				9000			OM642	352,873	1,5913	0,0751	79,3290	0,5757	0,0437	21,35	28,99
66			high	7000	Continental Vanco Four Season	215/85R16	OM642	325,843	0,1799	0,0862	73,2524	0,0651	0,0501	19,81	26,92
67				7500			OM642	348,379	0,1799	0,0862	78,3188	0,0651	0,0501	20,31	27,60
68				8000			OM642	370,916	0,1799	0,0862	83,3852	0,0651	0,0501	20,81	28,27
69				8500			OM642	393,452	0,1799	0,0862	88,4515	0,0651	0,0501	21,32	28,95
70				9000			OM642	415,988	0,1799	0,0862	93,5179	0,0651	0,0501	21,82	29,62
71			extra high	7000	Continental Vanco Four Season	215/85R16	OM642	325,843	0,1799	0,0893	73,2524	0,0651	0,0520	20,26	27,53
72				7500			OM642	348,379	0,1799	0,0893	78,3188	0,0651	0,0520	20,76	28,20
73				8000			OM642	370,916	0,1799	0,0893	83,3852	0,0651	0,0520	21,26	28,88
74				8500			OM642	393,452	0,1799	0,0893	88,4515	0,0651	0,0520	21,76	29,55
75				9000			OM642	415,988	0,1799	0,0893	93,5179	0,0651	0,0520	22,26	30,23
76		4,49 t/4,53 t/5,0 t crew bus (with H08)	standard	7000	Continental Vanco Four Season	215/85R16	OM642	264,122	1,8381	0,0760	59,3770	0,6649	0,0442	19,95	27,10
77				7500			OM642	283,726	1,8381	0,0760	63,7841	0,6649	0,0442	20,38	27,69
78				8000			OM642	303,330	1,8381	0,0760	68,1913	0,6649	0,0442	20,82	28,28
79				8500			OM642	322,934	1,8381	0,0760	72,5985	0,6649	0,0442	21,25	28,86
80				9000			OM642	342,538	1,8381	0,0760	77,0056	0,6649	0,0442	21,69	29,45
81			high	7000	Continental Vanco Four Season	215/85R16	OM642	315,508	0,4267	0,0871	70,9290	0,1544	0,0507	20,15	27,38
82				7500			OM642	338,044	0,4267	0,0871	75,9954	0,1544	0,0507	20,65	28,06
83				8000			OM642	360,581	0,4267	0,0871	81,0618	0,1544	0,0507	21,15	28,73
84				8500			OM642	383,117	0,4267	0,0871	86,1281	0,1544	0,0507	21,65	29,41
85				9000			OM642	405,653	0,4267	0,0871	91,1945	0,1544	0,0507	22,15	30,08
86			Winnebago	10500	Continental Vanco Four Season	215/85R16	OM642	334,860	1,6730	0,1431	75,2795	0,6052	0,0833	30,77	41,85
87		3,88 t panel van (without H08)	standard	6500	Continental Vanco Four Season	245/75R16	OM651	274,032	1,7463	0,0673	61,6048	0,6317	0,0392	18,77	25,49
88				7000			OM651	275,990	2,2001	0,0634	62,0449	0,7959	0,0369	19,06	25,88
89				7500			OM651	277,947	2,6538	0,0595	62,4850	0,9600	0,0346	19,36	26,28
90				8000			OM651	296,477	2,6538	0,0595	66,6506	0,9600	0,0346	19,77	26,84
91				6500	Continental Vanco Four Season (LongLife)	245/75R16	OM651	239,232	2,8437	0,0592	53,7815	1,0287	0,0345	18,79	25,52
92				7000			OM651	259,955	2,6855	0,0606	58,4402	0,9715	0,0352	19,16	26,02
93				7500			OM651	280,678	2,5273	0,0619	63,0989	0,9143	0,0360	19,53	26,52
94				8000			OM651	299,390	2,5273	0,0619	67,3055	0,9143	0,0360	19,95	27,08
95				6500	Kumho Road Venture	245/75R16	OM651	240,265	1,9774	0,0674	54,0137	0,7153	0,0392	18,44	25,05
96				7000			OM651	258,747	1,9774	0,0674	58,1686	0,7153	0,0392	18,85	25,61
97				7500			OM651	277,229	1,9774	0,0674	62,3235	0,7153	0,0392	19,26	26,16
98				8000			OM651	295,711	1,9774	0,0674	66,4784	0,7153	0,0392	19,67	26,71
99			high	6500	Continental Vanco Four Season	245/75R16	OM651	270,937	2,0373	0,0700	60,9091	0,7370	0,0407	19,60	26,62
100				7000			OM651	277,565	2,1770	0,0699	62,3990	0,7875	0,0407	19,98	27,14
101				7500			OM651	284,192	2,3166	0,0698	63,8889	0,8380	0,0406	20,36	27,65
102				8000			OM651	303,138	2,3166	0,0698	68,1482	0,8380	0,0406	20,78	28,22
103				6500	Continental Vanco Four Season (LongLife)	245/75R16	OM651	267,882	1,8101	0,0693	60,2223	0,6548	0,0403	19,03	25,85
104				7000			OM651	264,073	2,1456	0,0685	59,3660	0,7762	0,0399	19,42	26,39
105				7500			OM651	260,264	2,4811	0,0677	58,5097	0,8975	0,0394	19,82	26,93
106				8000			OM651	277,615	2,4811	0,0677	62,4103	0,8975	0,0394	20,21	27,45
107				6500	Kumho Road Venture	245/75R16	OM651	237,170	2,2684	0,0701	53,3179	0,8206	0,0408	19,27	26,19
108				7000			OM651	243,798	2,4081	0,0700	54,8079	0,8711	0,0407	19,65	26,70
109				7500			OM651	250,425	2,5477	0,0699	56,2978	0,9216	0,0407	20,04	27,22
110				8000			OM651	269,371	2,5477	0,0699	60,5570	0,9216	0,0407	20,46	27,79
111			extra high	6500	Continental Vanco Four Season	245/75R16	OM651	274,021	1,7086	0,0734	61,6024	0,6181	0,0427	19,57	26,58
112				7000			OM651	295,100	1,7086	0,0734	66,3411	0,6181	0,0427	20,03	27,21
113				7500			OM651	316,178	1,7086	0,0734	71,0797	0,6181	0,0427	20,50	27,84
114				8000			OM651	337,257	1,7086	0,0734	75,8184	0,6181	0,0427	20,97	28,48
115				6500	Continental Vanco Four Season (LongLife)	245/75R16	OM651	238,895	2,1905	0,0743	53,7057	0,7924	0,0433	19,77	26,86
116				7000			OM651	257,271	2,1905	0,0743	57,8369	0,7924	0,0433	20,18	27,42
117				7500			OM651	275,648	2,1905	0,0743	61,9681	0,7924	0,0433	20,59	27,97
118				8000			OM651	324,123	1,6682	0,0765	72,8657	0,6035	0,0445	21,05	28,59
119				6500	Kumho Road Venture	245/75R16	OM651	240,254	1,9397	0,0735	54,0113	0,7017	0,0428	19,24	26,15
120				7000			OM651	261,333	1,9397	0,0735	58,7500	0,7017	0,0428	19,71	26,78
121				7500			OM651	282,411	1,9397	0,0735	63,4886	0,7017	0,0428	20,18	27,41

122	A7			8000			OM651	303,490	1,9397	0,0735	68,2273	0,7017	0,0428	20,65	28,04
123		3,88 t crew bus (with H08)	standard	6500	Continental Vanco Four Season	245/75R16	OM651	263,697	1,9931	0,0682	59,2814	0,7210	0,0397	19,10	25,95
124				7000			OM651	265,655	2,4469	0,0643	59,7215	0,8852	0,0374	19,40	26,34
125				7500			OM651	267,612	2,9006	0,0604	60,1616	1,0493	0,0352	19,69	26,74
126				8000			OM651	286,142	2,9006	0,0604	64,3272	1,0493	0,0352	20,11	27,30
127				6500	Continental Vanco Four Season (LongLife)	245/75R16	OM651	228,897	3,0905	0,0601	51,4581	1,1180	0,0350	19,13	25,98
128				7000			OM651	249,620	2,9323	0,0615	56,1168	1,0608	0,0358	19,50	26,48
129				7500			OM651	270,343	2,7741	0,0628	60,7755	1,0035	0,0366	19,87	26,98
130				8000			OM651	289,055	2,7741	0,0628	64,9821	1,0035	0,0366	20,29	27,54
131				6500	Kumho Road Venture	245/75R16	OM651	229,930	2,2242	0,0683	51,6903	0,8046	0,0398	18,78	25,51
132				7000			OM651	248,412	2,2242	0,0683	55,8452	0,8046	0,0398	19,19	26,07
133				7500			OM651	266,894	2,2242	0,0683	60,0001	0,8046	0,0398	19,60	26,62
134				8000			OM651	285,376	2,2242	0,0683	64,1550	0,8046	0,0398	20,01	27,17
135			high	6500	Continental Vanco Four Season	245/75R16	OM651	260,602	2,2841	0,0709	58,5857	0,8263	0,0413	19,94	27,08
136				7000			OM651	267,230	2,4238	0,0708	60,0756	0,8768	0,0412	20,32	27,60
137				7500			OM651	273,857	2,5634	0,0707	61,5655	0,9273	0,0412	20,70	28,11
138				8000			OM651	292,803	2,5634	0,0707	65,8248	0,9273	0,0412	21,12	28,68
139				6500	Continental Vanco Four Season (LongLife)	245/75R16	OM651	257,547	2,0569	0,0702	57,8989	0,7441	0,0409	19,36	26,31
140				7000			OM651	253,738	2,3924	0,0694	57,0426	0,8655	0,0404	19,76	26,85
141				7500			OM651	249,929	2,7279	0,0686	56,1863	0,9868	0,0399	20,16	27,39
142				8000			OM651	267,280	2,7279	0,0686	60,0869	0,9868	0,0399	20,55	27,91
143				6500	Kumho Road Venture	245/75R16	OM651	304,435	-0,0226	0,0903	68,4397	-0,0082	0,0526	19,57	26,60
144				7000			OM651	316,001	-0,0445	0,0918	71,0398	-0,0161	0,0534	20,00	27,18
145				7500			OM651	325,312	0,3258	0,0901	73,1330	0,1179	0,0524	20,62	28,02
146				8000			OM651	346,999	0,3258	0,0901	78,0086	0,1179	0,0524	21,10	28,67
147		4,49 t/4,53 t/5,0 t panel van (without H08)	standard	7000	Continental Vanco Four Season	215/85R16	OM651	274,457	1,5913	0,0751	61,7004	0,5757	0,0437	19,61	26,64
148				7500			OM651	294,061	1,5913	0,0751	66,1075	0,5757	0,0437	20,04	27,23
149				8000			OM651	313,665	1,5913	0,0751	70,5147	0,5757	0,0437	20,48	27,82
150				8500			OM651	333,269	1,5913	0,0751	74,9219	0,5757	0,0437	20,92	28,40
151				9000			OM651	352,873	1,5913	0,0751	79,3290	0,5757	0,0437	21,35	28,99
152			high	7000	Continental Vanco Four Season	215/85R16	OM651	359,353	0,2119	0,0799	80,7857	0,0766	0,0465	19,73	26,79
153				7500			OM651	385,021	0,2119	0,0799	86,5562	0,0766	0,0465	20,30	27,56
154				8000			OM651	376,827	0,5497	0,0802	84,7140	0,1989	0,0467	20,76	28,19
155				8500			OM651	368,632	0,8876	0,0805	82,8718	0,3211	0,0469	21,22	28,82
156				9000			OM651	390,316	0,8876	0,0805	87,7466	0,3211	0,0469	21,70	29,47
157			extra high	7000	Continental Vanco Four Season	215/85R16	OM651	359,353	0,2119	0,0828	80,7857	0,0766	0,0482	20,14	27,35
158				7500			OM651	385,021	0,2119	0,0828	86,5562	0,0766	0,0482	20,71	28,12
159				8000			OM651	376,827	0,5497	0,0831	84,7140	0,1989	0,0484	21,17	28,75
160				8500			OM651	368,632	0,8876	0,0834	82,8718	0,3211	0,0486	21,64	29,38
161				9000			OM651	390,316	0,8876	0,0834	87,7466	0,3211	0,0486	22,12	30,03
162		4,49 t/4,53 t/5,0 t crew bus (with H08)	standard	7000	Continental Vanco Four Season	215/85R16	OM651	264,122	1,8381	0,0760	59,3770	0,6649	0,0442	19,95	27,10
163				7500			OM651	283,726	1,8381	0,0760	63,7841	0,6649	0,0442	20,38	27,69
164				8000			OM651	303,330	1,8381	0,0760	68,1913	0,6649	0,0442	20,82	28,28
165				8500			OM651	322,934	1,8381	0,0760	72,5985	0,6649	0,0442	21,25	28,86
166				9000			OM651	342,538	1,8381	0,0760	77,0056	0,6649	0,0442	21,69	29,45
167			high	7000	Continental Vanco Four Season	215/85R16	OM651	349,018	0,4587	0,0808	78,4623	0,1659	0,0470	20,07	27,25
168				7500			OM651	374,686	0,4587	0,0808	84,2328	0,1659	0,0470	20,64	28,02
169				8000			OM651	366,492	0,7965	0,0811	82,3906	0,2881	0,0472	21,10	28,65
170				8500			OM651	358,297	1,1344	0,0814	80,5484	0,4104	0,0474	21,56	29,28
171				9000			OM651	379,981	1,1344	0,0814	85,4232	0,4104	0,0474	22,04	29,93
172			Fleetwood	10500	Continental Vanco Four Season	215/85R16	OM651	458,660	1,4977	0,1348	103,1109	0,5418	0,0784	32,02	43,51