VP VOLCANO PARTNERS LLC
940 Centre Circle, Suite 3022 Altamonte Springs, FL 32714

February 17, 2012

Hon. Judith Enck, Regional Administrator
USEPA REGION 2
290 Broadway
Mail Code: 26THFL
New York, NY 10007-1866

VIA OVERNIGHT AND ELECTRONIC MAIL

RE: Cement-Lock® Proposal for "Alternative Pilot Program"

Dear Ms. Enck:

Please find below a follow-up letter to our meeting with you on December 17, 2010 when we presented a review of the benefits of the Cement-Lock® technology as part of an early action remedy for the removal of contaminated sediment from the Lower Passaic River Study Area ("LPRSA"). Today, Volcano Partners LLC, owners of the Cement-Lock® technology, offers a specific proposal for an "alternative pilot program" that supports a minimum commercial-scale facility specifically addressing "hot spot" removals of contaminated Passaic River sediment as part of an Interim Remedial Measure ("IRM"). This facility would require the dedication of 300,000 cubic yards of "in-situ" dredged river sediment to make the plant commercially viable. This amount could be reached by combining the 120,000 cubic yards "in-situ" at River Mile 10.9, renegotiating the 160,000 cubic yards "in-situ" from Tierra Solutions' Phase 2 IRM to allow processing at a Cement-Lock® plant, not a Confined Disposal Facility ("CDF") facility, and picking up additional dredged material from the 6-9 likely "hot spots" recently disclosed by LPR CPG consultants at the February 9 Citizens Action Committee ("CAG") meeting for the LPRSA.

Our proposed "alternative pilot program" is very timely given the report recently issued by the National Advisory Council for Environmental Policy and Technology ("NACEPT") to Administrator Jackson. NACEPT, Technologies for Environmental Justice Communities and Other Vulnerable Populations, February 15, 2012. The NACEPT Report responds to Administrator Jackson's request for "game changing" technologies to address

environmental problems experienced by environmental justice communities and other vulnerable communities. The NACEPT Report (and attached Case Studies) issues a call to action on the Passaic River cleanup and supports the deployment of Cement-Lock® technology as a means to that end.

Unfortunately, both the EPA and LPR CPG pilot programs, as recently proposed, leave Cement-Lock® technology out and delay our efforts to construct a Cement-Lock® facility. We, therefore, offer an "alternative pilot program" for your consideration. We discuss the details of this proposed program in Section II below. Furthermore, we provide a brief update regarding Cement-Lock's® plant design refinements since our last meeting with you. We attach hereto a memorandum, prepared by Tetra Tech EC and Foster Wheeler Corporation and submitted to EPA consultant, Louis Berger Group, on November 30, 2011. This memorandum details the plant design refinements and addresses the issues raised over the past year by your staff and cited in the 2008 Final Report from the WRDA Sediment Decontamination Program ("2008 Final Report"). We further outline the substantial air emissions offsets realized for mercury and CO_2 through the use of Cement-Lock® technology in a sustainable, beneficial use program. Finally, we describe how a Cement-Lock® facility would create high-paying manufacturing jobs and help stimulate the regional economy.

We look forward to working with you and your staff, and the PRPs and other stakeholders, to establish an "alternative pilot program" to clean up the Passaic River in a timely, cost-effective, sustainable, and environmentally sound manner that helps restore the quality of the river so it is once again a recreational and economic benefit to the citizens of New Jersey and the entire metropolitan New York region. This program would also establish and demonstrate a more cost effective and viable means of cleaning up sites similar to the Passaic River in other parts of the country. As you may know, specific public support for the commercial deployment of the Cement Lock® technology already exists which can only help in its implementation and acceptance by local citizens. We further request a follow-up meeting with you and your staff to discuss the details of our "alternative pilot program" presented below and to answer any remaining questions you or your staff may have.

I. The EPA and CPG LPR pilot programs, as currently designed, do not support construction of a Cement Lock® facility.

As we discuss in more detail below, in lieu of participation in the "pilot programs" as currently designed, Volcano Partners LLC now proposes the use of Cement-Lock® technology as part of an "alternative pilot program" that supports the construction of a minimum commercial-scale Cement Lock® facility specifically addressing "hot spot" removals of contaminated Passaic River sediment as part of an IRM. As currently proposed, the EPA and LPR CPG "pilot programs" do not provide the volume of material to economically support the construction of a minimum-sized Cement-Lock® facility. The scale of a 10,000 to 30,000 "in-situ" cubic yard "pilot program" simply would not financially support the construction of a capital intensive Cement Lock® plant. Moreover, it is not clear what funding, if any, is associated with such a limited initiative.

FOIA_07123_0005366_0002

To make both economic and policy sense, we believe that any "pilot program" must be of a sufficient scale to support a minimum commercial-scale Cement-Lock® facility. Any smaller facility would needlessly expend limited economic resources on an unsustainable project. This would further delay the construction of a commercial-scale facility that could provide meaningful processing capacity for Passaic River sediments by the end of 2013. Our program manager, Tetra Tech, projects an 18-month design, permit and build timeline for the proposed Cement-Lock® plant. Furthermore, a smaller pilot-scale facility has already been constructed, tested, reported on and demolished. From 2005-2008, a 10,000 ton per year plant was built and tested in Bayonne, New Jersey, under the WRDA Sediment Decontamination Program ("WRDA Program"). The WRDA Program was a multi-million dollar program jointly funded and administered by Brookhaven National Laboratory, EPA Region 2, USACE and the State of New Jersey.

The construction of a minimum commercial-scale Cement-Lock® plant would be the final step in the unprecedented 20-year effort by public and private stakeholders to identify and deploy a sustainable, green technology capable of producing a beneficial use product from contaminated dredged sediments. The WRDA Program was a key part of this effort. This program tested and studied Cement-Lock® technology for more than 15 years, including planning, design, bench studies, the construction of the 10,000 ton per year plant discussed above (including several phases of demonstration studies for this plant), and the issuance of more than 20 separate reports, permits and detailed memorandum. The study culminated with the issuance of a Final Report in November, 2008, with a record comprised of thousands of pages of study data that are available for public review at: http://www.bnl.gov/wrdadcon/Publications/reports/report.htm

The 2008 Final Report confirmed that Cement-Lock® technology met the program goals: "[a]t each level of development, the Cement-Lock Technology was demonstrated to be a technically efficient and cost effective means of remediating contaminated materials and generating a beneficial use component. When coupled with means for thermal energy recovery and power generation, the technology serves as a model for a sustainable industry." 2008 Final Report (Executive Summary) p. v. The 2008 Final Report noted several issues requiring design refinements to be incorporated into the design of a minimum commercial-scale plant. As discussed in Section III below, our program manager, Tetra Tech, and system design engineers, Foster Wheeler Corporation, fully address each and every significant issue raised in the 2008 Final Report in our draft final designs for the proposed facility.

The Cement-Lock® technology has been proven effective through many years of independent study and testing. The next step is the construction of a minimum commercial-scale plant that would be supported by an "alternative pilot program" set forth below.

FOIA_07123_0005366_0003

II. Volcano Partners LLC proposes an "alternative pilot program" and the construction of a 50,000 ton per year Cement-Lock® facility.

Our "alternative pilot program" would support the construction of a Cement-Lock® facility with a 4.4 meter rotary kiln and 50-70,000 "in-situ" tons per year processing capacity (i.e., "50,000 ton per year facility"). This facility would require the dedication of 300,000 cubic yards of "in-situ" dredged river sediment to make the plant commercially viable. Volcano Partners LLC is prepared to make three significant concessions to EPA and the PRPs participating in this program:

1. Volcano Partners would agree to a set processing fee of $350 per "in-situ" ton, including on-shore material handling at the facility, dewatering and processing sediments as a feedstock to produce the beneficial use product, Ecomelt® (but NOT including dredging and barge transport to our site),

2. Volcano Partners would agree to dedicate this plant solely to the processing of contaminated river and harbor sediments, and

3. Volcano Partners would agree to enter into a contract with the PRPs for 300,000 cubic yards "in-situ" with the following contingency provision: "if Cement Lock® fails to perform as agreed for the initial 20,000 cubic yards 'in situ' then the PRPs shall be released from any commitment to process the remaining 280,000 cubic yards 'in situ' at the Cement-Lock ® facility."

We are confident in our technology and the team, including Tetra Tech, Foster Wheeler Corporation and Gas Technology Institute, developer of the Cement-Lock® process, that we have assembled to design and construct the plant, and implement the program. All of these firms have enviable track records in executing challenging projects similar to what is required by this program. Furthermore, by allocating the risk as set forth in Point 3 above, we believe the "alternative pilot program" provides a true "pilot" function for the first 20,000 cubic yards, while maintaining our ability to operate a commercially viable plant after proving successful operation.

Notably, we understand EPA has sufficient sediment characterization data to support a 300,000 cubic yard "in-situ" program addressing "hot spots" as part of an IRM. The sediments identified under the proposed "pilot programs" for River Mile 10.9 total more than 120,000 cubic yards, although only 30,000 cubic yards are proposed for removal. Phase 2 of Tierra Solutions' current IRM has identified 160,000 cubic yards of sediment for removal near the Lister Avenue site. Furthermore, 6 to 9 additional likely "hot spots" were identified by LPR CPG consultants up river from River Mile 10.9 at the February 9 CAG meeting. River Mile 10.9 material combined with Phase 2 of Tierra Solutions' current IRM would total nearly 300,000 cubic yards. The dedication of this amount of sediment would support construction and sizing of a minimum commercial-scale Cement-Lock® plant that could process these sediments in a projected 4-year

FOIA_07123_0005366_0004

program. The program would have a design, build and permit timeline of 18 months from contract. We are currently negotiating terms for the leasing of a site for construction of the plant. We commenced the pre-permitting process with NJDEP in November, 2011 and could be ready to go with the 18-month design, build and permit program within 30-days of signing the above-described contingent contract with any single PRP or group of PRPs.

The Cement-Lock® technology is the perfect technology for "hot spot" removals containing high-levels of dioxins. Except for certain metals that are permanently entrained in our beneficial use product, Ecomelt®, the Cement-Lock® technology effectively destroys the most toxic contaminants in dredged river sediment, including furans, dioxins, and PCBs. In contrast to other technologies that merely separate, relocate or landfill the toxic component of the sediments, the Cement-Lock® technology, as preferred by Section 21 of CERCLA, actually reduces through thermal destruction the toxic component of the sediment and produces a beneficial use product that can be used to replace Portland cement in concrete. This is one of the principal reasons for its support by public interest groups, such as the Passaic River Coalition, which has monitored the development of this technology since the mid-1990's.

The Cement-Lock® technology is patented and the only local decontamination technology specifically designed to address the most toxic "hot spot" removals. By increasing scale we also can very effectively process large volumes of sediments of varying contamination levels. Finally, Cement-Lock® technology produces an additional beneficial use product – electricity. The Cement-Lock® facility will generate what is needed to operate the plant and export the balance to the power grid.

We are confident that our pricing will be more competitive than current out-of-state treatment or disposal (e.g., landfilling) options and, furthermore, our pricing will be very competitive with "all in" pricing for other less effective and unproven local decontamination technologies or containment facilities. Because Cement-Lock® technology is both an Ecomelt® manufacturing process and power producer, we are able to provide price certainty and stability to the program.

We stand ready to move forward on an "alternative pilot program" and the construction of a minimum commercial-scale Cement-Lock® facility that would avoid additional delays and begin a substantial clean up of the Passaic River.

III. Design refinements by Tetra Tech and Foster Wheeler Corporation address issues raised by 2008 Final Report.

As discussed above, the 2008 Final Report confirmed that Cement-Lock® technology is a "technically efficient and cost effective means of remediating contaminated materials and generating a beneficial use component." 2008 Final Report (Executive Summary) p. v. The 2008 Final Report, however, did note several issues requiring plant design refinements in a commercial-scale facility. Each issue has been addressed by simple plant design refinements incorporated into the draft final designs by Tetra Tech and Foster Wheeler.

FOIA_07123_0005366_0005

These issues are addressed in detail in the memorandum prepared by Tetra Tech and submitted to your staff on November 30, 2011 (attached hereto). As set forth in the memorandum, our engineers confirm that these design "fixes" are "off-the-shelf" mechanical systems that are reliable and in widespread use today.

These design refinements include:

1) Filter Cake Charging System – This system has been redesigned with a double "inward" turning corkscrew charging system to load our "filter cake" into the Cement Lock® process facility. The design is self-cleaning and is in use today for charging soils and sludges with the same geomorphic and geotechnical properties as dewatered sediment "filter cake".

2) Drop Out Box System -- The drop out box system will be fitted with additional burners AND re-designed inclines to prevent flow regulation issues reported during the demonstration study. This design refinement is currently operational in plants designed by Foster Wheeler. Foster Wheeler has a long history of designing successfully operating slagging rotary kiln systems. The drop out box system issues reported from the demonstration study were the result of using a medical waste kiln, rather than a specialized slagging rotary kiln for processing sediments.

3) Mercury APC Enhancements -- State of the Art ("SOTA") mercury air pollution controls ("APC") will be added to the flue gas cleaning system, including continuous emissions monitoring provisions for mercury emissions. Specifically, the revised design applies an additional mercury removal phase through the injection of powdered activated carbon ahead of the baghouse, in addition to the packed bed carbon adsorber at the end of the system. Foster Wheeler projects a 99% or greater removal rate for mercury from the flue gas.

4) Pb (Lead) APC Enhancements -- SOTA air pollution controls will be added to the system for Pb. As confirmed by Foster Wheeler, the Pb issues raised during the demonstration project were likely caused by a damaged bag in the baghouse. Foster Wheeler's revised design uses powdered lime and salt particles that bind with Pb prior to collection in the baghouse. Foster Wheeler projects a 99.9% or greater removal rate for Pb.

5) Dioxin DRE Enhancements -- Foster Wheeler's system design, based on experience in successfully designing numerous rotary slagging kilns since 1986, will meet at least 99.9999% ("6-9s") destruction and removal efficiency (DRE) for the principal organic hazardous constituent (POHC), dioxins.

FOIA_07123_0005366_0006

The 2008 Final Report also confirmed that the beneficial use product, Ecomelt®, meets structural and environmental standards to serve as a construction-grade cement admixture for concrete. We have examples of the successful use of Ecomelt® as a partial replacement for Portland cement. In 2008, the production of a batch of concrete using Ecomelt® was used to pour a length of sidewalk (165 feet long and 6 feet wide) at Montclair State University, Montclair, New Jersey. This pour is readily available for inspection by interested stakeholders. We have also entered into a letter of intent with U.S. Concrete, a major domestic Redi-Mix concrete manufacturer, to purchase construction-grade Ecomelt® from the Cement-Lock® plant.

IV. Use of Cement-Lock® technology in a sustainable, beneficial use program delivers substantial air emissions offsets for mercury and CO_2.

The production of a beneficial use product is an important factor in determining the environmental benefits from a Cement-Lock® facility. In addition to the SOTA air pollution controls, high pollutant removal rates and extremely high organic contaminant destruction rates, Cement-Lock® technology as an entrant into the cement admixture market reduces the need for Portland cement production. This results in an emissions offset for each ton of Ecomelt® production that replaces a ton of Portland cement production. Our proposed 50,000 ton per year facility would generate roughly 20,000 tons of Ecomelt® as a replacement for Portland cement per year. Therefore, the Cement-Lock® plant offsets the need for production of 20,000 tons of Portland cement. Furthermore, this same offset analysis would apply for each Megawatt of electricity produced by the proposed Cement-Lock® plant.

An example of the emissions offset described above can be projected for mercury. Given the information in project reports for an average mercury concentration level for Passaic River sediments, the enhanced air pollution controls systems for mercury removal, and the removal rate described in Section III above, we would expect the mercury emissions for our proposed plant to be far less than the mercury emissions from a currently operating Portland cement plant (on average) needed to produce 20,000 tons of clinker. See EPA, Mercury Study to Congress, Vol. II, An Inventory of Anthropogenic Mercury Emissions in the United States, 1997, p. 4-43 (reporting average mercury emissions rate for Portland cement industry). Moreover, applying the recently adopted EPA MACT standard for the Portland cement industry, even with reduced emissions from Portland cement plants in the future under this rule, we will continue to realize a substantial offset to the mercury emissions from our proposed plant. See 75 Fed. Reg. 54970 (September 9, 2010)(setting new MACT standard for Portland cement industry).

A similar emissions offset would apply to other constituent emissions. For example, EPA calculates that for every ton of clinker produced at a Portland cement plant, 0.5 tons of CO_2 is released. 2011 U.S. Greenhouse Gas Inventory Report, Chap. 4 (Industrial Processes): http://epa.gov/climatechange/emissions/usinventoryreport.html. Therefore, a Portland cement plant is projected to emit 10,000 tons of CO_2 to produce 20,000 tons of clinker. As discussed above, the production of Ecomelt® at the proposed Cement-Lock® plant replaces the need for production of 20,000 tons of Portland cement. Applying the EPA data above,

FOIA_07123_0005366_0007

we would project that the amount of CO_2 emitted by the production of 20,000 tons of Ecomelt® at our proposed plant would be offset by a reduction of at least 10,000 tons of CO_2 emitted from Portland cement plants.

Remarkably, the production of a beneficial use product results in substantial offsets for mercury and CO_2 air emissions by reducing these emissions from Portland cement plants. The production of electricity would also provide an additional emissions offset. This is precisely the benefit the beneficial use policy seeks to support. Our Cement-Lock® facility would serve as a model for sustainable system design. The Cement-Lock® technology not only addresses the contaminated sediments found in the Passaic River, it produces beneficial use products, Ecomelt® and electricity, that reduce air emissions from the Portland cement and electric power industries. We believe this is why the deployment of Cement-Lock® technology is embraced by public interest groups and advisory groups, such as the Passaic River Coalition and NACEPT, as a preferred solution to others that have been considered.

V. A Cement Lock® plant creates good manufacturing jobs and stimulates the local and regional economy.

As discussed above, our "alternative pilot program" proposes the construction of a 50,000 ton per year plant. The total project would also require dredging and material transportation activities. Under the proposed program, construction and operation of the plant, related dredging and transportation activities, and Ecomelt® handing, storage, processing and transportation, deliver both direct and indirect jobs and economic benefits.

Working with our program manager, Tetra Tech, who has significant comparable experience on the Lower Fox River Superfund Site, we estimate that the plant would support more than 100 FTEs for construction jobs in 2012 and 2013, and during the four year program operation would require more than 400 FTEs each year for operation and maintenance functions. These functions include scientists, engineers, construction professionals, marine surveying, equipment maintenance, QA/QC staff, and craft laborers. By applying a standard indirect employment multiplier (6.3 for comparable manufacturing industries) to the direct employment number, we can project indirect job creation at more than 2500 FTEs on an annual basis. See ContentFirst, Employment Multipliers, http://www.contentfirst.com/multiplier.shtml. Indirect jobs created include material suppliers, capital services, jobs created by employee spending, and state and local government jobs.

Beyond the direct economic benefits of the plant itself, the clean up of "hot spots" on the Passaic River, as a first step in a larger, complete clean up of the river, would set in motion a regional economic stimulus with its core along the Passaic River waterfront and the recreational, residential and commercial opportunities it would support along the entire river. For example, in Newark, the waterfront could link together significant redevelopment and transportation improvements over the past 15 years, including the NJ Performing Arts Center, the Prudential Center, the Newark Bears' Riverfront Stadium, the

FOIA_07123_0005366_0008

recently announced Panasonic Center, and the Red Bulls' Arena in nearby Harrison. The Passaic River cleanup would play a central and critical role in this redevelopment.

A revitalized Newark waterfront could follow the example of the "Inner Harbor" in Baltimore, or a more recent waterfront redevelopment effort on the Anacostia River in Washington D.C. A report recently issued by the Capitol Riverfront Improvement District ("CRID"), the non-profit entity charged with promoting and coordinating economic development activities on the Anacostia riverfront, projected that "[o]ver the next 20 years, new development in the entire 500 acre Capitol Riverfront neighborhood ... is projected to produce $2.28 billion in tax revenue, 21,000 permanent jobs and 585 construction jobs each year." CRID, Greenprint of Growth p. 14 (January 12, 2012).

We offer these examples by way of comparison, to highlight the possibilities for economic redevelopment in Newark and along the entire 17-mile length of the Passaic River. A clean Passaic River will play a critical part in such an effort. Furthermore, with Paterson, New Jersey, the cradle of the industrial revolution, along its banks, the Passaic River has a legacy of more than 200 years of largely unregulated industrial activity. The river and its surrounding communities deserve a master plan to educate the public and coordinate the cleanup and redevelopment efforts along the river. We support such an effort for the Passaic River and anticipate that our involvement will help facilitate coordination between regulatory authorities and the PRPs who will fund the cleanup. It is time for this process to move forward.

We look forward to working with you and your staff, and the PRPs and other stakeholders, to establish an action-oriented program to begin the clean up of the Passaic River in a cost-effective, sustainable, environmentally sound manner that helps restore the river for the environmental, recreational and economic benefits of the citizens of New Jersey and the entire metropolitan New York region. We further request a follow-up meeting with you and your staff to discuss the details of our "alternative pilot program" presented above and to answer any remaining questions you or your staff may have.

Sincerely,

Al Hendricks
Chairman / Managing Member
(407) 492-9731
www.cement-lock.com

Robert E. Fabricant
Counsel
(908) 370-8063

cc: Hon. Colonel John R. Boule' II, District Commander, New York District, USACE
Hon. Bob Martin, Commissioner, NJDEP

Attachments (1)

FOIA_07123_0005366_0009

ATTACHMENT 1

VOLCANO PARTNERS LLC

557 North Wymore Road
Suite 100, Maitland, FL 32751

November 30, 2011

Mr. Scott E. Thompson, PE, BCEE
Louis Berger Group, Inc.
565 Taxter Rd., Suite 510
Elmsford, NY 10523

RE: Request for additional information on the Cement-Lock® manufacturing process

Dear Mr. Thompson:

On behalf of Volcano Partners, LLC, I am pleased to provide additional information as per your request on the Cement-Lock® Technology manufacturing process design and an update on our plans for the development of a commercial-scale Cement-Lock® manufacturing plant. Specifically, you requested an update regarding our cost evaluation, scalability of the system and any additional updates for process design, including any modifications to the air pollution control systems.

Cement-Lock® Technology is the first sustainable thermo-chemical manufacturing process specifically designed to manufacture a construction-grade, cementitious building material (Ecomelt®) from contaminated dredged sediments. The development of a commercial-scale Cement-Lock plant would be the final step in the unprecedented 20-year effort by public and private stakeholders to identify and deploy a sustainable, green technology capable of producing a beneficial use product from contaminated dredged sediments. Furthermore, the deployment of this manufacturing technology for use with Passaic River sediment as a feedstock would be consistent with USEPA guidance directing that, to the extent practicable, clean-up project alternatives should consider the CERCLA preference for treatment over containment or land disposal. USEPA. 1993. Guidance on Conducting Non-Time-Critical Removal Actions Under CERCLA. EPA540-R-93-057. August

We are currently planning the deployment of a commercial-scale Cement-Lock® plant utilizing a 4.4 meter rotary kiln designed to process Passaic River sediments as a feedstock. As you know, the Cement-Lock® Technology manufacturing process was evaluated in 2006 demonstration project conducted at the IMTT site in Bayonne, NJ. The objective of that demonstration was to test the effectiveness of Cement-Lock® Technology's patented additives and process to 1) destroy and/or immobilize organic and inorganic contaminants found in sediment and 2) produce a beneficial use product, Ecomelt®. This study developed the operational data needed to advance the design. While the final report summarized several of the issues encountered and recommended design solutions, the demonstration concluded that the process can successfully create a safe and marketable product from highly contaminated sediment feedstock. Gas Technology Institute, 2008, Cement-Lock® Technology for Decontaminating Dredged Estuarine Sediments Final Project. Gas Technology Institute, Des Plains, IL., November 2008. Since the completion of the demonstration project, Volcano Partners has been working with a highly experienced design and management team, including Tetra Tech and Foster Wheeler Corporation, to advance the design and to develop engineering updates to address the issues encountered in the demonstration, including significant updates to the air pollution control systems.

Volcano Partners is fully committed to the design and deployment of a commercial-scale Cement-Lock® manufacturing facility. Our technology has been identified as a potential early action treatment technology by the U.S. Environmental Protection Agency for the Lower Passaic River Study Area. As fully set forth in the attached memorandum, prepared by our program management company, Tetra Tech, Cement-Lock® technology is ready for commercial-scale design and deployment on a timeline necessary to process Passaic River sediments under the early action program. The projected timeline is 18 months from start to construction completion. Furthermore, the memorandum provides a detailed response to the questions you have raised regarding Cement-Lock® Technology design updates, scalability and additional cost evaluation.

Volcano Partners is committed to the design and deployment of a sustainable, local solution to the serious environmental challenges found on the Lower Passaic River and Newark Bay. Our sediment management facility and manufacturing plant will contribute to the revitalization of a blighted, fallow waterfront, while creating jobs in construction and operation for the local community. We are committed to public involvement in the planning, siting and approval processes. We have already met with several key stakeholders, including the Passaic River Coalition and the Lower Passaic River Citizen's Advisory Group (CAG). We plan to expand this outreach to include other key stakeholders, including Clean Ocean Action and the Baykeeper, as we continue to collect input on community concerns.

As the design and deployment progresses, Volcano Partners will continue to keep the public involved and informed through the CAG. A Community Health and Safety Plan will be prepared to outline potential risks to the community and emergency procedures related to plant operations and transportation activities.

I trust the detailed memorandum attached hereto will confirm our commitment to serve as part of the solution to the serious environmental challenges found on the Lower Passaic River and Newark Bay. Do not hesitate to follow-up with any additional questions you may have regarding the attached memorandum.

Sincerely,

Al Hendricks
Chairman / Managing Member
(407) 492-9731
www.cement-lock.com

TETRA TECH EC, INC.

TO: Al Hendricks, Volcano Partners, LLC

FROM: Steve McGee, Tetra Tech, EC

CC: Dean Bybee, Foster Wheeler Corporation

DATE: November 30, 2011

RE: Summary of Project and Design Updates for Cement-Lock Technology Manufacturing Plant

As requested by Volcano Partners, LLC, please find below a response to several questions raised by Mr. Scott Thompson, Louis Berger Group, regarding Cement-Lock® technologies. Mr. Thompson requested additional information on the Cement-Lock® process design and an update on our plans for the development of a commercial-scale Cement-Lock manufacturing plant. Specifically, Mr. Thompson requested an update regarding our cost evaluation, scalability of the system and any additional updates for process design, including air emissions control systems modifications.

As Program Manager for this project, Tetra Tech is pleased to provide a response to the above questions. We have worked closely with our highly experienced team members to prepare this memorandum. In particular, Foster Wheeler Corporation (Foster Wheeler), with a highly experienced team and recognized 25-year track record in the design and construction of slagging rotary kilns, provided key input into design revisions for a commercial-scale Cement-Lock plant. As requested by Mr. Thompson, we are including below a detailed description of the Foster Wheeler design revisions with a particular focus on the engineering and air pollution control (APC) issues presented in the November 2008 Final Project Report (2008 Final Report) [1].

In addition, as per your request, we have incorporated material handling and dewatering components into the front end of our proposed project scope in order to provide turn key management of the project commencing with the barge delivery of our process feedstock, contaminated dredged sediments, to our proposed waterfront facility. We are currently assessing siting feasibility at several waterfront sites in the New York/New Jersey harbor area. As you know, TetraTech has operated in a similar Program Manager capacity at the Lower Fox River Superfund site where material management and dewatering technologies were designed and deployed for the management of more than four million cubic yards of contaminated dredged sediments. Working with input from experienced vendors, we are providing a more detailed description of our proposed materials management and dewatering facilities for this project.

[1] Gas Technology Institute, 2008. Cement-Lock® Technology for Decontaminating Dredged Estuarine Sediments Final Project. Gas Technology Institute, Des Plains, IL., November 2008.

We have also conducted a preliminary economic project analysis supporting Volcano Partners determination that a commercial-scale plant is feasible with the dedication of a minimum of 300,000 cubic yards of "in-situ" contaminated sediments. With a conversion to "in-situ" tons, a minimum "project-based" commercial-scale Cement Lock® manufacturing plant is projected to require a processing fee of $350.00 per "in-situ" ton of sediment. This manufacturing plant would utilize a 4.4 meter rotary kiln operating at 6-9 tons per hour with a projected average capacity of 50,000 tons per year. This facility is projected to require 4 to 5 years to process 300,000 "in-situ" cubic yards of sediment as feedstock. The permitting, design and construction timeline for such a plant is projected at 18 months.

Finally, two important aspects of scalability are addressed by this report. First, as you are aware, the uniqueness of the Cement Lock manufacturing process lies in the additives, the mixture ratios and residence times used to manufacture Ecomelt®, rather than in the thermo-chemical processing equipment. All mechanical systems are "off-the-shelf" and in widespread use worldwide. As set forth below, Foster Wheeler's proprietary rotary kiln designs readily scale up from your demonstration scale system to your proposed 50,000 ton per year project capacity requirements. Second, we are also designing the facility to allow future expansion through the addition of 1-3 rotary kilns and associated equipment placed in a parallel configuration. This would permit the plant to expand if additional feedstock becomes available.

I. Summary of Cement-Lock® Technology Manufacturing Process

According to the inventor, GTI, Cement-Lock technology is the first sustainable thermo-chemical manufacturing process specifically designed to manufacture a construction-grade, cementitious building material (Ecomelt®) from contaminated dredged sediments. The development of a commercial-scale Cement-Lock plant would be the final step in the unprecedented 20-year effort by public and private stakeholders to identify and deploy a sustainable, green technology capable of producing a beneficial use product from contaminated dredged sediments. The primary beneficial use product is Ecomelt®, a glassy, pozzolanic material, which when dried and finely ground, can be used as a partial replacement for Portland cement in the production of concrete. The Cement-Lock manufacturing process is specifically designed to use contaminated dredged materials as a feedstock or raw material for the production of Ecomelt®. After dewatering, these sediments are processed into a homogenous "filter cake." The patented technology then combines the "filter cake" with additives necessary for production of a pozzolanic, cementitious material. The mix is then run through a high temperature manufacturing process (slagging rotary kiln). This process produces a molten mixture that is then quenched in a water bath to create a beneficial use product, Ecomelt®.

The high temperature (2400° to 2600°F) involved in the manufacturing process to create Ecomelt® has the benefit of destroying organic contaminates present in the feedstock. This thermo-chemical manufacturing process also effectively immobilizes inorganic contaminants, such as metals, in the

FOIA_07123_0005366_0014

pozzolanic matrix found in Ecomelt®. As set forth in detail by the 2008 Final Report, leaching tests[2] conducted during the course of the demonstration project concluded that Ecomelt® readily passed the U.S. Environmental Protection Agency (USEPA) Toxicity Characteristic Leaching Procedure (TCLP) testing criteria[3]. Ecomelt® can be blended with ordinary Portland cement at a 40:60 Ecomelt®/Portland cement weight ratio[4]. The use is consistent with ASTM C 595 (Standard Specification for Blended Hydraulic Cements) and confirmed by the pilot and demonstration project testing results.

In addition, we have an example of the use of Ecomelt® as a partial replacement for Portland cement. In 2008, the production of a batch of concrete using Ecomelt® was used to pour a length of sidewalk (165 feet long by 6 feet wide) at Montclair State University, Montclair, New Jersey. The pour is readily available for inspection by interested stakeholders.

Finally, Volcano Partners has determined that a market exists for the sale of Ecomelt®. Volcano Partners has entered into a letter of intent with U.S. Concrete, a major domestic Redi-Mix concrete manufacturer, to purchase construction-grade Ecomelt® from the Cement-Lock plant. Based on information received from GTI, a 50,000 ton per year facility will yield more than 20,000 tons/year of Ecomelt® for incorporation in construction-grade cement[5] As a point of comparison, the current price of Portland cement is about $105 per ton.

II. Summary of Proposed Project and Cost Evaluation

We have conducted a preliminary economic project analysis using information provided by F&G, Chicago supporting Volcano Partners determination that a commercial-scale plant is feasible under the following conditions. The plant requires the dedication of a minimum of 300,000 cubic yards of "in-situ" contaminated sediments, with a processing fee of $350.00 for each "in-situ" ton of sediment. With projected process treatments and volume reductions for the contaminated dredged sediment, the resulting "filter cake" and combined process additives requires a minimum plant capacity of 50,000 tons per year. This "project-based" 50,000 ton per year plant is the minimum necessary for a commercial-scale Cement-Lock plant. Notably, as compared to past economic analysis, the proposed project scope includes all costs post barge delivery, including materials management, storage and dewatering costs. As the volume of dedicated "in-situ" contaminated sediments increases, we would expect a decrease in the fee per "in-situ" ton. However, the scope of our current evaluation focuses on the costs related to a 50,000 ton per year plant.

---

[2] Toxicity Characteristic Leaching Procedure, EPA Method 1311

[3] Rehmat, A., A. Lee, A. Goyal, and M. C. Mensinger, 1999. Construction-Grade Cement Production from Contaminated Sediments Using Cement-Lock™ Technology . http://www.bnl.gov/wrdadcon/publications/reports/igt-weda-5-99.pdf

[4] Mensinger, M.C., 2008. Cement-Lock® Technology for Decontaminating Dredged Estuarine Sediments Topical Report on Beneficial Use of Ecomelt from Passaic River Sediment at Montclair State University, New Jersey. Gas Technology institute, Des Plains, IL., 2008.

[5] Gas Technology Institute, 2008. Cement-Lock® Technology for Decontaminating Dredged Estuarine Sediments Final Project. Gas Technology Institute, Des Plains, IL., November 2008.

FOIA_07123_0005366_0015

We have commenced pre-permitting meetings with NJDEP regarding the proposed 50,000 ton per year plant. The projected permitting timeline is a 6-month period. Design and construction for this proposed plant is projected to require an 18-month period, with some overlap between permitting and design expected.

III. Scalability of Cement-Lock® Technology Manufacturing Plant

As you are aware, the uniqueness of the Cement-Lock process lies in the additives, the mixture ratios and residence times used to manufacture Ecomelt®, rather than in the thermo-chemical processing equipment. All mechanical systems are "off-the-shelf" and in widespread use worldwide. As set forth below, Foster Wheeler's proprietary rotary kiln designs readily scale up from your demonstration scale system to your proposed 50,000 ton per year project capacity requirements. Any of these components can be obtained within a 6 to 9 month lead time. Consequently, the ability to enlarge the facility from the 10,000 cubic yards per year 2006 demonstration facility to a full commercial facility consisting of multiple processing trains is not limited by mechanical considerations.

An increase in production or processing volume could be accomplished through the parallel deployment of additional rotary kiln trains. The base model evaluated by the 2008 Report was for a 125,000 ton per year plant, with the possible addition of three additional 125,000 ton kilns, for a total processing capacity of 500,000 tons per year. As per your direction, the current focus of our efforts has been an economic evaluation of a single 50,000 ton per year plant, but we would be happy to further discuss the cost efficiencies associated with a scaled up plant that would be possible with the dedication of additional feedstock.

IV. Description of Cement-Lock® Technology Design Updates

Please find below a detailed description of Cement-Lock® technology design updates. This description includes: 1) project management and design team, 2) updated scope of project, 3) project layout schematic, 4) design specifications for Passaic River sediments, and 5) design updates for Cement-Lock Technology manufacturing plant.

A. Project Management and Design Team

Volcano Partners, LLC -- Volcano Partners owns the patent to utilize the Cement-Lock Technology for the manufacture of Ecomelt, a Portland cement replacement. They have organized a project team which consists of firms with global experience.

Gas Technology Institute (GTI) -- Volcano Partners is collaborating with the GTI as the inventor of Cement-Lock. GTI is a world leader in the development and deployment of innovative technology solutions, and were the project managers of the original demonstration-scale Cement-Lock field pilots performed from 2005-2008 on contaminated dredged sediment that included Passaic River sediment.

Tetra Tech EC, Inc. --Tetra Tech EC, Inc. is the Program Manager and General Contractor, and will perform the facility Operations & Maintenance. They will implement the project on a fast track, design-

FOIA_07123_0005366_0016

build basis. In 2011, the Company revenues were $2.6 billion and there are currently over 13,000 employees. Tetra Tech will leverage their successful approach on the $700 million Fox River project to deliver a potential early action for the Lower Passaic River Study Area within the budget and schedule commitments.

Foster Wheeler Corporation -- Tetra Tech EC, Inc. has hired Foster-Wheeler to perform the design engineering. There are nine rotary kilns commercially operating in the United States designed by Foster-Wheeler. These kilns have an exceptional, long-term operating and compliance history. In addition to the rotary kiln and processing facilities, Foster Wheeler design systems include secondary combustion chambers and flue gas cleaning systems.

ABB -- Global leader ABB will be contracted to provide the integrated process controls, instrumentation, and monitoring systems required for plant operation. They presently operate in 200 countries and have over 100,000 employees.

ADA/NORIT Americas JV -- The ADA/NORIT Americas JV will provide the equipment and technology for the capture of trace metals from the flue gas. These firms provide the majority of these systems to the power generation and cement manufacturing industries around the world.

U.S. Concrete -- U.S. Concrete services the United State construction market through two primary business segments. These are Ready-Mix concrete and precast concrete products. The Company has 101 fixed-base facilities and 11 portable Ready-Mix plants. These facilities produced over 4 million cubic yards of Ready-Mix concrete last year. Volcano Partners has entered into a letter of intent with U.S. Concrete to purchase construction-grade Ecomelt® from the Cement-Lock plant.

B. Updated Scope of Project

As set forth above, Volcano Partners has asked us to commence design, permitting and cost evaluation in support of a "project-based" 50,000 ton per year Cement-Lock manufacturing plant. As discussed above, all mechanical systems are "off-the-shelf" and in widespread use worldwide. The permitting, design and construction timeline for such a plant is projected at 18 months.

As proposed, the Cement-Lock Technology manufacturing process involves the following key components:

Front End Materials Handling - Dredged sediments that serve as our manufacturing feedstock will arrive at our site by barge. This material will be offloaded by excavator and conveyed to the processing train. All free carriage water will be pumped directly to the water treatment plant for processing prior to and during sediment off-loading. Our materials management and dewatering vendor will conduct debris separation and dewatering to 50 percent solids content. We are currently evaluating the membrane filter press design for dewatering. Our vendor will then deliver the dewatered sediment to the kiln site. Cement-Lock Technology additives are dry and will be blended with the sediment filter cake to reduce moisture content to 40 percent or below.

FOIA_07123_0005366_0017

Rotary Kiln Design /Build - For more than 25 years the Foster Wheeler team, and its predecessor companies, has designed and built slagging rotary kiln technology to treat a wide variety of contaminated materials, including soils, sludges, and debris, fed through both continuous feeders and in bulk containers (drums). Foster Wheeler's design handles the slag discharge from rotary kilns by the use of a wet deslagger. The wet slag falls from the discharge of the kiln and the walls of the secondary combustion chamber into a pool of water where it is quenched and cooled. The slag is carried from the pool with a drag flight or plate-type conveyor.

Ecomelt® Production – The cooled slag is our beneficial use product, Ecomelt®. The use of additives and the control of mixture ratios and residence times used to manufacture Ecomelt® will require simple operational and design modifications to Foster Wheeler's slagging rotary kiln design. As set forth in Section IV below, we are currently working with Foster Wheeler to finalize revisions to its standard slagging rotary kiln design for the production of Ecomelt®. The thermo-chemical process used to produce Ecomelt® has an additional benefit by effectively destroying organic contaminants, including dioxins/furans, PCBs and pesticides/herbicides, found in the feedstock. This thermo-chemical manufacturing process also effectively immobilizes inorganic contaminants, such as metals, in the pozzolanic matrix found in Ecomelt®. Leaching tests have demonstrated that the Ecomelt® product meets TCLP criteria[6].

Air Pollution Control Systems (APC) – Foster Wheeler's slagging rotary kiln designs are fully compliant with all applicable air pollution control standards. ABB and ADA/Norit Americas will assist with the development of APC equipment and monitoring instrumentation for lime injection, carbon absorption, NOx capture, and stack emissions control. Independent companies will be used to conduct air monitoring.

Beneficial Use Product – The primary beneficial use product is Ecomelt® , a glassy, pozzolanic material, which when dried and finely ground, can be used as a partial replacement for Portland cement in the production of concrete. The Cement-Lock manufacturing process is specifically designed to use contaminated dredged materials as a feedstock or raw material for the production of Ecomelt®. Volcano Partners has determined that a market exists for sale of Ecomelt®. Volcano Partners has entered into a letter of intent with U.S. Concrete, a major domestic Redi-Mix concrete manufacturer, to purchase construction-grade Ecomelt® from the Cement-Lock plant.

C. Project Layout Schematic

The proposed project layout as designed by Foster Wheeler is attached hereto in Appendix A. The thermo-chemical processing and APC systems set forth in the schematic are described in more detail in Section IV E. below.

---

[6] Gas Technology Institute, 2008. Cement-Lock® Technology for Decontaminating Dredged Estuarine Sediments Final Project. Gas Technology Institute, Des Plains, IL., November 2008.

D. Design Specifications for Passaic River Sediments

Cement-Lock® Technology is the first sustainable thermo-chemical manufacturing process specifically designed to manufacture a construction-grade, cementitious building material (Ecomelt®) from contaminated dredged sediments. USEPA has identified Cement-Lock® technology as a potential early action treatment process for contaminated sediments found at the Lower Passaic River Superfund Site. In addition to producing a beneficial use product, the Cement-Lock® Technology manufacturing process employs a thermo-chemical process that is highly effective for the destruction of organic contaminants, such as dioxin and PCBs, and the treatment and immobilization of inorganic contaminants, such as metals, found in dredged sediments.

Volcano Partners is proposing the construction of a 50,000 ton per year Cement-Lock® Technology manufacturing plant in the vicinity of the Lower Passaic River Study Area in New Jersey. The plant design will accommodate additional capacity expansion as needed and will be constructed on a timeline necessary, under an early action plan, to accept contaminated dredged sediments as a manufacturing feedstock for Ecomelt® production. This facility will be dedicated to the treatment of contaminated dredged sediment unsuitable for ocean or upland disposal.

The Passaic River and Newark Bay superfund sites contain an estimated 11 million cubic yards of sediments determined by the USEPA and the state of New Jersey to contain elevated levels of various constituents (including dioxin, PCBs, metals and organics and pesticides)[7]. Concentrations of 2,3,7,8-TCDD in these sediments exceed 5 parts per million (ppm); chromium (363 ppm, average concentration), lead (555 ppm, average concentration) and mercury (7.78 ppm, average concentration) are also detected at elevated levels[8].

Silt and clay are the primary sediment size encountered in this area of the Passaic River. The primary assumptions made for the sediment are "in-situ" solids content of 35 percent. The assumption made for debris, oversize screenings, and sand removal is 17 percent of the mass prior to dewatering. We have utilized a density of 1.21 tons per "in-situ" cubic yard. These assumptions are based upon information received regarding the Phase I early action removal. The financial model for the project is based upon receipts using these assumptions.

The USEPA guidance[9] indicates that, to the extent practicable, clean-up project alternatives should consider the CERCLA preference for treatment over containment or land disposal. The only on-site potential treatment technology applicable for treatment of UTS (Universal Treatment Standard) dioxin

---

[7] Malcolm Pirnie, Inc. June 2007. Draft Source Control Early Action Focused Feasibility Study (FFS), Executive Summary, Prepared for US Environmental Protection Agency, et al.

[8] Tierra Solutions, Inc. August 2008. Phase I Engineering Evaluation/Cost Analysis Work Plan CERCLA Non-Time-Critical Removal Action – Lower Passaic River Study Area, revision 1

[9] USEPA. 1993. Guidance on Conducting Non-Time-Critical Removal Actions Under CERCLA. EPA540-R-93-057. August

FOIA_07123_0005366_0019

containing sediments is thermal treatment, such as the thermo-chemical process employed by Cement-Lock Technology in the manufacture of Ecomelt®. Thermal destruction has also been demonstrated to destroy organic contaminants such as PCDD/F, PCB, and PAH.

Off-site thermal treatment options are also limited. Only a few facilities in the United States (primarily in Texas, Utah, Nebraska and other western states) and Canada are permitted to treat such materials. All require transport over long distances and considerable material handling. Importantly, residue ash from these facilities all contain mobile metals that requires placement in a hazardous waste landfill, while the Cement-Lock® Technology manufacturing process creates a beneficial use product that immobilizes metals in a pozzolanic matrix.

E. Design Updates for Cement-Lock® Technology Manufacturing Plant.

As discussed above, the efficacy and feasibility of the Cement-Lock® manufacturing process was proved by the 2006 demonstration project in Bayonne, New Jersey that produced Ecomelt® from approximately 500 cubic yards of Passaic River sediment[10]. The demonstration project used a medical waste kiln modified to treat sediment. The demonstration yielded considerable operational data that has been used to refine the engineering design for a commercial-scale manufacturing facility specifically designed for the use of dredged sediments as a feedstock.

This section summarizes the key design developments since that demonstration, including any engineering modifications to address issues encountered in the demonstration project and advances proposed in the APC equipment for the commercial-scale facility.

The Cement-Lock 2006 demonstration identified a number of plant equipment-related problems, including: 1) inconsistent feeding of sediment to the demonstration plant system, and 2) discharging of slag from the drop-out box. Principal among these problems was the inability of the Ecomelt® Generator to continuously discharge slag from the rotary kiln. Slag accumulated in the drop-out box instead of falling into the granulator to be quenched[11]. In part, these problems were the result of the adaptation of a kiln designed for medical waste processing. The subsequent equipment modification design study as part of the New Jersey Department of Transportation/Office of Maritime Resources project[12] recommended modifications that were largely implemented and tested. The recommendations of that study and test results have been reviewed. The current design addresses these issues, as described in more detail below.

---

[10] ENDESCO Clean Harbors, Inc., 2006. Sediment Decontamination Demonstration Program: Cement-Lock® Technology Phase I Pilot Test Final Report. August 2006

[11] ENDESCO Clean Harbors, Inc., 2006. Sediment Decontamination Demonstration Program: Cement-Lock® Technology Phase I Pilot Test Final Report. August 2006

[12] ENDESCO Clean Harbors, Inc., 2006. Sediment Decontamination Demonstration Program: Cement-Lock® Technology Report on Task 6 – Equipment Modification Design Study. July 2006

1. Rotary Slagging Kiln

The rotary kiln thermal processing technology provided by Foster Wheeler has been used to treat a wide variety of contaminated soils, sediments, sludges, and debris fed through both continuous feeders and in bulk containers (drums). These kilns are routinely operated in slagging mode to ensure that desorption, volatilization and required carbon burn-out of organic contaminants in the solids feed is achieved and maximized. The feed materials, feed additives (slag modifiers), auxiliary fuel(s) and oxygen content are carefully planned and regulated to control the slagging conditions in the kiln. The internal diameter and length of the kiln are carefully chosen to stay within our proven limits for volumetric heat release, kiln gas velocity (to minimize ash carry-over to the secondary combustion chamber (SCC) and waste heat boiler), solids filling factor and residence time. Carefully selecting these design features is important to ensure the feed sediment is heated thoroughly, to completely volatilize organic contaminants that are then oxidized in the Secondary Combustion Chamber (SCC).

Foster Wheeler's thermal treatment technology, experience and know-how was obtained and demonstrated on multiple projects dating back to 1986. Their rotary kiln projects in North America include 13 designed, 12 built and operated, 9 currently operating, including several currently operating units that were designed and demonstrated to meet 99.9999+ percent DRE. Several other facilities were taken to various stages of design but not built for a variety of reasons. A partial list of their completed rotary kiln thermal treatment projects is provided below. We would be happy to provide additional examples of Foster Wheeler's relevant projects upon request.

ROTARY KILN EXPERIENCE

	Client & Location	Rotary Kiln	Start-up Year	percent DRE	Status
1	Dow Chemical Midlands, MI	4.4 m ø x 12 m L slagging	2002	99.99+	in operation
2	Chem Security, Ltd. Swan Hills, Alberta, Canada	4.4 m ø x 12 m L slagging	1993	99.9999+	Swan Hills Treatment Center (SHTC) in operation
3	APTUS Tooele County, UT	4.4 m ø x 12 m L slagging	1991	99.9999+	Clean Harbors in operation
4	Rollins Environmental Deer Park, TX	4.4 m ø x 12 m L slagging	1988	99.99+	Clean Harbors in operation
5	Pyrochem, Inc. Coffeyville, KS	3.6 m ø x 10 m L slagging	1986	99.9999+	Aptus-Laidlaw shut down in 1999

2. Feed System

The dewatered sediments that have been mixed with feed additives (slag modifiers) are placed in a feed hopper at the front wall of the rotary kiln. A double screw feeder conveyor (redesigned to address issues raised by the demonstration project) or ram feeder will be used to feed this material through an opening in the stationary front wall of the kiln on a continuous basis. The double screw conveyor creates a seal and restricts the in-leakage of air to the kiln. The heat for processing the sediments is provided by burning natural gas in a low-NOx burner also mounted on the stationary front wall of the rotary kiln. A combustion air fan will provide the proper ratio of air to fuel for efficient combustion.

Foster Wheeler rotary kilns are used routinely to treat widely heterogeneous materials that are often fed in batch mode (drums, boxes, etc.). It is much simpler to handle a single waste stream that will be somewhat homogeneous and fed continuously as is planned for this project. For example, Clean Harbors operates three 4.4 meter diameter x 12 meter long Foster Wheeler slagging rotary kilns at two locations. These kilns average over 10 tons/hour of feed to each one and have obtained onstream factors in excess of 85%.

The operating experience of these kilns demonstrates that the processing of 6-9 tons/hour of sediment modifier mix is well within their capability; especially considering the feed will be relatively homogeneous in nature and fed continuously to the kiln with a vast majority of the heat release from burning natural gas.

3. Wet Deslagger

To handle the slag discharge from the rotary kilns, a wet deslagger is employed. The molten slag falls from the discharge of the kiln and the walls of the secondary combustion chamber into a pool of water where it is quenched and cooled. The design of this slag drop area is extremely important. The proper openings and slopes are critical to the operability of the system. Foster Wheeler has gained this know-how through numerous applications. The slag is carried from the pool with a drag flight or plate-type conveyor. These wet deslaggers have been used on all of the slagging rotary kilns designed with Foster Wheeler technology and have provided excellent, reliable service thereby demonstrating that the removal of quenched slag will not be an issue with this design. Additional natural gas lances can be mounted at the kiln discharge to assist in melting any slag that may solidify and begin to build up in this area.

4. Secondary Combustion Chamber

The SCC must supply additional heat to the process to account for SCC heat losses, air in-leakage, and to heat the water vapor (steam) generated in the wet deslagger to temperatures necessary to obtain the designed DRE for the facility. Low-NOx burners are used in the SCC, as well as the kiln to keep the

FOIA_07123_0005366_0022

production of thermal NOx at a minimum. A minimum of two burners will be provided in the SCC. They will be arranged to promote turbulence and eliminate dead spaces and/or short circuits within the SCC.

To achieve the required Destruction and Removal Efficiency (DRE) for the thermal processor, Foster Wheeler uses proven guidelines combining residence time, temperature, turbulence, physical arrangement of the secondary combustion chamber (SCC), and type and arrangement of the burners. By following these guidelines all Foster Wheeler designs have surpassed the DRE requirements, as demonstrated, before being placed in service, for all organic components present in the feed, including dioxin and PCBs, whether the DRE is four nines (99.99 percent) or six nines (99.9999 percent). This operating experience demonstrates their capability of exceeding the DRE requirement of the project for any organic components present in Passaic River sediment.

5. Waste Heat Boiler

After the SCC, the hot flue gases enter a Waste Heat Boiler (WHB). The WHB will have a radiant section, designed with wide passes and slag/ash build-up removal capability, followed by a convection section with soot blowing. An aqueous urea solution will be sprayed into the WHB in the proper temperature zone (about 1,800° to 1,700°F) to allow selective non-catalytic reduction (SNCR) of most of the NOx in the flue gas to elemental nitrogen.

6. Flue Gas Cleaning System

The flue gas cleaning system will use proven components for any applicable state or federal air pollution control standards, including Maximum Achievable Control Technology (MACT) or New Jersey SOTA (State of the Art) requirements, for all regulated pollutants, including:

- Acid gases: SOx, HCl/Cl_2, and other halogen species,
- Fine particulate including volatile and semi-volatile metals,
- Mercury,
- Lead,
- NOx (as required), and
- Dioxins and Furans

Each component in the gas cleaning system will be designed to handle the maximum loading of contaminants and maximum flow rates for the process to ensure that all emission standards are met or exceeded.

The system will be a multi-step process and will provide a dry discharge with no waste water to treat. The treatment steps are as follows:

- The generation of fuel NOx in the system will be low due to the small amount of nitrogen in the feed. Thermal NOx will be minimized by the use of low-NOx burners. Further reduction of NOx

FOIA_07123_0005366_0023

occurs by selective non-catalytic reduction (SNCR) in the Waste Heat Boiler (WHB) where urea is injected into the flue gases in the zone where the temperature is about 1,800° to 1,700°F. At this temperature the urea reacts to reduce the NOx to N_2 without a catalyst. A reduction of 50 to 70 percent of NOx has been demonstrated in Foster Wheeler's systems. The gas is cooled to about 650°F in the WHB as steam is generated.

- The gas is then further quenched, to a temperature of about 375°F, by spraying a lime solution into a spray dryer absorber. The aqueous lime droplets absorb and react with the acid gas components (HCl , SOx, etc.) to form calcium salts (such as $CaCl_2$ and $CaSO_4$) which are dried and removed from the gas stream in a baghouse. A removal efficiency of 99.9% for HCl and 98% for SO_2 has been demonstrated.

- Fine particulate will be collected in the baghouse together with the lime and salts to achieve maximum achievable control of particulate emissions. Volatile and semi-volatile metals and metal compounds (such as Pb, $PbCl_2$, and PbO) will condense on the powdered lime and salt particles and will also be captured in the baghouse. The vapor pressures of Pb, $PbCl_2$ and PbO at 375 °F (which is the baghouse operating temperature) are less than 10^{-8}, 10^{-7} and 10^{-8} mm Hg, respectively (less than 1 ppm in the vapor phase). The fine particulate, lime, salts, and condensed compounds will be removed from the flue gas stream at over 99.9% efficiency by the bags. Based on Foster Wheeler's experience, the elevated Pb emissions from the demonstration tests were probably due to a damaged bag in the baghouse[13].

- Powdered activated carbon is also injected into the gas stream ahead of the baghouse to remove dioxins or furans (that may be generated in the boiler) and mercury compounds. The baghouse is maintained at a temperature sufficiently above the acid gas dew point to prevent any condensation and consequent plugging of the bags, and corrosion. ADA/Norit Americas expects that a reduction of 90 to 95% of the Hg in the flue gas stream can be achieved in this stage.

- The final step in the gas cleaning system is another partial quench, to a temperature of about 250 °F, by spraying water into the gas and then passing the gases through a packed bed absorber filled with carbon to absorb any mercury (Hg) or mercury compounds still present as vapor. ADA/Norit Americas expects that this Hg removal polishing step is capable of removing an additional 90+% of the Hg compounds. An Hg continuous emission monitoring system (CEMS) will be provided before the guard section of the packed bed to signal when the carbon packing needs to be replaced.

Each of these process components has been demonstrated successfully for the application described in numerous projects and can be provided by several reliable equipment suppliers.

[13] Gas Technology Institute, 2008. Cement-Lock® Technology for Decontaminating Dredged Estuarine Sediments Final Project. Gas Technology Institute, Des Plains, IL., November 2008.

FOIA_07123_0005366_0024

7. Induced Draft Fan, Stack and Continuous Emission Monitoring System

The entire thermal processing and gas cleaning system operates under slight negative draft pressure provided by the induced draft fan which pulls the flue gas through the system and pushes it up the stack where the cleaned gas is vented to the atmosphere. The negative draft pressure ensures that any system leaks will allow ambient air into the system rather than allowing untreated or partially treated flue gas to escape to the atmosphere. The stack will provide adequate lift to the gases to allow for proper dispersion of the cleaned flue gas into the atmosphere. A proven CEMS will be provided to monitor the stack gases to ensure that the thermal processing and gas cleaning system are operating efficiently and within the constraints of the regulations and operating permit requirements for all pollutants.

FOIA_07123_0005366_0025

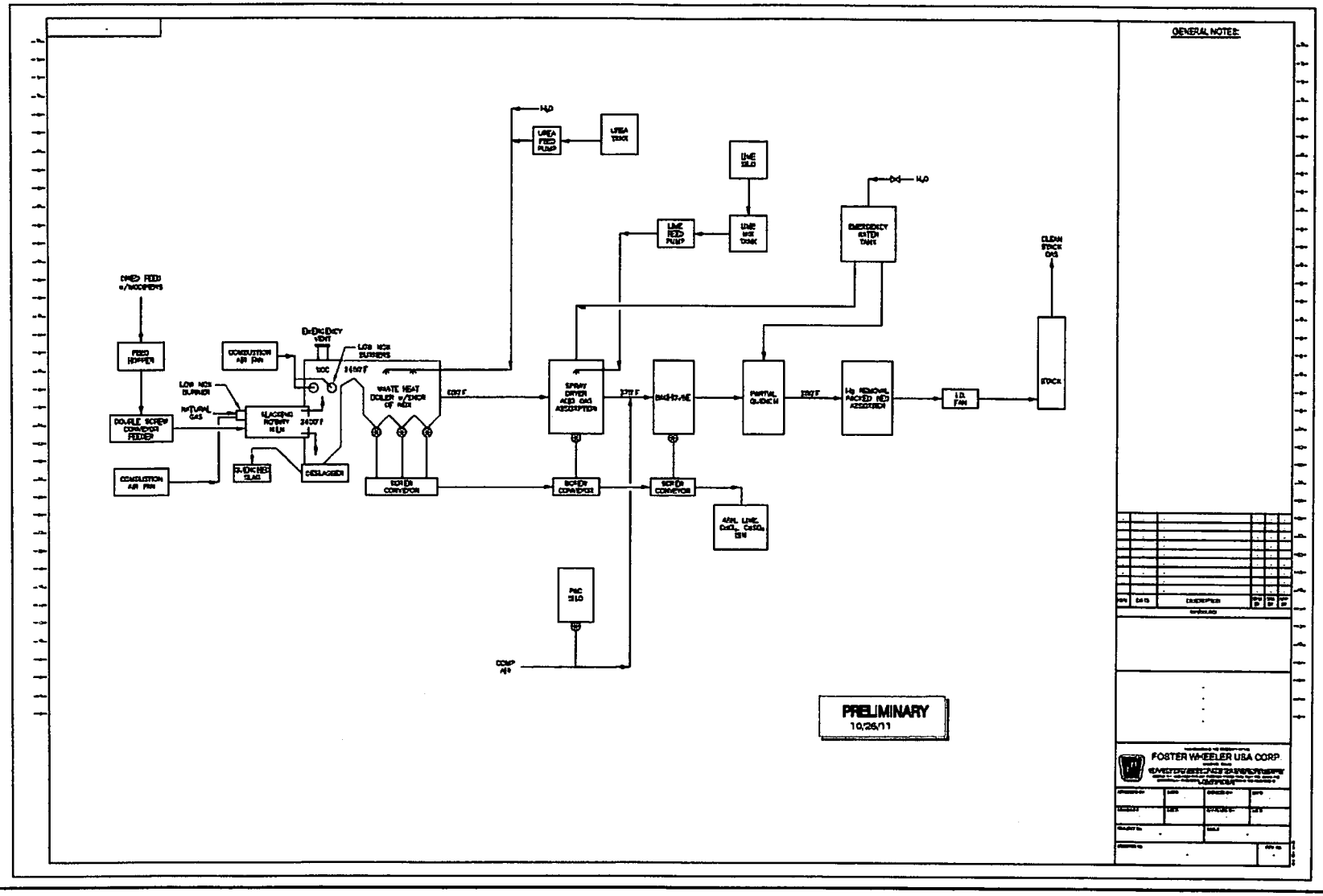

FOIA_07123_0005366_0026