QUALITY ASSURANCE PROJECT PLAN
GIVAUDAN: TRANSPORT PATHWAYTOPASSAIC RIVER
Clifton, New Jersey

Prepared for:
United States Environmental Protection Agency/Environmental Response Team
Edison, New Jersey

By:
Lockheed Martin/Scientific, Engineering, Response and Analytical Services
Work Assignment Number: SERAS-222

Based on the Intergovernmental Data Quality Task Force Uniform
Federal Policy for Quality Assurance Project Plans
(Final Version 1.1, June 2006)

November 12, 2013

SERAS-222-DQAPP-111213

TABLE OF CONTENTS

QAPP Worksheet #1. Title and Approval Page 1
QAPP Worksheet #2. QAPP Identifying Information 2
QAPP Worksheet #3. Distribution List 7
QAPP Worksheet #4. Project Personnel Sign-Off Sheet 8
QAPP Worksheet #5. Project Organizational Chart 9
QAPP Worksheet #6. Communication Pathways 10
QAPP Worksheet #7. Personnel Responsibilities and Qualification Table 11
QAPP Worksheet #8. Special Personnel Training Requirements Table 12
QAPP Worksheet #9. Project Scoping Session Participants Sheet 13
QAPP Worksheet #10. Problem Definition 21
QAPP Worksheet #11. Project Quality Objectives/Systematic Planning Process Statements 23
QAPP Worksheet #12. Measurement Performance Criteria Table 25
QAPP Worksheet #13. Secondary Data Criteria and Limitations Table 32
QAPP Worksheet #14. Summary of Project Tasks 37
QAPP Worksheet #15. Reference Limits and Evaluation Table 39
QAPP Worksheet #16. Project Schedule Timeline Table 54
QAPP Worksheet #17. Sampling Design and Rationale 55
QAPP Worksheet #18. Sampling Locations and Methods/SOP Requirements Table 57
QAPP Worksheet #19. Analytical SOP Requirements Table 65
QAPP Worksheet #20. Field Quality Control Sample Summary Table 66
QAPP Worksheet #21. Project Sampling SOP References Table 67
QAPP Worksheet #22. Field Equipment Calibration, Maintenance, Testing, and Inspection Table 68
QAPP Worksheet #23. Analytical SOP References Table 69
QAPP Worksheet #24. Analytical Instrument Calibration Table 70
QAPP Worksheet #25. Analytical Instrument and Equipment Maintenance, Testing, and Inspection Table 75
QAPP Worksheet #26. Sample Handling System 76
QAPP Worksheet #27. Sample Custody Requirements 77
QAPP Worksheet #28. QC Samples Table 78
QAPP Worksheet #29. Project Documents and Records Table 92
QAPP Worksheet #30. Analytical Services Table 93
QAPP Worksheet #31. Planned Project Assessments Table 94
QAPP Worksheet #32. Assessment Findings and Corrective Action Responses 95
QAPP Worksheet #33. QA Management Reports Table 96
QAPP Worksheet #34. Verification (Step I) Process Table 97
QAPP Worksheet #35. Validation (Steps IIa and IIb) Process Table 98
QAPP Worksheet #36. Validation (Steps IIa and IIb) Summary Table 99
QAPP Worksheet #37. Usability Assessment 100
Figure 1. Proposed Sample Locations 101
Appendix A. Standard Operating Procedures for HCX, HCP and Gamma Spectroscopy 103

QAPP Worksheet #1
Title and Approval Page

Site Name/Project Name: Givaudan: Transport Pathway to Passaic River
Site Location: Clifton, New Jersey (NJ)

Document Title: Givaudan: Transport Pathway to Passaic River

Lead Organization: Environmental Protection Agency/Environmental Response Team (EPA/ERT)

Preparer's Name and Organizational Affiliation: Deborah A. Killeen, Lockheed Martin/Scientific, Engineering, Response and Analytical Services (SERAS)

Preparer'sAddress,TelephoneNumber,and E-mailAddress: 2890Woodbridge Avenue,Edison, New Jersey 08837, 732-321-4245, deborah.a.killeen@lmco.com

Preparation Date (Day/Month/Year): 11/12/13

Investigative Organization's Project Manager/Date: _____
Signature
Printed Name/Organization: Marc S. Greenberg/ERT Work Assignment Manager

Investigative Organization's Project QA Officer/Date: _____
Signature
Printed Name/Organization: Stephen Blaze/ERT Quality Coordinator

Lead Organization's Project Manager/Date: _____
Signature
Printed Name/Organization: Christopher Gussman/SERAS Task Leader

Approval Signatures/Date: _____
Signature
Printed Name/Title: Deborah Killeen/SERAS QA/QC Officer

Approval Authority: SERAS

Other Approval Signatures/Date _____
Signature
Printed Name/Title: Dennis Miller/SERAS Program Manager

Document Control Numbering System: SERAS-222-DQAPP-111213

QAPP Worksheet #2
QAPP Identifying Information

Site Name/Project Name: Givaudan:Transport Pathwayto Passaic River
Site Location: Clifton, New Jersey (NJ)
Site Number/Code:
Operable Unit:
Contractor Name: Lockheed Martin
Contractor Number: EP-W-09-031

Contract Title: SERAS
Work Assignment Number: SERAS-222

1. Identify regulatory program: Comprehensive Environmental Response and Compensation Liability Act (CERCLA)

2. Identify approval entity: EPA/ERT

3. The QAPP is (select one): ☐Generic ☒Project Specific

4. List dates of scoping sessions that were held: 9/4/2013, 9/6/2013, 9/12/2013, 9/23/2013, 10/21/13

5. List dates and titles of QAPP documents written for previous site work, if applicable:

Title	Approval Date

6. List organizational partners (stakeholders) and connection with lead organization:
   EPA Region 2

7. List data users:
   EPA Region 2

8. If any required QAPP elements and required information are not applicable to the project, then circle the omitted QAPP elements and required information on the attached table. Provide an explanation for their exclusions below:

QAPP Worksheet #2
QAPP Identifying Information
(continued)

Required QAPP Element(s) and Corresponding QAPP Section(s)	Required Information	Crosswalk to Related Documents
Project Management and Objectives		
2.1 Title and Approval Page	- Title and Approval Page	1
2.2 Document Format and Table of Contents 2.2.1 Document Control Format 2.2.2 Document Control Numbering System 2.2.3 Table of Contents 2.2.4 QAPP Identifying Information	- Table of Contents - QAPP Identifying Information	2
2.3 Distribution List and Project Personnel Sign-Off Sheet 2.3.1 Distribution List 2.3.2 Project Personnel Sign-Off Sheet	- Distribution List - Project Personnel Sign-Off Sheet	3 4
2.4 Project Organization 2.4.1 Project Organizational Chart 2.4.2 Communication Pathways 2.4.3 Personnel Responsibilities and Qualifications 2.4.4 Special Training Requirements and Certification	- Project Organizational Chart - Communication Pathways - Personnel Responsibilities and Qualifications Table - Special Personnel Training Requirements Table	5 6 7 8
2.5 Project Planning/Problem Definition 2.5.1 Project Planning (Scoping) 2.5.2 Problem Definition, Site History, and Background	- Project Planning Session Documentation (including Data Needs tables) - Project Scoping Session Participants Sheet - Problem Definition, Site History, and Background - Site Maps (historical and present)	9 10
2.6 Project Quality Objectives and Measurement Performance Criteria 2.6.1 Development of Project Quality Objectives Using the Systematic Planning Process 2.6.2 Measurement Performance Criteria	- Site-Specific PQOs - Measurement Performance Criteria Table	11 12

QAPP Worksheet #2
QAPP Identifying Information
(continued)

Required QAPP Element(s) and Corresponding QAPP Section(s)	Required Information	Crosswalk to Related Documents
2.7 Secondary Data Evaluation	- Sources of Secondary Data and Information - Secondary Data Criteria and Limitations Table	13
2.8 Project Overview and Schedule 2.8.1 Project Overview 2.8.2 Project Schedule	- Summary of Project Tasks - Reference Limits and Evaluation Table - Project Schedule/Timeline Table	14 15 16
Measurement/Data Acquisition		
3.1 Sampling Tasks 3.1.1 SamplingProcess Design and Rationale 3.1.2 SamplingProcedures and Requirements 3.1.2.1 Sampling Collection Procedures 3.1.2.2 Sample Containers, Volume, and Preservation 3.1.2.3 Equipment/Sample Containers Cleaning and Decontamination Procedures 3.1.2.3 Field Equipment Calibration, Maintenance, Testing, and Inspection Procedures 3.1.2.4 Supply Inspection and Acceptance Procedures 3.1.2.6 Field Documentation Procedures	- Sampling Design and Rationale - Sample Location Map - Sampling Locations and Methods/SOP Requirements Table - Analytical Methods/SOP Requirements Table - Field Quality Control Sample Summary Table - Sampling SOPs - Project Sampling SOP References Table - Field Equipment Calibration, Maintenance, Testing, and Inspection Table	17 18 Figure 1 19 20 21 22
3.2 Analytical Tasks 3.2.1 Analytical SOPs 3.2.2 Analytical Instrument Calibration Procedures 3.2.3 Analytical Instrument and Equipment Maintenance, Testing, and Inspection Procedures 3.2.4 Analytical Supply Inspection and Acceptance Procedures	- Analytical SOPs - Analytical SOP References Table - Analytical Instrument Calibration Table - Analytical Instrument and Equipment Maintenance, Testing, and Inspection Table	23 24 25

QAPP Worksheet #2
QAPP Identifying Information
(continued)

Required QAPP Element(s) and Corresponding QAPP Section(s)	Required Information	Crosswalk to Required Documents
3.3 Sample Collection Documentation, Handling, Tracking, and Custody Procedures 3.3.1 Sample Collection Documentation 3.3.2 Sample Handling and Tracking System 3.3.3 Sample Custody	- Sample Collection Documentation Handling, Tracking, and Custody SOPs - Sample Container Identification - Sample Handling Flow Diagram - Example Chain-of-Custody Form and Seal	26 27
3.4 Quality Control Samples 3.4.1 Sampling Quality Control Samples 3.4.2 Analytical Quality Control Samples	- QC Samples Table - Screening/Confirmatory Analysis Decision Tree	28
3.5 Data Management Tasks 3.5.1 Project Documentation and Records 3.5.2 Data Package Deliverables 3.5.3 Data Reporting Formats 3.5.4 Data Handling and Management 3.5.5 Data Tracking and Control	- Project Documents and Records Table - Analytical Services Table - Data Management SOPs	29 30
Assessment/Oversight		
4.1 Assessments and Response Actions 4.1.1 Planned Assessments 4.1.2 Assessment Findings and Corrective Action Responses	- Assessments and Response Actions - Planned Project Assessments Table - Audit Checklists - Assessment Findings and Corrective Action Responses Table	31 32
4.2 QA Management Reports	- QA Management Reports Table	33
4.3 Final Project Report		

QAPP Worksheet #2
QAPP Identifying Information
(continued)

Required QAPP Element(s) and Corresponding QAPP Section(s)	Required Information	Crosswalk to Related Documents
Data Review		
5.1 Overview		
5.2 Data Review Steps 5.2.1 Step I: Verification 5.2.2 Step II: Validation 5.2.2.1 Step IIa Validation Activities 5.2.2.2 Step IIb Validation Activities 5.2.3 Step III: Usability Assessment 5.2.3.1 Data Limitations and Actions from Usability Assessment 5.2.3.2 Activities	- Verification (Step I) Process Table - Validation (Steps IIa and IIb) Process Table - Validation (Steps IIa and IIb) Summary Table - Usability Assessment	34 35 36 37
5.3 Streamlining Data Review 5.3.1 Data Review Steps To Be Streamlined 5.3.2 Criteria for Streamlining Data Review 5.3.3 Amounts and Types of Data Appropriate for Streamlining		

☐ Worksheet Not Applicable (State Reason)

QAPP Worksheet #3
Distribution List

QAPP Recipients	Title	Organization	Telephone Number	Fax Number	E-mail Address	Document Control Number
Marc S. Greenberg	WAM (Primary)	ERT	732-452-6413	732-321-6724	Greenberg.marc@epa.gov	SERAS-222-DQAPP-111213
Mark Sprenger	WAM (Secondary)	ERT	732-906-6826	732-321-6724	Sprenger.mark@epa.gov	SERAS-222-DQAPP-111213
Tom Kady	WAM (Secondary)	ERT	732-906-6172	732-321-6724	Kady.thomas@epa.gov	SERAS-222-DQAPP-111213
Christopher Gussman	Environmental Scientist (Phytoremediation)/Task Leader (TL)	SERAS	732-321-4237	732-494-4021	Christopher.d.gussman@lmco.com	SERAS-222-DQAPP-111213
Deborah Killeen	Quality Assurance/Quality Control (QA/QC) Officer	SERAS	732-321-4245	732-494-4021	Deborah.a.killeen@lmco.com	SERAS-222-DQAPP-111213
Dennis Miller	Program Manager	SERAS	732-321-4216	732-494-4021	Dennis.a.miller@lmco.com	SERAS-222-DQAPP-111213
Stephen Blaze	Quality Coordinator	ERT	732-906-6921	732-321-6724	Blaze.stephen@epa.gov	SERAS-222-DQAPP-111213
Eugenia Naranjo	Remedial Project Manager (RPM)	EPA R2	212-637-3467	NA	Naranjo.eugenia@epa.gov	SERAS-222-DQAPP-111213

☐ Worksheet Not Applicable (State Reason)

QAPP Worksheet #4
Project Personnel Sign-Off Sheet

Organization: ERT/SERAS

Project Personnel	Title	Telephone Number	Signature	Date QAPP Read
Marc S. Greenberg	ERT WAM (Primary)	732-452-6413		
Mark Sprenger	ERT WAM (Secondary)	732-906-6826		
Tom Kady	ERT WAM (Secondary)	732-906-6172		
Christopher Gussman	SERAS Environmental Scientist (Phytoremediation)/TL	732-321-4237		
Eugenia Naranjo	EPA R2 RPM	212-637-3467		
Jonathan McBurney	SERAS Project Engineer	732-321-4244		
Jean Bolduc	SERAS Geologist	732-321-4280		

☐ Worksheet Not Applicable (State Reason)

QAPP Worksheet #5
Project Organizational Chart

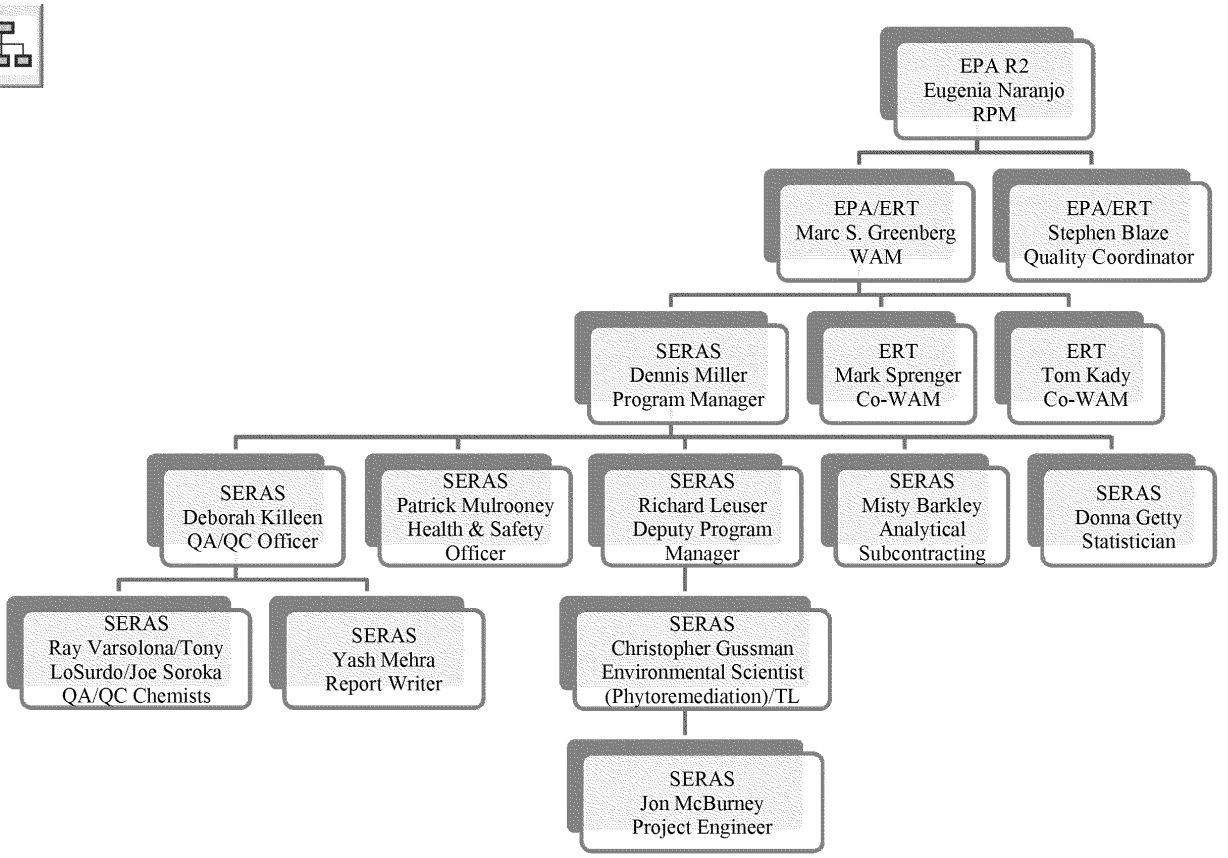

☐ Worksheet Not Applicable (State Reason)

QAPP Worksheet #6
Communication Pathways

Communication Drivers	Responsible Entity	Name	Phone Number	Procedure (Timing, Pathways, etc.)
Approval of initial QAPP and any amendments	ERT Work Assignment Manager ERT Quality Coordinator SERAS Program Manager SERAS QA/QC Officer SERAS TL	Marc S. Greenberg Stephen Blaze Dennis A. Miller Deborah Killeen Christopher Gussman	(732) 452-6413 (732) 906-6921 (732) 321-4216 (732) 321-4245 (732) 321-4237	SERAS internal peer review, followed by ERT approval, implementation of changes effective only with approved QAPP or QAPP Change Form.
Nonconformance and Corrective Action	SERAS TL ERT WAM SERAS QA/QC Officer	Christopher Gussman Marc S. Greenberg Deborah Killeen	(732) 321-4237 (732) 452-6413 (732) 906-6929	Use of the Work Assignment Field Change Form for field issues.
Posting of Deliverables to the ERT-Information Management System (IMS) website	SERAS TL SERAS QA/QC Officer SERAS Deputy Program Manager SERAS Administrative Support	Christopher Gussman Deborah Killeen Richard Leuser Eileen Ciambotti	(732) 321-4237 (732) 321-4245 (732) 494-4060 (732) 321-4255	As per work assignment, posting of deliverables to ERT-IMS website constitutes delivery to the WAM.
Work Assignment	SERAS Program Manager SERAS TL	Dennis A. Miller Christopher Gussman	(732) 321-4216 (732) 321-4237	Describes scope of work to SERAS personnel from the ERT WAM.
Contract/Purchasing Communications	SERAS TL SERAS Analytical Subcontracting	Christopher Gussman Misty Barkley	(732) 321-4237 (732) 321-4205	SERAS TL will communicate with Contract/Purchasing Liason
Health & Safety	SERAS TL	Christopher Gussman	(732) 321-4237	Site Health & Safety Meeting

QAPP Worksheet #7
Personnel Responsibilities and Qualification Table

Name	Title	Organizational Affiliation	Responsibilities	Education and Experience Qualifications
Christopher Gussman	Environmental Scientist (Phytoremediation)/TL	SERAS	Task Leader, Project Supervision, Field Sampling, Reporting, Document Preparation/Site Visit	Minimum B.S. degree plus 8 years of related experience/Lockheed Martin Employee Files
Jon McBurney	Project Engineer	SERAS	Field Sampling Activities	Minimum B.S. degree plus 14 years of related experience/Lockheed Martin Employee Files
Jean Bolduc	Geologist	SERAS	Field Sampling Activities	Minimum B.S. degree plus 8 years of related experience/Lockheed Martin Employee Files
Deborah Killeen	QA/QC Officer	SERAS	Quality Assurance/Validation Oversight and Deliverable Review/QAPP Preparation/Site Visit	Minimum B.S. degree plus 14 years of related experience/Lockheed Martin Employee Files
Ray Varsolona	QA/QC Chemist	SERAS	Data Validation	Minimum B.S. degree plus 8 years of related experience/Lockheed Martin Employee Files
Tony LoSurdo	QA/QC Chemist	SERAS	Data Validation	Minimum B.S. degree plus 8 years of related experience/Lockheed Martin Employee Files
Yash Mehra	Report Writer	SERAS	Report & EDD Preparation	Minimum B.S. degree plus 8 years of related experience/Lockheed Martin Employee Files
Joseph Soroka	QA/QC Chemist	SERAS	Data Validation	Minimum B.S. degree plus 8 years of related experience/Lockheed Martin Employee Files
Misty Barkley	Subcontract Laboratory Liaison	SERAS	Subcontract Laboratory Communications	Minimum B.S. degree plus 8 years of related experience/Lockheed Martin Employee Files
Donna Getty	Statistician	SERAS	Historical Data Review/Sampling Design	Minimum B.S. degree plus 8 years of related experience/Lockheed Martin Employee Files
Marc S. Greenberg	WAM	EPA/ERT	Technical Direction/Oversight	EPA Job-related qualifications/EPA Files
Stephen Blaze	Quality Coordinator	ERT	QA Oversight	EPA job-related qualifications/EPA Files
Eugenia Naranjo	RPM	EPA	Project Oversight	EPA job-related qualifications/EPA Files
Mark Sprenger	Co-WAM	EPA/ERT	Technical Direction/Oversight	EPA Job-related qualifications/EPA Files
Tom Kady	Co-WAM	EPA/ERT	Technical Direction/Oversight	EPA Job-related qualifications/EPA Files

QAPP Worksheet #8
Special Personnel Training Requirements Table

Project Function	Specialized Training – Title or Description of Course	Training Provider	Training Date	Personnel/Groups Receiving Training	Personnel Titles/ Organizational Affiliation	Location of Training Records/Certificates
Project Oversight	Health & Safety Training	SERAS	Nov 2012	Christopher Gussman	Environmental Scientist (Phytoremediation)/TL/ SERAS	SERAS H&S Files
Field Activities	Health & Safety Training	SERAS	Dec 2012	Jonathan McBurney	Project Engineer/SERAS	SERAS H&S Files
Field Activities	Health & Safety Training	SERAS	Sept 2013	Jean Bolduc	Geologist/SERAS	SERAS H&S Files
Site Visit	Health & Safety Training	SERAS	Oct 2012	Deborah Killeen	QA/QC Officer/SERAS	SERAS H&S Files
Validation Support	Annual Data Integrity Training/Peak Integration Training	SERAS	Jun 2012	Raymond Varsolona Tony Losurdo Joe Soroka	QA/QC Chemist/SERAS	SERAS Quality Files
Validation Support	Annual Data Integrity Training/Peak Integration Training	SERAS	Jun 2012	Yash Mehra	Report Writer/SERAS	SERAS Quality Files
QA Oversight	Data Review & Validation	Laboratory Data Consultants	Jan 2007	Deborah Killeen	QA/QC Officer/SERAS	SERAS Quality Files
QA Oversight	Uniform Federal Policy for Quality Assurance Project Plans	Advanced Systems	Jan 2006	Deborah Killeen	QA/QC Officer/SERAS	SERAS Quality Files

☐ Worksheet Not Applicable (State Reason)

QAPP Worksheet #9-1
Project Scoping Session Participants Sheet

Project Name: Givaudan: Transport Pathway to Passaic River **Projected Date(s) of Sampling:** TBD **Project Manager:** Christopher Gussman	**Site Name:** Givaudan: Transport Pathway to Passaic River **Site Location:** Clifton, NJ

Date of Session: 09/04/2013
Scoping Session Purpose: Answer questions regarding task and establish sampling/analytical strategies

Name	Title	Affiliation	Phone #	E-mail Address	Project Role
Marc S. Greenberg	WAM	ERT	732-453-6413	Greenberg.marc@epa.gov	Project Technical Direction
Dennis Miller	Program Manager	SERAS	732-321-4216	Dennis.a.miller@lmco.com	Contract oversight
Misty Barkley	Property Coordinator	SERAS	732-321-4205	Misty.barkley@lmco.com	Analytical Subcontracting
Richard Leuser	Deputy Program Manager	SERAS	732-494-4060	Richard.m.leuser@lmco.com	Project Review
Deb Killeen	QA/QC Officer	SERAS	732-321-4245	Deborah.a.killeen@lmco.com	QA/Validation Oversight/QAPP Preparation
Donna Getty	Statistician	SERAS	732-321-4274	Donna.j.getty@lmco.com	Statistical/sampling design support
Mark Sprenger	WAM	ERT	732-906-6826	Sprenger.mark@epa.gov	Technical Support
Christopher Gussman	Environmental Scientist (Phytoremediation)/TL	SERAS	732-321-4237	Christopher.d.gussman@lmco.com	Task Leader/Project Oversight & Coordination
Tim Kubiak	Supervisory Fish & Wildlife Biologist	USFWS	609-383-3938 x26	Tim_Kubiak@fws.gov	Technical Support

Comments/Decisions: A conceptual site model (CSM) will be developed to describe the contaminant transport routes on the former Givaudan facility and to the Passaic River. Present and historical reports have been provided by the ERT WAM via e-mail or downloaded from the ERT-IMS website. Storm water was discharged to the river in the past. Givaudan shut down in 1998 and the previous removal action that focused on sewage lines was overseen by the NJDEP. At River Mile 10.9, a spike in dioxins was found when the removal action was occurring. Hexachlorophene (HCP), hexachloroxanthene (HCX) and 2,4,6,8-tetrachlorodibenzothiophene (TCDT) are compounds of interest in addition to the 12 dioxin-like PCB congeners, 17 dioxins/furans and total polychlorinated biphenyls (PCBs) as Aroclors. The contamination at mudflat 10.9 is potentially sourced from the Givaudan Facility. The age of the surface dates back to 1960.

According to the USFWS, HCP, HCX and 2,3,7,8-TCDT are available from Cambridge Isotope (isotope.com) on pages 165, 181 and 206. USGS and USEPA analytical chemists have expertise with some or all of these compounds. For example, the EPA Region I Narragansett lab has expertise with HCX and TCDT.

The areas of focus for sampling are: 1) River at mudflat both core and surface – surface is defined as the top 6 inches (″); 2) Waste cell on Givaudan Property – 3-5' in depth and3)WastecellonDiamondAlkaliproperty–3-5'indepth. Hewouldliketooversampleside-by-sidecores,ifpossible. Mistybrought upthefactthat disposalofsamples containing dioxin is not feasible at this time.

Marc Greenberg would like us to get out there before the current USEPA removal action that includes dredging and capping is complete. The project decision statement should reflect the presence/absence of analytes and the ratios of the varoius analytes. Typical QC samples (field duplicates, matrix spikes/matrix spike duplicates [MS/MSDs], etc.) will be inserted into the sample stream.

Action Items: Misty will continue working with the labs to determine the feasibility of getting HCP, HCX and 2,4,6,8-TCDT analyzed. Marc will set up conference calls with USGS and then with the Narragansett lab to give us some insight into the extraction and analysis procedures.

QAPP Worksheet #9-2
Project Scoping Session Participants Sheet

Project Name: Givaudan: Transport Pathway to Passaic River **Projected Date(s) of Sampling:** TBD **Project Manager:** Christopher Gussman	**Site Name:** Givaudan: Transport Pathway to Passaic River **Site Location:** Clifton, NJ

Date of Session: 09/06/2013
Scoping Session Purpose: Answer questions on analytical methodologies for TCDT.

Name	Title	Affiliation	Phone #	E-mail Address	Project Role
Marc S. Greenberg	WAM	ERT	732-453-6413	Greenberg.marc@epa.gov	Project Technical Direction
Dennis Miller	Program Manager	SERAS	732-321-4216	Dennis.a.miller@lmco.com	Contract Oversight
Misty Barkley	Property Coordinator	SERAS	732-321-4205	Misty.barkley@lmco.com	Analytical Subcontracting
Deb Killeen	QA/QC Officer	SERAS	732-321-4245	Deborah.a.killeen@lmco.com	QA/Validation Oversight/QAPP Preparation
Christopher Gussman	Environmental Scientist (Phytoremediation)/TL	SERAS	732-321-4237	Christopher.d.gussman@lmco.com	TL/Project Oversight & Coordination
Tim Kubiak	Supervisory Fish & Wildlife Biologist	USFWS	609-383-3938 x26	Tim_Kubiak@fws.gov	Technical Support
Paul Peterman	Chemist	USGS	573-876-1830	ppeterman@usgs.gov	Technical Support
Kathy Echols	Research Chemist	USGS	573-876-1838	kechols@usgs.gov	Technical Support
Raymond Varsolona	QA/QC Chemist	SERAS	732-494-4054	Raymond.a.varsolona@lmco.com	Validation Support

Comments/Decisions: 2,4,6,8-TCDT is a primary indicator of the process. 2,3,7,8-Tetrachlorodibenzothiophene is available from Cambridge Isotope. Jan Anderson at the University of Muenster has several dibenzothiophenes that would be helpful to determine where the peaks are. TCDT was analyzed using high resolution gas chromatography/high resolution mass spectrometry (HRGC/HRMS) using a DB-5MS column in the selective ion monitoring (SIM) mode. In the Group 2 window, 95 percent (%) of the tetrachlorothiophenes elute with the penta dioxins/furans. The penta window needs to be stretched to see 2,3,7,8-TCDT otherwise it may be missed. 2,4,6,8-TCDT is one of the early eluters in the window (1/4 to 1/5 of the Group 2 window). An average response factor (RF) of 1 was assigned for the 2,4,6,8-TCDT (Refer to the Tracy et al and the Peterman et al references listed in Worksheet 13)

The standard extraction method for dioxins/furans was used. For the carbon cleanup separation, the lab should collect both fractions to make sure that this compound isn't missed (i.e., retain the eluate that removes the interfering compounds in section 13.5.4 of EPA Method 1613B prior to inverting the column and eluting the TCDDs/TCDFs with toluene)

There are several papers from the proceedings of the dioxin meetings (dioxin20xx.org) that can be referred to. Extraction and analysis of HCX by Karen Tracy, Battelle, Columbus, Ohio in 2003, go to organohalogen compounds 560, pp177-180. For chromatography of TCDT, see Peterman 2006, Enhanced Chemistry of Dibenzothiophenes, Figure 1 or Figure 2. This links HCX from HCP. Table 1 shows a 50% degradation of HCX in 30 days in nonane only. Table 2 shows the calibration curves. HCX survives the 1613 extraction method (hexa to hepta).

HCP is an inexpensive standard that can be obtained fromSigma. Beller 1988 demonstrated a relativelylong half-life for this compound. Allard in 1959 indicated that HCP is quite resistant to change. EPA Method 8270 would work better if it was a derivatization method.

Action Items: Misty will relay this information to the laboratories that may potentially perform work.

QAPP Worksheet #9-3
Project Scoping Session Participants Sheet

Project Name: Givaudan: Transport Pathway to Passaic River **Projected Date(s) of Sampling:** TBD **Project Manager:** Christopher Gussman	**Site Name:** Givaudan: Transport Pathway to Passaic River **Site Location:** Clifton, NJ

Date of Session: 09/06/2013
Scoping Session Purpose: Answer questions on sampling/analytical strategies

Name	Title	Affiliation	Phone #	E-mail Address	Project Role
Misty Barkley	Property Coordinator	SERAS	732-321-4205	Misty.barkley@lmco.com	Analytical Subcontracting
Christopher Gussman	Environmental Scientist (Phytoremediation)/TL	SERAS	732-321-4237	Christopher.d.gussman@lmco.com	Task Leader/Project Oversight & Coordination
Raymond Varsolona	QA/QC Chemist	SERAS	732-494-4054	Raymond.a.varsolona@lmco.com	Validation Support
Martha Maier	Laboratory Director	Vista	916-673-1520	mmaier@vista-analytical.com	Analytical Support
Andrew Patterson	Technical Director	Vista	916-673-1520	apatterson@vista-analytical.com	Analytical Support

Comments/Decisions: Updates: Ultra Scientific is trying to synthesize 2,4,6,8-TCDT. Cambridge Isotope would synthesize the compound along with a labeled compound in approximately 4 to 6 weeks.

The lab stated that they seem to have better recovery for HCX and TCDT if they modify the EPA Method 1613 extraction. HCX and 2,4,6,8-TCDT would be analyzedtogetherbyhighresolution mass spectrometryseparatefromthedioxins. HCP wouldbeanalyzedbyliquidchromatography/massspectrometry(LC/MS).

Ray recommended a labeled 2,4,6,8-TCDT due to possible co-elution with 1,2,8,9-TCDD. This would also give a final concentration based on the recovery of the labeled standard.

UPDATE (11/13/13): A labeled and unlabeled source of 2,4,6,8-TCDT will be purchased from Cambridge Isotopes.

QAPP Worksheet #9-4
Project Scoping Session Participants Sheet

Project Name: Givaudan: Transport Pathway to Passaic River **Projected Date(s) of Sampling:** TBD **Project Manager:** Christopher Gussman	**Site Name:** Givaudan: Transport Pathway to Passaic River **Site Location:** Clifton, NJ

Date of Session: 09/12/2013
Scoping Session Purpose: Answer questions on sampling/analytical strategies

Name	Title	Affiliation	Phone #	E-mail Address	Project Role
Marc S. Greenberg	WAM	ERT	732-453-6413	Greenberg.marc@epa.gov	Project Technical Direction
Misty Barkley	Property Coordinator	SERAS	732-321-4205	Misty.barkley@lmco.com	Analytical Subcontracting
Deb Killeen	QA/QC Officer	SERAS	732-321-4245	Deborah.a.killeen@lmco.com	QA/Validation Oversight/QAPP Preparation
Christopher Gussman	Environmental Scientist (Phytoremediation)/TL	SERAS	732-321-4237	Christopher.d.gussman@lmco.com	Task Leader/Project Oversight & Coordination
Tim Kubiak	Supervisory Fish & Wildlife Biologist	USFWS	609-383-3938 x26	Tim_Kubiak@fws.gov	Technical Support
Richard Pruell	Chemist	EPA R1	401-782-3091	Pruell.richard@epa.gov	Technical Support
Bryan Taplin	Chemist	EPA R1	401-782-9607	Taplin.bryan@epa.gov	Technical Support
Raymond Varsolona	QA/QC Chemist	SERAS	732-494-4054	Raymond.a.varsolona@lmco.com	Validation Support
Eugenia Naranjo	RPM	EPA R2	212-637-3467	Naranjo.eugenia@epa.gov	Project Oversight

Comments/Decisions: Marc started off the meeting stating that this investigation will be forensic to determine if other potentially responsible parties (PRPs) may have contributed to part of the contamination.

EPA R1 personnel stated that they didn't necessarily look for HCX but found it in the dioxin analysis. 2,4,6,8-TCDT can be found in the same fraction as dioxins. HCX is a by-product that is more dominant in the HCP process than 2,3,7,8-TCDD. EPA R1 stated that the use of Dionex solid phase extraction (SPE) may be better than Soxhlet extraction.

QAPP Worksheet #9-5
Project Scoping Session Participants Sheet

Project Name: Givaudan: Transport Pathway to Passaic River **Projected Date(s) of Sampling:** TBD **Project Manager:** Christopher Gussman	**Site Name:** Givaudan: Transport Pathway to Passaic River **Site Location:** Clifton, NJ

Date of Session: 09/23/2013
Scoping Session Purpose: Answer questions on sampling/analytical strategies

Name	Title	Affiliation	Phone #	E-mail Address	Project Role
Marc S. Greenberg	WAM	ERT	732-453-6413	Greenberg.marc@epa.gov	Project Technical Direction
Misty Barkley	Property Coordinator	SERAS	732-321-4205	Misty.barkley@lmco.com	Analytical Subcontracting
Deb Killeen	QA/QC Officer	SERAS	732-321-4245	Deborah.a.killeen@lmco.com	QA/Validation Oversight/QAPP Preparation
Christopher Gussman	Environmental Scientist (Phytoremediation)/TL	SERAS	732-321-4237	Christopher.d.gussman@lmco.com	Task Leader/Project Oversight & Coordination

Comments/Decisions: Marc stated that we will go ahead with the HCP and the HCX analyses and not the TCDT. Unlabeled and labeled HCP and unlabeled HCX will be used for analysis (what is available). We are looking at 0-2 foot and 2-4 foot intervals for analysis.

Dredging will be completed by October 2, 2013. Stephanie Vaughn (RPM for removal action) will be sending a dredging map. There may be some areas that we will be able to sample.

Marc needs a cost estimate today from Misty that includes everything (method development, calibration, analysis and method detection limit costs) so he can provide this estimate to the Region.

Action Items: Misty will supply costs to Marc this afternoon by 3pm.

UPDATE: Field activities will occur as soon as possible. Two cores will be taken from the dredge zone, 2 cores from cut 5 or 6 (after dredging) and 2 cores from the zone outside of the removal area boundary. Approximately 12 to 15 samples will be collected along with one field duplicate.

UPDATE: Since a source of the labeled and unlabeled 2,4,6,8-TCDT standard is now available, analysis of TCDT will be pursued.

QAPP Worksheet #9-6
Project Scoping Session Participants Sheet

Project Name: Givaudan: Transport Pathway to Passaic River **Projected Date(s) of Sampling:** TBD **Project Manager:** Christopher Gussman	**Site Name:** Givaudan: Transport Pathway to Passaic River **Site Location:** Clifton, NJ

Date of Session: 10/21/13
Scoping Session Purpose: Answer questions on sampling/analytical strategies

Name	Title	Affiliation	Phone #	E-mail Address	Project Role
Marc S. Greenberg	WAM	ERT	732-453-6413	Greenberg.marc@epa.gov	Project Technical Direction
Misty Barkley	Property Coordinator	SERAS	732-321-4205	Misty.barkley@lmco.com	Analytical Subcontracting
Deb Killeen	QA/QC Officer	SERAS	732-321-4245	Deborah.a.killeen@lmco.com	QA/Validation Oversight/QAPP Preparation
Christopher Gussman	Environmental Scientist (Phytoremediation)/TL	SERAS	732-321-4237	Christopher.d.gussman@lmco.com	Task Leader/Project Oversight & Coordination
Donna Getty	Statistician	SERAS	732-321-4274	Donna.j.getty@lmco.com	Sampling Design

Comments/Decisions: Cappingoperations beganon10/28/13. The initial samplingdesign was scoped as follows: Would like 6 cores in the Passaic River up to 16 samples and one field duplicate. Cesium-137 and beryllium-7 analyses need to be conducted to see recent and historic sediment depositions. Sediment (one core) from each of the areas (no-dredge, below removal area and at the Third River) needs to be dated. Sampling in the river is tentatively due to occur the week of 11/11/13. Six samples will be collected from each of the waste cells located on the Givaudan and Diamond Alkali properties during a subsequent mobilization.

ActionItems: Donna needs to lookat the historical data and see where the highest concentrations ofcontaminants have been found and propose sampling locations And revisions to the initial sampling design.

UPDATE: Field Activities will occur the week of 11/18/13. Add an additional location at the Dundee Dam, upstream of the Third River. There will be a total of 13 locations (4 in the non-dredge zone, 3 in the below removal area zone, 2 at the Passaic and Third Rivers confluence, 3 in the Third River and one upstream reference location).

☐ Worksheet Not Applicable (State Reason)

QAPP Worksheet #10
Problem Definition

The problem to be addressed by the project:
A limited and focused study will be conducted by the Environmental Response Team (ERT) at the request of the EPA Region 2 Emergency and Remedial Response Division (ERRD) to investigate the likelihood that the former Givaudan-Roure Facility contributed to the contamination found in the sediment deposit at river mile (RM) 10.9 of the Passaic River. This study will provide data that will be used by EPA Region 2 to inform future site management decisions.

The Lower Passaic River (LPR) is an operable unit of the Diamond Alkali Superfund Site located in Newark, NJ. The LPR 17-mile Remedial Investigation/Feasibility Study (RI/FS) is being conducted by a group of approximately 70 potentially responsible parties (PRPs) called the Cooperating Parties Group (CPG) under an Administrative Order of Consent (AOC) that was signed in May 2007. The RI/FS is scheduled to be complete in 2015. The LPR is tidal and flows from the Dundee Dam at RM 17.4 through densely populated and industrialized areas into Newark Bay. Beginning in the early nineteenth century, the LPRwatershed wasa majorcenterforindustrializedoperationsincludingcottonmills, manufacturedgasplants,papermanufac turingandchemical manufacturing facilities. These facilities discharged dioxins, petroleum hydrocarbons, polychlorinated biphenyls (PCBs), pesticides and metals to the LPR. Dioxins continue to be a risk driver at the site. CPG has agreed to performthe actions necessaryto remove, treat and/or properlydispose of approximately20,000 cubic yards (yd^3) of sediment from the designated Removal Area of the RM 10.9 Study Area due to elevated concentrations of polychlorinated dibenzodioxins/dibenzofurans (PCDDs/PCDFs), PCBs and metals to the LPR.

The former Givaudan facility is situated on approximately 31 acres in a mixed industrial/residential area near RM 10.9 of the western river bank of the LPR in Clifton, NJ. The Passaic River is located approximately 0.3 miles to the southeast of the facility and is tidally influenced. A Time-Critical Removal Action (TCRA) ispresentlybeingconducted for the sediment mudflat onthe easternriver bankofthe LPRat RM 10.9 across the river fromthe former Givaudanfacility.

Givaudanmanufacturedflavors,fragrancesandspecialtychemicalsandoperatedatthislocationfrom1913to1 998. Trichlorophenol was usedinthe manufacture of hexachlorophene (HCP). Dioxin is inherently a contaminant of the trichlorophenol feed stock and resultant production process wastes. 1,2,4,5,7,8-Hexachloroxanthene (HCX) has also beenassociated withthe productionofHCP. Givaudanceased operationofthe facilityin1998 and currently, the property is occupied by three warehouse buildings in active use that are operated by the Morris Companies.

The environmental questions being asked:
Are compounds that may be potentially linked to Givaudan present or absent from the sediments at RM 10.9?
Are the ratios and/or chemical chromatographic signatures of contaminantsfound inthe river sediments similar to those ratios found insamples collected fromthe Givaudan waste cell?
How similar or dissimilar are the contaminant ratios and/or chemical chromatographic signatures between the former Givaudan facility and the Diamond Alkali facilities waste cells?

Observations from any site reconnaissance reports: NA

A synopsis of secondary data or information from site reports:
Technical papers regarding analytical methods for the compounds of interest will be used as references for method enhancement. Diagrams, figures, inter-office memos, etc. will aid in the development of the conceptual site model to determine potential contaminant transport pathways to the Passaic River.

The possible classes of contaminants and the affected matrices: PCDDs/PCDFs, pesticides, total PCBs, PCB congeners, HCP, HCX and tetrachlorinated dibenzothiophenes (TCDT) in sediment and waste
The rationale for inclusion of chemical and nonchemical analyses: PCDDs/PCDFs – Dioxins continue to be a risk driver for the site, these compounds are associated with Givaudan's former operations and elevated concentrations in this area were previously documented. Diamond Alkali is also a known source of PCDDs/PCDFs. Total PCB and PCB congeners – Elevated concentrations in this area were previously documented. HCP – This compound was previously produced at the Givaudan facility from trichlorophenol HCX – This compound has been associated with the production of HCP TCDT – The ratio of 2,4,6,8 – tetrachlorodibenzothiophene to 2,3,7,8-tetrachlorodibenzodioxin is expected to be useful for environmental forensics. Cesium-137 and Beryllium-7 – Used for dating the age of the sediments.
Information concerning various environmental indicators: The RM 10.9 Removal Action will include dredging of the sediment to a predetermined depth (uppermost two feet). An engineering cap will be constructed, monitored and maintained. A small portion along the shore at the northeastern most end of the Removal Area cannot be capped due to the grade of the existing slope; thus, this small portion will be dredged to remove contaminated sediment to native material. The Jersey City Municipal Authority has established a no-dredge zone in the vicinity of two potable water supply lines that transect the RM 10.9 Removal Area. This area cannot be dredged or capped.
Project decision conditions ("If..., then..." statements): If PCDDs/PCDFs, total PCBs, PCB congeners, HCP and HCX are detected in river sediments, then ERT will evaluate the potential linkage of these contaminants to the sources under investigation(i.e., former Givaudanand Diamond Alkali facilities) inlight ofthe historical data and conceptual site model ofthe contaminant transport pathways. EPA Region 2 will then use the evaluation to inform future site management decisions. Ifthe ratios or multi-variate analysis of various contaminants ofconcernindicate a patternand linkages to the sources under investigation, thenEPA Region2 will use the evaluation to inform future site management decisions.

☐ Worksheet Not Applicable (State Reason)

QAPP Worksheet #11
Project Quality Objectives /Systematic Planning Process Statements

Who will use the data? ERT, EPA Region 2, ERRD and the Office of Regional Counsel (ORC)
What will the data be used for? Data will be used to determine if former Givaudan activities were likely to have contributed to the contamination at RM 10.9.
What type of data is needed? (target analytes, analytical groups, field screening, on-site analytical or off-site laboratory techniques, sampling techniques) PCDD/PCDFs + TCDT by EPA Method 1613, off-site laboratory PCB Congeners and total PCBs by EPA Method 1668C, off-site laboratory HCX and HCP by laboratory-developed methods, off-site laboratory Cesium-137 (Cs-137) and Beryllium-7 (Be-7) by gamma spectrometry, off-site laboratory GPS data of each sample location, field data
How "good" do the data need to be in order to support the environmental decision? PCDD/PCDF, PCB congener, total PCBs, HCX, HCP, TCDT, Cs-137 and Be-7 will be considered Definitive Data. GPS data will be considered supporting meta data and Screening Data (verified but not validated).
How much data are needed? (number of samples for each analytical group, matrix, and concentration) From the River: PCDD/PCDFs, PCB Congeners, HCX, HCP, TCDT – 19 sediment samples, Cs-137 and Be-7 – 50 sediment samples and GPS – 13 sediment locations. From the Waste Cells: PCDD/PCDFs, PCB Congeners, HCX, HCP, TCDT – 12 samples
Where, when, and how should the data be collected/generated? Sediment samples will be collected the week of November 18, 2013 using vibracore techniques. The river has been broken down into three areas of interest: the "no-dredge"zone withinaportionoftheRemoval Area;theareabelowthedesignatedRemovalArea;and theconfluence ofthePassaicandThirdRivers and within theThirdRiver. Sedimentsamples willbecollectedfromthelocationsidentifiedonFigure1,ProposedSamplingMap. Anadditionalsample willbecollected near the area known as the Dundee Dam, upstream of the confluence of the Third and Passaic Rivers as a reference. Specific information on depths and analyses can be found on Worksheet #14. At a later date (to be determined), approximately 6 samples will be collected from each of the waste cells located on the Givaudan and Diamond Alkali properties The QAPP will be amended to reflect this work.
Who will collect and generate the data? A vibracore contractor will be procured to advance sediment core samples to approximate depths below the sediment surface depending on design targets (see Worksheets 14, 17 and 18) andcollect GPS data onthose cores. Sediment cores will be recovered and transferred to SERAS personnel for processingafter theyare collected, cut and capped. GPS data on locations where vibracoring is not an option (i.e., depositional sediment surface sampling in the Third River) will be recorded by SERAS field personnel. Sediment samples after processing will be submitted to Vista Analytical and Outreach laboratories for analysis.

How will the data be reported? Validated data for the sediment samples will be reported in a Final Analytical Report (AR) that will be prepared in accordance with SERAS SOP #4020, *Analytical Report Preparation.* A Trip Report (TR) will be prepared and delivered to the EPA/ERT WAM in accordance with SERAS SOP #4017, *Preparation of Trip Reports* after the field mobilization. A draft summary report will be prepared that will include a weight of evidence discussion with accompanying tables and spreadsheets that summarize the data. This report will be prepared in accordance with SERAS SOP #4019, *Preparation of Preliminary Reports*. Data will be disseminated to EPA Region 2 by the WAM.
How will the data be archived? Hardcopiesofalldeliverables willbestoredinSERAS CentralFiles ande-copies willbestoredonSERAS Local Area Network(LAN). Data willbeimportedinto a Scribe database and posted to the ERT IMS website. Data will be archived by SERAS in accordance with Administrative Procedure (AP) #34, *Archiving Data Electronic Files.* Analytical data from the outside laboratory will be archived by the SERAS QA/QC Group both in hard copy and electronically.

☐ Worksheet Not Applicable (State Reason)

QAPP Worksheet #12-1
Measurement Performance Criteria Table

Matrix	Sediment
Analytical Group	PCDD/PCDF/TCDT*
Concentration Level	Low

Sampling Procedure[1]	Analytical Method/SOP[2]	Data Quality Indicators (DQIs)	Measurement Performance Criteria		QC Sample and/or Activity Used to Assess Measurement Performance	QC Sample Assesses Error for Sampling (S), Analytical (A), or Both (S&A)
SERAS SOP #2016	EPA Method 1613	Accuracy/Bias (Contamination)	<RL		Method Blank	A
		Accuracy/Bias	2378-TCDD	6.7-15.8 ng/mL	Ongoing Precision & Accuracy (OPR)	A
			2378-TCDF	7.5-15.8 ng/mL		
			12378-PeCDD	35-71 ng/mL		
			12378-PeCDF	40-67 ng/mL		
			23478-PeCDF	34-80 ng/mL		
			123478-HxCDD	35-82 ng/mL		
			123678-HxCDD	38-67 ng/mL		
			123789-HxCDD	32-81 ng/mL		
			123478-HxCDF	36-67 ng/mL		
			123678-HxCDF	42-65 ng/mL		
			123789-HxCDF	39-65 ng/mL		
			234678-HxCDF	35-78 ng/mL		
			1234678-HpCDD	35-70 ng/mL		
			1234678-HpCDF	41-61 ng/mL		
			1234789-HpCDF	39-69 ng/mL		
			OCDD	78-144 ng/mL		
			OCDF	63-170 ng/mL		
			$^{13}C_{12}$-2378-TCDD	20-175 ng/mL		
			$^{13}C_{12}$-2378-TCDF	22-152 ng/mL		
			$^{13}C_{12}$-12378-PeCDD	21-227 ng/mL		
			$^{13}C_{12}$-12378-PeCDF	21-192 ng/mL		
			$^{13}C_{12}$-23478-PeCDF	13-328 ng/mL		
			$^{13}C_{12}$-123478-HxCDD	21-193 ng/mL		

Matrix	Sediment
Analytical Group	PCDD/PCDF/TCDT*
Concentration Level	Low

			$^{13}C_{12}$-123678- HxCDD	25-163 ng/mL		
			$^{13}C_{12}$-123789 HxCDD	21-193 ng/mL		
			$^{13}C_{12}$-123478-HxCDF	19-202 ng/mL		
			$^{13}C_{12}$-123678-HxCDF	21-159 ng/mL		
			$^{13}C_{12}$-123789-HxCDF	17-205 ng/mL		
			$^{13}C_{12}$-234678-HxCDF	22-176 ng/mL		
			$^{13}C_{12}$-1234678-HpCDD	26-166 ng/mL		
			$^{13}C_{12}$-1234678-HpCDF	21-158 ng/mL		
			$^{13}C_{12}$-1234789-HpCDF	20-186 ng/mL		
			$^{13}C_{12}$-OCDD	26-397 ng/mL		
			$^{13}C_{12}$-OCDF	26-397 ng/mL		
			$^{37}Cl_4$-2378-TCDD	3.1-19.1 ng/mL		
		Accuracy/Bias	$^{13}C_{12}$-2378-TCDD	25-164 ng/mL	Labeled Compounds (Samples)	A
			$^{13}C_{12}$-2378-TCDF	24-169 ng/mL		
			$^{13}C_{12}$-12378-PeCDD	25-181 ng/mL		
			$^{13}C_{12}$-12378-PeCDF	24-185 ng/mL		
			$^{13}C_{12}$-23478-PeCDF	21-178 ng/mL		
			$^{13}C_{12}$-123478-HxCDD	32-141 ng/mL		
			$^{13}C_{12}$-123678- HxCDD	28-130 ng/mL		
			$^{13}C_{12}$-123789 HxCDD	32-141 ng/mL		
			$^{13}C_{12}$-123478-HxCDF	26-152 ng/mL		
			$^{13}C_{12}$-123678-HxCDF	26-123 ng/mL		
			$^{13}C_{12}$-123789-HxCDF	29-147 ng/mL		
			$^{13}C_{12}$-234678-HxCDF	28-136 ng/mL		
			$^{13}C_{12}$-1234678-HpCDD	23-140 ng/mL		
			$^{13}C_{12}$-1234678-HpCDF	28-143 ng/mL		
			$^{13}C_{12}$-1234789-HpCDF	26-138 ng/mL		
			$^{13}C_{12}$-OCDD	17-157 ng/mL		
			$^{13}C_{12}$-OCDF	17-157 ng/mL		
			$^{37}Cl_4$-2378-TCDD	35-197 ng/mL		
		Precision	RPD ±35%		Field Duplicate	S & A
		Accuracy/Bias	%R = 50-150 (for native compounds only)		Matrix Spike (MS)	S & A

Matrix	Sediment
Analytical Group	PCDD/PCDF/TCDT*
Concentration Level	Low

Sampling Procedure[1]	Analytical Method/SOP[2]	Data Quality Indicators (DQIs)	Measurement Performance Criteria	QC Sample and/or Activity Used to Assess Measurement Performance	QC Sample Assesses Error for Sampling (S), Analytical (A), or Both (S&A)
		Precision	RPD ±20%	MS/Matrix Spike Duplicate (MSD)	S & A
		Completeness	>90% sample collection, >90% completed analyses	Data Completeness Check	S & A

[1]Reference number from QAPP Worksheet #21 (see Section 3.1.2)
[2]Reference number from QAPP Worksheet #23 (see Section 3.2)
*TCDT will be added on to the PCDD/PCDF analysis if a TCDT standard is available

☐ Worksheet Not Applicable (State Reason)

QAPP Worksheet #12-2
Measurement Performance Criteria Table

Matrix	Sediment
Analytical Group[1]	PCB Congeners
Concentration Level	Low

Sampling Procedure[2]	Analytical Method/SOP[3]	Data Quality Indicators (DQIs)	Measurement Performance Criteria[9]	QC Sample and/or Activity Used to Assess Measurement Performance	QC Sample Assesses Error for Sampling (S), Analytical (A) or Both (S&A)
SERAS SOP #2016	EPA Method 1668C	Accuracy/Bias (Contamination)	<RL	Method Blank	A
		Accuracy/Bias	%R = 60-135	OPR*	A
		Accuracy/Bias	^{13}C-Mono, Di, TriCB + ^{13}C-23'4'5-TetraCB (%R = 5-145) Remaining Tetra, Penta, Hexa, Hepta , Octa, Nona and DecaCBs (%R = 10-145)	Internal Standards	A
		Accuracy/Bias	%R = 10-145	Cleanup Recovery Standards	A
		Accuracy/Bias	%R = 50-150%	MS*	S & A
		Precision	RPD ±20%	MS/MSD*	S & A
		Precision	RPD ±35%	Field Duplicate	S & A
		Completeness	>90% sample collection, >90% completed analyses	Data Completeness Check	S & A

*Spiked with PCB-5/PCB-8, PCB-18, PCB-20/21/33, PCB-28, PCB-31, PCB-43/49, PCB-44, PCB-52/69, PCB-56/60, PCB-61/70, PCB-74, PCB-76/66, PCB-87/117/125, PCB-90/101, PCB-95/98/102, PCB-97, PCB-99, PCB-105, PCB-118/106, PCB-110, PCB-128/162, PCB-132/161, PCB-138/163/164, PCB-139/149, PCB-146/165, PCB-151, PCB-153, PCB-156, PCB-158/160, PCB-170, PCB-174, PCB-177, PCB-180, PCB-182/187, PCB-183, PCB-194, PCB-195, PCB-196/203, PCB-201.

☐ Worksheet Not Applicable (State Reason)

QAPP Worksheet #12-3
Measurement Performance Criteria Table

Matrix	Sediment
Analytical Group	Low
Concentration Level	HCX

Sampling Procedure[1]	Analytical Method/SOP[2]	Data Quality Indicators (DQIs)	Measurement Performance Criteria	QC Sample and/or Activity Used to Assess Measurement Performance	QC Sample Assesses Error for Sampling (S), Analytical (A) or Both (S&A)
SERAS SOP #2016	Vista SOP #41	Accuracy/Bias (Contamination)	<RL	Method Blank	A
		Accuracy/Bias	%R = 50-150	OPR	A
		Accuracy/Bias	%R = 25-150	^{13}C-123789-HxCDF (Internal Standard)	A
		Accuracy/Bias	%R = 25-150	^{13}C-123789HxCDD (Cleanup Recovery Standard)	A
		Accuracy/Bias	%R = 50-150	MS	S & A
		Precision	RPD ±20%	MS/MSD*	S & A
		Precision	RPD ±35%	Field Duplicate	S & A
		Completeness	>90% sample collection, >90% completed analyses	Data Completeness Check	S & A

[1]Reference number from QAPP Worksheet #21 (see Section 3.1.2)
[2]Reference number from QAPP Worksheet #23 (see Section 3.2)

☐ Worksheet Not Applicable (State Reason)

QAPP Worksheet #12-4
Measurement Performance Criteria Table

Matrix	Sediment
Analytical Group	HCP
Concentration Level	Low

Sampling Procedure[1]	Analytical Method/SOP[2]	Data Indicators (DQIs)	Measurement Performance Criteria	QC Sample and/or Activity Used to Assess Measurement Performance	QC Sample Assesses Error for Sampling (S), Analytical (A) or Both (S&A)
SERAS SOP #2016	Vista SOP #50	Accuracy/Bias (Contamination)	<RL	Method Blank	A
		Accuracy/Bias	%R = 50-120%	OPR	A
		Accuracy/Bias	%R = 5-153	^{13}C-Hexachlorophene (Internal Standard)	A
		Accuracy/Bias	%R = 50-150	MS	S & A
		Precision	RPD ±50%	MS/MSD	S & A
		Precision	RPD ±35%	Field Duplicate	S & A
		Completeness	>90% sample collection, >90% completed analyses	Data Completeness Check	S & A

[1]Reference number from QAPP Worksheet #21 (see Section 3.1.2)
[2]Reference number from QAPP Worksheet #23 (see Section 3.2)

☐ Worksheet Not Applicable (State Reason)

QAPP Worksheet #12-5
Measurement Performance Criteria Table

Matrix	Sediment
Analytical Group	Radiochemistry for Be-7 and Cs-137
Concentration Level	Low

Sampling Procedure[1]	Analytical Method/SOP[2]	Data Quality Indicators (DQIs)	Measurement Performance Criteria[4]	QC Sample and/or Activity Used to Assess Measurement Performance	QC Sample Assesses Error for Sampling (S), Analytical (A) or Both (S&A)
SERAS SOP #2016	Outreach SOP #RAD_04-11	Precision	<20 RPD	Laboratory Duplicates	A
		Precision	RPD ±35%	Field Duplicates	S & A
		Accuracy	%R = 80-120% or acceptance range set by vendor	LCS	A
		Completeness	>90% sample collection, >90% completed analyses	Data Completeness Check	S & A

QAPP Worksheet #13
Secondary Data Criteria and Limitations Table

Secondary Data	Data Source (Originating Organization, Report Title, and Date)	Data Generator(s) (Originating Org., Data Types, Data Generation/ Collection Dates)	How Data Will Be Used	Limitations on Data Use
Historical River Mile 10.9 Analytical Data	EPA Region 2 Final Data Deliverable	Various Contract Laboratories, Dioxin/Furan Data for RM 10.9, August 2008 to May 2012	Will be used to determine areas of contaminant concern	Previous sampling designs are unknown. Sample location selection was limited to recent data only.
Historical River Mile 10.9 Analytical Data	EPA Region 2 Final Data Deliverable	Various Contract Laboratories, PCB Congener Data for RM 10.9, August 2011 to May 2012	Will be used to determine areas of contaminant concern	Previous sampling designs are unknown. Sample location selection was limited to recent data only.
Historical River Mile 10.9 Analytical Data	EPA Region 2 Final Data Deliverable	Various Contract Laboratories, Total PCB Data for RM 10.9, August 2008 to February 2012	Will be used to determine areas of contaminant concern	Previous sampling designs are unknown. Sample location selection was limited to recent data only.
Historical River Mile 10.9 Analytical Data	EPA Region 2 Final Data Deliverable	Various Contract Laboratories, WHO-PCB Data for RM 10.9, August 2008 to May 2012	Will be used to determine areas of contaminant concern	Previous sampling designs are unknown. Sample location selection was limited to recent data only.
Historical River Mile 11 to 11.5 Analytical Data	EPA Region 2 Final Data Deliverable	Various Contract Laboratories, Dioxin/Furan Data for RM 10.9, December 1991 to June 2012	Will be used to determine areas of contaminant concern	Previous sampling designs are unknown. Sample location selection was limited to recent data only.
Historical Third River Analytical Data	EPA Region 2 Final Data Deliverable	Various Contract Laboratories, Dioxin/Furan Data for RM 10.9, February 1990 to August 2008	Will be used to determine areas of contaminant concern	Previous sampling designs are unknown. Sample location selection was limited to recent data only.
Final Design Report for Removal Action	CPG, Newark, NJ River Mile 10.9 Removal Action Final Design Report, Lower Passaic River Study Area, May 6, 2013	CH2MHill, TCDD, total PCB, mercury data	Removal area summary of chemical parameters and identification of utilities within the no-dredge zone	No coordinates are given for the no-dredge zone

QAPP Worksheet #13
Secondary Data Criteria and Limitations Table

Secondary Data	Data Source (Originating Organization, Report Title, and Date)	Data Generator(s) (Originating Org., Data Types, Data Generation/ Collection Dates)	How Data Will Be Used	Limitations on Data Use
Diagram	Givaudan, Plant Sewer System Diagram	Sewer system diagram	Used to develop conceptual site model	
Diagram	Givaudan, October 12, 1983	Site Storm Drainage Sewer System Diagram	Used to develop conceptual site model	
Diagram	Givaudan, October 12, 1983	Site Stormwater Drainage Diagram	Used to develop conceptual site model	
Diagram	Givaudan, April 5, 1991	Contaminated TCDD Non-Process Areas	Used to develop conceptual site model	
Closure Activities	Givaudan-Roure Lagoon Closure Plan, NJPDES Permit No. NJ088374, May 1, 1996	Crest Engineering Associates, Inc., Hightstown, NJ, On-site storm sewer system changes	Used to develop conceptual site model	
Bypassed Waste	Affidavit of Seymour A. Letkin, January 6, 1994	State of Florida, County of Palm Beach	Used to develop conceptual site model	
Map	Clifton Storm Sewers	Undated	Used to develop conceptual site model	
Inter-Office Memo	Givaudan, Interoffice Memo, December 22, 1995	Stormwater Management Master Plan	Used to develop conceptual site model	
Map	Givaudan, Delineated TCDD Remediated Areas and Sample Locations	Environmental Resources Management (ERM), Inc.	Used to develop conceptual site model	
Map	ERM, Figure 1-3, Abandoned Waste Site Location Map, Givaudan Corporation	NA	Used to develop conceptual site model	
Memo	NJDEP, July 14, 1981	Site Inspection Report, Site Tour	Used to develop conceptual site model	
Diagram	Killam Associates	Passaic Valley Sewerage Commission, Overflow Chamber, Yantacaw Street, Clifton	Used to develop conceptual site model	
Letter	Givaudan, April 18, 1984	USEPA, OSWER, Request for information on HCP process	Used to develop conceptual site model	

QAPP Worksheet #13
Secondary Data Criteria and Limitations Table

Secondary Data	Data Source (Originating Organization, Report Title, and Date)	Data Generator(s) (Originating Org., Data Types, Data Generation/ Collection Dates)	How Data Will Be Used	Limitations on Data Use
Final Draft Report	USEPA, Waste Streams from Hexachlorophene Manufacturing Processes	Radian Corporation, RTP, NC, production processes	Used to develop conceptual site model	
Letter	Givaudan, April 30, 1984,	Radian Corp	Used to develop conceptual site model	
Letter	Givaudan, June 19, 1984	Radian Corp on behalf of USEPA	Used to develop conceptual site model	
Excerpt	Givaudan, A Current Overview of the Occurrence, Toxicity and Disposal of 2,3,7,8-TCDD, no date	TCDD pathways	Used to develop conceptual site model	
Memo	Tierra Solutions, Recovery of G11 in Sewer Ditch and Pond, 1951	Givaudan, HCP product recovery	Used to develop conceptual site model	
Letter to NJDEP	Givaudan –Roure Infiltration/PercolationLagoon Industrial Contingency Requirements/Proposed Emergency Repair Plan	Discussion of overflow conditions	Used to develop conceptual site model	
Report	Tierra Solutions, Inc., Hexachloroxanthene Method Development Report, May 2012	Environmental Data Services, Inc., validation of previous samples analyzed for HCX	Historical analytical data, analytical method and validation guidelines	
Technical Paper	Archer & Crone, Hexachloroxanthene Analysis with TCDD, Organohalogen Compounds Vol. 45 (2000)	USEPA Region 7, HCX analysis	Historical background on HCX analysis	
Technical Paper	Beliveau & al, Discovery of Dioxin Contamination in the Woonasquatucket River, Organohalogen Compounds, Volumes 60-65 (2003)	New England Regional Laboratory, HCX in the TCDD analysis	Historical background on HCX analysis	

QAPP Worksheet #13
Secondary Data Criteria and Limitations Table

Secondary Data	Data Source (Originating Organization, Report Title, and Date)	Data Generator(s) (Originating Org., Data Types, Data Generation/ Collection Dates)	How Data Will Be Used	Limitations on Data Use
Technical Paper	Gothe & Wachtmeister, Sunthesis of 124578-Hexachloroxanthene, Acta Chem. Scand. 26, No. 6 (1972)	Wallenberg Laboratory, University of Stockholm, HCX from HCP	Historical background on HCX from HCP	
Technical Paper	J. Czerwinski, Pathways of Polychlorinated Dibenzothiophenes (PCDTs) in the Environment, Archives of Environmental Protection, Vol. 34, No. 3 (2008), pp. 169-181	Laboratory of Environmental Analyses, Faculty of Environmental Engineering, Lublin University of Technology, Lublin, Poland, PCDT sources and pathways in the environment	Historical background and analytical data	
Technical Paper	Pruell et al, Accumulation of Polychlorinated Organic Contaminants from Sediment by Three Benthic Marine Species, Archives of Environmental Contamination and Toxicology, 24 (1993), pp.290-297	USEPA Environmental Research Laboratory, Narragansett, RI, analytical method for 2,4,6,8-TCDT	Analytical data for TCDT	
Technical Paper	S. Sinkkonen, PCDTs in the environment, Chemosphere, Vol 34, No 12,(1997), pp.2585-2594	Department of Chemistry, University of Jyvaskyla, Jyvaskyla, Finland, analytical methods for PCDTs	Historical background and methodology for PCDTs	
Technical Paper	Huntley et al, Potential Sources of Polychlorinated Dibenzothiophenes in the Passaic River, New Jersey, Chemosphere, Vol 29, No. 2 (1994), pp.257-272	ChemRisk, MBT Environmental Laboratory and Alta Analytical Laboratory, PCDT sources and formation	Background information on PCDT generation	

QAPP Worksheet #13
Secondary Data Criteria and Limitations Table

Secondary Data	Data Source (Originating Organization, Report Title, and Date)	Data Generator(s) (Originating Org., Data Types, Data Generation/ Collection Dates)	How Data Will Be Used	Limitations on Data Use
Technical Paper	Miltsov et al., Synthesis and Characterization of Polychlorinated Dibenzothiophenes, Organohalogen Compounds, Vol. 19 (1994), pp. 133-135	St Petersburg University, Department of Chemistry, synthesis of PCDTs	Background information on PCDT generation	
Technical Paper	Tracy et al., Extraction and Analysis of Hexachloroxanthene using Modified US EPA Method 1613, Revision B Procedures, Organohalogen Compounds, Vol. 60. (2003), pp. 177-180	Battelle Memorial Institute, Columbus, OH, HCX analytical methodology	Extraction and analysis of HCX	
Figure & Analytical Report as an Appendix	Givaudan Boring Locations Dioxin Containment Cell, 2010 & PCDD/F Laboratory Report	Entrix, Dioxin/furan results for Givaudan waste cell	Background information	
Technical Paper	Peterman et al, Enhanced GC/HRMS Chromatographic Analysis of PBDEs, PCDTs and Other Complex Mixtures with Narrow Bore Thin Film Columns, Organohalogen Compounds, Vol. 68 (2006), pp. 1170-1173	USGS, Columbia Environmental Research Center, Columbia, MO	TCDT Analytical Information	

☐ Worksheet Not Applicable (State Reason)

QAPP Worksheet #14
Summary of Project Tasks

Sampling Tasks:
Sediment core samples will generallybe obtained fromsurface to depths of4 to 8 feet belowthe sediment surface using vibracore techniques (maybe more than one core at some locations). Sediment core samples will be collected in four-inch diameter chemically clean rigid sleeves. During core recovery, the subcontractor must minimize sediment loss from the bottom of the core. When the cores are recovered, they will be capped on both ends and kept vertical to minimize disturbance of surficial layers until overlying water canbe siphoned off. Locations will be recorded usingGPS bythe vibracoring subcontractor. The top of the core above the sediment surface will be removed and capped so that the core can be efficiently transported with minimal disturbance. The subcontractor along with SERAS personnel will inspect each core to ensure an intact and representative sample. Intact cores will then be transferred to LM personnel for processing. Samples will be collected in accordance with SERAS SOP #2016, *Sediment Sampling*.

The investigation area has been broken down into three areas of interest: the "no-dredge" zone within a portion of the Removal Area; the area below the designated Removal Area; and the confluence of the Passaic and Third Rivers and within the Third River.
"No-Dredge" Zone - Four cores will be advanced in the "no-dredge" zone to approximately 5 feet. Two samples will be collected from the 0-0.5' and 1-3' intervalsand two samples fromthe 0-0.5'and 3-5'intervals for a total of8sa mples for PCDDs/PCDFs, 209PCB congeners, total PCBs, HCX, HCP andTCDT. One additional core will be advanced at one of these locations to 5 feet and sampled at each 0.5' interval for Cs-137 and Be-7 for a total of 10 samples.
River Confluence - Two cores will be advanced at the confluence of the rivers to the bottom of the sediment bed. Samples will be collected from the 0-0.5' interval and one foot fromthe bottomofthe sediment. Threeadditional sediment samples withinthe Third River onthe other side ofthe Route 21 bridge will be collected at surface only (0-0.5') for a total of 7 samples for PCDDs/PCDFs, 209 PCB congeners, total PCBs, HCX, HCP and TCDT. One additional core will be advanced at one of the two locations at the confluence of the rivers and sampled at each 0.5' interval for Cs-137 and Be-7 for a total of 8-16 samples (depending on the depth).
Below Removal Area – Three cores will be advanced in this zone to approximately 8 feet. Sediment samples will be collected from the 6-8' interval for PCDDs/PCDFs, 209 PCB congeners, total PCBs, HCX, HCP and TCDT for a total of 3 samples. One additional core will be advanced in this area up to 8 feet with samples collected every 0.5 foot intervals for Cs-137 and Be-7 for a total of 16 samples.
Upstream Reference Location – One sediment sample will be collected from a location above Dundee Dam. It is anticipated that samples will be collected from the 0-0.5' and 1-2' intervals. One additional core will be advanced in this area up to 8 feet with samples collected every 0.5 foot intervals for Cs-137 and Be-7 for a total of 16 samples.

NOTE: Sampling depths are based upon previous information and may not be attainable at some locations.

All non-dedicated sampling equipment will be decontaminated between each sample location as follows:
1. Physical removal of sediment/debris using potable water and a scrub brush or high pressure washer.
2. Non-phosphate detergent wash (liquinox)
3. Water rinse
4. Air dry

At a later date, up to six samples will be collected from each of the waste cells located on the Givaudan and Diamond Alkali properties.

Analysis Tasks: Dioxins/Furans & TCDT by EPA Method 1613B PCB Congeners and total PCBs by EPA Method 1668C HCX – Vista SOP #41, Revision 2 (Gas Chromatography with high-resolution mass spectrometry [GC/HRMS]) HCP – Vista SOP #50 (Liquid Chromatography with quadrapole mass spectrometry [LC/MS/MS]) Cs-137 and Be-7 – Outreach SOP #RAD_04-11 (Gamma Spectroscopy)
Quality Control Tasks: Refer to Worksheet #20 for field QC Samples and Worksheets #12 and #28 for analytical QC Samples based on subcontract laboratory SOPs.
Secondary Data: Historical dioxin and PCB data will be mapped to determine the core locations and sample depths. Refer to Figure 1.
Data Management Tasks: Field data will be recorded in field notebooks. Laboratorydata will be recorded in laboratorynotebooks. SCRIBE will be used for data management. A Trip Report and a Technical Memorandum(SummaryReport) will be posted to the ERT/Information Management System (IMS) website for this WA. Posting of the reports will be considered as completion of the deliverable. Hard copies of the deliverables will be archived in the SERAS Central Files. Electronic formats for the deliverables will be saved on the SERAS archive drive and archived in accordance with AP #34, *Archiving Electronic Files*.
Documentation and Records: Observations noted during field efforts will be documented in accordance with SERAS SOP #4001, *Logbook Documentation* and SERAS SOP #2002, *Sample Documentation*. Documents and records that will be generated during this project include: Work Plan (WP), QAPP, Health and safety plan (HASP), Field Documentation, Laboratory Logbooks, Sample Labels, Chain of Custody Records, Custody Seals, Analytical Report, Data Review Records, Data Reduction Records and Field Change Forms, if necessary. The trip report will include site background, observations and activities, and conclusions, results and/or recommendations. The trip report will be prepared in accordance with SERAS SOP #4017, *Preparation of Trip Reports*. The technical memorandum (summary report) will include brief text and risk summary tables.
Assessment/Audit Tasks: A performance audit of field operations is not anticipated for this project. The tasks associated with the QAPP are assessed using peer and management system reviews. Peer review enables the task leader to identify and correct reporting errors before reports are submitted. Management system reviews establish compliance with prevailing management structure, policies and procedures, and ensures that the required data are obtained.
Data Review Tasks: Analytical data for dioxins/furans, PCB congeners and total PCBs, HCX, HCP and TCDT will be validated in accordance with the SOPs listed in Worksheet #36. All SERAS project deliverables will receive an internal peer review prior to release as per the guidelines established in SERAS Administrative Procedure (AP) #22, *Peer Review of SERAS Deliverables*.

☐ Worksheet Not Applicable (State Reason)

QAPP Worksheet #15-1
Reference Limits and Evaluation Table

Matrix: Sediment

Analytical Group: Dioxins/Furans

Concentration Level: Low

Analyte	CAS Number	Project Action Limit (ng/kg)	Project Quantitation Limit (ng/kg)	Analytical Method EPA Method 1613B		Achievable Laboratory Limits	
				MDLs	Method QLs[1] (ng/kg)	MDLs (ng/kg)[2]	QLs[3] (ng/kg)
2378 - TCDD	1746-01-6	NS	0.50	NA	1.0	0.0510	0.50
12378 - PeCDD	40321-76-4	NS	1.0	NA	5.0	0.155	1.0
123678-HxCDD	57653-85-7	NS	1.0	NA	5.0	0.211	1.0
123478-HxCDD	39227-28-6	NS	1.0	NA	5.0	0.269	1.0
123789-HxCDD	19408-74-3	NS	1.0	NA	5.0	0.215	1.0
1234678 - HpCDD	35822-46-9	NS	1.0	NA	5.0	0.284	1.0
OCDD	3268-87-9	NS	2.0	NA	10.0	0.446	2.0
2378-TCDF	51207-31-9	NS	0.50	NA	1.0	0.0830	0.50
12378-PeCDF	57117-41-6	NS	1.0	NA	5.0	0.203	1.0
23478-PeCDF	57117-31-4	NS	1.0	NA	5.0	0.0905	1.0
123678-HxCDF	57117-44-9	NS	1.0	NA	5.0	0.0983	1.0
123789-HxCDF	72918-21-9	NS	1.0	NA	5.0	0.122	1.0
123478-HxCDF	70648-26-9	NS	1.0	NA	5.0	0.219	1.0
234678-HxCDF	60851-34-5	NS	1.0	NA	5.0	0.139	1.0
1234678-HpCDF	67562-39-4	NS	1.0	NA	5.0	0.164	1.0
1234789-HpCDF	55673-89-7	NS	1.0	NA	5.0	0.184	1.0
OCDF	39001-02-0	NS	2.0	NA	10.0	0.240	2.0
Total TCDD	NA	NS	1.0	NA	NA	NA	1.0
Total PeCDD	NA	NS	1.0	NA	NA	NA	1.0
Total HeCDD	NA	NS	1.0	NA	NA	NA	1.0
Total HpCDD	NA	NS	1.0	NA	NA	NA	1.0
Total TCDF	NA	NS	1.0	NA	NA	NA	1.0
Total PeCDF	NA	NS	1.0	NA	NA	NA	1.0
Total HxCDF	NA	NS	1.0	NA	NA	NA	1.0

QAPP Worksheet #15-1
Reference Limits and Evaluation Table

Matrix: Sediment

Analytical Group: Dioxins/Furans

Concentration Level: Low

Analyte	CAS Number	Project Action Limit (ng/kg)	Project Quantitation Limit (ng/kg)	Analytical Method EPA Method 1613B		Achievable Laboratory Limits	
				MDLs	Method QLs[1] (ng/kg)	MDLs (ng/kg)[2]	QLs[3] (ng/kg)
Total HpCDF	NA	NS	1.0	NA	NA	NA	1.0

[1]Based on 10 grams (g) of sample and final volume of 20 microliters (µL)
[2]Based on LOD/LOQ Study from Vista Analytical dated 8/13/2013
[3]Final QL will be adjusted based on the total solids content for each sample.
NS = not specified, NA = not applicable
ng/kg = nanograms per kilogram

☐ Worksheet Not Applicable (State Reason)

QAPP Worksheet #15-2
Reference Limits and Evaluation Table

Matrix: Sediment

Analytical Group: PCB Congeners

Concentration Level: Low

Analyte	CAS Number	Project Action Limit (ng/kg)*	Project Quantitation Limit (ng/kg)	Analytical Method EPA Method 1668C		Achievable Laboratory Limits	
				MDLs* (ng/kg)	Method QLs* (ng/kg)	MDLs (ng/kg)[1]	QLs[2] (ng/kg)
2-MoCB (1)	2051-60-7	NS	2.5	Refer to Table 2	Refer to Table 2	0.644	2.5
3-MoCB (2)	2051-61-8	NS	2.5	Refer to Table 2	Refer to Table 2	0.821	2.5
4-MoCB (3)	2051-62-9	NS	2.5	Refer to Table 2	Refer to Table 2	1.12	2.5
2,2'-DiCB (4)	13029-08-8	NS	10.0	Refer to Table 2	Refer to Table 2	2.61[3]	10.0
2,3-DiCB (5)	16605-91-7	NS	10.0	Refer to Table 2	Refer to Table 2	2.64[4]	10.0
2,3'-DiCB (6)	25569-80-6	NS	5.0	Refer to Table 2	Refer to Table 2	2.16	5.0
2,4-DiCB (7)	33284-50-3	NS	10.0	Refer to Table 2	Refer to Table 2	2.11[5]	10.0
2,4'-DiCB (8)	34883-43-7	NS	10.0	Refer to Table 2	Refer to Table 2	2.64[4]	10.0
2,5-DiCB (9)	34883-39-1	NS	10.0	Refer to Table 2	Refer to Table 2	2.11[5]	10.0
2,6-DiCB (10)	33146-45-1	NS	10.0	Refer to Table 2	Refer to Table 2	2.61[3]	10.0
3,3'-DiCB (11)	2050-67-1	NS	5.0	Refer to Table 2	Refer to Table 2	2.82	5.0
3,4-DiCB (12)	2974-92-7	NS	10.0	Refer to Table 2	Refer to Table 2	4.92[6]	10.0
3,4'-DiCB (13)	2974-90-5	NS	10.0	Refer to Table 2	Refer to Table 2	4.92[6]	10.0
3,5-DiCB (14)	34883-41-5	NS	5.0	Refer to Table 2	Refer to Table 2	1.30	5.0
4,4'-DiCB (15)	2050-68-2	NS	5.0	Refer to Table 2	Refer to Table 2	2.87	5.0
2,2,3'-TrCB (16)	38444-78-9	NS	5.0	Refer to Table 2	Refer to Table 2	1.30[7]	5.0
2,2',4-TrCB (17)	37680-66-3	NS	2.5	Refer to Table 2	Refer to Table 2	0.990	2.5
2,2',5-TrCB (18)	37680-65-2	NS	2.5	Refer to Table 2	Refer to Table 2	1.13	2.5
2,2',6-TrCB (19)	38444-73-4	NS	2.5	Refer to Table 2	Refer to Table 2	1.03	2.5
2,3,3'-TrCB (20)	38444-84-7	NS	7.5	Refer to Table 2	Refer to Table 2	2.38[8]	7.5
2,3,4-TrCB (21)	55702-46-0	NS	7.5	Refer to Table 2	Refer to Table 2	2.38[8]	7.5
2,3,4'-TrCB (22)	38444-85-8	NS	2.5	Refer to Table 2	Refer to Table 2	0.933	2.5
2,3,5-TrCB (23)	55720-44-0	NS	2.5	Refer to Table 2	Refer to Table 2	1.21	2.5
2,3,6-TrCB (24)	55702-45-9	NS	5.0	Refer to Table 2	Refer to Table 2	0.822[9]	5.0

QAPP Worksheet #15-2
Reference Limits and Evaluation Table

Matrix: Sediment

Analytical Group: PCB Congeners

Concentration Level: Low

Analyte	CAS Number	Project Action Limit (ng/kg)*	Project Quantitation Limit (ng/kg)	Analytical Method EPA Method 1668C		Achievable Laboratory Limits	
				MDLs* (ng/kg)	Method QLs* (ng/kg)	MDLs (ng/kg)[1]	QLs[2] (ng/kg)
2,3',4-TrCB (25)	55712-37-3	NS	2.5	Refer to Table 2	Refer to Table 2	1.82	2.5
2,3',5-TrCB (26)	38444-81-4	NS	2.5	Refer to Table 2	Refer to Table 2	1.51	2.5
2,3',6-TrCB (27)	38444-76-7	NS	5.0	Refer to Table 2	Refer to Table 2	0.822[9]	5.0
2,4,4'-TrCB (28)	7012-37-5	NS	2.5	Refer to Table 2	Refer to Table 2	2.42	2.5
2,4,5-TrCB (29)	15862-07-4	NS	2.5	Refer to Table 2	Refer to Table 2	0.984	2.5
2,4,6-TrCB (30)	35693-92-6	NS	2.5	Refer to Table 2	Refer to Table 2	0.681	2.5
2,4',5-TrCB (31)	16606-02-3	NS	2.5	Refer to Table 2	Refer to Table 2	1.54	2.5
2,4',6-TrCB (32)	38444-77-8	NS	5.0	Refer to Table 2	Refer to Table 2	1.30[7]	5.0
2',3,4-TrCB (33)	38444-86-9	NS	7.5	Refer to Table 2	Refer to Table 2	2.38[8]	7.5
2',3,5-TrCB (34)	37680-68-5	NS	2.5	Refer to Table 2	Refer to Table 2	1.26	2.5
3,3',4-TrCB (35)	37680-69-6	NS	2.5	Refer to Table 2	Refer to Table 2	1.29	2.5
3,3',5-TrCB (36)	38444-87-0	NS	2.5	Refer to Table 2	Refer to Table 2	0.910	2.5
3,4,4'-TrCB (37)	38444-90-5	NS	2.5	Refer to Table 2	Refer to Table 2	1.63	2.5
3,4,5-TrCB (38)	53555-66-1	NS	2.5	Refer to Table 2	Refer to Table 2	0.768	2.5
3,4',5-TrCB (39)	38444-88-1	NS	2.5	Refer to Table 2	Refer to Table 2	1.19	2.5
2,2',3,3'-TeCB (40)	38444-93-8	NS	2.5	Refer to Table 2	Refer to Table 2	1.28	2.5
2,2',3,4-TeCB (41)	52663-59-9	NS	10.0	Refer to Table 2	Refer to Table 2	3.90[10]	10.0
2,2',3,4'-TeCB (42)	36559-22-5	NS	5.0	Refer to Table 2	Refer to Table 2	1.97[11]	5.0
2,2',3,5-TeCB (43)	70362-46-8	NS	5.0	Refer to Table 2	Refer to Table 2	2.03[12]	5.0
2,2',3,5'-TeCB (44)	41464-39-5	NS	2.5	Refer to Table 2	Refer to Table 2	1.08	2.5
2,2',3,6-TeCB (45)	70362-45-7	NS	2.5	Refer to Table 2	Refer to Table 2	1.13	2.5
2,2',3,6'-TeCB (46)	41464-47-5	NS	2.5	Refer to Table 2	Refer to Table 2	0.468	2.5
2,2',4,4'-TeCB (47)	2437-79-8	NS	2.5	Refer to Table 2	Refer to Table 2	1.57	2.5
2,2',4,5-TeCB (48)	70362-47-9	NS	5.0	Refer to Table 2	Refer to Table 2	1.55[13]	5.0
2,2',4,5'-TeCB (49)	41464-40-8	NS	5.0	Refer to Table 2	Refer to Table 2	2.03[12]	5.0
2,2',4,6-TeCB (50)	62796-65-0	NS	2.5	Refer to Table 2	Refer to Table 2	0.825	2.5

QAPP Worksheet #15-2
Reference Limits and Evaluation Table

Matrix: Sediment

Analytical Group: PCB Congeners

Concentration Level: Low

Analyte	CAS Number	Project Action Limit (ng/kg)*	Project Quantitation Limit (ng/kg)	Analytical Method EPA Method 1668C		Achievable Laboratory Limits	
				MDLs* (ng/kg)	Method QLs* (ng/kg)	MDLs (ng/kg)[1]	QLs[2] (ng/kg)
2,2',4,6'-TeCB (51)	68194-04-7	NS	2.5	Refer to Table 2	Refer to Table 2	1.47	2.5
2,2',5,5'-TeCB (52)	35693-99-3	NS	5.0	Refer to Table 2	Refer to Table 2	2.03[14]	5.0
2,2',5,6'-TeCB (53)	41464-41-9	NS	2.5	Refer to Table 2	Refer to Table 2	1.11	2.5
2,2',6,6'-TeCB (54)	15968-05-5	NS	2.5	Refer to Table 2	Refer to Table 2	0.613	2.5
2,3,3',4'-TeCB (55)	74338-24-2	NS	2.5	Refer to Table 2	Refer to Table 2	1.08	2.5
2,3,3',4'-TeCB (56)	41464-43-1	NS	5.0	Refer to Table 2	Refer to Table 2	1.85[15]	5.0
2,3,3',5-TeCB (57)	70424-67-8	NS	2.5	Refer to Table 2	Refer to Table 2	1.13	2.5
2,3,3',5-TeCB (58)	41464-49-7	NS	2.5	Refer to Table 2	Refer to Table 2	2.04	2.5
2,3,3',6-TeCB (59)	74472-33-6	NS	5.0	Refer to Table 2	Refer to Table 2	1.97[11]	5.0
2,3,4,4'-TeCB (60)	33025-41-1	NS	5.0	Refer to Table 2	Refer to Table 2	1.85[15]	5.0
2,3,4,5-TeCB (61)	33284-53-6	NS	5.0	Refer to Table 2	Refer to Table 2	2.96[16]	5.0
2,3,4,6-TeCB (62)	54230-22-7	NS	2.5	Refer to Table 2	Refer to Table 2	0.944	2.5
2,3,4',5-TeCB (63)	74472-34-7	NS	2.5	Refer to Table 2	Refer to Table 2	1.12	2.5
2,3,4',6-TeCB (64)	52663-58-8	NS	10.0	Refer to Table 2	Refer to Table 2	3.90[10]	10.0
2,3,5,6-TeCB (65)	33284-54-7	NS	2.5	Refer to Table 2	Refer to Table 2	0.840	2.5
2,3',4,4'-TeCB (66)	32598-10-0	NS	5.0	Refer to Table 2	Refer to Table 2	2.88[17]	5.0
2,3',4,5-TeCB (67)	73575-53-8	NS	2.5	Refer to Table 2	Refer to Table 2	1.19	2.5
2,3',4,5'-TeCB (68)	73575-52-7	NS	2.5	Refer to Table 2	Refer to Table 2	1.32	2.5
2,3',4,6-TeCB (69)	60233-24-1	NS	5.0	Refer to Table 2	Refer to Table 2	2.03[14]	5.0
2,3'4'5-TeCB (70)	32598-11-1	NS	2.5	Refer to Table 2	Refer to Table 2	2.96[16]	2.5
2,3',4',6-TeCB (71)	41464-46-4	NS	10.0	Refer to Table 2	Refer to Table 2	3.90[10]	10.0
2,3',5,5'-TeCB (72)	41464-42-0	NS	10.0	Refer to Table 2	Refer to Table 2	3.90[10]	10.0
2,3',5',6-TeCB (73)	74338-23-1	NS	2.5	Refer to Table 2	Refer to Table 2	1.28	2.5
2,4,4',5-TeCB (74)	32690-93-0	NS	2.5	Refer to Table 2	Refer to Table 2	0.864	2.5
2,4,4',6-TeCB (75)	32598-12-2	NS	5.0	Refer to Table 2	Refer to Table 2	1.55[13]	5.0
2',3,4,5-TeCB (76)	70362-48-0	NS	5.0	Refer to Table 2	Refer to Table 2	2.88[17]	5.0

QAPP Worksheet #15-2
Reference Limits and Evaluation Table

Matrix: Sediment

Analytical Group: PCB Congeners

Concentration Level: Low

Analyte	CAS Number	Project Action Limit (ng/kg)*	Project Quantitation Limit (ng/kg)	Analytical Method EPA Method 1668C		Achievable Laboratory Limits	
				MDLs* (ng/kg)	Method QLs* (ng/kg)	MDLs (ng/kg)[1]	QLs[2] (ng/kg)
3,3',4,4'-TeCB (77)	32598-13-3	NS	2.5	Refer to Table 2	Refer to Table 2	1.95	2.5
3,3',4,5-TeCB (78)	70362-49-1	NS	2.5	Refer to Table 2	Refer to Table 2	1.51	2.5
3,3',4,5'-TeCB (79)	41464-48-6	NS	2.5	Refer to Table 2	Refer to Table 2	1.35	2.5
3,3',5,5'-TeCB (80)	33284-52-5	NS	2.5	Refer to Table 2	Refer to Table 2	1.05	2.5
3,4,4',5-TeCB (81)	70362-50-4	NS	2.5	Refer to Table 2	Refer to Table 2	1.63	2.5
2,2',3,3',4-PeCB (82)	52663-62-4	NS	2.5	Refer to Table 2	Refer to Table 2	1.64	2.5
2,2',3,3',5-PeCB (83)	60145-20-2	NS	2.5	Refer to Table 2	Refer to Table 2	0.737	2.5
2,2',3,3',6-PeCB (84)	52663-60-2	NS	5.0	Refer to Table 2	Refer to Table 2	0.837[18]	5.0
2,2',3,4,4'-PeCB (85)	65510-45-4	NS	5.0	Refer to Table 2	Refer to Table 2	0.783[19]	5.0
2,2'3,4,5-PeCB (86)	55312-69-1	NS	2.5	Refer to Table 2	Refer to Table 2	1.80	2.5
2,2',3,4,5'-PeCB (87)	38380-02-8	NS	7.5	Refer to Table 2	Refer to Table 2	1.30[20]	7.5
2,2',3,4,6-PeCB (88)	55215-17-3	NS	5.0	Refer to Table 2	Refer to Table 2	3.56[21]	5.0
2,2',3,4,6'-PeCB (89)	73575-57-2	NS	2.5	Refer to Table 2	Refer to Table 2	0.676	2.5
2,2',3,4',5-PeCB (90)	68194-07-0	NS	5.0	Refer to Table 2	Refer to Table 2	1.93[22]	5.0
2,2',3,4',6-PeCB (91)	68194-05-8	NS	5.0	Refer to Table 2	Refer to Table 2	3.56[21]	5.0
2,2',3,5,5'-PeCB (92)	52663-61-3	NS	10.0	Refer to Table 2	Refer to Table 2	0.837[18]	10.0
2,2',3,5,6-PeCB (93)	73575-56-1	NS	2.5	Refer to Table 2	Refer to Table 2	2.37	2.5
2,2',3,5,6'-PeCB (94)	73575-55-0	NS	2.5	Refer to Table 2	Refer to Table 2	1.07	2.5
2,2',3,5',6-PeCB (95)	38379-99-6	NS	7.5	Refer to Table 2	Refer to Table 2	1.74[23]	7.5
2,2',3,6,6'-PeCB (96)	73575-54-9	NS	2.5	Refer to Table 2	Refer to Table 2	0.747	2.5
2,2',3,4,5-PeCB (97)	41464-51-1	NS	2.5	Refer to Table 2	Refer to Table 2	1.05	2.5
2,2',3',4,6-PeCB (98)	60233-25-2	NS	7.5	Refer to Table 2	Refer to Table 2	1.74[23]	7.5
2,2',4,4',5-PeCB (99)	38380-01-7	NS	2.5	Refer to Table 2	Refer to Table 2	1.46	2.5
2,2',4,4',6-PeCB (100)	39485-83-1	NS	2.5	Refer to Table 2	Refer to Table 2	0.896	2.5
2,2',4,5'5'-PeCB (101)	37680-73-2	NS	5.0	Refer to Table 2	Refer to Table 2	1.93[22]	5.0
2,2',4,5,6'-PeCB (102)	68194-06-9	NS	7.5	Refer to Table 2	Refer to Table 2	1.74[23]	7.5

QAPP Worksheet #15-2
Reference Limits and Evaluation Table

Matrix: Sediment

Analytical Group: PCB Congeners

Concentration Level: Low

Analyte	CAS Number	Project Action Limit (ng/kg)*	Project Quantitation Limit (ng/kg)	Analytical Method EPA Method 1668C		Achievable Laboratory Limits	
				MDLs* (ng/kg)	Method QLs* (ng/kg)	MDLs (ng/kg)[1]	QLs[2] (ng/kg)
2,2',4,5',6-PeCB (103)	60145-21-3	NS	2.5	Refer to Table 2	Refer to Table 2	0.670	2.5
2,2',4,6,6'-PeCB (104)	56558-16-8	NS	2.5	Refer to Table 2	Refer to Table 2	0.397	2.5
2,3,3',4,4'-PeCB (105)	32598-14-4	NS	2.5	Refer to Table 2	Refer to Table 2	1.39	2.5
2,3,3',4,5-PeCB (106)	70424-69-0	NS	5.0	Refer to Table 2	Refer to Table 2	3.32[24]	5.0
2,3,3',4',5-PeCB (107)	70424-68-9	NS	5.0	Refer to Table 2	Refer to Table 2	1.36[25]	5.0
2,3,3',4,5'-PeCB (108)	70362-41-3	NS	5.0	Refer to Table 2	Refer to Table 2	1.99[26]	5.0
2,3,3',4,6-PeCB (109)	74472-35-8	NS	5.0	Refer to Table 2	Refer to Table 2	1.36[25]	5.0
2,3,3'4',6-PeCB (110)	38380-03-9	NS	2.5	Refer to Table 2	Refer to Table 2	1.66	2.5
2,3,3',5,5'-PeCB (111)	39635-32-0	NS	5.0	Refer to Table 2	Refer to Table 2	1.60[27]	5.0
2,3,3',5,6-PeCB (112)	74472-36-9	NS	5.0	Refer to Table 2	Refer to Table 2	1.99[26]	5.0
2,3,3',5',6-PeCB (113)	68194-10-5	NS	2.5	Refer to Table 2	Refer to Table 2	1.16	2.5
2,3,4,4',5-PeCB (114)	74472-37-0	NS	2.5	Refer to Table 2	Refer to Table 2	1.06	2.5
2,3,4,4',6-PeCB (115)	74472-38-1	NS	5.0	Refer to Table 2	Refer to Table 2	1.60[27]	5.0
2,3,4,5,6-PeCB (116)	18259-05-7	NS	5.0	Refer to Table 2	Refer to Table 2	0.783[19]	5.0
2,3,4',5,6-PeCB (117)	68194-11-6	NS	7.5	Refer to Table 2	Refer to Table 2	1.30[20]	7.5
2,3',4,4',5-PeCB (118)	31508-00-6	NS	5.0	Refer to Table 2	Refer to Table 2	3.32[24]	5.0
2,3',4,4',6-PeCB (119)	56558-17-9	NS	2.5	Refer to Table 2	Refer to Table 2	1.96	2.5
2,3',4,5,5'-PeCB (120)	68194-12-7	NS	2.5	Refer to Table 2	Refer to Table 2	0.953	2.5
2,3',4,5',6-PeCB (121)	56558-18-0	NS	2.5	Refer to Table 2	Refer to Table 2	1.49	2.5
2',3,3',4',5'-PeCB(122)	76842-07-4	NS	2.5	Refer to Table 2	Refer to Table 2	1.25	2.5
2,3',4,4',5'-PeCB (123)	65510-44-3	NS	2.5	Refer to Table 2	Refer to Table 2	1.45	2.5
2,3',4',5,5'-PeCB (124)	70424-70-3	NS	2.5	Refer to Table 2	Refer to Table 2	1.33	2.5
2,3',4'5',6-PeCB (125)	74472-39-2	NS	7.5	Refer to Table 2	Refer to Table 2	1.30[20]	7.5
3,3',4,4',5-PeCB (126)	57465-28-8	NS	2.5	Refer to Table 2	Refer to Table 2	0.783	2.5
3,3',4,5,5'-PeCB (127)	39635-33-1	NS	2.5	Refer to Table 2	Refer to Table 2	1.15	2.5
2,2',3,3',4,4'-HxCB (128)	38380-07-3	NS	5.0	Refer to Table 2	Refer to Table 2	1.52[28]	5.0

QAPP Worksheet #15-2
Reference Limits and Evaluation Table

Matrix: Sediment

Analytical Group: PCB Congeners

Concentration Level: Low

Analyte	CAS Number	Project Action Limit (ng/kg)*	Project Quantitation Limit (ng/kg)	Analytical Method EPA Method 1668C		Achievable Laboratory Limits	
				MDLs* (ng/kg)	Method QLs* (ng/kg)	MDLs (ng/kg)[1]	QLs[2] (ng/kg)
2,2',3,3',4,5-HxCB (129)	55215-18-4	NS	2.5	Refer to Table 2	Refer to Table 2	1.33	2.5
2,2',3,3',4,5'-HxCB (130)	52663-66-8	NS	2.5	Refer to Table 2	Refer to Table 2	1.55	2.5
2,2',3,3',4,6-HxCB (131)	61798-70-7	NS	2.5	Refer to Table 2	Refer to Table 2	0.780	2.5
2,2',3,3',4,6'-HxCB (132)	38380-05-1	NS	5.0	Refer to Table 2	Refer to Table 2	1.42[29]	5.0
2,2',3,3',5,5'-HxCB (133)	35694-04-3	NS	5.0	Refer to Table 2	Refer to Table 2	1.99[30]	5.0
2,2',3,3',5,6-HxCB (134)	52704-70-8	NS	5.0	Refer to Table 2	Refer to Table 2	1.54[31]	5.0
2,2',3,3',5,6'-HxCB (135)	52744-13-5	NS	2.5	Refer to Table 2	Refer to Table 2	0.842	2.5
2,2',3,3',6,6'-HxCB (136)	38411-22-2	NS	2.5	Refer to Table 2	Refer to Table 2	0.995	2.5
2,2',3,4,4',5-HxCB (137)	35694-06-5	NS	2.5	Refer to Table 2	Refer to Table 2	1.76	2.5
2,2',3,4,4',5'-HxCB (138)	35065-28-2	NS	7.5	Refer to Table 2	Refer to Table 2	1.24[32]	7.5
2,2',3,4,4',6-HxCB (139)	56030-56-9	NS	5.0	Refer to Table 2	Refer to Table 2	1.81[33]	5.0
2,2',3,4,4',6'-HxCB (140)	59291-64-4	NS	2.5	Refer to Table 2	Refer to Table 2	1.15	2.5
2,2',3,4,5,5'-HxCB (141)	52712-04-6	NS	2.5	Refer to Table 2	Refer to Table 2	1.15	2.5
2,2',3,4,5,6-HxCB (142)	41411-61-4	NS	5.0	Refer to Table 2	Refer to Table 2	1.99[30]	5.0
2,2',3,4,5,6'-HxCB (143)	68194-15-0	NS	5.0	Refer to Table 2	Refer to Table 2	1.54[31]	5.0
2,2',3,4,5',6-HxCB (144)	68194-14-9	NS	2.5	Refer to Table 2	Refer to Table 2	1.29	2.5
2,2',3,4,6,6'-HxCB (145)	74472-40-5	NS	2.5	Refer to Table 2	Refer to Table 2	0.555	2.5
2,2',3,4',5,5'-HxCB (146)	51908-16-8	NS	5.0	Refer to Table 2	Refer to Table 2	2.02[34]	5.0
2,2',3,4',5,6-HxCB (147)	68194-13-8	NS	2.5	Refer to Table 2	Refer to Table 2	1.04	2.5
2,2',3,4',5,6'-HxCB (148)	74472-41-6	NS	2.5	Refer to Table 2	Refer to Table 2	1.53	2.5
2,2',3,4',5',6-HxCB (149)	38380-04-0	NS	5.0	Refer to Table 2	Refer to Table 2	1.81[33]	5.0
2,2',3,4',6,6'-HxCB (150)	68194-08-1	NS	2.5	Refer to Table 2	Refer to Table 2	0.934	2.5
2,2',3,5,5',6-HxCB (151)	52663-63-5	NS	2.5	Refer to Table 2	Refer to Table 2	0.959	2.5
2,2',3,5,6,6'-HxCB (152)	68194-09-2	NS	2.5	Refer to Table 2	Refer to Table 2	0.994	2.5
2,2',4,4',5,5'-HxCB (153)	35065-27-1	NS	2.5	Refer to Table 2	Refer to Table 2	1.11	2.5
2,2',4,4',5',6-HxCB (154)	60145-22-4	NS	2.5	Refer to Table 2	Refer to Table 2	0.785	2.5

QAPP Worksheet #15-2
Reference Limits and Evaluation Table

Matrix: Sediment

Analytical Group: PCB Congeners

Concentration Level: Low

Analyte	CAS Number	Project Action Limit (ng/kg)*	Project Quantitation Limit (ng/kg)	Analytical Method EPA Method 1668C		Achievable Laboratory Limits	
				MDLs* (ng/kg)	Method QLs* (ng/kg)	MDLs (ng/kg)[1]	QLs[2] (ng/kg)
2,2',4,4',6,6'-HxCB (155)	33979-03-2	NS	2.5	Refer to Table 2	Refer to Table 2	1.02	2.5
2,3,3',4,4',5-HxCB (156)	38380-08-4	NS	2.5	Refer to Table 2	Refer to Table 2	1.31	2.5
2,3,3',4,4',5'-HxCB (157)	69782-90-7	NS	2.5	Refer to Table 2	Refer to Table 2	0.670	2.5
2,3,3',4,4',6-HxCB (158)	74472-42-7	NS	5.0	Refer to Table 2	Refer to Table 2	0.962[35]	5.0
2,3,3',4,5,5'-HxCB (159)	39635-35-3	NS	2.5	Refer to Table 2	Refer to Table 2	0.857	2.5
2,3,3',4,5,6-HxCB (160)	41411-62-5	NS	5.0	Refer to Table 2	Refer to Table 2	0.962[35]	5.0
2,3,3',4,5',6-HxCB (161)	74472-43-8	NS	5.0	Refer to Table 2	Refer to Table 2	1.42[29]	5.0
2,3,3',4',5,5'-HxCB (162)	39635-34-2	NS	5.0	Refer to Table 2	Refer to Table 2	1.52[28]	5.0
2,3,3',4',5,6-HxCB (163)	74472-44-9	NS	7.5	Refer to Table 2	Refer to Table 2	1.24[32]	7.5
2,3,3',4',5',6-HxCB (164)	74472-45-0	NS	7.5	Refer to Table 2	Refer to Table 2	1.24[32]	7.5
2,3,3',5,5',6-HxCB (165)	74472-46-1	NS	5.0	Refer to Table 2	Refer to Table 2	2.02[34]	5.0
2,3,4,4',5,6-HxCB (166)	41411-63-6	NS	2.5	Refer to Table 2	Refer to Table 2	0.737	2.5
2,3',4,4',5,5'-HxCB (167)	52663-72-6	NS	2.5	Refer to Table 2	Refer to Table 2	1.17	2.5
2,3',4,4',5',6-HxCB (168)	59291-65-5	NS	2.5	Refer to Table 2	Refer to Table 2	0.813	2.5
3,3',4,4',5,5'-HxCB (169)	32774-16-6	NS	2.5	Refer to Table 2	Refer to Table 2	0.743	2.5
2,2',3,3',4,4',5-HpCB (170)	35065-30-6	NS	2.5	Refer to Table 2	Refer to Table 2	0.566	2.5
2,2',3,3',4,4',6-HpCB (171)	52663-71-5	NS	2.5	Refer to Table 2	Refer to Table 2	0.876	2.5
2,2',3,3',4,5,5'-HpCB (172)	52663-74-8	NS	2.5	Refer to Table 2	Refer to Table 2	0.513	2.5
2,2',3,3',4,5,6-HpCB (173)	68194-16-1	NS	2.5	Refer to Table 2	Refer to Table 2	1.27	2.5
2,2',3,3',4,5,6'-HpCB (174)	38411-25-5	NS	2.5	Refer to Table 2	Refer to Table 2	1.14	2.5
2,2',3,3',4,5',6-HpCB (175)	40186-70-7	NS	2.5	Refer to Table 2	Refer to Table 2	1.19	2.5
2,2',3,3',4,6,6'-HpCB (176)	52663-65-7	NS	2.5	Refer to Table 2	Refer to Table 2	1.06	2.5
2,2',3,3',4',5,6-HpCB (177)	52663-70-4	NS	2.5	Refer to Table 2	Refer to Table 2	1.41	2.5
2,2',3,3',5,5',6-HpCB (178)	52663-67-9	NS	2.5	Refer to Table 2	Refer to Table 2	0.600	2.5
2,2',3,3',5,6,6'-HpCB (179)	52663-64-6	NS	2.5	Refer to Table 2	Refer to Table 2	0.627	2.5
2,2',3,4,4',5,5'-HpCB (180)	35065-29-3	NS	2.5	Refer to Table 2	Refer to Table 2	0.956	2.5

QAPP Worksheet #15-2
Reference Limits and Evaluation Table

Matrix: Sediment

Analytical Group: PCB Congeners

Concentration Level: Low

Analyte	CAS Number	Project Action Limit (ng/kg)*	Project Quantitation Limit (ng/kg)	Analytical Method EPA Method 1668C		Achievable Laboratory Limits	
				MDLs* (ng/kg)	Method QLs* (ng/kg)	MDLs (ng/kg)[1]	QLs[2] (ng/kg)
2,2',3,4,4',5,6-HpCB (181)	74472-47-2	NS	2.5	Refer to Table 2	Refer to Table 2	1.28	2.5
2,2',3,4,4',5,6'-HpCB (182)	60145-23-5	NS	5.0	Refer to Table 2	Refer to Table 2	0.796[36]	5.0
2,2',3,4,4',5',6-HpCB (183)	52663-69-1	NS	2.5	Refer to Table 2	Refer to Table 2	1.11	2.5
2,2',3,4,4',6,6'-HpCB (184)	74472-48-3	NS	2.5	Refer to Table 2	Refer to Table 2	1.02	2.5
2,2',3,4,5,5',6-HpCB (185)	52712-05-7	NS	2.5	Refer to Table 2	Refer to Table 2	0.896	2.5
2,2',3,4,5,5',6-HpCB (186)	74472-49-4	NS	2.5	Refer to Table 2	Refer to Table 2	0.908	2.5
2,2',3,4,5,5',6-HpCB (187)	52663-68-0	NS	5.0	Refer to Table 2	Refer to Table 2	0.796[36]	5.0
2,2',3,4,5,5',6-HpCB (188)	74487-85-7	NS	2.5	Refer to Table 2	Refer to Table 2	0.593	2.5
2,3,3',4,4',5,5'-HpCB (189)	39635-31-9	NS	2.5	Refer to Table 2	Refer to Table 2	0.825	2.5
2,3,3',4,4',5,6-HpCB (190)	41411-64-7	NS	2.5	Refer to Table 2	Refer to Table 2	0.680	2.5
2,3,3',4,4',5',6-HpCB (191)	74472-50-7	NS	2.5	Refer to Table 2	Refer to Table 2	0.873	2.5
2,3,3',4,5,5',6-HpCB (192)	74472-51-8	NS	2.5	Refer to Table 2	Refer to Table 2	0.417	2.5
2,3,3',4',5,5',6-HpCB (193)	69782-91-8	NS	2.5	Refer to Table 2	Refer to Table 2	0.607	2.5
2,2',3,3',4,4',5,5'-OcCB (194)	35694-08-7	NS	2.5	Refer to Table 2	Refer to Table 2	0.432	2.5
2,2',3,3',4,4',5,6-OcCB (195)	52663-78-2	NS	2.5	Refer to Table 2	Refer to Table 2	1.18	2.5
2,2',3,3',4,4',5,6'-OcCB (196)	42740-50-1	NS	5.0	Refer to Table 2	Refer to Table 2	2.50[37]	5.0
2,2',3,3',4,4',6,6'-OcCB (197)	33091-17-7	NS	2.5	Refer to Table 2	Refer to Table 2	0.864	2.5
2,2',3,3',4,5,5',6-OcCB (198)	68194-17-2	NS	2.5	Refer to Table 2	Refer to Table 2	0.809	2.5
2,2',3,3',4,5,5',6'-OcCB (199)	52663-75-9	NS	2.5	Refer to Table 2	Refer to Table 2	1.99	2.5
2,2',3,3',4,5,6,6'-OcCB (200)	52663-73-7	NS	2.5	Refer to Table 2	Refer to Table 2	1.13	2.5
2,2',3,3',4,5',6,6'-OcCB (201)	40186-71-8	NS	2.5	Refer to Table 2	Refer to Table 2	0.627	2.5
2,2',3,3',5,5',6,6'-OcCB (202)	2136-99-4	NS	2.5	Refer to Table 2	Refer to Table 2	1.01	2.5
2,2',3,4,4',5,5',6-OcCB (203)	52663-76-0	NS	5.0	Refer to Table 2	Refer to Table 2	2.50[37]	5.0
2,2',3,4,4',5,6,6'-OcCB (204)	74472-52-9	NS	2.5	Refer to Table 2	Refer to Table 2	0.872	2.5
2,3,3',4,4',5,5',6-OcCB (205)	74472-53-0	NS	2.5	Refer to Table 2	Refer to Table 2	0.854	2.5

QAPP Worksheet #15-2
Reference Limits and Evaluation Table

Matrix: Sediment

Analytical Group: PCB Congeners

Concentration Level: Low

Analyte	CAS Number	Project Action Limit (ng/kg)*	Project Quantitation Limit (ng/kg)	Analytical Method EPA Method 1668C		Achievable Laboratory Limits	
				MDLs* (ng/kg)	Method QLs* (ng/kg)	MDLs (ng/kg)[1]	QLs[2] (ng/kg)
2,2',3,3',4,4',5,5',6-NoCB (206)	40186-72-9	NS	2.5	Refer to Table 2	Refer to Table 2	0.733	2.5
2,2',3,3',4,4',5, 6,6'-NoCB (207)	52663-79-3	NS	2.5	Refer to Table 2	Refer to Table 2	0.370	2.5
2,2',3,3',4,5,5',6,6'-NoCB (208)	52663-77-1	NS	2.5	Refer to Table 2	Refer to Table 2	0.640	2.5
DeCB (209)	2051-24-3	NS	2.65	Refer to Table 2	Refer to Table 2	0.941	2.5

ng/kg = nanograms per kilogram
NS = Not Specified
NA = Not available or not applicable
*Refers to Table 2 in EPA Method 1668C.
[1]Based on LOD/LOQ Study from Vista Analytical dated 8/26/2013
[2]Final QL will be adjusted based on the total solids content for each sample.
[3] MDLrepresentsPCB 4/10, [4] MDLrepresents PCB 5/8, [5] MDLrepresentsPCB 7/9, [6] MDLrepresentsPCB 12/13, [7] MDLrepresentsPCB 16/32, [8] MDLrepresents PCB 20/21/33, [9] MDL represents PCB 24/27, [10] MDL represents PCB 41/64/71/72, [11] MDL represents PCB 42/59, [12] MDL represents PCB 43/49, [13] MDL represents PCB 48/75, [14] MDL represents PCB 52/69, [15] MDL represents PCB 56/60, [16] MDL represents PCB 61/70, [17] MDL represents PCB 76/66, [18] MDL represents PCB 84/92, [19] MDL represents PCB 85/116, [20] MDL represents PCB 87/117/125, [21] MDL represents PCB 88/91, [22] MDL represents PCB 90/101, [23] MDL represents PCB 95/98/102, [24] MDL represents PCB 106/118, [25] MDL represents PCB 107/109, [26] MDL represents PCB 108/112, [27] MDL represents PCB 111/115, [28] MDLrepresentsPCB 128/162, [29] MDLrepresents PCB 132/161, [30] MDLrepresentsPCB 133/142, [31] MDLrepresentsPCB 134/143, [32] MDLrepresents PCB 138/163/164, [33] MDL represents PCB 139/149, [34] MDL represents PCB 146/165, [35] MDL represents PCB 158/160, [36]MDL represents PCB 182/187, [37] MDL represents PCB 196/203.

QAPP Worksheet #15-3
Reference Limits and Evaluation Table

Matrix: Sediment

Analytical Group: HCX

Concentration Level: Low

Analyte	CAS Number	Project Action Limit * (µg/kg)	Project Quantitation Limit (µg/kg)	Analytical Method Vista SOP #41		Achievable Laboratory Limits	
				MDLs (µg/kg)	Method QLs(µg/kg)	MDLs[1] (µg/kg)	QLs (µg/kg)
124578-Hexachloroxanthene	38178-99-3	NS	0.02	NS	0.02	0.00466	0.02

*Based on LOD study from Vista dated 6/15/2011 - New MDL to be determined one new source of HCP is received by the laboratory
NS = Not Specified
µg/kg = micrograms per kilogram

QAPP Worksheet #15-4
Reference Limits and Evaluation Table

Matrix: Sediment

Analytical Group: HCP

Concentration Level: Low

Analyte	CAS Number	Project Action Limit * (µg/kg)	Project Quantitation Limit (µg/kg)	Analytical Method Vista SOP #50		Achievable Laboratory Limits	
				MDLs (µg/kg)	Method QLs(µg/kg)	MDLs[1] (µg/kg)	QLs (µg/kg)
Hexachlorophene	70-30-4	NS	0.50	NS	0.50	0.130	0.50

*Based on LOD study from Vista dated 6/15/2011 – New MDL to be determined one new source of HCP is received by the laboratory
NS = Not Specified
µg/kg = micrograms per kilogram

QAPP Worksheet #15-5
Reference Limits and Evaluation Table

Matrix: Sediment

Analytical Group: TCDT

Concentration Level: Low

Analyte	CAS Number	Project Action Limit * (µg/kg)	Project Quantitation Limit (µg/kg)	Analytical Method EPA Method 1613B Modified		Achievable Laboratory Limits	
				MDLs (µg/kg)	Method QLs(µg/kg)	MDLs[1] (µg/kg)	QLs (µg/kg)
2468-Tetrachlorodibenzothiophene	134705-49-0	NS	TBD	NS	NS	TBD	TBD

NS = Not Specified
µg/kg = micrograms per kilogram
TBD = To be determined upon receipt of TCDT standard and prior to sample analysis

QAPP Worksheet #15-6
Reference Limits and Evaluation Table

Matrix:	Sediment
Analytical Group:	Radionuclides
Concentration Level:	Low

Analyte	CAS Number	Project Action Limit (pCi/g)	Project Quantitation Limit (pCi/g)	Analytical Method		Achievable Laboratory Limits[3]
				MDLs	Method QLs (pCi/g)	QLs (pCi/g)
Beryllium-7	13966-02-4	NA[1]	0.3	NA	NA	0.3
Cesium-137	10045-97-3	NA[1]	0.10	NA	NA	0.10

NS = not specified
NA = not applicable
1. There are no action levels established for these parameters for this Study.
2. The target QLs are set at a low level intended to allow for dating of the sediment.
3. Lab results will be in dry weight. Actual QLs may be higher and are dependent on the amount of sample available and counting time.

pCi/g = picocuries per gram

☐ Worksheet Not Applicable (State Reason)

QAPP Worksheet #16
Project Schedule Timeline Table

Activities	Organization	Dates (MM/DD/YY)		Deliverable	Deliverable Due Date
		Anticipated Date(s) of Initiation	Anticipated Date of Completion		
Field Sampling Activities	SERAS	11/18/13	11/20/13	Trip Report	14 days following return from the field investigation
Dioxin/Furan, PCB Congeners and total PCBs, HCX, HCP and TCDT Analyses	Vista Analytical	11/20/13	TBD (Timeline for the TCDT analyses are unknown at this time)	Analytical Data Package	6 weeks after receipt of samples
Cs-137 and Be-7 Analyses	Outreach Lab	11/20/13	01/08/14	Analytical Data Package	35 business days after receipt
Trip Report Preparation	SERAS	11/20/13	12/08/13	Trip Report	14 days following return from the field investigation
Validation of Dioxin/Furan, PCB Congeners and total PCBs, HCX, HCP and TCDT	SERAS	Upon receipt of data package	Within 4 weeks	Analytical Report	Within 4 weeks after receipt of last data package
Validation of Cs-137 and Be-7	SERAS	Upon receipt of data package	Within 4 weeks	Analytical Report	Within 4 weeks after receipt of last data package
Summary Report Preparation	SERAS	Upon receipt of validated data	Within 2 weeks	Draft Summary Report	Within 2 weeks after receipt of validated data

QAPP Worksheet #17
Sampling Design and Rationale

Describe and provide a rationale for choosing the sampling approach (e.g., grid system, biased statistical approach):
The overall objective ofthis studyisto investigate the likelihood that former Givaudanactivities contributed to the contamination found inthe sediment deposit at RM 10.9 of the Passaic River, which is presently undergoing a Removal Action. Resource limitations (costly analytical method development and analysis) have led to the development of a focused study design and sample size of 30 for analysis of the contaminants of concern across all targeted locations. These locations include the sediments at Passaic River RM 10.9 and the Third River, and the waste cells present on the former Givaudan and Diamond Alkali facilities. This sampling and analysis plan pertains to the sampling of sediments as part of the Givaudan investigation.

Sediment sampling will be conducted at the following locations:

- "No-dredge zone" portion of the Removal Area,
- Below the designated Removal Area,
- In the region of the confluence of the Third River with the Passaic River
- In the Third River above the Rte. 21 bridge
- Upstream of the Third and Passaic Rivers confluence near Dundee Dam

These sampling results will be compared to samples which will be collected from the former Givaudan and Diamond Alkali facilities waste cells (note: sampling at the former facilities will be provided in a revision to this document).

The weight of evidence approach which will be used to evaluate the likelihood of Givaudan's contribution to sediment contamination within this stretch of the Passaic will include the computation of contaminant ratios which will act as a method of fingerprinting the waste streams produced by the historical chemical processes of the potential responsible parties (PRPs; Givaudan and Diamond Alkali). These fingerprints will be compared to the contaminant ratios found within the nodredgezone,belowthe Removal Area, withinthe ThirdRiveranditsconfluence withthePassaic RiverandupstreamneartheDundee Dam. Theevaluation of chromatographic results (e.g., peak patterns, chemical signatures, etc.) will also be used as a line of evidence.

No-Dredge Zone. Sampling within the Removal Area will occur within the no-dredge zone of the RM 10.9 Removal Area. Dredging activities in the Removal Area were completed on October 4, 2013 and capping is expected to commence during the week of November 4, 2013. The no-dredge zone overlays a known underground water pipe. Historical data fromwithinthe no dredge zone islimited to 4 sediment core locations fromwhichsamples were collected in2011.TCDD concentrations were highest at the surface of the sediments, decreasing with depth, and with a significant drop-off below 3.5 feet. PCBs at these 4 locations were also consistently within detectable ranges at surface and down to 2.5 feet. These results indicate that focusing on the top 2 feet of sediments is expected to be useful for the present investigation.

Sediment sampling and analysis for the COCs will be conducted at the surface (0 to 6 inches) for all four proposed sediment locations. Two sediment cores will be sampled from the 1-3' interval and two samples will be sampled from 3-5' interval. Historical data has indicated that both TCDD and PCBs are within detectable ranges at these depth intervals. These samples will be collected from four cores (total of 8 samples) located within the center of the no-dredge zone. Visual Sample Plan was used to generate 4 random coordinates within this area. Randomness was included in the sample design to support future comparisons with the Givaudan and Diamond Alkali waste cell results. Coordinates of the cores are below:

X-Coordinate:	Y-Coordinate:
572930.3495	4518941.0445
572917.6358	4518907.5235
572909.6868	4518916.4624
572928.7603	4518923.1666

A core will also be advanced to approximately4 feet with samples collected every ½ foot, for a total of 8 samples, which will be sent for Cs-137 and Be-7 dating. The sampling depths of the COCs will be linked to a frame of time when the corresponding sediment was deposited in the river.

Below Removal Area. Examinationofthe TCDD and PCB analytical results for historical sampling whichoccurred inthe "fingertip" portion(belowthe removal area) of the sediment deposit area identified high levels of TCDD at depths between 5 ½ to 7 ½ feet with TCDD concentrations as high as 40,800 picograms per gram (pg/g). These samples were collected in 2011. To further investigate these deposits, the present study will collect 3 cores south of the removal area with sample collection occurring from the interval of 6 to 8 feet. Coordinates of the proposed core locations are:

X-Coordinate:	Y-Coordinate:
572753.6416	4518629.4755
572779.7475	4518757.6318
572764.7168	4518698.3002

A core will also be advanced within this area to approximately8 feet with samples collected every ½ foot, for a total of 16 samples, which will be sent for Cs-137 and Be-7 dating.

Third River. The Third River is considered to be a transport pathway of waste from the Givaudan Facility; however, there is limited historical data regarding COC concentrations within the sediment in the Third River and at its confluence with the Passaic.

It is recommended that 2 cores be advanced into the sediments at the confluence of the Rivers. At this time, no information is available regarding the depth of the sediment within this area. Suggested sampling intervals are surface (0-6 inches) and 1 foot above the bottom of the sediment (to be determined in the field by probing), which will result in another 4 samples for analysis of COCs. An additional core will be advanced in this area, with samples collected every ½' until the bottom of the sediment is reached. These samples will be sent for Cs-137 and Be-7 dating.

It is recommended that three surface sediment samples be collected within the Third River above the Rte. 21 Bridge. Location of these samples will be dependent on the river flow and the actual presence of sediment. In this region, much of the Third River has a rocky, graveled bottom with little sediment.

Upstream Reference Location. One sediment sample will be collected froma location above Dundee Dam, upstreamof the confluence of the Third and Passaic Rivers. It is anticipated that samples will be collected from the 0-0.5' and 1-2' intervals. An additional core will be advanced in this area, with samples collected every ½' to 4'. These samples will be sent for Cs-137 and Be-7 dating.

Describe the sampling design and rationale in terms of what matrices will be sampled, what analytical groups will be analyzed and at what concentration levels, the sampling locations (including QC, critical, and background samples), the number of samples to be taken, and the sampling frequency (including seasonal considerations) [May refer to map or Worksheet #18 for details]:
Refer to Worksheets 11, 14 and 18

☐ Worksheet Not Applicable (State Reason)

QAPP Worksheet #18
Sampling Locations and Methods/SOP Requirements Table

Sampling Location/ID Number	Matrix	Depth (feet)	Analytical Group	Concentration Level	Number of Samples (identify field replicates)**	Sampling SOP Reference[1]	Rationale for Sampling Location
ND-001-0.0-0.5	Sediment	0-0.5	PCDD/PCDF, PCB Congeners and Total PCBs, HCX, HCP, TCDT	Low	1+1	SERAS SOP #2016	Based on historical data
ND-001-1.0-3.0	Sediment	1-2	PCDD/PCDF, PCB Congeners and Total PCBs, HCX, HCP, TCDT	Low	1	SERAS SOP #2016	Based on historical data
ND-002-0.0-0.5	Sediment	0-0.5	PCDD/PCDF, PCB Congeners and Total PCBs, HCX, HCP, TCDT	Low	1	SERAS SOP #2016	Based on historical data
ND-002-1.0-3.0	Sediment	1-2	PCDD/PCDF, PCB Congeners and Total PCBs, HCX, HCP, TCDT	Low	1	SERAS SOP #2016	Based on historical data
ND-003-0.0-0.5	Sediment	0-0.5	PCDD/PCDF, PCB Congeners and Total PCBs, HCX, HCP, TCDT	Low	1	SERAS SOP #2016	Based on historical data
ND-003-3.0-5.0	Sediment	1-2	PCDD/PCDF, PCB Congeners and Total PCBs, HCX, HCP, TCDT	Low	1	SERAS SOP #2016	Based on historical data
ND-004-0.0-0.5	Sediment	0-0.5	PCDD/PCDF, PCB Congeners and Total PCBs, HCX, HCP, TCDT	Low	1	SERAS SOP #2016	Based on historical data
ND-004-3.0-5.0	Sediment	1-2	PCDD/PCDF, PCB Congeners and Total PCBs, HCX, HCP, TCDT	Low	1	SERAS SOP #2016	Based on historical data
ND-005-0.0-0.5	Sediment	0-0.5	Cs-137 & Be-7	Low	1+1	SERAS SOP #2016	Will be used to date sediment cores

QAPP Worksheet #18
Sampling Locations and Methods/SOP Requirements Table

Sampling Location/ID Number	Matrix	Depth (feet)	Analytical Group	Concentration Level	Number of Samples (identify field replicates)**	Sampling SOP Reference[1]	Rationale for Sampling Location
ND-005-0.5-1.0	Sediment	0.5-1.0	Cs-137 & Be-7	Low	1+1	SERAS SOP #2016	Will be used to date sediment cores
ND-005-1.0-1.5	Sediment	1.0-1.5	Cs-137 & Be-7	Low	1	SERAS SOP #2016	Will be used to date sediment cores
ND-005-1.5-2.0	Sediment	1.5-2.0	Cs-137 & Be-7	Low	1	SERAS SOP #2016	Will be used to date sediment cores
ND-005-2.0-2.5	Sediment	2.0-2.5	Cs-137 & Be-7	Low	1	SERAS SOP #2016	Will be used to date sediment cores
ND-005-2.5-3.0	Sediment	2.5-3.0	Cs-137 & Be-7	Low	1	SERAS SOP #2016	Will be used to date sediment cores
ND-005-3.0-3.5	Sediment	3.0-3.5	Cs-137 & Be-7	Low	1	SERAS SOP #2016	Will be used to date sediment cores
ND-005-3.5-4.0	Sediment	3.5-4.0	Cs-137 & Be-7	Low	1	SERAS SOP #2016	Will be used to date sediment cores
ND-005-4.0-4.5	Sediment	3.5-4.0	Cs-137 & Be-7	Low	1	SERAS SOP #2016	Will be used to date sediment cores
ND-005-4.5-5.0	Sediment	3.5-4.0	Cs-137 & Be-7	Low	1	SERAS SOP #2016	Will be used to date sediment cores
BRA-001-6.0-8.0	Sediment	6.0-8.0	PCDD/PCDF, PCB Congeners and Total PCBs, HCX, HCP, TCDT	Low	1	SERAS SOP #2016	Based on historical data

QAPP Worksheet #18
Sampling Locations and Methods/SOP Requirements Table

Sampling Location/ID Number	Matrix	Depth (feet)	Analytical Group	Concentration Level	Number of Samples (identify field replicates)**	Sampling SOP Reference[1]	Rationale for Sampling Location
BRA-002-6.0-8.0	Sediment	6.0-8.0	PCDD/PCDF, PCB Congeners and Total PCBs, HCX, HCP, TCDT	Low	1	SERAS SOP #2016	Based on historical data
BRA-003-6.0-8.0	Sediment	6.0-8.0	PCDD/PCDF, PCB Congeners and Total PCBs, HCX, HCP, TCDT	Low	1	SERAS SOP #2016	Based on historical data
BRA-005-0.0-0.5	Sediment	0.0-0.5	Cs-137 & Be-7	Low	1	SERAS SOP #2016	Will be used to date sediment cores
BRA-005-0.5-1.0	Sediment	0.5-1.0	Cs-137 & Be-7	Low	1	SERAS SOP #2016	Will be used to date sediment cores
BRA-005-1.0-1.5	Sediment	1.0-1.5	Cs-137 & Be-7	Low	1	SERAS SOP #2016	Will be used to date sediment cores
BRA-005-1.5-2.0	Sediment	1.5-2.0	Cs-137 & Be-7	Low	1	SERAS SOP #2016	Will be used to date sediment cores
BRA-005-2.0-2.5	Sediment	2.0-2.5	Cs-137 & Be-7	Low	1	SERAS SOP #2016	Will be used to date sediment cores
BRA-005-2.5-3.0	Sediment	2.5-3.0	Cs-137 & Be-7	Low	1	SERAS SOP #2016	Will be used to date sediment cores
BRA-005-3.0-3.5	Sediment	3.0-3.5	Cs-137 & Be-7	Low	1	SERAS SOP #2016	Will be used to date sediment cores
BRA-005-3.5-4.0	Sediment	3.5-4.0	Cs-137 & Be-7	Low	1	SERAS SOP #2016	Will be used to date sediment cores

QAPP Worksheet #18
Sampling Locations and Methods/SOP Requirements Table

Sampling Location/ID Number	Matrix	Depth (feet)	Analytical Group	Concentration Level	Number of Samples (identify field replicates)**	Sampling SOP Reference[1]	Rationale for Sampling Location
BRA-005-4.0-4.5	Sediment	4.0-4.5	Cs-137 & Be-7	Low	1	SERAS SOP #2016	Will be used to date sediment cores
BRA-005-4.5-5.0	Sediment	4.5-5.0	Cs-137 & Be-7	Low	1	SERAS SOP #2016	Will be used to date sediment cores
BRA-005-5.0-5.5	Sediment	5.0-5.5	Cs-137 & Be-7	Low	1	SERAS SOP #2016	Will be used to date sediment cores
BRA-005-5.5-6.0	Sediment	5.5-6.0	Cs-137 & Be-7	Low	1+1	SERAS SOP #2016	Will be used to date sediment cores
BRA-005-6.0-6.5	Sediment	6.0-6.5	Cs-137 & Be-7	Low	1	SERAS SOP #2016	Will be used to date sediment cores
BRA-005-6.5-7.0	Sediment	6.5-7.0	Cs-137 & Be-7	Low	1	SERAS SOP #2016	Will be used to date sediment cores
BRA-005-7.0-7.5	Sediment	7.0-7.5	Cs-137 & Be-7	Low	1	SERAS SOP #2016	Will be used to date sediment cores
BRA-005-7.5-8.0	Sediment	7.5-8.0	Cs-137 & Be-7	Low	1	SERAS SOP #2016	Will be used to date sediment cores
TRC-001-0.0-0.5	Sediment	0-0.5	PCDD/PCDF, PCB Congeners and Total PCBs, HCX, HCP, TCDT	Low	1	SERAS SOP #2016	Based on historical data
TRC-001-xx-xx	Sediment	TBD (1 foot above sediment surface	PCDD/PCDF, PCB Congeners and Total PCBs, HCX, HCP, TCDT	Low	1	SERAS SOP #2016	Based on historical data

QAPP Worksheet #18
Sampling Locations and Methods/SOP Requirements Table

Sampling Location/ID Number	Matrix	Depth (feet)	Analytical Group	Concentration Level	Number of Samples (identify field replicates)**	Sampling SOP Reference[1]	Rationale for Sampling Location
TRC-002-0.0-0.5	Sediment	0-0.5	PCDD/PCDF, PCB Congeners and Total PCBs, HCX, HCP, TCDT	Low	1	SERAS SOP #2016	Based on historical data
TRC-002-xx-xx	Sediment	TBD (1 foot above sediment surface	PCDD/PCDF, PCB Congeners and Total PCBs, HCX, HCP, TCDT	Low	1	SERAS SOP #2016	Based on historical data
TRC-003-0.0-0.5	Sediment	0-0.5	Cs-137 & Be-7	Low	1	SERAS SOP #2016	Will be used to date sediment cores
TRC-003-0.5-1.0	Sediment	0.5-1.0	Cs-137 & Be-7	Low	1	SERAS SOP #2016	Will be used to date sediment cores
TRC-003-1.0-1.5	Sediment	1.0-1.5	Cs-137 & Be-7	Low	1	SERAS SOP #2016	Will be used to date sediment cores
TRC-003-1.5-2.0	Sediment	1.5-2.0	Cs-137 & Be-7	Low	1	SERAS SOP #2016	Will be used to date sediment cores
TRC-003-2.0-2.5	Sediment	2.0-2.5	Cs-137 & Be-7	Low	1	SERAS SOP #2016	Will be used to date sediment cores
TRC-003-2.5-3.0	Sediment	2.5-3.0	Cs-137 & Be-7	Low	1	SERAS SOP #2016	Will be used to date sediment cores
TRC-003-3.0-3.5	Sediment	3.0-3.5	Cs-137 & Be-7	Low	1	SERAS SOP #2016	Will be used to date sediment cores
TRC-003-3.5-4.0	Sediment	3.5-4.0	Cs-137 & Be-7	Low	1	SERAS SOP #2016	Will be used to date sediment cores

QAPP Worksheet #18
Sampling Locations and Methods/SOP Requirements Table

Sampling Location/ID Number	Matrix	Depth (feet)	Analytical Group	Concentration Level	Number of Samples (identify field replicates)**	Sampling SOP Reference[1]	Rationale for Sampling Location
TRC-003-4.0-4.5	Sediment	4.0-4.5	Cs-137 & Be-7	Low	1	SERAS SOP #2016	Will be used to date sediment cores
TRC-003-4.5-5.0	Sediment	4.5-5.0	Cs-137 & Be-7	Low	1	SERAS SOP #2016	Will be used to date sediment cores
TRC-003-5.0-5.5	Sediment	5.0-5.5	Cs-137 & Be-7	Low	1	SERAS SOP #2016	Will be used to date sediment cores
TRC-003-5.5-6.0	Sediment	5.5-6.0	Cs-137 & Be-7	Low	1	SERAS SOP #2016	Will be used to date sediment cores
TRC-003-6.0-6.5	Sediment	6.0-6.5	Cs-137 & Be-7	Low	1	SERAS SOP #2016	Will be used to date sediment cores
TRC-003-6.5-7.0	Sediment	6.5-7.0	Cs-137 & Be-7	Low	1	SERAS SOP #2016	Will be used to date sediment cores
TRC-003-7.0-7.5	Sediment	7.0-7.5	Cs-137 & Be-7	Low	1	SERAS SOP #2016	Will be used to date sediment cores
TRC-003-7.5-8.0	Sediment	7.5-8.0	Cs-137 & Be-7	Low	1+1	SERAS SOP #2016	Will be used to date sediment cores
TR-001-0.0-0.5	Sediment	0-0.5	PCDD/PCDF, PCB Congeners and Total PCBs, HCX, HCP, TCDT	Low	1	SERAS SOP #2016	Based on historical data
TR-002-0.0-0.5	Sediment	0-0.5	PCDD/PCDF, PCB Congeners and Total PCBs, HCX, HCP, TCDT	Low	1	SERAS SOP #2016	Based on historical data

QAPP Worksheet #18
Sampling Locations and Methods/SOP Requirements Table

Sampling Location/ID Number	Matrix	Depth (feet)	Analytical Group	Concentration Level	Number of Samples (identify field replicates)**	Sampling SOP Reference[1]	Rationale for Sampling Location
TR-003-0.0.-0.5	Sediment	0-0.5	PCDD/PCDF, PCB Congeners and Total PCBs, HCX, HCP, TCDT	Low	1	SERAS SOP #2016	Based on historical data
DD-001-0.0-0.5	Sediment	0-0.5	PCDD/PCDF, PCB Congeners and Total PCBs, HCX, HCP, TCDT	Low	1	SERAS SOP #2016	Upstream reference location
DD-001-1.0-2.0	Sediment	1.0-2.0	PCDD/PCDF, PCB Congeners and Total PCBs, HCX, HCP, TCDT	Low	1	SERAS SOP #2016	Upstream reference location
DD-002-0.0-0.5	Sediment	0-0.5	Cs-137 & Be-7	Low	1	SERAS SOP #2016	Upstream reference location
DD-002-0.5-1.0	Sediment	0.5-1.0	Cs-137 & Be-7	Low	1	SERAS SOP #2016	Upstream reference location
DD-002-1.0-1.5	Sediment	1.0-1.5	Cs-137 & Be-7	Low	1	SERAS SOP #2016	Upstream reference location
DD-002-1.5-2.0	Sediment	1.5-2.0	Cs-137 & Be-7	Low	1	SERAS SOP #2016	Upstream reference location
DD-002-2.0-2.5	Sediment	2.0-2.5	Cs-137 & Be-7	Low	1	SERAS SOP #2016	Upstream reference location
DD-002-2.5-3.0	Sediment	2.5-3.0	Cs-137 & Be-7	Low	1	SERAS SOP #2016	Upstream reference location
DD-002-3.0-3.5	Sediment	3.0-3.5	Cs-137 & Be-7	Low	1	SERAS SOP #2016	Upstream reference location
DD-002-3.5-4.0	Sediment	3.5-4.0	Cs-137 & Be-7	Low	1	SERAS SOP #2016	Upstream reference location

[1]Specify the appropriate reference letter or number from the Analytical SOP References table (Worksheet #21)
** Field replicates have beenarbitrarilyselected and will be chosen in the field at the frequencyof1:20 samples and based on mass available. Based onthe number of samples listed in Worksheet 18, one field replicate will be collected for TCDD/TCDF, PCB congeners and total PCBs, HCX, HCP and TCDT. Three field replicates will be selected for Cs-137 and Be-7 dating.

ND = No Dredge Zone

Location	X-Coordinate:	Y-Coordinate:
001	572930.3495	4518941.0445
002	572917.6358	4518907.5235
003	572909.6868	4518916.4624
004	572928.7603	4518923.1666

BRA = Below Removal Area

Location	X-Coordinate:	Y-Coordinate:
001	572753.6416	4518629.4755
002	572779.7475	4518757.6318
003	572764.7168	4518698.3002

TRC = Third River and Passaic River Confluence
TR = Third River
DD = Dundee Dam
xx-xx = 1 foot above sediment bottom

☐ Worksheet Not Applicable (State Reason)

QAPP Worksheet #19
Analytical SOP Requirements Table

Matrix	Analytical Group	Concentration Level	Analytical and Preparation Method/SOP Reference [1]	Sample Volume[2]	Containers (number, size, and type)	Preservation Requirements (chemical, temperature, light protected)	Maximum Holding Time (preparation/ analysis)
Sediment	17 Dioxins/furans + TCDT	Low	EPA 1613B	10 grams	8-oz jar	≤-10 degrees C, light protected	Up to 1 year
Sediment	209 PCB Congeners + total PCBs	Low	EPA 1668C	10 grams			
Sediment	HCP	Low	Vista SOP #50	10 grams			
Sediment	124578-HCX	Low	Vista SOP #41, Revision 2	10 grams	4-oz amber	≤6 degrees C, light protected	14 days from collection/40 days from extraction
Sediment	Cs-137 & Be-7	Low	Outreach SOP #RAD_04-11	~200 grams	16-oz plastic sealable bag or equivalent	None	None

[1]Specify the appropriate reference letter or number from the Analytical SOP References table (Worksheet #23)
NA = Not available or not applicable
C = Centigrade

☐ Worksheet Not Applicable (State Reason)

QAPP Worksheet #20
Field Quality Control Sample Summary Table

Matrix	Analytical Group	Concentration Level	Analytical and Preparation SOP Reference[1]	No. of Samples[2]	No. of Field Replicates[2]	No. of MS/MSD	No. of Field Blanks	No. of Equip. Blanks	No. of PT Samples	Total No. of Samples to Lab
Sediment	17 Dioxin/Furans, homologs + TCDT	Low	EPA 1613B	19	1	1	NA	NA	NA	20
Sediment	PCBs Congeners Full List 209 Congeners + total PCBs	Low	EPA 1668C	19	1	1	NA	NA	NA	20
Sediment	HCX	Low	Vista SOP #41	19	1	1	NA	NA	NA	20
Sediment	HCP	Low	Vista SOP #50	19	1	1	NA	NA	NA	20
Sediment	Cs-137 & Be-7	Low	Outreach SOP #RAD_04-11	48	3	NA	NA	NA	NA	51

[1]Specify the appropriate reference letter or number from the Analytical SOP References table (Worksheet #23)

☐ Worksheet Not Applicable (State Reason)

QAPP Worksheet #21
Project Sampling SOP References Table

Reference Number	Title, Revision Date and/or Number	Originating Organization	Equipment Type	Modified for Project Work? (Check if yes)	Comments
SERAS SOP #2001	General Field Sampling Guidelines	SERAS	General Sampling	☐	
SERAS SOP #2003	Sample Storage, Preservation and Handling	SERAS	Sample Handling	☐	
SERAS SOP #2002	Sample Documentation	SERAS	NA	☐	
SERAS SOP #2004	Sample Packaging and Shipment	SERAS	NA	☐	
SERAS SOP #4005	Chain of Custody Procedures	SERAS	NA	☐	
SERAS SOP #2016	Sediment Sampling	SERAS	Vibracore	☐	

☐ Worksheet Not Applicable (State Reason)

QAPP Worksheet #22
Field Equipment Calibration, Maintenance, Testing, and Inspection Table

Field Equipment	Calibration Activity	Maintenance Activity	Testing Activity	Inspection Activity	Frequency	Acceptance Criteria	Corrective Action	Responsible Person	SOP Reference[1]
GPS		As per manufacturer's instructions	As per manufacturer's instructions	Check Battery	Daily	Able to pick up signal	Recharge or replace battery	Field personnel	

[1]Specify the appropriate reference letter or number from the Project Sampling SOP References table (Worksheet #21)

☐ Worksheet Not Applicable (State Reason)

QAPP Worksheet #23
Analytical SOP References Table

Reference Number	Title, Revision Date, and/or Number	Definitive or Screening Data	Analytical Group	Instrument	Organization Performing Analysis	Modified for Project Work?
EPA 1613B	Tetra- through Octa-Chlorinated Dioxins and Furans by Isotope Dilution HRGC/HRMS	Definitive	Dioxin/furans/ homologs/TCDT	HRGC/HRMS	Vista Analytical	Yes – TCDT added
EPA 1668C	Chlorinated Biphenyl Congeners in Water, Soil, Sediment, and Tissue by HRGC/HRMS	Definitive	PCB Congeners – full list + total PCBs	HRGC/HRMS	Vista Analytical	
Vista SOP #41, Revision 2	Extraction and Analysis of Hexachloroxanthene by HRMS	Definitive	HCX	GC/HRMS	Vista Analytical	
Vista SOP #50, Revision 1	Preparation and Analysis of Aqueous and Solid Matrices for the Determination of Hexachlorophene	Definitive	HCP	LC/MS/MS	Vista Analytical	
Outreach SOP #RAD_04-11	Sample Analysis by Gamma Spectrometry	Definitive	Cs-137 & Be-7	High purity germanium detector	Outreach Laboratory	

☐ Worksheet Not Applicable (State Reason)

QAPP Worksheet #24-1
Analytical Instrument Calibration Table

Instrument	Calibration Procedure	Frequency of Calibration	Acceptance Criteria	Corrective Action (CA)	Person Responsible for CA	SOP Reference[1]
HRGC/HRMS (dioxins/furans and TCDT)	Tune using PFK	Prior to sample analysis	Resolving power ≥10,000 at m/z = 304.9824 or any other reference signal close to m/z 304 (from TCDF). Deviation between the exact m/z and theoretical m/z must be <5ppm	Retune instrument Reanalyze PFK	Vista Analytical Chemist	EPA 1613B (with TCDT added)
	Column Performance Check Solution (CPCM). Solution includes the Window Defining Mix	Prior to 12 hours of sample analysis	Used to set retention times of first and last eluters. CPCM must have ≤25% valley resolution for 2,3,7,8-TCDD and 2,3,7,8-TCDF	Readjust windows. Evaluate system. Perform maintenance. Reanalyze CPCM.		
	6-Point Initial Calibration (ICAL)	Initially and as required	Ion ratios within Table 9 limits*, and S/N ≥10:1. Absolute retention time of $^{13}C_{12}$-1234-TCDD >25 min on DB-5 column and retention time of $^{13}C_{12}$-1234-TCDD > 15 minutes on DB-225 column	Evaluate system. Recalibrate. If all criteria are met except the ion ratios, evaluate impact and document		
	Daily Continuing Calibration Verification (CCAL)	Once per 12 hours, prior to sample analysis	Analyte concentrations must be within the limits specified in Table 6 of method 1613B.	Evaluate system. Evaluate data for usability. Reanalyze CCAL. Recalibrate (ICAL).		

[1]Specify the appropriate reference letter or number from the Analytical SOP References table (Worksheet #23)
*Duetodifferentions monitoredforPeCDD,the ionratio willdiffer fromthelimitsinEPAMethodTable9. TheM+2andM+4are monitoredbecause thereisless interference from PCBs.

☐ Worksheet Not Applicable (State Reason)

QAPP Worksheet #24-2
Analytical Instrument Calibration Table

Instrument	Calibration Procedure	Frequency of Calibration	Acceptance Criteria	Corrective Action (CA)	Person Responsible for CA	SOP Reference[1]
HRGC/HRMS (PCB Congeners)	Tune using PFK	Prior to sample analysis	Resolving power ≥10,000 at m/z = 304.9824 or any other significant PFK fragment in the 300-350 range. The deviation between each monitored exact m/z and the theoretical m/z must be <5ppm	Retune instrument Reanalyze PFK	Vista Analytical Chemist	EPA Method 1668C
	6-Point Initial Calibration (ICAL)	Initially and as required	%RSD ±20% Ion ratios within Table 8 limits, and S/N ≥10	Evaluate system. Recalibrate.		
	Daily Continuing Calibration Verification (ICAL)	Once per 12 hours, prior to sample analysis	Compare recovery with calibration verification limit in Table 6. Ion ratios within Table 8 limits and S/N >10	Evaluate system. Reanalyze CCAL. Recalibrate (ICAL) as necessary.		

[1]Specify the appropriate reference letter or number from the Analytical SOP References table (Worksheet #23)

QAPP Worksheet #24-3
Analytical Instrument Calibration Table

Instrument	Calibration Procedure	Frequency of Calibration	Acceptance Criteria	Corrective Action (CA)	Person Responsible for CA	SOP Reference[1]
GC/HRMS (HCX)	Initial Calibration (5-point)	Whenever a new set of spiking calibration standards are created or whenever the continuing calibration falls outside the acceptance criteria	Signal to noise (S/N) ratio exceeds 10:1 for all ions monitored Ion abundance ratios are within ±15% of the theoretical ratio %RSD for the mean RFs must be within ±20% for the natives and ±35% for the internal standards	A new initial calibration curve must be prepared	Vista Analytical/ Chemist	Vista SOP #41
	Continuing Calibration	At the beginning of a 12-hour sequence	% Deviation recoveries must be 70-130% for the natives and 50-150% for the labeled compounds	Instrument must be recalibrated and the affected samples reanalyzed		
			Ion ratios must be within criteria listed in Table 1 S/N ratio must exceed 10:1 for all ions monitored	Reanalyze associated sample extracts		

[1]Specify the appropriate reference letter or number from the Analytical SOP References table (Worksheet #23)
[1]Specify the appropriate reference letter or number from the Analytical SOP References table (Worksheet #23)

QAPP Worksheet #24-4
Analytical Instrument Calibration Table

Instrument	Calibration Procedure	Frequency of Calibration	Acceptance Criteria	Corrective Action (CA)	Person Responsible for CA	SOP Reference[1]
LC/MS/MS (HCP)	Initial Calibration (5-point)	Whenever a new set of spiking calibration standards are created or whenever the continuing calibration falls outside the acceptance criteria	%RSD ±20 for natives and ±30 for internal standards	A new initial calibration curve must be prepared	Vista Analytical/ Chemist	Vista SOP #50
	Continuing Calibration	At the beginning of a 12-hour sequence	% Deviation recoveries must be 70-130% for the native and the labeled compound	Instrument must be recalibrated and the affected samples reanalyzed		

[1]Specify the appropriate reference letter or number from the Analytical SOP References table (Worksheet #23)
[1]Specify the appropriate reference letter or number from the Analytical SOP References table (Worksheet #23)

QAPP Worksheet #24-5
Analytical Instrument Calibration Table

Instrument	Calibration Procedure	Frequency of Calibration	Acceptance Criteria	Corrective Action (CA)	Person Responsible for CA	SOP Reference[1]
High purity germanium detector	Single Calibration Standard	Daily	Within control chart limits	Recount twice. If still out, conduct instrument maintenance	Outreach Analyst	RAD_04-11
	Instrument Calibration Blank	Daily	Result-error ≤SDL	Recount twice. Recalibrate		

[1]Specify the appropriate reference letter or number from the Analytical SOP References table (Worksheet #23)

☐ Worksheet Not Applicable (State Reason)

QAPP Worksheet #25
Analytical Instrument and Equipment Maintenance, Testing, and Inspection Table

Instrument/ Equipment	Maintenance Activity	Testing Activity	Inspection Activity	Frequency	Acceptance Criteria	Corrective Action	Responsible Person	SOP Reference [1]
HRGC/HRMS	As per manufacturer's recommendations	As per manufacturer's recommendations	As per manufacturer's recommendations	As per manufacturer's recommendations	As per manufacturer's recommendations	As per manufacturer's recommendations	Vista Analytical Chemist	NA
GC/HRMS	As per manufacturer's recommendations	As per manufacturer's recommendations	As per manufacturer's recommendations	As per manufacturer's recommendations	As per manufacturer's recommendations	As per manufacturer's recommendations	Vista Analytical Chemist	NA
LC/MS/MS	As per manufacturer's recommendations	As per manufacturer's recommendations	As per manufacturer's recommendations	As per manufacturer's recommendations	As per manufacturer's recommendations	As per manufacturer's recommendations	Vista Analytical Chemist	NA
High Purity Germanium Detector	As per manufacturer's recommendations	As per manufacturer's recommendations	As per manufacturer's recommendations	As per manufacturer's recommendations	As per manufacturer's recommendations	As per manufacturer's recommendations	Outreach Lab Chemist	NA

[1]Specify the appropriate reference letter or number from Analytical SOP References table (Worksheet #23)

☐ Worksheet Not Applicable (State Reason)

QAPP Worksheet #26
Sample Handling System

SAMPLE COLLECTION, PACKAGING, AND SHIPMENT
Sample Collection (Personnel/Organization): Christopher Gussman/SERAS
Sample Packaging (Personnel/Organization): Christopher Gussman/SERAS
Coordination of Shipment (Personnel/Organization): Christopher Gussman/SERAS
Type of Shipment/Carrier: Fed-Ex to Vista Analytical and Outreach Laboratory
SAMPLE RECEIPT AND ANALYSIS
Sample Receipt (Personnel/Organization): Sample Custodian, Vista Analytical and Outreach Laboratory
Sample Custody and Storage (Personnel/Organization): SERAS TL, Christopher Gussman and Sample Custodian, Vista Analytical and Outreach Laboratory
Sample Preparation (Personnel/Organization): Laboratory Chemists, Vista Analytical and Outreach Laboratory
Sample Determinative Analysis (Personnel/Organization): Laboratory Chemists, Vista Analytical and Outreach Laboratory
SAMPLE ARCHIVING
Field Sample Storage (No. of days from sample collection): Ship within 1 to 3 days to the respective laboratories.
Sample Extract/Digestate Storage (No. of days from extraction/digestion): All samples are to be extracted and analyzed within holding times mandated by each analytical method.
Biological Sample Storage (No. of days from sample collection): NA
SAMPLE DISPOSAL
Personnel/Organization: Sample Custodian, Vista Analytical and Outreach Laboratory
Number of Days from Analysis: As per subcontract laboratories defined procedures to retain samples once results have been reported.

☐ Worksheet Not Applicable (State Reason)

QAPP Worksheet #27
Sample Custody Requirements

Field Sample Custody Procedures (sample collection, packaging, shipment, and delivery to laboratory): Eachsample container will be affixed witha label identifying the sample number, sample location, collectiondate, collectiontime, matrix, requested analysis, and preservative. Each sample container will be placed in a re-sealable clear plastic bag and stored in a cooler on wet ice after collection. Sample coolers/containers will be forwarded to the assigned laboratories under specific chain-of-custody (COC) forms, and shipped via overnight courier to laboratory personnel. Sample coolers will contain ample packing material and wet ice, and will be sealed with duct tape or strapping tape. Custody seals will be placed over openings to ensure cooler and sample integrity. At least two custody seals will be placed across the shipping containers to ensure sample integrity. EPA/ERT Scribe software will be used for sample management, as well as, generation of sample documentation, such as, labels and COC records. All COC recordswillbepeerreviewedpriortoshipmentofsamplesinaccordance withSERASSOP #4005, *ChainofCustodyProcedures*. Samples willbeshipped within 24-72 hours ofsamplingfor next-daydeliveryunder COCto the appropriate laboratoryinaccordance withSERAS SOP #2004, *Sample Packaging andShipment.* Procedures outlined in SOP #2002, #2003, and #2004 will be applied (refer to Worksheet #21).
Laboratory Sample Custody Procedures (receipt of samples, archiving, disposal): Asamplecustodianatthesubcontractlaboratories willaccept custodyoftheshippedsamples. Asapplicable,t hecustodian willrecordthecoolertemperature,and inspect the samples for discrepancies, proper non-chemical preservation and container integrity before forwarding the samples to the appropriate department for analysis. The laboratory manager will be notified of any problems. Samples may be archived at Vista Analytical until it is known whether a TCDT standard can be synthesized by an outside vendor. Disposal will be in accordance with the outside laboratory's disposal protocols.
Sample Identification Procedures: Eachsample will beidentified witha uniqueidentificationnumberat the timeofcollectionasfollows. Anabbreviatedletterdesignationconsistingoftwo orthree letters as identified on Worksheet #18 (e.g., ND = No Dredge Zone) followed bya three digit numerical sample number at each area (e.g., 001) and the depth will be assigned to each sample collected. For example, the second core collected at surface from the No-Dredge zone would be labeled as ND-002-0-0.5. A unique laboratory number will be assigned to each sample during receipt at the respective laboratories. The number will be listed on the label of every sample container collected at a given location. Procedures outlined in SOP #2002 will be applied (refer to Worksheet #21).
Chain-of-custody Procedures: Chain-of-custody records will be generated for all samples submitted for analysis using Scribe database software. Procedures outlined in SOP #4005 will be applied (refer to Worksheet #21).

☐ Worksheet Not Applicable (State Reason)

QAPP Worksheet #28-1
QC Samples Table

Matrix	Sediment
Analytical Group	PCDD/PCDFs/ TCDT*
Concentration Level	Low
Sampling SOP	SERAS SOP #2016
Analytical Method/ SOP Reference	EPA Method 1613B
Sampler's Name	C. Gussman
Field Sampling Organization	SERAS
Analytical Organization	Vista Analytical
No. of Sample Locations	13

QC Sample:	Frequency/ Number	Method/SOP QC Acceptance Limits	Corrective Action	Person(s) Responsible for Corrective Action	Data Quality Indicator (DQI)	Measurement Performance Criteria	
Internal Standards	Every sample, method blank & LCS	Within limits in Table 7 of EPA Method	1. Check chromatography for interferences, flag data. 2. Check S/N. If <10:1, re-extract sample. 3. If S/N >10:1, evaluate data usability. Check instrument and re-analyze extract if problem is found. 4. Re-extract and re-analyze affected samples.	Vista Analytical Chemist	Accuracy/ Bias	$^{13}C_{12}$-2378-TCDD	25-164 ng/mL
						$^{13}C_{12}$-2378-TCDF	24-169 ng/mL
						$^{13}C_{12}$-12378-PeCDD	25-181 ng/mL
						$^{13}C_{12}$-12378-PeCDF	24-185 ng/mL
						$^{13}C_{12}$-23478-PeCDF	21-178 ng/mL
						$^{13}C_{12}$-123478-HxCDD	32-141 ng/mL
						$^{13}C_{12}$-123678- HxCDD	28-130 ng/mL
						$^{13}C_{12}$-123789 HxCDD	32-141 ng/mL
						$^{13}C_{12}$-123478-HxCDF	26-152 ng/mL
						$^{13}C_{12}$-123678-HxCDF	26-123 ng/mL
						$^{13}C_{12}$-123789-HxCDF	29-147 ng/mL
						$^{13}C_{12}$-234678-HxCDF	28-136 ng/mL
						$^{13}C_{12}$-1234678-HpCDD	23-140 ng/mL
						$^{13}C_{12}$-1234678-HpCDF	28-143 ng/mL

QAPP Worksheet #28-1
QC Samples Table

Matrix	Sediment
Analytical Group	PCDD/PCDFs/ TCDT*
Concentration Level	Low
Sampling SOP	SERAS SOP #2016
Analytical Method/ SOP Reference	EPA Method 1613B
Sampler's Name	C. Gussman
Field Sampling Organization	SERAS
Analytical Organization	Vista Analytical
No. of Sample Locations	13

QC Sample:	Frequency/ Number	Method/SOP QC Acceptance Limits	Corrective Action	Person(s) Responsible for Corrective Action	Data Quality Indicator (DQI)	Measurement Performance Criteria	
						$^{13}C_{12}$-1234789-HpCDF	26-138 ng/mL
						$^{13}C_{12}$-OCDD	17-157 ng/mL
						$^{13}C_{12}$-OCDF	17-157 ng/mL
						$^{37}Cl_4$-2378-TCDD	35-197 ng/mL
Method Blank	1 per analytical batch not to exceed 20 field samples per matrix.	<RL	1. Reanalyze if carryover is suspected. 2. If any CDD/CDF >RL or one-third of the regulatory compliance level, then the analysis of samples is halted until the blank associated with the sample batch shows no evidence of contamination.	Vista Analytical Chemist	Accuracy/Bias (Contamination)	<RL	

QAPP Worksheet #28-1
QC Samples Table

Matrix	Sediment
Analytical Group	PCDD/PCDFs/ TCDT*
Concentration Level	Low
Sampling SOP	SERAS SOP #2016
Analytical Method/ SOP Reference	EPA Method 1613B
Sampler's Name	C. Gussman
Field Sampling Organization	SERAS
Analytical Organization	Vista Analytical
No. of Sample Locations	13

QC Sample:	Frequency/ Number	Method/SOP QC Acceptance Limits	Corrective Action	Person(s) Responsible for Corrective Action	Data Quality Indicator (DQI)	Measurement Performance Criteria	
OPR	1 per analytical batch not to exceed 20 field samples per matrix	WithinTable 6 of EPA Method 1613B	1. Review internal standards. 2. Evaluate data for usability 3.IfLCS recoveriesare> the upper control limits and the sample resultsare non-detect, no action is required. 4. If samples have hits >RL, re-extract and re-analyze affected samples.	Vista Analytical Chemist	Accuracy/Bias	2378-TCDD	6.7-15.8 ng/mL
						2378-TCDF	7.5-15.8 ng/mL
						12378-PeCDD	35-71 ng/mL
						12378-PeCDF	40-67 ng/mL
						23478-PeCDF	34-80 ng/mL
						123478-HxCDD	35-82 ng/mL
						123678-HxCDD	38-67 ng/mL
						123789-HxCDD	32-81 ng/mL
						123478-HxCDF	36-67 ng/mL
						123678-HxCDF	42-65 ng/mL
						123789-HxCDF	39-65 ng/mL
						234678-HxCDF	35-78 ng/mL
						1234678-HpCDD	35-70 ng/mL
						1234678-HpCDD	41-61 ng/mL
						1234789-HpCDF	39-69 ng/mL

QAPP Worksheet #28-1
QC Samples Table

Matrix	Sediment
Analytical Group	PCDD/PCDFs/ TCDT*
Concentration Level	Low
Sampling SOP	SERAS SOP #2016
Analytical Method/ SOP Reference	EPA Method 1613B
Sampler's Name	C. Gussman
Field Sampling Organization	SERAS
Analytical Organization	Vista Analytical
No. of Sample Locations	13

QC Sample:	Frequency/ Number	Method/SOP QC Acceptance Limits	Corrective Action	Person(s) Responsible for Corrective Action	Data Quality Indicator (DQI)	Measurement Performance Criteria	
						OCDD	78-144 ng/mL
						OCDF	63-170 ng/mL
						$^{13}C_{12}$-2378-TCDD	20-175 ng/mL
						$^{13}C_{12}$-2378-TCDF	22-152 ng/mL
						$^{13}C_{12}$-12378-PeCDD	21-227 ng/mL
						$^{13}C_{12}$-12378-PeCDF	21-192 ng/mL
						$^{13}C_{12}$-23478-PeCDF	13-328 ng/mL
						$^{13}C_{12}$-123478-HxCDD	21-193 ng/mL
						$^{13}C_{12}$-123678-HxCDD	25-163 ng/mL
						$^{13}C_{12}$-123789-HxCDD	21-193 ng/mL
						$^{13}C_{12}$-123478-HxCDF	19-202 ng/mL
						$^{13}C_{12}$-123678-HxCDF	21-159 ng/mL
						$^{13}C_{12}$-123789-HxCDF	17-205 ng/mL
						$^{13}C_{12}$-234678-HxCDF	22-176 ng/mL
						$^{13}C_{12}$-1234678-HpCDD	26-166 ng/mL

QAPP Worksheet #28-1
QC Samples Table

Matrix	Sediment
Analytical Group	PCDD/PCDFs/ TCDT*
Concentration Level	Low
Sampling SOP	SERAS SOP #2016
Analytical Method/ SOP Reference	EPA Method 1613B
Sampler's Name	C. Gussman
Field Sampling Organization	SERAS
Analytical Organization	Vista Analytical
No. of Sample Locations	13

QC Sample:	Frequency/ Number	Method/SOP QC Acceptance Limits	Corrective Action	Person(s) Responsible for Corrective Action	Data Quality Indicator (DQI)	Measurement Performance Criteria	
						$^{13}C_{12}$-1234678-HpCDF	21-158 ng/mL
						$^{13}C_{12}$-1234789-HpCDF	20-186 ng/mL
						$^{13}C_{12}$-OCDD	26-397 ng/mL
						$^{13}C_{12}$-OCDF	26-397 ng/mL
Matrix Spike	1 per analytical batch not to exceed 20 field samples per matrix	%R= 50-150 (for native compounds only)	1. Review data for usability. 2. Narrate outliers.	Vista Analytical Chemist	Accuracy/Bias	%R = 50-150 (for native compounds only)	
MS/MSD	1 per analytical batch not to exceed 20 field samples per matrix	RPD ±20%	1. Review data for usability. 2. Narrate outliers.	Vista Analytical Chemist	Accuracy/Bias	RPD ±20%	
Field Duplicate	1 per 20 samples	NA	Document in final deliverable	SERAS TL	Precision	RPD ±35%	

☐ Worksheet Not Applicable (State Reason)

QAPP Worksheet #28-2
QC Samples Table

Matrix	Sediment
Analytical Group	PCB Congeners
Concentration Level	Low
Sampling SOP	SERAS SOP #2016
Analytical Method/ SOP Reference	EPA Method 1668C
Sampler's Name	C. Gussman
Field Sampling Organization	SERAS
Analytical Organization	Vista Analytical
No. of Decision Units	13

QC Sample:	Frequency/Number	Method/SOP QC Acceptance Limits	Corrective Action	Person(s) Responsible for Corrective Action	Data Quality Indicator (DQI)	Measurement Performance Criteria
Internal Standards	Every sample, method blank & LCS	^{13}C-Mono, Di, TriCB + ^{13}C-23'4'5-TetraCB (%R = 5-145) Remaining Tetra, Penta, Hexa, Hepta, Octa, Nona and DecaCBs (%R = 10-145)	1. Check chromatography for interferences, flag data. 2. Check S/N. If <10:1, re-extract sample. 3. If S/N >10:1, evaluate data usability. Check instrument and re-analyze extract if problem is found. 4. Re-extract and re-analyze affected samples.	Vista Analytical Chemist	Accuracy	^{13}C-Mono, Di, TriCB + ^{13}C-23'4'5-TetraCB (%R = 5-145) Remaining Tetra, Penta, Hexa, Hepta , Octa, Nona and DecaCBs (%R = 10-145)

QAPP Worksheet #28-2
QC Samples Table

Matrix	Sediment
Analytical Group	PCB Congeners
Concentration Level	Low
Sampling SOP	SERAS SOP #2016
Analytical Method/ SOP Reference	EPA Method 1668C
Sampler's Name	C. Gussman
Field Sampling Organization	SERAS
Analytical Organization	Vista Analytical
No. of Decision Units	13

QC Sample:	Frequency/Number	Method/SOP QC Acceptance Limits	Corrective Action	Person(s) Responsible for Corrective Action	Data Quality Indicator (DQI)	Measurement Performance Criteria
Method Blank	1 per analytical batch not to exceed 20 field samples per matrix.	<RL	1. Reanalyze if carryover is suspected. 2. If any congener >2x RL or one-third of the regulatory compliance level, then the analysis of samples is halted until the blank associated with the sample batch shows no evidence of contamination.	Vista Analytical Chemist	Accuracy/Bias (Contamination)	<RL

QAPP Worksheet #28-2
QC Samples Table

Matrix	Sediment
Analytical Group	PCB Congeners
Concentration Level	Low
Sampling SOP	SERAS SOP #2016
Analytical Method/ SOP Reference	EPA Method 1668C
Sampler's Name	C. Gussman
Field Sampling Organization	SERAS
Analytical Organization	Vista Analytical
No. of Decision Units	13

QC Sample:	Frequency/Number	Method/SOP QC Acceptance Limits	Corrective Action	Person(s) Responsible for Corrective Action	Data Quality Indicator (DQI)	Measurement Performance Criteria
OPR	1 per analytical batch not to exceed 20 field samples per matrix	%R = 60-135	1. Review internal standards. 2. Evaluate data for usability 3. If LCS recoveries are > the upper control limits and the sample results are non-detect, no action is required. 4. If samples have hits >RL, re-extract and re-analyze affected samples.	Vista Analytical Chemist	Accuracy/Bias	%R = 60-135

QAPP Worksheet #28-2
QC Samples Table

Matrix	Sediment
Analytical Group	PCB Congeners
Concentration Level	Low
Sampling SOP	SERAS SOP #2016
Analytical Method/ SOP Reference	EPA Method 1668C
Sampler's Name	C. Gussman
Field Sampling Organization	SERAS
Analytical Organization	Vista Analytical
No. of Decision Units	13

QC Sample:	Frequency/Number	Method/SOP QC Acceptance Limits	Corrective Action	Person(s) Responsible for Corrective Action	Data Quality Indicator (DQI)	Measurement Performance Criteria
Matrix Spike	1 per analytical batch not to exceed 20 field samples per matrix	%R = 50-150%	1. Review data for usability. 2. Narrate outliers.	Vista Analytical Chemist	Accuracy/Bias	%R = 50-150
MS/MSD	1 per analytical batch not to exceed 20 field samples per matrix	RPD ±20%	1. Review data for usability. 2. Narrate outliers.	Vista Analytical Chemist	Precision	RPD ±20%
Field Duplicates	1 per 20 samples	NA	Document in final deliverable	SERAS TL	Precision	RPD ±35%
Cleanup Recovery Standards	Each sample	%R = 10-145%	1. Use additional cleanup procedures. 2. Use smaller mass of sample	Vista Analytical Chemist	Accuracy/Bias	%R = 10-145%

QAPP Worksheet #28-3
QC Samples Table

Matrix	Sediment
Analytical Group	HCX
Concentration Level	Low
Sampling SOP	SERAS SOP #2016
Analytical Method/ SOP Reference	Vista SOP #41
Sampler's Name	C. Gussman
Field Sampling Organization	SERAS
Analytical Organization	Vista Analytical
No. of Sample Locations	13

QC Sample:	Frequency/Number	Method/SOP QC Acceptance Limits	Corrective Action	Person(s) Responsible for Corrective Action	Data Quality Indicator (DQI)	Measurement Performance Criteria
Method Blank	1 per analytical batch not to exceed 20 field samples per matrix.	<RL or 10x lower than the concentration found in any sample in the analytical batch	Reextract and reanalyze if the associated method blank does not meet criteria	Vista Analytical Chemist	Accuracy/Bias (Contamination)	<RLor 10xlower than the concentration found inanysample in the analytical batch
OPR	1 per analytical batch not to exceed 20 field samples per matrix	%R = 50-150%	If the OPR is outside of these limits, then the sample and OPR will be re-extracted and analyzed.	Vista Analytical Chemist	Accuracy/Bias	%R = 50-150%
^{13}C-123789-HxCDF (Internal Standard)	Each MB, OPR and sample	%R = 25-150	Reanalyze to confirm, reextract and analyze or document in case narrative	Vista Analytical Chemist	Accuracy/Bias	%R = 25-150

Matrix	Sediment
Analytical Group	HCX
Concentration Level	Low
Sampling SOP	SERAS SOP #2016
Analytical Method/ SOP Reference	Vista SOP #41
Sampler's Name	C. Gussman
Field Sampling Organization	SERAS
Analytical Organization	Vista Analytical
No. of Sample Locations	13

QC Sample:	Frequency/Number	Method/SOP QC Acceptance Limits	Corrective Action	Person(s) Responsible for Corrective Action	Data Quality Indicator (DQI)	Measurement Performance Criteria
^{13}C-123789HxCDD (Cleanup Recovery Standard)	Each MB, OPR and sample	%R = 25-150	Reanalyze to confirm, reextract and analyze or document in case narrative	Vista Analytical Chemist	Accuracy/Bias	%R = 25-150
MS	1 per 20 samples of the same matrix	%R = 50-150	Document in case narrative	Vista Analytical Chemist	Accuracy/Bias	%R = 50-150
MS/MSD*	One per 20 samples of the same matrix	RPD ±20%	Document in case narrative	Vista Analytical Chemist	Precision	RPD ±20%
Field Duplicate	1 per 20 samples	NA	Document in final deliverable	SERAS TL	Precision	RPD ±35%

QAPP Worksheet #28-4
QC Samples Table

Matrix	Sediment
Analytical Group	HCP
Concentration Level	Low
Sampling SOP	SERAS SOP #2016
Analytical Method/ SOP Reference	Vista SOP #50
Sampler's Name	C. Gussman
Field Sampling Organization	SERAS
Analytical Organization	Vista Analytical
No. of Sample Locations	13

QC Sample:	Frequency/Number	Method/SOP QC Acceptance Limits	Corrective Action	Person(s) Responsible for Corrective Action	Data Quality Indicator (DQI)	Measurement Performance Criteria
Method Blank	1 per analytical batch not to exceed 20 field samples per matrix.	<RL	Reextract and reanalyze if the associated method blank does not meet criteria	Vista Analytical Chemist	Accuracy/Bias (Contamination)	<RL
OPR	1 per analytical batch not to exceed 20 field samples per matrix	%R = 50-120%	If the OPR is outside of these limits, then the sample and OPR will be re-extracted and analyzed.	Vista Analytical Chemist	Accuracy/Bias	%R = 50-120%
Internal Standard	Each MB, OPR and sample	%R = 5-153	Reanalyze to confirm, reextract and analyze or document in case narrative	Vista Analytical Chemist	Accuracy/Bias	%R = 5-153
MS	1 per 20 samples of the same matrix	%R = 50-150	Document in case narrative	Vista Analytical Chemist	Accuracy/Bias	%R = 50-150
MS/MSD	One per 20 samples of the same matrix	RPD ±50%	Document in case narrative	Vista Analytical Chemist	Precision	RPD ±50%

Matrix	Sediment
Analytical Group	HCP
Concentration Level	Low
Sampling SOP	SERAS SOP #2016
Analytical Method/ SOP Reference	Vista SOP #50
Sampler's Name	C. Gussman
Field Sampling Organization	SERAS
Analytical Organization	Vista Analytical
No. of Sample Locations	13

QC Sample:	**Frequency/Number**	**Method/SOP QC Acceptance Limits**	**Corrective Action**	**Person(s) Responsible for Corrective Action**	**Data Quality Indicator (DQI)**	**Measurement Performance Criteria**
Field Duplicate	1 per 20 samples	NA	Document in final deliverable	SERAS TL	Precision	RPD ±35%

QAPP Worksheet #28-5
QC Samples Table

Matrix	Sediment
Analytical Group	Radionuclides Be^{7} & Cs^{137}
Concentration Level	Low/Medium (mg/kg)
Sampling SOP(s)	SERAS SOP #2016
Analytical Method/SOP Reference	Outreach SOP #RAD_04-11
Sampler's Name	C. Gussman
Field Sampling Organization	SERAS
Analytical Organization	Outreach Technologies
No. of Sample Locations	4

Lab QC Sample:	Frequency / Number	Method/SOP QC Acceptance Limits	Corrective Action	Person(s) Responsible for Corrective Action	Data Quality Indicator (DQI)	Measurement Performance Criteria
Laboratory Duplicates	5%	<20 RPD	If not within control chart limits, flag and report in case narrative	Gamma Spectroscopy Laboratory Technician	Precision	<20 RPD
Field Duplicates	5%	NA	Flag and report in Final Deliverable	SERAS TL	Precision	RPD ±35%
LCS	5%	%R = 80-120% or acceptance range set by vendor	Reanalyze LCS and all associated samples	Gamma Spectroscopy Laboratory Technician	Accuracy	%R = 80-120% or acceptance range set by vendor

☐ Worksheet Not Applicable (State Reason)

QAPP Worksheet #29
Project Documents and Records Table

Sample Collection Documents and Records	On-site Analysis Documents and Records	Off-site Analysis Documents and Records	Data Assessment Documents and Records	Other
Chain of custody records Sample labels Custody seals Site Logbook Field Change Form (if necessary)		Instrument run logs Sample extraction logs Preventative maintenance logs Instrument printouts Internal COC records Temperature logs Standard receipt logs Standard prep logs Data Reduction/Data Review records Analytical Results	Data Assessment Forms Data Validation Check Records	Trip Report Tech Memo (Summary Report) QAPP Work Plan (WP) Health & Safety Plan (HASP)

☐ Worksheet Not Applicable (State Reason)

QAPP Worksheet #30
Analytical Services Table

Matrix	Analytical Group	Concentration Level	Sample Location/ID Numbers	Analytical SOP	Data Package Turnaround Time	Laboratory/Organization (Name and Address, Contact Person and Telephone Number)	Backup Laboratory/Organization (Name and Address, Contact Person and Telephone Number
Sediment	Dioxins/Furans + TCDT	Low	See Worksheet 18	EPA 1613B	6 weeks (except TCDT) after receipt of samples	Vista Analytical Laboratory 1104 Windfield Way El Dorado Hills, CA 95762 Martha Maier 916-673-1520	NA
	PCB Congeners			EPA 1668C			
	HCX			Vista SOP #41			
	HCP			Vista SOP #50			
	Radiochemistry			RAD_04-11	4 weeks after receipt of samples	Outreach Technologies 311 N. Aspen Avenue Broken Arrow, OK Ron Eidson 918-251-2515	

☐ Worksheet Not Applicable (State Reason)

QAPP Worksheet #31
Planned Project Assessments Table

Assessment Type	Frequency	Internal or External	Organization Performing Assessment	Person(s) Responsible for Performing Assessment (Title and Organizational Affiliation)	Person(s) Responsible for Responding to Assessment Findings (Title and Organizational Affiliation)	Person(s) Responsible for Identifying and Implementing Corrective Actions (CA) (Title and Organizational Affiliation)	Person(s) Responsible for Monitoring Effectiveness of CA (Title and Organizational Affiliation)
Laboratory Accreditation Audit	Every 2 years	External	NELAC accrediting agency	NJDEP	QA/QC Officer/Outreach Laboratory	Laboratory Manager/Outreach Laboratory	NELAC Accrediting Authority
Laboratory Accreditation Audit	Every 2 years	External	NELAC/ISO accrediting agency	CADOH A2LA	QA/QC Officer/Vista Analytical	Laboratory Director/Vista Analytical	NELAC/ISO Accrediting Authority

QAPP Worksheet #32
Assessment Findings and Corrective Action Responses

Assessment Type	Nature of Deficiencies Documentation	Individual(s) Notified of Findings (Name, Title, Organization)	Timeframe of Notification	Nature of Corrective Action Response Documentation	Individual(s) Receiving Corrective Action Response (Name, Title, Org.)	Timeframe for Response
Field Observations/ Deviations from QAPP	Logbook	Chris Gussman, TL, SERAS	Immediately	Field Change Form	Chris Gussman, TL, SERAS	Within 24 hours of change
Peer Review	In the deliverable	Chris Gussman, TL, SERAS	Prior to deliverable due date	Comments directly in the deliverable	Chris Gussman, TL, SERAS	Prior to deliverable due date
Lab Performance Audits	Audit Report	Outreach Laboratory	Within 30 Days	Corrective Action Plan	Regulatory Agency	Within 30 Days
Lab Performance Audits	Audit Report	Vista Analytical	Within 30 Days	Corrective Action Plan	Regulatory Agency	Within 30 Days

QAPP Worksheet #33
QA Management Reports Table

Type of Report	Frequency (daily, weekly monthly, quarterly, annually, etc.)	Projected Delivery Date(s)	Person(s) Responsible for Report Preparation (Title and Organizational Affiliation)	Report Recipient(s) (Title and Organizational Affiliation)
Technical Report	Monthly	20th of the month following performance period	Task Leader/SERAS	ERT Project Officer and WAM
QA Report	Quarterly	February, May, August, November	QA/QC Officer/SERAS	ERT Quality Coordinator and ERT Project Officer

QAPP Worksheet #34
Verification (Step I) Process Table

Verification Input	Description	Internal/ External	Responsible for Verification (Name, Organization)
Chain of Custody Record	Reviewed by Field Sampling Personnel in field, upon receipt of samples by the outside laboratories and Data Validation Group prior to final analytical report preparation	Internal/ External	SERAS TL Outreach Laboratory Vista Analytical SERAS QA/QC Chemist
Laboratory Data Package	Reviewed for measurement performance criteria	Internal/ External	Outreach Laboratory Vista Analytical SERAS QA/QC Chemist
Analytical Report	Reviewed for accuracy	Internal	SERAS QA/QC Chemist SERAS QA/QC Officer SERAS Program Manager
Trip Report	Reviewed for accuracy	Internal	SERAS Peer Review Team
Technical Memorandum (Summary Report)	Reviewed for accuracy	Internal	SERAS Peer Review Team

QAPP Worksheet #35
Validation (Steps IIa and IIb) Process Table

Step IIa/IIb	Validation Input	Description	Responsible for Validation (Name, Organization)
IIa	SOPs	Ensure that the sampling methods/procedures outlined in QAPP were followed, and that any deviations were noted/approved.	SERAS TL ERT WAM
IIb	SOPs	Determine potential impacts from noted/approved deviations, in regard to PQOs.	SERAS QA/QC Chemist
IIa	Chains of custody	Examine COC forms against QAPP and laboratory contract requirements (e.g., analytical methods, sample identification, etc.).	SERAS TL SERAS QA/QC Chemist
IIa	Laboratory data package	Examine packages against QAPP and laboratory contract requirements, and against COC forms (e.g., holding times, sample handling, analytical methods, sample identification, data qualifiers, QC samples, etc.).	Vista Analytical Lab Personnel Outreach Laboratory Personnel SERAS QA/QC Chemist SERAS TL
IIb	Laboratory data package	Determine potential impacts from noted/approved deviations, in regard to PQOs. Examples include PQLs and QC sample limits (precision/accuracy).	SERAS QA/QC Chemist SERAS QA/QC Officer

QAPP Worksheet #36
Validation (Steps IIa and IIb) Summary Table

Step IIa/IIb	Matrix	Analytical Group	Concentration Level	Validation Criteria	Data Validator (title and organizational affiliation)
IIb	Sediment	PCDDs/PCDFs + TCDT	Low	SERAS SOP #1019, *Data Validation Procedures for Dioxin/Furan Analysis by HRGC/HRMS*	SERAS QA/QC Group
IIb	Sediment	PCB Congeners	Low	Draft SOP #1024, *Data Validation Procedures for PCB Congener Analysis Using HRGC/HRMS*	SERAS QA/QC Group
IIb	Sediment	Radiochemistry	Low	Draft SOP #1023, *Data Validation Procedures for Radiochemical Data*	SERAS QA/QC Group
IIb	Sediment	HCX	Low	Draft Data Assessment Form for Hexachloroxanthene (HCX) Data Review	SERAS QA/QC Group
IIb	Sediment	HCP	Low	Draft Data Assessment Form for Hexachlorophene (HCP) Data Review	SERAS QA/QC Group

☐ Worksheet Not Applicable (State Reason)

QAPP Worksheet #37
Usability Assessment

Summarize the usability assessment process and all procedures, including interim steps and any statistics, equations, and computer algorithms that will be used: See below.
Describe the evaluative procedures used to assess overall measurement error associated with the project: See below.
Identifythe personnel responsible for performingthe usabilityassessment: Assessment ofdata usability will be done byEPARegion2 personnel, ERT WAM and SERAS Statistician.
Describe the documentation that will be generated during usability assessment and how usability assessment results will be presented so that they identify trends, relationships (correlations), and anomalies: Ratios of 2,4,6,8-TCDT to 2,3,7,8-TCDD or other ratios if analytes are expected to be useful for environmental forensics.

The following items will be assessed and conclusions drawn based on their results:

Holding Time: All sample data will be checked to verify that both sample preparation and analysis were performed within the method required holding time.
Calibration: Data associated with instrument calibration and verification of calibration will be reviewed to confirm that all data were generated using properly calibrated instrumentation.
Accuracy/Bias Contamination: Results for all laboratory method blanks and instrument calibration blanks will be checked against performance criteria specified in Worksheet # 28; results for analytes that exceed criteria will be identified and the impact on field sample data will be assessed. Data will be summarized by type of blank.
Accuracy/Bias Overall: Reported values of laboratory control samples, performance samples, and matrix spikes will be evaluated against the spiked or certified concentrationand the percent recoverywill be calculated and compared to the criteria specified inWorksheet #28.The percent recoveryinformation will be used to assess the bias associated with the analysis. Recovery for matrix spikes in conjunction with the recovery reported for performance samples and laboratory control samples will provide information on the impact of the sample matrix on specific analyses. Average recoveries will be calculated and reported by analyte for each type of QC sample.
Precision: Results of the relative percent difference (RPD) will be calculated for each analyte in laboratory. These RPDs will be checked against measurement performance criteria presented on Worksheet #28; RPDs exceeding the stated criteria will be identified.
Sensitivity: Reporting limits will be checked against the criteria presented on Worksheet #15 and QLs presented on Worksheet #15.
Representativeness: A review of field records will be used to confirm that sample collection and handling was performed in a manner that conformed to the designated SOP. Similarly laboratory preparation procedures will be reviewed during validation to ensure that a representative sample was selected for analysis. Any deviations or modifications to field or laboratory procedures which might impact the representativeness of the sample will be discussed in the project final report.
Comparability: The sampling and analytical procedures which will be used in this program have been selected to ensure that the resulting data will be comparable to data from similar programs conducted previously or which will be conducted in the future. Any modifications or deviations from stated procedures which might impact data comparability will be addressed in the project final report.
Completeness: Completeness for the analytical program will be calculated as the number of data points that are accepted as usable based on the validation process divided by the total number of data points for each analysis.

FIGURE 1
Proposed Sampling Map
Givaudan: Transport Pathway to the Passaic River QAPP
November 2013

MDS SU DVR DVW DFWE UDB

&RRLG DVVW\ VWP _98 U M_ZR _81

U WW WUV

DWDDUFY ZSURJ FW\ E

MX DODUF IRSURJ FW\ E E IV U 1 3URSRV G_ GP W\F D M

F

U E3 E YUR P WZD VSR V DP
F W\F E J U J VSR V D G DQ\WFDO UYF V
E3 9
:

F JXU
3URSRV G GP W\DP SO J MDS
3DWDF Y U& UG Y U
YDXGD UD VSRUWBDWZ D\ WR
3DWDF Y U
1 Z DUk J

APPENDIX A
HCX, HCP and Gamma Spectrometry Standard Operating Procedures
Givaudan: Transport Pathway to the Passaic River QAPP
November 2013

The content of the SOP is the confidential property of Vista Analytical Laboratory, Inc. and may not be copied, modified, retransmitted, or used for any purposes other than those that have been determined by associated contractual agreements without Vista's written authorization.

Vista Analytical Laboratory

SOP 41	Revision: 2	Supersedes: Rev1
EXTRACTION AND ANALYSIS OF HEXACHLOROXANTHENE BY HRMS		
Analyst Review:		
Management:		
Quality Assurance:		
Effective Date: 1 November 2013		

Revision	Description of Revision
1	Added Section 6.12: Separatory Funnel. Removed Section 6.17: Whatman filters. Added Section 7.1.5: Carbopack B/Celite. Added Section 9.3; Residual chlorine detection. Added Sections 410.1 and 10.2, renumbered. Added Section 10.5. Added Section 11.1: Aqueous extraction, 11.2: soil extraction. Sections 12.2 and 12.3 no longer optional.
2	Replaced $MeCl_2$ with DCM. Replaced soxhlet with soxhlet/Dean-Stark (SDS). Section 7.2.6 Added Ethyl Acetate. Section 8.3.3: Revised MS/MSD acceptance criteria. Section 8.4.3: Revised duplicate samples acceptance criteria. Section 11.2: Added 70:30 Hexane: Ethyl Acetate. Section: 11.2.3 Replaced DCM with 70:30 Hexane: Ethyl Acetate.

1. PURPOSE

1.1. This procedure describes the preparation and analytical techniques used for the analysis of soil/sediment and aqueous samples for the determination of Hexachloroxanthene (HCX) by HRMS.

2. SUMMARY OF METHOD

2.1. This procedure uses matrix specific extraction, analyte specific cleanup, and HRGC/HRMS analysis techniques.

2.2. This method covers the determination of Hexachloroxanthene (HCX). The following parameter may be determined by this method:

Parameter	CAS No.
1,2,4,5,7,8-Hexachloroxanthene.	38178-99-3

2.3. Detection limits are sample-specific.

3. INTERFERENCES

3.1. Solvents, reagents, glassware and other sample processing hardware may yield discrete artifacts or elevated baselines that may cause misinterpretation of the chromatographic data. All of these materials must be demonstrated to be free from interferants under the conditions of analysis by performing laboratory method blanks. Analysts should avoid using PVC gloves.

3.2. The use of high purity reagents and solvents helps minimize interference problems.

3.3. Interferants co-extracted from the sample will vary considerably from matrix to matrix.

3.4. If interferences are encountered, the method provides selected cleanup procedures to aid the analyst in their elimination.

4. DEFINITIONS

4.1. Definitions are presented in the Glossary.

5. SAFETY

5.1. Procedures shall be carried out in a manner that protects the health and safety of all Vista employees, including the appropriate use of Personal Protective Equipment and engineering controls.

5.2. Each chemical compound should be treated as a potential health hazard. Exposure to these compounds should be reduced to the lowest possible level. Only highly trained personnel thoroughly familiar with handling and cautionary procedures and the associated risks should handle all compounds or reagents.

5.3. Each chemical compound should be handled in well-ventilated, controlled access laboratories.

5.4. Additional health and safety information can be obtained from material safety data sheets (MSDSs) available to all personnel involved in these analyses.

5.5. In the event of a known or potential compromise to the health and safety of a Vista associate, all work must stop and the incident reported immediately to management.

6. APPARATUS AND MATERIALS

6.1. Analytical Balances, capable of reading to 0.01g and 0.0001 g

6.2. Crimp top autoinjector vials plus caps and crimp tool

6.3. Drying Oven, VWR Model 1320 or equivalent

6.4. Electrothermal electromantle six sample and 500 & 1000 mL capacity

6.5. Funnels, 100 mm

6.6. Glass columns, 160 mm x 11 mm and 200 mm x 15 mm

6.7. Glass wool

6.8. Organomation 24-Station N-Evaporator

6.9. Precleaned Glass fiber thimbles - coarse

6.10. Rotary evaporator

6.11. Round bottom flasks: 50, 100, 250, and 500 mL

6.12. Separatory funnels, typically 250 mL to 2-L size

6.13. Soxhlet/Dean-Stark (SDS) Extractor

6.14. Teflon boiling chips

6.15. Test tubes plus Teflon lined caps, 16 mm x 125 mm

6.16. Vials, Glass conical,

6.17. Volatile Organic Analysis (VOA) vials, 40 mL

6.18. Wiretrol II Precision Disposable Micropipettes

6.19. Zymark TurboVap II plus 250 mL tubes with 1 mL stems or equivalent

6.20. EquipmentCTC Autosampler Model A200S.

6.21. Alpha Station 500.

6.22. Neslab HX200, HX300 or HX500 Water Cooler.

6.23. HP 6890F Gas Chromatograph

6.24. 60 meter DB-5MS GC column, 0.25 mm i.d., 0.25 µm film (J&W Scientific) or equivalent

6.25. Waters Autospec Ultima Magnetic Sector High Resolution Mass Spectrometer.

6.26. Injection vial inserts, 100 µL (Sun International or equivalent)

7. REAGENTS, SOLVENTS AND STANDARDS

7.1. Reagents (Highest purity available)

7.1.1. Acid Silica Gel, 44%

7.1.2. Activated Silica Gel, kilned for ~5 hours at 550°C, granular

7.1.3. Anhydrous sodium sulfate (Na_2SO_4), kilned for ~5 hours at 550°C, granular

7.1.4. Basic Silica Gel, 33%

7.1.5. Florisil

7.1.6. Acid Alumina

7.1.7. Hydrochloric acid, concentrated

7.1.8. Hydromatrix

7.1.9. Ottawa sand, kilned for ~5 hours at 550°C

7.1.10. Ultra-pure nitrogen gas

7.1.11. Water, HPLC grade

7.2. Solvents

7.2.1. Tetradecane

7.2.2. Hexane

7.2.3. Methylene chloride (DCM)

7.2.4. Toluene

7.2.5. Acetone

7.2.6. Ethyl Acetate

7.3. Standards

7.3.1. All analytical standards are obtained from a certified vendor. See SOP 15 and the current spike sheet for more information.

8. QUALITY CONTROL

8.1. Method Blank (MB): Method blank is a matrix preparation that is free of native analyte that has been prepared and analyzed using the same procedures followed for the rest of the analytical batch. The method blank should simulate (as close as possible) the matrix to be extracted.

8.1.1. A method blank is run with every analytical batch or 20 samples (whichever is less).

8.1.2. For the determination of the native Hexachloroxanthene, the levels measured in the method blank must be less than the method quantitation limit or ten times lower than the concentration found in any sample within the analytical batch.

8.1.3. All samples within an analytical batch are re-extracted and analyzed if the method blank associated with that batch does not meet criteria.

8.2. Ongoing Precision and Recovery (OPR): An OPR is prepared by adding a known quantity of native standards to an interferant free matrix and used to assess method performance (precision and accuracy).

FOIA_07123_0003548_0110

8.2.1. A 10 µL aliquot containing 4ng HCX is used for spiking.

8.2.2. The control limits are 50-150% for HCX.

8.2.3. If the OPR of an isomer is outside the recommended control than the sample and the OPR will be re-extracted and analyzed.

8.3. Matrix Spike (MS/MSD): Upon client request, a matrix spike sample is prepared by adding a known quantity of native standards to a sample matrix prior to extraction.

8.3.1. An MS/MSD is performed upon client request.

8.3.2. A 10 µL aliquot containing 4ng HCX is used for spiking.

8.3.3. The relative percent difference between MS/MSD samples should be 20%. If the criteria are not met, the data must be evaluated to determine whether the samples shall be re-extracted or the data are qualified appropriately.

8.4. Duplicate Samples: Duplicate samples are two separate aliquots taken from the same source. Duplicate samples are performed upon client request.

8.4.1. A duplicate sample is performed upon client request.

8.4.2. Duplicate samples are analyzed independently to assess laboratory precision.

8.4.3. If the relative percent difference from duplicate sample analyses is greater than 25%, then both duplicate samples will be qualified.

9. COLLECTION, PRESERVATION, AND HANDLING

9.1. Extract aqueous samples and sediment samples within 14 days of collection. Analyze within 40 days from extraction

9.2. Store all samples at 4°C in the dark

9.3. If residual chlorine is detected in an aqueous sample, add 80 mg sodium thiosulfate per liter.

10. SAMPLE PREPARATION

10.1. Residual Chlorine Determination (aqueous only)

10.1.1. Obtain an Aquacheck strip and place it directly into a small amount of sample in a disposable weigh boat. Move the strip back and forth for 30 seconds.

10.1.2. Check the color on the strip against the color chart on Aquacheck container.

10.1.3. If there is chlorine present, add 80 mg of sodium thiosulfate.

10.1.4. Record procedure on extraction benchsheet.

10.2. pH Determination (aqueous only)

10.2.1. Obtain a pH strip and place it directly into a small amount of sample in a disposable weigh boat. Move the strip back and forth for 30 seconds.

10.2.2. Check the color on the strip against the color chart on the pH container. Record the pH.

10.3. % Solids Determination

10.3.1. "ZERO" or "TARE" the balance.

10.3.2. Place a weigh boat on the balance and record the weight as "Boat Weight".

10.3.3. Samples are individually homogenized with a clean spoon, spoonula or spatula. Add a portion of the sample (2 – 10 g) to the weigh boat and record the weight as "Wet Wt. + Boat Wt."

10.3.4. Place the weigh boat plus sample in an oven at 110±5°C for at least overnight.

10.3.5. Remove the weigh boat plus sample from the oven and allow to come to room temperature.

10.3.6. "ZERO" or "TARE" the balance.

10.3.7. Place the weigh boat plus sample on the balance and record the weight as "Residue + Boat Wt."

10.3.8. Calculate the percent solids by the following formula:

$$\%\text{Solids} = \frac{(\text{Residue Wt.} + \text{Boat Wt.}) - (\text{Boat Wt.})}{(\text{Wet Wt.} + \text{Boat Wt.}) - (\text{Boat Wt.})} \text{ X } 100$$

10.4. Compositing – by client request

10.4.1. Samples are individually homogenized, if necessary, with a clean spoon, spoonula or spatula. Aqueous samples should be mixed and shaken to obtain a representative sample.

10.4.2. Weigh out approximately 50 grams, or amount designated by the client, from each individual sample and place into a pan.

10.4.3. Repeat the homogenization for each sample.

10.4.4. Place each individual sample into a new, separate container. Record the weight of each sample on the benchsheet.

10.4.5. Retain the original sample containers. The new container is given a new sample ID number and then processed through the appropriate extraction.

10.5. Sample Weight Determination (Aqueous)

10.5.1. Volumetric: Allow sample to come to ambient temperature, mark the water meniscus on the side of the 1 L sample bottle. Once the sample has been transferred, fill the sample bottle to the mark with water and transfer to a 1000 mL graduated cylinder. Record the sample volume to the nearest 5 mL.

10.5.2. Gravimetric: Sample bottle including sample is placed on calibrated balance. The weight is recorded. The empty bottle is allowed to air-dry overnight and then re-weighed on a calibrated balance. This weight is recorded.

11. EXTRACTION PROCEDURES

11.1. Aqueous Samples

11.1.1. Record the combined weight of the bottle, cap and sample for each sample to be extracted. After the sample has been removed from the bottle, allow it to drain overnight and reweigh it and the cap to determine the amount of sample extracted.

11.1.2. For the method blank (MB) and OPR(s), transfer ~1 liter of HPLC water into a one liter bottle for each.

FOIA_07123_0003548_0113

11.1.3. Add the appropriate volume of Internal Standard (IS) solution to a test tube containing ~1 mL of acetone. Quantitatively transfer to the samples and QC with small portions of the solvent used.

11.1.4. Add the appropriate volume of Native Standard (NS) solution to a test tube containing the IS/solvent and then quantitatively transfer to the aliquot of matrix assigned as an LCS, OPR, MS or MSD. Allow the spiked samples to equilibrate for at least 1 hour before extraction.

11.1.5. Pour the sample into a 2-liter separatory funnel. Rinse the sample container with ~60 mL of DCM and add it to the separatory funnel.

11.1.6. Stopper each separatory funnel and shake vigorously, with frequent venting, for 2 minutes.

11.1.7. Allow the phases to separate (centrifugation or other mechanical means may be used to facilitate separation).

11.1.8. Drain the DCM extract through a funnel of Na_2SO_4 into a 500 mL round bottom flask.

11.1.9. Extract the aqueous phase with two more ~60 mL portions of DCM (shaking 1 minute each time) and pass the extracts through the same funnel of Na_2SO_4 into a round bottom flask.

11.1.10. Pass the final extract through Na_2SO_4 one last time and concentrate the extract to approximately 10 mLs.

11.2. Soil Samples: 70:30 Hexane/Ethyl Acetate

11.2.1. Samples are individually homogenized with a clean spoon, spoonula or spatula. Weigh the sample (nominal 10 g dry weight equivalent) directly into an analyte-free thimble, carefully breaking up any large lumps of sample.

11.2.2. Add the appropriate volume of IS and NS solutions directly to the aliquot of matrix.

11.2.3. Assemble the soxhlet/Dean-Stark (SDS) apparatus, and add a fresh charge of 70:30 Hexane/Ethyl Acetate to the receiver and reflux flask. Apply power to the heating mantle to begin refluxing.

11.2.4. Reflux the sample for a total of 16 hours. Cool and disassemble the apparatus.

11.2.5. Pass extract through Na_2SO_4.

11.2.6. Add CRS and tetradecane to the extract.

11.2.7. Concentrate the extracts using the rotary evaporator. Exchange twice with 50 mLs of hexane. Bring to < 2mL of hexane.

12. CLEANUP PROCEDURES

12.1. Silica Gel Column Preparation (aqueous only)

12.1.1. Pack an 11 mm. id. x 160 mm. column as per Figure 1.

12.1.2. Pre-rinse the column with 20 mL of hexane. Discard the rinsate.

12.1.3. Quantitatively transfer the sample extract onto the column using a disposable pipet. Rinse with additional hexane and add to the column and collect the eluate.

12.1.4. Just prior to the exposure of the sodium sulfate layer to air, add 25 mL of hexane. After the hexane has passed, elute with 35 mL of 40% DCM/hexane. Continue collection of the eluate into a 100 mL round bottom flask.

12.1.5. Roto-evaporate the eluate to less than 5 mL. Quantitatively transfer to a conical vial, using a hexane rinse. Concentrate appropriately.

12.2. Acid Base Silica Gel/Acid Alumina (ABSG/AA) (soil/sediments)

12.2.1. Prepare the column as depicted in Figure 2.

12.2.2. Rinse the ABSG column with ~60 mL hexane, discard the eluate. Rinse the AA column with ~30 mL of DCM and then ~30 mL hexane.

12.2.3. Position the ABSG column so that it elutes directly onto the Acid Alumina column.

12.2.4. Transfer the extract to the ABSG column with 2-4 small portions of hexane.

12.2.5. When the extract reaches the sodium sulfate, add 150 mL of hexane.

12.2.6. When all of the ABSG eluate has passed through the Acid Alumina column, remove the ABSG column, discard all the

eluates.

12.2.7. Elute the Acid Alumina column with ~50 mL of 20% DCM:hexane, collect the eluate.

12.2.8. Add 100 µL tetradecane and concentrate to the tetradecane at 50°C (only if proceeding to Florisil).

12.3. Florisil (F) (soil/sediments)

12.3.1. Prepare the column as depicted in Figure 3.

12.3.2. After removing the florisil jar from the oven, allow the florisil to cool ~ 10 minutes before weighing out 1 gram.

12.3.3. Rinse the column with ~50 mL of DCM, then ~50 mL of hexane, discard the eluate.

12.3.4. Transfer the extract to the column with 2-4 small portions of hexane, discard the eluate.

12.3.5. Elute the column with ~30 mL of hexane, discard eluate.

12.3.6. Elute the column with ~50 mL of DCM, collect the eluate.

12.3.7. Concentrate the eluate appropriately.

13. ADJUST TO FINAL VOLUME

13.1. Using hexane, quantitatively transfer the concentrated eluate to a conical vial that contains the Recovery Standard (RS) and 10 µL of tetradecane.

13.2. Using nitrogen blow down, concentrate to the tetradecane.

13.3. Rinse the walls of the conical with hexane, concentrate down to the tetradecane.

13.4. Using a 10-20 µL Wiretrol, transfer the tetradecane to an insert in a crimp top amber autoinjector vial and then cap.

14. GC/MS ANALYSIS

14.1. Analyze samples with selected ion monitoring.

14.2. Recovery of each internal standard versus the recovery standard must be between 25 – 150% or have a signal to noise ratio > 2.5:1 for natives and > 10:1 for labeled compounds.

15. CALIBRATION

15.1. Initial Calibration

15.1.1. An initial calibration curve is created to demonstrate the linearity of the HRMS system over the calibration range. An initial calibration is repeated whenever a new set of spiking calibration standards are created or whenever the continuing calibration falls outside the acceptance criteria.

15.1.2. Each calibration standard contains HCX. Calibration standard solutions are presented in Table 2.

15.1.3. One internal standard and one recovery standard are used to improve quantitation.

15.1.4. See Table 2 for calibration range.

15.1.5. 2 µL maximum injection of standards are made to create an initial calibration curve whenever the continuing calibration check falls outside the acceptable relative response factor window.

15.1.6. An initial calibration curve is accepted if the following criteria are met:

1.) The signal to noise ratio (s/n) exceeds 10:1 for all ions monitored.

2.) The ion abundance ratio measurements are within ± 15% of the theoretical ratio.

3.) The %RSD for the mean response factors must be within ±20% for the native standards and within ±35% for internal standards.

15.1.7. If the criteria are not achieved, a new initial calibration curve must be prepared and analyzed.

15.2. Continuing Calibration

15.2.1. A verification (VER) standard from the initial calibration curve (CS3) is injected at the beginning of an analytical 12-hour sequence. The following criteria must be met:

15.2.2. The percent deviation recoveries for the native compound must be 70-130% and 50-150% for labeled compounds.

FOIA_07123_0003548_0117

15.2.3. The ion ratios are within the criteria listed in Table 1. If the ratios do not meet the acceptance criteria, then the instrument must be recalibrated and the affected samples are reanalyzed.

15.2.4. The signal to noise ratio (s/n) must exceed 10:1 for all ions monitored. If the s/n ratio is not met, then associated extracts are re-analyzed.

15.3. Qualitative Determination

15.3.1. To identify a chromatographic peak as a HCX, it must meet the following criteria:

1) The signals for the two exact m/zs being monitored must be present and must maximize within ±2 seconds of one another.

2) The signal-to-noise ratio (S/N) of each of the two exact m/zs must be ≥2.5:1 for a sample extract.

3) The ion abundance ratios must be within the limits established for the homologous series (Table 1A and 1B).

4) The relative retention time of HCX must be within 1.044-1.086 seconds of ^{13}C-1,2,3,7,8,9-HxCDF.

15.3.2. Quantitative Determination

15.3.3. Quantitate the HCX peaks from the response relative to the appropriate internal standard.

15.3.4. Recovery of each internal standard versus the recovery standard must be 25-150%.

15.3.5. Recoveries below the limits may be accepted if the signal to noise is >10:1. If the signal to noise is not >10:1, samples must be re-extracted and re-analyzed or the data must be qualified.

15.3.6. If a chromatographic peak saturates the detector, a dilution of the extract must be analyzed.

16. CALCULATIONS

16.1. The concentration for HCX is calculated by using the formula:

$$C_X = \frac{(A_X)(Q_{IS})}{(A_{IS})(W)(RRF)}$$

Where:

C_X	=	*Concentration of unlabeled HCX,*
A_X	=	*Sum of the integrated ion abundances of the quantitation ions for unlabeled HCX*
A_{IS}	=	*Sum of the integrated ion abundances of the quantitation ion for the labeled internal standards,*
Q_{IS}	=	*Quantity, in pg, of the internal standard added to the sample before extraction,*
W	=	*Weight of the sample (solid, dry weight or liquid)*
DW	=	*Sample wt.× %solids/100*
RRF	=	*Calculated relative response factor for the analyte.*

16.2. The detection limits can be calculated using the following formula:

$$DL = \frac{(2.5)(H_N)(Q_{IS})}{(H_{IS})(W)(RRF)}$$

Where:

DL	=	*Sample specific estimated detection limit,*
H_N	=	*Noise height (peak to peak),*
H_{IS}	=	*Peak height of the internal standard,*
Q_{is}	=	*Quantity, in pg, of the internal standard added to the sample before extraction,*
W	=	*Weight of the sample (solid or liquid), and*
RRF	=	*Calculated relative response factor for the analyte.*

16.3. The reporting limits can be calculated using the following formula:

$$RL = \frac{(\text{Extract Conc. of Low point of curve})(\text{Final volume})}{(\text{Weight of sample})}(\text{Split})$$

16.4. The Relative Response factor can be calculated using the following formula:

$$RRF = \frac{\left(A^1_N + A^2_N\right)\cdot(C_{IS})}{\left(A^1_{IS} + A^2_{IS}\right)\cdot(C_N)}$$

Where:

$A1_N$, $A2_N$	=	*Areas of the primary and secondary m/zs for the native compound*
$A1_{IS}$, $A2_{IS}$	=	*Areas of the primary and secondary m/zs for the labeled compound.*
C_{IS}	=	*Concentration of the labeled compound in the calibration standard.*
C_N	=	*Concentration of the native compound in the calibration standard*

17. POLLUTION PREVENTION

17.1. The techniques used in this method are amenable to solvent recovery, and it is recommended that the laboratory recover solvents wherever feasible.

17.2. Standards should be prepared in volumes consistent with laboratory use to minimize disposal of standards.

18. WASTE MANAGEMENT

18.1. Waste generated in the procedure must be segregated and disposed according to the facility hazardous waste procedures. Safety officer should be contacted if additional information is required.

18.2. The laboratory waste management is in compliance with all federal, state, and local regulations to protect the air, water, and land by minimizing and controlling all releases from fume hoods and bench operations.

19. REFERENCES

19.1. EPA Method 1668, Revision A: Chlorinated Biphenyl Congeners in Water, Soil, Sediment, and Tissue by HRGC/HRMS, United States Office of Water, EPA No. EPA 821-R-00-002, Environmental Protection Agency (4303), December 1999

19.2. USEPA Method 1613, Revision B, Dated October 1994.

Figure 1

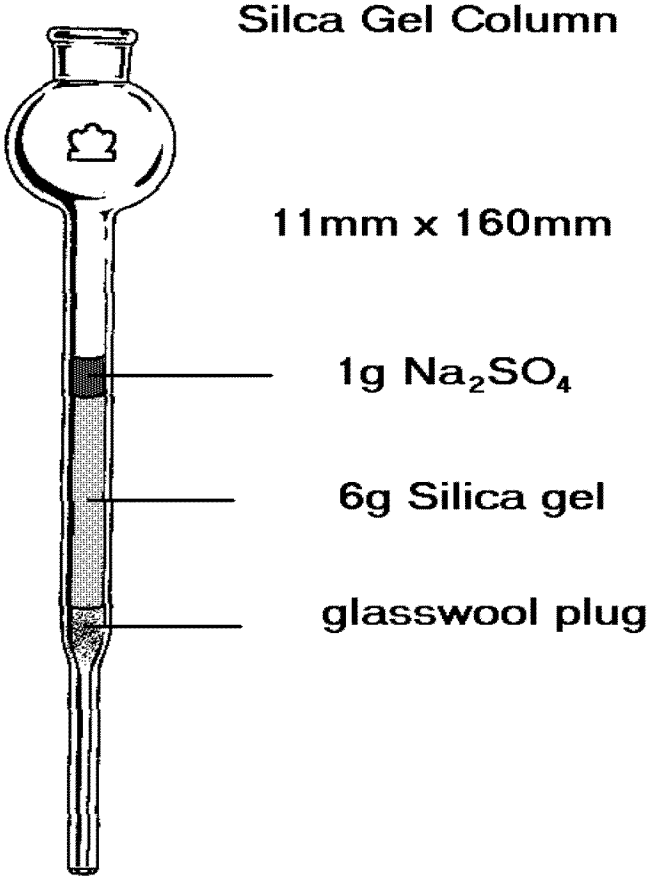
Silca Gel Column
11mm x 160mm
1g Na_2SO_4
6g Silica gel
glasswool plug

Figure 2

Acid Base Silica Gel/Acid Alumina (ABSG/AA)

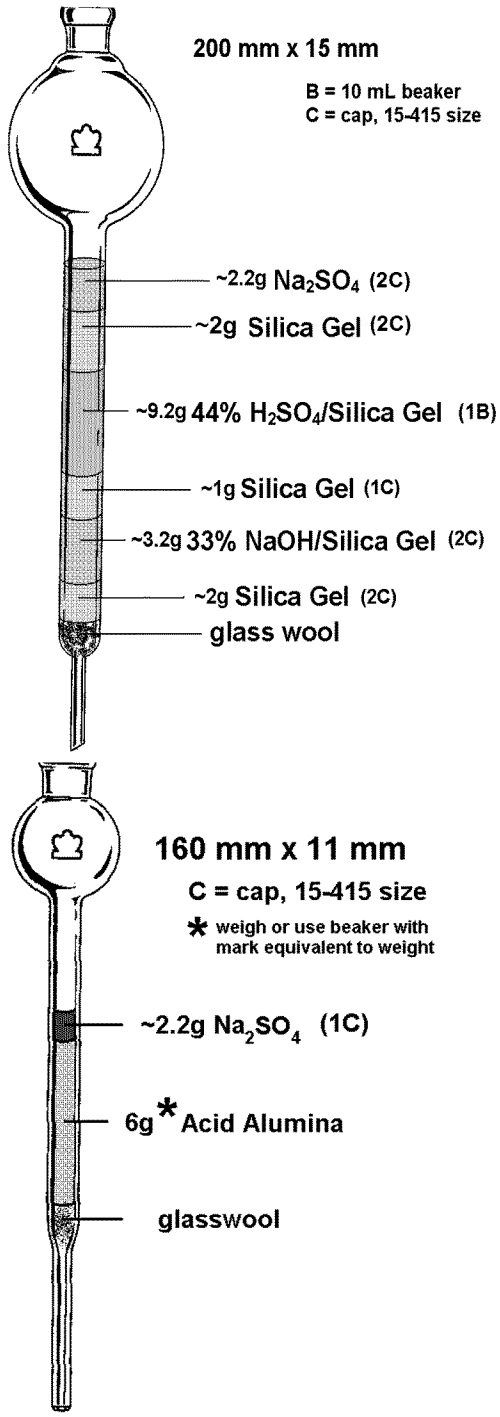

Figure 3

Florisil

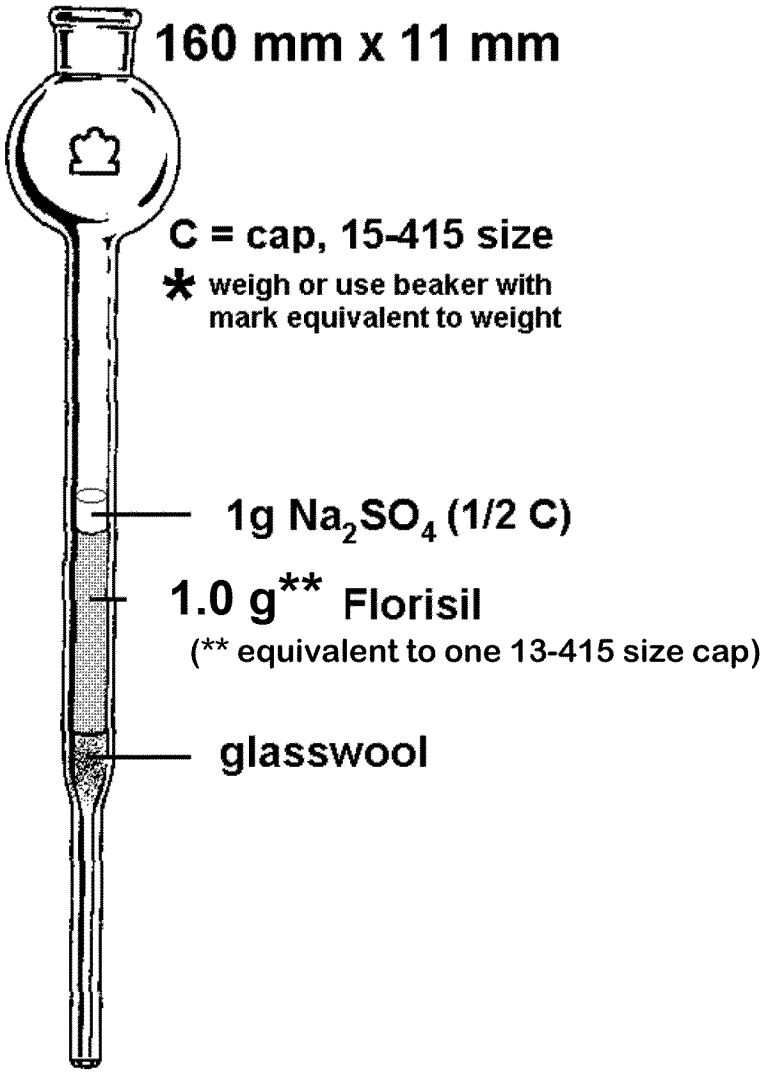

Table 1A

Hexachloroxanthene

Number of Chlorine Atoms	Exact m/z	Theoretical Ion Ratio	Control Limits	
			Lower	Upper
6	387.8364/389.8334	1.24	1.05	1.43

(1) Represents ±15% windows around the theoretical ion abundance ratios.

Table 1B

Standards

Labeled Compound	Exact m/z	Theoretical Ion Ratio	Control Limits	
			Lower	Upper
^{13}C-1,2,3,7,8,9-HxCDF	383.8639/385.8610	0.51	0.43	0.59
^{13}C-1,2,3,4,6,9-HxCDF	383.8639/385.8610	0.51	0.43	0.59
^{13}C-1,2,3,7,8,9-HxCDD	401.8560/403.8530	1.24	1.05	1.43

Table 2

Compound	Calibration Solutions (ng/mL)						
Native Compound	**CS0**	**CS1**	**CS2**	**CS3***	**CS4**	**CS5**	**CS6**
Hexachloroxanthene	10	25	100	500	1000	2000	4000
Labeled Compound							
^{13}C-1,2,3,7,8,9-HxCDF	100	100	100	100	100	100	100
Recovery Standard							
^{13}C-1,2,3,4,6,9-HxCDF	100	100	100	100	100	100	100
Cleanup Recovery Standard							
^{13}C-1,2,3,7,8,9-HxCDD	100	100	100	100	100	100	100

□ Calibration Verification Solution

Table 3

Congener	VER	IPR		OPR %	Labeled compound recovery in samples %
		RSD %	Ave %		
1,2,4,5,7,8-HxCX	70-130	40	60-140	50-150	NA
^{13}C-1,2,3,7,8,9-HxCDF	50-150	50	35-135	30-140	25-150
^{13}C-1,2,3,7,8,9-HxCDD	50-150	50	35-135	30-140	25-150

Glossary

Calibration Standard (CAL) — A solution prepared from a secondary standard and/or stock solutions and used to calibrate the response of the instrument with respect to analyte concentration.

Calibration Verification Standard (VER) — The mid-point calibration standard (CS3) that is used in to verify calibration. See Table 2.

CS0, CS1, CS2, CS3, CS4, CS5, CS6 — See Calibration standards and Table 2.

Field Blank — An aliquot of reagent water or other reference matrix that is placed in a sample container in the laboratory or the field, and treated as a sample in all respects, including exposure to sampling site conditions, storage, preservation, and all analytical procedures. The purpose of the field blank is to determine if the field or sample transporting procedures and environments have contaminated the sample.

GC — Gas chromatograph or gas chromatography.

HCX — Hexachloroxanthene

HRGC — High resolution GC.

HRMS — High resolution MS.

IPR — Initial precision and recovery; four aliquots of the diluted PAR standard analyzed to establish the ability to generate acceptable precision and accuracy. An IPR is performed prior to the first time this method is used and any time the method or instrumentation is modified.

Laboratory Blank — See method blank.

Laboratory Control sample (LCS) — See ongoing precision and recovery standard (OPR).

Laboratory Reagent Blank — See method blank.

May — This action, activity, or procedural step is neither required nor prohibited.

May Not — This action, activity, or procedural step is prohibited.

Method Blank — An aliquot of reagent water that is treated exactly as a sample including exposure to all glassware, equipment, solvents, reagents, internal standards, and surrogates that are used with samples. The method blank is used to determine if analytes or interferences are present in the laboratory environment, the reagents, or the apparatus.

Minimum Level (ML) — The level at which the entire analytical system must give a recognizable signal and acceptable calibration point for the analyte. It is equivalent to

FOIA_07123_0003548_0126

the concentration of the lowest calibration standard, assuming that all method-specified sample weights, volumes, and cleanup procedures have been employed.

MS — Mass spectrometer or mass spectrometry.

Must — This action, activity, or procedural step is required.

OPR — Ongoing precision and recovery sample (OPR); a laboratory blank spiked with known quantities of analytes. The OPR is analyzed exactly like a sample. Its purpose is to assure that the results produced by the laboratory remain within the limits specified in this method for precision and recovery.

PFK — Perfluorokerosene; the mixture of compounds used to calibrate the exact m/z scale in the HRMS.

Preparation Blank — See method blank.

Primary Dilution Standard — A solution containing the specified analytes that is purchased or prepared from stock solutions and diluted as needed to prepare calibration solutions and other solutions.

Quality Control Check Sample (QCS) — A sample containing all or a subset of the analytes at known concentrations. The QCS is obtained from a source external to the laboratory or is prepared from a source of standards different from the source of calibration standards. It is used to check laboratory performance with test materials prepared external to the normal preparation process.

Reagent Water — Water demonstrated to be free from the analytes of interest and potentially interfering substances at the method detection limit for the analyte.

Relative Standard Deviation (RSD) — The standard deviation times 100 divided by the mean. Also termed "coefficient of variation."

RSD — See relative standard deviation.

Should — This action, activity, or procedural step is suggested but not required.

SICP — Selected ion current profile; the line described by the signal at an exact m/z.

Stock Solution — A solution containing an analyte that is prepared using a reference material traceable to EPA, the National Institute of Science and Technology (NIST), or a source that will attest to the purity and authenticity of the reference material.

VER — See calibration verification standard.

The content of the SOP is the confidential property of Vista Analytical Laboratory, Inc. and may not be copied, modified, retransmitted, or used for any purposes other than those that have been determined by associated contractual agreements without Vista's written authorization.

Vista Analytical Laboratory

SOP 50	Revision: 1	Supersedes: Rev 0
PREPARATION AND ANALYSIS OF AQUEOUS AND SOLID MATRICES FOR THE DETERMINATION OF HEXACHLOROPHENE		
Analyst Review:		
Management:		
Quality Assurance:		
Effective Date: 7 November 2013		

Revision	Description of Revision
1	Section 4: deleted. Renumbered. Section 8.2: removed DCM, acetone, ethanol, toluene. Section 9.2: updated holding time. Sections 10.4 and 10.5: updated RPD criteria.

1. PURPOSE

1.1 This SOP outlines and describes the preparative and analytical techniques used for the determination of hexachlorophene in aqueous and solid matrices.

2. SCOPE

2.1 Data determined to be out-of-control from criteria stated within this SOP are handled according to procedures addressed within the applicable section.

Compound	CAS Registry No.*
Hexachlorophene	70-30-4

*Chemical Abstract Service

3. SUMMARY OF METHOD

3.1 This procedure utilizes an exhaustive soxhlet/Dean Stark extraction followed by an anion exchange SPE concentration and purification. Detection and quantitation of hexachlorophene is via ultra performance liquid chromatography/tandem mass spectrometry (UPLC/MS/MS) using isotope dilution techniques and internal standard calibration.

4. CONTAMINATION AND INTERFERENCES

4.1 Solvents, reagents, glassware and other sample processing hardware may yield discrete artifacts or elevated baselines that may cause misinterpretation of the chromatographic data. All of these materials must be demonstrated to be free from interfering substances under the conditions of analysis by performing laboratory method blanks. The use of high purity reagents and solvents helps to minimize interference problems.

4.2 Interferants co-extracted from the sample will vary considerably from matrix to matrix.

5. DEFINITIONS

5.1 Definitions are presented in the Glossary.

6. SAFETY

6.1 Procedures shall be carried out in a manner that protects the health and safety of all Vista employees.

FOIA_07123_0003548_0129

6.2 Each chemical compound should be treated as a potential health hazard. Exposure to these compounds should be reduced to the lowest possible level. All compounds or reagents should be handled only by highly trained personnel thoroughly familiar with handling and cautionary procedures and the associated risks

6.3 Additional health and safety information can be obtained from material safety data sheets (MSDSs) available to all personnel involved in these analyses.

6.4 In the event of a known or potential compromise to the health and safety of a Vista associate, all work must stop and the incident reported immediately to management.

6.5 Contamination of the laboratory will be minimized by conducting most of the manipulations in a hood

6.6 The toxicity or carcinogenicity of each chemical used in this method has not been precisely determined; however, each compound should be treated as a potential health hazard. Exposure to these compounds should be reduced to the lowest possible level. The laboratory is responsible for maintaining a current awareness file of OSHA regulations regarding the safe handling of the chemicals specified in this method. A reference file of MSDS should also be made available to all personnel involved in these analyses.

7. APPARATUS AND MATERIALS

Note: All materials used should be suitable for LC work, and comparable brand materials can be substituted where specific brands are mentioned.

7.1 Analytical Balances, capable of reading to 0.01g and 0.0001g

7.2 Electrothermal electromantle six sample and 500 & 1000 mL capacity

7.3 Precleaned Glass fiber thimbles - coarse

7.4 Syringe filter, 0.2 µm

7.5 Round bottom flasks: 500mL

7.6 Soxhlet/Dean-Stark (SDS) Extractor

7.7 Teflon boiling chips

7.8 Solid Phase Extraction Manifold (Waters)

7.9 Strata - XA (Phenomenex)

7.10 Silicone tubing, 1/16" diameter, various lengths (Nalgene)

7.11 Screw top polypropylene LC vials, 12x32mm (Waters)

7.12 HDPE Bottle various sizes (Nalgene)

7.13 Screw caps with pre-slit polypropylene septa, for 12x32mm vials (Waters)

7.14 Disposable polypropylene Pasteur pipets, various sizes

7.15 Aquacheck strips and pH strips

7.16 Test tubes plus Teflon lined caps, 16 mm x 125 mm

7.17 Organomation 24-Station N-Evaporator with water bath capable of heating to 65°C

7.18 Polypropylene centrifuge tubes, 13 mm x 100 mm

7.19 Wiretrol II Precision Disposable Micropipettes

7.20 Acquity Ultra Performance LC (Waters)

7.21 Lenovo computer work station with MassLynx Software

7.22 Quattro Premier XE with Micromass Technology (Waters)

8. REAGENTS, SOLVENTS AND STANDARDS

8.1 Reagents (HPLC grade or above)

8.1.1 Dipotassium Phosphate, HPLC grade

8.1.2 Formic Acid, Concentrate

8.1.3 Ultra-pure nitrogen gas

8.1.4 Ultra-pure argon gas

8.2 Solvents (HPLC Grade or above)

8.2.1 Reagent Water

8.2.2 Acetonitrile

8.2.3 Hexane

8.2.4 Methanol (MeOH)

8.2.5 Ethanol

8.2.6 Toluene

8.3 Standards

8.3.1 All analytical standards are obtained from a certified vendor.

8.3.2 See SOP 15 and the current spike sheet for more information.

9. COLLECTION, PRESERVATION, AND HANDLING

9.1 HDPE bottles and jars must be used for collection.

9.2 All samples must be extracted within 365 days from collection and analyzed within 365 days of extraction.

9.3 Store at < 6°C in the dark.

10. QUALITY CONTROL

10.1 Each time a modification is made to this method and the detection limit will be affected by the change, the laboratory is required to demonstrate that the MDL is lower than one-third the regulatory compliance level or one-third the method reporting limit (MRL) in the method, whichever is higher.

10.2 Method Blank (MB): Method blank is a matrix preparation that is free of native analyte that has been prepared and analyzed using the same procedures followed for the rest of the analytical batch. Simulate as close as possible the matrix to be extracted.

10.2.1 A MB is analyzed with every analytical batch, or every 20 samples, whichever is less.

10.2.2 For the determination of native Hexachlorophene, the levels measured in the method blank must be below 1/3 the MRL.

10.2.3 If amount found is greater than the minimum level or one-third the regulatory compliance limit, whichever is greater; or if any potentially interfering compound is found in the blank at or above the minimum level for each congener, the data must be evaluated to determine whether the batch shall be re-extracted or the data are qualified appropriately.

10.2.4 If there is evidence of contamination within the MB, then the source of the contamination must be located. The data must be evaluated to determine whether the batch shall be re-extracted or the data is qualified appropriately.

10.3 Ongoing Precision and Recovery Samples (OPR): An ongoing precision and recovery sample is prepared by adding a known quantity of native standard to an interferant free matrix and used to assess method performance (precision and recovery).

10.3.1 Add the appropriate amount of native spike.

10.3.2 An OPR is analyzed with every analytical batch, or every 20 samples, whichever is less.

10.3.3 The control limits are 50-120% for Hexachlorophene.

10.3.4 If the percent recovery of the native or internal standard of an isomer in the OPR and the associated sample(s) are out of method limits, it is recommended that the sample(s) be re-extracted and/or re-analyzed.

10.4 Matrix Spike (MS/MSD): A matrix spike sample is prepared by adding the appropriate quantity of native standards to a sample matrix prior to extraction. MS/MSD's are performed if the required amount of sample is provided by the client.

10.4.1 An MS/MSD is performed upon client request.

10.4.2 The relative percent difference between MS/MSD samples should be $\leq$ 50%.

10.4.3 If RPD does not meet the acceptance criteria, the data is evaluated and qualified appropriately.

10.5 Duplicate Samples: Duplicate samples are two separate aliquots taken from the same source. Duplicate samples are analyzed independently to assess laboratory precision.

10.5.1 Duplicate Samples are performed upon client request.

10.5.2 The relative percent difference between duplicate samples should be $\leq$ 50%

10.5.3 If the concentration is within a factor of 2 of the MRL, the relative percentage difference (RPD) must be $\leq$ 50%

10.5.4 If the RPD does not meet the acceptance criteria, the data are evaluated and qualified appropriately.

10.6 Second source standard: Analytes from a different source than that of the calibration standards. This is prepared and analyzed in the same way as a CS3.

10.6.1 This is analyzed every time new standards are prepared.

10.6.2 The calculated value for the second source standard must be within ±30% of the expected value.

11. SAMPLE PREPARATION

11.1 Residual Chlorine Determination (aqueous only)

11.1.1 Obtain an Aquacheck strip and place it directly into a small amount of sample in a disposable weigh boat. Move the strip back and forth for 30 seconds.

11.1.2 Check the color on the strip against the color chart on Aquacheck container.

11.1.3 If there is chlorine present add Trizma to the sample bottle.

11.1.4 Record the procedure on extraction bench sheet.

11.2 pH Determination (aqueous only)

11.2.1 Obtain a pH strip and place it directly into a small amount of sample in a disposable weigh boat. Move the strip back and forth for 30 seconds.

11.2.2 Check the color on the strip against the color chart on the pH container. Record the pH.

11.3 % Solids Determination

11.3.1 "ZERO" or "TARE" the balance.

11.3.2 Place a weigh boat on the balance and record the weight as "Boat Weight".

11.3.3 Samples are individually homogenized with a clean spoon, spoonula or spatula. Add a portion of the sample (2 – 10 g) to the weigh boat and record the weight as "Wet Wt. + Boat Wt."

11.3.4 Place the weigh boat plus sample in an oven at 110±5°C for at least overnight.

11.3.5 Remove the weigh boat plus sample from the oven and allow to come to room temperature.

11.3.6 "ZERO" or "TARE" the balance.

11.3.7 Place the weigh boat plus sample on the balance and record the weight as "Residue + Boat Wt."

11.3.8 Calculate the percent solids by the following formula:

$$\%\text{Solids} = \frac{(\text{Residue Wt.} + \text{Boat Wt.}) - (\text{Boat Wt.})}{(\text{Wet Wt.} + \text{Boat Wt.}) - (\text{Boat Wt.})} \text{ X } 100$$

11.4 Compositing – by client request

11.4.1 Samples are individually homogenized, if necessary, with a clean spoon, spoonula or spatula. Aqueous samples should be mixed and shaken to obtain a representative sample.

11.4.2 Weigh out approximately 50 grams, or amount designated by the client, from each individual sample and place into a pan.

11.4.3 Repeat the homogenization for each sample.

11.4.4 Place each individual sample into a new, separate container. Record the weight of each sample on the benchsheet.

11.4.5 Retain the original sample containers. The new container is given a new sample ID number and then processed through the appropriate extraction.

12. EXTRACTION PROCEDURES

12.1 Aqueous Samples

12.1.1 The appropriate aliquot of the sample will be taken gravimetrically.

12.1.2 For the method blank (MB) and OPR(s), transfer ~250 mL of HPLC water into a bottle for each.

12.1.2.1.1 Add the appropriate volume of Internal Standard (IS) solution and the appropriate volume of Native Standard (NS) solution to OPR, MS or MSD. Allow the spiked samples to equilibrate for at least 1 hour before extraction.

FOIA_07123_0003548_0135

12.2 Soil Samples

12.2.1 Samples are individually homogenized with a clean spoon, spoonula or spatula. Weigh the sample (nominal 10 g dry weight equivalent) directly into an analyte-free thimble, carefully breaking up any large lumps of sample.

12.2.2 Add the appropriate volume of IS and NS solutions directly to the aliquot of matrix.

12.2.3 Assemble the soxhlet/Dean-Stark (SDS) apparatus, and add a fresh charge of solvent to the receiver and reflux flask. Apply power to the heating mantle to begin refluxing.

12.2.4 Reflux the sample for a total of 16 hours. Cool and disassemble the apparatus.

12.2.5 Concentrate the extracts using the rotary evaporator. Exchange twice with 50 mL of hexane. Bring to < 2mL of hexane.

12.2.6 Bring up volume to ~10mLs with methanol.

12.3 Extraction and Cleanup

12.3.1 Assemble the SPE apparatus and attach the SPE strata - XA cartridges as shown in the appendix, Figure 1.

12.3.2 Condition the cartridges by eluting with acetonitrile followed by 100mM dipotassium phosphate. Discard eluant.

12.3.3 Load sample onto cartridge by way of siphon.

12.3.4 Wash the cartridges with 100mM dipotassium phosphate

12.4 Cartridge Elution

12.4.1 Elute the cartridge with 5% formic acid in acetonitrile.

12.4.2 Collect extracts eluted from the column into clean test tubes.

12.5 Adjustment to Final Volume

12.5.1 Concentrate extract to ~ 200µL under a gentle stream of nitrogen and a water bath set at 50 ± 5°C

12.5.2 Bring to a volume of ~ 450µL with H_2O.

12.5.3 Transfer the concentrated eluate to an auto injector vial that contains the Recovery Standard (RS).

13. LC/MS ANALYSIS

13.1 Establish the necessary conditions. The LC conditions may be optimized for compound separation and sensitivity. Once optimized, the same LC conditions must be used for the analysis of all standards, blanks, OPR aliquots and samples. The following LC operating conditions are guidance and adjustments may be required

Column: Waters BEH C18, 10.0cm, 2.1 mm i.d., 1.7 µm particle size
Ionization: Negative Ion Electrospray
Acquisition: MRM mode, unit resolution
Injection Volume: 5-15µL

General LC Conditions	
Column Temp	50°C
Max Pressure	15,000 psi
Autosampler Tray Temp.	18°C
MS Conditions	
Source Temp.	150°C
Desolvation Temp.	400°C
Cone/Desolvation Gas Rate	25 L/hr/ 850 L/hr

LC Gradient Program			***LC Gradient Program***	**Gradient**
Time (min)	**Flow Mixture***			
0.00	99%A	1%B	0.300	1
1.00	99%A	1%B	0.300	1
4.50	20%A	80%B	0.300	6
5.60	2%A	98%B	0.300	7
7.10	2%A	98%B	0.300	6
7.20	99%A	1%B	0.300	1
8.60	99%A	1%B	0.300	1

FOIA_07123_0003548_0137

- Solvent A = 0.1% Ammonium acetate/Acetic acid in water
- Solvent B = 1:1 Methanol:Acetonitrile

13.2 Initial Calibration (ICAL)

13.2.1 An initial calibration curve is created to demonstrate the linearity of the LCMS system over the calibration range. An initial calibration is repeated at least annually, whenever a new set of spiking calibration standards is created or whenever the continuing calibration falls outside the acceptance criteria.

13.2.2 Establish the operating conditions suggested in Section 14.1

13.2.3 Each calibration standard contains Hexachlorophene. Calibration standard solutions are presented in Table 1A.

13.2.4 One internal standard and one recovery standard are used to improve quantitation.

13.2.5 See Table 1B for calibration range.

13.2.6 The %RSD must be ≤20 for the native analyte and ≤30 for the internal standard.

13.3 Continuing Calibration

13.3.1 A verification (VER) standard from the initial calibration curve (CS3) is injected at the beginning of an analytical 12-hour sequence.

13.3.2 The CS3 verification is acceptable if the following criteria are met:

13.3.2.1.1 The LC peak representing each native and labeled compound must be present with a S/N ≥10.

13.3.2.1.2 The percent recovery for both the native and labeled compound must be 70-130%.

13.3.2.1.3 The retention times must be within ± 15 seconds of the respective retention times in the most recent CS3.

13.4 Qualitative Determination

13.4.1 The signal to noise ratio (S/N) at the LC peak maximum for each native compound must be greater than or equal to 2.5 for each compound detected in a sample extract.

13.4.2 The retention time of the peak for a native compound must be within ±15 seconds of its RT in the most recent CS3.

13.5 Quantitative Determination

13.5.1 Isotope dilution quantitation.

13.5.2 Recovery of each internal standard versus the recovery standard must be within 70-130%.

13.5.3 Recoveries below the limits may be accepted if the signal to noise is >10:1. If the signal to noise is not >10:1, samples must be re-extracted and re-analyzed or the data must be qualified.

13.5.4 If a chromatographic peak of any of the analyte saturates the detector, a dilution of the extract must be analyzed.

14. CALCULATIONS

14.1 The concentration of each compound is calculated as follows:

$$C_{Samp} = \frac{A_x C_y}{A_y RRF}$$

Where:

C_{Samp} = *Concentration of compound in sample*

A_x = *Sum of areas of daughter m/z for native compound in sample*

A_y = *Sum of areas of daughter m/z for labeled compound in sample*

C_y = *Concentration of Internal Standard in sample*

RRF = *Relative response factor, a sum of the response factors* (RF):

$$\sum RF = \frac{A_n C_I}{A_I C_n}$$

Where:

C_I = *Internal Standard Concentration at the curve point*

A_x = *Area of daughter m/z for native compound*

A_I = *Area of daughter m/z for labeled compound*

C_n = *Concentration of Native Standard at the curve point*

14.2 The detection limits can be calculated using the following formula:

$$DL = \frac{(2.5)(H_N)(Q_{IS})}{(H_{IS})(S)(RRF_N)}$$

Where:

DL = *Detection Limit,*
H_N = *Noise height (peak to peak),*
H_{IS} = *Peak height of the internal standard,*
Q_{IS} = *Quantity, in pg, of the internal standard added to the sample before extraction*
S = *Weight or volume of the sample, and*
RRF_N = *Calculated relative response factor for the analyte.*

14.3 Internal standard recoveries are calculated by using the formula:

$$\%Rec = \frac{(A^1_{IS} + A^2_{IS})(C_{RS})}{(A^1_{RS} + A^2_{RS})(C_{IS})(RRF_{IS})} \times 100$$

Where:

A^1_{IS}, A^2_{IS} = *Areas of the primary and secondary m/z's for the internal standard.*
A^1_{RS}, A^2_{RS} = *Areas of the primary and secondary m/z's for the recovery standard.*
C_{IS} = *Concentration of the internal standard.*
C_{RS} = *Concentration of the recovery standard.*
RRF_{IS} = *Calculated relative response factor for the internal std. analyte.*

14.4 Relative Response Factors can be calculated using the following formula:

$$RRF = \frac{(A^1_N + A^2_N)(C_{IS})}{(A^1_{IS} + A^2_{IS})(C_N)}$$

Where:

A^1_N, A^2_N = *Areas of the primary and secondary m/z's for the native compound*
A^1_{IS}, A^2_{IS} = *Areas of the primary and secondary m/z's for the labeled compound.*
C_{IS} = *Concentration of the internal standard in the calibration standard.*
C_N = *Concentration of the native compound in the calibration standard*

14.5 RRF for unlabeled analytes (RRFN) and for labeled analytes (RRFIS):

$$RRF_N = \frac{(A_X)(Q_{IS})}{(Q_X)(A_{IS})} \qquad RRF_{IS} = \frac{(A_{IS})(Q_{RS})}{(Q_{IS})(A_{RS})}$$

Where:

A_X = *Sum of the integrated ion abundances of the quantitation ions for the unlabeled analyte*
A_{IS} = *Sum of the integrated ion abundances of the quantitation ions for the labeled standards*

A_{RS} = *Sum of the integrated ion abundances of the quantitation ions for the labeled recovery standards*
Q_{IS} = *Quantity of internal standard injected (pg)*
Q_{RS} = *Quantity of recovery standard injected (pg)*
Q_X = *Quantity of unlabeled PCDD/PCDF analyte injected (pg)*

14.6 The RPD is calculated as follows:

$$RPD = \frac{(H - L)}{(H + L)/2} * 100$$

Where:
RPD = *Relative Percentage Difference*
H = *Highest area*
L = *Lowest area*

14.7 The peak asymmetry factor is calculated as follows:

$$A_s = \frac{b}{a}$$

Where:
A_s = *Peak symmetry factor*
b = *Width of the back half of the peak measured (at 10% peak height) from the trailing edge of the peak to a line dropped perpendicularly from the peak apex.*
a = *Width of the front half of the peak measured (at 10% peak height) from the leading edge of the peak to a line dropped perpendicularly from the peak apex.*

15. POLLUTION PREVENTION

15.1 The solvent evaporation techniques used in this method are amenable to solvent recovery, and the laboratory shall recover solvents wherever feasible.

15.2 Standards should be prepared in volumes consistent with laboratory use to minimize disposal of standard.

16. WASTE MANAGEMENT

16.1 Waste generated in the procedure must be segregated and disposed according to the facility hazardous waste procedures. Safety officer should be contacted if additional information is required.

16.2 The laboratory waste management is in compliance with all federal, state, and local regulations to protect the air, water, and land by minimizing and controlling all releases from fume hoods and bench operations

17. REFERENCES

17.1 Method 1694, Pharmaceuticals and Personal Care Products in Water, Soil, Sediment, and Biosolids by HPLC/MS/MS, December 2007.

Appendix

17.2 Figure 1. Extraction Manifold Set-up

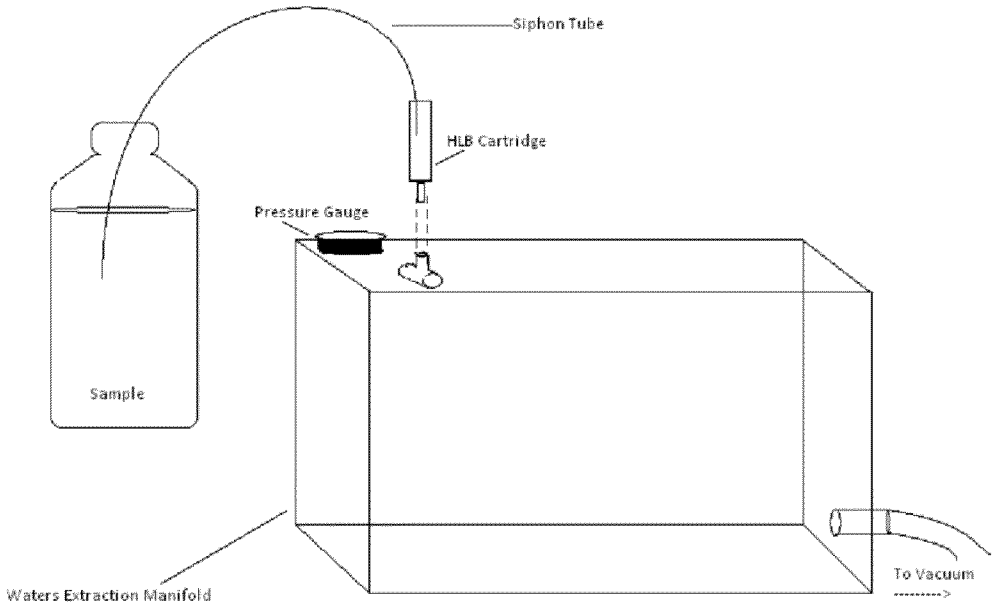

FOIA_07123_0003548_0143

Table 1A

Calibration Curve Concentration (pg/µL)

Compound	CS1	CS2	CS3*	CS4	CS5
Hexachlorophene	1.0	10	100	500	1000

* Calibration Verification Solution

Table 1B

Calibration Curve Concentration (pg/µL)

Internal Standard	CS1	CS2	CS3*	CS4	CS5
^{13}C-Hexachlorophene	200	200	200	200	200
Recovery Standard					
^{13}C-TCPAA	200	200	200	200	200

* Calibration Verification Solution

Table 2

Exact Masses Monitored

Compound	Native Parent-Daughter	Internal Standard	Native Parent-Daughter
Hexachlorophene	404.8 – 368.6	^{13}C-Hexachlorophene	417.8 – 381.7
Recovery Standard			
^{13}C-TCPAA	259.0 – 200.8	NA	NA

Table 3

Acceptance Criteria for Performance Tests

Congener	VER	IPR		OPR %	Labeled compound recovery in samples %
		RSD %	Ave %		
Hexachlorophene	70-130	30	55-108	50-120	
^{13}C-Hexachlorophene	70-130	30	6-151	5-168	5-153

Glossary

Analyte — A pharmaceutical or personal-care product tested for by this method. The analytes are listed in Table 1.

Calibration Standard — A solution prepared from a stock solution and used to calibrate the response of the HPLC/MSMS.

Calibration Verification Standard (CCC) — The mid-point calibration standard (CS3) that is used in to verify calibration. See Table 3.

Field Reagent Blank — A field reagent blank is a matrix preparation that is free of native analyte transported to the field in sealed containers and returned with the samples

Internal Standard – A labeled compound used as a reference for quantitation of other labeled and native compounds.

IPR — Initial precision and recovery; four aliquots of a reference material spiked with analytes of interest are analyzed to establish the ability of the laboratory to generate acceptable precision and recovery. An IPR is performed anytime the method or instrumentation is modified.

Isotope dilution quantitation – Determination of a naturally occurring (native) compound by reference to the same compound in which one or more atoms has been isotopically enriched. This method employs ^{2}H or ^{13}C labeled analogs which are spiked into each sample

LC – Liquid chromatography

Labeled Compound – A molecule in which one or more of the atoms is isotopically enriched, thereby increasing the mass of the molecule

Laboratory Blank — See method blank.

May — This action, activity, or procedural step is neither required nor prohibited.

May Not — This action, activity, or procedural step is prohibited.

Method Blank — An aliquot of reagent water that is treated exactly as a sample including exposure to all glassware, equipment, solvents, reagents, internal standards, and surrogates that is used with samples. The method blank is used to determine if analytes or interferences are present in the laboratory environment, the reagents, or the apparatus.

Method Detection Limit (MDL) — The lowest concentration at which an analyte can be detected under routine operating conditions (see 40 CFR 136, Appendix B).

MS — Mass spectrometer or mass spectrometry.

Must — This action, activity, or procedural step is required.

Native Compound – A molecule in which all atoms have naturally occurring isotopic abundances

OPR — Ongoing precision and recovery sample (OPR); a laboratory blank spiked with known quantities of analytes. The OPR is analyzed exactly like a sample. Its purpose is to assure that the results produced by the laboratory remain within the limits specified in

FOIA_07123_0003548_0145

this method for precision and recovery.

Reagent Water — Water demonstrated to be free from the analytes of interest and potentially interfering substances at the method detection limit for the analyte.

Relative Standard Deviation (RSD) — The standard deviation times 100 divided by the mean. Also termed "coefficient of variation."

RPD – Relative Percent Difference shown

RF — Response factor.

RRF — Relative response factor.

Should — Although this action, activity, or procedural step is suggested, it is not required.

SICP — Selected ion current profile; the line described by the signal at an exact m/z.

Signal-to-noise ratio (S/N) – The height of the signal as measured from the mean of the noise to the peak maximum divided by the width of the noise.

SPE — Solid-phase extraction; an extraction technique in which an analyte is extracted from an aqueous sample by passage over or through a material capable of reversibly adsorbing the analyte.

Stock Solution — A solution containing an analyte that is prepared using a reference material traceable to EPA, the National Institute of Science and Technology (NIST), or a source that will attest to the purity and authenticity of the reference material.

UPLC — Ultra performance liquid chromatography

Outreach Laboratory

311 North Aspen
Broken Arrow,
OK 74012
918/251-2515
FAX 251-0008

Reaching
Beyond
the Standard

STANDARD OPERATING PROCEDURE

GAMMA SPECTROSCOPY

RAD_04-11

OUTREACH LABORATORY
02/28/13
REVISION 11

APPROVAL:

LABORATORY DIRECTOR 2/28/13 DATE

I acknowledge that I have read the revisions to SOP RAD_04-11.

APPROVALS:

NA

Jennifer Bledsoe Date

Stephen Debrah Date

2/28/13

Donna Eidson Date

2/28/13

Ron Eidson Date

Lori Eldridge 03042013

Lori Eldridge Date

NA

Mioto Johnson Date

NA

Kristie Nguyen Date

3/4/13

Ralph Terrell Date

3/4/13

Raymond Thomas Date

0:word/sop/covrevise

GAMMA SPECTROMETRY
TABLE OF CONTENTS

		PAGE
1.0	PURPOSE	2
2.0	DETECTION LIMITS	2
3.0	SCOPE & APPLICATION	2
4.0	SUMMARY	2
5.0	DEFINITIONS	3
6.0	INTERFERENCES	3
7.0	SAFETY PRECAUTIONS	3
8.0	EQUIPMENT & SUPPLIES	4
9.0	REAGENTS	5
10.0	SAMPLE HANDLING & PRESERVATION	5
11.0	QUALITY CONTROL	5
12.0	CALIBRATION	6
13.0	PROCEDURE	8
14.0	CALCULATIONS	12
15.0	METHOD PERFORMANCE	12
16.0	POLLUTION PREVENTION	12
17.0	DATA ASSESSMENT & ACCEPTANCE CRITERIA	13
18.0	EQUIPMENT/INSTRUMENT MAINTENANCE & TROUBLESHOOTING	13
19.0	WASTE MANAGEMENT	13
20.0	REFERENCES	13
21.0	ATTACHMENTS	14

SAMPLE ANALYSIS BY GAMMA SPECTROMETRY

1.0 PURPOSE

This method describes the use of gamma spectroscopy for the measurement of gamma photons emitted from radionuclides without separating them from the sample matrix. The method can be applied to soil, water, air filters, etc. providing the sample can be condensed or reduced in size such that it can be placed in a calibrated geometry for counting.

2.0 DETECTION LIMIT

The detection limits for Cs-134 and Cs-137, which are 10 and 20 pCi/L respectively, are met with this procedure. Many other isotopes can be identified with this method and the detection limits are established by the customer or regulatory agency that governs the specific project.

3.0 SCOPE AND APPLICATION

3.1 Two types of gamma detectors are currently used, sodium iodide crystal, NaI, and high purity germanium detector, HPGe. Because of its energy resolution advantage and the availability of large active volume detectors, a HPGe detection system is used for measuring gamma emitting radionuclides.

3.2 The method is applicable for analyzing aqueous, non-aqueous, and solids samples that contain radionuclides emitting gamma photons with energies ranging from about 55 to 2000 keV.

4.0 SUMMARY OF METHOD

Solid samples are mixed as well as possible in their as-received containers. Liquid samples are shaken immediately before being transferred to the counting container. No other sample processing is done except to transfer to a suitable container (or plate) for counting.

A portion of the as-received or dried and ground sample is placed in a container such as a poly-bottle or marinelli beaker for which a calibration exists. An intrinsic germanium detector, interfaced with an 8192-channel multichannel analyzer controlled by Canberra Genie 2000 software is used to acquire and analyze the gamma spectrum. Data is then corrected for background.

5.0 DEFINITIONS

5.1 Accuracy – The closeness of agreement between an observed value and an accepted value.

5.2 Batch – A group of samples which behave similarly with respect to the sampling or the testing procedures being employed and which are processed as a unit.

5.3 Bias – the deviation due to matrix effects of the measured value from a known spiked amount.

5.4 Matrix Duplicate – An intralaboratory split sample which is used to document the precision of a method in a given sample matrix.

5.5 Matrix – The component or substrate which contains the analyte of interest; ie: surface water, drinking water, or soil.

5.6 Method Detection Limit – The minimum concentration of a substance that can be measured and reported with 99% confidence that the analyte concentration is greater than zero.

5.7 Precision – The agreement among a set of replicate measurements without assumption of knowledge of the true value. Precision is estimated by means of duplicate/replicate analyses.

5.8 MAPEP – The United States Department of Energy *Mixed Analyte Performance Evaluation Program.*

6.0 INTERFERENCES

6.1 Interferences are minimal in this method due to the high resolution of the intrinsic germanium detector.

6.2 Naturally occurring radionuclides found in building components may result in the background peaks not truly in the sample. These are corrected during the data reduction process.

7.0 SAFETY PRECAUTIONS

7.1 Hazardous Chemicals/Equipment

All work is to be performed in a fume hood with the following chemicals, 1) nitric acid, concentrated, and 2) hydrofluoric acid.

7.2 Radiological Hazards
When working with radioactive materials that are capable of being volatilized or airborne, perform activities in a fume hood.

7.3 General Laboratory Safety

Refer to the Laboratory Chemical Hygiene Plan for general laboratory safety.

8.0 EQUIPMENT AND SUPPLIES

8.1 Marinelli beakers: 1.0and 2.0-L.

8.2 Graduated cylinders: 1.0 and 2.0-L.

8.3 Poly-bottles and poly-containers: 160 & 500 mL.

8.4 Petri dishes: 50mm, 95mm and 100mm plastic disposable

8.5 Spatula.

8.6 Electric or duct tape.

8.7 Analytical balance.

8.8 High purity germanium detector with shield.

8.9 Spectroscopy amplifier.

8.10 High voltage supply.

8.11 Multichannel analyzer: 4096 channels, equipped with Computer with printer and Genie 2000 application software.

8.12 90 mm or 47mm / 0.45 μm membrane filter

8.13 Filtration System

8.14 Pestle and mortar

8.15 12 and 60 mesh sieve

8.16 Liquid Nitrogen – Nitrogen Service

8.17 ½ inch porcelain ball grinding media, Fisher # 08-400A or equivalent.

8.18 Tumbler – Rotary Extractor – capable of rotating extraction vessels in an end-over-end fashion.

9.0 REAGENTS AND STANDARDS

NOTE: All chemicals used for reagents are ACS or equivalent.

9.1 Deionized Water.

9.2 Sand-method blank

9.3 Calibration Standards – NIST or equivalent

	Source #	Geometry	Wt/Vol
9.3.1	R497-B1	**B1** - 160ml bottle	241g
9.3.2	R497-C1	**C1** -500ml container	624g
9.3.3	R497-M1	**M1**-1L marinelli	1 L
9.3.4	R497-M2	**M2**-2L Marinelli	2 L
9.3.5	R497-P1	**P1** (50 mm petri dish)	32g
9.3.6	R497-P2	**P2** (100 mm petri dish)	147g
9.3.7	R497-P3	**P3** (100 mm petri dish)	85.6g
9.3.8	I129-3622-SS	**M500**-500 mL marinelli	500 ml (I129)

10.0 SAMPLE COLLECTION AND PRESERVATION

10.1 Samples should be collected and stored in plastic rather than glass to prevent loss due to breakage during transportation and handling.

10.2 Samples should be preserved at the time of collection with nitric acid to the pH of 2 or less. If samples are to be collected without preservation, they should be brought to the laboratory within 5 days and then preserved and held in the original container for a minimum of 16 hours before analysis or transfer of the sample. Samples do not require refrigeration.

Note: If soluble or insoluble analysis is requested do not preserve.

10.3 Care should be taken during shipment of samples to avoid a contaminating spillage or cross contamination of multiple samples.

11.0 QUALITY CONTROL

11.1 Sample Quality Control

11.1.1 Prepare a lab control standard and a duplicate for each batch of up to twenty like samples. A method blank is to be counted if requested by client.

11.1.2 Blanks are prepared using sand for solid matrices and reagent water for aqueous matrices.

11.2 Instrument Quality Control

11.2.1 Count a background check for 1800 seconds or longer on each detector each day it is in use or with each sample batch.

11.2.2 Count a 60,000 second blank monthly, at a minimum, for each matrix analyzed to be used for background correction.

11.2.3 Count the appropriate check source for sample geometry for a minimum of 300 seconds on each detector each day the detector is in use. The B1 source check is used to monitor detector stability.

11.2.4 Upload data into QA file to evaluate source check. Print out and place in data gamma spec. run file.

B1 - 59, 662, 1173, and 1332
C1 - 59 or 88, 662, 1173, and 1332
P1-P3 – 59 or 88, 662, 1173, and 1332
M1-M2– 59 or 88, 662, 1173, and 1332

ALL ENERGY LINES SELECTED FOR DETECTOR MUST PASS

11.3 Corrective Action

11.3.1 Nonconformances may occur at any level. Some may be corrected immediately and documented using normal laboratory document procedures. Out-of-control nonconformances shall be documented by the use of a Corrective Action Report. With the use of a CAR, findings can be tracked and used to detect future trends.

11.3.2 Work shall be stopped when out-of-control deficiencies occur until the problem is alleviated, ie., instrumentation malfuntion, QC out of control limits, failure to perform demonstration of capabilities, etc.

12.0 CALIBRATION

Note: Calibration is performed on each spectrometer system at least annually, at a minimum, on each geometry in which measurements will be made.

12.1 Determine which calibration standard needs to be used and place in appropriate detector.

12.2 Acquire spectrum following steps 13.3.

12.3 Save Calibration with the following format:

XXZZMMDD.MCA

where XX = the detector number
ZZ = a geometry description (e.g., MI is a 1 L marinelli beaker).
MM = Month
DD = Day

12.4 Select from the **Calibration** Menu.

12.5 Select **Full Energy Calibration** from the Calibration Menu and select appropriate geometry. (KeV ≈ 0.5 per channel, Full width half max, FWHM, < 3.0 for Co-60 at 1173 KeV).

12.6 Select **Full Efficiency** from the Calibration Menu and select appropriate geometry.

12.7 Save the sample data using the following format:

ZZMMDDYY.CAL

where ZZ = a geometry description (e.g., M1 is a 1 L marinelli beaker).
MM = Month
DD = Day
YY = Year

12.8 Repeat for each detector and calibration source.

13.0 PROCEDURE

Note: If a detector has been out of service (e.g., thermocycle), do not apply bias across the detector unless it has been sufficiently cooled to liquid nitrogen temperatures overnight.

13.1 Water Sample Preparation

13.1.1 Measure 0.1, 0.5, 1.0 or 2.0 L of a sample and transfer into the appropriate sized marinelli beaker. Aliquot depends on sample available, but 1.0 or 2.0 L is

preferable. If less than 1 liter sample needs to be diluted to 1 liter with deionized water. Record volumes in the Sample Process Log.

Note: If soluble and insoluble are requested filter the sample through a 90 or 47 mm/0.45 μm pore size filter. Transfer filtrate to an appropriate sized marinelli beaker and save filter for analysis. Place filter in labeled Ziploc bag.

13.1.2 Place a lid on the container and seal it with tape. Apply label supplied from Sample Receiving showing the new Sub-ID.

13.1.3 Transfer the container to the counting room for analysis.

13.2 Soil or Sludge Sample Preparation

Note: If sample does not require drying and grinding, skip to step 13.2.9.

SOP WET_24 provides more detail regarding solid prep procedures.

13.2.1 Weigh sample before putting in oven. Record in Sample Process Log.

13.2.2 Dry sample at 100°C for at least 16 hours. If Beryllium-7 is requested, sample must be dried at no more than 70°C due to its volatility.

13.2.3 Weigh sample again after taking out of oven. Record in Sample Process Log.

13.2.4 Grind the sample in an exhaust hood and pass through a 12 or 60 mesh sieve.

13.2.5 Place well mixed sample into appropriate container. Fill the container full with sample depending on the volume of sample available and cap the bottle or container and seal with tape.

If there is not enough sample to fill a 160ml bottle, a petri dish (P1-P3) may be used. Solid samples should be compacted as well as possible to eliminate channels and air pockets.

13.2.6 Weigh the filled sample bottle subtracting the bottles tare weight.

13.2.7 Record all actions in the Sample Process Log.

13.2.8 Apply label supplied from Sample Receiving to sample.

13.2.9 Place sample in a plastic bag prior to counting to prevent contamination on the detector.

13.2.10 Transfer the sample to the counting room for analysis.

13.3 Data Acquisition

13.3.1 Record the detector number, sample identification number, volume, count date and geometry in the gamma spec log book.

13.3.2 Place the samples in the appropriate detector cavities and close the shield lids.

13.3.3 Preset the appropriate counting time using the **MCA-Aquire setup** keys. Liquid samples are typically counted for 500 minutes (30,000 sec) and solid samples are typically counted for 100 minutes (6000 sec). Counting times may be lengthened or shortened depending on required minimum detectable activities (MDA).

13.3.4 Clear any previous spectra on the screen by selecting the clear button on the screen. (Be sure previous spectra have been stored prior to erasing.)

13.3.5 Acquire the sample spectra by selecting the **Start** button on the screen. Select **Edit** from the top menu and enter sample information. Enter data in the appropriate fields.

13.3.6 Save the acquired spectra individually. This is accomplished by selecting **File** then **Save**. Save the sample using the following format:

The filename has the following format:

XXZZZZSS.CNF

where XX = the detector number. ie., Detector 1 – 01
ZZZZ = the unique batch number assigned to the samples.
SS=sample sub id

13.3.7 Detectors may be operated independently by following steps 13.3.1 through 13.3.5.

13.4 Spectral Data Reduction

13.4.1 Select **Analyze** from the top menu.

13.4.2 Select from the Macro for detector analysis being performed on.

13.4.3 Select from File Menu-**Print Listing**.

13.4.4 Save the sample data using the following format:

The filename has the following format:

XXZZZZSS.CNF

where XX = the detector number. ie., Detector 1 – 01
ZZZZ = the unique batch number assigned to the samples.
SS=sample sub id

13.5 Data Collection

Document the data in a bound lab notebook for each set of analyses performed. Entries must be made at the time of analysis and include the following:

- description of activity being documented (e.g., "gamma Spec Analysis") and procedure being followed.
- Date analysis started and analyst(s) initial(s).
- count length.
- Outreach batch number, sample ID, count time and sample aliquot. Identify any lab quality control samples (LCSs).

13.6 Data Reduction and Reporting for Gamma Spec

Using the Canberra Genie 2000, report gamma spectroscopy scan data as follows:

Report each nuclide that the data system has identified and quantified to two significant figures along with the counting uncertainty rounded to two significant figures with the following provisos:

- Report only those nuclides positively identified and quantified by the Canberra program.

In evaluating the identification made by the software, consider the following:

- Agreement of results for multiple photon peaks of a given nuclide.
- Possible identifications of any unidentified peaks.
- Possibility that identified nuclides may actually be low abundance peaks of other nuclides found in the sample that have not been included in the libraries.

Document and support changes to automated nuclide identifications on the instrument printout.

- Do not report a lower order of magnitude (decimal place) in the uncertainty than will be reported in the activity.

  Examples:

  176 +/- 32.1 pCi/L is reported as 176 +/- 32
  176 +/- 8.7 pCi/L is reported as 176 +/- 9

- If the counting uncertainty is greater than the reported activity, do not report the nuclide as found. (Unless requested by customer.)

- If no nuclides are identified by the data system, report "ND" in the results column of the LIMS data entry screen and "ND = Not detected" in the Value Text field of the data entry screen.

13.7 Data Reduction and Reporting for Specific Target Nuclides

If a specific nuclide is listed as an analyte in the LIMS and it was identified and quantified by the data system, report it as described above. If the specific nuclide is not identified and quantified by the data system, report the minimum detectable activity (MDA) for those nuclides as calculated by the data system. Report MDA values to one significant figure.

Qualify results for soil samples as follows: "Samples were oven-dried at 103°C prior to analysis. Nuclides volatile at this temperature are, therefore, excluded from analysis."

14.0 CALCULATIONS

The Genie 2000 software calculates the data using programs provided by Canberra and takes into account many variables. If Outreach calculates manually these are the equations used.

$$\text{ACTIVITY} = \frac{(CPM_{sample} - CPM_{bkgd})}{R*V*E*D*2.22}$$

$$\text{ERROR} = \frac{1.96*SQRT\left(\frac{CPM_{sample}}{T_{sample}} + \frac{CPM_{bkgd}}{T_{bkgd}}\right)}{}$$

R*V*E*D*2.22

$$MDR = 4.65*SQRT(CPM_{bkgd}) + \frac{2.71}{T}$$

$$MDA/MDC = \frac{MDR}{R*V*E*D*2.22}.$$

T	=	Count time
R	=	Chemical or Tracer recovery
V	=	Sample Volume or Weight
E	=	Efficiency
2.22	=	Conversion from dpm to pCi
D	=	Radionuclide decay factor $e^{-\wedge t}$

15.0 METHOD PERFORMANCE

15.1 Method performance is established by the use of demonstration of capability documentation. Performance evaluations by way of *QAP* and/or *MAPEP* are performed to track ongoing competency.

15.2 Method Detection Limits may be established but will vary due to sample matrices as well as concentration of particular isotopes found in the sample(s).

16.0 POLLUTION CONTROL

Refer to the Laboratory Chemical Hygiene Plan, SOP# GEN_22, for laboratory pollution control.

17.0 DATA ACCEPTANCE CRITERIA

Calibration/QC Sample	Frequency	Acceptance Criteria	
Instrument Calibration Standard	Daily	Control chart ± 3 sigma	Recount twice, if not in control limits place detector on hold for maintenance
Instrument Calibration Blank	Daily	Result-error ≤ SDL	Recount twice, if not in control limits, place detector on hold for maintenance
Laboratory Control Standard (LCS)	5%	80 – 120% or acceptance range by vender.	Reanalyze LCS and all associated samples
Duplicate	5%	< 20 RPD	If not in control limits, flag and report in case narrative

18.0 EQUIPMENT/INSTRUMENT MAINTENANCE & TROUBLESHOOTING

Maintenance is outlined in SOP GEN 17.

19.0 WASTE MANAGEMENT

Refer to SOP #GEN_19 (Hazardous Material Management) and SOP #GEN_20 (Waste Disposal) for laboratory waste management.

20.0 REFERENCES

20.1 Canberra Genie 2000 Software Operating Instructions.

20.2 Canberra QA S505 Software.

20.3 Environmental Protection Agency (EPA) Method 901.1.

20.4 Los Alamos National Laboratory (LANL) Method WR140-5.

20.5 DOE HASL 300, 4.5.2.3 Ga-01-R.

20.6 ANSI N42.14-1991, Calibration and Use of Germanium Spectrometers for the Measurement of Gamma-Ray Emission Rates of Radionuclides, American National Standards Institute, 1991.

20.7 DoD Quality Systems Manual Version 4.2, 10/25/10

21.0 ATTACHMENTS

21.1 Gamma Spec Run Log

21.2 Gamma Spec Data Checklist

21.3 Sample Process Log